2.5

# Remedial Investigation Report for the Eastern Michaud Flats Site

## Part III
## Appendices AA – AE for Air Quality Characterization

Prepared for
FMC Corporation
J.R. Simplot Company

Copy No. _____

AR 2.5

67960

***Bechtel Environmental, Inc.***

August 1996

## Appendix AA – Correspondence

Appendix AA comprises two attachments:

(1) Appendix AA-1 – Letter from IT Analytical

(2) Appendix AA-2 – Plant Operational Summaries

- FMC Plant Operational Summaries
- Simplot Plant Operational Summaries

# Appendix AA-1

# Letter from IT Analytical

INTERNATIONAL
TECHNOLOGY
CORPORATION

March 29, 1994

Mr. Tim Morgan
Bechtel Environmental Inc.
50 Beale Street
P.O.Box 193965
San Francisco CA 94119-3965

**SUBJECT: RESULTS, PACKAGES BAIRR0001 through BAIRR0020 and related documentation for EASTERN MICHAUD FLATS (EMF) AIR PATHWAYS MONITORING PROGRAM**

Dear Mr. Morgan:

Enclosed are verified sample result summaries for all data packages we had previously delivered to Bechtel for the Eastern Michaud Flats Air Pathways Monitoring Program. Two copies of the lead-210 recalibration data and the recalculation data for the isotopic thorium analysis, the lead-210 analysis, the radium-226 analysis and the radium-228 analysis will be shipped to Oak Ridge. These data are sorted by delivery package and submitted in the order stated above.

As we have discussed, the thorium recalculations were needed because use of thorium-234 as a tracer in this analysis requires a calculation to convert the beta counts from the tracer to their equivalent alpha counts for the alpha calculation program. The spreadsheet used for that conversion failed to take into account significantly improved detector efficiencies for newer detectors employed for some of the thorium determinations. A revised spreadsheet that accounts for individual detector efficiencies was verified and validated. Detector efficiencies are reevaluated monthly from check source data. The submitted recalculations take into account the actual efficiency of the detector used for each specific determination at the time of the original analysis.

Lead-210 recalculations were needed because it was determined that the original calibration for lead-210 overestimated the detector efficiencies by approximately thirty per cent. During the work for recalibration it was discovered that the point in the analysis that marks the beginning of the ingrowth period was somewhat earlier than we had believed. Start times for the ingrowth period in the submitted recalculations have been readjusted to our best estimate of actual beginning of ingrowth. We believe the uncertainty introduced by not knowing the exact time of initiation of ingrowth is less than the analytical uncertainty of the measurement. The time of lead/bismuth separation was confirmed by bismuth-207 tracer studies of the analysis. Lead-210 determinations done at other times for other clients had not revealed the problem because for those analyses the lead-210/bismuth-210 system was allowed to return to equilibrium before counting. Lead-210 analyses for this work were counted after a fourteen day bismuth-210 ingrowth due to turn-around-time requirements of the contract. Another result of the recalibration is that most lead-210 matrix spike results now fall within the acceptable range.

Recalculations for radium-226 and radium-228 were performed because the Minimum Detectable Activity (MDA) results submitted for packages BAIRR0001 through BAIRR0015 were incorrect. Calculation of this parameter is now imbedded in the calculation that produces the analytical results. The validity of the calculation was verified and documented as required. All results reported prior to the implementation of the upgraded radium calculation package have been reprocessed and the corrected MDAs are on the submitted result summaries.

If you have any questions or require additional information, please call me at (509) 375-3131.

Sincerely,

Lee Scott, Project Manager

xc: Jeffery Sprenger, Chester LabNet
Bob Schlachter, Bechtel Environmental

# FMC Plant Operational Summaries

FMC Corporation

Phosphorus Chemicals Division
Box 4111
Pocatello, Idaho 83202
(208) 236-8200
FAX (208) 236-8396

October 22, 1993

Certified Mail
Return Receipt Requested

Department of Health and Welfare
Division of Environmental Quality
224 South Arthur
Pocatello, ID 83201

Attention: Rick Elkins

Subject: Scheduled Maintenance Outage

Dear Rick:

FMC-Pocatello is planning a scheduled maintenance outage on the No. 2 furnace for a semiannual maintenance outage. The furnace will be shut down and flared to the flare stack beginning at 2000 hours October 24, 1993 for approximately six hours. After the six hour period, emissions will be vented to the Medusa/Andersen scrubbing system as required.

If you have any questions, please feel free to contact me.

Sincerely,

David Buttelman
Environmental Manager
Environmental Department

cc: Orville Green-Boise

FMC Corporation

Phosphorus Chemicals Division
Box 4111
Pocatello, Idaho 83202
(208) 236-8200
FAX (208) 238-8396

November 22, 1993

Certified Mail
Return Receipt Requested

Department of Health and Welfare
Air Quality Bureau
224 South Arthur
Pocatello, Idaho 83201

Attention: Rick Elkins

Subject: Shutdown/Bypass Report for the period of September 12, 1993 through November 17, 1993

Dear Rick:

The following air pollution control equipment shutdowns and\or upsets were noted:

1. 9/15/93-No. 4 furnace was shut down and flared to the flare stack from 1700 hours until 2212 hours for a precipitator wash (cross-over used).

2. 9/15/93-No. 1 furnace was shut down and flared to the flare stack from 2309 hours until 0004 9/16/93 hours to repair the second pass precipitator.

3. 9/16/93-No. 1 furnace was shut down and flared to the flare stack from 0300 hours until 0340 hours to change an insulator on the second pass precipitator.

4. 9/18/93-No. 4 furnace was shut down and flared to the flare stack from 0207 hours until 0247 hours to rod the furnace offtake.

5. 9/18/93-No. 4 furnace was shut down and flared to the flare stack from 1021 hours until 1045 hours to rod the furnace offtake and repair a hole in the first pass precipitator.

6. 9/22/93-No. 1 furnace was shut down and flared to the flare stack from 1710 hours until 2110 hours for a precipitator wash (cross-over used).

7. 9/25/93-Phos dock Andersen scrubber was shut down from 1600 hours until 1630 hours to clean the sprays and screens.

**Shut Down/Bypass Report**
**Page 2**

8. 9/26/93-No. 2 furnace was shut down and flared to the flare stack from 1530 hours until 1617 hours to rod the furnace offtake.

9. 10/3/93-Phos dock Andersen scrubber was shut down from 1730 hours until 1940 hours due to overheating of the fan motor.

10. 10/3/93-No. 4 furnace was shut down and flared to the flare stack from 0852 hours until 0912 hours due to problems with the pressure controller.

11. 10/5/93-Phos dock Andersen scrubber was shut down from 0520 hours until 0615 hours due to overheating of the fan motor.

12. 10/11/93-No. 1 furnace was shut down and flared to the flare stack from 0851 hours until 1004 hours to repair a valve on the CO line.

13. 10/13/93-Stockpile/reclaim baghouse was shut down from 0545 hours until 0800 hours to repair the fan motor.

14. 10/21/93-South calciner discharge baghouse was shut down from 0925 hours 10/21/93 until 1600 hours 10/22/93 to repair the chain on the rotary valve.

15. 10/25/93-No. 2 furnace was shut down and flared to the flare stack from 0125 hours until 0635 hours for the semiannual maintenance outage (cross-over used).

16. 11/4/93-Phos dock Andersen scrubber was shut down from 1300 hours until 2030 hours due to an electrical outage.

17. 11/5/93-No. 2 furnace was shut down and flared to the flare stack from 1230 hours until 1345 hours for computer repair.

18. 11/9/93-No. 1 furnace was shut down and flared to the flare stack from 0905 hours until 1125 hours to repair the Hytor system.

19. 11/11/93-No. 4 furnace was shut down from 1139 hours until 1250 hours to rod the furnace offtake.

20. 11/17/93-No. 1 furnace was shut down and flared to the flare stack from 0804 hours until 1410 hours for maintenance repair.

21. 11/17/93-No. 2 furnace was shut down and flared to the flare stack from 1305 hours until 1320 hours for maintenance repair.

22. 11/17/93-No. 1 furnace was shut down and flared to the flare stack from 0920 hours until 1115 hours to repair electrode seals.

If you have any questions; please feel free to call.

Sincerely yours,

David Buttelman
Environmental Manager
Environmental Department

cc: Orville Green-Boise
Audrey Cole-Pocatello

FMC Corporation

Phosphorus Chemicals Division
Box 4111
Pocatello, Idaho 83202
(208) 236-8200
FAX (208) 236-8396

January 11, 1994

Certified Mail
Return Receipt Requested

Department of Health and Welfare
Air Quality Bureau
224 South Arthur
Pocatello, Idaho 83201

Attention: Rick Elkins

Subject: Shutdown/Bypass Report for the period of November 17, 1993 through December 28, 1993

Dear Rick:

The following air pollution control equipment shutdowns and\or upsets were noted:

1. 11/24/93-No. 4 furnace was shut down and flared to the flare stack from 1502 hours until 1532 hours to replace the roof pressure controller.

2. 11/27/93-No. 1 furnace was shut down and flared to the flare stack from 1610 hours until 1815 hours due to a broken electrode.

3. 11/28/93-No. 1 furnace was shut down and flared to the flare stack from 1010 hours until 1245 hours due to electrode problems.

4. 11/29/93-No. 1 furnace was shut down and flared to the flare stack from 0150 hours until 0430 hours for a semiannual maintenance outage (Cross-over used).

5. 11/29/93-No. 1 furnace was shut down and flared to the flare stack from 1330 hours until 1800 hours due to a broken electrode.

6. 12/6/93-No. 1 furnace was shut down and flared to the flare stack from 1930 hours until 2220 hours to repair holes in the feed chutes and PRV.

7. 12/8/93-Secondary condenser was shut down and bypassed from 1445 hours until 1600 hours due to lack of CO.

8. 12/8/93-Secondary condenser was shut down and bypassed from 1305 hours until 1400 hours due to lack of CO.

9. 12/9/93-No. 1 furnace was shut down and flared to the flare stack from 1545 hours until 1815 hours for a furnace digout (Cross-over used).

10. 12/16/93-No. 3 furnace was flared to the flare stack from 0716 hours until 0845 hours as the furnace was brought back on line after the the digout.

11. 12/18/93-No. 3 furnace was shut down and flared to the flare stack from 1603 hours until 2203 hours to replace the monkey and ram the shrouds.

12. 12/19/93-No. 3 furnace was shut down and flared to the flare stack from 1100 hours until 1530 hours to repair the furnace controller and ram the shrouds.

13. 12/21/93-No. 3 furnace was shut down and flared to the flare stack from 1400 hours until 1615 hours to repack electrode seals.

14. 12/22/93-No. 3 furnace was shut and flared to the flare stack from 0842 hours until 1200 hours to repack electrode seals.

15. 12/22/93-East and west Bahco baghouses were shut down from 0630 hours until 0905 hours for maintenance repair.

16. 12/28/93-No. 4 furnace was shut down and flared to the flare stack from 1015 hours until 1135 hours to repair the No. 1 phase seal ring.

If you have any questions, please feel free to call.

Sincerely yours,

David Buttelman
Environmental Manager
Environmental Department

cc: Orville Green-Boise
Audrey Cole-Pocatello

FMC Corporation

Phosphorus Chemicals Division
Box 4111
Pocatello, Idaho 83202
(208) 236-8200
FAX (208) 236-8396

February 28, 1994

Certified Mail
Return Receipt Requested

Department of Health and Welfare
Air Quality Bureau
224 South Arthur
Pocatello, Idaho 83201

Attention: Rick Elkins

Subject: Shutdown/Bypass Report for the period of December 28, 1993 through February 23, 1994

Dear Rick:

The following air pollution control equipment shutdowns and/or upsets were noted:

1. 1/13/94-No. 4 Andersen scrubber was shut down from 1000 hours 1/13/94 until 2000 hours 1/14/94 to replace the fan motor.

2. 1/14/94-Nodule stockpile/reclaim baghouse was shut down from 0750 hours until 1500 hours to repair holes in the hopper.

3. 1/15/94-Nodule stockpile/reclaim baghouse was shut down from 0700 hours to 0900 hours to repair a dust valve.

4. 1/17/94-Dust silo baghouse was shut down from 0800 hours 1/17/94 until 2000 hours 1/18/94 to change-out all bags in the baghouse.

5. 1/17/94-Stockpile/reclaim baghouse was shut down from 0800 hours 1/17/94 until 2000 hours 1/18/94 due to the bag replacement in the dust silo baghouse.

6. 1/17/94-No. 2, 3 and 4 furnaces were shut down and flared to the flare stack from 0531 hours until 0800 hours due to a earthquake related power outage.

7. 1/19/94-No. 2 furnace was shut down and flared to the flare stack from 0835 hours until until 1309 hours to repair electrode seals

8. 1/20/94-No. 2 furnace was shut down and flared to the flare stack from 2200 hours 1/20/94 until 0054 hours 1/21/94 to repair electrode seals and feed chutes.

9. 1/21/94-No. 2 furnace was shut down and flared to the flare stack from 0945 hours until 1030 hours to repair an electrode seal.

10. 1/22/94-East nodule baghouse was shut down from 1030 hours 1/22/94 until 1200 hours 1/23/94 to change-out all of the bags in the baghouse.

11. 1/23/94-No. 2 furnace was shut down and flared to the flare stack from 1700 hours until 2200 hours for a precipitator wash (Cross-over Used).

12. 1/24/94-Stockpile/reclaim baghouse was shut down from 1300 hours until 1400 hours for maintenance repair.

13. 1/27/94-No. 2 furnace was flared to the flare stack from 1700 hours until 2154 hours as the furnace was being brought back on line from the 1/23 outage.

14. 2/6/94-No. 3 furnace was shut down and flared to the flare stack from 0857 hours until 1500 hours for a precipitator wash (Cross-over Used).

15. 2/11/94-No. 4 furnace was shut down and flared to the flare stack from 1100 hours until 1545 hours to repair electrode seals.

16. 2/12/94-No. 3 furnace was shut down and flared to the flare stack from 2213 hours until 2233 hours to clear the 8-inch bypass valve.

17. 2/14/94-No. 2 furnace was shut down and flared to the flare stack from 0848 hours until 1419 hours to replace the phosphorus pump.

18. 2/16/94-East nodule baghouse was shut down from 0001 hours until 1200 hours due to problems with the dust hopper sensor.

If you have any questions, please feel free to call.

Sincerely yours,

David Buttelman
Environmental Manager
Environmental Department

cc: Orville Green: Boise
Audrey Cole: Pocatello
Farshid Farsi: Shoshone-Bannock Tribes

BURDEN ENGINEERING DEPARTMENT
POCATELLO, IDAHO

FMC

WORLD'S LARGEST ELEMEN
PHOSPHORUS PLANT

PROJECT Ferrophos Crushing (93 thru 5-94) DATE 5-31-94

Hours Crushed / shift

| Date | Days | Nights |
|---|---|---|
| 11-29-93 | 2 | 0 |
| 11-30-93 | 4 | 0 |
| 12-2-93 | 5 | 3 |
| 12-3-93 | 5.5 | 6 |
| 12-4-93 | 8 | 7.5 |
| 12-5-93 | 6 | 0 |
| 12-28-93 | 6.5 | 0 |
| 12-29-93 | 3 | 0 |
| 12-30-93 | 3.5 | 0 |
| 1-3-94 | 6 | 0 |
| 1-4-94 | 3.5 | 0 |
| 1-5-94 | 5.5 | 0 |
| 1-6-94 | 4.5 | 0 |
| 1-7-94 | 3.5 | 0 |
| 1-10-94 | 3 | 0 |
| 1-11-94 | 0.5 | 0 |
| 1-12-94 | 5 | 0 |
| 1-13-94 | 4 | 0 |
| 1-14-94 | 1.5 | 0 |

Notes: No crushing prior to 11-29-93
Crushing data after 1-14-94 not available

FMC Corporation

Phosphorus Chemicals Division
Box 4111
Pocatello, Idaho 83202
(208) 236-8200
FAX (208) 236-8396

April 14, 1994

Certified Mail
Return Receipt Requested

Department of Health and Welfare
Air Quality Bureau
224 South Arthur
Pocatello, Idaho 83201

Attention: Rick Elkins

Subject: Shutdown/Bypass Report for the period of February 17, 1994 through April 10, 1994

Dear Rick:

The following air pollution control equipment shutdowns and\or upsets were noted:

1. 2/17/94-Stockpile/reclaim baghouse was shut down from 0900 hours until 1600 hours to repair the fan.

2. 2/25/94-Stockpile/reclaim baghouse was shut down from 0800 hours until 1400 hours to repair the compressed air system.

3. 3/1/94-Stockpile/reclaim baghouse was shut down from 0200 hours until 0800 hours to repair the dust pump.

4. 3/1/94-No. 3 furnace was shut down and flared to the flare stack from 1100 hours until 1515 hours to repair the scrubber system.

5. 3/4/94-No. 4 furnace was shut down and flared to the flare stack from 0845 hours until 0956 hours to repack electrode seals.

6. 3/5/94-No. 1 furnace was shut down and flared to the flare stack from 2046 hours until 2152 hours to repair the furnace offtake.

7. 3/5/94-No. 1 furnace was shut down and flared to the flared stack from 1215 hours until 1807 hours to repack electrode seals and repair the furnace offtake.

8. 3/4/94-Phos dock Andersen scrubber was shut down from 0400 hours until 0600 hours due to problems with the fan motor.

**Shut Down/Bypass Report**
**Page 2**

9. 3/7/94-No. 1 furnace was shut down and flared to the flare stack from 0813 hours until 1020 hours to repack electrode seals.

10. 3/7/94-Stockpile/reclaim baghouse was shut down from 1100 hours until 1200 hours to repair the pulsing system.

11. 3/9/94-No. 1 furnace was shut down and flared to the flare stack from 2010 hours 3/9/94 until 0125 hours 3/9/94 for a precipitator wash (cross-over used).

12. 3/11/94-Phos dock Andersen scrubber was shut down from 1310 hours until 1500 hours to replace gaskets at the car cleaning station.

13. 3/12/94-No. 1 furnace was flared to the flare stack from 2030 hours 3/12/94 until 0250 hours 3/13/94 to bring the furnace back on line after the precipitator wash.

14. 3/15/94-Phos dock Andersen scrubber was shut down from 2355 hours 3/15/94 until until 0010 hours 3/16/94 to clean the water sprays.

15. 3/16/94-Stockpile/reclaim baghouse was shut down from 1230 hours until 2030 hours for maintenance repair.

16. 3/16/94-No. 4 furnace was shut down and flared to the flare stack from 1447 hours until 1746 hours to repack electrode seals.

17. 3/16/94-No. 1 furnace was shut down and flared to the flare stack from 0832 hours until 1249 hours to repair the furnace dome and offtake.

18. 3/17/94-No. 4 furnace was shut down and flared to the flare stack from 0840 hours until 1006 hours to replace the electrode holder and monkey.

19. 3/17/94-No. 4 furnace was shut down and flared to the flare stack from 1133 hours until 1155 hours to repair the electrode holder and monkey.

20. 3/17/94-Secondary condenser was shut down and bypassed from 0905 hours until 1205 hours due to lack of CO.

21. 3/27/94-No. 1 furnace was shut down and flared to the flare stack from 1730 hours until 1745 hours due to a PRV seal loss.

002577



22. 3/28/94-No. 2 furnace was shut down and flared to the flare stack from 0837 hours until 1427 hours to repair electrode seals.

23. 3/29/94-No. 3 furnace was shut down and flared to the flare stack from 2346 hours 3/29/94 until 0245 hours to repair feed chutes.

24. 4/3/94-No. 4 furnace was shut down and flared to the flare stack from 0110 hours until 1248 hours 4/3/94 for a semiannual maintenance outage (cross-over used).

25. 4/5/94-No. 1 furnace was shut down and flared to the flare stack from 0830 hours until 0940 hours to repack electrode seals.

26. 4/10/94-No. 4 furnace was shut down and flared to the flare stack from 2307 hours 4/10/94 until 0305 hours to bring the furnace back on line after the outage.

If you have any questions, please feel free to call.

Sincerely yours,

David Buttelman
Environmental Manager
Environmental Department

cc: Orville Green: Boise
Audrey Cole: Pocatello
Farshid Farsi: Shoshone-Bannock Tribes

FMC Corporation

Phosphorus Chemicals Division
Box 4111
Pocatello, Idaho 83202
(208) 236-8200
FAX (208) 236-8386

June 15, 1994

Certified Mail
Return Receipt Requested

Department of Health and Welfare
Air Quality Bureau
224 South Arthur
Pocatello, Idaho 83201

Attention: Rick Elkins

Subject: Shutdown/Bypass Report for the period of April 3, 1994 through June 11, 1994

Dear Rick:

The following air pollution control equipment shutdowns and\or upsets were noted:

1. 4/3/94-East nodule baghouse was shut down from 1030 hours until 1500 hours to replace faulty bags.

2. 4/11/94-No. 2 furnace was shut down and flared to the flare stack from 0100 hours until 0500 hours for a maintenance outage (cross-over used).

3. 4/11/94-No. 1 furnace was shut down and flared to the flare stack from 1040 hours until 1256 hours to repair electrode seals.

4. 4/12/94-No. 1 furnace was shut down and flared to the flare stack from 0833 hours until 0947 hours to repair electrode seals.

5. 4/13/94-Stockpile/reclaim baghouse was shut down from 1300 hours until 1600 hours to repair the pulsing system.

6. 4/18/94-Dust silo baghouse was shut down from from 1000 hours until 1545 hours due to welding on the dust lines.

7. 4/18/94-South calciner discharge baghouse was shut down from 1000 hours until 1600 hours to replace a bearing.

8. 4/19/94-No. 3 furnace was shut down and flared to the flare stack from 1108 hours until 1556 hours for a maintenance outage (cross-over used).

9. 4/20/94-Phos dock Andersen scrubber was shut down from 1420 hours until 1440 hours to repair holes in the ducting.

10. 4/22/94-No. 3 furnace was flared to the flare stack from 2120 hours until 2234 hours to bring the furnace back on line.

11. 4/23/94-South calciner discharge baghouse was shut down from 0800 hours until 1600 hours to repair the hopper.

13. 4/29/94-No. 3 furnace was shut down and flared to the flare stack from 1300 hours until 1526 hours to repair the CO line.

14. 4/29/94-No. 1 furnace was shut down and flared to the flare stack from 1330 hours until 1526 hours to repair the CO line.

15. 5/2/94-Phos dock Andersen scrubber was shut down from 1600 hours until 1750 hours to clear the water sprays.

16. 5/2/94-No. 1 furnace was shut down and flared to the flare stack from 0830 hours until 1030 hours to repair electrode seals and the furnace offtake.

17. 5/3/94-Phos dock Andersen was shut down from from 1215 hours until 1730 hours to clear the water sprays.

18. 5/3/94-No. 3 furnace was shut down and flared to the flare stack from 1655 hours until 1743 hours to rod the furnace offtake.

19. 5/3/94-Dust silo baghouse was shut down from 0530 hours until 0915 hours to replace faulty bags.

20. 5/4/94-Phos dock Andersen scrubber was shut down from 0830 hours until 1620 hours to repair the fan motor.

21. 5/5/94-Phos dock Andersen scrubber was shut down from 0830 hours until 1620 hours to repair the fan motor.

22. 5/7/94-No. 1 furnace was shut down and flared to the flare stack from 1716 hours until 2136 hours to replace a phossy water pump.

23. 5/9/94-No. 4 furnace Andersen scrubber was shut down from 1745 hours until 1950 hours due to fan motor problems.

24. 5/11/94-No. 4 furnace was shut down and flared to the flare stack from 1215 hours until 1528 hours to repair the hytor system and feed chutes.

25. 5/11/94-Phos dock Andersen scrubber was shut down from 0930 hours until 1630 hours to replace drum seals and clean the water sprays.

26. 5/19/94-Stockpile/reclaim baghouse was shut down from 1030 hours until 1900 hours due to high dust levels in th dust silo.

27. 5/21/94-Stockpile/reclaim baghouse was shut down from 0700 hours until 1430 hours to clear a plugged dust line and hopper.

28. 5/22/94-Stockpile/reclaim baghouse was shut down from 0700 hours until 1200 hours to clear a plugged dust line.

29. 5/22/94-No. 3 furnace was shut down and flared to the flare stack from 0834 hours until 0903 hours to rod the furnace offtake.

30. 5/27/94-No. 2 furnace was shut down and flared to the flare stack from 0715 hours until 0735 hours due to high temperatures and the controller failure.

31. 5/30/94-Stockpile/reclaim baghouse was shut down from 0800 hours until 1150 hours to clear a plugged dust line.

32. 6/11/94-No. 2 furnace was shut down and flared to the flare stack from 1940 hours until 2245 hours to clear the feed chutes.

If you have any questions, please feel free to call.

Sincerely yours,

David Buttelman
Environmental Manager
Environmental Department

cc: Orville Green: Boise
Audrey Cole: Pocatello
Farshid Farsi: Shoshone-Bannock Tribes

**FMC Corporation**

Phosphorus Chemicals Division
Box 4111
Pocatello, Idaho 83202
(208) 236-8200
FAX (208) 236-8396

August 16, 1994

Certified Mail
Return Receipt Requested

Department of Health and Welfare
Air Quality Bureau
224 South Arthur
Pocatello, Idaho 83201

Attention: Rick Elkins

Subject: Shutdown/Bypass Report for the period of June 11, 1994 through August 5, 1994.

Dear Rick:

The following air pollution control equipment shutdowns and\or upsets were noted:

1. 6/13/94-No. 3 furnace was shut down and flared to the flare stack from 0228 hours until 0330 hours for the semiannual maintenance outage (cross-over used)

2. 6/16/94-No. 4 furnace was shut down and flared to the flare stack from 2128 hours until 2345 hours to repair electrode seals and the furnace controller.

3. 6/18/94-No. 3 furnace was shut down and flared to the flare stack from 1425 hours until 1520 hours as the furnace was brought back on line.

4. 6/24/94-No. 4 furnace was shut down and flared to the flare stack from 1300 hours until 1534 hours to work on the furnace offtake.

5. 6/24/94-Phos dock Andersen scrubber was shut down from 0540 hours until 0945 hours due problems with the fan motor.

6. 6/28/94-No. 3 furnace was shut down and flared to the flare stack from 0955 hours until 1125 hours to rod the furnace offtake and repair the electrode seal.

7. 6/30/94-Phos dock Andersen scrubber at the phos dock was shut down from 1900 hours until 2030 to repair the fan motor.

8. 6/30/94-Coke baghouse was shut down from 0400 hours until 1100 hours to replace bags.

9. 6/30/94-East nodule baghouse was shut down from 0600 hours until 0750 hours to repair a dust level relay.

10. 6/30/94-Phos dock Andersen scrubber was shut down from 2320 hours 6/30/94 until 0045 hours 7/1/94 to repair the fan motor.

11. 7/2/94-No. 4 furnace was shut down and flared to the flare stack from 0930 hours until 1000 hours to repair the furnace TDC.

12. 7/3/94-No. 4 furnace was shut down and flared to the flare stack from 1500 hours until 1600 hours to work on the furnace offtake.

13. 7/5/94-East nodule baghouse was shut down from 1200 hours until 1345 hours to replace faulty bags.

14. 7/5/94-No. 3 furnace was shut down and flared to the flare stack from 1710 hours until 2300 hours for a maintenance outage.

15. 7/5/94-No. 4 furnace was shut down and flared to the flare stack from 0510 hours until 1100 hours for a precipitator wash (cross-over used).

16. 7/7/94-Stockpile/reclaim baghouse was shut down from 1000 hours until 1600 hours due to problems with the air compressor.

16. 7/9/94-No. 4 furnace was shut down and flared to the flare stack from 0108 hours until 0450 hours for maintenance repair.

17. 7/8/94-East shale, west shale, and the screening/crushing baghouse were shut down from 0630 hours until 1700 hours due to air compressor failure.

18. 7/14/94-No. 3 furnace was shut down and flared to the flare stack from 2355 hours 7/14/94 until 0012 hours 7/15/94 to rod the furnace offtake.

19. 7/15/94-Secondary condenser was shut down and bypassed from 1700 hours 1540 hours until 1720 hours due to high inlet temperatures.

20. 7/17/94-No. 3 furnace was shut down and flared to the flare stack from 1205 hours until 1235 hours to rod the furnace offtake.

21. 7/19/94-No. 3 furnace was shut down and flared to the flare stack from 0906 hours until 0955 hours to rod the furnace offtake.

22. 7/19/94-No. 3 furnace was shut down and flared to the flare stack from 1150 hours until 1415 hours to rod the furnace offtake.

23. 7/20/94-No. 1,3, and 4 furnaces were shut down and flared to the flare stack from 2205 hours until 2338 hours for a CO line outage.

24. 7/21/94-No. 1,3, and 4 furnaces were shut down and flared to the flare stack from 2115 hours until 2125 hours to bring the furnaces back on line.

25. 7/22/94-No. 4 furnace was shut down and flared to the flare stack from 0614 hours until 1135 hours to repair electrode seals.

26. 7/22/94-No. 3 furnace was shut down and flared to the flare stack from 1353 hours until 1830 hours to clear feed chutes.

27. 7/22/94-No. 1 furnace was shut down and flared to the flare stack from 1235 hours until 1325 hours to clear feed chutes.

28. 7/23/94-No. 1 furnace was shut down and flared to the flare stack from 0810 hours until 1240 hours to repair a hole in the furnace roof.

29. 7/23/94-No. 4 furnace was shut down and flared to the flare stack from 0610 hours until 0800 hours to clear plugged feed chutes.

30. 7/23/94-No. 3 furnace was shut down and flared to the flare stack from 2210 hours until 2350 hours to rod the furnace offtake.

31. 7/23/94-No. 3 furnace was shut down and flared to the flare stack from 1530 hours until 1600 hours to repair the chill pit cover.

32. 7/23/94-No. 3 furnace was shut down and flared to the flare stack from 2015 hours until 2100 hours to repair the furnace controller and steam the roof valve.

33. 7/24/94-No. 4 furnace was shut down and flared to the flare stack from 1025 hours until 1156 hours to work on the furnace offtake.

34. 7/25/94-Phos dock Andersen scrubber was shut down from 2140 hours until 2250 hours to clear plugged water sprays.

35. 7/25/94-No. 3 furnace was shut down and flared to the flare stack from 0908 hours until 1235 hours to repair the furnace offtake and precipitators.

36. 7/26/94-No. 3 furnace was shut down and flared to the flare stack from 0008 hours until 0100 hours to repack the dust screw.

37. 7/25/94-No. 3 furnace was shut down and flared to the flare stack from 1631 hours until 1712 hours to repair the precipitators.

38. 7/26/94-No. 3 furnace was shut down and flared to the flare stack from 2206 hours until 2300 hours to rod the furnace offtake.

39. 7/26/94-East nodule baghouse was shut down from 0526 hours until 0820 to replace blow tubes, venturis, and faulty bags.

40. 7/29/94-No. 3 furnace was shut down and flared to the flare stack from 0450 hours until 0500 hours to rod the furnace offtake.

41. 7/29/94-No. 4 furnace was shut down and flared to the flare stack from 1400 hours until 1440 hours for maintenance repair.

42. 7/31/94-No. 3 furnace was shut down and flared to the flare stack from 2305 hours until 2340 hours to rod the furnace offtake and controller lines.

43. 8/1/94-No. 3 furnace was shut down and flared to the flare stack from 1005 hours until 1048 hours to rod the furnace offtake.

44. 8/2/94-No. 3 furnace was shut down and flared to the flare stack from 1305 hours until 1352 hours to rod the furnace offtake.

45. 8/2/94-No. 3 furnace was shut down and flared to the flare stack from 0240 hours until 0300 hours to rod the furnace offtake.

46. 8/2/94-Phos dock Andersen scrubber was shut down from 1820 hours until 2030 hours to repair the fan motor.

47. 8/3/94-Phos dock Andersen scrubber was shut down from 1630 hours until 1730 hours to repair the fan motor.

48. 8/5/94-Phos dock Andersen scrubber was shut down from 0820 hours until 0840 hours to repair the fan motor.

If you have any questions, please feel free to call.

Sincerely yours,

David Buttelman
Health, Safety, and Environmental Manager
Environmental Department

cc: Orville Green: Boise
Audrey Cole: Pocatello
Farshid Farsi: Shoshone-Bannock Tribes

**FMC Corporation**

Phosphorus Chemicals Division
Box 4111
Pocatello, Idaho 83205
(208) 236-8200
FAX (208) 236-8396

November 30, 1994

Certified Mail-Return Receipt Requested

Mr. Rick Elkins
Division of Environmental Quality
224 South Arthur
Pocatello, ID 83201

RE: Shutdown/Bypass Report for the period of August 4, 1994, through November 27, 1994.

Dear Mr. Rick Elkins:

The following air pollution control equipment shutdowns and/or upsets were noted:

1. 8/4/94-No. 3 furnace was shutdown and flared to the flare stack from 0814 hrs until 1302 hrs to work on the furnace offtake.

2. 8/8/94-No. 3 furnace was shutdown and flared to the flare stack from 0745 hrs until 0810 hrs to repair PRV seal.

3. 8/8/94-No. 4 furnace was shut down and flared to the flare stack from 1300 hrs until 1600 hrs to clear plugged feed chutes.

4. 8/9/94-No. 1 furnace was shutdown and flared to the flare stack from 0840 hrs until 1450 hrs for maintenance work.

5. 8/9/94-No. 4 furnace was shutdown and flared to the flare stack from 1525 hrs until 1750 hrs to clear plugged feed chute.

6. 8/10/94-No. 4 furnace was shutdown and flared to the flare stack from 0805 hrs until 0920 hrs to clear plugged feed chute.

7. 8/11/94-No. 1 furnace was shutdown and flared to the flare stack from 0702 hrs until 1110 hrs for maintenance work.

8. 8/14/94-No. 4 furnace was shutdown and flared to the flare stack from 1220 hrs until 1420 hrs to repair an electrode seal.

9. 8/17/94-No. 4 furnace was shutdown and flared to the flare stack from 1305 hrs until 1550 hrs to repair an electrode seal.

10. 8/18/94-No. 4 furnace was shutdown and flared to the flare stack from 0040 hrs until 0400 hrs to replace flex cables and repair an electrode seal.

11. 8/18/94-No. 3 furnace was shutdown and flared to the flare stack from 0955 hrs until 1305 hrs to clear plugged feed chute.

12. 8/19/94-No. 4 furnace was shutdown and flared to the flare stack from 1600 hrs until 1812 hrs to repair in inlet to precipitator.

13. 8/21/94-No. 1 furnace was shutdown and flared to the flare stack from 1110 hrs until 1400 hrs to repair electrode seals.

14. 8/25/94-North nodule stockpile baghouse was shutdown from 1100 hrs until 1300 hrs to replace bags.

15. 8/25/94-No. 3 furnace was shutdown and flared to the flare stack from 0900 hrs until 1320 hrs for maintenance work on hamer valve and feed chutes.

16. 8/26/94-No. 1 furnace was shutdown and flared to the flare stack from 1030 hrs until 1155 hrs to work on an electrode.

17. 8/26/94-North and south nodule stockpile baghouses were shutdown from 0100 hrs until 1400 hrs to replace rotary valve motor.

18. 8/27/94-Nodule reclaim baghouse was shutdown from 1900 hrs on 8/27/94 until 1900 hrs on 8/28/94 to repair dust pump lines.

19. 8/29/94-No. 1 furnace was shutdown and flared to the flare stack from 1315 hrs until 1820 hrs to repair furnace offtake scrapper and repair precipitator.

20. 8/30/94-No. 4 furnace was shutdown and flared to the flare stack from 0808 hrs until 1340 hrs to clear feed chute.

21. 8/30/94-South nodule stockpile baghouse was shutdown from 0830 hrs until 1600 hrs for preventative maintenance work.

22. 9/1/94-No. 3 furnace was shutdown and flared to the flare stack from 0810 hrs until 1400 hrs to clear plugged feed chutes and furnace offtake.

23. 9/2/94-No. 4 furnace was shutdown and flared to the flare stack from 0805 hrs until 0905 hrs to clear plugged feed chute.

24. 9/4/94-No. 4 furnace was shutdown and flared to the flare stack from 1235 hrs until 1510 to clear centrifuge product line into the furnace.

25. 9/7/94-No. 1 furnace was shutdown and flared to the flare stack from 0923 hrs until 1150 hrs to repair electrode seal.

26. 9/8/94-No. 1 furnace was shutdown and flared to the flare stack from 0905 hrs until 0950 hrs to repair electrode seal.

27. 9/9/94-No. 4 furnace was shutdown and flared to the flare stack from 0907 hrs until 1145 hrs to work on furnace controller.

28. 9/9/94-Coke baghouse was shutdown from 0600 hrs until 1900 hrs to replace bags and replace fan bearings.

29. 9/9/94-No. 1 furnace was shutdown and flared to the flare stack from 1400 hrs until 1905 hrs to repair electrode seal.

30. 9/10/94-No. 3 furnace was shutdown and flared to the flare stack from 1915 hrs until 1925 hrs to clean PRV.

31. 9/12/94-No. 4 furnace was shutdown and flared to the flare stack from 2010 hrs on 9/12/94 until 0136 hrs on 9/13/94 for a precipitator wash.

32. 9/19/94-East nodule baghouse was shutdown from 0305 until 0415 for maintenance work.

33. 9/23/94-No. 1 furnace was shutdown and flared to the flare stack from 0910 hrs until 1247 hrs to repair electrode seal and offtake scrapper.

34. 9/25/94-No. 2 furnace was flared to the flare stack from 1820 hrs until 1948 hrs to bring furnace back on-line.

35. 9/25/94-No. 1 furnace was shutdown and flared to the flare stack from 2238 hrs on 9/25/94 until 0250 hrs on 9/26/94 for a precipitator wash and repairs.

36. 9/26/94-No. 4 furnace was shutdown and flared to the flare stack from 0805 hrs until 0905 hrs for work on center feed chute.

37. 9/26/94-No. 2 furnace was shutdown and flared to the flare stack from 2020 hrs until 2110 hrs to work on metal blocks

38. 9/26/94-No. 4 furnace was shutdown and flared to the flare stack from 1245 hrs until 1308 hrs to work on precipitator.

39. 9/28/94-No. 3 furnace was shutdown and flared to the flare stack from 0140 hrs until 0335 hrs to clear plugged feed chute.

40. 9/29/94-No. 4 furnace was shutdown and flared to the flare stack from 1240 hrs until 1720 hrs to repair electrode seal and clear plugged feed chute.

41. 10/3/94-No. 4 furnace was shutdown and flared to the flare stack from 0840 hrs until 1023 hrs to clear plugged feed chute.

42. 10/3/94-No. 4 furnace was shutdown and flared to the flare stack from 2100 hrs until 2200 hrs to clear plugged feed chute.

43. 10/4/94-East and west Bahco baghouses were shutdown from 2130 hrs until 2250 hrs for repairs.

44. 10/4/94-No. 4 furnace was shutdown and flared to the flare stack from 1028 hrs until 1540 hrs to repair furnace roof.

45. 10/4/94-No. 3 furnace was shutdown and flared to the flare stack from 0938 hrs until 1515 hrs to clear plugged feed chute.

46. 10/5/94-No. 4 furnace was shutdown and flared to the flare stack from 0824 hrs until 1505 hrs to repair furnace roof.

47. 10/6/94-No. 4 furnace was shutdown and flared to the flare stack from 0906 hrs until 1243 hrs to repair electrode seal and offtake scrapper.

48. 10/6/94-No. 3 furnace was shutdown and flared to the flare stack from 1433 hrs until 1544 hrs to repair precipitator dust screen.

49. 10/6/94-No. 1 furnace was shutdown and flared to the flare stack from 1315 hrs until 1400 hrs to repair electrode seal.

50. 10/6/94-No. 4 furnace was shutdown and flared to the flare stack from 1547 hrs until 1830 hrs to clear plugged feed chute.

51. 10/7/94-No. 4 furnace was shutdown and flared to the flare stack from 1430 hrs until 2025 hrs for maintenance work.

52. 10/13/94-No. 1 furnace was shutdown and flared to the flare stack from 1036 hrs until 1508 hrs to repair feed chute.

53. 10/13/94-No. 2 furnace was shutdown and flared to the flare stack from 0815 hrs until 0825 hrs to drain and re-establish PRV water seal.

54. 10/14/94-Hot flush at secondary condenser from 2315 hrs on 10/14/94 until 0320 hrs on 10/15/94 for sceduled maintenance outage on No. 2 calciner.

55. 10/14/94-North nodule stockpile baghouse was shutdown from 0700 hrs to 1900 hrs for repair work on dust pump and dust line.

56. 10/19/94-No. 1 furnace was shutdown and flared to the flare stack from 1105 hrs until 1515 hrs to replace insulation and repair center feed chute.

57. 10/19/94-No. 2 furnace was shutdown and flared to the flare stack from 1620 hrs until 1916 hrs to repair electrode seal.

58. 10/20/94-No. 2 furnace was shutdown and flared to the flare stack from 0840 hrs until 1218 hrs to repair electrode seals.

59. 10/21/94-No. 2 furnace was shutdown and flared to the flare stack from 0910 hrs until 1005 hrs to repair electrode seal.

60. 10/29/94-No. 3 furnace was shutdown and flared to the flare stack from 2102 hrs until 2215 hrs to clear plugged feed chute.

61. 11/2/94-No. 2 furnace was shutdown and flared to the flare stack from 0846 hrs until 1303 hrs to repair electrode seal.

62. 11/10/94-No. 3 furnace was shutdown and flared to the flare stack from 0855 hrs until 1435 hrs to clear plugged feed chutes.

63. 11/14/94-No. 1 furnace was shutdown and flared to the flare stack from 0907 hrs until 1305 hrs to repair electrode seal.

64. 11/15/94-No. 2 furnace was shutdown and flared to the flare stack from 0840 hrs until 1040 hrs to repair electrode seal and condenser.

65. 11/18/94-No. 2 furnace was shutdown and flared to the flare stack from 1414 hrs until 1531 hrs to repair electrode seals.

66. 11/18/94-No. 2 furnace was shutdown and flared to the flare stack from 1240 hrs until 1425 hrs to repair electrode seals.

67. 11/22/94-No. 1 furnace was shutdown and flared to the flare stack from 0859 hrs until 1115 hrs to repair electrode seals and clean insulators.

68. 11/25/94-No. 1 furnace was shutdown and flared to the flare stack from 0905 hrs until 1008 hrs to repair electrode seal.

69. 11/25/94-No. 2 furnace was shutdown and flared to the flare stack from 0830 hrs until 0857 hrs to repair electrode seals.

70. 11/27/94-No. 3 furnace was shutdown and flared to the flare stack from 0537 hrs until 0847 hrs to repair electrode seal.

71. 11/27/94-No. 4 furnace was shutdown and flared to the flare stack from 0017 hrs until 0054 hrs to replace rapper on precipitator.

If you have any questions or need additional information, please feel free to call me at 236-8255.

Sincerely,

Kelly Packard

Kelly Packard
Environmental Engineer

cc: Orville Green: Boise
Audrey Cole: Pocatello
Farshid Farsi: Shoshone-Bannock Tribes

# Simplot Plant Operational Summaries

002017

J. R. SIMPLOT COMPANY P.O. BOX 912 POCATELLO, IDAHO 83204
(208) 232-6620 (PLANT) (208) 238-2700 (GROUP OFFICES)

MINERALS & CHEMICAL GROUP

December 1, 1993

Andy Phelps
Bechtel Environmental
50 Beale Street
San Francisco, CA 91119-3965

RE: Requested Information - Plant Upsets in October 1993

Dear Andy:

I have reviewed our weekly emissions reports and spill reports for the month of October, 1993.

We reported several opacity related incidents in both the nitric acid plant and the #4 sulfuric acid plant. None of these incidents was longer than 3 hours and most were less than 15 minutes duration. There was an emissions excursion reported for the 27th from the #4 sulfuric beginning at 0600 hours. Emissions of $SO_2$ were 334 pounds per hour compared to the permitted value of 333 pph. This was not a monitoring day.

There were no incidents in the month that would have the potential impact on the monitoring network. If you have questions or comments please call (208) 234-5465 at your convenience.

Sincerely,

Ward

Ward A. Wolleson
Environmental Engineer

c: Steve Curreri
Jack Cochrane
File

J. R. SIMPLOT COMPANY PO. BOX 912 POCATELLO. IDAHO 83204
(208) 232-6620 (PLANT) (208) 238-2700 (GROUP OFFICES)

MINERALS & CHEMICAL GROUP

RECEIVED
APR 0 5 1994
A.K. PHELPS

April 1, 1994

Andy Phelps
Bechtel Environmental
50 Beale Street
San Francisco, CA 91119-3965

RE: Requested Information - Plant Upsets in January, 1994

Dear Andy:

I have reviewed our weekly emissions reports and spill reports for the month of January, 1994.

We reported several opacity related incidents in the nitric acid plants. None of the incidents in the nitric acid plant were longer than 60 minutes duration. Most were less than 10 minutes. Upsets in the #4 sulfuric plant may have cause opacity problems during plant startups on the evening of the 17th and early morning of the 18th.

There were no incidents in the month that would have any potential impact on the monitoring network. If you have questions or comments please call (208) 234-5465 at your convenience.

Sincerely,

Ward A. Wolleson
Senior Environmental Engineer

c: Steve Curreri
Jack Cochrane
File

J. R. SIMPLOT COMPANY P.O. BOX 912 POCATELLO, IDAHO 83204
(208) 232-6620 (PLANT) (208) 238-2700 (GROUP OFFICES)

MINERALS & CHEMICAL GROUP

May 5, 1994

Mr. Rick Elkins
Idaho Air Quality Bureau
224 South Arthur
Pocatello, Idaho 83204

Dear Mr. Elkins:

In compliance with IDH&W Regulation 01.1006.01, we report the following excursions due to upset conditions.

**Nitrogen Solutions**

| Date | Time | Excursion | Cause |
|---|---|---|---|
| 04-30-94 | 2255-2330 | 30 min opacity >10% | Shutdown. |
| 05-01-94 | 0425-0450 | 10 min opacity >10% | Startup. |
| | 1200-1210 | 5 min opacity >10% | Shutdown for maintenance. |
| | 1745-1810 | 15 min opacity >10% | Startup. |

If you have any questions or desire further information, please contact me at 234-5356.

Sincerely,

Jim McWilliam
Environmental Quality Specialist
Environmental/Analytical Services

JM:lm

c: Audrey Cole, IAQB, Pocatello
Robert Wilkosz, IAQB, Boise
File 012.3.1

bc: Dave Finklenburg
Norm Self
Wayne Slaughter
Weaver Stopka
Terry Uhling
Bruce Winegar
Ward Wolleson

No upset report 5-9-94. OA per Jim McWilliam

J. R. SIMPLOT COMPANY P.O. BOX 912 POCATELLO, IDAHO 83204
(208) 232-6620 (PLANT) (208) 238-2700 (GROUP OFFICES)

MINERALS & CHEMICAL GROUP

May 27, 1994

Mr. Rick Elkins
Idaho Air Quality Bureau
224 South Arthur
Pocatello, Idaho 83204

Dear Mr. Elkins:

In compliance with IDH&W Regulation 01.1006.01, we report the following excursions due to upset conditions.

**Nitrogen Solutions**

| Date | Time | Excursion | Cause |
|---|---|---|---|
| 05-12-94 | 2145-2220 | 35 min opacity >10% | Shutdown for maintenance. |

An emergency shutdown caused by a cracked pump resulted in an ammonia release inside the Urea Building. The ammonia was hosed down. The released amount was approximately 65 pounds.

| | | | |
|---|---|---|---|
| 05-13-94 | 0730-0750 | 20 min opacity >10% | Startup. |
| 05-18-94 | 0750-1725 | The NOx analyzer was out of service for this time being repaired and calibrated. | |

If you have any questions or desire further information, please contact me at 234-5356.

Sincerely,

Jim McWilliam
Environmental Quality Specialist
Environmental/Analytical Services

JM:lm

c: Audrey Cole, IAQB, Pocatello
Robert Wilkosz, IAQB, Boise
File 012.3.1

bc: Dave Finklenburg
Norm Self
Wayne Slaughter
Weaver Stopka
Terry Uhling
Bruce Winegar
Ward Wolleson

Simplot MINERALS AND CHEMICAL GROUP
50 ANNIVERSARY
1944 1994

J. R. SIMPLOT COMPANY P.O. BOX 912 POCATELLO, IDAHO 83204
(208) 232-6620 (PLANT) (208) 238-2700 (GROUP OFFICES)

MINERALS & CHEMICAL GROUP

June 16, 1994

Mr. Rick Elkins
Idaho Air Quality Bureau
224 South Arthur
Pocatello, Idaho 83204

Dear Mr. Elkins:

In compliance with IDH&W Regulation 01.1006.01, we report the following excursions due to upset conditions.

**Nitrogen Solutions**

| Date | Time | Excursion | Cause |
|---|---|---|---|
| 05-21-94 | 0335-0345 | 10 min opacity >10% | Involuntary shutdown |
| 05-26-94 | 0500-0600 | 60 min opacity >10% | Shutdown and purge for maintenance |
| | 1845-1900 | 15 min opacity >10% | Startup |
| 06-08-94 | 0530-0535 | 5 min opacity >10% | Power outage |
| 06-10-94 | 0625-0630 | 5 min opacity >10% | Attempted startup |
| | 1955-2010 | 15 min opacity >10% | Startup |
| 06-13-94 | 2330-2400 | 30 min opacity >10% | Unknown malfunction, possible rate imbalance |
| 06-14-94 | 0530-0635 | 65 min opacity >10% | Rate imbalance |

**400 Sulfuric Acid**

On 5-29-94 at 1600 hours, the 400 Sulfuric Acid Plant was shut down for turn-around.

Simplot MINERALS AND CHEMICAL GROUP
50 ANNIVERSARY
1944 1994

300 Sulfuric Acid

On 6-6-94 at 1400 hours, the 300 Sulfuric Acid Plant was shut down for turn-around.

If you have any questions or desire further information, please contact me at 234-5356.

Sincerely,

Jim McWilliam
Environmental Quality Specialist
Environmental/Analytical Services

JM:lm

c: Audrey Cole, IAQB, Pocatello
Robert Wilkosz, IAQB, Boise
File 012.3.1

bc: Dave Finklenburg
Norm Self
Wayne Slaughter
Weaver Stopka
Terry Uhling
Bruce Winegar
Ward Wolleson

J. R. SIMPLOT COMPANY P.O. BOX 912 POCATELLO, IDAHO 83204
(208) 232-6620 (PLANT) (208) 238-2700 (GROUP OFFICES)

MINERALS & CHEMICAL GROUP

June 21, 1994

bc: Dave Finklenburg
Norm Self
Wayne Slaughter
Weaver Stopka
Terry Uhling
Bruce Winegar
Ward Wolleson

Mr. Rick Elkins
Idaho Air Quality Bureau
224 South Arthur
Pocatello, Idaho 83204

Dear Mr. Elkins:

In compliance with IDH&W Regulation 01.1006.01, we report the following excursions due to upset conditions.

**Nitrogen Solutions**

| Date | Time | Excursion | Cause |
|---|---|---|---|
| 06-16-94 | 1415-1430 | 15 min opacity >10% | Shutdown for maintenance. |
| 06-18-94 | 0815-0845 | 10 min opacity >10% | Attempted startup. |
| | 1510-1525 | 10 min opacity >10% | Startup. |
| | 1625-1640 | 15 min opacity >10% | Shutdown for maintenance. |
| 06-19-94 | 0605-0625 | 10 min opacity >10% | Startup. |
| | 0905-0915 | 10 min opacity >10% | Shutdown for maintenance. |
| | 1435-1450 | 10 min opacity >10% | Startup. |

**400 Sulfuric Acid**

After preheat the 400 Sulfuric Acid Plant started burning sulfur at 1647. An opacity was visible at the stack from 1647 to 1710. This was due to startup after turnaround.

If you have any questions or desire further information, please contact me at 234-5356.

Sincerely,

Jim McWilliam
Environmental Quality Specialist
Environmental/Analytical Services

JM:lm

c: Audrey Cole, IAQB, Pocatello
Robert Wilkosz, IAQB, Boise
File 012.3.1

J. R. SIMPLOT COMPANY P.O. BOX 912 POCATELLO, IDAHO 83204
(208) 232-6620 (PLANT) (208) 238-2700 (GROUP OFFICES)

MINERALS & CHEMICAL GROUP

July 28, 1994

bc: Dave Finklenburg
Norm Self
Wayne Slaughter
Weaver Stopka
Terry Uhling
Bruce Winegar
Ward Wolleson

Mr. Rick Elkins
Idaho Air Quality Bureau
224 South Arthur
Pocatello, Idaho 83204

Dear Mr. Elkins:

In compliance with IDH&W Regulation 01.1006.01, we report the following excursions due to upset conditions.

**Nitrogen Solutions**

| Date | Time | Excursion | Cause |
|---|---|---|---|
| 07-08-94 | 1145-1210 | 10 min opacity >10% | Shutdown for maintenance. |
| 07-09-94 | 0445-0500 | 10 min opacity >10% | Startup. |
| 07-10-94 | 2015-2030 | 10 min opacity >10% | Shutdown for maintenance. |
| 07-11-94 | 0450-0515 | 10 min opacity >10% | Startup. |
| | 0910-0920 | 10 min opacity >10% | Shutdown for maintenance. |
| | 2105-2125 | 10 min opacity >10% | Startup. |
| 07-12-94 | 0100-1110 | 10 min opacity >10% | Shutdown for maintenance. |
| | 0335-0400 | 10 min opacity >10% | Startup. |
| | 0405-0415 | 10 min opacity >10% | Shutdown for maintenance. |
| | 0440-0500 | 10 min opacity >10% | Startup. |
| | 0505-0515 | 10 min opacity >10% | Shutdown for maintenance. |
| | 0655-0710 | 10 min opacity >10% | Startup. |
| | 0855-0910 | 10 min opacity >10% | Shutdown for maintenance. |
| | 1330-1350 | 15 min opacity >10% | Startup. |
| 07-13-94 | 0945-1020 | 15 min opacity >10% | Shutdown for maintenance. |
| | 1220-1235 | 10 min opacity >10% | Startup. |
| | 1630-1645 | 10 min opacity >10% | Shutdown for maintenance. |
| | 1830-1850 | 10 min opacity >10% | Startup. |
| | 1900-1915 | 10 min opacity >10% | Shutdown for maintenance. |
| | 2115-2130 | 15 min opacity >10% | Startup. |
| 07-20-94 | 0600-0630 | 20 min opacity >10% | Shutdown for maintenance. |
| | 1995-2010 | 10 min opacity >10% | Startup. |
| 07-23-94 | 0045-0100 | 15 min opacity >10% | Shutdown for maintenance. |
| | 1435-1450 | 10 min opacity >10% | Startup. |

300 Sulfuric Acid

On 6-28-94 two 3-hour $SO_2$ averages exceeded the limit of 250 lbs. At 0500 and 0600 the 3-hour averages were 273 and 329 pph respectively. These are both attributed to operator error. This incident was verbally reported to DEQ.

On 6-29-94 one 3-hour $SO_2$ average exceeded the limit of 250 lbs. At 2100 and 2200 1-hour emission values of 334 pph and 400 pph caused a 3-hour average emission of 307 pph at 2200. This was caused by a startup. This incident was verbally reported to DEQ.

400 Sulfuric Acid

Between 7-8-94 and 7-14-94 there were problems with the SO2 analyzer. It would be "fixed" for awhile and then go awry late at night. This continued until the supplier was brought in on 7-15-94 and fixed the problem. While the problem was occurring the burner temperature was reduced 50° to reduce rate to ensure no apparent violations would occur. This problem was verbally reported to DEQ.

If you have any questions or desire further information, please contact me at 234-5356.

Sincerely,

for Jim McWilliam
Environmental Quality Specialist
Environmental/Analytical Services

JM:lm

c: Audrey Cole, IAQB, Pocatello
Robert Wilkosz, IAQB, Boise
File 012.3.1

J. R. SIMPLOT COMPANY P.O. BOX 912 POCATELLO, IDAHO 83204
(208) 232-6620 (PLANT) (208) 238-2700 (GROUP OFFICES)

August 9, 1994

MINERALS & CHEMICAL GROUP

Mr. Rick Elkins
Idaho Air Quality Bureau
224 South Arthur
Pocatello, Idaho 83204

bc: Jack Cochrane
Dean Cowley
Norm Self
Wayne Slaughter
Weaver Stopka
Terry Uhling
Bruce Winegar
Ward Wolleson

Dear Mr. Elkins:

**#400 Phos Acid Plant**

At 0945 on August 8, 1994, the scrubber fan tripped out. The plant was immediately shut down, but the residual reactions and "intertia" of the process caused fugitive emissions with an estimated 60 to 80 percent opacity for about 15 to 20 minutes.

**#400 Sulfuric Acid**

The continuous $SO_2$ analyzer problem previously reported has been further examined and the data downloaded and analyzed. The problem occurred during July 7, 1994, and July 15, 1994. The duration and cause of the missing data is as follows:

| | DATE | TIME | Cause |
|---|---|---|---|
| 1. | 07-07-94 | 0900 thru 1600 | The Instrumentation Department was attempting to fix the problem doing many successive calibration spans and zeroes. |
| 2. | 07-08-94 | 1100 thru 1700 | Maintenance. |
| 3. | 07-10-94 | 0900 thru 1000 | Plant down 0859-1057. |
| 4. | 07-11-94 | 0900 thru 1100 | Maintenance. |
| | | 1300 thru 1400 | Maintenance. |
| | | 1600 | Maintenance. |
| 5. | 07-12-94 | 0900 thru 1500 | Maintenance. |
| 6. | 07-13-94 | 0800 thru 1400 | Maintenance. |
| | | 1500 thru 2400 | System shut down awaiting parts. |
| | 07-14-94 | 0100 thru 2400 | System shut down awaiting parts. |
| 7. | 07-15-94 | 0100 thru 0700 | System shut down awaiting parts. |
| | | 0800 | Fixed! |
| | 07-16-94 | 1200-1300 | Plant down 1135-1352. |

September 1, 1994

Andy Phelps
Bechtel Environmental
50 Beale Street
San Francisco, CA 94119-3965

RE: Requested Information - Plant Upsets in March thru June 1994

Dear Andy:

I have reviewed our weekly emissions reports and spill reports for the months of March, April, May and June of 1994.

We reported numerous opacity related incidents iDuring the period. Upsets in the #3 sulfuric plant on the 28th and 29th of June arising from the sartup of the plant and some operator error resulted in excess emissions of $SO_2$. Three hour average emission were 329 and 307 pounds per hor respectively compared to the permitted value of 250 pounds per hour.

There were no incidents in the month that would have any potential impact on the monitoring network. If you have questions or comments please call (208)238-2870 at your convenience.

Sincerely,

Ward A. Wolleson
Senior Environmental Engineer

c: Steve Curreri
Jack Cochrane
File

J. R. SIMPLOT COMPANY P.O. BOX 912 POCATELLO, IDAHO 83204
(208) 232-6620 (PLANT) (208) 238-2700 (GROUP OFFICES)

MINERALS & CHEMICAL GROUP

September 1, 1994

bc: Dave Finklenburg
Norm Self
Wayne Slaughter
Weaver Stopka
Terry Uhling
Bruce Winegar
Ward Wolleson

Mr. Rick Elkins
Idaho Air Quality Bureau
224 South Arthur
Pocatello, Idaho 83204

Dear Mr. Elkins:

In compliance with IDH&W Regulation 01.1006.01, we report the following excursions due to upset conditions.

**Nitrogen Solutions**

| Date | Time | Excursion | Cause |
|---|---|---|---|
| 08-10-94 | 1135-1220 | 20 min opacity >10% | Shutdown for maintenance. |
| 08-11-94 | 0238-0255 | 15 min opacity >10% | Startup. |
| 08-18-94 | 1615-1650 | 20 min opacity >10% | Shutdown for maintenance. |
| | 1940-2000 | 15 min opacity >10% | Startup. |
| 08-25-94 | 0955-1020 | 15 min opacity >10% | Involuntary shutdown. |
| | 1115-1130 | 15 min opacity >10% | Attempted startup. |
| | 1320-1335 | 15 min opacity >10% | Startup. |

**400 Phosphoric Acid**

On August 25, 1994, at 0920 to 0940, the 400 Phosphoric Acid Plant reduced rate before attempting to descale the Davy McKee Scrubber. The scrubber-fan damper shut stopping airflow out the stack. The operator did not immediately notice. Fugitive emissions resulted which were not emitted from the stack.

If you have any questions or desire further information, please contact me at 234-5356.

Sincerely,

Jim McWilliam
Environmental Quality Specialist
Environmental/Analytical Services

JM:lm

c: Audrey Cole, IAQB, Pocatello
Robert Wilkosz, IAQB, Boise
File 012.3.1

J. R. SIMPLOT COMPANY P.O. BOX 912 POCATELLO, IDAHO 83204
(208) 232-6620 (PLANT) (208) 238-2700 (GROUP OFFICES)

MINERALS & CHEMICAL GROUP

September 16, 1994

Mr. Rick Elkins
Idaho Air Quality Bureau
224 South Arthur
Pocatello, Idaho 83204

Dear Mr. Elkins:

In compliance with IDH&W Regulation 01.1006.01, we report the following excursions due to upset conditions.

**Nitrogen Solutions**

| Date | Time | Excursion | Cause |
|---|---|---|---|
| 08-29-94 | 1600-1625 | 10 min opacity >10% | Shutdown for maintenance. |
| 08-31-94 | 0000-0020 | 10 min opacity >10% | Startup. |
| | 0045-0100 | 10 min opacity >10% | Shutdown for maintenance. |
| | 0150-0200 | 10 min opacity >10% | Attempted startup. |
| | 0200-0215 | 10 min opacity >10% | Startup. |
| 09-04-94 | 0635-0640 | 5 min opacity >10% | Involuntary shutdown; power failure |
| | 0725-0740 | 10 min opacity >10% | Shutdown. |
| 09-11-94 | 0315-0340 | 20 min opacity >10% | Shutdown and purge for turn-around. |

If you have any questions or desire further information, please contact me at 234-5356.

Sincerely,

Jim McWilliam
Environmental Quality Specialist
Environmental/Analytical Services

JM:lm

c: Audrey Cole, IAQB, Pocatello
Robert Wilkosz, IAQB, Boise
File 012.3.1

bc: Dave Finklenburg
Norm Self
Wayne Slaughter
Weaver Stopka
Terry Uhling
Bruce Winegar
Ward Wolleson

J. R. SIMPLOT COMPANY P.O. BOX 912 POCATELLO, IDAHO 83204
(208) 232-6620 (PLANT) (208) 238-2700 (GROUP OFFICES)

MINERALS & CHEMICAL GROUP

October 6, 1994

Mr. Rick Elkins
Idaho Air Quality Bureau
224 South Arthur
Pocatello, Idaho 83204

Dear Mr. Elkins:

In compliance with IDH&W Regulation 01.1006.01, we report the following excursions due to upset conditions.

**Nitrogen Solutions**

| Date | Time | Excursion | Cause |
|---|---|---|---|
| 09-30-94 | 0710-0740 | 30 min opacity >10% | Startup after turnaround. |

**400 Phos Acid Plant**

On 09-28-94 at 0850, visible fugitive emissions for approximately 2 minutes were caused by a man-way being open too early during shutdown. These emissions were not from the stack.

If you have any questions or desire further information, please contact me at 234-5356.

Sincerely,

Jim McWilliam
Environmental Quality Specialist
Environmental/Analytical Services

JM:lm

c: Audrey Cole, IAQB, Pocatello
Robert Wilkosz, IAQB, Boise
File 012.3.1

bc: Dave Finklenburg
Norm Self
Wayne Slaughter
Weaver Stopka
Terry Uhling - Boise
Bruce Winegar
Ward Wolleson

J. R. SIMPLOT COMPANY P.O. BOX 912 POCATELLO, IDAHO 83204
(208) 232-6620 (PLANT) (208) 238-2700 (GROUP OFFICES)

MINERALS & CHEMICAL GROUP

November 8, 1994

Mr. Rick Elkins
Idaho Air Quality Bureau
224 South Arthur
Pocatello, Idaho 83204

Dear Mr. Elkins:

In compliance with IDH&W Regulation 01.1006.01, we report the following excursions due to upset conditions.

**Nitrogen Solutions**

| Date | Time | Excursion | Cause |
|---|---|---|---|
| 10-25-94 | 2110-2130 | 20 min opacity >10% | Problems with Provox. |
| | 2245-2305 | 20 min opacity >10% | Problems with Provox. |
| 10-27-94 | 0925-1200 | 60 min opacity >10% | Shutdown and purge for maintenance. |
| | 1945-2010 | 25 min opacity >10% | Startup. |
| 11-07-94 | 0425-0450 | 25 min opacity >10% | Shutdown for maintenance. |

If you have any questions or desire further information, please contact me at 234-5356.

Sincerely,

Jim McWilliam
Environmental Quality Specialist
Environmental/Analytical Services

JM:lm

c: Audrey Cole, IAQB, Pocatello
Robert Wilkosz, IAQB, Boise
File 012.3.1

bc: Dave Finklenburg
Norm Self
Wayne Slaughter
Weaver Stopka
Terry Uhling - Boise
Bruce Winegar
Ward Wolleson

## Appendix AB – Air Quality Data

Appendix AB comprises four attachments:

(1) Appendix AB-1 – TSP/$PM_{10}$ Gravimetric Data and Lo-vol Gravimetric Data

(2) Appendix AB-2 – TSP/$PM_{10}$ Inorganic Data and Lo-vol Inorganic Data

(3) Appendix AB-3 – Silica and Fluoride Data

(4) Appendix AB-4 – $PM_{10}$ Radionuclide Data and Lo-vol Radionuclide Data

| Sample ID | SAMPLE DATE | N | Type | Time(min) | Volume Flow(m3) | Concen. (ug/m3) | Grav. Validity |
|---|---|---|---|---|---|---|---|
| TBL10063 | 10/06/1993 | T | BL | 1440.0 | 1464.03 | .12 | |
| TBL10083 | 10/08/1993 | T | BL | 1440.0 | 1508.19 | 6.75 | |
| TBL10143 | 10/14/1993 | T | BL | 1440.0 | 1480.55 | 3.11 | |
| TBL10203 | 10/20/1993 | T | BL | 1440.0 | 1463.13 | -1.78 | |
| TBL10243 | 10/24/1993 | T | BL | 1440.0 | 1439.93 | -1.18 | Q |
| PBL10283 | 10/28/1993 | P | BL | 1440.0 | 1529.97 | -1.37 | |
| TBL10283 | 10/28/1993 | T | BL | 1440.0 | 1478.47 | .95 | |
| PBL11053 | 11/05/1993 | P | BL | 1440.0 | 1515.74 | -2.05 | |
| TBL11053 | 11/05/1993 | T | BL | 1440.0 | 1534.66 | 10.76 | |
| PBL11133 | 11/13/1993 | P | BL | 1440.0 | 1537.10 | -1.17 | |
| TBL11133 | 11/13/1993 | T | BL | 1440.0 | 1540.93 | 2.53 | |
| PBL11213 | 11/21/1993 | P | BL | 1440.0 | 1512.43 | -1.06 | |
| TBL11213 | 11/21/1993 | T | BL | 1440.0 | 1523.73 | 8.47 | |
| PBL11253 | 11/25/1993 | P | BL | 1440.0 | 1627.54 | -1.11 | |
| TBL11253 | 11/25/1993 | T | BL | 1440.0 | 1631.62 | 3.31 | |
| PBL12033 | 12/03/1993 | P | BL | 1440.0 | 1528.91 | -.79 | |
| TBL12033 | 12/03/1993 | T | BL | 1440.0 | 1532.70 | 3.26 | |
| PBL12073 | 12/07/1993 | P | BL | 1440.0 | 1499.87 | -.60 | |
| TBL12073 | 12/07/1993 | T | BL | 1440.0 | 1553.58 | 3.16 | |
| PBL12193 | 12/19/1993 | P | BL | 1440.0 | 1543.38 | -1.43 | |
| TBL12193 | 12/19/1993 | T | BL | 1440.0 | 1897.48 | 1.11 | |
| PBL12233 | 12/23/1993 | P | BL | 1440.0 | 1571.88 | -1.46 | |
| TBL12233 | 12/23/1993 | T | BL | 1440.0 | 1525.20 | -1.38 | |
| PBL12313 | 12/31/1993 | P | BL | 1440.0 | 1519.98 | -1.45 | |
| TBL12313 | 12/31/1993 | T | BL | 1440.0 | 1489.80 | -.20 | |
| PBL01084 | 01/08/1994 | P | BL | 1440.0 | 1524.67 | -1.25 | |
| TBL01084 | 01/08/1994 | T | BL | 1440.0 | 1494.25 | 3.82 | |
| PBL01124 | 01/12/1994 | P | BL | 1440.0 | 1504.77 | -.93 | |
| TBL01124 | 01/12/1994 | T | BL | 1440.0 | 1523.52 | 4.99 | |
| PBL01204 | 01/20/1994 | P | BL | 1440.0 | 1529.72 | -1.37 | |
| TBL01204 | 01/20/1994 | T | BL | 1440.0 | 1499.22 | 5.27 | |
| PBL01284 | 01/28/1994 | P | BL | 1440.0 | 1540.77 | -.97 | |
| TBL01284 | 01/28/1994 | T | BL | 1440.0 | 1498.69 | 2.40 | |
| PBL02054 | 02/05/1994 | P | BL | 1440.0 | 1536.25 | -2.54 | |
| TBL02054 | 02/05/1994 | T | BL | 1440.0 | 1501.59 | -.20 | |
| PBL02134 | 02/13/1994 | P | BL | 1440.0 | 1631.05 | -1.35 | |
| TBL02134 | 02/13/1994 | T | BL | 1440.0 | 1631.05 | 1.72 | |
| PBL02174 | 02/17/1994 | P | BL | 1440.0 | 1503.75 | -1.40 | |
| TBL02174 | 02/17/1994 | T | BL | 1440.0 | 1631.05 | 1.66 | |
| PBL02254 | 02/25/1994 | P | BL | 1440.0 | 1502.40 | -.73 | |
| TBL02254 | 02/25/1994 | T | BL | 1440.0 | 1476.35 | 6.24 | |
| PBL03054 | 03/05/1994 | P | BL | 1440.0 | 1516.18 | -.99 | |
| TBL03054 | 03/05/1994 | T | BL | 1440.0 | 1471.57 | 2.18 | |
| PBL03094 | 03/09/1994 | P | BL | 1440.0 | 1631.05 | 1.72 | |
| TBL03094 | 03/09/1994 | T | BL | 1440.0 | 1631.05 | -1.17 | |
| PBL03174 | 03/17/1994 | P | BL | 1440.0 | 1631.05 | -1.53 | |
| TBL03174 | 03/17/1994 | T | BL | 1440.0 | 1450.98 | 23.65 | |

Note: Site -Site 1 to 7 are the normal sampling sites.
Site 8 is the co-located sampler located at Site 1.
Sample date indicates the start date of the sample.
Type - PM = PM10 sampler, TS = TSP sampler, BL = field blank
Gravimetric Validity - Sample validity based on sample & gravimetric QC.

| Sample ID | SAMPLE DATE | N | Type | Time(min) | Volume Flow(m3) | Concen. (ug/m3) | Grav. Validity |
|---|---|---|---|---|---|---|---|
| PBL03254 | 03/25/1994 | P | BL | 1440.0 | 1535.47 | -1.76 | |
| TBL03254 | 03/25/1994 | T | BL | 1440.0 | 1463.95 | 6.63 | |
| PBL04024 | 04/02/1994 | P | BL | 1440.0 | 1427.74 | -.56 | |
| TBL04024 | 04/02/1994 | T | BL | 1440.0 | 1409.43 | 8.52 | |
| PBL04044 | 04/04/1994 | P | BL | 1440.0 | 1467.74 | .75 | |
| TBL04104 | 04/10/1994 | T | BL | 1440.0 | 1425.58 | 2.39 | |
| PBL04164 | 04/16/1994 | P | BL | 1440.0 | 1461.54 | -.55 | |
| TBL04164 | 04/16/1994 | T | BL | 1440.0 | 1422.15 | 2.39 | |
| PBL04244 | 04/24/1994 | P | BL | 1440.0 | 1458.04 | -.82 | |
| TBL04244 | 04/24/1994 | T | BL | 1440.0 | 1494.69 | 13.25 | P |
| PBL04284 | 04/28/1994 | P | BL | 1440.0 | 1484.87 | -2.02 | PR |
| TBL04284 | 04/28/1994 | T | BL | 1440.0 | 1522.18 | -.79 | |
| PBL05064 | 05/06/1994 | P | BL | 1440.0 | 1423.78 | .21 | |
| TBL05064 | 05/06/1994 | T | BL | 1440.0 | 1409.47 | 3.27 | |
| PBL05164 | 05/16/1994 | P | BL | 1440.0 | 1509.70 | -.86 | |
| TBL05164 | 05/16/1994 | T | BL | 1440.0 | 1447.72 | 8.02 | |
| PBL05224 | 05/22/1994 | P | BL | 1440.0 | 1492.29 | -.54 | |
| TBL05224 | 05/22/1994 | T | BL | 1440.0 | 1631.05 | 43.37 | |
| PBL05284 | 05/28/1994 | P | BL | 1440.0 | 1394.75 | -.43 | |
| TBL05284 | 05/28/1994 | T | BL | 1440.0 | 1459.46 | 2.81 | |
| PBL06034 | 06/03/1994 | P | BL | 1440.0 | 1411.39 | -1.13 | |
| TBL06034 | 06/03/1994 | T | BL | 1440.0 | 1439.61 | 3.41 | |
| PBL06114 | 06/11/1994 | P | BL | 1440.0 | 1446.90 | -1.52 | |
| TBL06114 | 06/11/1994 | T | BL | 1440.0 | 1429.37 | 3.50 | |
| PBL06174 | 06/17/1994 | P | BL | 1440.0 | 1631.05 | -.80 | |
| TBL06174 | 06/17/1994 | T | BL | 1440.0 | 1631.05 | 2.94 | |
| PBL06234 | 06/23/1994 | P | BL | 1440.0 | 1440.46 | -1.32 | |
| TBL06234 | 06/23/1994 | T | BL | 1440.0 | 1631.05 | 4.29 | |
| PBL06294 | 06/29/1994 | P | BL | 1440.0 | 1631.05 | -.74 | |
| TBL06294 | 06/29/1994 | T | BL | 1440.0 | 1631.05 | 5.77 | |
| PBL07094 | 07/09/1994 | P | BL | 1440.0 | 1424.60 | -.21 | |
| TBL07094 | 07/09/1994 | T | BL | 1440.0 | 1631.05 | 4.85 | |
| PBL07154 | 07/15/1994 | P | BL | 1440.0 | 1439.97 | -.69 | |
| TBL07154 | 07/15/1994 | T | BL | 1440.0 | 1631.05 | 3.99 | |
| PBL07214 | 07/21/1994 | P | BL | 1440.0 | 1438.99 | -.49 | |
| TBL07214 | 07/21/1994 | T | BL | 1440.0 | 1631.05 | 3.62 | |
| PBL07274 | 07/27/1994 | P | BL | 1440.0 | 1631.05 | -.06 | |
| TBL07274 | 07/27/1994 | T | BL | 1440.0 | 1631.05 | 8.40 | |
| PBL08044 | 08/04/1994 | P | BL | 1440.0 | 1427.70 | .07 | |
| TBL08044 | 08/04/1994 | T | BL | 1440.0 | 1631.05 | 5.71 | |
| PBL08104 | 08/10/1994 | P | BL | 1440.0 | 1446.13 | -.07 | |
| TBL08104 | 08/10/1994 | T | BL | 1440.0 | 1631.05 | 9.88 | |
| PBL08204 | 08/20/1994 | P | BL | | | | |
| TBL08204 | 08/20/1994 | T | BL | 1440.0 | 1631.05 | 5.77 | |
| PBL08264 | 08/26/1994 | P | BL | 1440.0 | 1631.05 | -.31 | |
| TBL08264 | 08/26/1994 | T | BL | 1440.0 | 1631.05 | 9.45 | |
| PBL09034 | 09/03/1994 | P | BL | 1440.0 | 1419.10 | -.71 | |

Note: Site -Site 1 to 7 are the normal sampling sites.
Site 8 is the co-located sampler located at Site 1.
Sample date indicates the start date of the sample.
Type - PM = PM10 sampler, TS = TSP sampler, BL = field blank
Gravimetric Validity - Sample validity based on sample & gravimetric QC.

| Sample ID | SAMPLE DATE | N | Type | Time(min) | Volume Flow(m3) | Concen. (ug/m3) | Grav. Validity |
|---|---|---|---|---|---|---|---|
| TBL09034 | 09/03/1994 | T | BL | 1440.0 | 1390.92 | 12.88 | |
| PBL09094 | 09/09/1994 | P | BL | 1440.0 | 1436.38 | -.49 | |
| TBL09094 | 09/09/1994 | T | BL | 1440.0 | 1380.32 | 13.48 | |
| PBL09134 | 09/13/1994 | P | BL | 1440.0 | 1460.12 | -1.85 | |
| TBL09134 | 09/13/1994 | T | BL | 1440.0 | 1435.20 | 9.20 | |
| PBL09214 | 09/21/1994 | P | BL | 1440.0 | 1471.78 | -.54 | |
| TBL09214 | 09/21/1994 | T | BL | 1440.0 | 1392.79 | 8.69 | |
| PBL09294 | 09/29/1994 | P | BL | 1440.0 | 1631.05 | | |
| TBL09294 | 09/29/1994 | T | BL | 1440.0 | 1631.05 | | |
| PBL10034 | 10/03/1994 | P | BL | 1440.0 | | .00 | |
| TBL10034 | 10/03/1994 | T | BL | 1440.0 | | 10.55 | |
| PBL10074 | 10/07/1994 | P | BL | 1440.0 | 1437.40 | -1.74 | |
| TBL10074 | 10/07/1994 | T | BL | 1440.0 | 1411.92 | 2.62 | |
| PBL10134 | 10/13/1994 | P | BL | 1440.0 | 1441.97 | -.62 | |
| TBL10134 | 10/13/1994 | T | BL | 1440.0 | 1416.40 | 4.10 | |
| PBL10194 | 10/19/1994 | P | BL | 1440.0 | 1445.03 | -1.18 | |
| TBL10194 | 10/19/1994 | T | BL | 1440.0 | 1474.27 | .20 | |
| PBL10254 | 10/25/1994 | P | BL | 1440.0 | 1517.94 | -1.12 | |
| TBL10254 | 10/25/1994 | T | BL | 1440.0 | 1470.07 | 1.09 | |
| 1PM10023 | 10/02/1993 | 1 | PM | 1456.0 | 1509.94 | 35.25 | |
| 2PM10023 | 10/02/1993 | 2 | PM | 1480.0 | 1494.18 | 54.04 | |
| 3PM10023 | 10/02/1993 | 3 | PM | 1484.7 | 1491.48 | 36.76 | |
| 4PM10023 | 10/02/1993 | 4 | PM | 1462.8 | 1527.97 | 39.09 | |
| 5PM10023 | 10/02/1993 | 5 | PM | 1126.3 | 1151.16 | 43.81 | SR |
| 6PM10023 | 10/02/1993 | 6 | PM | 1443.5 | 1482.55 | 67.63 | |
| 7PM10023 | 10/02/1993 | 7 | PM | 1485.4 | 1544.13 | 43.93 | |
| 8PM10023 | 10/02/1993 | 8 | PM | 1416.3 | 1472.30 | 34.86 | |
| 1PM10043 | 10/04/1993 | 1 | PM | 1450.8 | 1494.16 | 43.80 | |
| 2PM10043 | 10/04/1993 | 2 | PM | 1480.4 | 1484.23 | 47.06 | |
| 3PM10043 | 10/04/1993 | 3 | PM | 1483.2 | 1479.69 | 183.05 | QR |
| 4PM10043 | 10/04/1993 | 4 | PM | 1466.7 | 1521.45 | 40.97 | |
| 5PM10043 | 10/04/1993 | 5 | PM | 270.6 | 274.66 | 29.15 | TR |
| 6PM10043 | 10/04/1993 | 6 | PM | 1440.8 | 1469.58 | 81.43 | |
| 7PM10043 | 10/04/1993 | 7 | PM | 1488.6 | 1536.79 | 58.86 | |
| 8PM10043 | 10/04/1993 | 8 | PM | 936.0 | 966.30 | 42.14 | TR |
| 1PM10063 | 10/06/1993 | 1 | PM | 1452.2 | 1509.17 | 25.33 | |
| 2PM10063 | 10/06/1993 | 2 | PM | 1478.3 | 1495.56 | 36.06 | |
| 3PM10063 | 10/06/1993 | 3 | PM | 1487.6 | 1497.51 | 30.40 | |
| 4PM10063 | 10/06/1993 | 4 | PM | 1461.9 | 1530.22 | 23.87 | |
| 5PM10063 | 10/06/1993 | 5 | PM | 1440.0 | 1474.84 | | VOID |
| 6PM10063 | 10/06/1993 | 6 | PM | 1442.4 | 1484.52 | 12.13 | |
| 7PM10063 | 10/06/1993 | 7 | PM | 1488.4 | 1550.50 | 24.97 | |
| 1PM10083 | 10/08/1993 | 1 | PM | 1453.4 | 1555.97 | 10.55 | |
| 2PM10083 | 10/08/1993 | 2 | PM | 1478.4 | 1540.79 | 17.73 | |
| 3PM10083 | 10/08/1993 | 3 | PM | 1486.1 | 1541.16 | 6.95 | |
| 4PM10083 | 10/08/1993 | 4 | PM | 1463.4 | 1577.99 | 6.15 | |
| 5PM10083 | 10/08/1993 | 5 | PM | 1440.0 | 1519.32 | | VOID |

Note: Site -Site 1 to 7 are the normal sampling sites.
Site 8 is the co-located sampler located at Site 1.
Sample date indicates the start date of the sample.
Type - PM = PM10 sampler, TS = TSP sampler, BL = field blank
Gravimetric Validity - Sample validity based on sample & gravimetric QC.

| Sample ID | SAMPLE DATE | N | Type | Time(min) | Volume Flow(m3) | Concen. (ug/m3) | Grav. Validity |
|---|---|---|---|---|---|---|---|
| 6PM10083 | 10/08/1993 | 6 | PM | 1439.3 | 1526.04 | 3.74 | |
| 7PM10083 | 10/08/1993 | 7 | PM | 1486.8 | 1595.56 | 5.08 | |
| 8PM10083 | 10/08/1993 | 8 | PM | 1434.6 | 1539.54 | 10.98 | |
| 1PM10103 | 10/10/1993 | 1 | PM | 1449.6 | 1526.70 | 11.73 | |
| 2PM10103 | 10/10/1993 | 2 | PM | 1478.5 | 1515.86 | 28.19 | |
| 3PM10103 | 10/10/1993 | 3 | PM | 892.3 | 910.30 | 9.78 | TR |
| 4PM10103 | 10/10/1993 | 4 | PM | 1463.9 | 1552.87 | 12.50 | |
| 5PM10103 | 10/10/1993 | 5 | PM | | | | VOID |
| 6PM10103 | 10/10/1993 | 6 | PM | 1440.0 | 1501.95 | 8.19 | |
| 7PM10103 | 10/10/1993 | 7 | PM | 1482.9 | 1565.51 | 12.21 | |
| 1PM10123 | 10/12/1993 | 1 | PM | 1445.3 | 1517.88 | 23.14 | |
| 2PM10123 | 10/12/1993 | 2 | PM | 1461.1 | 1493.80 | 50.04 | |
| 3PM10123 | 10/12/1993 | 3 | PM | 1448.0 | 1473.07 | 16.10 | |
| 4PM10123 | 10/12/1993 | 4 | PM | 1462.3 | 1546.83 | 13.07 | |
| 5PM10123 | 10/12/1993 | 5 | PM | 1440.0 | 1490.45 | | VOID |
| 6PM10123 | 10/12/1993 | 6 | PM | 1441.3 | 1499.06 | 9.95 | |
| 7PM10123 | 10/12/1993 | 7 | PM | 1440.1 | 1516.04 | 8.65 | |
| 8PM10123 | 10/12/1993 | 8 | PM | 1430.8 | 1506.25 | 23.25 | |
| 1PM10143 | 10/14/1993 | 1 | PM | 1450.4 | 1524.30 | 19.89 | |
| 2PM10143 | 10/14/1993 | 2 | PM | 1459.6 | 1493.30 | 45.30 | |
| 3PM10143 | 10/14/1993 | 3 | PM | 1450.4 | 1476.53 | 11.66 | |
| 4PM10143 | 10/14/1993 | 4 | PM | 1464.5 | 1550.23 | 13.10 | |
| 5PM10143 | 10/14/1993 | 5 | PM | 1440.0 | 1491.47 | | VOID |
| 6PM10143 | 10/14/1993 | 6 | PM | 1441.0 | 1499.81 | 9.47 | |
| 7PM10143 | 10/14/1993 | 7 | PM | 1439.3 | 1516.26 | 11.48 | |
| 1PM10163 | 10/16/1993 | 1 | PM | 1449.5 | 1539.07 | 9.36 | |
| 2PM10163 | 10/16/1993 | 2 | PM | 1460.9 | 1510.06 | 22.60 | |
| 3PM10163 | 10/16/1993 | 3 | PM | 1444.4 | 1485.64 | 11.25 | |
| 4PM10163 | 10/16/1993 | 4 | PM | 1466.8 | 1568.70 | 14.35 | |
| 5PM10163 | 10/16/1993 | 5 | PM | 1471.5 | 1539.85 | 17.02 | |
| 6PM10163 | 10/16/1993 | 6 | PM | 1440.6 | 1514.90 | 7.99 | |
| 7PM10163 | 10/16/1993 | 7 | PM | 1438.0 | 1530.57 | 26.67 | |
| 8PM10163 | 10/16/1993 | 8 | PM | 1435.2 | 1527.59 | 10.94 | |
| 1PM10183 | 10/18/1993 | 1 | PM | 1446.9 | 1538.53 | 30.44 | |
| 2PM10183 | 10/18/1993 | 2 | PM | 1462.7 | 1514.07 | 64.10 | |
| 3PM10183 | 10/18/1993 | 3 | PM | 1445.8 | 1489.17 | 18.01 | |
| 4PM10183 | 10/18/1993 | 4 | PM | 1467.2 | 1571.37 | 11.53 | |
| 5PM10183 | 10/18/1993 | 5 | PM | 1469.4 | 1539.86 | 7.02 | |
| 6PM10183 | 10/18/1993 | 6 | PM | 1442.4 | 1518.96 | 6.92 | |
| 7PM10183 | 10/18/1993 | 7 | PM | 1438.9 | 1533.69 | 7.57 | |
| 1PM10203 | 10/20/1993 | 1 | PM | 1448.3 | 1546.08 | 34.30 | |
| 2PM10203 | 10/20/1993 | 2 | PM | 1445.4 | 1502.06 | 40.10 | |
| 3PM10203 | 10/20/1993 | 3 | PM | 1451.6 | 1501.06 | 24.80 | |
| 4PM10203 | 10/20/1993 | 4 | PM | 1444.4 | 1553.05 | 41.04 | |
| 5PM10203 | 10/20/1993 | 5 | PM | 1461.5 | 1537.62 | 9.96 | |
| 6PM10203 | 10/20/1993 | 6 | PM | 1442.3 | 1524.81 | 10.89 | |
| 7PM10203 | 10/20/1993 | 7 | PM | 1440.3 | 1541.22 | 40.58 | |

Note: Site -Site 1 to 7 are the normal sampling sites.
Site 8 is the co-located sampler located at Site 1.
Sample date indicates the start date of the sample.
Type - PM = PM10 sampler, TS = TSP sampler, BL = field blank
Gravimetric Validity - Sample validity based on sample & gravimetric QC.

| Sample ID | SAMPLE DATE | N | Type | Time(min) | Volume Flow(m3) | Concen. (ug/m3) | Grav. Validity |
|---|---|---|---|---|---|---|---|
| 8PM10203 | 10/20/1993 | 8 | PM | 1458.4 | 1560.58 | 33.79 | |
| 1PM10223 | 10/22/1993 | 1 | PM | 1449.0 | 1522.83 | 28.45 | Q |
| 2PM10223 | 10/22/1993 | 2 | PM | 1444.4 | 1477.75 | 38.93 | Q |
| 3PM10223 | 10/22/1993 | 3 | PM | 1449.4 | 1475.52 | 20.68 | |
| 4PM10223 | 10/22/1993 | 4 | PM | 1448.6 | 1533.40 | 30.34 | |
| 5PM10223 | 10/22/1993 | 5 | PM | 1458.1 | 1510.22 | 36.57 | |
| 6PM10223 | 10/22/1993 | 6 | PM | 1440.3 | 1499.08 | 18.69 | |
| 7PM10223 | 10/22/1993 | 7 | PM | 1440.5 | 1517.53 | 29.47 | |
| 1PM10243 | 10/24/1993 | 1 | PM | 1450.9 | 1524.29 | 47.99 | |
| 2PM10243 | 10/24/1993 | 2 | PM | 1448.0 | 1480.90 | 106.76 | |
| 3PM10243 | 10/24/1993 | 3 | PM | 1447.5 | 1473.09 | 21.26 | |
| 4PM10243 | 10/24/1993 | 4 | PM | 1451.7 | 1536.15 | 17.59 | |
| 5PM10243 | 10/24/1993 | 5 | PM | 1457.7 | 1509.27 | 19.76 | |
| 6PM10243 | 10/24/1993 | 6 | PM | 1439.4 | 1497.62 | 14.03 | |
| 7PM10243 | 10/24/1993 | 7 | PM | 1367.0 | 1439.59 | 8.41 | SR |
| 8PM10243 | 10/24/1993 | 8 | PM | 1464.5 | 1542.27 | 47.23 | |
| 1PM10263 | 10/26/1993 | 1 | PM | 1446.3 | 1553.41 | 24.61 | |
| 2PM10263 | 10/26/1993 | 2 | PM | 1444.4 | 1510.22 | 31.07 | |
| 3PM10263 | 10/26/1993 | 3 | PM | 1454.8 | 1521.10 | 23.62 | |
| 4PM10263 | 10/26/1993 | 4 | PM | 1449.9 | 1568.53 | 29.41 | |
| 5PM10263 | 10/26/1993 | 5 | PM | 1456.4 | 1541.62 | 17.33 | |
| 6PM10263 | 10/26/1993 | 6 | PM | 1442.4 | 1534.27 | 24.65 | |
| 7PM10263 | 10/26/1993 | 7 | PM | 1442.5 | 1553.05 | 9.79 | |
| 1PM10283 | 10/28/1993 | 1 | PM | 1453.4 | 1540.50 | 30.79 | |
| 2PM10283 | 10/28/1993 | 2 | PM | 1445.3 | 1491.27 | 103.87 | |
| 3PM10283 | 10/28/1993 | 3 | PM | 1456.0 | 1502.31 | 21.71 | |
| 4PM10283 | 10/28/1993 | 4 | PM | 1450.3 | 1548.30 | 16.61 | |
| 5PM10283 | 10/28/1993 | 5 | PM | 1446.8 | 1511.30 | 15.23 | |
| 6PM10283 | 10/28/1993 | 6 | PM | 1446.5 | 1518.40 | 14.83 | |
| 7PM10283 | 10/28/1993 | 7 | PM | 1440.3 | 1530.28 | 11.84 | |
| 8PM10283 | 10/28/1993 | 8 | PM | 1463.1 | 1554.51 | 29.42 | |
| 1PM10303 | 10/30/1993 | 1 | PM | 1452.6 | 1574.90 | 20.20 | |
| 2PM10303 | 10/30/1993 | 2 | PM | 1445.0 | 1525.13 | 32.74 | |
| 3PM10303 | 10/30/1993 | 3 | PM | 1294.9 | 1366.71 | 20.43 | SMR |
| 4PM10303 | 10/30/1993 | 4 | PM | 1449.0 | 1582.36 | 15.49 | |
| 5PM10303 | 10/30/1993 | 5 | PM | 1442.1 | 1540.94 | 32.08 | |
| 6PM10303 | 10/30/1993 | 6 | PM | 1440.0 | 1546.19 | 15.98 | |
| 7PM10303 | 10/30/1993 | 7 | PM | 1439.3 | 1564.23 | 22.13 | |
| 1PM11013 | 11/01/1993 | 1 | PM | 722.9 | 779.51 | 39.41 | TMR |
| 2PM11013 | 11/01/1993 | 2 | PM | 1448.5 | 1520.54 | 79.03 | |
| 3PM11013 | 11/01/1993 | 3 | PM | 1454.7 | 1527.05 | 25.62 | |
| 4PM11013 | 11/01/1993 | 4 | PM | 1448.3 | 1573.03 | 14.95 | |
| 5PM11013 | 11/01/1993 | 5 | PM | 1438.0 | 1528.21 | 13.75 | |
| 6PM11013 | 11/01/1993 | 6 | PM | 1442.6 | 1540.57 | 13.96 | |
| 7PM11013 | 11/01/1993 | 7 | PM | 1439.6 | 1556.08 | 11.51 | |
| 8PM11013 | 11/01/1993 | 8 | PM | 1461.8 | 1580.08 | 37.74 | |
| 1PM11033 | 11/03/1993 | 1 | PM | 1451.2 | 1492.59 | 67.64 | |

Note: Site -Site 1 to 7 are the normal sampling sites.
Site 8 is the co-located sampler located at Site 1.
Sample date indicates the start date of the sample.
Type - PM = PM10 sampler, TS = TSP sampler, BL = field blank
Gravimetric Validity - Sample validity based on sample & gravimetric QC.

| Sample ID | SAMPLE DATE | N | Type | Time(min) | Volume Flow(m3) | Concen. (ug/m3) | Grav. Validity |
|---|---|---|---|---|---|---|---|
| 2PM11033 | 11/03/1993 | 2 | PM | 1615.6 | 1665.85 | 94.66 | |
| 3PM11033 | 11/03/1993 | 3 | PM | 1455.6 | 1500.87 | 37.33 | |
| 4PM11033 | 11/03/1993 | 4 | PM | 1449.0 | 1545.81 | 33.27 | |
| 5PM11033 | 11/03/1993 | 5 | PM | 1444.0 | 1507.31 | 39.96 | |
| 6PM11033 | 11/03/1993 | 6 | PM | 1444.2 | 1514.88 | 27.94 | |
| 7PM11033 | 11/03/1993 | 7 | PM | 1443.0 | 1532.05 | 24.69 | |
| 1PM11053 | 11/05/1993 | 1 | PM | 1455.7 | 1539.93 | 24.50 | |
| 2PM11053 | 11/05/1993 | 2 | PM | 1445.2 | 1532.59 | 46.29 | |
| 3PM11053 | 11/05/1993 | 3 | PM | 1456.0 | 1544.04 | 15.36 | |
| 4PM11053 | 11/05/1993 | 4 | PM | 1446.7 | 1587.35 | 14.18 | |
| 5PM11053 | 11/05/1993 | 5 | PM | 1442.7 | 1548.89 | 10.66 | |
| 6PM11053 | 11/05/1993 | 6 | PM | 1449.9 | 1564.22 | 17.21 | |
| 7PM11053 | 11/05/1993 | 7 | PM | 1440.1 | 1515.84 | 7.53 | |
| 8PM11053 | 11/05/1993 | 8 | PM | 1464.6 | 1541.63 | 24.66 | |
| 1PM11073 | 11/07/1993 | 1 | PM | 1448.2 | 1529.74 | 22.50 | |
| 2PM11073 | 11/07/1993 | 2 | PM | 1448.8 | 1534.19 | 38.81 | |
| 3PM11073 | 11/07/1993 | 3 | PM | 1446.8 | 1532.07 | 16.72 | |
| 4PM11073 | 11/07/1993 | 4 | PM | 1444.1 | 1582.21 | 14.61 | |
| 5PM11073 | 11/07/1993 | 5 | PM | 1440.1 | 1543.86 | 4.99 | |
| 6PM11073 | 11/07/1993 | 6 | PM | 1440.7 | 1552.05 | 8.32 | |
| 7PM11073 | 11/07/1993 | 7 | PM | 1436.7 | 1510.06 | 8.35 | |
| 1PM11093 | 11/09/1993 | 1 | PM | 1448.3 | 1534.89 | 28.16 | |
| 2PM11093 | 11/09/1993 | 2 | PM | 1450.0 | 1540.51 | 48.97 | |
| 3PM11093 | 11/09/1993 | 3 | PM | 1459.7 | 1550.81 | 19.36 | |
| 4PM11093 | 11/09/1993 | 4 | PM | 1449.8 | 1593.67 | 33.72 | |
| 5PM11093 | 11/09/1993 | 5 | PM | 1440.1 | 1548.91 | 30.30 | |
| 6PM11093 | 11/09/1993 | 6 | PM | 1442.4 | 1558.98 | 28.24 | |
| 7PM11093 | 11/09/1993 | 7 | PM | 1441.9 | 1520.51 | 33.76 | |
| 8PM11093 | 11/09/1993 | 8 | PM | 1463.7 | 1543.50 | 29.04 | |
| 1PM11113 | 11/11/1993 | 1 | PM | 1453.8 | 1543.56 | 72.67 | |
| 2PM11113 | 11/11/1993 | 2 | PM | 1446.5 | 1539.62 | 103.33 | |
| 3PM11113 | 11/11/1993 | 3 | PM | 1458.6 | 1552.50 | 53.04 | |
| 4PM11113 | 11/11/1993 | 4 | PM | 1447.7 | 1594.27 | 69.16 | |
| 5PM11113 | 11/11/1993 | 5 | PM | 1444.3 | 1556.29 | 42.05 | |
| 6PM11113 | 11/11/1993 | 6 | PM | 1443.5 | 1563.03 | 32.90 | |
| 7PM11113 | 11/11/1993 | 7 | PM | 1442.4 | 1523.86 | 117.40 | |
| 1PM11133 | 11/13/1993 | 1 | PM | 1452.6 | 1558.28 | 33.78 | |
| 2PM11133 | 11/13/1993 | 2 | PM | 1447.2 | 1556.34 | 102.87 | |
| 3PM11133 | 11/13/1993 | 3 | PM | 1453.0 | 1562.58 | 29.52 | |
| 4PM11133 | 11/13/1993 | 4 | PM | 1450.1 | 1613.50 | 19.97 | |
| 5PM11133 | 11/13/1993 | 5 | PM | 1442.6 | 1570.60 | 17.71 | |
| 6PM11133 | 11/13/1993 | 6 | PM | 1441.8 | 1577.40 | 17.57 | |
| 7PM11133 | 11/13/1993 | 7 | PM | 1439.7 | 1536.78 | 16.15 | |
| 8PM11133 | 11/13/1993 | 8 | PM | 1465.4 | 1564.21 | 37.93 | |
| 1PM11153 | 11/15/1993 | 1 | PM | 1450.3 | 1549.49 | 26.73 | |
| 2PM11153 | 11/15/1993 | 2 | PM | 1446.6 | 1549.39 | 44.24 | |
| 3PM11153 | 11/15/1993 | 3 | PM | 1456.5 | 1559.99 | 22.51 | |

Note: Site -Site 1 to 7 are the normal sampling sites.
Site 8 is the co-located sampler located at Site 1.
Sample date indicates the start date of the sample.
Type - PM = PM10 sampler, TS = TSP sampler, BL = field blank
Gravimetric Validity - Sample validity based on sample & gravimetric QC.

| Sample ID | SAMPLE DATE | N | Type | Time(min) | Volume Flow(m3) | Concen. (ug/m3) | Grav. Validity |
|---|---|---|---|---|---|---|---|
| 4PM11153 | 11/15/1993 | 4 | PM | 1447.2 | 1603.72 | 28.95 | |
| 5PM11153 | 11/15/1993 | 5 | PM | 1435.2 | 1556.20 | 13.95 | |
| 6PM11153 | 11/15/1993 | 6 | PM | 1441.5 | 1570.66 | 13.95 | |
| 7PM11153 | 11/15/1993 | 7 | PM | 1438.5 | 1529.27 | 14.66 | |
| 1PM11173 | 11/17/1993 | 1 | PM | 1448.8 | 1523.15 | 16.36 | |
| 2PM11173 | 11/17/1993 | 2 | PM | 1445.0 | 1522.92 | 48.16 | |
| 3PM11173 | 11/17/1993 | 3 | PM | 1455.6 | 1534.09 | 13.63 | |
| 4PM11173 | 11/17/1993 | 4 | PM | 1448.1 | 1579.09 | 21.80 | |
| 5PM11173 | 11/17/1993 | 5 | PM | 1444.0 | 1540.72 | 17.40 | |
| 6PM11173 | 11/17/1993 | 6 | PM | 1442.2 | 1546.31 | 22.97 | |
| 7PM11173 | 11/17/1993 | 7 | PM | 1439.9 | 1506.29 | 10.96 | P |
| 8PM11173 | 11/17/1993 | 8 | PM | 1461.1 | 1528.47 | 16.69 | |
| 1PM11193 | 11/19/1993 | 1 | PM | 1453.5 | 1556.95 | 20.44 | |
| 2PM11193 | 11/19/1993 | 2 | PM | 1444.5 | 1551.15 | 31.48 | |
| 3PM11193 | 11/19/1993 | 3 | PM | 748.6 | 803.87 | 22.90 | TR |
| 4PM11193 | 11/19/1993 | 4 | PM | 1448.7 | 1609.56 | 19.33 | |
| 5PM11193 | 11/19/1993 | 5 | PM | 1443.0 | 1568.70 | 8.04 | |
| 6PM11193 | 11/19/1993 | 6 | PM | 1442.3 | 1575.62 | 10.67 | |
| 7PM11193 | 11/19/1993 | 7 | PM | 1439.5 | 1534.29 | 5.28 | |
| 1PM11213 | 11/21/1993 | 1 | PM | 1451.9 | 1532.54 | 19.00 | |
| 2PM11213 | 11/21/1993 | 2 | PM | 1450.8 | 1535.16 | 53.19 | |
| 3PM11213 | 11/21/1993 | 3 | PM | 1454.5 | 1539.07 | 12.35 | |
| 4PM11213 | 11/21/1993 | 4 | PM | 1449.2 | 1586.60 | 22.70 | |
| 5PM11213 | 11/21/1993 | 5 | PM | 1438.6 | 1541.11 | 18.31 | |
| 6PM11213 | 11/21/1993 | 6 | PM | 1439.3 | 1549.40 | 20.54 | |
| 7PM11213 | 11/21/1993 | 7 | PM | 1392.2 | 1462.23 | 5.20 | |
| 8PM11213 | 11/21/1993 | 8 | PM | 1464.0 | 1537.64 | 19.13 | |
| 1PM11233 | 11/23/1993 | 1 | PM | 1448.6 | 1566.75 | 37.74 | |
| 2PM11233 | 11/23/1993 | 2 | PM | 1444.9 | 1566.64 | 94.59 | |
| 3PM11233 | 11/23/1993 | 3 | PM | 1451.3 | 1573.58 | 15.64 | |
| 4PM11233 | 11/23/1993 | 4 | PM | 1448.6 | 1625.08 | 7.64 | |
| 5PM11233 | 11/23/1993 | 5 | PM | 1439.0 | 1579.55 | 4.81 | |
| 6PM11233 | 11/23/1993 | 6 | PM | 1441.3 | 1589.79 | 3.97 | |
| 7PM11233 | 11/23/1993 | 7 | PM | 1439.9 | 1549.63 | 3.23 | |
| 1PM11253 | 11/25/1993 | 1 | PM | 1450.6 | 1647.70 | 58.72 | |
| 2PM11253 | 11/25/1993 | 2 | PM | 1441.3 | 1641.22 | 44.75 | |
| 3PM11253 | 11/25/1993 | 3 | PM | 1455.8 | 1657.73 | 67.42 | |
| 4PM11253 | 11/25/1993 | 4 | PM | 1445.7 | 1703.25 | 72.73 | |
| 5PM11253 | 11/25/1993 | 5 | PM | 1444.0 | 1664.65 | 40.39 | |
| 6PM11253 | 11/25/1993 | 6 | PM | 1444.1 | 1672.91 | 35.35 | |
| 7PM11253 | 11/25/1993 | 7 | PM | 1442.0 | 1629.80 | 47.21 | |
| 8PM11253 | 11/25/1993 | 8 | PM | 1562.0 | 1765.43 | 54.58 | SR |
| 1PM11273 | 11/27/1993 | 1 | PM | 1454.1 | 1637.55 | 41.73 | |
| 2PM11273 | 11/27/1993 | 2 | PM | 1443.9 | 1630.11 | 36.95 | |
| 3PM11273 | 11/27/1993 | 3 | PM | 1454.7 | 1642.30 | 40.39 | |
| 4PM11273 | 11/27/1993 | 4 | PM | 1450.4 | 1694.17 | 48.96 | |
| 5PM11273 | 11/27/1993 | 5 | PM | 1439.2 | 1644.90 | 90.76 | |

Note: Site -Site 1 to 7 are the normal sampling sites.
Site 8 is the co-located sampler located at Site 1.
Sample date indicates the start date of the sample.
Type - PM = PM10 sampler, TS = TSP sampler, BL = field blank
Gravimetric Validity - Sample validity based on sample & gravimetric QC.

| Sample ID | SAMPLE DATE | N | Type | Time(min) | Volume Flow(m3) | Concen. (ug/m3) | Grav. Validity |
|---|---|---|---|---|---|---|---|
| 6PM11273 | 11/27/1993 | 6 | PM | 1439.6 | 1653.43 | 26.14 | |
| 7PM11273 | 11/27/1993 | 7 | PM | 1439.7 | 1613.30 | 60.16 | |
| 1PM11293 | 11/29/1993 | 1 | PM | 1446.0 | 1535.28 | 43.15 | |
| 2PM11293 | 11/29/1993 | 2 | PM | 1445.7 | 1538.76 | 56.51 | |
| 3PM11293 | 11/29/1993 | 3 | PM | 1454.1 | 1547.71 | 31.36 | |
| 4PM11293 | 11/29/1993 | 4 | PM | 1446.9 | 1593.39 | 34.79 | |
| 5PM11293 | 11/29/1993 | 5 | PM | 1437.8 | 1549.29 | 40.49 | |
| 6PM11293 | 11/29/1993 | 6 | PM | 1440.5 | 1559.78 | 22.64 | |
| 7PM11293 | 11/29/1993 | 7 | PM | 1440.0 | 1521.32 | 20.52 | |
| 8PM11293 | 11/29/1993 | 8 | PM | 1460.8 | 1543.30 | 44.48 | |
| 1PM12013 | 12/01/1993 | 1 | PM | 1448.9 | 1523.26 | 12.22 | |
| 2PM12013 | 12/01/1993 | 2 | PM | 1443.2 | 1521.02 | 43.15 | |
| 3PM12013 | 12/01/1993 | 3 | PM | 1455.5 | 1533.99 | 10.11 | |
| 4PM12013 | 12/01/1993 | 4 | PM | 1445.0 | 1575.71 | 6.60 | |
| 5PM12013 | 12/01/1993 | 5 | PM | 1439.8 | 1536.24 | 2.34 | |
| 6PM12013 | 12/01/1993 | 6 | PM | 1441.4 | 1545.45 | 2.53 | |
| 7PM12013 | 12/01/1993 | 7 | PM | 1441.9 | 1508.38 | 1.86 | |
| 1PM12033 | 12/03/1993 | 1 | PM | 1453.9 | 1543.66 | 15.23 | |
| 2PM12033 | 12/03/1993 | 2 | PM | 1444.3 | 1537.27 | 40.03 | |
| 3PM12033 | 12/03/1993 | 3 | PM | 1454.3 | 1547.92 | 9.37 | |
| 4PM12033 | 12/03/1993 | 4 | PM | 1448.2 | 1594.82 | 12.80 | |
| 5PM12033 | 12/03/1993 | 5 | PM | 1442.1 | 1553.92 | 10.62 | |
| 6PM12033 | 12/03/1993 | 6 | PM | 1440.6 | 1559.89 | 5.13 | |
| 7PM12033 | 12/03/1993 | 7 | PM | 1438.6 | 1519.84 | 6.65 | |
| 8PM12033 | 12/03/1993 | 8 | PM | 1462.9 | 1545.51 | 15.67 | |
| 1PM12053 | 12/05/1993 | 1 | PM | 1451.3 | 1564.41 | 18.93 | |
| 2PM12053 | 12/05/1993 | 2 | PM | 1443.6 | 1559.99 | 22.32 | |
| 3PM12053 | 12/05/1993 | 3 | PM | 1452.3 | 1569.40 | 11.22 | |
| 4PM12053 | 12/05/1993 | 4 | PM | 1445.7 | 1616.38 | 21.29 | |
| 5PM12053 | 12/05/1993 | 5 | PM | 1437.5 | 1572.62 | 25.51 | |
| 6PM12053 | 12/05/1993 | 6 | PM | 1439.7 | 1582.73 | 4.62 | |
| 7PM12053 | 12/05/1993 | 7 | PM | 1434.8 | 1538.95 | 7.93 | |
| 1PM12073 | 12/07/1993 | 1 | PM | 1448.9 | 1555.46 | 15.25 | |
| 2PM12073 | 12/07/1993 | 2 | PM | 1444.5 | 1554.59 | 23.49 | |
| 3PM12073 | 12/07/1993 | 3 | PM | 1456.5 | 1567.50 | 9.19 | |
| 4PM12073 | 12/07/1993 | 4 | PM | 1446.6 | 1610.79 | 15.22 | |
| 5PM12073 | 12/07/1993 | 5 | PM | 1441.2 | 1570.21 | 24.66 | |
| 6PM12073 | 12/07/1993 | 6 | PM | 1441.4 | 1578.11 | 6.47 | |
| 7PM12073 | 12/07/1993 | 7 | PM | 1440.9 | 1539.21 | 24.64 | |
| 8PM12073 | 12/07/1993 | 8 | PM | 1460.0 | 1559.61 | 15.21 | |
| 1PM12093 | 12/09/1993 | 1 | PM | 1451.9 | 1508.90 | 17.31 | |
| 2PM12093 | 12/09/1993 | 2 | PM | 1443.3 | 1503.68 | 36.93 | |
| 3PM12093 | 12/09/1993 | 3 | PM | 1456.3 | 1517.22 | 7.85 | |
| 4PM12093 | 12/09/1993 | 4 | PM | 1450.0 | 1563.01 | 9.03 | |
| 5PM12093 | 12/09/1993 | 5 | PM | 1443.3 | 1522.27 | 2.23 | |
| 6PM12093 | 12/09/1993 | 6 | PM | 1444.4 | 1530.88 | 2.29 | |
| 7PM12093 | 12/09/1993 | 7 | PM | 1441.2 | 1490.31 | 2.35 | |

Note: Site -Site 1 to 7 are the normal sampling sites.
Site 8 is the co-located sampler located at Site 1.
Sample date indicates the start date of the sample.
Type - PM = PM10 sampler, TS = TSP sampler, BL = field blank
Gravimetric Validity - Sample validity based on sample & gravimetric QC.

| Sample ID | SAMPLE DATE | N | Type | Time(min) | Volume Flow(m3) | Concen. (ug/m3) | Grav. Validity |
|---|---|---|---|---|---|---|---|
| 1PM12113 | 12/11/1993 | 1 | PM | 1454.2 | 1506.92 | 19.92 | |
| 2PM12113 | 12/11/1993 | 2 | PM | 1445.4 | 1501.53 | 31.45 | |
| 3PM12113 | 12/11/1993 | 3 | PM | 1455.9 | 1512.44 | 14.89 | |
| 4PM12113 | 12/11/1993 | 4 | PM | 1451.7 | 1508.07 | 17.38 | |
| 5PM12113 | 12/11/1993 | 5 | PM | 1442.8 | 1517.38 | 13.52 | |
| 6PM12113 | 12/11/1993 | 6 | PM | 1438.5 | 1520.27 | 10.33 | |
| 7PM12113 | 12/11/1993 | 7 | PM | 1440.0 | 1484.83 | 22.17 | |
| 8PM12113 | 12/11/1993 | 8 | PM | 1466.0 | 1511.64 | 20.98 | |
| 1PM12133 | 12/13/1993 | 1 | PM | 1450.7 | 1563.76 | 16.12 | |
| 2PM12133 | 12/13/1993 | 2 | PM | 1445.3 | 1561.83 | 24.67 | |
| 3PM12133 | 12/13/1993 | 3 | PM | 1455.9 | 1573.29 | 10.24 | |
| 4PM12133 | 12/13/1993 | 4 | PM | 1449.0 | 1565.83 | 13.04 | |
| 5PM12133 | 12/13/1993 | 5 | PM | 1437.9 | 1573.05 | 17.17 | |
| 6PM12133 | 12/13/1993 | 6 | PM | 1440.7 | 1583.83 | 3.85 | |
| 7PM12133 | 12/13/1993 | 7 | PM | 1438.2 | 1542.59 | 5.45 | |
| 1PM12153 | 12/15/1993 | 1 | PM | 1450.4 | 1553.62 | 41.86 | |
| 2PM12153 | 12/15/1993 | 2 | PM | 1444.4 | 1551.04 | 84.12 | |
| 3PM12153 | 12/15/1993 | 3 | PM | 1454.7 | 1562.10 | 18.26 | |
| 4PM12153 | 12/15/1993 | 4 | PM | 1445.7 | 1552.44 | 15.47 | |
| 5PM12153 | 12/15/1993 | 5 | PM | 1440.3 | 1565.77 | 7.60 | |
| 6PM12153 | 12/15/1993 | 6 | PM | 1441.1 | 1574.31 | 2.29 | |
| 7PM12153 | 12/15/1993 | 7 | PM | 1443.4 | 1538.44 | 17.37 | |
| 8PM12153 | 12/15/1993 | 8 | PM | 1461.2 | 1557.41 | 45.55 | |
| 1PM12173 | 12/17/1993 | 1 | PM | 1453.0 | 1564.51 | 29.36 | |
| 2PM12173 | 12/17/1993 | 2 | PM | 1442.2 | 1556.72 | 25.13 | |
| 3PM12173 | 12/17/1993 | 3 | PM | 1452.6 | 1567.95 | 22.65 | |
| 4PM12173 | 12/17/1993 | 4 | PM | 1448.6 | 1563.63 | 41.27 | |
| 5PM12173 | 12/17/1993 | 5 | PM | 1442.3 | 1576.11 | 20.12 | |
| 6PM12173 | 12/17/1993 | 6 | PM | 1442.2 | 1583.68 | 11.31 | |
| 7PM12173 | 12/17/1993 | 7 | PM | 1439.3 | 1542.06 | 15.44 | |
| 1PM12193 | 12/19/1993 | 1 | PM | 1452.8 | 1564.88 | 30.69 | |
| 2PM12193 | 12/19/1993 | 2 | PM | 1443.9 | 1559.13 | 40.43 | |
| 3PM12193 | 12/19/1993 | 3 | PM | 1455.7 | 1571.87 | 24.76 | |
| 4PM12193 | 12/19/1993 | 4 | PM | 1446.7 | 1562.16 | 25.88 | |
| 5PM12193 | 12/19/1993 | 5 | PM | 1438.8 | 1572.86 | 10.75 | |
| 6PM12193 | 12/19/1993 | 6 | PM | 1438.3 | 1580.01 | 13.49 | |
| 7PM12193 | 12/19/1993 | 7 | PM | 1434.0 | 1536.95 | 11.78 | |
| 8PM12193 | 12/19/1993 | 8 | PM | 1463.6 | 1568.68 | 32.34 | |
| 1PM12213 | 12/21/1993 | 1 | PM | 1440.0 | 1556.31 | 2.70 | VOID |
| 2PM12213 | 12/21/1993 | 2 | PM | 1445.5 | 1566.10 | 25.36 | |
| 3PM12213 | 12/21/1993 | 3 | PM | 1455.5 | 1576.93 | 12.63 | |
| 4PM12213 | 12/21/1993 | 4 | PM | 1448.1 | 1568.92 | 14.54 | |
| 5PM12213 | 12/21/1993 | 5 | PM | 1437.2 | 1576.40 | 6.28 | PR |
| 6PM12213 | 12/21/1993 | 6 | PM | 1441.0 | 1588.28 | 6.74 | |
| 7PM12213 | 12/21/1993 | 7 | PM | 1441.6 | 1550.28 | 8.20 | |
| 1PM12233 | 12/23/1993 | 1 | PM | 1452.5 | 1581.62 | 21.19 | |
| 2PM12233 | 12/23/1993 | 2 | PM | 1443.4 | 1575.60 | 28.07 | |

Note: Site -Site 1 to 7 are the normal sampling sites.
Site 8 is the co-located sampler located at Site 1.
Sample date indicates the start date of the sample.
Type - PM = PM10 sampler, TS = TSP sampler, BL = field blank
Gravimetric Validity - Sample validity based on sample & gravimetric QC.

| Sample ID | SAMPLE DATE | N | Type | Time(min) | Volume Flow(m3) | Concen. (ug/m3) | Grav. Validity |
|---|---|---|---|---|---|---|---|
| 3PM12233 | 12/23/1993 | 3 | PM | 1454.3 | 1587.49 | 15.51 | |
| 4PM12233 | 12/23/1993 | 4 | PM | 1446.7 | 1579.20 | 17.42 | |
| 5PM12233 | 12/23/1993 | 5 | PM | 1443.1 | 1594.76 | 11.42 | |
| 6PM12233 | 12/23/1993 | 6 | PM | 1443.7 | 1603.23 | 8.18 | |
| 7PM12233 | 12/23/1993 | 7 | PM | 1440.3 | 1560.55 | 11.03 | |
| 8PM12233 | 12/23/1993 | 8 | PM | 1461.2 | 1583.19 | 23.01 | |
| 1PM12253 | 12/25/1993 | 1 | PM | 1455.5 | 1606.03 | 28.16 | |
| 2PM12253 | 12/25/1993 | 2 | PM | 1444.6 | 1597.93 | 25.55 | |
| 3PM12253 | 12/25/1993 | 3 | PM | 1455.7 | 1610.21 | 46.61 | |
| 4PM12253 | 12/25/1993 | 4 | PM | 1448.3 | 1602.02 | 40.54 | |
| 5PM12253 | 12/25/1993 | 5 | PM | 1440.3 | 1612.91 | 71.34 | |
| 6PM12253 | 12/25/1993 | 6 | PM | 1440.0 | 1620.45 | 19.94 | |
| 7PM12253 | 12/25/1993 | 7 | PM | 1438.7 | 1579.59 | 106.10 | |
| 1PM12273 | 12/27/1993 | 1 | PM | 1453.6 | 1550.71 | 35.49 | |
| 2PM12273 | 12/27/1993 | 2 | PM | 1445.4 | 1545.81 | 36.57 | |
| 3PM12273 | 12/27/1993 | 3 | PM | 1454.8 | 1555.87 | 31.13 | |
| 4PM12273 | 12/27/1993 | 4 | PM | 1447.8 | 1548.38 | 33.02 | |
| 5PM12273 | 12/27/1993 | 5 | PM | 1436.8 | 1555.62 | 15.12 | |
| 6PM12273 | 12/27/1993 | 6 | PM | 1441.0 | 1567.79 | 18.13 | |
| 7PM12273 | 12/27/1993 | 7 | PM | 1438.2 | 1526.67 | 29.82 | |
| 8PM12273 | 12/27/1993 | 8 | PM | 1461.0 | 1550.87 | 36.97 | |
| 1PM12293 | 12/29/1993 | 1 | PM | 1448.8 | 1566.39 | 26.19 | |
| 2PM12293 | 12/29/1993 | 2 | PM | 1449.7 | 1505.13 | 31.25 | |
| 3PM12293 | 12/29/1993 | 3 | PM | 1451.4 | 1573.11 | 16.98 | |
| 4PM12293 | 12/29/1993 | 4 | PM | 1446.1 | 1567.36 | 34.73 | |
| 5PM12293 | 12/29/1993 | 5 | PM | 1439.3 | 1509.78 | 25.32 | |
| 6PM12293 | 12/29/1993 | 6 | PM | 1439.8 | 1518.01 | 18.98 | |
| 7PM12293 | 12/29/1993 | 7 | PM | 1439.7 | 1548.81 | 12.53 | |
| 1PM12313 | 12/31/1993 | 1 | PM | 1453.2 | 1533.91 | 25.70 | |
| 2PM12313 | 12/31/1993 | 2 | PM | 1444.5 | 1464.19 | 81.87 | |
| 3PM12313 | 12/31/1993 | 3 | PM | 168.8 | 178.61 | 135.01 | TR |
| 4PM12313 | 12/31/1993 | 4 | PM | 1446.8 | 1530.92 | 9.35 | |
| 5PM12313 | 12/31/1993 | 5 | PM | 1440.7 | 1475.43 | 1.90 | |
| 6PM12313 | 12/31/1993 | 6 | PM | 1441.3 | 1483.60 | 3.30 | |
| 7PM12313 | 12/31/1993 | 7 | PM | 1438.2 | 1510.54 | 2.32 | |
| 8PM12313 | 12/31/1993 | 8 | PM | 1463.3 | 1536.90 | 27.47 | |
| 1PM01024 | 01/02/1994 | 1 | PM | 1453.1 | 1521.58 | 17.43 | |
| 2PM01024 | 01/02/1994 | 2 | PM | 1444.9 | 1452.93 | 82.64 | |
| 3PM01024 | 01/02/1994 | 3 | PM | 1456.7 | 1529.15 | 14.26 | |
| 4PM01024 | 01/02/1994 | 4 | PM | 1446.3 | 1518.23 | 3.82 | Q |
| 5PM01024 | 01/02/1994 | 5 | PM | 1438.1 | 1461.04 | 1.58 | |
| 6PM01024 | 01/02/1994 | 6 | PM | 1437.6 | 1468.02 | 1.50 | |
| 7PM01024 | 01/02/1994 | 7 | PM | 1434.7 | 1494.88 | -.94 | R |
| 1PM01044 | 01/04/1994 | 1 | PM | 1451.8 | 1516.40 | 12.67 | |
| 2PM01044 | 01/04/1994 | 2 | PM | 1444.5 | 1448.85 | 37.09 | |
| 3PM01044 | 01/04/1994 | 3 | PM | 1453.3 | 1521.71 | 6.84 | |
| 4PM01044 | 01/04/1994 | 4 | PM | 1447.9 | 1516.06 | 7.39 | |

Note: Site -Site 1 to 7 are the normal sampling sites.
Site 8 is the co-located sampler located at Site 1.
Sample date indicates the start date of the sample.
Type - PM = PM10 sampler, TS = TSP sampler, BL = field blank
Gravimetric Validity - Sample validity based on sample & gravimetric QC.

| Sample ID | SAMPLE DATE | N | Type | Time(min) | Volume Flow(m3) | Concen. (ug/m3) | Grav. Validity |
|---|---|---|---|---|---|---|---|
| 5PM01044 | 01/04/1994 | 5 | PM | 1439.4 | 1458.69 | 13.24 | |
| 6PM01044 | 01/04/1994 | 6 | PM | 1441.8 | 1468.60 | 2.52 | |
| 7PM01044 | 01/04/1994 | 7 | PM | 1439.6 | 1496.20 | 11.44 | |
| 1PM01064 | 01/06/1994 | 1 | PM | 1451.2 | 1544.17 | 45.49 | |
| 2PM01064 | 01/06/1994 | 2 | PM | 1441.8 | 1473.25 | 92.78 | |
| 3PM01064 | 01/06/1994 | 3 | PM | 1456.2 | 1553.36 | 7.86 | |
| 4PM01064 | 01/06/1994 | 4 | PM | 1446.5 | 1543.02 | 3.76 | |
| 5PM01064 | 01/06/1994 | 5 | PM | 1442.7 | 1489.41 | .60 | |
| 6PM01064 | 01/06/1994 | 6 | PM | 1443.5 | 1497.88 | 1.14 | |
| 7PM01064 | 01/06/1994 | 7 | PM | 1439.7 | 1524.35 | 1.58 | |
| 1PM01084 | 01/08/1994 | 1 | PM | 1454.6 | 1547.78 | 11.64 | |
| 2PM01084 | 01/08/1994 | 2 | PM | 1445.6 | 1477.13 | 35.77 | |
| 3PM01084 | 01/08/1994 | 3 | PM | 1456.9 | 1554.11 | 8.11 | |
| 4PM01084 | 01/08/1994 | 4 | PM | 1447.2 | 1543.76 | 11.02 | |
| 5PM01084 | 01/08/1994 | 5 | PM | 1437.9 | 1484.45 | 6.00 | |
| 6PM01084 | 01/08/1994 | 6 | PM | 1439.7 | 1493.93 | 4.89 | |
| 7PM01084 | 01/08/1994 | 7 | PM | 1437.0 | 1521.49 | 16.97 | |
| 8PM01084 | 01/08/1994 | 8 | PM | 1464.2 | 1550.29 | 11.04 | |
| 1PM01104 | 01/10/1994 | 1 | PM | 1451.8 | 1533.54 | 18.40 | |
| 2PM01104 | 01/10/1994 | 2 | PM | 1445.9 | 1466.67 | 30.09 | |
| 3PM01104 | 01/10/1994 | 3 | PM | 1452.7 | 1538.32 | 6.83 | |
| 4PM01104 | 01/10/1994 | 4 | PM | 1447.5 | 1532.81 | 5.29 | |
| 5PM01104 | 01/10/1994 | 5 | PM | 1436.4 | 1472.08 | 1.02 | |
| 6PM01104 | 01/10/1994 | 6 | PM | 1440.2 | 1483.56 | 1.82 | |
| 7PM01104 | 01/10/1994 | 7 | PM | 1437.4 | 1510.80 | 1.46 | |
| 0PM01124 | 01/12/1994 | 0 | PM | 1440.0 | 1631.05 | | VOID |
| 1PM01124 | 01/12/1994 | 1 | PM | 1447.5 | 1520.15 | 25.67 | |
| 2PM01124 | 01/12/1994 | 2 | PM | 1443.6 | 1455.84 | 84.40 | |
| 3PM01124 | 01/12/1994 | 3 | PM | 1456.9 | 1533.81 | 10.05 | |
| 4PM01124 | 01/12/1994 | 4 | PM | 1443.1 | 1519.28 | 3.75 | |
| 5PM01124 | 01/12/1994 | 5 | PM | 1439.7 | 1466.91 | .82 | |
| 6PM01124 | 01/12/1994 | 6 | PM | 1440.8 | 1475.53 | 1.90 | |
| 7PM01124 | 01/12/1994 | 7 | PM | 1440.5 | 1505.29 | .60 | |
| 1PM01144 | 01/14/1994 | 1 | PM | 1453.3 | 1522.90 | 15.44 | |
| 2PM01144 | 01/14/1994 | 2 | PM | 1443.5 | 1452.59 | 38.99 | |
| 3PM01144 | 01/14/1994 | 3 | PM | 1455.9 | 1529.42 | 11.25 | |
| 4PM01144 | 01/14/1994 | 4 | PM | 1446.4 | 1519.44 | 15.01 | |
| 5PM01154 | 01/14/1994 | 5 | PM | 1441.4 | 1465.45 | 9.76 | |
| 6PM01144 | 01/14/1994 | 6 | PM | 1441.1 | 1472.66 | 3.74 | |
| 7PM01144 | 01/14/1994 | 7 | PM | 1441.2 | 1502.71 | 5.93 | |
| 8PM01144 | 01/14/1994 | 8 | PM | 1461.1 | 1523.46 | 14.45 | |
| 1PM01164 | 01/16/1994 | 1 | PM | 1453.4 | 1542.56 | 35.61 | |
| 2PM01164 | 01/16/1994 | 2 | PM | 1445.9 | 1473.67 | 116.99 | |
| 3PM01164 | 01/16/1994 | 3 | PM | 1454.3 | 1547.34 | 11.58 | |
| 4PM01164 | 01/16/1994 | 4 | PM | 1449.1 | 1541.81 | 4.28 | |
| 5PM01164 | 01/16/1994 | 5 | PM | 1437.7 | 1480.46 | 3.24 | |
| 6PM01164 | 01/16/1994 | 6 | PM | 1438.9 | 1489.27 | 4.37 | |

Note: Site -Site 1 to 7 are the normal sampling sites.
Site 8 is the co-located sampler located at Site 1.
Sample date indicates the start date of the sample.
Type - PM = PM10 sampler, TS = TSP sampler, BL = field blank
Gravimetric Validity - Sample validity based on sample & gravimetric QC.

| Sample ID | SAMPLE DATE | N | Type | Time(min) | Volume Flow(m3) | Concen. (ug/m3) | Grav. Validity |
|---|---|---|---|---|---|---|---|
| 7PM01164 | 01/16/1994 | 7 | PM | 1437.1 | 1517.69 | 2.90 | |
| 1PM01184 | 01/18/1994 | 1 | PM | 1450.7 | 1539.69 | 27.68 | |
| 2PM01184 | 01/18/1994 | 2 | PM | 1443.0 | 1470.72 | 71.44 | |
| 3PM01184 | 01/18/1994 | 3 | PM | 1456.1 | 1549.26 | 18.73 | |
| 4PM01184 | 01/18/1994 | 4 | PM | 1453.5 | 1546.49 | 32.03 | |
| 5PM01184 | 01/18/1994 | 5 | PM | 1438.0 | 1480.77 | 39.12 | |
| 6PM01184 | 01/18/1994 | 6 | PM | 1441.0 | 1491.45 | 5.57 | |
| 7PM01184 | 01/18/1994 | 7 | PM | 1439.0 | 1519.69 | 49.05 | |
| 1PM01204 | 01/20/1994 | 1 | PM | 1477.7 | 1577.60 | 49.41 | |
| 2PM01204 | 01/20/1994 | 2 | PM | 1441.4 | 1477.74 | 72.92 | |
| 3PM01204 | 01/20/1994 | 3 | PM | 1460.0 | 1489.08 | 42.20 | |
| 4PM01204 | 01/20/1994 | 4 | PM | 1446.2 | 1517.14 | 56.59 | |
| 5PM01204 | 01/20/1994 | 5 | PM | 1443.7 | 1495.39 | 56.94 | |
| 6PM01204 | 01/20/1994 | 6 | PM | 1445.0 | 1504.43 | 20.55 | |
| 7PM01204 | 01/20/1994 | 7 | PM | 1440.8 | 1542.04 | 51.59 | |
| 8PM01204 | 01/20/1994 | 8 | PM | 1461.0 | 1563.66 | 49.40 | |
| 1PM01224 | 01/22/1994 | 1 | PM | 1434.2 | 1527.78 | 33.60 | |
| 2PM01224 | 01/22/1994 | 2 | PM | 1442.6 | 1475.70 | 38.24 | |
| 3PM01224 | 01/22/1994 | 3 | PM | 1452.1 | 1477.77 | 28.30 | |
| 4PM01224 | 01/22/1994 | 4 | PM | 1448.5 | 1516.19 | 47.58 | |
| 5PM01224 | 01/22/1994 | 5 | PM | 1439.6 | 1487.88 | 55.08 | |
| 6PM01224 | 01/22/1994 | 6 | PM | 1440.1 | 1495.98 | 18.13 | |
| 7PM01224 | 01/22/1994 | 7 | PM | 1439.4 | 1537.11 | 38.21 | |
| 1PM01244 | 01/24/1994 | 1 | PM | 1453.8 | 1513.59 | 15.07 | |
| 2PM01244 | 01/24/1994 | 2 | PM | 1444.0 | 1443.69 | 40.89 | |
| 3PM01244 | 01/24/1994 | 3 | PM | 1455.7 | 1447.84 | 14.58 | |
| 4PM01244 | 01/24/1994 | 4 | PM | 1447.0 | 1480.33 | 18.86 | |
| 5PM01244 | 01/24/1994 | 5 | PM | 1437.2 | 1451.74 | 7.93 | |
| 6PM01244 | 01/24/1994 | 6 | PM | 1439.6 | 1461.59 | 5.00 | |
| 7PM01244 | 01/24/1994 | 7 | PM | 1438.3 | 1501.16 | 7.00 | |
| 1PM01264 | 01/26/1994 | 1 | PM | 1449.7 | 1537.48 | 39.50 | |
| 2PM01264 | 01/26/1994 | 2 | PM | 1442.4 | 1469.04 | 40.39 | |
| 3PM01264 | 01/26/1994 | 3 | PM | 1455.9 | 1475.13 | 1.49 | |
| 4PM01264 | 01/26/1994 | 4 | PM | 1448.4 | 1509.44 | 2.32 | |
| 5PM01264 | 01/26/1994 | 5 | PM | 1440.8 | 1482.55 | .88 | |
| 6PM01264 | 01/26/1994 | 6 | PM | 1442.2 | 1491.59 | 3.02 | |
| 7PM01264 | 01/26/1994 | 7 | PM | 1442.5 | 1533.64 | 2.09 | |
| 8PM01264 | 01/26/1994 | 8 | PM | 1458.2 | 1550.34 | 41.63 | |
| 1PM01284 | 01/28/1994 | 1 | PM | 1453.7 | 1555.43 | 27.28 | |
| 2PM01284 | 01/28/1994 | 2 | PM | 1441.8 | 1481.46 | 38.90 | |
| 3PM01284 | 01/28/1994 | 3 | PM | 1454.6 | 1486.87 | 21.74 | |
| 4PM01284 | 01/28/1994 | 4 | PM | 1448.5 | 1522.92 | 17.21 | |
| 5PM01284 | 01/28/1994 | 5 | PM | 1441.5 | 1496.46 | 27.21 | |
| 6PM01284 | 01/28/1994 | 6 | PM | 1441.1 | 1503.67 | 6.12 | |
| 7PM01284 | 01/28/1994 | 7 | PM | 1440.9 | 1545.53 | 5.50 | |
| 1PM01304 | 01/30/1994 | 1 | PM | 1453.4 | 1579.02 | 8.05 | |
| 2PM01304 | 01/30/1994 | 2 | PM | 1446.1 | 1508.72 | 10.68 | |

Note: Site -Site 1 to 7 are the normal sampling sites.
Site 8 is the co-located sampler located at Site 1.
Sample date indicates the start date of the sample.
Type - PM = PM10 sampler, TS = TSP sampler, BL = field blank
Gravimetric Validity - Sample validity based on sample & gravimetric QC.

| Sample ID | SAMPLE DATE | N | Type | Time(min) | Volume Flow(m3) | Concen. (ug/m3) | Grav. Validity |
|---|---|---|---|---|---|---|---|
| 3PM01304 | 01/30/1994 | 3 | PM | 1455.7 | 1510.87 | 10.33 | |
| 4PM01304 | 01/30/1994 | 4 | PM | 1448.1 | 1545.95 | 15.08 | |
| 5PM01304 | 01/30/1994 | 5 | PM | 1437.4 | 1515.16 | 11.36 | |
| 6PM01304 | 01/30/1994 | 6 | PM | 1440.4 | 1526.07 | 4.20 | |
| 7PM01304 | 01/30/1994 | 7 | PM | 1437.3 | 1565.40 | .96 | |
| 1PM02014 | 02/01/1994 | 1 | PM | 1453.0 | 1579.20 | 32.25 | |
| 2PM02014 | 02/01/1994 | 2 | PM | 1320.7 | 1378.42 | 70.34 | SR |
| 3PM02014 | 02/01/1994 | 3 | PM | 1454.4 | 1510.09 | 15.77 | |
| 4PM02014 | 02/01/1994 | 4 | PM | 1447.2 | 1545.57 | 24.92 | |
| 5PM02014 | 02/01/1994 | 5 | PM | 1439.2 | 1517.62 | 8.90 | |
| 6PM02014 | 02/01/1994 | 6 | PM | 1437.6 | 1523.67 | 5.65 | |
| 7PM02014 | 02/01/1994 | 7 | PM | 1438.2 | 1566.99 | 40.80 | |
| 8PM02014 | 02/01/1994 | 8 | PM | 1458.0 | 1588.56 | 31.75 | |
| 1PM02034 | 02/03/1994 | 1 | PM | 1450.8 | 1574.43 | 42.45 | |
| 2PM02034 | 02/03/1994 | 2 | PM | 1440.0 | 1500.65 | 59.81 | |
| 3PM02034 | 02/03/1994 | 3 | PM | 1452.7 | 1506.07 | 40.06 | |
| 4PM02034 | 02/03/1994 | 4 | PM | 1444.4 | 1540.24 | 50.09 | |
| 5PM02034 | 02/03/1994 | 5 | PM | 1441.6 | 1517.87 | 31.44 | |
| 6PM02034 | 02/03/1994 | 6 | PM | 1444.2 | 1528.38 | 8.05 | |
| 7PM02034 | 02/03/1994 | 7 | PM | 1439.8 | 1566.37 | 118.50 | |
| 1PM02054 | 02/05/1994 | 1 | PM | 1455.7 | 1568.58 | 45.74 | |
| 2PM02054 | 02/05/1994 | 2 | PM | 1444.8 | 1495.01 | 65.59 | |
| 3PM02054 | 02/05/1994 | 3 | PM | 1456.0 | 1498.81 | 31.04 | |
| 4PM02054 | 02/05/1994 | 4 | PM | 1448.6 | 1533.81 | 51.01 | |
| 5PM02054 | 02/05/1994 | 5 | PM | 1440.7 | 1506.19 | 42.32 | |
| 6PM02054 | 02/05/1994 | 6 | PM | 1440.5 | 1513.69 | 8.66 | |
| 7PM02054 | 02/05/1994 | 7 | PM | 1442.1 | 1557.76 | 61.86 | |
| 1PM02074 | 02/07/1994 | 1 | PM | 1453.1 | 1519.94 | 8.82 | |
| 2PM02074 | 02/07/1994 | 2 | PM | 1449.1 | 1455.60 | 33.13 | |
| 3PM02074 | 02/07/1994 | 3 | PM | 1454.4 | 1502.43 | 3.80 | |
| 4PM02074 | 02/07/1994 | 4 | PM | 1447.1 | 1513.66 | 4.23 | |
| 5PM02074 | 02/07/1994 | 5 | PM | 1430.4 | 1451.64 | 1.24 | |
| 6PM02074 | 02/07/1994 | 6 | PM | 1445.5 | 1436.96 | 3.06 | |
| 7PM02074 | 02/07/1994 | 7 | PM | 1434.7 | 1485.82 | 1.35 | |
| 8PM02074 | 02/07/1994 | 8 | PM | 1463.3 | 1534.42 | 10.63 | |
| 1PM02094 | 02/09/1994 | 1 | PM | 1450.6 | 1553.26 | 26.73 | |
| 2PM02094 | 02/09/1994 | 2 | PM | 1446.3 | 1487.15 | 65.47 | |
| 3PM02094 | 02/09/1994 | 3 | PM | 1458.5 | 1542.35 | 10.44 | |
| 4PM02094 | 02/09/1994 | 4 | PM | 1485.3 | 1590.42 | 8.18 | |
| 5PM02094 | 02/09/1994 | 5 | PM | 1446.5 | 1502.75 | 3.80 | |
| 6PM02094 | 02/09/1994 | 6 | PM | 1451.3 | 1476.88 | 2.64 | |
| 7PM02094 | 02/09/1994 | 7 | PM | 1440.5 | 1527.11 | .66 | |
| 1PM02114 | 02/11/1994 | 1 | PM | 1454.1 | 1563.35 | 30.98 | |
| 2PM02114 | 02/11/1994 | 2 | PM | 1443.1 | 1489.94 | 55.87 | |
| 3PM02114 | 02/11/1994 | 3 | PM | 1456.3 | 1546.29 | 15.01 | |
| 4PM02114 | 02/11/1994 | 4 | PM | 1446.3 | 1554.97 | 11.65 | |
| 5PM02114 | 02/11/1994 | 5 | PM | 1440.5 | 1502.64 | 4.00 | |

Note: Site -Site 1 to 7 are the normal sampling sites.
Site 8 is the co-located sampler located at Site 1.
Sample date indicates the start date of the sample.
Type - PM = PM10 sampler, TS = TSP sampler, BL = field blank
Gravimetric Validity - Sample validity based on sample & gravimetric QC.

| Sample ID | SAMPLE DATE | N | Type | Time(min) | Volume Flow(m3) | Concen. (ug/m3) | Grav. Validity |
|---|---|---|---|---|---|---|---|
| 6PM02114 | 02/11/1994 | 6 | PM | 1444.3 | 1475.76 | 4.34 | |
| 7PM02114 | 02/11/1994 | 7 | PM | 1348.9 | 1435.85 | 8.36 | SR |
| 1PM02134 | 02/13/1994 | 1 | PM | 1458.9 | 1565.04 | 11.64 | |
| 2PM02134 | 02/13/1994 | 2 | PM | 1446.9 | 1490.55 | 27.32 | |
| 3PM02134 | 02/13/1994 | 3 | PM | 1453.1 | 1539.48 | 6.56 | |
| 4PM02134 | 02/13/1994 | 4 | PM | 1454.9 | 1560.75 | 9.62 | |
| 5PM02134 | 02/13/1994 | 5 | PM | 1438.1 | 1496.79 | 9.96 | |
| 6PM02134 | 02/13/1994 | 6 | PM | 1418.2 | 1445.88 | 8.93 | |
| 7PM02134 | 02/13/1994 | 7 | PM | 1444.8 | 1534.53 | 7.50 | |
| 8PM02134 | 02/13/1994 | 8 | PM | 1462.7 | 1573.01 | 11.70 | |
| 1PM02154 | 02/15/1994 | 1 | PM | 1455.3 | 1548.53 | 19.84 | |
| 2PM02154 | 02/15/1994 | 2 | PM | 1444.1 | 1475.60 | 32.07 | |
| 3PM02154 | 02/15/1994 | 3 | PM | 1443.5 | 1516.93 | 16.82 | Q |
| 4PM02154 | 02/15/1994 | 4 | PM | 1451.2 | 1544.17 | 25.40 | |
| 5PM02154 | 02/15/1994 | 5 | PM | 1438.7 | 1481.49 | 77.06 | |
| 6PM02154 | 02/15/1994 | 6 | PM | 1441.3 | 1457.56 | 8.24 | |
| 7PM02154 | 02/15/1994 | 7 | PM | 1437.9 | 1514.83 | 59.45 | |
| 1PM02174 | 02/17/1994 | 1 | PM | 1452.0 | 1497.69 | 11.49 | |
| 2PM02174 | 02/17/1994 | 2 | PM | 1442.7 | 1429.03 | 47.54 | |
| 3PM02174 | 02/17/1994 | 3 | PM | 1455.3 | 1482.47 | 8.03 | |
| 4PM02174 | 02/17/1994 | 4 | PM | 1447.3 | 1492.85 | 5.70 | |
| 5PM02174 | 02/17/1994 | 5 | PM | 1442.1 | 1439.50 | 2.78 | |
| 6PM02174 | 02/17/1994 | 6 | PM | 1445.1 | 1416.59 | 3.39 | |
| 7PM02174 | 02/17/1994 | 7 | PM | 1441.1 | 1471.68 | 2.79 | |
| 1PM02194 | 02/19/1994 | 1 | PM | 1453.4 | 1550.50 | 20.33 | |
| 2PM02194 | 02/19/1994 | 2 | PM | 1444.7 | 1480.06 | 46.99 | |
| 3PM02194 | 02/19/1994 | 3 | PM | 1454.9 | 1532.86 | 7.12 | |
| 4PM02194 | 02/19/1994 | 4 | PM | 1449.0 | 1545.81 | 7.31 | |
| 5PM02194 | 02/19/1994 | 5 | PM | 1439.7 | 1486.35 | .34 | |
| 6PM02194 | 02/19/1994 | 6 | PM | 1439.9 | 1459.89 | .82 | |
| 7PM02194 | 02/19/1994 | 7 | PM | 1203.3 | 1270.95 | | VOID |
| 8PM02194 | 02/19/1994 | 8 | PM | 1463.0 | 1564.64 | 21.23 | |
| 1PM02214 | 02/21/1994 | 1 | PM | 1453.2 | 1541.77 | 10.32 | |
| 2PM02214 | 02/21/1994 | 2 | PM | 1446.4 | 1473.65 | 26.07 | |
| 3PM02214 | 02/21/1994 | 3 | PM | 1440.0 | 1508.80 | | VOID |
| 4PM02214 | 02/21/1994 | 4 | PM | 1446.0 | 1534.13 | 5.02 | |
| 5PM02214 | 02/21/1994 | 5 | PM | 1435.1 | 1473.48 | -.41 | R |
| 6PM02214 | 02/21/1994 | 6 | PM | 1440.1 | 1452.06 | .41 | |
| 7PM02214 | 02/21/1994 | 7 | PM | 1440.0 | 1512.60 | | VOID |
| 1PM02234 | 02/23/1994 | 1 | PM | 1450.0 | 1541.21 | 9.28 | |
| 2PM02234 | 02/23/1994 | 2 | PM | 1444.2 | 1474.11 | 46.56 | |
| 3PM02234 | 02/23/1994 | 3 | PM | 1454.2 | 1526.48 | 5.96 | |
| 4PM02234 | 02/23/1994 | 4 | PM | 1445.1 | 1536.00 | 5.47 | |
| 5PM02234 | 02/23/1994 | 5 | PM | 1440.0 | 1481.20 | 3.31 | |
| 6PM02234 | 02/23/1994 | 6 | PM | 1443.2 | 1457.84 | .89 | |
| 7PM02234 | 02/23/1994 | 7 | PM | 1439.6 | 1514.95 | .99 | Q |
| 1PM02254 | 02/25/1994 | 1 | PM | 1453.2 | 1512.39 | 41.22 | |

Note: Site -Site 1 to 7 are the normal sampling sites.
Site 8 is the co-located sampler located at Site 1.
Sample date indicates the start date of the sample.
Type - PM = PM10 sampler, TS = TSP sampler, BL = field blank
Gravimetric Validity - Sample validity based on sample & gravimetric QC.

| Sample ID | SAMPLE DATE | N | Type | Time(min) | Volume Flow(m3) | Concen. (ug/m3) | Grav. Validity |
|---|---|---|---|---|---|---|---|
| 2PM02254 | 02/25/1994 | 2 | PM | 1442.0 | 1441.16 | 47.91 | |
| 3PM02254 | 02/25/1994 | 3 | PM | 1457.4 | 1497.94 | 9.22 | |
| 4PM02254 | 02/25/1994 | 4 | PM | 1447.3 | 1506.25 | 14.22 | |
| 5PM02254 | 02/25/1994 | 5 | PM | 1441.8 | 1452.14 | 14.75 | |
| 6PM02254 | 02/25/1994 | 6 | PM | 1441.7 | 1425.96 | 5.19 | |
| 7PM02254 | 02/25/1994 | 7 | PM | 1440.6 | 1484.43 | 17.19 | |
| 8PM02254 | 02/25/1994 | 8 | PM | 1459.0 | 1522.22 | 39.44 | |
| 1PM02274 | 02/27/1994 | 1 | PM | 1451.7 | 1518.47 | 25.70 | |
| 2PM02274 | 02/27/1994 | 2 | PM | 1443.8 | 1450.27 | 50.09 | |
| 3PM02274 | 02/27/1994 | 3 | PM | 1455.7 | 1503.78 | 8.25 | |
| 4PM02274 | 02/27/1994 | 4 | PM | 1446.8 | 1513.35 | 2.12 | |
| 5PM02274 | 02/27/1994 | 5 | PM | 1435.9 | 1453.52 | 2.20 | |
| 6PM02274 | 02/27/1994 | 6 | PM | 1439.6 | 1431.09 | 2.17 | |
| 7PM02274 | 02/27/1994 | 7 | PM | 1437.4 | 1488.62 | 2.69 | |
| 1PM03014 | 03/01/1994 | 1 | PM | 1451.6 | 1512.37 | 25.01 | |
| 2PM03014 | 03/01/1994 | 2 | PM | 1445.5 | 1446.21 | 41.44 | |
| 3PM03014 | 03/01/1994 | 3 | PM | 1454.5 | 1496.61 | 19.59 | |
| 4PM03014 | 03/01/1994 | 4 | PM | 1447.0 | 1507.57 | 24.36 | |
| 5PM03014 | 03/01/1994 | 5 | PM | 1437.9 | 1449.76 | 8.97 | |
| 6PM03014 | 03/01/1994 | 6 | PM | 1440.1 | 1425.92 | 8.07 | |
| 7PM03014 | 03/01/1994 | 7 | PM | 1434.2 | 1479.41 | 10.82 | |
| 1PM03034 | 03/03/1994 | 1 | PM | 1450.2 | 1503.68 | 36.73 | |
| 2PM03034 | 03/03/1994 | 2 | PM | 1441.4 | 1421.29 | 59.77 | |
| 3PM03034 | 03/03/1994 | 3 | PM | 1455.9 | 1476.28 | 23.18 | |
| 4PM03034 | 03/03/1994 | 4 | PM | 1442.2 | 1480.72 | 32.10 | |
| 5PM03034 | 03/03/1994 | 5 | PM | 1441.3 | 1428.50 | 25.29 | |
| 6PM03034 | 03/03/1994 | 6 | PM | 1443.7 | 1405.20 | 11.68 | |
| 7PM03034 | 03/03/1994 | 7 | PM | 1439.1 | 1488.50 | 19.63 | |
| 8PM03034 | 03/03/1994 | 8 | PM | 1460.0 | 1513.84 | 37.67 | |
| 1PM03054 | 03/05/1994 | 1 | PM | 1453.2 | 1530.08 | 19.23 | |
| 2PM03054 | 03/05/1994 | 2 | PM | 1444.7 | 1446.55 | 25.52 | |
| 3PM03054 | 03/05/1994 | 3 | PM | 1455.5 | 1498.67 | 12.42 | |
| 4PM03054 | 03/05/1994 | 4 | PM | 1449.3 | 1511.00 | 15.03 | |
| 5PM03054 | 03/05/1994 | 5 | PM | 1439.4 | 1448.67 | 5.11 | |
| 6PM03054 | 03/05/1994 | 6 | PM | 1442.2 | 1425.43 | 5.97 | |
| 7PM03054 | 03/05/1994 | 7 | PM | 1440.5 | 1512.96 | 13.09 | |
| 1PM03074 | 03/07/1994 | 1 | PM | 1451.9 | 1540.31 | 25.59 | |
| 2PM03074 | 03/07/1994 | 2 | PM | 1444.9 | 1457.76 | 41.11 | |
| 3PM03074 | 03/07/1994 | 3 | PM | 1453.4 | 1507.90 | 22.96 | |
| 4PM03074 | 03/07/1994 | 4 | PM | 1444.0 | 1516.92 | 29.88 | |
| 5PM03074 | 03/07/1994 | 5 | PM | 1432.4 | 1452.57 | 8.75 | |
| 6PM03074 | 03/07/1994 | 6 | PM | 1438.6 | 1432.71 | 8.45 | |
| 7PM03074 | 03/07/1994 | 7 | PM | 1291.3 | 1366.56 | 7.91 | SR |
| 1PM03094 | 03/09/1994 | 1 | PM | 1448.9 | 1527.20 | 23.06 | |
| 2PM03094 | 03/09/1994 | 2 | PM | 1443.5 | 1446.91 | 50.76 | |
| 3PM03094 | 03/09/1994 | 3 | PM | 1456.5 | 1501.35 | 24.19 | |
| 4PM03094 | 03/09/1994 | 4 | PM | 1445.7 | 1508.88 | 24.40 | |

Note: Site -Site 1 to 7 are the normal sampling sites.
Site 8 is the co-located sampler located at Site 1.
Sample date indicates the start date of the sample.
Type - PM = PM10 sampler, TS = TSP sampler, BL = field blank
Gravimetric Validity - Sample validity based on sample & gravimetric QC.

| Sample ID | SAMPLE DATE | N | Type | Time(min) | Volume Flow(m3) | Concen. (ug/m3) | Grav. Validity |
|---|---|---|---|---|---|---|---|
| 5PM03094 | 03/09/1994 | 5 | PM | 1440.0 | 1450.86 | 8.41 | |
| 6PM03094 | 03/09/1994 | 6 | PM | 1441.2 | 1425.99 | 9.61 | |
| 7PM03094 | 03/09/1994 | 7 | PM | 1440.9 | 1515.01 | 6.74 | |
| 8PM03094 | 03/09/1994 | 8 | PM | 1458.7 | 1537.53 | 21.67 | |
| 1PM03114 | 03/11/1994 | 1 | PM | 1452.1 | 1528.35 | 11.33 | |
| 2PM03114 | 03/11/1994 | 2 | PM | 1440.4 | 1441.72 | 15.82 | |
| 3PM03114 | 03/11/1994 | 3 | PM | 1456.2 | 1498.85 | 6.34 | |
| 4PM03114 | 03/11/1994 | 4 | PM | 1446.9 | 1507.96 | 8.76 | |
| 5PM03114 | 03/11/1994 | 5 | PM | 1440.5 | 1449.24 | 6.77 | |
| 6PM03114 | 03/11/1994 | 6 | PM | 1441.1 | 1423.85 | 3.23 | |
| 7PM03114 | 03/11/1994 | 7 | PM | 1441.4 | 1513.37 | 3.64 | |
| 1PM03134 | 03/13/1994 | 1 | PM | 1453.4 | 1513.95 | 13.68 | |
| 2PM03134 | 03/13/1994 | 2 | PM | 1444.3 | 1430.74 | 28.11 | |
| 3PM03134 | 03/13/1994 | 3 | PM | 1453.7 | 1480.88 | 15.34 | |
| 4PM03134 | 03/13/1994 | 4 | PM | 1445.8 | 1491.26 | 17.71 | |
| 5PM03134 | 03/13/1994 | 5 | PM | 1436.0 | 1429.83 | 7.49 | |
| 6PM03134 | 03/13/1994 | 6 | PM | 1440.5 | 1408.57 | 10.09 | |
| 7PM03134 | 03/13/1994 | 7 | PM | 1440.4 | 1496.74 | 12.30 | |
| 1PM03154 | 03/15/1994 | 1 | PM | 1452.0 | 1481.95 | 18.30 | P |
| 2PM03154 | 03/15/1994 | 2 | PM | 1443.1 | 1400.66 | 55.01 | |
| 3PM03154 | 03/15/1994 | 3 | PM | 1455.5 | 1452.75 | 15.91 | |
| 4PM03154 | 03/15/1994 | 4 | PM | 1447.6 | 1462.99 | 18.06 | |
| 5PM03154 | 03/15/1994 | 5 | PM | 1435.8 | 1400.77 | 16.00 | |
| 6PM03154 | 03/15/1994 | 6 | PM | 1439.2 | 1378.90 | 23.00 | Q |
| 7PM03154 | 03/15/1994 | 7 | PM | 1438.8 | 1464.89 | 7.51 | |
| 8PM03154 | 03/15/1994 | 8 | PM | 1458.9 | 1488.99 | 17.88 | |
| 1PM03174 | 03/17/1994 | 1 | PM | 1451.1 | 1521.83 | 79.49 | |
| 2PM03174 | 03/17/1994 | 2 | PM | 1443.2 | 1439.37 | 145.57 | |
| 3PM03174 | 03/17/1994 | 3 | PM | 1454.3 | 1491.54 | 27.44 | |
| 4PM03174 | 03/17/1994 | 4 | PM | 1444.7 | 1500.27 | 20.48 | |
| 5PM03174 | 03/17/1994 | 5 | PM | 1443.1 | 1446.67 | 15.22 | |
| 6PM03174 | 03/17/1994 | 6 | PM | 1440.8 | 1418.46 | 17.71 | |
| 7PM03174 | 03/17/1994 | 7 | PM | 1442.1 | 1508.68 | 13.33 | |
| 1PM03194 | 03/19/1994 | 1 | PM | 1451.3 | 1539.14 | 50.77 | |
| 2PM03194 | 03/19/1994 | 2 | PM | 1442.6 | 1454.91 | 142.77 | |
| 3PM03194 | 03/19/1994 | 3 | PM | 1451.7 | 1505.61 | 24.12 | |
| 4PM03194 | 03/19/1994 | 4 | PM | 1448.0 | 1520.55 | 8.36 | PR |
| 5PM03194 | 03/19/1994 | 5 | PM | 1440.8 | 1460.56 | 6.92 | |
| 6PM03194 | 03/19/1994 | 6 | PM | 1442.1 | 1435.66 | 8.57 | |
| 7PM03194 | 03/19/1994 | 7 | PM | 1438.5 | 1521.81 | 7.50 | |
| 1PM03214 | 03/21/1994 | 1 | PM | 1452.9 | 1508.08 | 29.46 | |
| 2PM03214 | 03/21/1994 | 2 | PM | 1441.8 | 1423.20 | 49.92 | |
| 3PM03214 | 03/21/1994 | 3 | PM | 778.7 | 790.44 | 12.28 | TR |
| 4PM03214 | 03/21/1994 | 4 | PM | 1446.3 | 1486.49 | 18.98 | |
| 5PM03214 | 03/21/1994 | 5 | PM | 1435.7 | 1424.49 | 11.10 | |
| 6PM03214 | 03/21/1994 | 6 | PM | 1439.9 | 1403.01 | 17.12 | |
| 7PM03214 | 03/21/1994 | 7 | PM | 1440.0 | 1491.02 | 10.27 | Q |

Note: Site -Site 1 to 7 are the normal sampling sites.
Site 8 is the co-located sampler located at Site 1.
Sample date indicates the start date of the sample.
Type - PM = PM10 sampler, TS = TSP sampler, BL = field blank
Gravimetric Validity - Sample validity based on sample & gravimetric QC.

| Sample ID | SAMPLE DATE | N | Type | Time(min) | Volume Flow(m3) | Concen. (ug/m3) | Grav. Validity |
|---|---|---|---|---|---|---|---|
| 8PM03214 | 03/21/1994 | 8 | PM | 1461.3 | 1516.80 | 29.22 | |
| 1PM03234 | 03/23/1994 | 1 | PM | 1449.5 | 1560.95 | 22.11 | |
| 2PM03234 | 03/23/1994 | 2 | PM | 1441.3 | 1476.00 | 98.77 | |
| 3PM03234 | 03/23/1994 | 3 | PM | 1454.8 | 1532.10 | 11.30 | |
| 4PM03234 | 03/23/1994 | 4 | PM | 1446.7 | 1542.66 | 4.80 | |
| 5PM03234 | 03/23/1994 | 5 | PM | 1439.9 | 1482.20 | .20 | |
| 6PM03234 | 03/23/1994 | 6 | PM | 1444.0 | 1459.72 | .21 | |
| 7PM03234 | 03/23/1994 | 7 | PM | 1440.0 | 1546.89 | 1.10 | Q |
| 1PM03254 | 03/25/1994 | 1 | PM | 1452.5 | 1539.30 | 25.16 | |
| 2PM03254 | 03/25/1994 | 2 | PM | 1441.3 | 1452.54 | 32.65 | |
| 3PM03254 | 03/25/1994 | 3 | PM | 1451.3 | 1504.08 | 17.16 | |
| 4PM03254 | 03/25/1994 | 4 | PM | 1445.7 | 1517.07 | 24.93 | |
| 5PM03254 | 03/25/1994 | 5 | PM | 1440.0 | 1458.73 | 31.69 | |
| 6PM03254 | 03/25/1994 | 6 | PM | 1442.7 | 1435.20 | 14.01 | |
| 7PM03254 | 03/25/1994 | 7 | PM | 1438.1 | 1520.29 | 20.73 | |
| 1PM03274 | 03/27/1994 | 1 | PM | 1453.7 | 1536.12 | 26.06 | |
| 2PM03274 | 03/27/1994 | 2 | PM | 1443.9 | 1450.95 | 30.07 | |
| 3PM03274 | 03/27/1994 | 3 | PM | 1455.6 | 1504.17 | 11.38 | |
| 4PM03274 | 03/27/1994 | 4 | PM | 1447.1 | 1514.15 | 10.84 | |
| 5PM03274 | 03/27/1994 | 5 | PM | 1436.2 | 1450.65 | 7.59 | |
| 6PM03274 | 03/27/1994 | 6 | PM | 1440.5 | 1428.89 | 10.64 | |
| 7PM03274 | 03/27/1994 | 7 | PM | 1438.1 | 1515.89 | 7.06 | |
| 8PM03274 | 03/27/1994 | 8 | PM | 1463.3 | 1546.27 | 27.31 | |
| 1PM03294 | 03/29/1994 | 1 | PM | 1452.5 | 1528.23 | 18.73 | |
| 2PM03294 | 03/29/1994 | 2 | PM | 1444.1 | 1444.93 | 23.48 | |
| 3PM03294 | 03/29/1994 | 3 | PM | 1455.3 | 1497.39 | 13.56 | |
| 4PM03294 | 03/29/1994 | 4 | PM | 1447.7 | 1508.26 | 19.50 | |
| 5PM03294 | 03/29/1994 | 5 | PM | 1438.1 | 1446.34 | 19.44 | |
| 6PM03294 | 03/29/1994 | 6 | PM | 1439.6 | 1421.84 | 17.80 | |
| 7PM03294 | 03/29/1994 | 7 | PM | 1434.7 | 1505.81 | 8.51 | |
| 1PM03314 | 03/31/1994 | 1 | PM | 1448.9 | 1507.67 | 35.11 | |
| 2PM03314 | 03/31/1994 | 2 | PM | 1441.2 | 1426.15 | 89.52 | |
| 3PM03314 | 03/31/1994 | 3 | PM | 1454.4 | 1479.99 | 28.19 | |
| 4PM03314 | 03/31/1994 | 4 | PM | 1446.6 | 1490.53 | 30.88 | |
| 5PM03314 | 03/31/1994 | 5 | PM | 1441.6 | 1433.90 | 27.35 | |
| 6PM03314 | 03/31/1994 | 6 | PM | 1441.7 | 1408.24 | 22.10 | |
| 7PM03314 | 03/31/1994 | 7 | PM | 1439.0 | 1493.70 | 21.84 | |
| 1PM04024 | 04/02/1994 | 1 | PM | 1453.6 | 1507.74 | 17.59 | |
| 2PM04024 | 04/02/1994 | 2 | PM | 1443.0 | 1423.36 | 38.03 | |
| 3PM04024 | 04/02/1994 | 3 | PM | 508.6 | 515.91 | 15.71 | TR |
| 4PM04024 | 04/02/1994 | 4 | PM | 1449.2 | 1488.44 | 7.87 | TR |
| 5PM04024 | 04/02/1994 | 5 | PM | 1439.4 | 1427.15 | 16.13 | |
| 6PM04024 | 04/02/1994 | 6 | PM | 1442.9 | 1404.92 | 16.17 | |
| 7PM04024 | 04/02/1994 | 7 | PM | 1439.3 | 1489.24 | 33.06 | |
| 8PM04024 | 04/02/1994 | 8 | PM | 1463.2 | 1517.70 | 20.31 | |
| 1PM04044 | 04/04/1994 | 1 | PM | 1451.5 | 1547.73 | 34.01 | |
| 2PM04044 | 04/04/1994 | 2 | PM | 1446.0 | 1466.28 | 77.79 | |

Note: Site -Site 1 to 7 are the normal sampling sites.
Site 8 is the co-located sampler located at Site 1.
Sample date indicates the start date of the sample.
Type - PM = PM10 sampler, TS = TSP sampler, BL = field blank
Gravimetric Validity - Sample validity based on sample & gravimetric QC.

| Sample ID | SAMPLE DATE | N | Type | Time(min) | Volume Flow(m3) | Concen. (ug/m3) | Grav. Validity |
|---|---|---|---|---|---|---|---|
| 3PM04044 | 04/04/1994 | 3 | PM | 1440.0 | 1501.59 | | VOID |
| 4PM04044 | 04/04/1994 | 4 | PM | 1440.0 | 1520.42 | | VOID |
| 5PM04044 | 04/04/1994 | 5 | PM | 1434.5 | 1462.14 | 5.00 | |
| 6PM04044 | 04/04/1994 | 6 | PM | 1438.2 | 1439.60 | 6.05 | |
| 7PM04044 | 04/04/1994 | 7 | PM | 1437.0 | 1528.53 | 7.53 | |
| 1PM04064 | 04/06/1994 | 1 | PM | 1449.4 | 1520.05 | 19.02 | |
| 2PM04064 | 04/06/1994 | 2 | PM | 1444.8 | 1440.97 | 46.87 | |
| 3PM04064 | 04/06/1994 | 3 | PM | 1454.2 | 1491.44 | 5.57 | |
| 4PM04064 | 04/06/1994 | 4 | PM | 1446.5 | 1502.14 | 4.40 | |
| 5PM04064 | 04/06/1994 | 5 | PM | 1439.8 | 1443.36 | 2.84 | |
| 6PM04064 | 04/06/1994 | 6 | PM | 1442.9 | 1420.52 | 3.38 | |
| 7PM04064 | 04/06/1994 | 7 | PM | 1437.8 | 1504.18 | 2.33 | |
| 1PM04084 | 04/08/1994 | 1 | PM | 1453.7 | 1530.03 | 9.35 | |
| 2PM04084 | 04/08/1994 | 2 | PM | 1441.2 | 1442.52 | 32.60 | |
| 3PM04084 | 04/08/1994 | 3 | PM | 1452.1 | 1494.63 | 7.63 | |
| 4PM04084 | 04/08/1994 | 4 | PM | 1446.3 | 1507.34 | 9.82 | |
| 5PM04084 | 04/08/1994 | 5 | PM | 1439.8 | 1448.54 | 12.36 | |
| 6PM04084 | 04/08/1994 | 6 | PM | 1439.5 | 1422.27 | 4.22 | |
| 7PM04084 | 04/08/1994 | 7 | PM | 1441.0 | 1512.95 | 5.82 | |
| 8PM04084 | 04/08/1994 | 8 | PM | 1460.1 | 1536.77 | 9.96 | |
| 1PM04104 | 04/10/1994 | 1 | PM | 1452.4 | 1523.73 | 25.68 | |
| 2PM04104 | 04/10/1994 | 2 | PM | 1446.3 | 1442.96 | 66.43 | |
| 3PM04104 | 04/10/1994 | 3 | PM | 1455.6 | 1493.41 | 18.22 | |
| 4PM04104 | 04/10/1994 | 4 | PM | 1448.5 | 1504.75 | 5.92 | |
| 5PM04104 | 04/10/1994 | 5 | PM | 1435.0 | 1439.08 | 3.82 | |
| 6PM04104 | 04/10/1994 | 6 | PM | 1438.8 | 1416.98 | 3.88 | |
| 7PM04104 | 04/10/1994 | 7 | PM | 1437.8 | 1504.75 | 6.12 | |
| 1PM04124 | 04/12/1994 | 1 | PM | 1450.3 | 1482.26 | 24.64 | |
| 2PM04124 | 04/12/1994 | 2 | PM | 1442.9 | 1402.42 | 68.64 | |
| 3PM04124 | 04/12/1994 | 3 | PM | 1455.8 | 1455.07 | 12.38 | |
| 4PM04124 | 04/12/1994 | 4 | PM | 1447.8 | 1465.24 | 13.18 | |
| 5PM04124 | 04/12/1994 | 5 | PM | 1438.1 | 1404.97 | 5.63 | |
| 6PM04124 | 04/12/1994 | 6 | PM | 1441.0 | 1382.54 | 11.65 | |
| 7PM04124 | 04/12/1994 | 7 | PM | 1435.2 | 1463.26 | 6.09 | |
| 1PM04144 | 04/14/1994 | 1 | PM | 1448.3 | 1507.04 | 53.12 | |
| 2PM04144 | 04/14/1994 | 2 | PM | 1442.9 | 1427.84 | 150.74 | |
| 3PM04144 | 04/14/1994 | 3 | PM | 1454.0 | 1479.58 | 28.67 | |
| 4PM04144 | 04/14/1994 | 4 | PM | 1446.3 | 1490.22 | 19.47 | |
| 5PM04144 | 04/14/1994 | 5 | PM | 1441.5 | 1433.80 | 16.68 | |
| 6PM04144 | 04/14/1994 | 6 | PM | 1442.7 | 1409.21 | 17.75 | |
| 7PM04144 | 04/14/1994 | 7 | PM | 1441.2 | 1495.98 | 19.20 | |
| 8PM04144 | 04/14/1994 | 8 | PM | 1460.5 | 1519.74 | 56.10 | |
| 1PM04164 | 04/16/1994 | 1 | PM | 1453.1 | 1474.84 | 26.32 | |
| 2PM04164 | 04/16/1994 | 2 | PM | 1442.7 | 1392.51 | 59.71 | |
| 3PM04164 | 04/16/1994 | 3 | PM | 1457.2 | 1446.40 | 19.92 | |
| 4PM04164 | 04/16/1994 | 4 | PM | 1447.3 | 1454.57 | 23.73 | |
| 5PM04164 | 04/16/1994 | 5 | PM | 1440.4 | 1397.46 | 45.47 | |

Note: Site -Site 1 to 7 are the normal sampling sites.
Site 8 is the co-located sampler located at Site 1.
Sample date indicates the start date of the sample.
Type - PM = PM10 sampler, TS = TSP sampler, BL = field blank
Gravimetric Validity - Sample validity based on sample & gravimetric QC.

| Sample ID | SAMPLE DATE | N | Type | Time(min) | Volume Flow(m3) | Concen. (ug/m3) | Grav. Validity |
|---|---|---|---|---|---|---|---|
| 6PM04164 | 04/16/1994 | 6 | PM | 1440.7 | 1372.67 | 37.18 | |
| 7PM04164 | 04/16/1994 | 7 | PM | 1438.6 | 1456.58 | 20.88 | |
| 1PM04184 | 04/18/1994 | 1 | PM | 1453.8 | 1457.89 | 34.59 | |
| 2PM04184 | 04/18/1994 | 2 | PM | 1445.2 | 1378.22 | 50.53 | |
| 3PM04184 | 04/18/1994 | 3 | PM | 1454.6 | 1426.52 | 30.86 | |
| 4PM04184 | 04/18/1994 | 4 | PM | 1447.9 | 1437.75 | 30.48 | |
| 5PM04184 | 04/18/1994 | 5 | PM | 1434.1 | 1374.70 | 40.03 | |
| 6PM04184 | 04/18/1994 | 6 | PM | 1439.6 | 1355.19 | 60.77 | |
| 7PM04184 | 04/18/1994 | 7 | PM | 1437.8 | 1438.30 | 26.02 | |
| 1PM04204 | 04/20/1994 | 1 | PM | 1451.0 | 1485.65 | 33.34 | |
| 2PM04204 | 04/20/1994 | 2 | PM | 1443.9 | 1378.86 | 40.64 | PR |
| 3PM04204 | 04/20/1994 | 3 | PM | 1451.1 | 1428.60 | 27.25 | |
| 4PM04204 | 04/20/1994 | 4 | PM | 1446.7 | 1470.56 | 37.63 | |
| 5PM04204 | 04/20/1994 | 5 | PM | 1443.0 | 1410.00 | 30.02 | |
| 6PM04204 | 04/20/1994 | 6 | PM | 1442.3 | 1412.87 | 25.07 | |
| 7PM04204 | 04/20/1994 | 7 | PM | 1436.4 | 1463.62 | 25.50 | PR |
| 8PM04204 | 04/20/1994 | 8 | PM | 1460.1 | 1466.23 | 42.11 | |
| 1PM04224 | 04/22/1994 | 1 | PM | 1454.9 | 1512.43 | 27.39 | |
| 2PM04224 | 04/22/1994 | 2 | PM | 1443.0 | 1399.13 | 81.89 | |
| 3PM04224 | 04/22/1994 | 3 | PM | 1456.6 | 1456.00 | 29.28 | |
| 4PM04224 | 04/22/1994 | 4 | PM | 1445.8 | 1492.16 | 25.21 | |
| 5PM04224 | 04/22/1994 | 5 | PM | 1442.0 | 1430.58 | 22.45 | |
| 6PM04224 | 04/22/1994 | 6 | PM | 1442.4 | 1434.57 | 21.41 | |
| 7PM04224 | 04/22/1994 | 7 | PM | 1442.4 | 1492.24 | 25.08 | |
| 1PM04244 | 04/24/1994 | 1 | PM | 1453.9 | 1538.72 | 19.51 | |
| 2PM04244 | 04/24/1994 | 2 | PM | 1445.5 | 1426.85 | 28.82 | |
| 3PM04244 | 04/24/1994 | 3 | PM | 1455.8 | 1481.45 | 17.22 | |
| 4PM04244 | 04/24/1994 | 4 | PM | 1449.0 | 1522.46 | 16.76 | |
| 5PM04244 | 04/24/1994 | 5 | PM | 1436.2 | 1450.57 | 13.80 | |
| 6PM04244 | 04/24/1994 | 6 | PM | 1438.2 | 1456.21 | 10.03 | |
| 7PM04244 | 04/24/1994 | 7 | PM | 1440.5 | 1517.20 | 13.78 | |
| 1PM04264 | 04/26/1994 | 1 | PM | 1451.1 | 1557.25 | 4.11 | |
| 2PM04264 | 04/26/1994 | 2 | PM | 1443.7 | 1445.02 | 7.13 | |
| 3PM04264 | 04/26/1994 | 3 | PM | 1453.7 | 1500.02 | 2.33 | |
| 4PM04264 | 04/26/1994 | 4 | PM | 1448.5 | 1543.26 | 3.83 | |
| 5PM04264 | 04/26/1994 | 5 | PM | 1438.5 | 1473.22 | 8.69 | |
| 6PM04264 | 04/26/1994 | 6 | PM | 1440.0 | 1478.47 | 3.59 | |
| 7PM04264 | 04/26/1994 | 7 | PM | 1435.9 | 1533.54 | 2.41 | PR |
| 8PM04264 | 04/26/1994 | 8 | PM | 1456.8 | 1533.29 | 6.00 | |
| 1PM04284 | 04/28/1994 | 1 | PM | 1450.8 | 1563.67 | 8.83 | |
| 2PM04284 | 04/28/1994 | 2 | PM | 1440.3 | 1447.86 | 11.54 | |
| 3PM04284 | 04/28/1994 | 3 | PM | 1455.7 | 1508.60 | 10.94 | |
| 4PM04284 | 04/28/1994 | 4 | PM | 1446.5 | 1547.81 | 11.38 | |
| 5PM04284 | 04/28/1994 | 5 | PM | 1440.9 | 1482.08 | 11.48 | |
| 6PM04284 | 04/28/1994 | 6 | PM | 1440.3 | 1485.18 | 6.80 | |
| 7PM04284 | 04/28/1994 | 7 | PM | 1442.2 | 1546.92 | 6.27 | |
| 1PM04304 | 04/30/1994 | 1 | PM | 1453.0 | 1549.83 | 23.44 | |

Note: Site -Site 1 to 7 are the normal sampling sites.
Site 8 is the co-located sampler located at Site 1.
Sample date indicates the start date of the sample.
Type - PM = PM10 sampler, TS = TSP sampler, BL = field blank
Gravimetric Validity - Sample validity based on sample & gravimetric QC.

| Sample ID | SAMPLE DATE | N | Type | Time(min) | Volume Flow(m3) | Concen. (ug/m3) | Grav. Validity |
|---|---|---|---|---|---|---|---|
| 2PM04304 | 04/30/1994 | 2 | PM | 1442.0 | 1434.58 | 44.43 | |
| 3PM04304 | 04/30/1994 | 3 | PM | 1455.3 | 1492.57 | 17.16 | |
| 4PM04304 | 04/30/1994 | 4 | PM | 1446.7 | 1531.96 | 15.09 | |
| 5PM04304 | 04/30/1994 | 5 | PM | 1440.8 | 1466.64 | 15.90 | |
| 6PM04304 | 04/30/1994 | 6 | PM | 1439.8 | 1469.29 | 12.67 | PR |
| 7PM04304 | 04/30/1994 | 7 | PM | 1441.8 | 1530.49 | 10.40 | |
| 1PM05024 | 05/02/1994 | 1 | PM | 1453.8 | 1526.19 | 18.75 | |
| 2PM05024 | 05/02/1994 | 2 | PM | 1443.2 | 1413.05 | 40.01 | |
| 3PM05024 | 05/02/1994 | 3 | PM | 1451.2 | 1464.86 | 17.01 | |
| 4PM05024 | 05/02/1994 | 4 | PM | 1448.1 | 1509.21 | 15.65 | |
| 5PM05024 | 05/02/1994 | 5 | PM | 1434.3 | 1436.91 | 11.56 | |
| 6PM05024 | 05/02/1994 | 6 | PM | 1439.2 | 1445.49 | 12.39 | |
| 7PM05024 | 05/02/1994 | 7 | PM | 1439.3 | 1503.67 | 11.31 | |
| 8PM05024 | 05/02/1994 | 8 | PM | 1460.9 | 1504.14 | 20.29 | |
| 1PM05044 | 05/04/1994 | 1 | PM | 1449.9 | 1504.64 | 10.31 | |
| 2PM05044 | 05/04/1994 | 2 | PM | 1442.1 | 1395.81 | 29.89 | |
| 3PM05044 | 05/04/1994 | 3 | PM | 1455.5 | 1452.34 | 9.92 | |
| 4PM05044 | 05/04/1994 | 4 | PM | 1463.8 | 1508.08 | 13.67 | |
| 5PM05044 | 05/04/1994 | 5 | PM | 1441.5 | 1427.59 | 11.63 | |
| 6PM05044 | 05/04/1994 | 6 | PM | 1440.4 | 1430.09 | 12.10 | |
| 7PM05044 | 05/04/1994 | 7 | PM | 1439.1 | 1486.26 | 6.73 | |
| 1PM05064 | 05/06/1994 | 1 | PM | 1450.8 | 1499.33 | 16.48 | |
| 2PM05064 | 05/06/1994 | 2 | PM | 1441.9 | 1389.81 | 36.00 | |
| 3PM05064 | 05/06/1994 | 3 | PM | 5.5 | 5.47 | | TR |
| 4PM05064 | 05/06/1994 | 4 | PM | 1427.7 | 1464.79 | 16.94 | |
| 5PM05064 | 05/06/1994 | 5 | PM | 1439.4 | 1419.60 | 20.86 | |
| 6PM05064 | 05/06/1994 | 6 | PM | 1441.2 | 1424.97 | 17.98 | |
| 7PM05064 | 05/06/1994 | 7 | PM | 1440.6 | 1481.61 | 10.74 | |
| 1PM05084 | 05/08/1994 | 1 | PM | 1452.4 | 1507.24 | 16.80 | |
| 2PM05084 | 05/08/1994 | 2 | PM | 1442.9 | 1396.58 | 25.86 | |
| 3PM05084 | 05/08/1994 | 3 | PM | 1449.6 | 1446.45 | 15.98 | |
| 4PM05084 | 05/08/1994 | 4 | PM | 1447.8 | 1491.60 | 16.37 | |
| 5PM05084 | 05/08/1994 | 5 | PM | 1435.4 | 1421.55 | 13.73 | |
| 6PM05084 | 05/08/1994 | 6 | PM | 1436.9 | 1426.62 | 12.84 | |
| 7PM05084 | 05/08/1994 | 7 | PM | 1439.5 | 1486.68 | 15.35 | |
| 8PM05084 | 05/08/1994 | 8 | PM | 1463.4 | 1489.44 | 17.00 | |
| 1PM05104 | 05/10/1994 | 1 | PM | 1451.7 | 1482.30 | 44.62 | |
| 2PM05104 | 05/10/1994 | 2 | PM | 1444.2 | 1375.39 | 49.25 | |
| 3PM05104 | 05/10/1994 | 3 | PM | 1455.5 | 1429.01 | 22.90 | |
| 4PM05104 | 05/10/1994 | 4 | PM | 1446.4 | 1466.24 | 23.54 | |
| 5PM05104 | 05/10/1994 | 5 | PM | 1437.8 | 1401.05 | 13.50 | |
| 6PM05104 | 05/10/1994 | 6 | PM | 1441.1 | 1407.81 | 20.19 | |
| 7PM05104 | 05/10/1994 | 7 | PM | 1437.6 | 1460.86 | 14.04 | |
| 1PM05124 | 05/12/1994 | 1 | PM | 1450.0 | 1485.12 | 42.78 | |
| 2PM05124 | 05/12/1994 | 2 | PM | 1442.0 | 1377.54 | 89.85 | |
| 3PM05124 | 05/12/1994 | 3 | PM | 1454.7 | 1432.63 | 34.50 | |
| 4PM05124 | 05/12/1994 | 4 | PM | 1446.2 | 1470.58 | 31.71 | |

Note: Site -Site 1 to 7 are the normal sampling sites.
Site 8 is the co-located sampler located at Site 1.
Sample date indicates the start date of the sample.
Type - PM = PM10 sampler, TS = TSP sampler, BL = field blank
Gravimetric Validity - Sample validity based on sample & gravimetric QC.

| Sample ID | SAMPLE DATE | N | Type | Time(min) | Volume Flow(m3) | Concen. (ug/m3) | Grav. Validity |
|---|---|---|---|---|---|---|---|
| 5PM05124 | 05/12/1994 | 5 | PM | 1442.1 | 1409.57 | 21.58 | |
| 6PM05124 | 05/12/1994 | 6 | PM | 1440.9 | 1411.94 | 22.96 | Q |
| 7PM05124 | 05/12/1994 | 7 | PM | 1440.1 | 1467.92 | 21.61 | |
| 1PM05144 | 05/14/1994 | 1 | PM | 1454.8 | 1500.33 | 20.14 | |
| 2PM05144 | 05/14/1994 | 2 | PM | 1444.0 | 1388.98 | 44.09 | |
| 3PM05144 | 05/14/1994 | 3 | PM | 1452.4 | 1440.24 | 21.95 | |
| 4PM05144 | 05/14/1994 | 4 | PM | 1446.7 | 1481.21 | 17.50 | |
| 5PM05144 | 05/14/1994 | 5 | PM | 1440.6 | 1417.85 | 11.43 | |
| 6PM05144 | 05/14/1994 | 6 | PM | 1439.9 | 1420.71 | 24.37 | |
| 7PM05144 | 05/14/1994 | 7 | PM | 1439.8 | 1477.73 | 16.66 | |
| 8PM05144 | 05/14/1994 | 8 | PM | 1464.0 | 1480.80 | 18.85 | |
| 1PM05164 | 05/16/1994 | 1 | PM | 1456.2 | 1534.07 | 21.33 | |
| 2PM05164 | 05/16/1994 | 2 | PM | 1448.0 | 1422.76 | 46.77 | |
| 3PM05164 | 05/16/1994 | 3 | PM | 1455.6 | 1474.45 | 15.81 | |
| 4PM05164 | 05/16/1994 | 4 | PM | 1450.4 | 1516.95 | 13.06 | |
| 5PM05164 | 05/16/1994 | 5 | PM | 1436.5 | 1444.20 | 10.05 | |
| 6PM05164 | 05/16/1994 | 6 | PM | 1439.4 | 1450.79 | 13.66 | |
| 7PM05164 | 05/16/1994 | 7 | PM | 1439.5 | 1509.18 | 9.02 | |
| 1PM05184 | 05/18/1994 | 1 | PM | 1449.4 | 1521.03 | 20.92 | PR |
| 2PM05184 | 05/18/1994 | 2 | PM | 1444.1 | 1413.44 | 29.80 | PR |
| 3PM05184 | 05/18/1994 | 3 | PM | 1455.2 | 1468.36 | 13.56 | |
| 4PM05184 | 05/18/1994 | 4 | PM | 1445.8 | 1506.28 | 21.19 | |
| 5PM05184 | 05/18/1994 | 5 | PM | 1438.6 | 1440.73 | 13.61 | |
| 6PM05184 | 05/18/1994 | 6 | PM | 1440.8 | 1446.57 | 8.51 | |
| 7PM05184 | 05/18/1994 | 7 | PM | 1438.5 | 1502.30 | 13.05 | |
| 1PM05204 | 05/20/1994 | 1 | PM | 1452.4 | 1528.46 | 21.80 | |
| 2PM05204 | 05/20/1994 | 2 | PM | 1445.3 | 1418.63 | 41.47 | |
| 3PM05204 | 05/20/1994 | 3 | PM | 1453.3 | 1470.60 | 8.85 | |
| 4PM05204 | 05/20/1994 | 4 | PM | 1446.3 | 1511.06 | 10.66 | |
| 5PM05204 | 05/20/1994 | 5 | PM | 1440.6 | 1446.81 | 2.90 | |
| 6PM05204 | 05/20/1994 | 6 | PM | 1440.3 | 1450.14 | 4.14 | |
| 7PM05204 | 05/20/1994 | 7 | PM | 1440.8 | 1508.95 | 4.24 | |
| 8PM05204 | 05/20/1994 | 8 | PM | 1460.1 | 1507.00 | 23.31 | |
| 1PM05224 | 05/22/1994 | 1 | PM | 1452.5 | 1505.24 | 27.32 | |
| 2PM05224 | 05/22/1994 | 2 | PM | 1446.3 | 1397.95 | 52.39 | |
| 3PM05224 | 05/22/1994 | 3 | PM | 1455.4 | 1450.22 | 17.53 | |
| 4PM05224 | 05/22/1994 | 4 | PM | 1447.5 | 1489.24 | 18.54 | |
| 5PM05224 | 05/22/1994 | 5 | PM | 1437.9 | 1422.03 | 12.88 | |
| 6PM05224 | 05/22/1994 | 6 | PM | 1437.4 | 1425.12 | 13.48 | |
| 7PM05224 | 05/22/1994 | 7 | PM | 1438.8 | 1483.87 | 17.13 | |
| 1PM05244 | 05/24/1994 | 1 | PM | 1454.1 | 1495.50 | 25.83 | |
| 2PM05244 | 05/24/1994 | 2 | PM | 1446.2 | 1387.24 | 35.56 | |
| 3PM05244 | 05/24/1994 | 3 | PM | 1454.8 | 1438.67 | 29.28 | |
| 4PM05244 | 05/24/1994 | 4 | PM | 1450.0 | 1480.52 | 34.13 | |
| 5PM05244 | 05/24/1994 | 5 | PM | 1440.9 | 1414.23 | 17.26 | |
| 6PM05244 | 05/24/1994 | 6 | PM | 1441.8 | 1418.66 | 25.53 | |
| 7PM05244 | 05/24/1994 | 7 | PM | 1437.6 | 1471.40 | 31.96 | |

Note: Site -Site 1 to 7 are the normal sampling sites.
Site 8 is the co-located sampler located at Site 1.
Sample date indicates the start date of the sample.
Type - PM = PM10 sampler, TS = TSP sampler, BL = field blank
Gravimetric Validity - Sample validity based on sample & gravimetric QC.

| Sample ID | SAMPLE DATE | N | Type | Time(min) | Volume Flow(m3) | Concen. (ug/m3) | Grav. Validity |
|---|---|---|---|---|---|---|---|
| 1PM05264 | 05/26/1994 | 1 | PM | 1453.0 | 1486.18 | 32.05 | |
| 2PM05264 | 05/26/1994 | 2 | PM | 1447.0 | 1380.43 | 83.94 | |
| 3PM05264 | 05/26/1994 | 3 | PM | 1454.3 | 1430.31 | 31.34 | |
| 4PM05264 | 05/26/1994 | 4 | PM | 1451.7 | 1474.12 | 39.84 | |
| 5PM05264 | 05/26/1994 | 5 | PM | 1444.4 | 1409.89 | 28.17 | |
| 6PM05264 | 05/26/1994 | 6 | PM | 1449.9 | 1418.83 | 37.02 | |
| 7PM05264 | 05/26/1994 | 7 | PM | 1442.5 | 1468.33 | 33.19 | |
| 8PM05264 | 05/26/1994 | 8 | PM | 1458.4 | 1463.00 | 32.62 | |
| 1PM05284 | 05/28/1994 | 1 | PM | 1454.0 | 1509.93 | 19.48 | |
| 2PM05284 | 05/28/1994 | 2 | PM | 1444.9 | 1399.50 | 39.97 | |
| 3PM05284 | 05/28/1994 | 3 | PM | 1456.0 | 1453.87 | 11.56 | |
| 4PM05284 | 05/28/1994 | 4 | PM | 1448.1 | 1492.97 | 12.40 | |
| 5PM05284 | 05/28/1994 | 5 | PM | 1438.9 | 1426.00 | 9.26 | |
| 6PM05284 | 05/28/1994 | 6 | PM | 1439.6 | 1430.28 | 9.65 | |
| 7PM05284 | 05/28/1994 | 7 | PM | 1438.9 | 1487.07 | 7.00 | |
| 1PM05304 | 05/30/1994 | 1 | PM | 1452.9 | 1483.52 | 19.42 | |
| 2PM05304 | 05/30/1994 | 2 | PM | 1445.3 | 1376.43 | 68.19 | |
| 3PM05304 | 05/30/1994 | 3 | PM | 1455.2 | 1428.72 | 19.75 | |
| 4PM05304 | 05/30/1994 | 4 | PM | 1448.9 | 1468.77 | 15.80 | |
| 5PM05304 | 05/30/1994 | 5 | PM | 1434.8 | 1398.13 | 10.45 | |
| 6PM05304 | 05/30/1994 | 6 | PM | 1438.2 | 1404.98 | 14.60 | |
| 7PM05304 | 05/30/1994 | 7 | PM | 1436.9 | 1460.15 | 10.14 | |
| 1PM06014 | 06/01/1994 | 1 | PM | 1447.8 | 1495.70 | 25.96 | |
| 2PM06014 | 06/01/1994 | 2 | PM | 1444.3 | 1391.64 | 92.25 | |
| 3PM06014 | 06/01/1994 | 3 | PM | 1454.0 | 1444.34 | 16.07 | |
| 4PM06014 | 06/01/1994 | 4 | PM | 1447.9 | 1485.02 | 11.79 | |
| 5PM06014 | 06/01/1994 | 5 | PM | 1440.0 | 1419.71 | 5.57 | |
| 6PM06014 | 06/01/1994 | 6 | PM | 1440.2 | 1423.45 | 7.03 | |
| 7PM06014 | 06/01/1994 | 7 | PM | 1438.9 | 1479.37 | 6.49 | |
| 8PM06014 | 06/01/1994 | 8 | PM | 1456.9 | 1476.14 | 28.88 | |
| 1PM06034 | 06/03/1994 | 1 | PM | 1451.2 | 1468.60 | 28.00 | |
| 2PM06034 | 06/03/1994 | 2 | PM | 1447.3 | 1407.93 | 43.56 | |
| 3PM06034 | 06/03/1994 | 3 | PM | 1464.3 | 1435.21 | 25.17 | |
| 4PM06034 | 06/03/1994 | 4 | PM | 1446.7 | 1460.52 | 29.39 | |
| 5PM06034 | 06/03/1994 | 5 | PM | 1440.4 | 1401.22 | 19.28 | |
| 6PM06034 | 06/03/1994 | 6 | PM | 1439.5 | 1403.85 | 25.09 | |
| 7PM06034 | 06/03/1994 | 7 | PM | 1440.7 | 1468.58 | 22.28 | |
| 1PM06054 | 06/05/1994 | 1 | PM | 1455.2 | 1471.16 | 13.53 | |
| 2PM06054 | 06/05/1994 | 2 | PM | 1446.8 | 1405.97 | 26.97 | |
| 3PM06054 | 06/05/1994 | 3 | PM | 1454.5 | 1424.16 | 16.16 | |
| 4PM06054 | 06/05/1994 | 4 | PM | 1450.1 | 1462.43 | 16.08 | |
| 5PM06054 | 06/05/1994 | 5 | PM | 1438.9 | 1398.29 | 24.40 | |
| 6PM06054 | 06/05/1994 | 6 | PM | 1436.6 | 1399.59 | 18.16 | |
| 7PM06054 | 06/05/1994 | 7 | PM | 1439.6 | 1465.95 | 12.90 | |
| 1PM06074 | 06/07/1994 | 1 | PM | 1450.8 | 1514.70 | 9.97 | |
| 2PM06074 | 06/07/1994 | 2 | PM | 1443.2 | 1448.40 | 19.34 | |
| 3PM06074 | 06/07/1994 | 3 | PM | 1451.6 | 1467.81 | 6.00 | |

Note: Site -Site 1 to 7 are the normal sampling sites.
Site 8 is the co-located sampler located at Site 1.
Sample date indicates the start date of the sample.
Type - PM = PM10 sampler, TS = TSP sampler, BL = field blank
Gravimetric Validity - Sample validity based on sample & gravimetric QC.

| Sample ID | SAMPLE DATE | N | Type | Time(min) | Volume Flow(m3) | Concen. (ug/m3) | Grav. Validity |
|---|---|---|---|---|---|---|---|
| 4PM06074 | 06/07/1994 | 4 | PM | 1448.0 | 1508.12 | 11.15 | |
| 5PM06074 | 06/07/1994 | 5 | PM | 1439.9 | 1445.09 | 3.25 | |
| 6PM06074 | 06/07/1994 | 6 | PM | 1437.7 | 1446.51 | 5.46 | |
| 7PM06074 | 06/07/1994 | 7 | PM | 1435.7 | 1509.83 | 6.43 | |
| 8PM06074 | 06/07/1994 | 8 | PM | 1460.8 | 1528.82 | 9.75 | |
| 1PM06094 | 06/09/1994 | 1 | PM | 1450.4 | 1484.01 | 17.73 | |
| 2PM06094 | 06/09/1994 | 2 | PM | 1443.6 | 1419.82 | 34.95 | |
| 3PM06094 | 06/09/1994 | 3 | PM | 1263.2 | 1251.77 | 13.43 | SR |
| 4PM06094 | 06/09/1994 | 4 | PM | 1444.2 | 1474.07 | 17.51 | |
| 5PM06094 | 06/09/1994 | 5 | PM | 1442.4 | 1418.64 | 5.01 | |
| 6PM06094 | 06/09/1994 | 6 | PM | 1439.7 | 1419.53 | 14.24 | |
| 7PM06094 | 06/09/1994 | 7 | PM | 1440.4 | 1484.46 | 8.43 | |
| 1PM06114 | 06/11/1994 | 1 | PM | 1452.9 | 1459.87 | 23.37 | |
| 2PM06114 | 06/11/1994 | 2 | PM | 1444.1 | 1394.80 | 34.15 | |
| 3PM06114 | 06/11/1994 | 3 | PM | 1457.5 | 1418.39 | 20.88 | |
| 4PM06114 | 06/11/1994 | 4 | PM | 1444.0 | 1447.41 | 23.85 | |
| 5PM06114 | 06/11/1994 | 5 | PM | 1439.9 | 1390.74 | 14.61 | |
| 6PM06114 | 06/11/1994 | 6 | PM | 1438.2 | 1392.60 | 23.78 | |
| 7PM06114 | 06/11/1994 | 7 | PM | 1440.7 | 1458.13 | 29.44 | |
| 1PM06134 | 06/13/1994 | 1 | PM | 1454.6 | 1463.06 | 36.11 | |
| 2PM06134 | 06/13/1994 | 2 | PM | 1445.6 | 1397.68 | 114.04 | |
| 3PM06134 | 06/13/1994 | 3 | PM | 1452.0 | 1414.47 | 32.47 | |
| 4PM06134 | 06/13/1994 | 4 | PM | 1292.8 | 1297.17 | 36.64 | SR |
| 5PM06134 | 06/13/1994 | 5 | PM | 1436.6 | 1388.98 | 18.87 | |
| 6PM06134 | 06/13/1994 | 6 | PM | 1438.7 | 1394.51 | 20.52 | Q |
| 7PM06134 | 06/13/1994 | 7 | PM | 1435.8 | 1454.64 | 25.52 | |
| 1PM06154 | 06/15/1994 | 1 | PM | 1451.5 | 1501.70 | 17.92 | |
| 2PM06154 | 06/15/1994 | 2 | PM | 1446.3 | 1438.33 | 39.93 | |
| 3PM06154 | 06/15/1994 | 3 | PM | 1455.7 | 1458.64 | 19.21 | |
| 4PM06154 | 06/15/1994 | 4 | PM | 1449.2 | 1495.67 | 17.73 | |
| 5PM06154 | 06/15/1994 | 5 | PM | 1440.8 | 1432.86 | 14.11 | |
| 6PM06154 | 06/15/1994 | 6 | PM | 1441.0 | 1436.69 | 13.86 | Q |
| 7PM06154 | 06/15/1994 | 7 | PM | 1438.5 | 1499.04 | 21.23 | |
| 8PM06154 | 06/15/1994 | 8 | PM | 1462.5 | 1516.72 | 18.67 | |
| 1PM06174 | 06/17/1994 | 1 | PM | 1450.8 | 1485.94 | 17.71 | |
| 2PM06174 | 06/17/1994 | 2 | PM | 1442.8 | 1420.51 | 42.33 | |
| 3PM06174 | 06/17/1994 | 3 | PM | 1454.1 | 1442.42 | 18.04 | |
| 4PM06174 | 06/17/1994 | 4 | PM | 1446.0 | 1477.42 | 18.49 | |
| 5PM06174 | 06/17/1994 | 5 | PM | 1441.4 | 1419.13 | 15.02 | |
| 6PM06174 | 06/17/1994 | 6 | PM | 1440.0 | 1421.30 | 26.96 | |
| 7PM06174 | 06/17/1994 | 7 | PM | 1440.2 | 1485.81 | 9.16 | |
| 1PM06194 | 06/19/1994 | 1 | PM | 1454.0 | 1461.47 | 25.54 | |
| 2PM06194 | 06/19/1994 | 2 | PM | 1445.2 | 1396.35 | 83.91 | |
| 3PM06194 | 06/19/1994 | 3 | PM | 1451.7 | 1413.24 | 24.36 | |
| 4PM06194 | 06/19/1994 | 4 | PM | 1450.1 | 1454.01 | 29.04 | |
| 5PM06194 | 06/19/1994 | 5 | PM | 1438.7 | 1390.07 | 12.16 | |
| 6PM06194 | 06/19/1994 | 6 | PM | 1438.1 | 1392.99 | 20.76 | |

Note: Site -Site 1 to 7 are the normal sampling sites.
Site 8 is the co-located sampler located at Site 1.
Sample date indicates the start date of the sample.
Type - PM = PM10 sampler, TS = TSP sampler, BL = field blank
Gravimetric Validity - Sample validity based on sample & gravimetric QC.

| Sample ID | SAMPLE DATE | N | Type | Time(min) | Volume Flow(m3) | Concen. (ug/m3) | Grav. Validity |
|---|---|---|---|---|---|---|---|
| 7PM06194 | 06/19/1994 | 7 | PM | 1440.1 | 1458.02 | 15.85 | |
| 8PM06194 | 06/19/1994 | 8 | PM | 1461.4 | 1472.46 | 25.41 | |
| 1PM06214 | 06/21/1994 | 1 | PM | 1451.3 | 1450.90 | 31.24 | |
| 2PM06214 | 06/21/1994 | 2 | PM | 1444.7 | 1388.34 | 45.19 | |
| 3PM06214 | 06/21/1994 | 3 | PM | 1456.0 | 1409.75 | 30.17 | |
| 4PM06214 | 06/21/1994 | 4 | PM | 1448.3 | 1444.38 | 32.14 | |
| 5PM06214 | 06/21/1994 | 5 | PM | 1439.3 | 1442.37 | 22.48 | |
| 6PM06214 | 06/21/1994 | 6 | PM | 1437.8 | 1437.41 | 31.67 | |
| 7PM06214 | 06/21/1994 | 7 | PM | 1438.2 | 1448.23 | 23.84 | |
| 1PM06234 | 06/23/1994 | 1 | PM | 1450.7 | 1454.70 | 33.50 | |
| 2PM06234 | 06/23/1994 | 2 | PM | 1441.3 | 1389.28 | 58.55 | |
| 3PM06234 | 06/23/1994 | 3 | PM | 1455.8 | 1413.85 | 26.19 | |
| 4PM06234 | 06/23/1994 | 4 | PM | 1448.5 | 1448.96 | 29.07 | |
| 5PM06234 | 06/23/1994 | 5 | PM | 1441.5 | 1448.98 | 17.95 | |
| 6PM06234 | 06/23/1994 | 6 | PM | 1439.6 | 1443.57 | 21.00 | |
| 7PM06234 | 06/23/1994 | 7 | PM | 1442.4 | 1456.87 | 52.40 | |
| 1PM06254 | 06/25/1994 | 1 | PM | 1454.1 | 1451.73 | 13.99 | |
| 2PM06254 | 06/25/1994 | 2 | PM | 1445.0 | 1386.75 | 26.77 | |
| 3PM06254 | 06/25/1994 | 3 | PM | 1453.9 | 1405.83 | 21.57 | |
| 4PM06254 | 06/25/1994 | 4 | PM | 1445.5 | 1439.66 | 24.95 | |
| 5PM06254 | 06/25/1994 | 5 | PM | 1441.1 | 1442.22 | 18.32 | |
| 6PM06254 | 06/25/1994 | 6 | PM | 1441.2 | 1438.85 | 37.83 | |
| 7PM06254 | 06/25/1994 | 7 | PM | 1442.2 | 1450.30 | 22.15 | |
| 8PM06254 | 06/25/1994 | 8 | PM | 1460.6 | 1461.73 | 22.73 | |
| 1PM06274 | 06/27/1994 | 1 | PM | 1454.8 | 1480.85 | 17.50 | |
| 2PM06274 | 06/27/1994 | 2 | PM | 1446.3 | 1415.15 | 22.91 | |
| 3PM06274 | 06/27/1994 | 3 | PM | 1455.9 | 1435.30 | 22.87 | |
| 4PM06274 | 06/27/1994 | 4 | PM | 1448.6 | 1470.97 | 22.04 | |
| 5PM06274 | 06/27/1994 | 5 | PM | 1436.4 | 1465.66 | 9.63 | |
| 6PM06274 | 06/27/1994 | 6 | PM | 1437.7 | 1463.44 | 17.78 | Q |
| 7PM06274 | 06/27/1994 | 7 | PM | 1441.2 | 1477.66 | 12.12 | |
| 1PM06294 | 06/29/1994 | 1 | PM | 1450.6 | 1441.91 | 51.49 | |
| 2PM06294 | 06/29/1994 | 2 | PM | 1445.4 | 1381.11 | 112.51 | |
| 3PM06294 | 06/29/1994 | 3 | PM | 1454.6 | 1400.41 | 36.37 | |
| 4PM06294 | 06/29/1994 | 4 | PM | 1445.6 | 1433.46 | 27.50 | |
| 5PM06294 | 06/29/1994 | 5 | PM | 1441.8 | 1436.63 | 16.65 | |
| 6PM06294 | 06/29/1994 | 6 | PM | 1440.7 | 1432.06 | 26.27 | |
| 7PM06294 | 06/29/1994 | 7 | PM | 1438.8 | 1437.10 | 41.91 | |
| 1PM07014 | 07/01/1994 | 1 | PM | 1451.1 | 1445.32 | 41.05 | |
| 2PM07014 | 07/01/1994 | 2 | PM | 1444.6 | 1383.13 | 76.47 | |
| 3PM07014 | 07/01/1994 | 3 | PM | 1451.6 | 1400.32 | 35.58 | |
| 4PM07014 | 07/01/1994 | 4 | PM | 1448.1 | 1438.85 | 28.72 | |
| 5PM07014 | 07/01/1994 | 5 | PM | 1441.7 | 1439.43 | 11.82 | |
| 6PM07014 | 07/01/1994 | 6 | PM | 1440.1 | 1434.36 | 21.07 | |
| 7PM07014 | 07/01/1994 | 7 | PM | 1440.0 | 1441.24 | 18.47 | |
| 8PM07014 | 07/01/1994 | 8 | PM | 1459.0 | 1456.70 | 46.02 | |
| 1PM07034 | 07/03/1994 | 1 | PM | 1452.9 | 1471.84 | 34.26 | |

Note: Site -Site 1 to 7 are the normal sampling sites.
Site 8 is the co-located sampler located at Site 1.
Sample date indicates the start date of the sample.
Type - PM = PM10 sampler, TS = TSP sampler, BL = field blank
Gravimetric Validity - Sample validity based on sample & gravimetric QC.

| Sample ID | SAMPLE DATE | N | Type | Time(min) | Volume Flow(m3) | Concen. (ug/m3) | Grav. Validity |
|---|---|---|---|---|---|---|---|
| 2PM07034 | 07/03/1994 | 2 | PM | 1445.3 | 1407.42 | 90.29 | |
| 3PM07034 | 07/03/1994 | 3 | PM | 1456.0 | 1428.56 | 17.58 | |
| 4PM07034 | 07/03/1994 | 4 | PM | 1451.2 | 1466.54 | 8.46 | |
| 5PM07034 | 07/03/1994 | 5 | PM | 1436.9 | 1459.13 | 6.45 | |
| 6PM07034 | 07/03/1994 | 6 | PM | 1439.7 | 1458.47 | 9.95 | |
| 7PM07034 | 07/03/1994 | 7 | PM | 1440.9 | 1466.74 | 8.25 | |
| 1PM07054 | 07/05/1994 | 1 | PM | 1451.5 | 1479.50 | 65.06 | |
| 2PM07054 | 07/05/1994 | 2 | PM | 1447.4 | 1418.15 | 105.62 | Q |
| 3PM07054 | 07/05/1994 | 3 | PM | 1455.8 | 1437.18 | 49.08 | Q |
| 4PM07054 | 07/05/1994 | 4 | PM | 1452.2 | 1476.64 | 41.74 | |
| 5PM07054 | 07/05/1994 | 5 | PM | 1440.2 | 1471.53 | 26.18 | |
| 6PM07054 | 07/05/1994 | 6 | PM | 1440.6 | 1468.39 | 38.43 | |
| 7PM07054 | 07/05/1994 | 7 | PM | 1437.4 | 1472.21 | 33.30 | |
| 1PM07074 | 07/07/1994 | 1 | PM | 1449.8 | 1484.91 | 18.13 | |
| 2PM07074 | 07/07/1994 | 2 | PM | 1443.5 | 1421.20 | 25.42 | Q |
| 3PM07074 | 07/07/1994 | 3 | PM | 1454.3 | 1442.62 | 13.59 | Q |
| 4PM07074 | 07/07/1994 | 4 | PM | 1446.5 | 1477.93 | 16.72 | |
| 5PM07074 | 07/07/1994 | 5 | PM | 1443.3 | 1481.85 | 18.37 | |
| 6PM07074 | 07/07/1994 | 6 | PM | 1442.8 | 1477.75 | 14.08 | |
| 7PM07074 | 07/07/1994 | 7 | PM | 1439.8 | 1481.81 | 15.40 | |
| 8PM07074 | 07/07/1994 | 8 | PM | 1460.3 | 1499.31 | 16.68 | |
| 1PM07094 | 07/09/1994 | 1 | PM | 1453.2 | 1441.12 | 26.18 | |
| 2PM07094 | 07/09/1994 | 2 | PM | 1447.2 | 1379.60 | 58.02 | |
| 3PM07094 | 07/09/1994 | 3 | PM | 1455.4 | 1397.88 | 19.04 | |
| 4PM07094 | 07/09/1994 | 4 | PM | 1445.0 | 1429.55 | 21.84 | |
| 5PM07094 | 07/09/1994 | 5 | PM | 1441.9 | 1412.60 | 22.88 | |
| 6PM07094 | 07/09/1994 | 6 | PM | 1440.7 | 1414.89 | 20.93 | |
| 7PM07094 | 07/09/1994 | 7 | PM | 1439.5 | 1434.46 | 19.60 | |
| 1PM07114 | 07/11/1994 | 1 | PM | 1440.0 | 1443.48 | | VOID |
| 2PM07114 | 07/11/1994 | 2 | PM | 1447.0 | 1394.32 | 93.94 | Q |
| 3PM07114 | 07/11/1994 | 3 | PM | 1455.0 | 1412.62 | 21.32 | |
| 4PM07114 | 07/11/1994 | 4 | PM | 1450.4 | 1450.37 | 20.49 | |
| 5PM07114 | 07/11/1994 | 5 | PM | 1437.3 | 1423.31 | 11.39 | |
| 6PM07114 | 07/11/1994 | 6 | PM | 1437.9 | 1427.41 | 15.56 | |
| 7PM07114 | 07/11/1994 | 7 | PM | 605.8 | 610.20 | | VOID |
| 1PM07134 | 07/13/1994 | 1 | PM | 1453.8 | 1465.22 | 41.38 | |
| 2PM07134 | 07/13/1994 | 2 | PM | 1446.0 | 1400.93 | 48.93 | Q |
| 3PM07134 | 07/13/1994 | 3 | PM | 1452.0 | 1417.35 | 29.30 | |
| 4PM07134 | 07/13/1994 | 4 | PM | 1448.5 | 1456.35 | 22.60 | |
| 5PM07134 | 07/13/1994 | 5 | PM | 1440.8 | 1434.57 | 15.28 | |
| 6PM07134 | 07/13/1994 | 6 | PM | 1442.5 | 1439.78 | 23.91 | |
| 7PM07134 | 07/13/1994 | 7 | PM | 1439.9 | 1458.26 | 16.06 | |
| 8PM07134 | 07/13/1994 | 8 | PM | 1464.9 | 1480.01 | 40.56 | |
| 1PM07154 | 07/15/1994 | 1 | PM | 1454.3 | 1457.81 | 29.99 | |
| 2PM07154 | 07/15/1994 | 2 | PM | 1447.0 | 1411.86 | 64.78 | Q |
| 3PM07154 | 07/15/1994 | 3 | PM | 1457.9 | 1415.43 | 25.38 | |
| 4PM07154 | 07/15/1994 | 4 | PM | 1447.4 | 1447.37 | 25.72 | |

Note: Site -Site 1 to 7 are the normal sampling sites.
Site 8 is the co-located sampler located at Site 1.
Sample date indicates the start date of the sample.
Type - PM = PM10 sampler, TS = TSP sampler, BL = field blank
Gravimetric Validity - Sample validity based on sample & gravimetric QC.

| Sample ID | SAMPLE DATE | N | Type | Time(min) | Volume Flow(m3) | Concen. (ug/m3) | Grav. Validity |
|---|---|---|---|---|---|---|---|
| 5PM07154 | 07/15/1994 | 5 | PM | 1441.9 | 1427.87 | 18.57 | |
| 6PM07154 | 07/15/1994 | 6 | PM | 1443.2 | 1432.67 | 25.14 | |
| 7PM07154 | 07/15/1994 | 7 | PM | 1440.9 | 1451.36 | 19.58 | |
| 1PM07174 | 07/17/1994 | 1 | PM | 1455.0 | 1445.33 | 36.97 | |
| 2PM07174 | 07/17/1994 | 2 | PM | 1447.9 | 1399.98 | 65.25 | |
| 3PM07174 | 07/17/1994 | 3 | PM | 1456.0 | 1400.81 | 24.93 | |
| 4PM07174 | 07/17/1994 | 4 | PM | 1452.2 | 1439.05 | 25.52 | |
| 5PM07174 | 07/17/1994 | 5 | PM | 1438.9 | 1412.02 | 13.53 | |
| 6PM07174 | 07/17/1994 | 6 | PM | 1438.8 | 1415.39 | 24.53 | |
| 7PM07174 | 07/17/1994 | 7 | PM | 1440.1 | 1437.46 | 26.73 | |
| 1PM07194 | 07/19/1994 | 1 | PM | 1457.9 | 1459.44 | 31.20 | |
| 2PM07194 | 07/19/1994 | 2 | PM | 1446.1 | 1409.10 | 73.21 | Q |
| 3PM07194 | 07/19/1994 | 3 | PM | 1453.9 | 1409.61 | 33.65 | |
| 4PM07194 | 07/19/1994 | 4 | PM | 1452.4 | 1450.44 | 25.59 | |
| 5PM07194 | 07/19/1994 | 5 | PM | 1441.6 | 1425.65 | 14.67 | |
| 6PM07194 | 07/19/1994 | 6 | PM | 1439.7 | 1427.28 | 23.42 | |
| 7PM07194 | 07/19/1994 | 7 | PM | 1438.0 | 1446.48 | 17.02 | |
| 8PM07194 | 07/19/1994 | 8 | PM | 1463.4 | 1468.51 | 31.55 | |
| 1PM07214 | 07/21/1994 | 1 | PM | 1450.0 | 1456.05 | 43.29 | |
| 2PM07214 | 07/21/1994 | 2 | PM | 1444.6 | 1408.58 | 53.21 | Q |
| 3PM07214 | 07/21/1994 | 3 | PM | 1456.9 | 1413.51 | 35.25 | |
| 4PM07214 | 07/21/1994 | 4 | PM | 1449.4 | 1448.39 | 33.71 | Q |
| 5PM07214 | 07/21/1994 | 5 | PM | 1443.4 | 1428.41 | 25.36 | |
| 6PM07214 | 07/21/1994 | 6 | PM | 1440.8 | 1429.31 | 36.19 | |
| 7PM07214 | 07/21/1994 | 7 | PM | 1439.7 | 1449.17 | 20.30 | |
| 1PM07234 | 07/23/1994 | 1 | PM | 1455.5 | 1456.63 | 22.32 | |
| 2PM07234 | 07/23/1994 | 2 | PM | 1446.2 | 1405.38 | 60.87 | Q |
| 3PM07234 | 07/23/1994 | 3 | PM | 1455.3 | 1407.18 | 17.99 | |
| 4PM07234 | 07/23/1994 | 4 | PM | 1446.4 | 1440.56 | 19.45 | Q |
| 5PM07234 | 07/23/1994 | 5 | PM | 1441.6 | 1421.82 | 19.49 | |
| 6PM07234 | 07/23/1994 | 6 | PM | 1443.2 | 1426.91 | 20.69 | |
| 7PM07234 | 07/23/1994 | 7 | PM | 1441.8 | 1446.43 | 15.22 | |
| 1PM07254 | 07/25/1994 | 1 | PM | 1454.5 | 1450.27 | 24.84 | |
| 2PM07254 | 07/25/1994 | 2 | PM | 1446.9 | 1400.86 | 31.86 | |
| 3PM07254 | 07/25/1994 | 3 | PM | 1452.3 | 1399.10 | 21.17 | |
| 4PM07254 | 07/25/1994 | 4 | PM | 1447.5 | 1436.32 | 23.27 | Q |
| 5PM07254 | 07/25/1994 | 5 | PM | 1437.6 | 1412.66 | 31.24 | |
| 6PM07254 | 07/25/1994 | 6 | PM | 1438.7 | 1417.20 | 39.61 | |
| 7PM07254 | 07/25/1994 | 7 | PM | 1438.3 | 1437.58 | 27.35 | |
| 8PM07254 | 07/25/1994 | 8 | PM | 1459.3 | 1465.59 | 24.71 | |
| 1PM07274 | 07/27/1994 | 1 | PM | 1452.4 | 1451.10 | 43.37 | |
| 2PM07274 | 07/27/1994 | 2 | PM | 1443.8 | 1400.68 | 59.22 | Q |
| 3PM07274 | 07/27/1994 | 3 | PM | 1456.5 | 1405.99 | 39.50 | |
| 4PM07274 | 07/27/1994 | 4 | PM | 1451.5 | 1443.21 | 40.91 | |
| 5PM07274 | 07/27/1994 | 5 | PM | 1441.9 | 1419.74 | 32.49 | |
| 6PM07274 | 07/27/1994 | 6 | PM | 1441.0 | 1422.33 | 41.44 | |
| 7PM07274 | 07/27/1994 | 7 | PM | 1440.2 | 1442.38 | 38.22 | |

Note: Site -Site 1 to 7 are the normal sampling sites.
Site 8 is the co-located sampler located at Site 1.
Sample date indicates the start date of the sample.
Type - PM = PM10 sampler, TS = TSP sampler, BL = field blank
Gravimetric Validity - Sample validity based on sample & gravimetric QC.

| Sample ID | SAMPLE DATE | N | Type | Time(min) | Volume Flow(m3) | Concen. (ug/m3) | Grav. Validity |
|---|---|---|---|---|---|---|---|
| 1PM07294 | 07/29/1994 | 1 | PM | 1452.5 | 1445.85 | 40.69 | |
| 2PM07294 | 07/29/1994 | 2 | PM | 1446.6 | 1398.24 | 43.72 | Q |
| 3PM07294 | 07/29/1994 | 3 | PM | 1455.4 | 1448.74 | 29.70 | |
| 4PM07294 | 07/29/1994 | 4 | PM | 1446.3 | 1453.60 | 31.46 | |
| 5PM07294 | 07/29/1994 | 5 | PM | 1444.2 | 1416.77 | 37.01 | |
| 6PM07294 | 07/29/1994 | 6 | PM | 1439.6 | 1415.73 | 42.90 | Q |
| 7PM07294 | 07/29/1994 | 7 | PM | 1441.3 | 1441.64 | 33.45 | |
| 1PM07314 | 07/31/1994 | 1 | PM | 1456.4 | 1458.52 | 35.40 | |
| 2PM07314 | 07/31/1994 | 2 | PM | 1445.8 | 1405.94 | 72.52 | |
| 3PM07314 | 07/31/1994 | 3 | PM | 1455.0 | 1457.12 | 31.86 | |
| 4PM07314 | 07/31/1994 | 4 | PM | 1449.8 | 1465.95 | 31.74 | |
| 5PM07314 | 07/31/1994 | 5 | PM | 1435.7 | 1416.97 | 28.39 | |
| 6PM07314 | 07/31/1994 | 6 | PM | 1439.0 | 1423.69 | 37.25 | |
| 7PM07314 | 07/31/1994 | 7 | PM | 1441.0 | 1450.07 | 29.74 | |
| 8PM07314 | 07/31/1994 | 8 | PM | 1458.8 | 1471.50 | 35.84 | |
| 1PM08024 | 08/02/1994 | 1 | PM | 1456.0 | 1457.62 | 51.55 | |
| 2PM08024 | 08/02/1994 | 2 | PM | 1444.8 | 1404.52 | 57.63 | Q |
| 3PM08024 | 08/02/1994 | 3 | PM | 1456.6 | 1458.22 | 39.25 | |
| 4PM08024 | 08/02/1994 | 4 | PM | 1451.3 | 1466.97 | 46.86 | |
| 5PM08024 | 08/02/1994 | 5 | PM | 1439.2 | 1419.94 | 51.86 | |
| 6PM08024 | 08/02/1994 | 6 | PM | 1439.2 | 1423.40 | 47.17 | |
| 7PM08024 | 08/02/1994 | 7 | PM | 1436.7 | 1445.26 | 49.22 | |
| 1PM08044 | 08/04/1994 | 1 | PM | 1453.5 | 1441.08 | 40.69 | |
| 2PM08044 | 08/04/1994 | 2 | PM | 1445.1 | 1391.22 | 70.99 | Q |
| 3PM08044 | 08/04/1994 | 3 | PM | 1455.0 | 1442.57 | 30.87 | |
| 4PM08044 | 08/04/1994 | 4 | PM | 1446.4 | 1447.89 | 44.78 | |
| 5PM08044 | 08/04/1994 | 5 | PM | 1442.5 | 1409.43 | 24.49 | |
| 6PM08044 | 08/04/1994 | 6 | PM | 1440.9 | 1411.33 | 46.51 | Q |
| 7PM08044 | 08/04/1994 | 7 | PM | 1440.8 | 1435.39 | 20.91 | |
| 1PM08064 | 08/06/1994 | 1 | PM | 1454.0 | 1445.90 | 44.84 | |
| 2PM08064 | 08/06/1994 | 2 | PM | 1441.6 | 1392.02 | 89.42 | |
| 4PM08064 | 08/06/1994 | 4 | PM | 1449.7 | 1455.54 | 27.02 | MR |
| 5PM08064 | 08/06/1994 | 5 | PM | 1441.9 | 1413.09 | 20.96 | |
| 6PM08064 | 08/06/1994 | 6 | PM | 1441.0 | 1415.67 | 32.94 | |
| 7PM08064 | 08/06/1994 | 7 | PM | 1440.7 | 1439.61 | 21.34 | |
| 8PM08064 | 08/06/1994 | 8 | PM | 1457.6 | 1459.97 | 45.58 | |
| 1PM08084 | 08/08/1994 | 1 | PM | 1456.1 | 1448.49 | 58.85 | |
| 2PM08084 | 08/08/1994 | 2 | PM | 1447.4 | 1398.07 | 63.41 | Q |
| 4PM08084 | 08/08/1994 | 4 | PM | 1447.9 | 1454.23 | 44.31 | |
| 5PM08084 | 08/08/1994 | 5 | PM | 1437.0 | 1408.73 | 31.68 | |
| 6PM08084 | 08/08/1994 | 6 | PM | 1436.7 | 1411.90 | 76.61 | Q |
| 7PM08084 | 08/08/1994 | 7 | PM | 1441.1 | 1440.46 | 31.95 | |
| 1PM08104 | 08/10/1994 | 1 | PM | 1453.0 | 1452.19 | 47.61 | |
| 2PM08104 | 08/10/1994 | 2 | PM | 1444.1 | 1401.46 | 69.54 | Q |
| 4PM08104 | 08/10/1994 | 4 | PM | 1450.4 | 1463.60 | 25.91 | |
| 5PM08104 | 08/10/1994 | 5 | PM | 1441.5 | 1419.80 | 16.98 | Q |
| 6PM08104 | 08/10/1994 | 6 | PM | 1442.5 | 1424.30 | 72.64 | Q |

Note: Site -Site 1 to 7 are the normal sampling sites.
Site 8 is the co-located sampler located at Site 1.
Sample date indicates the start date of the sample.
Type - PM = PM10 sampler, TS = TSP sampler, BL = field blank
Gravimetric Validity - Sample validity based on sample & gravimetric QC.

| Sample ID | SAMPLE DATE | N | Type | Time(min) | Volume Flow(m3) | Concen. (ug/m3) | Grav. Validity |
|---|---|---|---|---|---|---|---|
| 7PM08104 | 08/10/1994 | 7 | PM | 1439.9 | 1446.03 | 16.88 | |
| 1PM08124 | 08/12/1994 | 1 | PM | 1452.1 | 1466.55 | 47.69 | Q |
| 2PM08124 | 08/12/1994 | 2 | PM | 1444.7 | 1416.81 | 76.34 | |
| 4PM08124 | 08/12/1994 | 4 | PM | 1445.7 | 1474.21 | 25.86 | |
| 5PM08124 | 08/12/1994 | 5 | PM | 1440.1 | 1433.39 | 26.32 | Q |
| 6PM08124 | 08/12/1994 | 6 | PM | 1442.0 | 1438.79 | 28.03 | Q |
| 7PM08124 | 08/12/1994 | 7 | PM | 1441.8 | 1463.21 | 20.86 | |
| 8PM08124 | 08/12/1994 | 8 | PM | 1460.8 | 1486.05 | 47.20 | Q |
| 1PM08144 | 08/14/1994 | 1 | PM | 1456.0 | 1455.68 | 37.67 | |
| 2PM08144 | 08/14/1994 | 2 | PM | 1446.2 | 1403.95 | 54.95 | |
| 4PM08144 | 08/14/1994 | 4 | PM | 1450.0 | 1463.69 | 24.82 | |
| 5PM08144 | 08/14/1994 | 5 | PM | 1438.1 | 1416.94 | 30.44 | Q |
| 6PM08144 | 08/14/1994 | 6 | PM | 1438.6 | 1420.89 | 26.62 | |
| 7PM08144 | 08/14/1994 | 7 | PM | 1440.9 | 1447.52 | 30.21 | |
| 1PM08164 | 08/16/1994 | 1 | PM | 1455.7 | 1471.17 | 60.26 | |
| 2PM08164 | 08/16/1994 | 2 | PM | 1445.7 | 1411.65 | 86.69 | Q |
| 4PM08164 | 08/16/1994 | 4 | PM | 1447.0 | 1476.47 | 50.89 | |
| 5PM08164 | 08/16/1994 | 5 | PM | 1438.1 | 1411.24 | 38.50 | Q |
| 6PM08164 | 08/16/1994 | 6 | PM | 1441.9 | 1418.48 | 47.40 | Q |
| 7PM08164 | 08/16/1994 | 7 | PM | 1438.1 | 1460.39 | 58.58 | |
| 1PM08184 | 08/18/1994 | 1 | PM | 1452.1 | 1452.28 | 56.84 | |
| 2PM08184 | 08/18/1994 | 2 | PM | 1446.0 | 1397.25 | 64.02 | Q |
| 4PM08184 | 08/18/1994 | 4 | PM | 1448.9 | 1463.07 | 50.75 | |
| 5PM08184 | 08/18/1994 | 5 | PM | 1441.6 | 1420.88 | 32.53 | |
| 6PM08184 | 08/18/1994 | 6 | PM | 1441.0 | 1423.75 | 55.31 | |
| 7PM08184 | 08/18/1994 | 7 | PM | 1441.8 | 1448.92 | 47.93 | |
| 8PM08184 | 08/18/1994 | 8 | PM | 1463.1 | 1473.89 | 56.35 | |
| 1PM08204 | 08/20/1994 | 1 | PM | 1455.9 | 1463.95 | 49.42 | |
| 2PM08204 | 08/20/1994 | 2 | PM | 1444.6 | 1403.46 | 68.02 | Q |
| 4PM08204 | 08/20/1994 | 4 | PM | 1451.3 | 1473.42 | 33.34 | |
| 5PM08204 | 08/20/1994 | 5 | PM | 1439.9 | 1426.87 | 34.29 | |
| 6PM08204 | 08/20/1994 | 6 | PM | 1440.3 | 1430.77 | 49.65 | |
| 7PM08204 | 08/20/1994 | 7 | PM | 1441.5 | 1456.45 | 32.84 | |
| 1PM08224 | 08/22/1994 | 1 | PM | 1455.8 | 1479.85 | 60.65 | |
| 2PM08224 | 08/22/1994 | 2 | PM | 1448.3 | 1422.44 | 111.14 | |
| 4PM08224 | 08/22/1994 | 4 | PM | 1447.7 | 1485.84 | 29.50 | |
| 5PM08224 | 08/22/1994 | 5 | PM | 1435.2 | 1416.64 | 24.72 | |
| 6PM08224 | 08/22/1994 | 6 | PM | 1437.6 | 1422.51 | 31.02 | Q |
| 7PM08224 | 08/22/1994 | 7 | PM | 1439.2 | 1470.06 | 29.34 | |
| 1PM08244 | 08/24/1994 | 1 | PM | 1453.6 | 1448.02 | 51.48 | |
| 2PM08244 | 08/24/1994 | 2 | PM | 1446.8 | 1406.09 | 95.85 | Q |
| 4PM08244 | 08/24/1994 | 4 | PM | 1449.2 | 1429.52 | 43.05 | |
| 5PM08244 | 08/24/1994 | 5 | PM | 1442.1 | 1408.51 | 24.44 | |
| 6PM08244 | 08/24/1994 | 6 | PM | 1441.7 | 1411.63 | 35.02 | Q |
| 7PM08244 | 08/24/1994 | 7 | PM | 1440.4 | 1455.83 | 39.93 | |
| 8PM08244 | 08/24/1994 | 8 | PM | 1463.8 | 1458.18 | 52.29 | PR |
| 1PM08264 | 08/26/1994 | 1 | PM | 1451.9 | 1448.25 | 57.97 | |

Note: Site -Site 1 to 7 are the normal sampling sites.
Site 8 is the co-located sampler located at Site 1.
Sample date indicates the start date of the sample.
Type - PM = PM10 sampler, TS = TSP sampler, BL = field blank
Gravimetric Validity - Sample validity based on sample & gravimetric QC.

| Sample ID | SAMPLE DATE | N | Type | Time(min) | Volume Flow(m3) | Concen. (ug/m3) | Grav. Validity |
|---|---|---|---|---|---|---|---|
| 2PM08264 | 08/26/1994 | 2 | PM | 1445.4 | 1406.61 | 82.45 | Q |
| 4PM08264 | 08/26/1994 | 4 | PM | 1449.1 | 1431.39 | 37.12 | |
| 5PM08264 | 08/26/1994 | 5 | PM | 1440.2 | 1408.57 | 21.52 | |
| 6PM08264 | 08/26/1994 | 6 | PM | 1440.9 | 1412.76 | 36.40 | |
| 7PM08264 | 08/26/1994 | 7 | PM | 1440.7 | 1458.13 | 24.02 | |
| 1PM08284 | 08/28/1994 | 1 | PM | 1455.6 | 1450.01 | 25.39 | |
| 2PM08284 | 08/28/1994 | 2 | PM | 1445.5 | 1404.83 | 56.70 | |
| 4PM08284 | 08/28/1994 | 4 | PM | 1452.0 | 1432.28 | 21.87 | |
| 5PM08284 | 08/28/1994 | 5 | PM | 1436.9 | 1403.43 | 36.50 | |
| 6PM08284 | 08/28/1994 | 6 | PM | 1438.5 | 1408.49 | 36.44 | |
| 7PM08284 | 08/28/1994 | 7 | PM | 1440.4 | 1455.83 | 14.30 | |
| 1PM08304 | 08/30/1994 | 1 | PM | 1453.5 | 1467.75 | 52.08 | |
| 2PM08304 | 08/30/1994 | 2 | PM | 1447.0 | 1425.54 | 85.00 | |
| 4PM08304 | 08/30/1994 | 4 | PM | 1452.2 | 1452.13 | 44.10 | |
| 5PM08304 | 08/30/1994 | 5 | PM | 1437.8 | 1423.56 | 30.72 | |
| 6PM08304 | 08/30/1994 | 6 | PM | 1439.8 | 1429.09 | 41.10 | |
| 7PM08304 | 08/30/1994 | 7 | PM | 1438.8 | 1474.18 | 30.54 | |
| 8PM08304 | 08/30/1994 | 8 | PM | 1462.3 | 1476.64 | 50.08 | |
| 1PM09014 | 09/01/1994 | 1 | PM | 1451.2 | 1456.93 | 41.96 | |
| 2PM09014 | 09/01/1994 | 2 | PM | 1444.0 | 1414.37 | 53.48 | |
| 4PM09014 | 09/01/1994 | 4 | PM | 1445.4 | 1436.94 | 58.14 | |
| 5PM09014 | 09/01/1994 | 5 | PM | 1441.8 | 1419.28 | 32.36 | |
| 6PM09014 | 09/01/1994 | 6 | PM | 1440.4 | 1421.41 | 48.08 | Q |
| 7PM09014 | 09/01/1994 | 7 | PM | 1441.5 | 1468.37 | 40.27 | |
| 1PM09034 | 09/03/1994 | 1 | PM | 1455.5 | 1459.26 | 68.43 | |
| 2PM09034 | 09/03/1994 | 2 | PM | 1447.3 | 1415.63 | 143.77 | |
| 4PM09034 | 09/03/1994 | 4 | PM | 1449.2 | 1438.79 | 40.47 | |
| 5PM09034 | 09/03/1994 | 5 | PM | 1440.0 | 1415.55 | 36.90 | |
| 6PM09034 | 09/03/1994 | 6 | PM | 1443.3 | 1422.35 | 41.29 | Q |
| 7PM09034 | 09/03/1994 | 7 | PM | 1440.7 | 1465.56 | 36.87 | |
| 1PM09054 | 09/05/1994 | 1 | PM | 1457.6 | 1482.58 | 24.90 | |
| 2PM09054 | 09/05/1994 | 2 | PM | 1445.7 | 1434.62 | 34.04 | |
| 4PM09054 | 09/05/1994 | 4 | PM | 1449.1 | 1459.54 | 31.40 | |
| 5PM09054 | 09/05/1994 | 5 | PM | 1435.5 | 1431.61 | 41.03 | |
| 6PM09054 | 09/05/1994 | 6 | PM | 1437.4 | 1437.05 | 29.66 | |
| 7PM09054 | 09/05/1994 | 7 | PM | 1438.5 | 1484.54 | 32.15 | |
| 8PM09054 | 09/05/1994 | 8 | PM | 1460.7 | 1485.74 | 24.58 | |
| 1PM09074 | 09/07/1994 | 1 | PM | 1453.0 | 1448.36 | 43.73 | |
| 2PM09074 | 09/07/1994 | 2 | PM | 1444.7 | 1404.99 | 45.72 | |
| 4PM09074 | 09/07/1994 | 4 | PM | 1446.8 | 1428.13 | 36.85 | |
| 5PM09074 | 09/07/1994 | 5 | PM | 1439.8 | 1407.20 | 31.50 | |
| 6PM09074 | 09/07/1994 | 6 | PM | 1440.6 | 1411.49 | 35.09 | |
| 7PM09074 | 09/07/1994 | 7 | PM | 1438.8 | 1455.19 | 17.46 | |
| 1PM09094 | 09/09/1994 | 1 | PM | 1451.8 | 1448.15 | 53.62 | |
| 2PM09094 | 09/09/1994 | 2 | PM | 1445.2 | 1385.30 | 96.57 | |
| 4PM09094 | 09/09/1994 | 4 | PM | 1447.3 | 1429.61 | 39.33 | |
| 5PM09094 | 09/09/1994 | 5 | PM | 1440.6 | 1408.96 | 31.60 | |

Note: Site -Site 1 to 7 are the normal sampling sites.
Site 8 is the co-located sampler located at Site 1.
Sample date indicates the start date of the sample.
Type - PM = PM10 sampler, TS = TSP sampler, BL = field blank
Gravimetric Validity - Sample validity based on sample & gravimetric QC.

| Sample ID | SAMPLE DATE | N | Type | Time(min) | Volume Flow(m3) | Concen. (ug/m3) | Grav. Validity |
|---|---|---|---|---|---|---|---|
| 6PM09094 | 09/09/1994 | 6 | PM | 1440.7 | 1412.56 | 34.50 | |
| 7PM09094 | 09/09/1994 | 7 | PM | 1439.1 | 1442.50 | 24.69 | |
| 1PM09114 | 09/11/1994 | 1 | PM | 1455.2 | 1475.03 | 31.61 | |
| 2PM09114 | 09/11/1994 | 2 | PM | 1445.5 | 1408.02 | 80.37 | Q |
| 4PM09114 | 09/11/1994 | 4 | PM | 1451.0 | 1456.44 | 31.05 | |
| 5PM09114 | 09/11/1994 | 5 | PM | 1437.6 | 1428.78 | 15.48 | |
| 6PM09114 | 09/11/1994 | 6 | PM | 1440.1 | 1434.81 | 18.62 | |
| 7PM09114 | 09/11/1994 | 7 | PM | 1439.4 | 1466.15 | 14.20 | |
| 8PM09114 | 09/11/1994 | 8 | PM | 1460.1 | 1480.00 | 31.71 | |
| 1PM09134 | 09/13/1994 | 1 | PM | 1453.7 | 1474.01 | 54.24 | |
| 2PM09134 | 09/13/1994 | 2 | PM | 1.9 | 1.85 | | VOID |
| 4PM09134 | 09/13/1994 | 4 | PM | 1450.4 | 1456.33 | 50.98 | |
| 5PM09134 | 09/13/1994 | 5 | PM | 1437.3 | 1428.97 | 36.06 | |
| 6PM09134 | 09/13/1994 | 6 | PM | 1441.4 | 1436.60 | 36.57 | |
| 7PM09134 | 09/13/1994 | 7 | PM | 1435.8 | 1462.97 | 30.30 | |
| 1PM09154 | 09/15/1994 | 1 | PM | 1452.5 | 1491.30 | 19.79 | |
| 2PM09154 | 09/15/1994 | 2 | PM | 1446.4 | 1427.08 | 28.68 | Q |
| 4PM09154 | 09/15/1994 | 4 | PM | 1445.4 | 1469.52 | 20.43 | |
| 5PM09154 | 09/15/1994 | 5 | PM | 1438.9 | 1448.49 | 10.50 | |
| 6PM09154 | 09/15/1994 | 6 | PM | 1440.7 | 1453.93 | 30.97 | |
| 7PM09154 | 09/15/1994 | 7 | PM | 1440.4 | 1486.10 | 13.80 | |
| 0PM09174 | 09/17/1994 | 0 | PM | 1440.0 | 1631.05 | | VOID |
| 1PM09174 | 09/17/1994 | 1 | PM | 1453.2 | 1466.46 | 23.47 | |
| 2PM09174 | 09/17/1994 | 2 | PM | 1442.7 | 1399.04 | 41.77 | |
| 4PM09174 | 09/17/1994 | 4 | PM | 1449.8 | 1448.75 | 27.70 | |
| 5PM09174 | 09/17/1994 | 5 | PM | 1438.7 | 1423.48 | 29.24 | |
| 6PM09174 | 09/17/1994 | 6 | PM | 1439.7 | 1428.01 | 55.77 | Q |
| 7PM09174 | 09/17/1994 | 7 | PM | 1440.3 | 1460.50 | 18.50 | |
| 8PM09174 | 09/17/1994 | 8 | PM | 1458.0 | 1471.31 | 23.26 | |
| 1PM09194 | 09/19/1994 | 1 | PM | 1457.1 | 1476.96 | 44.98 | |
| 2PM09194 | 09/19/1994 | 2 | PM | 1444.2 | 1406.75 | 52.35 | |
| 4PM09194 | 09/19/1994 | 4 | PM | 1448.6 | 1454.03 | 49.07 | |
| 5PM09194 | 09/19/1994 | 5 | PM | 1434.9 | 1426.10 | 30.17 | |
| 6PM09194 | 09/19/1994 | 6 | PM | 1437.7 | 1432.42 | 96.96 | |
| 7PM09194 | 09/19/1994 | 7 | PM | 1438.4 | 1465.13 | 56.96 | |
| 1PM09214 | 09/21/1994 | 1 | PM | 1452.1 | 1484.15 | 49.76 | |
| 2PM09214 | 09/21/1994 | 2 | PM | 1444.6 | 1418.88 | 59.10 | |
| 4PM09214 | 09/21/1994 | 4 | PM | 1449.9 | 1467.44 | 39.48 | Q |
| 5PM09214 | 09/21/1994 | 5 | PM | 1441.3 | 1430.01 | 31.70 | |
| 6PM09214 | 09/21/1994 | 6 | PM | 1441.2 | 1419.14 | 105.62 | |
| 7PM09214 | 09/21/1994 | 7 | PM | 1438.8 | 1477.72 | 42.73 | |
| 1PM09234 | 09/23/1994 | 1 | PM | 1452.8 | 1479.72 | 50.38 | |
| 2PM09234 | 09/23/1994 | 2 | PM | 1445.1 | 1414.46 | 80.01 | |
| 4PM09234 | 09/23/1994 | 4 | PM | 1445.6 | 1458.02 | 48.86 | |
| 5PM09234 | 09/23/1994 | 5 | PM | 1441.5 | 1425.27 | 29.84 | |
| 6PM09234 | 09/23/1994 | 6 | PM | 1441.7 | 1414.69 | 55.81 | Q |
| 7PM09234 | 09/23/1994 | 7 | PM | 1441.0 | 1474.88 | 58.07 | |

Note: Site -Site 1 to 7 are the normal sampling sites.
Site 8 is the co-located sampler located at Site 1.
Sample date indicates the start date of the sample.
Type - PM = PM10 sampler, TS = TSP sampler, BL = field blank
Gravimetric Validity - Sample validity based on sample & gravimetric QC.

| Sample ID | SAMPLE DATE | N | Type | Time(min) | Volume Flow(m3) | Concen. (ug/m3) | Grav. Validity |
|---|---|---|---|---|---|---|---|
| 8PM09234 | 09/23/1994 | 8 | PM | 1461.2 | 1488.27 | 49.62 | |
| 1PM09254 | 09/25/1994 | 1 | PM | 1455.0 | 1469.27 | 37.66 | |
| 2PM09254 | 09/25/1994 | 2 | PM | 1445.3 | 1402.50 | 56.29 | |
| 4PM09254 | 09/25/1994 | 4 | PM | 1448.5 | 1448.43 | 41.17 | |
| 5PM09254 | 09/25/1994 | 5 | PM | 1437.3 | 1408.91 | 29.76 | |
| 6PM09254 | 09/25/1994 | 6 | PM | 1442.0 | 1402.85 | 30.53 | Q |
| 7PM09254 | 09/25/1994 | 7 | PM | 1438.6 | 1459.80 | 35.78 | |
| 1PM09274 | 09/27/1994 | 1 | PM | 1455.9 | 1472.69 | 69.10 | |
| 2PM09274 | 09/27/1994 | 2 | PM | 1455.3 | 1414.64 | 83.46 | Q |
| 4PM09274 | 09/27/1994 | 4 | PM | 1449.5 | 1451.94 | 66.23 | |
| 5PM09274 | 09/27/1994 | 5 | PM | 1438.2 | 1412.23 | 49.17 | |
| 6PM09274 | 09/27/1994 | 6 | PM | 1440.3 | 1403.61 | 92.32 | Q |
| 7PM09274 | 09/27/1994 | 7 | PM | 1436.7 | 1460.35 | 67.28 | |
| 1PM09294 | 09/29/1994 | 1 | PM | 1452.0 | 1475.78 | 39.87 | |
| 2PM09294 | 09/29/1994 | 2 | PM | 1434.9 | 1408.38 | 57.76 | Q |
| 4PM09294 | 09/29/1994 | 4 | PM | 1442.4 | 1458.83 | 20.71 | |
| 5PM09294 | 09/29/1994 | 5 | PM | 1441.8 | 1429.48 | 7.63 | |
| 6PM09294 | 09/29/1994 | 6 | PM | 1442.0 | 1418.90 | 9.38 | Q |
| 7PM09294 | 09/29/1994 | 7 | PM | 1440.5 | 1478.45 | 12.25 | |
| 1PM10014 | 10/01/1994 | 1 | PM | 1453.8 | 1486.38 | 19.93 | |
| 2PM10014 | 10/01/1994 | 2 | PM | 1441.4 | 1423.13 | 50.90 | |
| 4PM10014 | 10/01/1994 | 4 | PM | 1446.3 | 1460.61 | 15.76 | |
| 5PM10014 | 10/01/1994 | 5 | PM | 1438.7 | 1434.88 | 10.53 | |
| 6PM10014 | 10/01/1994 | 6 | PM | 1442.2 | 1427.55 | 8.62 | |
| 7PM10014 | 10/01/1994 | 7 | PM | 1439.4 | 1486.08 | 12.19 | |
| 8PM10014 | 10/01/1994 | 8 | PM | 1459.1 | 1502.74 | 20.37 | |
| 0PM10034 | 10/03/1994 | 0 | PM | 1440.0 | 1631.05 | | VOID |
| 1PM10034 | 10/03/1994 | 1 | PM | 1453.5 | 1540.89 | 4.61 | |
| 2PM10034 | 10/03/1994 | 2 | PM | 1444.5 | 1478.79 | 6.56 | |
| 4PM10034 | 10/03/1994 | 4 | PM | 1445.6 | 1513.73 | 10.64 | |
| 5PM10034 | 10/03/1994 | 5 | PM | 1436.6 | 1485.67 | 10.24 | |
| 6PM10034 | 10/03/1994 | 6 | PM | 1437.0 | 1474.86 | 7.26 | |
| 7PM10034 | 10/03/1994 | 7 | PM | 1439.4 | 1540.90 | 3.77 | |
| 1PM10054 | 10/05/1994 | 1 | PM | 1452.0 | 1505.01 | 25.33 | |
| 2PM10054 | 10/05/1994 | 2 | PM | 1445.0 | 1446.36 | 61.99 | |
| 4PM10054 | 10/05/1994 | 4 | PM | 1448.2 | 1482.66 | 8.98 | |
| 5PM10054 | 10/05/1994 | 5 | PM | 1441.8 | 1457.82 | 6.11 | |
| 6PM10054 | 10/05/1994 | 6 | PM | 1440.9 | 1445.93 | 3.88 | |
| 7PM10054 | 10/05/1994 | 7 | PM | 1438.0 | 1505.12 | 6.32 | |
| 8PM10054 | 10/05/1994 | 8 | PM | 1460.8 | 1525.26 | 25.91 | |
| 1PM10074 | 10/07/1994 | 1 | PM | 1451.3 | 1496.36 | 24.88 | |
| 2PM10074 | 10/07/1994 | 2 | PM | 1450.5 | 1444.19 | 76.84 | |
| 6PM10074 | 10/07/1994 | 6 | PM | 1440.4 | 1437.80 | 12.32 | |
| 7PM10074 | 10/07/1994 | 7 | PM | 1439.5 | 1498.74 | 10.15 | |
| 1PM10094 | 10/09/1994 | 1 | PM | 1456.6 | 1491.30 | 25.43 | |
| 2PM10094 | 10/09/1994 | 2 | PM | 1442.6 | 1426.31 | 42.30 | |
| 6PM10094 | 10/09/1994 | 6 | PM | 1438.6 | 1425.94 | 10.88 | Q |

Note: Site -Site 1 to 7 are the normal sampling sites.
Site 8 is the co-located sampler located at Site 1.
Sample date indicates the start date of the sample.
Type - PM = PM10 sampler, TS = TSP sampler, BL = field blank
Gravimetric Validity - Sample validity based on sample & gravimetric QC.

| Sample ID | SAMPLE DATE | N | Type | Time(min) | Volume Flow(m3) | Concen. (ug/m3) | Grav. Validity |
|---|---|---|---|---|---|---|---|
| 7PM10094 | 10/09/1994 | 7 | PM | 1440.2 | 1488.99 | 12.90 | |
| 1PM10114 | 10/11/1994 | 1 | PM | 1455.9 | 1494.79 | 30.39 | |
| 2PM10114 | 10/11/1994 | 2 | PM | 1446.5 | 1434.18 | 83.37 | |
| 6PM10114 | 10/11/1994 | 6 | PM | 1441.0 | 1432.36 | 27.45 | Q |
| 7PM10114 | 10/11/1994 | 7 | PM | 1438.8 | 1491.70 | 12.88 | |
| 8PM10114 | 10/11/1994 | 8 | PM | 1463.5 | 1513.62 | 31.40 | |
| 1PM10134 | 10/13/1994 | 1 | PM | 1451.2 | 1500.98 | 50.53 | |
| 2PM10134 | 10/13/1994 | 2 | PM | 1444.6 | 1442.90 | 74.41 | |
| 6PM10134 | 10/13/1994 | 6 | PM | 1440.2 | 1442.17 | 28.45 | |
| 7PM10134 | 10/13/1994 | 7 | PM | 1440.8 | 1504.87 | 25.07 | |
| 1PM10154 | 10/15/1994 | 1 | PM | 391.5 | 415.95 | | VOID |
| 2PM10154 | 10/15/1994 | 2 | PM | 1442.3 | 1479.77 | 38.75 | |
| 6PM10154 | 10/15/1994 | 6 | PM | 1439.7 | 1480.85 | 2.50 | |
| 7PM10154 | 10/15/1994 | 7 | PM | 1440.3 | 1545.21 | 4.14 | |
| 1PM10174 | 10/17/1994 | 1 | PM | 1456.1 | 1518.91 | 44.14 | |
| 2PM10174 | 10/17/1994 | 2 | PM | 1443.8 | 1454.40 | 106.64 | |
| 6PM10174 | 10/17/1994 | 6 | PM | 1439.5 | 1453.78 | 5.99 | |
| 7PM10174 | 10/17/1994 | 7 | PM | 1438.5 | 1515.30 | 5.68 | |
| 8PM10174 | 10/17/1994 | 8 | PM | 1459.7 | 1533.87 | 44.23 | |
| 1PM10194 | 10/19/1994 | 1 | PM | 1456.2 | 1509.37 | 10.08 | |
| 2PM10194 | 10/19/1994 | 2 | PM | 1445.0 | 1446.36 | 44.14 | |
| 6PM10194 | 10/19/1994 | 6 | PM | 1441.1 | 1446.13 | 4.77 | |
| 7PM10194 | 10/19/1994 | 7 | PM | 1438.4 | 1505.54 | 3.99 | |
| 1PM10214 | 10/21/1994 | 1 | PM | 1451.8 | 1498.43 | 48.95 | |
| 2PM10214 | 10/21/1994 | 2 | PM | 1444.0 | 1439.27 | 128.27 | |
| 4PM10214 | 10/21/1994 | 4 | PM | 1449.8 | 1478.06 | 14.28 | |
| 6PM10214 | 10/21/1994 | 6 | PM | 1440.7 | 1439.61 | 15.50 | |
| 7PM10214 | 10/21/1994 | 7 | PM | 1439.4 | 1500.23 | 13.01 | |
| 1PM10234 | 10/23/1994 | 1 | PM | 1454.0 | 1523.80 | 19.70 | |
| 2PM10234 | 10/23/1994 | 2 | PM | 1445.4 | 1462.81 | 25.65 | QR |
| 4PM10234 | 10/23/1994 | 4 | PM | 1447.1 | 1497.97 | 19.17 | |
| 6PM10234 | 10/23/1994 | 6 | PM | 1439.6 | 1460.65 | 10.41 | |
| 7PM10234 | 10/23/1994 | 7 | PM | 1441.9 | 1525.94 | 37.38 | |
| 8PM10234 | 10/23/1994 | 8 | PM | 1459.8 | 1541.12 | 18.96 | |
| 9PM10234 | 10/23/1994 | 9 | PM | 1437.0 | 1505.99 | 34.91 | |
| 1PM10254 | 10/25/1994 | 1 | PM | 1456.6 | 1535.44 | 27.30 | |
| 2PM10254 | 10/25/1994 | 2 | PM | 1446.9 | 1454.86 | 52.06 | |
| 6PM10254 | 10/25/1994 | 6 | PM | 1438.3 | 1453.59 | 34.35 | |
| 7PM10254 | 10/25/1994 | 7 | PM | 1436.1 | 1495.45 | 75.34 | |
| 4PM10264 | 10/26/1994 | 4 | PM | 1443.6 | 1475.38 | 33.23 | |
| 9PM10264 | 10/26/1994 | 9 | PM | 1444.4 | 1509.16 | 32.60 | |
| 1PM10274 | 10/27/1994 | 1 | PM | 1453.6 | 1486.21 | 38.11 | |
| 2PM10274 | 10/27/1994 | 2 | PM | 1439.5 | 1403.93 | 125.37 | |
| 6PM10274 | 10/27/1994 | 6 | PM | 1441.1 | 1412.63 | 21.75 | |
| 7PM10274 | 10/27/1994 | 7 | PM | 1439.6 | 1454.04 | 15.00 | |
| 1PM10294 | 10/29/1994 | 1 | PM | 1452.6 | 1558.98 | 19.25 | |
| 2PM10294 | 10/29/1994 | 2 | PM | 1447.4 | 1481.76 | 63.14 | |

Note: Site -Site 1 to 7 are the normal sampling sites.
Site 8 is the co-located sampler located at Site 1.
Sample date indicates the start date of the sample.
Type - PM = PM10 sampler, TS = TSP sampler, BL = field blank
Gravimetric Validity - Sample validity based on sample & gravimetric QC.

| Sample ID | SAMPLE DATE | N | Type | Time(min) | Volume Flow(m3) | Concen. (ug/m3) | Grav. Validity |
|---|---|---|---|---|---|---|---|
| 4PM10294 | 10/29/1994 | 4 | PM | 1449.5 | 1521.67 | 16.57 | |
| 6PM10294 | 10/29/1994 | 6 | PM | 1439.7 | 1481.38 | 6.35 | |
| 7PM10294 | 10/29/1994 | 7 | PM | 1439.0 | 1525.64 | 3.48 | |
| 8PM10294 | 10/29/1994 | 8 | PM | 1459.8 | 1581.92 | 18.91 | |
| 9PM10294 | 10/29/1994 | 9 | PM | 1443.2 | 1548.90 | 4.23 | |
| 1PM10314 | 10/31/1994 | 1 | PM | 1455.7 | 1531.23 | 8.63 | |
| 2PM10314 | 10/31/1994 | 2 | PM | 1444.3 | 1449.18 | 38.80 | |
| 6PM10314 | 10/31/1994 | 6 | PM | 1439.4 | 1451.60 | 11.51 | |
| 7PM10314 | 10/31/1994 | 7 | PM | 1436.7 | 1492.90 | 3.89 | |
| 1TS10023 | 10/02/1993 | 1 | TS | 1449.1 | 1430.36 | 77.86 | |
| 2TS10023 | 10/02/1993 | 2 | TS | 1434.9 | 1455.80 | 118.70 | |
| 3TS10023 | 10/02/1993 | 3 | TS | 1471.1 | 1529.27 | 71.71 | |
| 4TS10023 | 10/02/1993 | 4 | TS | 1478.4 | 1496.25 | 84.13 | |
| 5TS10023 | 10/02/1993 | 5 | TS | 1120.7 | 1134.23 | 75.51 | SR |
| 6TS10023 | 10/02/1993 | 6 | TS | 883.2 | 896.06 | 137.24 | TR |
| 7TS10023 | 10/02/1993 | 7 | TS | 1474.2 | 1488.32 | 91.30 | |
| 8TS10023 | 10/02/1993 | 8 | TS | 1456.7 | 1463.35 | 77.68 | |
| 1TS10043 | 10/04/1993 | 1 | TS | 1443.5 | 1414.98 | 100.84 | |
| 2TS10043 | 10/04/1993 | 2 | TS | 1437.6 | 1448.44 | 132.77 | |
| 3TS10043 | 10/04/1993 | 3 | TS | 1470.9 | 1518.52 | 1074.45 | QR |
| 4TS10043 | 10/04/1993 | 4 | TS | 1485.9 | 1493.45 | 90.85 | |
| 5TS10043 | 10/04/1993 | 5 | TS | 281.9 | 283.33 | 61.80 | TR |
| 6TS10043 | 10/04/1993 | 6 | TS | 1468.0 | 1479.07 | 182.18 | |
| 7TS10043 | 10/04/1993 | 7 | TS | 1473.7 | 1477.51 | 110.39 | |
| 8TS10043 | 10/04/1993 | 8 | TS | 1449.1 | 1445.67 | 102.23 | |
| 1TS10063 | 10/06/1993 | 1 | TS | 1447.9 | 1432.17 | 53.94 | |
| 2TS10063 | 10/06/1993 | 2 | TS | 1440.1 | 1464.13 | 94.51 | |
| 3TS10063 | 10/06/1993 | 3 | TS | 1465.3 | 1526.43 | 245.10 | QR |
| 4TS10063 | 10/06/1993 | 4 | TS | 1481.0 | 1502.02 | 47.70 | |
| 5TS10063 | 10/06/1993 | 5 | TS | 1440.0 | 1460.44 | | VOID |
| 6TS10063 | 10/06/1993 | 6 | TS | 1469.7 | 1494.23 | 24.91 | |
| 7TS10063 | 10/06/1993 | 7 | TS | 1471.3 | 1488.48 | 40.60 | |
| 1TS10083 | 10/08/1993 | 1 | TS | 1447.4 | 1474.87 | 23.88 | |
| 2TS10083 | 10/08/1993 | 2 | TS | 1438.0 | 1506.10 | 47.77 | |
| 3TS10083 | 10/08/1993 | 3 | TS | 1470.5 | 1578.07 | 15.28 | |
| 4TS10083 | 10/08/1993 | 4 | TS | 1473.6 | 1539.59 | 7.21 | |
| 5TS10083 | 10/08/1993 | 5 | TS | 1440.0 | 1504.48 | | VOID |
| 6TS10083 | 10/08/1993 | 6 | TS | 1468.8 | 1538.36 | 7.74 | |
| 7TS10083 | 10/08/1993 | 7 | TS | 1473.0 | 1535.16 | 8.86 | |
| 8TS10083 | 10/08/1993 | 8 | TS | 1454.4 | 1508.28 | 24.02 | |
| 1TS10103 | 10/10/1993 | 1 | TS | 1446.0 | 1449.49 | 17.53 | |
| 2TS10103 | 10/10/1993 | 2 | TS | 1437.6 | 1481.21 | 65.66 | |
| 3TS10103 | 10/10/1993 | 3 | TS | 1470.6 | 1552.53 | 22.88 | |
| 4TS10103 | 10/10/1993 | 4 | TS | 1482.0 | 1523.18 | 18.26 | |
| 5TS10103 | 10/10/1993 | 5 | TS | 1440.0 | 1480.02 | | VOID |
| 6TS10103 | 10/10/1993 | 6 | TS | 1468.6 | 1513.15 | 10.05 | |
| 7TS10103 | 10/10/1993 | 7 | TS | 1472.8 | 1510.01 | 16.04 | |

Note: Site -Site 1 to 7 are the normal sampling sites.
Site 8 is the co-located sampler located at Site 1.
Sample date indicates the start date of the sample.
Type - PM = PM10 sampler, TS = TSP sampler, BL = field blank
Gravimetric Validity - Sample validity based on sample & gravimetric QC.

| Sample ID | SAMPLE DATE | N | Type | Time(min) | Volume Flow(m3) | Concen. (ug/m3) | Grav. Validity |
|---|---|---|---|---|---|---|---|
| 1TS10123 | 10/12/1993 | 1 | TS | 1445.9 | 1445.30 | 37.59 | |
| 2TS10123 | 10/12/1993 | 2 | TS | 1407.6 | 1446.20 | 108.76 | |
| 3TS10123 | 10/12/1993 | 3 | TS | 1443.5 | 1519.62 | 28.97 | |
| 4TS10123 | 10/12/1993 | 4 | TS | 1451.1 | 1487.23 | 24.89 | |
| 5TS10123 | 10/12/1993 | 5 | TS | 1440.0 | 1475.86 | | VOID |
| 6TS10123 | 10/12/1993 | 6 | TS | 1449.2 | 1488.94 | 15.73 | |
| 7TS10123 | 10/12/1993 | 7 | TS | 1464.9 | 1497.68 | 13.29 | |
| 8TS10123 | 10/12/1993 | 8 | TS | 1449.7 | 1474.80 | 37.38 | |
| 1TS10143 | 10/14/1993 | 1 | TS | 1447.6 | 1448.02 | 75.60 | |
| 2TS10143 | 10/14/1993 | 2 | TS | 1409.0 | 1448.67 | 89.45 | |
| 3TS10143 | 10/14/1993 | 3 | TS | 1447.5 | 1524.90 | 31.89 | |
| 4TS10143 | 10/14/1993 | 4 | TS | 1445.6 | 1482.66 | 24.63 | |
| 5TS10143 | 10/14/1993 | 5 | TS | 1440.0 | 1476.92 | | VOID |
| 6TS10143 | 10/14/1993 | 6 | TS | 1449.1 | 1489.90 | 16.45 | |
| 7TS10143 | 10/14/1993 | 7 | TS | 1464.5 | 1498.31 | 19.63 | |
| 1TS10163 | 10/16/1993 | 1 | TS | 1448.3 | 1463.69 | 15.04 | |
| 2TS10163 | 10/16/1993 | 2 | TS | 1402.7 | 1457.09 | 52.12 | |
| 3TS10163 | 10/16/1993 | 3 | TS | 1448.6 | 1541.85 | 16.81 | |
| 4TS10163 | 10/16/1993 | 4 | TS | 1445.3 | 1497.66 | 19.84 | |
| 5TS10163 | 10/16/1993 | 5 | TS | 1467.6 | 1520.77 | 25.00 | |
| 6TS10163 | 10/16/1993 | 6 | TS | 1450.3 | 1506.54 | 11.29 | |
| 7TS10163 | 10/16/1993 | 7 | TS | 1466.9 | 1516.26 | 32.20 | |
| 8TS10163 | 10/16/1993 | 8 | TS | 1455.2 | 1496.75 | 16.85 | |
| 1TS10183 | 10/18/1993 | 1 | TS | 1445.8 | 1463.25 | 60.93 | |
| 2TS10183 | 10/18/1993 | 2 | TS | 1406.6 | 1463.21 | 165.35 | |
| 3TS10183 | 10/18/1993 | 3 | TS | 1447.6 | 1542.96 | 41.24 | |
| 4TS10183 | 10/18/1993 | 4 | TS | 1453.0 | 1507.78 | 40.55 | |
| 5TS10183 | 10/18/1993 | 5 | TS | 1464.8 | 1520.02 | 12.11 | |
| 6TS10183 | 10/18/1993 | 6 | TS | 1448.0 | 1506.28 | 12.49 | |
| 7TS10183 | 10/18/1993 | 7 | TS | 1467.8 | 1519.35 | 12.71 | |
| 1TS10203 | 10/20/1993 | 1 | TS | 1447.7 | 1470.96 | 61.15 | |
| 2TS10203 | 10/20/1993 | 2 | TS | 1440.2 | 1504.08 | 104.64 | |
| 3TS10203 | 10/20/1993 | 3 | TS | 1442.5 | 1543.57 | 57.37 | |
| 4TS10203 | 10/20/1993 | 4 | TS | 1448.9 | 1509.43 | 71.00 | |
| 5TS10203 | 10/20/1993 | 5 | TS | 1441.6 | 1501.83 | 23.72 | |
| 6TS10203 | 10/20/1993 | 6 | TS | 1451.4 | 1515.77 | 31.49 | |
| 7TS10203 | 10/20/1993 | 7 | TS | 1434.4 | 1490.63 | 62.23 | |
| 8TS10203 | 10/20/1993 | 8 | TS | 1453.0 | 1502.51 | 60.47 | |
| 1TS10223 | 10/22/1993 | 1 | TS | 1448.3 | 1448.72 | 55.39 | Q |
| 2TS10223 | 10/22/1993 | 2 | TS | 1439.1 | 1479.62 | 100.83 | Q |
| 3TS10223 | 10/22/1993 | 3 | TS | 1447.9 | 1525.32 | 43.49 | |
| 4TS10223 | 10/22/1993 | 4 | TS | 1444.5 | 1481.53 | 55.65 | |
| 5TS10223 | 10/22/1993 | 5 | TS | 1440.6 | 1477.53 | 74.15 | |
| 6TS10223 | 10/22/1993 | 6 | TS | 1443.3 | 1483.94 | 40.73 | |
| 7TS10223 | 10/22/1993 | 7 | TS | 1437.2 | 1470.38 | 47.57 | |
| 1TS10243 | 10/24/1993 | 1 | TS | 1446.5 | 1446.43 | 93.73 | |
| 2TS10243 | 10/24/1993 | 2 | TS | 1438.6 | 1478.58 | 270.76 | |

Note: Site -Site 1 to 7 are the normal sampling sites.
Site 8 is the co-located sampler located at Site 1.
Sample date indicates the start date of the sample.
Type - PM = PM10 sampler, TS = TSP sampler, BL = field blank
Gravimetric Validity - Sample validity based on sample & gravimetric QC.

| Sample ID | SAMPLE DATE | N | Type | Time(min) | Volume Flow(m3) | Concen. (ug/m3) | Grav. Validity |
|---|---|---|---|---|---|---|---|
| 3TS10243 | 10/24/1993 | 3 | TS | 1447.2 | 1524.05 | 57.64 | |
| 4TS10243 | 10/24/1993 | 4 | TS | 1451.7 | 1488.38 | 37.11 | |
| 5TS10243 | 10/24/1993 | 5 | TS | 1437.6 | 1473.93 | 38.56 | |
| 6TS10243 | 10/24/1993 | 6 | TS | 1441.4 | 1481.45 | 28.43 | |
| 7TS10243 | 10/24/1993 | 7 | TS | 1439.0 | 1471.69 | 36.10 | |
| 8TS10243 | 10/24/1993 | 8 | TS | 1454.6 | 1480.32 | 100.58 | |
| 1TS10263 | 10/26/1993 | 1 | TS | 1446.1 | 1478.34 | 54.96 | |
| 2TS10263 | 10/26/1993 | 2 | TS | 1439.6 | 1512.66 | 92.61 | |
| 3TS10263 | 10/26/1993 | 3 | TS | 1444.9 | 1555.63 | 55.38 | |
| 4TS10263 | 10/26/1993 | 4 | TS | 1451.0 | 1520.90 | 65.66 | |
| 5TS10263 | 10/26/1993 | 5 | TS | 1438.8 | 1508.12 | 33.57 | |
| 6TS10263 | 10/26/1993 | 6 | TS | 1444.2 | 1517.50 | 61.98 | PR |
| 7TS10263 | 10/26/1993 | 7 | TS | 1439.8 | 1505.41 | 22.86 | |
| 1TS10283 | 10/28/1993 | 1 | TS | 1447.7 | 1460.50 | 51.93 | |
| 2TS10283 | 10/28/1993 | 2 | TS | 1440.4 | 1493.60 | 260.60 | |
| 3TS10283 | 10/28/1993 | 3 | TS | 1445.8 | 1536.13 | 73.35 | |
| 4TS10283 | 10/28/1993 | 4 | TS | 1446.7 | 1496.45 | 50.08 | |
| 5TS10283 | 10/28/1993 | 5 | TS | 1442.3 | 1491.90 | 36.69 | |
| 6TS10283 | 10/28/1993 | 6 | TS | 1442.2 | 1495.47 | 44.63 | |
| 7TS10283 | 10/28/1993 | 7 | TS | 1455.6 | 1501.90 | 28.98 | |
| 8TS10283 | 10/28/1993 | 8 | TS | 1453.4 | 1492.22 | 75.84 | |
| 1TS10303 | 10/30/1993 | 1 | TS | 1447.1 | 1493.34 | 45.43 | |
| 2TS10303 | 10/30/1993 | 2 | TS | 1432.7 | 1519.65 | 99.62 | |
| 3TS10303 | 10/30/1993 | 3 | TS | 1450.6 | 1576.51 | 27.74 | |
| 4TS10303 | 10/30/1993 | 4 | TS | 1293.2 | 1368.32 | 47.17 | SMR |
| 5TS10303 | 10/30/1993 | 5 | TS | 1438.0 | 1521.53 | 65.43 | |
| 6TS10303 | 10/30/1993 | 6 | TS | 1442.0 | 1529.52 | 34.74 | |
| 7TS10303 | 10/30/1993 | 7 | TS | 1456.2 | 1536.95 | 35.68 | |
| 1TS11013 | 11/01/1993 | 1 | TS | 1444.4 | 1482.45 | 95.51 | |
| 2TS11013 | 11/01/1993 | 2 | TS | 1440.0 | 1519.12 | 224.47 | |
| 3TS11013 | 11/01/1993 | 3 | TS | 1448.3 | 1565.48 | 89.99 | |
| 4TS11013 | 11/01/1993 | 4 | TS | 1450.4 | 1526.31 | 35.40 | |
| 5TS11013 | 11/01/1993 | 5 | TS | 1438.8 | 1514.11 | 34.03 | |
| 6TS11013 | 11/01/1993 | 6 | TS | 1440.0 | 1519.12 | 34.91 | |
| 7TS11013 | 11/01/1993 | 7 | TS | 1457.3 | 1529.78 | 22.04 | |
| 8TS11013 | 11/01/1993 | 8 | TS | 1451.4 | 1516.06 | 94.97 | |
| 1TS11033 | 11/03/1993 | 1 | TS | 1461.2 | 1473.05 | 190.74 | |
| 2TS11033 | 11/03/1993 | 2 | TS | 1442.9 | 1495.13 | 338.70 | |
| 3TS11033 | 11/03/1993 | 3 | TS | 1443.4 | 1532.47 | 184.06 | |
| 4TS11033 | 11/03/1993 | 4 | TS | 1449.7 | 1498.48 | 116.85 | |
| 5TS11033 | 11/03/1993 | 5 | TS | 1438.2 | 1486.60 | 167.80 | |
| 6TS11033 | 11/03/1993 | 6 | TS | 1442.3 | 1494.51 | 81.81 | |
| 7TS11033 | 11/03/1993 | 7 | TS | 1452.4 | 1497.57 | 60.67 | |
| 1TS11053 | 11/05/1993 | 1 | TS | 1454.2 | 1507.79 | 45.06 | |
| 2TS11053 | 11/05/1993 | 2 | TS | 1442.2 | 1537.00 | 120.89 | |
| 3TS11053 | 11/05/1993 | 3 | TS | 1449.0 | 1582.28 | 36.05 | |
| 4TS11053 | 11/05/1993 | 4 | TS | 1445.7 | 1536.92 | 29.95 | |

Note: Site -Site 1 to 7 are the normal sampling sites.
Site 8 is the co-located sampler located at Site 1.
Sample date indicates the start date of the sample.
Type - PM = PM10 sampler, TS = TSP sampler, BL = field blank
Gravimetric Validity - Sample validity based on sample & gravimetric QC.

| Sample ID | SAMPLE DATE | N | Type | Time(min) | Volume Flow(m3) | Concen. (ug/m3) | Grav. Validity |
|---|---|---|---|---|---|---|---|
| 5TS11053 | 11/05/1993 | 5 | TS | 1439.5 | 1530.33 | 27.00 | |
| 6TS11053 | 11/05/1993 | 6 | TS | 1446.3 | 1541.37 | 41.03 | |
| 7TS11053 | 11/05/1993 | 7 | TS | 1454.7 | 1542.66 | 16.28 | P |
| 8TS11053 | 11/05/1993 | 8 | TS | 1450.5 | 1530.61 | 43.67 | |
| 1TS11073 | 11/07/1993 | 1 | TS | 1440.5 | 1491.42 | 39.58 | |
| 2TS11073 | 11/07/1993 | 2 | TS | 1437.2 | 1529.43 | 104.22 | |
| 3TS11073 | 11/07/1993 | 3 | TS | 1442.7 | 1573.07 | 33.58 | |
| 4TS11073 | 11/07/1993 | 4 | TS | 1442.2 | 1530.96 | 41.89 | MR |
| 5TS11073 | 11/07/1993 | 5 | TS | 1437.6 | 1526.07 | 13.57 | |
| 6TS11073 | 11/07/1993 | 6 | TS | 1439.6 | 1531.99 | 23.51 | |
| 7TS11073 | 11/07/1993 | 7 | TS | 1455.6 | 1541.39 | 16.03 | |
| 1TS11093 | 11/09/1993 | 1 | TS | 1444.4 | 1500.37 | 54.22 | |
| 2TS11093 | 11/09/1993 | 2 | TS | 1439.8 | 1537.26 | 117.55 | |
| 3TS11093 | 11/09/1993 | 3 | TS | 1443.9 | 1579.58 | 35.47 | |
| 4TS11093 | 11/09/1993 | 4 | TS | 1378.4 | 1468.07 | 71.77 | S |
| 5TS11093 | 11/09/1993 | 5 | TS | 1437.9 | 1531.44 | 65.86 | |
| 6TS11093 | 11/09/1993 | 6 | TS | 1442.9 | 1540.57 | 59.82 | |
| 7TS11093 | 11/09/1993 | 7 | TS | 1458.3 | 1549.33 | 50.12 | |
| 8TS11093 | 11/09/1993 | 8 | TS | 1455.1 | 1538.26 | 54.96 | |
| 1TS11113 | 11/11/1993 | 1 | TS | 1451.5 | 1510.49 | 133.35 | |
| 2TS11113 | 11/11/1993 | 2 | TS | 1439.8 | 1540.07 | 273.53 | |
| 3TS11113 | 11/11/1993 | 3 | TS | 1447.5 | 1586.42 | 101.29 | |
| 4TS11113 | 11/11/1993 | 4 | TS | 1429.3 | 1525.07 | 127.68 | |
| 5TS11113 | 11/11/1993 | 5 | TS | 1441.3 | 1537.88 | 82.31 | |
| 6TS11113 | 11/11/1993 | 6 | TS | 1440.5 | 1540.82 | 77.08 | |
| 7TS11113 | 11/11/1993 | 7 | TS | 1455.7 | 1549.41 | 144.85 | |
| 1TS11133 | 11/13/1993 | 1 | TS | 1449.4 | 1523.99 | 73.14 | |
| 2TS11133 | 11/13/1993 | 2 | TS | 1434.3 | 1550.11 | 235.03 | |
| 3TS11133 | 11/13/1993 | 3 | TS | 1448.5 | 1604.01 | 70.68 | |
| 4TS11133 | 11/13/1993 | 4 | TS | 1423.3 | 1534.43 | 46.36 | |
| 5TS11133 | 11/13/1993 | 5 | TS | 1438.0 | 1550.28 | 40.08 | |
| 6TS11133 | 11/13/1993 | 6 | TS | 1439.2 | 1555.40 | 39.95 | |
| 7TS11133 | 11/13/1993 | 7 | TS | 1456.8 | 1566.67 | 36.34 | |
| 8TS11133 | 11/13/1993 | 8 | TS | 1458.6 | 1560.84 | 66.54 | |
| 1TS11153 | 11/15/1993 | 1 | TS | 1448.8 | 1517.16 | 66.74 | |
| 2TS11153 | 11/15/1993 | 2 | TS | 1438.2 | 1548.01 | 151.64 | |
| 3TS11153 | 11/15/1993 | 3 | TS | 1448.1 | 1597.05 | 54.82 | |
| 4TS11153 | 11/15/1993 | 4 | TS | 1434.1 | 1539.78 | 86.36 | |
| 5TS11153 | 11/15/1993 | 5 | TS | 1437.2 | 1543.11 | 37.15 | |
| 6TS11153 | 11/15/1993 | 6 | TS | 1438.5 | 1548.33 | 35.41 | |
| 7TS11153 | 11/15/1993 | 7 | TS | 1455.8 | 1559.24 | 33.11 | |
| 1TS11173 | 11/17/1993 | 1 | TS | 1450.2 | 1494.36 | 48.88 | |
| 2TS11173 | 11/17/1993 | 2 | TS | 1438.9 | 1523.99 | 199.99 | |
| 3TS11173 | 11/17/1993 | 3 | TS | 1445.5 | 1568.72 | 42.61 | |
| 4TS11173 | 11/17/1993 | 4 | TS | 1428.8 | 1509.57 | 79.47 | |
| 5TS11173 | 11/17/1993 | 5 | TS | 1437.3 | 1518.55 | 79.27 | |
| 6TS11173 | 11/17/1993 | 6 | TS | 1439.1 | 1524.20 | 72.74 | |

Note: Site -Site 1 to 7 are the normal sampling sites.
Site 8 is the co-located sampler located at Site 1.
Sample date indicates the start date of the sample.
Type - PM = PM10 sampler, TS = TSP sampler, BL = field blank
Gravimetric Validity - Sample validity based on sample & gravimetric QC.

| Sample ID | SAMPLE DATE | N | Type | Time(min) | Volume Flow(m3) | Concen. (ug/m3) | Grav. Validity |
|---|---|---|---|---|---|---|---|
| 7TS11173 | 11/17/1993 | 7 | TS | 1452.2 | 1530.51 | 30.07 | |
| 8TS11173 | 11/17/1993 | 8 | TS | 1451.5 | 1522.21 | 47.26 | |
| 1TS11193 | 11/19/1993 | 1 | TS | 1451.4 | 1523.83 | 56.73 | |
| 2TS11193 | 11/19/1993 | 2 | TS | 1421.7 | 1534.19 | 117.46 | |
| 3TS11193 | 11/19/1993 | 3 | TS | 1448.8 | 1601.96 | 69.83 | |
| 4TS11193 | 11/19/1993 | 4 | TS | 1429.5 | 1538.81 | 58.13 | |
| 5TS11193 | 11/19/1993 | 5 | TS | 1439.1 | 1549.14 | 27.90 | |
| 6TS11193 | 11/19/1993 | 6 | TS | 1440.6 | 1554.59 | 29.41 | |
| 7TS11193 | 11/19/1993 | 7 | TS | 1453.7 | 1561.03 | 12.24 | |
| 1TS11213 | 11/21/1993 | 1 | TS | 1446.4 | 1496.42 | 63.92 | |
| 2TS11213 | 11/21/1993 | 2 | TS | 1434.4 | 1525.32 | 199.42 | |
| 3TS11213 | 11/21/1993 | 3 | TS | 1450.6 | 1580.54 | 53.87 | |
| 4TS11213 | 11/21/1993 | 4 | TS | 1430.9 | 1517.87 | 105.34 | |
| 5TS11213 | 11/21/1993 | 5 | TS | 1436.9 | 1524.23 | 80.81 | |
| 6TS11213 | 11/21/1993 | 6 | TS | 1437.4 | 1528.51 | 73.45 | |
| 7TS11213 | 11/21/1993 | 7 | TS | 1456.4 | 1541.08 | 25.84 | |
| 8TS11213 | 11/21/1993 | 8 | TS | 1461.2 | 1538.51 | 69.13 | |
| 1TS11233 | 11/23/1993 | 1 | TS | 1444.6 | 1531.42 | 56.58 | |
| 2TS11233 | 11/23/1993 | 2 | TS | 1431.8 | 1560.09 | 140.40 | |
| 3TS11233 | 11/23/1993 | 3 | TS | 1446.0 | 1614.38 | 29.01 | |
| 4TS11233 | 11/23/1993 | 4 | TS | 1432.7 | 1557.26 | 16.71 | |
| 5TS11233 | 11/23/1993 | 5 | TS | 1438.0 | 1563.02 | 10.31 | |
| 6TS11233 | 11/23/1993 | 6 | TS | 1440.6 | 1569.68 | 13.83 | |
| 7TS11233 | 11/23/1993 | 7 | TS | 1454.7 | 1577.26 | 6.98 | |
| 1TS11253 | 11/25/1993 | 1 | TS | 1447.1 | 1611.10 | 68.94 | |
| 2TS11253 | 11/25/1993 | 2 | TS | 1445.1 | 1653.69 | 67.71 | |
| 3TS11253 | 11/25/1993 | 3 | TS | 1445.5 | 1694.87 | 69.78 | |
| 4TS11253 | 11/25/1993 | 4 | TS | 1429.2 | 1631.44 | 88.32 | |
| 5TS11253 | 11/25/1993 | 5 | TS | 1441.2 | 1645.14 | 52.18 | |
| 6TS11253 | 11/25/1993 | 6 | TS | 1438.1 | 1645.68 | 43.53 | |
| 7TS11253 | 11/25/1993 | 7 | TS | 1450.3 | 1651.46 | 57.13 | |
| 8TS11253 | 11/25/1993 | 8 | TS | 1453.3 | 1646.69 | 71.76 | |
| 1TS11273 | 11/27/1993 | 1 | TS | 1446.5 | 1596.67 | 57.97 | |
| 2TS11273 | 11/27/1993 | 2 | TS | 1434.4 | 1627.39 | 78.02 | |
| 3TS11273 | 11/27/1993 | 3 | TS | 1449.4 | 1684.92 | 41.27 | |
| 4TS11273 | 11/27/1993 | 4 | TS | 1429.2 | 1617.48 | 63.28 | |
| 5TS11273 | 11/27/1993 | 5 | TS | 1440.2 | 1629.93 | 117.87 | |
| 6TS11273 | 11/27/1993 | 6 | TS | 1438.6 | 1632.15 | 31.02 | |
| 7TS11273 | 11/27/1993 | 7 | TS | 1453.6 | 1641.06 | 70.91 | |
| 1TS11293 | 11/29/1993 | 1 | TS | 1442.9 | 1501.55 | 62.37 | |
| 2TS11293 | 11/29/1993 | 2 | TS | 1436.4 | 1536.43 | 112.34 | |
| 3TS11293 | 11/29/1993 | 3 | TS | 1446.4 | 1585.22 | 35.92 | |
| 4TS11293 | 11/29/1993 | 4 | TS | 1427.1 | 1522.73 | 47.31 | |
| 5TS11293 | 11/29/1993 | 5 | TS | 1436.1 | 1532.33 | 57.01 | |
| 6TS11293 | 11/29/1993 | 6 | TS | 1436.2 | 1536.22 | 29.51 | |
| 7TS11293 | 11/29/1993 | 7 | TS | 1453.6 | 1547.17 | 28.33 | |
| 8TS11293 | 11/29/1993 | 8 | TS | 1452.3 | 1538.14 | 62.58 | |

Note: Site -Site 1 to 7 are the normal sampling sites.
Site 8 is the co-located sampler located at Site 1.
Sample date indicates the start date of the sample.
Type - PM = PM10 sampler, TS = TSP sampler, BL = field blank
Gravimetric Validity - Sample validity based on sample & gravimetric QC.

| Sample ID | SAMPLE DATE | N | Type | Time(min) | Volume Flow(m3) | Concen. (ug/m3) | Grav. Validity |
|---|---|---|---|---|---|---|---|
| 1TS12013 | 12/01/1993 | 1 | TS | 1445.3 | 1489.31 | 32.85 | |
| 2TS12013 | 12/01/1993 | 2 | TS | 1436.6 | 1521.55 | 107.06 | |
| 3TS12013 | 12/01/1993 | 3 | TS | 1442.5 | 1565.46 | 22.56 | |
| 4TS12013 | 12/01/1993 | 4 | TS | 1428.7 | 1509.46 | 21.41 | |
| 5TS12013 | 12/01/1993 | 5 | TS | 1438.6 | 1519.92 | 6.65 | |
| 6TS12013 | 12/01/1993 | 6 | TS | 1438.3 | 1523.35 | 4.47 | |
| 7TS12013 | 12/01/1993 | 7 | TS | 1452.4 | 1530.72 | 4.12 | |
| 1TS12033 | 12/03/1993 | 1 | TS | 1446.4 | 1505.19 | 33.84 | |
| 2TS12033 | 12/03/1993 | 2 | TS | 1436.1 | 1536.11 | 170.53 | |
| 3TS12033 | 12/03/1993 | 3 | TS | 1446.6 | 1585.44 | 20.64 | |
| 4TS12033 | 12/03/1993 | 4 | TS | 1429.1 | 1524.86 | 35.50 | |
| 5TS12033 | 12/03/1993 | 5 | TS | 1440.7 | 1537.24 | 30.59 | |
| 6TS12033 | 12/03/1993 | 6 | TS | 1439.6 | 1539.85 | 9.03 | |
| 7TS12033 | 12/03/1993 | 7 | TS | 1453.5 | 1547.07 | 11.71 | |
| 8TS12033 | 12/03/1993 | 8 | TS | 1453.7 | 1539.62 | 32.82 | |
| 1TS12053 | 12/05/1993 | 1 | TS | 1444.6 | 1526.26 | 29.70 | |
| 2TS12053 | 12/05/1993 | 2 | TS | 1433.0 | 1556.17 | 59.60 | |
| 3TS12053 | 12/05/1993 | 3 | TS | 1447.6 | 1610.76 | 19.32 | |
| 4TS12053 | 12/05/1993 | 4 | TS | 1428.1 | 1547.05 | 31.56 | |
| 5TS12053 | 12/05/1993 | 5 | TS | 1438.4 | 1558.20 | 11.62 | |
| 6TS12053 | 12/05/1993 | 6 | TS | 1435.4 | 1558.77 | 7.57 | |
| 7TS12053 | 12/05/1993 | 7 | TS | 1442.9 | 1559.24 | 13.60 | |
| 1TS12073 | 12/07/1993 | 1 | TS | 1442.4 | 1517.73 | 29.01 | |
| 2TS12073 | 12/07/1993 | 2 | TS | 1437.9 | 1555.14 | 88.60 | |
| 3TS12073 | 12/07/1993 | 3 | TS | 1444.3 | 1600.54 | 16.69 | |
| 4TS12073 | 12/07/1993 | 4 | TS | 1425.7 | 1538.15 | 30.77 | |
| 5TS12073 | 12/07/1993 | 5 | TS | 1438.7 | 1552.17 | 46.35 | |
| 6TS12073 | 12/07/1993 | 6 | TS | 1437.8 | 1555.03 | 14.09 | |
| 7TS12073 | 12/07/1993 | 7 | TS | 1465.7 | 1577.40 | 34.82 | |
| 8TS12073 | 12/07/1993 | 8 | TS | 1456.1 | 1559.32 | 29.71 | |
| 1TS12093 | 12/09/1993 | 1 | TS | 1442.7 | 1469.55 | 33.29 | |
| 2TS12093 | 12/09/1993 | 2 | TS | 1436.8 | 1504.31 | 97.05 | |
| 3TS12093 | 12/09/1993 | 3 | TS | 1445.1 | 1550.24 | 16.78 | |
| 4TS12093 | 12/09/1993 | 4 | TS | 1428.9 | 1492.36 | 19.31 | |
| 5TS12093 | 12/09/1993 | 5 | TS | 1438.2 | 1502.07 | 3.60 | |
| 6TS12093 | 12/09/1993 | 6 | TS | 1436.3 | 1503.79 | 4.72 | |
| 7TS12093 | 12/09/1993 | 7 | TS | 1451.6 | 1512.33 | 5.69 | |
| 1TS12113 | 12/11/1993 | 1 | TS | 1445.7 | 1468.39 | 34.82 | |
| 2TS12113 | 12/11/1993 | 2 | TS | 1435.3 | 1498.43 | 64.77 | |
| 3TS12113 | 12/11/1993 | 3 | TS | 1449.7 | 1550.74 | 30.33 | |
| 4TS12113 | 12/11/1993 | 4 | TS | 1429.1 | 1488.28 | 38.19 | |
| 5TS12113 | 12/11/1993 | 5 | TS | 1438.3 | 1497.86 | 28.39 | |
| 6TS12113 | 12/11/1993 | 6 | TS | 1438.9 | 1502.19 | 19.78 | |
| 7TS12113 | 12/11/1993 | 7 | TS | 1456.7 | 1513.27 | 28.90 | |
| 8TS12113 | 12/11/1993 | 8 | TS | 1339.5 | 1384.65 | 42.85 | |
| 1TS12133 | 12/13/1993 | 1 | TS | 1441.6 | 1523.09 | 30.15 | |
| 2TS12133 | 12/13/1993 | 2 | TS | 1433.7 | 1556.93 | 84.25 | |

Note: Site -Site 1 to 7 are the normal sampling sites.
Site 8 is the co-located sampler located at Site 1.
Sample date indicates the start date of the sample.
Type - PM = PM10 sampler, TS = TSP sampler, BL = field blank
Gravimetric Validity - Sample validity based on sample & gravimetric QC.

| Sample ID | SAMPLE DATE | N | Type | Time(min) | Volume Flow(m3) | Concen. (ug/m3) | Grav. Validity |
|---|---|---|---|---|---|---|---|
| 3TS12133 | 12/13/1993 | 3 | TS | 1447.4 | 1610.54 | 17.21 | |
| 4TS12133 | 12/13/1993 | 4 | TS | 1440.0 | 1559.94 | | VOID |
| 5TS12133 | 12/13/1993 | 5 | TS | 1436.5 | 1556.15 | 29.51 | |
| 6TS12133 | 12/13/1993 | 6 | TS | 1438.2 | 1561.81 | 6.34 | |
| 7TS12133 | 12/13/1993 | 7 | TS | 1454.9 | 1572.20 | 11.90 | |
| 1TS12153 | 12/15/1993 | 1 | TS | 1445.6 | 1517.74 | 70.48 | |
| 2TS12153 | 12/15/1993 | 2 | TS | 1435.9 | 1549.52 | 202.76 | |
| 3TS12153 | 12/15/1993 | 3 | TS | 1442.0 | 1594.44 | 42.42 | |
| 4TS12153 | 12/15/1993 | 4 | TS | 1451.8 | 1485.65 | 29.43 | |
| 5TS12153 | 12/15/1993 | 5 | TS | 1440.7 | 1550.86 | 14.00 | |
| 6TS12153 | 12/15/1993 | 6 | TS | 1438.8 | 1552.65 | 11.54 | |
| 7TS12153 | 12/15/1993 | 7 | TS | 1451.7 | 1558.88 | 20.60 | |
| 8TS12153 | 12/15/1993 | 8 | TS | 1440.0 | 1538.65 | | VOID |
| 1TS12173 | 12/17/1993 | 1 | TS | 1445.3 | 1525.32 | 46.18 | |
| 2TS12173 | 12/17/1993 | 2 | TS | 1436.4 | 1558.15 | 53.62 | |
| 3TS12173 | 12/17/1993 | 3 | TS | 1447.0 | 1608.29 | 24.45 | |
| 4TS12173 | 12/17/1993 | 4 | TS | 1426.3 | 1467.15 | 48.76 | |
| 5TS12173 | 12/17/1993 | 5 | TS | 1438.6 | 1556.67 | 25.90 | |
| 6TS12173 | 12/17/1993 | 6 | TS | 1437.8 | 1559.67 | 14.05 | |
| 7TS12173 | 12/17/1993 | 7 | TS | 1451.9 | 1567.20 | 20.30 | |
| 1TS12193 | 12/19/1993 | 1 | TS | 1448.8 | 1529.59 | 45.14 | |
| 2TS12193 | 12/19/1993 | 2 | TS | 1430.8 | 1552.64 | 89.00 | |
| 3TS12193 | 12/19/1993 | 3 | TS | 1448.5 | 1610.57 | 31.93 | |
| 4TS12193 | 12/19/1993 | 4 | TS | 1427.2 | 1468.64 | 36.18 | |
| 5TS12193 | 12/19/1993 | 5 | TS | 1436.7 | 1555.22 | 11.13 | |
| 6TS12193 | 12/19/1993 | 6 | TS | 1408.4 | 1528.34 | 15.71 | |
| 7TS12193 | 12/19/1993 | 7 | TS | 1454.2 | 1570.25 | 14.59 | |
| 8TS12193 | 12/19/1993 | 8 | TS | 1440.0 | 1897.48 | 44.30 | |
| 1TS12213 | 12/21/1993 | 1 | TS | 1442.6 | 1528.15 | 34.18 | |
| 2TS12213 | 12/21/1993 | 2 | TS | 1438.5 | 1566.25 | 87.07 | |
| 3TS12213 | 12/21/1993 | 3 | TS | 1446.6 | 1613.87 | 20.34 | |
| 4TS12213 | 12/21/1993 | 4 | TS | 1429.5 | 1475.94 | 23.25 | |
| 5TS12213 | 12/21/1993 | 5 | TS | 1435.5 | 1559.13 | 10.40 | |
| 6TS12213 | 12/21/1993 | 6 | TS | 1439.0 | 1566.80 | 8.69 | |
| 7TS12213 | 12/21/1993 | 7 | TS | 1453.8 | 1575.09 | 9.91 | |
| 1TS12233 | 12/23/1993 | 1 | TS | 1460.2 | 1558.42 | 38.52 | |
| 2TS12233 | 12/23/1993 | 2 | TS | 1438.7 | 1578.25 | 81.34 | |
| 3TS12233 | 12/23/1993 | 3 | TS | 1444.7 | 1623.86 | 22.12 | |
| 4TS12233 | 12/23/1993 | 4 | TS | 1429.5 | 1487.03 | 29.94 | |
| 5TS12233 | 12/23/1993 | 5 | TS | 1437.8 | 1573.39 | 16.34 | |
| 6TS12233 | 12/23/1993 | 6 | TS | 1438.7 | 1578.25 | 10.97 | |
| 7TS12233 | 12/23/1993 | 7 | TS | 1449.1 | 1581.82 | 22.90 | |
| 8TS12233 | 12/23/1993 | 8 | TS | 1389.7 | 1471.92 | 50.64 | |
| 1TS12253 | 12/25/1993 | 1 | TS | 1447.3 | 1565.26 | 33.31 | |
| 2TS12253 | 12/25/1993 | 2 | TS | 1434.3 | 1594.42 | 42.24 | |
| 3TS12253 | 12/25/1993 | 3 | TS | 1450.1 | 1651.69 | 53.01 | |
| 4TS12253 | 12/25/1993 | 4 | TS | 1430.3 | 1507.71 | 56.74 | |

Note: Site -Site 1 to 7 are the normal sampling sites.
Site 8 is the co-located sampler located at Site 1.
Sample date indicates the start date of the sample.
Type - PM = PM10 sampler, TS = TSP sampler, BL = field blank
Gravimetric Validity - Sample validity based on sample & gravimetric QC.

| Sample ID | SAMPLE DATE | N | Type | Time(min) | Volume Flow(m3) | Concen. (ug/m3) | Grav. Validity |
|---|---|---|---|---|---|---|---|
| 5TS12253 | 12/25/1993 | 5 | TS | 1437.5 | 1594.03 | 106.77 | |
| 6TS12253 | 12/25/1993 | 6 | TS | 1444.0 | 1605.20 | 23.25 | |
| 7TS12253 | 12/25/1993 | 7 | TS | 1452.7 | 1606.89 | 159.35 | |
| 1TS12273 | 12/27/1993 | 1 | TS | 1440.4 | 1506.12 | 49.69 | |
| 2TS12273 | 12/27/1993 | 2 | TS | 1435.0 | 1542.29 | 68.77 | |
| 3TS12273 | 12/27/1993 | 3 | TS | 1447.3 | 1593.83 | 36.29 | |
| 4TS12273 | 12/27/1993 | 4 | TS | 1426.8 | 1454.17 | 45.69 | |
| 5TS12273 | 12/27/1993 | 5 | TS | 1434.3 | 1537.72 | 19.91 | |
| 6TS12273 | 12/27/1993 | 6 | TS | 1436.6 | 1544.01 | 19.38 | |
| 7TS12273 | 12/27/1993 | 7 | TS | 1455.5 | 1556.61 | 38.70 | |
| 8TS12273 | 12/27/1993 | 8 | TS | 1450.7 | 1505.39 | 50.58 | |
| 1TS12293 | 12/29/1993 | 1 | TS | 1444.7 | 1530.95 | 42.94 | |
| 2TS12293 | 12/29/1993 | 2 | TS | 1437.8 | 1496.65 | 85.58 | |
| 3TS12293 | 12/29/1993 | 3 | TS | 1442.5 | 1609.86 | 22.31 | |
| 4TS12293 | 12/29/1993 | 4 | TS | 1425.8 | 1472.69 | 49.46 | |
| 5TS12293 | 12/29/1993 | 5 | TS | 1436.8 | 1480.18 | 40.29 | |
| 6TS12293 | 12/29/1993 | 6 | TS | 1439.7 | 1568.13 | 21.18 | |
| 7TS12293 | 12/29/1993 | 7 | TS | 1450.3 | 1529.08 | 18.78 | |
| 1TS12313 | 12/31/1993 | 1 | TS | 1445.1 | 1495.08 | 47.78 | |
| 2TS12313 | 12/31/1993 | 2 | TS | 1435.1 | 1458.44 | 198.07 | |
| 3TS12313 | 12/31/1993 | 3 | TS | 1446.2 | 1575.74 | 32.58 | |
| 4TS12313 | 12/31/1993 | 4 | TS | 1429.5 | 1441.50 | 18.39 | |
| 5TS12313 | 12/31/1993 | 5 | TS | 1439.4 | 1447.73 | 6.15 | |
| 6TS12313 | 12/31/1993 | 6 | TS | 1439.4 | 1530.63 | 8.96 | |
| 7TS12313 | 12/31/1993 | 7 | TS | 1452.9 | 1495.54 | 5.55 | |
| 8TS12313 | 12/31/1993 | 8 | TS | 1453.2 | 1492.02 | 46.27 | |
| 1TS01024 | 01/02/1994 | 1 | TS | 1442.5 | 1480.50 | 30.68 | |
| 2TS01024 | 01/02/1994 | 2 | TS | 1431.4 | 1443.09 | 189.08 | |
| 3TS01024 | 01/02/1994 | 3 | TS | 1446.4 | 1563.43 | 25.28 | |
| 4TS01024 | 01/02/1994 | 4 | TS | 1430.5 | 1431.04 | 8.88 | |
| 5TS01024 | 01/02/1994 | 5 | TS | 1435.2 | 1432.00 | 2.52 | |
| 6TS01024 | 01/02/1994 | 6 | TS | 1434.3 | 1513.11 | 2.71 | |
| 7TS01024 | 01/02/1994 | 7 | TS | 1454.5 | 1485.28 | 2.02 | |
| 1TS01044 | 01/04/1994 | 1 | TS | 1441.5 | 1475.76 | 30.44 | |
| 2TS01044 | 01/04/1994 | 2 | TS | 1438.1 | 1446.18 | 103.23 | |
| 3TS01044 | 01/04/1994 | 3 | TS | 1441.7 | 1554.43 | 13.71 | |
| 4TS01044 | 01/04/1994 | 4 | TS | 1428.7 | 1425.60 | 22.11 | |
| 5TS01044 | 01/04/1994 | 5 | TS | 1436.1 | 1429.28 | 25.97 | |
| 6TS01044 | 01/04/1994 | 6 | TS | 1438.9 | 1514.13 | 5.88 | |
| 7TS01044 | 01/04/1994 | 7 | TS | 1455.1 | 1482.14 | 15.73 | |
| 1TS01064 | 01/06/1994 | 1 | TS | 1447.9 | 1510.07 | 108.80 | |
| 2TS01064 | 01/06/1994 | 2 | TS | 1436.1 | 1471.25 | 297.82 | |
| 3TS01064 | 01/06/1994 | 3 | TS | 1443.9 | 1585.99 | 23.22 | |
| 4TS01064 | 01/06/1994 | 4 | TS | 1429.4 | 1453.05 | 15.29 | |
| 5TS01064 | 01/06/1994 | 5 | TS | 1437.4 | 1457.40 | 3.64 | |
| 6TS01064 | 01/06/1994 | 6 | TS | 1437.2 | 1540.67 | 4.09 | |
| 7TS01064 | 01/06/1994 | 7 | TS | 1448.6 | 1503.17 | 3.40 | |

Note: Site -Site 1 to 7 are the normal sampling sites.
Site 8 is the co-located sampler located at Site 1.
Sample date indicates the start date of the sample.
Type - PM = PM10 sampler, TS = TSP sampler, BL = field blank
Gravimetric Validity - Sample validity based on sample & gravimetric QC.

| Sample ID | SAMPLE DATE | N | Type | Time(min) | Volume Flow(m3) | Concen. (ug/m3) | Grav. Validity |
|---|---|---|---|---|---|---|---|
| 1TS01084 | 01/08/1994 | 1 | TS | 1445.0 | 1507.05 | 29.61 | |
| 2TS01084 | 01/08/1994 | 2 | TS | 1434.2 | 1469.30 | 128.85 | |
| 3TS01084 | 01/08/1994 | 3 | TS | 1449.8 | 1592.48 | 15.96 | |
| 4TS01084 | 01/08/1994 | 4 | TS | 1427.7 | 1451.32 | 23.65 | |
| 5TS01084 | 01/08/1994 | 5 | TS | 1437.9 | 1457.91 | 12.22 | |
| 6TS01084 | 01/08/1994 | 6 | TS | 1438.0 | 1541.52 | 8.18 | |
| 7TS01084 | 01/08/1994 | 7 | TS | 1454.5 | 1509.29 | 31.36 | |
| 8TS01084 | 01/08/1994 | 8 | TS | 1450.9 | 1532.39 | 28.53 | |
| 1TS01104 | 01/10/1994 | 1 | TS | 1439.9 | 1490.80 | 41.81 | |
| 2TS01104 | 01/10/1994 | 2 | TS | 1433.1 | 1457.46 | 84.51 | |
| 3TS01104 | 01/10/1994 | 3 | TS | 1445.0 | 1575.58 | 12.51 | |
| 4TS01104 | 01/10/1994 | 4 | TS | 1428.2 | 1441.24 | 13.82 | |
| 5TS01104 | 01/10/1994 | 5 | TS | 1436.6 | 1445.93 | 3.74 | |
| 6TS01104 | 01/10/1994 | 6 | TS | 1436.1 | 1528.26 | 2.36 | |
| 7TS01104 | 01/10/1994 | 7 | TS | 1453.8 | 1497.57 | 1.94 | |
| 1TS01124 | 01/12/1994 | 1 | TS | 1445.3 | 1487.67 | 54.21 | |
| 2TS01124 | 01/12/1994 | 2 | TS | 1437.4 | 1453.33 | 232.71 | |
| 3TS01124 | 01/12/1994 | 3 | TS | 1442.8 | 1564.07 | 24.69 | |
| 4TS01124 | 01/12/1994 | 4 | TS | 1428.4 | 1433.06 | 12.50 | |
| 5TS01124 | 01/12/1994 | 5 | TS | 1437.6 | 1438.55 | 1.46 | |
| 6TS01124 | 01/12/1994 | 6 | TS | 1437.6 | 1520.98 | 2.70 | |
| 7TS01124 | 01/12/1994 | 7 | TS | 1452.7 | 1487.72 | .81 | |
| 1TS01144 | 01/14/1994 | 1 | TS | 1444.8 | 1483.93 | 43.56 | |
| 2TS01144 | 01/14/1994 | 2 | TS | 1436.4 | 1449.19 | 113.23 | |
| 3TS01144 | 01/14/1994 | 3 | TS | 1451.3 | 1569.88 | 25.49 | |
| 4TS01144 | 01/14/1994 | 4 | TS | 1434.8 | 1436.36 | 34.48 | |
| 5TS01144 | 01/14/1994 | 5 | TS | 1440.5 | 1438.31 | 32.07 | |
| 6TS01144 | 01/14/1994 | 6 | TS | 1438.5 | 1518.64 | 5.14 | |
| 7TS01144 | 01/14/1994 | 7 | TS | 1452.4 | 1484.21 | 14.56 | |
| 8TS01144 | 01/14/1994 | 8 | TS | 1453.7 | 1512.00 | 33.55 | |
| 1TS01164 | 01/16/1994 | 1 | TS | 1444.7 | 1502.89 | 66.98 | |
| 2TS01164 | 01/16/1994 | 2 | TS | 1432.2 | 1463.48 | 281.96 | |
| 3TS01164 | 01/16/1994 | 3 | TS | 1448.3 | 1586.73 | 28.82 | |
| 4TS01164 | 01/16/1994 | 4 | TS | 1427.5 | 1447.40 | 10.78 | |
| 5TS01164 | 01/16/1994 | 5 | TS | 1437.2 | 1453.45 | 5.65 | |
| 6TS01164 | 01/16/1994 | 6 | TS | 1435.9 | 1535.33 | 5.87 | |
| 7TS01164 | 01/16/1994 | 7 | TS | 1460.5 | 1511.63 | 5.10 | |
| 1TS01184 | 01/18/1994 | 1 | TS | 1442.8 | 1500.91 | 55.67 | |
| 2TS01184 | 01/18/1994 | 2 | TS | 1435.3 | 1466.65 | 198.87 | |
| 3TS01184 | 01/18/1994 | 3 | TS | 1444.2 | 1582.23 | 38.77 | |
| 4TS01184 | 01/18/1994 | 4 | TS | 1428.9 | 1448.82 | 76.45 | |
| 5TS01184 | 01/18/1994 | 5 | TS | 1436.0 | 1452.24 | 56.08 | |
| 6TS01184 | 01/18/1994 | 6 | TS | 1438.3 | 1537.89 | 11.52 | |
| 7TS01184 | 01/18/1994 | 7 | TS | 1450.7 | 1501.49 | 66.44 | |
| 1TS01204 | 01/20/1994 | 1 | TS | 1448.7 | 1492.90 | 89.48 | |
| 2TS01204 | 01/20/1994 | 2 | TS | 1435.9 | 1475.92 | 173.22 | |
| 3TS01204 | 01/20/1994 | 3 | TS | 1444.7 | 1515.57 | 78.76 | |

Note: Site -Site 1 to 7 are the normal sampling sites.
Site 8 is the co-located sampler located at Site 1.
Sample date indicates the start date of the sample.
Type - PM = PM10 sampler, TS = TSP sampler, BL = field blank
Gravimetric Validity - Sample validity based on sample & gravimetric QC.

| Sample ID | SAMPLE DATE | N | Type | Time(min) | Volume Flow(m3) | Concen. (ug/m3) | Grav. Validity |
|---|---|---|---|---|---|---|---|
| 4TS01204 | 01/20/1994 | 4 | TS | 1431.3 | 1486.35 | 103.00 | |
| 5TS01204 | 01/20/1994 | 5 | TS | 1440.2 | 1465.09 | 101.56 | |
| 6TS01204 | 01/20/1994 | 6 | TS | 1439.4 | 1548.16 | 26.18 | |
| 7TS01204 | 01/20/1994 | 7 | TS | 1447.7 | 1507.24 | 74.62 | |
| 8TS01204 | 01/20/1994 | 8 | TS | 1453.5 | 1497.84 | 88.78 | |
| 1TS01224 | 01/22/1994 | 1 | TS | 1444.4 | 1485.19 | 52.41 | |
| 2TS01224 | 01/22/1994 | 2 | TS | 1432.7 | 1469.39 | 78.79 | |
| 3TS01224 | 01/22/1994 | 3 | TS | 1447.8 | 1515.46 | 39.15 | |
| 4TS01224 | 01/22/1994 | 4 | TS | 1428.4 | 1480.07 | 68.35 | |
| 5TS01224 | 01/22/1994 | 5 | TS | 1436.8 | 1458.38 | 80.75 | |
| 6TS01224 | 01/22/1994 | 6 | TS | 1439.6 | 1544.95 | 24.55 | |
| 7TS01224 | 01/22/1994 | 7 | TS | 1453.8 | 1510.21 | 51.35 | |
| 1TS01244 | 01/24/1994 | 1 | TS | 1442.8 | 1449.92 | 32.50 | |
| 2TS01244 | 01/24/1994 | 2 | TS | 1435.5 | 1438.89 | 117.87 | |
| 3TS01244 | 01/24/1994 | 3 | TS | 1445.2 | 1478.48 | 25.99 | |
| 4TS01244 | 01/24/1994 | 4 | TS | 1425.6 | 1443.70 | 35.76 | |
| 5TS01244 | 01/24/1994 | 5 | TS | 1434.8 | 1423.36 | 14.13 | |
| 6TS01244 | 01/24/1994 | 6 | TS | 1436.1 | 1506.26 | 16.54 | |
| 7TS01244 | 01/24/1994 | 7 | TS | 1455.1 | 1477.32 | 11.72 | |
| 1TS01264 | 01/26/1994 | 1 | TS | 1442.5 | 1476.70 | 57.32 | |
| 2TS01264 | 01/26/1994 | 2 | TS | 1437.0 | 1467.29 | 89.33 | |
| 3TS01264 | 01/26/1994 | 3 | TS | 1440.2 | 1500.90 | 5.47 | |
| 4TS01264 | 01/26/1994 | 4 | TS | 1427.2 | 1472.32 | 6.12 | |
| 5TS01264 | 01/26/1994 | 5 | TS | 1436.6 | 1451.79 | 4.34 | |
| 6TS01264 | 01/26/1994 | 6 | TS | 1438.5 | 1536.97 | 4.36 | |
| 7TS01264 | 01/26/1994 | 7 | TS | 1449.4 | 1499.03 | 3.00 | |
| 8TS01264 | 01/26/1994 | 8 | TS | 1455.5 | 1490.01 | 57.62 | |
| 1TS01284 | 01/28/1994 | 1 | TS | 1447.6 | 1495.08 | 49.86 | |
| 2TS01284 | 01/28/1994 | 2 | TS | 1434.4 | 1477.63 | 92.97 | |
| 3TS01284 | 01/28/1994 | 3 | TS | 1448.7 | 1523.13 | 33.44 | |
| 4TS01284 | 01/28/1994 | 4 | TS | 1428.9 | 1487.14 | 31.89 | |
| 5TS01284 | 01/28/1994 | 5 | TS | 1436.6 | 1464.64 | 38.33 | |
| 6TS01284 | 01/28/1994 | 6 | TS | 1440.0 | 1552.23 | 7.41 | |
| 7TS01284 | 01/28/1994 | 7 | TS | 1452.4 | 1515.46 | 8.39 | |
| 1TS01304 | 01/30/1994 | 1 | TS | 1444.4 | 1514.72 | 16.05 | |
| 2TS01304 | 01/30/1994 | 2 | TS | 1433.2 | 1499.12 | 38.31 | |
| 3TS01304 | 01/30/1994 | 3 | TS | 1448.8 | 1546.70 | 17.21 | |
| 4TS01304 | 01/30/1994 | 4 | TS | 1430.1 | 1511.31 | 26.22 | |
| 5TS01304 | 01/30/1994 | 5 | TS | 1436.7 | 1487.28 | 26.37 | |
| 6TS01304 | 01/30/1994 | 6 | TS | 1437.2 | 1573.06 | 8.71 | |
| 7TS01304 | 01/30/1994 | 7 | TS | 1455.4 | 1541.96 | 4.87 | |
| 1TS02014 | 02/01/1994 | 1 | TS | 1440.4 | 1511.10 | 66.81 | |
| 2TS02014 | 02/01/1994 | 2 | TS | 1433.7 | 1500.21 | 102.45 | |
| 3TS02014 | 02/01/1994 | 3 | TS | 1446.4 | 1544.71 | 39.06 | |
| 4TS02014 | 02/01/1994 | 4 | TS | 1429.0 | 1510.71 | 57.62 | |
| 5TS02014 | 02/01/1994 | 5 | TS | 1437.1 | 1488.27 | 17.62 | |
| 6TS02014 | 02/01/1994 | 6 | TS | 1436.7 | 1573.08 | 11.77 | |

Note: Site -Site 1 to 7 are the normal sampling sites.
Site 8 is the co-located sampler located at Site 1.
Sample date indicates the start date of the sample.
Type - PM = PM10 sampler, TS = TSP sampler, BL = field blank
Gravimetric Validity - Sample validity based on sample & gravimetric QC.

| Sample ID | SAMPLE DATE | N | Type | Time(min) | Volume Flow(m3) | Concen. (ug/m3) | Grav. Validity |
|---|---|---|---|---|---|---|---|
| 7TS02014 | 02/01/1994 | 7 | TS | 1452.4 | 1539.36 | 58.89 | |
| 8TS02014 | 02/01/1994 | 8 | TS | 1452.5 | 1523.79 | 68.03 | |
| 1TS02034 | 02/03/1994 | 1 | TS | 1445.7 | 1514.41 | 71.23 | |
| 2TS02034 | 02/03/1994 | 2 | TS | 1433.3 | 1497.56 | 136.77 | |
| 3TS02034 | 02/03/1994 | 3 | TS | 1444.2 | 1540.03 | 68.03 | |
| 4TS02034 | 02/03/1994 | 4 | TS | 1427.9 | 1507.28 | 101.24 | |
| 5TS02034 | 02/03/1994 | 5 | TS | 1439.4 | 1488.41 | 46.79 | |
| 6TS02034 | 02/03/1994 | 6 | TS | 1440.3 | 1574.66 | 12.33 | |
| 7TS02034 | 02/03/1994 | 7 | TS | 1452.7 | 1537.37 | 176.38 | |
| 1TS02054 | 02/05/1994 | 1 | TS | 1445.3 | 1503.27 | 70.62 | |
| 2TS02054 | 02/05/1994 | 2 | TS | 1431.7 | 1485.31 | 130.83 | |
| 3TS02054 | 02/05/1994 | 3 | TS | 1450.7 | 1536.04 | 50.16 | |
| 4TS02054 | 02/05/1994 | 4 | TS | 1430.0 | 1498.81 | 72.03 | |
| 5TS02054 | 02/05/1994 | 5 | TS | 1439.1 | 1477.58 | 56.88 | |
| 6TS02054 | 02/05/1994 | 6 | TS | 1438.8 | 1561.90 | 12.17 | |
| 7TS02054 | 02/05/1994 | 7 | TS | 1459.1 | 1533.24 | 74.92 | |
| 1TS02074 | 02/07/1994 | 1 | TS | 1443.8 | 1457.76 | 22.31 | |
| 2TS02074 | 02/07/1994 | 2 | TS | 1439.2 | 1449.36 | 120.26 | |
| 3TS02074 | 02/07/1994 | 3 | TS | 1446.4 | 1486.67 | 12.72 | |
| 4TS02074 | 02/07/1994 | 4 | TS | 1429.5 | 1447.04 | 12.45 | |
| 5TS02074 | 02/07/1994 | 5 | TS | 1435.5 | 1430.76 | 3.50 | |
| 6TS02074 | 02/07/1994 | 6 | TS | 1437.0 | 1409.87 | 4.33 | |
| 7TS02074 | 02/07/1994 | 7 | TS | 1453.4 | 1467.45 | 2.18 | |
| 8TS02074 | 02/07/1994 | 8 | TS | 1451.9 | 1465.93 | 22.73 | |
| 1TS02094 | 02/09/1994 | 1 | TS | 1441.9 | 1490.30 | 55.86 | |
| 2TS02094 | 02/09/1994 | 2 | TS | 1442.3 | 1486.87 | 166.56 | |
| 3TS02094 | 02/09/1994 | 3 | TS | 1442.2 | 1517.44 | 35.34 | |
| 4TS02094 | 02/09/1994 | 4 | TS | 1428.8 | 1480.56 | 23.59 | |
| 5TS02094 | 02/09/1994 | 5 | TS | 1437.9 | 1467.07 | 33.15 | Q |
| 6TS02094 | 02/09/1994 | 6 | TS | 1451.5 | 1457.80 | 8.31 | |
| 7TS02094 | 02/09/1994 | 7 | TS | 1451.7 | 1500.43 | 4.53 | |
| 1TS02114 | 02/11/1994 | 1 | TS | 1446.0 | 1500.64 | 54.54 | |
| 2TS02114 | 02/11/1994 | 2 | TS | 1432.7 | 1483.02 | 123.34 | |
| 3TS02114 | 02/11/1994 | 3 | TS | 1448.0 | 1529.77 | 25.05 | |
| 4TS02114 | 02/11/1994 | 4 | TS | 1428.2 | 1485.96 | 17.44 | |
| 5TS02114 | 02/11/1994 | 5 | TS | 1437.6 | 1472.74 | 7.27 | |
| 6TS02114 | 02/11/1994 | 6 | TS | 1441.6 | 1453.78 | 6.54 | |
| 7TS02114 | 02/11/1994 | 7 | TS | 1450.7 | 1505.51 | 10.83 | |
| 1TS02134 | 02/13/1994 | 1 | TS | 1446.1 | 1497.42 | 33.01 | |
| 2TS02134 | 02/13/1994 | 2 | TS | 1431.2 | 1478.18 | 100.59 | |
| 3TS02134 | 02/13/1994 | 3 | TS | 1451.4 | 1529.95 | 19.29 | |
| 4TS02134 | 02/13/1994 | 4 | TS | 1427.4 | 1481.86 | 27.14 | |
| 5TS02134 | 02/13/1994 | 5 | TS | 1438.3 | 1470.20 | 37.16 | |
| 6TS02134 | 02/13/1994 | 6 | TS | 1435.1 | 1444.01 | 14.55 | |
| 7TS02134 | 02/13/1994 | 7 | TS | 1457.3 | 1509.02 | 13.26 | |
| 8TS02134 | 02/13/1994 | 8 | TS | 1456.5 | 1508.19 | 32.31 | |
| 1TS02154 | 02/15/1994 | 1 | TS | 1440.3 | 1464.13 | 40.73 | |

Note: Site -Site 1 to 7 are the normal sampling sites.
Site 8 is the co-located sampler located at Site 1.
Sample date indicates the start date of the sample.
Type - PM = PM10 sampler, TS = TSP sampler, BL = field blank
Gravimetric Validity - Sample validity based on sample & gravimetric QC.

| Sample ID | SAMPLE DATE | N | Type | Time(min) | Volume Flow(m3) | Concen. (ug/m3) | Grav. Validity |
|---|---|---|---|---|---|---|---|
| 2TS02154 | 02/15/1994 | 2 | TS | 1434.9 | 1470.02 | 87.33 | |
| 3TS02154 | 02/15/1994 | 3 | TS | 1444.6 | 1510.47 | 30.21 | |
| 4TS02154 | 02/15/1994 | 4 | TS | 1428.3 | 1470.78 | 68.92 | |
| 5TS02154 | 02/15/1994 | 5 | TS | 1434.1 | 1450.28 | 117.84 | |
| 6TS02154 | 02/15/1994 | 6 | TS | 1438.1 | 1435.30 | 11.64 | |
| 7TS02154 | 02/15/1994 | 7 | TS | 1451.9 | 1491.26 | 74.01 | |
| 1TS02174 | 02/17/1994 | 1 | TS | 1445.6 | 1424.49 | | VOID |
| 2TS02174 | 02/17/1994 | 2 | TS | 1436.6 | 1426.65 | 172.75 | |
| 3TS02174 | 02/17/1994 | 3 | TS | 1446.8 | 1466.40 | 41.35 | |
| 4TS02174 | 02/17/1994 | 4 | TS | 1426.9 | 1424.33 | 24.59 | |
| 5TS02174 | 02/17/1994 | 5 | TS | 1437.5 | 1409.14 | 14.70 | |
| 6TS02174 | 02/17/1994 | 6 | TS | 1439.1 | 1392.29 | 6.76 | |
| 7TS02174 | 02/17/1994 | 7 | TS | 1452.0 | 1445.68 | -13.84 | PR |
| 1TS02194 | 02/19/1994 | 1 | TS | 1444.2 | 1471.90 | 45.14 | |
| 2TS02194 | 02/19/1994 | 2 | TS | 1432.4 | 1471.23 | 109.50 | |
| 3TS02194 | 02/19/1994 | 3 | TS | 1450.0 | 1520.02 | 18.96 | |
| 4TS02194 | 02/19/1994 | 4 | TS | 1427.5 | 1473.76 | 22.81 | |
| 5TS02194 | 02/19/1994 | 5 | TS | 1437.4 | 1457.36 | 2.27 | |
| 6TS02194 | 02/19/1994 | 6 | TS | 1436.2 | 1437.11 | 2.79 | |
| 7TS02194 | 02/19/1994 | 7 | TS | 1454.6 | 1497.90 | 1.34 | QR |
| 8TS02194 | 02/19/1994 | 8 | TS | 1449.6 | 1523.42 | 43.81 | |
| 1TS02214 | 02/21/1994 | 1 | TS | 1442.7 | 1462.28 | 26.82 | |
| 2TS02214 | 02/21/1994 | 2 | TS | 1433.4 | 1464.18 | 54.40 | |
| 3TS02214 | 02/21/1994 | 3 | TS | 1446.6 | 1508.10 | 14.93 | |
| 4TS02214 | 02/21/1994 | 4 | TS | 1428.8 | 1467.01 | 13.78 | |
| 5TS02214 | 02/21/1994 | 5 | TS | 1436.7 | 1448.63 | 2.76 | |
| 6TS02214 | 02/21/1994 | 6 | TS | 1436.7 | 1429.72 | 2.31 | |
| 7TS02214 | 02/21/1994 | 7 | TS | 1454.6 | 1489.67 | .54 | |
| 1TS02234 | 02/23/1994 | 1 | TS | 1446.0 | 1468.29 | 30.33 | |
| 2TS02234 | 02/23/1994 | 2 | TS | 1436.4 | 1469.93 | 100.95 | |
| 3TS02234 | 02/23/1994 | 3 | TS | 1443.4 | 1507.54 | 20.11 | |
| 4TS02234 | 02/23/1994 | 4 | TS | 1426.7 | 1467.52 | 20.11 | |
| 5TS02234 | 02/23/1994 | 5 | TS | 1438.3 | 1452.89 | 24.04 | |
| 6TS02234 | 02/23/1994 | 6 | TS | 1438.5 | 1434.11 | 6.07 | |
| 7TS02234 | 02/23/1994 | 7 | TS | 1450.7 | 1488.38 | 1.75 | Q |
| 1TS02254 | 02/25/1994 | 1 | TS | 1445.7 | 1437.40 | 66.97 | |
| 2TS02254 | 02/25/1994 | 2 | TS | 1434.1 | 1436.96 | 108.28 | |
| 3TS02254 | 02/25/1994 | 3 | TS | 1446.4 | 1479.18 | 16.64 | |
| 4TS02254 | 02/25/1994 | 4 | TS | 1426.4 | 1436.63 | 26.40 | |
| 5TS02254 | 02/25/1994 | 5 | TS | 1435.0 | 1419.33 | 20.87 | |
| 6TS02254 | 02/25/1994 | 6 | TS | 1438.1 | 1403.83 | 6.20 | |
| 7TS02254 | 02/25/1994 | 7 | TS | 1452.8 | 1459.48 | 24.41 | |
| 8TS02254 | 02/25/1994 | 8 | TS | 1450.2 | 1486.80 | 67.77 | |
| 1TS02274 | 02/27/1994 | 1 | TS | 1443.0 | 1441.95 | 45.52 | |
| 2TS02274 | 02/27/1994 | 2 | TS | 1432.9 | 1443.02 | 132.79 | |
| 3TS02274 | 02/27/1994 | 3 | TS | 1446.5 | 1486.78 | 13.80 | |
| 4TS02274 | 02/27/1994 | 4 | TS | 1426.4 | 1443.90 | 5.47 | |

Note: Site -Site 1 to 7 are the normal sampling sites.
Site 8 is the co-located sampler located at Site 1.
Sample date indicates the start date of the sample.
Type - PM = PM10 sampler, TS = TSP sampler, BL = field blank
Gravimetric Validity - Sample validity based on sample & gravimetric QC.

| Sample ID | SAMPLE DATE | N | Type | Time(min) | Volume Flow(m3) | Concen. (ug/m3) | Grav. Validity |
|---|---|---|---|---|---|---|---|
| 5TS02274 | 02/27/1994 | 5 | TS | 1435.2 | 1426.72 | 3.09 | |
| 6TS02274 | 02/27/1994 | 6 | TS | 1435.9 | 1408.79 | 3.98 | |
| 7TS02274 | 02/27/1994 | 7 | TS | 1456.7 | 1470.78 | 3.13 | |
| 1TS03014 | 03/01/1994 | 1 | TS | 1438.3 | 1431.59 | 51.16 | |
| 2TS03014 | 03/01/1994 | 2 | TS | 1435.3 | 1439.74 | 106.82 | |
| 3TS03014 | 03/01/1994 | 3 | TS | 1443.1 | 1477.40 | 48.15 | |
| 4TS03014 | 03/01/1994 | 4 | TS | 1428.8 | 1440.59 | 50.01 | |
| 5TS03014 | 03/01/1994 | 5 | TS | 1434.9 | 1420.77 | 14.79 | |
| 6TS03014 | 03/01/1994 | 6 | TS | 1438.6 | 1405.86 | 13.31 | Q |
| 7TS03014 | 03/01/1994 | 7 | TS | 1451.6 | 1459.83 | 13.50 | |
| 1TS03034 | 03/03/1994 | 1 | TS | 1445.7 | 1414.52 | 77.88 | |
| 2TS03034 | 03/03/1994 | 2 | TS | 1436.6 | 1431.16 | 159.41 | |
| 3TS03034 | 03/03/1994 | 3 | TS | 1444.9 | 1454.12 | 47.00 | |
| 4TS03034 | 03/03/1994 | 4 | TS | 1428.2 | 1415.51 | 67.72 | |
| 5TS03034 | 03/03/1994 | 5 | TS | 1435.7 | 1397.42 | 38.81 | |
| 6TS03034 | 03/03/1994 | 6 | TS | 1439.6 | 1382.95 | 15.19 | |
| 7TS03034 | 03/03/1994 | 7 | TS | 1449.5 | 1432.97 | 29.82 | |
| 8TS03034 | 03/03/1994 | 8 | TS | 1456.3 | 1469.30 | 76.88 | |
| 1TS03054 | 03/05/1994 | 1 | TS | 1443.9 | 1434.59 | 41.01 | |
| 2TS03054 | 03/05/1994 | 2 | TS | 1434.5 | 1451.13 | 96.60 | |
| 3TS03054 | 03/05/1994 | 3 | TS | 1447.9 | 1479.65 | 28.00 | |
| 4TS03054 | 03/05/1994 | 4 | TS | 1432.1 | 1441.32 | 30.62 | |
| 5TS03054 | 03/05/1994 | 5 | TS | 1439.2 | 1422.46 | 10.83 | |
| 6TS03054 | 03/05/1994 | 6 | TS | 1440.0 | 1404.70 | 11.90 | |
| 7TS03054 | 03/05/1994 | 7 | TS | 1453.2 | 1458.81 | 21.67 | |
| 1TS03074 | 03/07/1994 | 1 | TS | 1440.9 | 1442.46 | 54.11 | |
| 2TS03074 | 03/07/1994 | 2 | TS | 1433.3 | 1460.95 | 131.50 | |
| 3TS03074 | 03/07/1994 | 3 | TS | 1446.1 | 1489.03 | 46.37 | |
| 4TS03074 | 03/07/1994 | 4 | TS | 1429.5 | 1449.63 | 56.39 | |
| 5TS03074 | 03/07/1994 | 5 | TS | 1436.0 | 1430.12 | 20.15 | |
| 6TS03074 | 03/07/1994 | 6 | TS | 1437.8 | 1413.18 | 17.28 | |
| 7TS03074 | 03/07/1994 | 7 | TS | 1454.8 | 1471.54 | 16.12 | |
| 1TS03094 | 03/09/1994 | 1 | TS | 1445.5 | 1437.70 | 57.00 | |
| 2TS03094 | 03/09/1994 | 2 | TS | 1434.0 | 1452.21 | 171.43 | |
| 3TS03094 | 03/09/1994 | 3 | TS | 1442.8 | 1476.03 | 58.71 | |
| 4TS03094 | 03/09/1994 | 4 | TS | 1428.4 | 1439.17 | 52.70 | |
| 5TS03094 | 03/09/1994 | 5 | TS | 1438.8 | 1423.62 | 22.21 | |
| 6TS03094 | 03/09/1994 | 6 | TS | 1438.9 | 1405.14 | 26.21 | |
| 7TS03094 | 03/09/1994 | 7 | TS | 1451.6 | 1458.77 | 16.67 | |
| 8TS03094 | 03/09/1994 | 8 | TS | 1454.6 | 1491.85 | 51.91 | |
| 1TS03114 | 03/11/1994 | 1 | TS | 1443.9 | 1434.06 | 36.77 | |
| 2TS03114 | 03/11/1994 | 2 | TS | 1431.8 | 1447.91 | 52.45 | |
| 3TS03114 | 03/11/1994 | 3 | TS | 1445.9 | 1477.07 | 25.54 | |
| 4TS03114 | 03/11/1994 | 4 | TS | 1427.9 | 1436.57 | 23.61 | |
| 5TS03114 | 03/11/1994 | 5 | TS | 1436.9 | 1419.70 | 21.21 | |
| 6TS03114 | 03/11/1994 | 6 | TS | 1440.0 | 1404.17 | 10.55 | |
| 7TS03114 | 03/11/1994 | 7 | TS | 1451.0 | 1456.07 | 12.23 | |

Note: Site -Site 1 to 7 are the normal sampling sites.
Site 8 is the co-located sampler located at Site 1.
Sample date indicates the start date of the sample.
Type - PM = PM10 sampler, TS = TSP sampler, BL = field blank
Gravimetric Validity - Sample validity based on sample & gravimetric QC.

| Sample ID | SAMPLE DATE | N | Type | Time(min) | Volume Flow(m3) | Concen. (ug/m3) | Grav. Validity |
|---|---|---|---|---|---|---|---|
| 1TS03134 | 03/13/1994 | 1 | TS | 1441.9 | 1417.29 | 32.48 | |
| 2TS03134 | 03/13/1994 | 2 | TS | 1432.5 | 1433.69 | 101.27 | |
| 3TS03134 | 03/13/1994 | 3 | TS | 1448.4 | 1464.37 | 49.54 | |
| 4TS03134 | 03/13/1994 | 4 | TS | 1428.7 | 1422.56 | 45.51 | |
| 5TS03134 | 03/13/1994 | 5 | TS | 1437.2 | 1405.35 | 14.74 | QR |
| 6TS03134 | 03/13/1994 | 6 | TS | 1439.3 | 1389.02 | 22.48 | |
| 7TS03134 | 03/13/1994 | 7 | TS | 1453.7 | 1443.75 | 21.48 | |
| 1TS03154 | 03/15/1994 | 1 | TS | 1438.4 | 1385.30 | 59.52 | |
| 2TS03154 | 03/15/1994 | 2 | TS | 1435.3 | 1407.47 | 204.25 | |
| 3TS03154 | 03/15/1994 | 3 | TS | 1443.7 | 1430.14 | 95.71 | |
| 4TS03154 | 03/15/1994 | 4 | TS | 1430.5 | 1395.60 | 64.89 | |
| 5TS03154 | 03/15/1994 | 5 | TS | 1435.3 | 1418.24 | 38.52 | |
| 6TS03154 | 03/15/1994 | 6 | TS | 1439.0 | 1360.70 | 81.77 | Q |
| 7TS03154 | 03/15/1994 | 7 | TS | 1450.9 | 1411.88 | 20.20 | |
| 8TS03154 | 03/15/1994 | 8 | TS | 1452.8 | 1442.78 | 61.31 | |
| 1TS03174 | 03/17/1994 | 1 | TS | 1445.5 | 1430.49 | 218.66 | |
| 2TS03174 | 03/17/1994 | 2 | TS | 1437.4 | 1448.36 | 372.99 | |
| 3TS03174 | 03/17/1994 | 3 | TS | 1440.7 | 1466.50 | 164.09 | |
| 4TS03174 | 03/17/1994 | 4 | TS | 1428.1 | 1431.63 | 62.97 | |
| 5TS03174 | 03/17/1994 | 5 | TS | 1436.5 | 1458.52 | 50.90 | |
| 6TS03174 | 03/17/1994 | 6 | TS | 1439.6 | 1398.77 | 60.45 | |
| 7TS03174 | 03/17/1994 | 7 | TS | 1448.9 | 1448.79 | 32.18 | |
| 1TS03194 | 03/19/1994 | 1 | TS | 1444.7 | 1445.74 | 108.18 | |
| 2TS03194 | 03/19/1994 | 2 | TS | 1431.2 | 1458.29 | 334.43 | |
| 3TS03194 | 03/19/1994 | 3 | TS | 1447.3 | 1489.73 | 115.39 | |
| 4TS03194 | 03/19/1994 | 4 | TS | 1424.2 | 1443.73 | 36.66 | |
| 5TS03194 | 03/19/1994 | 5 | TS | 1437.2 | 1475.59 | 31.80 | |
| 6TS03194 | 03/19/1994 | 6 | TS | 1438.7 | 1413.58 | 36.31 | |
| 7TS03194 | 03/19/1994 | 7 | TS | 1451.7 | 1467.87 | 24.68 | |
| 1TS03214 | 03/21/1994 | 1 | TS | 1441.6 | 1411.98 | 56.48 | |
| 2TS03214 | 03/21/1994 | 2 | TS | 1429.9 | 1425.99 | 143.71 | |
| 3TS03214 | 03/21/1994 | 3 | TS | 1447.0 | 1457.79 | 85.73 | |
| 4TS03214 | 03/21/1994 | 4 | TS | 1428.6 | 1417.45 | 56.19 | |
| 5TS03214 | 03/21/1994 | 5 | TS | 1433.0 | 1440.03 | 40.37 | |
| 6TS03214 | 03/21/1994 | 6 | TS | 1435.5 | 1380.48 | 53.85 | |
| 7TS03214 | 03/21/1994 | 7 | TS | 1451.8 | 1436.77 | 22.22 | |
| 8TS03214 | 03/21/1994 | 8 | TS | 1448.5 | 1462.99 | 80.77 | |
| 1TS03234 | 03/23/1994 | 1 | TS | 1442.4 | 1465.74 | 59.87 | |
| 2TS03234 | 03/23/1994 | 2 | TS | 1435.2 | 1484.92 | 246.29 | |
| 3TS03234 | 03/23/1994 | 3 | TS | 1442.4 | 1507.60 | 47.32 | |
| 4TS03234 | 03/23/1994 | 4 | TS | 1427.1 | 1469.02 | 22.00 | |
| 5TS03234 | 03/23/1994 | 5 | TS | 1438.1 | 1499.32 | 17.48 | |
| 6TS03234 | 03/23/1994 | 6 | TS | 1440.4 | 1437.07 | 19.98 | |
| 7TS03234 | 03/23/1994 | 7 | TS | 1450.3 | 1489.08 | 6.32 | |
| 1TS03254 | 03/25/1994 | 1 | TS | 1445.8 | 1445.81 | 50.31 | |
| 2TS03254 | 03/25/1994 | 2 | TS | 1432.2 | 1458.25 | 78.15 | |
| 3TS03254 | 03/25/1994 | 3 | TS | 1447.2 | 1488.56 | 37.84 | |

Note: Site -Site 1 to 7 are the normal sampling sites.
Site 8 is the co-located sampler located at Site 1.
Sample date indicates the start date of the sample.
Type - PM = PM10 sampler, TS = TSP sampler, BL = field blank
Gravimetric Validity - Sample validity based on sample & gravimetric QC.

| Sample ID | SAMPLE DATE | N | Type | Time(min) | Volume Flow(m3) | Concen. (ug/m3) | Grav. Validity |
|---|---|---|---|---|---|---|---|
| 4TS03254 | 03/25/1994 | 4 | TS | 1427.9 | 1446.47 | 48.70 | |
| 5TS03254 | 03/25/1994 | 5 | TS | 1437.1 | 1474.43 | 70.85 | |
| 6TS03254 | 03/25/1994 | 6 | TS | 1438.2 | 1412.07 | 36.28 | |
| 7TS03254 | 03/25/1994 | 7 | TS | 1449.9 | 1464.98 | 39.34 | |
| 1TS03274 | 03/27/1994 | 1 | TS | 1441.8 | 1437.65 | 60.20 | |
| 2TS03274 | 03/27/1994 | 2 | TS | 1432.8 | 1454.64 | 105.93 | |
| 3TS03274 | 03/27/1994 | 3 | TS | 1449.6 | 1486.72 | 40.78 | |
| 4TS03274 | 03/27/1994 | 4 | TS | 1428.3 | 1442.67 | 34.33 | |
| 5TS03274 | 03/27/1994 | 5 | TS | 1436.4 | 1469.48 | 32.89 | |
| 6TS03274 | 03/27/1994 | 6 | TS | 1438.0 | 1407.80 | 38.17 | |
| 7TS03274 | 03/27/1994 | 7 | TS | 1451.7 | 1462.57 | 17.58 | |
| 8TS03274 | 03/27/1994 | 8 | TS | 1445.9 | 1486.69 | 52.03 | |
| 1TS03294 | 03/29/1994 | 1 | TS | 1440.1 | 1429.76 | 69.77 | |
| 2TS03294 | 03/29/1994 | 2 | TS | 1434.1 | 1449.71 | 88.90 | |
| 3TS03294 | 03/29/1994 | 3 | TS | 1443.4 | 1473.99 | 74.67 | |
| 4TS03294 | 03/29/1994 | 4 | TS | 1429.7 | 1437.89 | 66.39 | |
| 5TS03294 | 03/29/1994 | 5 | TS | 1435.1 | 1461.81 | 58.73 | |
| 6TS03294 | 03/29/1994 | 6 | TS | 1438.0 | 1401.73 | 82.66 | |
| 7TS03294 | 03/29/1994 | 7 | TS | 1452.7 | 1457.28 | 26.57 | |
| 1TS03314 | 03/31/1994 | 1 | TS | 1445.2 | 1419.02 | 103.94 | |
| 2TS03314 | 03/31/1994 | 2 | TS | 1436.0 | 1435.65 | 230.35 | |
| 3TS03314 | 03/31/1994 | 3 | TS | 1442.5 | 1456.85 | 160.10 | |
| 4TS03314 | 03/31/1994 | 4 | TS | 1429.0 | 1421.37 | 129.25 | |
| 5TS03314 | 03/31/1994 | 5 | TS | 1435.3 | 1445.92 | 88.85 | |
| 6TS03314 | 03/31/1994 | 6 | TS | 1439.2 | 1387.46 | 78.82 | |
| 7TS03314 | 03/31/1994 | 7 | TS | 1448.1 | 1436.67 | 56.27 | |
| 1TS04024 | 04/02/1994 | 1 | TS | 1445.2 | 1414.52 | 43.29 | |
| 2TS04024 | 04/02/1994 | 2 | TS | 1432.3 | 1427.37 | 91.97 | |
| 3TS04024 | 04/02/1994 | 3 | TS | 1447.9 | 1457.67 | 40.23 | |
| 4TS04024 | 04/02/1994 | 4 | TS | 1426.5 | 1414.35 | 44.36 | |
| 5TS04024 | 04/02/1994 | 5 | TS | 1435.8 | 1441.83 | 31.16 | |
| 6TS04024 | 04/02/1994 | 6 | TS | 1437.9 | 1381.81 | 46.63 | |
| 7TS04024 | 04/02/1994 | 7 | TS | 1451.0 | 1434.95 | 49.58 | |
| 8TS04024 | 04/02/1994 | 8 | TS | 1454.0 | 1467.48 | 21.89 | QR |
| 1TS04044 | 04/04/1994 | 1 | TS | 1443.3 | 1452.22 | 66.35 | |
| 2TS04044 | 04/04/1994 | 2 | TS | 1434.7 | 1469.81 | 204.77 | |
| 3TS04044 | 04/04/1994 | 3 | TS | 1447.4 | 1497.99 | 33.73 | |
| 4TS04044 | 04/04/1994 | 4 | TS | 1426.7 | 1454.19 | 24.63 | |
| 5TS04044 | 04/04/1994 | 5 | TS | 1431.3 | 1477.56 | 15.64 | |
| 6TS04044 | 04/04/1994 | 6 | TS | 1436.5 | 1419.10 | 20.73 | |
| 7TS04044 | 04/04/1994 | 7 | TS | 1451.9 | 1476.05 | 15.32 | |
| 1TS04064 | 04/06/1994 | 1 | TS | 1444.1 | 1429.11 | 54.54 | |
| 2TS04064 | 04/06/1994 | 2 | TS | 1436.0 | 1446.95 | 147.98 | |
| 3TS04064 | 04/06/1994 | 3 | TS | 1444.2 | 1470.06 | 23.35 | |
| 4TS04064 | 04/06/1994 | 4 | TS | 1427.4 | 1430.93 | 13.78 | |
| 5TS04064 | 04/06/1994 | 5 | TS | 1438.0 | 1460.04 | 9.80 | |
| 6TS04064 | 04/06/1994 | 6 | TS | 1440.7 | 1399.84 | 12.87 | |

Note: Site -Site 1 to 7 are the normal sampling sites.
Site 8 is the co-located sampler located at Site 1.
Sample date indicates the start date of the sample.
Type - PM = PM10 sampler, TS = TSP sampler, BL = field blank
Gravimetric Validity - Sample validity based on sample & gravimetric QC.

| Sample ID | SAMPLE DATE | N | Type | Time(min) | Volume Flow(m3) | Concen. (ug/m3) | Grav. Validity |
|---|---|---|---|---|---|---|---|
| 7TS04064 | 04/06/1994 | 7 | TS | 1448.2 | 1448.09 | 6.77 | |
| 1TS04084 | 04/08/1994 | 1 | TS | 1445.1 | 1435.25 | 37.65 | |
| 2TS04084 | 04/08/1994 | 2 | TS | 1431.9 | 1448.01 | 114.43 | |
| 3TS04084 | 04/08/1994 | 3 | TS | 1444.7 | 1475.85 | 33.02 | |
| 4TS04084 | 04/08/1994 | 4 | TS | 1427.9 | 1436.57 | 29.88 | |
| 5TS04084 | 04/08/1994 | 5 | TS | 1436.5 | 1463.77 | 41.29 | |
| 6TS04084 | 04/08/1994 | 6 | TS | 1438.1 | 1402.32 | 17.62 | |
| 7TS04084 | 04/08/1994 | 7 | TS | 1447.8 | 1452.86 | 11.43 | |
| 8TS04084 | 04/08/1994 | 8 | TS | 1454.1 | 1489.20 | 36.48 | |
| 1TS04104 | 04/10/1994 | 1 | TS | 1442.5 | 1428.05 | 45.54 | |
| 2TS04104 | 04/10/1994 | 2 | TS | 1431.4 | 1442.84 | 166.44 | |
| 3TS04104 | 04/10/1994 | 3 | TS | 1446.9 | 1473.34 | 33.35 | |
| 4TS04104 | 04/10/1994 | 4 | TS | 1427.6 | 1431.66 | 11.25 | |
| 5TS04104 | 04/10/1994 | 5 | TS | 1434.2 | 1456.71 | 6.94 | |
| 6TS04104 | 04/10/1994 | 6 | TS | 1438.1 | 1397.80 | 7.59 | |
| 7TS04104 | 04/10/1994 | 7 | TS | 1452.8 | 1453.18 | 9.98 | |
| 1TS04124 | 04/12/1994 | 1 | TS | 1441.3 | 1390.05 | 63.99 | |
| 2TS04124 | 04/12/1994 | 2 | TS | 1434.1 | 1408.25 | 236.75 | |
| 3TS04124 | 04/12/1994 | 3 | TS | 1443.1 | 1431.55 | 52.07 | |
| 4TS04124 | 04/12/1994 | 4 | TS | 1428.4 | 1395.49 | 37.43 | |
| 5TS04124 | 04/12/1994 | 5 | TS | 1436.1 | 1420.99 | 14.08 | |
| 6TS04124 | 04/12/1994 | 6 | TS | 1438.4 | 1362.00 | 42.17 | |
| 7TS04124 | 04/12/1994 | 7 | TS | 1450.1 | 1413.08 | 12.11 | |
| 1TS04144 | 04/14/1994 | 1 | TS | 1445.0 | 1418.83 | 141.12 | |
| 2TS04144 | 04/14/1994 | 2 | TS | 1435.6 | 1435.25 | 442.63 | |
| 3TS04144 | 04/14/1994 | 3 | TS | 1440.0 | 1454.33 | 142.14 | |
| 4TS04144 | 04/14/1994 | 4 | TS | 1428.7 | 1421.07 | 72.74 | |
| 5TS04144 | 04/14/1994 | 5 | TS | 1438.9 | 1449.55 | 61.85 | |
| 6TS04144 | 04/14/1994 | 6 | TS | 1439.6 | 1387.84 | 59.55 | |
| 7TS04144 | 04/14/1994 | 7 | TS | 1448.7 | 1437.27 | 48.04 | |
| 8TS04144 | 04/14/1994 | 8 | TS | 1453.3 | 1471.46 | 137.84 | |
| 1TS04164 | 04/16/1994 | 1 | TS | 1442.7 | 1381.76 | 61.91 | |
| 2TS04164 | 04/16/1994 | 2 | TS | 1432.1 | 1396.55 | 155.40 | |
| 3TS04164 | 04/16/1994 | 3 | TS | 1446.9 | 1425.36 | 64.79 | |
| 4TS04164 | 04/16/1994 | 4 | TS | 1428.3 | 1385.72 | 61.16 | |
| 5TS04164 | 04/16/1994 | 5 | TS | 1435.9 | 1410.95 | 98.50 | |
| 6TS04164 | 04/16/1994 | 6 | TS | 1437.8 | 1352.03 | 102.57 | |
| 7TS04164 | 04/16/1994 | 7 | TS | 1452.7 | 1405.78 | 42.07 | |
| 1TS04184 | 04/18/1994 | 1 | TS | 1442.2 | 1364.74 | 86.07 | |
| 2TS04184 | 04/18/1994 | 2 | TS | 1433.0 | 1380.67 | 132.48 | |
| 3TS04184 | 04/18/1994 | 3 | TS | 1445.3 | 1406.76 | 125.11 | |
| 4TS04184 | 04/18/1994 | 4 | TS | 1428.4 | 1369.24 | 79.07 | |
| 5TS04184 | 04/18/1994 | 5 | TS | 1432.7 | 1390.97 | 88.62 | |
| 6TS04184 | 04/18/1994 | 6 | TS | 1434.2 | 1332.48 | 174.52 | |
| 7TS04184 | 04/18/1994 | 7 | TS | 1452.5 | 1388.76 | 56.70 | |
| 1TS04204 | 04/20/1994 | 1 | TS | 1443.6 | 1428.33 | 84.98 | |
| 2TS04204 | 04/20/1994 | 2 | TS | 1436.4 | 1385.86 | 116.68 | |

Note: Site -Site 1 to 7 are the normal sampling sites.
Site 8 is the co-located sampler located at Site 1.
Sample date indicates the start date of the sample.
Type - PM = PM10 sampler, TS = TSP sampler, BL = field blank
Gravimetric Validity - Sample validity based on sample & gravimetric QC.

| Sample ID | SAMPLE DATE | N | Type | Time(min) | Volume Flow(m3) | Concen. (ug/m3) | Grav. Validity |
|---|---|---|---|---|---|---|---|
| 3TS04204 | 04/20/1994 | 3 | TS | 1442.3 | 1441.25 | 94.07 | |
| 4TS04204 | 04/20/1994 | 4 | TS | 1433.0 | 1375.51 | 132.97 | |
| 5TS04204 | 04/20/1994 | 5 | TS | 1427.9 | 1377.65 | 96.82 | |
| 6TS04204 | 04/20/1994 | 6 | TS | 1438.7 | 1395.16 | 68.99 | |
| 7TS04204 | 04/20/1994 | 7 | TS | 1448.4 | 1454.48 | 61.30 | |
| 8TS04204 | 04/20/1994 | 8 | TS | 1453.2 | 1419.96 | 83.15 | |
| 1TS04224 | 04/22/1994 | 1 | TS | 1446.5 | 1453.11 | 96.13 | |
| 2TS04224 | 04/22/1994 | 2 | TS | 1433.8 | 1404.54 | 242.50 | |
| 3TS04224 | 04/22/1994 | 3 | TS | 1445.6 | 1466.65 | 129.49 | |
| 4TS04224 | 04/22/1994 | 4 | TS | 1430.6 | 1394.24 | 85.33 | |
| 5TS04224 | 04/22/1994 | 5 | TS | 1444.1 | 1414.63 | 84.52 | |
| 6TS04224 | 04/22/1994 | 6 | TS | 1438.6 | 1416.41 | 77.28 | |
| 7TS04224 | 04/22/1994 | 7 | TS | 1449.0 | 1477.37 | 59.94 | |
| 1TS04244 | 04/24/1994 | 1 | TS | 1441.9 | 1474.66 | 53.60 | |
| 2TS04244 | 04/24/1994 | 2 | TS | 1432.1 | 1428.18 | 97.03 | |
| 3TS04244 | 04/24/1994 | 3 | TS | 1446.1 | 1493.66 | 76.30 | |
| 4TS04244 | 04/24/1994 | 4 | TS | 1430.1 | 1418.94 | 58.74 | |
| 5TS04244 | 04/24/1994 | 5 | TS | 1435.7 | 1431.77 | 61.78 | |
| 6TS04244 | 04/24/1994 | 6 | TS | 1440.5 | 1443.90 | 50.03 | |
| 7TS04244 | 04/24/1994 | 7 | TS | 1453.2 | 1508.40 | 39.14 | MR |
| 1TS04264 | 04/26/1994 | 1 | TS | 1442.3 | 1495.73 | 19.20 | |
| 2TS04264 | 04/26/1994 | 2 | TS | 1434.6 | 1450.74 | 27.52 | |
| 3TS04264 | 04/26/1994 | 3 | TS | 1442.1 | 1510.39 | 14.24 | |
| 4TS04264 | 04/26/1994 | 4 | TS | 1428.4 | 1437.07 | 14.20 | |
| 5TS04264 | 04/26/1994 | 5 | TS | 1432.8 | 1448.92 | 24.58 | |
| 6TS04264 | 04/26/1994 | 6 | TS | 1437.5 | 1461.08 | 13.97 | |
| 7TS04264 | 04/26/1994 | 7 | TS | 1448.8 | 1524.87 | 8.99 | |
| 8TS04264 | 04/26/1994 | 8 | TS | 1449.3 | 1484.28 | 18.27 | PR |
| 1TS04284 | 04/28/1994 | 1 | TS | 1453.6 | 1513.96 | 23.53 | |
| 2TS04284 | 04/28/1994 | 2 | TS | 1434.9 | 1457.30 | 37.35 | |
| 3TS04284 | 04/28/1994 | 3 | TS | 1440.6 | 1515.35 | 56.26 | |
| 4TS04284 | 04/28/1994 | 4 | TS | 1429.4 | 1444.31 | 34.36 | |
| 5TS04284 | 04/28/1994 | 5 | TS | 1437.9 | 1460.35 | 36.79 | |
| 6TS04284 | 04/28/1994 | 6 | TS | 1440.1 | 1470.05 | 19.19 | |
| 7TS04284 | 04/28/1994 | 7 | TS | 1448.6 | 1531.27 | 14.83 | |
| 1TS04304 | 04/30/1994 | 1 | TS | 1435.0 | 1479.10 | 50.53 | |
| 2TS04304 | 04/30/1994 | 2 | TS | 1432.2 | 1439.51 | 124.49 | |
| 3TS04304 | 04/30/1994 | 3 | TS | 1447.8 | 1507.18 | 67.32 | |
| 4TS04304 | 04/30/1994 | 4 | TS | 1429.5 | 1429.47 | 41.30 | |
| 5TS04304 | 04/30/1994 | 5 | TS | 1435.8 | 1443.13 | 66.56 | |
| 6TS04304 | 04/30/1994 | 6 | TS | 1445.2 | 1459.99 | 29.95 | |
| 7TS04304 | 04/30/1994 | 7 | TS | 1451.8 | 1518.78 | 20.62 | |
| 1TS05024 | 05/02/1994 | 1 | TS | 1442.1 | 1462.94 | 44.80 | |
| 2TS05024 | 05/02/1994 | 2 | TS | 1434.6 | 1419.14 | 120.57 | |
| 3TS05024 | 05/02/1994 | 3 | TS | 1446.0 | 1481.47 | 65.11 | |
| 4TS05024 | 05/02/1994 | 4 | TS | 1428.6 | 1406.00 | 43.70 | |
| 5TS05024 | 05/02/1994 | 5 | TS | 1432.6 | 1417.16 | 37.28 | |

Note: Site -Site 1 to 7 are the normal sampling sites.
Site 8 is the co-located sampler located at Site 1.
Sample date indicates the start date of the sample.
Type - PM = PM10 sampler, TS = TSP sampler, BL = field blank
Gravimetric Validity - Sample validity based on sample & gravimetric QC.

| Sample ID | SAMPLE DATE | N | Type | Time(min) | Volume Flow(m3) | Concen. (ug/m3) | Grav. Validity |
|---|---|---|---|---|---|---|---|
| 6TS05024 | 05/02/1994 | 6 | TS | 1428.9 | 1420.70 | 31.98 | |
| 7TS05024 | 05/02/1994 | 7 | TS | 1452.4 | 1495.39 | 20.94 | |
| 8TS05024 | 05/02/1994 | 8 | TS | 1446.6 | 1449.24 | 45.64 | |
| 1TS05044 | 05/04/1994 | 1 | TS | 1444.0 | 1448.06 | 28.95 | |
| 2TS05044 | 05/04/1994 | 2 | TS | 1437.7 | 1405.88 | 98.64 | Q |
| 3TS05044 | 05/04/1994 | 3 | TS | 1439.5 | 1457.94 | 47.56 | |
| 4TS05044 | 05/04/1994 | 4 | TS | 1424.5 | 1385.87 | 52.71 | |
| 5TS05044 | 05/04/1994 | 5 | TS | 1435.6 | 1403.82 | 54.31 | |
| 6TS05044 | 05/04/1994 | 6 | TS | 1438.5 | 1413.87 | 40.55 | |
| 7TS05044 | 05/04/1994 | 7 | TS | 1448.8 | 1474.58 | 13.50 | |
| 1TS05064 | 05/06/1994 | 1 | TS | 1444.2 | 1442.25 | 42.39 | |
| 2TS05064 | 05/06/1994 | 2 | TS | 1433.3 | 1395.77 | 148.32 | Q |
| 3TS05064 | 05/06/1994 | 3 | TS | 1445.6 | 1458.02 | 84.14 | |
| 4TS05064 | 05/06/1994 | 4 | TS | 1424.2 | 1379.85 | 48.80 | |
| 5TS05064 | 05/06/1994 | 5 | TS | 1433.5 | 1395.97 | 61.07 | |
| 6TS05064 | 05/06/1994 | 6 | TS | 1436.2 | 1405.75 | 61.36 | |
| 7TS05064 | 05/06/1994 | 7 | TS | 1446.9 | 1466.54 | 23.47 | |
| 1TS05084 | 05/08/1994 | 1 | TS | 1441.9 | 1445.96 | 32.39 | |
| 2TS05084 | 05/08/1994 | 2 | TS | 1431.1 | 1399.42 | 58.13 | |
| 3TS05084 | 05/08/1994 | 3 | TS | 1447.0 | 1465.53 | 40.56 | |
| 4TS05084 | 05/08/1994 | 4 | TS | 1430.1 | 1391.32 | 35.02 | |
| 5TS05084 | 05/08/1994 | 5 | TS | 1430.7 | 1399.03 | 31.90 | |
| 6TS05084 | 05/08/1994 | 6 | TS | 1437.2 | 1412.59 | 31.17 | |
| 7TS05084 | 05/08/1994 | 7 | TS | 1452.2 | 1478.04 | 25.93 | |
| 8TS05084 | 05/08/1994 | 8 | TS | 1447.8 | 1433.83 | 32.94 | |
| 1TS05104 | 05/10/1994 | 1 | TS | 1440.3 | 1421.19 | 101.03 | |
| 2TS05104 | 05/10/1994 | 2 | TS | 1434.2 | 1379.96 | 136.32 | |
| 3TS05104 | 05/10/1994 | 3 | TS | 1442.8 | 1437.79 | 61.52 | |
| 4TS05104 | 05/10/1994 | 4 | TS | 1429.6 | 1368.53 | 59.88 | |
| 5TS05104 | 05/10/1994 | 5 | TS | 1433.6 | 1379.38 | 41.13 | |
| 6TS05104 | 05/10/1994 | 6 | TS | 1435.0 | 1387.76 | 58.11 | |
| 7TS05104 | 05/10/1994 | 7 | TS | 1449.0 | 1451.11 | 26.89 | |
| 1TS05124 | 05/12/1994 | 1 | TS | 1444.0 | 1429.21 | 104.53 | |
| 2TS05124 | 05/12/1994 | 2 | TS | 1435.9 | 1385.86 | 222.02 | |
| 3TS05124 | 05/12/1994 | 3 | TS | 1441.3 | 1440.74 | 128.55 | |
| 4TS05124 | 05/12/1994 | 4 | TS | 1428.9 | 1372.06 | 89.63 | |
| 5TS05124 | 05/12/1994 | 5 | TS | 1435.4 | 1353.55 | 76.44 | |
| 6TS05124 | 05/12/1994 | 6 | TS | 1439.5 | 1396.43 | 72.01 | Q |
| 7TS05124 | 05/12/1994 | 7 | TS | 1446.9 | 1453.47 | 42.34 | |
| 1TS05144 | 05/14/1994 | 1 | TS | 1446.2 | 1441.26 | 44.09 | |
| 2TS05144 | 05/14/1994 | 2 | TS | 1432.7 | 1392.31 | 121.24 | |
| 3TS05144 | 05/14/1994 | 3 | TS | 1447.5 | 1456.94 | 57.07 | |
| 4TS05144 | 05/14/1994 | 4 | TS | 1430.4 | 1382.98 | 45.80 | |
| 5TS05144 | 05/14/1994 | 5 | TS | 1434.7 | 1394.25 | 23.18 | |
| 6TS05144 | 05/14/1994 | 6 | TS | 1437.3 | 1403.90 | 70.99 | |
| 7TS05144 | 05/14/1994 | 7 | TS | 1448.2 | 1464.82 | 26.71 | |
| 8TS05144 | 05/14/1994 | 8 | TS | 1446.4 | 1423.56 | 41.96 | |

Note: Site -Site 1 to 7 are the normal sampling sites.
Site 8 is the co-located sampler located at Site 1.
Sample date indicates the start date of the sample.
Type - PM = PM10 sampler, TS = TSP sampler, BL = field blank
Gravimetric Validity - Sample validity based on sample & gravimetric QC.

| Sample ID | SAMPLE DATE | N | Type | Time(min) | Volume Flow(m3) | Concen. (ug/m3) | Grav. Validity |
|---|---|---|---|---|---|---|---|
| 1TS05164 | 05/16/1994 | 1 | TS | 1442.8 | 1468.80 | 61.58 | |
| 2TS05164 | 05/16/1994 | 2 | TS | 1432.8 | 1422.35 | 148.58 | |
| 3TS05164 | 05/16/1994 | 3 | TS | 1445.5 | 1486.20 | 71.77 | |
| 4TS05164 | 05/16/1994 | 4 | TS | 1429.3 | 1411.63 | 60.11 | |
| 5TS05164 | 05/16/1994 | 5 | TS | 1431.2 | 1420.76 | 49.72 | |
| 6TS05164 | 05/16/1994 | 6 | TS | 1436.5 | 1433.30 | 57.73 | |
| 7TS05164 | 05/16/1994 | 7 | TS | 1453.1 | 1501.38 | 31.46 | |
| 1TS05184 | 05/18/1994 | 1 | TS | 1443.1 | 1463.42 | 46.36 | |
| 2TS05184 | 05/18/1994 | 2 | TS | 1435.5 | 1419.54 | 77.61 | PR |
| 3TS05184 | 05/18/1994 | 3 | TS | 1441.4 | 1476.27 | 35.45 | |
| 4TS05184 | 05/18/1994 | 4 | TS | 1426.5 | 1403.41 | 53.83 | |
| 5TS05184 | 05/18/1994 | 5 | TS | 1435.7 | 1419.74 | 33.69 | |
| 6TS05184 | 05/18/1994 | 6 | TS | 1438.3 | 1429.56 | 21.70 | |
| 7TS05184 | 05/18/1994 | 7 | TS | 1451.6 | 1494.03 | 22.70 | |
| 1TS05204 | 05/20/1994 | 1 | TS | 1444.5 | 1468.97 | 39.64 | |
| 2TS05204 | 05/20/1994 | 2 | TS | 1433.3 | 1421.34 | 110.03 | |
| 3TS05204 | 05/20/1994 | 3 | TS | 1445.3 | 1484.44 | 31.28 | |
| 4TS05204 | 05/20/1994 | 4 | TS | 1428.1 | 1408.95 | 34.80 | |
| 5TS05204 | 05/20/1994 | 5 | TS | 1434.3 | 1422.33 | 14.28 | |
| 6TS05204 | 05/20/1994 | 6 | TS | 1439.1 | 1434.39 | 20.51 | |
| 7TS05204 | 05/20/1994 | 7 | TS | 1447.3 | 1493.79 | 10.58 | |
| 8TS05204 | 05/20/1994 | 8 | TS | 1451.9 | 1458.16 | 42.27 | |
| 1TS05224 | 05/22/1994 | 1 | TS | 1444.5 | 1446.56 | 56.17 | |
| 2TS05224 | 05/22/1994 | 2 | TS | 1432.5 | 1398.89 | 137.98 | |
| 3TS05224 | 05/22/1994 | 3 | TS | 1446.2 | 1462.68 | 48.16 | |
| 4TS05224 | 05/22/1994 | 4 | TS | 1428.7 | 1388.05 | 38.78 | |
| 5TS05224 | 05/22/1994 | 5 | TS | 1435.2 | 1401.52 | 49.69 | |
| 6TS05224 | 05/22/1994 | 6 | TS | 1436.5 | 1409.95 | 31.58 | |
| 7TS05224 | 05/22/1994 | 7 | TS | 1451.8 | 1475.58 | 28.82 | |
| 1TS05244 | 05/24/1994 | 1 | TS | 1441.0 | 1432.16 | 59.67 | |
| 2TS05244 | 05/24/1994 | 2 | TS | 1434.5 | 1390.20 | 99.33 | |
| 3TS05244 | 05/24/1994 | 3 | TS | 1443.4 | 1448.81 | 88.19 | |
| 4TS05244 | 05/24/1994 | 4 | TS | 1428.9 | 1377.73 | 92.60 | |
| 5TS05244 | 05/24/1994 | 5 | TS | 1435.8 | 1391.46 | 55.01 | |
| 6TS05244 | 05/24/1994 | 6 | TS | 1437.6 | 1400.32 | 60.95 | |
| 7TS05244 | 05/24/1994 | 7 | TS | 1448.9 | 1461.47 | 53.20 | |
| 1TS05264 | 05/26/1994 | 1 | TS | 1447.3 | 1430.51 | 85.54 | |
| 2TS05264 | 05/26/1994 | 2 | TS | 1438.4 | 1386.36 | 243.44 | |
| 3TS05264 | 05/26/1994 | 3 | TS | 1444.8 | 1442.28 | 143.26 | |
| 4TS05264 | 05/26/1994 | 4 | TS | 1431.1 | 1372.27 | 127.89 | |
| 5TS05264 | 05/26/1994 | 5 | TS | 1440.8 | 1356.81 | 97.27 | |
| 6TS05264 | 05/26/1994 | 6 | TS | 1448.8 | 1403.52 | 129.89 | |
| 7TS05264 | 05/26/1994 | 7 | TS | 1449.3 | 1453.87 | 67.93 | |
| 8TS05264 | 05/26/1994 | 8 | TS | 1448.3 | 1413.70 | 84.72 | |
| 1TS05284 | 05/28/1994 | 1 | TS | 1445.0 | 1450.09 | 34.85 | |
| 2TS05284 | 05/28/1994 | 2 | TS | 1432.8 | 1402.06 | 127.89 | |
| 3TS05284 | 05/28/1994 | 3 | TS | 1440.0 | 1459.46 | | VOID |

Note: Site -Site 1 to 7 are the normal sampling sites.
Site 8 is the co-located sampler located at Site 1.
Sample date indicates the start date of the sample.
Type - PM = PM10 sampler, TS = TSP sampler, BL = field blank
Gravimetric Validity - Sample validity based on sample & gravimetric QC.

| Sample ID | SAMPLE DATE | N | Type | Time(min) | Volume Flow(m3) | Concen. (ug/m3) | Grav. Validity |
|---|---|---|---|---|---|---|---|
| 4TS05284 | 05/28/1994 | 4 | TS | 1428.0 | 1390.25 | 25.19 | |
| 5TS05284 | 05/28/1994 | 5 | TS | 1436.3 | 1405.48 | 19.72 | |
| 6TS05284 | 05/28/1994 | 6 | TS | 1437.2 | 1413.57 | 20.10 | |
| 7TS05284 | 05/28/1994 | 7 | TS | 1448.3 | 1475.09 | 12.41 | |
| 1TS05304 | 05/30/1994 | 1 | TS | 1443.1 | 1423.95 | 48.42 | |
| 2TS05304 | 05/30/1994 | 2 | TS | 1433.8 | 1379.57 | 199.96 | |
| 3TS05304 | 05/30/1994 | 3 | TS | 1448.9 | 1443.87 | 55.72 | |
| 4TS05304 | 05/30/1994 | 4 | TS | 1426.6 | 1365.65 | 43.67 | |
| 5TS05304 | 05/30/1994 | 5 | TS | 1432.5 | 1378.32 | 40.87 | |
| 6TS05304 | 05/30/1994 | 6 | TS | 1434.5 | 1387.27 | 38.80 | |
| 7TS05304 | 05/30/1994 | 7 | TS | 1449.4 | 1451.51 | 19.37 | |
| 1TS06014 | 06/01/1994 | 1 | TS | 1443.4 | 1440.96 | 64.30 | |
| 2TS06014 | 06/01/1994 | 2 | TS | 1435.7 | 1397.62 | 252.36 | |
| 3TS06014 | 06/01/1994 | 3 | TS | 1445.4 | 1457.32 | 63.85 | |
| 4TS06014 | 06/01/1994 | 4 | TS | 1427.7 | 1382.76 | 44.07 | |
| 5TS06014 | 06/01/1994 | 5 | TS | 1435.9 | 1397.82 | 16.68 | |
| 6TS06014 | 06/01/1994 | 6 | TS | 1437.7 | 1406.73 | 18.21 | |
| 7TS06014 | 06/01/1994 | 7 | TS | 1441.4 | 1460.43 | 13.84 | |
| 8TS06014 | 06/01/1994 | 8 | TS | 1445.4 | 1425.03 | 64.32 | |
| 1TS06034 | 06/03/1994 | 1 | TS | 1445.2 | 1423.57 | 59.89 | |
| 2TS06034 | 06/03/1994 | 2 | TS | 1433.0 | 1404.53 | 127.95 | |
| 3TS06034 | 06/03/1994 | 3 | TS | 1432.5 | 1425.09 | 134.88 | |
| 4TS06034 | 06/03/1994 | 4 | TS | 1429.4 | 1397.52 | 67.16 | |
| 5TS06034 | 06/03/1994 | 5 | TS | 1435.5 | 1378.85 | 49.06 | |
| 6TS06034 | 06/03/1994 | 6 | TS | 1434.2 | 1384.63 | 44.59 | |
| 7TS06034 | 06/03/1994 | 7 | TS | 1453.5 | 1453.10 | 40.28 | |
| 1TS06054 | 06/05/1994 | 1 | TS | 1442.1 | 1419.08 | 17.35 | |
| 2TS06054 | 06/05/1994 | 2 | TS | 1432.9 | 1374.93 | 80.05 | |
| 3TS06054 | 06/05/1994 | 3 | TS | 1445.3 | 1400.99 | 62.56 | |
| 4TS06054 | 06/05/1994 | 4 | TS | 1427.8 | 1394.50 | 39.18 | |
| 5TS06054 | 06/05/1994 | 5 | TS | 1435.5 | 1377.43 | 92.76 | |
| 6TS06054 | 06/05/1994 | 6 | TS | 1437.3 | 1386.19 | 67.64 | |
| 7TS06054 | 06/05/1994 | 7 | TS | 1451.1 | 1449.22 | 27.34 | |
| 1TS06074 | 06/07/1994 | 1 | TS | 1442.2 | 1465.61 | 36.59 | |
| 2TS06074 | 06/07/1994 | 2 | TS | 1435.5 | 1451.53 | 80.10 | |
| 3TS06074 | 06/07/1994 | 3 | TS | 1445.7 | 1483.79 | 43.50 | |
| 4TS06074 | 06/07/1994 | 4 | TS | 1428.0 | 1440.35 | 56.62 | |
| 5TS06074 | 06/07/1994 | 5 | TS | 1435.4 | 1422.41 | 20.05 | |
| 6TS06074 | 06/07/1994 | 6 | TS | 1438.7 | 1432.97 | 19.27 | |
| 7TS06074 | 06/07/1994 | 7 | TS | 1448.3 | 1493.80 | 21.30 | |
| 8TS06074 | 06/07/1994 | 8 | TS | 1449.0 | 1479.87 | 33.47 | |
| 1TS06094 | 06/09/1994 | 1 | TS | 1446.5 | 1440.57 | 47.65 | |
| 2TS06094 | 06/09/1994 | 2 | TS | 1437.8 | 1424.79 | 124.16 | |
| 3TS06094 | 06/09/1994 | 3 | TS | 1440.7 | 1449.08 | 70.85 | |
| 4TS06094 | 06/09/1994 | 4 | TS | 1428.0 | 1411.56 | 66.14 | |
| 5TS06094 | 06/09/1994 | 5 | TS | 1438.6 | 1397.06 | 18.76 | |
| 6TS06094 | 06/09/1994 | 6 | TS | 1437.2 | 1424.19 | 47.99 | |

Note: Site -Site 1 to 7 are the normal sampling sites.
Site 8 is the co-located sampler located at Site 1.
Sample date indicates the start date of the sample.
Type - PM = PM10 sampler, TS = TSP sampler, BL = field blank
Gravimetric Validity - Sample validity based on sample & gravimetric QC.

| Sample ID | SAMPLE DATE | N | Type | Time(min) | Volume Flow(m3) | Concen. (ug/m3) | Grav. Validity |
|---|---|---|---|---|---|---|---|
| 7TS06094 | 06/09/1994 | 7 | TS | 1445.5 | 1461.07 | 23.22 | |
| 1TS06114 | 06/11/1994 | 1 | TS | 1442.8 | 1442.69 | 52.99 | |
| 2TS06114 | 06/11/1994 | 2 | TS | 1431.7 | 1393.28 | 93.72 | |
| 3TS06114 | 06/11/1994 | 3 | TS | 1439.7 | 1443.10 | 66.36 | |
| 4TS06114 | 06/11/1994 | 4 | TS | 1427.6 | 1385.81 | 69.75 | |
| 5TS06114 | 06/11/1994 | 5 | TS | 1436.2 | 1369.72 | 43.98 | |
| 6TS06114 | 06/11/1994 | 6 | TS | 1439.0 | 1379.36 | 60.28 | |
| 7TS06114 | 06/11/1994 | 7 | TS | 1449.0 | 1438.30 | 70.12 | |
| 1TS06134 | 06/13/1994 | 1 | TS | 1442.4 | 1419.17 | 92.57 | |
| 2TS06134 | 06/13/1994 | 2 | TS | 1432.4 | 1409.33 | 252.04 | |
| 3TS06134 | 06/13/1994 | 3 | TS | 1448.4 | 1453.29 | 124.07 | |
| 4TS06134 | 06/13/1994 | 4 | TS | 1428.9 | 1388.49 | 110.91 | |
| 5TS06134 | 06/13/1994 | 5 | TS | 1432.7 | 1409.63 | 55.15 | |
| 6TS06134 | 06/13/1994 | 6 | TS | 1436.2 | 1413.07 | 59.83 | |
| 7TS06134 | 06/13/1994 | 7 | TS | 1448.5 | 1425.18 | 51.60 | |
| 8TS06134 | 06/13/1994 | 8 | TS | 1450.9 | 1427.54 | 91.54 | |
| 1TS06154 | 06/15/1994 | 1 | TS | 1442.4 | 1503.11 | 52.86 | |
| 2TS06154 | 06/15/1994 | 2 | TS | 1435.0 | 1427.09 | 137.92 | |
| 3TS06154 | 06/15/1994 | 3 | TS | 1444.8 | 1447.72 | 103.19 | |
| 4TS06154 | 06/15/1994 | 4 | TS | 1429.0 | 1478.42 | 57.12 | |
| 5TS06154 | 06/15/1994 | 5 | TS | 1438.0 | 1469.69 | 44.66 | |
| 6TS06154 | 06/15/1994 | 6 | TS | 1437.7 | 1418.99 | 43.86 | Q |
| 7TS06154 | 06/15/1994 | 7 | TS | 1446.7 | 1449.62 | 43.21 | |
| 1TS06174 | 06/17/1994 | 1 | TS | 1446.1 | 1427.32 | 51.32 | |
| 2TS06174 | 06/17/1994 | 2 | TS | 1432.9 | 1414.29 | 143.27 | |
| 3TS06174 | 06/17/1994 | 3 | TS | 1440.8 | 1422.09 | 81.13 | |
| 4TS06174 | 06/17/1994 | 4 | TS | 1429.7 | 1411.13 | 49.14 | |
| 5TS06174 | 06/17/1994 | 5 | TS | 1437.5 | 1418.83 | 41.89 | |
| 6TS06174 | 06/17/1994 | 6 | TS | 1436.7 | 1418.04 | 68.87 | |
| 7TS06174 | 06/17/1994 | 7 | TS | 1446.7 | 1427.91 | 27.75 | |
| 1TS06194 | 06/19/1994 | 1 | TS | 1442.0 | 1396.77 | 50.43 | |
| 2TS06194 | 06/19/1994 | 2 | TS | 1428.6 | 1383.79 | 187.06 | |
| 3TS06194 | 06/19/1994 | 3 | TS | 1447.1 | 1401.71 | 66.89 | |
| 4TS06194 | 06/19/1994 | 4 | TS | 1429.0 | 1384.18 | 73.23 | |
| 5TS06194 | 06/19/1994 | 5 | TS | 1436.8 | 1391.73 | 27.25 | |
| 6TS06194 | 06/19/1994 | 6 | TS | 1436.7 | 1391.64 | 49.40 | |
| 7TS06194 | 06/19/1994 | 7 | TS | 1451.4 | 1405.88 | 29.89 | |
| 8TS06194 | 06/19/1994 | 8 | TS | 1453.0 | 1407.43 | 49.06 | |
| 1TS06214 | 06/21/1994 | 1 | TS | 1439.9 | 1432.53 | 82.91 | |
| 2TS06214 | 06/21/1994 | 2 | TS | 1073.0 | 1038.92 | 165.66 | TR |
| 3TS06214 | 06/21/1994 | 3 | TS | 1446.3 | 1442.38 | 117.58 | Q |
| 4TS06214 | 06/21/1994 | 4 | TS | 1429.0 | 1380.17 | 105.05 | |
| 5TS06214 | 06/21/1994 | 5 | TS | 1432.7 | 1414.94 | 60.18 | |
| 6TS06214 | 06/21/1994 | 6 | TS | 1434.8 | 1417.02 | 86.85 | |
| 7TS06214 | 06/21/1994 | 7 | TS | 1448.2 | 1430.25 | 63.03 | |
| 1TS06234 | 06/23/1994 | 1 | TS | 1444.6 | 1441.55 | 73.30 | |
| 2TS06234 | 06/23/1994 | 2 | TS | 1438.1 | 1396.66 | 140.49 | |

Note: Site -Site 1 to 7 are the normal sampling sites.
Site 8 is the co-located sampler located at Site 1.
Sample date indicates the start date of the sample.
Type - PM = PM10 sampler, TS = TSP sampler, BL = field blank
Gravimetric Validity - Sample validity based on sample & gravimetric QC.

| Sample ID | SAMPLE DATE | N | Type | Time(min) | Volume Flow(m3) | Concen. (ug/m3) | Grav. Validity |
|---|---|---|---|---|---|---|---|
| 3TS06234 | 06/23/1994 | 3 | TS | 1443.4 | 1443.86 | 103.12 | Q |
| 4TS06234 | 06/23/1994 | 4 | TS | 1429.5 | 1384.87 | 78.10 | |
| 5TS06234 | 06/23/1994 | 5 | TS | 1436.0 | 1422.51 | 41.01 | |
| 6TS06234 | 06/23/1994 | 6 | TS | 1439.0 | 1425.49 | 57.14 | |
| 7TS06234 | 06/23/1994 | 7 | TS | 1443.7 | 1430.14 | 70.73 | |
| 1TS06254 | 06/25/1994 | 1 | TS | 1445.6 | 1436.24 | 51.76 | |
| 2TS06254 | 06/25/1994 | 2 | TS | 1435.8 | 1388.33 | 79.28 | |
| 3TS06254 | 06/25/1994 | 3 | TS | 1442.6 | 1436.77 | 65.12 | |
| 4TS06254 | 06/25/1994 | 4 | TS | 1428.6 | 1377.93 | 64.63 | |
| 5TS06254 | 06/25/1994 | 5 | TS | 1435.6 | 1415.90 | 40.42 | |
| 6TS06254 | 06/25/1994 | 6 | TS | 1437.3 | 1417.57 | 86.33 | |
| 7TS06254 | 06/25/1994 | 7 | TS | 1449.9 | 1430.00 | 41.35 | |
| 8TS06254 | 06/25/1994 | 8 | TS | 1452.9 | 1418.93 | 45.62 | |
| 1TS06274 | 06/27/1994 | 1 | TS | 1441.1 | 1459.76 | 47.02 | |
| 2TS06274 | 06/27/1994 | 2 | TS | 1430.5 | 1410.26 | 104.23 | |
| 3TS06274 | 06/27/1994 | 3 | TS | 1448.9 | 1471.27 | 97.66 | |
| 4TS06274 | 06/27/1994 | 4 | TS | 1427.7 | 1403.98 | 67.35 | |
| 5TS06274 | 06/27/1994 | 5 | TS | 1434.2 | 1442.17 | 36.08 | |
| 6TS06274 | 06/27/1994 | 6 | TS | 1436.8 | 1444.79 | 47.02 | Q |
| 7TS06274 | 06/27/1994 | 7 | TS | 1450.6 | 1458.66 | 29.02 | |
| 1TS06294 | 06/29/1994 | 1 | TS | 1443.9 | 1428.29 | 130.16 | |
| 2TS06294 | 06/29/1994 | 2 | TS | 1436.0 | 1382.50 | 307.81 | |
| 3TS06294 | 06/29/1994 | 3 | TS | 1446.5 | 1434.35 | 140.64 | |
| 4TS06294 | 06/29/1994 | 4 | TS | 1428.7 | 1372.03 | 76.06 | |
| 5TS06294 | 06/29/1994 | 5 | TS | 1436.4 | 1410.50 | 48.59 | |
| 6TS06294 | 06/29/1994 | 6 | TS | 1439.4 | 1413.45 | 61.23 | |
| 7TS06294 | 06/29/1994 | 7 | TS | 1447.9 | 1404.41 | 78.58 | |
| 1TS07014 | 07/01/1994 | 1 | TS | 1444.2 | 1431.50 | 106.95 | |
| 2TS07014 | 07/01/1994 | 2 | TS | 1436.4 | 1385.65 | 201.90 | |
| 3TS07014 | 07/01/1994 | 3 | TS | 1440.2 | 1431.00 | 132.43 | |
| 4TS07014 | 07/01/1994 | 4 | TS | 1429.9 | 1375.94 | 79.41 | |
| 5TS07014 | 07/01/1994 | 5 | TS | 1434.8 | 1411.78 | 36.71 | |
| 6TS07014 | 07/01/1994 | 6 | TS | 1434.7 | 1411.68 | 55.14 | |
| 7TS07014 | 07/01/1994 | 7 | TS | 1448.3 | 1425.06 | 38.62 | |
| 8TS07014 | 07/01/1994 | 8 | TS | 1451.9 | 1414.62 | 100.37 | |
| 1TS07034 | 07/03/1994 | 1 | TS | 1444.5 | 1456.21 | 78.54 | |
| 2TS07034 | 07/03/1994 | 2 | TS | 1433.0 | 1405.99 | 241.47 | |
| 3TS07034 | 07/03/1994 | 3 | TS | 1447.3 | 1462.60 | 75.18 | |
| 4TS07034 | 07/03/1994 | 4 | TS | 1428.8 | 1398.35 | 27.05 | |
| 5TS07034 | 07/03/1994 | 5 | TS | 1435.7 | 1436.81 | 24.44 | |
| 6TS07034 | 07/03/1994 | 6 | TS | 1435.9 | 1437.01 | 34.54 | |
| 7TS07034 | 07/03/1994 | 7 | TS | 1451.9 | 1435.22 | 16.66 | |
| 1TS07054 | 07/05/1994 | 1 | TS | 1440.2 | 1460.89 | 173.08 | |
| 2TS07054 | 07/05/1994 | 2 | TS | 1434.1 | 1415.76 | 281.57 | Q |
| 3TS07054 | 07/05/1994 | 3 | TS | 1446.9 | 1471.25 | 261.09 | Q |
| 4TS07054 | 07/05/1994 | 4 | TS | 1428.0 | 1406.22 | 161.31 | |
| 5TS07054 | 07/05/1994 | 5 | TS | 1435.9 | 1445.88 | 102.91 | |

Note: Site -Site 1 to 7 are the normal sampling sites.
Site 8 is the co-located sampler located at Site 1.
Sample date indicates the start date of the sample.
Type - PM = PM10 sampler, TS = TSP sampler, BL = field blank
Gravimetric Validity - Sample validity based on sample & gravimetric QC.

| Sample ID | SAMPLE DATE | N | Type | Time(min) | Volume Flow(m3) | Concen. (ug/m3) | Grav. Validity |
|---|---|---|---|---|---|---|---|
| 6TS07054 | 07/05/1994 | 6 | TS | 1436.5 | 1446.48 | 126.73 | |
| 7TS07054 | 07/05/1994 | 7 | TS | 1450.0 | 1442.17 | 80.48 | |
| 1TS07074 | 07/07/1994 | 1 | TS | 1443.9 | 1471.72 | 33.38 | |
| 2TS07074 | 07/07/1994 | 2 | TS | 1437.4 | 1425.85 | 45.96 | Q |
| 3TS07074 | 07/07/1994 | 3 | TS | 1444.4 | 1475.78 | 26.58 | |
| 4TS07074 | 07/07/1994 | 4 | TS | 1429.9 | 1414.89 | 27.79 | |
| 5TS07074 | 07/07/1994 | 5 | TS | 1436.8 | 1453.78 | 38.89 | |
| 6TS07074 | 07/07/1994 | 6 | TS | 1441.1 | 1458.13 | 34.04 | |
| 7TS07074 | 07/07/1994 | 7 | TS | 1444.2 | 1443.35 | 28.63 | |
| 8TS07074 | 07/07/1994 | 8 | TS | 1448.8 | 1451.56 | 34.12 | |
| 1TS07094 | 07/09/1994 | 1 | TS | 1444.5 | 1425.58 | 58.47 | |
| 2TS07094 | 07/09/1994 | 2 | TS | 1435.5 | 1378.77 | 137.31 | |
| 3TS07094 | 07/09/1994 | 3 | TS | 1443.1 | 1427.67 | 61.40 | |
| 4TS07094 | 07/09/1994 | 4 | TS | 1428.5 | 1368.61 | 56.15 | |
| 5TS07094 | 07/09/1994 | 5 | TS | 1434.5 | 1384.71 | 52.32 | |
| 6TS07094 | 07/09/1994 | 6 | TS | 1437.3 | 1397.75 | 49.25 | |
| 7TS07094 | 07/09/1994 | 7 | TS | 1450.4 | 1403.51 | 38.78 | |
| 1TS07114 | 07/11/1994 | 1 | TS | 1438.4 | 1434.91 | 84.03 | |
| 2TS07114 | 07/11/1994 | 2 | TS | 1432.5 | 1390.77 | 296.05 | Q |
| 3TS07114 | 07/11/1994 | 3 | TS | 1440.0 | 1439.97 | | VOID |
| 4TS07114 | 07/11/1994 | 4 | TS | 1429.6 | 1384.48 | 55.94 | |
| 5TS07114 | 07/11/1994 | 5 | TS | 1431.7 | 1396.93 | 30.37 | |
| 6TS07114 | 07/11/1994 | 6 | TS | 1435.8 | 1411.38 | 37.08 | |
| 7TS07114 | 07/11/1994 | 7 | TS | 1331.4 | 1302.31 | | VOID |
| 1TS07134 | 07/13/1994 | 1 | TS | 1445.0 | 1449.31 | 77.46 | |
| 2TS07134 | 07/13/1994 | 2 | TS | 1438.6 | 1404.27 | 116.93 | Q |
| 3TS07134 | 07/13/1994 | 3 | TS | 1450.2 | 1458.06 | 84.27 | |
| 4TS07134 | 07/13/1994 | 4 | TS | 1428.3 | 1390.74 | 50.00 | |
| 5TS07134 | 07/13/1994 | 5 | TS | 1436.3 | 1409.02 | 41.19 | |
| 6TS07134 | 07/13/1994 | 6 | TS | 1439.1 | 1422.32 | 58.25 | |
| 7TS07134 | 07/13/1994 | 7 | TS | 1448.8 | 1424.85 | 32.02 | |
| 8TS07134 | 07/13/1994 | 8 | TS | 1446.1 | 1425.72 | 73.69 | |
| 1TS07154 | 07/15/1994 | 1 | TS | 1446.8 | 1443.29 | 81.60 | |
| 2TS07154 | 07/15/1994 | 2 | TS | 1438.9 | 1417.93 | 191.31 | Q |
| 3TS07154 | 07/15/1994 | 3 | TS | 1445.9 | 1445.87 | 73.77 | |
| 4TS07154 | 07/15/1994 | 4 | TS | 1430.3 | 1385.15 | 58.15 | |
| 5TS07154 | 07/15/1994 | 5 | TS | 1436.8 | 1401.91 | 43.18 | |
| 6TS07154 | 07/15/1994 | 6 | TS | 1436.6 | 1412.16 | 60.79 | |
| 7TS07154 | 07/15/1994 | 7 | TS | 1449.0 | 1417.34 | 39.32 | |
| 1TS07174 | 07/17/1994 | 1 | TS | 1444.2 | 1427.65 | 73.80 | |
| 2TS07174 | 07/17/1994 | 2 | TS | 1435.2 | 1380.80 | 201.89 | |
| 3TS07174 | 07/17/1994 | 3 | TS | 1443.2 | 1430.14 | 65.14 | |
| 4TS07174 | 07/17/1994 | 4 | TS | 1429.4 | 1371.78 | 59.96 | |
| 5TS07174 | 07/17/1994 | 5 | TS | 1434.7 | 1387.22 | 29.57 | |
| 6TS07174 | 07/17/1994 | 6 | TS | 1436.9 | 1399.68 | 52.47 | |
| 7TS07174 | 07/17/1994 | 7 | TS | 1450.1 | 1405.60 | 49.40 | |
| 1TS07194 | 07/19/1994 | 1 | TS | 1438.9 | 1433.45 | 76.29 | |

Note: Site -Site 1 to 7 are the normal sampling sites.
Site 8 is the co-located sampler located at Site 1.
Sample date indicates the start date of the sample.
Type - PM = PM10 sampler, TS = TSP sampler, BL = field blank
Gravimetric Validity - Sample validity based on sample & gravimetric QC.

| Sample ID | SAMPLE DATE | N | Type | Time(min) | Volume Flow(m3) | Concen. (ug/m3) | Grav. Validity |
|---|---|---|---|---|---|---|---|
| 2TS07194 | 07/19/1994 | 2 | TS | 3.0 | 2.95 | | VOID |
| 3TS07194 | 07/19/1994 | 3 | TS | 1446.9 | 1444.95 | 119.59 | |
| 4TS07194 | 07/19/1994 | 4 | TS | 1429.3 | 1382.32 | 72.10 | |
| 5TS07194 | 07/19/1994 | 5 | TS | 1433.0 | 1396.33 | 41.63 | |
| 6TS07194 | 07/19/1994 | 6 | TS | 1436.9 | 1410.55 | 73.28 | |
| 7TS07194 | 07/19/1994 | 7 | TS | 1451.4 | 1417.75 | 39.24 | |
| 8TS07194 | 07/19/1994 | 8 | TS | 1450.7 | 1420.60 | 74.24 | |
| 1TS07214 | 07/21/1994 | 1 | TS | 1445.8 | 1441.31 | 98.93 | |
| 2TS07214 | 07/21/1994 | 2 | TS | 1436.8 | 1414.88 | 162.02 | Q |
| 3TS07214 | 07/21/1994 | 3 | TS | 1447.6 | 1446.59 | 100.71 | |
| 4TS07214 | 07/21/1994 | 4 | TS | 1430.9 | 1384.80 | 69.51 | Q |
| 5TS07214 | 07/21/1994 | 5 | TS | 1438.0 | 1402.14 | 59.59 | |
| 6TS07214 | 07/21/1994 | 6 | TS | 1439.4 | 1413.98 | 95.46 | |
| 7TS07214 | 07/21/1994 | 7 | TS | 1447.2 | 1414.63 | 45.62 | |
| 1TS07234 | 07/23/1994 | 1 | TS | 1444.8 | 1435.44 | 54.86 | |
| 2TS07234 | 07/23/1994 | 2 | TS | 1435.6 | 1408.95 | 134.29 | Q |
| 3TS07234 | 07/23/1994 | 3 | TS | 1443.5 | 1437.67 | 121.52 | |
| 4TS07234 | 07/23/1994 | 4 | TS | 1432.4 | 1381.59 | 61.20 | Q |
| 5TS07234 | 07/23/1994 | 5 | TS | 1436.5 | 1395.96 | 55.26 | |
| 6TS07234 | 07/23/1994 | 6 | TS | 1436.9 | 1406.76 | 77.39 | |
| 7TS07234 | 07/23/1994 | 7 | TS | 1454.7 | 1417.15 | 37.92 | |
| 1TS07254 | 07/25/1994 | 1 | TS | 1442.6 | 1393.23 | 65.14 | |
| 2TS07254 | 07/25/1994 | 2 | TS | 1433.9 | 1402.12 | 94.06 | |
| 3TS07254 | 07/25/1994 | 3 | TS | 1441.8 | 1430.67 | 82.39 | |
| 4TS07254 | 07/25/1994 | 4 | TS | 1430.1 | 1374.27 | 67.57 | Q |
| 5TS07254 | 07/25/1994 | 5 | TS | 1433.8 | 1388.18 | 81.23 | |
| 6TS07254 | 07/25/1994 | 6 | TS | 1437.5 | 1402.18 | 128.95 | |
| 7TS07254 | 07/25/1994 | 7 | TS | 1452.2 | 1409.49 | 61.76 | |
| 8TS07254 | 07/25/1994 | 8 | TS | 1451.6 | 1408.91 | 62.21 | |
| 1TS07274 | 07/27/1994 | 1 | TS | 1443.4 | 1396.82 | 120.85 | |
| 2TS07274 | 07/27/1994 | 2 | TS | 1436.9 | 1407.86 | 185.92 | Q |
| 3TS07274 | 07/27/1994 | 3 | TS | 1447.1 | 1438.84 | 164.68 | |
| 4TS07274 | 07/27/1994 | 4 | TS | 1428.5 | 1375.52 | 126.86 | |
| 5TS07274 | 07/27/1994 | 5 | TS | 1438.5 | 1395.54 | 106.90 | |
| 6TS07274 | 07/27/1994 | 6 | TS | 1438.2 | 1405.67 | 129.69 | |
| 7TS07274 | 07/27/1994 | 7 | TS | 1449.8 | 1410.03 | 96.44 | |
| 1TS07294 | 07/29/1994 | 1 | TS | 1444.8 | 1393.02 | 122.25 | |
| 2TS07294 | 07/29/1994 | 2 | TS | 1434.9 | 1400.74 | 115.01 | Q |
| 3TS07294 | 07/29/1994 | 3 | TS | 1440.5 | 1440.84 | 93.96 | |
| 4TS07294 | 07/29/1994 | 4 | TS | 1428.1 | 1390.67 | 84.11 | |
| 5TS07294 | 07/29/1994 | 5 | TS | 1435.3 | 1387.31 | 92.54 | |
| 6TS07294 | 07/29/1994 | 6 | TS | 1435.7 | 1398.07 | 125.03 | Q |
| 7TS07294 | 07/29/1994 | 7 | TS | 1449.1 | 1411.12 | 73.32 | |
| 1TS07314 | 07/31/1994 | 1 | TS | 1444.2 | 1400.91 | 81.71 | |
| 2TS07314 | 07/31/1994 | 2 | TS | 1435.0 | 1409.33 | 170.96 | |
| 3TS07314 | 07/31/1994 | 3 | TS | 1247.0 | 1254.85 | 150.78 | SR |
| 4TS07314 | 07/31/1994 | 4 | TS | 1429.1 | 1400.06 | 97.55 | |

Note: Site -Site 1 to 7 are the normal sampling sites.
Site 8 is the co-located sampler located at Site 1.
Sample date indicates the start date of the sample.
Type - PM = PM10 sampler, TS = TSP sampler, BL = field blank
Gravimetric Validity - Sample validity based on sample & gravimetric QC.

| Sample ID | SAMPLE DATE | N | Type | Time(min) | Volume Flow(m3) | Concen. (ug/m3) | Grav. Validity |
|---|---|---|---|---|---|---|---|
| 5TS07314 | 07/31/1994 | 5 | TS | 1434.4 | 1394.85 | 91.89 | |
| 6TS07314 | 07/31/1994 | 6 | TS | 1437.2 | 1407.99 | 101.91 | |
| 7TS07314 | 07/31/1994 | 7 | TS | 1453.1 | 1423.57 | 68.11 | |
| 8TS07314 | 07/31/1994 | 8 | TS | 1452.2 | 1415.70 | 75.13 | |
| 1TS08024 | 08/02/1994 | 1 | TS | 1439.6 | 1395.95 | 122.35 | |
| 2TS08024 | 08/02/1994 | 2 | TS | 1435.9 | 1409.73 | 151.96 | Q |
| 3TS08024 | 08/02/1994 | 3 | TS | 1446.2 | 1454.81 | 106.81 | |
| 4TS08024 | 08/02/1994 | 4 | TS | 1430.4 | 1400.89 | 107.50 | |
| 5TS08024 | 08/02/1994 | 5 | TS | 1432.7 | 1392.75 | 129.53 | |
| 6TS08024 | 08/02/1994 | 6 | TS | 1438.0 | 1408.33 | 129.95 | |
| 7TS08024 | 08/02/1994 | 7 | TS | 1452.6 | 1422.63 | 111.27 | |
| 1TS08044 | 08/04/1994 | 1 | TS | 1446.0 | 1388.61 | 117.45 | |
| 2TS08044 | 08/04/1994 | 2 | TS | 1440.1 | 1400.19 | 201.16 | Q |
| 3TS08044 | 08/04/1994 | 3 | TS | 1449.5 | 1444.05 | 116.62 | |
| 4TS08044 | 08/04/1994 | 4 | TS | 1430.8 | 1387.70 | 137.36 | |
| 5TS08044 | 08/04/1994 | 5 | TS | 1436.9 | 1383.33 | 72.62 | |
| 6TS08044 | 08/04/1994 | 6 | TS | 1439.5 | 1396.14 | 132.59 | Q |
| 7TS08044 | 08/04/1994 | 7 | TS | 1447.3 | 1403.71 | 56.03 | |
| 1TS08064 | 08/06/1994 | 1 | TS | 1444.6 | 1391.44 | 109.59 | |
| 2TS08064 | 08/06/1994 | 2 | TS | 1438.2 | 1402.54 | 252.91 | |
| 4TS08064 | 08/06/1994 | 4 | TS | 1428.9 | 1390.03 | 64.35 | |
| 5TS08064 | 08/06/1994 | 5 | TS | 1435.1 | 1385.74 | 52.06 | |
| 6TS08064 | 08/06/1994 | 6 | TS | 1436.8 | 1397.71 | 117.48 | |
| 7TS08064 | 08/06/1994 | 7 | TS | 1452.5 | 1412.99 | 44.12 | |
| 8TS08064 | 08/06/1994 | 8 | TS | 1451.9 | 1405.46 | 96.04 | |
| 1TS08084 | 08/08/1994 | 1 | TS | 1440.6 | 1388.07 | 170.70 | |
| 2TS08084 | 08/08/1994 | 2 | TS | 1434.3 | 1399.22 | 224.04 | Q |
| 4TS08084 | 08/08/1994 | 4 | TS | 1428.5 | 1390.13 | 130.14 | |
| 5TS08084 | 08/08/1994 | 5 | TS | 1432.5 | 1383.67 | 104.57 | |
| 6TS08084 | 08/08/1994 | 6 | TS | 1438.1 | 1399.47 | 293.00 | Q |
| 7TS08084 | 08/08/1994 | 7 | TS | 1455.6 | 1416.50 | 85.68 | |
| 1TS08104 | 08/10/1994 | 1 | TS | 1445.0 | 1398.86 | 176.82 | |
| 2TS08104 | 08/10/1994 | 2 | TS | 1439.7 | 1411.09 | 191.95 | Q |
| 4TS08104 | 08/10/1994 | 4 | TS | 1428.9 | 1397.07 | 87.23 | |
| 5TS08104 | 08/10/1994 | 5 | TS | 1435.5 | 1393.12 | 46.11 | Q |
| 6TS08104 | 08/10/1994 | 6 | TS | 1439.5 | 1407.43 | 260.42 | Q |
| 7TS08104 | 08/10/1994 | 7 | TS | 1447.3 | 1415.06 | 33.52 | |
| 1TS08124 | 08/12/1994 | 1 | TS | 1443.8 | 1412.41 | 128.15 | |
| 2TS08124 | 08/12/1994 | 2 | TS | 1436.6 | 1422.86 | 184.60 | |
| 4TS08124 | 08/12/1994 | 4 | TS | 1428.4 | 1411.26 | 87.28 | |
| 5TS08124 | 08/12/1994 | 5 | TS | 1434.9 | 1407.20 | 84.83 | Q |
| 6TS08124 | 08/12/1994 | 6 | TS | 1438.2 | 1420.95 | 111.89 | Q |
| 7TS08124 | 08/12/1994 | 7 | TS | 1449.0 | 1431.62 | 46.90 | |
| 8TS08124 | 08/12/1994 | 8 | TS | 1450.8 | 1426.33 | 115.54 | |
| 1TS08144 | 08/14/1994 | 1 | TS | 1444.6 | 1398.92 | 88.84 | |
| 2TS08144 | 08/14/1994 | 2 | TS | 1434.6 | 1406.58 | 138.08 | |
| 4TS08144 | 08/14/1994 | 4 | TS | 1431.9 | 1400.45 | 67.30 | |

Note: Site -Site 1 to 7 are the normal sampling sites.
Site 8 is the co-located sampler located at Site 1.
Sample date indicates the start date of the sample.
Type - PM = PM10 sampler, TS = TSP sampler, BL = field blank
Gravimetric Validity - Sample validity based on sample & gravimetric QC.

| Sample ID | SAMPLE DATE | N | Type | Time(min) | Volume Flow(m3) | Concen. (ug/m3) | Grav. Validity |
|---|---|---|---|---|---|---|---|
| 5TS08144 | 08/14/1994 | 5 | TS | 1436.0 | 1394.05 | 78.88 | |
| 6TS08144 | 08/14/1994 | 6 | TS | 1438.5 | 1406.90 | 75.17 | Q |
| 7TS08144 | 08/14/1994 | 7 | TS | 1452.6 | 1420.69 | 64.80 | |
| 1TS08164 | 08/16/1994 | 1 | TS | 1440.6 | 1410.18 | 138.50 | |
| 2TS08164 | 08/16/1994 | 2 | TS | 1433.9 | 1407.12 | 281.81 | Q |
| 4TS08164 | 08/16/1994 | 4 | TS | 1427.8 | 1411.60 | 119.01 | |
| 5TS08164 | 08/16/1994 | 5 | TS | 1433.1 | 1381.86 | 84.43 | Q |
| 6TS08164 | 08/16/1994 | 6 | TS | 1436.2 | 1402.38 | 131.35 | Q |
| 7TS08164 | 08/16/1994 | 7 | TS | 1451.5 | 1435.03 | 105.84 | |
| 1TS08184 | 08/18/1994 | 1 | TS | 1446.0 | 1400.77 | 161.94 | |
| 2TS08184 | 08/18/1994 | 2 | TS | 1438.3 | 1396.77 | 222.14 | Q |
| 4TS08184 | 08/18/1994 | 4 | TS | 1428.6 | 1397.71 | 133.66 | |
| 5TS08184 | 08/18/1994 | 5 | TS | 1436.1 | 1394.63 | 84.52 | |
| 6TS08184 | 08/18/1994 | 6 | TS | 1439.2 | 1408.08 | 135.66 | |
| 7TS08184 | 08/18/1994 | 7 | TS | 1447.4 | 1416.10 | 105.56 | |
| 8TS08184 | 08/18/1994 | 8 | TS | 1448.3 | 1409.97 | 160.17 | |
| 1TS08204 | 08/20/1994 | 1 | TS | 1445.2 | 1407.56 | 135.42 | |
| 2TS08204 | 08/20/1994 | 2 | TS | 978.3 | 955.18 | | VOID |
| 4TS08204 | 08/20/1994 | 4 | TS | 1428.7 | 1405.37 | 100.75 | |
| 5TS08204 | 08/20/1994 | 5 | TS | 1434.3 | 1400.40 | 87.24 | |
| 6TS08204 | 08/20/1994 | 6 | TS | 1437.8 | 1414.32 | 143.97 | |
| 7TS08204 | 08/20/1994 | 7 | TS | 1451.9 | 1428.19 | 79.80 | |
| 1TS08224 | 08/22/1994 | 1 | TS | 1443.9 | 1421.67 | 139.64 | |
| 2TS08224 | 08/22/1994 | 2 | TS | 1435.5 | 1416.94 | 349.34 | |
| 4TS08224 | 08/22/1994 | 4 | TS | 1429.4 | 1421.44 | 89.33 | |
| 5TS08224 | 08/22/1994 | 5 | TS | 1431.0 | 1387.90 | 86.87 | |
| 6TS08224 | 08/22/1994 | 6 | TS | 1434.1 | 1408.49 | 89.87 | Q |
| 7TS08224 | 08/22/1994 | 7 | TS | 1452.1 | 1444.01 | 74.14 | |
| 1TS08244 | 08/24/1994 | 1 | TS | 1444.1 | 1382.41 | 148.52 | |
| 2TS08244 | 08/24/1994 | 2 | TS | 1435.8 | 1402.35 | 260.65 | |
| 4TS08244 | 08/24/1994 | 4 | TS | 1427.7 | 1352.80 | 115.38 | |
| 5TS08244 | 08/24/1994 | 5 | TS | 1435.5 | 1377.63 | 57.02 | |
| 6TS08244 | 08/24/1994 | 6 | TS | 1439.0 | 1398.51 | 90.08 | PR |
| 7TS08244 | 08/24/1994 | 7 | TS | 1450.0 | 1426.82 | 83.73 | |
| 8TS08244 | 08/24/1994 | 8 | TS | 1446.2 | 1387.90 | 140.80 | |
| 1TS08264 | 08/26/1994 | 1 | TS | 1446.4 | 1386.45 | 166.78 | |
| 2TS08264 | 08/26/1994 | 2 | TS | 1437.9 | 1406.32 | 215.30 | |
| 4TS08264 | 08/26/1994 | 4 | TS | 1428.2 | 1355.13 | 97.76 | |
| 5TS08264 | 08/26/1994 | 5 | TS | 1434.8 | 1378.83 | 60.38 | |
| 6TS08264 | 08/26/1994 | 6 | TS | 1436.8 | 1398.24 | 86.88 | |
| 7TS08264 | 08/26/1994 | 7 | TS | 1447.1 | 1425.89 | 50.03 | Q |
| 1TS08284 | 08/28/1994 | 1 | TS | 1443.4 | 1381.74 | 67.27 | |
| 2TS08284 | 08/28/1994 | 2 | TS | 1435.8 | 1402.35 | 177.24 | |
| 4TS08284 | 08/28/1994 | 4 | TS | 1429.3 | 1354.32 | 73.66 | |
| 5TS08284 | 08/28/1994 | 5 | TS | 1435.7 | 1377.82 | 128.39 | |
| 6TS08284 | 08/28/1994 | 6 | TS | 1436.9 | 1396.47 | 140.51 | |
| 7TS08284 | 08/28/1994 | 7 | TS | 1455.9 | 1432.62 | 34.78 | |

Note: Site -Site 1 to 7 are the normal sampling sites.
Site 8 is the co-located sampler located at Site 1.
Sample date indicates the start date of the sample.
Type - PM = PM10 sampler, TS = TSP sampler, BL = field blank
Gravimetric Validity - Sample validity based on sample & gravimetric QC.

| Sample ID | SAMPLE DATE | N | Type | Time(min) | Volume Flow(m3) | Concen. (ug/m3) | Grav. Validity |
|---|---|---|---|---|---|---|---|
| 1TS08304 | 08/30/1994 | 1 | TS | 1440.4 | 1397.75 | 131.22 | |
| 2TS08304 | 08/30/1994 | 2 | TS | 1432.8 | 1418.61 | 206.73 | |
| 4TS08304 | 08/30/1994 | 4 | TS | 1431.4 | 1374.91 | 103.78 | |
| 5TS08304 | 08/30/1994 | 5 | TS | 1433.6 | 1394.68 | 65.21 | |
| 6TS08304 | 08/30/1994 | 6 | TS | 1438.3 | 1416.97 | 93.28 | |
| 7TS08304 | 08/30/1994 | 7 | TS | 1452.7 | 1449.05 | 67.81 | |
| 8TS08304 | 08/30/1994 | 8 | TS | 1451.1 | 1411.71 | 124.11 | |
| 1TS09014 | 09/01/1994 | 1 | TS | 1444.4 | 1393.53 | 123.36 | |
| 2TS09014 | 09/01/1994 | 2 | TS | 1438.3 | 1415.83 | 155.41 | |
| 4TS09014 | 09/01/1994 | 4 | TS | 1430.1 | 1365.72 | 149.97 | |
| 5TS09014 | 09/01/1994 | 5 | TS | 1438.3 | 1391.15 | 81.06 | |
| 6TS09014 | 09/01/1994 | 6 | TS | 1439.6 | 1410.06 | 129.86 | Q |
| 7TS09014 | 09/01/1994 | 7 | TS | 1449.1 | 1437.09 | 87.80 | |
| 1TS09034 | 09/03/1994 | 1 | TS | 1445.2 | 1392.38 | 194.10 | |
| 2TS09034 | 09/03/1994 | 2 | TS | 1436.9 | 1412.50 | 411.50 | |
| 4TS09034 | 09/03/1994 | 4 | TS | 1430.6 | 1364.34 | 132.96 | |
| 5TS09034 | 09/03/1994 | 5 | TS | 1436.7 | 1387.73 | 138.87 | |
| 6TS09034 | 09/03/1994 | 6 | TS | 1435.9 | 1404.48 | 144.34 | Q |
| 7TS09034 | 09/03/1994 | 7 | TS | 1452.0 | 1437.99 | 92.06 | |
| 1TS09054 | 09/05/1994 | 1 | TS | 1441.1 | 1408.59 | 65.78 | |
| 2TS09054 | 09/05/1994 | 2 | TS | 1432.1 | 1428.22 | 141.45 | |
| 4TS09054 | 09/05/1994 | 4 | TS | 1430.6 | 1384.11 | 83.06 | |
| 5TS09054 | 09/05/1994 | 5 | TS | 1434.6 | 1405.77 | 61.07 | |
| 6TS09054 | 09/05/1994 | 6 | TS | 1433.9 | 1422.91 | 90.71 | |
| 7TS09054 | 09/05/1994 | 7 | TS | 1454.9 | 1461.79 | 68.79 | |
| 8TS09054 | 09/05/1994 | 8 | TS | 1451.8 | 1422.63 | 60.91 | |
| 1TS09074 | 09/07/1994 | 1 | TS | 1444.6 | 1383.83 | 121.55 | |
| 2TS09074 | 09/07/1994 | 2 | TS | 1436.1 | 1403.58 | 153.70 | |
| 4TS09074 | 09/07/1994 | 4 | TS | 1428.6 | 1354.58 | 89.97 | |
| 5TS09074 | 09/07/1994 | 5 | TS | 1435.5 | 1378.56 | 83.11 | |
| 6TS09074 | 09/07/1994 | 6 | TS | 1438.4 | 1398.86 | 141.70 | |
| 7TS09074 | 09/07/1994 | 7 | TS | 1448.9 | 1426.68 | 41.59 | |
| 1TS09094 | 09/09/1994 | 1 | TS | 1445.4 | 1385.49 | 145.59 | |
| 2TS09094 | 09/09/1994 | 2 | TS | 1435.2 | 1372.26 | 309.67 | |
| 4TS09094 | 09/09/1994 | 4 | TS | 1430.0 | 1356.84 | 115.71 | |
| 5TS09094 | 09/09/1994 | 5 | TS | 1436.0 | 1379.98 | 107.67 | |
| 6TS09094 | 09/09/1994 | 6 | TS | 1436.5 | 1397.95 | 115.81 | |
| 7TS09094 | 09/09/1994 | 7 | TS | 1450.2 | 1421.88 | 78.67 | |
| 1TS09114 | 09/11/1994 | 1 | TS | 1446.3 | 1408.80 | 80.40 | |
| 2TS09114 | 09/11/1994 | 2 | TS | 1435.5 | 1394.74 | 259.13 | Q |
| 4TS09114 | 09/11/1994 | 4 | TS | 1429.9 | 1378.69 | 70.40 | |
| 5TS09114 | 09/11/1994 | 5 | TS | 1437.9 | 1404.16 | 45.32 | |
| 6TS09114 | 09/11/1994 | 6 | TS | 1437.6 | 1421.66 | 49.34 | |
| 7TS09114 | 09/11/1994 | 7 | TS | 1453.0 | 1447.66 | 37.12 | |
| 8TS09114 | 09/11/1994 | 8 | TS | 1453.2 | 1419.10 | 71.57 | |
| 1TS09134 | 09/13/1994 | 1 | TS | 1441.2 | 1404.32 | 143.29 | |
| 2TS09134 | 09/13/1994 | 2 | TS | 1.1 | 1.07 | | VOID |

Note: Site -Site 1 to 7 are the normal sampling sites.
Site 8 is the co-located sampler located at Site 1.
Sample date indicates the start date of the sample.
Type - PM = PM10 sampler, TS = TSP sampler, BL = field blank
Gravimetric Validity - Sample validity based on sample & gravimetric QC.

| Sample ID | SAMPLE DATE | N | Type | Time(min) | Volume Flow(m3) | Concen. (ug/m3) | Grav. Validity |
|---|---|---|---|---|---|---|---|
| 4TS09134 | 09/13/1994 | 4 | TS | 1429.7 | 1378.99 | 133.51 | |
| 5TS09134 | 09/13/1994 | 5 | TS | 1434.9 | 1401.72 | 104.79 | |
| 6TS09134 | 09/13/1994 | 6 | TS | 1436.2 | 1420.76 | 111.98 | |
| 7TS09134 | 09/13/1994 | 7 | TS | 1451.7 | 1446.86 | 76.00 | |
| 1TS09154 | 09/15/1994 | 1 | TS | 1443.1 | 1423.83 | 48.21 | |
| 2TS09154 | 09/15/1994 | 2 | TS | 1434.5 | 1411.73 | 74.28 | |
| 4TS09154 | 09/15/1994 | 4 | TS | 1429.8 | 1396.37 | 50.23 | |
| 5TS09154 | 09/15/1994 | 5 | TS | 1439.2 | 1423.56 | 29.94 | |
| 6TS09154 | 09/15/1994 | 6 | TS | 1438.9 | 1441.28 | 83.79 | |
| 7TS09154 | 09/15/1994 | 7 | TS | 1447.1 | 1460.39 | 34.46 | |
| 1TS09174 | 09/17/1994 | 1 | TS | 1445.0 | 1401.27 | 54.63 | |
| 2TS09174 | 09/17/1994 | 2 | TS | 1437.4 | 1390.36 | 129.18 | |
| 4TS09174 | 09/17/1994 | 4 | TS | 1430.4 | 1373.02 | 67.70 | |
| 5TS09174 | 09/17/1994 | 5 | TS | 1437.8 | 1397.83 | 79.38 | |
| 6TS09174 | 09/17/1994 | 6 | TS | 1437.6 | 1415.31 | 148.54 | |
| 7TS09174 | 09/17/1994 | 7 | TS | 1451.8 | 1440.02 | 48.29 | |
| 8TS09174 | 09/17/1994 | 8 | TS | 1449.7 | 1409.40 | 52.96 | PR |
| 1TS09194 | 09/19/1994 | 1 | TS | 1440.5 | 1403.15 | 107.11 | |
| 2TS09194 | 09/19/1994 | 2 | TS | 1436.0 | 1395.23 | 146.94 | |
| 4TS09194 | 09/19/1994 | 4 | TS | 1429.0 | 1377.83 | 107.55 | |
| 5TS09194 | 09/19/1994 | 5 | TS | 1437.1 | 1403.38 | 63.17 | |
| 6TS09194 | 09/19/1994 | 6 | TS | 1435.6 | 1419.68 | 252.81 | |
| 7TS09194 | 09/19/1994 | 7 | TS | 1453.1 | 1447.76 | 112.10 | |
| 1TS09214 | 09/21/1994 | 1 | TS | 1443.4 | 1396.08 | 141.69 | |
| 2TS09214 | 09/21/1994 | 2 | TS | 1432.0 | 1402.94 | 189.29 | |
| 4TS09214 | 09/21/1994 | 4 | TS | 1430.4 | 1390.64 | 144.98 | |
| 5TS09214 | 09/21/1994 | 5 | TS | 1438.1 | 1362.29 | 87.85 | |
| 6TS09214 | 09/21/1994 | 6 | TS | 1438.0 | 1398.03 | 287.58 | |
| 7TS09214 | 09/21/1994 | 7 | TS | 1450.0 | 1456.71 | 102.69 | |
| 1TS09234 | 09/23/1994 | 1 | TS | 1445.1 | 1392.90 | 104.52 | |
| 2TS09234 | 09/23/1994 | 2 | TS | 1436.2 | 1402.17 | 188.46 | |
| 4TS09234 | 09/23/1994 | 4 | TS | 1430.8 | 1386.25 | 115.34 | |
| 5TS09234 | 09/23/1994 | 5 | TS | 1439.7 | 1359.07 | 77.30 | |
| 6TS09234 | 09/23/1994 | 6 | TS | 1436.1 | 1391.38 | 141.24 | |
| 7TS09234 | 09/23/1994 | 7 | TS | 1451.3 | 1452.96 | 104.26 | |
| 8TS09234 | 09/23/1994 | 8 | TS | 1449.4 | 1472.68 | 94.71 | |
| 1TS09254 | 09/25/1994 | 1 | TS | 1443.3 | 1379.23 | 79.95 | |
| 2TS09254 | 09/25/1994 | 2 | TS | 1435.5 | 1389.46 | 139.56 | |
| 4TS09254 | 09/25/1994 | 4 | TS | 1429.7 | 1373.28 | 93.99 | |
| 5TS09254 | 09/25/1994 | 5 | TS | 1439.2 | 1346.99 | 68.27 | |
| 6TS09254 | 09/25/1994 | 6 | TS | 1435.2 | 1378.56 | 61.33 | Q |
| 7TS09254 | 09/25/1994 | 7 | TS | 1451.7 | 1440.90 | 66.53 | |
| 1TS09274 | 09/27/1994 | 1 | TS | 1442.2 | 1380.55 | 149.09 | |
| 2TS09274 | 09/27/1994 | 2 | TS | 1435.2 | 1391.57 | 220.46 | Q |
| 4TS09274 | 09/27/1994 | 4 | TS | 1430.8 | 1376.73 | 156.99 | |
| 5TS09274 | 09/27/1994 | 5 | TS | 1435.9 | 1346.18 | 104.51 | |
| 6TS09274 | 09/27/1994 | 6 | TS | 1436.0 | 1381.73 | 271.42 | Q |

Note: Site -Site 1 to 7 are the normal sampling sites.
Site 8 is the co-located sampler located at Site 1.
Sample date indicates the start date of the sample.
Type - PM = PM10 sampler, TS = TSP sampler, BL = field blank
Gravimetric Validity - Sample validity based on sample & gravimetric QC

| Sample ID | SAMPLE DATE | N | Type | Time(min) | Volume Flow(m3) | Concen. (ug/m3) | Grav. Validity |
|---|---|---|---|---|---|---|---|
| 7TS09274 | 09/27/1994 | 7 | TS | 1449.2 | 1440.88 | 120.97 | |
| 1TS09294 | 09/29/1994 | 1 | TS | 1444.1 | 1395.82 | 88.89 | |
| 2TS09294 | 09/29/1994 | 2 | TS | 906.6 | 887.59 | | VOID |
| 4TS09294 | 09/29/1994 | 4 | TS | 1429.5 | 1388.83 | 73.27 | |
| 5TS09294 | 09/29/1994 | 5 | TS | 1439.9 | 1363.06 | 23.71 | |
| 6TS09294 | 09/29/1994 | 6 | TS | 1438.6 | 1397.67 | 43.96 | Q |
| 7TS09294 | 09/29/1994 | 7 | TS | 1447.8 | 1453.47 | 25.68 | |
| 1TS10014 | 10/01/1994 | 1 | TS | 1444.3 | 1404.27 | 42.54 | |
| 2TS10014 | 10/01/1994 | 2 | TS | 1437.1 | 1415.30 | 149.67 | |
| 4TS10014 | 10/01/1994 | 4 | TS | 1424.5 | 1406.44 | 25.75 | |
| 5TS10014 | 10/01/1994 | 5 | TS | 1439.6 | 1370.84 | 19.49 | |
| 6TS10014 | 10/01/1994 | 6 | TS | 1435.8 | 1403.21 | 14.62 | |
| 7TS10014 | 10/01/1994 | 7 | TS | 1452.1 | 1466.46 | 17.60 | |
| 8TS10014 | 10/01/1994 | 8 | TS | 1450.0 | 1486.10 | 35.35 | |
| 0TS10034 | 10/03/1994 | 0 | TS | 1440.0 | 1631.05 | | VOID |
| 1TS10034 | 10/03/1994 | 1 | TS | 1440.1 | 1451.86 | 24.81 | |
| 2TS10034 | 10/03/1994 | 2 | TS | 1436.1 | 1466.49 | 27.84 | |
| 4TS10034 | 10/03/1994 | 4 | TS | 1428.6 | 1462.51 | 30.38 | |
| 5TS10034 | 10/03/1994 | 5 | TS | 1435.1 | 1416.99 | 40.39 | |
| 6TS10034 | 10/03/1994 | 6 | TS | 1435.0 | 1454.15 | 43.07 | |
| 7TS10034 | 10/03/1994 | 7 | TS | 1453.2 | 1521.69 | 13.87 | |
| 1TS10054 | 10/05/1994 | 1 | TS | 1443.8 | 1423.17 | 42.75 | |
| 2TS10054 | 10/05/1994 | 2 | TS | 1440.0 | 1437.69 | | VOID |
| 4TS10054 | 10/05/1994 | 4 | TS | 1428.6 | 1429.95 | 13.02 | |
| 5TS10054 | 10/05/1994 | 5 | TS | 1438.5 | 1388.70 | 7.85 | |
| 6TS10054 | 10/05/1994 | 6 | TS | 1435.9 | 1422.66 | 7.74 | |
| 7TS10054 | 10/05/1994 | 7 | TS | 1447.1 | 1481.53 | 8.51 | |
| 8TS10054 | 10/05/1994 | 8 | TS | 1456.9 | 1513.80 | 39.33 | |
| 1TS10074 | 10/07/1994 | 1 | TS | 1445.1 | 1416.92 | 47.31 | |
| 2TS10074 | 10/07/1994 | 2 | TS | 1432.9 | 1423.05 | 175.92 | |
| 6TS10074 | 10/07/1994 | 6 | TS | 1433.9 | 1413.17 | 26.20 | |
| 7TS10074 | 10/07/1994 | 7 | TS | 1448.0 | 1474.67 | 19.81 | |
| 1TS10094 | 10/09/1994 | 1 | TS | 1444.3 | 1406.24 | 42.12 | |
| 2TS10094 | 10/09/1994 | 2 | TS | 1435.3 | 1415.48 | 94.87 | |
| 6TS10094 | 10/09/1994 | 6 | TS | 1436.2 | 1405.55 | 22.50 | |
| 7TS10094 | 10/09/1994 | 7 | TS | 1452.9 | 1469.29 | 20.97 | |
| 1TS10114 | 10/11/1994 | 1 | TS | 1440.5 | 1406.45 | 74.42 | |
| 2TS10114 | 10/11/1994 | 2 | TS | 1437.7 | 1421.84 | 223.15 | |
| 6TS10114 | 10/11/1994 | 6 | TS | 1435.4 | 1408.71 | 79.69 | |
| 7TS10114 | 10/11/1994 | 7 | TS | 1454.9 | 1475.43 | 29.16 | |
| 8TS10114 | 10/11/1994 | 8 | TS | 1450.6 | 1493.00 | 70.30 | |
| 1TS10134 | 10/13/1994 | 1 | TS | 1444.9 | 1421.22 | 103.70 | |
| 2TS10134 | 10/13/1994 | 2 | TS | 1434.7 | 1429.39 | 172.76 | |
| 6TS10134 | 10/13/1994 | 6 | TS | 1437.4 | 1421.13 | 69.99 | |
| 7TS10134 | 10/13/1994 | 7 | TS | 1447.5 | 1478.83 | 64.89 | |
| 1TS10154 | 10/15/1994 | 1 | TS | 1444.6 | 1459.54 | 40.79 | |
| 2TS10154 | 10/15/1994 | 2 | TS | 1431.9 | 1465.36 | 93.34 | |

Note: Site -Site 1 to 7 are the normal sampling sites.
Site 8 is the co-located sampler located at Site 1.
Sample date indicates the start date of the sample.
Type - PM = PM10 sampler, TS = TSP sampler, BL = field blank
Gravimetric Validity - Sample validity based on sample & gravimetric QC.

| Sample ID | SAMPLE DATE | N | Type | Time(min) | Volume Flow(m3) | Concen. (ug/m3) | Grav. Validity |
|---|---|---|---|---|---|---|---|
| 6TS10154 | 10/15/1994 | 6 | TS | 1436.3 | 1458.64 | 11.39 | |
| 7TS10154 | 10/15/1994 | 7 | TS | 1450.7 | 1522.40 | 8.22 | |
| 1TS10174 | 10/17/1994 | 1 | TS | 1440.9 | 1429.41 | 85.33 | |
| 2TS10174 | 10/17/1994 | 2 | TS | 1435.4 | 1442.28 | 253.22 | |
| 6TS10174 | 10/17/1994 | 6 | TS | 1433.9 | 1429.77 | 14.63 | |
| 7TS10174 | 10/17/1994 | 7 | TS | 1451.5 | 1495.57 | 14.79 | |
| 8TS10174 | 10/17/1994 | 8 | TS | 1449.5 | 1515.76 | 79.22 | |
| 1TS10194 | 10/19/1994 | 1 | TS | 1441.7 | 1421.10 | 21.97 | |
| 2TS10194 | 10/19/1994 | 2 | TS | 1435.2 | 1432.90 | 122.41 | |
| 6TS10194 | 10/19/1994 | 6 | TS | 1437.5 | 1424.24 | 13.63 | |
| 7TS10194 | 10/19/1994 | 7 | TS | 1447.7 | 1482.15 | 7.09 | |
| 1TS10214 | 10/21/1994 | 1 | TS | 1443.6 | 1416.96 | 114.54 | |
| 2TS10214 | 10/21/1994 | 2 | TS | 1432.4 | 1424.06 | 322.65 | |
| 6TS10214 | 10/21/1994 | 6 | TS | 1435.6 | 1416.34 | 43.16 | |
| 7TS10214 | 10/21/1994 | 7 | TS | 1449.5 | 1477.75 | 30.74 | |
| 1TS10234 | 10/23/1994 | 1 | TS | 1444.5 | 1439.65 | 38.85 | |
| 2TS10234 | 10/23/1994 | 2 | TS | 1433.5 | 1447.07 | 85.74 | |
| 6TS10234 | 10/23/1994 | 6 | TS | 1435.7 | 1438.23 | 22.40 | |
| 7TS10234 | 10/23/1994 | 7 | TS | 1452.1 | 1503.14 | 49.66 | |
| 8TS10234 | 10/23/1994 | 8 | TS | 1451.7 | 1525.09 | 35.49 | |
| 1TS10254 | 10/25/1994 | 1 | TS | 1441.3 | 1464.01 | 59.05 | |
| 2TS10254 | 10/25/1994 | 2 | TS | 1437.1 | 1448.71 | 136.41 | |
| 6TS10254 | 10/25/1994 | 6 | TS | 1435.8 | 1432.68 | 90.58 | |
| 7TS10254 | 10/25/1994 | 7 | TS | 1450.5 | 1480.78 | 86.56 | |
| 1TS10274 | 10/27/1994 | 1 | TS | 1444.8 | 1423.46 | 109.02 | |
| 2TS10274 | 10/27/1994 | 2 | TS | 1432.6 | 1400.77 | 356.95 | |
| 6TS10274 | 10/27/1994 | 6 | TS | 1436.9 | 1390.69 | 79.94 | |
| 7TS10274 | 10/27/1994 | 7 | TS | 1449.0 | 1434.78 | 40.31 | |
| 1TS10294 | 10/29/1994 | 1 | TS | 1442.7 | 1491.98 | 49.56 | |
| 2TS10294 | 10/29/1994 | 2 | TS | 1432.8 | 1470.55 | 161.87 | |
| 6TS10294 | 10/29/1994 | 6 | TS | 1436.5 | 1459.37 | 31.20 | |
| 7TS10294 | 10/29/1994 | 7 | TS | 1451.3 | 1508.44 | 15.12 | |
| 8TS10294 | 10/29/1994 | 8 | TS | 1450.8 | 1526.82 | 43.58 | |
| 1TS10314 | 10/31/1994 | 1 | TS | 1440.8 | 1460.36 | 19.53 | |
| 2TS10314 | 10/31/1994 | 2 | TS | 1433.6 | 1442.10 | 181.72 | |
| 6TS10314 | 10/31/1994 | 6 | TS | 1433.3 | 1427.14 | 39.54 | |
| 7TS10314 | 10/31/1994 | 7 | TS | 1452.6 | 1479.76 | 9.67 | |

Note: Site -Site 1 to 7 are the normal sampling sites.
Site 8 is the co-located sampler located at Site 1.
Sample date indicates the start date of the sample.
Type - PM = PM10 sampler, TS = TSP sampler, BL = field blank
Gravimetric Validity - Sample validity based on sample & gravimetric QC.

| Sample ID | SAMPLE DATE | N | Type | Total Flow(cf) | Concen. (ug/m3) | Grav. Validity |
|---|---|---|---|---|---|---|
| 3LO10013 | 10/01/1993 | 3 | LO | 48150 | 202.01 | Q |
| 4LO10013 | 10/01/1993 | 4 | LO | 51380 | 49.54 | |
| 5LO10013 | 10/01/1993 | 5 | LO | 34410 | 40.99 | T |
| 6LO10013 | 10/01/1993 | 6 | LO | 54195 | 31.89 | |
| 9LO10013 | 10/01/1993 | 9 | LO | 58490 | 142.72 | Q |
| 3LO11013 | 11/01/1993 | 3 | LO | 47555 | 71.80 | |
| 4LO11013 | 11/01/1993 | 4 | LO | 49990 | 46.79 | |
| 5LO11013 | 11/01/1993 | 5 | LO | 53000 | 51.72 | |
| 6LO11013 | 11/01/1993 | 6 | LO | 54150 | 26.65 | |
| 9LO11013 | 11/01/1993 | 9 | LO | 54205 | 53.81 | |
| 3LO12023 | 12/02/1993 | 3 | LO | 50620 | 34.86 | |
| 4LO12023 | 12/02/1993 | 4 | LO | 52895 | 33.79 | P |
| 5LO12023 | 12/02/1993 | 5 | LO | 55930 | 36.93 | |
| 6LO12023 | 12/02/1993 | 6 | LO | 57180 | 14.81 | P |
| 9LO12023 | 12/02/1993 | 9 | LO | 57420 | 31.19 | |
| LBL12023 | 12/02/1993 | L | BL | | | |
| LBL12153 | 12/15/1993 | L | BL | | | |
| 3LO01034 | 01/03/1994 | 3 | LO | 45580 | 33.66 | |
| 4LO01034 | 01/03/1994 | 4 | LO | 47720 | 38.03 | |
| 5LO01034 | 01/03/1994 | 5 | LO | 49330 | 30.80 | |
| 6LO01034 | 01/03/1994 | 6 | LO | 50810 | 12.67 | |
| 9LO01034 | 01/03/1994 | 9 | LO | 52145 | 29.64 | |
| LBL01034 | 01/03/1994 | L | BL | | | |
| 3LO02014 | 02/01/1994 | 3 | LO | 45610 | 29.21 | |
| 4LO02014 | 02/01/1994 | 4 | LO | 47570 | 29.84 | |
| 5LO02014 | 02/01/1994 | 5 | LO | 48460 | 27.42 | |
| 6LO02014 | 02/01/1994 | 6 | LO | 50440 | 8.78 | |
| 9LO02014 | 02/01/1994 | 9 | LO | 51885 | 26.63 | |
| LBL02014 | 02/01/1994 | L | BL | | | |
| 3LO03024 | 03/02/1994 | 3 | LO | 47040 | 67.52 | |
| 4LO03024 | 03/02/1994 | 4 | LO | 48720 | 47.42 | |
| 5LO03024 | 03/02/1994 | 5 | LO | 48580 | 38.09 | |
| 6LO03024 | 03/02/1994 | 6 | LO | 51560 | 33.89 | |
| 9LO03024 | 03/02/1994 | 9 | LO | 53660 | 56.62 | |
| LBL03024 | 03/02/1994 | L | BL | | | |
| 3LO04014 | 04/01/1994 | 3 | LO | 47100 | 64.54 | |
| 4LO04014 | 04/01/1994 | 4 | LO | 50470 | 45.61 | |
| 5LO04014 | 04/01/1994 | 5 | LO | 48720 | 50.30 | |
| 6LO04014 | 04/01/1994 | 6 | LO | 53000 | 45.65 | |
| 9LO04014 | 04/01/1994 | 9 | LO | 55590 | 43.80 | |
| 3LO05024 | 05/02/1994 | 3 | LO | 46740 | 54.93 | |
| 4LO05024 | 05/02/1994 | 4 | LO | 48520 | 41.78 | |
| 5LO05024 | 05/02/1994 | 5 | LO | 45780 | 34.81 | PR |
| 6LO05024 | 05/02/1994 | 6 | LO | 51290 | 46.73 | |
| 9LO05024 | 05/02/1994 | 9 | LO | 53220 | 51.46 | |
| LBL05024 | 05/02/1994 | L | BL | | | |
| 3LO06014 | 06/01/1994 | 3 | LO | 46730 | 134.10 | |

Note: Site -Sites 3 to 6 are the normal sampling sites.
Site 9 is the co-located sampler located at Site 3.
Sample date indicates the start date of the sample.
Type - LO = Lo-vol sampler, BL = field blank
Gravimetric Validity - Sample validity based on sample & gravimetric QC.

| Sample ID | SAMPLE DATE | N | Type | Total Flow(cf) | Concen. (ug/m3) | Grav. Validity |
|---|---|---|---|---|---|---|
| 4LO06014 | 06/01/1994 | 4 | LO | 48310 | 73.85 | |
| 5LO06014 | 06/01/1994 | 5 | LO | 43520 | 53.66 | |
| 6LO06014 | 06/01/1994 | 6 | LO | 51100 | 43.88 | |
| 9LO06014 | 06/01/1994 | 9 | LO | 52990 | 86.85 | |
| LBL06014 | 06/01/1994 | L | BL | | | |
| 3LO07014 | 07/01/1994 | 3 | LO | 48240 | 106.19 | |
| 4LO07014 | 07/01/1994 | 4 | LO | 49910 | 62.72 | |
| 5LO07014 | 07/01/1994 | 5 | LO | 44930 | 60.89 | |
| 6LO07014 | 07/01/1994 | 6 | LO | 52360 | 76.10 | |
| 9LO07014 | 07/01/1994 | 9 | LO | 54860 | 97.12 | |
| LBL07014 | 07/01/1994 | L | BL | | | |
| 3LO08014 | 08/01/1994 | 3 | LO | 6180 | | VOID |
| 4LO08014 | 08/01/1994 | 4 | LO | 48250 | 98.99 | |
| 5LO08014 | 08/01/1994 | 5 | LO | 42590 | 92.46 | |
| 6LO08014 | 08/01/1994 | 6 | LO | 49540 | 123.07 | |
| 9LO08014 | 08/01/1994 | 9 | LO | 7070 | | VOID |
| LBL08014 | 08/01/1994 | L | BL | | | |
| 4LO08314 | 08/31/1994 | 4 | LO | 48340 | 106.56 | |
| 5LO08314 | 08/31/1994 | 5 | LO | 41930 | 84.17 | |
| 6LO08314 | 08/31/1994 | 6 | LO | 49410 | 142.36 | |
| LBL08314 | 08/31/1994 | L | BL | | | |
| 6LO09304 | 09/30/1994 | 6 | LO | 52350 | 37.30 | |

Note: Site -Sites 3 to 6 are the normal sampling sites.
Site 9 is the co-located sampler located at Site 3.
Sample date indicates the start date of the sample.
Type - LO = Lo-vol sampler, BL = field blank
Gravimetric Validity - Sample validity based on sample & gravimetric QC.

# Appendix AB-2

## $TSP/PM_{10}$ Inorganic Data and Lo-vol Inorganic Data

| Sample Date | Chemical Name | Site # | Typ | Run Time (min.) | Chem Conc. (ug/m3) | EPA Scr. L(ug/m3) | Part.C. Grav. (ug/m3) | Val | Qual. Lab | Val |
|---|---|---|---|---|---|---|---|---|---|---|
| 10/14/1993 | Aluminum | T | BL | 1440.0 | .03181 | 33.30000 | 3.11 | | B | U |
| 10/14/1993 | Arsenic | T | BL | 1440.0 | .00017 | .00057 | 3.11 | | U | U |
| 10/14/1993 | Barium | T | BL | 1440.0 | .00170 | .52000 | 3.11 | | U | U |
| 10/14/1993 | Beryllium | T | BL | 1440.0 | .00017 | .00100 | 3.11 | | U | U |
| 10/14/1993 | Cadmium | T | BL | 1440.0 | .00135 | .00140 | 3.11 | | U | U |
| 10/14/1993 | Chromium | T | BL | 1440.0 | .00086 | .00020 | 3.11 | | | U |
| 10/14/1993 | Manganese | T | BL | 1440.0 | .00073 | .42000 | 3.11 | | B | |
| 10/14/1993 | Nickel | T | BL | 1440.0 | .00338 | .01000 | 3.11 | | U | U |
| 10/14/1993 | Particulate Fluoride | T | BL | 1440.0 | 1.45892 | 8.30000 | 3.11 | | B | U |
| 10/14/1993 | Phosphorus | T | BL | 1440.0 | .20668 | .30000 | 3.11 | | B | U |
| 10/14/1993 | Selenium | T | BL | 1440.0 | .01695 | .70000 | 3.11 | | U | U |
| 10/14/1993 | Silver | T | BL | 1440.0 | .00118 | .30000 | 3.11 | | U | U |
| 10/14/1993 | Thallium | T | BL | 1440.0 | .03384 | .30000 | 3.11 | | U | U |
| 10/14/1993 | Vanadium | T | BL | 1440.0 | .00170 | .17000 | 3.11 | | U | U |
| 10/14/1993 | Zinc | T | BL | 1440.0 | .00267 | .00000 | 3.11 | | B | |
| 10/20/1993 | Aluminum | T | BL | 1440.0 | .01750 | 33.30000 | -1.78 | | B | U |
| 10/20/1993 | Arsenic | T | BL | 1440.0 | .00017 | .00057 | -1.78 | | U | U |
| 10/20/1993 | Barium | T | BL | 1440.0 | .00172 | .52000 | -1.78 | | U | U |
| 10/20/1993 | Beryllium | T | BL | 1440.0 | .00017 | .00100 | -1.78 | | U | U |
| 10/20/1993 | Cadmium | T | BL | 1440.0 | .00137 | .00140 | -1.78 | | U | U |
| 10/20/1993 | Chromium | T | BL | 1440.0 | .00017 | .00020 | -1.78 | | U | U |
| 10/20/1993 | Manganese | T | BL | 1440.0 | .00051 | .42000 | -1.78 | | U | U |
| 10/20/1993 | Nickel | T | BL | 1440.0 | .00342 | .01000 | -1.78 | | U | U |
| 10/20/1993 | Particulate Fluoride | T | BL | 1440.0 | 1.63349 | 8.30000 | -1.78 | | B | U |
| 10/20/1993 | Phosphorus | T | BL | 1440.0 | .13533 | .30000 | -1.78 | | B | U |
| 10/20/1993 | Selenium | T | BL | 1440.0 | .01716 | .70000 | -1.78 | | U | U |
| 10/20/1993 | Silver | T | BL | 1440.0 | .00120 | .30000 | -1.78 | | U | U |
| 10/20/1993 | Thallium | T | BL | 1440.0 | .03424 | .30000 | -1.78 | | U | U |
| 10/20/1993 | Vanadium | T | BL | 1440.0 | .00172 | .17000 | -1.78 | | U | U |
| 10/20/1993 | Zinc | T | BL | 1440.0 | .00085 | .00000 | -1.78 | | U | U |
| 10/24/1993 | Aluminum | T | BL | 1440.0 | .01688 | 33.30000 | -1.18 | Q | B | U |
| 10/24/1993 | Arsenic | T | BL | 1440.0 | .00017 | .00057 | -1.18 | Q | U | U |
| 10/24/1993 | Barium | T | BL | 1440.0 | .00174 | .52000 | -1.18 | Q | U | U |
| 10/24/1993 | Beryllium | T | BL | 1440.0 | .00017 | .00100 | -1.18 | Q | U | U |
| 10/24/1993 | Cadmium | T | BL | 1440.0 | .00139 | .00140 | -1.18 | Q | U | U |
| 10/24/1993 | Chromium | T | BL | 1440.0 | .00034 | .00020 | -1.18 | Q | | U |
| 10/24/1993 | Manganese | T | BL | 1440.0 | .00052 | .42000 | -1.18 | Q | U | U |
| 10/24/1993 | Nickel | T | BL | 1440.0 | .00348 | .01000 | -1.18 | Q | U | U |
| 10/24/1993 | Particulate Fluoride | T | BL | 1440.0 | 1.72926 | 8.30000 | -1.18 | Q | B | U |
| 10/24/1993 | Phosphorus | T | BL | 1440.0 | .13820 | .30000 | -1.18 | Q | B | U |
| 10/24/1993 | Selenium | T | BL | 1440.0 | .01743 | .70000 | -1.18 | Q | U | U |
| 10/24/1993 | Silver | T | BL | 1440.0 | .00122 | .30000 | -1.18 | Q | U | U |
| 10/24/1993 | Thallium | T | BL | 1440.0 | .03479 | .30000 | -1.18 | Q | U | U |
| 10/24/1993 | Vanadium | T | BL | 1440.0 | .00174 | .17000 | -1.18 | Q | U | U |
| 10/24/1993 | Zinc | T | BL | 1440.0 | .00275 | .00000 | -1.18 | Q | B | |
| 10/28/1993 | Aluminum | P | BL | 1440.0 | .01673 | 33.30000 | -1.37 | | B | U |
| 10/28/1993 | Arsenic | P | BL | 1440.0 | .00016 | .00057 | -1.37 | | U | U |
| 10/28/1993 | Barium | P | BL | 1440.0 | .00164 | .52000 | -1.37 | | U | U |
| 10/28/1993 | Beryllium | P | BL | 1440.0 | .00016 | .00100 | -1.37 | | U | U |

| Sample Date | Chemical Name | Site # | Typ | Run Time (min.) | Chem Conc. (ug/m3) | EPA Scr. L(ug/m3) | Part.C. (ug/m3) | Grav. Val | Qual. Lab | Qual. Val |
|---|---|---|---|---|---|---|---|---|---|---|
| 10/28/1993 | Cadmium | P | BL | 1440.0 | .00131 | .00140 | -1.37 | | U | U |
| 10/28/1993 | Chromium | P | BL | 1440.0 | .00046 | .00020 | -1.37 | | | U |
| 10/28/1993 | Manganese | P | BL | 1440.0 | .00049 | .42000 | -1.37 | | U | U |
| 10/28/1993 | Nickel | P | BL | 1440.0 | .00327 | .01000 | -1.37 | | U | U |
| 10/28/1993 | Particulate Fluoride | P | BL | 1440.0 | 1.37912 | 8.30000 | -1.37 | | B | U |
| 10/28/1993 | Phosphorus | P | BL | 1440.0 | .46341 | .30000 | -1.37 | | | U |
| 10/28/1993 | Selenium | P | BL | 1440.0 | .01641 | .70000 | -1.37 | | U | U |
| 10/28/1993 | Silver | P | BL | 1440.0 | .00114 | .30000 | -1.37 | | U | U |
| 10/28/1993 | Thallium | P | BL | 1440.0 | .03275 | .30000 | -1.37 | | U | U |
| 10/28/1993 | Vanadium | P | BL | 1440.0 | .00164 | .17000 | -1.37 | | U | U |
| 10/28/1993 | Zinc | P | BL | 1440.0 | .00082 | .00000 | -1.37 | | U | U |
| 10/28/1993 | Aluminum | T | BL | 1440.0 | .03862 | 33.30000 | .95 | | | U |
| 10/28/1993 | Arsenic | T | BL | 1440.0 | .00017 | .00057 | .95 | | U | U |
| 10/28/1993 | Barium | T | BL | 1440.0 | .00170 | .52000 | .95 | | U | U |
| 10/28/1993 | Beryllium | T | BL | 1440.0 | .00017 | .00100 | .95 | | U | U |
| 10/28/1993 | Cadmium | T | BL | 1440.0 | .00135 | .00140 | .95 | | U | U |
| 10/28/1993 | Chromium | T | BL | 1440.0 | .00070 | .00020 | .95 | | | U |
| 10/28/1993 | Manganese | T | BL | 1440.0 | .00066 | .42000 | .95 | | B | |
| 10/28/1993 | Nickel | T | BL | 1440.0 | .00339 | .01000 | .95 | | U | U |
| 10/28/1993 | Particulate Fluoride | T | BL | 1440.0 | 1.89385 | 8.30000 | .95 | | B | U |
| 10/28/1993 | Phosphorus | T | BL | 1440.0 | .20494 | .30000 | .95 | | B | U |
| 10/28/1993 | Selenium | T | BL | 1440.0 | .01698 | .70000 | .95 | | U | U |
| 10/28/1993 | Silver | T | BL | 1440.0 | .00118 | .30000 | .95 | | U | U |
| 10/28/1993 | Thallium | T | BL | 1440.0 | .03389 | .30000 | .95 | | U | U |
| 10/28/1993 | Vanadium | T | BL | 1440.0 | .00170 | .17000 | .95 | | U | U |
| 10/28/1993 | Zinc | T | BL | 1440.0 | .00163 | .00000 | .95 | | B | |
| 11/05/1993 | Aluminum | P | BL | 1440.0 | .01755 | 33.30000 | -2.05 | | B | U |
| 11/05/1993 | Arsenic | P | BL | 1440.0 | .00017 | .00057 | -2.05 | | U | U |
| 11/05/1993 | Barium | P | BL | 1440.0 | .00166 | .52000 | -2.05 | | U | U |
| 11/05/1993 | Beryllium | P | BL | 1440.0 | .00017 | .00100 | -2.05 | | U | U |
| 11/05/1993 | Cadmium | P | BL | 1440.0 | .00132 | .00140 | -2.05 | | U | U |
| 11/05/1993 | Chromium | P | BL | 1440.0 | .00044 | .00020 | -2.05 | | | U |
| 11/05/1993 | Manganese | P | BL | 1440.0 | .00050 | .42000 | -2.05 | | U | U |
| 11/05/1993 | Nickel | P | BL | 1440.0 | .00331 | .01000 | -2.05 | | U | U |
| 11/05/1993 | Particulate Fluoride | P | BL | 1440.0 | 1.55699 | 8.30000 | -2.05 | | B | U |
| 11/05/1993 | Phosphorus | P | BL | 1440.0 | .15174 | .30000 | -2.05 | | B | U |
| 11/05/1993 | Selenium | P | BL | 1440.0 | .01656 | .70000 | -2.05 | | U | U |
| 11/05/1993 | Silver | P | BL | 1440.0 | .00115 | .30000 | -2.05 | | U | U |
| 11/05/1993 | Thallium | P | BL | 1440.0 | .03305 | .30000 | -2.05 | | U | U |
| 11/05/1993 | Vanadium | P | BL | 1440.0 | .00166 | .17000 | -2.05 | | U | U |
| 11/05/1993 | Zinc | P | BL | 1440.0 | .00098 | .00000 | -2.05 | | B | |
| 11/05/1993 | Aluminum | T | BL | 1440.0 | .12316 | 33.30000 | 10.76 | | | |
| 11/05/1993 | Arsenic | T | BL | 1440.0 | .00016 | .00057 | 10.76 | | U | U |
| 11/05/1993 | Barium | T | BL | 1440.0 | .00171 | .52000 | 10.76 | | B | |
| 11/05/1993 | Beryllium | T | BL | 1440.0 | .00016 | .00100 | 10.76 | | U | U |
| 11/05/1993 | Cadmium | T | BL | 1440.0 | .00130 | .00140 | 10.76 | | U | U |
| 11/05/1993 | Chromium | T | BL | 1440.0 | .00315 | .00020 | 10.76 | | | U |
| 11/05/1993 | Manganese | T | BL | 1440.0 | .00258 | .42000 | 10.76 | | | |
| 11/05/1993 | Nickel | T | BL | 1440.0 | .00368 | .01000 | 10.76 | | B | |

| Sample Date | Chemical Name | Site # | Typ | Run Time (min.) | Chem Conc. (ug/m3) | EPA Scr. L(ug/m3) | Part.C. (ug/m3) | Grav. Val | Qual. Lab | Qual. Val |
|---|---|---|---|---|---|---|---|---|---|---|
| 11/05/1993 | Particulate Fluoride | T | BL | 1440.0 | 1.64859 | 8.30000 | 10.76 | | B | U |
| 11/05/1993 | Phosphorus | T | BL | 1440.0 | .30365 | .30000 | 10.76 | | B | U |
| 11/05/1993 | Selenium | T | BL | 1440.0 | .01636 | .70000 | 10.76 | | U | U |
| 11/05/1993 | Silver | T | BL | 1440.0 | .00114 | .30000 | 10.76 | | U | U |
| 11/05/1993 | Thallium | T | BL | 1440.0 | .03265 | .30000 | 10.76 | | U | U |
| 11/05/1993 | Vanadium | T | BL | 1440.0 | .00412 | .17000 | 10.76 | | B | |
| 11/05/1993 | Zinc | T | BL | 1440.0 | .00506 | .00000 | 10.76 | | B | |
| 11/13/1993 | Aluminum | P | BL | 1440.0 | .01379 | 33.30000 | -1.17 | | B | |
| 11/13/1993 | Arsenic | P | BL | 1440.0 | .00016 | .00057 | -1.17 | | U | U |
| 11/13/1993 | Barium | P | BL | 1440.0 | .00163 | .52000 | -1.17 | | U | U |
| 11/13/1993 | Beryllium | P | BL | 1440.0 | .00016 | .00100 | -1.17 | | U | U |
| 11/13/1993 | Cadmium | P | BL | 1440.0 | .00130 | .00140 | -1.17 | | U | U |
| 11/13/1993 | Chromium | P | BL | 1440.0 | .00047 | .00020 | -1.17 | | | U |
| 11/13/1993 | Manganese | P | BL | 1440.0 | .00049 | .42000 | -1.17 | | U | U |
| 11/13/1993 | Nickel | P | BL | 1440.0 | .00326 | .01000 | -1.17 | | U | U |
| 11/13/1993 | Particulate Fluoride | P | BL | 1440.0 | 2.12740 | 8.30000 | -1.17 | | B | U |
| 11/13/1993 | Phosphorus | P | BL | 1440.0 | .11515 | .30000 | -1.17 | | B | U |
| 11/13/1993 | Selenium | P | BL | 1440.0 | .01633 | .70000 | -1.17 | | U | U |
| 11/13/1993 | Silver | P | BL | 1440.0 | .00114 | .30000 | -1.17 | | U | U |
| 11/13/1993 | Thallium | P | BL | 1440.0 | .03259 | .30000 | -1.17 | | U | U |
| 11/13/1993 | Vanadium | P | BL | 1440.0 | .00163 | .17000 | -1.17 | | U | U |
| 11/13/1993 | Zinc | P | BL | 1440.0 | .00220 | .00000 | -1.17 | | B | |
| 11/13/1993 | Aluminum | T | BL | 1440.0 | .03563 | 33.30000 | 2.53 | | | |
| 11/13/1993 | Arsenic | T | BL | 1440.0 | .00016 | .00057 | 2.53 | | U | U |
| 11/13/1993 | Barium | T | BL | 1440.0 | .00163 | .52000 | 2.53 | | U | U |
| 11/13/1993 | Beryllium | T | BL | 1440.0 | .00016 | .00100 | 2.53 | | U | U |
| 11/13/1993 | Cadmium | T | BL | 1440.0 | .00130 | .00140 | 2.53 | | U | U |
| 11/13/1993 | Chromium | T | BL | 1440.0 | .00096 | .00020 | 2.53 | | | U |
| 11/13/1993 | Manganese | T | BL | 1440.0 | .00071 | .42000 | 2.53 | | B | |
| 11/13/1993 | Nickel | T | BL | 1440.0 | .00325 | .01000 | 2.53 | | U | U |
| 11/13/1993 | Particulate Fluoride | T | BL | 1440.0 | 1.97284 | 8.30000 | 2.53 | | B | U |
| 11/13/1993 | Phosphorus | T | BL | 1440.0 | .21156 | .30000 | 2.53 | | B | U |
| 11/13/1993 | Selenium | T | BL | 1440.0 | .01629 | .70000 | 2.53 | | U | U |
| 11/13/1993 | Silver | T | BL | 1440.0 | .00114 | .30000 | 2.53 | | U | U |
| 11/13/1993 | Thallium | T | BL | 1440.0 | .03251 | .30000 | 2.53 | | U | U |
| 11/13/1993 | Vanadium | T | BL | 1440.0 | .00163 | .17000 | 2.53 | | U | U |
| 11/13/1993 | Zinc | T | BL | 1440.0 | .00190 | .00000 | 2.53 | | B | |
| 11/21/1993 | Aluminum | P | BL | 1440.0 | .01428 | 33.30000 | -1.06 | | B | |
| 11/21/1993 | Arsenic | P | BL | 1440.0 | .00017 | .00057 | -1.06 | | U | U |
| 11/21/1993 | Barium | P | BL | 1440.0 | .00166 | .52000 | -1.06 | | U | U |
| 11/21/1993 | Beryllium | P | BL | 1440.0 | .00017 | .00100 | -1.06 | | U | U |
| 11/21/1993 | Cadmium | P | BL | 1440.0 | .00132 | .00140 | -1.06 | | U | U |
| 11/21/1993 | Chromium | P | BL | 1440.0 | .00045 | .00020 | -1.06 | | | U |
| 11/21/1993 | Manganese | P | BL | 1440.0 | .00050 | .42000 | -1.06 | | U | U |
| 11/21/1993 | Nickel | P | BL | 1440.0 | .00331 | .01000 | -1.06 | | U | U |
| 11/21/1993 | Particulate Fluoride | P | BL | 1440.0 | 1.63974 | 8.30000 | -1.06 | | B | U |
| 11/21/1993 | Phosphorus | P | BL | 1440.0 | .17918 | .30000 | -1.06 | | B | U |

| Sample Date | Chemical Name | Site # | Typ | Run Time (min.) | Chem Conc. (ug/m3) | EPA Scr. L(ug/m3) | Part.C. (ug/m3) | Grav. Val | Qual. Lab | Qual. Val |
|---|---|---|---|---|---|---|---|---|---|---|
| 11/21/1993 | Selenium | P | BL | 1440.0 | .01660 | .70000 | -1.06 | | U | U |
| 11/21/1993 | Silver | P | BL | 1440.0 | .00116 | .30000 | -1.06 | | U | U |
| 11/21/1993 | Thallium | P | BL | 1440.0 | .03313 | .30000 | -1.06 | | U | U |
| 11/21/1993 | Vanadium | P | BL | 1440.0 | .00166 | .17000 | -1.06 | | U | U |
| 11/21/1993 | Zinc | P | BL | 1440.0 | .00159 | .00000 | -1.06 | | B | U |
| 11/21/1993 | Aluminum | T | BL | 1440.0 | .13191 | 33.30000 | 8.47 | | | |
| 11/21/1993 | Arsenic | T | BL | 1440.0 | .00016 | .00057 | 8.47 | | U | U |
| 11/21/1993 | Barium | T | BL | 1440.0 | .00263 | .52000 | 8.47 | | | U |
| 11/21/1993 | Beryllium | T | BL | 1440.0 | .00016 | .00100 | 8.47 | | U | U |
| 11/21/1993 | Cadmium | T | BL | 1440.0 | .00205 | .00140 | 8.47 | | | |
| 11/21/1993 | Chromium | T | BL | 1440.0 | .00126 | .00020 | 8.47 | | | U |
| 11/21/1993 | Manganese | T | BL | 1440.0 | .00373 | .42000 | 8.47 | | | |
| 11/21/1993 | Nickel | T | BL | 1440.0 | .00329 | .01000 | 8.47 | | U | U |
| 11/21/1993 | Particulate Fluoride | T | BL | 1440.0 | 1.75226 | 8.30000 | 8.47 | | B | U |
| 11/21/1993 | Phosphorus | T | BL | 1440.0 | .37473 | .30000 | 8.47 | | | U |
| 11/21/1993 | Selenium | T | BL | 1440.0 | .01647 | .70000 | 8.47 | | U | U |
| 11/21/1993 | Silver | T | BL | 1440.0 | .00115 | .30000 | 8.47 | | U | U |
| 11/21/1993 | Thallium | T | BL | 1440.0 | .03288 | .30000 | 8.47 | | U | U |
| 11/21/1993 | Vanadium | T | BL | 1440.0 | .00354 | .17000 | 8.47 | | B | |
| 11/21/1993 | Zinc | T | BL | 1440.0 | .00735 | .00000 | 8.47 | | B | U |
| 11/25/1993 | Aluminum | P | BL | 1440.0 | .02679 | 33.30000 | -1.11 | | B | U |
| 11/25/1993 | Arsenic | P | BL | 1440.0 | .00015 | .00057 | -1.11 | | U | U |
| 11/25/1993 | Barium | P | BL | 1440.0 | .00154 | .52000 | -1.11 | | U | U |
| 11/25/1993 | Beryllium | P | BL | 1440.0 | .00015 | .00100 | -1.11 | | U | U |
| 11/25/1993 | Cadmium | P | BL | 1440.0 | .00123 | .00140 | -1.11 | | U | U |
| 11/25/1993 | Chromium | P | BL | 1440.0 | .00054 | .00020 | -1.11 | | | U |
| 11/25/1993 | Manganese | P | BL | 1440.0 | .00046 | .42000 | -1.11 | | U | U |
| 11/25/1993 | Nickel | P | BL | 1440.0 | .00308 | .01000 | -1.11 | | U | U |
| 11/25/1993 | Particulate Fluoride | P | BL | 1440.0 | 1.22884 | 8.30000 | -1.11 | | U | U |
| 11/25/1993 | Phosphorus | P | BL | 1440.0 | .17081 | .30000 | -1.11 | | B | U |
| 11/25/1993 | Selenium | P | BL | 1440.0 | .01542 | .70000 | -1.11 | | U | U |
| 11/25/1993 | Silver | P | BL | 1440.0 | .00108 | .30000 | -1.11 | | U | U |
| 11/25/1993 | Thallium | P | BL | 1440.0 | .03078 | .30000 | -1.11 | | U | U |
| 11/25/1993 | Vanadium | P | BL | 1440.0 | .00154 | .17000 | -1.11 | | U | U |
| 11/25/1993 | Zinc | P | BL | 1440.0 | .00103 | .00000 | -1.11 | | B | |
| 11/25/1993 | Aluminum | T | BL | 1440.0 | .02703 | 33.30000 | 3.31 | | B | U |
| 11/25/1993 | Arsenic | T | BL | 1440.0 | .00015 | .00057 | 3.31 | | U | U |
| 11/25/1993 | Barium | T | BL | 1440.0 | .00154 | .52000 | 3.31 | | U | U |
| 11/25/1993 | Beryllium | T | BL | 1440.0 | .00015 | .00100 | 3.31 | | U | U |
| 11/25/1993 | Cadmium | T | BL | 1440.0 | .00123 | .00140 | 3.31 | | U | U |
| 11/25/1993 | Chromium | T | BL | 1440.0 | .00068 | .00020 | 3.31 | | | U |
| 11/25/1993 | Manganese | T | BL | 1440.0 | .00046 | .42000 | 3.31 | | U | U |
| 11/25/1993 | Nickel | T | BL | 1440.0 | .00307 | .01000 | 3.31 | | U | U |
| 11/25/1993 | Particulate Fluoride | T | BL | 1440.0 | 1.22578 | 8.30000 | 3.31 | | U | U |
| 11/25/1993 | Phosphorus | T | BL | 1440.0 | .19490 | .30000 | 3.31 | | B | U |
| 11/25/1993 | Selenium | T | BL | 1440.0 | .01538 | .70000 | 3.31 | | U | U |
| 11/25/1993 | Silver | T | BL | 1440.0 | .00107 | .30000 | 3.31 | | U | U |
| 11/25/1993 | Thallium | T | BL | 1440.0 | .03071 | .30000 | 3.31 | | U | U |
| 11/25/1993 | Vanadium | T | BL | 1440.0 | .00154 | .17000 | 3.31 | | U | U |

| Sample Date | Chemical Name | Site # | Typ | Run Time (min.) | Chem Conc. (ug/m3) | EPA Scr. L(ug/m3) | Part.C. Grav. (ug/m3) | Qual. Val | Lab | Val |
|---|---|---|---|---|---|---|---|---|---|---|
| 11/25/1993 | Zinc | T | BL | 1440.0 | .00180 | .00000 | 3.31 | | B | |
| 12/03/1993 | Aluminum | P | BL | 1440.0 | .02754 | 33.30000 | -.79 | | B | U |
| 12/03/1993 | Arsenic | P | BL | 1440.0 | .00016 | .00057 | -.79 | | U | U |
| 12/03/1993 | Barium | P | BL | 1440.0 | .00164 | .52000 | -.79 | | U | U |
| 12/03/1993 | Beryllium | P | BL | 1440.0 | .00016 | .00100 | -.79 | | U | U |
| 12/03/1993 | Cadmium | P | BL | 1440.0 | .00131 | .00140 | -.79 | | U | U |
| 12/03/1993 | Chromium | P | BL | 1440.0 | .00033 | .00020 | -.79 | | | U |
| 12/03/1993 | Manganese | P | BL | 1440.0 | .00049 | .42000 | -.79 | | U | U |
| 12/03/1993 | Nickel | P | BL | 1440.0 | .00328 | .01000 | -.79 | | U | U |
| 12/03/1993 | Particulate Fluoride | P | BL | 1440.0 | 1.49782 | 8.30000 | -.79 | | B | |
| 12/03/1993 | Phosphorus | P | BL | 1440.0 | .21650 | .30000 | -.79 | | B | U |
| 12/03/1993 | Selenium | P | BL | 1440.0 | .01642 | .70000 | -.79 | | U | U |
| 12/03/1993 | Silver | P | BL | 1440.0 | .00114 | .30000 | -.79 | | U | U |
| 12/03/1993 | Thallium | P | BL | 1440.0 | .03277 | .30000 | -.79 | | U | U |
| 12/03/1993 | Vanadium | P | BL | 1440.0 | .00164 | .17000 | -.79 | | U | U |
| 12/03/1993 | Zinc | P | BL | 1440.0 | .00141 | .00000 | -.79 | | B | |
| 12/03/1993 | Aluminum | T | BL | 1440.0 | .03399 | 33.30000 | 3.26 | | B | U |
| 12/03/1993 | Arsenic | T | BL | 1440.0 | .00016 | .00057 | 3.26 | | U | U |
| 12/03/1993 | Barium | T | BL | 1440.0 | .00188 | .52000 | 3.26 | | B | |
| 12/03/1993 | Beryllium | T | BL | 1440.0 | .00016 | .00100 | 3.26 | | U | U |
| 12/03/1993 | Cadmium | T | BL | 1440.0 | .00130 | .00140 | 3.26 | | U | U |
| 12/03/1993 | Chromium | T | BL | 1440.0 | .00920 | .00020 | 3.26 | | | |
| 12/03/1993 | Manganese | T | BL | 1440.0 | .00132 | .42000 | 3.26 | | B | |
| 12/03/1993 | Nickel | T | BL | 1440.0 | .00327 | .01000 | 3.26 | | U | U |
| 12/03/1993 | Particulate Fluoride | T | BL | 1440.0 | 1.30490 | 8.30000 | 3.26 | | U | U |
| 12/03/1993 | Phosphorus | T | BL | 1440.0 | .37777 | .30000 | 3.26 | | | U |
| 12/03/1993 | Selenium | T | BL | 1440.0 | .01638 | .70000 | 3.26 | | U | U |
| 12/03/1993 | Silver | T | BL | 1440.0 | .00114 | .30000 | 3.26 | | U | U |
| 12/03/1993 | Thallium | T | BL | 1440.0 | .03269 | .30000 | 3.26 | | U | U |
| 12/03/1993 | Vanadium | T | BL | 1440.0 | .01351 | .17000 | 3.26 | | | |
| 12/03/1993 | Zinc | T | BL | 1440.0 | .00277 | .00000 | 3.26 | | B | |
| 12/07/1993 | Aluminum | P | BL | 1440.0 | .04260 | 33.30000 | -.60 | | | U |
| 12/07/1993 | Arsenic | P | BL | 1440.0 | .00017 | .00057 | -.60 | | U | U |
| 12/07/1993 | Barium | P | BL | 1440.0 | .00201 | .52000 | -.60 | | | |
| 12/07/1993 | Beryllium | P | BL | 1440.0 | .00017 | .00100 | -.60 | | U | U |
| 12/07/1993 | Cadmium | P | BL | 1440.0 | .00133 | .00140 | -.60 | | U | U |
| 12/07/1993 | Chromium | P | BL | 1440.0 | .00227 | .00020 | -.60 | | | U |
| 12/07/1993 | Manganese | P | BL | 1440.0 | .00077 | .42000 | -.60 | | B | |
| 12/07/1993 | Nickel | P | BL | 1440.0 | .00334 | .01000 | -.60 | | U | U |
| 12/07/1993 | Particulate Fluoride | P | BL | 1440.0 | 1.56680 | 8.30000 | -.60 | | B | |
| 12/07/1993 | Phosphorus | P | BL | 1440.0 | .30403 | .30000 | -.60 | | B | U |
| 12/07/1993 | Selenium | P | BL | 1440.0 | .01673 | .70000 | -.60 | | U | U |
| 12/07/1993 | Silver | P | BL | 1440.0 | .00117 | .30000 | -.60 | | U | U |
| 12/07/1993 | Thallium | P | BL | 1440.0 | .03340 | .30000 | -.60 | | U | U |
| 12/07/1993 | Vanadium | P | BL | 1440.0 | .00273 | .17000 | -.60 | | B | |
| 12/07/1993 | Zinc | P | BL | 1440.0 | .00276 | .00000 | -.60 | | B | |
| 12/07/1993 | Aluminum | T | BL | 1440.0 | .01616 | 33.30000 | 3.16 | | B | U |
| 12/07/1993 | Arsenic | T | BL | 1440.0 | .00016 | .00057 | 3.16 | | U | U |
| 12/07/1993 | Barium | T | BL | 1440.0 | .00162 | .52000 | 3.16 | | U | U |

| Sample Date | Chemical Name | Site # | Typ | Run Time (min.) | Chem Conc. (ug/m3) | EPA Scr. L(ug/m3) | Part.C. (ug/m3) | Grav. Val | Qual. Lab | Qual. Val |
|---|---|---|---|---|---|---|---|---|---|---|
| 12/07/1993 | Beryllium | T | BL | 1440.0 | .00016 | .00100 | 3.16 | | U | U |
| 12/07/1993 | Cadmium | T | BL | 1440.0 | .00129 | .00140 | 3.16 | | U | U |
| 12/07/1993 | Chromium | T | BL | 1440.0 | .00042 | .00020 | 3.16 | | | U |
| 12/07/1993 | Manganese | T | BL | 1440.0 | .00048 | .42000 | 3.16 | | U | U |
| 12/07/1993 | Nickel | T | BL | 1440.0 | .00322 | .01000 | 3.16 | | U | U |
| 12/07/1993 | Particulate Fluoride | T | BL | 1440.0 | 1.31310 | 8.30000 | 3.16 | | B | |
| 12/07/1993 | Phosphorus | T | BL | 1440.0 | .21113 | .30000 | 3.16 | | B | U |
| 12/07/1993 | Selenium | T | BL | 1440.0 | .01616 | .70000 | 3.16 | | U | U |
| 12/07/1993 | Silver | T | BL | 1440.0 | .00113 | .30000 | 3.16 | | U | U |
| 12/07/1993 | Thallium | T | BL | 1440.0 | .03225 | .30000 | 3.16 | | U | U |
| 12/07/1993 | Vanadium | T | BL | 1440.0 | .00162 | .17000 | 3.16 | | U | U |
| 12/07/1993 | Zinc | T | BL | 1440.0 | .00080 | .00000 | 3.16 | | U | U |
| 12/19/1993 | Aluminum | P | BL | 1440.0 | .01672 | 33.30000 | -1.43 | | B | U |
| 12/19/1993 | Arsenic | P | BL | 1440.0 | .00016 | .00057 | -1.43 | | U | U |
| 12/19/1993 | Barium | P | BL | 1440.0 | .00235 | .52000 | -1.43 | | | |
| 12/19/1993 | Beryllium | P | BL | 1440.0 | .00016 | .00100 | -1.43 | | U | U |
| 12/19/1993 | Cadmium | P | BL | 1440.0 | .00130 | .00140 | -1.43 | | U | U |
| 12/19/1993 | Chromium | P | BL | 1440.0 | .00052 | .00020 | -1.43 | | | U |
| 12/19/1993 | Manganese | P | BL | 1440.0 | .00049 | .42000 | -1.43 | | U | U |
| 12/19/1993 | Nickel | P | BL | 1440.0 | .00325 | .01000 | -1.43 | | U | U |
| 12/19/1993 | Phosphorus | P | BL | 1440.0 | .22094 | .30000 | -1.43 | | B | U |
| 12/19/1993 | Selenium | P | BL | 1440.0 | .01626 | .70000 | -1.43 | | U | U |
| 12/19/1993 | Silver | P | BL | 1440.0 | .00113 | .30000 | -1.43 | | U | U |
| 12/19/1993 | Thallium | P | BL | 1440.0 | .03246 | .30000 | -1.43 | | U | U |
| 12/19/1993 | Vanadium | P | BL | 1440.0 | .00163 | .17000 | -1.43 | | U | U |
| 12/19/1993 | Zinc | P | BL | 1440.0 | .00081 | .00000 | -1.43 | | U | U |
| 12/19/1993 | Aluminum | T | BL | 1440.0 | .02851 | 33.30000 | 1.11 | | | U |
| 12/19/1993 | Arsenic | T | BL | 1440.0 | .00013 | .00057 | 1.11 | | U | U |
| 12/19/1993 | Barium | T | BL | 1440.0 | .00139 | .52000 | 1.11 | | B | |
| 12/19/1993 | Beryllium | T | BL | 1440.0 | .00013 | .00100 | 1.11 | | U | U |
| 12/19/1993 | Cadmium | T | BL | 1440.0 | .00105 | .00140 | 1.11 | | U | U |
| 12/19/1993 | Chromium | T | BL | 1440.0 | .00062 | .00020 | 1.11 | | | U |
| 12/19/1993 | Manganese | T | BL | 1440.0 | .00040 | .42000 | 1.11 | | U | U |
| 12/19/1993 | Nickel | T | BL | 1440.0 | .00264 | .01000 | 1.11 | | U | U |
| 12/19/1993 | Particulate Fluoride | T | BL | 1440.0 | 1.27538 | 8.30000 | 1.11 | | B | |
| 12/19/1993 | Phosphorus | T | BL | 1440.0 | .14282 | .30000 | 1.11 | | B | U |
| 12/19/1993 | Selenium | T | BL | 1440.0 | .01323 | .70000 | 1.11 | | U | U |
| 12/19/1993 | Silver | T | BL | 1440.0 | .00092 | .30000 | 1.11 | | U | U |
| 12/19/1993 | Thallium | T | BL | 1440.0 | .02640 | .30000 | 1.11 | | U | U |
| 12/19/1993 | Vanadium | T | BL | 1440.0 | .00132 | .17000 | 1.11 | | U | U |
| 12/19/1993 | Zinc | T | BL | 1440.0 | .00087 | .00000 | 1.11 | | B | |
| 12/23/1993 | Aluminum | P | BL | 1440.0 | .02074 | 33.30000 | -1.46 | | B | U |
| 12/23/1993 | Arsenic | P | BL | 1440.0 | .00016 | .00057 | -1.46 | | U | U |
| 12/23/1993 | Barium | P | BL | 1440.0 | .00160 | .52000 | -1.46 | | U | U |
| 12/23/1993 | Beryllium | P | BL | 1440.0 | .00016 | .00100 | -1.46 | | U | U |
| 12/23/1993 | Cadmium | P | BL | 1440.0 | .00127 | .00140 | -1.46 | | U | U |
| 12/23/1993 | Chromium | P | BL | 1440.0 | .00045 | .00020 | -1.46 | | | U |
| 12/23/1993 | Manganese | P | BL | 1440.0 | .00048 | .42000 | -1.46 | | U | U |
| 12/23/1993 | Nickel | P | BL | 1440.0 | .00319 | .01000 | -1.46 | | U | U |
| 12/23/1993 | Phosphorus | P | BL | 1440.0 | .17240 | .30000 | -1.46 | | B | U |
| 12/23/1993 | Selenium | P | BL | 1440.0 | .01597 | .70000 | -1.46 | | U | U |

| Sample Date | Chemical Name | Site # | Typ | Run Time (min.) | Chem Conc. (ug/m3) | EPA Scr. L(ug/m3) | Part.C. (ug/m3) | Grav. Val | Qual. Lab | Qual. Val |
|---|---|---|---|---|---|---|---|---|---|---|
| 12/23/1993 | Silver | P | BL | 1440.0 | .00111 | .30000 | -1.46 | | U | U |
| 12/23/1993 | Thallium | P | BL | 1440.0 | .03187 | .30000 | -1.46 | | U | U |
| 12/23/1993 | Vanadium | P | BL | 1440.0 | .00160 | .17000 | -1.46 | | U | U |
| 12/23/1993 | Zinc | P | BL | 1440.0 | .00080 | .00000 | -1.46 | | U | U |
| 12/23/1993 | Aluminum | T | BL | 1440.0 | .02006 | 33.30000 | -1.38 | | B | U |
| 12/23/1993 | Arsenic | T | BL | 1440.0 | .00016 | .00057 | -1.38 | | U | U |
| 12/23/1993 | Barium | T | BL | 1440.0 | .00222 | .52000 | -1.38 | | | |
| 12/23/1993 | Beryllium | T | BL | 1440.0 | .00016 | .00100 | -1.38 | | U | U |
| 12/23/1993 | Cadmium | T | BL | 1440.0 | .00165 | .00140 | -1.38 | | | U |
| 12/23/1993 | Chromium | T | BL | 1440.0 | .00048 | .00020 | -1.38 | | | U |
| 12/23/1993 | Manganese | T | BL | 1440.0 | .00049 | .42000 | -1.38 | | U | U |
| 12/23/1993 | Nickel | T | BL | 1440.0 | .00328 | .01000 | -1.38 | | U | U |
| 12/23/1993 | Particulate Fluoride | T | BL | 1440.0 | 1.71125 | 8.30000 | -1.38 | | B | U |
| 12/23/1993 | Phosphorus | T | BL | 1440.0 | .18883 | .30000 | -1.38 | | B | U |
| 12/23/1993 | Selenium | T | BL | 1440.0 | .01646 | .70000 | -1.38 | | U | U |
| 12/23/1993 | Silver | T | BL | 1440.0 | .00115 | .30000 | -1.38 | | U | U |
| 12/23/1993 | Thallium | T | BL | 1440.0 | .03285 | .30000 | -1.38 | | U | U |
| 12/23/1993 | Vanadium | T | BL | 1440.0 | .00165 | .17000 | -1.38 | | U | U |
| 12/23/1993 | Zinc | T | BL | 1440.0 | .00094 | .00000 | -1.38 | | B | U |
| 12/31/1993 | Aluminum | P | BL | 1440.0 | .01151 | 33.30000 | -1.45 | | U | U |
| 12/31/1993 | Arsenic | P | BL | 1440.0 | .00017 | .00057 | -1.45 | | U | U |
| 12/31/1993 | Barium | P | BL | 1440.0 | .00165 | .52000 | -1.45 | | U | U |
| 12/31/1993 | Beryllium | P | BL | 1440.0 | .00017 | .00100 | -1.45 | | U | U |
| 12/31/1993 | Cadmium | P | BL | 1440.0 | .00132 | .00140 | -1.45 | | U | U |
| 12/31/1993 | Chromium | P | BL | 1440.0 | .00034 | .00020 | -1.45 | | | U |
| 12/31/1993 | Manganese | P | BL | 1440.0 | .00049 | .42000 | -1.45 | | U | U |
| 12/31/1993 | Nickel | P | BL | 1440.0 | .00330 | .01000 | -1.45 | | U | U |
| 12/31/1993 | Phosphorus | P | BL | 1440.0 | .17632 | .30000 | -1.45 | | B | U |
| 12/31/1993 | Selenium | P | BL | 1440.0 | .01651 | .70000 | -1.45 | | U | U |
| 12/31/1993 | Silver | P | BL | 1440.0 | .00115 | .30000 | -1.45 | | U | UJ |
| 12/31/1993 | Thallium | P | BL | 1440.0 | .03296 | .30000 | -1.45 | | U | U |
| 12/31/1993 | Vanadium | P | BL | 1440.0 | .00165 | .17000 | -1.45 | | U | U |
| 12/31/1993 | Zinc | P | BL | 1440.0 | .00330 | .00000 | -1.45 | | B | U |
| 12/31/1993 | Aluminum | T | BL | 1440.0 | .01953 | 33.30000 | -.20 | | B | U |
| 12/31/1993 | Arsenic | T | BL | 1440.0 | .00017 | .00057 | -.20 | | U | U |
| 12/31/1993 | Barium | T | BL | 1440.0 | .00168 | .52000 | -.20 | | U | U |
| 12/31/1993 | Beryllium | T | BL | 1440.0 | .00017 | .00100 | -.20 | | U | U |
| 12/31/1993 | Cadmium | T | BL | 1440.0 | .00134 | .00140 | -.20 | | U | U |
| 12/31/1993 | Chromium | T | BL | 1440.0 | .00061 | .00020 | -.20 | | | U |
| 12/31/1993 | Manganese | T | BL | 1440.0 | .00050 | .42000 | -.20 | | U | U |
| 12/31/1993 | Nickel | T | BL | 1440.0 | .00336 | .01000 | -.20 | | U | U |
| 12/31/1993 | Particulate Fluoride | T | BL | 1440.0 | 1.69150 | 8.30000 | -.20 | | B | U |
| 12/31/1993 | Phosphorus | T | BL | 1440.0 | .18996 | .30000 | -.20 | | B | U |
| 12/31/1993 | Selenium | T | BL | 1440.0 | .01685 | .70000 | -.20 | | U | U |
| 12/31/1993 | Silver | T | BL | 1440.0 | .00117 | .30000 | -.20 | | U | U |
| 12/31/1993 | Thallium | T | BL | 1440.0 | .03363 | .30000 | -.20 | | U | U |
| 12/31/1993 | Vanadium | T | BL | 1440.0 | .00168 | .17000 | -.20 | | U | U |
| 12/31/1993 | Zinc | T | BL | 1440.0 | .00126 | .00000 | -.20 | | B | U |
| 01/08/1994 | Aluminum | P | BL | 1440.0 | .01325 | 33.30000 | -1.25 | | B | U |
| 01/08/1994 | Arsenic | P | BL | 1440.0 | .00016 | .00057 | -1.25 | | U | U |
| 01/08/1994 | Barium | P | BL | 1440.0 | .00165 | .52000 | -1.25 | | U | U |

| Sample Date | Chemical Name | Site # | Typ | Run Time (min.) | Chem Conc. (ug/m3) | EPA Scr. L(ug/m3) | Part.C. (ug/m3) | Grav. Val | Qual. Lab | Qual. Val |
|---|---|---|---|---|---|---|---|---|---|---|
| 01/08/1994 | Beryllium | P | BL | 1440.0 | .00016 | .00100 | -1.25 | | U | U |
| 01/08/1994 | Cadmium | P | BL | 1440.0 | .00131 | .00140 | -1.25 | | U | U |
| 01/08/1994 | Chromium | P | BL | 1440.0 | .00057 | .00020 | -1.25 | | | U |
| 01/08/1994 | Manganese | P | BL | 1440.0 | .00049 | .42000 | -1.25 | | U | U |
| 01/08/1994 | Nickel | P | BL | 1440.0 | .00329 | .01000 | -1.25 | | U | U |
| 01/08/1994 | Phosphorus | P | BL | 1440.0 | .15151 | .30000 | -1.25 | | B | U |
| 01/08/1994 | Selenium | P | BL | 1440.0 | .01646 | .70000 | -1.25 | | U | U |
| 01/08/1994 | Silver | P | BL | 1440.0 | .00115 | .30000 | -1.25 | | U | U |
| 01/08/1994 | Thallium | P | BL | 1440.0 | .03286 | .30000 | -1.25 | | U | U |
| 01/08/1994 | Vanadium | P | BL | 1440.0 | .00165 | .17000 | -1.25 | | U | U |
| 01/08/1994 | Zinc | P | BL | 1440.0 | .00082 | .00000 | -1.25 | | U | U |
| 01/08/1994 | Aluminum | T | BL | 1440.0 | .03955 | 33.30000 | 3.82 | | | U |
| 01/08/1994 | Arsenic | T | BL | 1440.0 | .00017 | .00057 | 3.82 | | U | U |
| 01/08/1994 | Barium | T | BL | 1440.0 | .00168 | .52000 | 3.82 | | U | U |
| 01/08/1994 | Beryllium | T | BL | 1440.0 | .00017 | .00100 | 3.82 | | B | |
| 01/08/1994 | Cadmium | T | BL | 1440.0 | .00134 | .00140 | 3.82 | | U | U |
| 01/08/1994 | Chromium | T | BL | 1440.0 | .00069 | .00020 | 3.82 | | | U |
| 01/08/1994 | Manganese | T | BL | 1440.0 | .00183 | .42000 | 3.82 | | B | |
| 01/08/1994 | Nickel | T | BL | 1440.0 | .00503 | .01000 | 3.82 | | B | |
| 01/08/1994 | Particulate Fluoride | T | BL | 1440.0 | 1.67978 | 8.30000 | 3.82 | | B | U |
| 01/08/1994 | Phosphorus | T | BL | 1440.0 | .32859 | .30000 | 3.82 | | | U |
| 01/08/1994 | Selenium | T | BL | 1440.0 | .01680 | .70000 | 3.82 | | U | U |
| 01/08/1994 | Silver | T | BL | 1440.0 | .00117 | .30000 | 3.82 | | U | U |
| 01/08/1994 | Thallium | T | BL | 1440.0 | .03353 | .30000 | 3.82 | | U | U |
| 01/08/1994 | Vanadium | T | BL | 1440.0 | .01660 | .17000 | 3.82 | | | |
| 01/08/1994 | Zinc | T | BL | 1440.0 | .00216 | .00000 | 3.82 | | B | U |
| 01/12/1994 | Aluminum | P | BL | 1440.0 | .01402 | 33.30000 | -.93 | | B | U |
| 01/12/1994 | Arsenic | P | BL | 1440.0 | .00017 | .00057 | -.93 | | U | U |
| 01/12/1994 | Barium | P | BL | 1440.0 | .00167 | .52000 | -.93 | | U | U |
| 01/12/1994 | Beryllium | P | BL | 1440.0 | .00017 | .00100 | -.93 | | U | U |
| 01/12/1994 | Cadmium | P | BL | 1440.0 | .00133 | .00140 | -.93 | | U | U |
| 01/12/1994 | Chromium | P | BL | 1440.0 | .00115 | .00020 | -.93 | | | U |
| 01/12/1994 | Manganese | P | BL | 1440.0 | .00050 | .42000 | -.93 | | U | U |
| 01/12/1994 | Nickel | P | BL | 1440.0 | .00366 | .01000 | -.93 | | B | |
| 01/12/1994 | Phosphorus | P | BL | 1440.0 | .17677 | .30000 | -.93 | | B | U |
| 01/12/1994 | Selenium | P | BL | 1440.0 | .01668 | .70000 | -.93 | | U | U |
| 01/12/1994 | Silver | P | BL | 1440.0 | .00116 | .30000 | -.93 | | U | U |
| 01/12/1994 | Thallium | P | BL | 1440.0 | .03329 | .30000 | -.93 | | U | U |
| 01/12/1994 | Vanadium | P | BL | 1440.0 | .00167 | .17000 | -.93 | | U | U |
| 01/12/1994 | Zinc | P | BL | 1440.0 | .00207 | .00000 | -.93 | | B | |
| 01/12/1994 | Aluminum | T | BL | 1440.0 | .04575 | 33.30000 | 4.99 | | | U |
| 01/12/1994 | Arsenic | T | BL | 1440.0 | .00016 | .00057 | 4.99 | | U | U |
| 01/12/1994 | Barium | T | BL | 1440.0 | .00165 | .52000 | 4.99 | | U | U |
| 01/12/1994 | Beryllium | T | BL | 1440.0 | .00016 | .00100 | 4.99 | | U | U |
| 01/12/1994 | Cadmium | T | BL | 1440.0 | .00131 | .00140 | 4.99 | | U | U |
| 01/12/1994 | Chromium | T | BL | 1440.0 | .00952 | .00020 | 4.99 | | | |
| 01/12/1994 | Manganese | T | BL | 1440.0 | .00098 | .42000 | 4.99 | | B | |
| 01/12/1994 | Nickel | T | BL | 1440.0 | .00329 | .01000 | 4.99 | | U | U |
| 01/12/1994 | Particulate Fluoride | T | BL | 1440.0 | 1.70658 | 8.30000 | 4.99 | | B | |
| 01/12/1994 | Phosphorus | T | BL | 1440.0 | .31769 | .30000 | 4.99 | | B | U |
| 01/12/1994 | Selenium | T | BL | 1440.0 | .01648 | .70000 | 4.99 | | U | U |

| Sample Date | Chemical Name | Site # | Typ | Run Time (min.) | Chem Conc. (ug/m3) | EPA Scr. L(ug/m3) | Part.C. (ug/m3) | Grav. Val | Qual. Lab | Qual. Val |
|---|---|---|---|---|---|---|---|---|---|---|
| 01/12/1994 | Silver | T | BL | 1440.0 | .00115 | .30000 | 4.99 | | U | U |
| 01/12/1994 | Thallium | T | BL | 1440.0 | .03288 | .30000 | 4.99 | | U | U |
| 01/12/1994 | Vanadium | T | BL | 1440.0 | .00853 | .17000 | 4.99 | | | |
| 01/12/1994 | Zinc | T | BL | 1440.0 | .00270 | .00000 | 4.99 | | B | |
| 01/20/1994 | Aluminum | P | BL | 1440.0 | .01144 | 33.30000 | -1.37 | | U | U |
| 01/20/1994 | Arsenic | P | BL | 1440.0 | .00016 | .00057 | -1.37 | | U | U |
| 01/20/1994 | Barium | P | BL | 1440.0 | .00164 | .52000 | -1.37 | | U | U |
| 01/20/1994 | Beryllium | P | BL | 1440.0 | .00016 | .00100 | -1.37 | | U | U |
| 01/20/1994 | Cadmium | P | BL | 1440.0 | .00131 | .00140 | -1.37 | | U | U |
| 01/20/1994 | Chromium | P | BL | 1440.0 | .00062 | .00020 | -1.37 | | | U |
| 01/20/1994 | Manganese | P | BL | 1440.0 | .00049 | .42000 | -1.37 | | U | U |
| 01/20/1994 | Nickel | P | BL | 1440.0 | .00328 | .01000 | -1.37 | | U | U |
| 01/20/1994 | Phosphorus | P | BL | 1440.0 | .17389 | .30000 | -1.37 | | B | U |
| 01/20/1994 | Selenium | P | BL | 1440.0 | .01641 | .70000 | -1.37 | | U | U |
| 01/20/1994 | Silver | P | BL | 1440.0 | .00114 | .30000 | -1.37 | | U | U |
| 01/20/1994 | Thallium | P | BL | 1440.0 | .03275 | .30000 | -1.37 | | U | U |
| 01/20/1994 | Vanadium | P | BL | 1440.0 | .00164 | .17000 | -1.37 | | U | U |
| 01/20/1994 | Zinc | P | BL | 1440.0 | .00098 | .00000 | -1.37 | | B | |
| 01/20/1994 | Aluminum | T | BL | 1440.0 | .08004 | 33.30000 | 5.27 | | | |
| 01/20/1994 | Arsenic | T | BL | 1440.0 | .00017 | .00057 | 5.27 | | U | U |
| 01/20/1994 | Barium | T | BL | 1440.0 | .00175 | .52000 | 5.27 | | B | |
| 01/20/1994 | Beryllium | T | BL | 1440.0 | .00017 | .00100 | 5.27 | | U | U |
| 01/20/1994 | Cadmium | T | BL | 1440.0 | .00133 | .00140 | 5.27 | | U | U |
| 01/20/1994 | Chromium | T | BL | 1440.0 | .01347 | .00020 | 5.27 | | | |
| 01/20/1994 | Manganese | T | BL | 1440.0 | .00202 | .42000 | 5.27 | | | |
| 01/20/1994 | Nickel | T | BL | 1440.0 | .00334 | .01000 | 5.27 | | U | U |
| 01/20/1994 | Particulate Fluoride | T | BL | 1440.0 | 1.68756 | 8.30000 | 5.27 | | B | |
| 01/20/1994 | Phosphorus | T | BL | 1440.0 | .47158 | .30000 | 5.27 | | | U |
| 01/20/1994 | Selenium | T | BL | 1440.0 | .01674 | .70000 | 5.27 | | U | U |
| 01/20/1994 | Silver | T | BL | 1440.0 | .00117 | .30000 | 5.27 | | U | U |
| 01/20/1994 | Thallium | T | BL | 1440.0 | .03342 | .30000 | 5.27 | | U | U |
| 01/20/1994 | Vanadium | T | BL | 1440.0 | .00974 | .17000 | 5.27 | | | |
| 01/20/1994 | Zinc | T | BL | 1440.0 | .00423 | .00000 | 5.27 | | B | |
| 01/28/1994 | Aluminum | P | BL | 1440.0 | .01136 | 33.30000 | -.97 | | U | U |
| 01/28/1994 | Arsenic | P | BL | 1440.0 | .00016 | .00057 | -.97 | | U | U |
| 01/28/1994 | Barium | P | BL | 1440.0 | .00163 | .52000 | -.97 | | U | U |
| 01/28/1994 | Beryllium | P | BL | 1440.0 | .00016 | .00100 | -.97 | | U | U |
| 01/28/1994 | Cadmium | P | BL | 1440.0 | .00130 | .00140 | -.97 | | U | U |
| 01/28/1994 | Chromium | P | BL | 1440.0 | .00071 | .00020 | -.97 | | | U |
| 01/28/1994 | Manganese | P | BL | 1440.0 | .00049 | .42000 | -.97 | | U | U |
| 01/28/1994 | Nickel | P | BL | 1440.0 | .00325 | .01000 | -.97 | | U | U |
| 01/28/1994 | Phosphorus | P | BL | 1440.0 | .11942 | .30000 | -.97 | | B | U |
| 01/28/1994 | Selenium | P | BL | 1440.0 | .01629 | .70000 | -.97 | | U | U |
| 01/28/1994 | Silver | P | BL | 1440.0 | .00114 | .30000 | -.97 | | U | U |
| 01/28/1994 | Thallium | P | BL | 1440.0 | .03252 | .30000 | -.97 | | U | U |
| 01/28/1994 | Vanadium | P | BL | 1440.0 | .00163 | .17000 | -.97 | | U | U |
| 01/28/1994 | Zinc | P | BL | 1440.0 | .00151 | .00000 | -.97 | | B | |
| 01/28/1994 | Aluminum | T | BL | 1440.0 | .02809 | 33.30000 | 2.40 | | B | |
| 01/28/1994 | Arsenic | T | BL | 1440.0 | .00017 | .00057 | 2.40 | | U | U |
| 01/28/1994 | Barium | T | BL | 1440.0 | .00167 | .52000 | 2.40 | | U | U |
| 01/28/1994 | Beryllium | T | BL | 1440.0 | .00017 | .00100 | 2.40 | | U | U |
| 01/28/1994 | Cadmium | T | BL | 1440.0 | .00133 | .00140 | 2.40 | | U | U |
| 01/28/1994 | Chromium | T | BL | 1440.0 | .00097 | .00020 | 2.40 | | | U |

| Sample Date | Chemical Name | Site # | Typ | Run Time (min.) | Chem Conc. (ug/m3) | EPA Scr. L(ug/m3) | Part.C. Grav. (ug/m3) | Val | Qual. Lab | Val |
|---|---|---|---|---|---|---|---|---|---|---|
| 01/28/1994 | Manganese | T | BL | 1440.0 | .00062 | .42000 | 2.40 | | B | |
| 01/28/1994 | Nickel | T | BL | 1440.0 | .00334 | .01000 | 2.40 | | U | U |
| 01/28/1994 | Particulate Fluoride | T | BL | 1440.0 | 1.72149 | 8.30000 | 2.40 | | B | U |
| 01/28/1994 | Phosphorus | T | BL | 1440.0 | .19750 | .30000 | 2.40 | | B | U |
| 01/28/1994 | Selenium | T | BL | 1440.0 | .01675 | .70000 | 2.40 | | U | U |
| 01/28/1994 | Silver | T | BL | 1440.0 | .00117 | .30000 | 2.40 | | U | U |
| 01/28/1994 | Thallium | T | BL | 1440.0 | .03343 | .30000 | 2.40 | | U | U |
| 01/28/1994 | Vanadium | T | BL | 1440.0 | .00167 | .17000 | 2.40 | | U | U |
| 01/28/1994 | Zinc | T | BL | 1440.0 | .00201 | .00000 | 2.40 | | B | |
| 02/05/1994 | Arsenic | P | BL | 1440.0 | .00016 | .00057 | -2.54 | | U | U |
| 02/05/1994 | Cadmium | P | BL | 1440.0 | .00130 | .00140 | -2.54 | | U | U |
| 02/05/1994 | Chromium | P | BL | 1440.0 | .00065 | .00020 | -2.54 | | | U |
| 02/05/1994 | Nickel | P | BL | 1440.0 | .00326 | .01000 | -2.54 | | U | U |
| 02/05/1994 | Phosphorus | P | BL | 1440.0 | .16664 | .30000 | -2.54 | | B | U |
| 02/05/1994 | Vanadium | P | BL | 1440.0 | .00163 | .17000 | -2.54 | | U | U |
| 02/05/1994 | Zinc | P | BL | 1440.0 | .00093 | .00000 | -2.54 | | B | |
| 02/05/1994 | Arsenic | T | BL | 1440.0 | .00017 | .00057 | -.20 | | U | U |
| 02/05/1994 | Cadmium | T | BL | 1440.0 | .00133 | .00140 | -.20 | | U | U |
| 02/05/1994 | Chromium | T | BL | 1440.0 | .00156 | .00020 | -.20 | | | U |
| 02/05/1994 | Nickel | T | BL | 1440.0 | .00334 | .01000 | -.20 | | U | U |
| 02/05/1994 | Particulate Fluoride | T | BL | 1440.0 | 1.96457 | 8.30000 | -.20 | | B | |
| 02/05/1994 | Phosphorus | T | BL | 1440.0 | .21377 | .30000 | -.20 | | B | U |
| 02/05/1994 | Vanadium | T | BL | 1440.0 | .00167 | .17000 | -.20 | | U | U |
| 02/05/1994 | Zinc | T | BL | 1440.0 | .00215 | .00000 | -.20 | | B | |
| 02/13/1994 | Arsenic | P | BL | 1440.0 | .00015 | .00057 | -1.35 | | U | U |
| 02/13/1994 | Cadmium | P | BL | 1440.0 | .00123 | .00140 | -1.35 | | U | U |
| 02/13/1994 | Chromium | P | BL | 1440.0 | .00059 | .00020 | -1.35 | | | U |
| 02/13/1994 | Nickel | P | BL | 1440.0 | .00307 | .01000 | -1.35 | | U | U |
| 02/13/1994 | Phosphorus | P | BL | 1440.0 | .15266 | .30000 | -1.35 | | B | U |
| 02/13/1994 | Vanadium | P | BL | 1440.0 | .00154 | .17000 | -1.35 | | U | U |
| 02/13/1994 | Zinc | P | BL | 1440.0 | .00095 | .00000 | -1.35 | | B | U |
| 02/13/1994 | Arsenic | T | BL | 1440.0 | .00015 | .00057 | 1.72 | | U | U |
| 02/13/1994 | Cadmium | T | BL | 1440.0 | .00123 | .00140 | 1.72 | | U | U |
| 02/13/1994 | Chromium | T | BL | 1440.0 | .00110 | .00020 | 1.72 | | | U |
| 02/13/1994 | Nickel | T | BL | 1440.0 | .00307 | .01000 | 1.72 | | U | U |
| 02/13/1994 | Particulate Fluoride | T | BL | 1440.0 | 1.63085 | 8.30000 | 1.72 | | B | |
| 02/13/1994 | Phosphorus | T | BL | 1440.0 | .18148 | .30000 | 1.72 | | B | U |
| 02/13/1994 | Vanadium | T | BL | 1440.0 | .00154 | .17000 | 1.72 | | U | U |
| 02/13/1994 | Zinc | T | BL | 1440.0 | .00213 | .00000 | 1.72 | | B | U |
| 02/17/1994 | Arsenic | P | BL | 1440.0 | .00017 | .00057 | -1.40 | | U | U |
| 02/17/1994 | Cadmium | P | BL | 1440.0 | .00133 | .00140 | -1.40 | | U | U |
| 02/17/1994 | Chromium | P | BL | 1440.0 | .00038 | .00020 | -1.40 | | | U |
| 02/17/1994 | Nickel | P | BL | 1440.0 | .00333 | .01000 | -1.40 | | U | U |
| 02/17/1994 | Phosphorus | P | BL | 1440.0 | .15162 | .30000 | -1.40 | | B | U |
| 02/17/1994 | Vanadium | P | BL | 1440.0 | .00167 | .17000 | -1.40 | | U | U |
| 02/17/1994 | Zinc | P | BL | 1440.0 | .00083 | .00000 | -1.40 | | U | U |
| 02/17/1994 | Arsenic | T | BL | 1440.0 | .00015 | .00057 | 1.66 | | U | U |
| 02/17/1994 | Cadmium | T | BL | 1440.0 | .00123 | .00140 | 1.66 | | U | U |
| 02/17/1994 | Chromium | T | BL | 1440.0 | .00120 | .00020 | 1.66 | | | U |

| Sample Date | Chemical Name | Site # | Typ | Run Time (min.) | Chem Conc. (ug/m3) | EPA Scr. L(ug/m3) | Part.C. Grav. (ug/m3) | Qual. Val | Lab | Val |
|---|---|---|---|---|---|---|---|---|---|---|
| 02/17/1994 | Nickel | T | BL | 1440.0 | .00307 | .01000 | 1.66 | | U | U |
| 02/17/1994 | Particulate Fluoride | T | BL | 1440.0 | 2.24395 | 8.30000 | 1.66 | | B | U |
| 02/17/1994 | Phosphorus | T | BL | 1440.0 | .21520 | .30000 | 1.66 | | B | U |
| 02/17/1994 | Vanadium | T | BL | 1440.0 | .00154 | .17000 | 1.66 | | U | U |
| 02/17/1994 | Zinc | T | BL | 1440.0 | .00237 | .00000 | 1.66 | | B | |
| 02/25/1994 | Arsenic | P | BL | 1440.0 | .00017 | .00057 | -.73 | | U | U |
| 02/25/1994 | Cadmium | P | BL | 1440.0 | .00133 | .00140 | -.73 | | U | U |
| 02/25/1994 | Chromium | P | BL | 1440.0 | .00028 | .00020 | -.73 | | | U |
| 02/25/1994 | Phosphorus | P | BL | 1440.0 | .17372 | .30000 | -.73 | | B | U |
| 02/25/1994 | Vanadium | P | BL | 1440.0 | .00167 | .17000 | -.73 | | U | U |
| 02/25/1994 | Zinc | P | BL | 1440.0 | .00097 | .00000 | -.73 | | B | U |
| 02/25/1994 | Arsenic | T | BL | 1440.0 | .00017 | .00057 | 6.24 | | U | U |
| 02/25/1994 | Cadmium | T | BL | 1440.0 | .00135 | .00140 | 6.24 | | U | U |
| 02/25/1994 | Chromium | T | BL | 1440.0 | .00146 | .00020 | 6.24 | | | |
| 02/25/1994 | Particulate Fluoride | T | BL | 1440.0 | 2.58746 | 8.30000 | 6.24 | | B | U |
| 02/25/1994 | Phosphorus | T | BL | 1440.0 | .29194 | .30000 | 6.24 | | B | U |
| 02/25/1994 | Vanadium | T | BL | 1440.0 | .00311 | .17000 | 6.24 | | B | |
| 02/25/1994 | Zinc | T | BL | 1440.0 | .00299 | .00000 | 6.24 | | B | U |
| 03/05/1994 | Arsenic | P | BL | 1440.0 | .00017 | .00057 | -.99 | | U | U |
| 03/05/1994 | Cadmium | P | BL | 1440.0 | .00132 | .00140 | -.99 | | U | U |
| 03/05/1994 | Chromium | P | BL | 1440.0 | .00086 | .00020 | -.99 | | | U |
| 03/05/1994 | Phosphorus | P | BL | 1440.0 | .19325 | .30000 | -.99 | | B | U |
| 03/05/1994 | Vanadium | P | BL | 1440.0 | .00166 | .17000 | -.99 | | U | U |
| 03/05/1994 | Zinc | P | BL | 1440.0 | .00082 | .00000 | -.99 | | U | U |
| 03/05/1994 | Arsenic | T | BL | 1440.0 | .00017 | .00057 | 2.18 | | U | U |
| 03/05/1994 | Cadmium | T | BL | 1440.0 | .00182 | .00140 | 2.18 | | | |
| 03/05/1994 | Chromium | T | BL | 1440.0 | .02195 | .00020 | 2.18 | | | |
| 03/05/1994 | Particulate Fluoride | T | BL | 1440.0 | 1.78720 | 8.30000 | 2.18 | | B | |
| 03/05/1994 | Phosphorus | T | BL | 1440.0 | .45122 | .30000 | 2.18 | | | UJ |
| 03/05/1994 | Vanadium | T | BL | 1440.0 | .02147 | .17000 | 2.18 | | | |
| 03/05/1994 | Zinc | T | BL | 1440.0 | .00354 | .00000 | 2.18 | | B | UJ |
| 03/09/1994 | Arsenic | P | BL | 1440.0 | .00015 | .00057 | 1.72 | | U | U |
| 03/09/1994 | Cadmium | P | BL | 1440.0 | .00123 | .00140 | 1.72 | | U | U |
| 03/09/1994 | Chromium | P | BL | 1440.0 | .00119 | .00020 | 1.72 | | | U |
| 03/09/1994 | Phosphorus | P | BL | 1440.0 | .18761 | .30000 | 1.72 | | B | U |
| 03/09/1994 | Vanadium | P | BL | 1440.0 | .00154 | .17000 | 1.72 | | U | U |
| 03/09/1994 | Zinc | P | BL | 1440.0 | .00197 | .00000 | 1.72 | | B | |
| 03/09/1994 | Arsenic | T | BL | 1440.0 | .00016 | .00057 | -1.17 | | U | U |
| 03/09/1994 | Cadmium | T | BL | 1440.0 | .00130 | .00140 | -1.17 | | U | U |
| 03/09/1994 | Chromium | T | BL | 1440.0 | .00137 | .00020 | -1.17 | | | U |
| 03/09/1994 | Particulate Fluoride | T | BL | 1440.0 | 2.33492 | 8.30000 | -1.17 | | B | U |
| 03/09/1994 | Phosphorus | T | BL | 1440.0 | .16455 | .30000 | -1.17 | | B | U |
| 03/09/1994 | Vanadium | T | BL | 1440.0 | .00163 | .17000 | -1.17 | | U | U |
| 03/09/1994 | Zinc | T | BL | 1440.0 | .00081 | .00000 | -1.17 | | U | U |
| 03/17/1994 | Arsenic | P | BL | 1440.0 | .00017 | .00057 | -1.53 | | U | U |
| 03/17/1994 | Cadmium | P | BL | 1440.0 | .00133 | .00140 | -1.53 | | U | U |
| 03/17/1994 | Chromium | P | BL | 1440.0 | .00043 | .00020 | -1.53 | | | U |

| Sample Date | Chemical Name | Site # | Typ | Run Time (min.) | Chem Conc. (ug/m3) | EPA Scr. L(ug/m3) | Part.C. Grav. (ug/m3) | Qual. Val | Lab Val |
|---|---|---|---|---|---|---|---|---|---|
| 03/17/1994 | Phosphorus | P | BL | 1440.0 | .17989 | .30000 | -1.53 | B | U |
| 03/17/1994 | Vanadium | P | BL | 1440.0 | .00167 | .17000 | -1.53 | U | U |
| 03/17/1994 | Zinc | P | BL | 1440.0 | .00085 | .00000 | -1.53 | B | |
| 03/17/1994 | Arsenic | T | BL | 1440.0 | .00017 | .00057 | 23.65 | U | |
| 03/17/1994 | Cadmium | T | BL | 1440.0 | .00171 | .00140 | 23.65 | | |
| 03/17/1994 | Chromium | T | BL | 1440.0 | .01330 | .00020 | 23.65 | | |
| 03/17/1994 | Particulate Fluoride | T | BL | 1440.0 | 2.20541 | 8.30000 | 23.65 | B | |
| 03/17/1994 | Phosphorus | T | BL | 1440.0 | .64577 | .30000 | 23.65 | | |
| 03/17/1994 | Vanadium | T | BL | 1440.0 | .01516 | .17000 | 23.65 | | |
| 03/17/1994 | Zinc | T | BL | 1440.0 | .01041 | .00000 | 23.65 | B | |
| 03/25/1994 | Arsenic | P | BL | 1440.0 | .00017 | .00057 | -1.76 | U | U |
| 03/25/1994 | Cadmium | P | BL | 1440.0 | .00158 | .00140 | -1.76 | | |
| 03/25/1994 | Chromium | P | BL | 1440.0 | .00051 | .00020 | -1.76 | | U |
| 03/25/1994 | Phosphorus | P | BL | 1440.0 | .13243 | .30000 | -1.76 | B | U |
| 03/25/1994 | Vanadium | P | BL | 1440.0 | .00166 | .17000 | -1.76 | U | |
| 03/25/1994 | Zinc | P | BL | 1440.0 | .00174 | .00000 | -1.76 | B | UJ |
| 03/25/1994 | Arsenic | T | BL | 1440.0 | .00017 | .00057 | 6.63 | U | |
| 03/25/1994 | Cadmium | T | BL | 1440.0 | .00174 | .00140 | 6.63 | | |
| 03/25/1994 | Chromium | T | BL | 1440.0 | .00269 | .00020 | 6.63 | | |
| 03/25/1994 | Particulate Fluoride | T | BL | 1440.0 | 1.86822 | 8.30000 | 6.63 | B | |
| 03/25/1994 | Phosphorus | T | BL | 1440.0 | .33753 | .30000 | 6.63 | B | |
| 03/25/1994 | Vanadium | T | BL | 1440.0 | .00282 | .17000 | 6.63 | B | |
| 03/25/1994 | Zinc | T | BL | 1440.0 | .00461 | .00000 | 6.63 | B | |
| 04/02/1994 | Arsenic | P | BL | 1440.0 | .00018 | .00057 | -.56 | U | U |
| 04/02/1994 | Cadmium | P | BL | 1440.0 | .00140 | .00140 | -.56 | U | U |
| 04/02/1994 | Chromium | P | BL | 1440.0 | .00041 | .00020 | -.56 | | U |
| 04/02/1994 | Particulate Fluoride | P | BL | 1440.0 | 1.95414 | 8.30000 | -.56 | B | |
| 04/02/1994 | Phosphorus | P | BL | 1440.0 | .19331 | .30000 | -.56 | B | U |
| 04/02/1994 | Vanadium | P | BL | 1440.0 | .00176 | .17000 | -.56 | U | U |
| 04/02/1994 | Zinc | P | BL | 1440.0 | .00139 | .00000 | -.56 | B | U |
| 04/16/1994 | Arsenic | P | BL | 1440.0 | .00017 | .00057 | -.55 | U | U |
| 04/16/1994 | Cadmium | P | BL | 1440.0 | .00137 | .00140 | -.55 | U | U |
| 04/16/1994 | Chromium | P | BL | 1440.0 | .00082 | .00020 | -.55 | | U |
| 04/16/1994 | Phosphorus | P | BL | 1440.0 | .21621 | .30000 | -.55 | U | U |
| 04/16/1994 | Vanadium | P | BL | 1440.0 | .00172 | .17000 | -.55 | U | U |
| 04/16/1994 | Zinc | P | BL | 1440.0 | .00335 | .00000 | -.55 | B | |
| 04/16/1994 | Arsenic | T | BL | 1440.0 | .00018 | .00057 | 2.39 | U | U |
| 04/16/1994 | Cadmium | T | BL | 1440.0 | .00141 | .00140 | 2.39 | U | U |
| 04/16/1994 | Chromium | T | BL | 1440.0 | .00127 | .00020 | 2.39 | | U |
| 04/16/1994 | Particulate Fluoride | T | BL | 1440.0 | 1.40632 | 8.30000 | 2.39 | U | U |
| 04/16/1994 | Phosphorus | T | BL | 1440.0 | .21165 | .30000 | 2.39 | B | U |
| 04/16/1994 | Vanadium | T | BL | 1440.0 | .00176 | .17000 | 2.39 | U | U |
| 04/16/1994 | Zinc | T | BL | 1440.0 | .00143 | .00000 | 2.39 | B | |
| 06/11/1994 | Arsenic | P | BL | 1440.0 | .00017 | .00057 | -1.52 | U | U |
| 06/11/1994 | Cadmium | P | BL | 1440.0 | .00138 | .00140 | -1.52 | U | U |
| 06/11/1994 | Chromium | P | BL | 1440.0 | .00063 | .00020 | -1.52 | | U |
| 06/11/1994 | Phosphorus | P | BL | 1440.0 | .15689 | .30000 | -1.52 | B | U |

| Sample Date | Chemical Name | Site # | Typ | Run Time (min.) | Chem Conc. (ug/m3) | EPA Scr. L(ug/m3) | Part.C. (ug/m3) | Grav. Val | Qual. Lab | Qual. Val |
|---|---|---|---|---|---|---|---|---|---|---|
| 06/11/1994 | Vanadium | P | BL | 1440.0 | .00173 | .17000 | -1.52 | | U | U |
| 06/11/1994 | Zinc | P | BL | 1440.0 | .00086 | .00000 | -1.52 | | U | U |
| 06/11/1994 | Arsenic | T | BL | 1440.0 | .00018 | .00057 | 3.50 | | U | U |
| 06/11/1994 | Cadmium | T | BL | 1440.0 | .00140 | .00140 | 3.50 | | U | U |
| 06/11/1994 | Chromium | T | BL | 1440.0 | .00119 | .00020 | 3.50 | | | U |
| 06/11/1994 | Particulate Fluoride | T | BL | 1440.0 | 1.39920 | 8.30000 | 3.50 | | U | U |
| 06/11/1994 | Phosphorus | T | BL | 1440.0 | .17210 | .30000 | 3.50 | | B | U |
| 06/11/1994 | Vanadium | T | BL | 1440.0 | .00176 | .17000 | 3.50 | | U | U |
| 06/11/1994 | Zinc | T | BL | 1440.0 | .00170 | .00000 | 3.50 | | B | U |
| 09/21/1994 | Arsenic | P | BL | 1440.0 | .00017 | .00057 | -.54 | | U | U |
| 09/21/1994 | Cadmium | P | BL | 1440.0 | .00136 | .00140 | -.54 | | U | U |
| 09/21/1994 | Chromium | P | BL | 1440.0 | .00075 | .00020 | -.54 | | | U |
| 09/21/1994 | Phosphorus | P | BL | 1440.0 | .19772 | .30000 | -.54 | | B | U |
| 09/21/1994 | Vanadium | P | BL | 1440.0 | .00171 | .17000 | -.54 | | U | U |
| 09/21/1994 | Zinc | P | BL | 1440.0 | .00085 | .00000 | -.54 | | B | |
| 09/21/1994 | Arsenic | T | BL | 1440.0 | .00018 | .00057 | 8.69 | | U | U |
| 09/21/1994 | Cadmium | T | BL | 1440.0 | .00144 | .00140 | 8.69 | | U | U |
| 09/21/1994 | Chromium | T | BL | 1440.0 | .00134 | .00020 | 8.69 | | | U |
| 09/21/1994 | Particulate Fluoride | T | BL | 1440.0 | 1.43595 | 8.30000 | 8.69 | | U | U |
| 09/21/1994 | Phosphorus | T | BL | 1440.0 | .27714 | .30000 | 8.69 | | B | U |
| 09/21/1994 | Vanadium | T | BL | 1440.0 | .00180 | .17000 | 8.69 | | U | U |
| 09/21/1994 | Zinc | T | BL | 1440.0 | .00373 | .00000 | 8.69 | | B | |
| 10/04/1993 | Aluminum | 1 | PM | 1450.8 | .67596 | 33.30000 | 43.80 | | | |
| 10/04/1993 | Arsenic | 1 | PM | 1450.8 | .00159 | .00057 | 43.80 | | | |
| 10/04/1993 | Barium | 1 | PM | 1450.8 | .01566 | .52000 | 43.80 | | | |
| 10/04/1993 | Beryllium | 1 | PM | 1450.8 | .00017 | .00100 | 43.80 | | U | U |
| 10/04/1993 | Cadmium | 1 | PM | 1450.8 | .00134 | .00140 | 43.80 | | U | U |
| 10/04/1993 | Chromium | 1 | PM | 1450.8 | .00428 | .00020 | 43.80 | | | |
| 10/04/1993 | Manganese | 1 | PM | 1450.8 | .02081 | .42000 | 43.80 | | | |
| 10/04/1993 | Nickel | 1 | PM | 1450.8 | .00335 | .01000 | 43.80 | | U | U |
| 10/04/1993 | Phosphorus | 1 | PM | 1450.8 | 1.43224 | .30000 | 43.80 | | | |
| 10/04/1993 | Selenium | 1 | PM | 1450.8 | .01680 | .70000 | 43.80 | | U | U |
| 10/04/1993 | Silver | 1 | PM | 1450.8 | .00117 | .30000 | 43.80 | | U | U |
| 10/04/1993 | Thallium | 1 | PM | 1450.8 | .03353 | .30000 | 43.80 | | U | U |
| 10/04/1993 | Vanadium | 1 | PM | 1450.8 | .00359 | .17000 | 43.80 | | B | |
| 10/04/1993 | Zinc | 1 | PM | 1450.8 | .02463 | .00000 | 43.80 | | B | |
| 10/04/1993 | Aluminum | 2 | PM | 1480.4 | .66836 | 33.30000 | 47.06 | | | |
| 10/04/1993 | Arsenic | 2 | PM | 1480.4 | .00177 | .00057 | 47.06 | | | |
| 10/04/1993 | Barium | 2 | PM | 1480.4 | .01860 | .52000 | 47.06 | | | |
| 10/04/1993 | Beryllium | 2 | PM | 1480.4 | .00022 | .00100 | 47.06 | | B | |
| 10/04/1993 | Cadmium | 2 | PM | 1480.4 | .00211 | .00140 | 47.06 | | | |
| 10/04/1993 | Chromium | 2 | PM | 1480.4 | .00714 | .00020 | 47.06 | | | |
| 10/04/1993 | Manganese | 2 | PM | 1480.4 | .02331 | .42000 | 47.06 | | | |
| 10/04/1993 | Nickel | 2 | PM | 1480.4 | .00338 | .01000 | 47.06 | | U | U |
| 10/04/1993 | Phosphorus | 2 | PM | 1480.4 | 2.26379 | .30000 | 47.06 | | | |
| 10/04/1993 | Selenium | 2 | PM | 1480.4 | .02870 | .70000 | 47.06 | | B | |
| 10/04/1993 | Silver | 2 | PM | 1480.4 | .00118 | .30000 | 47.06 | | U | U |
| 10/04/1993 | Thallium | 2 | PM | 1480.4 | .03375 | .30000 | 47.06 | | U | U |
| 10/04/1993 | Vanadium | 2 | PM | 1480.4 | .00755 | .17000 | 47.06 | | | |
| 10/04/1993 | Zinc | 2 | PM | 1480.4 | .03241 | .00000 | 47.06 | | B | |
| 10/04/1993 | Aluminum | 3 | PM | 1483.2 | 6.23105 | 33.30000 | 183.05 | QR | | |

| Sample Date | Chemical Name | Site # | Typ | Run Time (min.) | Chem Conc. (ug/m3) | EPA Scr. L(ug/m3) | Part.C. (ug/m3) | Grav. Val | Qual. Lab | Qual. Val |
|---|---|---|---|---|---|---|---|---|---|---|
| 10/04/1993 | Arsenic | 3 | PM | 1483.2 | .00285 | .00057 | 183.05 | QR | | |
| 10/04/1993 | Barium | 3 | PM | 1483.2 | .06062 | .52000 | 183.05 | QR | | |
| 10/04/1993 | Beryllium | 3 | PM | 1483.2 | .00025 | .00100 | 183.05 | QR | B | |
| 10/04/1993 | Cadmium | 3 | PM | 1483.2 | .00198 | .00140 | 183.05 | QR | | |
| 10/04/1993 | Chromium | 3 | PM | 1483.2 | .00926 | .00020 | 183.05 | QR | | |
| 10/04/1993 | Manganese | 3 | PM | 1483.2 | .17098 | .42000 | 183.05 | QR | | |
| 10/04/1993 | Nickel | 3 | PM | 1483.2 | .00576 | .01000 | 183.05 | QR | B | U |
| 10/04/1993 | Phosphorus | 3 | PM | 1483.2 | .63324 | .30000 | 183.05 | QR | | U |
| 10/04/1993 | Selenium | 3 | PM | 1483.2 | .01696 | .70000 | 183.05 | QR | U | U |
| 10/04/1993 | Silver | 3 | PM | 1483.2 | .00118 | .30000 | 183.05 | QR | U | U |
| 10/04/1993 | Thallium | 3 | PM | 1483.2 | .03386 | .30000 | 183.05 | QR | U | U |
| 10/04/1993 | Vanadium | 3 | PM | 1483.2 | .00993 | .17000 | 183.05 | QR | | |
| 10/04/1993 | Zinc | 3 | PM | 1483.2 | .04048 | .00000 | 183.05 | QR | B | |
| 10/04/1993 | Aluminum | 4 | PM | 1466.7 | .75585 | 33.30000 | 40.97 | | | |
| 10/04/1993 | Arsenic | 4 | PM | 1466.7 | .00193 | .00057 | 40.97 | | | |
| 10/04/1993 | Barium | 4 | PM | 1466.7 | .01715 | .52000 | 40.97 | | | |
| 10/04/1993 | Beryllium | 4 | PM | 1466.7 | .00016 | .00100 | 40.97 | | U | U |
| 10/04/1993 | Cadmium | 4 | PM | 1466.7 | .00131 | .00140 | 40.97 | | U | U |
| 10/04/1993 | Chromium | 4 | PM | 1466.7 | .00536 | .00020 | 40.97 | | | |
| 10/04/1993 | Manganese | 4 | PM | 1466.7 | .02438 | .42000 | 40.97 | | | |
| 10/04/1993 | Nickel | 4 | PM | 1466.7 | .00371 | .01000 | 40.97 | | B | U |
| 10/04/1993 | Phosphorus | 4 | PM | 1466.7 | .59285 | .30000 | 40.97 | | | U |
| 10/04/1993 | Selenium | 4 | PM | 1466.7 | .01814 | .70000 | 40.97 | | B | |
| 10/04/1993 | Silver | 4 | PM | 1466.7 | .00115 | .30000 | 40.97 | | U | U |
| 10/04/1993 | Thallium | 4 | PM | 1466.7 | .03293 | .30000 | 40.97 | | U | U |
| 10/04/1993 | Vanadium | 4 | PM | 1466.7 | .00306 | .17000 | 40.97 | | B | |
| 10/04/1993 | Zinc | 4 | PM | 1466.7 | .02504 | .00000 | 40.97 | | B | |
| 10/04/1993 | Aluminum | 5 | PM | 270.6 | .43326 | 33.30000 | 29.15 | TR | | U |
| 10/04/1993 | Arsenic | 5 | PM | 270.6 | .00091 | .00057 | 29.15 | TR | U | U |
| 10/04/1993 | Barium | 5 | PM | 270.6 | .01915 | .52000 | 29.15 | TR | | U |
| 10/04/1993 | Beryllium | 5 | PM | 270.6 | .00091 | .00100 | 29.15 | TR | U | U |
| 10/04/1993 | Cadmium | 5 | PM | 270.6 | .00728 | .00140 | 29.15 | TR | U | U |
| 10/04/1993 | Chromium | 5 | PM | 270.6 | .00877 | .00020 | 29.15 | TR | | U |
| 10/04/1993 | Manganese | 5 | PM | 270.6 | .00968 | .42000 | 29.15 | TR | B | U |
| 10/04/1993 | Nickel | 5 | PM | 270.6 | .02006 | .01000 | 29.15 | TR | B | U |
| 10/04/1993 | Phosphorus | 5 | PM | 270.6 | 4.07778 | .30000 | 29.15 | TR | | |
| 10/04/1993 | Selenium | 5 | PM | 270.6 | .09139 | .70000 | 29.15 | TR | U | U |
| 10/04/1993 | Silver | 5 | PM | 270.6 | .00637 | .30000 | 29.15 | TR | U | U |
| 10/04/1993 | Thallium | 5 | PM | 270.6 | .18241 | .30000 | 29.15 | TR | U | U |
| 10/04/1993 | Vanadium | 5 | PM | 270.6 | .00914 | .17000 | 29.15 | TR | U | U |
| 10/04/1993 | Zinc | 5 | PM | 270.6 | .03222 | .00000 | 29.15 | TR | B | |
| 10/04/1993 | Aluminum | 6 | PM | 1440.8 | 2.01420 | 33.30000 | 81.43 | | | |
| 10/04/1993 | Arsenic | 6 | PM | 1440.8 | .00154 | .00057 | 81.43 | | | |
| 10/04/1993 | Barium | 6 | PM | 1440.8 | .01878 | .52000 | 81.43 | | | |
| 10/04/1993 | Beryllium | 6 | PM | 1440.8 | .00017 | .00100 | 81.43 | | U | U |
| 10/04/1993 | Cadmium | 6 | PM | 1440.8 | .00136 | .00140 | 81.43 | | U | U |
| 10/04/1993 | Chromium | 6 | PM | 1440.8 | .00372 | .00020 | 81.43 | | | |
| 10/04/1993 | Manganese | 6 | PM | 1440.8 | .05219 | .42000 | 81.43 | | | |
| 10/04/1993 | Nickel | 6 | PM | 1440.8 | .00341 | .01000 | 81.43 | | U | U |
| 10/04/1993 | Phosphorus | 6 | PM | 1440.8 | .43006 | .30000 | 81.43 | | | U |
| 10/04/1993 | Selenium | 6 | PM | 1440.8 | .01708 | .70000 | 81.43 | | U | U |
| 10/04/1993 | Silver | 6 | PM | 1440.8 | .00119 | .30000 | 81.43 | | U | U |
| 10/04/1993 | Thallium | 6 | PM | 1440.8 | .03409 | .30000 | 81.43 | | U | U |
| 10/04/1993 | Vanadium | 6 | PM | 1440.8 | .00529 | .17000 | 81.43 | | | |
| 10/04/1993 | Zinc | 6 | PM | 1440.8 | .01300 | .00000 | 81.43 | | B | |

| Sample Date | Chemical Name | Site # | Typ | Run Time (min.) | Chem Conc. (ug/m3) | EPA Scr. L(ug/m3) | Part.C. (ug/m3) | Grav. Val | Qual. Lab | Qual. Val |
|---|---|---|---|---|---|---|---|---|---|---|
| 10/04/1993 | Aluminum | 7 | PM | 1488.6 | .64550 | 33.30000 | 58.86 | | | |
| 10/04/1993 | Arsenic | 7 | PM | 1488.6 | .00171 | .00057 | 58.86 | | | |
| 10/04/1993 | Barium | 7 | PM | 1488.6 | .00534 | .52000 | 58.86 | | | U |
| 10/04/1993 | Beryllium | 7 | PM | 1488.6 | .00016 | .00100 | 58.86 | | U | U |
| 10/04/1993 | Cadmium | 7 | PM | 1488.6 | .00346 | .00140 | 58.86 | | | |
| 10/04/1993 | Chromium | 7 | PM | 1488.6 | .00599 | .00020 | 58.86 | | | |
| 10/04/1993 | Manganese | 7 | PM | 1488.6 | .01588 | .42000 | 58.86 | | | |
| 10/04/1993 | Nickel | 7 | PM | 1488.6 | .00326 | .01000 | 58.86 | | U | U |
| 10/04/1993 | Phosphorus | 7 | PM | 1488.6 | 2.42714 | .30000 | 58.86 | | | |
| 10/04/1993 | Selenium | 7 | PM | 1488.6 | .02395 | .70000 | 58.86 | | B | |
| 10/04/1993 | Silver | 7 | PM | 1488.6 | .00114 | .30000 | 58.86 | | U | U |
| 10/04/1993 | Thallium | 7 | PM | 1488.6 | .03260 | .30000 | 58.86 | | U | U |
| 10/04/1993 | Vanadium | 7 | PM | 1488.6 | .00606 | .17000 | 58.86 | | | |
| 10/04/1993 | Zinc | 7 | PM | 1488.6 | .02512 | .00000 | 58.86 | | B | |
| 10/04/1993 | Aluminum | 8 | PM | 936.0 | .66439 | 33.30000 | 42.14 | TR | | |
| 10/04/1993 | Arsenic | 8 | PM | 936.0 | .00140 | .00057 | 42.14 | TR | | |
| 10/04/1993 | Barium | 8 | PM | 936.0 | .01056 | .52000 | 42.14 | TR | | U |
| 10/04/1993 | Beryllium | 8 | PM | 936.0 | .00026 | .00100 | 42.14 | TR | U | U |
| 10/04/1993 | Cadmium | 8 | PM | 936.0 | .00207 | .00140 | 42.14 | TR | U | U |
| 10/04/1993 | Chromium | 8 | PM | 936.0 | .00407 | .00020 | 42.14 | TR | | U |
| 10/04/1993 | Manganese | 8 | PM | 936.0 | .01987 | .42000 | 42.14 | TR | | |
| 10/04/1993 | Nickel | 8 | PM | 936.0 | .00518 | .01000 | 42.14 | TR | U | U |
| 10/04/1993 | Phosphorus | 8 | PM | 936.0 | .93863 | .30000 | 42.14 | TR | | U |
| 10/04/1993 | Selenium | 8 | PM | 936.0 | .02598 | .70000 | 42.14 | TR | U | U |
| 10/04/1993 | Silver | 8 | PM | 936.0 | .00181 | .30000 | 42.14 | TR | U | U |
| 10/04/1993 | Thallium | 8 | PM | 936.0 | .05185 | .30000 | 42.14 | TR | U | U |
| 10/04/1993 | Vanadium | 8 | PM | 936.0 | .00376 | .17000 | 42.14 | TR | B | |
| 10/04/1993 | Zinc | 8 | PM | 936.0 | .02318 | .00000 | 42.14 | TR | B | |
| 10/08/1993 | Aluminum | 1 | PM | 1453.4 | .06215 | 33.30000 | 10.55 | | | U |
| 10/08/1993 | Arsenic | 1 | PM | 1453.4 | .00018 | .00057 | 10.55 | | B | |
| 10/08/1993 | Barium | 1 | PM | 1453.4 | .00172 | .52000 | 10.55 | | B | |
| 10/08/1993 | Beryllium | 1 | PM | 1453.4 | .00016 | .00100 | 10.55 | | U | U |
| 10/08/1993 | Cadmium | 1 | PM | 1453.4 | .00134 | .00140 | 10.55 | | B | |
| 10/08/1993 | Chromium | 1 | PM | 1453.4 | .00249 | .00020 | 10.55 | | | U |
| 10/08/1993 | Manganese | 1 | PM | 1453.4 | .00184 | .42000 | 10.55 | | B | |
| 10/08/1993 | Nickel | 1 | PM | 1453.4 | .00346 | .01000 | 10.55 | | B | |
| 10/08/1993 | Phosphorus | 1 | PM | 1453.4 | .93189 | .30000 | 10.55 | | | |
| 10/08/1993 | Selenium | 1 | PM | 1453.4 | .01613 | .70000 | 10.55 | | U | U |
| 10/08/1993 | Silver | 1 | PM | 1453.4 | .00112 | .30000 | 10.55 | | U | U |
| 10/08/1993 | Thallium | 1 | PM | 1453.4 | .03220 | .30000 | 10.55 | | U | U |
| 10/08/1993 | Vanadium | 1 | PM | 1453.4 | .00172 | .17000 | 10.55 | | B | |
| 10/08/1993 | Zinc | 1 | PM | 1453.4 | .00771 | .00000 | 10.55 | | B | |
| 10/08/1993 | Aluminum | 2 | PM | 1478.4 | .08243 | 33.30000 | 17.73 | | | U |
| 10/08/1993 | Arsenic | 2 | PM | 1478.4 | .00033 | .00057 | 17.73 | | B | |
| 10/08/1993 | Barium | 2 | PM | 1478.4 | .00228 | .52000 | 17.73 | | | |
| 10/08/1993 | Beryllium | 2 | PM | 1478.4 | .00016 | .00100 | 17.73 | | U | U |
| 10/08/1993 | Cadmium | 2 | PM | 1478.4 | .00675 | .00140 | 17.73 | | | |
| 10/08/1993 | Chromium | 2 | PM | 1478.4 | .00386 | .00020 | 17.73 | | | |
| 10/08/1993 | Manganese | 2 | PM | 1478.4 | .00301 | .42000 | 17.73 | | | |
| 10/08/1993 | Nickel | 2 | PM | 1478.4 | .00569 | .01000 | 17.73 | | B | |
| 10/08/1993 | Phosphorus | 2 | PM | 1478.4 | 1.99898 | .30000 | 17.73 | | | |
| 10/08/1993 | Selenium | 2 | PM | 1478.4 | .02116 | .70000 | 17.73 | | B | |
| 10/08/1993 | Silver | 2 | PM | 1478.4 | .00122 | .30000 | 17.73 | | B | |
| 10/08/1993 | Thallium | 2 | PM | 1478.4 | .03252 | .30000 | 17.73 | | U | U |
| 10/08/1993 | Vanadium | 2 | PM | 1478.4 | .00163 | .17000 | 17.73 | | B | |

| Sample Date | Chemical Name | Site # | Typ | Run Time (min.) | Chem Conc. (ug/m3) | EPA Scr. L(ug/m3) | Part.C. (ug/m3) | Grav. Val | Qual. Lab | Qual. Val |
|---|---|---|---|---|---|---|---|---|---|---|
| 10/08/1993 | Zinc | 2 | PM | 1478.4 | .02992 | .00000 | 17.73 | | B | |
| 10/08/1993 | Aluminum | 3 | PM | 1486.1 | .05204 | 33.30000 | 6.95 | | | U |
| 10/08/1993 | Arsenic | 3 | PM | 1486.1 | .00016 | .00057 | 6.95 | | U | U |
| 10/08/1993 | Barium | 3 | PM | 1486.1 | .00163 | .52000 | 6.95 | | U | U |
| 10/08/1993 | Beryllium | 3 | PM | 1486.1 | .00016 | .00100 | 6.95 | | U | U |
| 10/08/1993 | Cadmium | 3 | PM | 1486.1 | .00130 | .00140 | 6.95 | | U | U |
| 10/08/1993 | Chromium | 3 | PM | 1486.1 | .00171 | .00020 | 6.95 | | | U |
| 10/08/1993 | Manganese | 3 | PM | 1486.1 | .00151 | .42000 | 6.95 | | B | |
| 10/08/1993 | Nickel | 3 | PM | 1486.1 | .00325 | .01000 | 6.95 | | U | U |
| 10/08/1993 | Phosphorus | 3 | PM | 1486.1 | .50742 | .30000 | 6.95 | | | U |
| 10/08/1993 | Selenium | 3 | PM | 1486.1 | .01629 | .70000 | 6.95 | | U | U |
| 10/08/1993 | Silver | 3 | PM | 1486.1 | .00114 | .30000 | 6.95 | | U | U |
| 10/08/1993 | Thallium | 3 | PM | 1486.1 | .03251 | .30000 | 6.95 | | U | U |
| 10/08/1993 | Vanadium | 3 | PM | 1486.1 | .00163 | .17000 | 6.95 | | U | U |
| 10/08/1993 | Zinc | 3 | PM | 1486.1 | .00436 | .00000 | 6.95 | | B | U |
| 10/08/1993 | Aluminum | 4 | PM | 1463.4 | .04449 | 33.30000 | 6.15 | | | U |
| 10/08/1993 | Arsenic | 4 | PM | 1463.4 | .00016 | .00057 | 6.15 | | U | U |
| 10/08/1993 | Barium | 4 | PM | 1463.4 | .00345 | .52000 | 6.15 | | | U |
| 10/08/1993 | Beryllium | 4 | PM | 1463.4 | .00016 | .00100 | 6.15 | | U | U |
| 10/08/1993 | Cadmium | 4 | PM | 1463.4 | .00127 | .00140 | 6.15 | | U | U |
| 10/08/1993 | Chromium | 4 | PM | 1463.4 | .00075 | .00020 | 6.15 | | | U |
| 10/08/1993 | Manganese | 4 | PM | 1463.4 | .00191 | .42000 | 6.15 | | | U |
| 10/08/1993 | Nickel | 4 | PM | 1463.4 | .00317 | .01000 | 6.15 | | U | U |
| 10/08/1993 | Phosphorus | 4 | PM | 1463.4 | .20469 | .30000 | 6.15 | | B | |
| 10/08/1993 | Selenium | 4 | PM | 1463.4 | .01591 | .70000 | 6.15 | | U | U |
| 10/08/1993 | Silver | 4 | PM | 1463.4 | .00111 | .30000 | 6.15 | | U | U |
| 10/08/1993 | Thallium | 4 | PM | 1463.4 | .03175 | .30000 | 6.15 | | U | U |
| 10/08/1993 | Vanadium | 4 | PM | 1463.4 | .00159 | .17000 | 6.15 | | U | U |
| 10/08/1993 | Zinc | 4 | PM | 1463.4 | .00365 | .00000 | 6.15 | | B | |
| 10/08/1993 | Aluminum | 6 | PM | 1439.3 | .04777 | 33.30000 | 3.74 | | | U |
| 10/08/1993 | Arsenic | 6 | PM | 1439.3 | .00016 | .00057 | 3.74 | | U | U |
| 10/08/1993 | Barium | 6 | PM | 1439.3 | .00181 | .52000 | 3.74 | | B | |
| 10/08/1993 | Beryllium | 6 | PM | 1439.3 | .00016 | .00100 | 3.74 | | U | U |
| 10/08/1993 | Cadmium | 6 | PM | 1439.3 | .00131 | .00140 | 3.74 | | U | U |
| 10/08/1993 | Chromium | 6 | PM | 1439.3 | .00100 | .00020 | 3.74 | | | U |
| 10/08/1993 | Manganese | 6 | PM | 1439.3 | .00107 | .42000 | 3.74 | | B | |
| 10/08/1993 | Nickel | 6 | PM | 1439.3 | .00328 | .01000 | 3.74 | | U | U |
| 10/08/1993 | Phosphorus | 6 | PM | 1439.3 | .18742 | .30000 | 3.74 | | B | U |
| 10/08/1993 | Selenium | 6 | PM | 1439.3 | .01645 | .70000 | 3.74 | | U | U |
| 10/08/1993 | Silver | 6 | PM | 1439.3 | .00115 | .30000 | 3.74 | | U | U |
| 10/08/1993 | Thallium | 6 | PM | 1439.3 | .03283 | .30000 | 3.74 | | U | U |
| 10/08/1993 | Vanadium | 6 | PM | 1439.3 | .00164 | .17000 | 3.74 | | U | U |
| 10/08/1993 | Zinc | 6 | PM | 1439.3 | .00191 | .00000 | 3.74 | | B | U |
| 10/08/1993 | Aluminum | 7 | PM | 1486.8 | .04274 | 33.30000 | 5.08 | | | U |
| 10/08/1993 | Arsenic | 7 | PM | 1486.8 | .00016 | .00057 | 5.08 | | U | U |
| 10/08/1993 | Barium | 7 | PM | 1486.8 | .00157 | .52000 | 5.08 | | U | U |
| 10/08/1993 | Beryllium | 7 | PM | 1486.8 | .00016 | .00100 | 5.08 | | U | U |
| 10/08/1993 | Cadmium | 7 | PM | 1486.8 | .00125 | .00140 | 5.08 | | U | U |
| 10/08/1993 | Chromium | 7 | PM | 1486.8 | .00121 | .00020 | 5.08 | | | U |
| 10/08/1993 | Manganese | 7 | PM | 1486.8 | .00113 | .42000 | 5.08 | | B | |
| 10/08/1993 | Nickel | 7 | PM | 1486.8 | .00314 | .01000 | 5.08 | | U | U |
| 10/08/1993 | Phosphorus | 7 | PM | 1486.8 | .23879 | .30000 | 5.08 | | B | U |
| 10/08/1993 | Selenium | 7 | PM | 1486.8 | .01573 | .70000 | 5.08 | | U | U |
| 10/08/1993 | Silver | 7 | PM | 1486.8 | .00110 | .30000 | 5.08 | | U | U |
| 10/08/1993 | Thallium | 7 | PM | 1486.8 | .03140 | .30000 | 5.08 | | U | U |

| Sample Date | Chemical Name | Site # | Typ | Run Time (min.) | Chem Conc. (ug/m3) | EPA Scr. L(ug/m3) | Part.C. (ug/m3) | Grav. Val | Qual. Lab | Qual. Val |
|---|---|---|---|---|---|---|---|---|---|---|
| 10/08/1993 | Vanadium | 7 | PM | 1486.8 | .00157 | .17000 | 5.08 | | U | U |
| 10/08/1993 | Zinc | 7 | PM | 1486.8 | .00303 | .00000 | 5.08 | | B | U |
| 10/08/1993 | Aluminum | 8 | PM | 1434.6 | .05748 | 33.30000 | 10.98 | | | U |
| 10/08/1993 | Arsenic | 8 | PM | 1434.6 | .00016 | .00057 | 10.98 | | U | U |
| 10/08/1993 | Barium | 8 | PM | 1434.6 | .00163 | .52000 | 10.98 | | U | U |
| 10/08/1993 | Beryllium | 8 | PM | 1434.6 | .00016 | .00100 | 10.98 | | U | U |
| 10/08/1993 | Cadmium | 8 | PM | 1434.6 | .00130 | .00140 | 10.98 | | U | U |
| 10/08/1993 | Chromium | 8 | PM | 1434.6 | .00184 | .00020 | 10.98 | | | U |
| 10/08/1993 | Manganese | 8 | PM | 1434.6 | .00166 | .42000 | 10.98 | | B | |
| 10/08/1993 | Nickel | 8 | PM | 1434.6 | .00325 | .01000 | 10.98 | | U | U |
| 10/08/1993 | Phosphorus | 8 | PM | 1434.6 | .79894 | .30000 | 10.98 | | | U |
| 10/08/1993 | Selenium | 8 | PM | 1434.6 | .01630 | .70000 | 10.98 | | U | U |
| 10/08/1993 | Silver | 8 | PM | 1434.6 | .00114 | .30000 | 10.98 | | U | U |
| 10/08/1993 | Thallium | 8 | PM | 1434.6 | .03254 | .30000 | 10.98 | | U | U |
| 10/08/1993 | Vanadium | 8 | PM | 1434.6 | .00202 | .17000 | 10.98 | | B | |
| 10/08/1993 | Zinc | 8 | PM | 1434.6 | .00618 | .00000 | 10.98 | | B | |
| 10/12/1993 | Aluminum | 1 | PM | 1445.3 | .10871 | 33.30000 | 23.14 | | | U |
| 10/12/1993 | Arsenic | 1 | PM | 1445.3 | .00096 | .00057 | 23.14 | | | |
| 10/12/1993 | Barium | 1 | PM | 1445.3 | .00363 | .52000 | 23.14 | | | |
| 10/12/1993 | Beryllium | 1 | PM | 1445.3 | .00017 | .00100 | 23.14 | | U | U |
| 10/12/1993 | Cadmium | 1 | PM | 1445.3 | .00784 | .00140 | 23.14 | | | |
| 10/12/1993 | Chromium | 1 | PM | 1445.3 | .00320 | .00020 | 23.14 | | | U |
| 10/12/1993 | Manganese | 1 | PM | 1445.3 | .00437 | .42000 | 23.14 | | | |
| 10/12/1993 | Nickel | 1 | PM | 1445.3 | .00330 | .01000 | 23.14 | | U | U |
| 10/12/1993 | Phosphorus | 1 | PM | 1445.3 | 1.00800 | .30000 | 23.14 | | | |
| 10/12/1993 | Selenium | 1 | PM | 1445.3 | .01654 | .70000 | 23.14 | | U | U |
| 10/12/1993 | Silver | 1 | PM | 1445.3 | .00115 | .30000 | 23.14 | | U | U |
| 10/12/1993 | Thallium | 1 | PM | 1445.3 | .03301 | .30000 | 23.14 | | U | U |
| 10/12/1993 | Vanadium | 1 | PM | 1445.3 | .00177 | .17000 | 23.14 | | B | |
| 10/12/1993 | Zinc | 1 | PM | 1445.3 | .01963 | .00000 | 23.14 | | B | |
| 10/12/1993 | Aluminum | 2 | PM | 1461.1 | .26309 | 33.30000 | 50.04 | | | |
| 10/12/1993 | Arsenic | 2 | PM | 1461.1 | .00135 | .00057 | 50.04 | | | |
| 10/12/1993 | Barium | 2 | PM | 1461.1 | .00823 | .52000 | 50.04 | | | |
| 10/12/1993 | Beryllium | 2 | PM | 1461.1 | .00017 | .00100 | 50.04 | | U | U |
| 10/12/1993 | Cadmium | 2 | PM | 1461.1 | .05603 | .00140 | 50.04 | | | |
| 10/12/1993 | Chromium | 2 | PM | 1461.1 | .01667 | .00020 | 50.04 | | | |
| 10/12/1993 | Manganese | 2 | PM | 1461.1 | .00797 | .42000 | 50.04 | | | |
| 10/12/1993 | Nickel | 2 | PM | 1461.1 | .00520 | .01000 | 50.04 | | B | |
| 10/12/1993 | Phosphorus | 2 | PM | 1461.1 | 5.58983 | .30000 | 50.04 | | | |
| 10/12/1993 | Selenium | 2 | PM | 1461.1 | .06206 | .70000 | 50.04 | | B | |
| 10/12/1993 | Silver | 2 | PM | 1461.1 | .00148 | .30000 | 50.04 | | B | |
| 10/12/1993 | Thallium | 2 | PM | 1461.1 | .03354 | .30000 | 50.04 | | U | U |
| 10/12/1993 | Vanadium | 2 | PM | 1461.1 | .01259 | .17000 | 50.04 | | | |
| 10/12/1993 | Zinc | 2 | PM | 1461.1 | .14728 | .00000 | 50.04 | | | |
| 10/12/1993 | Aluminum | 3 | PM | 1448.0 | .09640 | 33.30000 | 16.10 | | | U |
| 10/12/1993 | Arsenic | 3 | PM | 1448.0 | .00083 | .00057 | 16.10 | | | |
| 10/12/1993 | Barium | 3 | PM | 1448.0 | .00306 | .52000 | 16.10 | | | |
| 10/12/1993 | Beryllium | 3 | PM | 1448.0 | .00017 | .00100 | 16.10 | | U | U |
| 10/12/1993 | Cadmium | 3 | PM | 1448.0 | .00363 | .00140 | 16.10 | | | |
| 10/12/1993 | Chromium | 3 | PM | 1448.0 | .00196 | .00020 | 16.10 | | | U |
| 10/12/1993 | Manganese | 3 | PM | 1448.0 | .00494 | .42000 | 16.10 | | | |
| 10/12/1993 | Nickel | 3 | PM | 1448.0 | .00340 | .01000 | 16.10 | | U | U |
| 10/12/1993 | Phosphorus | 3 | PM | 1448.0 | .57703 | .30000 | 16.10 | | | U |
| 10/12/1993 | Selenium | 3 | PM | 1448.0 | .01704 | .70000 | 16.10 | | U | U |
| 10/12/1993 | Silver | 3 | PM | 1448.0 | .00119 | .30000 | 16.10 | | U | U |

| Sample Date | Chemical Name | Site # | Typ | Run Time (min.) | Chem Conc. (ug/m3) | EPA Scr. L(ug/m3) | Part.C. (ug/m3) | Grav. Val | Qual. Lab | Qual. Val |
|---|---|---|---|---|---|---|---|---|---|---|
| 10/12/1993 | Thallium | 3 | PM | 1448.0 | .04338 | .30000 | 16.10 | | B | |
| 10/12/1993 | Vanadium | 3 | PM | 1448.0 | .00170 | .17000 | 16.10 | | U | U |
| 10/12/1993 | Zinc | 3 | PM | 1448.0 | .02383 | .00000 | 16.10 | | B | |
| 10/12/1993 | Aluminum | 4 | PM | 1462.3 | .11895 | 33.30000 | 13.07 | | | |
| 10/12/1993 | Arsenic | 4 | PM | 1462.3 | .00083 | .00057 | 13.07 | | | |
| 10/12/1993 | Barium | 4 | PM | 1462.3 | .00319 | .52000 | 13.07 | | | |
| 10/12/1993 | Beryllium | 4 | PM | 1462.3 | .00016 | .00100 | 13.07 | | U | U |
| 10/12/1993 | Cadmium | 4 | PM | 1462.3 | .00147 | .00140 | 13.07 | | | |
| 10/12/1993 | Chromium | 4 | PM | 1462.3 | .00134 | .00020 | 13.07 | | | U |
| 10/12/1993 | Manganese | 4 | PM | 1462.3 | .00458 | .42000 | 13.07 | | | |
| 10/12/1993 | Nickel | 4 | PM | 1462.3 | .00381 | .01000 | 13.07 | | B | |
| 10/12/1993 | Phosphorus | 4 | PM | 1462.3 | .23144 | .30000 | 13.07 | | B | U |
| 10/12/1993 | Selenium | 4 | PM | 1462.3 | .01623 | .70000 | 13.07 | | U | U |
| 10/12/1993 | Silver | 4 | PM | 1462.3 | .00113 | .30000 | 13.07 | | U | U |
| 10/12/1993 | Thallium | 4 | PM | 1462.3 | .03239 | .30000 | 13.07 | | U | U |
| 10/12/1993 | Vanadium | 4 | PM | 1462.3 | .00162 | .17000 | 13.07 | | U | U |
| 10/12/1993 | Zinc | 4 | PM | 1462.3 | .01060 | .00000 | 13.07 | | B | |
| 10/12/1993 | Aluminum | 6 | PM | 1441.3 | .05650 | 33.30000 | 9.95 | | | U |
| 10/12/1993 | Arsenic | 6 | PM | 1441.3 | .00074 | .00057 | 9.95 | | | |
| 10/12/1993 | Barium | 6 | PM | 1441.3 | .00167 | .52000 | 9.95 | | U | U |
| 10/12/1993 | Beryllium | 6 | PM | 1441.3 | .00017 | .00100 | 9.95 | | U | U |
| 10/12/1993 | Cadmium | 6 | PM | 1441.3 | .00133 | .00140 | 9.95 | | U | U |
| 10/12/1993 | Chromium | 6 | PM | 1441.3 | .00097 | .00020 | 9.95 | | | U |
| 10/12/1993 | Manganese | 6 | PM | 1441.3 | .00177 | .42000 | 9.95 | | B | |
| 10/12/1993 | Nickel | 6 | PM | 1441.3 | .00334 | .01000 | 9.95 | | U | U |
| 10/12/1993 | Phosphorus | 6 | PM | 1441.3 | .24749 | .30000 | 9.95 | | B | U |
| 10/12/1993 | Selenium | 6 | PM | 1441.3 | .01674 | .70000 | 9.95 | | U | U |
| 10/12/1993 | Silver | 6 | PM | 1441.3 | .00117 | .30000 | 9.95 | | U | U |
| 10/12/1993 | Thallium | 6 | PM | 1441.3 | .03342 | .30000 | 9.95 | | U | U |
| 10/12/1993 | Vanadium | 6 | PM | 1441.3 | .00167 | .17000 | 9.95 | | U | U |
| 10/12/1993 | Zinc | 6 | PM | 1441.3 | .00508 | .00000 | 9.95 | | B | U |
| 10/12/1993 | Aluminum | 7 | PM | 1440.1 | .04630 | 33.30000 | 8.65 | | | U |
| 10/12/1993 | Arsenic | 7 | PM | 1440.1 | .00071 | .00057 | 8.65 | | | |
| 10/12/1993 | Barium | 7 | PM | 1440.1 | .00166 | .52000 | 8.65 | | U | U |
| 10/12/1993 | Beryllium | 7 | PM | 1440.1 | .00017 | .00100 | 8.65 | | U | U |
| 10/12/1993 | Cadmium | 7 | PM | 1440.1 | .00132 | .00140 | 8.65 | | U | U |
| 10/12/1993 | Chromium | 7 | PM | 1440.1 | .00063 | .00020 | 8.65 | | | U |
| 10/12/1993 | Manganese | 7 | PM | 1440.1 | .00193 | .42000 | 8.65 | | B | |
| 10/12/1993 | Nickel | 7 | PM | 1440.1 | .00330 | .01000 | 8.65 | | U | U |
| 10/12/1993 | Phosphorus | 7 | PM | 1440.1 | .17216 | .30000 | 8.65 | | B | U |
| 10/12/1993 | Selenium | 7 | PM | 1440.1 | .01656 | .70000 | 8.65 | | U | U |
| 10/12/1993 | Silver | 7 | PM | 1440.1 | .00115 | .30000 | 8.65 | | U | U |
| 10/12/1993 | Thallium | 7 | PM | 1440.1 | .03305 | .30000 | 8.65 | | U | U |
| 10/12/1993 | Vanadium | 7 | PM | 1440.1 | .00166 | .17000 | 8.65 | | U | U |
| 10/12/1993 | Zinc | 7 | PM | 1440.1 | .00362 | .00000 | 8.65 | | B | U |
| 10/12/1993 | Aluminum | 8 | PM | 1430.8 | .09095 | 33.30000 | 23.25 | | | U |
| 10/12/1993 | Arsenic | 8 | PM | 1430.8 | .00090 | .00057 | 23.25 | | | |
| 10/12/1993 | Barium | 8 | PM | 1430.8 | .00349 | .52000 | 23.25 | | | |
| 10/12/1993 | Beryllium | 8 | PM | 1430.8 | .00017 | .00100 | 23.25 | | U | U |
| 10/12/1993 | Cadmium | 8 | PM | 1430.8 | .00810 | .00140 | 23.25 | | | |
| 10/12/1993 | Chromium | 8 | PM | 1430.8 | .00293 | .00020 | 23.25 | | | U |
| 10/12/1993 | Manganese | 8 | PM | 1430.8 | .00413 | .42000 | 23.25 | | | |
| 10/12/1993 | Nickel | 8 | PM | 1430.8 | .00333 | .01000 | 23.25 | | U | U |
| 10/12/1993 | Phosphorus | 8 | PM | 1430.8 | .82323 | .30000 | 23.25 | | | |
| 10/12/1993 | Selenium | 8 | PM | 1430.8 | .01912 | .70000 | 23.25 | | B | |

| Sample Date | Chemical Name | Site # | Typ | Run Time (min.) | Chem Conc. (ug/m3) | EPA Scr. L(ug/m3) | Part.C. (ug/m3) | Grav. Val | Qual. Lab | Qual. Val |
|---|---|---|---|---|---|---|---|---|---|---|
| 10/12/1993 | Silver | 8 | PM | 1430.8 | .00116 | .30000 | 23.25 | | U | U |
| 10/12/1993 | Thallium | 8 | PM | 1430.8 | .03326 | .30000 | 23.25 | | U | U |
| 10/12/1993 | Vanadium | 8 | PM | 1430.8 | .00167 | .17000 | 23.25 | | U | U |
| 10/12/1993 | Zinc | 8 | PM | 1430.8 | .01846 | .00000 | 23.25 | | B | |
| 10/16/1993 | Aluminum | 1 | PM | 1449.5 | .03385 | 33.30000 | 9.36 | | B | U |
| 10/16/1993 | Arsenic | 1 | PM | 1449.5 | .00016 | .00057 | 9.36 | | U | U |
| 10/16/1993 | Barium | 1 | PM | 1449.5 | .00386 | .52000 | 9.36 | | | U |
| 10/16/1993 | Beryllium | 1 | PM | 1449.5 | .00016 | .00100 | 9.36 | | U | U |
| 10/16/1993 | Cadmium | 1 | PM | 1449.5 | .00130 | .00140 | 9.36 | | U | U |
| 10/16/1993 | Chromium | 1 | PM | 1449.5 | .00085 | .00020 | 9.36 | | | U |
| 10/16/1993 | Manganese | 1 | PM | 1449.5 | .00264 | .42000 | 9.36 | | | |
| 10/16/1993 | Nickel | 1 | PM | 1449.5 | .00431 | .01000 | 9.36 | | B | U |
| 10/16/1993 | Phosphorus | 1 | PM | 1449.5 | .35021 | .30000 | 9.36 | | | U |
| 10/16/1993 | Selenium | 1 | PM | 1449.5 | .01631 | .70000 | 9.36 | | U | U |
| 10/16/1993 | Silver | 1 | PM | 1449.5 | .00114 | .30000 | 9.36 | | U | U |
| 10/16/1993 | Thallium | 1 | PM | 1449.5 | .03255 | .30000 | 9.36 | | U | U |
| 10/16/1993 | Vanadium | 1 | PM | 1449.5 | .00163 | .17000 | 9.36 | | U | U |
| 10/16/1993 | Zinc | 1 | PM | 1449.5 | .00611 | .00000 | 9.36 | | B | |
| 10/16/1993 | Aluminum | 2 | PM | 1460.9 | .08543 | 33.30000 | 22.60 | | | |
| 10/16/1993 | Arsenic | 2 | PM | 1460.9 | .00041 | .00057 | 22.60 | | B | |
| 10/16/1993 | Barium | 2 | PM | 1460.9 | .00543 | .52000 | 22.60 | | | U |
| 10/16/1993 | Beryllium | 2 | PM | 1460.9 | .00017 | .00100 | 22.60 | | U | U |
| 10/16/1993 | Cadmium | 2 | PM | 1460.9 | .00355 | .00140 | 22.60 | | | |
| 10/16/1993 | Chromium | 2 | PM | 1460.9 | .00352 | .00020 | 22.60 | | | |
| 10/16/1993 | Manganese | 2 | PM | 1460.9 | .00556 | .42000 | 22.60 | | | |
| 10/16/1993 | Nickel | 2 | PM | 1460.9 | .00357 | .01000 | 22.60 | | B | U |
| 10/16/1993 | Phosphorus | 2 | PM | 1460.9 | 1.48999 | .30000 | 22.60 | | | |
| 10/16/1993 | Selenium | 2 | PM | 1460.9 | .01662 | .70000 | 22.60 | | U | U |
| 10/16/1993 | Silver | 2 | PM | 1460.9 | .00116 | .30000 | 22.60 | | U | U |
| 10/16/1993 | Thallium | 2 | PM | 1460.9 | .03318 | .30000 | 22.60 | | U | U |
| 10/16/1993 | Vanadium | 2 | PM | 1460.9 | .00365 | .17000 | 22.60 | | B | |
| 10/16/1993 | Zinc | 2 | PM | 1460.9 | .01530 | .00000 | 22.60 | | B | |
| 10/16/1993 | Aluminum | 3 | PM | 1444.4 | .05042 | 33.30000 | 11.25 | | | U |
| 10/16/1993 | Arsenic | 3 | PM | 1444.4 | .00023 | .00057 | 11.25 | | B | |
| 10/16/1993 | Barium | 3 | PM | 1444.4 | .00309 | .52000 | 11.25 | | | U |
| 10/16/1993 | Beryllium | 3 | PM | 1444.4 | .00017 | .00100 | 11.25 | | U | U |
| 10/16/1993 | Cadmium | 3 | PM | 1444.4 | .00150 | .00140 | 11.25 | | B | |
| 10/16/1993 | Chromium | 3 | PM | 1444.4 | .00096 | .00020 | 11.25 | | | U |
| 10/16/1993 | Manganese | 3 | PM | 1444.4 | .00297 | .42000 | 11.25 | | | |
| 10/16/1993 | Nickel | 3 | PM | 1444.4 | .00590 | .01000 | 11.25 | | B | U |
| 10/16/1993 | Phosphorus | 3 | PM | 1444.4 | .30358 | .30000 | 11.25 | | B | U |
| 10/16/1993 | Selenium | 3 | PM | 1444.4 | .01690 | .70000 | 11.25 | | U | U |
| 10/16/1993 | Silver | 3 | PM | 1444.4 | .00118 | .30000 | 11.25 | | U | U |
| 10/16/1993 | Thallium | 3 | PM | 1444.4 | .04133 | .30000 | 11.25 | | B | |
| 10/16/1993 | Vanadium | 3 | PM | 1444.4 | .00169 | .17000 | 11.25 | | U | U |
| 10/16/1993 | Zinc | 3 | PM | 1444.4 | .00633 | .00000 | 11.25 | | B | |
| 10/16/1993 | Aluminum | 4 | PM | 1466.8 | .03481 | 33.30000 | 14.35 | | | U |
| 10/16/1993 | Arsenic | 4 | PM | 1466.8 | .00026 | .00057 | 14.35 | | B | |
| 10/16/1993 | Barium | 4 | PM | 1466.8 | .00331 | .52000 | 14.35 | | | U |
| 10/16/1993 | Beryllium | 4 | PM | 1466.8 | .00016 | .00100 | 14.35 | | U | U |
| 10/16/1993 | Cadmium | 4 | PM | 1466.8 | .00127 | .00140 | 14.35 | | U | U |
| 10/16/1993 | Chromium | 4 | PM | 1466.8 | .00105 | .00020 | 14.35 | | | U |
| 10/16/1993 | Manganese | 4 | PM | 1466.8 | .00280 | .42000 | 14.35 | | | |
| 10/16/1993 | Nickel | 4 | PM | 1466.8 | .00543 | .01000 | 14.35 | | B | U |
| 10/16/1993 | Phosphorus | 4 | PM | 1466.8 | .52718 | .30000 | 14.35 | | | U |

| Sample Date | Chemical Name | Site # | Typ | Run Time (min.) | Chem Conc. (ug/m3) | EPA Scr. L(ug/m3) | Part.C. (ug/m3) | Grav. Val | Qual. Lab | Qual. Val |
|---|---|---|---|---|---|---|---|---|---|---|
| 10/16/1993 | Selenium | 4 | PM | 1466.8 | .01600 | .70000 | 14.35 | | U | U |
| 10/16/1993 | Silver | 4 | PM | 1466.8 | .00112 | .30000 | 14.35 | | U | U |
| 10/16/1993 | Thallium | 4 | PM | 1466.8 | .03194 | .30000 | 14.35 | | B | |
| 10/16/1993 | Vanadium | 4 | PM | 1466.8 | .00160 | .17000 | 14.35 | | U | U |
| 10/16/1993 | Zinc | 4 | PM | 1466.8 | .00682 | .00000 | 14.35 | | B | |
| 10/16/1993 | Aluminum | 5 | PM | 1471.5 | .03513 | 33.30000 | 17.02 | | | U |
| 10/16/1993 | Arsenic | 5 | PM | 1471.5 | .00016 | .00057 | 17.02 | | U | U |
| 10/16/1993 | Barium | 5 | PM | 1471.5 | .00272 | .52000 | 17.02 | | | U |
| 10/16/1993 | Beryllium | 5 | PM | 1471.5 | .00016 | .00100 | 17.02 | | U | U |
| 10/16/1993 | Cadmium | 5 | PM | 1471.5 | .00202 | .00140 | 17.02 | | | |
| 10/16/1993 | Chromium | 5 | PM | 1471.5 | .00154 | .00020 | 17.02 | | | |
| 10/16/1993 | Manganese | 5 | PM | 1471.5 | .00138 | .42000 | 17.02 | | B | |
| 10/16/1993 | Nickel | 5 | PM | 1471.5 | .00325 | .01000 | 17.02 | | U | U |
| 10/16/1993 | Phosphorus | 5 | PM | 1471.5 | 1.14946 | .30000 | 17.02 | | | |
| 10/16/1993 | Selenium | 5 | PM | 1471.5 | .01630 | .70000 | 17.02 | | U | U |
| 10/16/1993 | Silver | 5 | PM | 1471.5 | .00114 | .30000 | 17.02 | | U | U |
| 10/16/1993 | Thallium | 5 | PM | 1471.5 | .03254 | .30000 | 17.02 | | U | U |
| 10/16/1993 | Vanadium | 5 | PM | 1471.5 | .00163 | .17000 | 17.02 | | U | U |
| 10/16/1993 | Zinc | 5 | PM | 1471.5 | .00909 | .00000 | 17.02 | | B | |
| 10/16/1993 | Aluminum | 6 | PM | 1440.6 | .02119 | 33.30000 | 7.99 | | B | U |
| 10/16/1993 | Arsenic | 6 | PM | 1440.6 | .00017 | .00057 | 7.99 | | U | U |
| 10/16/1993 | Barium | 6 | PM | 1440.6 | .00193 | .52000 | 7.99 | | B | U |
| 10/16/1993 | Beryllium | 6 | PM | 1440.6 | .00017 | .00100 | 7.99 | | U | U |
| 10/16/1993 | Cadmium | 6 | PM | 1440.6 | .00132 | .00140 | 7.99 | | U | U |
| 10/16/1993 | Chromium | 6 | PM | 1440.6 | .00069 | .00020 | 7.99 | | | U |
| 10/16/1993 | Manganese | 6 | PM | 1440.6 | .00131 | .42000 | 7.99 | | B | |
| 10/16/1993 | Nickel | 6 | PM | 1440.6 | .00604 | .01000 | 7.99 | | B | U |
| 10/16/1993 | Phosphorus | 6 | PM | 1440.6 | .27989 | .30000 | 7.99 | | B | U |
| 10/16/1993 | Selenium | 6 | PM | 1440.6 | .01657 | .70000 | 7.99 | | U | U |
| 10/16/1993 | Silver | 6 | PM | 1440.6 | .00116 | .30000 | 7.99 | | U | U |
| 10/16/1993 | Thallium | 6 | PM | 1440.6 | .03307 | .30000 | 7.99 | | U | U |
| 10/16/1993 | Vanadium | 6 | PM | 1440.6 | .00166 | .17000 | 7.99 | | U | U |
| 10/16/1993 | Zinc | 6 | PM | 1440.6 | .00693 | .00000 | 7.99 | | B | U |
| 10/16/1993 | Aluminum | 7 | PM | 1438.0 | .03848 | 33.30000 | 26.67 | | | U |
| 10/16/1993 | Arsenic | 7 | PM | 1438.0 | .00018 | .00057 | 26.67 | | B | |
| 10/16/1993 | Barium | 7 | PM | 1438.0 | .00278 | .52000 | 26.67 | | | U |
| 10/16/1993 | Beryllium | 7 | PM | 1438.0 | .00016 | .00100 | 26.67 | | U | U |
| 10/16/1993 | Cadmium | 7 | PM | 1438.0 | .00136 | .00140 | 26.67 | | B | |
| 10/16/1993 | Chromium | 7 | PM | 1438.0 | .00091 | .00020 | 26.67 | | | U |
| 10/16/1993 | Manganese | 7 | PM | 1438.0 | .00193 | .42000 | 26.67 | | B | |
| 10/16/1993 | Nickel | 7 | PM | 1438.0 | .00442 | .01000 | 26.67 | | B | U |
| 10/16/1993 | Phosphorus | 7 | PM | 1438.0 | 1.23485 | .30000 | 26.67 | | | |
| 10/16/1993 | Selenium | 7 | PM | 1438.0 | .02372 | .70000 | 26.67 | | B | |
| 10/16/1993 | Silver | 7 | PM | 1438.0 | .00114 | .30000 | 26.67 | | U | U |
| 10/16/1993 | Thallium | 7 | PM | 1438.0 | .03273 | .30000 | 26.67 | | U | U |
| 10/16/1993 | Vanadium | 7 | PM | 1438.0 | .00164 | .17000 | 26.67 | | U | U |
| 10/16/1993 | Zinc | 7 | PM | 1438.0 | .00836 | .00000 | 26.67 | | B | |
| 10/16/1993 | Aluminum | 8 | PM | 1435.2 | .03345 | 33.30000 | 10.94 | | B | U |
| 10/16/1993 | Arsenic | 8 | PM | 1435.2 | .00020 | .00057 | 10.94 | | B | |
| 10/16/1993 | Barium | 8 | PM | 1435.2 | .00323 | .52000 | 10.94 | | | U |
| 10/16/1993 | Beryllium | 8 | PM | 1435.2 | .00016 | .00100 | 10.94 | | U | U |
| 10/16/1993 | Cadmium | 8 | PM | 1435.2 | .00131 | .00140 | 10.94 | | U | U |
| 10/16/1993 | Chromium | 8 | PM | 1435.2 | .00108 | .00020 | 10.94 | | | U |
| 10/16/1993 | Manganese | 8 | PM | 1435.2 | .00256 | .42000 | 10.94 | | | |
| 10/16/1993 | Nickel | 8 | PM | 1435.2 | .00443 | .01000 | 10.94 | | B | U |

| Sample Date | Chemical Name | Site # | Typ | Run Time (min.) | Chem Conc. (ug/m3) | EPA Scr. L(ug/m3) | Part.C. (ug/m3) | Grav. Val | Qual. Lab | Qual. Val |
|---|---|---|---|---|---|---|---|---|---|---|
| 10/16/1993 | Phosphorus | 8 | PM | 1435.2 | .36725 | .30000 | 10.94 | | | U |
| 10/16/1993 | Selenium | 8 | PM | 1435.2 | .01643 | .70000 | 10.94 | | U | U |
| 10/16/1993 | Silver | 8 | PM | 1435.2 | .00115 | .30000 | 10.94 | | U | U |
| 10/16/1993 | Thallium | 8 | PM | 1435.2 | .03280 | .30000 | 10.94 | | U | U |
| 10/16/1993 | Vanadium | 8 | PM | 1435.2 | .00164 | .17000 | 10.94 | | U | U |
| 10/16/1993 | Zinc | 8 | PM | 1435.2 | .00700 | .00000 | 10.94 | | B | |
| 10/20/1993 | Aluminum | 1 | PM | 1448.3 | .12483 | 33.30000 | 34.30 | | | |
| 10/20/1993 | Arsenic | 1 | PM | 1448.3 | .00016 | .00057 | 34.30 | | U | U |
| 10/20/1993 | Barium | 1 | PM | 1448.3 | .00640 | .52000 | 34.30 | | | |
| 10/20/1993 | Beryllium | 1 | PM | 1448.3 | .00016 | .00100 | 34.30 | | U | U |
| 10/20/1993 | Cadmium | 1 | PM | 1448.3 | .00129 | .00140 | 34.30 | | U | U |
| 10/20/1993 | Chromium | 1 | PM | 1448.3 | .00177 | .00020 | 34.30 | | | |
| 10/20/1993 | Manganese | 1 | PM | 1448.3 | .00614 | .42000 | 34.30 | | | |
| 10/20/1993 | Nickel | 1 | PM | 1448.3 | .00324 | .01000 | 34.30 | | U | U |
| 10/20/1993 | Phosphorus | 1 | PM | 1448.3 | .94433 | .30000 | 34.30 | | | |
| 10/20/1993 | Selenium | 1 | PM | 1448.3 | .01623 | .70000 | 34.30 | | U | U |
| 10/20/1993 | Silver | 1 | PM | 1448.3 | .00113 | .30000 | 34.30 | | U | U |
| 10/20/1993 | Thallium | 1 | PM | 1448.3 | .03240 | .30000 | 34.30 | | U | U |
| 10/20/1993 | Vanadium | 1 | PM | 1448.3 | .00190 | .17000 | 34.30 | | B | |
| 10/20/1993 | Zinc | 1 | PM | 1448.3 | .01151 | .00000 | 34.30 | | B | |
| 10/20/1993 | Aluminum | 2 | PM | 1445.4 | .19706 | 33.30000 | 40.10 | | | |
| 10/20/1993 | Arsenic | 2 | PM | 1445.4 | .00035 | .00057 | 40.10 | | B | |
| 10/20/1993 | Barium | 2 | PM | 1445.4 | .00666 | .52000 | 40.10 | | | |
| 10/20/1993 | Beryllium | 2 | PM | 1445.4 | .00017 | .00100 | 40.10 | | U | U |
| 10/20/1993 | Cadmium | 2 | PM | 1445.4 | .00377 | .00140 | 40.10 | | | |
| 10/20/1993 | Chromium | 2 | PM | 1445.4 | .00445 | .00020 | 40.10 | | | |
| 10/20/1993 | Manganese | 2 | PM | 1445.4 | .01065 | .42000 | 40.10 | | | |
| 10/20/1993 | Nickel | 2 | PM | 1445.4 | .00367 | .01000 | 40.10 | | B | |
| 10/20/1993 | Phosphorus | 2 | PM | 1445.4 | 3.32207 | .30000 | 40.10 | | | |
| 10/20/1993 | Selenium | 2 | PM | 1445.4 | .01751 | .70000 | 40.10 | | B | |
| 10/20/1993 | Silver | 2 | PM | 1445.4 | .00135 | .30000 | 40.10 | | B | |
| 10/20/1993 | Thallium | 2 | PM | 1445.4 | .03335 | .30000 | 40.10 | | U | U |
| 10/20/1993 | Vanadium | 2 | PM | 1445.4 | .00501 | .17000 | 40.10 | | | |
| 10/20/1993 | Zinc | 2 | PM | 1445.4 | .03835 | .00000 | 40.10 | | B | |
| 10/20/1993 | Aluminum | 3 | PM | 1451.6 | .19053 | 33.30000 | 24.80 | | | |
| 10/20/1993 | Arsenic | 3 | PM | 1451.6 | .00021 | .00057 | 24.80 | | B | |
| 10/20/1993 | Barium | 3 | PM | 1451.6 | .00534 | .52000 | 24.80 | | | |
| 10/20/1993 | Beryllium | 3 | PM | 1451.6 | .00017 | .00100 | 24.80 | | U | U |
| 10/20/1993 | Cadmium | 3 | PM | 1451.6 | .00151 | .00140 | 24.80 | | | |
| 10/20/1993 | Chromium | 3 | PM | 1451.6 | .00187 | .00020 | 24.80 | | | |
| 10/20/1993 | Manganese | 3 | PM | 1451.6 | .00913 | .42000 | 24.80 | | | |
| 10/20/1993 | Nickel | 3 | PM | 1451.6 | .00334 | .01000 | 24.80 | | U | U |
| 10/20/1993 | Phosphorus | 3 | PM | 1451.6 | .67286 | .30000 | 24.80 | | | |
| 10/20/1993 | Selenium | 3 | PM | 1451.6 | .01672 | .70000 | 24.80 | | U | U |
| 10/20/1993 | Silver | 3 | PM | 1451.6 | .00117 | .30000 | 24.80 | | U | U |
| 10/20/1993 | Thallium | 3 | PM | 1451.6 | .03338 | .30000 | 24.80 | | U | U |
| 10/20/1993 | Vanadium | 3 | PM | 1451.6 | .00217 | .17000 | 24.80 | | B | |
| 10/20/1993 | Zinc | 3 | PM | 1451.6 | .01346 | .00000 | 24.80 | | B | |
| 10/20/1993 | Aluminum | 4 | PM | 1444.4 | .27752 | 33.30000 | 41.04 | | | |
| 10/20/1993 | Arsenic | 4 | PM | 1444.4 | .00028 | .00057 | 41.04 | | B | |
| 10/20/1993 | Barium | 4 | PM | 1444.4 | .00740 | .52000 | 41.04 | | | |
| 10/20/1993 | Beryllium | 4 | PM | 1444.4 | .00016 | .00100 | 41.04 | | U | U |
| 10/20/1993 | Cadmium | 4 | PM | 1444.4 | .00178 | .00140 | 41.04 | | | |
| 10/20/1993 | Chromium | 4 | PM | 1444.4 | .00187 | .00020 | 41.04 | | | |
| 10/20/1993 | Manganese | 4 | PM | 1444.4 | .01082 | .42000 | 41.04 | | | |

| Sample Date | Chemical Name | Site # | Typ | Run Time (min.) | Chem Conc. (ug/m3) | EPA Scr. L(ug/m3) | Part.C. (ug/m3) | Grav. Val | Qual. Lab | Qual. Val |
|---|---|---|---|---|---|---|---|---|---|---|
| 10/20/1993 | Nickel | 4 | PM | 1444.4 | .00323 | .01000 | 41.04 | | U | U |
| 10/20/1993 | Phosphorus | 4 | PM | 1444.4 | .43914 | .30000 | 41.04 | | | U |
| 10/20/1993 | Selenium | 4 | PM | 1444.4 | .01616 | .70000 | 41.04 | | U | U |
| 10/20/1993 | Silver | 4 | PM | 1444.4 | .00113 | .30000 | 41.04 | | U | U |
| 10/20/1993 | Thallium | 4 | PM | 1444.4 | .03226 | .30000 | 41.04 | | U | U |
| 10/20/1993 | Vanadium | 4 | PM | 1444.4 | .00221 | .17000 | 41.04 | | B | |
| 10/20/1993 | Zinc | 4 | PM | 1444.4 | .01809 | .00000 | 41.04 | | B | |
| 10/20/1993 | Aluminum | 5 | PM | 1461.5 | .09430 | 33.30000 | 9.96 | | | |
| 10/20/1993 | Arsenic | 5 | PM | 1461.5 | .00016 | .00057 | 9.96 | | U | U |
| 10/20/1993 | Barium | 5 | PM | 1461.5 | .00310 | .52000 | 9.96 | | | |
| 10/20/1993 | Beryllium | 5 | PM | 1461.5 | .00016 | .00100 | 9.96 | | U | U |
| 10/20/1993 | Cadmium | 5 | PM | 1461.5 | .00130 | .00140 | 9.96 | | U | U |
| 10/20/1993 | Chromium | 5 | PM | 1461.5 | .00064 | .00020 | 9.96 | | | U |
| 10/20/1993 | Manganese | 5 | PM | 1461.5 | .00315 | .42000 | 9.96 | | | |
| 10/20/1993 | Nickel | 5 | PM | 1461.5 | .00326 | .01000 | 9.96 | | U | U |
| 10/20/1993 | Phosphorus | 5 | PM | 1461.5 | .37331 | .30000 | 9.96 | | | U |
| 10/20/1993 | Selenium | 5 | PM | 1461.5 | .01632 | .70000 | 9.96 | | U | U |
| 10/20/1993 | Silver | 5 | PM | 1461.5 | .00114 | .30000 | 9.96 | | U | U |
| 10/20/1993 | Thallium | 5 | PM | 1461.5 | .03258 | .30000 | 9.96 | | U | U |
| 10/20/1993 | Vanadium | 5 | PM | 1461.5 | .00163 | .17000 | 9.96 | | U | U |
| 10/20/1993 | Zinc | 5 | PM | 1461.5 | .00450 | .00000 | 9.96 | | B | |
| 10/20/1993 | Aluminum | 6 | PM | 1442.3 | .12395 | 33.30000 | 10.89 | | | |
| 10/20/1993 | Arsenic | 6 | PM | 1442.3 | .00016 | .00057 | 10.89 | | U | U |
| 10/20/1993 | Barium | 6 | PM | 1442.3 | .00254 | .52000 | 10.89 | | | |
| 10/20/1993 | Beryllium | 6 | PM | 1442.3 | .00016 | .00100 | 10.89 | | U | U |
| 10/20/1993 | Cadmium | 6 | PM | 1442.3 | .00131 | .00140 | 10.89 | | U | U |
| 10/20/1993 | Chromium | 6 | PM | 1442.3 | .00042 | .00020 | 10.89 | | | U |
| 10/20/1993 | Manganese | 6 | PM | 1442.3 | .00406 | .42000 | 10.89 | | | |
| 10/20/1993 | Nickel | 6 | PM | 1442.3 | .00329 | .01000 | 10.89 | | U | U |
| 10/20/1993 | Phosphorus | 6 | PM | 1442.3 | .16461 | .30000 | 10.89 | | B | U |
| 10/20/1993 | Selenium | 6 | PM | 1442.3 | .01646 | .70000 | 10.89 | | U | U |
| 10/20/1993 | Silver | 6 | PM | 1442.3 | .00115 | .30000 | 10.89 | | U | U |
| 10/20/1993 | Thallium | 6 | PM | 1442.3 | .03286 | .30000 | 10.89 | | U | U |
| 10/20/1993 | Vanadium | 6 | PM | 1442.3 | .00165 | .17000 | 10.89 | | U | U |
| 10/20/1993 | Zinc | 6 | PM | 1442.3 | .00695 | .00000 | 10.89 | | B | |
| 10/20/1993 | Aluminum | 7 | PM | 1440.3 | .11614 | 33.30000 | 40.58 | | | |
| 10/20/1993 | Arsenic | 7 | PM | 1440.3 | .00016 | .00057 | 40.58 | | U | U |
| 10/20/1993 | Barium | 7 | PM | 1440.3 | .00358 | .52000 | 40.58 | | | |
| 10/20/1993 | Beryllium | 7 | PM | 1440.3 | .00016 | .00100 | 40.58 | | U | U |
| 10/20/1993 | Cadmium | 7 | PM | 1440.3 | .00130 | .00140 | 40.58 | | U | U |
| 10/20/1993 | Chromium | 7 | PM | 1440.3 | .00141 | .00020 | 40.58 | | | |
| 10/20/1993 | Manganese | 7 | PM | 1440.3 | .00421 | .42000 | 40.58 | | | |
| 10/20/1993 | Nickel | 7 | PM | 1440.3 | .00325 | .01000 | 40.58 | | U | U |
| 10/20/1993 | Phosphorus | 7 | PM | 1440.3 | .84348 | .30000 | 40.58 | | | |
| 10/20/1993 | Selenium | 7 | PM | 1440.3 | .01629 | .70000 | 40.58 | | U | U |
| 10/20/1993 | Silver | 7 | PM | 1440.3 | .00114 | .30000 | 40.58 | | U | U |
| 10/20/1993 | Thallium | 7 | PM | 1440.3 | .03251 | .30000 | 40.58 | | U | U |
| 10/20/1993 | Vanadium | 7 | PM | 1440.3 | .00195 | .17000 | 40.58 | | B | |
| 10/20/1993 | Zinc | 7 | PM | 1440.3 | .00967 | .00000 | 40.58 | | B | |
| 10/20/1993 | Aluminum | 8 | PM | 1458.4 | .16532 | 33.30000 | 33.79 | | | |
| 10/20/1993 | Arsenic | 8 | PM | 1458.4 | .00017 | .00057 | 33.79 | | B | |
| 10/20/1993 | Barium | 8 | PM | 1458.4 | .00554 | .52000 | 33.79 | | | |
| 10/20/1993 | Beryllium | 8 | PM | 1458.4 | .00016 | .00100 | 33.79 | | U | U |
| 10/20/1993 | Cadmium | 8 | PM | 1458.4 | .00133 | .00140 | 33.79 | | B | |
| 10/20/1993 | Chromium | 8 | PM | 1458.4 | .00286 | .00020 | 33.79 | | | |

| Sample Date | Chemical Name | Site # | Typ | Run Time (min.) | Chem Conc. (ug/m3) | EPA Scr. L(ug/m3) | Part.C. (ug/m3) | Grav. Val | Qual. Lab | Qual. Val |
|---|---|---|---|---|---|---|---|---|---|---|
| 10/20/1993 | Manganese | 8 | PM | 1458.4 | .00756 | .42000 | 33.79 | | | |
| 10/20/1993 | Nickel | 8 | PM | 1458.4 | .00321 | .01000 | 33.79 | | U | U |
| 10/20/1993 | Phosphorus | 8 | PM | 1458.4 | .99961 | .30000 | 33.79 | | | |
| 10/20/1993 | Selenium | 8 | PM | 1458.4 | .01608 | .70000 | 33.79 | | U | U |
| 10/20/1993 | Silver | 8 | PM | 1458.4 | .00112 | .30000 | 33.79 | | U | U |
| 10/20/1993 | Thallium | 8 | PM | 1458.4 | .03210 | .30000 | 33.79 | | U | U |
| 10/20/1993 | Vanadium | 8 | PM | 1458.4 | .00183 | .17000 | 33.79 | | B | |
| 10/20/1993 | Zinc | 8 | PM | 1458.4 | .01339 | .00000 | 33.79 | | B | |
| 10/24/1993 | Aluminum | 1 | PM | 1450.9 | .33393 | 33.30000 | 47.99 | | | |
| 10/24/1993 | Arsenic | 1 | PM | 1450.9 | .00161 | .00057 | 47.99 | | | |
| 10/24/1993 | Barium | 1 | PM | 1450.9 | .00625 | .52000 | 47.99 | | | |
| 10/24/1993 | Beryllium | 1 | PM | 1450.9 | .00016 | .00100 | 47.99 | | U | U |
| 10/24/1993 | Cadmium | 1 | PM | 1450.9 | .00513 | .00140 | 47.99 | | | |
| 10/24/1993 | Chromium | 1 | PM | 1450.9 | .00554 | .00020 | 47.99 | | | |
| 10/24/1993 | Manganese | 1 | PM | 1450.9 | .00807 | .42000 | 47.99 | | | |
| 10/24/1993 | Nickel | 1 | PM | 1450.9 | .00361 | .01000 | 47.99 | | B | |
| 10/24/1993 | Phosphorus | 1 | PM | 1450.9 | 2.84724 | .30000 | 47.99 | | | |
| 10/24/1993 | Selenium | 1 | PM | 1450.9 | .02139 | .70000 | 47.99 | | B | |
| 10/24/1993 | Silver | 1 | PM | 1450.9 | .00115 | .30000 | 47.99 | | U | U |
| 10/24/1993 | Thallium | 1 | PM | 1450.9 | .03287 | .30000 | 47.99 | | U | U |
| 10/24/1993 | Vanadium | 1 | PM | 1450.9 | .00574 | .17000 | 47.99 | | | |
| 10/24/1993 | Zinc | 1 | PM | 1450.9 | .02204 | .00000 | 47.99 | | B | |
| 10/24/1993 | Aluminum | 2 | PM | 1448.0 | .72253 | 33.30000 | 106.76 | | | |
| 10/24/1993 | Arsenic | 2 | PM | 1448.0 | .00245 | .00057 | 106.76 | | | |
| 10/24/1993 | Barium | 2 | PM | 1448.0 | .01465 | .52000 | 106.76 | | | |
| 10/24/1993 | Beryllium | 2 | PM | 1448.0 | .00027 | .00100 | 106.76 | | B | |
| 10/24/1993 | Cadmium | 2 | PM | 1448.0 | .03552 | .00140 | 106.76 | | | |
| 10/24/1993 | Chromium | 2 | PM | 1448.0 | .03505 | .00020 | 106.76 | | | |
| 10/24/1993 | Manganese | 2 | PM | 1448.0 | .02066 | .42000 | 106.76 | | | |
| 10/24/1993 | Nickel | 2 | PM | 1448.0 | .00756 | .01000 | 106.76 | | B | |
| 10/24/1993 | Phosphorus | 2 | PM | 1448.0 | 12.62734 | .30000 | 106.76 | | | |
| 10/24/1993 | Selenium | 2 | PM | 1448.0 | .12087 | .70000 | 106.76 | | | |
| 10/24/1993 | Silver | 2 | PM | 1448.0 | .00198 | .30000 | 106.76 | | B | |
| 10/24/1993 | Thallium | 2 | PM | 1448.0 | .03383 | .30000 | 106.76 | | U | U |
| 10/24/1993 | Vanadium | 2 | PM | 1448.0 | .03437 | .17000 | 106.76 | | | |
| 10/24/1993 | Zinc | 2 | PM | 1448.0 | .15463 | .00000 | 106.76 | | | |
| 10/24/1993 | Aluminum | 3 | PM | 1447.5 | .17514 | 33.30000 | 21.26 | | | |
| 10/24/1993 | Arsenic | 3 | PM | 1447.5 | .00119 | .00057 | 21.26 | | | |
| 10/24/1993 | Barium | 3 | PM | 1447.5 | .00332 | .52000 | 21.26 | | | |
| 10/24/1993 | Beryllium | 3 | PM | 1447.5 | .00017 | .00100 | 21.26 | | U | U |
| 10/24/1993 | Cadmium | 3 | PM | 1447.5 | .00218 | .00140 | 21.26 | | | |
| 10/24/1993 | Chromium | 3 | PM | 1447.5 | .00212 | .00020 | 21.26 | | | |
| 10/24/1993 | Manganese | 3 | PM | 1447.5 | .00557 | .42000 | 21.26 | | | |
| 10/24/1993 | Nickel | 3 | PM | 1447.5 | .00340 | .01000 | 21.26 | | U | U |
| 10/24/1993 | Phosphorus | 3 | PM | 1447.5 | .76031 | .30000 | 21.26 | | | |
| 10/24/1993 | Selenium | 3 | PM | 1447.5 | .01704 | .70000 | 21.26 | | U | U |
| 10/24/1993 | Silver | 3 | PM | 1447.5 | .00119 | .30000 | 21.26 | | U | U |
| 10/24/1993 | Thallium | 3 | PM | 1447.5 | .03401 | .30000 | 21.26 | | U | U |
| 10/24/1993 | Vanadium | 3 | PM | 1447.5 | .00223 | .17000 | 21.26 | | B | |
| 10/24/1993 | Zinc | 3 | PM | 1447.5 | .02247 | .00000 | 21.26 | | B | |
| 10/24/1993 | Aluminum | 4 | PM | 1451.7 | .14322 | 33.30000 | 17.59 | | | |
| 10/24/1993 | Arsenic | 4 | PM | 1451.7 | .00124 | .00057 | 17.59 | | | |
| 10/24/1993 | Barium | 4 | PM | 1451.7 | .00253 | .52000 | 17.59 | | | |
| 10/24/1993 | Beryllium | 4 | PM | 1451.7 | .00016 | .00100 | 17.59 | | U | U |
| 10/24/1993 | Cadmium | 4 | PM | 1451.7 | .00130 | .00140 | 17.59 | | U | U |

| Sample Date | Chemical Name | Site # | Typ | Run Time (min.) | Chem Conc. (ug/m3) | EPA Scr. L(ug/m3) | Part.C. (ug/m3) | Grav. Val | Qual. Lab | Qual. Val |
|---|---|---|---|---|---|---|---|---|---|---|
| 10/24/1993 | Chromium | 4 | PM | 1451.7 | .00133 | .00020 | 17.59 | | | |
| 10/24/1993 | Manganese | 4 | PM | 1451.7 | .00568 | .42000 | 17.59 | | | |
| 10/24/1993 | Nickel | 4 | PM | 1451.7 | .00326 | .01000 | 17.59 | | U | U |
| 10/24/1993 | Phosphorus | 4 | PM | 1451.7 | .57612 | .30000 | 17.59 | | | U |
| 10/24/1993 | Selenium | 4 | PM | 1451.7 | .01634 | .70000 | 17.59 | | U | U |
| 10/24/1993 | Silver | 4 | PM | 1451.7 | .00114 | .30000 | 17.59 | | U | U |
| 10/24/1993 | Thallium | 4 | PM | 1451.7 | .03261 | .30000 | 17.59 | | U | U |
| 10/24/1993 | Vanadium | 4 | PM | 1451.7 | .00163 | .17000 | 17.59 | | U | U |
| 10/24/1993 | Zinc | 4 | PM | 1451.7 | .01165 | .00000 | 17.59 | | B | |
| 10/24/1993 | Aluminum | 5 | PM | 1457.7 | .14775 | 33.30000 | 19.76 | | | |
| 10/24/1993 | Arsenic | 5 | PM | 1457.7 | .00135 | .00057 | 19.76 | | | |
| 10/24/1993 | Barium | 5 | PM | 1457.7 | .00457 | .52000 | 19.76 | | | |
| 10/24/1993 | Beryllium | 5 | PM | 1457.7 | .00017 | .00100 | 19.76 | | U | U |
| 10/24/1993 | Cadmium | 5 | PM | 1457.7 | .00505 | .00140 | 19.76 | | | |
| 10/24/1993 | Chromium | 5 | PM | 1457.7 | .00236 | .00020 | 19.76 | | | |
| 10/24/1993 | Manganese | 5 | PM | 1457.7 | .00478 | .42000 | 19.76 | | | |
| 10/24/1993 | Nickel | 5 | PM | 1457.7 | .00332 | .01000 | 19.76 | | U | U |
| 10/24/1993 | Phosphorus | 5 | PM | 1457.7 | 1.12636 | .30000 | 19.76 | | | |
| 10/24/1993 | Selenium | 5 | PM | 1457.7 | .02239 | .70000 | 19.76 | | B | |
| 10/24/1993 | Silver | 5 | PM | 1457.7 | .00116 | .30000 | 19.76 | | U | U |
| 10/24/1993 | Thallium | 5 | PM | 1457.7 | .03319 | .30000 | 19.76 | | B | |
| 10/24/1993 | Vanadium | 5 | PM | 1457.7 | .00211 | .17000 | 19.76 | | B | |
| 10/24/1993 | Zinc | 5 | PM | 1457.7 | .02008 | .00000 | 19.76 | | B | |
| 10/24/1993 | Aluminum | 6 | PM | 1439.4 | .14957 | 33.30000 | 14.03 | | | |
| 10/24/1993 | Arsenic | 6 | PM | 1439.4 | .00136 | .00057 | 14.03 | | | |
| 10/24/1993 | Barium | 6 | PM | 1439.4 | .00360 | .52000 | 14.03 | | | |
| 10/24/1993 | Beryllium | 6 | PM | 1439.4 | .00017 | .00100 | 14.03 | | U | U |
| 10/24/1993 | Cadmium | 6 | PM | 1439.4 | .00134 | .00140 | 14.03 | | U | U |
| 10/24/1993 | Chromium | 6 | PM | 1439.4 | .00075 | .00020 | 14.03 | | | U |
| 10/24/1993 | Manganese | 6 | PM | 1439.4 | .00495 | .42000 | 14.03 | | | |
| 10/24/1993 | Nickel | 6 | PM | 1439.4 | .00335 | .01000 | 14.03 | | U | U |
| 10/24/1993 | Phosphorus | 6 | PM | 1439.4 | .19898 | .30000 | 14.03 | | B | U |
| 10/24/1993 | Selenium | 6 | PM | 1439.4 | .01676 | .70000 | 14.03 | | U | U |
| 10/24/1993 | Silver | 6 | PM | 1439.4 | .00117 | .30000 | 14.03 | | U | U |
| 10/24/1993 | Thallium | 6 | PM | 1439.4 | .03345 | .30000 | 14.03 | | U | U |
| 10/24/1993 | Vanadium | 6 | PM | 1439.4 | .00168 | .17000 | 14.03 | | U | U |
| 10/24/1993 | Zinc | 6 | PM | 1439.4 | .00721 | .00000 | 14.03 | | B | |
| 10/24/1993 | Aluminum | 7 | PM | 1367.0 | .10072 | 33.30000 | 8.41 | SR | | |
| 10/24/1993 | Arsenic | 7 | PM | 1367.0 | .00017 | .00057 | 8.41 | SR | U | U |
| 10/24/1993 | Barium | 7 | PM | 1367.0 | .00340 | .52000 | 8.41 | SR | | |
| 10/24/1993 | Beryllium | 7 | PM | 1367.0 | .00017 | .00100 | 8.41 | SR | U | U |
| 10/24/1993 | Cadmium | 7 | PM | 1367.0 | .00139 | .00140 | 8.41 | SR | U | U |
| 10/24/1993 | Chromium | 7 | PM | 1367.0 | .00038 | .00020 | 8.41 | SR | | U |
| 10/24/1993 | Manganese | 7 | PM | 1367.0 | .00348 | .42000 | 8.41 | SR | | |
| 10/24/1993 | Nickel | 7 | PM | 1367.0 | .00348 | .01000 | 8.41 | SR | U | U |
| 10/24/1993 | Phosphorus | 7 | PM | 1367.0 | .20006 | .30000 | 8.41 | SR | B | U |
| 10/24/1993 | Selenium | 7 | PM | 1367.0 | .01744 | .70000 | 8.41 | SR | U | U |
| 10/24/1993 | Silver | 7 | PM | 1367.0 | .00122 | .30000 | 8.41 | SR | U | U |
| 10/24/1993 | Thallium | 7 | PM | 1367.0 | .03480 | .30000 | 8.41 | SR | U | U |
| 10/24/1993 | Vanadium | 7 | PM | 1367.0 | .00174 | .17000 | 8.41 | SR | U | U |
| 10/24/1993 | Zinc | 7 | PM | 1367.0 | .00522 | .00000 | 8.41 | SR | B | |
| 10/24/1993 | Aluminum | 8 | PM | 1464.5 | .27492 | 33.30000 | 47.23 | | | |
| 10/24/1993 | Arsenic | 8 | PM | 1464.5 | .00158 | .00057 | 47.23 | | | |
| 10/24/1993 | Barium | 8 | PM | 1464.5 | .00759 | .52000 | 47.23 | | | |
| 10/24/1993 | Beryllium | 8 | PM | 1464.5 | .00016 | .00100 | 47.23 | | U | U |

| Sample Date | Chemical Name | Site # | Typ | Run Time (min.) | Chem Conc. (ug/m3) | EPA Scr. L(ug/m3) | Part.C. (ug/m3) | Grav. Val | Qual. Lab | Qual. Val |
|---|---|---|---|---|---|---|---|---|---|---|
| 10/24/1993 | Cadmium | 8 | PM | 1464.5 | .00458 | .00140 | 47.23 | | | |
| 10/24/1993 | Chromium | 8 | PM | 1464.5 | .00545 | .00020 | 47.23 | | | |
| 10/24/1993 | Manganese | 8 | PM | 1464.5 | .00778 | .42000 | 47.23 | | | |
| 10/24/1993 | Nickel | 8 | PM | 1464.5 | .00325 | .01000 | 47.23 | | U | U |
| 10/24/1993 | Phosphorus | 8 | PM | 1464.5 | 2.60006 | .30000 | 47.23 | | | |
| 10/24/1993 | Selenium | 8 | PM | 1464.5 | .02276 | .70000 | 47.23 | | B | |
| 10/24/1993 | Silver | 8 | PM | 1464.5 | .00113 | .30000 | 47.23 | | U | U |
| 10/24/1993 | Thallium | 8 | PM | 1464.5 | .03248 | .30000 | 47.23 | | U | U |
| 10/24/1993 | Vanadium | 8 | PM | 1464.5 | .00463 | .17000 | 47.23 | | | |
| 10/24/1993 | Zinc | 8 | PM | 1464.5 | .01932 | .00000 | 47.23 | | B | |
| 10/28/1993 | Aluminum | 1 | PM | 1453.4 | .36417 | 33.30000 | 30.79 | | | |
| 10/28/1993 | Arsenic | 1 | PM | 1453.4 | .00040 | .00057 | 30.79 | | B | |
| 10/28/1993 | Barium | 1 | PM | 1453.4 | .00529 | .52000 | 30.79 | | | |
| 10/28/1993 | Beryllium | 1 | PM | 1453.4 | .00016 | .00100 | 30.79 | | U | U |
| 10/28/1993 | Cadmium | 1 | PM | 1453.4 | .00130 | .00140 | 30.79 | | U | U |
| 10/28/1993 | Chromium | 1 | PM | 1453.4 | .00529 | .00020 | 30.79 | | | |
| 10/28/1993 | Manganese | 1 | PM | 1453.4 | .00850 | .42000 | 30.79 | | | |
| 10/28/1993 | Nickel | 1 | PM | 1453.4 | .00325 | .01000 | 30.79 | | U | U |
| 10/28/1993 | Phosphorus | 1 | PM | 1453.4 | 1.29180 | .30000 | 30.79 | | | |
| 10/28/1993 | Selenium | 1 | PM | 1453.4 | .01629 | .70000 | 30.79 | | U | U |
| 10/28/1993 | Silver | 1 | PM | 1453.4 | .00114 | .30000 | 30.79 | | U | U |
| 10/28/1993 | Thallium | 1 | PM | 1453.4 | .03252 | .30000 | 30.79 | | U | U |
| 10/28/1993 | Vanadium | 1 | PM | 1453.4 | .00558 | .17000 | 30.79 | | | |
| 10/28/1993 | Zinc | 1 | PM | 1453.4 | .02603 | .00000 | 30.79 | | B | |
| 10/28/1993 | Aluminum | 2 | PM | 1445.3 | .65715 | 33.30000 | 103.87 | | | |
| 10/28/1993 | Arsenic | 2 | PM | 1445.3 | .00145 | .00057 | 103.87 | | | J |
| 10/28/1993 | Barium | 2 | PM | 1445.3 | .00825 | .52000 | 103.87 | | | |
| 10/28/1993 | Beryllium | 2 | PM | 1445.3 | .00017 | .00100 | 103.87 | | U | U |
| 10/28/1993 | Cadmium | 2 | PM | 1445.3 | .01556 | .00140 | 103.87 | | | |
| 10/28/1993 | Chromium | 2 | PM | 1445.3 | .02018 | .00020 | 103.87 | | | |
| 10/28/1993 | Manganese | 2 | PM | 1445.3 | .01797 | .42000 | 103.87 | | | |
| 10/28/1993 | Nickel | 2 | PM | 1445.3 | .00336 | .01000 | 103.87 | | U | U |
| 10/28/1993 | Phosphorus | 2 | PM | 1445.3 | 13.74647 | .30000 | 103.87 | | | |
| 10/28/1993 | Selenium | 2 | PM | 1445.3 | .06706 | .70000 | 103.87 | | B | |
| 10/28/1993 | Silver | 2 | PM | 1445.3 | .00219 | .30000 | 103.87 | | B | |
| 10/28/1993 | Thallium | 2 | PM | 1445.3 | .03360 | .30000 | 103.87 | | U | U |
| 10/28/1993 | Vanadium | 2 | PM | 1445.3 | .02454 | .17000 | 103.87 | | | |
| 10/28/1993 | Zinc | 2 | PM | 1445.3 | .19849 | .00000 | 103.87 | | | |
| 10/28/1993 | Aluminum | 3 | PM | 1456.0 | .21700 | 33.30000 | 21.71 | | | |
| 10/28/1993 | Arsenic | 3 | PM | 1456.0 | .00017 | .00057 | 21.71 | | U | U |
| 10/28/1993 | Barium | 3 | PM | 1456.0 | .00342 | .52000 | 21.71 | | | |
| 10/28/1993 | Beryllium | 3 | PM | 1456.0 | .00017 | .00100 | 21.71 | | U | U |
| 10/28/1993 | Cadmium | 3 | PM | 1456.0 | .00133 | .00140 | 21.71 | | U | U |
| 10/28/1993 | Chromium | 3 | PM | 1456.0 | .00237 | .00020 | 21.71 | | | U |
| 10/28/1993 | Manganese | 3 | PM | 1456.0 | .00679 | .42000 | 21.71 | | | |
| 10/28/1993 | Nickel | 3 | PM | 1456.0 | .00333 | .01000 | 21.71 | | U | U |
| 10/28/1993 | Phosphorus | 3 | PM | 1456.0 | 1.31129 | .30000 | 21.71 | | | |
| 10/28/1993 | Selenium | 3 | PM | 1456.0 | .01671 | .70000 | 21.71 | | U | U |
| 10/28/1993 | Silver | 3 | PM | 1456.0 | .00116 | .30000 | 21.71 | | U | U |
| 10/28/1993 | Thallium | 3 | PM | 1456.0 | .03335 | .30000 | 21.71 | | U | U |
| 10/28/1993 | Vanadium | 3 | PM | 1456.0 | .00227 | .17000 | 21.71 | | B | |
| 10/28/1993 | Zinc | 3 | PM | 1456.0 | .02017 | .00000 | 21.71 | | B | |
| 10/28/1993 | Aluminum | 4 | PM | 1450.3 | .22993 | 33.30000 | 16.61 | | | |
| 10/28/1993 | Arsenic | 4 | PM | 1450.3 | .00016 | .00057 | 16.61 | | U | U |
| 10/28/1993 | Barium | 4 | PM | 1450.3 | .00486 | .52000 | 16.61 | | | |

| Sample Date | Chemical Name | Site # | Typ | Run Time (min.) | Chem Conc. (ug/m3) | EPA Scr. L(ug/m3) | Part.C. (ug/m3) | Grav. Val | Qual. Lab | Qual. Val |
|---|---|---|---|---|---|---|---|---|---|---|
| 10/28/1993 | Beryllium | 4 | PM | 1450.3 | .00016 | .00100 | 16.61 | | U | U |
| 10/28/1993 | Cadmium | 4 | PM | 1450.3 | .00129 | .00140 | 16.61 | | U | U |
| 10/28/1993 | Chromium | 4 | PM | 1450.3 | .00098 | .00020 | 16.61 | | | U |
| 10/28/1993 | Manganese | 4 | PM | 1450.3 | .00762 | .42000 | 16.61 | | | |
| 10/28/1993 | Nickel | 4 | PM | 1450.3 | .00324 | .01000 | 16.61 | | U | U |
| 10/28/1993 | Phosphorus | 4 | PM | 1450.3 | .22670 | .30000 | 16.61 | | B | U |
| 10/28/1993 | Selenium | 4 | PM | 1450.3 | .01699 | .70000 | 16.61 | | B | |
| 10/28/1993 | Silver | 4 | PM | 1450.3 | .00113 | .30000 | 16.61 | | U | U |
| 10/28/1993 | Thallium | 4 | PM | 1450.3 | .03236 | .30000 | 16.61 | | U | U |
| 10/28/1993 | Vanadium | 4 | PM | 1450.3 | .00162 | .17000 | 16.61 | | U | U |
| 10/28/1993 | Zinc | 4 | PM | 1450.3 | .00794 | .00000 | 16.61 | | B | |
| 10/28/1993 | Aluminum | 5 | PM | 1446.8 | .19255 | 33.30000 | 15.23 | | | |
| 10/28/1993 | Arsenic | 5 | PM | 1446.8 | .00028 | .00057 | 15.23 | | B | |
| 10/28/1993 | Barium | 5 | PM | 1446.8 | .00240 | .52000 | 15.23 | | | |
| 10/28/1993 | Beryllium | 5 | PM | 1446.8 | .00017 | .00100 | 15.23 | | U | U |
| 10/28/1993 | Cadmium | 5 | PM | 1446.8 | .00132 | .00140 | 15.23 | | U | U |
| 10/28/1993 | Chromium | 5 | PM | 1446.8 | .00159 | .00020 | 15.23 | | | U |
| 10/28/1993 | Manganese | 5 | PM | 1446.8 | .00589 | .42000 | 15.23 | | | |
| 10/28/1993 | Nickel | 5 | PM | 1446.8 | .00331 | .01000 | 15.23 | | U | U |
| 10/28/1993 | Phosphorus | 5 | PM | 1446.8 | .64646 | .30000 | 15.23 | | | U |
| 10/28/1993 | Selenium | 5 | PM | 1446.8 | .01661 | .70000 | 15.23 | | U | U |
| 10/28/1993 | Silver | 5 | PM | 1446.8 | .00116 | .30000 | 15.23 | | U | U |
| 10/28/1993 | Thallium | 5 | PM | 1446.8 | .03315 | .30000 | 15.23 | | U | U |
| 10/28/1993 | Vanadium | 5 | PM | 1446.8 | .00166 | .17000 | 15.23 | | U | U |
| 10/28/1993 | Zinc | 5 | PM | 1446.8 | .00986 | .00000 | 15.23 | | B | |
| 10/28/1993 | Aluminum | 6 | PM | 1446.5 | .30361 | 33.30000 | 14.83 | | | |
| 10/28/1993 | Arsenic | 6 | PM | 1446.5 | .00017 | .00057 | 14.83 | | U | U |
| 10/28/1993 | Barium | 6 | PM | 1446.5 | .00379 | .52000 | 14.83 | | | |
| 10/28/1993 | Beryllium | 6 | PM | 1446.5 | .00017 | .00100 | 14.83 | | U | U |
| 10/28/1993 | Cadmium | 6 | PM | 1446.5 | .00132 | .00140 | 14.83 | | U | U |
| 10/28/1993 | Chromium | 6 | PM | 1446.5 | .00070 | .00020 | 14.83 | | | U |
| 10/28/1993 | Manganese | 6 | PM | 1446.5 | .00922 | .42000 | 14.83 | | | |
| 10/28/1993 | Nickel | 6 | PM | 1446.5 | .00330 | .01000 | 14.83 | | U | U |
| 10/28/1993 | Phosphorus | 6 | PM | 1446.5 | .19626 | .30000 | 14.83 | | B | U |
| 10/28/1993 | Selenium | 6 | PM | 1446.5 | .01653 | .70000 | 14.83 | | U | U |
| 10/28/1993 | Silver | 6 | PM | 1446.5 | .00115 | .30000 | 14.83 | | U | U |
| 10/28/1993 | Thallium | 6 | PM | 1446.5 | .03300 | .30000 | 14.83 | | U | U |
| 10/28/1993 | Vanadium | 6 | PM | 1446.5 | .00165 | .17000 | 14.83 | | U | U |
| 10/28/1993 | Zinc | 6 | PM | 1446.5 | .00538 | .00000 | 14.83 | | B | |
| 10/28/1993 | Aluminum | 7 | PM | 1440.3 | .17709 | 33.30000 | 11.84 | | | |
| 10/28/1993 | Arsenic | 7 | PM | 1440.3 | .00017 | .00057 | 11.84 | | B | |
| 10/28/1993 | Barium | 7 | PM | 1440.3 | .00188 | .52000 | 11.84 | | B | |
| 10/28/1993 | Beryllium | 7 | PM | 1440.3 | .00016 | .00100 | 11.84 | | U | U |
| 10/28/1993 | Cadmium | 7 | PM | 1440.3 | .00131 | .00140 | 11.84 | | U | U |
| 10/28/1993 | Chromium | 7 | PM | 1440.3 | .00094 | .00020 | 11.84 | | | U |
| 10/28/1993 | Manganese | 7 | PM | 1440.3 | .00531 | .42000 | 11.84 | | | |
| 10/28/1993 | Nickel | 7 | PM | 1440.3 | .00327 | .01000 | 11.84 | | U | U |
| 10/28/1993 | Phosphorus | 7 | PM | 1440.3 | .31955 | .30000 | 11.84 | | B | U |
| 10/28/1993 | Selenium | 7 | PM | 1440.3 | .01640 | .70000 | 11.84 | | U | U |
| 10/28/1993 | Silver | 7 | PM | 1440.3 | .00114 | .30000 | 11.84 | | U | U |
| 10/28/1993 | Thallium | 7 | PM | 1440.3 | .03274 | .30000 | 11.84 | | U | U |
| 10/28/1993 | Vanadium | 7 | PM | 1440.3 | .00164 | .17000 | 11.84 | | U | U |
| 10/28/1993 | Zinc | 7 | PM | 1440.3 | .00534 | .00000 | 11.84 | | B | |
| 10/28/1993 | Aluminum | 8 | PM | 1463.1 | .34995 | 33.30000 | 29.42 | | | |
| 10/28/1993 | Arsenic | 8 | PM | 1463.1 | .00043 | .00057 | 29.42 | | B | |

| Sample Date | Chemical Name | Site # | Typ | Run Time (min.) | Chem Conc. (ug/m3) | EPA Scr. L(ug/m3) | Part.C. (ug/m3) | Grav. Val | Qual. Lab | Qual. Val |
|---|---|---|---|---|---|---|---|---|---|---|
| 10/28/1993 | Barium | 8 | PM | 1463.1 | .00532 | .52000 | 29.42 | | | |
| 10/28/1993 | Beryllium | 8 | PM | 1463.1 | .00016 | .00100 | 29.42 | | U | U |
| 10/28/1993 | Cadmium | 8 | PM | 1463.1 | .00129 | .00140 | 29.42 | | U | U |
| 10/28/1993 | Chromium | 8 | PM | 1463.1 | .00643 | .00020 | 29.42 | | | |
| 10/28/1993 | Manganese | 8 | PM | 1463.1 | .00849 | .42000 | 29.42 | | | |
| 10/28/1993 | Nickel | 8 | PM | 1463.1 | .00322 | .01000 | 29.42 | | U | U |
| 10/28/1993 | Phosphorus | 8 | PM | 1463.1 | 1.09360 | .30000 | 29.42 | | | |
| 10/28/1993 | Selenium | 8 | PM | 1463.1 | .02014 | .70000 | 29.42 | | B | |
| 10/28/1993 | Silver | 8 | PM | 1463.1 | .00113 | .30000 | 29.42 | | U | U |
| 10/28/1993 | Thallium | 8 | PM | 1463.1 | .03223 | .30000 | 29.42 | | U | U |
| 10/28/1993 | Vanadium | 8 | PM | 1463.1 | .00519 | .17000 | 29.42 | | | |
| 10/28/1993 | Zinc | 8 | PM | 1463.1 | .01917 | .00000 | 29.42 | | B | |
| 11/01/1993 | Aluminum | 1 | PM | 722.9 | .43745 | 33.30000 | 39.41 | TMR | | |
| 11/01/1993 | Arsenic | 1 | PM | 722.9 | .00039 | .00057 | 39.41 | TMR | B | |
| 11/01/1993 | Barium | 1 | PM | 722.9 | .00836 | .52000 | 39.41 | TMR | | |
| 11/01/1993 | Beryllium | 1 | PM | 722.9 | .00032 | .00100 | 39.41 | TMR | U | U |
| 11/01/1993 | Cadmium | 1 | PM | 722.9 | .00579 | .00140 | 39.41 | TMR | | |
| 11/01/1993 | Chromium | 1 | PM | 722.9 | .00659 | .00020 | 39.41 | TMR | | |
| 11/01/1993 | Manganese | 1 | PM | 722.9 | .01488 | .42000 | 39.41 | TMR | | |
| 11/01/1993 | Nickel | 1 | PM | 722.9 | .00643 | .01000 | 39.41 | TMR | U | U |
| 11/01/1993 | Phosphorus | 1 | PM | 722.9 | 1.77033 | .30000 | 39.41 | TMR | | |
| 11/01/1993 | Selenium | 1 | PM | 722.9 | .03220 | .70000 | 39.41 | TMR | U | U |
| 11/01/1993 | Silver | 1 | PM | 722.9 | .00224 | .30000 | 39.41 | TMR | U | UJ |
| 11/01/1993 | Thallium | 1 | PM | 722.9 | .06427 | .30000 | 39.41 | TMR | U | U |
| 11/01/1993 | Vanadium | 1 | PM | 722.9 | .00604 | .17000 | 39.41 | TMR | B | |
| 11/01/1993 | Zinc | 1 | PM | 722.9 | .05503 | .00000 | 39.41 | TMR | B | |
| 11/01/1993 | Aluminum | 2 | PM | 1448.5 | .63135 | 33.30000 | 79.03 | | | |
| 11/01/1993 | Arsenic | 2 | PM | 1448.5 | .00175 | .00057 | 79.03 | | | |
| 11/01/1993 | Barium | 2 | PM | 1448.5 | .00986 | .52000 | 79.03 | | | |
| 11/01/1993 | Beryllium | 2 | PM | 1448.5 | .00017 | .00100 | 79.03 | | U | U |
| 11/01/1993 | Cadmium | 2 | PM | 1448.5 | .03459 | .00140 | 79.03 | | | |
| 11/01/1993 | Chromium | 2 | PM | 1448.5 | .02821 | .00020 | 79.03 | | | |
| 11/01/1993 | Manganese | 2 | PM | 1448.5 | .01414 | .42000 | 79.03 | | | |
| 11/01/1993 | Nickel | 2 | PM | 1448.5 | .00677 | .01000 | 79.03 | | B | |
| 11/01/1993 | Phosphorus | 2 | PM | 1448.5 | 9.07571 | .30000 | 79.03 | | | |
| 11/01/1993 | Selenium | 2 | PM | 1448.5 | .03624 | .70000 | 79.03 | | B | |
| 11/01/1993 | Silver | 2 | PM | 1448.5 | .00429 | .30000 | 79.03 | | B | J |
| 11/01/1993 | Thallium | 2 | PM | 1448.5 | .03295 | .30000 | 79.03 | | U | U |
| 11/01/1993 | Vanadium | 2 | PM | 1448.5 | .02440 | .17000 | 79.03 | | | |
| 11/01/1993 | Zinc | 2 | PM | 1448.5 | .41564 | .00000 | 79.03 | | | |
| 11/01/1993 | Aluminum | 3 | PM | 1454.7 | .34118 | 33.30000 | 25.62 | | | |
| 11/01/1993 | Arsenic | 3 | PM | 1454.7 | .00031 | .00057 | 25.62 | | B | |
| 11/01/1993 | Barium | 3 | PM | 1454.7 | .00451 | .52000 | 25.62 | | | |
| 11/01/1993 | Beryllium | 3 | PM | 1454.7 | .00016 | .00100 | 25.62 | | U | U |
| 11/01/1993 | Cadmium | 3 | PM | 1454.7 | .00299 | .00140 | 25.62 | | | |
| 11/01/1993 | Chromium | 3 | PM | 1454.7 | .00272 | .00020 | 25.62 | | | |
| 11/01/1993 | Manganese | 3 | PM | 1454.7 | .01107 | .42000 | 25.62 | | | |
| 11/01/1993 | Nickel | 3 | PM | 1454.7 | .00328 | .01000 | 25.62 | | U | U |
| 11/01/1993 | Phosphorus | 3 | PM | 1454.7 | .88406 | .30000 | 25.62 | | | |
| 11/01/1993 | Selenium | 3 | PM | 1454.7 | .01644 | .70000 | 25.62 | | U | U |
| 11/01/1993 | Silver | 3 | PM | 1454.7 | .00115 | .30000 | 25.62 | | U | UJ |
| 11/01/1993 | Thallium | 3 | PM | 1454.7 | .03281 | .30000 | 25.62 | | U | U |
| 11/01/1993 | Vanadium | 3 | PM | 1454.7 | .00223 | .17000 | 25.62 | | B | |
| 11/01/1993 | Zinc | 3 | PM | 1454.7 | .02017 | .00000 | 25.62 | | B | |
| 11/01/1993 | Aluminum | 4 | PM | 1448.3 | .18944 | 33.30000 | 14.95 | | | |

| Sample Date | Chemical Name | Site # | Typ | Run Time (min.) | Chem Conc. (ug/m3) | EPA Scr. L(ug/m3) | Part.C. (ug/m3) | Grav. Val | Qual. Lab | Qual. Val |
|---|---|---|---|---|---|---|---|---|---|---|
| 11/01/1993 | Arsenic | 4 | PM | 1448.3 | .00023 | .00057 | 14.95 | | B | |
| 11/01/1993 | Barium | 4 | PM | 1448.3 | .00327 | .52000 | 14.95 | | | |
| 11/01/1993 | Beryllium | 4 | PM | 1448.3 | .00016 | .00100 | 14.95 | | U | U |
| 11/01/1993 | Cadmium | 4 | PM | 1448.3 | .00132 | .00140 | 14.95 | | B | |
| 11/01/1993 | Chromium | 4 | PM | 1448.3 | .00127 | .00020 | 14.95 | | | |
| 11/01/1993 | Manganese | 4 | PM | 1448.3 | .00617 | .42000 | 14.95 | | | |
| 11/01/1993 | Nickel | 4 | PM | 1448.3 | .00318 | .01000 | 14.95 | | U | U |
| 11/01/1993 | Phosphorus | 4 | PM | 1448.3 | .42403 | .30000 | 14.95 | | | U |
| 11/01/1993 | Selenium | 4 | PM | 1448.3 | .01596 | .70000 | 14.95 | | U | U |
| 11/01/1993 | Silver | 4 | PM | 1448.3 | .00111 | .30000 | 14.95 | | U | UJ |
| 11/01/1993 | Thallium | 4 | PM | 1448.3 | .03185 | .30000 | 14.95 | | U | U |
| 11/01/1993 | Vanadium | 4 | PM | 1448.3 | .00160 | .17000 | 14.95 | | U | U |
| 11/01/1993 | Zinc | 4 | PM | 1448.3 | .01291 | .00000 | 14.95 | | B | |
| 11/01/1993 | Aluminum | 5 | PM | 1438.0 | .22968 | 33.30000 | 13.75 | | | |
| 11/01/1993 | Arsenic | 5 | PM | 1438.0 | .00019 | .00057 | 13.75 | | B | |
| 11/01/1993 | Barium | 5 | PM | 1438.0 | .00418 | .52000 | 13.75 | | | |
| 11/01/1993 | Beryllium | 5 | PM | 1438.0 | .00016 | .00100 | 13.75 | | U | U |
| 11/01/1993 | Cadmium | 5 | PM | 1438.0 | .00131 | .00140 | 13.75 | | U | U |
| 11/01/1993 | Chromium | 5 | PM | 1438.0 | .00114 | .00020 | 13.75 | | | U |
| 11/01/1993 | Manganese | 5 | PM | 1438.0 | .00739 | .42000 | 13.75 | | | |
| 11/01/1993 | Nickel | 5 | PM | 1438.0 | .00328 | .01000 | 13.75 | | U | U |
| 11/01/1993 | Phosphorus | 5 | PM | 1438.0 | .17079 | .30000 | 13.75 | | B | U |
| 11/01/1993 | Selenium | 5 | PM | 1438.0 | .01642 | .70000 | 13.75 | | U | U |
| 11/01/1993 | Silver | 5 | PM | 1438.0 | .00115 | .30000 | 13.75 | | U | UJ |
| 11/01/1993 | Thallium | 5 | PM | 1438.0 | .03278 | .30000 | 13.75 | | U | U |
| 11/01/1993 | Vanadium | 5 | PM | 1438.0 | .00164 | .17000 | 13.75 | | U | U |
| 11/01/1993 | Zinc | 5 | PM | 1438.0 | .00566 | .00000 | 13.75 | | B | |
| 11/01/1993 | Aluminum | 6 | PM | 1442.6 | .24731 | 33.30000 | 13.96 | | | |
| 11/01/1993 | Arsenic | 6 | PM | 1442.6 | .00017 | .00057 | 13.96 | | B | |
| 11/01/1993 | Barium | 6 | PM | 1442.6 | .00374 | .52000 | 13.96 | | | |
| 11/01/1993 | Beryllium | 6 | PM | 1442.6 | .00016 | .00100 | 13.96 | | U | U |
| 11/01/1993 | Cadmium | 6 | PM | 1442.6 | .00130 | .00140 | 13.96 | | U | U |
| 11/01/1993 | Chromium | 6 | PM | 1442.6 | .00080 | .00020 | 13.96 | | | U |
| 11/01/1993 | Manganese | 6 | PM | 1442.6 | .00772 | .42000 | 13.96 | | | |
| 11/01/1993 | Nickel | 6 | PM | 1442.6 | .00325 | .01000 | 13.96 | | U | U |
| 11/01/1993 | Phosphorus | 6 | PM | 1442.6 | .14994 | .30000 | 13.96 | | B | U |
| 11/01/1993 | Selenium | 6 | PM | 1442.6 | .01629 | .70000 | 13.96 | | U | U |
| 11/01/1993 | Silver | 6 | PM | 1442.6 | .00114 | .30000 | 13.96 | | U | UJ |
| 11/01/1993 | Thallium | 6 | PM | 1442.6 | .03252 | .30000 | 13.96 | | U | U |
| 11/01/1993 | Vanadium | 6 | PM | 1442.6 | .00163 | .17000 | 13.96 | | U | U |
| 11/01/1993 | Zinc | 6 | PM | 1442.6 | .00721 | .00000 | 13.96 | | B | |
| 11/01/1993 | Aluminum | 7 | PM | 1439.6 | .15359 | 33.30000 | 11.51 | | | |
| 11/01/1993 | Arsenic | 7 | PM | 1439.6 | .00016 | .00057 | 11.51 | | U | U |
| 11/01/1993 | Barium | 7 | PM | 1439.6 | .00395 | .52000 | 11.51 | | | |
| 11/01/1993 | Beryllium | 7 | PM | 1439.6 | .00016 | .00100 | 11.51 | | U | U |
| 11/01/1993 | Cadmium | 7 | PM | 1439.6 | .00129 | .00140 | 11.51 | | U | U |
| 11/01/1993 | Chromium | 7 | PM | 1439.6 | .00060 | .00020 | 11.51 | | | U |
| 11/01/1993 | Manganese | 7 | PM | 1439.6 | .00425 | .42000 | 11.51 | | | |
| 11/01/1993 | Nickel | 7 | PM | 1439.6 | .00322 | .01000 | 11.51 | | U | U |
| 11/01/1993 | Phosphorus | 7 | PM | 1439.6 | .16901 | .30000 | 11.51 | | B | U |
| 11/01/1993 | Selenium | 7 | PM | 1439.6 | .01613 | .70000 | 11.51 | | U | U |
| 11/01/1993 | Silver | 7 | PM | 1439.6 | .00112 | .30000 | 11.51 | | U | UJ |
| 11/01/1993 | Thallium | 7 | PM | 1439.6 | .03220 | .30000 | 11.51 | | U | U |
| 11/01/1993 | Vanadium | 7 | PM | 1439.6 | .00161 | .17000 | 11.51 | | U | U |
| 11/01/1993 | Zinc | 7 | PM | 1439.6 | .00393 | .00000 | 11.51 | | B | |

| Sample Date | Chemical Name | Site # | Typ | Run Time (min.) | Chem Conc. (ug/m3) | EPA Scr. L(ug/m3) | Part.C. (ug/m3) | Grav. Val | Qual. Lab | Qual. Val |
|---|---|---|---|---|---|---|---|---|---|---|
| 11/01/1993 | Aluminum | 8 | PM | 1461.8 | .39681 | 33.30000 | 37.74 | | | |
| 11/01/1993 | Arsenic | 8 | PM | 1461.8 | .00043 | .00057 | 37.74 | | B | |
| 11/01/1993 | Barium | 8 | PM | 1461.8 | .00652 | .52000 | 37.74 | | | |
| 11/01/1993 | Beryllium | 8 | PM | 1461.8 | .00016 | .00100 | 37.74 | | U | U |
| 11/01/1993 | Cadmium | 8 | PM | 1461.8 | .00395 | .00140 | 37.74 | | | |
| 11/01/1993 | Chromium | 8 | PM | 1461.8 | .00547 | .00020 | 37.74 | | | |
| 11/01/1993 | Manganese | 8 | PM | 1461.8 | .01019 | .42000 | 37.74 | | | |
| 11/01/1993 | Nickel | 8 | PM | 1461.8 | .00333 | .01000 | 37.74 | | B | |
| 11/01/1993 | Phosphorus | 8 | PM | 1461.8 | 1.14551 | .30000 | 37.74 | | | |
| 11/01/1993 | Selenium | 8 | PM | 1461.8 | .01589 | .70000 | 37.74 | | U | U |
| 11/01/1993 | Silver | 8 | PM | 1461.8 | .00111 | .30000 | 37.74 | | U | UJ |
| 11/01/1993 | Thallium | 8 | PM | 1461.8 | .03171 | .30000 | 37.74 | | U | U |
| 11/01/1993 | Vanadium | 8 | PM | 1461.8 | .00449 | .17000 | 37.74 | | | |
| 11/01/1993 | Zinc | 8 | PM | 1461.8 | .03316 | .00000 | 37.74 | | B | |
| 11/05/1993 | Aluminum | 1 | PM | 1455.7 | .17923 | 33.30000 | 24.50 | | | |
| 11/05/1993 | Arsenic | 1 | PM | 1455.7 | .00028 | .00057 | 24.50 | | B | |
| 11/05/1993 | Barium | 1 | PM | 1455.7 | .00464 | .52000 | 24.50 | | | |
| 11/05/1993 | Beryllium | 1 | PM | 1455.7 | .00016 | .00100 | 24.50 | | U | U |
| 11/05/1993 | Cadmium | 1 | PM | 1455.7 | .00186 | .00140 | 24.50 | | | |
| 11/05/1993 | Chromium | 1 | PM | 1455.7 | .00295 | .00020 | 24.50 | | | U |
| 11/05/1993 | Manganese | 1 | PM | 1455.7 | .00555 | .42000 | 24.50 | | | |
| 11/05/1993 | Nickel | 1 | PM | 1455.7 | .00399 | .01000 | 24.50 | | B | |
| 11/05/1993 | Phosphorus | 1 | PM | 1455.7 | .87667 | .30000 | 24.50 | | | |
| 11/05/1993 | Selenium | 1 | PM | 1455.7 | .01630 | .70000 | 24.50 | | U | U |
| 11/05/1993 | Silver | 1 | PM | 1455.7 | .00114 | .30000 | 24.50 | | U | U |
| 11/05/1993 | Thallium | 1 | PM | 1455.7 | .03253 | .30000 | 24.50 | | U | U |
| 11/05/1993 | Vanadium | 1 | PM | 1455.7 | .00377 | .17000 | 24.50 | | B | |
| 11/05/1993 | Zinc | 1 | PM | 1455.7 | .01740 | .00000 | 24.50 | | B | |
| 11/05/1993 | Aluminum | 2 | PM | 1445.2 | .39410 | 33.30000 | 46.29 | | | |
| 11/05/1993 | Arsenic | 2 | PM | 1445.2 | .00120 | .00057 | 46.29 | | | |
| 11/05/1993 | Barium | 2 | PM | 1445.2 | .00679 | .52000 | 46.29 | | | |
| 11/05/1993 | Beryllium | 2 | PM | 1445.2 | .00016 | .00100 | 46.29 | | U | U |
| 11/05/1993 | Cadmium | 2 | PM | 1445.2 | .01129 | .00140 | 46.29 | | | |
| 11/05/1993 | Chromium | 2 | PM | 1445.2 | .01507 | .00020 | 46.29 | | | |
| 11/05/1993 | Manganese | 2 | PM | 1445.2 | .01077 | .42000 | 46.29 | | | |
| 11/05/1993 | Nickel | 2 | PM | 1445.2 | .00605 | .01000 | 46.29 | | B | |
| 11/05/1993 | Phosphorus | 2 | PM | 1445.2 | 4.77619 | .30000 | 46.29 | | | |
| 11/05/1993 | Selenium | 2 | PM | 1445.2 | .01801 | .70000 | 46.29 | | B | |
| 11/05/1993 | Silver | 2 | PM | 1445.2 | .00200 | .30000 | 46.29 | | B | |
| 11/05/1993 | Thallium | 2 | PM | 1445.2 | .03269 | .30000 | 46.29 | | U | U |
| 11/05/1993 | Vanadium | 2 | PM | 1445.2 | .01703 | .17000 | 46.29 | | | |
| 11/05/1993 | Zinc | 2 | PM | 1445.2 | .09200 | .00000 | 46.29 | | | |
| 11/05/1993 | Aluminum | 3 | PM | 1456.0 | .15349 | 33.30000 | 15.36 | | | |
| 11/05/1993 | Arsenic | 3 | PM | 1456.0 | .00024 | .00057 | 15.36 | | B | |
| 11/05/1993 | Barium | 3 | PM | 1456.0 | .00341 | .52000 | 15.36 | | | |
| 11/05/1993 | Beryllium | 3 | PM | 1456.0 | .00016 | .00100 | 15.36 | | U | U |
| 11/05/1993 | Cadmium | 3 | PM | 1456.0 | .00157 | .00140 | 15.36 | | | |
| 11/05/1993 | Chromium | 3 | PM | 1456.0 | .00185 | .00020 | 15.36 | | | U |
| 11/05/1993 | Manganese | 3 | PM | 1456.0 | .00511 | .42000 | 15.36 | | | |
| 11/05/1993 | Nickel | 3 | PM | 1456.0 | .00365 | .01000 | 15.36 | | B | |
| 11/05/1993 | Phosphorus | 3 | PM | 1456.0 | .53560 | .30000 | 15.36 | | | U |
| 11/05/1993 | Selenium | 3 | PM | 1456.0 | .01626 | .70000 | 15.36 | | U | U |
| 11/05/1993 | Silver | 3 | PM | 1456.0 | .00113 | .30000 | 15.36 | | U | U |
| 11/05/1993 | Thallium | 3 | PM | 1456.0 | .03245 | .30000 | 15.36 | | U | U |
| 11/05/1993 | Vanadium | 3 | PM | 1456.0 | .00163 | .17000 | 15.36 | | U | U |

| Sample Date | Chemical Name | Site # | Typ | Run Time (min.) | Chem Conc. (ug/m3) | EPA Scr. L(ug/m3) | Part.C. (ug/m3) | Grav. Val | Qual. Lab | Qual. Val |
|---|---|---|---|---|---|---|---|---|---|---|
| 11/05/1993 | Zinc | 3 | PM | 1456.0 | .01373 | .00000 | 15.36 | | B | |
| 11/05/1993 | Aluminum | 4 | PM | 1446.7 | .12663 | 33.30000 | 14.18 | | | |
| 11/05/1993 | Arsenic | 4 | PM | 1446.7 | .00016 | .00057 | 14.18 | | U | U |
| 11/05/1993 | Barium | 4 | PM | 1446.7 | .00308 | .52000 | 14.18 | | | |
| 11/05/1993 | Beryllium | 4 | PM | 1446.7 | .00016 | .00100 | 14.18 | | U | U |
| 11/05/1993 | Cadmium | 4 | PM | 1446.7 | .00126 | .00140 | 14.18 | | U | U |
| 11/05/1993 | Chromium | 4 | PM | 1446.7 | .00110 | .00020 | 14.18 | | | U |
| 11/05/1993 | Manganese | 4 | PM | 1446.7 | .00568 | .42000 | 14.18 | | | |
| 11/05/1993 | Nickel | 4 | PM | 1446.7 | .00316 | .01000 | 14.18 | | U | U |
| 11/05/1993 | Phosphorus | 4 | PM | 1446.7 | .33641 | .30000 | 14.18 | | | U |
| 11/05/1993 | Selenium | 4 | PM | 1446.7 | .01581 | .70000 | 14.18 | | U | U |
| 11/05/1993 | Silver | 4 | PM | 1446.7 | .00110 | .30000 | 14.18 | | U | U |
| 11/05/1993 | Thallium | 4 | PM | 1446.7 | .03156 | .30000 | 14.18 | | U | U |
| 11/05/1993 | Vanadium | 4 | PM | 1446.7 | .00180 | .17000 | 14.18 | | B | |
| 11/05/1993 | Zinc | 4 | PM | 1446.7 | .00895 | .00000 | 14.18 | | B | |
| 11/05/1993 | Aluminum | 5 | PM | 1442.7 | .15624 | 33.30000 | 10.66 | | | |
| 11/05/1993 | Arsenic | 5 | PM | 1442.7 | .00019 | .00057 | 10.66 | | B | |
| 11/05/1993 | Barium | 5 | PM | 1442.7 | .00234 | .52000 | 10.66 | | | |
| 11/05/1993 | Beryllium | 5 | PM | 1442.7 | .00016 | .00100 | 10.66 | | U | U |
| 11/05/1993 | Cadmium | 5 | PM | 1442.7 | .00129 | .00140 | 10.66 | | U | U |
| 11/05/1993 | Chromium | 5 | PM | 1442.7 | .00087 | .00020 | 10.66 | | | U |
| 11/05/1993 | Manganese | 5 | PM | 1442.7 | .00484 | .42000 | 10.66 | | | |
| 11/05/1993 | Nickel | 5 | PM | 1442.7 | .00323 | .01000 | 10.66 | | U | U |
| 11/05/1993 | Phosphorus | 5 | PM | 1442.7 | .24082 | .30000 | 10.66 | | B | U |
| 11/05/1993 | Selenium | 5 | PM | 1442.7 | .01621 | .70000 | 10.66 | | U | U |
| 11/05/1993 | Silver | 5 | PM | 1442.7 | .00113 | .30000 | 10.66 | | U | U |
| 11/05/1993 | Thallium | 5 | PM | 1442.7 | .03235 | .30000 | 10.66 | | U | U |
| 11/05/1993 | Vanadium | 5 | PM | 1442.7 | .00162 | .17000 | 10.66 | | U | U |
| 11/05/1993 | Zinc | 5 | PM | 1442.7 | .00505 | .00000 | 10.66 | | B | |
| 11/05/1993 | Aluminum | 6 | PM | 1449.9 | .27106 | 33.30000 | 17.21 | | | |
| 11/05/1993 | Arsenic | 6 | PM | 1449.9 | .00017 | .00057 | 17.21 | | B | |
| 11/05/1993 | Barium | 6 | PM | 1449.9 | .00440 | .52000 | 17.21 | | | |
| 11/05/1993 | Beryllium | 6 | PM | 1449.9 | .00016 | .00100 | 17.21 | | U | U |
| 11/05/1993 | Cadmium | 6 | PM | 1449.9 | .00128 | .00140 | 17.21 | | U | U |
| 11/05/1993 | Chromium | 6 | PM | 1449.9 | .00094 | .00020 | 17.21 | | | U |
| 11/05/1993 | Manganese | 6 | PM | 1449.9 | .00914 | .42000 | 17.21 | | | |
| 11/05/1993 | Nickel | 6 | PM | 1449.9 | .00320 | .01000 | 17.21 | | B | |
| 11/05/1993 | Phosphorus | 6 | PM | 1449.9 | .21800 | .30000 | 17.21 | | B | U |
| 11/05/1993 | Selenium | 6 | PM | 1449.9 | .01605 | .70000 | 17.21 | | U | U |
| 11/05/1993 | Silver | 6 | PM | 1449.9 | .00112 | .30000 | 17.21 | | U | U |
| 11/05/1993 | Thallium | 6 | PM | 1449.9 | .03203 | .30000 | 17.21 | | U | U |
| 11/05/1993 | Vanadium | 6 | PM | 1449.9 | .00160 | .17000 | 17.21 | | U | U |
| 11/05/1993 | Zinc | 6 | PM | 1449.9 | .00476 | .00000 | 17.21 | | B | |
| 11/05/1993 | Aluminum | 7 | PM | 1440.1 | .09895 | 33.30000 | 7.53 | | | |
| 11/05/1993 | Arsenic | 7 | PM | 1440.1 | .00017 | .00057 | 7.53 | | U | U |
| 11/05/1993 | Barium | 7 | PM | 1440.1 | .00166 | .52000 | 7.53 | | U | U |
| 11/05/1993 | Beryllium | 7 | PM | 1440.1 | .00017 | .00100 | 7.53 | | U | U |
| 11/05/1993 | Cadmium | 7 | PM | 1440.1 | .00132 | .00140 | 7.53 | | U | U |
| 11/05/1993 | Chromium | 7 | PM | 1440.1 | .00082 | .00020 | 7.53 | | | U |
| 11/05/1993 | Manganese | 7 | PM | 1440.1 | .00301 | .42000 | 7.53 | | | |
| 11/05/1993 | Nickel | 7 | PM | 1440.1 | .00331 | .01000 | 7.53 | | U | U |
| 11/05/1993 | Phosphorus | 7 | PM | 1440.1 | .26784 | .30000 | 7.53 | | B | U |
| 11/05/1993 | Selenium | 7 | PM | 1440.1 | .01656 | .70000 | 7.53 | | U | U |
| 11/05/1993 | Silver | 7 | PM | 1440.1 | .00115 | .30000 | 7.53 | | U | U |
| 11/05/1993 | Thallium | 7 | PM | 1440.1 | .03305 | .30000 | 7.53 | | U | U |

| Sample Date | Chemical Name | Site # | Typ | Run Time (min.) | Chem Conc. (ug/m3) | EPA Scr. L(ug/m3) | Part.C. (ug/m3) | Grav. Val | Qual. Lab | Qual. Val |
|---|---|---|---|---|---|---|---|---|---|---|
| 11/05/1993 | Vanadium | 7 | PM | 1440.1 | .00166 | .17000 | 7.53 | | U | U |
| 11/05/1993 | Zinc | 7 | PM | 1440.1 | .00365 | .00000 | 7.53 | | B | U |
| 11/05/1993 | Aluminum | 8 | PM | 1464.6 | .17708 | 33.30000 | 24.66 | | | |
| 11/05/1993 | Arsenic | 8 | PM | 1464.6 | .00032 | .00057 | 24.66 | | B | |
| 11/05/1993 | Barium | 8 | PM | 1464.6 | .00423 | .52000 | 24.66 | | | |
| 11/05/1993 | Beryllium | 8 | PM | 1464.6 | .00016 | .00100 | 24.66 | | U | U |
| 11/05/1993 | Cadmium | 8 | PM | 1464.6 | .00163 | .00140 | 24.66 | | | |
| 11/05/1993 | Chromium | 8 | PM | 1464.6 | .00280 | .00020 | 24.66 | | | U |
| 11/05/1993 | Manganese | 8 | PM | 1464.6 | .00535 | .42000 | 24.66 | | | |
| 11/05/1993 | Nickel | 8 | PM | 1464.6 | .00325 | .01000 | 24.66 | | U | U |
| 11/05/1993 | Phosphorus | 8 | PM | 1464.6 | .89515 | .30000 | 24.66 | | | |
| 11/05/1993 | Selenium | 8 | PM | 1464.6 | .01628 | .70000 | 24.66 | | U | U |
| 11/05/1993 | Silver | 8 | PM | 1464.6 | .00114 | .30000 | 24.66 | | U | U |
| 11/05/1993 | Thallium | 8 | PM | 1464.6 | .03250 | .30000 | 24.66 | | U | U |
| 11/05/1993 | Vanadium | 8 | PM | 1464.6 | .00374 | .17000 | 24.66 | | B | U |
| 11/05/1993 | Zinc | 8 | PM | 1464.6 | .01563 | .00000 | 24.66 | | B | |
| 11/09/1993 | Aluminum | 1 | PM | 1448.3 | .20588 | 33.30000 | 28.16 | | | |
| 11/09/1993 | Arsenic | 1 | PM | 1448.3 | .00125 | .00057 | 28.16 | | | |
| 11/09/1993 | Barium | 1 | PM | 1448.3 | .00795 | .52000 | 28.16 | | | U |
| 11/09/1993 | Beryllium | 1 | PM | 1448.3 | .00016 | .00100 | 28.16 | | U | U |
| 11/09/1993 | Cadmium | 1 | PM | 1448.3 | .00130 | .00140 | 28.16 | | U | U |
| 11/09/1993 | Chromium | 1 | PM | 1448.3 | .00175 | .00020 | 28.16 | | | U |
| 11/09/1993 | Manganese | 1 | PM | 1448.3 | .01068 | .42000 | 28.16 | | | |
| 11/09/1993 | Nickel | 1 | PM | 1448.3 | .00326 | .01000 | 28.16 | | U | U |
| 11/09/1993 | Phosphorus | 1 | PM | 1448.3 | .52707 | .30000 | 28.16 | | | U |
| 11/09/1993 | Selenium | 1 | PM | 1448.3 | .01635 | .70000 | 28.16 | | U | U |
| 11/09/1993 | Silver | 1 | PM | 1448.3 | .00114 | .30000 | 28.16 | | U | U |
| 11/09/1993 | Thallium | 1 | PM | 1448.3 | .03264 | .30000 | 28.16 | | U | U |
| 11/09/1993 | Vanadium | 1 | PM | 1448.3 | .00273 | .17000 | 28.16 | | B | |
| 11/09/1993 | Zinc | 1 | PM | 1448.3 | .01766 | .00000 | 28.16 | | B | |
| 11/09/1993 | Aluminum | 2 | PM | 1450.0 | .34015 | 33.30000 | 48.97 | | | |
| 11/09/1993 | Arsenic | 2 | PM | 1450.0 | .00142 | .00057 | 48.97 | | | |
| 11/09/1993 | Barium | 2 | PM | 1450.0 | .01370 | .52000 | 48.97 | | | |
| 11/09/1993 | Beryllium | 2 | PM | 1450.0 | .00020 | .00100 | 48.97 | | B | |
| 11/09/1993 | Cadmium | 2 | PM | 1450.0 | .00200 | .00140 | 48.97 | | | |
| 11/09/1993 | Chromium | 2 | PM | 1450.0 | .00549 | .00020 | 48.97 | | | |
| 11/09/1993 | Manganese | 2 | PM | 1450.0 | .01740 | .42000 | 48.97 | | | |
| 11/09/1993 | Nickel | 2 | PM | 1450.0 | .00325 | .01000 | 48.97 | | U | U |
| 11/09/1993 | Phosphorus | 2 | PM | 1450.0 | 2.84971 | .30000 | 48.97 | | | |
| 11/09/1993 | Selenium | 2 | PM | 1450.0 | .01629 | .70000 | 48.97 | | U | U |
| 11/09/1993 | Silver | 2 | PM | 1450.0 | .00114 | .30000 | 48.97 | | U | U |
| 11/09/1993 | Thallium | 2 | PM | 1450.0 | .03252 | .30000 | 48.97 | | U | U |
| 11/09/1993 | Vanadium | 2 | PM | 1450.0 | .00573 | .17000 | 48.97 | | | |
| 11/09/1993 | Zinc | 2 | PM | 1450.0 | .02850 | .00000 | 48.97 | | B | |
| 11/09/1993 | Aluminum | 3 | PM | 1459.7 | .14315 | 33.30000 | 19.36 | | | |
| 11/09/1993 | Arsenic | 3 | PM | 1459.7 | .00117 | .00057 | 19.36 | | | |
| 11/09/1993 | Barium | 3 | PM | 1459.7 | .00517 | .52000 | 19.36 | | | |
| 11/09/1993 | Beryllium | 3 | PM | 1459.7 | .00016 | .00100 | 19.36 | | U | U |
| 11/09/1993 | Cadmium | 3 | PM | 1459.7 | .00129 | .00140 | 19.36 | | U | U |
| 11/09/1993 | Chromium | 3 | PM | 1459.7 | .00098 | .00020 | 19.36 | | | U |
| 11/09/1993 | Manganese | 3 | PM | 1459.7 | .00754 | .42000 | 19.36 | | | |
| 11/09/1993 | Nickel | 3 | PM | 1459.7 | .00323 | .01000 | 19.36 | | U | U |
| 11/09/1993 | Phosphorus | 3 | PM | 1459.7 | .20183 | .30000 | 19.36 | | B | U |
| 11/09/1993 | Selenium | 3 | PM | 1459.7 | .01619 | .70000 | 19.36 | | U | U |
| 11/09/1993 | Silver | 3 | PM | 1459.7 | .00113 | .30000 | 19.36 | | U | U |

| Sample Date | Chemical Name | Site # | Typ | Run Time (min.) | Chem Conc. (ug/m3) | EPA Scr. L(ug/m3) | Part.C. (ug/m3) | Grav. Val | Qual. Lab | Qual. Val |
|---|---|---|---|---|---|---|---|---|---|---|
| 11/09/1993 | Thallium | 3 | PM | 1459.7 | .03231 | .30000 | 19.36 | | U | U |
| 11/09/1993 | Vanadium | 3 | PM | 1459.7 | .00162 | .17000 | 19.36 | | U | U |
| 11/09/1993 | Zinc | 3 | PM | 1459.7 | .00987 | .00000 | 19.36 | | B | |
| 11/09/1993 | Aluminum | 4 | PM | 1449.8 | .25476 | 33.30000 | 33.72 | | | |
| 11/09/1993 | Arsenic | 4 | PM | 1449.8 | .00139 | .00057 | 33.72 | | | |
| 11/09/1993 | Barium | 4 | PM | 1449.8 | .00941 | .52000 | 33.72 | | | |
| 11/09/1993 | Beryllium | 4 | PM | 1449.8 | .00016 | .00100 | 33.72 | | B | |
| 11/09/1993 | Cadmium | 4 | PM | 1449.8 | .00125 | .00140 | 33.72 | | U | U |
| 11/09/1993 | Chromium | 4 | PM | 1449.8 | .00165 | .00020 | 33.72 | | | U |
| 11/09/1993 | Manganese | 4 | PM | 1449.8 | .01305 | .42000 | 33.72 | | | |
| 11/09/1993 | Nickel | 4 | PM | 1449.8 | .00314 | .01000 | 33.72 | | U | U |
| 11/09/1993 | Phosphorus | 4 | PM | 1449.8 | .30056 | .30000 | 33.72 | | B | U |
| 11/09/1993 | Selenium | 4 | PM | 1449.8 | .01575 | .70000 | 33.72 | | U | U |
| 11/09/1993 | Silver | 4 | PM | 1449.8 | .00110 | .30000 | 33.72 | | U | U |
| 11/09/1993 | Thallium | 4 | PM | 1449.8 | .03144 | .30000 | 33.72 | | U | U |
| 11/09/1993 | Vanadium | 4 | PM | 1449.8 | .00214 | .17000 | 33.72 | | B | |
| 11/09/1993 | Zinc | 4 | PM | 1449.8 | .02234 | .00000 | 33.72 | | B | |
| 11/09/1993 | Aluminum | 5 | PM | 1440.1 | .21499 | 33.30000 | 30.30 | | | |
| 11/09/1993 | Arsenic | 5 | PM | 1440.1 | .00130 | .00057 | 30.30 | | | |
| 11/09/1993 | Barium | 5 | PM | 1440.1 | .00509 | .52000 | 30.30 | | | |
| 11/09/1993 | Beryllium | 5 | PM | 1440.1 | .00016 | .00100 | 30.30 | | U | U |
| 11/09/1993 | Cadmium | 5 | PM | 1440.1 | .00594 | .00140 | 30.30 | | | |
| 11/09/1993 | Chromium | 5 | PM | 1440.1 | .00311 | .00020 | 30.30 | | | |
| 11/09/1993 | Manganese | 5 | PM | 1440.1 | .00788 | .42000 | 30.30 | | | |
| 11/09/1993 | Nickel | 5 | PM | 1440.1 | .00323 | .01000 | 30.30 | | U | U |
| 11/09/1993 | Phosphorus | 5 | PM | 1440.1 | 1.69795 | .30000 | 30.30 | | | |
| 11/09/1993 | Selenium | 5 | PM | 1440.1 | .01620 | .70000 | 30.30 | | U | U |
| 11/09/1993 | Silver | 5 | PM | 1440.1 | .00113 | .30000 | 30.30 | | U | U |
| 11/09/1993 | Thallium | 5 | PM | 1440.1 | .03235 | .30000 | 30.30 | | U | U |
| 11/09/1993 | Vanadium | 5 | PM | 1440.1 | .00348 | .17000 | 30.30 | | B | |
| 11/09/1993 | Zinc | 5 | PM | 1440.1 | .02008 | .00000 | 30.30 | | B | |
| 11/09/1993 | Aluminum | 6 | PM | 1442.4 | .32970 | 33.30000 | 28.24 | | | |
| 11/09/1993 | Arsenic | 6 | PM | 1442.4 | .00092 | .00057 | 28.24 | | | |
| 11/09/1993 | Barium | 6 | PM | 1442.4 | .00595 | .52000 | 28.24 | | | |
| 11/09/1993 | Beryllium | 6 | PM | 1442.4 | .00016 | .00100 | 28.24 | | U | U |
| 11/09/1993 | Cadmium | 6 | PM | 1442.4 | .00128 | .00140 | 28.24 | | U | U |
| 11/09/1993 | Chromium | 6 | PM | 1442.4 | .00109 | .00020 | 28.24 | | | U |
| 11/09/1993 | Manganese | 6 | PM | 1442.4 | .01373 | .42000 | 28.24 | | | |
| 11/09/1993 | Nickel | 6 | PM | 1442.4 | .00321 | .01000 | 28.24 | | U | U |
| 11/09/1993 | Phosphorus | 6 | PM | 1442.4 | .24760 | .30000 | 28.24 | | B | U |
| 11/09/1993 | Selenium | 6 | PM | 1442.4 | .01610 | .70000 | 28.24 | | U | U |
| 11/09/1993 | Silver | 6 | PM | 1442.4 | .00112 | .30000 | 28.24 | | U | U |
| 11/09/1993 | Thallium | 6 | PM | 1442.4 | .03374 | .30000 | 28.24 | | B | |
| 11/09/1993 | Vanadium | 6 | PM | 1442.4 | .00161 | .17000 | 28.24 | | U | U |
| 11/09/1993 | Zinc | 6 | PM | 1442.4 | .00770 | .00000 | 28.24 | | B | |
| 11/09/1993 | Aluminum | 7 | PM | 1441.9 | .15652 | 33.30000 | 33.76 | | | |
| 11/09/1993 | Arsenic | 7 | PM | 1441.9 | .00127 | .00057 | 33.76 | | | |
| 11/09/1993 | Barium | 7 | PM | 1441.9 | .00502 | .52000 | 33.76 | | | |
| 11/09/1993 | Beryllium | 7 | PM | 1441.9 | .00017 | .00100 | 33.76 | | U | U |
| 11/09/1993 | Cadmium | 7 | PM | 1441.9 | .00368 | .00140 | 33.76 | | | |
| 11/09/1993 | Chromium | 7 | PM | 1441.9 | .00195 | .00020 | 33.76 | | | U |
| 11/09/1993 | Manganese | 7 | PM | 1441.9 | .00605 | .42000 | 33.76 | | | |
| 11/09/1993 | Nickel | 7 | PM | 1441.9 | .00329 | .01000 | 33.76 | | U | U |
| 11/09/1993 | Phosphorus | 7 | PM | 1441.9 | .96677 | .30000 | 33.76 | | | |
| 11/09/1993 | Selenium | 7 | PM | 1441.9 | .01651 | .70000 | 33.76 | | U | U |

| Sample Date | Chemical Name | Site # | Typ | Run Time (min.) | Chem Conc. (ug/m3) | EPA Scr. L(ug/m3) | Part.C. (ug/m3) | Grav. Val | Qual. Lab | Qual. Val |
|---|---|---|---|---|---|---|---|---|---|---|
| 11/09/1993 | Silver | 7 | PM | 1441.9 | .00115 | .30000 | 33.76 | | U | U |
| 11/09/1993 | Thallium | 7 | PM | 1441.9 | .03295 | .30000 | 33.76 | | U | U |
| 11/09/1993 | Vanadium | 7 | PM | 1441.9 | .00270 | .17000 | 33.76 | | B | |
| 11/09/1993 | Zinc | 7 | PM | 1441.9 | .01848 | .00000 | 33.76 | | B | |
| 11/09/1993 | Aluminum | 8 | PM | 1463.7 | .26951 | 33.30000 | 29.04 | | | |
| 11/09/1993 | Arsenic | 8 | PM | 1463.7 | .00139 | .00057 | 29.04 | | | |
| 11/09/1993 | Barium | 8 | PM | 1463.7 | .00901 | .52000 | 29.04 | | | |
| 11/09/1993 | Beryllium | 8 | PM | 1463.7 | .00016 | .00100 | 29.04 | | U | U |
| 11/09/1993 | Cadmium | 8 | PM | 1463.7 | .00130 | .00140 | 29.04 | | U | U |
| 11/09/1993 | Chromium | 8 | PM | 1463.7 | .00227 | .00020 | 29.04 | | | U |
| 11/09/1993 | Manganese | 8 | PM | 1463.7 | .01199 | .42000 | 29.04 | | | |
| 11/09/1993 | Nickel | 8 | PM | 1463.7 | .00325 | .01000 | 29.04 | | U | U |
| 11/09/1993 | Phosphorus | 8 | PM | 1463.7 | .56689 | .30000 | 29.04 | | | U |
| 11/09/1993 | Selenium | 8 | PM | 1463.7 | .01626 | .70000 | 29.04 | | U | U |
| 11/09/1993 | Silver | 8 | PM | 1463.7 | .00113 | .30000 | 29.04 | | U | U |
| 11/09/1993 | Thallium | 8 | PM | 1463.7 | .03246 | .30000 | 29.04 | | U | U |
| 11/09/1993 | Vanadium | 8 | PM | 1463.7 | .00221 | .17000 | 29.04 | | B | U |
| 11/09/1993 | Zinc | 8 | PM | 1463.7 | .01918 | .00000 | 29.04 | | B | |
| 11/13/1993 | Aluminum | 1 | PM | 1452.6 | .25862 | 33.30000 | 33.78 | | | |
| 11/13/1993 | Arsenic | 1 | PM | 1452.6 | .00054 | .00057 | 33.78 | | B | |
| 11/13/1993 | Barium | 1 | PM | 1452.6 | .00386 | .52000 | 33.78 | | | U |
| 11/13/1993 | Beryllium | 1 | PM | 1452.6 | .00018 | .00100 | 33.78 | | B | |
| 11/13/1993 | Cadmium | 1 | PM | 1452.6 | .00185 | .00140 | 33.78 | | | |
| 11/13/1993 | Chromium | 1 | PM | 1452.6 | .00190 | .00020 | 33.78 | | | U |
| 11/13/1993 | Manganese | 1 | PM | 1452.6 | .00725 | .42000 | 33.78 | | | |
| 11/13/1993 | Nickel | 1 | PM | 1452.6 | .00322 | .01000 | 33.78 | | U | U |
| 11/13/1993 | Phosphorus | 1 | PM | 1452.6 | .87276 | .30000 | 33.78 | | | |
| 11/13/1993 | Selenium | 1 | PM | 1452.6 | .01611 | .70000 | 33.78 | | U | U |
| 11/13/1993 | Silver | 1 | PM | 1452.6 | .00112 | .30000 | 33.78 | | U | U |
| 11/13/1993 | Thallium | 1 | PM | 1452.6 | .03215 | .30000 | 33.78 | | U | U |
| 11/13/1993 | Vanadium | 1 | PM | 1452.6 | .00318 | .17000 | 33.78 | | B | |
| 11/13/1993 | Zinc | 1 | PM | 1452.6 | .01149 | .00000 | 33.78 | | B | |
| 11/13/1993 | Aluminum | 2 | PM | 1447.2 | .45427 | 33.30000 | 102.87 | | | |
| 11/13/1993 | Arsenic | 2 | PM | 1447.2 | .00117 | .00057 | 102.87 | | | |
| 11/13/1993 | Barium | 2 | PM | 1447.2 | .00739 | .52000 | 102.87 | | | |
| 11/13/1993 | Beryllium | 2 | PM | 1447.2 | .00024 | .00100 | 102.87 | | B | |
| 11/13/1993 | Cadmium | 2 | PM | 1447.2 | .02917 | .00140 | 102.87 | | | |
| 11/13/1993 | Chromium | 2 | PM | 1447.2 | .01549 | .00020 | 102.87 | | | |
| 11/13/1993 | Manganese | 2 | PM | 1447.2 | .01137 | .42000 | 102.87 | | | |
| 11/13/1993 | Nickel | 2 | PM | 1447.2 | .00322 | .01000 | 102.87 | | U | U |
| 11/13/1993 | Phosphorus | 2 | PM | 1447.2 | 14.64982 | .30000 | 102.87 | | | |
| 11/13/1993 | Selenium | 2 | PM | 1447.2 | .05474 | .70000 | 102.87 | | B | |
| 11/13/1993 | Silver | 2 | PM | 1447.2 | .00240 | .30000 | 102.87 | | B | |
| 11/13/1993 | Thallium | 2 | PM | 1447.2 | .03219 | .30000 | 102.87 | | U | U |
| 11/13/1993 | Vanadium | 2 | PM | 1447.2 | .01645 | .17000 | 102.87 | | | |
| 11/13/1993 | Zinc | 2 | PM | 1447.2 | .16449 | .00000 | 102.87 | | | |
| 11/13/1993 | Aluminum | 3 | PM | 1453.0 | .17471 | 33.30000 | 29.52 | | | |
| 11/13/1993 | Arsenic | 3 | PM | 1453.0 | .00032 | .00057 | 29.52 | | B | |
| 11/13/1993 | Barium | 3 | PM | 1453.0 | .00409 | .52000 | 29.52 | | | U |
| 11/13/1993 | Beryllium | 3 | PM | 1453.0 | .00016 | .00100 | 29.52 | | U | U |
| 11/13/1993 | Cadmium | 3 | PM | 1453.0 | .00359 | .00140 | 29.52 | | | |
| 11/13/1993 | Chromium | 3 | PM | 1453.0 | .00156 | .00020 | 29.52 | | | U |
| 11/13/1993 | Manganese | 3 | PM | 1453.0 | .00672 | .42000 | 29.52 | | | |
| 11/13/1993 | Nickel | 3 | PM | 1453.0 | .00321 | .01000 | 29.52 | | U | U |
| 11/13/1993 | Phosphorus | 3 | PM | 1453.0 | 1.37594 | .30000 | 29.52 | | | |

| Sample Date | Chemical Name | Site # | Typ | Run Time (min.) | Chem Conc. (ug/m3) | EPA Scr. L(ug/m3) | Part.C. (ug/m3) | Grav. Val | Qual. Lab | Qual. Val |
|---|---|---|---|---|---|---|---|---|---|---|
| 11/13/1993 | Selenium | 3 | PM | 1453.0 | .01606 | .70000 | 29.52 | | U | U |
| 11/13/1993 | Silver | 3 | PM | 1453.0 | .00112 | .30000 | 29.52 | | U | U |
| 11/13/1993 | Thallium | 3 | PM | 1453.0 | .03206 | .30000 | 29.52 | | U | U |
| 11/13/1993 | Vanadium | 3 | PM | 1453.0 | .00161 | .17000 | 29.52 | | U | U |
| 11/13/1993 | Zinc | 3 | PM | 1453.0 | .02342 | .00000 | 29.52 | | B | |
| 11/13/1993 | Aluminum | 4 | PM | 1450.1 | .17416 | 33.30000 | 19.97 | | | |
| 11/13/1993 | Arsenic | 4 | PM | 1450.1 | .00039 | .00057 | 19.97 | | B | |
| 11/13/1993 | Barium | 4 | PM | 1450.1 | .00443 | .52000 | 19.97 | | | U |
| 11/13/1993 | Beryllium | 4 | PM | 1450.1 | .00016 | .00100 | 19.97 | | U | U |
| 11/13/1993 | Cadmium | 4 | PM | 1450.1 | .00124 | .00140 | 19.97 | | U | U |
| 11/13/1993 | Chromium | 4 | PM | 1450.1 | .00071 | .00020 | 19.97 | | | U |
| 11/13/1993 | Manganese | 4 | PM | 1450.1 | .00615 | .42000 | 19.97 | | | |
| 11/13/1993 | Nickel | 4 | PM | 1450.1 | .00311 | .01000 | 19.97 | | U | U |
| 11/13/1993 | Phosphorus | 4 | PM | 1450.1 | .17416 | .30000 | 19.97 | | B | U |
| 11/13/1993 | Selenium | 4 | PM | 1450.1 | .01556 | .70000 | 19.97 | | U | U |
| 11/13/1993 | Silver | 4 | PM | 1450.1 | .00108 | .30000 | 19.97 | | U | U |
| 11/13/1993 | Thallium | 4 | PM | 1450.1 | .03105 | .30000 | 19.97 | | U | U |
| 11/13/1993 | Vanadium | 4 | PM | 1450.1 | .00156 | .17000 | 19.97 | | U | U |
| 11/13/1993 | Zinc | 4 | PM | 1450.1 | .00985 | .00000 | 19.97 | | B | U |
| 11/13/1993 | Aluminum | 5 | PM | 1442.6 | .14772 | 33.30000 | 17.71 | | | |
| 11/13/1993 | Arsenic | 5 | PM | 1442.6 | .00032 | .00057 | 17.71 | | B | |
| 11/13/1993 | Barium | 5 | PM | 1442.6 | .00399 | .52000 | 17.71 | | | |
| 11/13/1993 | Beryllium | 5 | PM | 1442.6 | .00016 | .00100 | 17.71 | | U | U |
| 11/13/1993 | Cadmium | 5 | PM | 1442.6 | .00127 | .00140 | 17.71 | | U | U |
| 11/13/1993 | Chromium | 5 | PM | 1442.6 | .00081 | .00020 | 17.71 | | | U |
| 11/13/1993 | Manganese | 5 | PM | 1442.6 | .00546 | .42000 | 17.71 | | | |
| 11/13/1993 | Nickel | 5 | PM | 1442.6 | .00319 | .01000 | 17.71 | | U | U |
| 11/13/1993 | Phosphorus | 5 | PM | 1442.6 | .39921 | .30000 | 17.71 | | | U |
| 11/13/1993 | Selenium | 5 | PM | 1442.6 | .01598 | .70000 | 17.71 | | U | U |
| 11/13/1993 | Silver | 5 | PM | 1442.6 | .00111 | .30000 | 17.71 | | U | U |
| 11/13/1993 | Thallium | 5 | PM | 1442.6 | .03190 | .30000 | 17.71 | | U | U |
| 11/13/1993 | Vanadium | 5 | PM | 1442.6 | .00176 | .17000 | 17.71 | | B | |
| 11/13/1993 | Zinc | 5 | PM | 1442.6 | .00802 | .00000 | 17.71 | | B | |
| 11/13/1993 | Aluminum | 6 | PM | 1441.8 | .18258 | 33.30000 | 17.57 | | | |
| 11/13/1993 | Arsenic | 6 | PM | 1441.8 | .00030 | .00057 | 17.57 | | B | |
| 11/13/1993 | Barium | 6 | PM | 1441.8 | .00365 | .52000 | 17.57 | | | |
| 11/13/1993 | Beryllium | 6 | PM | 1441.8 | .00016 | .00100 | 17.57 | | U | U |
| 11/13/1993 | Cadmium | 6 | PM | 1441.8 | .00127 | .00140 | 17.57 | | U | U |
| 11/13/1993 | Chromium | 6 | PM | 1441.8 | .00052 | .00020 | 17.57 | | | U |
| 11/13/1993 | Manganese | 6 | PM | 1441.8 | .00647 | .42000 | 17.57 | | | |
| 11/13/1993 | Nickel | 6 | PM | 1441.8 | .00318 | .01000 | 17.57 | | U | U |
| 11/13/1993 | Phosphorus | 6 | PM | 1441.8 | .13440 | .30000 | 17.57 | | B | U |
| 11/13/1993 | Selenium | 6 | PM | 1441.8 | .01591 | .70000 | 17.57 | | U | U |
| 11/13/1993 | Silver | 6 | PM | 1441.8 | .00111 | .30000 | 17.57 | | U | U |
| 11/13/1993 | Thallium | 6 | PM | 1441.8 | .03176 | .30000 | 17.57 | | U | U |
| 11/13/1993 | Vanadium | 6 | PM | 1441.8 | .00159 | .17000 | 17.57 | | U | U |
| 11/13/1993 | Zinc | 6 | PM | 1441.8 | .00742 | .00000 | 17.57 | | B | |
| 11/13/1993 | Aluminum | 7 | PM | 1439.7 | .15877 | 33.30000 | 16.15 | | | |
| 11/13/1993 | Arsenic | 7 | PM | 1439.7 | .00037 | .00057 | 16.15 | | B | |
| 11/13/1993 | Barium | 7 | PM | 1439.7 | .00334 | .52000 | 16.15 | | | |
| 11/13/1993 | Beryllium | 7 | PM | 1439.7 | .00016 | .00100 | 16.15 | | U | U |
| 11/13/1993 | Cadmium | 7 | PM | 1439.7 | .00130 | .00140 | 16.15 | | U | U |
| 11/13/1993 | Chromium | 7 | PM | 1439.7 | .00068 | .00020 | 16.15 | | | U |
| 11/13/1993 | Manganese | 7 | PM | 1439.7 | .00512 | .42000 | 16.15 | | | |
| 11/13/1993 | Nickel | 7 | PM | 1439.7 | .00326 | .01000 | 16.15 | | U | U |

| Sample Date | Chemical Name | Site # | Typ | Run Time (min.) | Chem Conc. (ug/m3) | EPA Scr. L(ug/m3) | Part.C. (ug/m3) | Grav. Val | Qual. Lab | Qual. Val |
|---|---|---|---|---|---|---|---|---|---|---|
| 11/13/1993 | Phosphorus | 7 | PM | 1439.7 | .16073 | .30000 | 16.15 | | B | U |
| 11/13/1993 | Selenium | 7 | PM | 1439.7 | .01633 | .70000 | 16.15 | | U | U |
| 11/13/1993 | Silver | 7 | PM | 1439.7 | .00114 | .30000 | 16.15 | | U | U |
| 11/13/1993 | Thallium | 7 | PM | 1439.7 | .03260 | .30000 | 16.15 | | U | U |
| 11/13/1993 | Vanadium | 7 | PM | 1439.7 | .00163 | .17000 | 16.15 | | U | U |
| 11/13/1993 | Zinc | 7 | PM | 1439.7 | .00813 | .00000 | 16.15 | | B | U |
| 11/13/1993 | Aluminum | 8 | PM | 1465.4 | .29344 | 33.30000 | 37.93 | | | |
| 11/13/1993 | Arsenic | 8 | PM | 1465.4 | .00046 | .00057 | 37.93 | | B | |
| 11/13/1993 | Barium | 8 | PM | 1465.4 | .00488 | .52000 | 37.93 | | | |
| 11/13/1993 | Beryllium | 8 | PM | 1465.4 | .00016 | .00100 | 37.93 | | U | U |
| 11/13/1993 | Cadmium | 8 | PM | 1465.4 | .00154 | .00140 | 37.93 | | | |
| 11/13/1993 | Chromium | 8 | PM | 1465.4 | .00226 | .00020 | 37.93 | | | |
| 11/13/1993 | Manganese | 8 | PM | 1465.4 | .00754 | .42000 | 37.93 | | | |
| 11/13/1993 | Nickel | 8 | PM | 1465.4 | .00320 | .01000 | 37.93 | | U | U |
| 11/13/1993 | Phosphorus | 8 | PM | 1465.4 | .83749 | .30000 | 37.93 | | | |
| 11/13/1993 | Selenium | 8 | PM | 1465.4 | .01605 | .70000 | 37.93 | | U | U |
| 11/13/1993 | Silver | 8 | PM | 1465.4 | .00112 | .30000 | 37.93 | | U | U |
| 11/13/1993 | Thallium | 8 | PM | 1465.4 | .03203 | .30000 | 37.93 | | U | U |
| 11/13/1993 | Vanadium | 8 | PM | 1465.4 | .00219 | .17000 | 37.93 | | B | |
| 11/13/1993 | Zinc | 8 | PM | 1465.4 | .01637 | .00000 | 37.93 | | B | |
| 11/17/1993 | Aluminum | 1 | PM | 1448.8 | .15757 | 33.30000 | 16.36 | | | |
| 11/17/1993 | Arsenic | 1 | PM | 1448.8 | .00143 | .00057 | 16.36 | | | |
| 11/17/1993 | Barium | 1 | PM | 1448.8 | .00535 | .52000 | 16.36 | | | U |
| 11/17/1993 | Beryllium | 1 | PM | 1448.8 | .00016 | .00100 | 16.36 | | U | U |
| 11/17/1993 | Cadmium | 1 | PM | 1448.8 | .00131 | .00140 | 16.36 | | U | U |
| 11/17/1993 | Chromium | 1 | PM | 1448.8 | .00139 | .00020 | 16.36 | | | U |
| 11/17/1993 | Manganese | 1 | PM | 1448.8 | .00645 | .42000 | 16.36 | | | |
| 11/17/1993 | Nickel | 1 | PM | 1448.8 | .00329 | .01000 | 16.36 | | U | U |
| 11/17/1993 | Phosphorus | 1 | PM | 1448.8 | .33877 | .30000 | 16.36 | | | U |
| 11/17/1993 | Selenium | 1 | PM | 1448.8 | .01648 | .70000 | 16.36 | | U | U |
| 11/17/1993 | Silver | 1 | PM | 1448.8 | .00115 | .30000 | 16.36 | | U | U |
| 11/17/1993 | Thallium | 1 | PM | 1448.8 | .03289 | .30000 | 16.36 | | U | U |
| 11/17/1993 | Vanadium | 1 | PM | 1448.8 | .00165 | .17000 | 16.36 | | U | U |
| 11/17/1993 | Zinc | 1 | PM | 1448.8 | .01254 | .00000 | 16.36 | | B | |
| 11/17/1993 | Aluminum | 2 | PM | 1445.0 | .45110 | 33.30000 | 48.16 | | | |
| 11/17/1993 | Arsenic | 2 | PM | 1445.0 | .00199 | .00057 | 48.16 | | | |
| 11/17/1993 | Barium | 2 | PM | 1445.0 | .00900 | .52000 | 48.16 | | | J |
| 11/17/1993 | Beryllium | 2 | PM | 1445.0 | .00023 | .00100 | 48.16 | | B | |
| 11/17/1993 | Cadmium | 2 | PM | 1445.0 | .00821 | .00140 | 48.16 | | | |
| 11/17/1993 | Chromium | 2 | PM | 1445.0 | .02173 | .00020 | 48.16 | | | |
| 11/17/1993 | Manganese | 2 | PM | 1445.0 | .01458 | .42000 | 48.16 | | | |
| 11/17/1993 | Nickel | 2 | PM | 1445.0 | .00634 | .01000 | 48.16 | | B | U |
| 11/17/1993 | Phosphorus | 2 | PM | 1445.0 | 2.37043 | .30000 | 48.16 | | | |
| 11/17/1993 | Selenium | 2 | PM | 1445.0 | .01648 | .70000 | 48.16 | | U | U |
| 11/17/1993 | Silver | 2 | PM | 1445.0 | .00131 | .30000 | 48.16 | | B | |
| 11/17/1993 | Thallium | 2 | PM | 1445.0 | .03290 | .30000 | 48.16 | | U | U |
| 11/17/1993 | Vanadium | 2 | PM | 1445.0 | .02535 | .17000 | 48.16 | | | |
| 11/17/1993 | Zinc | 2 | PM | 1445.0 | .05004 | .00000 | 48.16 | | B | |
| 11/17/1993 | Aluminum | 3 | PM | 1455.6 | .10495 | 33.30000 | 13.63 | | | |
| 11/17/1993 | Arsenic | 3 | PM | 1455.6 | .00139 | .00057 | 13.63 | | | |
| 11/17/1993 | Barium | 3 | PM | 1455.6 | .00359 | .52000 | 13.63 | | | J |
| 11/17/1993 | Beryllium | 3 | PM | 1455.6 | .00016 | .00100 | 13.63 | | U | U |
| 11/17/1993 | Cadmium | 3 | PM | 1455.6 | .00130 | .00140 | 13.63 | | U | U |
| 11/17/1993 | Chromium | 3 | PM | 1455.6 | .00138 | .00020 | 13.63 | | | U |
| 11/17/1993 | Manganese | 3 | PM | 1455.6 | .00531 | .42000 | 13.63 | | | |

| Sample Date | Chemical Name | Site # | Typ | Run Time (min.) | Chem Conc. (ug/m3) | EPA Scr. L(ug/m3) | Part.C. (ug/m3) | Grav. Val | Qual. Lab | Qual. Val |
|---|---|---|---|---|---|---|---|---|---|---|
| 11/17/1993 | Nickel | 3 | PM | 1455.6 | .00327 | .01000 | 13.63 | | U | U |
| 11/17/1993 | Phosphorus | 3 | PM | 1455.6 | .25487 | .30000 | 13.63 | | B | U |
| 11/17/1993 | Selenium | 3 | PM | 1455.6 | .01636 | .70000 | 13.63 | | U | U |
| 11/17/1993 | Silver | 3 | PM | 1455.6 | .00114 | .30000 | 13.63 | | U | U |
| 11/17/1993 | Thallium | 3 | PM | 1455.6 | .03266 | .30000 | 13.63 | | U | U |
| 11/17/1993 | Vanadium | 3 | PM | 1455.6 | .00164 | .17000 | 13.63 | | U | U |
| 11/17/1993 | Zinc | 3 | PM | 1455.6 | .00913 | .00000 | 13.63 | | B | U |
| 11/17/1993 | Aluminum | 4 | PM | 1448.1 | .01108 | 33.30000 | 21.80 | | U | U |
| 11/17/1993 | Arsenic | 4 | PM | 1448.1 | .00148 | .00057 | 21.80 | | | |
| 11/17/1993 | Barium | 4 | PM | 1448.1 | .00159 | .52000 | 21.80 | | U | U |
| 11/17/1993 | Beryllium | 4 | PM | 1448.1 | .00016 | .00100 | 21.80 | | U | U |
| 11/17/1993 | Cadmium | 4 | PM | 1448.1 | .00127 | .00140 | 21.80 | | U | U |
| 11/17/1993 | Chromium | 4 | PM | 1448.1 | .00143 | .00020 | 21.80 | | | U |
| 11/17/1993 | Manganese | 4 | PM | 1448.1 | .00893 | .42000 | 21.80 | | | |
| 11/17/1993 | Nickel | 4 | PM | 1448.1 | .00317 | .01000 | 21.80 | | U | U |
| 11/17/1993 | Phosphorus | 4 | PM | 1448.1 | .20645 | .30000 | 21.80 | | B | U |
| 11/17/1993 | Selenium | 4 | PM | 1448.1 | .01590 | .70000 | 21.80 | | U | U |
| 11/17/1993 | Silver | 4 | PM | 1448.1 | .00111 | .30000 | 21.80 | | U | U |
| 11/17/1993 | Thallium | 4 | PM | 1448.1 | .03173 | .30000 | 21.80 | | U | U |
| 11/17/1993 | Vanadium | 4 | PM | 1448.1 | .00159 | .17000 | 21.80 | | U | U |
| 11/17/1993 | Zinc | 4 | PM | 1448.1 | .01298 | .00000 | 21.80 | | B | U |
| 11/17/1993 | Aluminum | 5 | PM | 1444.0 | .23561 | 33.30000 | 17.40 | | | |
| 11/17/1993 | Arsenic | 5 | PM | 1444.0 | .00160 | .00057 | 17.40 | | | |
| 11/17/1993 | Barium | 5 | PM | 1444.0 | .00456 | .52000 | 17.40 | | | U |
| 11/17/1993 | Beryllium | 5 | PM | 1444.0 | .00016 | .00100 | 17.40 | | U | U |
| 11/17/1993 | Cadmium | 5 | PM | 1444.0 | .00195 | .00140 | 17.40 | | | |
| 11/17/1993 | Chromium | 5 | PM | 1444.0 | .00174 | .00020 | 17.40 | | | U |
| 11/17/1993 | Manganese | 5 | PM | 1444.0 | .00948 | .42000 | 17.40 | | | |
| 11/17/1993 | Nickel | 5 | PM | 1444.0 | .00325 | .01000 | 17.40 | | U | U |
| 11/17/1993 | Phosphorus | 5 | PM | 1444.0 | .59518 | .30000 | 17.40 | | | U |
| 11/17/1993 | Selenium | 5 | PM | 1444.0 | .01629 | .70000 | 17.40 | | U | U |
| 11/17/1993 | Silver | 5 | PM | 1444.0 | .00114 | .30000 | 17.40 | | U | U |
| 11/17/1993 | Thallium | 5 | PM | 1444.0 | .03252 | .30000 | 17.40 | | U | U |
| 11/17/1993 | Vanadium | 5 | PM | 1444.0 | .00163 | .17000 | 17.40 | | U | U |
| 11/17/1993 | Zinc | 5 | PM | 1444.0 | .01389 | .00000 | 17.40 | | B | |
| 11/17/1993 | Aluminum | 6 | PM | 1442.2 | .35956 | 33.30000 | 22.97 | | | |
| 11/17/1993 | Arsenic | 6 | PM | 1442.2 | .00127 | .00057 | 22.97 | | | |
| 11/17/1993 | Barium | 6 | PM | 1442.2 | .00567 | .52000 | 22.97 | | | U |
| 11/17/1993 | Beryllium | 6 | PM | 1442.2 | .00016 | .00100 | 22.97 | | U | U |
| 11/17/1993 | Cadmium | 6 | PM | 1442.2 | .00129 | .00140 | 22.97 | | U | U |
| 11/17/1993 | Chromium | 6 | PM | 1442.2 | .00082 | .00020 | 22.97 | | | U |
| 11/17/1993 | Manganese | 6 | PM | 1442.2 | .01410 | .42000 | 22.97 | | | |
| 11/17/1993 | Nickel | 6 | PM | 1442.2 | .00324 | .01000 | 22.97 | | U | U |
| 11/17/1993 | Phosphorus | 6 | PM | 1442.2 | .16361 | .30000 | 22.97 | | B | U |
| 11/17/1993 | Selenium | 6 | PM | 1442.2 | .01623 | .70000 | 22.97 | | U | U |
| 11/17/1993 | Silver | 6 | PM | 1442.2 | .00113 | .30000 | 22.97 | | U | U |
| 11/17/1993 | Thallium | 6 | PM | 1442.2 | .03240 | .30000 | 22.97 | | U | U |
| 11/17/1993 | Vanadium | 6 | PM | 1442.2 | .00162 | .17000 | 22.97 | | U | U |
| 11/17/1993 | Zinc | 6 | PM | 1442.2 | .00598 | .00000 | 22.97 | | B | U |
| 11/17/1993 | Aluminum | 7 | PM | 1439.9 | .09494 | 33.30000 | 10.96 | P | | |
| 11/17/1993 | Arsenic | 7 | PM | 1439.9 | .00170 | .00057 | 10.96 | P | | |
| 11/17/1993 | Barium | 7 | PM | 1439.9 | .00408 | .52000 | 10.96 | P | | |
| 11/17/1993 | Beryllium | 7 | PM | 1439.9 | .00017 | .00100 | 10.96 | P | U | U |
| 11/17/1993 | Cadmium | 7 | PM | 1439.9 | .00208 | .00140 | 10.96 | P | | |
| 11/17/1993 | Chromium | 7 | PM | 1439.9 | .00221 | .00020 | 10.96 | P | | |

| Sample Date | Chemical Name | Site # | Typ | Run Time (min.) | Chem Conc. (ug/m3) | EPA Scr. L(ug/m3) | Part.C. (ug/m3) | Grav. Val | Qual. Lab | Qual. Val |
|---|---|---|---|---|---|---|---|---|---|---|
| 11/17/1993 | Manganese | 7 | PM | 1439.9 | .00436 | .42000 | 10.96 | P | | |
| 11/17/1993 | Nickel | 7 | PM | 1439.9 | .00333 | .01000 | 10.96 | P | U | U |
| 11/17/1993 | Phosphorus | 7 | PM | 1439.9 | .70372 | .30000 | 10.96 | P | | U |
| 11/17/1993 | Selenium | 7 | PM | 1439.9 | .01666 | .70000 | 10.96 | P | U | U |
| 11/17/1993 | Silver | 7 | PM | 1439.9 | .00116 | .30000 | 10.96 | P | U | U |
| 11/17/1993 | Thallium | 7 | PM | 1439.9 | .03326 | .30000 | 10.96 | P | U | U |
| 11/17/1993 | Vanadium | 7 | PM | 1439.9 | .00167 | .17000 | 10.96 | P | U | U |
| 11/17/1993 | Zinc | 7 | PM | 1439.9 | .01295 | .00000 | 10.96 | P | B | |
| 11/17/1993 | Aluminum | 8 | PM | 1461.1 | .14066 | 33.30000 | 16.69 | | | |
| 11/17/1993 | Arsenic | 8 | PM | 1461.1 | .00141 | .00057 | 16.69 | | | |
| 11/17/1993 | Barium | 8 | PM | 1461.1 | .00557 | .52000 | 16.69 | | | |
| 11/17/1993 | Beryllium | 8 | PM | 1461.1 | .00016 | .00100 | 16.69 | | U | U |
| 11/17/1993 | Cadmium | 8 | PM | 1461.1 | .00131 | .00140 | 16.69 | | U | U |
| 11/17/1993 | Chromium | 8 | PM | 1461.1 | .00154 | .00020 | 16.69 | | | U |
| 11/17/1993 | Manganese | 8 | PM | 1461.1 | .00603 | .42000 | 16.69 | | | |
| 11/17/1993 | Nickel | 8 | PM | 1461.1 | .00328 | .01000 | 16.69 | | U | U |
| 11/17/1993 | Phosphorus | 8 | PM | 1461.1 | .29507 | .30000 | 16.69 | | B | U |
| 11/17/1993 | Selenium | 8 | PM | 1461.1 | .01642 | .70000 | 16.69 | | U | U |
| 11/17/1993 | Silver | 8 | PM | 1461.1 | .00114 | .30000 | 16.69 | | U | U |
| 11/17/1993 | Thallium | 8 | PM | 1461.1 | .03278 | .30000 | 16.69 | | U | U |
| 11/17/1993 | Vanadium | 8 | PM | 1461.1 | .00164 | .17000 | 16.69 | | U | U |
| 11/17/1993 | Zinc | 8 | PM | 1461.1 | .01210 | .00000 | 16.69 | | B | |
| 11/21/1993 | Aluminum | 1 | PM | 1451.9 | .19314 | 33.30000 | 19.00 | | | |
| 11/21/1993 | Arsenic | 1 | PM | 1451.9 | .00275 | .00057 | 19.00 | | | |
| 11/21/1993 | Barium | 1 | PM | 1451.9 | .00666 | .52000 | 19.00 | | | U |
| 11/21/1993 | Beryllium | 1 | PM | 1451.9 | .00016 | .00100 | 19.00 | | U | U |
| 11/21/1993 | Cadmium | 1 | PM | 1451.9 | .00221 | .00140 | 19.00 | | | |
| 11/21/1993 | Chromium | 1 | PM | 1451.9 | .00275 | .00020 | 19.00 | | | |
| 11/21/1993 | Manganese | 1 | PM | 1451.9 | .00679 | .42000 | 19.00 | | | |
| 11/21/1993 | Nickel | 1 | PM | 1451.9 | .00327 | .01000 | 19.00 | | U | U |
| 11/21/1993 | Phosphorus | 1 | PM | 1451.9 | .46459 | .30000 | 19.00 | | | U |
| 11/21/1993 | Selenium | 1 | PM | 1451.9 | .01638 | .70000 | 19.00 | | U | U |
| 11/21/1993 | Silver | 1 | PM | 1451.9 | .00114 | .30000 | 19.00 | | U | U |
| 11/21/1993 | Thallium | 1 | PM | 1451.9 | .03269 | .30000 | 19.00 | | U | U |
| 11/21/1993 | Vanadium | 1 | PM | 1451.9 | .00253 | .17000 | 19.00 | | B | |
| 11/21/1993 | Zinc | 1 | PM | 1451.9 | .01155 | .00000 | 19.00 | | B | |
| 11/21/1993 | Aluminum | 2 | PM | 1450.8 | .62338 | 33.30000 | 53.19 | | | |
| 11/21/1993 | Arsenic | 2 | PM | 1450.8 | .00313 | .00057 | 53.19 | | | |
| 11/21/1993 | Barium | 2 | PM | 1450.8 | .01107 | .52000 | 53.19 | | | |
| 11/21/1993 | Beryllium | 2 | PM | 1450.8 | .00020 | .00100 | 53.19 | | B | |
| 11/21/1993 | Cadmium | 2 | PM | 1450.8 | .01498 | .00140 | 53.19 | | | |
| 11/21/1993 | Chromium | 2 | PM | 1450.8 | .02189 | .00020 | 53.19 | | | |
| 11/21/1993 | Manganese | 2 | PM | 1450.8 | .01681 | .42000 | 53.19 | | | |
| 11/21/1993 | Nickel | 2 | PM | 1450.8 | .00782 | .01000 | 53.19 | | B | |
| 11/21/1993 | Phosphorus | 2 | PM | 1450.8 | 2.48180 | .30000 | 53.19 | | | |
| 11/21/1993 | Selenium | 2 | PM | 1450.8 | .01635 | .70000 | 53.19 | | U | U |
| 11/21/1993 | Silver | 2 | PM | 1450.8 | .00114 | .30000 | 53.19 | | U | U |
| 11/21/1993 | Thallium | 2 | PM | 1450.8 | .03263 | .30000 | 53.19 | | U | U |
| 11/21/1993 | Vanadium | 2 | PM | 1450.8 | .03641 | .17000 | 53.19 | | | |
| 11/21/1993 | Zinc | 2 | PM | 1450.8 | .05941 | .00000 | 53.19 | | B | |
| 11/21/1993 | Aluminum | 3 | PM | 1454.5 | .15854 | 33.30000 | 12.35 | | | |
| 11/21/1993 | Arsenic | 3 | PM | 1454.5 | .00339 | .00057 | 12.35 | | | |
| 11/21/1993 | Barium | 3 | PM | 1454.5 | .00431 | .52000 | 12.35 | | | U |
| 11/21/1993 | Beryllium | 3 | PM | 1454.5 | .00016 | .00100 | 12.35 | | U | U |
| 11/21/1993 | Cadmium | 3 | PM | 1454.5 | .00130 | .00140 | 12.35 | | U | U |

| Sample Date | Chemical Name | Site # | Typ | Run Time (min.) | Chem Conc. (ug/m3) | EPA Scr. L(ug/m3) | Part.C. (ug/m3) | Grav. Val | Qual. Lab | Qual. Val |
|---|---|---|---|---|---|---|---|---|---|---|
| 11/21/1993 | Chromium | 3 | PM | 1454.5 | .00079 | .00020 | 12.35 | | | U |
| 11/21/1993 | Manganese | 3 | PM | 1454.5 | .00650 | .42000 | 12.35 | | | |
| 11/21/1993 | Nickel | 3 | PM | 1454.5 | .00326 | .01000 | 12.35 | | U | U |
| 11/21/1993 | Phosphorus | 3 | PM | 1454.5 | .19687 | .30000 | 12.35 | | B | U |
| 11/21/1993 | Selenium | 3 | PM | 1454.5 | .01631 | .70000 | 12.35 | | U | U |
| 11/21/1993 | Silver | 3 | PM | 1454.5 | .00114 | .30000 | 12.35 | | B | |
| 11/21/1993 | Thallium | 3 | PM | 1454.5 | .03255 | .30000 | 12.35 | | U | U |
| 11/21/1993 | Vanadium | 3 | PM | 1454.5 | .00163 | .17000 | 12.35 | | U | U |
| 11/21/1993 | Zinc | 3 | PM | 1454.5 | .00715 | .00000 | 12.35 | | B | U |
| 11/21/1993 | Aluminum | 4 | PM | 1449.2 | .25589 | 33.30000 | 22.70 | | | |
| 11/21/1993 | Arsenic | 4 | PM | 1449.2 | .00300 | .00057 | 22.70 | | | |
| 11/21/1993 | Barium | 4 | PM | 1449.2 | .00553 | .52000 | 22.70 | | | J |
| 11/21/1993 | Beryllium | 4 | PM | 1449.2 | .00016 | .00100 | 22.70 | | U | U |
| 11/21/1993 | Cadmium | 4 | PM | 1449.2 | .00126 | .00140 | 22.70 | | U | U |
| 11/21/1993 | Chromium | 4 | PM | 1449.2 | .00142 | .00020 | 22.70 | | | U |
| 11/21/1993 | Manganese | 4 | PM | 1449.2 | .01021 | .42000 | 22.70 | | | |
| 11/21/1993 | Nickel | 4 | PM | 1449.2 | .00316 | .01000 | 22.70 | | U | U |
| 11/21/1993 | Phosphorus | 4 | PM | 1449.2 | .22879 | .30000 | 22.70 | | B | U |
| 11/21/1993 | Selenium | 4 | PM | 1449.2 | .01582 | .70000 | 22.70 | | U | U |
| 11/21/1993 | Silver | 4 | PM | 1449.2 | .00110 | .30000 | 22.70 | | U | U |
| 11/21/1993 | Thallium | 4 | PM | 1449.2 | .03158 | .30000 | 22.70 | | U | U |
| 11/21/1993 | Vanadium | 4 | PM | 1449.2 | .00204 | .17000 | 22.70 | | B | |
| 11/21/1993 | Zinc | 4 | PM | 1449.2 | .01078 | .00000 | 22.70 | | B | U |
| 11/21/1993 | Aluminum | 5 | PM | 1438.6 | .31730 | 33.30000 | 18.31 | | | |
| 11/21/1993 | Arsenic | 5 | PM | 1438.6 | .00189 | .00057 | 18.31 | | | |
| 11/21/1993 | Barium | 5 | PM | 1438.6 | .00301 | .52000 | 18.31 | | | J |
| 11/21/1993 | Beryllium | 5 | PM | 1438.6 | .00016 | .00100 | 18.31 | | U | U |
| 11/21/1993 | Cadmium | 5 | PM | 1438.6 | .00219 | .00140 | 18.31 | | | |
| 11/21/1993 | Chromium | 5 | PM | 1438.6 | .00147 | .00020 | 18.31 | | | U |
| 11/21/1993 | Manganese | 5 | PM | 1438.6 | .01123 | .42000 | 18.31 | | | |
| 11/21/1993 | Nickel | 5 | PM | 1438.6 | .00325 | .01000 | 18.31 | | U | U |
| 11/21/1993 | Phosphorus | 5 | PM | 1438.6 | .36078 | .30000 | 18.31 | | | U |
| 11/21/1993 | Selenium | 5 | PM | 1438.6 | .01629 | .70000 | 18.31 | | U | U |
| 11/21/1993 | Silver | 5 | PM | 1438.6 | .00114 | .30000 | 18.31 | | U | U |
| 11/21/1993 | Thallium | 5 | PM | 1438.6 | .03251 | .30000 | 18.31 | | U | U |
| 11/21/1993 | Vanadium | 5 | PM | 1438.6 | .00163 | .17000 | 18.31 | | U | U |
| 11/21/1993 | Zinc | 5 | PM | 1438.6 | .00746 | .00000 | 18.31 | | B | U |
| 11/21/1993 | Aluminum | 6 | PM | 1439.3 | .33626 | 33.30000 | 20.54 | | | |
| 11/21/1993 | Arsenic | 6 | PM | 1439.3 | .00375 | .00057 | 20.54 | | | |
| 11/21/1993 | Barium | 6 | PM | 1439.3 | .00469 | .52000 | 20.54 | | | J |
| 11/21/1993 | Beryllium | 6 | PM | 1439.3 | .00016 | .00100 | 20.54 | | U | U |
| 11/21/1993 | Cadmium | 6 | PM | 1439.3 | .00129 | .00140 | 20.54 | | U | U |
| 11/21/1993 | Chromium | 6 | PM | 1439.3 | .00114 | .00020 | 20.54 | | | U |
| 11/21/1993 | Manganese | 6 | PM | 1439.3 | .01278 | .42000 | 20.54 | | | |
| 11/21/1993 | Nickel | 6 | PM | 1439.3 | .00323 | .01000 | 20.54 | | U | U |
| 11/21/1993 | Phosphorus | 6 | PM | 1439.3 | .20072 | .30000 | 20.54 | | B | U |
| 11/21/1993 | Selenium | 6 | PM | 1439.3 | .01620 | .70000 | 20.54 | | U | U |
| 11/21/1993 | Silver | 6 | PM | 1439.3 | .00113 | .30000 | 20.54 | | U | U |
| 11/21/1993 | Thallium | 6 | PM | 1439.3 | .03234 | .30000 | 20.54 | | U | U |
| 11/21/1993 | Vanadium | 6 | PM | 1439.3 | .00162 | .17000 | 20.54 | | U | U |
| 11/21/1993 | Zinc | 6 | PM | 1439.3 | .00579 | .00000 | 20.54 | | B | U |
| 11/21/1993 | Aluminum | 7 | PM | 1392.2 | .04938 | 33.30000 | 5.20 | | | U |
| 11/21/1993 | Arsenic | 7 | PM | 1392.2 | .00111 | .00057 | 5.20 | | | |
| 11/21/1993 | Barium | 7 | PM | 1392.2 | .00308 | .52000 | 5.20 | | | |
| 11/21/1993 | Beryllium | 7 | PM | 1392.2 | .00017 | .00100 | 5.20 | | U | U |

| Sample Date | Chemical Name | Site # | Typ | Run Time (min.) | Chem Conc. (ug/m3) | EPA Scr. L(ug/m3) | Part.C. (ug/m3) | Grav. Val | Qual. Lab | Qual. Val |
|---|---|---|---|---|---|---|---|---|---|---|
| 11/21/1993 | Cadmium | 7 | PM | 1392.2 | .00137 | .00140 | 5.20 | | U | U |
| 11/21/1993 | Chromium | 7 | PM | 1392.2 | .00088 | .00020 | 5.20 | | | U |
| 11/21/1993 | Manganese | 7 | PM | 1392.2 | .00211 | .42000 | 5.20 | | | |
| 11/21/1993 | Nickel | 7 | PM | 1392.2 | .00343 | .01000 | 5.20 | | U | U |
| 11/21/1993 | Phosphorus | 7 | PM | 1392.2 | .29134 | .30000 | 5.20 | | B | U |
| 11/21/1993 | Selenium | 7 | PM | 1392.2 | .01717 | .70000 | 5.20 | | U | U |
| 11/21/1993 | Silver | 7 | PM | 1392.2 | .00120 | .30000 | 5.20 | | U | U |
| 11/21/1993 | Thallium | 7 | PM | 1392.2 | .03426 | .30000 | 5.20 | | U | U |
| 11/21/1993 | Vanadium | 7 | PM | 1392.2 | .00172 | .17000 | 5.20 | | U | U |
| 11/21/1993 | Zinc | 7 | PM | 1392.2 | .00384 | .00000 | 5.20 | | B | U |
| 11/21/1993 | Aluminum | 8 | PM | 1464.0 | .19250 | 33.30000 | 19.13 | | | |
| 11/21/1993 | Arsenic | 8 | PM | 1464.0 | .00279 | .00057 | 19.13 | | | |
| 11/21/1993 | Barium | 8 | PM | 1464.0 | .00702 | .52000 | 19.13 | | | |
| 11/21/1993 | Beryllium | 8 | PM | 1464.0 | .00016 | .00100 | 19.13 | | U | U |
| 11/21/1993 | Cadmium | 8 | PM | 1464.0 | .00213 | .00140 | 19.13 | | | |
| 11/21/1993 | Chromium | 8 | PM | 1464.0 | .00243 | .00020 | 19.13 | | | |
| 11/21/1993 | Manganese | 8 | PM | 1464.0 | .00683 | .42000 | 19.13 | | | |
| 11/21/1993 | Nickel | 8 | PM | 1464.0 | .00326 | .01000 | 19.13 | | U | U |
| 11/21/1993 | Phosphorus | 8 | PM | 1464.0 | .48256 | .30000 | 19.13 | | | U |
| 11/21/1993 | Selenium | 8 | PM | 1464.0 | .01632 | .70000 | 19.13 | | U | U |
| 11/21/1993 | Silver | 8 | PM | 1464.0 | .00114 | .30000 | 19.13 | | U | U |
| 11/21/1993 | Thallium | 8 | PM | 1464.0 | .03258 | .30000 | 19.13 | | U | U |
| 11/21/1993 | Vanadium | 8 | PM | 1464.0 | .00243 | .17000 | 19.13 | | B | |
| 11/21/1993 | Zinc | 8 | PM | 1464.0 | .01151 | .00000 | 19.13 | | B | |
| 11/25/1993 | Aluminum | 1 | PM | 1450.6 | .04716 | 33.30000 | 58.72 | | | U |
| 11/25/1993 | Arsenic | 1 | PM | 1450.6 | .00026 | .00057 | 58.72 | | B | |
| 11/25/1993 | Barium | 1 | PM | 1450.6 | .00350 | .52000 | 58.72 | | | J |
| 11/25/1993 | Beryllium | 1 | PM | 1450.6 | .00015 | .00100 | 58.72 | | U | U |
| 11/25/1993 | Cadmium | 1 | PM | 1450.6 | .00291 | .00140 | 58.72 | | | |
| 11/25/1993 | Chromium | 1 | PM | 1450.6 | .00149 | .00020 | 58.72 | | | U |
| 11/25/1993 | Manganese | 1 | PM | 1450.6 | .00295 | .42000 | 58.72 | | | |
| 11/25/1993 | Nickel | 1 | PM | 1450.6 | .00304 | .01000 | 58.72 | | U | U |
| 11/25/1993 | Phosphorus | 1 | PM | 1450.6 | .60508 | .30000 | 58.72 | | | U |
| 11/25/1993 | Selenium | 1 | PM | 1450.6 | .01523 | .70000 | 58.72 | | U | U |
| 11/25/1993 | Silver | 1 | PM | 1450.6 | .00106 | .30000 | 58.72 | | U | U |
| 11/25/1993 | Thallium | 1 | PM | 1450.6 | .03041 | .30000 | 58.72 | | U | U |
| 11/25/1993 | Vanadium | 1 | PM | 1450.6 | .00155 | .17000 | 58.72 | | B | |
| 11/25/1993 | Zinc | 1 | PM | 1450.6 | .02282 | .00000 | 58.72 | | B | |
| 11/25/1993 | Aluminum | 2 | PM | 1441.3 | .03193 | 33.30000 | 44.75 | | B | U |
| 11/25/1993 | Arsenic | 2 | PM | 1441.3 | .00015 | .00057 | 44.75 | | U | U |
| 11/25/1993 | Barium | 2 | PM | 1441.3 | .00298 | .52000 | 44.75 | | | J |
| 11/25/1993 | Beryllium | 2 | PM | 1441.3 | .00015 | .00100 | 44.75 | | U | U |
| 11/25/1993 | Cadmium | 2 | PM | 1441.3 | .00229 | .00140 | 44.75 | | | |
| 11/25/1993 | Chromium | 2 | PM | 1441.3 | .00134 | .00020 | 44.75 | | | U |
| 11/25/1993 | Manganese | 2 | PM | 1441.3 | .00227 | .42000 | 44.75 | | | |
| 11/25/1993 | Nickel | 2 | PM | 1441.3 | .00305 | .01000 | 44.75 | | U | U |
| 11/25/1993 | Phosphorus | 2 | PM | 1441.3 | .55873 | .30000 | 44.75 | | | U |
| 11/25/1993 | Selenium | 2 | PM | 1441.3 | .01529 | .70000 | 44.75 | | U | U |
| 11/25/1993 | Silver | 2 | PM | 1441.3 | .00107 | .30000 | 44.75 | | U | U |
| 11/25/1993 | Thallium | 2 | PM | 1441.3 | .03053 | .30000 | 44.75 | | U | U |
| 11/25/1993 | Vanadium | 2 | PM | 1441.3 | .00153 | .17000 | 44.75 | | U | U |
| 11/25/1993 | Zinc | 2 | PM | 1441.3 | .01590 | .00000 | 44.75 | | B | |
| 11/25/1993 | Aluminum | 3 | PM | 1455.8 | .03505 | 33.30000 | 67.42 | | | U |
| 11/25/1993 | Arsenic | 3 | PM | 1455.8 | .00032 | .00057 | 67.42 | | B | |
| 11/25/1993 | Barium | 3 | PM | 1455.8 | .00219 | .52000 | 67.42 | | | J |

| Sample Date | Chemical Name | Site # | Typ | Run Time (min.) | Chem Conc. (ug/m3) | EPA Scr. L(ug/m3) | Part.C. (ug/m3) | Grav. Val | Qual. Lab | Qual. Val |
|---|---|---|---|---|---|---|---|---|---|---|
| 11/25/1993 | Beryllium | 3 | PM | 1455.8 | .00015 | .00100 | 67.42 | | U | U |
| 11/25/1993 | Cadmium | 3 | PM | 1455.8 | .00358 | .00140 | 67.42 | | | |
| 11/25/1993 | Chromium | 3 | PM | 1455.8 | .00113 | .00020 | 67.42 | | | U |
| 11/25/1993 | Manganese | 3 | PM | 1455.8 | .00361 | .42000 | 67.42 | | | |
| 11/25/1993 | Nickel | 3 | PM | 1455.8 | .00302 | .01000 | 67.42 | | U | U |
| 11/25/1993 | Phosphorus | 3 | PM | 1455.8 | .60143 | .30000 | 67.42 | | | U |
| 11/25/1993 | Selenium | 3 | PM | 1455.8 | .01514 | .70000 | 67.42 | | U | U |
| 11/25/1993 | Silver | 3 | PM | 1455.8 | .00106 | .30000 | 67.42 | | U | U |
| 11/25/1993 | Thallium | 3 | PM | 1455.8 | .03022 | .30000 | 67.42 | | U | U |
| 11/25/1993 | Vanadium | 3 | PM | 1455.8 | .00151 | .17000 | 67.42 | | U | U |
| 11/25/1993 | Zinc | 3 | PM | 1455.8 | .02359 | .00000 | 67.42 | | B | |
| 11/25/1993 | Aluminum | 4 | PM | 1445.7 | .04503 | 33.30000 | 72.73 | | | U |
| 11/25/1993 | Arsenic | 4 | PM | 1445.7 | .00045 | .00057 | 72.73 | | B | |
| 11/25/1993 | Barium | 4 | PM | 1445.7 | .00272 | .52000 | 72.73 | | | J |
| 11/25/1993 | Beryllium | 4 | PM | 1445.7 | .00015 | .00100 | 72.73 | | U | U |
| 11/25/1993 | Cadmium | 4 | PM | 1445.7 | .00244 | .00140 | 72.73 | | | |
| 11/25/1993 | Chromium | 4 | PM | 1445.7 | .00133 | .00020 | 72.73 | | | U |
| 11/25/1993 | Manganese | 4 | PM | 1445.7 | .00413 | .42000 | 72.73 | | | |
| 11/25/1993 | Nickel | 4 | PM | 1445.7 | .00294 | .01000 | 72.73 | | U | U |
| 11/25/1993 | Phosphorus | 4 | PM | 1445.7 | .47673 | .30000 | 72.73 | | | U |
| 11/25/1993 | Selenium | 4 | PM | 1445.7 | .01474 | .70000 | 72.73 | | U | U |
| 11/25/1993 | Silver | 4 | PM | 1445.7 | .00103 | .30000 | 72.73 | | U | U |
| 11/25/1993 | Thallium | 4 | PM | 1445.7 | .02941 | .30000 | 72.73 | | U | U |
| 11/25/1993 | Vanadium | 4 | PM | 1445.7 | .00147 | .17000 | 72.73 | | U | U |
| 11/25/1993 | Zinc | 4 | PM | 1445.7 | .03076 | .00000 | 72.73 | | B | |
| 11/25/1993 | Aluminum | 5 | PM | 1444.0 | .04560 | 33.30000 | 40.39 | | | U |
| 11/25/1993 | Arsenic | 5 | PM | 1444.0 | .00015 | .00057 | 40.39 | | U | U |
| 11/25/1993 | Barium | 5 | PM | 1444.0 | .00188 | .52000 | 40.39 | | | |
| 11/25/1993 | Beryllium | 5 | PM | 1444.0 | .00015 | .00100 | 40.39 | | U | U |
| 11/25/1993 | Cadmium | 5 | PM | 1444.0 | .00351 | .00140 | 40.39 | | | |
| 11/25/1993 | Chromium | 5 | PM | 1444.0 | .00114 | .00020 | 40.39 | | | U |
| 11/25/1993 | Manganese | 5 | PM | 1444.0 | .00151 | .42000 | 40.39 | | B | |
| 11/25/1993 | Nickel | 5 | PM | 1444.0 | .00301 | .01000 | 40.39 | | U | U |
| 11/25/1993 | Phosphorus | 5 | PM | 1444.0 | .91912 | .30000 | 40.39 | | | |
| 11/25/1993 | Selenium | 5 | PM | 1444.0 | .01508 | .70000 | 40.39 | | U | U |
| 11/25/1993 | Silver | 5 | PM | 1444.0 | .00105 | .30000 | 40.39 | | U | U |
| 11/25/1993 | Thallium | 5 | PM | 1444.0 | .03010 | .30000 | 40.39 | | U | U |
| 11/25/1993 | Vanadium | 5 | PM | 1444.0 | .00151 | .17000 | 40.39 | | U | U |
| 11/25/1993 | Zinc | 5 | PM | 1444.0 | .01195 | .00000 | 40.39 | | B | |
| 11/25/1993 | Aluminum | 6 | PM | 1444.1 | .02307 | 33.30000 | 35.35 | | B | U |
| 11/25/1993 | Arsenic | 6 | PM | 1444.1 | .00015 | .00057 | 35.35 | | U | U |
| 11/25/1993 | Barium | 6 | PM | 1444.1 | .00150 | .52000 | 35.35 | | U | U |
| 11/25/1993 | Beryllium | 6 | PM | 1444.1 | .00015 | .00100 | 35.35 | | U | U |
| 11/25/1993 | Cadmium | 6 | PM | 1444.1 | .00195 | .00140 | 35.35 | | | |
| 11/25/1993 | Chromium | 6 | PM | 1444.1 | .00128 | .00020 | 35.35 | | | U |
| 11/25/1993 | Manganese | 6 | PM | 1444.1 | .00094 | .42000 | 35.35 | | B | |
| 11/25/1993 | Nickel | 6 | PM | 1444.1 | .00299 | .01000 | 35.35 | | U | U |
| 11/25/1993 | Phosphorus | 6 | PM | 1444.1 | .69341 | .30000 | 35.35 | | | |
| 11/25/1993 | Selenium | 6 | PM | 1444.1 | .01500 | .70000 | 35.35 | | U | U |
| 11/25/1993 | Silver | 6 | PM | 1444.1 | .00105 | .30000 | 35.35 | | U | U |
| 11/25/1993 | Thallium | 6 | PM | 1444.1 | .02995 | .30000 | 35.35 | | U | U |
| 11/25/1993 | Vanadium | 6 | PM | 1444.1 | .00150 | .17000 | 35.35 | | U | U |
| 11/25/1993 | Zinc | 6 | PM | 1444.1 | .01106 | .00000 | 35.35 | | B | |
| 11/25/1993 | Aluminum | 7 | PM | 1442.0 | .02737 | 33.30000 | 47.21 | | B | U |
| 11/25/1993 | Arsenic | 7 | PM | 1442.0 | .00016 | .00057 | 47.21 | | B | |

| Sample Date | Chemical Name | Site # | Typ | Run Time (min.) | Chem Conc. (ug/m3) | EPA Scr. L(ug/m3) | Part.C. (ug/m3) | Grav. Val | Qual. Lab | Qual. Val |
|---|---|---|---|---|---|---|---|---|---|---|
| 11/25/1993 | Barium | 7 | PM | 1442.0 | .00154 | .52000 | 47.21 | | U | U |
| 11/25/1993 | Beryllium | 7 | PM | 1442.0 | .00015 | .00100 | 47.21 | | U | U |
| 11/25/1993 | Cadmium | 7 | PM | 1442.0 | .00275 | .00140 | 47.21 | | | |
| 11/25/1993 | Chromium | 7 | PM | 1442.0 | .00109 | .00020 | 47.21 | | | U |
| 11/25/1993 | Manganese | 7 | PM | 1442.0 | .00151 | .42000 | 47.21 | | B | |
| 11/25/1993 | Nickel | 7 | PM | 1442.0 | .00307 | .01000 | 47.21 | | U | U |
| 11/25/1993 | Phosphorus | 7 | PM | 1442.0 | .80991 | .30000 | 47.21 | | | |
| 11/25/1993 | Selenium | 7 | PM | 1442.0 | .01540 | .70000 | 47.21 | | U | U |
| 11/25/1993 | Silver | 7 | PM | 1442.0 | .00107 | .30000 | 47.21 | | U | U |
| 11/25/1993 | Thallium | 7 | PM | 1442.0 | .03074 | .30000 | 47.21 | | U | U |
| 11/25/1993 | Vanadium | 7 | PM | 1442.0 | .00154 | .17000 | 47.21 | | U | U |
| 11/25/1993 | Zinc | 7 | PM | 1442.0 | .01693 | .00000 | 47.21 | | B | |
| 11/25/1993 | Aluminum | 8 | PM | 1562.0 | .03263 | 33.30000 | 54.58 | SR | | U |
| 11/25/1993 | Arsenic | 8 | PM | 1562.0 | .00028 | .00057 | 54.58 | SR | B | |
| 11/25/1993 | Barium | 8 | PM | 1562.0 | .00142 | .52000 | 54.58 | SR | U | U |
| 11/25/1993 | Beryllium | 8 | PM | 1562.0 | .00014 | .00100 | 54.58 | SR | U | U |
| 11/25/1993 | Cadmium | 8 | PM | 1562.0 | .00206 | .00140 | 54.58 | SR | | |
| 11/25/1993 | Chromium | 8 | PM | 1562.0 | .00140 | .00020 | 54.58 | SR | | U |
| 11/25/1993 | Manganese | 8 | PM | 1562.0 | .00246 | .42000 | 54.58 | SR | | |
| 11/25/1993 | Nickel | 8 | PM | 1562.0 | .00284 | .01000 | 54.58 | SR | U | U |
| 11/25/1993 | Phosphorus | 8 | PM | 1562.0 | .56360 | .30000 | 54.58 | SR | | U |
| 11/25/1993 | Selenium | 8 | PM | 1562.0 | .02555 | .70000 | 54.58 | SR | B | |
| 11/25/1993 | Silver | 8 | PM | 1562.0 | .00099 | .30000 | 54.58 | SR | U | U |
| 11/25/1993 | Thallium | 8 | PM | 1562.0 | .02838 | .30000 | 54.58 | SR | U | U |
| 11/25/1993 | Vanadium | 8 | PM | 1562.0 | .00142 | .17000 | 54.58 | SR | U | U |
| 11/25/1993 | Zinc | 8 | PM | 1562.0 | .02243 | .00000 | 54.58 | SR | B | |
| 11/29/1993 | Aluminum | 1 | PM | 1446.0 | .32503 | 33.30000 | 43.15 | | | |
| 11/29/1993 | Arsenic | 1 | PM | 1446.0 | .00170 | .00057 | 43.15 | | | J |
| 11/29/1993 | Barium | 1 | PM | 1446.0 | .02286 | .52000 | 43.15 | | | |
| 11/29/1993 | Beryllium | 1 | PM | 1446.0 | .00065 | .00100 | 43.15 | | U | U |
| 11/29/1993 | Cadmium | 1 | PM | 1446.0 | .01244 | .00140 | 43.15 | | | |
| 11/29/1993 | Chromium | 1 | PM | 1446.0 | .00328 | .00020 | 43.15 | | | |
| 11/29/1993 | Manganese | 1 | PM | 1446.0 | .02644 | .42000 | 43.15 | | | |
| 11/29/1993 | Nickel | 1 | PM | 1446.0 | .01303 | .01000 | 43.15 | | U | U |
| 11/29/1993 | Phosphorus | 1 | PM | 1446.0 | 4.08399 | .30000 | 43.15 | | | |
| 11/29/1993 | Selenium | 1 | PM | 1446.0 | .06514 | .70000 | 43.15 | | U | U |
| 11/29/1993 | Silver | 1 | PM | 1446.0 | .00457 | .30000 | 43.15 | | U | U |
| 11/29/1993 | Thallium | 1 | PM | 1446.0 | .13027 | .30000 | 43.15 | | U | U |
| 11/29/1993 | Vanadium | 1 | PM | 1446.0 | .00938 | .17000 | 43.15 | | B | |
| 11/29/1993 | Zinc | 1 | PM | 1446.0 | .19150 | .00000 | 43.15 | | B | |
| 11/29/1993 | Aluminum | 2 | PM | 1445.7 | .15987 | 33.30000 | 56.51 | | | |
| 11/29/1993 | Arsenic | 2 | PM | 1445.7 | .00184 | .00057 | 56.51 | | | J |
| 11/29/1993 | Barium | 2 | PM | 1445.7 | .00650 | .52000 | 56.51 | | | |
| 11/29/1993 | Beryllium | 2 | PM | 1445.7 | .00016 | .00100 | 56.51 | | U | U |
| 11/29/1993 | Cadmium | 2 | PM | 1445.7 | .00598 | .00140 | 56.51 | | | |
| 11/29/1993 | Chromium | 2 | PM | 1445.7 | .00819 | .00020 | 56.51 | | | |
| 11/29/1993 | Manganese | 2 | PM | 1445.7 | .01014 | .42000 | 56.51 | | | |
| 11/29/1993 | Nickel | 2 | PM | 1445.7 | .00334 | .01000 | 56.51 | | B | U |
| 11/29/1993 | Phosphorus | 2 | PM | 1445.7 | 2.55401 | .30000 | 56.51 | | | |
| 11/29/1993 | Selenium | 2 | PM | 1445.7 | .01631 | .70000 | 56.51 | | U | U |
| 11/29/1993 | Silver | 2 | PM | 1445.7 | .00117 | .30000 | 56.51 | | B | |
| 11/29/1993 | Thallium | 2 | PM | 1445.7 | .03256 | .30000 | 56.51 | | U | U |
| 11/29/1993 | Vanadium | 2 | PM | 1445.7 | .00728 | .17000 | 56.51 | | | |
| 11/29/1993 | Zinc | 2 | PM | 1445.7 | .05654 | .00000 | 56.51 | | B | |
| 11/29/1993 | Aluminum | 3 | PM | 1454.1 | .04471 | 33.30000 | 31.36 | | | |

| Sample Date | Chemical Name | Site # | Typ | Run Time (min.) | Chem Conc. (ug/m3) | EPA Scr. L(ug/m3) | Part.C. (ug/m3) | Grav. Val | Qual. Lab | Qual. Val |
|---|---|---|---|---|---|---|---|---|---|---|
| 11/29/1993 | Arsenic | 3 | PM | 1454.1 | .00132 | .00057 | 31.36 | | | J |
| 11/29/1993 | Barium | 3 | PM | 1454.1 | .00348 | .52000 | 31.36 | | | |
| 11/29/1993 | Beryllium | 3 | PM | 1454.1 | .00016 | .00100 | 31.36 | | U | U |
| 11/29/1993 | Cadmium | 3 | PM | 1454.1 | .00185 | .00140 | 31.36 | | | |
| 11/29/1993 | Chromium | 3 | PM | 1454.1 | .00191 | .00020 | 31.36 | | | |
| 11/29/1993 | Manganese | 3 | PM | 1454.1 | .00518 | .42000 | 31.36 | | | |
| 11/29/1993 | Nickel | 3 | PM | 1454.1 | .00324 | .01000 | 31.36 | | U | U |
| 11/29/1993 | Phosphorus | 3 | PM | 1454.1 | .58151 | .30000 | 31.36 | | | U |
| 11/29/1993 | Selenium | 3 | PM | 1454.1 | .01622 | .70000 | 31.36 | | B | |
| 11/29/1993 | Silver | 3 | PM | 1454.1 | .00113 | .30000 | 31.36 | | U | U |
| 11/29/1993 | Thallium | 3 | PM | 1454.1 | .03237 | .30000 | 31.36 | | U | U |
| 11/29/1993 | Vanadium | 3 | PM | 1454.1 | .00162 | .17000 | 31.36 | | U | U |
| 11/29/1993 | Zinc | 3 | PM | 1454.1 | .02055 | .00000 | 31.36 | | B | |
| 11/29/1993 | Aluminum | 4 | PM | 1446.9 | .05347 | 33.30000 | 34.79 | | | |
| 11/29/1993 | Arsenic | 4 | PM | 1446.9 | .00128 | .00057 | 34.79 | | | J |
| 11/29/1993 | Barium | 4 | PM | 1446.9 | .00495 | .52000 | 34.79 | | | |
| 11/29/1993 | Beryllium | 4 | PM | 1446.9 | .00016 | .00100 | 34.79 | | U | U |
| 11/29/1993 | Cadmium | 4 | PM | 1446.9 | .00190 | .00140 | 34.79 | | | |
| 11/29/1993 | Chromium | 4 | PM | 1446.9 | .00181 | .00020 | 34.79 | | | U |
| 11/29/1993 | Manganese | 4 | PM | 1446.9 | .00715 | .42000 | 34.79 | | | |
| 11/29/1993 | Nickel | 4 | PM | 1446.9 | .00314 | .01000 | 34.79 | | U | U |
| 11/29/1993 | Phosphorus | 4 | PM | 1446.9 | .62759 | .30000 | 34.79 | | | U |
| 11/29/1993 | Selenium | 4 | PM | 1446.9 | .01575 | .70000 | 34.79 | | U | U |
| 11/29/1993 | Silver | 4 | PM | 1446.9 | .00110 | .30000 | 34.79 | | U | U |
| 11/29/1993 | Thallium | 4 | PM | 1446.9 | .03144 | .30000 | 34.79 | | U | U |
| 11/29/1993 | Vanadium | 4 | PM | 1446.9 | .00158 | .17000 | 34.79 | | U | U |
| 11/29/1993 | Zinc | 4 | PM | 1446.9 | .02736 | .00000 | 34.79 | | B | |
| 11/29/1993 | Aluminum | 5 | PM | 1437.8 | .07681 | 33.30000 | 40.49 | | | |
| 11/29/1993 | Arsenic | 5 | PM | 1437.8 | .00204 | .00057 | 40.49 | | | J |
| 11/29/1993 | Barium | 5 | PM | 1437.8 | .00283 | .52000 | 40.49 | | | |
| 11/29/1993 | Beryllium | 5 | PM | 1437.8 | .00016 | .00100 | 40.49 | | U | U |
| 11/29/1993 | Cadmium | 5 | PM | 1437.8 | .00826 | .00140 | 40.49 | | | |
| 11/29/1993 | Chromium | 5 | PM | 1437.8 | .00441 | .00020 | 40.49 | | | |
| 11/29/1993 | Manganese | 5 | PM | 1437.8 | .00364 | .42000 | 40.49 | | | |
| 11/29/1993 | Nickel | 5 | PM | 1437.8 | .00323 | .01000 | 40.49 | | U | U |
| 11/29/1993 | Phosphorus | 5 | PM | 1437.8 | 2.08483 | .30000 | 40.49 | | | |
| 11/29/1993 | Selenium | 5 | PM | 1437.8 | .01620 | .70000 | 40.49 | | U | U |
| 11/29/1993 | Silver | 5 | PM | 1437.8 | .00113 | .30000 | 40.49 | | U | U |
| 11/29/1993 | Thallium | 5 | PM | 1437.8 | .03234 | .30000 | 40.49 | | U | U |
| 11/29/1993 | Vanadium | 5 | PM | 1437.8 | .00254 | .17000 | 40.49 | | B | |
| 11/29/1993 | Zinc | 5 | PM | 1437.8 | .04241 | .00000 | 40.49 | | B | |
| 11/29/1993 | Aluminum | 6 | PM | 1440.5 | .02859 | 33.30000 | 22.64 | | B | |
| 11/29/1993 | Arsenic | 6 | PM | 1440.5 | .00106 | .00057 | 22.64 | | | J |
| 11/29/1993 | Barium | 6 | PM | 1440.5 | .00201 | .52000 | 22.64 | | | |
| 11/29/1993 | Beryllium | 6 | PM | 1440.5 | .00016 | .00100 | 22.64 | | U | U |
| 11/29/1993 | Cadmium | 6 | PM | 1440.5 | .00135 | .00140 | 22.64 | | B | |
| 11/29/1993 | Chromium | 6 | PM | 1440.5 | .00073 | .00020 | 22.64 | | | U |
| 11/29/1993 | Manganese | 6 | PM | 1440.5 | .00213 | .42000 | 22.64 | | | |
| 11/29/1993 | Nickel | 6 | PM | 1440.5 | .00330 | .01000 | 22.64 | | B | U |
| 11/29/1993 | Phosphorus | 6 | PM | 1440.5 | .36928 | .30000 | 22.64 | | | U |
| 11/29/1993 | Selenium | 6 | PM | 1440.5 | .01609 | .70000 | 22.64 | | U | U |
| 11/29/1993 | Silver | 6 | PM | 1440.5 | .00112 | .30000 | 22.64 | | U | U |
| 11/29/1993 | Thallium | 6 | PM | 1440.5 | .03212 | .30000 | 22.64 | | U | U |
| 11/29/1993 | Vanadium | 6 | PM | 1440.5 | .00161 | .17000 | 22.64 | | U | U |
| 11/29/1993 | Zinc | 6 | PM | 1440.5 | .00994 | .00000 | 22.64 | | B | |

| Sample Date | Chemical Name | Site # | Typ | Run Time (min.) | Chem Conc. (ug/m3) | EPA Scr. L(ug/m3) | Part.C. (ug/m3) | Grav. Val | Qual. Lab | Qual. Val |
|---|---|---|---|---|---|---|---|---|---|---|
| 11/29/1993 | Aluminum | 7 | PM | 1440.0 | .03951 | 33.30000 | 20.52 | | | |
| 11/29/1993 | Arsenic | 7 | PM | 1440.0 | .00163 | .00057 | 20.52 | | | J |
| 11/29/1993 | Barium | 7 | PM | 1440.0 | .00165 | .52000 | 20.52 | | U | U |
| 11/29/1993 | Beryllium | 7 | PM | 1440.0 | .00016 | .00100 | 20.52 | | U | U |
| 11/29/1993 | Cadmium | 7 | PM | 1440.0 | .00296 | .00140 | 20.52 | | | |
| 11/29/1993 | Chromium | 7 | PM | 1440.0 | .00144 | .00020 | 20.52 | | | U |
| 11/29/1993 | Manganese | 7 | PM | 1440.0 | .00225 | .42000 | 20.52 | | | |
| 11/29/1993 | Nickel | 7 | PM | 1440.0 | .00329 | .01000 | 20.52 | | U | U |
| 11/29/1993 | Phosphorus | 7 | PM | 1440.0 | .69677 | .30000 | 20.52 | | | U |
| 11/29/1993 | Selenium | 7 | PM | 1440.0 | .01650 | .70000 | 20.52 | | U | U |
| 11/29/1993 | Silver | 7 | PM | 1440.0 | .00115 | .30000 | 20.52 | | U | U |
| 11/29/1993 | Thallium | 7 | PM | 1440.0 | .03293 | .30000 | 20.52 | | U | U |
| 11/29/1993 | Vanadium | 7 | PM | 1440.0 | .00165 | .17000 | 20.52 | | U | U |
| 11/29/1993 | Zinc | 7 | PM | 1440.0 | .01203 | .00000 | 20.52 | | B | |
| 11/29/1993 | Aluminum | 8 | PM | 1460.8 | .08877 | 33.30000 | 44.48 | | | |
| 11/29/1993 | Arsenic | 8 | PM | 1460.8 | .00151 | .00057 | 44.48 | | | J |
| 11/29/1993 | Barium | 8 | PM | 1460.8 | .00577 | .52000 | 44.48 | | | |
| 11/29/1993 | Beryllium | 8 | PM | 1460.8 | .00016 | .00100 | 44.48 | | U | U |
| 11/29/1993 | Cadmium | 8 | PM | 1460.8 | .00292 | .00140 | 44.48 | | | |
| 11/29/1993 | Chromium | 8 | PM | 1460.8 | .00283 | .00020 | 44.48 | | | |
| 11/29/1993 | Manganese | 8 | PM | 1460.8 | .00581 | .42000 | 44.48 | | | |
| 11/29/1993 | Nickel | 8 | PM | 1460.8 | .00325 | .01000 | 44.48 | | U | U |
| 11/29/1993 | Phosphorus | 8 | PM | 1460.8 | .86180 | .30000 | 44.48 | | | |
| 11/29/1993 | Selenium | 8 | PM | 1460.8 | .01626 | .70000 | 44.48 | | U | U |
| 11/29/1993 | Silver | 8 | PM | 1460.8 | .00113 | .30000 | 44.48 | | U | U |
| 11/29/1993 | Thallium | 8 | PM | 1460.8 | .03246 | .30000 | 44.48 | | U | U |
| 11/29/1993 | Vanadium | 8 | PM | 1460.8 | .00164 | .17000 | 44.48 | | B | |
| 11/29/1993 | Zinc | 8 | PM | 1460.8 | .04581 | .00000 | 44.48 | | B | |
| 12/03/1993 | Aluminum | 1 | PM | 1453.9 | .06478 | 33.30000 | 15.23 | | | |
| 12/03/1993 | Arsenic | 1 | PM | 1453.9 | .00025 | .00057 | 15.23 | | B | |
| 12/03/1993 | Barium | 1 | PM | 1453.9 | .00235 | .52000 | 15.23 | | | |
| 12/03/1993 | Beryllium | 1 | PM | 1453.9 | .00016 | .00100 | 15.23 | | U | U |
| 12/03/1993 | Cadmium | 1 | PM | 1453.9 | .00130 | .00140 | 15.23 | | U | U |
| 12/03/1993 | Chromium | 1 | PM | 1453.9 | .00126 | .00020 | 15.23 | | | U |
| 12/03/1993 | Manganese | 1 | PM | 1453.9 | .00373 | .42000 | 15.23 | | | |
| 12/03/1993 | Nickel | 1 | PM | 1453.9 | .00325 | .01000 | 15.23 | | U | U |
| 12/03/1993 | Phosphorus | 1 | PM | 1453.9 | .28893 | .30000 | 15.23 | | B | U |
| 12/03/1993 | Selenium | 1 | PM | 1453.9 | .01626 | .70000 | 15.23 | | U | U |
| 12/03/1993 | Silver | 1 | PM | 1453.9 | .00113 | .30000 | 15.23 | | U | U |
| 12/03/1993 | Thallium | 1 | PM | 1453.9 | .03246 | .30000 | 15.23 | | U | U |
| 12/03/1993 | Vanadium | 1 | PM | 1453.9 | .00163 | .17000 | 15.23 | | U | U |
| 12/03/1993 | Zinc | 1 | PM | 1453.9 | .01192 | .00000 | 15.23 | | B | |
| 12/03/1993 | Aluminum | 2 | PM | 1444.3 | .32135 | 33.30000 | 40.03 | | | |
| 12/03/1993 | Arsenic | 2 | PM | 1444.3 | .00053 | .00057 | 40.03 | | B | |
| 12/03/1993 | Barium | 2 | PM | 1444.3 | .00716 | .52000 | 40.03 | | | |
| 12/03/1993 | Beryllium | 2 | PM | 1444.3 | .00016 | .00100 | 40.03 | | U | U |
| 12/03/1993 | Cadmium | 2 | PM | 1444.3 | .02231 | .00140 | 40.03 | | | |
| 12/03/1993 | Chromium | 2 | PM | 1444.3 | .01106 | .00020 | 40.03 | | | |
| 12/03/1993 | Manganese | 2 | PM | 1444.3 | .01099 | .42000 | 40.03 | | | |
| 12/03/1993 | Nickel | 2 | PM | 1444.3 | .00326 | .01000 | 40.03 | | U | U |
| 12/03/1993 | Phosphorus | 2 | PM | 1444.3 | 2.19871 | .30000 | 40.03 | | | |
| 12/03/1993 | Selenium | 2 | PM | 1444.3 | .01633 | .70000 | 40.03 | | U | U |
| 12/03/1993 | Silver | 2 | PM | 1444.3 | .00129 | .30000 | 40.03 | | B | |
| 12/03/1993 | Thallium | 2 | PM | 1444.3 | .03259 | .30000 | 40.03 | | U | U |
| 12/03/1993 | Vanadium | 2 | PM | 1444.3 | .00963 | .17000 | 40.03 | | | |

| Sample Date | Chemical Name | Site # | Typ | Run Time (min.) | Chem Conc. (ug/m3) | EPA Scr. L(ug/m3) | Part.C. Grav. (ug/m3) | Qual. Val | Qual. Lab | Qual. Val |
|---|---|---|---|---|---|---|---|---|---|---|
| 12/03/1993 | Zinc | 2 | PM | 1444.3 | .06407 | .00000 | 40.03 | | B | |
| 12/03/1993 | Aluminum | 3 | PM | 1454.3 | .06654 | 33.30000 | 9.37 | | | |
| 12/03/1993 | Arsenic | 3 | PM | 1454.3 | .00020 | .00057 | 9.37 | | B | |
| 12/03/1993 | Barium | 3 | PM | 1454.3 | .00284 | .52000 | 9.37 | | | |
| 12/03/1993 | Beryllium | 3 | PM | 1454.3 | .00016 | .00100 | 9.37 | | U | U |
| 12/03/1993 | Cadmium | 3 | PM | 1454.3 | .00129 | .00140 | 9.37 | | U | U |
| 12/03/1993 | Chromium | 3 | PM | 1454.3 | .00123 | .00020 | 9.37 | | | U |
| 12/03/1993 | Manganese | 3 | PM | 1454.3 | .00377 | .42000 | 9.37 | | | |
| 12/03/1993 | Nickel | 3 | PM | 1454.3 | .00324 | .01000 | 9.37 | | U | U |
| 12/03/1993 | Phosphorus | 3 | PM | 1454.3 | .23774 | .30000 | 9.37 | | B | U |
| 12/03/1993 | Selenium | 3 | PM | 1454.3 | .01622 | .70000 | 9.37 | | U | U |
| 12/03/1993 | Silver | 3 | PM | 1454.3 | .00113 | .30000 | 9.37 | | U | U |
| 12/03/1993 | Thallium | 3 | PM | 1454.3 | .03237 | .30000 | 9.37 | | U | U |
| 12/03/1993 | Vanadium | 3 | PM | 1454.3 | .00162 | .17000 | 9.37 | | U | U |
| 12/03/1993 | Zinc | 3 | PM | 1454.3 | .00801 | .00000 | 9.37 | | B | |
| 12/03/1993 | Aluminum | 4 | PM | 1448.2 | .07650 | 33.30000 | 12.80 | | | |
| 12/03/1993 | Arsenic | 4 | PM | 1448.2 | .00021 | .00057 | 12.80 | | B | J |
| 12/03/1993 | Barium | 4 | PM | 1448.2 | .00385 | .52000 | 12.80 | | | |
| 12/03/1993 | Beryllium | 4 | PM | 1448.2 | .00016 | .00100 | 12.80 | | U | U |
| 12/03/1993 | Cadmium | 4 | PM | 1448.2 | .00125 | .00140 | 12.80 | | U | U |
| 12/03/1993 | Chromium | 4 | PM | 1448.2 | .00112 | .00020 | 12.80 | | | U |
| 12/03/1993 | Manganese | 4 | PM | 1448.2 | .00627 | .42000 | 12.80 | | | |
| 12/03/1993 | Nickel | 4 | PM | 1448.2 | .00314 | .01000 | 12.80 | | B | U |
| 12/03/1993 | Phosphorus | 4 | PM | 1448.2 | .21821 | .30000 | 12.80 | | B | U |
| 12/03/1993 | Selenium | 4 | PM | 1448.2 | .01574 | .70000 | 12.80 | | U | U |
| 12/03/1993 | Silver | 4 | PM | 1448.2 | .00110 | .30000 | 12.80 | | U | U |
| 12/03/1993 | Thallium | 4 | PM | 1448.2 | .03141 | .30000 | 12.80 | | U | U |
| 12/03/1993 | Vanadium | 4 | PM | 1448.2 | .00157 | .17000 | 12.80 | | U | U |
| 12/03/1993 | Zinc | 4 | PM | 1448.2 | .01336 | .00000 | 12.80 | | B | |
| 12/03/1993 | Aluminum | 5 | PM | 1442.1 | .07143 | 33.30000 | 10.62 | | | |
| 12/03/1993 | Arsenic | 5 | PM | 1442.1 | .00016 | .00057 | 10.62 | | U | U |
| 12/03/1993 | Barium | 5 | PM | 1442.1 | .00185 | .52000 | 10.62 | | B | |
| 12/03/1993 | Beryllium | 5 | PM | 1442.1 | .00016 | .00100 | 10.62 | | U | U |
| 12/03/1993 | Cadmium | 5 | PM | 1442.1 | .00185 | .00140 | 10.62 | | | |
| 12/03/1993 | Chromium | 5 | PM | 1442.1 | .05998 | .00020 | 10.62 | | | |
| 12/03/1993 | Manganese | 5 | PM | 1442.1 | .00624 | .42000 | 10.62 | | | |
| 12/03/1993 | Nickel | 5 | PM | 1442.1 | .01281 | .01000 | 10.62 | | | U |
| 12/03/1993 | Phosphorus | 5 | PM | 1442.1 | .88164 | .30000 | 10.62 | | | |
| 12/03/1993 | Selenium | 5 | PM | 1442.1 | .01615 | .70000 | 10.62 | | U | U |
| 12/03/1993 | Silver | 5 | PM | 1442.1 | .00113 | .30000 | 10.62 | | U | U |
| 12/03/1993 | Thallium | 5 | PM | 1442.1 | .03224 | .30000 | 10.62 | | U | U |
| 12/03/1993 | Vanadium | 5 | PM | 1442.1 | .06126 | .17000 | 10.62 | | | |
| 12/03/1993 | Zinc | 5 | PM | 1442.1 | .01081 | .00000 | 10.62 | | B | |
| 12/03/1993 | Aluminum | 6 | PM | 1440.6 | .02827 | 33.30000 | 5.13 | | B | |
| 12/03/1993 | Arsenic | 6 | PM | 1440.6 | .00016 | .00057 | 5.13 | | U | U |
| 12/03/1993 | Barium | 6 | PM | 1440.6 | .00161 | .52000 | 5.13 | | U | U |
| 12/03/1993 | Beryllium | 6 | PM | 1440.6 | .00016 | .00100 | 5.13 | | U | U |
| 12/03/1993 | Cadmium | 6 | PM | 1440.6 | .00128 | .00140 | 5.13 | | U | U |
| 12/03/1993 | Chromium | 6 | PM | 1440.6 | .00049 | .00020 | 5.13 | | | U |
| 12/03/1993 | Manganese | 6 | PM | 1440.6 | .00088 | .42000 | 5.13 | | B | |
| 12/03/1993 | Nickel | 6 | PM | 1440.6 | .00321 | .01000 | 5.13 | | U | U |
| 12/03/1993 | Phosphorus | 6 | PM | 1440.6 | .18014 | .30000 | 5.13 | | B | U |
| 12/03/1993 | Selenium | 6 | PM | 1440.6 | .01609 | .70000 | 5.13 | | U | U |
| 12/03/1993 | Silver | 6 | PM | 1440.6 | .00112 | .30000 | 5.13 | | U | U |
| 12/03/1993 | Thallium | 6 | PM | 1440.6 | .03212 | .30000 | 5.13 | | U | U |

| Sample Date | Chemical Name | Site # | Typ | Run Time (min.) | Chem Conc. (ug/m3) | EPA Scr. L(ug/m3) | Part.C. Grav. (ug/m3) | Qual. Val | Qual. Lab | Qual. Val |
|---|---|---|---|---|---|---|---|---|---|---|
| 12/07/1993 | Silver | 6 | PM | 1441.4 | .00111 | .30000 | 6.47 | | U | UJ |
| 12/07/1993 | Thallium | 6 | PM | 1441.4 | .03175 | .30000 | 6.47 | | U | U |
| 12/07/1993 | Vanadium | 6 | PM | 1441.4 | .00159 | .17000 | 6.47 | | U | U |
| 12/07/1993 | Zinc | 6 | PM | 1441.4 | .00577 | .00000 | 6.47 | | B | |
| 12/07/1993 | Aluminum | 7 | PM | 1440.9 | .08056 | 33.30000 | 24.64 | | | |
| 12/07/1993 | Arsenic | 7 | PM | 1440.9 | .00057 | .00057 | 24.64 | | B | |
| 12/07/1993 | Barium | 7 | PM | 1440.9 | .00163 | .52000 | 24.64 | | U | U |
| 12/07/1993 | Beryllium | 7 | PM | 1440.9 | .00016 | .00100 | 24.64 | | U | U |
| 12/07/1993 | Cadmium | 7 | PM | 1440.9 | .00210 | .00140 | 24.64 | | | |
| 12/07/1993 | Chromium | 7 | PM | 1440.9 | .00220 | .00020 | 24.64 | | | |
| 12/07/1993 | Manganese | 7 | PM | 1440.9 | .00249 | .42000 | 24.64 | | | |
| 12/07/1993 | Nickel | 7 | PM | 1440.9 | .00325 | .01000 | 24.64 | | U | U |
| 12/07/1993 | Phosphorus | 7 | PM | 1440.9 | .76664 | .30000 | 24.64 | | | |
| 12/07/1993 | Selenium | 7 | PM | 1440.9 | .01631 | .70000 | 24.64 | | U | U |
| 12/07/1993 | Silver | 7 | PM | 1440.9 | .00114 | .30000 | 24.64 | | U | UJ |
| 12/07/1993 | Thallium | 7 | PM | 1440.9 | .03255 | .30000 | 24.64 | | U | U |
| 12/07/1993 | Vanadium | 7 | PM | 1440.9 | .00264 | .17000 | 24.64 | | B | |
| 12/07/1993 | Zinc | 7 | PM | 1440.9 | .01111 | .00000 | 24.64 | | B | |
| 12/07/1993 | Aluminum | 8 | PM | 1460.0 | .06861 | 33.30000 | 15.21 | | | |
| 12/07/1993 | Arsenic | 8 | PM | 1460.0 | .00034 | .00057 | 15.21 | | B | |
| 12/07/1993 | Barium | 8 | PM | 1460.0 | .00177 | .52000 | 15.21 | | B | |
| 12/07/1993 | Beryllium | 8 | PM | 1460.0 | .00016 | .00100 | 15.21 | | U | U |
| 12/07/1993 | Cadmium | 8 | PM | 1460.0 | .00128 | .00140 | 15.21 | | U | U |
| 12/07/1993 | Chromium | 8 | PM | 1460.0 | .00137 | .00020 | 15.21 | | | |
| 12/07/1993 | Manganese | 8 | PM | 1460.0 | .00373 | .42000 | 15.21 | | | |
| 12/07/1993 | Nickel | 8 | PM | 1460.0 | .00321 | .01000 | 15.21 | | U | U |
| 12/07/1993 | Phosphorus | 8 | PM | 1460.0 | .26032 | .30000 | 15.21 | | B | |
| 12/07/1993 | Selenium | 8 | PM | 1460.0 | .01609 | .70000 | 15.21 | | U | U |
| 12/07/1993 | Silver | 8 | PM | 1460.0 | .00112 | .30000 | 15.21 | | U | UJ |
| 12/07/1993 | Thallium | 8 | PM | 1460.0 | .03212 | .30000 | 15.21 | | U | U |
| 12/07/1993 | Vanadium | 8 | PM | 1460.0 | .00178 | .17000 | 15.21 | | B | |
| 12/07/1993 | Zinc | 8 | PM | 1460.0 | .01096 | .00000 | 15.21 | | B | |
| 12/11/1993 | Aluminum | 1 | PM | 1454.2 | .14931 | 33.30000 | 19.92 | | | |
| 12/11/1993 | Arsenic | 1 | PM | 1454.2 | .00181 | .00057 | 19.92 | | | |
| 12/11/1993 | Barium | 1 | PM | 1454.2 | .00607 | .52000 | 19.92 | | | |
| 12/11/1993 | Beryllium | 1 | PM | 1454.2 | .00017 | .00100 | 19.92 | | U | U |
| 12/11/1993 | Cadmium | 1 | PM | 1454.2 | .00163 | .00140 | 19.92 | | | |
| 12/11/1993 | Chromium | 1 | PM | 1454.2 | .00251 | .00020 | 19.92 | | | |
| 12/11/1993 | Manganese | 1 | PM | 1454.2 | .00657 | .42000 | 19.92 | | | |
| 12/11/1993 | Nickel | 1 | PM | 1454.2 | .00332 | .01000 | 19.92 | | U | U |
| 12/11/1993 | Phosphorus | 1 | PM | 1454.2 | .54415 | .30000 | 19.92 | | | |
| 12/11/1993 | Selenium | 1 | PM | 1454.2 | .01666 | .70000 | 19.92 | | U | U |
| 12/11/1993 | Silver | 1 | PM | 1454.2 | .00116 | .30000 | 19.92 | | U | UJ |
| 12/11/1993 | Thallium | 1 | PM | 1454.2 | .03325 | .30000 | 19.92 | | U | U |
| 12/11/1993 | Vanadium | 1 | PM | 1454.2 | .00295 | .17000 | 19.92 | | B | |
| 12/11/1993 | Zinc | 1 | PM | 1454.2 | .01778 | .00000 | 19.92 | | B | |
| 12/11/1993 | Aluminum | 2 | PM | 1445.4 | .21711 | 33.30000 | 31.45 | | | |
| 12/11/1993 | Arsenic | 2 | PM | 1445.4 | .00187 | .00057 | 31.45 | | | |
| 12/11/1993 | Barium | 2 | PM | 1445.4 | .00584 | .52000 | 31.45 | | | |
| 12/11/1993 | Beryllium | 2 | PM | 1445.4 | .00017 | .00100 | 31.45 | | U | U |
| 12/11/1993 | Cadmium | 2 | PM | 1445.4 | .00426 | .00140 | 31.45 | | | |
| 12/11/1993 | Chromium | 2 | PM | 1445.4 | .00647 | .00020 | 31.45 | | | |
| 12/11/1993 | Manganese | 2 | PM | 1445.4 | .00946 | .42000 | 31.45 | | | |
| 12/11/1993 | Nickel | 2 | PM | 1445.4 | .00334 | .01000 | 31.45 | | U | U |
| 12/11/1993 | Phosphorus | 2 | PM | 1445.4 | 1.61168 | .30000 | 31.45 | | | |

| Sample Date | Chemical Name | Site # | Typ | Run Time (min.) | Chem Conc. (ug/m3) | EPA Scr. L(ug/m3) | Part.C. (ug/m3) | Grav. Val | Qual. Lab | Qual. Val |
|---|---|---|---|---|---|---|---|---|---|---|
| 12/11/1993 | Selenium | 2 | PM | 1445.4 | .01752 | .70000 | 31.45 | | B | |
| 12/11/1993 | Silver | 2 | PM | 1445.4 | .00117 | .30000 | 31.45 | | U | UJ |
| 12/11/1993 | Thallium | 2 | PM | 1445.4 | .03337 | .30000 | 31.45 | | U | U |
| 12/11/1993 | Vanadium | 2 | PM | 1445.4 | .00879 | .17000 | 31.45 | | | |
| 12/11/1993 | Zinc | 2 | PM | 1445.4 | .02484 | .00000 | 31.45 | | B | |
| 12/11/1993 | Aluminum | 3 | PM | 1455.9 | .11571 | 33.30000 | 14.89 | | | |
| 12/11/1993 | Arsenic | 3 | PM | 1455.9 | .00151 | .00057 | 14.89 | | | |
| 12/11/1993 | Barium | 3 | PM | 1455.9 | .00298 | .52000 | 14.89 | | | |
| 12/11/1993 | Beryllium | 3 | PM | 1455.9 | .00017 | .00100 | 14.89 | | U | U |
| 12/11/1993 | Cadmium | 3 | PM | 1455.9 | .00132 | .00140 | 14.89 | | U | U |
| 12/11/1993 | Chromium | 3 | PM | 1455.9 | .00111 | .00020 | 14.89 | | | |
| 12/11/1993 | Manganese | 3 | PM | 1455.9 | .00491 | .42000 | 14.89 | | | |
| 12/11/1993 | Nickel | 3 | PM | 1455.9 | .00331 | .01000 | 14.89 | | U | U |
| 12/11/1993 | Phosphorus | 3 | PM | 1455.9 | .26844 | .30000 | 14.89 | | B | |
| 12/11/1993 | Selenium | 3 | PM | 1455.9 | .01990 | .70000 | 14.89 | | B | |
| 12/11/1993 | Silver | 3 | PM | 1455.9 | .00116 | .30000 | 14.89 | | U | UJ |
| 12/11/1993 | Thallium | 3 | PM | 1455.9 | .03313 | .30000 | 14.89 | | U | U |
| 12/11/1993 | Vanadium | 3 | PM | 1455.9 | .00166 | .17000 | 14.89 | | U | U |
| 12/11/1993 | Zinc | 3 | PM | 1455.9 | .01058 | .00000 | 14.89 | | B | |
| 12/11/1993 | Aluminum | 4 | PM | 1451.7 | .14058 | 33.30000 | 17.38 | | | |
| 12/11/1993 | Arsenic | 4 | PM | 1451.7 | .00178 | .00057 | 17.38 | | | |
| 12/11/1993 | Barium | 4 | PM | 1451.7 | .00465 | .52000 | 17.38 | | | |
| 12/11/1993 | Beryllium | 4 | PM | 1451.7 | .00017 | .00100 | 17.38 | | U | U |
| 12/11/1993 | Cadmium | 4 | PM | 1451.7 | .00133 | .00140 | 17.38 | | U | U |
| 12/11/1993 | Chromium | 4 | PM | 1451.7 | .00153 | .00020 | 17.38 | | | |
| 12/11/1993 | Manganese | 4 | PM | 1451.7 | .00696 | .42000 | 17.38 | | | |
| 12/11/1993 | Nickel | 4 | PM | 1451.7 | .00332 | .01000 | 17.38 | | U | U |
| 12/11/1993 | Phosphorus | 4 | PM | 1451.7 | .33884 | .30000 | 17.38 | | | |
| 12/11/1993 | Selenium | 4 | PM | 1451.7 | .01664 | .70000 | 17.38 | | U | U |
| 12/11/1993 | Silver | 4 | PM | 1451.7 | .00116 | .30000 | 17.38 | | U | UJ |
| 12/11/1993 | Thallium | 4 | PM | 1451.7 | .03322 | .30000 | 17.38 | | U | U |
| 12/11/1993 | Vanadium | 4 | PM | 1451.7 | .00186 | .17000 | 17.38 | | B | |
| 12/11/1993 | Zinc | 4 | PM | 1451.7 | .01532 | .00000 | 17.38 | | B | |
| 12/11/1993 | Aluminum | 5 | PM | 1442.8 | .09424 | 33.30000 | 13.52 | | | |
| 12/11/1993 | Arsenic | 5 | PM | 1442.8 | .00236 | .00057 | 13.52 | | | |
| 12/11/1993 | Barium | 5 | PM | 1442.8 | .00165 | .52000 | 13.52 | | B | |
| 12/11/1993 | Beryllium | 5 | PM | 1442.8 | .00017 | .00100 | 13.52 | | U | U |
| 12/11/1993 | Cadmium | 5 | PM | 1442.8 | .00185 | .00140 | 13.52 | | | |
| 12/11/1993 | Chromium | 5 | PM | 1442.8 | .00132 | .00020 | 13.52 | | | |
| 12/11/1993 | Manganese | 5 | PM | 1442.8 | .00463 | .42000 | 13.52 | | | |
| 12/11/1993 | Nickel | 5 | PM | 1442.8 | .00330 | .01000 | 13.52 | | U | U |
| 12/11/1993 | Phosphorus | 5 | PM | 1442.8 | .44946 | .30000 | 13.52 | | | |
| 12/11/1993 | Selenium | 5 | PM | 1442.8 | .01654 | .70000 | 13.52 | | U | U |
| 12/11/1993 | Silver | 5 | PM | 1442.8 | .00115 | .30000 | 13.52 | | U | UJ |
| 12/11/1993 | Thallium | 5 | PM | 1442.8 | .03302 | .30000 | 13.52 | | U | U |
| 12/11/1993 | Vanadium | 5 | PM | 1442.8 | .00165 | .17000 | 13.52 | | U | U |
| 12/11/1993 | Zinc | 5 | PM | 1442.8 | .01081 | .00000 | 13.52 | | B | |
| 12/11/1993 | Aluminum | 6 | PM | 1438.5 | .06427 | 33.30000 | 10.33 | | | |
| 12/11/1993 | Arsenic | 6 | PM | 1438.5 | .00141 | .00057 | 10.33 | | | |
| 12/11/1993 | Barium | 6 | PM | 1438.5 | .00206 | .52000 | 10.33 | | | |
| 12/11/1993 | Beryllium | 6 | PM | 1438.5 | .00017 | .00100 | 10.33 | | U | U |
| 12/11/1993 | Cadmium | 6 | PM | 1438.5 | .00132 | .00140 | 10.33 | | U | U |
| 12/11/1993 | Chromium | 6 | PM | 1438.5 | .00066 | .00020 | 10.33 | | | |
| 12/11/1993 | Manganese | 6 | PM | 1438.5 | .00320 | .42000 | 10.33 | | | |
| 12/11/1993 | Nickel | 6 | PM | 1438.5 | .00330 | .01000 | 10.33 | | U | U |

| Sample Date | Chemical Name | Site # | Typ | Run Time (min.) | Chem Conc. (ug/m3) | EPA Scr. L(ug/m3) | Part.C. (ug/m3) | Grav. Val | Qual. Lab | Qual. Val |
|---|---|---|---|---|---|---|---|---|---|---|
| 12/11/1993 | Phosphorus | 6 | PM | 1438.5 | .21115 | .30000 | 10.33 | | B | |
| 12/11/1993 | Selenium | 6 | PM | 1438.5 | .01651 | .70000 | 10.33 | | U | U |
| 12/11/1993 | Silver | 6 | PM | 1438.5 | .00115 | .30000 | 10.33 | | U | UJ |
| 12/11/1993 | Thallium | 6 | PM | 1438.5 | .03295 | .30000 | 10.33 | | U | U |
| 12/11/1993 | Vanadium | 6 | PM | 1438.5 | .00165 | .17000 | 10.33 | | U | U |
| 12/11/1993 | Zinc | 6 | PM | 1438.5 | .00802 | .00000 | 10.33 | | B | |
| 12/11/1993 | Aluminum | 7 | PM | 1440.0 | .10978 | 33.30000 | 22.17 | | | |
| 12/11/1993 | Arsenic | 7 | PM | 1440.0 | .00206 | .00057 | 22.17 | | | |
| 12/11/1993 | Barium | 7 | PM | 1440.0 | .00220 | .52000 | 22.17 | | | |
| 12/11/1993 | Beryllium | 7 | PM | 1440.0 | .00017 | .00100 | 22.17 | | U | U |
| 12/11/1993 | Cadmium | 7 | PM | 1440.0 | .00244 | .00140 | 22.17 | | | |
| 12/11/1993 | Chromium | 7 | PM | 1440.0 | .00168 | .00020 | 22.17 | | | |
| 12/11/1993 | Manganese | 7 | PM | 1440.0 | .00496 | .42000 | 22.17 | | | |
| 12/11/1993 | Nickel | 7 | PM | 1440.0 | .00337 | .01000 | 22.17 | | U | U |
| 12/11/1993 | Phosphorus | 7 | PM | 1440.0 | .71389 | .30000 | 22.17 | | | |
| 12/11/1993 | Selenium | 7 | PM | 1440.0 | .01771 | .70000 | 22.17 | | B | |
| 12/11/1993 | Silver | 7 | PM | 1440.0 | .00118 | .30000 | 22.17 | | U | UJ |
| 12/11/1993 | Thallium | 7 | PM | 1440.0 | .03374 | .30000 | 22.17 | | U | U |
| 12/11/1993 | Vanadium | 7 | PM | 1440.0 | .00199 | .17000 | 22.17 | | B | |
| 12/11/1993 | Zinc | 7 | PM | 1440.0 | .01441 | .00000 | 22.17 | | B | |
| 12/11/1993 | Aluminum | 8 | PM | 1466.0 | .14620 | 33.30000 | 20.98 | | | |
| 12/11/1993 | Arsenic | 8 | PM | 1466.0 | .00181 | .00057 | 20.98 | | | |
| 12/11/1993 | Barium | 8 | PM | 1466.0 | .00708 | .52000 | 20.98 | | | |
| 12/11/1993 | Beryllium | 8 | PM | 1466.0 | .00017 | .00100 | 20.98 | | U | U |
| 12/11/1993 | Cadmium | 8 | PM | 1466.0 | .00132 | .00140 | 20.98 | | U | U |
| 12/11/1993 | Chromium | 8 | PM | 1466.0 | .00226 | .00020 | 20.98 | | | U |
| 12/11/1993 | Manganese | 8 | PM | 1466.0 | .00642 | .42000 | 20.98 | | | |
| 12/11/1993 | Nickel | 8 | PM | 1466.0 | .00331 | .01000 | 20.98 | | U | U |
| 12/11/1993 | Phosphorus | 8 | PM | 1466.0 | .60001 | .30000 | 20.98 | | | U |
| 12/11/1993 | Selenium | 8 | PM | 1466.0 | .01660 | .70000 | 20.98 | | U | U |
| 12/11/1993 | Silver | 8 | PM | 1466.0 | .00118 | .30000 | 20.98 | | B | |
| 12/11/1993 | Thallium | 8 | PM | 1466.0 | .03314 | .30000 | 20.98 | | U | U |
| 12/11/1993 | Vanadium | 8 | PM | 1466.0 | .00227 | .17000 | 20.98 | | B | |
| 12/11/1993 | Zinc | 8 | PM | 1466.0 | .01594 | .00000 | 20.98 | | B | |
| 12/15/1993 | Aluminum | 1 | PM | 1450.4 | .14933 | 33.30000 | 41.86 | | | |
| 12/15/1993 | Arsenic | 1 | PM | 1450.4 | .00046 | .00057 | 41.86 | | B | |
| 12/15/1993 | Barium | 1 | PM | 1450.4 | .00460 | .52000 | 41.86 | | | |
| 12/15/1993 | Beryllium | 1 | PM | 1450.4 | .00016 | .00100 | 41.86 | | U | U |
| 12/15/1993 | Cadmium | 1 | PM | 1450.4 | .00216 | .00140 | 41.86 | | | |
| 12/15/1993 | Chromium | 1 | PM | 1450.4 | .00316 | .00020 | 41.86 | | | |
| 12/15/1993 | Manganese | 1 | PM | 1450.4 | .00453 | .42000 | 41.86 | | | |
| 12/15/1993 | Nickel | 1 | PM | 1450.4 | .00322 | .01000 | 41.86 | | U | U |
| 12/15/1993 | Phosphorus | 1 | PM | 1450.4 | 1.11354 | .30000 | 41.86 | | | |
| 12/15/1993 | Selenium | 1 | PM | 1450.4 | .01616 | .70000 | 41.86 | | U | U |
| 12/15/1993 | Silver | 1 | PM | 1450.4 | .00113 | .30000 | 41.86 | | U | U |
| 12/15/1993 | Thallium | 1 | PM | 1450.4 | .03225 | .30000 | 41.86 | | U | U |
| 12/15/1993 | Vanadium | 1 | PM | 1450.4 | .00300 | .17000 | 41.86 | | B | |
| 12/15/1993 | Zinc | 1 | PM | 1450.4 | .01757 | .00000 | 41.86 | | B | |
| 12/15/1993 | Aluminum | 2 | PM | 1444.4 | .49258 | 33.30000 | 84.12 | | | |
| 12/15/1993 | Arsenic | 2 | PM | 1444.4 | .00125 | .00057 | 84.12 | | | |
| 12/15/1993 | Barium | 2 | PM | 1444.4 | .00896 | .52000 | 84.12 | | | |
| 12/15/1993 | Beryllium | 2 | PM | 1444.4 | .00016 | .00100 | 84.12 | | B | |
| 12/15/1993 | Cadmium | 2 | PM | 1444.4 | .01289 | .00140 | 84.12 | | | |
| 12/15/1993 | Chromium | 2 | PM | 1444.4 | .02211 | .00020 | 84.12 | | | |
| 12/15/1993 | Manganese | 2 | PM | 1444.4 | .01006 | .42000 | 84.12 | | | |

| Sample Date | Chemical Name | Site # | Typ | Run Time (min.) | Chem Conc. (ug/m3) | EPA Scr. L(ug/m3) | Part.C. (ug/m3) | Grav. Val | Qual. Lab | Qual. Val |
|---|---|---|---|---|---|---|---|---|---|---|
| 12/15/1993 | Nickel | 2 | PM | 1444.4 | .00323 | .01000 | 84.12 | | B | |
| 12/15/1993 | Phosphorus | 2 | PM | 1444.4 | 11.02498 | .30000 | 84.12 | | | |
| 12/15/1993 | Selenium | 2 | PM | 1444.4 | .02502 | .70000 | 84.12 | | B | |
| 12/15/1993 | Silver | 2 | PM | 1444.4 | .00113 | .30000 | 84.12 | | U | U |
| 12/15/1993 | Thallium | 2 | PM | 1444.4 | .03230 | .30000 | 84.12 | | U | U |
| 12/15/1993 | Vanadium | 2 | PM | 1444.4 | .02263 | .17000 | 84.12 | | | |
| 12/15/1993 | Zinc | 2 | PM | 1444.4 | .06705 | .00000 | 84.12 | | | |
| 12/15/1993 | Aluminum | 3 | PM | 1454.7 | .10691 | 33.30000 | 18.26 | | | |
| 12/15/1993 | Arsenic | 3 | PM | 1454.7 | .00039 | .00057 | 18.26 | | B | |
| 12/15/1993 | Barium | 3 | PM | 1454.7 | .00329 | .52000 | 18.26 | | | |
| 12/15/1993 | Beryllium | 3 | PM | 1454.7 | .00016 | .00100 | 18.26 | | U | U |
| 12/15/1993 | Cadmium | 3 | PM | 1454.7 | .00157 | .00140 | 18.26 | | | |
| 12/15/1993 | Chromium | 3 | PM | 1454.7 | .00268 | .00020 | 18.26 | | | |
| 12/15/1993 | Manganese | 3 | PM | 1454.7 | .00318 | .42000 | 18.26 | | | |
| 12/15/1993 | Nickel | 3 | PM | 1454.7 | .00321 | .01000 | 18.26 | | U | U |
| 12/15/1993 | Phosphorus | 3 | PM | 1454.7 | 1.24193 | .30000 | 18.26 | | | |
| 12/15/1993 | Selenium | 3 | PM | 1454.7 | .01607 | .70000 | 18.26 | | U | U |
| 12/15/1993 | Silver | 3 | PM | 1454.7 | .00112 | .30000 | 18.26 | | U | U |
| 12/15/1993 | Thallium | 3 | PM | 1454.7 | .03207 | .30000 | 18.26 | | U | U |
| 12/15/1993 | Vanadium | 3 | PM | 1454.7 | .00262 | .17000 | 18.26 | | B | |
| 12/15/1993 | Zinc | 3 | PM | 1454.7 | .01268 | .00000 | 18.26 | | B | |
| 12/15/1993 | Aluminum | 4 | PM | 1445.7 | .08889 | 33.30000 | 15.47 | | | U |
| 12/15/1993 | Arsenic | 4 | PM | 1445.7 | .00042 | .00057 | 15.47 | | B | |
| 12/15/1993 | Barium | 4 | PM | 1445.7 | .00404 | .52000 | 15.47 | | | |
| 12/15/1993 | Beryllium | 4 | PM | 1445.7 | .00016 | .00100 | 15.47 | | U | U |
| 12/15/1993 | Cadmium | 4 | PM | 1445.7 | .00129 | .00140 | 15.47 | | U | U |
| 12/15/1993 | Chromium | 4 | PM | 1445.7 | .00181 | .00020 | 15.47 | | | U |
| 12/15/1993 | Manganese | 4 | PM | 1445.7 | .00405 | .42000 | 15.47 | | | |
| 12/15/1993 | Nickel | 4 | PM | 1445.7 | .00323 | .01000 | 15.47 | | U | U |
| 12/15/1993 | Phosphorus | 4 | PM | 1445.7 | .42643 | .30000 | 15.47 | | | U |
| 12/15/1993 | Selenium | 4 | PM | 1445.7 | .01617 | .70000 | 15.47 | | U | U |
| 12/15/1993 | Silver | 4 | PM | 1445.7 | .00113 | .30000 | 15.47 | | U | U |
| 12/15/1993 | Thallium | 4 | PM | 1445.7 | .03227 | .30000 | 15.47 | | U | U |
| 12/15/1993 | Vanadium | 4 | PM | 1445.7 | .00162 | .17000 | 15.47 | | U | U |
| 12/15/1993 | Zinc | 4 | PM | 1445.7 | .01217 | .00000 | 15.47 | | B | |
| 12/15/1993 | Aluminum | 5 | PM | 1440.3 | .06176 | 33.30000 | 7.60 | | | U |
| 12/15/1993 | Arsenic | 5 | PM | 1440.3 | .00047 | .00057 | 7.60 | | B | |
| 12/15/1993 | Barium | 5 | PM | 1440.3 | .00160 | .52000 | 7.60 | | U | U |
| 12/15/1993 | Beryllium | 5 | PM | 1440.3 | .00016 | .00100 | 7.60 | | U | U |
| 12/15/1993 | Cadmium | 5 | PM | 1440.3 | .00128 | .00140 | 7.60 | | U | U |
| 12/15/1993 | Chromium | 5 | PM | 1440.3 | .00123 | .00020 | 7.60 | | | U |
| 12/15/1993 | Manganese | 5 | PM | 1440.3 | .00218 | .42000 | 7.60 | | | |
| 12/15/1993 | Nickel | 5 | PM | 1440.3 | .00320 | .01000 | 7.60 | | U | U |
| 12/15/1993 | Phosphorus | 5 | PM | 1440.3 | .33147 | .30000 | 7.60 | | | U |
| 12/15/1993 | Selenium | 5 | PM | 1440.3 | .01603 | .70000 | 7.60 | | U | U |
| 12/15/1993 | Silver | 5 | PM | 1440.3 | .00112 | .30000 | 7.60 | | U | U |
| 12/15/1993 | Thallium | 5 | PM | 1440.3 | .03200 | .30000 | 7.60 | | U | U |
| 12/15/1993 | Vanadium | 5 | PM | 1440.3 | .00160 | .17000 | 7.60 | | U | U |
| 12/15/1993 | Zinc | 5 | PM | 1440.3 | .01207 | .00000 | 7.60 | | B | |
| 12/15/1993 | Aluminum | 6 | PM | 1441.1 | .06047 | 33.30000 | 2.29 | | | U |
| 12/15/1993 | Arsenic | 6 | PM | 1441.1 | .00016 | .00057 | 2.29 | | U | U |
| 12/15/1993 | Barium | 6 | PM | 1441.1 | .00246 | .52000 | 2.29 | | | |
| 12/15/1993 | Beryllium | 6 | PM | 1441.1 | .00016 | .00100 | 2.29 | | U | U |
| 12/15/1993 | Cadmium | 6 | PM | 1441.1 | .00127 | .00140 | 2.29 | | U | U |
| 12/15/1993 | Chromium | 6 | PM | 1441.1 | .00085 | .00020 | 2.29 | | | U |

| Sample Date | Chemical Name | Site # | Typ | Run Time (min.) | Chem Conc. (ug/m3) | EPA Scr. L(ug/m3) | Part.C. (ug/m3) | Grav. Val | Qual. Lab | Qual. Val |
|---|---|---|---|---|---|---|---|---|---|---|
| 12/15/1993 | Manganese | 6 | PM | 1441.1 | .00226 | .42000 | 2.29 | | | |
| 12/15/1993 | Nickel | 6 | PM | 1441.1 | .00318 | .01000 | 2.29 | | U | U |
| 12/15/1993 | Phosphorus | 6 | PM | 1441.1 | .25154 | .30000 | 2.29 | | B | U |
| 12/15/1993 | Selenium | 6 | PM | 1441.1 | .01594 | .70000 | 2.29 | | U | U |
| 12/15/1993 | Silver | 6 | PM | 1441.1 | .00111 | .30000 | 2.29 | | U | U |
| 12/15/1993 | Thallium | 6 | PM | 1441.1 | .03182 | .30000 | 2.29 | | U | U |
| 12/15/1993 | Vanadium | 6 | PM | 1441.1 | .00159 | .17000 | 2.29 | | U | U |
| 12/15/1993 | Zinc | 6 | PM | 1441.1 | .00794 | .00000 | 2.29 | | B | |
| 12/15/1993 | Aluminum | 7 | PM | 1443.4 | .06500 | 33.30000 | 17.37 | | | U |
| 12/15/1993 | Arsenic | 7 | PM | 1443.4 | .00041 | .00057 | 17.37 | | B | |
| 12/15/1993 | Barium | 7 | PM | 1443.4 | .00252 | .52000 | 17.37 | | | |
| 12/15/1993 | Beryllium | 7 | PM | 1443.4 | .00016 | .00100 | 17.37 | | U | U |
| 12/15/1993 | Cadmium | 7 | PM | 1443.4 | .00223 | .00140 | 17.37 | | | |
| 12/15/1993 | Chromium | 7 | PM | 1443.4 | .00168 | .00020 | 17.37 | | | U |
| 12/15/1993 | Manganese | 7 | PM | 1443.4 | .00249 | .42000 | 17.37 | | | |
| 12/15/1993 | Nickel | 7 | PM | 1443.4 | .00326 | .01000 | 17.37 | | U | U |
| 12/15/1993 | Phosphorus | 7 | PM | 1443.4 | .67601 | .30000 | 17.37 | | | U |
| 12/15/1993 | Selenium | 7 | PM | 1443.4 | .01632 | .70000 | 17.37 | | U | U |
| 12/15/1993 | Silver | 7 | PM | 1443.4 | .00114 | .30000 | 17.37 | | U | U |
| 12/15/1993 | Thallium | 7 | PM | 1443.4 | .03257 | .30000 | 17.37 | | U | U |
| 12/15/1993 | Vanadium | 7 | PM | 1443.4 | .00163 | .17000 | 17.37 | | U | U |
| 12/15/1993 | Zinc | 7 | PM | 1443.4 | .01079 | .00000 | 17.37 | | B | |
| 12/15/1993 | Aluminum | 8 | PM | 1461.2 | .16245 | 33.30000 | 45.55 | | | |
| 12/15/1993 | Arsenic | 8 | PM | 1461.2 | .00057 | .00057 | 45.55 | | B | |
| 12/15/1993 | Barium | 8 | PM | 1461.2 | .00458 | .52000 | 45.55 | | | |
| 12/15/1993 | Beryllium | 8 | PM | 1461.2 | .00016 | .00100 | 45.55 | | U | U |
| 12/15/1993 | Cadmium | 8 | PM | 1461.2 | .00201 | .00140 | 45.55 | | | |
| 12/15/1993 | Chromium | 8 | PM | 1461.2 | .00410 | .00020 | 45.55 | | | |
| 12/15/1993 | Manganese | 8 | PM | 1461.2 | .00448 | .42000 | 45.55 | | | |
| 12/15/1993 | Nickel | 8 | PM | 1461.2 | .00322 | .01000 | 45.55 | | U | U |
| 12/15/1993 | Phosphorus | 8 | PM | 1461.2 | 1.01450 | .30000 | 45.55 | | | |
| 12/15/1993 | Selenium | 8 | PM | 1461.2 | .01612 | .70000 | 45.55 | | U | U |
| 12/15/1993 | Silver | 8 | PM | 1461.2 | .00112 | .30000 | 45.55 | | U | U |
| 12/15/1993 | Thallium | 8 | PM | 1461.2 | .03217 | .30000 | 45.55 | | U | U |
| 12/15/1993 | Vanadium | 8 | PM | 1461.2 | .00299 | .17000 | 45.55 | | B | |
| 12/15/1993 | Zinc | 8 | PM | 1461.2 | .01753 | .00000 | 45.55 | | B | |
| 12/19/1993 | Aluminum | 1 | PM | 1452.8 | .07604 | 33.30000 | 30.69 | | | U |
| 12/19/1993 | Arsenic | 1 | PM | 1452.8 | .00016 | .00057 | 30.69 | | U | U |
| 12/19/1993 | Barium | 1 | PM | 1452.8 | .00417 | .52000 | 30.69 | | | U |
| 12/19/1993 | Beryllium | 1 | PM | 1452.8 | .00016 | .00100 | 30.69 | | U | U |
| 12/19/1993 | Cadmium | 1 | PM | 1452.8 | .00135 | .00140 | 30.69 | | B | |
| 12/19/1993 | Chromium | 1 | PM | 1452.8 | .00156 | .00020 | 30.69 | | | U |
| 12/19/1993 | Manganese | 1 | PM | 1452.8 | .00307 | .42000 | 30.69 | | | |
| 12/19/1993 | Nickel | 1 | PM | 1452.8 | .00320 | .01000 | 30.69 | | U | U |
| 12/19/1993 | Phosphorus | 1 | PM | 1452.8 | .51250 | .30000 | 30.69 | | | U |
| 12/19/1993 | Selenium | 1 | PM | 1452.8 | .01604 | .70000 | 30.69 | | U | U |
| 12/19/1993 | Silver | 1 | PM | 1452.8 | .00112 | .30000 | 30.69 | | U | U |
| 12/19/1993 | Thallium | 1 | PM | 1452.8 | .03202 | .30000 | 30.69 | | U | U |
| 12/19/1993 | Vanadium | 1 | PM | 1452.8 | .00160 | .17000 | 30.69 | | U | U |
| 12/19/1993 | Zinc | 1 | PM | 1452.8 | .01425 | .00000 | 30.69 | | B | |
| 12/19/1993 | Aluminum | 2 | PM | 1443.9 | .13982 | 33.30000 | 40.43 | | | |
| 12/19/1993 | Arsenic | 2 | PM | 1443.9 | .00067 | .00057 | 40.43 | | | |
| 12/19/1993 | Barium | 2 | PM | 1443.9 | .00490 | .52000 | 40.43 | | | |
| 12/19/1993 | Beryllium | 2 | PM | 1443.9 | .00016 | .00100 | 40.43 | | U | U |
| 12/19/1993 | Cadmium | 2 | PM | 1443.9 | .00568 | .00140 | 40.43 | | | |

| Sample Date | Chemical Name | Site # | Typ | Run Time (min.) | Chem Conc. (ug/m3) | EPA Scr. L(ug/m3) | Part.C. (ug/m3) | Grav. Val | Qual. Lab | Qual. Val |
|---|---|---|---|---|---|---|---|---|---|---|
| 12/19/1993 | Chromium | 2 | PM | 1443.9 | .00680 | .00020 | 40.43 | | | |
| 12/19/1993 | Manganese | 2 | PM | 1443.9 | .00498 | .42000 | 40.43 | | | |
| 12/19/1993 | Nickel | 2 | PM | 1443.9 | .00321 | .01000 | 40.43 | | U | U |
| 12/19/1993 | Phosphorus | 2 | PM | 1443.9 | 4.37421 | .30000 | 40.43 | | | |
| 12/19/1993 | Selenium | 2 | PM | 1443.9 | .01610 | .70000 | 40.43 | | U | U |
| 12/19/1993 | Silver | 2 | PM | 1443.9 | .00112 | .30000 | 40.43 | | U | U |
| 12/19/1993 | Thallium | 2 | PM | 1443.9 | .03213 | .30000 | 40.43 | | U | U |
| 12/19/1993 | Vanadium | 2 | PM | 1443.9 | .00757 | .17000 | 40.43 | | | |
| 12/19/1993 | Zinc | 2 | PM | 1443.9 | .06125 | .00000 | 40.43 | | B | |
| 12/19/1993 | Aluminum | 3 | PM | 1455.7 | .06616 | 33.30000 | 24.76 | | | U |
| 12/19/1993 | Arsenic | 3 | PM | 1455.7 | .00017 | .00057 | 24.76 | | B | |
| 12/19/1993 | Barium | 3 | PM | 1455.7 | .00343 | .52000 | 24.76 | | | |
| 12/19/1993 | Beryllium | 3 | PM | 1455.7 | .00016 | .00100 | 24.76 | | U | U |
| 12/19/1993 | Cadmium | 3 | PM | 1455.7 | .00127 | .00140 | 24.76 | | U | U |
| 12/19/1993 | Chromium | 3 | PM | 1455.7 | .00108 | .00020 | 24.76 | | | U |
| 12/19/1993 | Manganese | 3 | PM | 1455.7 | .00389 | .42000 | 24.76 | | | |
| 12/19/1993 | Nickel | 3 | PM | 1455.7 | .00319 | .01000 | 24.76 | | U | U |
| 12/19/1993 | Phosphorus | 3 | PM | 1455.7 | .46250 | .30000 | 24.76 | | | U |
| 12/19/1993 | Selenium | 3 | PM | 1455.7 | .01597 | .70000 | 24.76 | | U | U |
| 12/19/1993 | Silver | 3 | PM | 1455.7 | .00111 | .30000 | 24.76 | | U | U |
| 12/19/1993 | Thallium | 3 | PM | 1455.7 | .03187 | .30000 | 24.76 | | U | U |
| 12/19/1993 | Vanadium | 3 | PM | 1455.7 | .00160 | .17000 | 24.76 | | U | U |
| 12/19/1993 | Zinc | 3 | PM | 1455.7 | .01381 | .00000 | 24.76 | | B | |
| 12/19/1993 | Aluminum | 4 | PM | 1446.7 | .07170 | 33.30000 | 25.88 | | | U |
| 12/19/1993 | Arsenic | 4 | PM | 1446.7 | .00022 | .00057 | 25.88 | | B | |
| 12/19/1993 | Barium | 4 | PM | 1446.7 | .00417 | .52000 | 25.88 | | | |
| 12/19/1993 | Beryllium | 4 | PM | 1446.7 | .00016 | .00100 | 25.88 | | U | U |
| 12/19/1993 | Cadmium | 4 | PM | 1446.7 | .00128 | .00140 | 25.88 | | U | U |
| 12/19/1993 | Chromium | 4 | PM | 1446.7 | .00141 | .00020 | 25.88 | | | U |
| 12/19/1993 | Manganese | 4 | PM | 1446.7 | .00435 | .42000 | 25.88 | | | |
| 12/19/1993 | Nickel | 4 | PM | 1446.7 | .00321 | .01000 | 25.88 | | U | U |
| 12/19/1993 | Phosphorus | 4 | PM | 1446.7 | .36232 | .30000 | 25.88 | | | U |
| 12/19/1993 | Selenium | 4 | PM | 1446.7 | .01607 | .70000 | 25.88 | | U | U |
| 12/19/1993 | Silver | 4 | PM | 1446.7 | .00112 | .30000 | 25.88 | | U | U |
| 12/19/1993 | Thallium | 4 | PM | 1446.7 | .03207 | .30000 | 25.88 | | U | U |
| 12/19/1993 | Vanadium | 4 | PM | 1446.7 | .00161 | .17000 | 25.88 | | U | U |
| 12/19/1993 | Zinc | 4 | PM | 1446.7 | .01639 | .00000 | 25.88 | | B | |
| 12/19/1993 | Aluminum | 5 | PM | 1438.8 | .03904 | 33.30000 | 10.75 | | | U |
| 12/19/1993 | Arsenic | 5 | PM | 1438.8 | .00016 | .00057 | 10.75 | | U | U |
| 12/19/1993 | Barium | 5 | PM | 1438.8 | .00160 | .52000 | 10.75 | | U | U |
| 12/19/1993 | Beryllium | 5 | PM | 1438.8 | .00016 | .00100 | 10.75 | | U | U |
| 12/19/1993 | Cadmium | 5 | PM | 1438.8 | .00127 | .00140 | 10.75 | | U | U |
| 12/19/1993 | Chromium | 5 | PM | 1438.8 | .00067 | .00020 | 10.75 | | | U |
| 12/19/1993 | Manganese | 5 | PM | 1438.8 | .00139 | .42000 | 10.75 | | B | |
| 12/19/1993 | Nickel | 5 | PM | 1438.8 | .00319 | .01000 | 10.75 | | U | U |
| 12/19/1993 | Phosphorus | 5 | PM | 1438.8 | .23270 | .30000 | 10.75 | | B | U |
| 12/19/1993 | Selenium | 5 | PM | 1438.8 | .01596 | .70000 | 10.75 | | U | U |
| 12/19/1993 | Silver | 5 | PM | 1438.8 | .00111 | .30000 | 10.75 | | U | U |
| 12/19/1993 | Thallium | 5 | PM | 1438.8 | .03185 | .30000 | 10.75 | | U | U |
| 12/19/1993 | Vanadium | 5 | PM | 1438.8 | .00160 | .17000 | 10.75 | | U | U |
| 12/19/1993 | Zinc | 5 | PM | 1438.8 | .00668 | .00000 | 10.75 | | B | |
| 12/19/1993 | Aluminum | 6 | PM | 1438.3 | .03968 | 33.30000 | 13.49 | | | U |
| 12/19/1993 | Arsenic | 6 | PM | 1438.3 | .00016 | .00057 | 13.49 | | U | U |
| 12/19/1993 | Barium | 6 | PM | 1438.3 | .00238 | .52000 | 13.49 | | | |
| 12/19/1993 | Beryllium | 6 | PM | 1438.3 | .00016 | .00100 | 13.49 | | U | U |

| Sample Date | Chemical Name | Site # | Typ | Run Time (min.) | Chem Conc. (ug/m3) | EPA Scr. L(ug/m3) | Part.C. (ug/m3) | Grav. Val | Qual. Lab | Qual. Val |
|---|---|---|---|---|---|---|---|---|---|---|
| 12/19/1993 | Cadmium | 6 | PM | 1438.3 | .00127 | .00140 | 13.49 | | U | U |
| 12/19/1993 | Chromium | 6 | PM | 1438.3 | .00080 | .00020 | 13.49 | | | U |
| 12/19/1993 | Manganese | 6 | PM | 1438.3 | .00181 | .42000 | 13.49 | | B | |
| 12/19/1993 | Nickel | 6 | PM | 1438.3 | .00317 | .01000 | 13.49 | | U | U |
| 12/19/1993 | Phosphorus | 6 | PM | 1438.3 | .26646 | .30000 | 13.49 | | B | U |
| 12/19/1993 | Selenium | 6 | PM | 1438.3 | .01589 | .70000 | 13.49 | | U | U |
| 12/19/1993 | Silver | 6 | PM | 1438.3 | .00111 | .30000 | 13.49 | | U | U |
| 12/19/1993 | Thallium | 6 | PM | 1438.3 | .03171 | .30000 | 13.49 | | U | U |
| 12/19/1993 | Vanadium | 6 | PM | 1438.3 | .00159 | .17000 | 13.49 | | U | U |
| 12/19/1993 | Zinc | 6 | PM | 1438.3 | .00728 | .00000 | 13.49 | | B | |
| 12/19/1993 | Aluminum | 7 | PM | 1434.0 | .04255 | 33.30000 | 11.78 | | | U |
| 12/19/1993 | Arsenic | 7 | PM | 1434.0 | .00017 | .00057 | 11.78 | | B | |
| 12/19/1993 | Barium | 7 | PM | 1434.0 | .00286 | .52000 | 11.78 | | | |
| 12/19/1993 | Beryllium | 7 | PM | 1434.0 | .00016 | .00100 | 11.78 | | U | U |
| 12/19/1993 | Cadmium | 7 | PM | 1434.0 | .00130 | .00140 | 11.78 | | U | U |
| 12/19/1993 | Chromium | 7 | PM | 1434.0 | .00093 | .00020 | 11.78 | | | U |
| 12/19/1993 | Manganese | 7 | PM | 1434.0 | .00168 | .42000 | 11.78 | | B | |
| 12/19/1993 | Nickel | 7 | PM | 1434.0 | .00326 | .01000 | 11.78 | | U | U |
| 12/19/1993 | Phosphorus | 7 | PM | 1434.0 | .23488 | .30000 | 11.78 | | B | U |
| 12/19/1993 | Selenium | 7 | PM | 1434.0 | .01633 | .70000 | 11.78 | | U | U |
| 12/19/1993 | Silver | 7 | PM | 1434.0 | .00114 | .30000 | 11.78 | | U | U |
| 12/19/1993 | Thallium | 7 | PM | 1434.0 | .03260 | .30000 | 11.78 | | U | U |
| 12/19/1993 | Vanadium | 7 | PM | 1434.0 | .00163 | .17000 | 11.78 | | U | U |
| 12/19/1993 | Zinc | 7 | PM | 1434.0 | .00716 | .00000 | 11.78 | | B | |
| 12/19/1993 | Aluminum | 8 | PM | 1463.6 | .08670 | 33.30000 | 32.34 | | | |
| 12/19/1993 | Arsenic | 8 | PM | 1463.6 | .00016 | .00057 | 32.34 | | U | U |
| 12/19/1993 | Barium | 8 | PM | 1463.6 | .00551 | .52000 | 32.34 | | | U |
| 12/19/1993 | Beryllium | 8 | PM | 1463.6 | .00016 | .00100 | 32.34 | | U | U |
| 12/19/1993 | Cadmium | 8 | PM | 1463.6 | .00259 | .00140 | 32.34 | | | |
| 12/19/1993 | Chromium | 8 | PM | 1463.6 | .00222 | .00020 | 32.34 | | | |
| 12/19/1993 | Manganese | 8 | PM | 1463.6 | .00315 | .42000 | 32.34 | | | |
| 12/19/1993 | Nickel | 8 | PM | 1463.6 | .00375 | .01000 | 32.34 | | B | |
| 12/19/1993 | Phosphorus | 8 | PM | 1463.6 | .65023 | .30000 | 32.34 | | | U |
| 12/19/1993 | Selenium | 8 | PM | 1463.6 | .01600 | .70000 | 32.34 | | U | U |
| 12/19/1993 | Silver | 8 | PM | 1463.6 | .00112 | .30000 | 32.34 | | U | U |
| 12/19/1993 | Thallium | 8 | PM | 1463.6 | .03194 | .30000 | 32.34 | | U | U |
| 12/19/1993 | Vanadium | 8 | PM | 1463.6 | .00160 | .17000 | 32.34 | | U | U |
| 12/19/1993 | Zinc | 8 | PM | 1463.6 | .01249 | .00000 | 32.34 | | B | |
| 12/23/1993 | Aluminum | 1 | PM | 1452.5 | .07208 | 33.30000 | 21.19 | | | U |
| 12/23/1993 | Arsenic | 1 | PM | 1452.5 | .00016 | .00057 | 21.19 | | U | U |
| 12/23/1993 | Barium | 1 | PM | 1452.5 | .00507 | .52000 | 21.19 | | | U |
| 12/23/1993 | Beryllium | 1 | PM | 1452.5 | .00016 | .00100 | 21.19 | | U | U |
| 12/23/1993 | Cadmium | 1 | PM | 1452.5 | .00126 | .00140 | 21.19 | | U | U |
| 12/23/1993 | Chromium | 1 | PM | 1452.5 | .00156 | .00020 | 21.19 | | | U |
| 12/23/1993 | Manganese | 1 | PM | 1452.5 | .00376 | .42000 | 21.19 | | | |
| 12/23/1993 | Nickel | 1 | PM | 1452.5 | .00317 | .01000 | 21.19 | | B | |
| 12/23/1993 | Phosphorus | 1 | PM | 1452.5 | .39770 | .30000 | 21.19 | | | U |
| 12/23/1993 | Selenium | 1 | PM | 1452.5 | .01587 | .70000 | 21.19 | | U | U |
| 12/23/1993 | Silver | 1 | PM | 1452.5 | .00111 | .30000 | 21.19 | | U | U |
| 12/23/1993 | Thallium | 1 | PM | 1452.5 | .03168 | .30000 | 21.19 | | U | U |
| 12/23/1993 | Vanadium | 1 | PM | 1452.5 | .00159 | .17000 | 21.19 | | U | U |
| 12/23/1993 | Zinc | 1 | PM | 1452.5 | .01498 | .00000 | 21.19 | | B | |
| 12/23/1993 | Aluminum | 2 | PM | 1443.4 | .13074 | 33.30000 | 28.07 | | | |
| 12/23/1993 | Arsenic | 2 | PM | 1443.4 | .00020 | .00057 | 28.07 | | B | |
| 12/23/1993 | Barium | 2 | PM | 1443.4 | .00469 | .52000 | 28.07 | | | U |

| Sample Date | Chemical Name | Site # | Typ | Run Time (min.) | Chem Conc. (ug/m3) | EPA Scr. L(ug/m3) | Part.C. (ug/m3) | Grav. Val | Qual. Lab | Qual. Val |
|---|---|---|---|---|---|---|---|---|---|---|
| 12/23/1993 | Beryllium | 2 | PM | 1443.4 | .00016 | .00100 | 28.07 | | U | U |
| 12/23/1993 | Cadmium | 2 | PM | 1443.4 | .00552 | .00140 | 28.07 | | | |
| 12/23/1993 | Chromium | 2 | PM | 1443.4 | .00641 | .00020 | 28.07 | | | |
| 12/23/1993 | Manganese | 2 | PM | 1443.4 | .00490 | .42000 | 28.07 | | | |
| 12/23/1993 | Nickel | 2 | PM | 1443.4 | .00326 | .01000 | 28.07 | | B | |
| 12/23/1993 | Phosphorus | 2 | PM | 1443.4 | 2.35466 | .30000 | 28.07 | | | |
| 12/23/1993 | Selenium | 2 | PM | 1443.4 | .02069 | .70000 | 28.07 | | B | |
| 12/23/1993 | Silver | 2 | PM | 1443.4 | .00111 | .30000 | 28.07 | | U | U |
| 12/23/1993 | Thallium | 2 | PM | 1443.4 | .03180 | .30000 | 28.07 | | U | U |
| 12/23/1993 | Vanadium | 2 | PM | 1443.4 | .00647 | .17000 | 28.07 | | | |
| 12/23/1993 | Zinc | 2 | PM | 1443.4 | .02818 | .00000 | 28.07 | | B | |
| 12/23/1993 | Aluminum | 3 | PM | 1454.3 | .06677 | 33.30000 | 15.51 | | | U |
| 12/23/1993 | Arsenic | 3 | PM | 1454.3 | .00016 | .00057 | 15.51 | | U | U |
| 12/23/1993 | Barium | 3 | PM | 1454.3 | .00489 | .52000 | 15.51 | | | U |
| 12/23/1993 | Beryllium | 3 | PM | 1454.3 | .00016 | .00100 | 15.51 | | U | U |
| 12/23/1993 | Cadmium | 3 | PM | 1454.3 | .00126 | .00140 | 15.51 | | U | U |
| 12/23/1993 | Chromium | 3 | PM | 1454.3 | .00108 | .00020 | 15.51 | | | U |
| 12/23/1993 | Manganese | 3 | PM | 1454.3 | .00445 | .42000 | 15.51 | | | |
| 12/23/1993 | Nickel | 3 | PM | 1454.3 | .00347 | .01000 | 15.51 | | B | |
| 12/23/1993 | Phosphorus | 3 | PM | 1454.3 | .31874 | .30000 | 15.51 | | | U |
| 12/23/1993 | Selenium | 3 | PM | 1454.3 | .01896 | .70000 | 15.51 | | B | |
| 12/23/1993 | Silver | 3 | PM | 1454.3 | .00110 | .30000 | 15.51 | | U | U |
| 12/23/1993 | Thallium | 3 | PM | 1454.3 | .03156 | .30000 | 15.51 | | U | U |
| 12/23/1993 | Vanadium | 3 | PM | 1454.3 | .00158 | .17000 | 15.51 | | U | U |
| 12/23/1993 | Zinc | 3 | PM | 1454.3 | .02287 | .00000 | 15.51 | | B | |
| 12/23/1993 | Aluminum | 4 | PM | 1446.7 | .06218 | 33.30000 | 17.42 | | | U |
| 12/23/1993 | Arsenic | 4 | PM | 1446.7 | .00016 | .00057 | 17.42 | | U | U |
| 12/23/1993 | Barium | 4 | PM | 1446.7 | .00317 | .52000 | 17.42 | | | U |
| 12/23/1993 | Beryllium | 4 | PM | 1446.7 | .00016 | .00100 | 17.42 | | U | U |
| 12/23/1993 | Cadmium | 4 | PM | 1446.7 | .00127 | .00140 | 17.42 | | U | U |
| 12/23/1993 | Chromium | 4 | PM | 1446.7 | .00103 | .00020 | 17.42 | | | U |
| 12/23/1993 | Manganese | 4 | PM | 1446.7 | .00407 | .42000 | 17.42 | | | |
| 12/23/1993 | Nickel | 4 | PM | 1446.7 | .00317 | .01000 | 17.42 | | B | |
| 12/23/1993 | Phosphorus | 4 | PM | 1446.7 | .28875 | .30000 | 17.42 | | B | U |
| 12/23/1993 | Selenium | 4 | PM | 1446.7 | .01589 | .70000 | 17.42 | | U | U |
| 12/23/1993 | Silver | 4 | PM | 1446.7 | .00111 | .30000 | 17.42 | | U | U |
| 12/23/1993 | Thallium | 4 | PM | 1446.7 | .03172 | .30000 | 17.42 | | U | U |
| 12/23/1993 | Vanadium | 4 | PM | 1446.7 | .00159 | .17000 | 17.42 | | U | U |
| 12/23/1993 | Zinc | 4 | PM | 1446.7 | .01247 | .00000 | 17.42 | | B | |
| 12/23/1993 | Aluminum | 5 | PM | 1443.1 | .03204 | 33.30000 | 11.42 | | B | U |
| 12/23/1993 | Arsenic | 5 | PM | 1443.1 | .00016 | .00057 | 11.42 | | U | U |
| 12/23/1993 | Barium | 5 | PM | 1443.1 | .00204 | .52000 | 11.42 | | | U |
| 12/23/1993 | Beryllium | 5 | PM | 1443.1 | .00016 | .00100 | 11.42 | | U | U |
| 12/23/1993 | Cadmium | 5 | PM | 1443.1 | .00125 | .00140 | 11.42 | | U | U |
| 12/23/1993 | Chromium | 5 | PM | 1443.1 | .00076 | .00020 | 11.42 | | | U |
| 12/23/1993 | Manganese | 5 | PM | 1443.1 | .00110 | .42000 | 11.42 | | B | |
| 12/23/1993 | Nickel | 5 | PM | 1443.1 | .00314 | .01000 | 11.42 | | U | U |
| 12/23/1993 | Phosphorus | 5 | PM | 1443.1 | .30349 | .30000 | 11.42 | | B | U |
| 12/23/1993 | Selenium | 5 | PM | 1443.1 | .01574 | .70000 | 11.42 | | U | U |
| 12/23/1993 | Silver | 5 | PM | 1443.1 | .00110 | .30000 | 11.42 | | U | U |
| 12/23/1993 | Thallium | 5 | PM | 1443.1 | .03142 | .30000 | 11.42 | | U | U |
| 12/23/1993 | Vanadium | 5 | PM | 1443.1 | .00157 | .17000 | 11.42 | | U | U |
| 12/23/1993 | Zinc | 5 | PM | 1443.1 | .00715 | .00000 | 11.42 | | B | |
| 12/23/1993 | Aluminum | 6 | PM | 1443.7 | .03499 | 33.30000 | 8.18 | | | U |
| 12/23/1993 | Arsenic | 6 | PM | 1443.7 | .00016 | .00057 | 8.18 | | U | U |

| Sample Date | Chemical Name | Site # | Typ | Run Time (min.) | Chem Conc. (ug/m3) | EPA Scr. L(ug/m3) | Part.C. (ug/m3) | Grav. Val | Qual. Lab | Qual. Val |
|---|---|---|---|---|---|---|---|---|---|---|
| 12/23/1993 | Barium | 6 | PM | 1443.7 | .00164 | .52000 | 8.18 | | B | U |
| 12/23/1993 | Beryllium | 6 | PM | 1443.7 | .00016 | .00100 | 8.18 | | U | U |
| 12/23/1993 | Cadmium | 6 | PM | 1443.7 | .00125 | .00140 | 8.18 | | U | U |
| 12/23/1993 | Chromium | 6 | PM | 1443.7 | .00059 | .00020 | 8.18 | | | U |
| 12/23/1993 | Manganese | 6 | PM | 1443.7 | .00102 | .42000 | 8.18 | | B | |
| 12/23/1993 | Nickel | 6 | PM | 1443.7 | .00312 | .01000 | 8.18 | | U | U |
| 12/23/1993 | Phosphorus | 6 | PM | 1443.7 | .20771 | .30000 | 8.18 | | B | U |
| 12/23/1993 | Selenium | 6 | PM | 1443.7 | .01566 | .70000 | 8.18 | | U | U |
| 12/23/1993 | Silver | 6 | PM | 1443.7 | .00109 | .30000 | 8.18 | | U | U |
| 12/23/1993 | Thallium | 6 | PM | 1443.7 | .03125 | .30000 | 8.18 | | U | U |
| 12/23/1993 | Vanadium | 6 | PM | 1443.7 | .00157 | .17000 | 8.18 | | U | U |
| 12/23/1993 | Zinc | 6 | PM | 1443.7 | .00388 | .00000 | 8.18 | | B | |
| 12/23/1993 | Aluminum | 7 | PM | 1440.3 | .02858 | 33.30000 | 11.03 | | B | U |
| 12/23/1993 | Arsenic | 7 | PM | 1440.3 | .00016 | .00057 | 11.03 | | U | U |
| 12/23/1993 | Barium | 7 | PM | 1440.3 | .00161 | .52000 | 11.03 | | U | U |
| 12/23/1993 | Beryllium | 7 | PM | 1440.3 | .00016 | .00100 | 11.03 | | U | U |
| 12/23/1993 | Cadmium | 7 | PM | 1440.3 | .00142 | .00140 | 11.03 | | B | U |
| 12/23/1993 | Chromium | 7 | PM | 1440.3 | .00081 | .00020 | 11.03 | | | U |
| 12/23/1993 | Manganese | 7 | PM | 1440.3 | .00127 | .42000 | 11.03 | | B | |
| 12/23/1993 | Nickel | 7 | PM | 1440.3 | .00321 | .01000 | 11.03 | | U | U |
| 12/23/1993 | Phosphorus | 7 | PM | 1440.3 | .30182 | .30000 | 11.03 | | B | U |
| 12/23/1993 | Selenium | 7 | PM | 1440.3 | .01608 | .70000 | 11.03 | | U | U |
| 12/23/1993 | Silver | 7 | PM | 1440.3 | .00112 | .30000 | 11.03 | | U | U |
| 12/23/1993 | Thallium | 7 | PM | 1440.3 | .03210 | .30000 | 11.03 | | U | U |
| 12/23/1993 | Vanadium | 7 | PM | 1440.3 | .00161 | .17000 | 11.03 | | U | U |
| 12/23/1993 | Zinc | 7 | PM | 1440.3 | .00622 | .00000 | 11.03 | | B | |
| 12/23/1993 | Aluminum | 8 | PM | 1461.2 | .08022 | 33.30000 | 23.01 | | | U |
| 12/23/1993 | Arsenic | 8 | PM | 1461.2 | .00016 | .00057 | 23.01 | | U | U |
| 12/23/1993 | Barium | 8 | PM | 1461.2 | .00412 | .52000 | 23.01 | | | U |
| 12/23/1993 | Beryllium | 8 | PM | 1461.2 | .00016 | .00100 | 23.01 | | U | U |
| 12/23/1993 | Cadmium | 8 | PM | 1461.2 | .00126 | .00140 | 23.01 | | U | U |
| 12/23/1993 | Chromium | 8 | PM | 1461.2 | .00169 | .00020 | 23.01 | | | U |
| 12/23/1993 | Manganese | 8 | PM | 1461.2 | .00334 | .42000 | 23.01 | | | |
| 12/23/1993 | Nickel | 8 | PM | 1461.2 | .00316 | .01000 | 23.01 | | U | U |
| 12/23/1993 | Phosphorus | 8 | PM | 1461.2 | .38467 | .30000 | 23.01 | | | U |
| 12/23/1993 | Selenium | 8 | PM | 1461.2 | .02615 | .70000 | 23.01 | | B | |
| 12/23/1993 | Silver | 8 | PM | 1461.2 | .00111 | .30000 | 23.01 | | U | U |
| 12/23/1993 | Thallium | 8 | PM | 1461.2 | .03165 | .30000 | 23.01 | | U | U |
| 12/23/1993 | Vanadium | 8 | PM | 1461.2 | .00159 | .17000 | 23.01 | | U | U |
| 12/23/1993 | Zinc | 8 | PM | 1461.2 | .01181 | .00000 | 23.01 | | B | |
| 12/25/1993 | Aluminum | 1 | PM | 1455.5 | .05398 | 33.30000 | 28.16 | | | U |
| 12/25/1993 | Arsenic | 1 | PM | 1455.5 | .00022 | .00057 | 28.16 | | B | |
| 12/25/1993 | Barium | 1 | PM | 1455.5 | .00320 | .52000 | 28.16 | | | |
| 12/25/1993 | Beryllium | 1 | PM | 1455.5 | .00016 | .00100 | 28.16 | | U | U |
| 12/25/1993 | Cadmium | 1 | PM | 1455.5 | .00125 | .00140 | 28.16 | | U | U |
| 12/25/1993 | Chromium | 1 | PM | 1455.5 | .00121 | .00020 | 28.16 | | | |
| 12/25/1993 | Manganese | 1 | PM | 1455.5 | .00309 | .42000 | 28.16 | | | |
| 12/25/1993 | Nickel | 1 | PM | 1455.5 | .00312 | .01000 | 28.16 | | U | U |
| 12/25/1993 | Phosphorus | 1 | PM | 1455.5 | .29950 | .30000 | 28.16 | | B | U |
| 12/25/1993 | Selenium | 1 | PM | 1455.5 | .01563 | .70000 | 28.16 | | U | U |
| 12/25/1993 | Silver | 1 | PM | 1455.5 | .00109 | .30000 | 28.16 | | U | U |
| 12/25/1993 | Thallium | 1 | PM | 1455.5 | .03119 | .30000 | 28.16 | | U | U |
| 12/25/1993 | Vanadium | 1 | PM | 1455.5 | .00156 | .17000 | 28.16 | | U | U |
| 12/25/1993 | Zinc | 1 | PM | 1455.5 | .01351 | .00000 | 28.16 | | B | |
| 12/25/1993 | Aluminum | 2 | PM | 1444.6 | .06634 | 33.30000 | 25.55 | | | U |

| Sample Date | Chemical Name | Site # | Typ | Run Time (min.) | Chem Conc. (ug/m3) | EPA Scr. L(ug/m3) | Part.C. (ug/m3) | Grav. Val | Qual. Lab | Qual. Val |
|---|---|---|---|---|---|---|---|---|---|---|
| 12/25/1993 | Arsenic | 2 | PM | 1444.6 | .00018 | .00057 | 25.55 | | B | |
| 12/25/1993 | Barium | 2 | PM | 1444.6 | .00353 | .52000 | 25.55 | | | |
| 12/25/1993 | Beryllium | 2 | PM | 1444.6 | .00016 | .00100 | 25.55 | | U | U |
| 12/25/1993 | Cadmium | 2 | PM | 1444.6 | .00157 | .00140 | 25.55 | | | U |
| 12/25/1993 | Chromium | 2 | PM | 1444.6 | .00223 | .00020 | 25.55 | | | |
| 12/25/1993 | Manganese | 2 | PM | 1444.6 | .00356 | .42000 | 25.55 | | | |
| 12/25/1993 | Nickel | 2 | PM | 1444.6 | .00314 | .01000 | 25.55 | | U | U |
| 12/25/1993 | Phosphorus | 2 | PM | 1444.6 | .39238 | .30000 | 25.55 | | | U |
| 12/25/1993 | Selenium | 2 | PM | 1444.6 | .01571 | .70000 | 25.55 | | U | U |
| 12/25/1993 | Silver | 2 | PM | 1444.6 | .00110 | .30000 | 25.55 | | U | U |
| 12/25/1993 | Thallium | 2 | PM | 1444.6 | .03135 | .30000 | 25.55 | | U | U |
| 12/25/1993 | Vanadium | 2 | PM | 1444.6 | .00157 | .17000 | 25.55 | | U | U |
| 12/25/1993 | Zinc | 2 | PM | 1444.6 | .01527 | .00000 | 25.55 | | B | |
| 12/25/1993 | Aluminum | 3 | PM | 1455.7 | .05633 | 33.30000 | 46.61 | | | U |
| 12/25/1993 | Arsenic | 3 | PM | 1455.7 | .00021 | .00057 | 46.61 | | B | |
| 12/25/1993 | Barium | 3 | PM | 1455.7 | .00366 | .52000 | 46.61 | | | |
| 12/25/1993 | Beryllium | 3 | PM | 1455.7 | .00016 | .00100 | 46.61 | | U | U |
| 12/25/1993 | Cadmium | 3 | PM | 1455.7 | .00153 | .00140 | 46.61 | | | U |
| 12/25/1993 | Chromium | 3 | PM | 1455.7 | .00107 | .00020 | 46.61 | | | |
| 12/25/1993 | Manganese | 3 | PM | 1455.7 | .00411 | .42000 | 46.61 | | | |
| 12/25/1993 | Nickel | 3 | PM | 1455.7 | .00311 | .01000 | 46.61 | | U | U |
| 12/25/1993 | Phosphorus | 3 | PM | 1455.7 | .31114 | .30000 | 46.61 | | | U |
| 12/25/1993 | Selenium | 3 | PM | 1455.7 | .01559 | .70000 | 46.61 | | U | U |
| 12/25/1993 | Silver | 3 | PM | 1455.7 | .00109 | .30000 | 46.61 | | U | U |
| 12/25/1993 | Thallium | 3 | PM | 1455.7 | .03111 | .30000 | 46.61 | | U | U |
| 12/25/1993 | Vanadium | 3 | PM | 1455.7 | .00156 | .17000 | 46.61 | | U | U |
| 12/25/1993 | Zinc | 3 | PM | 1455.7 | .01745 | .00000 | 46.61 | | B | |
| 12/25/1993 | Aluminum | 4 | PM | 1448.3 | .07927 | 33.30000 | 40.54 | | | U |
| 12/25/1993 | Arsenic | 4 | PM | 1448.3 | .00025 | .00057 | 40.54 | | B | |
| 12/25/1993 | Barium | 4 | PM | 1448.3 | .00313 | .52000 | 40.54 | | | |
| 12/25/1993 | Beryllium | 4 | PM | 1448.3 | .00016 | .00100 | 40.54 | | U | U |
| 12/25/1993 | Cadmium | 4 | PM | 1448.3 | .00223 | .00140 | 40.54 | | | U |
| 12/25/1993 | Chromium | 4 | PM | 1448.3 | .00140 | .00020 | 40.54 | | | |
| 12/25/1993 | Manganese | 4 | PM | 1448.3 | .00469 | .42000 | 40.54 | | | |
| 12/25/1993 | Nickel | 4 | PM | 1448.3 | .00313 | .01000 | 40.54 | | U | U |
| 12/25/1993 | Phosphorus | 4 | PM | 1448.3 | .30961 | .30000 | 40.54 | | | U |
| 12/25/1993 | Selenium | 4 | PM | 1448.3 | .01567 | .70000 | 40.54 | | U | U |
| 12/25/1993 | Silver | 4 | PM | 1448.3 | .00109 | .30000 | 40.54 | | U | U |
| 12/25/1993 | Thallium | 4 | PM | 1448.3 | .03127 | .30000 | 40.54 | | U | U |
| 12/25/1993 | Vanadium | 4 | PM | 1448.3 | .00157 | .17000 | 40.54 | | U | U |
| 12/25/1993 | Zinc | 4 | PM | 1448.3 | .01642 | .00000 | 40.54 | | B | |
| 12/25/1993 | Aluminum | 5 | PM | 1440.3 | .08680 | 33.30000 | 71.34 | | | |
| 12/25/1993 | Arsenic | 5 | PM | 1440.3 | .00052 | .00057 | 71.34 | | B | |
| 12/25/1993 | Barium | 5 | PM | 1440.3 | .00202 | .52000 | 71.34 | | | |
| 12/25/1993 | Beryllium | 5 | PM | 1440.3 | .00016 | .00100 | 71.34 | | U | U |
| 12/25/1993 | Cadmium | 5 | PM | 1440.3 | .00738 | .00140 | 71.34 | | | |
| 12/25/1993 | Chromium | 5 | PM | 1440.3 | .00332 | .00020 | 71.34 | | | |
| 12/25/1993 | Manganese | 5 | PM | 1440.3 | .00234 | .42000 | 71.34 | | | |
| 12/25/1993 | Nickel | 5 | PM | 1440.3 | .00311 | .01000 | 71.34 | | U | U |
| 12/25/1993 | Phosphorus | 5 | PM | 1440.3 | 1.89719 | .30000 | 71.34 | | | |
| 12/25/1993 | Selenium | 5 | PM | 1440.3 | .01556 | .70000 | 71.34 | | U | U |
| 12/25/1993 | Silver | 5 | PM | 1440.3 | .00108 | .30000 | 71.34 | | U | U |
| 12/25/1993 | Thallium | 5 | PM | 1440.3 | .03106 | .30000 | 71.34 | | U | U |
| 12/25/1993 | Vanadium | 5 | PM | 1440.3 | .00191 | .17000 | 71.34 | | B | |
| 12/25/1993 | Zinc | 5 | PM | 1440.3 | .02548 | .00000 | 71.34 | | B | |

| Sample Date | Chemical Name | Site # | Typ | Run Time (min.) | Chem Conc. (ug/m3) | EPA Scr. L(ug/m3) | Part.C. (ug/m3) | Grav. Val | Qual. Lab | Qual. Val |
|---|---|---|---|---|---|---|---|---|---|---|
| 12/25/1993 | Aluminum | 6 | PM | 1440.0 | .03277 | 33.30000 | 19.94 | | B | U |
| 12/25/1993 | Arsenic | 6 | PM | 1440.0 | .00017 | .00057 | 19.94 | | B | |
| 12/25/1993 | Barium | 6 | PM | 1440.0 | .00155 | .52000 | 19.94 | | U | U |
| 12/25/1993 | Beryllium | 6 | PM | 1440.0 | .00015 | .00100 | 19.94 | | U | U |
| 12/25/1993 | Cadmium | 6 | PM | 1440.0 | .00161 | .00140 | 19.94 | | | |
| 12/25/1993 | Chromium | 6 | PM | 1440.0 | .00077 | .00020 | 19.94 | | | |
| 12/25/1993 | Manganese | 6 | PM | 1440.0 | .00153 | .42000 | 19.94 | | B | |
| 12/25/1993 | Nickel | 6 | PM | 1440.0 | .00309 | .01000 | 19.94 | | U | U |
| 12/25/1993 | Phosphorus | 6 | PM | 1440.0 | .31226 | .30000 | 19.94 | | | U |
| 12/25/1993 | Selenium | 6 | PM | 1440.0 | .01549 | .70000 | 19.94 | | U | U |
| 12/25/1993 | Silver | 6 | PM | 1440.0 | .00108 | .30000 | 19.94 | | U | U |
| 12/25/1993 | Thallium | 6 | PM | 1440.0 | .03092 | .30000 | 19.94 | | U | U |
| 12/25/1993 | Vanadium | 6 | PM | 1440.0 | .00195 | .17000 | 19.94 | | B | |
| 12/25/1993 | Zinc | 6 | PM | 1440.0 | .00889 | .00000 | 19.94 | | B | |
| 12/25/1993 | Aluminum | 7 | PM | 1438.7 | .08357 | 33.30000 | 106.10 | | | U |
| 12/25/1993 | Arsenic | 7 | PM | 1438.7 | .00058 | .00057 | 106.10 | | B | |
| 12/25/1993 | Barium | 7 | PM | 1438.7 | .00166 | .52000 | 106.10 | | B | |
| 12/25/1993 | Beryllium | 7 | PM | 1438.7 | .00016 | .00100 | 106.10 | | U | U |
| 12/25/1993 | Cadmium | 7 | PM | 1438.7 | .00988 | .00140 | 106.10 | | | |
| 12/25/1993 | Chromium | 7 | PM | 1438.7 | .00333 | .00020 | 106.10 | | | |
| 12/25/1993 | Manganese | 7 | PM | 1438.7 | .00389 | .42000 | 106.10 | | | |
| 12/25/1993 | Nickel | 7 | PM | 1438.7 | .00317 | .01000 | 106.10 | | U | U |
| 12/25/1993 | Phosphorus | 7 | PM | 1438.7 | 1.96886 | .30000 | 106.10 | | | |
| 12/25/1993 | Selenium | 7 | PM | 1438.7 | .03172 | .70000 | 106.10 | | B | U |
| 12/25/1993 | Silver | 7 | PM | 1438.7 | .00111 | .30000 | 106.10 | | U | U |
| 12/25/1993 | Thallium | 7 | PM | 1438.7 | .03172 | .30000 | 106.10 | | U | U |
| 12/25/1993 | Vanadium | 7 | PM | 1438.7 | .00560 | .17000 | 106.10 | | | |
| 12/25/1993 | Zinc | 7 | PM | 1438.7 | .04077 | .00000 | 106.10 | | B | |
| 12/27/1993 | Aluminum | 1 | PM | 1453.6 | .08899 | 33.30000 | 35.49 | | | |
| 12/27/1993 | Arsenic | 1 | PM | 1453.6 | .00082 | .00057 | 35.49 | | | |
| 12/27/1993 | Barium | 1 | PM | 1453.6 | .00437 | .52000 | 35.49 | | | |
| 12/27/1993 | Beryllium | 1 | PM | 1453.6 | .00016 | .00100 | 35.49 | | U | U |
| 12/27/1993 | Cadmium | 1 | PM | 1453.6 | .00341 | .00140 | 35.49 | | | U |
| 12/27/1993 | Chromium | 1 | PM | 1453.6 | .00182 | .00020 | 35.49 | | | U |
| 12/27/1993 | Manganese | 1 | PM | 1453.6 | .00564 | .42000 | 35.49 | | | |
| 12/27/1993 | Nickel | 1 | PM | 1453.6 | .00371 | .01000 | 35.49 | | B | |
| 12/27/1993 | Phosphorus | 1 | PM | 1453.6 | .81897 | .30000 | 35.49 | | | |
| 12/27/1993 | Selenium | 1 | PM | 1453.6 | .01619 | .70000 | 35.49 | | U | U |
| 12/27/1993 | Silver | 1 | PM | 1453.6 | .00113 | .30000 | 35.49 | | U | U |
| 12/27/1993 | Thallium | 1 | PM | 1453.6 | .03231 | .30000 | 35.49 | | U | U |
| 12/27/1993 | Vanadium | 1 | PM | 1453.6 | .00234 | .17000 | 35.49 | | B | |
| 12/27/1993 | Zinc | 1 | PM | 1453.6 | .01793 | .00000 | 35.49 | | B | |
| 12/27/1993 | Aluminum | 2 | PM | 1445.4 | .10351 | 33.30000 | 36.57 | | | |
| 12/27/1993 | Arsenic | 2 | PM | 1445.4 | .00086 | .00057 | 36.57 | | | |
| 12/27/1993 | Barium | 2 | PM | 1445.4 | .00478 | .52000 | 36.57 | | | |
| 12/27/1993 | Beryllium | 2 | PM | 1445.4 | .00016 | .00100 | 36.57 | | U | U |
| 12/27/1993 | Cadmium | 2 | PM | 1445.4 | .00673 | .00140 | 36.57 | | | U |
| 12/27/1993 | Chromium | 2 | PM | 1445.4 | .00485 | .00020 | 36.57 | | | |
| 12/27/1993 | Manganese | 2 | PM | 1445.4 | .00569 | .42000 | 36.57 | | | |
| 12/27/1993 | Nickel | 2 | PM | 1445.4 | .00324 | .01000 | 36.57 | | U | U |
| 12/27/1993 | Phosphorus | 2 | PM | 1445.4 | 2.36770 | .30000 | 36.57 | | | |
| 12/27/1993 | Selenium | 2 | PM | 1445.4 | .02109 | .70000 | 36.57 | | B | |
| 12/27/1993 | Silver | 2 | PM | 1445.4 | .00118 | .30000 | 36.57 | | B | |
| 12/27/1993 | Thallium | 2 | PM | 1445.4 | .03241 | .30000 | 36.57 | | U | U |
| 12/27/1993 | Vanadium | 2 | PM | 1445.4 | .00501 | .17000 | 36.57 | | | |

| Sample Date | Chemical Name | Site # | Typ | Run Time (min.) | Chem Conc. (ug/m3) | EPA Scr. L(ug/m3) | Part.C. (ug/m3) | Grav. Val | Qual. Lab | Qual. Val |
|---|---|---|---|---|---|---|---|---|---|---|
| 12/27/1993 | Zinc | 2 | PM | 1445.4 | .03584 | .00000 | 36.57 | | B | |
| 12/27/1993 | Aluminum | 3 | PM | 1454.8 | .05348 | 33.30000 | 31.13 | | | U |
| 12/27/1993 | Arsenic | 3 | PM | 1454.8 | .00066 | .00057 | 31.13 | | | |
| 12/27/1993 | Barium | 3 | PM | 1454.8 | .00411 | .52000 | 31.13 | | | U |
| 12/27/1993 | Beryllium | 3 | PM | 1454.8 | .00016 | .00100 | 31.13 | | U | U |
| 12/27/1993 | Cadmium | 3 | PM | 1454.8 | .00289 | .00140 | 31.13 | | | |
| 12/27/1993 | Chromium | 3 | PM | 1454.8 | .00118 | .00020 | 31.13 | | | U |
| 12/27/1993 | Manganese | 3 | PM | 1454.8 | .00694 | .42000 | 31.13 | | | |
| 12/27/1993 | Nickel | 3 | PM | 1454.8 | .00322 | .01000 | 31.13 | | U | U |
| 12/27/1993 | Phosphorus | 3 | PM | 1454.8 | .64273 | .30000 | 31.13 | | | U |
| 12/27/1993 | Selenium | 3 | PM | 1454.8 | .02417 | .70000 | 31.13 | | B | U |
| 12/27/1993 | Silver | 3 | PM | 1454.8 | .00112 | .30000 | 31.13 | | U | U |
| 12/27/1993 | Thallium | 3 | PM | 1454.8 | .03220 | .30000 | 31.13 | | U | U |
| 12/27/1993 | Vanadium | 3 | PM | 1454.8 | .00161 | .17000 | 31.13 | | U | U |
| 12/27/1993 | Zinc | 3 | PM | 1454.8 | .01774 | .00000 | 31.13 | | B | |
| 12/27/1993 | Aluminum | 4 | PM | 1447.8 | .06846 | 33.30000 | 33.02 | | | U |
| 12/27/1993 | Arsenic | 4 | PM | 1447.8 | .00088 | .00057 | 33.02 | | | |
| 12/27/1993 | Barium | 4 | PM | 1447.8 | .00356 | .52000 | 33.02 | | | U |
| 12/27/1993 | Beryllium | 4 | PM | 1447.8 | .00016 | .00100 | 33.02 | | U | U |
| 12/27/1993 | Cadmium | 4 | PM | 1447.8 | .00332 | .00140 | 33.02 | | | U |
| 12/27/1993 | Chromium | 4 | PM | 1447.8 | .00155 | .00020 | 33.02 | | | U |
| 12/27/1993 | Manganese | 4 | PM | 1447.8 | .00665 | .42000 | 33.02 | | | |
| 12/27/1993 | Nickel | 4 | PM | 1447.8 | .00332 | .01000 | 33.02 | | B | |
| 12/27/1993 | Phosphorus | 4 | PM | 1447.8 | .67167 | .30000 | 33.02 | | | U |
| 12/27/1993 | Selenium | 4 | PM | 1447.8 | .01621 | .70000 | 33.02 | | U | U |
| 12/27/1993 | Silver | 4 | PM | 1447.8 | .00113 | .30000 | 33.02 | | U | U |
| 12/27/1993 | Thallium | 4 | PM | 1447.8 | .03804 | .30000 | 33.02 | | B | |
| 12/27/1993 | Vanadium | 4 | PM | 1447.8 | .00162 | .17000 | 33.02 | | U | U |
| 12/27/1993 | Zinc | 4 | PM | 1447.8 | .02215 | .00000 | 33.02 | | B | |
| 12/27/1993 | Aluminum | 5 | PM | 1436.8 | .04172 | 33.30000 | 15.12 | | | U |
| 12/27/1993 | Arsenic | 5 | PM | 1436.8 | .00058 | .00057 | 15.12 | | B | |
| 12/27/1993 | Barium | 5 | PM | 1436.8 | .00274 | .52000 | 15.12 | | | U |
| 12/27/1993 | Beryllium | 5 | PM | 1436.8 | .00016 | .00100 | 15.12 | | U | U |
| 12/27/1993 | Cadmium | 5 | PM | 1436.8 | .00188 | .00140 | 15.12 | | | U |
| 12/27/1993 | Chromium | 5 | PM | 1436.8 | .00097 | .00020 | 15.12 | | | U |
| 12/27/1993 | Manganese | 5 | PM | 1436.8 | .00153 | .42000 | 15.12 | | B | |
| 12/27/1993 | Nickel | 5 | PM | 1436.8 | .00322 | .01000 | 15.12 | | U | U |
| 12/27/1993 | Phosphorus | 5 | PM | 1436.8 | .60104 | .30000 | 15.12 | | | U |
| 12/27/1993 | Selenium | 5 | PM | 1436.8 | .01613 | .70000 | 15.12 | | U | U |
| 12/27/1993 | Silver | 5 | PM | 1436.8 | .00112 | .30000 | 15.12 | | U | U |
| 12/27/1993 | Thallium | 5 | PM | 1436.8 | .03221 | .30000 | 15.12 | | U | U |
| 12/27/1993 | Vanadium | 5 | PM | 1436.8 | .00161 | .17000 | 15.12 | | U | U |
| 12/27/1993 | Zinc | 5 | PM | 1436.8 | .00836 | .00000 | 15.12 | | B | |
| 12/27/1993 | Aluminum | 6 | PM | 1441.0 | .05371 | 33.30000 | 18.13 | | | U |
| 12/27/1993 | Arsenic | 6 | PM | 1441.0 | .00059 | .00057 | 18.13 | | | |
| 12/27/1993 | Barium | 6 | PM | 1441.0 | .00272 | .52000 | 18.13 | | | U |
| 12/27/1993 | Beryllium | 6 | PM | 1441.0 | .00016 | .00100 | 18.13 | | U | U |
| 12/27/1993 | Cadmium | 6 | PM | 1441.0 | .00128 | .00140 | 18.13 | | U | U |
| 12/27/1993 | Chromium | 6 | PM | 1441.0 | .00068 | .00020 | 18.13 | | | U |
| 12/27/1993 | Manganese | 6 | PM | 1441.0 | .00261 | .42000 | 18.13 | | | |
| 12/27/1993 | Nickel | 6 | PM | 1441.0 | .00320 | .01000 | 18.13 | | U | U |
| 12/27/1993 | Phosphorus | 6 | PM | 1441.0 | .77816 | .30000 | 18.13 | | | |
| 12/27/1993 | Selenium | 6 | PM | 1441.0 | .01601 | .70000 | 18.13 | | U | U |
| 12/27/1993 | Silver | 6 | PM | 1441.0 | .00112 | .30000 | 18.13 | | U | U |
| 12/27/1993 | Thallium | 6 | PM | 1441.0 | .03196 | .30000 | 18.13 | | U | U |

| Sample Date | Chemical Name | Site # | Typ | Run Time (min.) | Chem Conc. (ug/m3) | EPA Scr. L(ug/m3) | Part.C. (ug/m3) | Grav. Val | Qual. Lab | Qual. Val |
|---|---|---|---|---|---|---|---|---|---|---|
| 12/27/1993 | Vanadium | 6 | PM | 1441.0 | .00161 | .17000 | 18.13 | | B | |
| 12/27/1993 | Zinc | 6 | PM | 1441.0 | .01065 | .00000 | 18.13 | | B | |
| 12/27/1993 | Aluminum | 7 | PM | 1438.2 | .06465 | 33.30000 | 29.82 | | | |
| 12/27/1993 | Arsenic | 7 | PM | 1438.2 | .00105 | .00057 | 29.82 | | | |
| 12/27/1993 | Barium | 7 | PM | 1438.2 | .00189 | .52000 | 29.82 | | B | |
| 12/27/1993 | Beryllium | 7 | PM | 1438.2 | .00016 | .00100 | 29.82 | | U | U |
| 12/27/1993 | Cadmium | 7 | PM | 1438.2 | .00427 | .00140 | 29.82 | | | |
| 12/27/1993 | Chromium | 7 | PM | 1438.2 | .00212 | .00020 | 29.82 | | | |
| 12/27/1993 | Manganese | 7 | PM | 1438.2 | .00250 | .42000 | 29.82 | | | |
| 12/27/1993 | Nickel | 7 | PM | 1438.2 | .00328 | .01000 | 29.82 | | U | U |
| 12/27/1993 | Phosphorus | 7 | PM | 1438.2 | 1.31658 | .30000 | 29.82 | | | |
| 12/27/1993 | Selenium | 7 | PM | 1438.2 | .01644 | .70000 | 29.82 | | U | U |
| 12/27/1993 | Silver | 7 | PM | 1438.2 | .00115 | .30000 | 29.82 | | U | UJ |
| 12/27/1993 | Thallium | 7 | PM | 1438.2 | .03282 | .30000 | 29.82 | | U | U |
| 12/27/1993 | Vanadium | 7 | PM | 1438.2 | .00172 | .17000 | 29.82 | | B | |
| 12/27/1993 | Zinc | 7 | PM | 1438.2 | .01382 | .00000 | 29.82 | | B | |
| 12/27/1993 | Aluminum | 8 | PM | 1461.0 | .07415 | 33.30000 | 36.97 | | | |
| 12/27/1993 | Arsenic | 8 | PM | 1461.0 | .00075 | .00057 | 36.97 | | | |
| 12/27/1993 | Barium | 8 | PM | 1461.0 | .00533 | .52000 | 36.97 | | | |
| 12/27/1993 | Beryllium | 8 | PM | 1461.0 | .00016 | .00100 | 36.97 | | U | U |
| 12/27/1993 | Cadmium | 8 | PM | 1461.0 | .00328 | .00140 | 36.97 | | | |
| 12/27/1993 | Chromium | 8 | PM | 1461.0 | .00231 | .00020 | 36.97 | | | |
| 12/27/1993 | Manganese | 8 | PM | 1461.0 | .00526 | .42000 | 36.97 | | | |
| 12/27/1993 | Nickel | 8 | PM | 1461.0 | .00323 | .01000 | 36.97 | | U | U |
| 12/27/1993 | Phosphorus | 8 | PM | 1461.0 | .80599 | .30000 | 36.97 | | | |
| 12/27/1993 | Selenium | 8 | PM | 1461.0 | .01618 | .70000 | 36.97 | | U | U |
| 12/27/1993 | Silver | 8 | PM | 1461.0 | .00113 | .30000 | 36.97 | | U | UJ |
| 12/27/1993 | Thallium | 8 | PM | 1461.0 | .03230 | .30000 | 36.97 | | U | U |
| 12/27/1993 | Vanadium | 8 | PM | 1461.0 | .00184 | .17000 | 36.97 | | B | |
| 12/27/1993 | Zinc | 8 | PM | 1461.0 | .02308 | .00000 | 36.97 | | B | |
| 12/31/1993 | Aluminum | 1 | PM | 1453.2 | .10235 | 33.30000 | 25.70 | | | |
| 12/31/1993 | Arsenic | 1 | PM | 1453.2 | .00055 | .00057 | 25.70 | | B | |
| 12/31/1993 | Barium | 1 | PM | 1453.2 | .00245 | .52000 | 25.70 | | | |
| 12/31/1993 | Beryllium | 1 | PM | 1453.2 | .00016 | .00100 | 25.70 | | U | U |
| 12/31/1993 | Cadmium | 1 | PM | 1453.2 | .00281 | .00140 | 25.70 | | | |
| 12/31/1993 | Chromium | 1 | PM | 1453.2 | .00199 | .00020 | 25.70 | | | |
| 12/31/1993 | Manganese | 1 | PM | 1453.2 | .00250 | .42000 | 25.70 | | | |
| 12/31/1993 | Nickel | 1 | PM | 1453.2 | .00327 | .01000 | 25.70 | | U | U |
| 12/31/1993 | Phosphorus | 1 | PM | 1453.2 | 1.06917 | .30000 | 25.70 | | | |
| 12/31/1993 | Selenium | 1 | PM | 1453.2 | .01636 | .70000 | 25.70 | | U | U |
| 12/31/1993 | Silver | 1 | PM | 1453.2 | .00114 | .30000 | 25.70 | | U | UJ |
| 12/31/1993 | Thallium | 1 | PM | 1453.2 | .03266 | .30000 | 25.70 | | U | U |
| 12/31/1993 | Vanadium | 1 | PM | 1453.2 | .00164 | .17000 | 25.70 | | U | U |
| 12/31/1993 | Zinc | 1 | PM | 1453.2 | .01376 | .00000 | 25.70 | | B | |
| 12/31/1993 | Aluminum | 2 | PM | 1444.5 | .32373 | 33.30000 | 81.87 | | | |
| 12/31/1993 | Arsenic | 2 | PM | 1444.5 | .00146 | .00057 | 81.87 | | | |
| 12/31/1993 | Barium | 2 | PM | 1444.5 | .00548 | .52000 | 81.87 | | | |
| 12/31/1993 | Beryllium | 2 | PM | 1444.5 | .00017 | .00100 | 81.87 | | U | U |
| 12/31/1993 | Cadmium | 2 | PM | 1444.5 | .01366 | .00140 | 81.87 | | | |
| 12/31/1993 | Chromium | 2 | PM | 1444.5 | .01496 | .00020 | 81.87 | | | |
| 12/31/1993 | Manganese | 2 | PM | 1444.5 | .00604 | .42000 | 81.87 | | | |
| 12/31/1993 | Nickel | 2 | PM | 1444.5 | .00342 | .01000 | 81.87 | | U | U |
| 12/31/1993 | Phosphorus | 2 | PM | 1444.5 | 12.90817 | .30000 | 81.87 | | | |
| 12/31/1993 | Selenium | 2 | PM | 1444.5 | .01714 | .70000 | 81.87 | | U | U |
| 12/31/1993 | Silver | 2 | PM | 1444.5 | .00307 | .30000 | 81.87 | | B | UJ |

| Sample Date | Chemical Name | Site # | Typ | Run Time (min.) | Chem Conc. (ug/m3) | EPA Scr. L(ug/m3) | Part.C. (ug/m3) | Grav. Val | Qual. Lab | Qual. Val |
|---|---|---|---|---|---|---|---|---|---|---|
| 12/31/1993 | Thallium | 2 | PM | 1444.5 | .03422 | .30000 | 81.87 | | U | U |
| 12/31/1993 | Vanadium | 2 | PM | 1444.5 | .01762 | .17000 | 81.87 | | | |
| 12/31/1993 | Zinc | 2 | PM | 1444.5 | .11542 | .00000 | 81.87 | | | |
| 12/31/1993 | Aluminum | 4 | PM | 1446.8 | .03240 | 33.30000 | 9.35 | | B | |
| 12/31/1993 | Arsenic | 4 | PM | 1446.8 | .00059 | .00057 | 9.35 | | B | |
| 12/31/1993 | Barium | 4 | PM | 1446.8 | .00253 | .52000 | 9.35 | | | |
| 12/31/1993 | Beryllium | 4 | PM | 1446.8 | .00016 | .00100 | 9.35 | | U | U |
| 12/31/1993 | Cadmium | 4 | PM | 1446.8 | .00131 | .00140 | 9.35 | | U | U |
| 12/31/1993 | Chromium | 4 | PM | 1446.8 | .00067 | .00020 | 9.35 | | | U |
| 12/31/1993 | Manganese | 4 | PM | 1446.8 | .00239 | .42000 | 9.35 | | | |
| 12/31/1993 | Nickel | 4 | PM | 1446.8 | .00327 | .01000 | 9.35 | | U | U |
| 12/31/1993 | Phosphorus | 4 | PM | 1446.8 | .19792 | .30000 | 9.35 | | B | U |
| 12/31/1993 | Selenium | 4 | PM | 1446.8 | .01640 | .70000 | 9.35 | | U | U |
| 12/31/1993 | Silver | 4 | PM | 1446.8 | .00135 | .30000 | 9.35 | | B | UJ |
| 12/31/1993 | Thallium | 4 | PM | 1446.8 | .03272 | .30000 | 9.35 | | U | U |
| 12/31/1993 | Vanadium | 4 | PM | 1446.8 | .00164 | .17000 | 9.35 | | U | U |
| 12/31/1993 | Zinc | 4 | PM | 1446.8 | .00901 | .00000 | 9.35 | | B | |
| 12/31/1993 | Aluminum | 5 | PM | 1440.7 | .01349 | 33.30000 | 1.90 | | B | |
| 12/31/1993 | Arsenic | 5 | PM | 1440.7 | .00017 | .00057 | 1.90 | | U | U |
| 12/31/1993 | Barium | 5 | PM | 1440.7 | .00170 | .52000 | 1.90 | | U | U |
| 12/31/1993 | Beryllium | 5 | PM | 1440.7 | .00017 | .00100 | 1.90 | | U | U |
| 12/31/1993 | Cadmium | 5 | PM | 1440.7 | .00136 | .00140 | 1.90 | | U | U |
| 12/31/1993 | Chromium | 5 | PM | 1440.7 | .00065 | .00020 | 1.90 | | | U |
| 12/31/1993 | Manganese | 5 | PM | 1440.7 | .00081 | .42000 | 1.90 | | B | |
| 12/31/1993 | Nickel | 5 | PM | 1440.7 | .00340 | .01000 | 1.90 | | U | U |
| 12/31/1993 | Phosphorus | 5 | PM | 1440.7 | .21756 | .30000 | 1.90 | | B | U |
| 12/31/1993 | Selenium | 5 | PM | 1440.7 | .01701 | .70000 | 1.90 | | B | U |
| 12/31/1993 | Silver | 5 | PM | 1440.7 | .00119 | .30000 | 1.90 | | U | UJ |
| 12/31/1993 | Thallium | 5 | PM | 1440.7 | .03396 | .30000 | 1.90 | | U | U |
| 12/31/1993 | Vanadium | 5 | PM | 1440.7 | .00170 | .17000 | 1.90 | | U | U |
| 12/31/1993 | Zinc | 5 | PM | 1440.7 | .01078 | .00000 | 1.90 | | B | |
| 12/31/1993 | Aluminum | 6 | PM | 1441.3 | .04159 | 33.30000 | 3.30 | | | |
| 12/31/1993 | Arsenic | 6 | PM | 1441.3 | .00017 | .00057 | 3.30 | | U | U |
| 12/31/1993 | Barium | 6 | PM | 1441.3 | .00169 | .52000 | 3.30 | | U | U |
| 12/31/1993 | Beryllium | 6 | PM | 1441.3 | .00017 | .00100 | 3.30 | | U | U |
| 12/31/1993 | Cadmium | 6 | PM | 1441.3 | .00135 | .00140 | 3.30 | | U | U |
| 12/31/1993 | Chromium | 6 | PM | 1441.3 | .00048 | .00020 | 3.30 | | | U |
| 12/31/1993 | Manganese | 6 | PM | 1441.3 | .00110 | .42000 | 3.30 | | B | |
| 12/31/1993 | Nickel | 6 | PM | 1441.3 | .00338 | .01000 | 3.30 | | U | U |
| 12/31/1993 | Phosphorus | 6 | PM | 1441.3 | .21637 | .30000 | 3.30 | | B | U |
| 12/31/1993 | Selenium | 6 | PM | 1441.3 | .01692 | .70000 | 3.30 | | U | U |
| 12/31/1993 | Silver | 6 | PM | 1441.3 | .00118 | .30000 | 3.30 | | U | UJ |
| 12/31/1993 | Thallium | 6 | PM | 1441.3 | .03377 | .30000 | 3.30 | | U | U |
| 12/31/1993 | Vanadium | 6 | PM | 1441.3 | .00169 | .17000 | 3.30 | | U | U |
| 12/31/1993 | Zinc | 6 | PM | 1441.3 | .00672 | .00000 | 3.30 | | B | |
| 12/31/1993 | Aluminum | 7 | PM | 1438.2 | .01860 | 33.30000 | 2.32 | | B | |
| 12/31/1993 | Arsenic | 7 | PM | 1438.2 | .00017 | .00057 | 2.32 | | U | U |
| 12/31/1993 | Barium | 7 | PM | 1438.2 | .00166 | .52000 | 2.32 | | U | U |
| 12/31/1993 | Beryllium | 7 | PM | 1438.2 | .00017 | .00100 | 2.32 | | U | U |
| 12/31/1993 | Cadmium | 7 | PM | 1438.2 | .00132 | .00140 | 2.32 | | U | U |
| 12/31/1993 | Chromium | 7 | PM | 1438.2 | .00052 | .00020 | 2.32 | | | U |
| 12/31/1993 | Manganese | 7 | PM | 1438.2 | .00068 | .42000 | 2.32 | | B | |
| 12/31/1993 | Nickel | 7 | PM | 1438.2 | .00332 | .01000 | 2.32 | | U | U |
| 12/31/1993 | Phosphorus | 7 | PM | 1438.2 | .21251 | .30000 | 2.32 | | B | U |
| 12/31/1993 | Selenium | 7 | PM | 1438.2 | .01662 | .70000 | 2.32 | | U | U |

| Sample Date | Chemical Name | Site # | Typ | Run Time (min.) | Chem Conc. (ug/m3) | EPA Scr. L(ug/m3) | Part.C. (ug/m3) | Grav. Val | Qual. Lab | Qual. Val |
|---|---|---|---|---|---|---|---|---|---|---|
| 12/31/1993 | Silver | 7 | PM | 1438.2 | .00128 | .30000 | 2.32 | | B | UJ |
| 12/31/1993 | Thallium | 7 | PM | 1438.2 | .03317 | .30000 | 2.32 | | U | U |
| 12/31/1993 | Vanadium | 7 | PM | 1438.2 | .00166 | .17000 | 2.32 | | U | U |
| 12/31/1993 | Zinc | 7 | PM | 1438.2 | .00540 | .00000 | 2.32 | | B | U |
| 12/31/1993 | Aluminum | 8 | PM | 1463.3 | .09109 | 33.30000 | 27.47 | | | |
| 12/31/1993 | Arsenic | 8 | PM | 1463.3 | .00047 | .00057 | 27.47 | | B | |
| 12/31/1993 | Barium | 8 | PM | 1463.3 | .00245 | .52000 | 27.47 | | | |
| 12/31/1993 | Beryllium | 8 | PM | 1463.3 | .00016 | .00100 | 27.47 | | U | U |
| 12/31/1993 | Cadmium | 8 | PM | 1463.3 | .00315 | .00140 | 27.47 | | | |
| 12/31/1993 | Chromium | 8 | PM | 1463.3 | .00259 | .00020 | 27.47 | | | |
| 12/31/1993 | Manganese | 8 | PM | 1463.3 | .00262 | .42000 | 27.47 | | | |
| 12/31/1993 | Nickel | 8 | PM | 1463.3 | .00326 | .01000 | 27.47 | | B | U |
| 12/31/1993 | Phosphorus | 8 | PM | 1463.3 | 1.08660 | .30000 | 27.47 | | | |
| 12/31/1993 | Selenium | 8 | PM | 1463.3 | .01633 | .70000 | 27.47 | | U | U |
| 12/31/1993 | Silver | 8 | PM | 1463.3 | .00114 | .30000 | 27.47 | | U | UJ |
| 12/31/1993 | Thallium | 8 | PM | 1463.3 | .03260 | .30000 | 27.47 | | U | U |
| 12/31/1993 | Vanadium | 8 | PM | 1463.3 | .00225 | .17000 | 27.47 | | B | |
| 12/31/1993 | Zinc | 8 | PM | 1463.3 | .01184 | .00000 | 27.47 | | B | |
| 01/04/1994 | Aluminum | 1 | PM | 1451.8 | .06529 | 33.30000 | 12.67 | | | U |
| 01/04/1994 | Arsenic | 1 | PM | 1451.8 | .00050 | .00057 | 12.67 | | B | |
| 01/04/1994 | Barium | 1 | PM | 1451.8 | .00347 | .52000 | 12.67 | | | |
| 01/04/1994 | Beryllium | 1 | PM | 1451.8 | .00017 | .00100 | 12.67 | | U | U |
| 01/04/1994 | Cadmium | 1 | PM | 1451.8 | .00132 | .00140 | 12.67 | | U | U |
| 01/04/1994 | Chromium | 1 | PM | 1451.8 | .00273 | .00020 | 12.67 | | | |
| 01/04/1994 | Manganese | 1 | PM | 1451.8 | .00372 | .42000 | 12.67 | | | |
| 01/04/1994 | Nickel | 1 | PM | 1451.8 | .00330 | .01000 | 12.67 | | U | U |
| 01/04/1994 | Phosphorus | 1 | PM | 1451.8 | .62780 | .30000 | 12.67 | | | U |
| 01/04/1994 | Selenium | 1 | PM | 1451.8 | .01655 | .70000 | 12.67 | | U | U |
| 01/04/1994 | Silver | 1 | PM | 1451.8 | .00115 | .30000 | 12.67 | | U | U |
| 01/04/1994 | Thallium | 1 | PM | 1451.8 | .03304 | .30000 | 12.67 | | U | U |
| 01/04/1994 | Vanadium | 1 | PM | 1451.8 | .00166 | .17000 | 12.67 | | U | U |
| 01/04/1994 | Zinc | 1 | PM | 1451.8 | .00910 | .00000 | 12.67 | | B | |
| 01/04/1994 | Aluminum | 2 | PM | 1444.5 | .17048 | 33.30000 | 37.09 | | | |
| 01/04/1994 | Arsenic | 2 | PM | 1444.5 | .00159 | .00057 | 37.09 | | | J |
| 01/04/1994 | Barium | 2 | PM | 1444.5 | .00346 | .52000 | 37.09 | | | |
| 01/04/1994 | Beryllium | 2 | PM | 1444.5 | .00017 | .00100 | 37.09 | | U | U |
| 01/04/1994 | Cadmium | 2 | PM | 1444.5 | .00939 | .00140 | 37.09 | | | |
| 01/04/1994 | Chromium | 2 | PM | 1444.5 | .01097 | .00020 | 37.09 | | | |
| 01/04/1994 | Manganese | 2 | PM | 1444.5 | .00576 | .42000 | 37.09 | | | |
| 01/04/1994 | Nickel | 2 | PM | 1444.5 | .00380 | .01000 | 37.09 | | B | |
| 01/04/1994 | Phosphorus | 2 | PM | 1444.5 | 4.27230 | .30000 | 37.09 | | | |
| 01/04/1994 | Selenium | 2 | PM | 1444.5 | .02423 | .70000 | 37.09 | | B | |
| 01/04/1994 | Silver | 2 | PM | 1444.5 | .00121 | .30000 | 37.09 | | U | U |
| 01/04/1994 | Thallium | 2 | PM | 1444.5 | .03458 | .30000 | 37.09 | | U | U |
| 01/04/1994 | Vanadium | 2 | PM | 1444.5 | .01277 | .17000 | 37.09 | | | |
| 01/04/1994 | Zinc | 2 | PM | 1444.5 | .04742 | .00000 | 37.09 | | B | |
| 01/04/1994 | Aluminum | 3 | PM | 1453.3 | .04331 | 33.30000 | 6.84 | | | U |
| 01/04/1994 | Arsenic | 3 | PM | 1453.3 | .00049 | .00057 | 6.84 | | B | |
| 01/04/1994 | Barium | 3 | PM | 1453.3 | .00214 | .52000 | 6.84 | | | |
| 01/04/1994 | Beryllium | 3 | PM | 1453.3 | .00016 | .00100 | 6.84 | | U | U |
| 01/04/1994 | Cadmium | 3 | PM | 1453.3 | .00131 | .00140 | 6.84 | | U | U |
| 01/04/1994 | Chromium | 3 | PM | 1453.3 | .00129 | .00020 | 6.84 | | | U |
| 01/04/1994 | Manganese | 3 | PM | 1453.3 | .00270 | .42000 | 6.84 | | | |
| 01/04/1994 | Nickel | 3 | PM | 1453.3 | .00329 | .01000 | 6.84 | | U | U |
| 01/04/1994 | Phosphorus | 3 | PM | 1453.3 | .36537 | .30000 | 6.84 | | | U |

| Sample Date | Chemical Name | Site # | Typ | Run Time (min.) | Chem Conc. (ug/m3) | EPA Scr. L(ug/m3) | Part.C. (ug/m3) | Grav. Val | Qual. Lab | Qual. Val |
|---|---|---|---|---|---|---|---|---|---|---|
| 01/04/1994 | Selenium | 3 | PM | 1453.3 | .01649 | .70000 | 6.84 | | U | U |
| 01/04/1994 | Silver | 3 | PM | 1453.3 | .00115 | .30000 | 6.84 | | U | U |
| 01/04/1994 | Thallium | 3 | PM | 1453.3 | .03292 | .30000 | 6.84 | | U | U |
| 01/04/1994 | Vanadium | 3 | PM | 1453.3 | .00165 | .17000 | 6.84 | | U | U |
| 01/04/1994 | Zinc | 3 | PM | 1453.3 | .00808 | .00000 | 6.84 | | B | |
| 01/04/1994 | Aluminum | 4 | PM | 1447.9 | .06266 | 33.30000 | 7.39 | | | U |
| 01/04/1994 | Arsenic | 4 | PM | 1447.9 | .00060 | .00057 | 7.39 | | B | |
| 01/04/1994 | Barium | 4 | PM | 1447.9 | .00290 | .52000 | 7.39 | | | |
| 01/04/1994 | Beryllium | 4 | PM | 1447.9 | .00017 | .00100 | 7.39 | | U | U |
| 01/04/1994 | Cadmium | 4 | PM | 1447.9 | .00132 | .00140 | 7.39 | | U | U |
| 01/04/1994 | Chromium | 4 | PM | 1447.9 | .00109 | .00020 | 7.39 | | | U |
| 01/04/1994 | Manganese | 4 | PM | 1447.9 | .00494 | .42000 | 7.39 | | | |
| 01/04/1994 | Nickel | 4 | PM | 1447.9 | .00330 | .01000 | 7.39 | | U | U |
| 01/04/1994 | Phosphorus | 4 | PM | 1447.9 | .19986 | .30000 | 7.39 | | B | U |
| 01/04/1994 | Selenium | 4 | PM | 1447.9 | .01656 | .70000 | 7.39 | | U | U |
| 01/04/1994 | Silver | 4 | PM | 1447.9 | .00115 | .30000 | 7.39 | | U | U |
| 01/04/1994 | Thallium | 4 | PM | 1447.9 | .03305 | .30000 | 7.39 | | U | U |
| 01/04/1994 | Vanadium | 4 | PM | 1447.9 | .00166 | .17000 | 7.39 | | U | U |
| 01/04/1994 | Zinc | 4 | PM | 1447.9 | .00976 | .00000 | 7.39 | | B | |
| 01/04/1994 | Aluminum | 5 | PM | 1439.4 | .02989 | 33.30000 | 13.24 | | B | U |
| 01/04/1994 | Arsenic | 5 | PM | 1439.4 | .00056 | .00057 | 13.24 | | B | |
| 01/04/1994 | Barium | 5 | PM | 1439.4 | .00172 | .52000 | 13.24 | | U | U |
| 01/04/1994 | Beryllium | 5 | PM | 1439.4 | .00017 | .00100 | 13.24 | | U | U |
| 01/04/1994 | Cadmium | 5 | PM | 1439.4 | .00137 | .00140 | 13.24 | | U | U |
| 01/04/1994 | Chromium | 5 | PM | 1439.4 | .00367 | .00020 | 13.24 | | | |
| 01/04/1994 | Manganese | 5 | PM | 1439.4 | .00095 | .42000 | 13.24 | | B | |
| 01/04/1994 | Nickel | 5 | PM | 1439.4 | .00343 | .01000 | 13.24 | | U | U |
| 01/04/1994 | Phosphorus | 5 | PM | 1439.4 | .74040 | .30000 | 13.24 | | | |
| 01/04/1994 | Selenium | 5 | PM | 1439.4 | .01721 | .70000 | 13.24 | | U | U |
| 01/04/1994 | Silver | 5 | PM | 1439.4 | .00120 | .30000 | 13.24 | | U | U |
| 01/04/1994 | Thallium | 5 | PM | 1439.4 | .03435 | .30000 | 13.24 | | U | U |
| 01/04/1994 | Vanadium | 5 | PM | 1439.4 | .00332 | .17000 | 13.24 | | B | |
| 01/04/1994 | Zinc | 5 | PM | 1439.4 | .00761 | .00000 | 13.24 | | B | |
| 01/04/1994 | Aluminum | 6 | PM | 1441.8 | .02526 | 33.30000 | 2.52 | | B | U |
| 01/04/1994 | Arsenic | 6 | PM | 1441.8 | .00035 | .00057 | 2.52 | | B | |
| 01/04/1994 | Barium | 6 | PM | 1441.8 | .00171 | .52000 | 2.52 | | U | U |
| 01/04/1994 | Beryllium | 6 | PM | 1441.8 | .00017 | .00100 | 2.52 | | U | U |
| 01/04/1994 | Cadmium | 6 | PM | 1441.8 | .00136 | .00140 | 2.52 | | U | U |
| 01/04/1994 | Chromium | 6 | PM | 1441.8 | .00051 | .00020 | 2.52 | | | U |
| 01/04/1994 | Manganese | 6 | PM | 1441.8 | .00084 | .42000 | 2.52 | | B | |
| 01/04/1994 | Nickel | 6 | PM | 1441.8 | .00341 | .01000 | 2.52 | | U | U |
| 01/04/1994 | Phosphorus | 6 | PM | 1441.8 | .19270 | .30000 | 2.52 | | B | U |
| 01/04/1994 | Selenium | 6 | PM | 1441.8 | .01709 | .70000 | 2.52 | | U | U |
| 01/04/1994 | Silver | 6 | PM | 1441.8 | .00119 | .30000 | 2.52 | | U | U |
| 01/04/1994 | Thallium | 6 | PM | 1441.8 | .03411 | .30000 | 2.52 | | U | U |
| 01/04/1994 | Vanadium | 6 | PM | 1441.8 | .00171 | .17000 | 2.52 | | U | U |
| 01/04/1994 | Zinc | 6 | PM | 1441.8 | .00222 | .00000 | 2.52 | | B | U |
| 01/04/1994 | Aluminum | 7 | PM | 1439.6 | .02847 | 33.30000 | 11.44 | | B | U |
| 01/04/1994 | Arsenic | 7 | PM | 1439.6 | .00051 | .00057 | 11.44 | | B | |
| 01/04/1994 | Barium | 7 | PM | 1439.6 | .00168 | .52000 | 11.44 | | U | U |
| 01/04/1994 | Beryllium | 7 | PM | 1439.6 | .00017 | .00100 | 11.44 | | U | U |
| 01/04/1994 | Cadmium | 7 | PM | 1439.6 | .00176 | .00140 | 11.44 | | | |
| 01/04/1994 | Chromium | 7 | PM | 1439.6 | .00112 | .00020 | 11.44 | | | |
| 01/04/1994 | Manganese | 7 | PM | 1439.6 | .00107 | .42000 | 11.44 | | B | |
| 01/04/1994 | Nickel | 7 | PM | 1439.6 | .00335 | .01000 | 11.44 | | U | U |

| Sample Date | Chemical Name | Site # | Typ | Run Time (min.) | Chem Conc. (ug/m3) | EPA Scr. L(ug/m3) | Part.C. (ug/m3) | Grav. Val | Qual. Lab | Qual. Val |
|---|---|---|---|---|---|---|---|---|---|---|
| 01/04/1994 | Phosphorus | 7 | PM | 1439.6 | .94908 | .30000 | 11.44 | | | |
| 01/04/1994 | Selenium | 7 | PM | 1439.6 | .01678 | .70000 | 11.44 | | U | U |
| 01/04/1994 | Silver | 7 | PM | 1439.6 | .00117 | .30000 | 11.44 | | U | U |
| 01/04/1994 | Thallium | 7 | PM | 1439.6 | .03349 | .30000 | 11.44 | | U | U |
| 01/04/1994 | Vanadium | 7 | PM | 1439.6 | .00168 | .17000 | 11.44 | | U | U |
| 01/04/1994 | Zinc | 7 | PM | 1439.6 | .00565 | .00000 | 11.44 | | B | |
| 01/06/1994 | Aluminum | 1 | PM | 1451.2 | .29530 | 33.30000 | 45.49 | | | |
| 01/06/1994 | Arsenic | 1 | PM | 1451.2 | .00083 | .00057 | 45.49 | | | |
| 01/06/1994 | Barium | 1 | PM | 1451.2 | .00680 | .52000 | 45.49 | | | |
| 01/06/1994 | Beryllium | 1 | PM | 1451.2 | .00016 | .00100 | 45.49 | | U | U |
| 01/06/1994 | Cadmium | 1 | PM | 1451.2 | .00887 | .00140 | 45.49 | | | |
| 01/06/1994 | Chromium | 1 | PM | 1451.2 | .03601 | .00020 | 45.49 | | | |
| 01/06/1994 | Manganese | 1 | PM | 1451.2 | .00771 | .42000 | 45.49 | | | |
| 01/06/1994 | Nickel | 1 | PM | 1451.2 | .00661 | .01000 | 45.49 | | B | |
| 01/06/1994 | Phosphorus | 1 | PM | 1451.2 | 3.85969 | .30000 | 45.49 | | | |
| 01/06/1994 | Selenium | 1 | PM | 1451.2 | .01625 | .70000 | 45.49 | | U | U |
| 01/06/1994 | Silver | 1 | PM | 1451.2 | .00113 | .30000 | 45.49 | | U | U |
| 01/06/1994 | Thallium | 1 | PM | 1451.2 | .03244 | .30000 | 45.49 | | U | U |
| 01/06/1994 | Vanadium | 1 | PM | 1451.2 | .03652 | .17000 | 45.49 | | | |
| 01/06/1994 | Zinc | 1 | PM | 1451.2 | .04611 | .00000 | 45.49 | | B | |
| 01/06/1994 | Aluminum | 2 | PM | 1441.8 | .77380 | 33.30000 | 92.78 | | | |
| 01/06/1994 | Arsenic | 2 | PM | 1441.8 | .00279 | .00057 | 92.78 | | | |
| 01/06/1994 | Barium | 2 | PM | 1441.8 | .01235 | .52000 | 92.78 | | | |
| 01/06/1994 | Beryllium | 2 | PM | 1441.8 | .00017 | .00100 | 92.78 | | U | U |
| 01/06/1994 | Cadmium | 2 | PM | 1441.8 | .03014 | .00140 | 92.78 | | | |
| 01/06/1994 | Chromium | 2 | PM | 1441.8 | .11878 | .00020 | 92.78 | | | |
| 01/06/1994 | Manganese | 2 | PM | 1441.8 | .01941 | .42000 | 92.78 | | | |
| 01/06/1994 | Nickel | 2 | PM | 1441.8 | .02247 | .01000 | 92.78 | | | |
| 01/06/1994 | Phosphorus | 2 | PM | 1441.8 | 13.30391 | .30000 | 92.78 | | | |
| 01/06/1994 | Selenium | 2 | PM | 1441.8 | .05274 | .70000 | 92.78 | | B | U |
| 01/06/1994 | Silver | 2 | PM | 1441.8 | .00507 | .30000 | 92.78 | | B | |
| 01/06/1994 | Thallium | 2 | PM | 1441.8 | .03401 | .30000 | 92.78 | | U | U |
| 01/06/1994 | Vanadium | 2 | PM | 1441.8 | .12557 | .17000 | 92.78 | | | |
| 01/06/1994 | Zinc | 2 | PM | 1441.8 | .22264 | .00000 | 92.78 | | | |
| 01/06/1994 | Aluminum | 3 | PM | 1456.2 | .05646 | 33.30000 | 7.86 | | | U |
| 01/06/1994 | Arsenic | 3 | PM | 1456.2 | .00016 | .00057 | 7.86 | | U | U |
| 01/06/1994 | Barium | 3 | PM | 1456.2 | .00363 | .52000 | 7.86 | | | |
| 01/06/1994 | Beryllium | 3 | PM | 1456.2 | .00016 | .00100 | 7.86 | | U | U |
| 01/06/1994 | Cadmium | 3 | PM | 1456.2 | .00227 | .00140 | 7.86 | | | U |
| 01/06/1994 | Chromium | 3 | PM | 1456.2 | .00497 | .00020 | 7.86 | | | |
| 01/06/1994 | Manganese | 3 | PM | 1456.2 | .00227 | .42000 | 7.86 | | | |
| 01/06/1994 | Nickel | 3 | PM | 1456.2 | .00323 | .01000 | 7.86 | | U | U |
| 01/06/1994 | Phosphorus | 3 | PM | 1456.2 | 1.07509 | .30000 | 7.86 | | | |
| 01/06/1994 | Selenium | 3 | PM | 1456.2 | .01616 | .70000 | 7.86 | | U | U |
| 01/06/1994 | Silver | 3 | PM | 1456.2 | .00113 | .30000 | 7.86 | | U | U |
| 01/06/1994 | Thallium | 3 | PM | 1456.2 | .03225 | .30000 | 7.86 | | U | U |
| 01/06/1994 | Vanadium | 3 | PM | 1456.2 | .00449 | .17000 | 7.86 | | B | |
| 01/06/1994 | Zinc | 3 | PM | 1456.2 | .01661 | .00000 | 7.86 | | B | |
| 01/06/1994 | Aluminum | 4 | PM | 1446.5 | .05943 | 33.30000 | 3.76 | | | U |
| 01/06/1994 | Arsenic | 4 | PM | 1446.5 | .00016 | .00057 | 3.76 | | U | U |
| 01/06/1994 | Barium | 4 | PM | 1446.5 | .00260 | .52000 | 3.76 | | | |
| 01/06/1994 | Beryllium | 4 | PM | 1446.5 | .00016 | .00100 | 3.76 | | U | U |
| 01/06/1994 | Cadmium | 4 | PM | 1446.5 | .00130 | .00140 | 3.76 | | U | U |
| 01/06/1994 | Chromium | 4 | PM | 1446.5 | .00143 | .00020 | 3.76 | | | |
| 01/06/1994 | Manganese | 4 | PM | 1446.5 | .00198 | .42000 | 3.76 | | | |

| Sample Date | Chemical Name | Site # | Typ | Run Time (min.) | Chem Conc. (ug/m3) | EPA Scr. L(ug/m3) | Part.C. Grav. (ug/m3) | Val | Qual. Lab | Val |
|---|---|---|---|---|---|---|---|---|---|---|
| 01/06/1994 | Nickel | 4 | PM | 1446.5 | .00325 | .01000 | 3.76 | | U | U |
| 01/06/1994 | Phosphorus | 4 | PM | 1446.5 | .20479 | .30000 | 3.76 | | B | U |
| 01/06/1994 | Selenium | 4 | PM | 1446.5 | .02191 | .70000 | 3.76 | | B | U |
| 01/06/1994 | Silver | 4 | PM | 1446.5 | .00113 | .30000 | 3.76 | | U | U |
| 01/06/1994 | Thallium | 4 | PM | 1446.5 | .03247 | .30000 | 3.76 | | U | U |
| 01/06/1994 | Vanadium | 4 | PM | 1446.5 | .00163 | .17000 | 3.76 | | U | U |
| 01/06/1994 | Zinc | 4 | PM | 1446.5 | .00344 | .00000 | 3.76 | | B | |
| 01/06/1994 | Aluminum | 5 | PM | 1442.7 | .02813 | 33.30000 | .60 | | B | U |
| 01/06/1994 | Arsenic | 5 | PM | 1442.7 | .00017 | .00057 | .60 | | U | U |
| 01/06/1994 | Barium | 5 | PM | 1442.7 | .00169 | .52000 | .60 | | U | U |
| 01/06/1994 | Beryllium | 5 | PM | 1442.7 | .00017 | .00100 | .60 | | U | U |
| 01/06/1994 | Cadmium | 5 | PM | 1442.7 | .00134 | .00140 | .60 | | B | |
| 01/06/1994 | Chromium | 5 | PM | 1442.7 | .00080 | .00020 | .60 | | | |
| 01/06/1994 | Manganese | 5 | PM | 1442.7 | .00077 | .42000 | .60 | | B | |
| 01/06/1994 | Nickel | 5 | PM | 1442.7 | .00336 | .01000 | .60 | | U | U |
| 01/06/1994 | Phosphorus | 5 | PM | 1442.7 | .20679 | .30000 | .60 | | B | U |
| 01/06/1994 | Selenium | 5 | PM | 1442.7 | .01685 | .70000 | .60 | | U | U |
| 01/06/1994 | Silver | 5 | PM | 1442.7 | .00117 | .30000 | .60 | | U | U |
| 01/06/1994 | Thallium | 5 | PM | 1442.7 | .03364 | .30000 | .60 | | U | U |
| 01/06/1994 | Vanadium | 5 | PM | 1442.7 | .00169 | .17000 | .60 | | U | U |
| 01/06/1994 | Zinc | 5 | PM | 1442.7 | .00363 | .00000 | .60 | | B | |
| 01/06/1994 | Aluminum | 6 | PM | 1443.5 | .03378 | 33.30000 | 1.14 | | B | U |
| 01/06/1994 | Arsenic | 6 | PM | 1443.5 | .00017 | .00057 | 1.14 | | U | U |
| 01/06/1994 | Barium | 6 | PM | 1443.5 | .00192 | .52000 | 1.14 | | B | |
| 01/06/1994 | Beryllium | 6 | PM | 1443.5 | .00017 | .00100 | 1.14 | | U | U |
| 01/06/1994 | Cadmium | 6 | PM | 1443.5 | .00134 | .00140 | 1.14 | | U | U |
| 01/06/1994 | Chromium | 6 | PM | 1443.5 | .00057 | .00020 | 1.14 | | | |
| 01/06/1994 | Manganese | 6 | PM | 1443.5 | .00117 | .42000 | 1.14 | | B | |
| 01/06/1994 | Nickel | 6 | PM | 1443.5 | .00334 | .01000 | 1.14 | | U | U |
| 01/06/1994 | Phosphorus | 6 | PM | 1443.5 | .20229 | .30000 | 1.14 | | B | U |
| 01/06/1994 | Selenium | 6 | PM | 1443.5 | .01676 | .70000 | 1.14 | | U | U |
| 01/06/1994 | Silver | 6 | PM | 1443.5 | .00117 | .30000 | 1.14 | | U | U |
| 01/06/1994 | Thallium | 6 | PM | 1443.5 | .03345 | .30000 | 1.14 | | U | U |
| 01/06/1994 | Vanadium | 6 | PM | 1443.5 | .00168 | .17000 | 1.14 | | U | U |
| 01/06/1994 | Zinc | 6 | PM | 1443.5 | .00248 | .00000 | 1.14 | | B | |
| 01/06/1994 | Aluminum | 7 | PM | 1439.7 | .03254 | 33.30000 | 1.58 | | B | U |
| 01/06/1994 | Arsenic | 7 | PM | 1439.7 | .00016 | .00057 | 1.58 | | U | U |
| 01/06/1994 | Barium | 7 | PM | 1439.7 | .00165 | .52000 | 1.58 | | U | U |
| 01/06/1994 | Beryllium | 7 | PM | 1439.7 | .00016 | .00100 | 1.58 | | U | U |
| 01/06/1994 | Cadmium | 7 | PM | 1439.7 | .00131 | .00140 | 1.58 | | U | U |
| 01/06/1994 | Chromium | 7 | PM | 1439.7 | .00079 | .00020 | 1.58 | | | |
| 01/06/1994 | Manganese | 7 | PM | 1439.7 | .00085 | .42000 | 1.58 | | B | |
| 01/06/1994 | Nickel | 7 | PM | 1439.7 | .00329 | .01000 | 1.58 | | U | U |
| 01/06/1994 | Phosphorus | 7 | PM | 1439.7 | .19418 | .30000 | 1.58 | | B | U |
| 01/06/1994 | Selenium | 7 | PM | 1439.7 | .01647 | .70000 | 1.58 | | U | U |
| 01/06/1994 | Silver | 7 | PM | 1439.7 | .00115 | .30000 | 1.58 | | U | U |
| 01/06/1994 | Thallium | 7 | PM | 1439.7 | .03287 | .30000 | 1.58 | | U | U |
| 01/06/1994 | Vanadium | 7 | PM | 1439.7 | .00165 | .17000 | 1.58 | | U | U |
| 01/06/1994 | Zinc | 7 | PM | 1439.7 | .00261 | .00000 | 1.58 | | B | |
| 01/08/1994 | Aluminum | 1 | PM | 1454.6 | .08141 | 33.30000 | 11.64 | | | |
| 01/08/1994 | Arsenic | 1 | PM | 1454.6 | .00106 | .00057 | 11.64 | | | |
| 01/08/1994 | Barium | 1 | PM | 1454.6 | .00259 | .52000 | 11.64 | | | |
| 01/08/1994 | Beryllium | 1 | PM | 1454.6 | .00016 | .00100 | 11.64 | | U | U |
| 01/08/1994 | Cadmium | 1 | PM | 1454.6 | .00129 | .00140 | 11.64 | | U | U |
| 01/08/1994 | Chromium | 1 | PM | 1454.6 | .00274 | .00020 | 11.64 | | | |

| Sample Date | Chemical Name | Site # | Typ | Run Time (min.) | Chem Conc. (ug/m3) | EPA Scr. L(ug/m3) | Part.C. (ug/m3) | Grav. Val | Qual. Lab | Qual. Val |
|---|---|---|---|---|---|---|---|---|---|---|
| 01/12/1994 | Cadmium | 1 | PM | 1447.5 | .00195 | .00140 | 25.67 | | | |
| 01/12/1994 | Chromium | 1 | PM | 1447.5 | .01178 | .00020 | 25.67 | | | |
| 01/12/1994 | Manganese | 1 | PM | 1447.5 | .00372 | .42000 | 25.67 | | | |
| 01/12/1994 | Nickel | 1 | PM | 1447.5 | .00420 | .01000 | 25.67 | | B | |
| 01/12/1994 | Phosphorus | 1 | PM | 1447.5 | 1.46040 | .30000 | 25.67 | | | |
| 01/12/1994 | Selenium | 1 | PM | 1447.5 | .01651 | .70000 | 25.67 | | U | U |
| 01/12/1994 | Silver | 1 | PM | 1447.5 | .00115 | .30000 | 25.67 | | U | U |
| 01/12/1994 | Thallium | 1 | PM | 1447.5 | .03296 | .30000 | 25.67 | | U | U |
| 01/12/1994 | Vanadium | 1 | PM | 1447.5 | .01020 | .17000 | 25.67 | | | |
| 01/12/1994 | Zinc | 1 | PM | 1447.5 | .01210 | .00000 | 25.67 | | B | |
| 01/12/1994 | Aluminum | 2 | PM | 1443.6 | .42381 | 33.30000 | 84.40 | | | |
| 01/12/1994 | Arsenic | 2 | PM | 1443.6 | .00138 | .00057 | 84.40 | | | |
| 01/12/1994 | Barium | 2 | PM | 1443.6 | .00707 | .52000 | 84.40 | | | |
| 01/12/1994 | Beryllium | 2 | PM | 1443.6 | .00019 | .00100 | 84.40 | | B | |
| 01/12/1994 | Cadmium | 2 | PM | 1443.6 | .01305 | .00140 | 84.40 | | | |
| 01/12/1994 | Chromium | 2 | PM | 1443.6 | .04355 | .00020 | 84.40 | | | |
| 01/12/1994 | Manganese | 2 | PM | 1443.6 | .00996 | .42000 | 84.40 | | | |
| 01/12/1994 | Nickel | 2 | PM | 1443.6 | .00907 | .01000 | 84.40 | | | |
| 01/12/1994 | Phosphorus | 2 | PM | 1443.6 | 12.22657 | .30000 | 84.40 | | | |
| 01/12/1994 | Selenium | 2 | PM | 1443.6 | .04561 | .70000 | 84.40 | | B | |
| 01/12/1994 | Silver | 2 | PM | 1443.6 | .00155 | .30000 | 84.40 | | B | |
| 01/12/1994 | Thallium | 2 | PM | 1443.6 | .03441 | .30000 | 84.40 | | U | U |
| 01/12/1994 | Vanadium | 2 | PM | 1443.6 | .04685 | .17000 | 84.40 | | | |
| 01/12/1994 | Zinc | 2 | PM | 1443.6 | .09136 | .00000 | 84.40 | | | |
| 01/12/1994 | Aluminum | 3 | PM | 1456.9 | .05587 | 33.30000 | 10.05 | | | U |
| 01/12/1994 | Arsenic | 3 | PM | 1456.9 | .00019 | .00057 | 10.05 | | B | |
| 01/12/1994 | Barium | 3 | PM | 1456.9 | .00253 | .52000 | 10.05 | | | |
| 01/12/1994 | Beryllium | 3 | PM | 1456.9 | .00016 | .00100 | 10.05 | | U | U |
| 01/12/1994 | Cadmium | 3 | PM | 1456.9 | .00130 | .00140 | 10.05 | | U | U |
| 01/12/1994 | Chromium | 3 | PM | 1456.9 | .00353 | .00020 | 10.05 | | | |
| 01/12/1994 | Manganese | 3 | PM | 1456.9 | .00233 | .42000 | 10.05 | | | |
| 01/12/1994 | Nickel | 3 | PM | 1456.9 | .00327 | .01000 | 10.05 | | U | U |
| 01/12/1994 | Phosphorus | 3 | PM | 1456.9 | 1.06924 | .30000 | 10.05 | | | |
| 01/12/1994 | Selenium | 3 | PM | 1456.9 | .01636 | .70000 | 10.05 | | U | U |
| 01/12/1994 | Silver | 3 | PM | 1456.9 | .00114 | .30000 | 10.05 | | U | U |
| 01/12/1994 | Thallium | 3 | PM | 1456.9 | .03266 | .30000 | 10.05 | | U | U |
| 01/12/1994 | Vanadium | 3 | PM | 1456.9 | .00443 | .17000 | 10.05 | | B | |
| 01/12/1994 | Zinc | 3 | PM | 1456.9 | .01121 | .00000 | 10.05 | | B | |
| 01/12/1994 | Aluminum | 4 | PM | 1443.1 | .05575 | 33.30000 | 3.75 | | | U |
| 01/12/1994 | Arsenic | 4 | PM | 1443.1 | .00017 | .00057 | 3.75 | | U | U |
| 01/12/1994 | Barium | 4 | PM | 1443.1 | .00182 | .52000 | 3.75 | | B | |
| 01/12/1994 | Beryllium | 4 | PM | 1443.1 | .00017 | .00100 | 3.75 | | U | U |
| 01/12/1994 | Cadmium | 4 | PM | 1443.1 | .00132 | .00140 | 3.75 | | U | U |
| 01/12/1994 | Chromium | 4 | PM | 1443.1 | .00082 | .00020 | 3.75 | | | U |
| 01/12/1994 | Manganese | 4 | PM | 1443.1 | .00224 | .42000 | 3.75 | | | |
| 01/12/1994 | Nickel | 4 | PM | 1443.1 | .00330 | .01000 | 3.75 | | U | U |
| 01/12/1994 | Phosphorus | 4 | PM | 1443.1 | .18167 | .30000 | 3.75 | | B | U |
| 01/12/1994 | Selenium | 4 | PM | 1443.1 | .01652 | .70000 | 3.75 | | U | U |
| 01/12/1994 | Silver | 4 | PM | 1443.1 | .00115 | .30000 | 3.75 | | U | U |
| 01/12/1994 | Thallium | 4 | PM | 1443.1 | .03298 | .30000 | 3.75 | | U | U |
| 01/12/1994 | Vanadium | 4 | PM | 1443.1 | .00165 | .17000 | 3.75 | | U | U |
| 01/12/1994 | Zinc | 4 | PM | 1443.1 | .00379 | .00000 | 3.75 | | B | |
| 01/12/1994 | Aluminum | 5 | PM | 1439.7 | .02611 | 33.30000 | .82 | | B | U |
| 01/12/1994 | Arsenic | 5 | PM | 1439.7 | .00017 | .00057 | .82 | | U | U |
| 01/12/1994 | Barium | 5 | PM | 1439.7 | .00171 | .52000 | .82 | | U | U |

| Sample Date | Chemical Name | Site # | Typ | Run Time (min.) | Chem Conc. (ug/m3) | EPA Scr. L(ug/m3) | Part.C. Grav. (ug/m3) | Qual. Val | Lab Val |
|---|---|---|---|---|---|---|---|---|---|
| 01/12/1994 | Beryllium | 5 | PM | 1439.7 | .00017 | .00100 | .82 | U | U |
| 01/12/1994 | Cadmium | 5 | PM | 1439.7 | .00136 | .00140 | .82 | U | U |
| 01/12/1994 | Chromium | 5 | PM | 1439.7 | .00064 | .00020 | .82 | | U |
| 01/12/1994 | Manganese | 5 | PM | 1439.7 | .00075 | .42000 | .82 | B | |
| 01/12/1994 | Nickel | 5 | PM | 1439.7 | .00342 | .01000 | .82 | U | U |
| 01/12/1994 | Phosphorus | 5 | PM | 1439.7 | .18610 | .30000 | .82 | B | U |
| 01/12/1994 | Selenium | 5 | PM | 1439.7 | .01711 | .70000 | .82 | U | U |
| 01/12/1994 | Silver | 5 | PM | 1439.7 | .00119 | .30000 | .82 | U | U |
| 01/12/1994 | Thallium | 5 | PM | 1439.7 | .03415 | .30000 | .82 | U | U |
| 01/12/1994 | Vanadium | 5 | PM | 1439.7 | .00171 | .17000 | .82 | U | U |
| 01/12/1994 | Zinc | 5 | PM | 1439.7 | .00116 | .00000 | .82 | B | |
| 01/12/1994 | Aluminum | 6 | PM | 1440.8 | .03429 | 33.30000 | 1.90 | B | U |
| 01/12/1994 | Arsenic | 6 | PM | 1440.8 | .00017 | .00057 | 1.90 | U | U |
| 01/12/1994 | Barium | 6 | PM | 1440.8 | .00170 | .52000 | 1.90 | U | U |
| 01/12/1994 | Beryllium | 6 | PM | 1440.8 | .00017 | .00100 | 1.90 | U | U |
| 01/12/1994 | Cadmium | 6 | PM | 1440.8 | .00136 | .00140 | 1.90 | U | U |
| 01/12/1994 | Chromium | 6 | PM | 1440.8 | .00074 | .00020 | 1.90 | | U |
| 01/12/1994 | Manganese | 6 | PM | 1440.8 | .00143 | .42000 | 1.90 | B | |
| 01/12/1994 | Nickel | 6 | PM | 1440.8 | .00340 | .01000 | 1.90 | U | U |
| 01/12/1994 | Phosphorus | 6 | PM | 1440.8 | .19044 | .30000 | 1.90 | B | U |
| 01/12/1994 | Selenium | 6 | PM | 1440.8 | .01701 | .70000 | 1.90 | U | U |
| 01/12/1994 | Silver | 6 | PM | 1440.8 | .00119 | .30000 | 1.90 | U | U |
| 01/12/1994 | Thallium | 6 | PM | 1440.8 | .03395 | .30000 | 1.90 | U | U |
| 01/12/1994 | Vanadium | 6 | PM | 1440.8 | .00170 | .17000 | 1.90 | U | U |
| 01/12/1994 | Zinc | 6 | PM | 1440.8 | .00319 | .00000 | 1.90 | B | |
| 01/12/1994 | Aluminum | 7 | PM | 1440.5 | .02531 | 33.30000 | .60 | B | U |
| 01/12/1994 | Arsenic | 7 | PM | 1440.5 | .00017 | .00057 | .60 | U | U |
| 01/12/1994 | Barium | 7 | PM | 1440.5 | .00167 | .52000 | .60 | U | U |
| 01/12/1994 | Beryllium | 7 | PM | 1440.5 | .00017 | .00100 | .60 | U | U |
| 01/12/1994 | Cadmium | 7 | PM | 1440.5 | .00133 | .00140 | .60 | U | U |
| 01/12/1994 | Chromium | 7 | PM | 1440.5 | .00051 | .00020 | .60 | | U |
| 01/12/1994 | Manganese | 7 | PM | 1440.5 | .00050 | .42000 | .60 | U | U |
| 01/12/1994 | Nickel | 7 | PM | 1440.5 | .00333 | .01000 | .60 | U | U |
| 01/12/1994 | Phosphorus | 7 | PM | 1440.5 | .18668 | .30000 | .60 | B | U |
| 01/12/1994 | Selenium | 7 | PM | 1440.5 | .01667 | .70000 | .60 | U | U |
| 01/12/1994 | Silver | 7 | PM | 1440.5 | .00116 | .30000 | .60 | U | U |
| 01/12/1994 | Thallium | 7 | PM | 1440.5 | .03328 | .30000 | .60 | U | U |
| 01/12/1994 | Vanadium | 7 | PM | 1440.5 | .00167 | .17000 | .60 | U | U |
| 01/12/1994 | Zinc | 7 | PM | 1440.5 | .00240 | .00000 | .60 | B | |
| 01/16/1994 | Aluminum | 1 | PM | 1453.4 | .12058 | 33.30000 | 35.61 | | |
| 01/16/1994 | Arsenic | 1 | PM | 1453.4 | .00042 | .00057 | 35.61 | B | |
| 01/16/1994 | Barium | 1 | PM | 1453.4 | .00292 | .52000 | 35.61 | | |
| 01/16/1994 | Beryllium | 1 | PM | 1453.4 | .00016 | .00100 | 35.61 | U | U |
| 01/16/1994 | Cadmium | 1 | PM | 1453.4 | .00482 | .00140 | 35.61 | | |
| 01/16/1994 | Chromium | 1 | PM | 1453.4 | .00507 | .00020 | 35.61 | | |
| 01/16/1994 | Manganese | 1 | PM | 1453.4 | .00330 | .42000 | 35.61 | | |
| 01/16/1994 | Nickel | 1 | PM | 1453.4 | .00325 | .01000 | 35.61 | U | U |
| 01/16/1994 | Phosphorus | 1 | PM | 1453.4 | 2.09393 | .30000 | 35.61 | | |
| 01/16/1994 | Selenium | 1 | PM | 1453.4 | .01627 | .70000 | 35.61 | U | U |
| 01/16/1994 | Silver | 1 | PM | 1453.4 | .00113 | .30000 | 35.61 | U | U |
| 01/16/1994 | Thallium | 1 | PM | 1453.4 | .03248 | .30000 | 35.61 | U | U |
| 01/16/1994 | Vanadium | 1 | PM | 1453.4 | .00646 | .17000 | 35.61 | | |
| 01/16/1994 | Zinc | 1 | PM | 1453.4 | .02146 | .00000 | 35.61 | B | |
| 01/16/1994 | Aluminum | 2 | PM | 1445.9 | .57476 | 33.30000 | 116.99 | | |
| 01/16/1994 | Arsenic | 2 | PM | 1445.9 | .00381 | .00057 | 116.99 | | |

| Sample Date | Chemical Name | Site # | Typ | Run Time (min.) | Chem Conc. (ug/m3) | EPA Scr. L(ug/m3) | Part.C. (ug/m3) | Grav. Val | Qual. Lab | Qual. Val |
|---|---|---|---|---|---|---|---|---|---|---|
| 01/16/1994 | Barium | 2 | PM | 1445.9 | .00841 | .52000 | 116.99 | | | |
| 01/16/1994 | Beryllium | 2 | PM | 1445.9 | .00017 | .00100 | 116.99 | | B | |
| 01/16/1994 | Cadmium | 2 | PM | 1445.9 | .03216 | .00140 | 116.99 | | | |
| 01/16/1994 | Chromium | 2 | PM | 1445.9 | .03013 | .00020 | 116.99 | | | |
| 01/16/1994 | Manganese | 2 | PM | 1445.9 | .01384 | .42000 | 116.99 | | | |
| 01/16/1994 | Nickel | 2 | PM | 1445.9 | .00679 | .01000 | 116.99 | | B | |
| 01/16/1994 | Phosphorus | 2 | PM | 1445.9 | 16.35375 | .30000 | 116.99 | | | |
| 01/16/1994 | Selenium | 2 | PM | 1445.9 | .07939 | .70000 | 116.99 | | B | |
| 01/16/1994 | Silver | 2 | PM | 1445.9 | .00333 | .30000 | 116.99 | | B | |
| 01/16/1994 | Thallium | 2 | PM | 1445.9 | .03400 | .30000 | 116.99 | | U | U |
| 01/16/1994 | Vanadium | 2 | PM | 1445.9 | .04044 | .17000 | 116.99 | | | |
| 01/16/1994 | Zinc | 2 | PM | 1445.9 | .20086 | .00000 | 116.99 | | | |
| 01/16/1994 | Aluminum | 3 | PM | 1454.3 | .04763 | 33.30000 | 11.58 | | | |
| 01/16/1994 | Arsenic | 3 | PM | 1454.3 | .00021 | .00057 | 11.58 | | B | |
| 01/16/1994 | Barium | 3 | PM | 1454.3 | .00186 | .52000 | 11.58 | | B | |
| 01/16/1994 | Beryllium | 3 | PM | 1454.3 | .00016 | .00100 | 11.58 | | U | U |
| 01/16/1994 | Cadmium | 3 | PM | 1454.3 | .00182 | .00140 | 11.58 | | | |
| 01/16/1994 | Chromium | 3 | PM | 1454.3 | .00253 | .00020 | 11.58 | | | |
| 01/16/1994 | Manganese | 3 | PM | 1454.3 | .00186 | .42000 | 11.58 | | B | |
| 01/16/1994 | Nickel | 3 | PM | 1454.3 | .00324 | .01000 | 11.58 | | U | U |
| 01/16/1994 | Phosphorus | 3 | PM | 1454.3 | .92417 | .30000 | 11.58 | | | |
| 01/16/1994 | Selenium | 3 | PM | 1454.3 | .01622 | .70000 | 11.58 | | U | U |
| 01/16/1994 | Silver | 3 | PM | 1454.3 | .00113 | .30000 | 11.58 | | U | U |
| 01/16/1994 | Thallium | 3 | PM | 1454.3 | .03238 | .30000 | 11.58 | | U | U |
| 01/16/1994 | Vanadium | 3 | PM | 1454.3 | .00291 | .17000 | 11.58 | | B | |
| 01/16/1994 | Zinc | 3 | PM | 1454.3 | .01325 | .00000 | 11.58 | | B | |
| 01/16/1994 | Aluminum | 4 | PM | 1449.1 | .03087 | 33.30000 | 4.28 | | B | |
| 01/16/1994 | Arsenic | 4 | PM | 1449.1 | .00016 | .00057 | 4.28 | | U | U |
| 01/16/1994 | Barium | 4 | PM | 1449.1 | .00163 | .52000 | 4.28 | | U | U |
| 01/16/1994 | Beryllium | 4 | PM | 1449.1 | .00016 | .00100 | 4.28 | | U | U |
| 01/16/1994 | Cadmium | 4 | PM | 1449.1 | .00130 | .00140 | 4.28 | | U | U |
| 01/16/1994 | Chromium | 4 | PM | 1449.1 | .00071 | .00020 | 4.28 | | | U |
| 01/16/1994 | Manganese | 4 | PM | 1449.1 | .00145 | .42000 | 4.28 | | B | |
| 01/16/1994 | Nickel | 4 | PM | 1449.1 | .00325 | .01000 | 4.28 | | U | U |
| 01/16/1994 | Phosphorus | 4 | PM | 1449.1 | .15372 | .30000 | 4.28 | | B | U |
| 01/16/1994 | Selenium | 4 | PM | 1449.1 | .01628 | .70000 | 4.28 | | U | U |
| 01/16/1994 | Silver | 4 | PM | 1449.1 | .00114 | .30000 | 4.28 | | U | U |
| 01/16/1994 | Thallium | 4 | PM | 1449.1 | .03249 | .30000 | 4.28 | | U | U |
| 01/16/1994 | Vanadium | 4 | PM | 1449.1 | .00163 | .17000 | 4.28 | | U | U |
| 01/16/1994 | Zinc | 4 | PM | 1449.1 | .00575 | .00000 | 4.28 | | B | |
| 01/16/1994 | Aluminum | 5 | PM | 1437.7 | .02776 | 33.30000 | 3.24 | | B | U |
| 01/16/1994 | Arsenic | 5 | PM | 1437.7 | .00017 | .00057 | 3.24 | | U | U |
| 01/16/1994 | Barium | 5 | PM | 1437.7 | .00170 | .52000 | 3.24 | | U | U |
| 01/16/1994 | Beryllium | 5 | PM | 1437.7 | .00017 | .00100 | 3.24 | | U | U |
| 01/16/1994 | Cadmium | 5 | PM | 1437.7 | .00135 | .00140 | 3.24 | | U | U |
| 01/16/1994 | Chromium | 5 | PM | 1437.7 | .00059 | .00020 | 3.24 | | U | U |
| 01/16/1994 | Manganese | 5 | PM | 1437.7 | .00059 | .42000 | 3.24 | | B | |
| 01/16/1994 | Nickel | 5 | PM | 1437.7 | .00338 | .01000 | 3.24 | | U | U |
| 01/16/1994 | Phosphorus | 5 | PM | 1437.7 | .15873 | .30000 | 3.24 | | B | U |
| 01/16/1994 | Selenium | 5 | PM | 1437.7 | .01695 | .70000 | 3.24 | | U | U |
| 01/16/1994 | Silver | 5 | PM | 1437.7 | .00118 | .30000 | 3.24 | | U | U |
| 01/16/1994 | Thallium | 5 | PM | 1437.7 | .03384 | .30000 | 3.24 | | U | U |
| 01/16/1994 | Vanadium | 5 | PM | 1437.7 | .00170 | .17000 | 3.24 | | U | U |
| 01/16/1994 | Zinc | 5 | PM | 1437.7 | .00238 | .00000 | 3.24 | | B | |
| 01/16/1994 | Aluminum | 6 | PM | 1438.9 | .02726 | 33.30000 | 4.37 | | B | U |

| Sample Date | Chemical Name | Site # | Typ | Run Time (min.) | Chem Conc. (ug/m3) | EPA Scr. L(ug/m3) | Part.C. (ug/m3) | Grav. Val | Qual. Lab | Qual. Val |
|---|---|---|---|---|---|---|---|---|---|---|
| 01/16/1994 | Arsenic | 6 | PM | 1438.9 | .00017 | .00057 | 4.37 | | U | U |
| 01/16/1994 | Barium | 6 | PM | 1438.9 | .00169 | .52000 | 4.37 | | B | |
| 01/16/1994 | Beryllium | 6 | PM | 1438.9 | .00017 | .00100 | 4.37 | | U | U |
| 01/16/1994 | Cadmium | 6 | PM | 1438.9 | .00134 | .00140 | 4.37 | | U | U |
| 01/16/1994 | Chromium | 6 | PM | 1438.9 | .00054 | .00020 | 4.37 | | | U |
| 01/16/1994 | Manganese | 6 | PM | 1438.9 | .00071 | .42000 | 4.37 | | B | |
| 01/16/1994 | Nickel | 6 | PM | 1438.9 | .00336 | .01000 | 4.37 | | U | U |
| 01/16/1994 | Phosphorus | 6 | PM | 1438.9 | .20010 | .30000 | 4.37 | | B | U |
| 01/16/1994 | Selenium | 6 | PM | 1438.9 | .01685 | .70000 | 4.37 | | U | U |
| 01/16/1994 | Silver | 6 | PM | 1438.9 | .00118 | .30000 | 4.37 | | U | U |
| 01/16/1994 | Thallium | 6 | PM | 1438.9 | .03364 | .30000 | 4.37 | | U | U |
| 01/16/1994 | Vanadium | 6 | PM | 1438.9 | .00169 | .17000 | 4.37 | | U | U |
| 01/16/1994 | Zinc | 6 | PM | 1438.9 | .00192 | .00000 | 4.37 | | B | |
| 01/16/1994 | Aluminum | 7 | PM | 1437.1 | .02016 | 33.30000 | 2.90 | | B | U |
| 01/16/1994 | Arsenic | 7 | PM | 1437.1 | .00017 | .00057 | 2.90 | | U | U |
| 01/16/1994 | Barium | 7 | PM | 1437.1 | .00165 | .52000 | 2.90 | | U | U |
| 01/16/1994 | Beryllium | 7 | PM | 1437.1 | .00017 | .00100 | 2.90 | | U | U |
| 01/16/1994 | Cadmium | 7 | PM | 1437.1 | .00132 | .00140 | 2.90 | | U | U |
| 01/16/1994 | Chromium | 7 | PM | 1437.1 | .00047 | .00020 | 2.90 | | | U |
| 01/16/1994 | Manganese | 7 | PM | 1437.1 | .00050 | .42000 | 2.90 | | U | U |
| 01/16/1994 | Nickel | 7 | PM | 1437.1 | .00330 | .01000 | 2.90 | | U | U |
| 01/16/1994 | Phosphorus | 7 | PM | 1437.1 | .17527 | .30000 | 2.90 | | B | U |
| 01/16/1994 | Selenium | 7 | PM | 1437.1 | .01654 | .70000 | 2.90 | | U | U |
| 01/16/1994 | Silver | 7 | PM | 1437.1 | .00115 | .30000 | 2.90 | | U | U |
| 01/16/1994 | Thallium | 7 | PM | 1437.1 | .03301 | .30000 | 2.90 | | U | U |
| 01/16/1994 | Vanadium | 7 | PM | 1437.1 | .00165 | .17000 | 2.90 | | U | U |
| 01/16/1994 | Zinc | 7 | PM | 1437.1 | .00082 | .00000 | 2.90 | | U | U |
| 01/20/1994 | Aluminum | 1 | PM | 1477.7 | .16354 | 33.30000 | 49.41 | | | |
| 01/20/1994 | Arsenic | 1 | PM | 1477.7 | .00075 | .00057 | 49.41 | | | |
| 01/20/1994 | Barium | 1 | PM | 1477.7 | .00849 | .52000 | 49.41 | | | |
| 01/20/1994 | Beryllium | 1 | PM | 1477.7 | .00016 | .00100 | 49.41 | | U | U |
| 01/20/1994 | Cadmium | 1 | PM | 1477.7 | .00127 | .00140 | 49.41 | | U | U |
| 01/20/1994 | Chromium | 1 | PM | 1477.7 | .00286 | .00020 | 49.41 | | | |
| 01/20/1994 | Manganese | 1 | PM | 1477.7 | .00989 | .42000 | 49.41 | | | |
| 01/20/1994 | Nickel | 1 | PM | 1477.7 | .00318 | .01000 | 49.41 | | U | U |
| 01/20/1994 | Phosphorus | 1 | PM | 1477.7 | .85573 | .30000 | 49.41 | | | |
| 01/20/1994 | Selenium | 1 | PM | 1477.7 | .01591 | .70000 | 49.41 | | U | U |
| 01/20/1994 | Silver | 1 | PM | 1477.7 | .00111 | .30000 | 49.41 | | U | U |
| 01/20/1994 | Thallium | 1 | PM | 1477.7 | .03176 | .30000 | 49.41 | | U | U |
| 01/20/1994 | Vanadium | 1 | PM | 1477.7 | .00242 | .17000 | 49.41 | | B | |
| 01/20/1994 | Zinc | 1 | PM | 1477.7 | .02333 | .00000 | 49.41 | | B | |
| 01/20/1994 | Aluminum | 2 | PM | 1441.4 | .38640 | 33.30000 | 72.92 | | | |
| 01/20/1994 | Arsenic | 2 | PM | 1441.4 | .00138 | .00057 | 72.92 | | | |
| 01/20/1994 | Barium | 2 | PM | 1441.4 | .01414 | .52000 | 72.92 | | | |
| 01/20/1994 | Beryllium | 2 | PM | 1441.4 | .00017 | .00100 | 72.92 | | U | U |
| 01/20/1994 | Cadmium | 2 | PM | 1441.4 | .00348 | .00140 | 72.92 | | | |
| 01/20/1994 | Chromium | 2 | PM | 1441.4 | .01164 | .00020 | 72.92 | | | |
| 01/20/1994 | Manganese | 2 | PM | 1441.4 | .01766 | .42000 | 72.92 | | | |
| 01/20/1994 | Nickel | 2 | PM | 1441.4 | .00415 | .01000 | 72.92 | | B | |
| 01/20/1994 | Phosphorus | 2 | PM | 1441.4 | 1.98274 | .30000 | 72.92 | | | |
| 01/20/1994 | Selenium | 2 | PM | 1441.4 | .01699 | .70000 | 72.92 | | U | U |
| 01/20/1994 | Silver | 2 | PM | 1441.4 | .00135 | .30000 | 72.92 | | B | |
| 01/20/1994 | Thallium | 2 | PM | 1441.4 | .03390 | .30000 | 72.92 | | U | U |
| 01/20/1994 | Vanadium | 2 | PM | 1441.4 | .01475 | .17000 | 72.92 | | | |
| 01/20/1994 | Zinc | 2 | PM | 1441.4 | .04717 | .00000 | 72.92 | | B | |

| Sample Date | Chemical Name | Site # | Typ | Run Time (min.) | Chem Conc. (ug/m3) | EPA Scr. L(ug/m3) | Part.C. (ug/m3) | Grav. Val | Qual. Lab | Qual. Val |
|---|---|---|---|---|---|---|---|---|---|---|
| 01/20/1994 | Aluminum | 3 | PM | 1460.0 | .11752 | 33.30000 | 42.20 | | | |
| 01/20/1994 | Arsenic | 3 | PM | 1460.0 | .00094 | .00057 | 42.20 | | | |
| 01/20/1994 | Barium | 3 | PM | 1460.0 | .00555 | .52000 | 42.20 | | | |
| 01/20/1994 | Beryllium | 3 | PM | 1460.0 | .00017 | .00100 | 42.20 | | U | U |
| 01/20/1994 | Cadmium | 3 | PM | 1460.0 | .00134 | .00140 | 42.20 | | U | U |
| 01/20/1994 | Chromium | 3 | PM | 1460.0 | .00134 | .00020 | 42.20 | | | U |
| 01/20/1994 | Manganese | 3 | PM | 1460.0 | .00745 | .42000 | 42.20 | | | |
| 01/20/1994 | Nickel | 3 | PM | 1460.0 | .00370 | .01000 | 42.20 | | B | |
| 01/20/1994 | Phosphorus | 3 | PM | 1460.0 | .49829 | .30000 | 42.20 | | | U |
| 01/20/1994 | Selenium | 3 | PM | 1460.0 | .01686 | .70000 | 42.20 | | U | U |
| 01/20/1994 | Silver | 3 | PM | 1460.0 | .00118 | .30000 | 42.20 | | U | U |
| 01/20/1994 | Thallium | 3 | PM | 1460.0 | .03364 | .30000 | 42.20 | | U | U |
| 01/20/1994 | Vanadium | 3 | PM | 1460.0 | .00169 | .17000 | 42.20 | | U | U |
| 01/20/1994 | Zinc | 3 | PM | 1460.0 | .02404 | .00000 | 42.20 | | B | |
| 01/20/1994 | Aluminum | 4 | PM | 1446.2 | .21488 | 33.30000 | 56.59 | | | |
| 01/20/1994 | Arsenic | 4 | PM | 1446.2 | .00102 | .00057 | 56.59 | | | |
| 01/20/1994 | Barium | 4 | PM | 1446.2 | .00943 | .52000 | 56.59 | | | |
| 01/20/1994 | Beryllium | 4 | PM | 1446.2 | .00017 | .00100 | 56.59 | | U | U |
| 01/20/1994 | Cadmium | 4 | PM | 1446.2 | .00132 | .00140 | 56.59 | | U | U |
| 01/20/1994 | Chromium | 4 | PM | 1446.2 | .00264 | .00020 | 56.59 | | | |
| 01/20/1994 | Manganese | 4 | PM | 1446.2 | .01358 | .42000 | 56.59 | | | |
| 01/20/1994 | Nickel | 4 | PM | 1446.2 | .00330 | .01000 | 56.59 | | U | U |
| 01/20/1994 | Phosphorus | 4 | PM | 1446.2 | .65254 | .30000 | 56.59 | | | U |
| 01/20/1994 | Selenium | 4 | PM | 1446.2 | .01654 | .70000 | 56.59 | | U | U |
| 01/20/1994 | Silver | 4 | PM | 1446.2 | .00115 | .30000 | 56.59 | | U | U |
| 01/20/1994 | Thallium | 4 | PM | 1446.2 | .03302 | .30000 | 56.59 | | U | U |
| 01/20/1994 | Vanadium | 4 | PM | 1446.2 | .00187 | .17000 | 56.59 | | B | |
| 01/20/1994 | Zinc | 4 | PM | 1446.2 | .02861 | .00000 | 56.59 | | B | |
| 01/20/1994 | Aluminum | 5 | PM | 1443.7 | .12639 | 33.30000 | 56.94 | | | |
| 01/20/1994 | Arsenic | 5 | PM | 1443.7 | .00107 | .00057 | 56.94 | | | |
| 01/20/1994 | Barium | 5 | PM | 1443.7 | .00436 | .52000 | 56.94 | | | |
| 01/20/1994 | Beryllium | 5 | PM | 1443.7 | .00017 | .00100 | 56.94 | | U | U |
| 01/20/1994 | Cadmium | 5 | PM | 1443.7 | .00358 | .00140 | 56.94 | | | |
| 01/20/1994 | Chromium | 5 | PM | 1443.7 | .00345 | .00020 | 56.94 | | | |
| 01/20/1994 | Manganese | 5 | PM | 1443.7 | .00486 | .42000 | 56.94 | | | |
| 01/20/1994 | Nickel | 5 | PM | 1443.7 | .00344 | .01000 | 56.94 | | B | U |
| 01/20/1994 | Phosphorus | 5 | PM | 1443.7 | 1.72528 | .30000 | 56.94 | | | |
| 01/20/1994 | Selenium | 5 | PM | 1443.7 | .01678 | .70000 | 56.94 | | U | U |
| 01/20/1994 | Silver | 5 | PM | 1443.7 | .00117 | .30000 | 56.94 | | U | U |
| 01/20/1994 | Thallium | 5 | PM | 1443.7 | .03350 | .30000 | 56.94 | | U | U |
| 01/20/1994 | Vanadium | 5 | PM | 1443.7 | .00320 | .17000 | 56.94 | | B | |
| 01/20/1994 | Zinc | 5 | PM | 1443.7 | .02595 | .00000 | 56.94 | | B | |
| 01/20/1994 | Aluminum | 6 | PM | 1445.0 | .07578 | 33.30000 | 20.55 | | | |
| 01/20/1994 | Arsenic | 6 | PM | 1445.0 | .00066 | .00057 | 20.55 | | | |
| 01/20/1994 | Barium | 6 | PM | 1445.0 | .00300 | .52000 | 20.55 | | | |
| 01/20/1994 | Beryllium | 6 | PM | 1445.0 | .00017 | .00100 | 20.55 | | U | U |
| 01/20/1994 | Cadmium | 6 | PM | 1445.0 | .00133 | .00140 | 20.55 | | U | U |
| 01/20/1994 | Chromium | 6 | PM | 1445.0 | .00124 | .00020 | 20.55 | | | U |
| 01/20/1994 | Manganese | 6 | PM | 1445.0 | .00355 | .42000 | 20.55 | | | |
| 01/20/1994 | Nickel | 6 | PM | 1445.0 | .00333 | .01000 | 20.55 | | U | U |
| 01/20/1994 | Phosphorus | 6 | PM | 1445.0 | .27320 | .30000 | 20.55 | | B | U |
| 01/20/1994 | Selenium | 6 | PM | 1445.0 | .01668 | .70000 | 20.55 | | U | U |
| 01/20/1994 | Silver | 6 | PM | 1445.0 | .00116 | .30000 | 20.55 | | U | U |
| 01/20/1994 | Thallium | 6 | PM | 1445.0 | .03330 | .30000 | 20.55 | | U | U |
| 01/20/1994 | Vanadium | 6 | PM | 1445.0 | .00167 | .17000 | 20.55 | | U | U |

| Sample Date | Chemical Name | Site # | Typ | Run Time (min.) | Chem Conc. (ug/m3) | EPA Scr. L(ug/m3) | Part.C. (ug/m3) | Grav. Val | Qual. Lab | Qual. Val |
|---|---|---|---|---|---|---|---|---|---|---|
| 01/20/1994 | Zinc | 6 | PM | 1445.0 | .01196 | .00000 | 20.55 | | B | |
| 01/20/1994 | Aluminum | 7 | PM | 1440.8 | .18353 | 33.30000 | 51.59 | | | |
| 01/20/1994 | Arsenic | 7 | PM | 1440.8 | .00118 | .00057 | 51.59 | | | |
| 01/20/1994 | Barium | 7 | PM | 1440.8 | .00561 | .52000 | 51.59 | | | |
| 01/20/1994 | Beryllium | 7 | PM | 1440.8 | .00016 | .00100 | 51.59 | | U | U |
| 01/20/1994 | Cadmium | 7 | PM | 1440.8 | .00147 | .00140 | 51.59 | | | |
| 01/20/1994 | Chromium | 7 | PM | 1440.8 | .00257 | .00020 | 51.59 | | | |
| 01/20/1994 | Manganese | 7 | PM | 1440.8 | .00830 | .42000 | 51.59 | | | |
| 01/20/1994 | Nickel | 7 | PM | 1440.8 | .00325 | .01000 | 51.59 | | U | U |
| 01/20/1994 | Phosphorus | 7 | PM | 1440.8 | .90790 | .30000 | 51.59 | | | |
| 01/20/1994 | Selenium | 7 | PM | 1440.8 | .01628 | .70000 | 51.59 | | U | U |
| 01/20/1994 | Silver | 7 | PM | 1440.8 | .00151 | .30000 | 51.59 | | B | |
| 01/20/1994 | Thallium | 7 | PM | 1440.8 | .03249 | .30000 | 51.59 | | U | U |
| 01/20/1994 | Vanadium | 7 | PM | 1440.8 | .00167 | .17000 | 51.59 | | B | |
| 01/20/1994 | Zinc | 7 | PM | 1440.8 | .02341 | .00000 | 51.59 | | B | |
| 01/20/1994 | Aluminum | 8 | PM | 1461.0 | .17331 | 33.30000 | 49.40 | | | |
| 01/20/1994 | Arsenic | 8 | PM | 1461.0 | .00084 | .00057 | 49.40 | | | |
| 01/20/1994 | Barium | 8 | PM | 1461.0 | .01004 | .52000 | 49.40 | | | |
| 01/20/1994 | Beryllium | 8 | PM | 1461.0 | .00016 | .00100 | 49.40 | | U | U |
| 01/20/1994 | Cadmium | 8 | PM | 1461.0 | .00145 | .00140 | 49.40 | | | |
| 01/20/1994 | Chromium | 8 | PM | 1461.0 | .00279 | .00020 | 49.40 | | | |
| 01/20/1994 | Manganese | 8 | PM | 1461.0 | .00883 | .42000 | 49.40 | | | |
| 01/20/1994 | Nickel | 8 | PM | 1461.0 | .00320 | .01000 | 49.40 | | U | U |
| 01/20/1994 | Phosphorus | 8 | PM | 1461.0 | .90814 | .30000 | 49.40 | | | |
| 01/20/1994 | Selenium | 8 | PM | 1461.0 | .01605 | .70000 | 49.40 | | U | U |
| 01/20/1994 | Silver | 8 | PM | 1461.0 | .00127 | .30000 | 49.40 | | B | |
| 01/20/1994 | Thallium | 8 | PM | 1461.0 | .03204 | .30000 | 49.40 | | U | U |
| 01/20/1994 | Vanadium | 8 | PM | 1461.0 | .00250 | .17000 | 49.40 | | B | |
| 01/20/1994 | Zinc | 8 | PM | 1461.0 | .02417 | .00000 | 49.40 | | B | |
| 01/24/1994 | Aluminum | 1 | PM | 1453.8 | .13280 | 33.30000 | 15.07 | | | |
| 01/24/1994 | Arsenic | 1 | PM | 1453.8 | .00186 | .00057 | 15.07 | | | |
| 01/24/1994 | Barium | 1 | PM | 1453.8 | .00629 | .52000 | 15.07 | | | |
| 01/24/1994 | Beryllium | 1 | PM | 1453.8 | .00017 | .00100 | 15.07 | | U | U |
| 01/24/1994 | Cadmium | 1 | PM | 1453.8 | .00132 | .00140 | 15.07 | | U | U |
| 01/24/1994 | Chromium | 1 | PM | 1453.8 | .00189 | .00020 | 15.07 | | | |
| 01/24/1994 | Manganese | 1 | PM | 1453.8 | .00674 | .42000 | 15.07 | | | |
| 01/24/1994 | Nickel | 1 | PM | 1453.8 | .00331 | .01000 | 15.07 | | U | U |
| 01/24/1994 | Phosphorus | 1 | PM | 1453.8 | .39575 | .30000 | 15.07 | | | U |
| 01/24/1994 | Selenium | 1 | PM | 1453.8 | .01658 | .70000 | 15.07 | | U | U |
| 01/24/1994 | Silver | 1 | PM | 1453.8 | .00116 | .30000 | 15.07 | | U | U |
| 01/24/1994 | Thallium | 1 | PM | 1453.8 | .03310 | .30000 | 15.07 | | U | U |
| 01/24/1994 | Vanadium | 1 | PM | 1453.8 | .00166 | .17000 | 15.07 | | U | U |
| 01/24/1994 | Zinc | 1 | PM | 1453.8 | .01467 | .00000 | 15.07 | | B | |
| 01/24/1994 | Aluminum | 2 | PM | 1444.0 | .23967 | 33.30000 | 40.89 | | | |
| 01/24/1994 | Arsenic | 2 | PM | 1444.0 | .00186 | .00057 | 40.89 | | | |
| 01/24/1994 | Barium | 2 | PM | 1444.0 | .00607 | .52000 | 40.89 | | | |
| 01/24/1994 | Beryllium | 2 | PM | 1444.0 | .00017 | .00100 | 40.89 | | U | U |
| 01/24/1994 | Cadmium | 2 | PM | 1444.0 | .00241 | .00140 | 40.89 | | | |
| 01/24/1994 | Chromium | 2 | PM | 1444.0 | .00797 | .00020 | 40.89 | | | |
| 01/24/1994 | Manganese | 2 | PM | 1444.0 | .01302 | .42000 | 40.89 | | | |
| 01/24/1994 | Nickel | 2 | PM | 1444.0 | .00677 | .01000 | 40.89 | | B | |
| 01/24/1994 | Phosphorus | 2 | PM | 1444.0 | 2.50056 | .30000 | 40.89 | | | |
| 01/24/1994 | Selenium | 2 | PM | 1444.0 | .01739 | .70000 | 40.89 | | U | U |
| 01/24/1994 | Silver | 2 | PM | 1444.0 | .00121 | .30000 | 40.89 | | B | |
| 01/24/1994 | Thallium | 2 | PM | 1444.0 | .03470 | .30000 | 40.89 | | U | U |

| Sample Date | Chemical Name | Site # | Typ | Run Time (min.) | Chem Conc. (ug/m3) | EPA Scr. L(ug/m3) | Part.C. Grav. (ug/m3) | Qual. Val | Qual. Lab | Qual. Val |
|---|---|---|---|---|---|---|---|---|---|---|
| 01/24/1994 | Vanadium | 2 | PM | 1444.0 | .00748 | .17000 | 40.89 | | | |
| 01/24/1994 | Zinc | 2 | PM | 1444.0 | .02501 | .00000 | 40.89 | | B | |
| 01/24/1994 | Aluminum | 3 | PM | 1455.7 | .11396 | 33.30000 | 14.58 | | | |
| 01/24/1994 | Arsenic | 3 | PM | 1455.7 | .00191 | .00057 | 14.58 | | | |
| 01/24/1994 | Barium | 3 | PM | 1455.7 | .00407 | .52000 | 14.58 | | | |
| 01/24/1994 | Beryllium | 3 | PM | 1455.7 | .00017 | .00100 | 14.58 | | U | U |
| 01/24/1994 | Cadmium | 3 | PM | 1455.7 | .00138 | .00140 | 14.58 | | U | U |
| 01/24/1994 | Chromium | 3 | PM | 1455.7 | .00090 | .00020 | 14.58 | | | U |
| 01/24/1994 | Manganese | 3 | PM | 1455.7 | .00639 | .42000 | 14.58 | | | |
| 01/24/1994 | Nickel | 3 | PM | 1455.7 | .00346 | .01000 | 14.58 | | U | U |
| 01/24/1994 | Phosphorus | 3 | PM | 1455.7 | .19891 | .30000 | 14.58 | | B | U |
| 01/24/1994 | Selenium | 3 | PM | 1455.7 | .01734 | .70000 | 14.58 | | U | U |
| 01/24/1994 | Silver | 3 | PM | 1455.7 | .00121 | .30000 | 14.58 | | U | U |
| 01/24/1994 | Thallium | 3 | PM | 1455.7 | .03460 | .30000 | 14.58 | | U | U |
| 01/24/1994 | Vanadium | 3 | PM | 1455.7 | .00173 | .17000 | 14.58 | | U | U |
| 01/24/1994 | Zinc | 3 | PM | 1455.7 | .01768 | .00000 | 14.58 | | B | |
| 01/24/1994 | Aluminum | 4 | PM | 1447.0 | .14119 | 33.30000 | 18.86 | | | |
| 01/24/1994 | Arsenic | 4 | PM | 1447.0 | .00217 | .00057 | 18.86 | | | |
| 01/24/1994 | Barium | 4 | PM | 1447.0 | .00551 | .52000 | 18.86 | | | |
| 01/24/1994 | Beryllium | 4 | PM | 1447.0 | .00017 | .00100 | 18.86 | | U | U |
| 01/24/1994 | Cadmium | 4 | PM | 1447.0 | .00135 | .00140 | 18.86 | | U | U |
| 01/24/1994 | Chromium | 4 | PM | 1447.0 | .00198 | .00020 | 18.86 | | | |
| 01/24/1994 | Manganese | 4 | PM | 1447.0 | .00898 | .42000 | 18.86 | | | |
| 01/24/1994 | Nickel | 4 | PM | 1447.0 | .00338 | .01000 | 18.86 | | U | U |
| 01/24/1994 | Phosphorus | 4 | PM | 1447.0 | .31007 | .30000 | 18.86 | | B | U |
| 01/24/1994 | Selenium | 4 | PM | 1447.0 | .01696 | .70000 | 18.86 | | U | U |
| 01/24/1994 | Silver | 4 | PM | 1447.0 | .00146 | .30000 | 18.86 | | B | |
| 01/24/1994 | Thallium | 4 | PM | 1447.0 | .03384 | .30000 | 18.86 | | U | U |
| 01/24/1994 | Vanadium | 4 | PM | 1447.0 | .00170 | .17000 | 18.86 | | U | U |
| 01/24/1994 | Zinc | 4 | PM | 1447.0 | .01898 | .00000 | 18.86 | | B | |
| 01/24/1994 | Aluminum | 5 | PM | 1437.2 | .08542 | 33.30000 | 7.93 | | | |
| 01/24/1994 | Arsenic | 5 | PM | 1437.2 | .00156 | .00057 | 7.93 | | | |
| 01/24/1994 | Barium | 5 | PM | 1437.2 | .00242 | .52000 | 7.93 | | | |
| 01/24/1994 | Beryllium | 5 | PM | 1437.2 | .00017 | .00100 | 7.93 | | U | U |
| 01/24/1994 | Cadmium | 5 | PM | 1437.2 | .00138 | .00140 | 7.93 | | U | U |
| 01/24/1994 | Chromium | 5 | PM | 1437.2 | .00122 | .00020 | 7.93 | | | U |
| 01/24/1994 | Manganese | 5 | PM | 1437.2 | .00276 | .42000 | 7.93 | | | |
| 01/24/1994 | Nickel | 5 | PM | 1437.2 | .00345 | .01000 | 7.93 | | U | U |
| 01/24/1994 | Phosphorus | 5 | PM | 1437.2 | .46083 | .30000 | 7.93 | | | U |
| 01/24/1994 | Selenium | 5 | PM | 1437.2 | .01729 | .70000 | 7.93 | | U | U |
| 01/24/1994 | Silver | 5 | PM | 1437.2 | .00138 | .30000 | 7.93 | | B | |
| 01/24/1994 | Thallium | 5 | PM | 1437.2 | .03451 | .30000 | 7.93 | | U | U |
| 01/24/1994 | Vanadium | 5 | PM | 1437.2 | .00173 | .17000 | 7.93 | | U | U |
| 01/24/1994 | Zinc | 5 | PM | 1437.2 | .00985 | .00000 | 7.93 | | B | |
| 01/24/1994 | Aluminum | 6 | PM | 1439.6 | .05692 | 33.30000 | 5.00 | | | U |
| 01/24/1994 | Arsenic | 6 | PM | 1439.6 | .00148 | .00057 | 5.00 | | | |
| 01/24/1994 | Barium | 6 | PM | 1439.6 | .00172 | .52000 | 5.00 | | U | U |
| 01/24/1994 | Beryllium | 6 | PM | 1439.6 | .00017 | .00100 | 5.00 | | U | U |
| 01/24/1994 | Cadmium | 6 | PM | 1439.6 | .00137 | .00140 | 5.00 | | U | U |
| 01/24/1994 | Chromium | 6 | PM | 1439.6 | .00083 | .00020 | 5.00 | | | U |
| 01/24/1994 | Manganese | 6 | PM | 1439.6 | .00264 | .42000 | 5.00 | | | |
| 01/24/1994 | Nickel | 6 | PM | 1439.6 | .00343 | .01000 | 5.00 | | U | U |
| 01/24/1994 | Phosphorus | 6 | PM | 1439.6 | .17652 | .30000 | 5.00 | | B | U |
| 01/24/1994 | Selenium | 6 | PM | 1439.6 | .01717 | .70000 | 5.00 | | U | U |
| 01/24/1994 | Silver | 6 | PM | 1439.6 | .00120 | .30000 | 5.00 | | U | U |

| Sample Date | Chemical Name | Site # | Typ | Run Time (min.) | Chem Conc. (ug/m3) | EPA Scr. L(ug/m3) | Part.C. Grav. (ug/m3) | Qual. Val | Lab Val |
|---|---|---|---|---|---|---|---|---|---|
| 01/24/1994 | Thallium | 6 | PM | 1439.6 | .03428 | .30000 | 5.00 | U | U |
| 01/24/1994 | Vanadium | 6 | PM | 1439.6 | .00172 | .17000 | 5.00 | U | U |
| 01/24/1994 | Zinc | 6 | PM | 1439.6 | .00718 | .00000 | 5.00 | B | |
| 01/24/1994 | Aluminum | 7 | PM | 1438.3 | .05709 | 33.30000 | 7.00 | | |
| 01/24/1994 | Arsenic | 7 | PM | 1438.3 | .00135 | .00057 | 7.00 | | |
| 01/24/1994 | Barium | 7 | PM | 1438.3 | .00209 | .52000 | 7.00 | | |
| 01/24/1994 | Beryllium | 7 | PM | 1438.3 | .00017 | .00100 | 7.00 | U | U |
| 01/24/1994 | Cadmium | 7 | PM | 1438.3 | .00133 | .00140 | 7.00 | U | U |
| 01/24/1994 | Chromium | 7 | PM | 1438.3 | .00046 | .00020 | 7.00 | | U |
| 01/24/1994 | Manganese | 7 | PM | 1438.3 | .00207 | .42000 | 7.00 | | |
| 01/24/1994 | Nickel | 7 | PM | 1438.3 | .00334 | .01000 | 7.00 | U | U |
| 01/24/1994 | Phosphorus | 7 | PM | 1438.3 | .24381 | .30000 | 7.00 | B | U |
| 01/24/1994 | Selenium | 7 | PM | 1438.3 | .01672 | .70000 | 7.00 | U | U |
| 01/24/1994 | Silver | 7 | PM | 1438.3 | .00117 | .30000 | 7.00 | U | U |
| 01/24/1994 | Thallium | 7 | PM | 1438.3 | .03337 | .30000 | 7.00 | U | U |
| 01/24/1994 | Vanadium | 7 | PM | 1438.3 | .00167 | .17000 | 7.00 | U | U |
| 01/24/1994 | Zinc | 7 | PM | 1438.3 | .00568 | .00000 | 7.00 | B | U |
| 01/28/1994 | Aluminum | 1 | PM | 1453.7 | .11508 | 33.30000 | 27.28 | | |
| 01/28/1994 | Arsenic | 1 | PM | 1453.7 | .00026 | .00057 | 27.28 | B | |
| 01/28/1994 | Barium | 1 | PM | 1453.7 | .00443 | .52000 | 27.28 | | |
| 01/28/1994 | Beryllium | 1 | PM | 1453.7 | .00016 | .00100 | 27.28 | U | U |
| 01/28/1994 | Cadmium | 1 | PM | 1453.7 | .00129 | .00140 | 27.28 | U | U |
| 01/28/1994 | Chromium | 1 | PM | 1453.7 | .00226 | .00020 | 27.28 | | |
| 01/28/1994 | Manganese | 1 | PM | 1453.7 | .00525 | .42000 | 27.28 | | |
| 01/28/1994 | Nickel | 1 | PM | 1453.7 | .00322 | .01000 | 27.28 | U | U |
| 01/28/1994 | Phosphorus | 1 | PM | 1453.7 | .51883 | .30000 | 27.28 | | U |
| 01/28/1994 | Selenium | 1 | PM | 1453.7 | .01614 | .70000 | 27.28 | U | U |
| 01/28/1994 | Silver | 1 | PM | 1453.7 | .00113 | .30000 | 27.28 | U | U |
| 01/28/1994 | Thallium | 1 | PM | 1453.7 | .03221 | .30000 | 27.28 | U | U |
| 01/28/1994 | Vanadium | 1 | PM | 1453.7 | .00203 | .17000 | 27.28 | B | |
| 01/28/1994 | Zinc | 1 | PM | 1453.7 | .01376 | .00000 | 27.28 | B | |
| 01/28/1994 | Aluminum | 2 | PM | 1441.8 | .17753 | 33.30000 | 38.90 | | |
| 01/28/1994 | Arsenic | 2 | PM | 1441.8 | .00039 | .00057 | 38.90 | B | |
| 01/28/1994 | Barium | 2 | PM | 1441.8 | .00558 | .52000 | 38.90 | | |
| 01/28/1994 | Beryllium | 2 | PM | 1441.8 | .00017 | .00100 | 38.90 | U | U |
| 01/28/1994 | Cadmium | 2 | PM | 1441.8 | .00638 | .00140 | 38.90 | | |
| 01/28/1994 | Chromium | 2 | PM | 1441.8 | .00514 | .00020 | 38.90 | | |
| 01/28/1994 | Manganese | 2 | PM | 1441.8 | .00756 | .42000 | 38.90 | | |
| 01/28/1994 | Nickel | 2 | PM | 1441.8 | .00338 | .01000 | 38.90 | U | U |
| 01/28/1994 | Phosphorus | 2 | PM | 1441.8 | 3.84086 | .30000 | 38.90 | | |
| 01/28/1994 | Selenium | 2 | PM | 1441.8 | .01694 | .70000 | 38.90 | U | U |
| 01/28/1994 | Silver | 2 | PM | 1441.8 | .00118 | .30000 | 38.90 | U | U |
| 01/28/1994 | Thallium | 2 | PM | 1441.8 | .03382 | .30000 | 38.90 | U | U |
| 01/28/1994 | Vanadium | 2 | PM | 1441.8 | .00643 | .17000 | 38.90 | | |
| 01/28/1994 | Zinc | 2 | PM | 1441.8 | .05177 | .00000 | 38.90 | B | |
| 01/28/1994 | Aluminum | 3 | PM | 1454.6 | .06268 | 33.30000 | 21.74 | | |
| 01/28/1994 | Arsenic | 3 | PM | 1454.6 | .00017 | .00057 | 21.74 | B | |
| 01/28/1994 | Barium | 3 | PM | 1454.6 | .00320 | .52000 | 21.74 | | |
| 01/28/1994 | Beryllium | 3 | PM | 1454.6 | .00017 | .00100 | 21.74 | U | U |
| 01/28/1994 | Cadmium | 3 | PM | 1454.6 | .00169 | .00140 | 21.74 | | |
| 01/28/1994 | Chromium | 3 | PM | 1454.6 | .00129 | .00020 | 21.74 | | U |
| 01/28/1994 | Manganese | 3 | PM | 1454.6 | .00379 | .42000 | 21.74 | | |
| 01/28/1994 | Nickel | 3 | PM | 1454.6 | .00337 | .01000 | 21.74 | U | U |
| 01/28/1994 | Phosphorus | 3 | PM | 1454.6 | 1.42582 | .30000 | 21.74 | | |
| 01/28/1994 | Selenium | 3 | PM | 1454.6 | .01688 | .70000 | 21.74 | U | U |

| Sample Date | Chemical Name | Site # | Typ | Run Time (min.) | Chem Conc. (ug/m3) | EPA Scr. L(ug/m3) | Part.C. (ug/m3) | Grav. Val | Qual. Lab | Qual. Val |
|---|---|---|---|---|---|---|---|---|---|---|
| 01/28/1994 | Silver | 3 | PM | 1454.6 | .00118 | .30000 | 21.74 | | U | U |
| 01/28/1994 | Thallium | 3 | PM | 1454.6 | .03370 | .30000 | 21.74 | | U | U |
| 01/28/1994 | Vanadium | 3 | PM | 1454.6 | .00169 | .17000 | 21.74 | | U | U |
| 01/28/1994 | Zinc | 3 | PM | 1454.6 | .01823 | .00000 | 21.74 | | B | |
| 01/28/1994 | Aluminum | 4 | PM | 1448.5 | .07420 | 33.30000 | 17.21 | | | |
| 01/28/1994 | Arsenic | 4 | PM | 1448.5 | .00016 | .00057 | 17.21 | | U | U |
| 01/28/1994 | Barium | 4 | PM | 1448.5 | .00272 | .52000 | 17.21 | | | |
| 01/28/1994 | Beryllium | 4 | PM | 1448.5 | .00016 | .00100 | 17.21 | | U | U |
| 01/28/1994 | Cadmium | 4 | PM | 1448.5 | .00131 | .00140 | 17.21 | | U | U |
| 01/28/1994 | Chromium | 4 | PM | 1448.5 | .00144 | .00020 | 17.21 | | | U |
| 01/28/1994 | Manganese | 4 | PM | 1448.5 | .00500 | .42000 | 17.21 | | | |
| 01/28/1994 | Nickel | 4 | PM | 1448.5 | .00329 | .01000 | 17.21 | | U | U |
| 01/28/1994 | Phosphorus | 4 | PM | 1448.5 | .17269 | .30000 | 17.21 | | B | U |
| 01/28/1994 | Selenium | 4 | PM | 1448.5 | .01648 | .70000 | 17.21 | | U | U |
| 01/28/1994 | Silver | 4 | PM | 1448.5 | .00115 | .30000 | 17.21 | | U | U |
| 01/28/1994 | Thallium | 4 | PM | 1448.5 | .03290 | .30000 | 17.21 | | U | U |
| 01/28/1994 | Vanadium | 4 | PM | 1448.5 | .00165 | .17000 | 17.21 | | U | U |
| 01/28/1994 | Zinc | 4 | PM | 1448.5 | .00873 | .00000 | 17.21 | | B | |
| 01/28/1994 | Aluminum | 5 | PM | 1441.5 | .04658 | 33.30000 | 27.21 | | | |
| 01/28/1994 | Arsenic | 5 | PM | 1441.5 | .00021 | .00057 | 27.21 | | B | |
| 01/28/1994 | Barium | 5 | PM | 1441.5 | .00218 | .52000 | 27.21 | | | |
| 01/28/1994 | Beryllium | 5 | PM | 1441.5 | .00017 | .00100 | 27.21 | | U | U |
| 01/28/1994 | Cadmium | 5 | PM | 1441.5 | .00134 | .00140 | 27.21 | | U | U |
| 01/28/1994 | Chromium | 5 | PM | 1441.5 | .00133 | .00020 | 27.21 | | | U |
| 01/28/1994 | Manganese | 5 | PM | 1441.5 | .00186 | .42000 | 27.21 | | B | |
| 01/28/1994 | Nickel | 5 | PM | 1441.5 | .00335 | .01000 | 27.21 | | U | U |
| 01/28/1994 | Phosphorus | 5 | PM | 1441.5 | 1.28305 | .30000 | 27.21 | | | |
| 01/28/1994 | Selenium | 5 | PM | 1441.5 | .01677 | .70000 | 27.21 | | U | U |
| 01/28/1994 | Silver | 5 | PM | 1441.5 | .00117 | .30000 | 27.21 | | U | U |
| 01/28/1994 | Thallium | 5 | PM | 1441.5 | .03348 | .30000 | 27.21 | | U | U |
| 01/28/1994 | Vanadium | 5 | PM | 1441.5 | .00168 | .17000 | 27.21 | | U | U |
| 01/28/1994 | Zinc | 5 | PM | 1441.5 | .01069 | .00000 | 27.21 | | B | |
| 01/28/1994 | Aluminum | 6 | PM | 1441.1 | .03119 | 33.30000 | 6.12 | | B | |
| 01/28/1994 | Arsenic | 6 | PM | 1441.1 | .00017 | .00057 | 6.12 | | U | U |
| 01/28/1994 | Barium | 6 | PM | 1441.1 | .00167 | .52000 | 6.12 | | U | U |
| 01/28/1994 | Beryllium | 6 | PM | 1441.1 | .00017 | .00100 | 6.12 | | U | U |
| 01/28/1994 | Cadmium | 6 | PM | 1441.1 | .00133 | .00140 | 6.12 | | U | U |
| 01/28/1994 | Chromium | 6 | PM | 1441.1 | .00053 | .00020 | 6.12 | | | U |
| 01/28/1994 | Manganese | 6 | PM | 1441.1 | .00140 | .42000 | 6.12 | | B | |
| 01/28/1994 | Nickel | 6 | PM | 1441.1 | .00333 | .01000 | 6.12 | | U | U |
| 01/28/1994 | Phosphorus | 6 | PM | 1441.1 | .19020 | .30000 | 6.12 | | B | U |
| 01/28/1994 | Selenium | 6 | PM | 1441.1 | .01669 | .70000 | 6.12 | | U | U |
| 01/28/1994 | Silver | 6 | PM | 1441.1 | .00116 | .30000 | 6.12 | | U | U |
| 01/28/1994 | Thallium | 6 | PM | 1441.1 | .03332 | .30000 | 6.12 | | U | U |
| 01/28/1994 | Vanadium | 6 | PM | 1441.1 | .00167 | .17000 | 6.12 | | U | U |
| 01/28/1994 | Zinc | 6 | PM | 1441.1 | .00600 | .00000 | 6.12 | | B | U |
| 01/28/1994 | Aluminum | 7 | PM | 1440.9 | .03112 | 33.30000 | 5.50 | | B | |
| 01/28/1994 | Arsenic | 7 | PM | 1440.9 | .00016 | .00057 | 5.50 | | U | U |
| 01/28/1994 | Barium | 7 | PM | 1440.9 | .00195 | .52000 | 5.50 | | | |
| 01/28/1994 | Beryllium | 7 | PM | 1440.9 | .00016 | .00100 | 5.50 | | U | U |
| 01/28/1994 | Cadmium | 7 | PM | 1440.9 | .00129 | .00140 | 5.50 | | U | U |
| 01/28/1994 | Chromium | 7 | PM | 1440.9 | .00051 | .00020 | 5.50 | | | U |
| 01/28/1994 | Manganese | 7 | PM | 1440.9 | .00173 | .42000 | 5.50 | | B | |
| 01/28/1994 | Nickel | 7 | PM | 1440.9 | .00324 | .01000 | 5.50 | | U | U |
| 01/28/1994 | Phosphorus | 7 | PM | 1440.9 | .17858 | .30000 | 5.50 | | B | U |

| Sample Date | Chemical Name | Site # | Typ | Run Time (min.) | Chem Conc. (ug/m3) | EPA Scr. L(ug/m3) | Part.C. (ug/m3) | Grav. Val | Qual. Lab | Qual. Val |
|---|---|---|---|---|---|---|---|---|---|---|
| 01/28/1994 | Selenium | 7 | PM | 1440.9 | .01786 | .70000 | 5.50 | | B | |
| 01/28/1994 | Silver | 7 | PM | 1440.9 | .00113 | .30000 | 5.50 | | U | U |
| 01/28/1994 | Thallium | 7 | PM | 1440.9 | .03242 | .30000 | 5.50 | | U | U |
| 01/28/1994 | Vanadium | 7 | PM | 1440.9 | .00162 | .17000 | 5.50 | | U | U |
| 01/28/1994 | Zinc | 7 | PM | 1440.9 | .00848 | .00000 | 5.50 | | B | |
| 02/01/1994 | Arsenic | 1 | PM | 1453.0 | .00034 | .00057 | 32.25 | | B | |
| 02/01/1994 | Cadmium | 1 | PM | 1453.0 | .00157 | .00140 | 32.25 | | | |
| 02/01/1994 | Chromium | 1 | PM | 1453.0 | .00422 | .00020 | 32.25 | | | |
| 02/01/1994 | Nickel | 1 | PM | 1453.0 | .00317 | .01000 | 32.25 | | U | U |
| 02/01/1994 | Phosphorus | 1 | PM | 1453.0 | .81688 | .30000 | 32.25 | | | |
| 02/01/1994 | Vanadium | 1 | PM | 1453.0 | .00430 | .17000 | 32.25 | | B | |
| 02/01/1994 | Zinc | 1 | PM | 1453.0 | .02824 | .00000 | 32.25 | | B | |
| 02/01/1994 | Arsenic | 2 | PM | 1320.7 | .00084 | .00057 | 70.34 | SR | | |
| 02/01/1994 | Cadmium | 2 | PM | 1320.7 | .00596 | .00140 | 70.34 | SR | | |
| 02/01/1994 | Chromium | 2 | PM | 1320.7 | .02525 | .00020 | 70.34 | SR | | |
| 02/01/1994 | Nickel | 2 | PM | 1320.7 | .00536 | .01000 | 70.34 | SR | B | |
| 02/01/1994 | Phosphorus | 2 | PM | 1320.7 | 2.54642 | .30000 | 70.34 | SR | | |
| 02/01/1994 | Vanadium | 2 | PM | 1320.7 | .02670 | .17000 | 70.34 | SR | | |
| 02/01/1994 | Zinc | 2 | PM | 1320.7 | .06928 | .00000 | 70.34 | SR | B | |
| 02/01/1994 | Arsenic | 3 | PM | 1454.4 | .00018 | .00057 | 15.77 | | B | |
| 02/01/1994 | Cadmium | 3 | PM | 1454.4 | .00132 | .00140 | 15.77 | | U | U |
| 02/01/1994 | Chromium | 3 | PM | 1454.4 | .00149 | .00020 | 15.77 | | | U |
| 02/01/1994 | Nickel | 3 | PM | 1454.4 | .00332 | .01000 | 15.77 | | U | U |
| 02/01/1994 | Phosphorus | 3 | PM | 1454.4 | .25362 | .30000 | 15.77 | | B | U |
| 02/01/1994 | Vanadium | 3 | PM | 1454.4 | .00166 | .17000 | 15.77 | | U | U |
| 02/01/1994 | Zinc | 3 | PM | 1454.4 | .01424 | .00000 | 15.77 | | B | |
| 02/01/1994 | Arsenic | 4 | PM | 1447.2 | .00016 | .00057 | 24.92 | | U | U |
| 02/01/1994 | Cadmium | 4 | PM | 1447.2 | .00129 | .00140 | 24.92 | | U | U |
| 02/01/1994 | Chromium | 4 | PM | 1447.2 | .00256 | .00020 | 24.92 | | | |
| 02/01/1994 | Nickel | 4 | PM | 1447.2 | .00324 | .01000 | 24.92 | | U | U |
| 02/01/1994 | Phosphorus | 4 | PM | 1447.2 | .33386 | .30000 | 24.92 | | | U |
| 02/01/1994 | Vanadium | 4 | PM | 1447.2 | .00162 | .17000 | 24.92 | | U | U |
| 02/01/1994 | Zinc | 4 | PM | 1447.2 | .02219 | .00000 | 24.92 | | B | |
| 02/01/1994 | Arsenic | 5 | PM | 1439.2 | .00017 | .00057 | 8.90 | | U | U |
| 02/01/1994 | Cadmium | 5 | PM | 1439.2 | .00132 | .00140 | 8.90 | | U | U |
| 02/01/1994 | Chromium | 5 | PM | 1439.2 | .00108 | .00020 | 8.90 | | | U |
| 02/01/1994 | Nickel | 5 | PM | 1439.2 | .00330 | .01000 | 8.90 | | U | U |
| 02/01/1994 | Phosphorus | 5 | PM | 1439.2 | .33012 | .30000 | 8.90 | | | U |
| 02/01/1994 | Vanadium | 5 | PM | 1439.2 | .00165 | .17000 | 8.90 | | U | U |
| 02/01/1994 | Zinc | 5 | PM | 1439.2 | .00969 | .00000 | 8.90 | | B | |
| 02/01/1994 | Arsenic | 6 | PM | 1437.6 | .00016 | .00057 | 5.65 | | U | U |
| 02/01/1994 | Cadmium | 6 | PM | 1437.6 | .00131 | .00140 | 5.65 | | U | U |
| 02/01/1994 | Chromium | 6 | PM | 1437.6 | .00065 | .00020 | 5.65 | | | U |
| 02/01/1994 | Nickel | 6 | PM | 1437.6 | .00329 | .01000 | 5.65 | | U | U |
| 02/01/1994 | Phosphorus | 6 | PM | 1437.6 | .17917 | .30000 | 5.65 | | B | U |
| 02/01/1994 | Vanadium | 6 | PM | 1437.6 | .00165 | .17000 | 5.65 | | U | U |
| 02/01/1994 | Zinc | 6 | PM | 1437.6 | .00421 | .00000 | 5.65 | | B | |
| 02/01/1994 | Aluminum | 7 | PM | 1438.2 | .12125 | 33.30000 | 40.80 | | | |
| 02/01/1994 | Arsenic | 7 | PM | 1438.2 | .00028 | .00057 | 40.80 | | B | |
| 02/01/1994 | Barium | 7 | PM | 1438.2 | .00368 | .52000 | 40.80 | | | |
| 02/01/1994 | Beryllium | 7 | PM | 1438.2 | .00016 | .00100 | 40.80 | | U | U |
| 02/01/1994 | Cadmium | 7 | PM | 1438.2 | .00299 | .00140 | 40.80 | | | |
| 02/01/1994 | Chromium | 7 | PM | 1438.2 | .00398 | .00020 | 40.80 | | | |
| 02/01/1994 | Manganese | 7 | PM | 1438.2 | .00306 | .42000 | 40.80 | | | |
| 02/01/1994 | Nickel | 7 | PM | 1438.2 | .00368 | .01000 | 40.80 | | B | |

| Sample Date | Chemical Name | Site # | Typ | Run Time (min.) | Chem Conc. (ug/m3) | EPA Scr. L(ug/m3) | Part.C. (ug/m3) | Grav. Val | Qual. Lab | Qual. Val |
|---|---|---|---|---|---|---|---|---|---|---|
| 02/01/1994 | Phosphorus | 7 | PM | 1438.2 | 1.02746 | .30000 | 40.80 | | | |
| 02/01/1994 | Selenium | 7 | PM | 1438.2 | .01602 | .70000 | 40.80 | | U | U |
| 02/01/1994 | Silver | 7 | PM | 1438.2 | .00112 | .30000 | 40.80 | | U | U |
| 02/01/1994 | Thallium | 7 | PM | 1438.2 | .03197 | .30000 | 40.80 | | U | U |
| 02/01/1994 | Vanadium | 7 | PM | 1438.2 | .00382 | .17000 | 40.80 | | B | |
| 02/01/1994 | Zinc | 7 | PM | 1438.2 | .02495 | .00000 | 40.80 | | B | |
| 02/01/1994 | Arsenic | 8 | PM | 1458.0 | .00020 | .00057 | 31.75 | | B | |
| 02/01/1994 | Cadmium | 8 | PM | 1458.0 | .00181 | .00140 | 31.75 | | | |
| 02/01/1994 | Chromium | 8 | PM | 1458.0 | .00392 | .00020 | 31.75 | | | |
| 02/01/1994 | Nickel | 8 | PM | 1458.0 | .00315 | .01000 | 31.75 | | U | U |
| 02/01/1994 | Phosphorus | 8 | PM | 1458.0 | .73652 | .30000 | 31.75 | | | |
| 02/01/1994 | Vanadium | 8 | PM | 1458.0 | .00412 | .17000 | 31.75 | | B | |
| 02/01/1994 | Zinc | 8 | PM | 1458.0 | .02764 | .00000 | 31.75 | | B | |
| 02/05/1994 | Aluminum | 1 | PM | 1455.7 | .14727 | 33.30000 | 45.74 | | | |
| 02/05/1994 | Arsenic | 1 | PM | 1455.7 | .00044 | .00057 | 45.74 | | B | |
| 02/05/1994 | Barium | 1 | PM | 1455.7 | .00471 | .52000 | 45.74 | | | |
| 02/05/1994 | Beryllium | 1 | PM | 1455.7 | .00016 | .00100 | 45.74 | | U | U |
| 02/05/1994 | Cadmium | 1 | PM | 1455.7 | .00168 | .00140 | 45.74 | | | |
| 02/05/1994 | Chromium | 1 | PM | 1455.7 | .00280 | .00020 | 45.74 | | | |
| 02/05/1994 | Manganese | 1 | PM | 1455.7 | .00746 | .42000 | 45.74 | | | |
| 02/05/1994 | Nickel | 1 | PM | 1455.7 | .00328 | .01000 | 45.74 | | B | |
| 02/05/1994 | Phosphorus | 1 | PM | 1455.7 | 1.22404 | .30000 | 45.74 | | | |
| 02/05/1994 | Selenium | 1 | PM | 1455.7 | .01600 | .70000 | 45.74 | | U | U |
| 02/05/1994 | Silver | 1 | PM | 1455.7 | .00112 | .30000 | 45.74 | | U | U |
| 02/05/1994 | Thallium | 1 | PM | 1455.7 | .03194 | .30000 | 45.74 | | U | U |
| 02/05/1994 | Vanadium | 1 | PM | 1455.7 | .00211 | .17000 | 45.74 | | B | |
| 02/05/1994 | Zinc | 1 | PM | 1455.7 | .02123 | .00000 | 45.74 | | B | |
| 02/05/1994 | Arsenic | 2 | PM | 1444.8 | .00050 | .00057 | 65.59 | | B | |
| 02/05/1994 | Cadmium | 2 | PM | 1444.8 | .00287 | .00140 | 65.59 | | | |
| 02/05/1994 | Chromium | 2 | PM | 1444.8 | .00610 | .00020 | 65.59 | | | |
| 02/05/1994 | Nickel | 2 | PM | 1444.8 | .00335 | .01000 | 65.59 | | U | U |
| 02/05/1994 | Phosphorus | 2 | PM | 1444.8 | 1.55182 | .30000 | 65.59 | | | |
| 02/05/1994 | Vanadium | 2 | PM | 1444.8 | .00676 | .17000 | 65.59 | | | |
| 02/05/1994 | Zinc | 2 | PM | 1444.8 | .03070 | .00000 | 65.59 | | B | |
| 02/05/1994 | Aluminum | 3 | PM | 1456.0 | .18081 | 33.30000 | 31.04 | | | |
| 02/05/1994 | Arsenic | 3 | PM | 1456.0 | .00040 | .00057 | 31.04 | | B | |
| 02/05/1994 | Barium | 3 | PM | 1456.0 | .00544 | .52000 | 31.04 | | | |
| 02/05/1994 | Beryllium | 3 | PM | 1456.0 | .00017 | .00100 | 31.04 | | U | U |
| 02/05/1994 | Cadmium | 3 | PM | 1456.0 | .00133 | .00140 | 31.04 | | U | U |
| 02/05/1994 | Chromium | 3 | PM | 1456.0 | .00205 | .00020 | 31.04 | | | U |
| 02/05/1994 | Manganese | 3 | PM | 1456.0 | .00841 | .42000 | 31.04 | | | |
| 02/05/1994 | Nickel | 3 | PM | 1456.0 | .00334 | .01000 | 31.04 | | U | U |
| 02/05/1994 | Phosphorus | 3 | PM | 1456.0 | .68721 | .30000 | 31.04 | | | U |
| 02/05/1994 | Selenium | 3 | PM | 1456.0 | .01675 | .70000 | 31.04 | | U | U |
| 02/05/1994 | Silver | 3 | PM | 1456.0 | .00117 | .30000 | 31.04 | | U | U |
| 02/05/1994 | Thallium | 3 | PM | 1456.0 | .03343 | .30000 | 31.04 | | U | U |
| 02/05/1994 | Vanadium | 3 | PM | 1456.0 | .00167 | .17000 | 31.04 | | U | U |
| 02/05/1994 | Zinc | 3 | PM | 1456.0 | .02275 | .00000 | 31.04 | | B | |
| 02/05/1994 | Aluminum | 4 | PM | 1448.6 | .15973 | 33.30000 | 51.01 | | | |
| 02/05/1994 | Arsenic | 4 | PM | 1448.6 | .00046 | .00057 | 51.01 | | B | |
| 02/05/1994 | Barium | 4 | PM | 1448.6 | .00621 | .52000 | 51.01 | | | |
| 02/05/1994 | Beryllium | 4 | PM | 1448.6 | .00016 | .00100 | 51.01 | | U | U |
| 02/05/1994 | Cadmium | 4 | PM | 1448.6 | .00130 | .00140 | 51.01 | | U | U |
| 02/05/1994 | Chromium | 4 | PM | 1448.6 | .00233 | .00020 | 51.01 | | | U |
| 02/05/1994 | Manganese | 4 | PM | 1448.6 | .00769 | .42000 | 51.01 | | | |

| Sample Date | Chemical Name | Site # | Typ | Run Time (min.) | Chem Conc. (ug/m3) | EPA Scr. L(ug/m3) | Part.C. Grav. (ug/m3) | Qual. Val | Lab Val |
|---|---|---|---|---|---|---|---|---|---|
| 02/05/1994 | Nickel | 4 | PM | 1448.6 | .00327 | .01000 | 51.01 | U | U |
| 02/05/1994 | Phosphorus | 4 | PM | 1448.6 | .67153 | .30000 | 51.01 | | U |
| 02/05/1994 | Selenium | 4 | PM | 1448.6 | .01636 | .70000 | 51.01 | U | U |
| 02/05/1994 | Silver | 4 | PM | 1448.6 | .00114 | .30000 | 51.01 | U | U |
| 02/05/1994 | Thallium | 4 | PM | 1448.6 | .03266 | .30000 | 51.01 | U | U |
| 02/05/1994 | Vanadium | 4 | PM | 1448.6 | .00164 | .17000 | 51.01 | U | U |
| 02/05/1994 | Zinc | 4 | PM | 1448.6 | .01975 | .00000 | 51.01 | B | |
| 02/05/1994 | Arsenic | 5 | PM | 1440.7 | .00034 | .00057 | 42.32 | B | |
| 02/05/1994 | Cadmium | 5 | PM | 1440.7 | .00228 | .00140 | 42.32 | | |
| 02/05/1994 | Chromium | 5 | PM | 1440.7 | .00218 | .00020 | 42.32 | | |
| 02/05/1994 | Nickel | 5 | PM | 1440.7 | .00333 | .01000 | 42.32 | U | U |
| 02/05/1994 | Phosphorus | 5 | PM | 1440.7 | 1.18179 | .30000 | 42.32 | | |
| 02/05/1994 | Vanadium | 5 | PM | 1440.7 | .00190 | .17000 | 42.32 | B | |
| 02/05/1994 | Zinc | 5 | PM | 1440.7 | .01832 | .00000 | 42.32 | B | |
| 02/05/1994 | Arsenic | 6 | PM | 1440.5 | .00017 | .00057 | 8.66 | U | U |
| 02/05/1994 | Cadmium | 6 | PM | 1440.5 | .00132 | .00140 | 8.66 | U | U |
| 02/05/1994 | Chromium | 6 | PM | 1440.5 | .00108 | .00020 | 8.66 | | U |
| 02/05/1994 | Nickel | 6 | PM | 1440.5 | .00331 | .01000 | 8.66 | U | U |
| 02/05/1994 | Phosphorus | 6 | PM | 1440.5 | .15789 | .30000 | 8.66 | B | U |
| 02/05/1994 | Vanadium | 6 | PM | 1440.5 | .00166 | .17000 | 8.66 | U | U |
| 02/05/1994 | Zinc | 6 | PM | 1440.5 | .01169 | .00000 | 8.66 | B | |
| 02/05/1994 | Arsenic | 7 | PM | 1442.1 | .00025 | .00057 | 61.86 | B | |
| 02/05/1994 | Cadmium | 7 | PM | 1442.1 | .00162 | .00140 | 61.86 | | |
| 02/05/1994 | Chromium | 7 | PM | 1442.1 | .00207 | .00020 | 61.86 | | |
| 02/05/1994 | Nickel | 7 | PM | 1442.1 | .00322 | .01000 | 61.86 | U | U |
| 02/05/1994 | Phosphorus | 7 | PM | 1442.1 | 1.15549 | .30000 | 61.86 | | |
| 02/05/1994 | Vanadium | 7 | PM | 1442.1 | .00178 | .17000 | 61.86 | B | |
| 02/05/1994 | Zinc | 7 | PM | 1442.1 | .01547 | .00000 | 61.86 | B | |
| 02/09/1994 | Arsenic | 1 | PM | 1450.6 | .00035 | .00057 | 26.73 | B | |
| 02/09/1994 | Cadmium | 1 | PM | 1450.6 | .00153 | .00140 | 26.73 | | |
| 02/09/1994 | Chromium | 1 | PM | 1450.6 | .00491 | .00020 | 26.73 | | |
| 02/09/1994 | Nickel | 1 | PM | 1450.6 | .00323 | .01000 | 26.73 | U | U |
| 02/09/1994 | Phosphorus | 1 | PM | 1450.6 | .76614 | .30000 | 26.73 | | |
| 02/09/1994 | Vanadium | 1 | PM | 1450.6 | .00376 | .17000 | 26.73 | B | |
| 02/09/1994 | Zinc | 1 | PM | 1450.6 | .01152 | .00000 | 26.73 | B | |
| 02/09/1994 | Arsenic | 2 | PM | 1446.3 | .00155 | .00057 | 65.47 | | |
| 02/09/1994 | Cadmium | 2 | PM | 1446.3 | .02239 | .00140 | 65.47 | | |
| 02/09/1994 | Chromium | 2 | PM | 1446.3 | .01641 | .00020 | 65.47 | | |
| 02/09/1994 | Nickel | 2 | PM | 1446.3 | .00565 | .01000 | 65.47 | B | |
| 02/09/1994 | Phosphorus | 2 | PM | 1446.3 | 8.74149 | .30000 | 65.47 | | |
| 02/09/1994 | Vanadium | 2 | PM | 1446.3 | .02158 | .17000 | 65.47 | | |
| 02/09/1994 | Zinc | 2 | PM | 1446.3 | .10154 | .00000 | 65.47 | | |
| 02/09/1994 | Arsenic | 3 | PM | 1458.5 | .00033 | .00057 | 10.44 | B | |
| 02/09/1994 | Cadmium | 3 | PM | 1458.5 | .00169 | .00140 | 10.44 | | |
| 02/09/1994 | Chromium | 3 | PM | 1458.5 | .00156 | .00020 | 10.44 | | U |
| 02/09/1994 | Nickel | 3 | PM | 1458.5 | .00357 | .01000 | 10.44 | B | |
| 02/09/1994 | Phosphorus | 3 | PM | 1458.5 | .64837 | .30000 | 10.44 | | U |
| 02/09/1994 | Vanadium | 3 | PM | 1458.5 | .00180 | .17000 | 10.44 | B | |
| 02/09/1994 | Zinc | 3 | PM | 1458.5 | .01115 | .00000 | 10.44 | B | |
| 02/09/1994 | Arsenic | 4 | PM | 1485.3 | .00019 | .00057 | 8.18 | B | |
| 02/09/1994 | Cadmium | 4 | PM | 1485.3 | .00126 | .00140 | 8.18 | U | U |
| 02/09/1994 | Chromium | 4 | PM | 1485.3 | .00146 | .00020 | 8.18 | | U |
| 02/09/1994 | Nickel | 4 | PM | 1485.3 | .00315 | .01000 | 8.18 | U | U |
| 02/09/1994 | Phosphorus | 4 | PM | 1485.3 | .17983 | .30000 | 8.18 | B | U |
| 02/09/1994 | Vanadium | 4 | PM | 1485.3 | .00158 | .17000 | 8.18 | U | U |

| Sample Date | Chemical Name | Site # | Typ | Run Time (min.) | Chem Conc. (ug/m3) | EPA Scr. L(ug/m3) | Part.C. Grav. (ug/m3) | Qual. Val | Lab | Val |
|---|---|---|---|---|---|---|---|---|---|---|
| 02/09/1994 | Zinc | 4 | PM | 1485.3 | .01037 | .00000 | 8.18 | | B | |
| 02/09/1994 | Arsenic | 5 | PM | 1446.5 | .00017 | .00057 | 3.80 | | U | U |
| 02/09/1994 | Cadmium | 5 | PM | 1446.5 | .00133 | .00140 | 3.80 | | U | U |
| 02/09/1994 | Chromium | 5 | PM | 1446.5 | .00092 | .00020 | 3.80 | | | U |
| 02/09/1994 | Nickel | 5 | PM | 1446.5 | .00333 | .01000 | 3.80 | | U | U |
| 02/09/1994 | Phosphorus | 5 | PM | 1446.5 | .19165 | .30000 | 3.80 | | B | U |
| 02/09/1994 | Vanadium | 5 | PM | 1446.5 | .00167 | .17000 | 3.80 | | U | U |
| 02/09/1994 | Zinc | 5 | PM | 1446.5 | .00272 | .00000 | 3.80 | | B | |
| 02/09/1994 | Arsenic | 6 | PM | 1451.3 | .00017 | .00057 | 2.64 | | U | U |
| 02/09/1994 | Cadmium | 6 | PM | 1451.3 | .00135 | .00140 | 2.64 | | U | U |
| 02/09/1994 | Chromium | 6 | PM | 1451.3 | .00067 | .00020 | 2.64 | | | U |
| 02/09/1994 | Nickel | 6 | PM | 1451.3 | .00339 | .01000 | 2.64 | | U | U |
| 02/09/1994 | Phosphorus | 6 | PM | 1451.3 | .19704 | .30000 | 2.64 | | B | U |
| 02/09/1994 | Vanadium | 6 | PM | 1451.3 | .00170 | .17000 | 2.64 | | U | U |
| 02/09/1994 | Zinc | 6 | PM | 1451.3 | .00214 | .00000 | 2.64 | | B | |
| 02/09/1994 | Arsenic | 7 | PM | 1440.5 | .00016 | .00057 | .66 | | U | U |
| 02/09/1994 | Cadmium | 7 | PM | 1440.5 | .00131 | .00140 | .66 | | U | U |
| 02/09/1994 | Chromium | 7 | PM | 1440.5 | .00074 | .00020 | .66 | | | U |
| 02/09/1994 | Nickel | 7 | PM | 1440.5 | .00328 | .01000 | .66 | | U | U |
| 02/09/1994 | Phosphorus | 7 | PM | 1440.5 | .21020 | .30000 | .66 | | B | U |
| 02/09/1994 | Vanadium | 7 | PM | 1440.5 | .00164 | .17000 | .66 | | U | U |
| 02/09/1994 | Zinc | 7 | PM | 1440.5 | .00279 | .00000 | .66 | | B | |
| 02/13/1994 | Arsenic | 1 | PM | 1458.9 | .00096 | .00057 | 11.64 | | | |
| 02/13/1994 | Cadmium | 1 | PM | 1458.9 | .00128 | .00140 | 11.64 | | U | U |
| 02/13/1994 | Chromium | 1 | PM | 1458.9 | .00153 | .00020 | 11.64 | | | U |
| 02/13/1994 | Nickel | 1 | PM | 1458.9 | .00320 | .01000 | 11.64 | | U | U |
| 02/13/1994 | Phosphorus | 1 | PM | 1458.9 | .38721 | .30000 | 11.64 | | | U |
| 02/13/1994 | Vanadium | 1 | PM | 1458.9 | .00196 | .17000 | 11.64 | | B | |
| 02/13/1994 | Zinc | 1 | PM | 1458.9 | .01131 | .00000 | 11.64 | | B | |
| 02/13/1994 | Arsenic | 2 | PM | 1446.9 | .00069 | .00057 | 27.32 | | | |
| 02/13/1994 | Cadmium | 2 | PM | 1446.9 | .00134 | .00140 | 27.32 | | U | U |
| 02/13/1994 | Chromium | 2 | PM | 1446.9 | .00382 | .00020 | 27.32 | | | |
| 02/13/1994 | Nickel | 2 | PM | 1446.9 | .00336 | .01000 | 27.32 | | U | U |
| 02/13/1994 | Phosphorus | 2 | PM | 1446.9 | .74470 | .30000 | 27.32 | | | |
| 02/13/1994 | Vanadium | 2 | PM | 1446.9 | .00494 | .17000 | 27.32 | | | |
| 02/13/1994 | Zinc | 2 | PM | 1446.9 | .01496 | .00000 | 27.32 | | B | |
| 02/13/1994 | Arsenic | 3 | PM | 1453.1 | .00130 | .00057 | 6.56 | | | |
| 02/13/1994 | Cadmium | 3 | PM | 1453.1 | .00134 | .00140 | 6.56 | | B | |
| 02/13/1994 | Chromium | 3 | PM | 1453.1 | .00094 | .00020 | 6.56 | | | U |
| 02/13/1994 | Nickel | 3 | PM | 1453.1 | .00325 | .01000 | 6.56 | | U | U |
| 02/13/1994 | Phosphorus | 3 | PM | 1453.1 | .19227 | .30000 | 6.56 | | B | U |
| 02/13/1994 | Vanadium | 3 | PM | 1453.1 | .00163 | .17000 | 6.56 | | U | U |
| 02/13/1994 | Zinc | 3 | PM | 1453.1 | .00890 | .00000 | 6.56 | | B | |
| 02/13/1994 | Arsenic | 4 | PM | 1454.9 | .00133 | .00057 | 9.62 | | | |
| 02/13/1994 | Cadmium | 4 | PM | 1454.9 | .00128 | .00140 | 9.62 | | U | U |
| 02/13/1994 | Chromium | 4 | PM | 1454.9 | .00115 | .00020 | 9.62 | | | U |
| 02/13/1994 | Nickel | 4 | PM | 1454.9 | .00321 | .01000 | 9.62 | | U | U |
| 02/13/1994 | Phosphorus | 4 | PM | 1454.9 | .18132 | .30000 | 9.62 | | B | U |
| 02/13/1994 | Vanadium | 4 | PM | 1454.9 | .00161 | .17000 | 9.62 | | U | U |
| 02/13/1994 | Zinc | 4 | PM | 1454.9 | .01717 | .00000 | 9.62 | | B | |
| 02/13/1994 | Arsenic | 5 | PM | 1438.1 | .00106 | .00057 | 9.96 | | | |
| 02/13/1994 | Cadmium | 5 | PM | 1438.1 | .00134 | .00140 | 9.96 | | U | U |
| 02/13/1994 | Chromium | 5 | PM | 1438.1 | .00116 | .00020 | 9.96 | | | U |
| 02/13/1994 | Nickel | 5 | PM | 1438.1 | .00335 | .01000 | 9.96 | | U | U |
| 02/13/1994 | Phosphorus | 5 | PM | 1438.1 | .33138 | .30000 | 9.96 | | | U |

| Sample Date | Chemical Name | Site # | Typ | Run Time (min.) | Chem Conc. (ug/m3) | EPA Scr. L(ug/m3) | Part.C. (ug/m3) | Grav. Val | Qual. Lab | Qual. Val |
|---|---|---|---|---|---|---|---|---|---|---|
| 02/13/1994 | Vanadium | 5 | PM | 1438.1 | .00168 | .17000 | 9.96 | | U | U |
| 02/13/1994 | Zinc | 5 | PM | 1438.1 | .00625 | .00000 | 9.96 | | B | |
| 02/13/1994 | Arsenic | 6 | PM | 1418.2 | .00089 | .00057 | 8.93 | | | |
| 02/13/1994 | Cadmium | 6 | PM | 1418.2 | .00138 | .00140 | 8.93 | | U | U |
| 02/13/1994 | Chromium | 6 | PM | 1418.2 | .00084 | .00020 | 8.93 | | | U |
| 02/13/1994 | Nickel | 6 | PM | 1418.2 | .00347 | .01000 | 8.93 | | U | U |
| 02/13/1994 | Phosphorus | 6 | PM | 1418.2 | .19089 | .30000 | 8.93 | | B | U |
| 02/13/1994 | Vanadium | 6 | PM | 1418.2 | .00174 | .17000 | 8.93 | | U | U |
| 02/13/1994 | Zinc | 6 | PM | 1418.2 | .00548 | .00000 | 8.93 | | B | |
| 02/13/1994 | Arsenic | 7 | PM | 1444.8 | .00100 | .00057 | 7.50 | | | |
| 02/13/1994 | Cadmium | 7 | PM | 1444.8 | .00130 | .00140 | 7.50 | | U | U |
| 02/13/1994 | Chromium | 7 | PM | 1444.8 | .00099 | .00020 | 7.50 | | | U |
| 02/13/1994 | Nickel | 7 | PM | 1444.8 | .00326 | .01000 | 7.50 | | U | U |
| 02/13/1994 | Phosphorus | 7 | PM | 1444.8 | .32192 | .30000 | 7.50 | | | U |
| 02/13/1994 | Vanadium | 7 | PM | 1444.8 | .00164 | .17000 | 7.50 | | U | U |
| 02/13/1994 | Zinc | 7 | PM | 1444.8 | .00684 | .00000 | 7.50 | | B | |
| 02/13/1994 | Arsenic | 8 | PM | 1462.7 | .00087 | .00057 | 11.70 | | | |
| 02/13/1994 | Cadmium | 8 | PM | 1462.7 | .00129 | .00140 | 11.70 | | B | |
| 02/13/1994 | Chromium | 8 | PM | 1462.7 | .00170 | .00020 | 11.70 | | | U |
| 02/13/1994 | Nickel | 8 | PM | 1462.7 | .00318 | .01000 | 11.70 | | U | U |
| 02/13/1994 | Phosphorus | 8 | PM | 1462.7 | .38207 | .30000 | 11.70 | | | U |
| 02/13/1994 | Vanadium | 8 | PM | 1462.7 | .00160 | .17000 | 11.70 | | U | U |
| 02/13/1994 | Zinc | 8 | PM | 1462.7 | .01335 | .00000 | 11.70 | | B | |
| 02/17/1994 | Arsenic | 1 | PM | 1452.0 | .00089 | .00057 | 11.49 | | | |
| 02/17/1994 | Cadmium | 1 | PM | 1452.0 | .00134 | .00140 | 11.49 | | U | U |
| 02/17/1994 | Chromium | 1 | PM | 1452.0 | .00258 | .00020 | 11.49 | | | |
| 02/17/1994 | Nickel | 1 | PM | 1452.0 | .00335 | .01000 | 11.49 | | U | U |
| 02/17/1994 | Phosphorus | 1 | PM | 1452.0 | .32784 | .30000 | 11.49 | | | U |
| 02/17/1994 | Vanadium | 1 | PM | 1452.0 | .00241 | .17000 | 11.49 | | B | |
| 02/17/1994 | Zinc | 1 | PM | 1452.0 | .01088 | .00000 | 11.49 | | B | |
| 02/17/1994 | Arsenic | 2 | PM | 1442.7 | .00183 | .00057 | 47.54 | | | |
| 02/17/1994 | Cadmium | 2 | PM | 1442.7 | .00819 | .00140 | 47.54 | | | |
| 02/17/1994 | Chromium | 2 | PM | 1442.7 | .01945 | .00020 | 47.54 | | | |
| 02/17/1994 | Nickel | 2 | PM | 1442.7 | .00579 | .01000 | 47.54 | | B | |
| 02/17/1994 | Phosphorus | 2 | PM | 1442.7 | 5.31134 | .30000 | 47.54 | | | |
| 02/17/1994 | Vanadium | 2 | PM | 1442.7 | .02190 | .17000 | 47.54 | | | |
| 02/17/1994 | Zinc | 2 | PM | 1442.7 | .05367 | .00000 | 47.54 | | B | |
| 02/17/1994 | Arsenic | 3 | PM | 1455.3 | .00105 | .00057 | 8.03 | | | |
| 02/17/1994 | Cadmium | 3 | PM | 1455.3 | .00135 | .00140 | 8.03 | | U | U |
| 02/17/1994 | Chromium | 3 | PM | 1455.3 | .00147 | .00020 | 8.03 | | | U |
| 02/17/1994 | Nickel | 3 | PM | 1455.3 | .00338 | .01000 | 8.03 | | U | U |
| 02/17/1994 | Phosphorus | 3 | PM | 1455.3 | .43306 | .30000 | 8.03 | | | U |
| 02/17/1994 | Vanadium | 3 | PM | 1455.3 | .00169 | .17000 | 8.03 | | U | U |
| 02/17/1994 | Zinc | 3 | PM | 1455.3 | .01234 | .00000 | 8.03 | | B | |
| 02/17/1994 | Arsenic | 4 | PM | 1447.3 | .00093 | .00057 | 5.70 | | | |
| 02/17/1994 | Cadmium | 4 | PM | 1447.3 | .00134 | .00140 | 5.70 | | U | U |
| 02/17/1994 | Chromium | 4 | PM | 1447.3 | .00188 | .00020 | 5.70 | | | U |
| 02/17/1994 | Nickel | 4 | PM | 1447.3 | .00336 | .01000 | 5.70 | | U | U |
| 02/17/1994 | Phosphorus | 4 | PM | 1447.3 | .19158 | .30000 | 5.70 | | B | U |
| 02/17/1994 | Vanadium | 4 | PM | 1447.3 | .00168 | .17000 | 5.70 | | U | U |
| 02/17/1994 | Zinc | 4 | PM | 1447.3 | .00784 | .00000 | 5.70 | | B | |
| 02/17/1994 | Arsenic | 5 | PM | 1442.1 | .00092 | .00057 | 2.78 | | | |
| 02/17/1994 | Cadmium | 5 | PM | 1442.1 | .00139 | .00140 | 2.78 | | U | U |
| 02/17/1994 | Chromium | 5 | PM | 1442.1 | .00086 | .00020 | 2.78 | | | U |
| 02/17/1994 | Nickel | 5 | PM | 1442.1 | .00365 | .01000 | 2.78 | | B | |

| Sample Date | Chemical Name | Site # | Typ | Run Time (min.) | Chem Conc. (ug/m3) | EPA Scr. L(ug/m3) | Part.C. (ug/m3) | Grav. Val | Qual. Lab | Qual. Val |
|---|---|---|---|---|---|---|---|---|---|---|
| 02/17/1994 | Phosphorus | 5 | PM | 1442.1 | .21049 | .30000 | 2.78 | | B | U |
| 02/17/1994 | Vanadium | 5 | PM | 1442.1 | .00174 | .17000 | 2.78 | | U | U |
| 02/17/1994 | Zinc | 5 | PM | 1442.1 | .00543 | .00000 | 2.78 | | B | |
| 02/17/1994 | Arsenic | 6 | PM | 1445.1 | .00122 | .00057 | 3.39 | | | |
| 02/17/1994 | Cadmium | 6 | PM | 1445.1 | .00141 | .00140 | 3.39 | | U | U |
| 02/17/1994 | Chromium | 6 | PM | 1445.1 | .00078 | .00020 | 3.39 | | | U |
| 02/17/1994 | Nickel | 6 | PM | 1445.1 | .00354 | .01000 | 3.39 | | U | U |
| 02/17/1994 | Phosphorus | 6 | PM | 1445.1 | .20895 | .30000 | 3.39 | | B | U |
| 02/17/1994 | Vanadium | 6 | PM | 1445.1 | .00177 | .17000 | 3.39 | | U | U |
| 02/17/1994 | Zinc | 6 | PM | 1445.1 | .00812 | .00000 | 3.39 | | B | |
| 02/17/1994 | Arsenic | 7 | PM | 1441.1 | .00092 | .00057 | 2.79 | | | |
| 02/17/1994 | Cadmium | 7 | PM | 1441.1 | .00136 | .00140 | 2.79 | | U | U |
| 02/17/1994 | Chromium | 7 | PM | 1441.1 | .00078 | .00020 | 2.79 | | | U |
| 02/17/1994 | Nickel | 7 | PM | 1441.1 | .00340 | .01000 | 2.79 | | U | U |
| 02/17/1994 | Phosphorus | 7 | PM | 1441.1 | .20453 | .30000 | 2.79 | | B | U |
| 02/17/1994 | Vanadium | 7 | PM | 1441.1 | .00171 | .17000 | 2.79 | | U | U |
| 02/17/1994 | Zinc | 7 | PM | 1441.1 | .00347 | .00000 | 2.79 | | B | |
| 02/21/1994 | Arsenic | 1 | PM | 1453.2 | .00016 | .00057 | 10.32 | | U | U |
| 02/21/1994 | Cadmium | 1 | PM | 1453.2 | .00130 | .00140 | 10.32 | | U | U |
| 02/21/1994 | Chromium | 1 | PM | 1453.2 | .00173 | .00020 | 10.32 | | | |
| 02/21/1994 | Phosphorus | 1 | PM | 1453.2 | .44235 | .30000 | 10.32 | | | U |
| 02/21/1994 | Vanadium | 1 | PM | 1453.2 | .00231 | .17000 | 10.32 | | B | U |
| 02/21/1994 | Zinc | 1 | PM | 1453.2 | .00739 | .00000 | 10.32 | | B | |
| 02/21/1994 | Arsenic | 2 | PM | 1446.4 | .00017 | .00057 | 26.07 | | U | U |
| 02/21/1994 | Cadmium | 2 | PM | 1446.4 | .00464 | .00140 | 26.07 | | | |
| 02/21/1994 | Chromium | 2 | PM | 1446.4 | .00463 | .00020 | 26.07 | | | |
| 02/21/1994 | Nickel | 2 | PM | 1446.4 | .00340 | .01000 | 26.07 | | U | U |
| 02/21/1994 | Phosphorus | 2 | PM | 1446.4 | 3.69151 | .30000 | 26.07 | | | |
| 02/21/1994 | Vanadium | 2 | PM | 1446.4 | .00393 | .17000 | 26.07 | | B | |
| 02/21/1994 | Zinc | 2 | PM | 1446.4 | .03434 | .00000 | 26.07 | | B | |
| 02/21/1994 | Arsenic | 4 | PM | 1446.0 | .00020 | .00057 | 5.02 | | B | |
| 02/21/1994 | Cadmium | 4 | PM | 1446.0 | .00130 | .00140 | 5.02 | | U | U |
| 02/21/1994 | Chromium | 4 | PM | 1446.0 | .00704 | .00020 | 5.02 | | | |
| 02/21/1994 | Phosphorus | 4 | PM | 1446.0 | .16100 | .30000 | 5.02 | | B | UJ |
| 02/21/1994 | Vanadium | 4 | PM | 1446.0 | .00164 | .17000 | 5.02 | | U | U |
| 02/21/1994 | Zinc | 4 | PM | 1446.0 | .00717 | .00000 | 5.02 | | B | J |
| 02/21/1994 | Arsenic | 5 | PM | 1435.1 | .00017 | .00057 | -.41 | R | U | U |
| 02/21/1994 | Cadmium | 5 | PM | 1435.1 | .00141 | .00140 | -.41 | R | B | |
| 02/21/1994 | Chromium | 5 | PM | 1435.1 | .00074 | .00020 | -.41 | R | | U |
| 02/21/1994 | Phosphorus | 5 | PM | 1435.1 | .15813 | .30000 | -.41 | R | B | UJ |
| 02/21/1994 | Vanadium | 5 | PM | 1435.1 | .00170 | .17000 | -.41 | R | U | U |
| 02/21/1994 | Zinc | 5 | PM | 1435.1 | .00381 | .00000 | -.41 | R | B | UJ |
| 02/21/1994 | Arsenic | 6 | PM | 1440.1 | .00017 | .00057 | .41 | | U | U |
| 02/21/1994 | Cadmium | 6 | PM | 1440.1 | .00138 | .00140 | .41 | | U | U |
| 02/21/1994 | Chromium | 6 | PM | 1440.1 | .00017 | .00020 | .41 | | U | U |
| 02/21/1994 | Phosphorus | 6 | PM | 1440.1 | .16459 | .30000 | .41 | | B | U |
| 02/21/1994 | Vanadium | 6 | PM | 1440.1 | .00173 | .17000 | .41 | | U | U |
| 02/21/1994 | Zinc | 6 | PM | 1440.1 | .00164 | .00000 | .41 | | B | U |
| 02/25/1994 | Arsenic | 1 | PM | 1453.2 | .00036 | .00057 | 41.22 | | B | |
| 02/25/1994 | Cadmium | 1 | PM | 1453.2 | .00411 | .00140 | 41.22 | | | |
| 02/25/1994 | Chromium | 1 | PM | 1453.2 | .00239 | .00020 | 41.22 | | | |
| 02/25/1994 | Nickel | 1 | PM | 1453.2 | .00331 | .01000 | 41.22 | | U | U |
| 02/25/1994 | Phosphorus | 1 | PM | 1453.2 | 2.08939 | .30000 | 41.22 | | | |
| 02/25/1994 | Vanadium | 1 | PM | 1453.2 | .00298 | .17000 | 41.22 | | B | |
| 02/25/1994 | Zinc | 1 | PM | 1453.2 | .03875 | .00000 | 41.22 | | B | |

| Sample Date | Chemical Name | Site # | Typ | Run Time (min.) | Chem Conc. (ug/m3) | EPA Scr. L(ug/m3) | Part.C. (ug/m3) | Grav. Val | Qual. Lab | Qual. Val |
|---|---|---|---|---|---|---|---|---|---|---|
| 02/25/1994 | Arsenic | 2 | PM | 1442.0 | .00072 | .00057 | 47.91 | | | |
| 02/25/1994 | Cadmium | 2 | PM | 1442.0 | .01166 | .00140 | 47.91 | | | |
| 02/25/1994 | Chromium | 2 | PM | 1442.0 | .00715 | .00020 | 47.91 | | | |
| 02/25/1994 | Nickel | 2 | PM | 1442.0 | .00348 | .01000 | 47.91 | | U | U |
| 02/25/1994 | Phosphorus | 2 | PM | 1442.0 | 6.29353 | .30000 | 47.91 | | | |
| 02/25/1994 | Vanadium | 2 | PM | 1442.0 | .00715 | .17000 | 47.91 | | | |
| 02/25/1994 | Zinc | 2 | PM | 1442.0 | .13531 | .00000 | 47.91 | | | |
| 02/25/1994 | Arsenic | 3 | PM | 1457.4 | .00017 | .00057 | 9.22 | | U | U |
| 02/25/1994 | Cadmium | 3 | PM | 1457.4 | .00134 | .00140 | 9.22 | | U | U |
| 02/25/1994 | Chromium | 3 | PM | 1457.4 | .00080 | .00020 | 9.22 | | | U |
| 02/25/1994 | Nickel | 3 | PM | 1457.4 | .00334 | .01000 | 9.22 | | U | U |
| 02/25/1994 | Phosphorus | 3 | PM | 1457.4 | .40655 | .30000 | 9.22 | | | U |
| 02/25/1994 | Vanadium | 3 | PM | 1457.4 | .00168 | .17000 | 9.22 | | U | U |
| 02/25/1994 | Zinc | 3 | PM | 1457.4 | .00666 | .00000 | 9.22 | | B | |
| 02/25/1994 | Arsenic | 4 | PM | 1447.3 | .00017 | .00057 | 14.22 | | U | U |
| 02/25/1994 | Cadmium | 4 | PM | 1447.3 | .00133 | .00140 | 14.22 | | U | U |
| 02/25/1994 | Chromium | 4 | PM | 1447.3 | .00101 | .00020 | 14.22 | | | U |
| 02/25/1994 | Nickel | 4 | PM | 1447.3 | .00333 | .01000 | 14.22 | | U | U |
| 02/25/1994 | Phosphorus | 4 | PM | 1447.3 | .49925 | .30000 | 14.22 | | | U |
| 02/25/1994 | Vanadium | 4 | PM | 1447.3 | .00167 | .17000 | 14.22 | | U | U |
| 02/25/1994 | Zinc | 4 | PM | 1447.3 | .00750 | .00000 | 14.22 | | B | |
| 02/25/1994 | Arsenic | 5 | PM | 1441.8 | .00017 | .00057 | 14.75 | | U | U |
| 02/25/1994 | Cadmium | 5 | PM | 1441.8 | .00138 | .00140 | 14.75 | | U | U |
| 02/25/1994 | Chromium | 5 | PM | 1441.8 | .00174 | .00020 | 14.75 | | | U |
| 02/25/1994 | Nickel | 5 | PM | 1441.8 | .00345 | .01000 | 14.75 | | U | U |
| 02/25/1994 | Phosphorus | 5 | PM | 1441.8 | 1.40483 | .30000 | 14.75 | | | |
| 02/25/1994 | Vanadium | 5 | PM | 1441.8 | .00173 | .17000 | 14.75 | | U | U |
| 02/25/1994 | Zinc | 5 | PM | 1441.8 | .00751 | .00000 | 14.75 | | B | |
| 02/25/1994 | Arsenic | 6 | PM | 1441.7 | .00018 | .00057 | 5.19 | | U | U |
| 02/25/1994 | Cadmium | 6 | PM | 1441.7 | .00140 | .00140 | 5.19 | | U | U |
| 02/25/1994 | Chromium | 6 | PM | 1441.7 | .00049 | .00020 | 5.19 | | | U |
| 02/25/1994 | Nickel | 6 | PM | 1441.7 | .00351 | .01000 | 5.19 | | U | U |
| 02/25/1994 | Phosphorus | 6 | PM | 1441.7 | .19355 | .30000 | 5.19 | | B | U |
| 02/25/1994 | Vanadium | 6 | PM | 1441.7 | .00176 | .17000 | 5.19 | | U | U |
| 02/25/1994 | Zinc | 6 | PM | 1441.7 | .00194 | .00000 | 5.19 | | B | |
| 02/25/1994 | Arsenic | 7 | PM | 1440.6 | .00017 | .00057 | 17.19 | | U | U |
| 02/25/1994 | Cadmium | 7 | PM | 1440.6 | .00135 | .00140 | 17.19 | | U | U |
| 02/25/1994 | Chromium | 7 | PM | 1440.6 | .00104 | .00020 | 17.19 | | | U |
| 02/25/1994 | Nickel | 7 | PM | 1440.6 | .00338 | .01000 | 17.19 | | U | U |
| 02/25/1994 | Phosphorus | 7 | PM | 1440.6 | .78819 | .30000 | 17.19 | | | |
| 02/25/1994 | Vanadium | 7 | PM | 1440.6 | .00169 | .17000 | 17.19 | | U | U |
| 02/25/1994 | Zinc | 7 | PM | 1440.6 | .00680 | .00000 | 17.19 | | B | |
| 02/25/1994 | Arsenic | 8 | PM | 1459.0 | .00016 | .00057 | 39.44 | | U | U |
| 02/25/1994 | Cadmium | 8 | PM | 1459.0 | .00290 | .00140 | 39.44 | | | |
| 02/25/1994 | Chromium | 8 | PM | 1459.0 | .00189 | .00020 | 39.44 | | | |
| 02/25/1994 | Phosphorus | 8 | PM | 1459.0 | 1.85915 | .30000 | 39.44 | | | |
| 02/25/1994 | Vanadium | 8 | PM | 1459.0 | .00303 | .17000 | 39.44 | | B | |
| 02/25/1994 | Zinc | 8 | PM | 1459.0 | .03311 | .00000 | 39.44 | | B | |
| 03/01/1994 | Arsenic | 1 | PM | 1451.6 | .00023 | .00057 | 25.01 | | B | |
| 03/01/1994 | Cadmium | 1 | PM | 1451.6 | .00164 | .00140 | 25.01 | | | |
| 03/01/1994 | Chromium | 1 | PM | 1451.6 | .00317 | .00020 | 25.01 | | | |
| 03/01/1994 | Phosphorus | 1 | PM | 1451.6 | .76701 | .30000 | 25.01 | | | U |
| 03/01/1994 | Vanadium | 1 | PM | 1451.6 | .00257 | .17000 | 25.01 | | B | |
| 03/01/1994 | Zinc | 1 | PM | 1451.6 | .01858 | .00000 | 25.01 | | B | |
| 03/01/1994 | Arsenic | 2 | PM | 1445.5 | .00049 | .00057 | 41.44 | | B | |

| Sample Date | Chemical Name | Site # | Typ | Run Time (min.) | Chem Conc. (ug/m3) | EPA Scr. L(ug/m3) | Part.C. (ug/m3) | Grav. Val | Qual. Lab | Qual. Val |
|---|---|---|---|---|---|---|---|---|---|---|
| 03/01/1994 | Cadmium | 2 | PM | 1445.5 | .01120 | .00140 | 41.44 | | | |
| 03/01/1994 | Chromium | 2 | PM | 1445.5 | .01106 | .00020 | 41.44 | | | |
| 03/01/1994 | Phosphorus | 2 | PM | 1445.5 | 2.91104 | .30000 | 41.44 | | | |
| 03/01/1994 | Vanadium | 2 | PM | 1445.5 | .01051 | .17000 | 41.44 | | | |
| 03/01/1994 | Zinc | 2 | PM | 1445.5 | .03499 | .00000 | 41.44 | | B | |
| 03/01/1994 | Arsenic | 3 | PM | 1454.5 | .00032 | .00057 | 19.59 | | B | |
| 03/01/1994 | Cadmium | 3 | PM | 1454.5 | .00248 | .00140 | 19.59 | | | |
| 03/01/1994 | Chromium | 3 | PM | 1454.5 | .00266 | .00020 | 19.59 | | | |
| 03/01/1994 | Phosphorus | 3 | PM | 1454.5 | .47909 | .30000 | 19.59 | | | U |
| 03/01/1994 | Vanadium | 3 | PM | 1454.5 | .00225 | .17000 | 19.59 | | B | |
| 03/01/1994 | Zinc | 3 | PM | 1454.5 | .01323 | .00000 | 19.59 | | B | |
| 03/01/1994 | Arsenic | 4 | PM | 1447.0 | .00032 | .00057 | 24.36 | | B | |
| 03/01/1994 | Cadmium | 4 | PM | 1447.0 | .00133 | .00140 | 24.36 | | U | U |
| 03/01/1994 | Chromium | 4 | PM | 1447.0 | .00261 | .00020 | 24.36 | | | |
| 03/01/1994 | Phosphorus | 4 | PM | 1447.0 | .35885 | .30000 | 24.36 | | | U |
| 03/01/1994 | Vanadium | 4 | PM | 1447.0 | .00249 | .17000 | 24.36 | | B | |
| 03/01/1994 | Zinc | 4 | PM | 1447.0 | .01930 | .00000 | 24.36 | | B | |
| 03/01/1994 | Arsenic | 5 | PM | 1437.9 | .00021 | .00057 | 8.97 | | B | |
| 03/01/1994 | Cadmium | 5 | PM | 1437.9 | .00138 | .00140 | 8.97 | | U | U |
| 03/01/1994 | Chromium | 5 | PM | 1437.9 | .00137 | .00020 | 8.97 | | | U |
| 03/01/1994 | Phosphorus | 5 | PM | 1437.9 | .27315 | .30000 | 8.97 | | B | U |
| 03/01/1994 | Vanadium | 5 | PM | 1437.9 | .00173 | .17000 | 8.97 | | U | U |
| 03/01/1994 | Zinc | 5 | PM | 1437.9 | .00379 | .00000 | 8.97 | | B | |
| 03/01/1994 | Arsenic | 6 | PM | 1440.1 | .00018 | .00057 | 8.07 | | U | U |
| 03/01/1994 | Cadmium | 6 | PM | 1440.1 | .00140 | .00140 | 8.07 | | U | U |
| 03/01/1994 | Chromium | 6 | PM | 1440.1 | .00129 | .00020 | 8.07 | | | U |
| 03/01/1994 | Phosphorus | 6 | PM | 1440.1 | .22512 | .30000 | 8.07 | | B | U |
| 03/01/1994 | Vanadium | 6 | PM | 1440.1 | .00176 | .17000 | 8.07 | | U | U |
| 03/01/1994 | Zinc | 6 | PM | 1440.1 | .00480 | .00000 | 8.07 | | B | |
| 03/01/1994 | Arsenic | 7 | PM | 1434.2 | .00017 | .00057 | 10.82 | | U | U |
| 03/01/1994 | Cadmium | 7 | PM | 1434.2 | .00135 | .00140 | 10.82 | | U | U |
| 03/01/1994 | Chromium | 7 | PM | 1434.2 | .00151 | .00020 | 10.82 | | | U |
| 03/01/1994 | Phosphorus | 7 | PM | 1434.2 | .31499 | .30000 | 10.82 | | B | U |
| 03/01/1994 | Vanadium | 7 | PM | 1434.2 | .00170 | .17000 | 10.82 | | U | U |
| 03/01/1994 | Zinc | 7 | PM | 1434.2 | .00335 | .00000 | 10.82 | | B | |
| 03/05/1994 | Arsenic | 1 | PM | 1453.2 | .00016 | .00057 | 19.23 | | U | U |
| 03/05/1994 | Cadmium | 1 | PM | 1453.2 | .00187 | .00140 | 19.23 | | | |
| 03/05/1994 | Chromium | 1 | PM | 1453.2 | .00218 | .00020 | 19.23 | | | U |
| 03/05/1994 | Phosphorus | 1 | PM | 1453.2 | .86271 | .30000 | 19.23 | | | J |
| 03/05/1994 | Vanadium | 1 | PM | 1453.2 | .00164 | .17000 | 19.23 | | U | U |
| 03/05/1994 | Zinc | 1 | PM | 1453.2 | .01033 | .00000 | 19.23 | | B | J |
| 03/05/1994 | Arsenic | 2 | PM | 1444.7 | .00047 | .00057 | 25.52 | | B | |
| 03/05/1994 | Cadmium | 2 | PM | 1444.7 | .00795 | .00140 | 25.52 | | | |
| 03/05/1994 | Chromium | 2 | PM | 1444.7 | .00672 | .00020 | 25.52 | | | |
| 03/05/1994 | Phosphorus | 2 | PM | 1444.7 | 2.77211 | .30000 | 25.52 | | | J |
| 03/05/1994 | Vanadium | 2 | PM | 1444.7 | .00574 | .17000 | 25.52 | | | |
| 03/05/1994 | Zinc | 2 | PM | 1444.7 | .04763 | .00000 | 25.52 | | B | J |
| 03/05/1994 | Arsenic | 3 | PM | 1455.5 | .00017 | .00057 | 12.42 | | U | U |
| 03/05/1994 | Cadmium | 3 | PM | 1455.5 | .00133 | .00140 | 12.42 | | U | U |
| 03/05/1994 | Chromium | 3 | PM | 1455.5 | .00184 | .00020 | 12.42 | | | |
| 03/05/1994 | Phosphorus | 3 | PM | 1455.5 | .45840 | .30000 | 12.42 | | | U |
| 03/05/1994 | Vanadium | 3 | PM | 1455.5 | .00167 | .17000 | 12.42 | | U | U |
| 03/05/1994 | Zinc | 3 | PM | 1455.5 | .00907 | .00000 | 12.42 | | B | |
| 03/05/1994 | Arsenic | 4 | PM | 1449.3 | .00017 | .00057 | 15.03 | | U | U |
| 03/05/1994 | Cadmium | 4 | PM | 1449.3 | .00132 | .00140 | 15.03 | | U | U |

| Sample Date | Chemical Name | Site # | Typ | Run Time (min.) | Chem Conc. (ug/m3) | EPA Scr. L(ug/m3) | Part.C. (ug/m3) | Grav. Val | Qual. Lab | Qual. Val |
|---|---|---|---|---|---|---|---|---|---|---|
| 03/05/1994 | Chromium | 4 | PM | 1449.3 | .00212 | .00020 | 15.03 | | | |
| 03/05/1994 | Phosphorus | 4 | PM | 1449.3 | .52747 | .30000 | 15.03 | | | U |
| 03/05/1994 | Vanadium | 4 | PM | 1449.3 | .00201 | .17000 | 15.03 | | B | |
| 03/05/1994 | Zinc | 4 | PM | 1449.3 | .00900 | .00000 | 15.03 | | B | |
| 03/05/1994 | Arsenic | 5 | PM | 1439.4 | .00017 | .00057 | 5.11 | | U | U |
| 03/05/1994 | Cadmium | 5 | PM | 1439.4 | .00138 | .00140 | 5.11 | | U | U |
| 03/05/1994 | Chromium | 5 | PM | 1439.4 | .00133 | .00020 | 5.11 | | | U |
| 03/05/1994 | Phosphorus | 5 | PM | 1439.4 | .22158 | .30000 | 5.11 | | B | U |
| 03/05/1994 | Vanadium | 5 | PM | 1439.4 | .00173 | .17000 | 5.11 | | U | U |
| 03/05/1994 | Zinc | 5 | PM | 1439.4 | .00472 | .00000 | 5.11 | | B | |
| 03/05/1994 | Arsenic | 6 | PM | 1442.2 | .00018 | .00057 | 5.97 | | U | U |
| 03/05/1994 | Cadmium | 6 | PM | 1442.2 | .00140 | .00140 | 5.97 | | U | U |
| 03/05/1994 | Chromium | 6 | PM | 1442.2 | .00115 | .00020 | 5.97 | | | U |
| 03/05/1994 | Phosphorus | 6 | PM | 1442.2 | .19854 | .30000 | 5.97 | | B | U |
| 03/05/1994 | Vanadium | 6 | PM | 1442.2 | .00176 | .17000 | 5.97 | | U | U |
| 03/05/1994 | Zinc | 6 | PM | 1442.2 | .00288 | .00000 | 5.97 | | B | |
| 03/05/1994 | Arsenic | 7 | PM | 1440.5 | .00017 | .00057 | 13.09 | | U | U |
| 03/05/1994 | Cadmium | 7 | PM | 1440.5 | .00163 | .00140 | 13.09 | | | |
| 03/05/1994 | Chromium | 7 | PM | 1440.5 | .00202 | .00020 | 13.09 | | | |
| 03/05/1994 | Phosphorus | 7 | PM | 1440.5 | .86584 | .30000 | 13.09 | | | U |
| 03/05/1994 | Vanadium | 7 | PM | 1440.5 | .00202 | .17000 | 13.09 | | B | |
| 03/05/1994 | Zinc | 7 | PM | 1440.5 | .00972 | .00000 | 13.09 | | B | |
| 03/09/1994 | Arsenic | 1 | PM | 1448.9 | .00036 | .00057 | 23.06 | | B | |
| 03/09/1994 | Cadmium | 1 | PM | 1448.9 | .00131 | .00140 | 23.06 | | U | U |
| 03/09/1994 | Chromium | 1 | PM | 1448.9 | .00304 | .00020 | 23.06 | | | |
| 03/09/1994 | Phosphorus | 1 | PM | 1448.9 | .51533 | .30000 | 23.06 | | | U |
| 03/09/1994 | Vanadium | 1 | PM | 1448.9 | .00208 | .17000 | 23.06 | | B | |
| 03/09/1994 | Zinc | 1 | PM | 1448.9 | .01742 | .00000 | 23.06 | | B | |
| 03/09/1994 | Arsenic | 2 | PM | 1443.5 | .00058 | .00057 | 50.76 | | B | |
| 03/09/1994 | Cadmium | 2 | PM | 1443.5 | .00822 | .00140 | 50.76 | | | |
| 03/09/1994 | Chromium | 2 | PM | 1443.5 | .01908 | .00020 | 50.76 | | | |
| 03/09/1994 | Phosphorus | 2 | PM | 1443.5 | 3.42800 | .30000 | 50.76 | | | |
| 03/09/1994 | Vanadium | 2 | PM | 1443.5 | .02163 | .17000 | 50.76 | | | |
| 03/09/1994 | Zinc | 2 | PM | 1443.5 | .05232 | .00000 | 50.76 | | B | |
| 03/09/1994 | Arsenic | 3 | PM | 1456.5 | .00032 | .00057 | 24.19 | | B | |
| 03/09/1994 | Cadmium | 3 | PM | 1456.5 | .00133 | .00140 | 24.19 | | U | U |
| 03/09/1994 | Chromium | 3 | PM | 1456.5 | .00175 | .00020 | 24.19 | | | |
| 03/09/1994 | Phosphorus | 3 | PM | 1456.5 | .25178 | .30000 | 24.19 | | B | U |
| 03/09/1994 | Vanadium | 3 | PM | 1456.5 | .00167 | .17000 | 24.19 | | U | U |
| 03/09/1994 | Zinc | 3 | PM | 1456.5 | .01985 | .00000 | 24.19 | | B | |
| 03/09/1994 | Arsenic | 4 | PM | 1445.7 | .00030 | .00057 | 24.40 | | B | |
| 03/09/1994 | Cadmium | 4 | PM | 1445.7 | .00133 | .00140 | 24.40 | | U | U |
| 03/09/1994 | Chromium | 4 | PM | 1445.7 | .00193 | .00020 | 24.40 | | | |
| 03/09/1994 | Phosphorus | 4 | PM | 1445.7 | .30751 | .30000 | 24.40 | | B | U |
| 03/09/1994 | Vanadium | 4 | PM | 1445.7 | .00166 | .17000 | 24.40 | | U | U |
| 03/09/1994 | Zinc | 4 | PM | 1445.7 | .01418 | .00000 | 24.40 | | B | |
| 03/09/1994 | Arsenic | 5 | PM | 1440.0 | .00025 | .00057 | 8.41 | | B | |
| 03/09/1994 | Cadmium | 5 | PM | 1440.0 | .00138 | .00140 | 8.41 | | U | U |
| 03/09/1994 | Chromium | 5 | PM | 1440.0 | .00096 | .00020 | 8.41 | | | U |
| 03/09/1994 | Phosphorus | 5 | PM | 1440.0 | .30396 | .30000 | 8.41 | | B | U |
| 03/09/1994 | Vanadium | 5 | PM | 1440.0 | .00173 | .17000 | 8.41 | | U | U |
| 03/09/1994 | Zinc | 5 | PM | 1440.0 | .00502 | .00000 | 8.41 | | B | U |
| 03/09/1994 | Arsenic | 6 | PM | 1441.2 | .00018 | .00057 | 9.61 | | U | U |
| 03/09/1994 | Cadmium | 6 | PM | 1441.2 | .00140 | .00140 | 9.61 | | U | U |
| 03/09/1994 | Chromium | 6 | PM | 1441.2 | .00151 | .00020 | 9.61 | | | U |

| Sample Date | Chemical Name | Site # | Typ | Run Time (min.) | Chem Conc. (ug/m3) | EPA Scr. L(ug/m3) | Part.C. (ug/m3) | Grav. Val | Qual. Lab | Qual. Val |
|---|---|---|---|---|---|---|---|---|---|---|
| 03/09/1994 | Phosphorus | 6 | PM | 1441.2 | .16550 | .30000 | 9.61 | | B | U |
| 03/09/1994 | Vanadium | 6 | PM | 1441.2 | .00176 | .17000 | 9.61 | | U | U |
| 03/09/1994 | Zinc | 6 | PM | 1441.2 | .00594 | .00000 | 9.61 | | B | U |
| 03/09/1994 | Arsenic | 7 | PM | 1440.9 | .00017 | .00057 | 6.74 | | U | U |
| 03/09/1994 | Cadmium | 7 | PM | 1440.9 | .00143 | .00140 | 6.74 | | B | |
| 03/09/1994 | Chromium | 7 | PM | 1440.9 | .00155 | .00020 | 6.74 | | | U |
| 03/09/1994 | Phosphorus | 7 | PM | 1440.9 | .26270 | .30000 | 6.74 | | B | U |
| 03/09/1994 | Vanadium | 7 | PM | 1440.9 | .00166 | .17000 | 6.74 | | U | U |
| 03/09/1994 | Zinc | 7 | PM | 1440.9 | .00448 | .00000 | 6.74 | | B | U |
| 03/09/1994 | Arsenic | 8 | PM | 1458.7 | .00019 | .00057 | 21.67 | | B | |
| 03/09/1994 | Cadmium | 8 | PM | 1458.7 | .00213 | .00140 | 21.67 | | | |
| 03/09/1994 | Chromium | 8 | PM | 1458.7 | .00345 | .00020 | 21.67 | | | U |
| 03/09/1994 | Phosphorus | 8 | PM | 1458.7 | .47935 | .30000 | 21.67 | | | U |
| 03/09/1994 | Vanadium | 8 | PM | 1458.7 | .00163 | .17000 | 21.67 | | U | U |
| 03/09/1994 | Zinc | 8 | PM | 1458.7 | .01541 | .00000 | 21.67 | | B | U |
| 03/13/1994 | Arsenic | 1 | PM | 1453.4 | .00017 | .00057 | 13.68 | | U | U |
| 03/13/1994 | Cadmium | 1 | PM | 1453.4 | .00159 | .00140 | 13.68 | | | |
| 03/13/1994 | Chromium | 1 | PM | 1453.4 | .00263 | .00020 | 13.68 | | | |
| 03/13/1994 | Phosphorus | 1 | PM | 1453.4 | .46038 | .30000 | 13.68 | | | U |
| 03/13/1994 | Vanadium | 1 | PM | 1453.4 | .00166 | .17000 | 13.68 | | U | U |
| 03/13/1994 | Zinc | 1 | PM | 1453.4 | .00925 | .00000 | 13.68 | | B | |
| 03/13/1994 | Arsenic | 2 | PM | 1444.3 | .00039 | .00057 | 28.11 | | B | |
| 03/13/1994 | Cadmium | 2 | PM | 1444.3 | .00380 | .00140 | 28.11 | | | |
| 03/13/1994 | Chromium | 2 | PM | 1444.3 | .00755 | .00020 | 28.11 | | | |
| 03/13/1994 | Phosphorus | 2 | PM | 1444.3 | 2.39738 | .30000 | 28.11 | | | |
| 03/13/1994 | Vanadium | 2 | PM | 1444.3 | .00636 | .17000 | 28.11 | | | |
| 03/13/1994 | Zinc | 2 | PM | 1444.3 | .03537 | .00000 | 28.11 | | B | |
| 03/13/1994 | Arsenic | 3 | PM | 1453.7 | .00017 | .00057 | 15.34 | | U | U |
| 03/13/1994 | Cadmium | 3 | PM | 1453.7 | .00166 | .00140 | 15.34 | | | |
| 03/13/1994 | Chromium | 3 | PM | 1453.7 | .00194 | .00020 | 15.34 | | | |
| 03/13/1994 | Phosphorus | 3 | PM | 1453.7 | .45716 | .30000 | 15.34 | | | U |
| 03/13/1994 | Vanadium | 3 | PM | 1453.7 | .00169 | .17000 | 15.34 | | U | U |
| 03/13/1994 | Zinc | 3 | PM | 1453.7 | .00939 | .00000 | 15.34 | | B | |
| 03/13/1994 | Arsenic | 4 | PM | 1445.8 | .00017 | .00057 | 17.71 | | U | U |
| 03/13/1994 | Cadmium | 4 | PM | 1445.8 | .00183 | .00140 | 17.71 | | | |
| 03/13/1994 | Chromium | 4 | PM | 1445.8 | .00220 | .00020 | 17.71 | | | |
| 03/13/1994 | Phosphorus | 4 | PM | 1445.8 | .57132 | .30000 | 17.71 | | | U |
| 03/13/1994 | Vanadium | 4 | PM | 1445.8 | .00168 | .17000 | 17.71 | | U | U |
| 03/13/1994 | Zinc | 4 | PM | 1445.8 | .00858 | .00000 | 17.71 | | B | |
| 03/13/1994 | Arsenic | 5 | PM | 1436.0 | .00018 | .00057 | 7.49 | | U | U |
| 03/13/1994 | Cadmium | 5 | PM | 1436.0 | .00140 | .00140 | 7.49 | | U | U |
| 03/13/1994 | Chromium | 5 | PM | 1436.0 | .00144 | .00020 | 7.49 | | | U |
| 03/13/1994 | Phosphorus | 5 | PM | 1436.0 | .18743 | .30000 | 7.49 | | B | U |
| 03/13/1994 | Vanadium | 5 | PM | 1436.0 | .00176 | .17000 | 7.49 | | U | U |
| 03/13/1994 | Zinc | 5 | PM | 1436.0 | .00575 | .00000 | 7.49 | | B | |
| 03/13/1994 | Arsenic | 6 | PM | 1440.5 | .00018 | .00057 | 10.09 | | U | U |
| 03/13/1994 | Cadmium | 6 | PM | 1440.5 | .00142 | .00140 | 10.09 | | U | U |
| 03/13/1994 | Chromium | 6 | PM | 1440.5 | .00125 | .00020 | 10.09 | | | U |
| 03/13/1994 | Phosphorus | 6 | PM | 1440.5 | .18671 | .30000 | 10.09 | | B | U |
| 03/13/1994 | Vanadium | 6 | PM | 1440.5 | .00178 | .17000 | 10.09 | | U | U |
| 03/13/1994 | Zinc | 6 | PM | 1440.5 | .00368 | .00000 | 10.09 | | B | |
| 03/13/1994 | Arsenic | 7 | PM | 1440.4 | .00017 | .00057 | 12.30 | | U | U |
| 03/13/1994 | Cadmium | 7 | PM | 1440.4 | .00134 | .00140 | 12.30 | | U | U |
| 03/13/1994 | Chromium | 7 | PM | 1440.4 | .00229 | .00020 | 12.30 | | | |
| 03/13/1994 | Phosphorus | 7 | PM | 1440.4 | .46033 | .30000 | 12.30 | | | U |

| Sample Date | Chemical Name | Site # | Typ | Run Time (min.) | Chem Conc. (ug/m3) | EPA Scr. L(ug/m3) | Part.C. Grav. (ug/m3) | Qual. Val | Lab | Val |
|---|---|---|---|---|---|---|---|---|---|---|
| 03/13/1994 | Vanadium | 7 | PM | 1440.4 | .00168 | .17000 | 12.30 | | U | U |
| 03/13/1994 | Zinc | 7 | PM | 1440.4 | .00522 | .00000 | 12.30 | | B | |
| 03/17/1994 | Arsenic | 1 | PM | 1451.1 | .00106 | .00057 | 79.49 | | | |
| 03/17/1994 | Cadmium | 1 | PM | 1451.1 | .00867 | .00140 | 79.49 | | | |
| 03/17/1994 | Chromium | 1 | PM | 1451.1 | .04021 | .00020 | 79.49 | | | |
| 03/17/1994 | Phosphorus | 1 | PM | 1451.1 | 6.22273 | .30000 | 79.49 | | | |
| 03/17/1994 | Vanadium | 1 | PM | 1451.1 | .04284 | .17000 | 79.49 | | | |
| 03/17/1994 | Zinc | 1 | PM | 1451.1 | .08082 | .00000 | 79.49 | | | |
| 03/17/1994 | Arsenic | 2 | PM | 1443.2 | .00461 | .00057 | 145.57 | | | |
| 03/17/1994 | Cadmium | 2 | PM | 1443.2 | .01952 | .00140 | 145.57 | | | |
| 03/17/1994 | Chromium | 2 | PM | 1443.2 | .10213 | .00020 | 145.57 | | | |
| 03/17/1994 | Phosphorus | 2 | PM | 1443.2 | 13.68663 | .30000 | 145.57 | | | |
| 03/17/1994 | Vanadium | 2 | PM | 1443.2 | .12158 | .17000 | 145.57 | | | |
| 03/17/1994 | Zinc | 2 | PM | 1443.2 | .22302 | .00000 | 145.57 | | | |
| 03/17/1994 | Arsenic | 3 | PM | 1454.3 | .00033 | .00057 | 27.44 | | B | |
| 03/17/1994 | Cadmium | 3 | PM | 1454.3 | .00134 | .00140 | 27.44 | | U | U |
| 03/17/1994 | Chromium | 3 | PM | 1454.3 | .00467 | .00020 | 27.44 | | | |
| 03/17/1994 | Phosphorus | 3 | PM | 1454.3 | 1.07271 | .30000 | 27.44 | | | |
| 03/17/1994 | Vanadium | 3 | PM | 1454.3 | .00430 | .17000 | 27.44 | | B | |
| 03/17/1994 | Zinc | 3 | PM | 1454.3 | .01964 | .00000 | 27.44 | | B | |
| 03/17/1994 | Arsenic | 4 | PM | 1444.7 | .00028 | .00057 | 20.48 | | B | |
| 03/17/1994 | Cadmium | 4 | PM | 1444.7 | .00133 | .00140 | 20.48 | | U | U |
| 03/17/1994 | Chromium | 4 | PM | 1444.7 | .00239 | .00020 | 20.48 | | | |
| 03/17/1994 | Phosphorus | 4 | PM | 1444.7 | .47458 | .30000 | 20.48 | | | U |
| 03/17/1994 | Vanadium | 4 | PM | 1444.7 | .00232 | .17000 | 20.48 | | B | |
| 03/17/1994 | Zinc | 4 | PM | 1444.7 | .01000 | .00000 | 20.48 | | B | |
| 03/17/1994 | Arsenic | 5 | PM | 1443.1 | .00019 | .00057 | 15.22 | | B | |
| 03/17/1994 | Cadmium | 5 | PM | 1443.1 | .00138 | .00140 | 15.22 | | U | U |
| 03/17/1994 | Chromium | 5 | PM | 1443.1 | .00085 | .00020 | 15.22 | | | U |
| 03/17/1994 | Phosphorus | 5 | PM | 1443.1 | .22880 | .30000 | 15.22 | | B | U |
| 03/17/1994 | Vanadium | 5 | PM | 1443.1 | .00174 | .17000 | 15.22 | | U | U |
| 03/17/1994 | Zinc | 5 | PM | 1443.1 | .00444 | .00000 | 15.22 | | B | |
| 03/17/1994 | Arsenic | 6 | PM | 1440.8 | .00018 | .00057 | 17.71 | | U | U |
| 03/17/1994 | Cadmium | 6 | PM | 1440.8 | .00141 | .00140 | 17.71 | | U | U |
| 03/17/1994 | Chromium | 6 | PM | 1440.8 | .00062 | .00020 | 17.71 | | | U |
| 03/17/1994 | Phosphorus | 6 | PM | 1440.8 | .20163 | .30000 | 17.71 | | B | U |
| 03/17/1994 | Vanadium | 6 | PM | 1440.8 | .00177 | .17000 | 17.71 | | U | U |
| 03/17/1994 | Zinc | 6 | PM | 1440.8 | .00327 | .00000 | 17.71 | | B | U |
| 03/17/1994 | Arsenic | 7 | PM | 1442.1 | .00026 | .00057 | 13.33 | | B | |
| 03/17/1994 | Cadmium | 7 | PM | 1442.1 | .00133 | .00140 | 13.33 | | U | U |
| 03/17/1994 | Chromium | 7 | PM | 1442.1 | .00119 | .00020 | 13.33 | | | U |
| 03/17/1994 | Phosphorus | 7 | PM | 1442.1 | .27574 | .30000 | 13.33 | | B | U |
| 03/17/1994 | Vanadium | 7 | PM | 1442.1 | .00166 | .17000 | 13.33 | | U | U |
| 03/17/1994 | Zinc | 7 | PM | 1442.1 | .00475 | .00000 | 13.33 | | B | |
| 03/19/1994 | Arsenic | 1 | PM | 1451.3 | .00035 | .00057 | 50.77 | | B | |
| 03/19/1994 | Cadmium | 1 | PM | 1451.3 | .00266 | .00140 | 50.77 | | | |
| 03/19/1994 | Chromium | 1 | PM | 1451.3 | .00422 | .00020 | 50.77 | | | |
| 03/19/1994 | Phosphorus | 1 | PM | 1451.3 | 2.85227 | .30000 | 50.77 | | | |
| 03/19/1994 | Vanadium | 1 | PM | 1451.3 | .00635 | .17000 | 50.77 | | | |
| 03/19/1994 | Zinc | 1 | PM | 1451.3 | .01904 | .00000 | 50.77 | | B | |
| 03/19/1994 | Arsenic | 2 | PM | 1442.6 | .00324 | .00057 | 142.77 | | | |
| 03/19/1994 | Cadmium | 2 | PM | 1442.6 | .02413 | .00140 | 142.77 | | | |
| 03/19/1994 | Chromium | 2 | PM | 1442.6 | .02069 | .00020 | 142.77 | | | |
| 03/19/1994 | Phosphorus | 2 | PM | 1442.6 | 19.10782 | .30000 | 142.77 | | | |
| 03/19/1994 | Vanadium | 2 | PM | 1442.6 | .02309 | .17000 | 142.77 | | | |

| Sample Date | Chemical Name | Site # | Typ | Run Time (min.) | Chem Conc. (ug/m3) | EPA Scr. L(ug/m3) | Part.C. (ug/m3) | Grav. Val | Qual. Lab | Qual. Val |
|---|---|---|---|---|---|---|---|---|---|---|
| 03/19/1994 | Zinc | 2 | PM | 1442.6 | .15534 | .00000 | 142.77 | | | |
| 03/19/1994 | Arsenic | 3 | PM | 1451.7 | .00017 | .00057 | 24.12 | | U | U |
| 03/19/1994 | Cadmium | 3 | PM | 1451.7 | .00173 | .00140 | 24.12 | | | |
| 03/19/1994 | Chromium | 3 | PM | 1451.7 | .00187 | .00020 | 24.12 | | | U |
| 03/19/1994 | Phosphorus | 3 | PM | 1451.7 | 1.53429 | .30000 | 24.12 | | | |
| 03/19/1994 | Vanadium | 3 | PM | 1451.7 | .00233 | .17000 | 24.12 | | B | |
| 03/19/1994 | Zinc | 3 | PM | 1451.7 | .01056 | .00000 | 24.12 | | B | |
| 03/19/1994 | Arsenic | 4 | PM | 1448.0 | .00017 | .00057 | 8.36 | PR | U | U |
| 03/19/1994 | Cadmium | 4 | PM | 1448.0 | .00132 | .00140 | 8.36 | PR | U | U |
| 03/19/1994 | Chromium | 4 | PM | 1448.0 | .00053 | .00020 | 8.36 | PR | | U |
| 03/19/1994 | Phosphorus | 4 | PM | 1448.0 | .15849 | .30000 | 8.36 | PR | B | U |
| 03/19/1994 | Vanadium | 4 | PM | 1448.0 | .00165 | .17000 | 8.36 | PR | U | U |
| 03/19/1994 | Zinc | 4 | PM | 1448.0 | .00329 | .00000 | 8.36 | PR | B | |
| 03/19/1994 | Arsenic | 5 | PM | 1440.8 | .00017 | .00057 | 6.92 | | U | U |
| 03/19/1994 | Cadmium | 5 | PM | 1440.8 | .00137 | .00140 | 6.92 | | U | U |
| 03/19/1994 | Chromium | 5 | PM | 1440.8 | .00046 | .00020 | 6.92 | | | U |
| 03/19/1994 | Phosphorus | 5 | PM | 1440.8 | .15336 | .30000 | 6.92 | | B | U |
| 03/19/1994 | Vanadium | 5 | PM | 1440.8 | .00172 | .17000 | 6.92 | | U | U |
| 03/19/1994 | Zinc | 5 | PM | 1440.8 | .00357 | .00000 | 6.92 | | B | |
| 03/19/1994 | Arsenic | 6 | PM | 1442.1 | .00017 | .00057 | 8.57 | | U | U |
| 03/19/1994 | Cadmium | 6 | PM | 1442.1 | .00139 | .00140 | 8.57 | | U | U |
| 03/19/1994 | Chromium | 6 | PM | 1442.1 | .00070 | .00020 | 8.57 | | | U |
| 03/19/1994 | Phosphorus | 6 | PM | 1442.1 | .20618 | .30000 | 8.57 | | B | U |
| 03/19/1994 | Vanadium | 6 | PM | 1442.1 | .00176 | .17000 | 8.57 | | B | |
| 03/19/1994 | Zinc | 6 | PM | 1442.1 | .00403 | .00000 | 8.57 | | B | |
| 03/19/1994 | Arsenic | 7 | PM | 1438.5 | .00030 | .00057 | 7.50 | | B | U |
| 03/19/1994 | Cadmium | 7 | PM | 1438.5 | .00131 | .00140 | 7.50 | | U | U |
| 03/19/1994 | Chromium | 7 | PM | 1438.5 | .00059 | .00020 | 7.50 | | | U |
| 03/19/1994 | Phosphorus | 7 | PM | 1438.5 | .17611 | .30000 | 7.50 | | B | U |
| 03/19/1994 | Vanadium | 7 | PM | 1438.5 | .00165 | .17000 | 7.50 | | U | U |
| 03/19/1994 | Zinc | 7 | PM | 1438.5 | .00387 | .00000 | 7.50 | | B | |
| 03/21/1994 | Arsenic | 1 | PM | 1452.9 | .00092 | .00057 | 29.46 | | | |
| 03/21/1994 | Cadmium | 1 | PM | 1452.9 | .00246 | .00140 | 29.46 | | | U |
| 03/21/1994 | Chromium | 1 | PM | 1452.9 | .00875 | .00020 | 29.46 | | | |
| 03/21/1994 | Phosphorus | 1 | PM | 1452.9 | 1.64448 | .30000 | 29.46 | | | |
| 03/21/1994 | Vanadium | 1 | PM | 1452.9 | .01041 | .17000 | 29.46 | | | |
| 03/21/1994 | Zinc | 1 | PM | 1452.9 | .02845 | .00000 | 29.46 | | B | J |
| 03/21/1994 | Arsenic | 2 | PM | 1441.8 | .00137 | .00057 | 49.92 | | | |
| 03/21/1994 | Cadmium | 2 | PM | 1441.8 | .00836 | .00140 | 49.92 | | | U |
| 03/21/1994 | Chromium | 2 | PM | 1441.8 | .03064 | .00020 | 49.92 | | | |
| 03/21/1994 | Phosphorus | 2 | PM | 1441.8 | 3.97696 | .30000 | 49.92 | | | |
| 03/21/1994 | Vanadium | 2 | PM | 1441.8 | .04117 | .17000 | 49.92 | | | |
| 03/21/1994 | Zinc | 2 | PM | 1441.8 | .06781 | .00000 | 49.92 | | B | J |
| 03/21/1994 | Arsenic | 3 | PM | 778.7 | .00106 | .00057 | 12.28 | TR | B | |
| 03/21/1994 | Cadmium | 3 | PM | 778.7 | .00253 | .00140 | 12.28 | TR | U | U |
| 03/21/1994 | Chromium | 3 | PM | 778.7 | .00221 | .00020 | 12.28 | TR | | U |
| 03/21/1994 | Phosphorus | 3 | PM | 778.7 | .45671 | .30000 | 12.28 | TR | B | U |
| 03/21/1994 | Vanadium | 3 | PM | 778.7 | .00318 | .17000 | 12.28 | TR | U | U |
| 03/21/1994 | Zinc | 3 | PM | 778.7 | .01097 | .00000 | 12.28 | TR | B | |
| 03/21/1994 | Arsenic | 4 | PM | 1446.3 | .00073 | .00057 | 18.98 | | | |
| 03/21/1994 | Cadmium | 4 | PM | 1446.3 | .00135 | .00140 | 18.98 | | U | U |
| 03/21/1994 | Chromium | 4 | PM | 1446.3 | .00189 | .00020 | 18.98 | | | U |
| 03/21/1994 | Phosphorus | 4 | PM | 1446.3 | .42852 | .30000 | 18.98 | | | U |
| 03/21/1994 | Vanadium | 4 | PM | 1446.3 | .00169 | .17000 | 18.98 | | U | U |
| 03/21/1994 | Zinc | 4 | PM | 1446.3 | .01029 | .00000 | 18.98 | | B | |

| Sample Date | Chemical Name | Site # | Typ | Run Time (min.) | Chem Conc. (ug/m3) | EPA Scr. L(ug/m3) | Part.C. (ug/m3) | Grav. Val | Qual. Lab | Qual. Val |
|---|---|---|---|---|---|---|---|---|---|---|
| 03/21/1994 | Arsenic | 5 | PM | 1435.7 | .00087 | .00057 | 11.10 | | | |
| 03/21/1994 | Cadmium | 5 | PM | 1435.7 | .00140 | .00140 | 11.10 | | U | U |
| 03/21/1994 | Chromium | 5 | PM | 1435.7 | .00117 | .00020 | 11.10 | | | U |
| 03/21/1994 | Phosphorus | 5 | PM | 1435.7 | .17971 | .30000 | 11.10 | | B | U |
| 03/21/1994 | Vanadium | 5 | PM | 1435.7 | .00176 | .17000 | 11.10 | | U | U |
| 03/21/1994 | Zinc | 5 | PM | 1435.7 | .00560 | .00000 | 11.10 | | B | |
| 03/21/1994 | Arsenic | 6 | PM | 1439.9 | .00041 | .00057 | 17.12 | | B | |
| 03/21/1994 | Cadmium | 6 | PM | 1439.9 | .00143 | .00140 | 17.12 | | U | U |
| 03/21/1994 | Chromium | 6 | PM | 1439.9 | .00098 | .00020 | 17.12 | | | U |
| 03/21/1994 | Phosphorus | 6 | PM | 1439.9 | .17320 | .30000 | 17.12 | | B | U |
| 03/21/1994 | Vanadium | 6 | PM | 1439.9 | .00179 | .17000 | 17.12 | | U | U |
| 03/21/1994 | Zinc | 6 | PM | 1439.9 | .00470 | .00000 | 17.12 | | B | U |
| 03/21/1994 | Arsenic | 7 | PM | 1440.0 | .00056 | .00057 | 10.27 | Q | B | |
| 03/21/1994 | Cadmium | 7 | PM | 1440.0 | .00134 | .00140 | 10.27 | Q | U | U |
| 03/21/1994 | Chromium | 7 | PM | 1440.0 | .00092 | .00020 | 10.27 | Q | | U |
| 03/21/1994 | Phosphorus | 7 | PM | 1440.0 | .14487 | .30000 | 10.27 | Q | B | U |
| 03/21/1994 | Vanadium | 7 | PM | 1440.0 | .00168 | .17000 | 10.27 | Q | U | U |
| 03/21/1994 | Zinc | 7 | PM | 1440.0 | .00852 | .00000 | 10.27 | Q | B | |
| 03/21/1994 | Arsenic | 8 | PM | 1461.3 | .00062 | .00057 | 29.22 | | | |
| 03/21/1994 | Cadmium | 8 | PM | 1461.3 | .00132 | .00140 | 29.22 | | B | |
| 03/21/1994 | Chromium | 8 | PM | 1461.3 | .00818 | .00020 | 29.22 | | | |
| 03/21/1994 | Phosphorus | 8 | PM | 1461.3 | 1.17353 | .30000 | 29.22 | | | |
| 03/21/1994 | Vanadium | 8 | PM | 1461.3 | .00686 | .17000 | 29.22 | | | |
| 03/21/1994 | Zinc | 8 | PM | 1461.3 | .02149 | .00000 | 29.22 | | B | |
| 03/25/1994 | Arsenic | 1 | PM | 1452.5 | .00024 | .00057 | 25.16 | | B | |
| 03/25/1994 | Cadmium | 1 | PM | 1452.5 | .00130 | .00140 | 25.16 | | U | U |
| 03/25/1994 | Chromium | 1 | PM | 1452.5 | .00202 | .00020 | 25.16 | | | |
| 03/25/1994 | Phosphorus | 1 | PM | 1452.5 | .97448 | .30000 | 25.16 | | | |
| 03/25/1994 | Vanadium | 1 | PM | 1452.5 | .00241 | .17000 | 25.16 | | B | |
| 03/25/1994 | Zinc | 1 | PM | 1452.5 | .01728 | .00000 | 25.16 | | B | J |
| 03/25/1994 | Arsenic | 2 | PM | 1441.3 | .00041 | .00057 | 32.65 | | B | |
| 03/25/1994 | Cadmium | 2 | PM | 1441.3 | .00292 | .00140 | 32.65 | | | U |
| 03/25/1994 | Chromium | 2 | PM | 1441.3 | .00535 | .00020 | 32.65 | | | |
| 03/25/1994 | Phosphorus | 2 | PM | 1441.3 | 1.90012 | .30000 | 32.65 | | | |
| 03/25/1994 | Vanadium | 2 | PM | 1441.3 | .00607 | .17000 | 32.65 | | | |
| 03/25/1994 | Zinc | 2 | PM | 1441.3 | .02520 | .00000 | 32.65 | | B | J |
| 03/25/1994 | Arsenic | 3 | PM | 1451.3 | .00028 | .00057 | 17.16 | | B | |
| 03/25/1994 | Cadmium | 3 | PM | 1451.3 | .00144 | .00140 | 17.16 | | B | U |
| 03/25/1994 | Chromium | 3 | PM | 1451.3 | .00113 | .00020 | 17.16 | | | U |
| 03/25/1994 | Phosphorus | 3 | PM | 1451.3 | .21475 | .30000 | 17.16 | | B | U |
| 03/25/1994 | Vanadium | 3 | PM | 1451.3 | .00167 | .17000 | 17.16 | | U | U |
| 03/25/1994 | Zinc | 3 | PM | 1451.3 | .01257 | .00000 | 17.16 | | B | J |
| 03/25/1994 | Arsenic | 4 | PM | 1445.7 | .00025 | .00057 | 24.93 | | B | |
| 03/25/1994 | Cadmium | 4 | PM | 1445.7 | .00132 | .00140 | 24.93 | | U | U |
| 03/25/1994 | Chromium | 4 | PM | 1445.7 | .00172 | .00020 | 24.93 | | | |
| 03/25/1994 | Phosphorus | 4 | PM | 1445.7 | .41462 | .30000 | 24.93 | | | U |
| 03/25/1994 | Vanadium | 4 | PM | 1445.7 | .00238 | .17000 | 24.93 | | B | |
| 03/25/1994 | Zinc | 4 | PM | 1445.7 | .01767 | .00000 | 24.93 | | B | J |
| 03/25/1994 | Arsenic | 5 | PM | 1440.0 | .00039 | .00057 | 31.69 | | B | |
| 03/25/1994 | Cadmium | 5 | PM | 1440.0 | .00299 | .00140 | 31.69 | | | U |
| 03/25/1994 | Chromium | 5 | PM | 1440.0 | .00302 | .00020 | 31.69 | | | |
| 03/25/1994 | Phosphorus | 5 | PM | 1440.0 | 1.33680 | .30000 | 31.69 | | | |
| 03/25/1994 | Vanadium | 5 | PM | 1440.0 | .00402 | .17000 | 31.69 | | B | |
| 03/25/1994 | Zinc | 5 | PM | 1440.0 | .01769 | .00000 | 31.69 | | B | J |
| 03/25/1994 | Arsenic | 6 | PM | 1442.7 | .00017 | .00057 | 14.01 | | U | U |

| Sample Date | Chemical Name | Site # | Typ | Run Time (min.) | Chem Conc. (ug/m3) | EPA Scr. L(ug/m3) | Part.C. (ug/m3) | Grav. Val | Qual. Lab | Qual. Val |
|---|---|---|---|---|---|---|---|---|---|---|
| 03/25/1994 | Cadmium | 6 | PM | 1442.7 | .00139 | .00140 | 14.01 | | U | U |
| 03/25/1994 | Chromium | 6 | PM | 1442.7 | .00088 | .00020 | 14.01 | | | U |
| 03/25/1994 | Phosphorus | 6 | PM | 1442.7 | .21809 | .30000 | 14.01 | | B | U |
| 03/25/1994 | Vanadium | 6 | PM | 1442.7 | .00175 | .17000 | 14.01 | | U | U |
| 03/25/1994 | Zinc | 6 | PM | 1442.7 | .00739 | .00000 | 14.01 | | B | J |
| 03/25/1994 | Arsenic | 7 | PM | 1438.1 | .00017 | .00057 | 20.73 | | U | U |
| 03/25/1994 | Cadmium | 7 | PM | 1438.1 | .00259 | .00140 | 20.73 | | | U |
| 03/25/1994 | Chromium | 7 | PM | 1438.1 | .00164 | .00020 | 20.73 | | | |
| 03/25/1994 | Phosphorus | 7 | PM | 1438.1 | .91430 | .30000 | 20.73 | | | |
| 03/25/1994 | Vanadium | 7 | PM | 1438.1 | .00199 | .17000 | 20.73 | | B | |
| 03/25/1994 | Zinc | 7 | PM | 1438.1 | .01289 | .00000 | 20.73 | | B | J |
| 03/29/1994 | Arsenic | 1 | PM | 1452.5 | .00016 | .00057 | 18.73 | | U | U |
| 03/29/1994 | Cadmium | 1 | PM | 1452.5 | .00131 | .00140 | 18.73 | | U | U |
| 03/29/1994 | Chromium | 1 | PM | 1452.5 | .00171 | .00020 | 18.73 | | | U |
| 03/29/1994 | Phosphorus | 1 | PM | 1452.5 | .69361 | .30000 | 18.73 | | | U |
| 03/29/1994 | Vanadium | 1 | PM | 1452.5 | .00184 | .17000 | 18.73 | | B | |
| 03/29/1994 | Zinc | 1 | PM | 1452.5 | .00975 | .00000 | 18.73 | | B | |
| 03/29/1994 | Arsenic | 2 | PM | 1444.1 | .00023 | .00057 | 23.48 | | B | |
| 03/29/1994 | Cadmium | 2 | PM | 1444.1 | .00138 | .00140 | 23.48 | | B | |
| 03/29/1994 | Chromium | 2 | PM | 1444.1 | .00444 | .00020 | 23.48 | | | |
| 03/29/1994 | Phosphorus | 2 | PM | 1444.1 | 1.00352 | .30000 | 23.48 | | | |
| 03/29/1994 | Vanadium | 2 | PM | 1444.1 | .00335 | .17000 | 23.48 | | B | |
| 03/29/1994 | Zinc | 2 | PM | 1444.1 | .02049 | .00000 | 23.48 | | B | |
| 03/29/1994 | Arsenic | 3 | PM | 1455.3 | .00018 | .00057 | 13.56 | | B | |
| 03/29/1994 | Cadmium | 3 | PM | 1455.3 | .00134 | .00140 | 13.56 | | U | U |
| 03/29/1994 | Chromium | 3 | PM | 1455.3 | .00097 | .00020 | 13.56 | | | U |
| 03/29/1994 | Phosphorus | 3 | PM | 1455.3 | .19768 | .30000 | 13.56 | | B | U |
| 03/29/1994 | Vanadium | 3 | PM | 1455.3 | .00168 | .17000 | 13.56 | | U | U |
| 03/29/1994 | Zinc | 3 | PM | 1455.3 | .00855 | .00000 | 13.56 | | B | |
| 03/29/1994 | Arsenic | 4 | PM | 1447.7 | .00023 | .00057 | 19.50 | | B | |
| 03/29/1994 | Cadmium | 4 | PM | 1447.7 | .00145 | .00140 | 19.50 | | B | |
| 03/29/1994 | Chromium | 4 | PM | 1447.7 | .00154 | .00020 | 19.50 | | | U |
| 03/29/1994 | Phosphorus | 4 | PM | 1447.7 | .30565 | .30000 | 19.50 | | B | U |
| 03/29/1994 | Vanadium | 4 | PM | 1447.7 | .00166 | .17000 | 19.50 | | U | U |
| 03/29/1994 | Zinc | 4 | PM | 1447.7 | .01253 | .00000 | 19.50 | | B | |
| 03/29/1994 | Arsenic | 5 | PM | 1438.1 | .00023 | .00057 | 19.44 | | B | |
| 03/29/1994 | Cadmium | 5 | PM | 1438.1 | .00138 | .00140 | 19.44 | | U | U |
| 03/29/1994 | Chromium | 5 | PM | 1438.1 | .00270 | .00020 | 19.44 | | | |
| 03/29/1994 | Phosphorus | 5 | PM | 1438.1 | .97488 | .30000 | 19.44 | | | |
| 03/29/1994 | Vanadium | 5 | PM | 1438.1 | .00301 | .17000 | 19.44 | | B | |
| 03/29/1994 | Zinc | 5 | PM | 1438.1 | .01639 | .00000 | 19.44 | | B | J |
| 03/29/1994 | Arsenic | 6 | PM | 1439.6 | .00018 | .00057 | 17.80 | | U | U |
| 03/29/1994 | Cadmium | 6 | PM | 1439.6 | .00141 | .00140 | 17.80 | | U | U |
| 03/29/1994 | Chromium | 6 | PM | 1439.6 | .00113 | .00020 | 17.80 | | | U |
| 03/29/1994 | Phosphorus | 6 | PM | 1439.6 | .28343 | .30000 | 17.80 | | B | U |
| 03/29/1994 | Vanadium | 6 | PM | 1439.6 | .00177 | .17000 | 17.80 | | U | U |
| 03/29/1994 | Zinc | 6 | PM | 1439.6 | .00703 | .00000 | 17.80 | | B | |
| 03/29/1994 | Arsenic | 7 | PM | 1434.7 | .00017 | .00057 | 8.51 | | U | U |
| 03/29/1994 | Cadmium | 7 | PM | 1434.7 | .00185 | .00140 | 8.51 | | | |
| 03/29/1994 | Chromium | 7 | PM | 1434.7 | .00096 | .00020 | 8.51 | | | U |
| 03/29/1994 | Phosphorus | 7 | PM | 1434.7 | .33603 | .30000 | 8.51 | | | U |
| 03/29/1994 | Vanadium | 7 | PM | 1434.7 | .00167 | .17000 | 8.51 | | U | U |
| 03/29/1994 | Zinc | 7 | PM | 1434.7 | .00574 | .00000 | 8.51 | | B | |
| 04/14/1994 | Arsenic | 1 | PM | 1448.3 | .00062 | .00057 | 53.12 | | | |
| 04/14/1994 | Cadmium | 1 | PM | 1448.3 | .00565 | .00140 | 53.12 | | | |

| Sample Date | Chemical Name | Site # | Typ | Run Time (min.) | Chem Conc. (ug/m3) | EPA Scr. L(ug/m3) | Part.C. (ug/m3) | Grav. Val | Qual. Lab | Qual. Val |
|---|---|---|---|---|---|---|---|---|---|---|
| 04/14/1994 | Chromium | 1 | PM | 1448.3 | .00995 | .00020 | 53.12 | | | |
| 04/14/1994 | Phosphorus | 1 | PM | 1448.3 | 3.85524 | .30000 | 53.12 | | | |
| 04/14/1994 | Vanadium | 1 | PM | 1448.3 | .00956 | .17000 | 53.12 | | | |
| 04/14/1994 | Zinc | 1 | PM | 1448.3 | .02674 | .00000 | 53.12 | | B | |
| 04/14/1994 | Arsenic | 2 | PM | 1442.9 | .00235 | .00057 | 150.74 | | | |
| 04/14/1994 | Cadmium | 2 | PM | 1442.9 | .03110 | .00140 | 150.74 | | | |
| 04/14/1994 | Chromium | 2 | PM | 1442.9 | .04861 | .00020 | 150.74 | | | |
| 04/14/1994 | Phosphorus | 2 | PM | 1442.9 | 16.24853 | .30000 | 150.74 | | | |
| 04/14/1994 | Vanadium | 2 | PM | 1442.9 | .05057 | .17000 | 150.74 | | | |
| 04/14/1994 | Zinc | 2 | PM | 1442.9 | .16879 | .00000 | 150.74 | | | |
| 04/14/1994 | Arsenic | 3 | PM | 1454.0 | .00021 | .00057 | 28.67 | | B | |
| 04/14/1994 | Cadmium | 3 | PM | 1454.0 | .00198 | .00140 | 28.67 | | | |
| 04/14/1994 | Chromium | 3 | PM | 1454.0 | .00339 | .00020 | 28.67 | | | U |
| 04/14/1994 | Phosphorus | 3 | PM | 1454.0 | 1.19627 | .30000 | 28.67 | | | U |
| 04/14/1994 | Vanadium | 3 | PM | 1454.0 | .00218 | .17000 | 28.67 | | B | |
| 04/14/1994 | Zinc | 3 | PM | 1454.0 | .01345 | .00000 | 28.67 | | B | U |
| 04/14/1994 | Arsenic | 4 | PM | 1446.3 | .00017 | .00057 | 19.47 | | U | U |
| 04/14/1994 | Cadmium | 4 | PM | 1446.3 | .00134 | .00140 | 19.47 | | U | U |
| 04/14/1994 | Chromium | 4 | PM | 1446.3 | .00213 | .00020 | 19.47 | | | U |
| 04/14/1994 | Phosphorus | 4 | PM | 1446.3 | .40666 | .30000 | 19.47 | | | U |
| 04/14/1994 | Vanadium | 4 | PM | 1446.3 | .00168 | .17000 | 19.47 | | U | U |
| 04/14/1994 | Zinc | 4 | PM | 1446.3 | .00711 | .00000 | 19.47 | | B | U |
| 04/14/1994 | Arsenic | 5 | PM | 1441.5 | .00018 | .00057 | 16.68 | | U | U |
| 04/14/1994 | Cadmium | 5 | PM | 1441.5 | .00139 | .00140 | 16.68 | | U | U |
| 04/14/1994 | Chromium | 5 | PM | 1441.5 | .00141 | .00020 | 16.68 | | | U |
| 04/14/1994 | Phosphorus | 5 | PM | 1441.5 | .19947 | .30000 | 16.68 | | B | U |
| 04/14/1994 | Vanadium | 5 | PM | 1441.5 | .00175 | .17000 | 16.68 | | U | U |
| 04/14/1994 | Zinc | 5 | PM | 1441.5 | .00580 | .00000 | 16.68 | | B | U |
| 04/14/1994 | Arsenic | 6 | PM | 1442.7 | .00018 | .00057 | 17.75 | | U | U |
| 04/14/1994 | Cadmium | 6 | PM | 1442.7 | .00142 | .00140 | 17.75 | | U | U |
| 04/14/1994 | Chromium | 6 | PM | 1442.7 | .00141 | .00020 | 17.75 | | | U |
| 04/14/1994 | Phosphorus | 6 | PM | 1442.7 | .22778 | .30000 | 17.75 | | B | U |
| 04/14/1994 | Vanadium | 6 | PM | 1442.7 | .00178 | .17000 | 17.75 | | U | U |
| 04/14/1994 | Zinc | 6 | PM | 1442.7 | .00446 | .00000 | 17.75 | | B | U |
| 04/14/1994 | Arsenic | 7 | PM | 1441.2 | .00020 | .00057 | 19.20 | | B | |
| 04/14/1994 | Cadmium | 7 | PM | 1441.2 | .00134 | .00140 | 19.20 | | U | U |
| 04/14/1994 | Chromium | 7 | PM | 1441.2 | .00140 | .00020 | 19.20 | | | U |
| 04/14/1994 | Phosphorus | 7 | PM | 1441.2 | .20589 | .30000 | 19.20 | | B | U |
| 04/14/1994 | Vanadium | 7 | PM | 1441.2 | .00168 | .17000 | 19.20 | | U | U |
| 04/14/1994 | Zinc | 7 | PM | 1441.2 | .00566 | .00000 | 19.20 | | B | U |
| 04/14/1994 | Arsenic | 8 | PM | 1460.5 | .00054 | .00057 | 56.10 | | B | |
| 04/14/1994 | Cadmium | 8 | PM | 1460.5 | .00482 | .00140 | 56.10 | | | |
| 04/14/1994 | Chromium | 8 | PM | 1460.5 | .00974 | .00020 | 56.10 | | | |
| 04/14/1994 | Phosphorus | 8 | PM | 1460.5 | 3.72434 | .30000 | 56.10 | | | |
| 04/14/1994 | Vanadium | 8 | PM | 1460.5 | .00888 | .17000 | 56.10 | | | |
| 04/14/1994 | Zinc | 8 | PM | 1460.5 | .02586 | .00000 | 56.10 | | B | |
| 06/07/1994 | Arsenic | 1 | PM | 1450.8 | .00017 | .00057 | 9.97 | | U | U |
| 06/07/1994 | Cadmium | 1 | PM | 1450.8 | .00146 | .00140 | 9.97 | | B | |
| 06/07/1994 | Chromium | 1 | PM | 1450.8 | .00205 | .00020 | 9.97 | | | U |
| 06/07/1994 | Phosphorus | 1 | PM | 1450.8 | .77903 | .30000 | 9.97 | | | |
| 06/07/1994 | Vanadium | 1 | PM | 1450.8 | .00225 | .17000 | 9.97 | | B | |
| 06/07/1994 | Zinc | 1 | PM | 1450.8 | .00885 | .00000 | 9.97 | | B | |
| 06/07/1994 | Arsenic | 2 | PM | 1443.2 | .00034 | .00057 | 19.34 | | B | |
| 06/07/1994 | Cadmium | 2 | PM | 1443.2 | .00523 | .00140 | 19.34 | | | |
| 06/07/1994 | Chromium | 2 | PM | 1443.2 | .00507 | .00020 | 19.34 | | | |

| Sample Date | Chemical Name | Site # | Typ | Run Time (min.) | Chem Conc. (ug/m3) | EPA Scr. L(ug/m3) | Part.C. (ug/m3) | Grav. Val | Qual. Lab | Qual. Val |
|---|---|---|---|---|---|---|---|---|---|---|
| 06/07/1994 | Phosphorus | 2 | PM | 1443.2 | 1.95388 | .30000 | 19.34 | | | |
| 06/07/1994 | Vanadium | 2 | PM | 1443.2 | .00608 | .17000 | 19.34 | | | |
| 06/07/1994 | Zinc | 2 | PM | 1443.2 | .01954 | .00000 | 19.34 | | B | |
| 06/07/1994 | Arsenic | 3 | PM | 1451.6 | .00017 | .00057 | 6.00 | | U | U |
| 06/07/1994 | Cadmium | 3 | PM | 1451.6 | .00136 | .00140 | 6.00 | | U | U |
| 06/07/1994 | Chromium | 3 | PM | 1451.6 | .00067 | .00020 | 6.00 | | | U |
| 06/07/1994 | Phosphorus | 3 | PM | 1451.6 | .27115 | .30000 | 6.00 | | B | U |
| 06/07/1994 | Vanadium | 3 | PM | 1451.6 | .00171 | .17000 | 6.00 | | U | U |
| 06/07/1994 | Zinc | 3 | PM | 1451.6 | .00375 | .00000 | 6.00 | | B | |
| 06/07/1994 | Arsenic | 4 | PM | 1448.0 | .00017 | .00057 | 11.15 | | U | U |
| 06/07/1994 | Cadmium | 4 | PM | 1448.0 | .00133 | .00140 | 11.15 | | U | U |
| 06/07/1994 | Chromium | 4 | PM | 1448.0 | .00143 | .00020 | 11.15 | | | U |
| 06/07/1994 | Phosphorus | 4 | PM | 1448.0 | .24269 | .30000 | 11.15 | | B | U |
| 06/07/1994 | Vanadium | 4 | PM | 1448.0 | .00166 | .17000 | 11.15 | | U | U |
| 06/07/1994 | Zinc | 4 | PM | 1448.0 | .00557 | .00000 | 11.15 | | B | |
| 06/07/1994 | Arsenic | 5 | PM | 1439.9 | .00017 | .00057 | 3.25 | | U | U |
| 06/07/1994 | Cadmium | 5 | PM | 1439.9 | .00138 | .00140 | 3.25 | | U | U |
| 06/07/1994 | Chromium | 5 | PM | 1439.9 | .00068 | .00020 | 3.25 | | | U |
| 06/07/1994 | Phosphorus | 5 | PM | 1439.9 | .21175 | .30000 | 3.25 | | B | U |
| 06/07/1994 | Vanadium | 5 | PM | 1439.9 | .00174 | .17000 | 3.25 | | U | U |
| 06/07/1994 | Zinc | 5 | PM | 1439.9 | .00168 | .00000 | 3.25 | | B | |
| 06/07/1994 | Arsenic | 6 | PM | 1437.7 | .00017 | .00057 | 5.46 | | U | U |
| 06/07/1994 | Cadmium | 6 | PM | 1437.7 | .00138 | .00140 | 5.46 | | U | U |
| 06/07/1994 | *Chromium* | 6 | PM | 1437.7 | *.00060* | *.00020* | 5.46 | | | U |
| 06/07/1994 | Phosphorus | 6 | PM | 1437.7 | .18043 | .30000 | 5.46 | | B | U |
| 06/07/1994 | Vanadium | 6 | PM | 1437.7 | .00174 | .17000 | 5.46 | | U | U |
| 06/07/1994 | Zinc | 6 | PM | 1437.7 | .00203 | .00000 | 5.46 | | B | |
| 06/07/1994 | Arsenic | 7 | PM | 1435.7 | .00017 | .00057 | 6.43 | | U | U |
| 06/07/1994 | Cadmium | 7 | PM | 1435.7 | .00132 | .00140 | 6.43 | | U | U |
| 06/07/1994 | Chromium | 7 | PM | 1435.7 | .00087 | .00020 | 6.43 | | | U |
| 06/07/1994 | Phosphorus | 7 | PM | 1435.7 | .23711 | .30000 | 6.43 | | B | U |
| 06/07/1994 | Vanadium | 7 | PM | 1435.7 | .00166 | .17000 | 6.43 | | U | U |
| 06/07/1994 | Zinc | 7 | PM | 1435.7 | .00213 | .00000 | 6.43 | | B | U |
| 06/07/1994 | Arsenic | 8 | PM | 1460.8 | .00016 | .00057 | 9.75 | | U | U |
| 06/07/1994 | Cadmium | 8 | PM | 1460.8 | .00158 | .00140 | 9.75 | | | |
| 06/07/1994 | Chromium | 8 | PM | 1460.8 | .00259 | .00020 | 9.75 | | | |
| 06/07/1994 | Phosphorus | 8 | PM | 1460.8 | .90920 | .30000 | 9.75 | | | |
| 06/07/1994 | Vanadium | 8 | PM | 1460.8 | .00243 | .17000 | 9.75 | | B | |
| 06/07/1994 | Zinc | 8 | PM | 1460.8 | .00844 | .00000 | 9.75 | | B | |
| 09/21/1994 | Arsenic | 1 | PM | 1452.1 | .00069 | .00057 | 49.76 | | | |
| 09/21/1994 | Cadmium | 1 | PM | 1452.1 | .00775 | .00140 | 49.76 | | | |
| 09/21/1994 | Chromium | 1 | PM | 1452.1 | .00417 | .00020 | 49.76 | | | |
| 09/21/1994 | Phosphorus | 1 | PM | 1452.1 | 1.39474 | .30000 | 49.76 | | | |
| 09/21/1994 | Vanadium | 1 | PM | 1452.1 | .00341 | .17000 | 49.76 | | B | |
| 09/21/1994 | Zinc | 1 | PM | 1452.1 | .02702 | .00000 | 49.76 | | B | |
| 09/21/1994 | Arsenic | 2 | PM | 1444.6 | .00104 | .00057 | 59.10 | | | |
| 09/21/1994 | Cadmium | 2 | PM | 1444.6 | .01219 | .00140 | 59.10 | | | |
| 09/21/1994 | Chromium | 2 | PM | 1444.6 | .01480 | .00020 | 59.10 | | | |
| 09/21/1994 | Phosphorus | 2 | PM | 1444.6 | 3.05878 | .30000 | 59.10 | | | |
| 09/21/1994 | Vanadium | 2 | PM | 1444.6 | .01677 | .17000 | 59.10 | | | |
| 09/21/1994 | Zinc | 2 | PM | 1444.6 | .05511 | .00000 | 59.10 | | B | |
| 09/21/1994 | Arsenic | 4 | PM | 1449.9 | .00070 | .00057 | 39.48 | Q | | |
| 09/21/1994 | Cadmium | 4 | PM | 1449.9 | .00613 | .00140 | 39.48 | Q | | |
| 09/21/1994 | Chromium | 4 | PM | 1449.9 | .00287 | .00020 | 39.48 | Q | | U |
| 09/21/1994 | Phosphorus | 4 | PM | 1449.9 | .63512 | .30000 | 39.48 | Q | | U |

| Sample Date | Chemical Name | Site # | Typ | Run Time (min.) | Chem Conc. (ug/m3) | EPA Scr. L(ug/m3) | Part.C. (ug/m3) | Grav. Val | Qual. Lab | Qual. Val |
|---|---|---|---|---|---|---|---|---|---|---|
| 09/21/1994 | Vanadium | 4 | PM | 1449.9 | .00237 | .17000 | 39.48 | Q | B | |
| 09/21/1994 | Zinc | 4 | PM | 1449.9 | .02371 | .00000 | 39.48 | Q | B | |
| 09/21/1994 | Arsenic | 5 | PM | 1441.3 | .00045 | .00057 | 31.70 | | B | |
| 09/21/1994 | Cadmium | 5 | PM | 1441.3 | .01042 | .00140 | 31.70 | | | |
| 09/21/1994 | Chromium | 5 | PM | 1441.3 | .00370 | .00020 | 31.70 | | | U |
| 09/21/1994 | Phosphorus | 5 | PM | 1441.3 | 1.18182 | .30000 | 31.70 | | | |
| 09/21/1994 | Vanadium | 5 | PM | 1441.3 | .00361 | .17000 | 31.70 | | B | |
| 09/21/1994 | Zinc | 5 | PM | 1441.3 | .02245 | .00000 | 31.70 | | B | |
| 09/21/1994 | Arsenic | 6 | PM | 1441.2 | .00104 | .00057 | 105.62 | | | |
| 09/21/1994 | Cadmium | 6 | PM | 1441.2 | .00141 | .00140 | 105.62 | | U | U |
| 09/21/1994 | Chromium | 6 | PM | 1441.2 | .00364 | .00020 | 105.62 | | | U |
| 09/21/1994 | Phosphorus | 6 | PM | 1441.2 | .37418 | .30000 | 105.62 | | | U |
| 09/21/1994 | Vanadium | 6 | PM | 1441.2 | .00323 | .17000 | 105.62 | | B | |
| 09/21/1994 | Zinc | 6 | PM | 1441.2 | .01755 | .00000 | 105.62 | | B | |
| 09/21/1994 | Arsenic | 7 | PM | 1438.8 | .00091 | .00057 | 42.73 | | | |
| 09/21/1994 | Cadmium | 7 | PM | 1438.8 | .03512 | .00140 | 42.73 | | | |
| 09/21/1994 | Chromium | 7 | PM | 1438.8 | .00562 | .00020 | 42.73 | | | |
| 09/21/1994 | Phosphorus | 7 | PM | 1438.8 | 2.42263 | .30000 | 42.73 | | | |
| 09/21/1994 | Vanadium | 7 | PM | 1438.8 | .00483 | .17000 | 42.73 | | | |
| 09/21/1994 | Zinc | 7 | PM | 1438.8 | .04087 | .00000 | 42.73 | | B | |
| 10/04/1993 | Aluminum | 1 | TS | 1443.5 | 1.68198 | 33.30000 | 100.84 | | | |
| 10/04/1993 | Arsenic | 1 | TS | 1443.5 | .00193 | .00057 | 100.84 | | | |
| 10/04/1993 | Barium | 1 | TS | 1443.5 | .02848 | .52000 | 100.84 | | | |
| 10/04/1993 | Beryllium | 1 | TS | 1443.5 | .00018 | .00100 | 100.84 | | U | U |
| 10/04/1993 | Cadmium | 1 | TS | 1443.5 | .00339 | .00140 | 100.84 | | | |
| 10/04/1993 | Chromium | 1 | TS | 1443.5 | .01124 | .00020 | 100.84 | | | |
| 10/04/1993 | Manganese | 1 | TS | 1443.5 | .04339 | .42000 | 100.84 | | | |
| 10/04/1993 | Nickel | 1 | TS | 1443.5 | .00461 | .01000 | 100.84 | | B | U |
| 10/04/1993 | Particulate Fluoride | 1 | TS | 1443.5 | 2.40989 | 8.30000 | 100.84 | | B | |
| 10/04/1993 | Phosphorus | 1 | TS | 1443.5 | 2.00000 | .30000 | 100.84 | | | |
| 10/04/1993 | Selenium | 1 | TS | 1443.5 | .01774 | .70000 | 100.84 | | U | U |
| 10/04/1993 | Silver | 1 | TS | 1443.5 | .00124 | .30000 | 100.84 | | U | U |
| 10/04/1993 | Thallium | 1 | TS | 1443.5 | .03541 | .30000 | 100.84 | | U | U |
| 10/04/1993 | Vanadium | 1 | TS | 1443.5 | .01131 | .17000 | 100.84 | | | |
| 10/04/1993 | Zinc | 1 | TS | 1443.5 | .04940 | .00000 | 100.84 | | B | |
| 10/04/1993 | Aluminum | 2 | TS | 1437.6 | 1.95380 | 33.30000 | 132.77 | | | |
| 10/04/1993 | Arsenic | 2 | TS | 1437.6 | .00232 | .00057 | 132.77 | | | |
| 10/04/1993 | Barium | 2 | TS | 1437.6 | .03010 | .52000 | 132.77 | | | |
| 10/04/1993 | Beryllium | 2 | TS | 1437.6 | .00019 | .00100 | 132.77 | | B | |
| 10/04/1993 | Cadmium | 2 | TS | 1437.6 | .00554 | .00140 | 132.77 | | | |
| 10/04/1993 | Chromium | 2 | TS | 1437.6 | .02803 | .00020 | 132.77 | | | |
| 10/04/1993 | Manganese | 2 | TS | 1437.6 | .04619 | .42000 | 132.77 | | | |
| 10/04/1993 | Nickel | 2 | TS | 1437.6 | .00657 | .01000 | 132.77 | | B | U |
| 10/04/1993 | Particulate Fluoride | 2 | TS | 1437.6 | 3.12746 | 8.30000 | 132.77 | | B | |
| 10/04/1993 | Phosphorus | 2 | TS | 1437.6 | 3.51408 | .30000 | 132.77 | | | |
| 10/04/1993 | Selenium | 2 | TS | 1437.6 | .01733 | .70000 | 132.77 | | U | U |
| 10/04/1993 | Silver | 2 | TS | 1437.6 | .00121 | .30000 | 132.77 | | U | U |
| 10/04/1993 | Thallium | 2 | TS | 1437.6 | .03459 | .30000 | 132.77 | | U | U |
| 10/04/1993 | Vanadium | 2 | TS | 1437.6 | .03010 | .17000 | 132.77 | | | |
| 10/04/1993 | Zinc | 2 | TS | 1437.6 | .06835 | .00000 | 132.77 | | B | |
| 10/04/1993 | Aluminum | 3 | TS | 1470.9 | 21.27078 | 33.30000 | 1074.45 | QR | | |

| Sample Date | Chemical Name | Site # | Typ | Run Time (min.) | Chem Conc. (ug/m3) | EPA Scr. L(ug/m3) | Part.C. (ug/m3) | Grav. Val | Qual. Lab | Qual. Val |
|---|---|---|---|---|---|---|---|---|---|---|
| 10/04/1993 | Arsenic | 3 | TS | 1470.9 | .00543 | .00057 | 1074.45 | QR | | |
| 10/04/1993 | Barium | 3 | TS | 1470.9 | .16529 | .52000 | 1074.45 | QR | | |
| 10/04/1993 | Beryllium | 3 | TS | 1470.9 | .00091 | .00100 | 1074.45 | QR | B | |
| 10/04/1993 | Cadmium | 3 | TS | 1470.9 | .00394 | .00140 | 1074.45 | QR | | |
| 10/04/1993 | Chromium | 3 | TS | 1470.9 | .02891 | .00020 | 1074.45 | QR | | |
| 10/04/1993 | Manganese | 3 | TS | 1470.9 | .52815 | .42000 | 1074.45 | QR | | |
| 10/04/1993 | Nickel | 3 | TS | 1470.9 | .01699 | .01000 | 1074.45 | QR | | |
| 10/04/1993 | Particulate Fluoride | 3 | TS | 1470.9 | 2.27854 | 8.30000 | 1074.45 | QR | B | |
| 10/04/1993 | Phosphorus | 3 | TS | 1470.9 | 1.50805 | .30000 | 1074.45 | QR | | |
| 10/04/1993 | Selenium | 3 | TS | 1470.9 | .01653 | .70000 | 1074.45 | QR | U | U |
| 10/04/1993 | Silver | 3 | TS | 1470.9 | .00115 | .30000 | 1074.45 | QR | U | U |
| 10/04/1993 | Thallium | 3 | TS | 1470.9 | .03299 | .30000 | 1074.45 | QR | U | U |
| 10/04/1993 | Vanadium | 3 | TS | 1470.9 | .03352 | .17000 | 1074.45 | QR | | |
| 10/04/1993 | Zinc | 3 | TS | 1470.9 | .11854 | .00000 | 1074.45 | QR | | |
| 10/04/1993 | Aluminum | 4 | TS | 1485.9 | 1.65390 | 33.30000 | 90.85 | | | |
| 10/04/1993 | Arsenic | 4 | TS | 1485.9 | .00238 | .00057 | 90.85 | | | |
| 10/04/1993 | Barium | 4 | TS | 1485.9 | .02618 | .52000 | 90.85 | | | |
| 10/04/1993 | Beryllium | 4 | TS | 1485.9 | .00017 | .00100 | 90.85 | | U | U |
| 10/04/1993 | Cadmium | 4 | TS | 1485.9 | .00148 | .00140 | 90.85 | | B | |
| 10/04/1993 | Chromium | 4 | TS | 1485.9 | .00730 | .00020 | 90.85 | | | |
| 10/04/1993 | Manganese | 4 | TS | 1485.9 | .04600 | .42000 | 90.85 | | | |
| 10/04/1993 | Nickel | 4 | TS | 1485.9 | .00378 | .01000 | 90.85 | | B | U |
| 10/04/1993 | Particulate Fluoride | 4 | TS | 1485.9 | 1.82130 | 8.30000 | 90.85 | | B | |
| 10/04/1993 | Phosphorus | 4 | TS | 1485.9 | .82360 | .30000 | 90.85 | | | |
| 10/04/1993 | Selenium | 4 | TS | 1485.9 | .01681 | .70000 | 90.85 | | U | U |
| 10/04/1993 | Silver | 4 | TS | 1485.9 | .00117 | .30000 | 90.85 | | U | U |
| 10/04/1993 | Thallium | 4 | TS | 1485.9 | .03355 | .30000 | 90.85 | | U | U |
| 10/04/1993 | Vanadium | 4 | TS | 1485.9 | .00627 | .17000 | 90.85 | | | |
| 10/04/1993 | Zinc | 4 | TS | 1485.9 | .04165 | .00000 | 90.85 | | B | |
| 10/04/1993 | Aluminum | 5 | TS | 281.9 | 1.01648 | 33.30000 | 61.80 | TR | | |
| 10/04/1993 | Arsenic | 5 | TS | 281.9 | .00137 | .00057 | 61.80 | TR | B | |
| 10/04/1993 | Barium | 5 | TS | 281.9 | .02238 | .52000 | 61.80 | TR | | U |
| 10/04/1993 | Beryllium | 5 | TS | 281.9 | .00089 | .00100 | 61.80 | TR | U | U |
| 10/04/1993 | Cadmium | 5 | TS | 281.9 | .00706 | .00140 | 61.80 | TR | U | U |
| 10/04/1993 | Chromium | 5 | TS | 281.9 | .01609 | .00020 | 61.80 | TR | | U |
| 10/04/1993 | Manganese | 5 | TS | 281.9 | .02139 | .42000 | 61.80 | TR | | |
| 10/04/1993 | Nickel | 5 | TS | 281.9 | .01768 | .01000 | 61.80 | TR | U | U |
| 10/04/1993 | Particulate Fluoride | 5 | TS | 281.9 | 8.71775 | 8.30000 | 61.80 | TR | B | |
| 10/04/1993 | Phosphorus | 5 | TS | 281.9 | 4.16475 | .30000 | 61.80 | TR | | |
| 10/04/1993 | Selenium | 5 | TS | 281.9 | .08859 | .70000 | 61.80 | TR | B | |
| 10/04/1993 | Silver | 5 | TS | 281.9 | .00618 | .30000 | 61.80 | TR | U | U |
| 10/04/1993 | Thallium | 5 | TS | 281.9 | .17683 | .30000 | 61.80 | TR | U | U |
| 10/04/1993 | Vanadium | 5 | TS | 281.9 | .01567 | .17000 | 61.80 | TR | B | |
| 10/04/1993 | Zinc | 5 | TS | 281.9 | .07482 | .00000 | 61.80 | TR | B | |
| 10/04/1993 | Aluminum | 6 | TS | 1468.0 | 4.11740 | 33.30000 | 182.18 | | | |
| 10/04/1993 | Arsenic | 6 | TS | 1468.0 | .00200 | .00057 | 182.18 | | | |
| 10/04/1993 | Barium | 6 | TS | 1468.0 | .04063 | .52000 | 182.18 | | | |
| 10/04/1993 | Beryllium | 6 | TS | 1468.0 | .00017 | .00100 | 182.18 | | U | U |
| 10/04/1993 | Cadmium | 6 | TS | 1468.0 | .00135 | .00140 | 182.18 | | U | U |

| Sample Date | Chemical Name | Site # | Typ | Run Time (min.) | Chem Conc. (ug/m3) | EPA Scr. L(ug/m3) | Part.C. (ug/m3) | Grav. Val | Qual. Lab | Qual. Val |
|---|---|---|---|---|---|---|---|---|---|---|
| 10/04/1993 | Chromium | 6 | TS | 1468.0 | .00730 | .00020 | 182.18 | | | |
| 10/04/1993 | Manganese | 6 | TS | 1468.0 | .10277 | .42000 | 182.18 | | | |
| 10/04/1993 | Nickel | 6 | TS | 1468.0 | .00974 | .01000 | 182.18 | | | U |
| 10/04/1993 | Particulate Fluoride | 6 | TS | 1468.0 | 1.92010 | 8.30000 | 182.18 | | B | |
| 10/04/1993 | Phosphorus | 6 | TS | 1468.0 | .56927 | .30000 | 182.18 | | | U |
| 10/04/1993 | Selenium | 6 | TS | 1468.0 | .01913 | .70000 | 182.18 | | B | |
| 10/04/1993 | Silver | 6 | TS | 1468.0 | .00118 | .30000 | 182.18 | | U | U |
| 10/04/1993 | Thallium | 6 | TS | 1468.0 | .03387 | .30000 | 182.18 | | U | U |
| 10/04/1993 | Vanadium | 6 | TS | 1468.0 | .00832 | .17000 | 182.18 | | | |
| 10/04/1993 | Zinc | 6 | TS | 1468.0 | .02420 | .00000 | 182.18 | | B | |
| 10/04/1993 | Aluminum | 7 | TS | 1473.7 | 1.83416 | 33.30000 | 110.39 | | | |
| 10/04/1993 | Arsenic | 7 | TS | 1473.7 | .00192 | .00057 | 110.39 | | | |
| 10/04/1993 | Barium | 7 | TS | 1473.7 | .02085 | .52000 | 110.39 | | | |
| 10/04/1993 | Beryllium | 7 | TS | 1473.7 | .00017 | .00100 | 110.39 | | U | U |
| 10/04/1993 | Cadmium | 7 | TS | 1473.7 | .00799 | .00140 | 110.39 | | | |
| 10/04/1993 | Chromium | 7 | TS | 1473.7 | .01354 | .00020 | 110.39 | | | |
| 10/04/1993 | Manganese | 7 | TS | 1473.7 | .03797 | .42000 | 110.39 | | | |
| 10/04/1993 | Nickel | 7 | TS | 1473.7 | .00610 | .01000 | 110.39 | | B | U |
| 10/04/1993 | Particulate Fluoride | 7 | TS | 1473.7 | 3.81721 | 8.30000 | 110.39 | | | |
| 10/04/1993 | Phosphorus | 7 | TS | 1473.7 | 2.71401 | .30000 | 110.39 | | | |
| 10/04/1993 | Selenium | 7 | TS | 1473.7 | .01814 | .70000 | 110.39 | | B | |
| 10/04/1993 | Silver | 7 | TS | 1473.7 | .00118 | .30000 | 110.39 | | U | U |
| 10/04/1993 | Thallium | 7 | TS | 1473.7 | .03391 | .30000 | 110.39 | | U | U |
| 10/04/1993 | Vanadium | 7 | TS | 1473.7 | .01469 | .17000 | 110.39 | | | |
| 10/04/1993 | Zinc | 7 | TS | 1473.7 | .05002 | .00000 | 110.39 | | B | |
| 10/04/1993 | Aluminum | 8 | TS | 1449.1 | 1.60480 | 33.30000 | 102.23 | | | |
| 10/04/1993 | Arsenic | 8 | TS | 1449.1 | .00192 | .00057 | 102.23 | | | |
| 10/04/1993 | Barium | 8 | TS | 1449.1 | .02532 | .52000 | 102.23 | | | |
| 10/04/1993 | Beryllium | 8 | TS | 1449.1 | .00017 | .00100 | 102.23 | | U | U |
| 10/04/1993 | Cadmium | 8 | TS | 1449.1 | .00419 | .00140 | 102.23 | | | |
| 10/04/1993 | Chromium | 8 | TS | 1449.1 | .01093 | .00020 | 102.23 | | | |
| 10/04/1993 | Manganese | 8 | TS | 1449.1 | .04247 | .42000 | 102.23 | | | |
| 10/04/1993 | Nickel | 8 | TS | 1449.1 | .00459 | .01000 | 102.23 | | B | U |
| 10/04/1993 | Particulate Fluoride | 8 | TS | 1449.1 | 2.53171 | 8.30000 | 102.23 | | B | |
| 10/04/1993 | Phosphorus | 8 | TS | 1449.1 | 1.83999 | .30000 | 102.23 | | | |
| 10/04/1993 | Selenium | 8 | TS | 1449.1 | .01736 | .70000 | 102.23 | | U | U |
| 10/04/1993 | Silver | 8 | TS | 1449.1 | .00121 | .30000 | 102.23 | | U | U |
| 10/04/1993 | Thallium | 8 | TS | 1449.1 | .03466 | .30000 | 102.23 | | U | U |
| 10/04/1993 | Vanadium | 8 | TS | 1449.1 | .01190 | .17000 | 102.23 | | | |
| 10/04/1993 | Zinc | 8 | TS | 1449.1 | .04904 | .00000 | 102.23 | | B | |
| 10/06/1993 | Aluminum | 1 | TS | 1447.9 | .37426 | 33.30000 | 53.94 | | | |
| 10/06/1993 | Arsenic | 1 | TS | 1447.9 | .00109 | .00057 | 53.94 | | | |
| 10/06/1993 | Barium | 1 | TS | 1447.9 | .01250 | .52000 | 53.94 | | | |
| 10/06/1993 | Beryllium | 1 | TS | 1447.9 | .00018 | .00100 | 53.94 | | U | U |
| 10/06/1993 | Cadmium | 1 | TS | 1447.9 | .00325 | .00140 | 53.94 | | | |
| 10/06/1993 | Chromium | 1 | TS | 1447.9 | .00591 | .00020 | 53.94 | | | |
| 10/06/1993 | Manganese | 1 | TS | 1447.9 | .01327 | .42000 | 53.94 | | | |
| 10/06/1993 | Nickel | 1 | TS | 1447.9 | .00350 | .01000 | 53.94 | | U | U |
| 10/06/1993 | Particulate | 1 | TS | 1447.9 | 1.70370 | 8.30000 | 53.94 | | B | |

| Sample Date | Chemical Name | Site # | Typ | Run Time (min.) | Chem Conc. (ug/m3) | EPA Scr. L(ug/m3) | Part.C. (ug/m3) | Grav. Val | Qual. Lab | Qual. Val |
|---|---|---|---|---|---|---|---|---|---|---|
| | Fluoride | | | | | | | | | |
| 10/06/1993 | Phosphorus | 1 | TS | 1447.9 | 1.96205 | .30000 | 53.94 | | | |
| 10/06/1993 | Selenium | 1 | TS | 1447.9 | .01836 | .70000 | 53.94 | | B | |
| 10/06/1993 | Silver | 1 | TS | 1447.9 | .00122 | .30000 | 53.94 | | U | U |
| 10/06/1993 | Thallium | 1 | TS | 1447.9 | .03498 | .30000 | 53.94 | | U | U |
| 10/06/1993 | Vanadium | 1 | TS | 1447.9 | .00873 | .17000 | 53.94 | | | |
| 10/06/1993 | Zinc | 1 | TS | 1447.9 | .03568 | .00000 | 53.94 | | B | |
| 10/06/1993 | Aluminum | 2 | TS | 1440.1 | .75130 | 33.30000 | 94.51 | | | |
| 10/06/1993 | Arsenic | 2 | TS | 1440.1 | .00142 | .00057 | 94.51 | | | |
| 10/06/1993 | Barium | 2 | TS | 1440.1 | .01530 | .52000 | 94.51 | | | |
| 10/06/1993 | Beryllium | 2 | TS | 1440.1 | .00024 | .00100 | 94.51 | | B | |
| 10/06/1993 | Cadmium | 2 | TS | 1440.1 | .00854 | .00140 | 94.51 | | | |
| 10/06/1993 | Chromium | 2 | TS | 1440.1 | .02001 | .00020 | 94.51 | | | |
| 10/06/1993 | Manganese | 2 | TS | 1440.1 | .01933 | .42000 | 94.51 | | | |
| 10/06/1993 | Nickel | 2 | TS | 1440.1 | .00582 | .01000 | 94.51 | | B | |
| 10/06/1993 | Particulate Fluoride | 2 | TS | 1440.1 | 2.42465 | 8.30000 | 94.51 | | B | |
| 10/06/1993 | Phosphorus | 2 | TS | 1440.1 | 4.03653 | .30000 | 94.51 | | | |
| 10/06/1993 | Selenium | 2 | TS | 1440.1 | .02056 | .70000 | 94.51 | | B | |
| 10/06/1993 | Silver | 2 | TS | 1440.1 | .00120 | .30000 | 94.51 | | U | U |
| 10/06/1993 | Thallium | 2 | TS | 1440.1 | .03422 | .30000 | 94.51 | | U | U |
| 10/06/1993 | Vanadium | 2 | TS | 1440.1 | .02513 | .17000 | 94.51 | | | |
| 10/06/1993 | Zinc | 2 | TS | 1440.1 | .06570 | .00000 | 94.51 | | B | |
| 10/06/1993 | Aluminum | 3 | TS | 1465.3 | 2.49600 | 33.30000 | 245.10 | QR | | |
| 10/06/1993 | Arsenic | 3 | TS | 1465.3 | .00164 | .00057 | 245.10 | QR | | |
| 10/06/1993 | Barium | 3 | TS | 1465.3 | .03020 | .52000 | 245.10 | QR | | |
| 10/06/1993 | Beryllium | 3 | TS | 1465.3 | .00016 | .00100 | 245.10 | QR | U | U |
| 10/06/1993 | Cadmium | 3 | TS | 1465.3 | .00331 | .00140 | 245.10 | QR | | |
| 10/06/1993 | Chromium | 3 | TS | 1465.3 | .00643 | .00020 | 245.10 | QR | | |
| 10/06/1993 | Manganese | 3 | TS | 1465.3 | .07992 | .42000 | 245.10 | QR | | |
| 10/06/1993 | Nickel | 3 | TS | 1465.3 | .00369 | .01000 | 245.10 | QR | B | |
| 10/06/1993 | Particulate Fluoride | 3 | TS | 1465.3 | 1.48056 | 8.30000 | 245.10 | QR | B | |
| 10/06/1993 | Phosphorus | 3 | TS | 1465.3 | .98923 | .30000 | 245.10 | QR | | |
| 10/06/1993 | Selenium | 3 | TS | 1465.3 | .01644 | .70000 | 245.10 | QR | U | U |
| 10/06/1993 | Silver | 3 | TS | 1465.3 | .00115 | .30000 | 245.10 | QR | U | U |
| 10/06/1993 | Thallium | 3 | TS | 1465.3 | .03282 | .30000 | 245.10 | QR | U | U |
| 10/06/1993 | Vanadium | 3 | TS | 1465.3 | .00701 | .17000 | 245.10 | QR | | |
| 10/06/1993 | Zinc | 3 | TS | 1465.3 | .03380 | .00000 | 245.10 | QR | B | |
| 10/06/1993 | Aluminum | 4 | TS | 1481.0 | .42742 | 33.30000 | 47.70 | | | |
| 10/06/1993 | Arsenic | 4 | TS | 1481.0 | .00088 | .00057 | 47.70 | | | |
| 10/06/1993 | Barium | 4 | TS | 1481.0 | .01052 | .52000 | 47.70 | | | |
| 10/06/1993 | Beryllium | 4 | TS | 1481.0 | .00017 | .00100 | 47.70 | | U | U |
| 10/06/1993 | Cadmium | 4 | TS | 1481.0 | .00270 | .00140 | 47.70 | | | |
| 10/06/1993 | Chromium | 4 | TS | 1481.0 | .00596 | .00020 | 47.70 | | | |
| 10/06/1993 | Manganese | 4 | TS | 1481.0 | .01278 | .42000 | 47.70 | | | |
| 10/06/1993 | Nickel | 4 | TS | 1481.0 | .00334 | .01000 | 47.70 | | B | |
| 10/06/1993 | Particulate Fluoride | 4 | TS | 1481.0 | 1.91075 | 8.30000 | 47.70 | | B | |
| 10/06/1993 | Phosphorus | 4 | TS | 1481.0 | 1.38480 | .30000 | 47.70 | | | |
| 10/06/1993 | Selenium | 4 | TS | 1481.0 | .01671 | .70000 | 47.70 | | U | U |

| Sample Date | Chemical Name | Site # | Typ | Run Time (min.) | Chem Conc. (ug/m3) | EPA Scr. L(ug/m3) | Part.C. (ug/m3) | Grav. Val | Qual. Lab | Qual. Val |
|---|---|---|---|---|---|---|---|---|---|---|
| 10/06/1993 | Silver | 4 | TS | 1481.0 | .00117 | .30000 | 47.70 | | U | U |
| 10/06/1993 | Thallium | 4 | TS | 1481.0 | .03335 | .30000 | 47.70 | | U | U |
| 10/06/1993 | Vanadium | 4 | TS | 1481.0 | .00639 | .17000 | 47.70 | | | |
| 10/06/1993 | Zinc | 4 | TS | 1481.0 | .03269 | .00000 | 47.70 | | B | |
| 10/06/1993 | Aluminum | 6 | TS | 1469.7 | .23959 | 33.30000 | 24.91 | | | |
| 10/06/1993 | Arsenic | 6 | TS | 1469.7 | .00052 | .00057 | 24.91 | | B | |
| 10/06/1993 | Barium | 6 | TS | 1469.7 | .00461 | .52000 | 24.91 | | | |
| 10/06/1993 | Beryllium | 6 | TS | 1469.7 | .00017 | .00100 | 24.91 | | U | U |
| 10/06/1993 | Cadmium | 6 | TS | 1469.7 | .00134 | .00140 | 24.91 | | U | U |
| 10/06/1993 | Chromium | 6 | TS | 1469.7 | .00118 | .00020 | 24.91 | | | U |
| 10/06/1993 | Manganese | 6 | TS | 1469.7 | .00703 | .42000 | 24.91 | | | |
| 10/06/1993 | Nickel | 6 | TS | 1469.7 | .00335 | .01000 | 24.91 | | U | U |
| 10/06/1993 | Particulate Fluoride | 6 | TS | 1469.7 | 1.74673 | 8.30000 | 24.91 | | B | |
| 10/06/1993 | Phosphorus | 6 | TS | 1469.7 | .20479 | .30000 | 24.91 | | B | U |
| 10/06/1993 | Selenium | 6 | TS | 1469.7 | .01680 | .70000 | 24.91 | | U | U |
| 10/06/1993 | Silver | 6 | TS | 1469.7 | .00117 | .30000 | 24.91 | | U | U |
| 10/06/1993 | Thallium | 6 | TS | 1469.7 | .03353 | .30000 | 24.91 | | U | U |
| 10/06/1993 | Vanadium | 6 | TS | 1469.7 | .00209 | .17000 | 24.91 | | B | |
| 10/06/1993 | Zinc | 6 | TS | 1469.7 | .00443 | .00000 | 24.91 | | B | |
| 10/06/1993 | Aluminum | 7 | TS | 1471.3 | .37689 | 33.30000 | 40.60 | | | |
| 10/06/1993 | Arsenic | 7 | TS | 1471.3 | .00020 | .00057 | 40.60 | | B | |
| 10/06/1993 | Barium | 7 | TS | 1471.3 | .00446 | .52000 | 40.60 | | | |
| 10/06/1993 | Beryllium | 7 | TS | 1471.3 | .00017 | .00100 | 40.60 | | U | U |
| 10/06/1993 | Cadmium | 7 | TS | 1471.3 | .00134 | .00140 | 40.60 | | U | U |
| 10/06/1993 | Chromium | 7 | TS | 1471.3 | .00229 | .00020 | 40.60 | | | U |
| 10/06/1993 | Manganese | 7 | TS | 1471.3 | .01055 | .42000 | 40.60 | | | |
| 10/06/1993 | Nickel | 7 | TS | 1471.3 | .00337 | .01000 | 40.60 | | U | U |
| 10/06/1993 | Particulate Fluoride | 7 | TS | 1471.3 | 2.39842 | 8.30000 | 40.60 | | B | U |
| 10/06/1993 | Phosphorus | 7 | TS | 1471.3 | .36883 | .30000 | 40.60 | | | U |
| 10/06/1993 | Selenium | 7 | TS | 1471.3 | .01686 | .70000 | 40.60 | | U | U |
| 10/06/1993 | Silver | 7 | TS | 1471.3 | .00118 | .30000 | 40.60 | | U | U |
| 10/06/1993 | Thallium | 7 | TS | 1471.3 | .03366 | .30000 | 40.60 | | U | U |
| 10/06/1993 | Vanadium | 7 | TS | 1471.3 | .00169 | .17000 | 40.60 | | U | U |
| 10/06/1993 | Zinc | 7 | TS | 1471.3 | .00799 | .00000 | 40.60 | | B | |
| 10/08/1993 | Aluminum | 1 | TS | 1447.4 | .19866 | 33.30000 | 23.88 | | | |
| 10/08/1993 | Arsenic | 1 | TS | 1447.4 | .00035 | .00057 | 23.88 | | B | |
| 10/08/1993 | Barium | 1 | TS | 1447.4 | .00459 | .52000 | 23.88 | | | |
| 10/08/1993 | Beryllium | 1 | TS | 1447.4 | .00017 | .00100 | 23.88 | | U | U |
| 10/08/1993 | Cadmium | 1 | TS | 1447.4 | .00136 | .00140 | 23.88 | | U | U |
| 10/08/1993 | Chromium | 1 | TS | 1447.4 | .00442 | .00020 | 23.88 | | | |
| 10/08/1993 | Manganese | 1 | TS | 1447.4 | .00464 | .42000 | 23.88 | | | |
| 10/08/1993 | Nickel | 1 | TS | 1447.4 | .00391 | .01000 | 23.88 | | B | |
| 10/08/1993 | Particulate Fluoride | 1 | TS | 1447.4 | 1.72218 | 8.30000 | 23.88 | | B | U |
| 10/08/1993 | Phosphorus | 1 | TS | 1447.4 | 1.38995 | .30000 | 23.88 | | | |
| 10/08/1993 | Selenium | 1 | TS | 1447.4 | .01702 | .70000 | 23.88 | | U | U |
| 10/08/1993 | Silver | 1 | TS | 1447.4 | .00119 | .30000 | 23.88 | | U | U |
| 10/08/1993 | Thallium | 1 | TS | 1447.4 | .03397 | .30000 | 23.88 | | U | U |
| 10/08/1993 | Vanadium | 1 | TS | 1447.4 | .00473 | .17000 | 23.88 | | B | |
| 10/08/1993 | Zinc | 1 | TS | 1447.4 | .03261 | .00000 | 23.88 | | B | |

| Sample Date | Chemical Name | Site # | Typ | Run Time (min.) | Chem Conc. (ug/m3) | EPA Scr. L(ug/m3) | Part.C. (ug/m3) | Grav. Val | Qual. Lab | Qual. Val |
|---|---|---|---|---|---|---|---|---|---|---|
| 10/08/1993 | Aluminum | 2 | TS | 1438.0 | .44951 | 33.30000 | 47.77 | | | |
| 10/08/1993 | Arsenic | 2 | TS | 1438.0 | .00068 | .00057 | 47.77 | | | |
| 10/08/1993 | Barium | 2 | TS | 1438.0 | .00850 | .52000 | 47.77 | | | |
| 10/08/1993 | Beryllium | 2 | TS | 1438.0 | .00017 | .00100 | 47.77 | | U | U |
| 10/08/1993 | Cadmium | 2 | TS | 1438.0 | .00896 | .00140 | 47.77 | | | |
| 10/08/1993 | Chromium | 2 | TS | 1438.0 | .01328 | .00020 | 47.77 | | | |
| 10/08/1993 | Manganese | 2 | TS | 1438.0 | .00963 | .42000 | 47.77 | | | |
| 10/08/1993 | Nickel | 2 | TS | 1438.0 | .00533 | .01000 | 47.77 | | B | |
| 10/08/1993 | Particulate Fluoride | 2 | TS | 1438.0 | 2.19109 | 8.30000 | 47.77 | | B | U |
| 10/08/1993 | Phosphorus | 2 | TS | 1438.0 | 2.96129 | .30000 | 47.77 | | | |
| 10/08/1993 | Selenium | 2 | TS | 1438.0 | .02244 | .70000 | 47.77 | | B | |
| 10/08/1993 | Silver | 2 | TS | 1438.0 | .00116 | .30000 | 47.77 | | U | U |
| 10/08/1993 | Thallium | 2 | TS | 1438.0 | .05411 | .30000 | 47.77 | | B | |
| 10/08/1993 | Vanadium | 2 | TS | 1438.0 | .01354 | .17000 | 47.77 | | | |
| 10/08/1993 | Zinc | 2 | TS | 1438.0 | .05272 | .00000 | 47.77 | | B | |
| 10/08/1993 | Aluminum | 3 | TS | 1470.5 | .20785 | 33.30000 | 15.28 | | | |
| 10/08/1993 | Arsenic | 3 | TS | 1470.5 | .00016 | .00057 | 15.28 | | U | U |
| 10/08/1993 | Barium | 3 | TS | 1470.5 | .00259 | .52000 | 15.28 | | | U |
| 10/08/1993 | Beryllium | 3 | TS | 1470.5 | .00016 | .00100 | 15.28 | | U | U |
| 10/08/1993 | Cadmium | 3 | TS | 1470.5 | .00127 | .00140 | 15.28 | | U | U |
| 10/08/1993 | Chromium | 3 | TS | 1470.5 | .00197 | .00020 | 15.28 | | | U |
| 10/08/1993 | Manganese | 3 | TS | 1470.5 | .00484 | .42000 | 15.28 | | | |
| 10/08/1993 | Nickel | 3 | TS | 1470.5 | .00317 | .01000 | 15.28 | | U | U |
| 10/08/1993 | Particulate Fluoride | 3 | TS | 1470.5 | 1.43846 | 8.30000 | 15.28 | | B | |
| 10/08/1993 | Phosphorus | 3 | TS | 1470.5 | .50315 | .30000 | 15.28 | | | U |
| 10/08/1993 | Selenium | 3 | TS | 1470.5 | .01591 | .70000 | 15.28 | | U | U |
| 10/08/1993 | Silver | 3 | TS | 1470.5 | .00111 | .30000 | 15.28 | | U | U |
| 10/08/1993 | Thallium | 3 | TS | 1470.5 | .03175 | .30000 | 15.28 | | U | U |
| 10/08/1993 | Vanadium | 3 | TS | 1470.5 | .00170 | .17000 | 15.28 | | B | |
| 10/08/1993 | Zinc | 3 | TS | 1470.5 | .00722 | .00000 | 15.28 | | B | |
| 10/08/1993 | Aluminum | 4 | TS | 1473.6 | .11367 | 33.30000 | 7.21 | | | |
| 10/08/1993 | Arsenic | 4 | TS | 1473.6 | .00027 | .00057 | 7.21 | | B | |
| 10/08/1993 | Barium | 4 | TS | 1473.6 | .00260 | .52000 | 7.21 | | | U |
| 10/08/1993 | Beryllium | 4 | TS | 1473.6 | .00016 | .00100 | 7.21 | | U | U |
| 10/08/1993 | Cadmium | 4 | TS | 1473.6 | .00130 | .00140 | 7.21 | | U | U |
| 10/08/1993 | Chromium | 4 | TS | 1473.6 | .00099 | .00020 | 7.21 | | | U |
| 10/08/1993 | Manganese | 4 | TS | 1473.6 | .00321 | .42000 | 7.21 | | | |
| 10/08/1993 | Nickel | 4 | TS | 1473.6 | .00325 | .01000 | 7.21 | | U | U |
| 10/08/1993 | Particulate Fluoride | 4 | TS | 1473.6 | 1.37699 | 8.30000 | 7.21 | | B | |
| 10/08/1993 | Phosphorus | 4 | TS | 1473.6 | .21499 | .30000 | 7.21 | | B | |
| 10/08/1993 | Selenium | 4 | TS | 1473.6 | .01630 | .70000 | 7.21 | | B | |
| 10/08/1993 | Silver | 4 | TS | 1473.6 | .00114 | .30000 | 7.21 | | U | U |
| 10/08/1993 | Thallium | 4 | TS | 1473.6 | .03254 | .30000 | 7.21 | | U | U |
| 10/08/1993 | Vanadium | 4 | TS | 1473.6 | .00163 | .17000 | 7.21 | | U | U |
| 10/08/1993 | Zinc | 4 | TS | 1473.6 | .00870 | .00000 | 7.21 | | B | |
| 10/08/1993 | Aluminum | 6 | TS | 1468.8 | .10466 | 33.30000 | 7.74 | | | U |
| 10/08/1993 | Arsenic | 6 | TS | 1468.8 | .00016 | .00057 | 7.74 | | U | U |
| 10/08/1993 | Barium | 6 | TS | 1468.8 | .00163 | .52000 | 7.74 | | U | U |
| 10/08/1993 | Beryllium | 6 | TS | 1468.8 | .00016 | .00100 | 7.74 | | U | U |

| Sample Date | Chemical Name | Site # | Typ | Run Time (min.) | Chem Conc. (ug/m3) | EPA Scr. L(ug/m3) | Part.C. Grav. (ug/m3) | Qual. Val | Qual. Lab | Qual. Val |
|---|---|---|---|---|---|---|---|---|---|---|
| 10/08/1993 | Cadmium | 6 | TS | 1468.8 | .00130 | .00140 | 7.74 | | U | U |
| 10/08/1993 | Chromium | 6 | TS | 1468.8 | .00090 | .00020 | 7.74 | | | U |
| 10/08/1993 | Manganese | 6 | TS | 1468.8 | .00257 | .42000 | 7.74 | | | |
| 10/08/1993 | Nickel | 6 | TS | 1468.8 | .00326 | .01000 | 7.74 | | U | U |
| 10/08/1993 | Particulate Fluoride | 6 | TS | 1468.8 | 1.37810 | 8.30000 | 7.74 | | B | U |
| 10/08/1993 | Phosphorus | 6 | TS | 1468.8 | .15991 | .30000 | 7.74 | | B | U |
| 10/08/1993 | Selenium | 6 | TS | 1468.8 | .01632 | .70000 | 7.74 | | U | U |
| 10/08/1993 | Silver | 6 | TS | 1468.8 | .00114 | .30000 | 7.74 | | U | U |
| 10/08/1993 | Thallium | 6 | TS | 1468.8 | .03257 | .30000 | 7.74 | | U | U |
| 10/08/1993 | Vanadium | 6 | TS | 1468.8 | .00163 | .17000 | 7.74 | | U | U |
| 10/08/1993 | Zinc | 6 | TS | 1468.8 | .00202 | .00000 | 7.74 | | B | U |
| 10/08/1993 | Aluminum | 7 | TS | 1473.0 | .10943 | 33.30000 | 8.86 | | | |
| 10/08/1993 | Arsenic | 7 | TS | 1473.0 | .00016 | .00057 | 8.86 | | U | U |
| 10/08/1993 | Barium | 7 | TS | 1473.0 | .00294 | .52000 | 8.86 | | | U |
| 10/08/1993 | Beryllium | 7 | TS | 1473.0 | .00016 | .00100 | 8.86 | | U | U |
| 10/08/1993 | Cadmium | 7 | TS | 1473.0 | .00130 | .00140 | 8.86 | | U | U |
| 10/08/1993 | Chromium | 7 | TS | 1473.0 | .00154 | .00020 | 8.86 | | | U |
| 10/08/1993 | Manganese | 7 | TS | 1473.0 | .00240 | .42000 | 8.86 | | | U |
| 10/08/1993 | Nickel | 7 | TS | 1473.0 | .00326 | .01000 | 8.86 | | U | U |
| 10/08/1993 | Particulate Fluoride | 7 | TS | 1473.0 | 1.71969 | 8.30000 | 8.86 | | B | |
| 10/08/1993 | Phosphorus | 7 | TS | 1473.0 | .21040 | .30000 | 8.86 | | B | |
| 10/08/1993 | Selenium | 7 | TS | 1473.0 | .01635 | .70000 | 8.86 | | U | U |
| 10/08/1993 | Silver | 7 | TS | 1473.0 | .00114 | .30000 | 8.86 | | U | U |
| 10/08/1993 | Thallium | 7 | TS | 1473.0 | .03263 | .30000 | 8.86 | | U | U |
| 10/08/1993 | Vanadium | 7 | TS | 1473.0 | .00164 | .17000 | 8.86 | | U | U |
| 10/08/1993 | Zinc | 7 | TS | 1473.0 | .00814 | .00000 | 8.86 | | B | |
| 10/08/1993 | Aluminum | 8 | TS | 1454.4 | .16973 | 33.30000 | 24.02 | | | |
| 10/08/1993 | Arsenic | 8 | TS | 1454.4 | .00025 | .00057 | 24.02 | | B | |
| 10/08/1993 | Barium | 8 | TS | 1454.4 | .00200 | .52000 | 24.02 | | | |
| 10/08/1993 | Beryllium | 8 | TS | 1454.4 | .00017 | .00100 | 24.02 | | U | U |
| 10/08/1993 | Cadmium | 8 | TS | 1454.4 | .00236 | .00140 | 24.02 | | | |
| 10/08/1993 | Chromium | 8 | TS | 1454.4 | .00400 | .00020 | 24.02 | | | |
| 10/08/1993 | Manganese | 8 | TS | 1454.4 | .00449 | .42000 | 24.02 | | | |
| 10/08/1993 | Nickel | 8 | TS | 1454.4 | .00523 | .01000 | 24.02 | | B | |
| 10/08/1993 | Particulate Fluoride | 8 | TS | 1454.4 | 2.21446 | 8.30000 | 24.02 | | B | U |
| 10/08/1993 | Phosphorus | 8 | TS | 1454.4 | 1.32603 | .30000 | 24.02 | | | |
| 10/08/1993 | Selenium | 8 | TS | 1454.4 | .01664 | .70000 | 24.02 | | U | U |
| 10/08/1993 | Silver | 8 | TS | 1454.4 | .00116 | .30000 | 24.02 | | U | U |
| 10/08/1993 | Thallium | 8 | TS | 1454.4 | .03322 | .30000 | 24.02 | | U | U |
| 10/08/1993 | Vanadium | 8 | TS | 1454.4 | .00483 | .17000 | 24.02 | | | |
| 10/08/1993 | Zinc | 8 | TS | 1454.4 | .01366 | .00000 | 24.02 | | B | |
| 10/12/1993 | Aluminum | 1 | TS | 1445.9 | .21864 | 33.30000 | 37.59 | | | |
| 10/12/1993 | Arsenic | 1 | TS | 1445.9 | .00112 | .00057 | 37.59 | | | |
| 10/12/1993 | Barium | 1 | TS | 1445.9 | .00872 | .52000 | 37.59 | | | U |
| 10/12/1993 | Beryllium | 1 | TS | 1445.9 | .00017 | .00100 | 37.59 | | U | U |
| 10/12/1993 | Cadmium | 1 | TS | 1445.9 | .01052 | .00140 | 37.59 | | | |
| 10/12/1993 | Chromium | 1 | TS | 1445.9 | .00458 | .00020 | 37.59 | | | J |
| 10/12/1993 | Manganese | 1 | TS | 1445.9 | .00823 | .42000 | 37.59 | | | |
| 10/12/1993 | Nickel | 1 | TS | 1445.9 | .00706 | .01000 | 37.59 | | B | U |

| Sample Date | Chemical Name | Site # | Typ | Run Time (min.) | Chem Conc. (ug/m3) | EPA Scr. L(ug/m3) | Part.C. (ug/m3) | Grav. Val | Qual. Lab | Qual. Val |
|---|---|---|---|---|---|---|---|---|---|---|
| 10/12/1993 | Particulate Fluoride | 1 | TS | 1445.9 | 3.43178 | 8.30000 | 37.59 | | B | U |
| 10/12/1993 | Phosphorus | 1 | TS | 1445.9 | 1.23849 | .30000 | 37.59 | | | |
| 10/12/1993 | Selenium | 1 | TS | 1445.9 | .01737 | .70000 | 37.59 | | U | U |
| 10/12/1993 | Silver | 1 | TS | 1445.9 | .00121 | .30000 | 37.59 | | U | U |
| 10/12/1993 | Thallium | 1 | TS | 1445.9 | .03466 | .30000 | 37.59 | | U | U |
| 10/12/1993 | Vanadium | 1 | TS | 1445.9 | .00529 | .17000 | 37.59 | | | |
| 10/12/1993 | Zinc | 1 | TS | 1445.9 | .03003 | .00000 | 37.59 | | B | |
| 10/12/1993 | Aluminum | 2 | TS | 1407.6 | .95422 | 33.30000 | 108.76 | | | |
| 10/12/1993 | Arsenic | 2 | TS | 1407.6 | .00258 | .00057 | 108.76 | | | |
| 10/12/1993 | Barium | 2 | TS | 1407.6 | .01452 | .52000 | 108.76 | | | |
| 10/12/1993 | Beryllium | 2 | TS | 1407.6 | .00029 | .00100 | 108.76 | | B | |
| 10/12/1993 | Cadmium | 2 | TS | 1407.6 | .06915 | .00140 | 108.76 | | | |
| 10/12/1993 | Chromium | 2 | TS | 1407.6 | .03658 | .00020 | 108.76 | | | |
| 10/12/1993 | Manganese | 2 | TS | 1407.6 | .02199 | .42000 | 108.76 | | | |
| 10/12/1993 | Nickel | 2 | TS | 1407.6 | .01093 | .01000 | 108.76 | | | U |
| 10/12/1993 | Particulate Fluoride | 2 | TS | 1407.6 | 3.38125 | 8.30000 | 108.76 | | B | U |
| 10/12/1993 | Phosphorus | 2 | TS | 1407.6 | 7.81351 | .30000 | 108.76 | | | |
| 10/12/1993 | Selenium | 2 | TS | 1407.6 | .08851 | .70000 | 108.76 | | B | |
| 10/12/1993 | Silver | 2 | TS | 1407.6 | .00153 | .30000 | 108.76 | | B | |
| 10/12/1993 | Thallium | 2 | TS | 1407.6 | .03464 | .30000 | 108.76 | | U | U |
| 10/12/1993 | Vanadium | 2 | TS | 1407.6 | .04418 | .17000 | 108.76 | | | |
| 10/12/1993 | Zinc | 2 | TS | 1407.6 | .18531 | .00000 | 108.76 | | | |
| 10/12/1993 | Aluminum | 3 | TS | 1443.5 | .18623 | 33.30000 | 28.97 | | | |
| 10/12/1993 | Arsenic | 3 | TS | 1443.5 | .00086 | .00057 | 28.97 | | | |
| 10/12/1993 | Barium | 3 | TS | 1443.5 | .00632 | .52000 | 28.97 | | | U |
| 10/12/1993 | Beryllium | 3 | TS | 1443.5 | .00017 | .00100 | 28.97 | | U | U |
| 10/12/1993 | Cadmium | 3 | TS | 1443.5 | .00455 | .00140 | 28.97 | | | |
| 10/12/1993 | Chromium | 3 | TS | 1443.5 | .00238 | .00020 | 28.97 | | | |
| 10/12/1993 | Manganese | 3 | TS | 1443.5 | .00888 | .42000 | 28.97 | | | |
| 10/12/1993 | Nickel | 3 | TS | 1443.5 | .00462 | .01000 | 28.97 | | B | U |
| 10/12/1993 | Particulate Fluoride | 3 | TS | 1443.5 | 2.13868 | 8.30000 | 28.97 | | B | U |
| 10/12/1993 | Phosphorus | 3 | TS | 1443.5 | .68438 | .30000 | 28.97 | | | U |
| 10/12/1993 | Selenium | 3 | TS | 1443.5 | .02310 | .70000 | 28.97 | | B | |
| 10/12/1993 | Silver | 3 | TS | 1443.5 | .00115 | .30000 | 28.97 | | U | U |
| 10/12/1993 | Thallium | 3 | TS | 1443.5 | .03297 | .30000 | 28.97 | | U | U |
| 10/12/1993 | Vanadium | 3 | TS | 1443.5 | .00165 | .17000 | 28.97 | | U | U |
| 10/12/1993 | Zinc | 3 | TS | 1443.5 | .02224 | .00000 | 28.97 | | B | |
| 10/12/1993 | Aluminum | 4 | TS | 1451.1 | .22592 | 33.30000 | 24.89 | | | |
| 10/12/1993 | Arsenic | 4 | TS | 1451.1 | .00094 | .00057 | 24.89 | | | |
| 10/12/1993 | Barium | 4 | TS | 1451.1 | .00733 | .52000 | 24.89 | | | U |
| 10/12/1993 | Beryllium | 4 | TS | 1451.1 | .00017 | .00100 | 24.89 | | U | U |
| 10/12/1993 | Cadmium | 4 | TS | 1451.1 | .00134 | .00140 | 24.89 | | U | U |
| 10/12/1993 | Chromium | 4 | TS | 1451.1 | .00102 | .00020 | 24.89 | | | U |
| 10/12/1993 | Manganese | 4 | TS | 1451.1 | .00955 | .42000 | 24.89 | | | |
| 10/12/1993 | Nickel | 4 | TS | 1451.1 | .00472 | .01000 | 24.89 | | B | U |
| 10/12/1993 | Particulate Fluoride | 4 | TS | 1451.1 | 1.72804 | 8.30000 | 24.89 | | B | U |
| 10/12/1993 | Phosphorus | 4 | TS | 1451.1 | .28980 | .30000 | 24.89 | | B | U |

| Sample Date | Chemical Name | Site # | Typ | Run Time (min.) | Chem Conc. (ug/m3) | EPA Scr. L(ug/m3) | Part.C. (ug/m3) | Grav. Val | Qual. Lab | Qual. Val |
|---|---|---|---|---|---|---|---|---|---|---|
| 10/12/1993 | Selenium | 4 | TS | 1451.1 | .01688 | .70000 | 24.89 | | U | U |
| 10/12/1993 | Silver | 4 | TS | 1451.1 | .00118 | .30000 | 24.89 | | U | U |
| 10/12/1993 | Thallium | 4 | TS | 1451.1 | .03369 | .30000 | 24.89 | | U | U |
| 10/12/1993 | Vanadium | 4 | TS | 1451.1 | .00169 | .17000 | 24.89 | | U | U |
| 10/12/1993 | Zinc | 4 | TS | 1451.1 | .01735 | .00000 | 24.89 | | B | |
| 10/12/1993 | Aluminum | 6 | TS | 1449.2 | .08731 | 33.30000 | 15.73 | | | U |
| 10/12/1993 | Arsenic | 6 | TS | 1449.2 | .00076 | .00057 | 15.73 | | | |
| 10/12/1993 | Barium | 6 | TS | 1449.2 | .00169 | .52000 | 15.73 | | U | U |
| 10/12/1993 | Beryllium | 6 | TS | 1449.2 | .00017 | .00100 | 15.73 | | U | U |
| 10/12/1993 | Cadmium | 6 | TS | 1449.2 | .00134 | .00140 | 15.73 | | U | U |
| 10/12/1993 | Chromium | 6 | TS | 1449.2 | .00099 | .00020 | 15.73 | | | U |
| 10/12/1993 | Manganese | 6 | TS | 1449.2 | .00308 | .42000 | 15.73 | | | |
| 10/12/1993 | Nickel | 6 | TS | 1449.2 | .00379 | .01000 | 15.73 | | B | |
| 10/12/1993 | Particulate Fluoride | 6 | TS | 1449.2 | 1.63873 | 8.30000 | 15.73 | | B | U |
| 10/12/1993 | Phosphorus | 6 | TS | 1449.2 | .21223 | .30000 | 15.73 | | B | U |
| 10/12/1993 | Selenium | 6 | TS | 1449.2 | .01686 | .70000 | 15.73 | | U | U |
| 10/12/1993 | Silver | 6 | TS | 1449.2 | .00118 | .30000 | 15.73 | | U | U |
| 10/12/1993 | Thallium | 6 | TS | 1449.2 | .03365 | .30000 | 15.73 | | U | U |
| 10/12/1993 | Vanadium | 6 | TS | 1449.2 | .00169 | .17000 | 15.73 | | U | U |
| 10/12/1993 | Zinc | 6 | TS | 1449.2 | .00766 | .00000 | 15.73 | | B | |
| 10/12/1993 | Aluminum | 7 | TS | 1464.9 | .10683 | 33.30000 | 13.29 | | | U |
| 10/12/1993 | Arsenic | 7 | TS | 1464.9 | .00077 | .00057 | 13.29 | | | |
| 10/12/1993 | Barium | 7 | TS | 1464.9 | .00168 | .52000 | 13.29 | | U | U |
| 10/12/1993 | Beryllium | 7 | TS | 1464.9 | .00017 | .00100 | 13.29 | | U | U |
| 10/12/1993 | Cadmium | 7 | TS | 1464.9 | .00134 | .00140 | 13.29 | | U | U |
| 10/12/1993 | Chromium | 7 | TS | 1464.9 | .00101 | .00020 | 13.29 | | | U |
| 10/12/1993 | Manganese | 7 | TS | 1464.9 | .00391 | .42000 | 13.29 | | | |
| 10/12/1993 | Nickel | 7 | TS | 1464.9 | .00477 | .01000 | 13.29 | | B | |
| 10/12/1993 | Particulate Fluoride | 7 | TS | 1464.9 | 1.42889 | 8.30000 | 13.29 | | B | U |
| 10/12/1993 | Phosphorus | 7 | TS | 1464.9 | .18429 | .30000 | 13.29 | | B | U |
| 10/12/1993 | Selenium | 7 | TS | 1464.9 | .01676 | .70000 | 13.29 | | U | U |
| 10/12/1993 | Silver | 7 | TS | 1464.9 | .00117 | .30000 | 13.29 | | U | U |
| 10/12/1993 | Thallium | 7 | TS | 1464.9 | .03345 | .30000 | 13.29 | | U | U |
| 10/12/1993 | Vanadium | 7 | TS | 1464.9 | .00168 | .17000 | 13.29 | | U | U |
| 10/12/1993 | Zinc | 7 | TS | 1464.9 | .00450 | .00000 | 13.29 | | B | U |
| 10/12/1993 | Aluminum | 8 | TS | 1449.7 | .27733 | 33.30000 | 37.38 | | | |
| 10/12/1993 | Arsenic | 8 | TS | 1449.7 | .00106 | .00057 | 37.38 | | | |
| 10/12/1993 | Barium | 8 | TS | 1449.7 | .00780 | .52000 | 37.38 | | | |
| 10/12/1993 | Beryllium | 8 | TS | 1449.7 | .00017 | .00100 | 37.38 | | U | U |
| 10/12/1993 | Cadmium | 8 | TS | 1449.7 | .00976 | .00140 | 37.38 | | | |
| 10/12/1993 | Chromium | 8 | TS | 1449.7 | .00671 | .00020 | 37.38 | | | |
| 10/12/1993 | Manganese | 8 | TS | 1449.7 | .00929 | .42000 | 37.38 | | | |
| 10/12/1993 | Nickel | 8 | TS | 1449.7 | .00698 | .01000 | 37.38 | | B | |
| 10/12/1993 | Particulate Fluoride | 8 | TS | 1449.7 | 2.91566 | 8.30000 | 37.38 | | B | U |
| 10/12/1993 | Phosphorus | 8 | TS | 1449.7 | 1.14592 | .30000 | 37.38 | | | |
| 10/12/1993 | Selenium | 8 | TS | 1449.7 | .01953 | .70000 | 37.38 | | B | |
| 10/12/1993 | Silver | 8 | TS | 1449.7 | .00119 | .30000 | 37.38 | | U | U |
| 10/12/1993 | Thallium | 8 | TS | 1449.7 | .03397 | .30000 | 37.38 | | U | U |
| 10/12/1993 | Vanadium | 8 | TS | 1449.7 | .00488 | .17000 | 37.38 | | | |

| Sample Date | Chemical Name | Site # | Typ | Run Time (min.) | Chem Conc. (ug/m3) | EPA Scr. L(ug/m3) | Part.C. (ug/m3) | Grav. Val | Qual. Lab | Qual. Val |
|---|---|---|---|---|---|---|---|---|---|---|
| 10/12/1993 | Zinc | 8 | TS | 1449.7 | .03214 | .00000 | 37.38 | | B | |
| 10/16/1993 | Aluminum | 1 | TS | 1448.3 | .08540 | 33.30000 | 15.04 | | | |
| 10/16/1993 | Arsenic | 1 | TS | 1448.3 | .00017 | .00057 | 15.04 | | U | U |
| 10/16/1993 | Barium | 1 | TS | 1448.3 | .00560 | .52000 | 15.04 | | | U |
| 10/16/1993 | Beryllium | 1 | TS | 1448.3 | .00017 | .00100 | 15.04 | | U | U |
| 10/16/1993 | Cadmium | 1 | TS | 1448.3 | .00169 | .00140 | 15.04 | | | |
| 10/16/1993 | Chromium | 1 | TS | 1448.3 | .00167 | .00020 | 15.04 | | | |
| 10/16/1993 | Manganese | 1 | TS | 1448.3 | .00473 | .42000 | 15.04 | | | |
| 10/16/1993 | Nickel | 1 | TS | 1448.3 | .00342 | .01000 | 15.04 | | U | U |
| 10/16/1993 | Particulate Fluoride | 1 | TS | 1448.3 | 1.48938 | 8.30000 | 15.04 | | B | U |
| 10/16/1993 | Phosphorus | 1 | TS | 1448.3 | .43178 | .30000 | 15.04 | | | U |
| 10/16/1993 | Selenium | 1 | TS | 1448.3 | .01715 | .70000 | 15.04 | | U | U |
| 10/16/1993 | Silver | 1 | TS | 1448.3 | .00120 | .30000 | 15.04 | | U | U |
| 10/16/1993 | Thallium | 1 | TS | 1448.3 | .03423 | .30000 | 15.04 | | U | U |
| 10/16/1993 | Vanadium | 1 | TS | 1448.3 | .00171 | .17000 | 15.04 | | U | U |
| 10/16/1993 | Zinc | 1 | TS | 1448.3 | .01305 | .00000 | 15.04 | | B | |
| 10/16/1993 | Aluminum | 2 | TS | 1402.7 | .43031 | 33.30000 | 52.12 | | | |
| 10/16/1993 | Arsenic | 2 | TS | 1402.7 | .00057 | .00057 | 52.12 | | B | |
| 10/16/1993 | Barium | 2 | TS | 1402.7 | .01132 | .52000 | 52.12 | | | |
| 10/16/1993 | Beryllium | 2 | TS | 1402.7 | .00017 | .00100 | 52.12 | | U | U |
| 10/16/1993 | Cadmium | 2 | TS | 1402.7 | .00762 | .00140 | 52.12 | | | |
| 10/16/1993 | Chromium | 2 | TS | 1402.7 | .01194 | .00020 | 52.12 | | | |
| 10/16/1993 | Manganese | 2 | TS | 1402.7 | .01393 | .42000 | 52.12 | | | |
| 10/16/1993 | Nickel | 2 | TS | 1402.7 | .00576 | .01000 | 52.12 | | B | U |
| 10/16/1993 | Particulate Fluoride | 2 | TS | 1402.7 | 2.99913 | 8.30000 | 52.12 | | B | U |
| 10/16/1993 | Phosphorus | 2 | TS | 1402.7 | 2.20302 | .30000 | 52.12 | | | |
| 10/16/1993 | Selenium | 2 | TS | 1402.7 | .01723 | .70000 | 52.12 | | U | U |
| 10/16/1993 | Silver | 2 | TS | 1402.7 | .00120 | .30000 | 52.12 | | U | U |
| 10/16/1993 | Thallium | 2 | TS | 1402.7 | .03438 | .30000 | 52.12 | | U | U |
| 10/16/1993 | Vanadium | 2 | TS | 1402.7 | .01407 | .17000 | 52.12 | | | |
| 10/16/1993 | Zinc | 2 | TS | 1402.7 | .03404 | .00000 | 52.12 | | B | |
| 10/16/1993 | Aluminum | 3 | TS | 1448.6 | .14852 | 33.30000 | 16.81 | | | |
| 10/16/1993 | Arsenic | 3 | TS | 1448.6 | .00016 | .00057 | 16.81 | | U | U |
| 10/16/1993 | Barium | 3 | TS | 1448.6 | .00492 | .52000 | 16.81 | | | U |
| 10/16/1993 | Beryllium | 3 | TS | 1448.6 | .00016 | .00100 | 16.81 | | U | U |
| 10/16/1993 | Cadmium | 3 | TS | 1448.6 | .00130 | .00140 | 16.81 | | U | U |
| 10/16/1993 | Chromium | 3 | TS | 1448.6 | .00128 | .00020 | 16.81 | | | |
| 10/16/1993 | Manganese | 3 | TS | 1448.6 | .00532 | .42000 | 16.81 | | | |
| 10/16/1993 | Nickel | 3 | TS | 1448.6 | .00431 | .01000 | 16.81 | | B | U |
| 10/16/1993 | Particulate Fluoride | 3 | TS | 1448.6 | 1.69927 | 8.30000 | 16.81 | | B | U |
| 10/16/1993 | Phosphorus | 3 | TS | 1448.6 | .31067 | .30000 | 16.81 | | B | U |
| 10/16/1993 | Selenium | 3 | TS | 1448.6 | .01628 | .70000 | 16.81 | | B | |
| 10/16/1993 | Silver | 3 | TS | 1448.6 | .00114 | .30000 | 16.81 | | U | U |
| 10/16/1993 | Thallium | 3 | TS | 1448.6 | .03574 | .30000 | 16.81 | | B | |
| 10/16/1993 | Vanadium | 3 | TS | 1448.6 | .00163 | .17000 | 16.81 | | U | U |
| 10/16/1993 | Zinc | 3 | TS | 1448.6 | .00960 | .00000 | 16.81 | | B | |
| 10/16/1993 | Aluminum | 4 | TS | 1445.3 | .10016 | 33.30000 | 19.84 | | | |
| 10/16/1993 | Arsenic | 4 | TS | 1445.3 | .00027 | .00057 | 19.84 | | B | |
| 10/16/1993 | Barium | 4 | TS | 1445.3 | .00447 | .52000 | 19.84 | | | U |

| Sample Date | Chemical Name | Site # | Typ | Run Time (min.) | Chem Conc. (ug/m3) | EPA Scr. L(ug/m3) | Part.C. Grav. (ug/m3) | Qual. Val | Lab Val |
|---|---|---|---|---|---|---|---|---|---|
| 10/16/1993 | Beryllium | 4 | TS | 1445.3 | .00017 | .00100 | 19.84 | U | U |
| 10/16/1993 | Cadmium | 4 | TS | 1445.3 | .00159 | .00140 | 19.84 | | |
| 10/16/1993 | Chromium | 4 | TS | 1445.3 | .00178 | .00020 | 19.84 | | |
| 10/16/1993 | Manganese | 4 | TS | 1445.3 | .00530 | .42000 | 19.84 | | |
| 10/16/1993 | Nickel | 4 | TS | 1445.3 | .00452 | .01000 | 19.84 | B | U |
| 10/16/1993 | Particulate Fluoride | 4 | TS | 1445.3 | 2.23684 | 8.30000 | 19.84 | B | U |
| 10/16/1993 | Phosphorus | 4 | TS | 1445.3 | .57757 | .30000 | 19.84 | | U |
| 10/16/1993 | Selenium | 4 | TS | 1445.3 | .01676 | .70000 | 19.84 | B | |
| 10/16/1993 | Silver | 4 | TS | 1445.3 | .00117 | .30000 | 19.84 | U | U |
| 10/16/1993 | Thallium | 4 | TS | 1445.3 | .03345 | .30000 | 19.84 | U | U |
| 10/16/1993 | Vanadium | 4 | TS | 1445.3 | .00168 | .17000 | 19.84 | U | U |
| 10/16/1993 | Zinc | 4 | TS | 1445.3 | .01342 | .00000 | 19.84 | B | |
| 10/16/1993 | Aluminum | 5 | TS | 1467.6 | .14664 | 33.30000 | 25.00 | | |
| 10/16/1993 | Arsenic | 5 | TS | 1467.6 | .00017 | .00057 | 25.00 | U | U |
| 10/16/1993 | Barium | 5 | TS | 1467.6 | .00325 | .52000 | 25.00 | | U |
| 10/16/1993 | Beryllium | 5 | TS | 1467.6 | .00017 | .00100 | 25.00 | U | U |
| 10/16/1993 | Cadmium | 5 | TS | 1467.6 | .00244 | .00140 | 25.00 | | |
| 10/16/1993 | Chromium | 5 | TS | 1467.6 | .00379 | .00020 | 25.00 | | |
| 10/16/1993 | Manganese | 5 | TS | 1467.6 | .00377 | .42000 | 25.00 | | |
| 10/16/1993 | Nickel | 5 | TS | 1467.6 | .00429 | .01000 | 25.00 | B | U |
| 10/16/1993 | Particulate Fluoride | 5 | TS | 1467.6 | 2.69603 | 8.30000 | 25.00 | B | U |
| 10/16/1993 | Phosphorus | 5 | TS | 1467.6 | 1.23623 | .30000 | 25.00 | | |
| 10/16/1993 | Selenium | 5 | TS | 1467.6 | .01650 | .70000 | 25.00 | U | U |
| 10/16/1993 | Silver | 5 | TS | 1467.6 | .00115 | .30000 | 25.00 | U | U |
| 10/16/1993 | Thallium | 5 | TS | 1467.6 | .03294 | .30000 | 25.00 | U | U |
| 10/16/1993 | Vanadium | 5 | TS | 1467.6 | .00293 | .17000 | 25.00 | B | |
| 10/16/1993 | Zinc | 5 | TS | 1467.6 | .01341 | .00000 | 25.00 | B | |
| 10/16/1993 | Aluminum | 6 | TS | 1450.3 | .03923 | 33.30000 | 11.29 | | U |
| 10/16/1993 | Arsenic | 6 | TS | 1450.3 | .00017 | .00057 | 11.29 | U | U |
| 10/16/1993 | Barium | 6 | TS | 1450.3 | .00288 | .52000 | 11.29 | | U |
| 10/16/1993 | Beryllium | 6 | TS | 1450.3 | .00017 | .00100 | 11.29 | U | U |
| 10/16/1993 | Cadmium | 6 | TS | 1450.3 | .00133 | .00140 | 11.29 | U | U |
| 10/16/1993 | Chromium | 6 | TS | 1450.3 | .00091 | .00020 | 11.29 | | U |
| 10/16/1993 | Manganese | 6 | TS | 1450.3 | .00218 | .42000 | 11.29 | | |
| 10/16/1993 | Nickel | 6 | TS | 1450.3 | .00333 | .01000 | 11.29 | U | U |
| 10/16/1993 | Particulate Fluoride | 6 | TS | 1450.3 | 3.00026 | 8.30000 | 11.29 | B | U |
| 10/16/1993 | Phosphorus | 6 | TS | 1450.3 | .30600 | .30000 | 11.29 | B | U |
| 10/16/1993 | Selenium | 6 | TS | 1450.3 | .01666 | .70000 | 11.29 | U | U |
| 10/16/1993 | Silver | 6 | TS | 1450.3 | .00116 | .30000 | 11.29 | U | U |
| 10/16/1993 | Thallium | 6 | TS | 1450.3 | .04494 | .30000 | 11.29 | B | |
| 10/16/1993 | Vanadium | 6 | TS | 1450.3 | .00167 | .17000 | 11.29 | U | U |
| 10/16/1993 | Zinc | 6 | TS | 1450.3 | .00361 | .00000 | 11.29 | B | U |
| 10/16/1993 | Aluminum | 7 | TS | 1466.9 | .20972 | 33.30000 | 32.20 | | |
| 10/16/1993 | Arsenic | 7 | TS | 1466.9 | .00017 | .00057 | 32.20 | U | U |
| 10/16/1993 | Barium | 7 | TS | 1466.9 | .00562 | .52000 | 32.20 | | U |
| 10/16/1993 | Beryllium | 7 | TS | 1466.9 | .00017 | .00100 | 32.20 | U | U |
| 10/16/1993 | Cadmium | 7 | TS | 1466.9 | .00258 | .00140 | 32.20 | | |
| 10/16/1993 | Chromium | 7 | TS | 1466.9 | .00491 | .00020 | 32.20 | | |
| 10/16/1993 | Manganese | 7 | TS | 1466.9 | .00448 | .42000 | 32.20 | | |

| Sample Date | Chemical Name | Site # | Typ | Run Time (min.) | Chem Conc. (ug/m3) | EPA Scr. L(ug/m3) | Part.C. Grav. (ug/m3) | Val | Qual. Lab | Qual. Val |
|---|---|---|---|---|---|---|---|---|---|---|
| 10/16/1993 | Nickel | 7 | TS | 1466.9 | .00330 | .01000 | 32.20 | | U | U |
| 10/16/1993 | Particulate Fluoride | 7 | TS | 1466.9 | 2.32807 | 8.30000 | 32.20 | | B | U |
| 10/16/1993 | Phosphorus | 7 | TS | 1466.9 | 1.35200 | .30000 | 32.20 | | | |
| 10/16/1993 | Selenium | 7 | TS | 1466.9 | .01655 | .70000 | 32.20 | | U | U |
| 10/16/1993 | Silver | 7 | TS | 1466.9 | .00115 | .30000 | 32.20 | | U | U |
| 10/16/1993 | Thallium | 7 | TS | 1466.9 | .03304 | .30000 | 32.20 | | U | U |
| 10/16/1993 | Vanadium | 7 | TS | 1466.9 | .00407 | .17000 | 32.20 | | B | |
| 10/16/1993 | Zinc | 7 | TS | 1466.9 | .01563 | .00000 | 32.20 | | B | |
| 10/16/1993 | Aluminum | 8 | TS | 1455.2 | .09888 | 33.30000 | 16.85 | | | |
| 10/16/1993 | Arsenic | 8 | TS | 1455.2 | .00017 | .00057 | 16.85 | | U | U |
| 10/16/1993 | Barium | 8 | TS | 1455.2 | .00565 | .52000 | 16.85 | | | U |
| 10/16/1993 | Beryllium | 8 | TS | 1455.2 | .00017 | .00100 | 16.85 | | U | U |
| 10/16/1993 | Cadmium | 8 | TS | 1455.2 | .00199 | .00140 | 16.85 | | | |
| 10/16/1993 | Chromium | 8 | TS | 1455.2 | .00144 | .00020 | 16.85 | | | |
| 10/16/1993 | Manganese | 8 | TS | 1455.2 | .00492 | .42000 | 16.85 | | | |
| 10/16/1993 | Nickel | 8 | TS | 1455.2 | .00586 | .01000 | 16.85 | | B | U |
| 10/16/1993 | Particulate Fluoride | 8 | TS | 1455.2 | 3.06000 | 8.30000 | 16.85 | | B | U |
| 10/16/1993 | Phosphorus | 8 | TS | 1455.2 | .41023 | .30000 | 16.85 | | | U |
| 10/16/1993 | Selenium | 8 | TS | 1455.2 | .01677 | .70000 | 16.85 | | U | U |
| 10/16/1993 | Silver | 8 | TS | 1455.2 | .00117 | .30000 | 16.85 | | U | U |
| 10/16/1993 | Thallium | 8 | TS | 1455.2 | .03347 | .30000 | 16.85 | | U | U |
| 10/16/1993 | Vanadium | 8 | TS | 1455.2 | .00168 | .17000 | 16.85 | | U | U |
| 10/16/1993 | Zinc | 8 | TS | 1455.2 | .01076 | .00000 | 16.85 | | B | |
| 10/20/1993 | Aluminum | 1 | TS | 1447.7 | .43645 | 33.30000 | 61.15 | | | |
| 10/20/1993 | Arsenic | 1 | TS | 1447.7 | .00035 | .00057 | 61.15 | | B | |
| 10/20/1993 | Barium | 1 | TS | 1447.7 | .01237 | .52000 | 61.15 | | | |
| 10/20/1993 | Beryllium | 1 | TS | 1447.7 | .00020 | .00100 | 61.15 | | B | |
| 10/20/1993 | Cadmium | 1 | TS | 1447.7 | .00223 | .00140 | 61.15 | | | |
| 10/20/1993 | Chromium | 1 | TS | 1447.7 | .00516 | .00020 | 61.15 | | | |
| 10/20/1993 | Manganese | 1 | TS | 1447.7 | .01700 | .42000 | 61.15 | | | |
| 10/20/1993 | Nickel | 1 | TS | 1447.7 | .00341 | .01000 | 61.15 | | U | U |
| 10/20/1993 | Particulate Fluoride | 1 | TS | 1447.7 | 2.67854 | 8.30000 | 61.15 | | B | U |
| 10/20/1993 | Phosphorus | 1 | TS | 1447.7 | 1.33927 | .30000 | 61.15 | | | |
| 10/20/1993 | Selenium | 1 | TS | 1447.7 | .01706 | .70000 | 61.15 | | U | U |
| 10/20/1993 | Silver | 1 | TS | 1447.7 | .00119 | .30000 | 61.15 | | U | U |
| 10/20/1993 | Thallium | 1 | TS | 1447.7 | .03406 | .30000 | 61.15 | | U | U |
| 10/20/1993 | Vanadium | 1 | TS | 1447.7 | .00509 | .17000 | 61.15 | | | |
| 10/20/1993 | Zinc | 1 | TS | 1447.7 | .02488 | .00000 | 61.15 | | B | |
| 10/20/1993 | Aluminum | 2 | TS | 1440.2 | .91086 | 33.30000 | 104.64 | | | |
| 10/20/1993 | Arsenic | 2 | TS | 1440.2 | .00094 | .00057 | 104.64 | | | |
| 10/20/1993 | Barium | 2 | TS | 1440.2 | .01702 | .52000 | 104.64 | | | |
| 10/20/1993 | Beryllium | 2 | TS | 1440.2 | .00017 | .00100 | 104.64 | | U | U |
| 10/20/1993 | Cadmium | 2 | TS | 1440.2 | .00838 | .00140 | 104.64 | | | |
| 10/20/1993 | Chromium | 2 | TS | 1440.2 | .02081 | .00020 | 104.64 | | | |
| 10/20/1993 | Manganese | 2 | TS | 1440.2 | .02852 | .42000 | 104.64 | | | |
| 10/20/1993 | Nickel | 2 | TS | 1440.2 | .00691 | .01000 | 104.64 | | B | |
| 10/20/1993 | Particulate Fluoride | 2 | TS | 1440.2 | 2.90543 | 8.30000 | 104.64 | | B | |

| Sample Date | Chemical Name | Site # | Typ | Run Time (min.) | Chem Conc. (ug/m3) | EPA Scr. L(ug/m3) | Part.C. (ug/m3) | Grav. Val | Qual. Lab | Qual. Val |
|---|---|---|---|---|---|---|---|---|---|---|
| 10/20/1993 | Phosphorus | 2 | TS | 1440.2 | 4.51438 | .30000 | 104.64 | | | |
| 10/20/1993 | Selenium | 2 | TS | 1440.2 | .02413 | .70000 | 104.64 | | B | U |
| 10/20/1993 | Silver | 2 | TS | 1440.2 | .00116 | .30000 | 104.64 | | U | U |
| 10/20/1993 | Thallium | 2 | TS | 1440.2 | .03331 | .30000 | 104.64 | | U | U |
| 10/20/1993 | Vanadium | 2 | TS | 1440.2 | .02234 | .17000 | 104.64 | | | |
| 10/20/1993 | Zinc | 2 | TS | 1440.2 | .07047 | .00000 | 104.64 | | | |
| 10/20/1993 | Aluminum | 3 | TS | 1442.5 | .56492 | 33.30000 | 57.37 | | | |
| 10/20/1993 | Arsenic | 3 | TS | 1442.5 | .00030 | .00057 | 57.37 | | B | |
| 10/20/1993 | Barium | 3 | TS | 1442.5 | .00900 | .52000 | 57.37 | | | |
| 10/20/1993 | Beryllium | 3 | TS | 1442.5 | .00016 | .00100 | 57.37 | | U | U |
| 10/20/1993 | Cadmium | 3 | TS | 1442.5 | .00174 | .00140 | 57.37 | | | |
| 10/20/1993 | Chromium | 3 | TS | 1442.5 | .00370 | .00020 | 57.37 | | | |
| 10/20/1993 | Manganese | 3 | TS | 1442.5 | .01982 | .42000 | 57.37 | | | |
| 10/20/1993 | Nickel | 3 | TS | 1442.5 | .00349 | .01000 | 57.37 | | B | |
| 10/20/1993 | Particulate Fluoride | 3 | TS | 1442.5 | 2.17027 | 8.30000 | 57.37 | | B | |
| 10/20/1993 | Phosphorus | 3 | TS | 1442.5 | .73206 | .30000 | 57.37 | | | |
| 10/20/1993 | Selenium | 3 | TS | 1442.5 | .02112 | .70000 | 57.37 | | B | U |
| 10/20/1993 | Silver | 3 | TS | 1442.5 | .00113 | .30000 | 57.37 | | U | U |
| 10/20/1993 | Thallium | 3 | TS | 1442.5 | .03246 | .30000 | 57.37 | | U | U |
| 10/20/1993 | Vanadium | 3 | TS | 1442.5 | .00446 | .17000 | 57.37 | | B | |
| 10/20/1993 | Zinc | 3 | TS | 1442.5 | .02611 | .00000 | 57.37 | | B | |
| 10/20/1993 | Aluminum | 4 | TS | 1448.9 | .59095 | 33.30000 | 71.00 | | | |
| 10/20/1993 | Arsenic | 4 | TS | 1448.9 | .00037 | .00057 | 71.00 | | B | |
| 10/20/1993 | Barium | 4 | TS | 1448.9 | .01120 | .52000 | 71.00 | | | |
| 10/20/1993 | Beryllium | 4 | TS | 1448.9 | .00017 | .00100 | 71.00 | | U | U |
| 10/20/1993 | Cadmium | 4 | TS | 1448.9 | .00223 | .00140 | 71.00 | | | |
| 10/20/1993 | Chromium | 4 | TS | 1448.9 | .00348 | .00020 | 71.00 | | | |
| 10/20/1993 | Manganese | 4 | TS | 1448.9 | .02040 | .42000 | 71.00 | | | |
| 10/20/1993 | Nickel | 4 | TS | 1448.9 | .00374 | .01000 | 71.00 | | B | |
| 10/20/1993 | Particulate Fluoride | 4 | TS | 1448.9 | 2.35849 | 8.30000 | 71.00 | | B | |
| 10/20/1993 | Phosphorus | 4 | TS | 1448.9 | .73537 | .30000 | 71.00 | | | |
| 10/20/1993 | Selenium | 4 | TS | 1448.9 | .01908 | .70000 | 71.00 | | B | U |
| 10/20/1993 | Silver | 4 | TS | 1448.9 | .00116 | .30000 | 71.00 | | U | U |
| 10/20/1993 | Thallium | 4 | TS | 1448.9 | .03319 | .30000 | 71.00 | | U | U |
| 10/20/1993 | Vanadium | 4 | TS | 1448.9 | .00365 | .17000 | 71.00 | | B | |
| 10/20/1993 | Zinc | 4 | TS | 1448.9 | .02690 | .00000 | 71.00 | | B | |
| 10/20/1993 | Aluminum | 5 | TS | 1441.6 | .32360 | 33.30000 | 23.72 | | | |
| 10/20/1993 | Arsenic | 5 | TS | 1441.6 | .00017 | .00057 | 23.72 | | U | U |
| 10/20/1993 | Barium | 5 | TS | 1441.6 | .00459 | .52000 | 23.72 | | | |
| 10/20/1993 | Beryllium | 5 | TS | 1441.6 | .00017 | .00100 | 23.72 | | U | U |
| 10/20/1993 | Cadmium | 5 | TS | 1441.6 | .00133 | .00140 | 23.72 | | U | U |
| 10/20/1993 | Chromium | 5 | TS | 1441.6 | .00194 | .00020 | 23.72 | | | |
| 10/20/1993 | Manganese | 5 | TS | 1441.6 | .00952 | .42000 | 23.72 | | | |
| 10/20/1993 | Nickel | 5 | TS | 1441.6 | .00334 | .01000 | 23.72 | | U | U |
| 10/20/1993 | Particulate Fluoride | 5 | TS | 1441.6 | 2.07746 | 8.30000 | 23.72 | | B | |
| 10/20/1993 | Phosphorus | 5 | TS | 1441.6 | .43880 | .30000 | 23.72 | | | U |
| 10/20/1993 | Selenium | 5 | TS | 1441.6 | .01671 | .70000 | 23.72 | | U | U |
| 10/20/1993 | Silver | 5 | TS | 1441.6 | .00117 | .30000 | 23.72 | | U | U |
| 10/20/1993 | Thallium | 5 | TS | 1441.6 | .03336 | .30000 | 23.72 | | U | U |

| Sample Date | Chemical Name | Site # | Typ | Run Time (min.) | Chem Conc. (ug/m3) | EPA Scr. L(ug/m3) | Part.C. (ug/m3) | Grav. Val | Qual. Lab | Qual. Val |
|---|---|---|---|---|---|---|---|---|---|---|
| 10/20/1993 | Vanadium | 5 | TS | 1441.6 | .00224 | .17000 | 23.72 | | B | |
| 10/20/1993 | Zinc | 5 | TS | 1441.6 | .02018 | .00000 | 23.72 | | B | |
| 10/20/1993 | Aluminum | 6 | TS | 1451.4 | .38198 | 33.30000 | 31.49 | | | |
| 10/20/1993 | Arsenic | 6 | TS | 1451.4 | .00017 | .00057 | 31.49 | | U | U |
| 10/20/1993 | Barium | 6 | TS | 1451.4 | .00579 | .52000 | 31.49 | | | |
| 10/20/1993 | Beryllium | 6 | TS | 1451.4 | .00017 | .00100 | 31.49 | | U | U |
| 10/20/1993 | Cadmium | 6 | TS | 1451.4 | .00132 | .00140 | 31.49 | | U | U |
| 10/20/1993 | Chromium | 6 | TS | 1451.4 | .00099 | .00020 | 31.49 | | | U |
| 10/20/1993 | Manganese | 6 | TS | 1451.4 | .01286 | .42000 | 31.49 | | | |
| 10/20/1993 | Nickel | 6 | TS | 1451.4 | .00331 | .01000 | 31.49 | | U | U |
| 10/20/1993 | Particulate Fluoride | 6 | TS | 1451.4 | 2.04515 | 8.30000 | 31.49 | | B | |
| 10/20/1993 | Phosphorus | 6 | TS | 1451.4 | .15899 | .30000 | 31.49 | | B | U |
| 10/20/1993 | Selenium | 6 | TS | 1451.4 | .01656 | .70000 | 31.49 | | U | U |
| 10/20/1993 | Silver | 6 | TS | 1451.4 | .00115 | .30000 | 31.49 | | U | U |
| 10/20/1993 | Thallium | 6 | TS | 1451.4 | .03305 | .30000 | 31.49 | | U | U |
| 10/20/1993 | Vanadium | 6 | TS | 1451.4 | .00226 | .17000 | 31.49 | | B | |
| 10/20/1993 | Zinc | 6 | TS | 1451.4 | .00552 | .00000 | 31.49 | | B | |
| 10/20/1993 | Aluminum | 7 | TS | 1434.4 | .33274 | 33.30000 | 62.23 | | | |
| 10/20/1993 | Arsenic | 7 | TS | 1434.4 | .00017 | .00057 | 62.23 | | U | U |
| 10/20/1993 | Barium | 7 | TS | 1434.4 | .00605 | .52000 | 62.23 | | | |
| 10/20/1993 | Beryllium | 7 | TS | 1434.4 | .00017 | .00100 | 62.23 | | U | U |
| 10/20/1993 | Cadmium | 7 | TS | 1434.4 | .00134 | .00140 | 62.23 | | U | U |
| 10/20/1993 | Chromium | 7 | TS | 1434.4 | .00382 | .00020 | 62.23 | | | |
| 10/20/1993 | Manganese | 7 | TS | 1434.4 | .01006 | .42000 | 62.23 | | | |
| 10/20/1993 | Nickel | 7 | TS | 1434.4 | .00362 | .01000 | 62.23 | | B | |
| 10/20/1993 | Particulate Fluoride | 7 | TS | 1434.4 | 2.80416 | 8.30000 | 62.23 | | B | |
| 10/20/1993 | Phosphorus | 7 | TS | 1434.4 | .99957 | .30000 | 62.23 | | | |
| 10/20/1993 | Selenium | 7 | TS | 1434.4 | .01684 | .70000 | 62.23 | | U | U |
| 10/20/1993 | Silver | 7 | TS | 1434.4 | .00117 | .30000 | 62.23 | | U | U |
| 10/20/1993 | Thallium | 7 | TS | 1434.4 | .03361 | .30000 | 62.23 | | U | U |
| 10/20/1993 | Vanadium | 7 | TS | 1434.4 | .00481 | .17000 | 62.23 | | | |
| 10/20/1993 | Zinc | 7 | TS | 1434.4 | .01281 | .00000 | 62.23 | | B | |
| 10/20/1993 | Aluminum | 8 | TS | 1453.0 | .50383 | 33.30000 | 60.47 | | | |
| 10/20/1993 | Arsenic | 8 | TS | 1453.0 | .00028 | .00057 | 60.47 | | B | |
| 10/20/1993 | Barium | 8 | TS | 1453.0 | .01092 | .52000 | 60.47 | | | |
| 10/20/1993 | Beryllium | 8 | TS | 1453.0 | .00017 | .00100 | 60.47 | | B | |
| 10/20/1993 | Cadmium | 8 | TS | 1453.0 | .00192 | .00140 | 60.47 | | | |
| 10/20/1993 | Chromium | 8 | TS | 1453.0 | .00552 | .00020 | 60.47 | | | |
| 10/20/1993 | Manganese | 8 | TS | 1453.0 | .01631 | .42000 | 60.47 | | | |
| 10/20/1993 | Nickel | 8 | TS | 1453.0 | .00333 | .01000 | 60.47 | | U | U |
| 10/20/1993 | Particulate Fluoride | 8 | TS | 1453.0 | 2.51581 | 8.30000 | 60.47 | | B | |
| 10/20/1993 | Phosphorus | 8 | TS | 1453.0 | 1.25790 | .30000 | 60.47 | | | |
| 10/20/1993 | Selenium | 8 | TS | 1453.0 | .01671 | .70000 | 60.47 | | U | U |
| 10/20/1993 | Silver | 8 | TS | 1453.0 | .00116 | .30000 | 60.47 | | U | U |
| 10/20/1993 | Thallium | 8 | TS | 1453.0 | .03334 | .30000 | 60.47 | | U | U |
| 10/20/1993 | Vanadium | 8 | TS | 1453.0 | .00582 | .17000 | 60.47 | | | |
| 10/20/1993 | Zinc | 8 | TS | 1453.0 | .02569 | .00000 | 60.47 | | B | |
| 10/24/1993 | Aluminum | 1 | TS | 1446.5 | .91951 | 33.30000 | 93.73 | | | |
| 10/24/1993 | Arsenic | 1 | TS | 1446.5 | .00169 | .00057 | 93.73 | | | |

| Sample Date | Chemical Name | Site # | Typ | Run Time (min.) | Chem Conc. (ug/m3) | EPA Scr. L(ug/m3) | Part.C. (ug/m3) | Grav. Val | Qual. Lab | Qual. Val |
|---|---|---|---|---|---|---|---|---|---|---|
| 10/24/1993 | Barium | 1 | TS | 1446.5 | .01438 | .52000 | 93.73 | | | |
| 10/24/1993 | Beryllium | 1 | TS | 1446.5 | .00023 | .00100 | 93.73 | | B | |
| 10/24/1993 | Cadmium | 1 | TS | 1446.5 | .00871 | .00140 | 93.73 | | | |
| 10/24/1993 | Chromium | 1 | TS | 1446.5 | .01590 | .00020 | 93.73 | | | |
| 10/24/1993 | Manganese | 1 | TS | 1446.5 | .01874 | .42000 | 93.73 | | | |
| 10/24/1993 | Nickel | 1 | TS | 1446.5 | .00346 | .01000 | 93.73 | | U | U |
| 10/24/1993 | Particulate Fluoride | 1 | TS | 1446.5 | 6.60941 | 8.30000 | 93.73 | | | U |
| 10/24/1993 | Phosphorus | 1 | TS | 1446.5 | 3.63656 | .30000 | 93.73 | | | |
| 10/24/1993 | Selenium | 1 | TS | 1446.5 | .02862 | .70000 | 93.73 | | B | |
| 10/24/1993 | Silver | 1 | TS | 1446.5 | .00121 | .30000 | 93.73 | | U | U |
| 10/24/1993 | Thallium | 1 | TS | 1446.5 | .03464 | .30000 | 93.73 | | U | U |
| 10/24/1993 | Vanadium | 1 | TS | 1446.5 | .01943 | .17000 | 93.73 | | | |
| 10/24/1993 | Zinc | 1 | TS | 1446.5 | .04314 | .00000 | 93.73 | | B | |
| 10/24/1993 | Aluminum | 2 | TS | 1438.6 | 2.59032 | 33.30000 | 270.76 | | | |
| 10/24/1993 | Arsenic | 2 | TS | 1438.6 | .00425 | .00057 | 270.76 | | | |
| 10/24/1993 | Barium | 2 | TS | 1438.6 | .03524 | .52000 | 270.76 | | | |
| 10/24/1993 | Beryllium | 2 | TS | 1438.6 | .00032 | .00100 | 270.76 | | B | |
| 10/24/1993 | Cadmium | 2 | TS | 1438.6 | .05356 | .00140 | 270.76 | | | |
| 10/24/1993 | Chromium | 2 | TS | 1438.6 | .08251 | .00020 | 270.76 | | | |
| 10/24/1993 | Manganese | 2 | TS | 1438.6 | .05255 | .42000 | 270.76 | | | |
| 10/24/1993 | Nickel | 2 | TS | 1438.6 | .02151 | .01000 | 270.76 | | | |
| 10/24/1993 | Particulate Fluoride | 2 | TS | 1438.6 | 6.00575 | 8.30000 | 270.76 | | | U |
| 10/24/1993 | Phosphorus | 2 | TS | 1438.6 | 16.09648 | .30000 | 270.76 | | | |
| 10/24/1993 | Selenium | 2 | TS | 1438.6 | .11362 | .70000 | 270.76 | | | |
| 10/24/1993 | Silver | 2 | TS | 1438.6 | .00264 | .30000 | 270.76 | | B | |
| 10/24/1993 | Thallium | 2 | TS | 1438.6 | .04322 | .30000 | 270.76 | | B | |
| 10/24/1993 | Vanadium | 2 | TS | 1438.6 | .11768 | .17000 | 270.76 | | | |
| 10/24/1993 | Zinc | 2 | TS | 1438.6 | .24889 | .00000 | 270.76 | | | |
| 10/24/1993 | Aluminum | 3 | TS | 1447.2 | .64105 | 33.30000 | 57.64 | | | |
| 10/24/1993 | Arsenic | 3 | TS | 1447.2 | .00136 | .00057 | 57.64 | | | |
| 10/24/1993 | Barium | 3 | TS | 1447.2 | .00965 | .52000 | 57.64 | | | |
| 10/24/1993 | Beryllium | 3 | TS | 1447.2 | .00016 | .00100 | 57.64 | | U | U |
| 10/24/1993 | Cadmium | 3 | TS | 1447.2 | .00411 | .00140 | 57.64 | | | |
| 10/24/1993 | Chromium | 3 | TS | 1447.2 | .00689 | .00020 | 57.64 | | | |
| 10/24/1993 | Manganese | 3 | TS | 1447.2 | .01693 | .42000 | 57.64 | | | |
| 10/24/1993 | Nickel | 3 | TS | 1447.2 | .00362 | .01000 | 57.64 | | B | |
| 10/24/1993 | Particulate Fluoride | 3 | TS | 1447.2 | 2.52615 | 8.30000 | 57.64 | | B | U |
| 10/24/1993 | Phosphorus | 3 | TS | 1447.2 | 1.20730 | .30000 | 57.64 | | | |
| 10/24/1993 | Selenium | 3 | TS | 1447.2 | .03287 | .70000 | 57.64 | | B | |
| 10/24/1993 | Silver | 3 | TS | 1447.2 | .00115 | .30000 | 57.64 | | U | U |
| 10/24/1993 | Thallium | 3 | TS | 1447.2 | .03287 | .30000 | 57.64 | | U | U |
| 10/24/1993 | Vanadium | 3 | TS | 1447.2 | .00689 | .17000 | 57.64 | | | |
| 10/24/1993 | Zinc | 3 | TS | 1447.2 | .02579 | .00000 | 57.64 | | B | |
| 10/24/1993 | Aluminum | 4 | TS | 1451.7 | .35878 | 33.30000 | 37.11 | | | |
| 10/24/1993 | Arsenic | 4 | TS | 1451.7 | .00122 | .00057 | 37.11 | | | |
| 10/24/1993 | Barium | 4 | TS | 1451.7 | .00699 | .52000 | 37.11 | | | |
| 10/24/1993 | Beryllium | 4 | TS | 1451.7 | .00017 | .00100 | 37.11 | | U | U |
| 10/24/1993 | Cadmium | 4 | TS | 1451.7 | .00209 | .00140 | 37.11 | | | |
| 10/24/1993 | Chromium | 4 | TS | 1451.7 | .00292 | .00020 | 37.11 | | | |

| Sample Date | Chemical Name | Site # | Typ | Run Time (min.) | Chem Conc. (ug/m3) | EPA Scr. L(ug/m3) | Part.C. (ug/m3) | Grav. Val | Qual. Lab | Qual. Val |
|---|---|---|---|---|---|---|---|---|---|---|
| 10/24/1993 | Manganese | 4 | TS | 1451.7 | .01216 | .42000 | 37.11 | | | |
| 10/24/1993 | Nickel | 4 | TS | 1451.7 | .00337 | .01000 | 37.11 | | U | U |
| 10/24/1993 | Particulate Fluoride | 4 | TS | 1451.7 | 1.79390 | 8.30000 | 37.11 | | B | U |
| 10/24/1993 | Phosphorus | 4 | TS | 1451.7 | .00660 | .30000 | 37.11 | | | U |
| 10/24/1993 | Selenium | 4 | TS | 1451.7 | .01686 | .70000 | 37.11 | | U | U |
| 10/24/1993 | Silver | 4 | TS | 1451.7 | .00118 | .30000 | 37.11 | | U | U |
| 10/24/1993 | Thallium | 4 | TS | 1451.7 | .03366 | .30000 | 37.11 | | U | U |
| 10/24/1993 | Vanadium | 4 | TS | 1451.7 | .00315 | .17000 | 37.11 | | B | |
| 10/24/1993 | Zinc | 4 | TS | 1451.7 | .01754 | .00000 | 37.11 | | B | |
| 10/24/1993 | Aluminum | 5 | TS | 1437.6 | .33991 | 33.30000 | 38.56 | | | |
| 10/24/1993 | Arsenic | 5 | TS | 1437.6 | .00127 | .00057 | 38.56 | | | |
| 10/24/1993 | Barium | 5 | TS | 1437.6 | .00760 | .52000 | 38.56 | | | |
| 10/24/1993 | Beryllium | 5 | TS | 1437.6 | .00017 | .00100 | 38.56 | | U | U |
| 10/24/1993 | Cadmium | 5 | TS | 1437.6 | .00510 | .00140 | 38.56 | | | |
| 10/24/1993 | Chromium | 5 | TS | 1437.6 | .00517 | .00020 | 38.56 | | | |
| 10/24/1993 | Manganese | 5 | TS | 1437.6 | .00963 | .42000 | 38.56 | | | |
| 10/24/1993 | Nickel | 5 | TS | 1437.6 | .00340 | .01000 | 38.56 | | B | |
| 10/24/1993 | Particulate Fluoride | 5 | TS | 1437.6 | 1.81150 | 8.30000 | 38.56 | | B | U |
| 10/24/1993 | Phosphorus | 5 | TS | 1437.6 | 1.24159 | .30000 | 38.56 | | | |
| 10/24/1993 | Selenium | 5 | TS | 1437.6 | .01873 | .70000 | 38.56 | | B | |
| 10/24/1993 | Silver | 5 | TS | 1437.6 | .00119 | .30000 | 38.56 | | U | U |
| 10/24/1993 | Thallium | 5 | TS | 1437.6 | .03399 | .30000 | 38.56 | | U | U |
| 10/24/1993 | Vanadium | 5 | TS | 1437.6 | .00463 | .17000 | 38.56 | | B | |
| 10/24/1993 | Zinc | 5 | TS | 1437.6 | .02361 | .00000 | 38.56 | | B | |
| 10/24/1993 | Aluminum | 6 | TS | 1441.4 | .27405 | 33.30000 | 28.43 | | | |
| 10/24/1993 | Arsenic | 6 | TS | 1441.4 | .00137 | .00057 | 28.43 | | | |
| 10/24/1993 | Barium | 6 | TS | 1441.4 | .00635 | .52000 | 28.43 | | | |
| 10/24/1993 | Beryllium | 6 | TS | 1441.4 | .00017 | .00100 | 28.43 | | U | U |
| 10/24/1993 | Cadmium | 6 | TS | 1441.4 | .00135 | .00140 | 28.43 | | U | U |
| 10/24/1993 | Chromium | 6 | TS | 1441.4 | .00117 | .00020 | 28.43 | | | |
| 10/24/1993 | Manganese | 6 | TS | 1441.4 | .01019 | .42000 | 28.43 | | | |
| 10/24/1993 | Nickel | 6 | TS | 1441.4 | .00338 | .01000 | 28.43 | | U | U |
| 10/24/1993 | Particulate Fluoride | 6 | TS | 1441.4 | 1.97778 | 8.30000 | 28.43 | | B | U |
| 10/24/1993 | Phosphorus | 6 | TS | 1441.4 | .20655 | .30000 | 28.43 | | B | U |
| 10/24/1993 | Selenium | 6 | TS | 1441.4 | .01694 | .70000 | 28.43 | | B | |
| 10/24/1993 | Silver | 6 | TS | 1441.4 | .00118 | .30000 | 28.43 | | U | U |
| 10/24/1993 | Thallium | 6 | TS | 1441.4 | .03382 | .30000 | 28.43 | | U | U |
| 10/24/1993 | Vanadium | 6 | TS | 1441.4 | .00169 | .17000 | 28.43 | | U | U |
| 10/24/1993 | Zinc | 6 | TS | 1441.4 | .01121 | .00000 | 28.43 | | B | |
| 10/24/1993 | Aluminum | 7 | TS | 1439.0 | .35061 | 33.30000 | 36.10 | | | |
| 10/24/1993 | Arsenic | 7 | TS | 1439.0 | .00131 | .00057 | 36.10 | | | |
| 10/24/1993 | Barium | 7 | TS | 1439.0 | .00700 | .52000 | 36.10 | | | |
| 10/24/1993 | Beryllium | 7 | TS | 1439.0 | .00017 | .00100 | 36.10 | | U | U |
| 10/24/1993 | Cadmium | 7 | TS | 1439.0 | .00444 | .00140 | 36.10 | | | |
| 10/24/1993 | Chromium | 7 | TS | 1439.0 | .00443 | .00020 | 36.10 | | | |
| 10/24/1993 | Manganese | 7 | TS | 1439.0 | .00856 | .42000 | 36.10 | | | |
| 10/24/1993 | Nickel | 7 | TS | 1439.0 | .00340 | .01000 | 36.10 | | U | U |
| 10/24/1993 | Particulate Fluoride | 7 | TS | 1439.0 | 1.65794 | 8.30000 | 36.10 | | B | U |

| Sample Date | Chemical Name | Site # | Typ | Run Time (min.) | Chem Conc. (ug/m3) | EPA Scr. L(ug/m3) | Part.C. Grav. (ug/m3) | Qual. Val | Lab Val |
|---|---|---|---|---|---|---|---|---|---|
| 10/24/1993 | Phosphorus | 7 | TS | 1439.0 | 1.05999 | .30000 | 36.10 | | |
| 10/24/1993 | Selenium | 7 | TS | 1439.0 | .01705 | .70000 | 36.10 | U | U |
| 10/24/1993 | Silver | 7 | TS | 1439.0 | .00119 | .30000 | 36.10 | U | U |
| 10/24/1993 | Thallium | 7 | TS | 1439.0 | .03404 | .30000 | 36.10 | U | U |
| 10/24/1993 | Vanadium | 7 | TS | 1439.0 | .00427 | .17000 | 36.10 | B | |
| 10/24/1993 | Zinc | 7 | TS | 1439.0 | .01807 | .00000 | 36.10 | B | |
| 10/24/1993 | Aluminum | 8 | TS | 1454.6 | .87820 | 33.30000 | 100.58 | | |
| 10/24/1993 | Arsenic | 8 | TS | 1454.6 | .00168 | .00057 | 100.58 | | |
| 10/24/1993 | Barium | 8 | TS | 1454.6 | .01560 | .52000 | 100.58 | | |
| 10/24/1993 | Beryllium | 8 | TS | 1454.6 | .00022 | .00100 | 100.58 | B | |
| 10/24/1993 | Cadmium | 8 | TS | 1454.6 | .00831 | .00140 | 100.58 | | |
| 10/24/1993 | Chromium | 8 | TS | 1454.6 | .01547 | .00020 | 100.58 | | |
| 10/24/1993 | Manganese | 8 | TS | 1454.6 | .01844 | .42000 | 100.58 | | |
| 10/24/1993 | Nickel | 8 | TS | 1454.6 | .00398 | .01000 | 100.58 | B | |
| 10/24/1993 | Particulate Fluoride | 8 | TS | 1454.6 | 8.17402 | 8.30000 | 100.58 | | |
| 10/24/1993 | Phosphorus | 8 | TS | 1454.6 | 3.40472 | .30000 | 100.58 | | |
| 10/24/1993 | Selenium | 8 | TS | 1454.6 | .03303 | .70000 | 100.58 | B | |
| 10/24/1993 | Silver | 8 | TS | 1454.6 | .00118 | .30000 | 100.58 | U | U |
| 10/24/1993 | Thallium | 8 | TS | 1454.6 | .03384 | .30000 | 100.58 | U | U |
| 10/24/1993 | Vanadium | 8 | TS | 1454.6 | .01777 | .17000 | 100.58 | | |
| 10/24/1993 | Zinc | 8 | TS | 1454.6 | .04350 | .00000 | 100.58 | B | |
| 10/28/1993 | Aluminum | 1 | TS | 1447.7 | .81479 | 33.30000 | 51.93 | | |
| 10/28/1993 | Arsenic | 1 | TS | 1447.7 | .00068 | .00057 | 51.93 | | |
| 10/28/1993 | Barium | 1 | TS | 1447.7 | .01096 | .52000 | 51.93 | | |
| 10/28/1993 | Beryllium | 1 | TS | 1447.7 | .00017 | .00100 | 51.93 | U | U |
| 10/28/1993 | Cadmium | 1 | TS | 1447.7 | .00322 | .00140 | 51.93 | | |
| 10/28/1993 | Chromium | 1 | TS | 1447.7 | .01123 | .00020 | 51.93 | | |
| 10/28/1993 | Manganese | 1 | TS | 1447.7 | .01924 | .42000 | 51.93 | | |
| 10/28/1993 | Nickel | 1 | TS | 1447.7 | .00343 | .01000 | 51.93 | U | U |
| 10/28/1993 | Particulate Fluoride | 1 | TS | 1447.7 | 6.44304 | 8.30000 | 51.93 | | U |
| 10/28/1993 | Phosphorus | 1 | TS | 1447.7 | 2.02672 | .30000 | 51.93 | | |
| 10/28/1993 | Selenium | 1 | TS | 1447.7 | .01719 | .70000 | 51.93 | U | U |
| 10/28/1993 | Silver | 1 | TS | 1447.7 | .00120 | .30000 | 51.93 | U | U |
| 10/28/1993 | Thallium | 1 | TS | 1447.7 | .03430 | .30000 | 51.93 | U | U |
| 10/28/1993 | Vanadium | 1 | TS | 1447.7 | .01376 | .17000 | 51.93 | | |
| 10/28/1993 | Zinc | 1 | TS | 1447.7 | .04190 | .00000 | 51.93 | B | |
| 10/28/1993 | Aluminum | 2 | TS | 1440.4 | 2.48394 | 33.30000 | 260.60 | | |
| 10/28/1993 | Arsenic | 2 | TS | 1440.4 | .00230 | .00057 | 260.60 | | J |
| 10/28/1993 | Barium | 2 | TS | 1440.4 | .02819 | .52000 | 260.60 | | |
| 10/28/1993 | Beryllium | 2 | TS | 1440.4 | .00018 | .00100 | 260.60 | B | |
| 10/28/1993 | Cadmium | 2 | TS | 1440.4 | .02651 | .00140 | 260.60 | | |
| 10/28/1993 | Chromium | 2 | TS | 1440.4 | .08369 | .00020 | 260.60 | | |
| 10/28/1993 | Manganese | 2 | TS | 1440.4 | .05403 | .42000 | 260.60 | | |
| 10/28/1993 | Nickel | 2 | TS | 1440.4 | .01352 | .01000 | 260.60 | | |
| 10/28/1993 | Particulate Fluoride | 2 | TS | 1440.4 | 5.21507 | 8.30000 | 260.60 | | U |
| 10/28/1993 | Phosphorus | 2 | TS | 1440.4 | 15.93473 | .30000 | 260.60 | | |
| 10/28/1993 | Selenium | 2 | TS | 1440.4 | .07231 | .70000 | 260.60 | B | |
| 10/28/1993 | Silver | 2 | TS | 1440.4 | .00226 | .30000 | 260.60 | B | |

| Sample Date | Chemical Name | Site # | Typ | Run Time (min.) | Chem Conc. (ug/m3) | EPA Scr. L(ug/m3) | Part.C. Grav. (ug/m3) | Qual. Val | Lab | Val |
|---|---|---|---|---|---|---|---|---|---|---|
| 10/28/1993 | Thallium | 2 | TS | 1440.4 | .03354 | .30000 | 260.60 | | U | U |
| 10/28/1993 | Vanadium | 2 | TS | 1440.4 | .08503 | .17000 | 260.60 | | | |
| 10/28/1993 | Zinc | 2 | TS | 1440.4 | .28187 | .00000 | 260.60 | | | |
| 10/28/1993 | Aluminum | 3 | TS | 1445.8 | .87233 | 33.30000 | 73.35 | | | |
| 10/28/1993 | Arsenic | 3 | TS | 1445.8 | .00069 | .00057 | 73.35 | | | |
| 10/28/1993 | Barium | 3 | TS | 1445.8 | .01120 | .52000 | 73.35 | | | |
| 10/28/1993 | Beryllium | 3 | TS | 1445.8 | .00016 | .00100 | 73.35 | | U | U |
| 10/28/1993 | Cadmium | 3 | TS | 1445.8 | .00368 | .00140 | 73.35 | | | |
| 10/28/1993 | Chromium | 3 | TS | 1445.8 | .00931 | .00020 | 73.35 | | | |
| 10/28/1993 | Manganese | 3 | TS | 1445.8 | .02363 | .42000 | 73.35 | | | |
| 10/28/1993 | Nickel | 3 | TS | 1445.8 | .00326 | .01000 | 73.35 | | U | U |
| 10/28/1993 | Particulate Fluoride | 3 | TS | 1445.8 | 2.68208 | 8.30000 | 73.35 | | B | U |
| 10/28/1993 | Phosphorus | 3 | TS | 1445.8 | 1.73164 | .30000 | 73.35 | | | |
| 10/28/1993 | Selenium | 3 | TS | 1445.8 | .01712 | .70000 | 73.35 | | B | |
| 10/28/1993 | Silver | 3 | TS | 1445.8 | .00114 | .30000 | 73.35 | | U | U |
| 10/28/1993 | Thallium | 3 | TS | 1445.8 | .03261 | .30000 | 73.35 | | U | U |
| 10/28/1993 | Vanadium | 3 | TS | 1445.8 | .00807 | .17000 | 73.35 | | | |
| 10/28/1993 | Zinc | 3 | TS | 1445.8 | .03476 | .00000 | 73.35 | | B | |
| 10/28/1993 | Aluminum | 4 | TS | 1446.7 | .64620 | 33.30000 | 50.08 | | | |
| 10/28/1993 | Arsenic | 4 | TS | 1446.7 | .00037 | .00057 | 50.08 | | B | |
| 10/28/1993 | Barium | 4 | TS | 1446.7 | .00922 | .52000 | 50.08 | | | |
| 10/28/1993 | Beryllium | 4 | TS | 1446.7 | .00017 | .00100 | 50.08 | | U | U |
| 10/28/1993 | Cadmium | 4 | TS | 1446.7 | .00134 | .00140 | 50.08 | | U | U |
| 10/28/1993 | Chromium | 4 | TS | 1446.7 | .00228 | .00020 | 50.08 | | | U |
| 10/28/1993 | Manganese | 4 | TS | 1446.7 | .01891 | .42000 | 50.08 | | | |
| 10/28/1993 | Nickel | 4 | TS | 1446.7 | .00335 | .01000 | 50.08 | | U | U |
| 10/28/1993 | Particulate Fluoride | 4 | TS | 1446.7 | 2.25871 | 8.30000 | 50.08 | | B | U |
| 10/28/1993 | Phosphorus | 4 | TS | 1446.7 | .33814 | .30000 | 50.08 | | | U |
| 10/28/1993 | Selenium | 4 | TS | 1446.7 | .02092 | .70000 | 50.08 | | B | |
| 10/28/1993 | Silver | 4 | TS | 1446.7 | .00117 | .30000 | 50.08 | | U | U |
| 10/28/1993 | Thallium | 4 | TS | 1446.7 | .03348 | .30000 | 50.08 | | U | U |
| 10/28/1993 | Vanadium | 4 | TS | 1446.7 | .00233 | .17000 | 50.08 | | B | |
| 10/28/1993 | Zinc | 4 | TS | 1446.7 | .01824 | .00000 | 50.08 | | B | |
| 10/28/1993 | Aluminum | 5 | TS | 1442.3 | .48060 | 33.30000 | 36.69 | | | |
| 10/28/1993 | Arsenic | 5 | TS | 1442.3 | .00047 | .00057 | 36.69 | | B | |
| 10/28/1993 | Barium | 5 | TS | 1442.3 | .00605 | .52000 | 36.69 | | | |
| 10/28/1993 | Beryllium | 5 | TS | 1442.3 | .00017 | .00100 | 36.69 | | U | U |
| 10/28/1993 | Cadmium | 5 | TS | 1442.3 | .00185 | .00140 | 36.69 | | | |
| 10/28/1993 | Chromium | 5 | TS | 1442.3 | .00393 | .00020 | 36.69 | | | U |
| 10/28/1993 | Manganese | 5 | TS | 1442.3 | .01448 | .42000 | 36.69 | | | |
| 10/28/1993 | Nickel | 5 | TS | 1442.3 | .00336 | .01000 | 36.69 | | U | U |
| 10/28/1993 | Particulate Fluoride | 5 | TS | 1442.3 | 2.62085 | 8.30000 | 36.69 | | B | U |
| 10/28/1993 | Phosphorus | 5 | TS | 1442.3 | .86468 | .30000 | 36.69 | | | U |
| 10/28/1993 | Selenium | 5 | TS | 1442.3 | .01682 | .70000 | 36.69 | | U | U |
| 10/28/1993 | Silver | 5 | TS | 1442.3 | .00117 | .30000 | 36.69 | | U | U |
| 10/28/1993 | Thallium | 5 | TS | 1442.3 | .03358 | .30000 | 36.69 | | U | U |
| 10/28/1993 | Vanadium | 5 | TS | 1442.3 | .00412 | .17000 | 36.69 | | B | |
| 10/28/1993 | Zinc | 5 | TS | 1442.3 | .01850 | .00000 | 36.69 | | B | |
| 10/28/1993 | Aluminum | 6 | TS | 1442.2 | .61520 | 33.30000 | 44.63 | | | |

| Sample Date | Chemical Name | Site # | Typ | Run Time (min.) | Chem Conc. (ug/m3) | EPA Scr. L(ug/m3) | Part.C. (ug/m3) | Grav. Val | Qual. Lab | Qual. Val |
|---|---|---|---|---|---|---|---|---|---|---|
| 10/28/1993 | Arsenic | 6 | TS | 1442.2 | .00019 | .00057 | 44.63 | | B | |
| 10/28/1993 | Barium | 6 | TS | 1442.2 | .00936 | .52000 | 44.63 | | | |
| 10/28/1993 | Beryllium | 6 | TS | 1442.2 | .00017 | .00100 | 44.63 | | U | U |
| 10/28/1993 | Cadmium | 6 | TS | 1442.2 | .00134 | .00140 | 44.63 | | U | U |
| 10/28/1993 | Chromium | 6 | TS | 1442.2 | .00142 | .00020 | 44.63 | | | U |
| 10/28/1993 | Manganese | 6 | TS | 1442.2 | .01946 | .42000 | 44.63 | | | |
| 10/28/1993 | Nickel | 6 | TS | 1442.2 | .00335 | .01000 | 44.63 | | U | U |
| 10/28/1993 | Particulate Fluoride | 6 | TS | 1442.2 | 2.08632 | 8.30000 | 44.63 | | B | U |
| 10/28/1993 | Phosphorus | 6 | TS | 1442.2 | 2.81519 | .30000 | 44.63 | | | |
| 10/28/1993 | Selenium | 6 | TS | 1442.2 | .01678 | .70000 | 44.63 | | B | |
| 10/28/1993 | Silver | 6 | TS | 1442.2 | .00117 | .30000 | 44.63 | | U | U |
| 10/28/1993 | Thallium | 6 | TS | 1442.2 | .03350 | .30000 | 44.63 | | U | U |
| 10/28/1993 | Vanadium | 6 | TS | 1442.2 | .00178 | .17000 | 44.63 | | B | |
| 10/28/1993 | Zinc | 6 | TS | 1442.2 | .00943 | .00000 | 44.63 | | B | |
| 10/28/1993 | Aluminum | 7 | TS | 1455.6 | .28231 | 33.30000 | 28.98 | | | |
| 10/28/1993 | Arsenic | 7 | TS | 1455.6 | .00092 | .00057 | 28.98 | | | |
| 10/28/1993 | Barium | 7 | TS | 1455.6 | .00467 | .52000 | 28.98 | | | |
| 10/28/1993 | Beryllium | 7 | TS | 1455.6 | .00017 | .00100 | 28.98 | | U | U |
| 10/28/1993 | Cadmium | 7 | TS | 1455.6 | .00195 | .00140 | 28.98 | | | |
| 10/28/1993 | Chromium | 7 | TS | 1455.6 | .00464 | .00020 | 28.98 | | | |
| 10/28/1993 | Manganese | 7 | TS | 1455.6 | .00686 | .42000 | 28.98 | | | |
| 10/28/1993 | Nickel | 7 | TS | 1455.6 | .00334 | .01000 | 28.98 | | U | U |
| 10/28/1993 | Particulate Fluoride | 7 | TS | 1455.6 | 2.55010 | 8.30000 | 28.98 | | B | U |
| 10/28/1993 | Phosphorus | 7 | TS | 1455.6 | 1.50476 | .30000 | 28.98 | | | |
| 10/28/1993 | Selenium | 7 | TS | 1455.6 | .01671 | .70000 | 28.98 | | U | U |
| 10/28/1993 | Silver | 7 | TS | 1455.6 | .00117 | .30000 | 28.98 | | U | U |
| 10/28/1993 | Thallium | 7 | TS | 1455.6 | .03336 | .30000 | 28.98 | | U | U |
| 10/28/1993 | Vanadium | 7 | TS | 1455.6 | .00462 | .17000 | 28.98 | | B | |
| 10/28/1993 | Zinc | 7 | TS | 1455.6 | .01538 | .00000 | 28.98 | | B | |
| 10/28/1993 | Aluminum | 8 | TS | 1453.4 | .83768 | 33.30000 | 75.84 | | | |
| 10/28/1993 | Arsenic | 8 | TS | 1453.4 | .00072 | .00057 | 75.84 | | | |
| 10/28/1993 | Barium | 8 | TS | 1453.4 | .01173 | .52000 | 75.84 | | | |
| 10/28/1993 | Beryllium | 8 | TS | 1453.4 | .00017 | .00100 | 75.84 | | U | U |
| 10/28/1993 | Cadmium | 8 | TS | 1453.4 | .00393 | .00140 | 75.84 | | | |
| 10/28/1993 | Chromium | 8 | TS | 1453.4 | .00253 | .00020 | 75.84 | | | U |
| 10/28/1993 | Manganese | 8 | TS | 1453.4 | .01964 | .42000 | 75.84 | | | |
| 10/28/1993 | Nickel | 8 | TS | 1453.4 | .00336 | .01000 | 75.84 | | U | U |
| 10/28/1993 | Particulate Fluoride | 8 | TS | 1453.4 | 6.96946 | 8.30000 | 75.84 | | | U |
| 10/28/1993 | Phosphorus | 8 | TS | 1453.4 | 1.74907 | .30000 | 75.84 | | | |
| 10/28/1993 | Selenium | 8 | TS | 1453.4 | .01682 | .70000 | 75.84 | | U | U |
| 10/28/1993 | Silver | 8 | TS | 1453.4 | .00117 | .30000 | 75.84 | | U | U |
| 10/28/1993 | Thallium | 8 | TS | 1453.4 | .03357 | .30000 | 75.84 | | U | U |
| 10/28/1993 | Vanadium | 8 | TS | 1453.4 | .01320 | .17000 | 75.84 | | | |
| 10/28/1993 | Zinc | 8 | TS | 1453.4 | .03646 | .00000 | 75.84 | | B | |
| 11/01/1993 | Aluminum | 1 | TS | 1444.4 | 1.42331 | 33.30000 | 95.51 | | | |
| 11/01/1993 | Arsenic | 1 | TS | 1444.4 | .00082 | .00057 | 95.51 | | | |
| 11/01/1993 | Barium | 1 | TS | 1444.4 | .02199 | .52000 | 95.51 | | | |
| 11/01/1993 | Beryllium | 1 | TS | 1444.4 | .00027 | .00100 | 95.51 | | B | |
| 11/01/1993 | Cadmium | 1 | TS | 1444.4 | .00637 | .00140 | 95.51 | | | |

| Sample Date | Chemical Name | Site # | Typ | Run Time (min.) | Chem Conc. (ug/m3) | EPA Scr. L(ug/m3) | Part.C. (ug/m3) | Grav. Val | Qual. Lab | Qual. Val |
|---|---|---|---|---|---|---|---|---|---|---|
| 11/01/1993 | Chromium | 1 | TS | 1444.4 | .01774 | .00020 | 95.51 | | | |
| 11/01/1993 | Manganese | 1 | TS | 1444.4 | .03062 | .42000 | 95.51 | | | |
| 11/01/1993 | Nickel | 1 | TS | 1444.4 | .00405 | .01000 | 95.51 | | B | |
| 11/01/1993 | Particulate Fluoride | 1 | TS | 1444.4 | 7.89228 | 8.30000 | 95.51 | | | |
| 11/01/1993 | Phosphorus | 1 | TS | 1444.4 | 2.21254 | .30000 | 95.51 | | | |
| 11/01/1993 | Selenium | 1 | TS | 1444.4 | .01693 | .70000 | 95.51 | | U | U |
| 11/01/1993 | Silver | 1 | TS | 1444.4 | .00118 | .30000 | 95.51 | | U | UJ |
| 11/01/1993 | Thallium | 1 | TS | 1444.4 | .03380 | .30000 | 95.51 | | U | U |
| 11/01/1993 | Vanadium | 1 | TS | 1444.4 | .01875 | .17000 | 95.51 | | | |
| 11/01/1993 | Zinc | 1 | TS | 1444.4 | .06341 | .00000 | 95.51 | | B | |
| 11/01/1993 | Aluminum | 2 | TS | 1440.0 | 2.65288 | 33.30000 | 224.47 | | | |
| 11/01/1993 | Arsenic | 2 | TS | 1440.0 | .00297 | .00057 | 224.47 | | | |
| 11/01/1993 | Barium | 2 | TS | 1440.0 | .01586 | .52000 | 224.47 | | | |
| 11/01/1993 | Beryllium | 2 | TS | 1440.0 | .00021 | .00100 | 224.47 | | B | |
| 11/01/1993 | Cadmium | 2 | TS | 1440.0 | .04799 | .00140 | 224.47 | | | |
| 11/01/1993 | Chromium | 2 | TS | 1440.0 | .09743 | .00020 | 224.47 | | | |
| 11/01/1993 | Manganese | 2 | TS | 1440.0 | .04239 | .42000 | 224.47 | | | |
| 11/01/1993 | Nickel | 2 | TS | 1440.0 | .01718 | .01000 | 224.47 | | | |
| 11/01/1993 | Particulate Fluoride | 2 | TS | 1440.0 | 7.96522 | 8.30000 | 224.47 | | | U |
| 11/01/1993 | Phosphorus | 2 | TS | 1440.0 | 12.57321 | .30000 | 224.47 | | | |
| 11/01/1993 | Selenium | 2 | TS | 1440.0 | .02890 | .70000 | 224.47 | | B | |
| 11/01/1993 | Silver | 2 | TS | 1440.0 | .00456 | .30000 | 224.47 | | B | J |
| 11/01/1993 | Thallium | 2 | TS | 1440.0 | .03298 | .30000 | 224.47 | | U | U |
| 11/01/1993 | Vanadium | 2 | TS | 1440.0 | .09940 | .17000 | 224.47 | | | |
| 11/01/1993 | Zinc | 2 | TS | 1440.0 | .47989 | .00000 | 224.47 | | | |
| 11/01/1993 | Aluminum | 3 | TS | 1448.3 | 1.36060 | 33.30000 | 89.99 | | | |
| 11/01/1993 | Arsenic | 3 | TS | 1448.3 | .00068 | .00057 | 89.99 | | | |
| 11/01/1993 | Barium | 3 | TS | 1448.3 | .01680 | .52000 | 89.99 | | | |
| 11/01/1993 | Beryllium | 3 | TS | 1448.3 | .00024 | .00100 | 89.99 | | B | |
| 11/01/1993 | Cadmium | 3 | TS | 1448.3 | .00335 | .00140 | 89.99 | | | |
| 11/01/1993 | Chromium | 3 | TS | 1448.3 | .00623 | .00020 | 89.99 | | | |
| 11/01/1993 | Manganese | 3 | TS | 1448.3 | .03539 | .42000 | 89.99 | | | |
| 11/01/1993 | Nickel | 3 | TS | 1448.3 | .00416 | .01000 | 89.99 | | B | |
| 11/01/1993 | Particulate Fluoride | 3 | TS | 1448.3 | 3.07252 | 8.30000 | 89.99 | | B | U |
| 11/01/1993 | Phosphorus | 3 | TS | 1448.3 | 1.11147 | .30000 | 89.99 | | | |
| 11/01/1993 | Selenium | 3 | TS | 1448.3 | .01603 | .70000 | 89.99 | | U | U |
| 11/01/1993 | Silver | 3 | TS | 1448.3 | .00112 | .30000 | 89.99 | | U | UJ |
| 11/01/1993 | Thallium | 3 | TS | 1448.3 | .03200 | .30000 | 89.99 | | U | U |
| 11/01/1993 | Vanadium | 3 | TS | 1448.3 | .00703 | .17000 | 89.99 | | | |
| 11/01/1993 | Zinc | 3 | TS | 1448.3 | .03251 | .00000 | 89.99 | | B | |
| 11/01/1993 | Aluminum | 4 | TS | 1450.4 | .44486 | 33.30000 | 35.40 | | | |
| 11/01/1993 | Arsenic | 4 | TS | 1450.4 | .00037 | .00057 | 35.40 | | B | |
| 11/01/1993 | Barium | 4 | TS | 1450.4 | .00753 | .52000 | 35.40 | | | |
| 11/01/1993 | Beryllium | 4 | TS | 1450.4 | .00016 | .00100 | 35.40 | | U | U |
| 11/01/1993 | Cadmium | 4 | TS | 1450.4 | .00202 | .00140 | 35.40 | | | |
| 11/01/1993 | Chromium | 4 | TS | 1450.4 | .00279 | .00020 | 35.40 | | | |
| 11/01/1993 | Manganese | 4 | TS | 1450.4 | .01330 | .42000 | 35.40 | | | |
| 11/01/1993 | Nickel | 4 | TS | 1450.4 | .00328 | .01000 | 35.40 | | U | U |
| 11/01/1993 | Particulate | 4 | TS | 1450.4 | 3.15140 | 8.30000 | 35.40 | | B | U |

| Sample Date | Chemical Name | Site # | Typ | Run Time (min.) | Chem Conc. (ug/m3) | EPA Scr. L(ug/m3) | Part.C. (ug/m3) | Grav. Val | Qual. Lab | Qual. Val |
|---|---|---|---|---|---|---|---|---|---|---|
| | Fluoride | | | | | | | | | |
| 11/01/1993 | Phosphorus | 4 | TS | 1450.4 | .51038 | .30000 | 35.40 | | | U |
| 11/01/1993 | Selenium | 4 | TS | 1450.4 | .01644 | .70000 | 35.40 | | U | U |
| 11/01/1993 | Silver | 4 | TS | 1450.4 | .00115 | .30000 | 35.40 | | U | UJ |
| 11/01/1993 | Thallium | 4 | TS | 1450.4 | .03282 | .30000 | 35.40 | | U | U |
| 11/01/1993 | Vanadium | 4 | TS | 1450.4 | .00218 | .17000 | 35.40 | | B | |
| 11/01/1993 | Zinc | 4 | TS | 1450.4 | .02234 | .00000 | 35.40 | | B | |
| 11/01/1993 | Aluminum | 5 | TS | 1438.8 | .54818 | 33.30000 | 34.03 | | | |
| 11/01/1993 | Arsenic | 5 | TS | 1438.8 | .00034 | .00057 | 34.03 | | B | |
| 11/01/1993 | Barium | 5 | TS | 1438.8 | .00793 | .52000 | 34.03 | | | |
| 11/01/1993 | Beryllium | 5 | TS | 1438.8 | .00017 | .00100 | 34.03 | | U | U |
| 11/01/1993 | Cadmium | 5 | TS | 1438.8 | .00132 | .00140 | 34.03 | | U | U |
| 11/01/1993 | Chromium | 5 | TS | 1438.8 | .00177 | .00020 | 34.03 | | | U |
| 11/01/1993 | Manganese | 5 | TS | 1438.8 | .01724 | .42000 | 34.03 | | | |
| 11/01/1993 | Nickel | 5 | TS | 1438.8 | .00331 | .01000 | 34.03 | | U | U |
| 11/01/1993 | Particulate Fluoride | 5 | TS | 1438.8 | 3.11076 | 8.30000 | 34.03 | | B | U |
| 11/01/1993 | Phosphorus | 5 | TS | 1438.8 | .21531 | .30000 | 34.03 | | B | U |
| 11/01/1993 | Selenium | 5 | TS | 1438.8 | .01658 | .70000 | 34.03 | | U | U |
| 11/01/1993 | Silver | 5 | TS | 1438.8 | .00116 | .30000 | 34.03 | | U | UJ |
| 11/01/1993 | Thallium | 5 | TS | 1438.8 | .03309 | .30000 | 34.03 | | U | U |
| 11/01/1993 | Vanadium | 5 | TS | 1438.8 | .00177 | .17000 | 34.03 | | B | |
| 11/01/1993 | Zinc | 5 | TS | 1438.8 | .00911 | .00000 | 34.03 | | B | |
| 11/01/1993 | Aluminum | 6 | TS | 1440.0 | .60035 | 33.30000 | 34.91 | | | |
| 11/01/1993 | Arsenic | 6 | TS | 1440.0 | .00030 | .00057 | 34.91 | | B | |
| 11/01/1993 | Barium | 6 | TS | 1440.0 | .00750 | .52000 | 34.91 | | | |
| 11/01/1993 | Beryllium | 6 | TS | 1440.0 | .00017 | .00100 | 34.91 | | U | U |
| 11/01/1993 | Cadmium | 6 | TS | 1440.0 | .00132 | .00140 | 34.91 | | U | U |
| 11/01/1993 | Chromium | 6 | TS | 1440.0 | .00141 | .00020 | 34.91 | | | U |
| 11/01/1993 | Manganese | 6 | TS | 1440.0 | .01863 | .42000 | 34.91 | | | |
| 11/01/1993 | Nickel | 6 | TS | 1440.0 | .00330 | .01000 | 34.91 | | U | U |
| 11/01/1993 | Particulate Fluoride | 6 | TS | 1440.0 | 2.57389 | 8.30000 | 34.91 | | B | U |
| 11/01/1993 | Phosphorus | 6 | TS | 1440.0 | .17971 | .30000 | 34.91 | | B | U |
| 11/01/1993 | Selenium | 6 | TS | 1440.0 | .01652 | .70000 | 34.91 | | U | U |
| 11/01/1993 | Silver | 6 | TS | 1440.0 | .00115 | .30000 | 34.91 | | U | UJ |
| 11/01/1993 | Thallium | 6 | TS | 1440.0 | .03298 | .30000 | 34.91 | | U | U |
| 11/01/1993 | Vanadium | 6 | TS | 1440.0 | .00170 | .17000 | 34.91 | | B | |
| 11/01/1993 | Zinc | 6 | TS | 1440.0 | .00718 | .00000 | 34.91 | | B | |
| 11/01/1993 | Aluminum | 7 | TS | 1457.3 | .33273 | 33.30000 | 22.04 | | | |
| 11/01/1993 | Arsenic | 7 | TS | 1457.3 | .00018 | .00057 | 22.04 | | B | |
| 11/01/1993 | Barium | 7 | TS | 1457.3 | .00450 | .52000 | 22.04 | | | |
| 11/01/1993 | Beryllium | 7 | TS | 1457.3 | .00016 | .00100 | 22.04 | | U | U |
| 11/01/1993 | Cadmium | 7 | TS | 1457.3 | .00131 | .00140 | 22.04 | | U | U |
| 11/01/1993 | Chromium | 7 | TS | 1457.3 | .00106 | .00020 | 22.04 | | | U |
| 11/01/1993 | Manganese | 7 | TS | 1457.3 | .00896 | .42000 | 22.04 | | | |
| 11/01/1993 | Nickel | 7 | TS | 1457.3 | .00327 | .01000 | 22.04 | | U | U |
| 11/01/1993 | Particulate Fluoride | 7 | TS | 1457.3 | 4.78500 | 8.30000 | 22.04 | | | U |
| 11/01/1993 | Phosphorus | 7 | TS | 1457.3 | .22748 | .30000 | 22.04 | | B | U |
| 11/01/1993 | Selenium | 7 | TS | 1457.3 | .01641 | .70000 | 22.04 | | U | U |

| Sample Date | Chemical Name | Site # | Typ | Run Time (min.) | Chem Conc. (ug/m3) | EPA Scr. L(ug/m3) | Part.C. (ug/m3) | Grav. Val | Qual. Lab | Qual. Val |
|---|---|---|---|---|---|---|---|---|---|---|
| 11/01/1993 | Silver | 7 | TS | 1457.3 | .00114 | .30000 | 22.04 | | U | UJ |
| 11/01/1993 | Thallium | 7 | TS | 1457.3 | .03275 | .30000 | 22.04 | | U | U |
| 11/01/1993 | Vanadium | 7 | TS | 1457.3 | .00171 | .17000 | 22.04 | | B | |
| 11/01/1993 | Zinc | 7 | TS | 1457.3 | .00590 | .00000 | 22.04 | | B | |
| 11/01/1993 | Aluminum | 8 | TS | 1451.4 | 1.16092 | 33.30000 | 94.97 | | | |
| 11/01/1993 | Arsenic | 8 | TS | 1451.4 | .00070 | .00057 | 94.97 | | | |
| 11/01/1993 | Barium | 8 | TS | 1451.4 | .01788 | .52000 | 94.97 | | | |
| 11/01/1993 | Beryllium | 8 | TS | 1451.4 | .00018 | .00100 | 94.97 | | B | |
| 11/01/1993 | Cadmium | 8 | TS | 1451.4 | .00562 | .00140 | 94.97 | | | |
| 11/01/1993 | Chromium | 8 | TS | 1451.4 | .01412 | .00020 | 94.97 | | | |
| 11/01/1993 | Manganese | 8 | TS | 1451.4 | .02546 | .42000 | 94.97 | | | |
| 11/01/1993 | Nickel | 8 | TS | 1451.4 | .00644 | .01000 | 94.97 | | B | |
| 11/01/1993 | Particulate Fluoride | 8 | TS | 1451.4 | 9.36648 | 8.30000 | 94.97 | | | U |
| 11/01/1993 | Phosphorus | 8 | TS | 1451.4 | 1.78755 | .30000 | 94.97 | | | |
| 11/01/1993 | Selenium | 8 | TS | 1451.4 | .01656 | .70000 | 94.97 | | U | U |
| 11/01/1993 | Silver | 8 | TS | 1451.4 | .00115 | .30000 | 94.97 | | U | UJ |
| 11/01/1993 | Thallium | 8 | TS | 1451.4 | .03305 | .30000 | 94.97 | | U | U |
| 11/01/1993 | Vanadium | 8 | TS | 1451.4 | .01722 | .17000 | 94.97 | | | |
| 11/01/1993 | Zinc | 8 | TS | 1451.4 | .05356 | .00000 | 94.97 | | B | |
| 11/03/1993 | Aluminum | 1 | TS | 1461.2 | 2.39637 | 33.30000 | 190.74 | | | |
| 11/03/1993 | Arsenic | 1 | TS | 1461.2 | .00240 | .00057 | 190.74 | | | |
| 11/03/1993 | Barium | 1 | TS | 1461.2 | .03333 | .52000 | 190.74 | | | |
| 11/03/1993 | Beryllium | 1 | TS | 1461.2 | .00017 | .00100 | 190.74 | | U | U |
| 11/03/1993 | Cadmium | 1 | TS | 1461.2 | .01874 | .00140 | 190.74 | | | |
| 11/03/1993 | Chromium | 1 | TS | 1461.2 | .04528 | .00020 | 190.74 | | | |
| 11/03/1993 | Manganese | 1 | TS | 1461.2 | .05343 | .42000 | 190.74 | | | |
| 11/03/1993 | Nickel | 1 | TS | 1461.2 | .01039 | .01000 | 190.74 | | | |
| 11/03/1993 | Particulate Fluoride | 1 | TS | 1461.2 | 4.79274 | 8.30000 | 190.74 | | | U |
| 11/03/1993 | Phosphorus | 1 | TS | 1461.2 | 4.10030 | .30000 | 190.74 | | | |
| 11/03/1993 | Selenium | 1 | TS | 1461.2 | .01704 | .70000 | 190.74 | | U | U |
| 11/03/1993 | Silver | 1 | TS | 1461.2 | .00119 | .30000 | 190.74 | | B | |
| 11/03/1993 | Thallium | 1 | TS | 1461.2 | .03401 | .30000 | 190.74 | | U | U |
| 11/03/1993 | Vanadium | 1 | TS | 1461.2 | .05648 | .17000 | 190.74 | | | |
| 11/03/1993 | Zinc | 1 | TS | 1461.2 | .11269 | .00000 | 190.74 | | | |
| 11/03/1993 | Aluminum | 2 | TS | 1442.9 | 3.63850 | 33.30000 | 338.70 | | | |
| 11/03/1993 | Arsenic | 2 | TS | 1442.9 | .00473 | .00057 | 338.70 | | | |
| 11/03/1993 | Barium | 2 | TS | 1442.9 | .04508 | .52000 | 338.70 | | | |
| 11/03/1993 | Beryllium | 2 | TS | 1442.9 | .00026 | .00100 | 338.70 | | B | |
| 11/03/1993 | Cadmium | 2 | TS | 1442.9 | .03304 | .00140 | 338.70 | | | |
| 11/03/1993 | Chromium | 2 | TS | 1442.9 | .11303 | .00020 | 338.70 | | | |
| 11/03/1993 | Manganese | 2 | TS | 1442.9 | .07491 | .42000 | 338.70 | | | |
| 11/03/1993 | Nickel | 2 | TS | 1442.9 | .02736 | .01000 | 338.70 | | | |
| 11/03/1993 | Particulate Fluoride | 2 | TS | 1442.9 | 5.53132 | 8.30000 | 338.70 | | | U |
| 11/03/1993 | Phosphorus | 2 | TS | 1442.9 | 9.69820 | .30000 | 338.70 | | | |
| 11/03/1993 | Selenium | 2 | TS | 1442.9 | .01679 | .70000 | 338.70 | | U | U |
| 11/03/1993 | Silver | 2 | TS | 1442.9 | .00208 | .30000 | 338.70 | | B | |
| 11/03/1993 | Thallium | 2 | TS | 1442.9 | .03351 | .30000 | 338.70 | | U | U |
| 11/03/1993 | Vanadium | 2 | TS | 1442.9 | .15517 | .17000 | 338.70 | | | |
| 11/03/1993 | Zinc | 2 | TS | 1442.9 | .26620 | .00000 | 338.70 | | | |

| Sample Date | Chemical Name | Site # | Typ | Run Time (min.) | Chem Conc. (ug/m3) | EPA Scr. L(ug/m3) | Part.C. Grav. (ug/m3) | Qual. Val | Qual. Lab | Qual. Val |
|---|---|---|---|---|---|---|---|---|---|---|
| 11/03/1993 | Aluminum | 3 | TS | 1443.4 | 1.94456 | 33.30000 | 184.06 | | | |
| 11/03/1993 | Arsenic | 3 | TS | 1443.4 | .00211 | .00057 | 184.06 | | | |
| 11/03/1993 | Barium | 3 | TS | 1443.4 | .02878 | .52000 | 184.06 | | | |
| 11/03/1993 | Beryllium | 3 | TS | 1443.4 | .00016 | .00100 | 184.06 | | U | U |
| 11/03/1993 | Cadmium | 3 | TS | 1443.4 | .00309 | .00140 | 184.06 | | | |
| 11/03/1993 | Chromium | 3 | TS | 1443.4 | .00920 | .00020 | 184.06 | | | |
| 11/03/1993 | Manganese | 3 | TS | 1443.4 | .06786 | .42000 | 184.06 | | | |
| 11/03/1993 | Nickel | 3 | TS | 1443.4 | .00376 | .01000 | 184.06 | | B | |
| 11/03/1993 | Particulate Fluoride | 3 | TS | 1443.4 | 2.23168 | 8.30000 | 184.06 | | B | U |
| 11/03/1993 | Phosphorus | 3 | TS | 1443.4 | .93313 | .30000 | 184.06 | | | |
| 11/03/1993 | Selenium | 3 | TS | 1443.4 | .01638 | .70000 | 184.06 | | U | U |
| 11/03/1993 | Silver | 3 | TS | 1443.4 | .00114 | .30000 | 184.06 | | U | U |
| 11/03/1993 | Thallium | 3 | TS | 1443.4 | .03269 | .30000 | 184.06 | | U | U |
| 11/03/1993 | Vanadium | 3 | TS | 1443.4 | .01103 | .17000 | 184.06 | | | |
| 11/03/1993 | Zinc | 3 | TS | 1443.4 | .04059 | .00000 | 184.06 | | B | |
| 11/03/1993 | Aluminum | 4 | TS | 1449.7 | 1.34991 | 33.30000 | 116.85 | | | |
| 11/03/1993 | Arsenic | 4 | TS | 1449.7 | .00177 | .00057 | 116.85 | | | |
| 11/03/1993 | Barium | 4 | TS | 1449.7 | .02105 | .52000 | 116.85 | | | |
| 11/03/1993 | Beryllium | 4 | TS | 1449.7 | .00017 | .00100 | 116.85 | | U | U |
| 11/03/1993 | Cadmium | 4 | TS | 1449.7 | .00154 | .00140 | 116.85 | | | |
| 11/03/1993 | Chromium | 4 | TS | 1449.7 | .00461 | .00020 | 116.85 | | | |
| 11/03/1993 | Manganese | 4 | TS | 1449.7 | .04094 | .42000 | 116.85 | | | |
| 11/03/1993 | Nickel | 4 | TS | 1449.7 | .00334 | .01000 | 116.85 | | U | U |
| 11/03/1993 | Particulate Fluoride | 4 | TS | 1449.7 | 2.31710 | 8.30000 | 116.85 | | B | U |
| 11/03/1993 | Phosphorus | 4 | TS | 1449.7 | .48460 | .30000 | 116.85 | | | U |
| 11/03/1993 | Selenium | 4 | TS | 1449.7 | .01671 | .70000 | 116.85 | | U | U |
| 11/03/1993 | Silver | 4 | TS | 1449.7 | .00117 | .30000 | 116.85 | | U | U |
| 11/03/1993 | Thallium | 4 | TS | 1449.7 | .03342 | .30000 | 116.85 | | U | U |
| 11/03/1993 | Vanadium | 4 | TS | 1449.7 | .00560 | .17000 | 116.85 | | | |
| 11/03/1993 | Zinc | 4 | TS | 1449.7 | .02991 | .00000 | 116.85 | | B | |
| 11/03/1993 | Aluminum | 5 | TS | 1438.2 | 1.97096 | 33.30000 | 167.80 | | | |
| 11/03/1993 | Arsenic | 5 | TS | 1438.2 | .00199 | .00057 | 167.80 | | | |
| 11/03/1993 | Barium | 5 | TS | 1438.2 | .02442 | .52000 | 167.80 | | | |
| 11/03/1993 | Beryllium | 5 | TS | 1438.2 | .00019 | .00100 | 167.80 | | B | |
| 11/03/1993 | Cadmium | 5 | TS | 1438.2 | .00140 | .00140 | 167.80 | | B | |
| 11/03/1993 | Chromium | 5 | TS | 1438.2 | .00329 | .00020 | 167.80 | | | |
| 11/03/1993 | Manganese | 5 | TS | 1438.2 | .07063 | .42000 | 167.80 | | | |
| 11/03/1993 | Nickel | 5 | TS | 1438.2 | .00480 | .01000 | 167.80 | | B | |
| 11/03/1993 | Particulate Fluoride | 5 | TS | 1438.2 | 1.93060 | 8.30000 | 167.80 | | B | U |
| 11/03/1993 | Phosphorus | 5 | TS | 1438.2 | .39756 | .30000 | 167.80 | | | U |
| 11/03/1993 | Selenium | 5 | TS | 1438.2 | .01688 | .70000 | 167.80 | | U | U |
| 11/03/1993 | Silver | 5 | TS | 1438.2 | .00118 | .30000 | 167.80 | | U | U |
| 11/03/1993 | Thallium | 5 | TS | 1438.2 | .03370 | .30000 | 167.80 | | U | U |
| 11/03/1993 | Vanadium | 5 | TS | 1438.2 | .00494 | .17000 | 167.80 | | | |
| 11/03/1993 | Zinc | 5 | TS | 1438.2 | .02106 | .00000 | 167.80 | | B | |
| 11/03/1993 | Aluminum | 6 | TS | 1442.3 | 1.05052 | 33.30000 | 81.81 | | | |
| 11/03/1993 | Arsenic | 6 | TS | 1442.3 | .00098 | .00057 | 81.81 | | | |
| 11/03/1993 | Barium | 6 | TS | 1442.3 | .01519 | .52000 | 81.81 | | | |
| 11/03/1993 | Beryllium | 6 | TS | 1442.3 | .00018 | .00100 | 81.81 | | B | |

| Sample Date | Chemical Name | Site # | Typ | Run Time (min.) | Chem Conc. (ug/m3) | EPA Scr. L(ug/m3) | Part.C. (ug/m3) | Grav. Val | Qual. Lab | Qual. Val |
|---|---|---|---|---|---|---|---|---|---|---|
| 11/03/1993 | Cadmium | 6 | TS | 1442.3 | .00134 | .00140 | 81.81 | | U | U |
| 11/03/1993 | Chromium | 6 | TS | 1442.3 | .00165 | .00020 | 81.81 | | | U |
| 11/03/1993 | Manganese | 6 | TS | 1442.3 | .03754 | .42000 | 81.81 | | | |
| 11/03/1993 | Nickel | 6 | TS | 1442.3 | .00335 | .01000 | 81.81 | | U | U |
| 11/03/1993 | Particulate Fluoride | 6 | TS | 1442.3 | 1.99398 | 8.30000 | 81.81 | | B | U |
| 11/03/1993 | Phosphorus | 6 | TS | 1442.3 | .26296 | .30000 | 81.81 | | B | U |
| 11/03/1993 | Selenium | 6 | TS | 1442.3 | .01679 | .70000 | 81.81 | | U | U |
| 11/03/1993 | Silver | 6 | TS | 1442.3 | .00117 | .30000 | 81.81 | | U | U |
| 11/03/1993 | Thallium | 6 | TS | 1442.3 | .03352 | .30000 | 81.81 | | U | U |
| 11/03/1993 | Vanadium | 6 | TS | 1442.3 | .00262 | .17000 | 81.81 | | B | |
| 11/03/1993 | Zinc | 6 | TS | 1442.3 | .01278 | .00000 | 81.81 | | B | |
| 11/03/1993 | Aluminum | 7 | TS | 1452.4 | .78795 | 33.30000 | 60.67 | | | |
| 11/03/1993 | Arsenic | 7 | TS | 1452.4 | .00104 | .00057 | 60.67 | | | |
| 11/03/1993 | Barium | 7 | TS | 1452.4 | .01135 | .52000 | 60.67 | | | |
| 11/03/1993 | Beryllium | 7 | TS | 1452.4 | .00017 | .00100 | 60.67 | | U | U |
| 11/03/1993 | Cadmium | 7 | TS | 1452.4 | .00134 | .00140 | 60.67 | | U | U |
| 11/03/1993 | Chromium | 7 | TS | 1452.4 | .00178 | .00020 | 60.67 | | | U |
| 11/03/1993 | Manganese | 7 | TS | 1452.4 | .02411 | .42000 | 60.67 | | | |
| 11/03/1993 | Nickel | 7 | TS | 1452.4 | .00335 | .01000 | 60.67 | | U | U |
| 11/03/1993 | Particulate Fluoride | 7 | TS | 1452.4 | 2.45067 | 8.30000 | 60.67 | | B | U |
| 11/03/1993 | Phosphorus | 7 | TS | 1452.4 | .22770 | .30000 | 60.67 | | B | U |
| 11/03/1993 | Selenium | 7 | TS | 1452.4 | .01676 | .70000 | 60.67 | | U | U |
| 11/03/1993 | Silver | 7 | TS | 1452.4 | .00117 | .30000 | 60.67 | | U | U |
| 11/03/1993 | Thallium | 7 | TS | 1452.4 | .03345 | .30000 | 60.67 | | U | U |
| 11/03/1993 | Vanadium | 7 | TS | 1452.4 | .00234 | .17000 | 60.67 | | B | |
| 11/03/1993 | Zinc | 7 | TS | 1452.4 | .00982 | .00000 | 60.67 | | B | U |
| 11/05/1993 | Aluminum | 1 | TS | 1454.2 | .47022 | 33.30000 | 45.06 | | | |
| 11/05/1993 | Arsenic | 1 | TS | 1454.2 | .00048 | .00057 | 45.06 | | B | |
| 11/05/1993 | Barium | 1 | TS | 1454.2 | .00882 | .52000 | 45.06 | | | |
| 11/05/1993 | Beryllium | 1 | TS | 1454.2 | .00017 | .00100 | 45.06 | | U | U |
| 11/05/1993 | Cadmium | 1 | TS | 1454.2 | .00251 | .00140 | 45.06 | | | |
| 11/05/1993 | Chromium | 1 | TS | 1454.2 | .00723 | .00020 | 45.06 | | | |
| 11/05/1993 | Manganese | 1 | TS | 1454.2 | .01200 | .42000 | 45.06 | | | |
| 11/05/1993 | Nickel | 1 | TS | 1454.2 | .00532 | .01000 | 45.06 | | B | |
| 11/05/1993 | Particulate Fluoride | 1 | TS | 1454.2 | 5.04049 | 8.30000 | 45.06 | | | U |
| 11/05/1993 | Phosphorus | 1 | TS | 1454.2 | 1.54531 | .30000 | 45.06 | | | |
| 11/05/1993 | Selenium | 1 | TS | 1454.2 | .01665 | .70000 | 45.06 | | U | U |
| 11/05/1993 | Silver | 1 | TS | 1454.2 | .00116 | .30000 | 45.06 | | U | U |
| 11/05/1993 | Thallium | 1 | TS | 1454.2 | .03323 | .30000 | 45.06 | | U | U |
| 11/05/1993 | Vanadium | 1 | TS | 1454.2 | .00862 | .17000 | 45.06 | | | |
| 11/05/1993 | Zinc | 1 | TS | 1454.2 | .02845 | .00000 | 45.06 | | B | |
| 11/05/1993 | Aluminum | 2 | TS | 1442.2 | 1.56800 | 33.30000 | 120.89 | | | |
| 11/05/1993 | Arsenic | 2 | TS | 1442.2 | .00183 | .00057 | 120.89 | | | |
| 11/05/1993 | Barium | 2 | TS | 1442.2 | .01991 | .52000 | 120.89 | | | |
| 11/05/1993 | Beryllium | 2 | TS | 1442.2 | .00016 | .00100 | 120.89 | | B | |
| 11/05/1993 | Cadmium | 2 | TS | 1442.2 | .02121 | .00140 | 120.89 | | | |
| 11/05/1993 | Chromium | 2 | TS | 1442.2 | .04925 | .00020 | 120.89 | | | |
| 11/05/1993 | Manganese | 2 | TS | 1442.2 | .03051 | .42000 | 120.89 | | | |
| 11/05/1993 | Nickel | 2 | TS | 1442.2 | .01204 | .01000 | 120.89 | | | |

| Sample Date | Chemical Name | Site # | Typ | Run Time (min.) | Chem Conc. (ug/m3) | EPA Scr. L(ug/m3) | Part.C. (ug/m3) | Grav. Val | Qual. Lab | Qual. Val |
|---|---|---|---|---|---|---|---|---|---|---|
| 11/05/1993 | Particulate Fluoride | 2 | TS | 1442.2 | 3.57842 | 8.30000 | 120.89 | | | U |
| 11/05/1993 | Phosphorus | 2 | TS | 1442.2 | 6.76647 | .30000 | 120.89 | | | |
| 11/05/1993 | Selenium | 2 | TS | 1442.2 | .01633 | .70000 | 120.89 | | U | U |
| 11/05/1993 | Silver | 2 | TS | 1442.2 | .00129 | .30000 | 120.89 | | B | |
| 11/05/1993 | Thallium | 2 | TS | 1442.2 | .03260 | .30000 | 120.89 | | U | U |
| 11/05/1993 | Vanadium | 2 | TS | 1442.2 | .06116 | .17000 | 120.89 | | | |
| 11/05/1993 | Zinc | 2 | TS | 1442.2 | .14899 | .00000 | 120.89 | | | |
| 11/05/1993 | Aluminum | 3 | TS | 1449.0 | .42471 | 33.30000 | 36.05 | | | |
| 11/05/1993 | Arsenic | 3 | TS | 1449.0 | .00031 | .00057 | 36.05 | | B | |
| 11/05/1993 | Barium | 3 | TS | 1449.0 | .00664 | .52000 | 36.05 | | | |
| 11/05/1993 | Beryllium | 3 | TS | 1449.0 | .00016 | .00100 | 36.05 | | U | U |
| 11/05/1993 | Cadmium | 3 | TS | 1449.0 | .00206 | .00140 | 36.05 | | | |
| 11/05/1993 | Chromium | 3 | TS | 1449.0 | .00428 | .00020 | 36.05 | | | |
| 11/05/1993 | Manganese | 3 | TS | 1449.0 | .01157 | .42000 | 36.05 | | | |
| 11/05/1993 | Nickel | 3 | TS | 1449.0 | .00404 | .01000 | 36.05 | | B | |
| 11/05/1993 | Particulate Fluoride | 3 | TS | 1449.0 | 1.97185 | 8.30000 | 36.05 | | B | U |
| 11/05/1993 | Phosphorus | 3 | TS | 1449.0 | .66992 | .30000 | 36.05 | | | U |
| 11/05/1993 | Selenium | 3 | TS | 1449.0 | .01586 | .70000 | 36.05 | | U | U |
| 11/05/1993 | Silver | 3 | TS | 1449.0 | .00111 | .30000 | 36.05 | | U | U |
| 11/05/1993 | Thallium | 3 | TS | 1449.0 | .03166 | .30000 | 36.05 | | U | U |
| 11/05/1993 | Vanadium | 3 | TS | 1449.0 | .00518 | .17000 | 36.05 | | | |
| 11/05/1993 | Zinc | 3 | TS | 1449.0 | .01599 | .00000 | 36.05 | | B | |
| 11/05/1993 | Aluminum | 4 | TS | 1445.7 | .33118 | 33.30000 | 29.95 | | | |
| 11/05/1993 | Arsenic | 4 | TS | 1445.7 | .00031 | .00057 | 29.95 | | B | |
| 11/05/1993 | Barium | 4 | TS | 1445.7 | .00729 | .52000 | 29.95 | | | |
| 11/05/1993 | Beryllium | 4 | TS | 1445.7 | .00016 | .00100 | 29.95 | | U | U |
| 11/05/1993 | Cadmium | 4 | TS | 1445.7 | .00130 | .00140 | 29.95 | | U | U |
| 11/05/1993 | Chromium | 4 | TS | 1445.7 | .00248 | .00020 | 29.95 | | | U |
| 11/05/1993 | Manganese | 4 | TS | 1445.7 | .01204 | .42000 | 29.95 | | | |
| 11/05/1993 | Nickel | 4 | TS | 1445.7 | .00326 | .01000 | 29.95 | | U | U |
| 11/05/1993 | Particulate Fluoride | 4 | TS | 1445.7 | 1.76326 | 8.30000 | 29.95 | | B | U |
| 11/05/1993 | Phosphorus | 4 | TS | 1445.7 | .38649 | .30000 | 29.95 | | | U |
| 11/05/1993 | Selenium | 4 | TS | 1445.7 | .01633 | .70000 | 29.95 | | U | U |
| 11/05/1993 | Silver | 4 | TS | 1445.7 | .00114 | .30000 | 29.95 | | U | U |
| 11/05/1993 | Thallium | 4 | TS | 1445.7 | .03260 | .30000 | 29.95 | | U | U |
| 11/05/1993 | Vanadium | 4 | TS | 1445.7 | .00299 | .17000 | 29.95 | | B | |
| 11/05/1993 | Zinc | 4 | TS | 1445.7 | .02037 | .00000 | 29.95 | | B | |
| 11/05/1993 | Aluminum | 5 | TS | 1439.5 | .40775 | 33.30000 | 27.00 | | | |
| 11/05/1993 | Arsenic | 5 | TS | 1439.5 | .00028 | .00057 | 27.00 | | B | |
| 11/05/1993 | Barium | 5 | TS | 1439.5 | .00434 | .52000 | 27.00 | | | |
| 11/05/1993 | Beryllium | 5 | TS | 1439.5 | .00016 | .00100 | 27.00 | | U | U |
| 11/05/1993 | Cadmium | 5 | TS | 1439.5 | .00131 | .00140 | 27.00 | | U | U |
| 11/05/1993 | Chromium | 5 | TS | 1439.5 | .00175 | .00020 | 27.00 | | | U |
| 11/05/1993 | Manganese | 5 | TS | 1439.5 | .01189 | .42000 | 27.00 | | | |
| 11/05/1993 | Nickel | 5 | TS | 1439.5 | .00410 | .01000 | 27.00 | | B | |
| 11/05/1993 | Particulate Fluoride | 5 | TS | 1439.5 | 1.81660 | 8.30000 | 27.00 | | B | U |
| 11/05/1993 | Phosphorus | 5 | TS | 1439.5 | .27184 | .30000 | 27.00 | | B | U |

| Sample Date | Chemical Name | Site # | Typ | Run Time (min.) | Chem Conc. (ug/m3) | EPA Scr. L(ug/m3) | Part.C. (ug/m3) | Grav. Val | Qual. Lab | Qual. Val |
|---|---|---|---|---|---|---|---|---|---|---|
| 11/05/1993 | Selenium | 5 | TS | 1439.5 | .01640 | .70000 | 27.00 | | U | U |
| 11/05/1993 | Silver | 5 | TS | 1439.5 | .00114 | .30000 | 27.00 | | U | U |
| 11/05/1993 | Thallium | 5 | TS | 1439.5 | .03274 | .30000 | 27.00 | | U | U |
| 11/05/1993 | Vanadium | 5 | TS | 1439.5 | .00234 | .17000 | 27.00 | | B | |
| 11/05/1993 | Zinc | 5 | TS | 1439.5 | .00843 | .00000 | 27.00 | | B | |
| 11/05/1993 | Aluminum | 6 | TS | 1446.3 | .70068 | 33.30000 | 41.03 | | | |
| 11/05/1993 | Arsenic | 6 | TS | 1446.3 | .00032 | .00057 | 41.03 | | B | |
| 11/05/1993 | Barium | 6 | TS | 1446.3 | .00954 | .52000 | 41.03 | | | |
| 11/05/1993 | Beryllium | 6 | TS | 1446.3 | .00016 | .00100 | 41.03 | | U | U |
| 11/05/1993 | Cadmium | 6 | TS | 1446.3 | .00130 | .00140 | 41.03 | | U | U |
| 11/05/1993 | Chromium | 6 | TS | 1446.3 | .00143 | .00020 | 41.03 | | | U |
| 11/05/1993 | Manganese | 6 | TS | 1446.3 | .02277 | .42000 | 41.03 | | | |
| 11/05/1993 | Nickel | 6 | TS | 1446.3 | .00325 | .01000 | 41.03 | | U | U |
| 11/05/1993 | Particulate Fluoride | 6 | TS | 1446.3 | 1.70628 | 8.30000 | 41.03 | | B | U |
| 11/05/1993 | Phosphorus | 6 | TS | 1446.3 | .25173 | .30000 | 41.03 | | B | U |
| 11/05/1993 | Selenium | 6 | TS | 1446.3 | .01628 | .70000 | 41.03 | | U | U |
| 11/05/1993 | Silver | 6 | TS | 1446.3 | .00114 | .30000 | 41.03 | | U | U |
| 11/05/1993 | Thallium | 6 | TS | 1446.3 | .03250 | .30000 | 41.03 | | U | U |
| 11/05/1993 | Vanadium | 6 | TS | 1446.3 | .00182 | .17000 | 41.03 | | B | U |
| 11/05/1993 | Zinc | 6 | TS | 1446.3 | .00681 | .00000 | 41.03 | | B | |
| 11/05/1993 | Aluminum | 7 | TS | 1454.7 | .22753 | 33.30000 | 16.28 | P | | |
| 11/05/1993 | Arsenic | 7 | TS | 1454.7 | .00018 | .00057 | 16.28 | P | B | |
| 11/05/1993 | Barium | 7 | TS | 1454.7 | .00285 | .52000 | 16.28 | P | | |
| 11/05/1993 | Beryllium | 7 | TS | 1454.7 | .00016 | .00100 | 16.28 | P | U | U |
| 11/05/1993 | Cadmium | 7 | TS | 1454.7 | .00130 | .00140 | 16.28 | P | U | U |
| 11/05/1993 | Chromium | 7 | TS | 1454.7 | .00127 | .00020 | 16.28 | P | | U |
| 11/05/1993 | Manganese | 7 | TS | 1454.7 | .00630 | .42000 | 16.28 | P | | |
| 11/05/1993 | Nickel | 7 | TS | 1454.7 | .00325 | .01000 | 16.28 | P | U | U |
| 11/05/1993 | Particulate Fluoride | 7 | TS | 1454.7 | 2.17803 | 8.30000 | 16.28 | P | B | U |
| 11/05/1993 | Phosphorus | 7 | TS | 1454.7 | .25670 | .30000 | 16.28 | P | B | U |
| 11/05/1993 | Selenium | 7 | TS | 1454.7 | .01627 | .70000 | 16.28 | P | U | U |
| 11/05/1993 | Silver | 7 | TS | 1454.7 | .00113 | .30000 | 16.28 | P | U | U |
| 11/05/1993 | Thallium | 7 | TS | 1454.7 | .03248 | .30000 | 16.28 | P | U | U |
| 11/05/1993 | Vanadium | 7 | TS | 1454.7 | .00288 | .17000 | 16.28 | P | B | U |
| 11/05/1993 | Zinc | 7 | TS | 1454.7 | .00492 | .00000 | 16.28 | P | B | |
| 11/05/1993 | Aluminum | 8 | TS | 1450.5 | .45341 | 33.30000 | 43.67 | | | |
| 11/05/1993 | Arsenic | 8 | TS | 1450.5 | .00042 | .00057 | 43.67 | | B | |
| 11/05/1993 | Barium | 8 | TS | 1450.5 | .00784 | .52000 | 43.67 | | | |
| 11/05/1993 | Beryllium | 8 | TS | 1450.5 | .00016 | .00100 | 43.67 | | U | U |
| 11/05/1993 | Cadmium | 8 | TS | 1450.5 | .00265 | .00140 | 43.67 | | | |
| 11/05/1993 | Chromium | 8 | TS | 1450.5 | .00634 | .00020 | 43.67 | | | |
| 11/05/1993 | Manganese | 8 | TS | 1450.5 | .01163 | .42000 | 43.67 | | | |
| 11/05/1993 | Nickel | 8 | TS | 1450.5 | .00401 | .01000 | 43.67 | | B | |
| 11/05/1993 | Particulate Fluoride | 8 | TS | 1450.5 | 5.52722 | 8.30000 | 43.67 | | | U |
| 11/05/1993 | Phosphorus | 8 | TS | 1450.5 | 1.42427 | .30000 | 43.67 | | | |
| 11/05/1993 | Selenium | 8 | TS | 1450.5 | .01640 | .70000 | 43.67 | | U | U |
| 11/05/1993 | Silver | 8 | TS | 1450.5 | .00114 | .30000 | 43.67 | | U | U |
| 11/05/1993 | Thallium | 8 | TS | 1450.5 | .03273 | .30000 | 43.67 | | U | U |
| 11/05/1993 | Vanadium | 8 | TS | 1450.5 | .00823 | .17000 | 43.67 | | | U |

| Sample Date | Chemical Name | Site # | Typ | Run Time (min.) | Chem Conc. (ug/m3) | EPA Scr. L(ug/m3) | Part.C. (ug/m3) | Grav. Val | Qual. Lab | Qual. Val |
|---|---|---|---|---|---|---|---|---|---|---|
| 11/05/1993 | Zinc | 8 | TS | 1450.5 | .02600 | .00000 | 43.67 | | B | |
| 11/09/1993 | Aluminum | 1 | TS | 1444.4 | .52454 | 33.30000 | 54.22 | | | |
| 11/09/1993 | Arsenic | 1 | TS | 1444.4 | .00165 | .00057 | 54.22 | | | |
| 11/09/1993 | Barium | 1 | TS | 1444.4 | .01506 | .52000 | 54.22 | | | |
| 11/09/1993 | Beryllium | 1 | TS | 1444.4 | .00030 | .00100 | 54.22 | | B | |
| 11/09/1993 | Cadmium | 1 | TS | 1444.4 | .00133 | .00140 | 54.22 | | U | U |
| 11/09/1993 | Chromium | 1 | TS | 1444.4 | .00449 | .00020 | 54.22 | | | |
| 11/09/1993 | Manganese | 1 | TS | 1444.4 | .02073 | .42000 | 54.22 | | | |
| 11/09/1993 | Nickel | 1 | TS | 1444.4 | .00334 | .01000 | 54.22 | | U | U |
| 11/09/1993 | Particulate Fluoride | 1 | TS | 1444.4 | 1.34633 | 8.30000 | 54.22 | | B | U |
| 11/09/1993 | Phosphorus | 1 | TS | 1444.4 | .73315 | .30000 | 54.22 | | | U |
| 11/09/1993 | Selenium | 1 | TS | 1444.4 | .01673 | .70000 | 54.22 | | U | U |
| 11/09/1993 | Silver | 1 | TS | 1444.4 | .00117 | .30000 | 54.22 | | U | U |
| 11/09/1993 | Thallium | 1 | TS | 1444.4 | .03339 | .30000 | 54.22 | | U | U |
| 11/09/1993 | Vanadium | 1 | TS | 1444.4 | .00476 | .17000 | 54.22 | | | |
| 11/09/1993 | Zinc | 1 | TS | 1444.4 | .03006 | .00000 | 54.22 | | B | |
| 11/09/1993 | Aluminum | 2 | TS | 1439.8 | 1.15159 | 33.30000 | 117.55 | | | |
| 11/09/1993 | Arsenic | 2 | TS | 1439.8 | .00207 | .00057 | 117.55 | | | |
| 11/09/1993 | Barium | 2 | TS | 1439.8 | .02557 | .52000 | 117.55 | | | |
| 11/09/1993 | Beryllium | 2 | TS | 1439.8 | .00016 | .00100 | 117.55 | | U | U |
| 11/09/1993 | Cadmium | 2 | TS | 1439.8 | .00590 | .00140 | 117.55 | | | |
| 11/09/1993 | Chromium | 2 | TS | 1439.8 | .02134 | .00020 | 117.55 | | | |
| 11/09/1993 | Manganese | 2 | TS | 1439.8 | .03800 | .42000 | 117.55 | | | |
| 11/09/1993 | Nickel | 2 | TS | 1439.8 | .00497 | .01000 | 117.55 | | B | |
| 11/09/1993 | Particulate Fluoride | 2 | TS | 1439.8 | 3.28562 | 8.30000 | 117.55 | | | U |
| 11/09/1993 | Phosphorus | 2 | TS | 1439.8 | 4.15745 | .30000 | 117.55 | | | |
| 11/09/1993 | Selenium | 2 | TS | 1439.8 | .01633 | .70000 | 117.55 | | U | U |
| 11/09/1993 | Silver | 2 | TS | 1439.8 | .00114 | .30000 | 117.55 | | U | U |
| 11/09/1993 | Thallium | 2 | TS | 1439.8 | .03260 | .30000 | 117.55 | | U | U |
| 11/09/1993 | Vanadium | 2 | TS | 1439.8 | .02557 | .17000 | 117.55 | | | |
| 11/09/1993 | Zinc | 2 | TS | 1439.8 | .07157 | .00000 | 117.55 | | | |
| 11/09/1993 | Aluminum | 3 | TS | 1443.9 | .37921 | 33.30000 | 35.47 | | | |
| 11/09/1993 | Arsenic | 3 | TS | 1443.9 | .00137 | .00057 | 35.47 | | | |
| 11/09/1993 | Barium | 3 | TS | 1443.9 | .00810 | .52000 | 35.47 | | | |
| 11/09/1993 | Beryllium | 3 | TS | 1443.9 | .00016 | .00100 | 35.47 | | B | |
| 11/09/1993 | Cadmium | 3 | TS | 1443.9 | .00127 | .00140 | 35.47 | | U | U |
| 11/09/1993 | Chromium | 3 | TS | 1443.9 | .00142 | .00020 | 35.47 | | | U |
| 11/09/1993 | Manganese | 3 | TS | 1443.9 | .01393 | .42000 | 35.47 | | | |
| 11/09/1993 | Nickel | 3 | TS | 1443.9 | .00317 | .01000 | 35.47 | | U | U |
| 11/09/1993 | Particulate Fluoride | 3 | TS | 1443.9 | 1.46874 | 8.30000 | 35.47 | | B | U |
| 11/09/1993 | Phosphorus | 3 | TS | 1443.9 | .21398 | .30000 | 35.47 | | B | U |
| 11/09/1993 | Selenium | 3 | TS | 1443.9 | .01747 | .70000 | 35.47 | | B | |
| 11/09/1993 | Silver | 3 | TS | 1443.9 | .00111 | .30000 | 35.47 | | U | U |
| 11/09/1993 | Thallium | 3 | TS | 1443.9 | .03172 | .30000 | 35.47 | | U | U |
| 11/09/1993 | Vanadium | 3 | TS | 1443.9 | .00197 | .17000 | 35.47 | | B | |
| 11/09/1993 | Zinc | 3 | TS | 1443.9 | .01475 | .00000 | 35.47 | | B | |
| 11/09/1993 | Aluminum | 4 | TS | 1378.4 | .78334 | 33.30000 | 71.77 | S | | |
| 11/09/1993 | Arsenic | 4 | TS | 1378.4 | .00167 | .00057 | 71.77 | S | | |
| 11/09/1993 | Barium | 4 | TS | 1378.4 | .01744 | .52000 | 71.77 | S | | |

| Sample Date | Chemical Name | Site # | Typ | Run Time (min.) | Chem Conc. (ug/m3) | EPA Scr. L(ug/m3) | Part.C. (ug/m3) | Grav. Val | Qual. Lab | Qual. Val |
|---|---|---|---|---|---|---|---|---|---|---|
| 11/09/1993 | Beryllium | 4 | TS | 1378.4 | .00019 | .00100 | 71.77 | S | B | |
| 11/09/1993 | Cadmium | 4 | TS | 1378.4 | .00159 | .00140 | 71.77 | S | | |
| 11/09/1993 | Chromium | 4 | TS | 1378.4 | .00399 | .00020 | 71.77 | S | | |
| 11/09/1993 | Manganese | 4 | TS | 1378.4 | .02868 | .42000 | 71.77 | S | | |
| 11/09/1993 | Nickel | 4 | TS | 1378.4 | .00341 | .01000 | 71.77 | S | U | U |
| 11/09/1993 | Particulate Fluoride | 4 | TS | 1378.4 | 1.84596 | 8.30000 | 71.77 | S | B | U |
| 11/09/1993 | Phosphorus | 4 | TS | 1378.4 | .44753 | .30000 | 71.77 | S | | U |
| 11/09/1993 | Selenium | 4 | TS | 1378.4 | .01710 | .70000 | 71.77 | S | U | U |
| 11/09/1993 | Silver | 4 | TS | 1378.4 | .00119 | .30000 | 71.77 | S | U | U |
| 11/09/1993 | Thallium | 4 | TS | 1378.4 | .03413 | .30000 | 71.77 | S | U | U |
| 11/09/1993 | Vanadium | 4 | TS | 1378.4 | .00448 | .17000 | 71.77 | S | B | |
| 11/09/1993 | Zinc | 4 | TS | 1378.4 | .03958 | .00000 | 71.77 | S | B | |
| 11/09/1993 | Aluminum | 5 | TS | 1437.9 | .61054 | 33.30000 | 65.86 | | | |
| 11/09/1993 | Arsenic | 5 | TS | 1437.9 | .00178 | .00057 | 65.86 | | | |
| 11/09/1993 | Barium | 5 | TS | 1437.9 | .01123 | .52000 | 65.86 | | | |
| 11/09/1993 | Beryllium | 5 | TS | 1437.9 | .00021 | .00100 | 65.86 | | B | |
| 11/09/1993 | Cadmium | 5 | TS | 1437.9 | .00771 | .00140 | 65.86 | | | |
| 11/09/1993 | Chromium | 5 | TS | 1437.9 | .00803 | .00020 | 65.86 | | | |
| 11/09/1993 | Manganese | 5 | TS | 1437.9 | .01848 | .42000 | 65.86 | | | |
| 11/09/1993 | Nickel | 5 | TS | 1437.9 | .00327 | .01000 | 65.86 | | U | U |
| 11/09/1993 | Particulate Fluoride | 5 | TS | 1437.9 | 2.12873 | 8.30000 | 65.86 | | B | U |
| 11/09/1993 | Phosphorus | 5 | TS | 1437.9 | 1.91324 | .30000 | 65.86 | | | |
| 11/09/1993 | Selenium | 5 | TS | 1437.9 | .01881 | .70000 | 65.86 | | B | |
| 11/09/1993 | Silver | 5 | TS | 1437.9 | .00114 | .30000 | 65.86 | | U | U |
| 11/09/1993 | Thallium | 5 | TS | 1437.9 | .03271 | .30000 | 65.86 | | U | U |
| 11/09/1993 | Vanadium | 5 | TS | 1437.9 | .00921 | .17000 | 65.86 | | | |
| 11/09/1993 | Zinc | 5 | TS | 1437.9 | .03454 | .00000 | 65.86 | | B | |
| 11/09/1993 | Aluminum | 6 | TS | 1442.9 | .78543 | 33.30000 | 59.82 | | | |
| 11/09/1993 | Arsenic | 6 | TS | 1442.9 | .00079 | .00057 | 59.82 | | | |
| 11/09/1993 | Barium | 6 | TS | 1442.9 | .01065 | .52000 | 59.82 | | | |
| 11/09/1993 | Beryllium | 6 | TS | 1442.9 | .00026 | .00100 | 59.82 | | B | |
| 11/09/1993 | Cadmium | 6 | TS | 1442.9 | .00160 | .00140 | 59.82 | | | |
| 11/09/1993 | Chromium | 6 | TS | 1442.9 | .00148 | .00020 | 59.82 | | | U |
| 11/09/1993 | Manganese | 6 | TS | 1442.9 | .02895 | .42000 | 59.82 | | | |
| 11/09/1993 | Nickel | 6 | TS | 1442.9 | .00325 | .01000 | 59.82 | | U | U |
| 11/09/1993 | Particulate Fluoride | 6 | TS | 1442.9 | 1.65525 | 8.30000 | 59.82 | | B | U |
| 11/09/1993 | Phosphorus | 6 | TS | 1442.9 | .28172 | .30000 | 59.82 | | B | U |
| 11/09/1993 | Selenium | 6 | TS | 1442.9 | .01629 | .70000 | 59.82 | | U | U |
| 11/09/1993 | Silver | 6 | TS | 1442.9 | .00114 | .30000 | 59.82 | | U | U |
| 11/09/1993 | Thallium | 6 | TS | 1442.9 | .03252 | .30000 | 59.82 | | U | U |
| 11/09/1993 | Vanadium | 6 | TS | 1442.9 | .00317 | .17000 | 59.82 | | B | |
| 11/09/1993 | Zinc | 6 | TS | 1442.9 | .01019 | .00000 | 59.82 | | B | |
| 11/09/1993 | Aluminum | 7 | TS | 1458.3 | .39307 | 33.30000 | 50.12 | | | |
| 11/09/1993 | Arsenic | 7 | TS | 1458.3 | .00141 | .00057 | 50.12 | | | |
| 11/09/1993 | Barium | 7 | TS | 1458.3 | .00865 | .52000 | 50.12 | | | |
| 11/09/1993 | Beryllium | 7 | TS | 1458.3 | .00019 | .00100 | 50.12 | | B | |
| 11/09/1993 | Cadmium | 7 | TS | 1458.3 | .00385 | .00140 | 50.12 | | | |
| 11/09/1993 | Chromium | 7 | TS | 1458.3 | .00348 | .00020 | 50.12 | | | |
| 11/09/1993 | Manganese | 7 | TS | 1458.3 | .01233 | .42000 | 50.12 | | | |

| Sample Date | Chemical Name | Site # | Typ | Run Time (min.) | Chem Conc. (ug/m3) | EPA Scr. L(ug/m3) | Part.C. (ug/m3) | Grav. Val | Qual. Lab | Qual. Val |
|---|---|---|---|---|---|---|---|---|---|---|
| 11/09/1993 | Nickel | 7 | TS | 1458.3 | .00323 | .01000 | 50.12 | | U | U |
| 11/09/1993 | Particulate Fluoride | 7 | TS | 1458.3 | 2.73022 | 8.30000 | 50.12 | | B | U |
| 11/09/1993 | Phosphorus | 7 | TS | 1458.3 | 1.07789 | .30000 | 50.12 | | | |
| 11/09/1993 | Selenium | 7 | TS | 1458.3 | .01620 | .70000 | 50.12 | | U | U |
| 11/09/1993 | Silver | 7 | TS | 1458.3 | .00113 | .30000 | 50.12 | | U | U |
| 11/09/1993 | Thallium | 7 | TS | 1458.3 | .03234 | .30000 | 50.12 | | U | U |
| 11/09/1993 | Vanadium | 7 | TS | 1458.3 | .00345 | .17000 | 50.12 | | B | |
| 11/09/1993 | Zinc | 7 | TS | 1458.3 | .02169 | .00000 | 50.12 | | B | |
| 11/09/1993 | Aluminum | 8 | TS | 1455.1 | .61433 | 33.30000 | 54.96 | | | |
| 11/09/1993 | Arsenic | 8 | TS | 1455.1 | .00152 | .00057 | 54.96 | | | |
| 11/09/1993 | Barium | 8 | TS | 1455.1 | .01534 | .52000 | 54.96 | | | |
| 11/09/1993 | Beryllium | 8 | TS | 1455.1 | .00018 | .00100 | 54.96 | | B | |
| 11/09/1993 | Cadmium | 8 | TS | 1455.1 | .00130 | .00140 | 54.96 | | U | U |
| 11/09/1993 | Chromium | 8 | TS | 1455.1 | .00528 | .00020 | 54.96 | | | |
| 11/09/1993 | Manganese | 8 | TS | 1455.1 | .02197 | .42000 | 54.96 | | | |
| 11/09/1993 | Nickel | 8 | TS | 1455.1 | .00424 | .01000 | 54.96 | | B | |
| 11/09/1993 | Particulate Fluoride | 8 | TS | 1455.1 | 2.10626 | 8.30000 | 54.96 | | B | U |
| 11/09/1993 | Phosphorus | 8 | TS | 1455.1 | .69559 | .30000 | 54.96 | | | U |
| 11/09/1993 | Selenium | 8 | TS | 1455.1 | .01632 | .70000 | 54.96 | | U | U |
| 11/09/1993 | Silver | 8 | TS | 1455.1 | .00114 | .30000 | 54.96 | | U | U |
| 11/09/1993 | Thallium | 8 | TS | 1455.1 | .03257 | .30000 | 54.96 | | U | U |
| 11/09/1993 | Vanadium | 8 | TS | 1455.1 | .00582 | .17000 | 54.96 | | | U |
| 11/09/1993 | Zinc | 8 | TS | 1455.1 | .03224 | .00000 | 54.96 | | B | |
| 11/11/1993 | Aluminum | 1 | TS | 1451.5 | 1.42336 | 33.30000 | 133.35 | | | |
| 11/11/1993 | Arsenic | 1 | TS | 1451.5 | .00213 | .00057 | 133.35 | | | |
| 11/11/1993 | Barium | 1 | TS | 1451.5 | .02688 | .52000 | 133.35 | | | |
| 11/11/1993 | Beryllium | 1 | TS | 1451.5 | .00017 | .00100 | 133.35 | | U | U |
| 11/11/1993 | Cadmium | 1 | TS | 1451.5 | .00589 | .00140 | 133.35 | | | |
| 11/11/1993 | Chromium | 1 | TS | 1451.5 | .01940 | .00020 | 133.35 | | | |
| 11/11/1993 | Manganese | 1 | TS | 1451.5 | .03601 | .42000 | 133.35 | | | |
| 11/11/1993 | Nickel | 1 | TS | 1451.5 | .00415 | .01000 | 133.35 | | B | |
| 11/11/1993 | Particulate Fluoride | 1 | TS | 1451.5 | 4.99831 | 8.30000 | 133.35 | | | |
| 11/11/1993 | Phosphorus | 1 | TS | 1451.5 | 3.68087 | .30000 | 133.35 | | | |
| 11/11/1993 | Selenium | 1 | TS | 1451.5 | .01993 | .70000 | 133.35 | | B | |
| 11/11/1993 | Silver | 1 | TS | 1451.5 | .00116 | .30000 | 133.35 | | U | U |
| 11/11/1993 | Thallium | 1 | TS | 1451.5 | .03317 | .30000 | 133.35 | | U | U |
| 11/11/1993 | Vanadium | 1 | TS | 1451.5 | .02039 | .17000 | 133.35 | | | |
| 11/11/1993 | Zinc | 1 | TS | 1451.5 | .05925 | .00000 | 133.35 | | B | |
| 11/11/1993 | Aluminum | 2 | TS | 1439.8 | 3.28558 | 33.30000 | 273.53 | | | |
| 11/11/1993 | Arsenic | 2 | TS | 1439.8 | .00347 | .00057 | 273.53 | | | |
| 11/11/1993 | Barium | 2 | TS | 1439.8 | .04428 | .52000 | 273.53 | | | |
| 11/11/1993 | Beryllium | 2 | TS | 1439.8 | .00026 | .00100 | 273.53 | | B | |
| 11/11/1993 | Cadmium | 2 | TS | 1439.8 | .03013 | .00140 | 273.53 | | | |
| 11/11/1993 | Chromium | 2 | TS | 1439.8 | .08311 | .00020 | 273.53 | | | |
| 11/11/1993 | Manganese | 2 | TS | 1439.8 | .05844 | .42000 | 273.53 | | | |
| 11/11/1993 | Nickel | 2 | TS | 1439.8 | .01571 | .01000 | 273.53 | | | |
| 11/11/1993 | Particulate Fluoride | 2 | TS | 1439.8 | 6.68805 | 8.30000 | 273.53 | | | |

| Sample Date | Chemical Name | Site # | Typ | Run Time (min.) | Chem Conc. (ug/m3) | EPA Scr. L(ug/m3) | Part.C. (ug/m3) | Grav. Val | Qual. Lab | Qual. Val |
|---|---|---|---|---|---|---|---|---|---|---|
| 11/11/1993 | Phosphorus | 2 | TS | 1439.8 | 14.09035 | .30000 | 273.53 | | | |
| 11/11/1993 | Selenium | 2 | TS | 1439.8 | .03740 | .70000 | 273.53 | | B | |
| 11/11/1993 | Silver | 2 | TS | 1439.8 | .00158 | .30000 | 273.53 | | B | |
| 11/11/1993 | Thallium | 2 | TS | 1439.8 | .03253 | .30000 | 273.53 | | U | U |
| 11/11/1993 | Vanadium | 2 | TS | 1439.8 | .09675 | .17000 | 273.53 | | | |
| 11/11/1993 | Zinc | 2 | TS | 1439.8 | .17921 | .00000 | 273.53 | | | |
| 11/11/1993 | Aluminum | 3 | TS | 1447.5 | .92030 | 33.30000 | 101.29 | | | |
| 11/11/1993 | Arsenic | 3 | TS | 1447.5 | .00182 | .00057 | 101.29 | | | |
| 11/11/1993 | Barium | 3 | TS | 1447.5 | .01582 | .52000 | 101.29 | | | |
| 11/11/1993 | Beryllium | 3 | TS | 1447.5 | .00017 | .00100 | 101.29 | | B | |
| 11/11/1993 | Cadmium | 3 | TS | 1447.5 | .00384 | .00140 | 101.29 | | | |
| 11/11/1993 | Chromium | 3 | TS | 1447.5 | .00826 | .00020 | 101.29 | | | |
| 11/11/1993 | Manganese | 3 | TS | 1447.5 | .03051 | .42000 | 101.29 | | | |
| 11/11/1993 | Nickel | 3 | TS | 1447.5 | .00316 | .01000 | 101.29 | | U | U |
| 11/11/1993 | Particulate Fluoride | 3 | TS | 1447.5 | 2.11796 | 8.30000 | 101.29 | | B | |
| 11/11/1993 | Phosphorus | 3 | TS | 1447.5 | 1.94146 | .30000 | 101.29 | | | |
| 11/11/1993 | Selenium | 3 | TS | 1447.5 | .01740 | .70000 | 101.29 | | B | |
| 11/11/1993 | Silver | 3 | TS | 1447.5 | .00110 | .30000 | 101.29 | | U | U |
| 11/11/1993 | Thallium | 3 | TS | 1447.5 | .03158 | .30000 | 101.29 | | U | U |
| 11/11/1993 | Vanadium | 3 | TS | 1447.5 | .00769 | .17000 | 101.29 | | | |
| 11/11/1993 | Zinc | 3 | TS | 1447.5 | .04110 | .00000 | 101.29 | | B | |
| 11/11/1993 | Aluminum | 4 | TS | 1429.3 | 1.25896 | 33.30000 | 127.68 | | | |
| 11/11/1993 | Arsenic | 4 | TS | 1429.3 | .00237 | .00057 | 127.68 | | | |
| 11/11/1993 | Barium | 4 | TS | 1429.3 | .02695 | .52000 | 127.68 | | | |
| 11/11/1993 | Beryllium | 4 | TS | 1429.3 | .00016 | .00100 | 127.68 | | U | U |
| 11/11/1993 | Cadmium | 4 | TS | 1429.3 | .00529 | .00140 | 127.68 | | | |
| 11/11/1993 | Chromium | 4 | TS | 1429.3 | .01049 | .00020 | 127.68 | | | |
| 11/11/1993 | Manganese | 4 | TS | 1429.3 | .04079 | .42000 | 127.68 | | | |
| 11/11/1993 | Nickel | 4 | TS | 1429.3 | .00329 | .01000 | 127.68 | | U | U |
| 11/11/1993 | Particulate Fluoride | 4 | TS | 1429.3 | 2.66874 | 8.30000 | 127.68 | | B | |
| 11/11/1993 | Phosphorus | 4 | TS | 1429.3 | 1.94090 | .30000 | 127.68 | | | |
| 11/11/1993 | Selenium | 4 | TS | 1429.3 | .01646 | .70000 | 127.68 | | U | U |
| 11/11/1993 | Silver | 4 | TS | 1429.3 | .00115 | .30000 | 127.68 | | U | U |
| 11/11/1993 | Thallium | 4 | TS | 1429.3 | .03285 | .30000 | 127.68 | | U | U |
| 11/11/1993 | Vanadium | 4 | TS | 1429.3 | .00964 | .17000 | 127.68 | | | |
| 11/11/1993 | Zinc | 4 | TS | 1429.3 | .06164 | .00000 | 127.68 | | B | |
| 11/11/1993 | Aluminum | 5 | TS | 1441.3 | .99441 | 33.30000 | 82.31 | | | |
| 11/11/1993 | Arsenic | 5 | TS | 1441.3 | .00216 | .00057 | 82.31 | | | |
| 11/11/1993 | Barium | 5 | TS | 1441.3 | .01521 | .52000 | 82.31 | | | |
| 11/11/1993 | Beryllium | 5 | TS | 1441.3 | .00029 | .00100 | 82.31 | | B | |
| 11/11/1993 | Cadmium | 5 | TS | 1441.3 | .00401 | .00140 | 82.31 | | | |
| 11/11/1993 | Chromium | 5 | TS | 1441.3 | .00523 | .00020 | 82.31 | | | |
| 11/11/1993 | Manganese | 5 | TS | 1441.3 | .03549 | .42000 | 82.31 | | | |
| 11/11/1993 | Nickel | 5 | TS | 1441.3 | .00326 | .01000 | 82.31 | | U | U |
| 11/11/1993 | Particulate Fluoride | 5 | TS | 1441.3 | 3.33420 | 8.30000 | 82.31 | | | |
| 11/11/1993 | Phosphorus | 5 | TS | 1441.3 | 1.69635 | .30000 | 82.31 | | | |
| 11/11/1993 | Selenium | 5 | TS | 1441.3 | .01794 | .70000 | 82.31 | | B | |
| 11/11/1993 | Silver | 5 | TS | 1441.3 | .00114 | .30000 | 82.31 | | U | U |
| 11/11/1993 | Thallium | 5 | TS | 1441.3 | .03256 | .30000 | 82.31 | | U | U |

| Sample Date | Chemical Name | Site # | Typ | Run Time (min.) | Chem Conc. (ug/m3) | EPA Scr. L(ug/m3) | Part.C. (ug/m3) | Grav. Val | Qual. Lab | Qual. Val |
|---|---|---|---|---|---|---|---|---|---|---|
| 11/11/1993 | Vanadium | 5 | TS | 1441.3 | .00408 | .17000 | 82.31 | | B | |
| 11/11/1993 | Zinc | 5 | TS | 1441.3 | .03406 | .00000 | 82.31 | | B | |
| 11/11/1993 | Aluminum | 6 | TS | 1440.5 | 1.03842 | 33.30000 | 77.08 | | | |
| 11/11/1993 | Arsenic | 6 | TS | 1440.5 | .00179 | .00057 | 77.08 | | | |
| 11/11/1993 | Barium | 6 | TS | 1440.5 | .01661 | .52000 | 77.08 | | | |
| 11/11/1993 | Beryllium | 6 | TS | 1440.5 | .00020 | .00100 | 77.08 | | B | |
| 11/11/1993 | Cadmium | 6 | TS | 1440.5 | .00130 | .00140 | 77.08 | | U | U |
| 11/11/1993 | Chromium | 6 | TS | 1440.5 | .00228 | .00020 | 77.08 | | | |
| 11/11/1993 | Manganese | 6 | TS | 1440.5 | .03641 | .42000 | 77.08 | | | |
| 11/11/1993 | Nickel | 6 | TS | 1440.5 | .00325 | .01000 | 77.08 | | U | U |
| 11/11/1993 | Particulate Fluoride | 6 | TS | 1440.5 | 1.83021 | 8.30000 | 77.08 | | B | |
| 11/11/1993 | Phosphorus | 6 | TS | 1440.5 | .36085 | .30000 | 77.08 | | | U |
| 11/11/1993 | Selenium | 6 | TS | 1440.5 | .01629 | .70000 | 77.08 | | U | U |
| 11/11/1993 | Silver | 6 | TS | 1440.5 | .00114 | .30000 | 77.08 | | U | U |
| 11/11/1993 | Thallium | 6 | TS | 1440.5 | .03252 | .30000 | 77.08 | | U | U |
| 11/11/1993 | Vanadium | 6 | TS | 1440.5 | .00202 | .17000 | 77.08 | | B | |
| 11/11/1993 | Zinc | 6 | TS | 1440.5 | .01292 | .00000 | 77.08 | | B | |
| 11/11/1993 | Aluminum | 7 | TS | 1455.7 | 1.00039 | 33.30000 | 144.85 | | | |
| 11/11/1993 | Arsenic | 7 | TS | 1455.7 | .00208 | .00057 | 144.85 | | | |
| 11/11/1993 | Barium | 7 | TS | 1455.7 | .01426 | .52000 | 144.85 | | | |
| 11/11/1993 | Beryllium | 7 | TS | 1455.7 | .00021 | .00100 | 144.85 | | B | |
| 11/11/1993 | Cadmium | 7 | TS | 1455.7 | .00942 | .00140 | 144.85 | | | |
| 11/11/1993 | Chromium | 7 | TS | 1455.7 | .01375 | .00020 | 144.85 | | | |
| 11/11/1993 | Manganese | 7 | TS | 1455.7 | .02117 | .42000 | 144.85 | | | |
| 11/11/1993 | Nickel | 7 | TS | 1455.7 | .00323 | .01000 | 144.85 | | U | U |
| 11/11/1993 | Particulate Fluoride | 7 | TS | 1455.7 | 6.51866 | 8.30000 | 144.85 | | | |
| 11/11/1993 | Phosphorus | 7 | TS | 1455.7 | 4.76959 | .30000 | 144.85 | | | |
| 11/11/1993 | Selenium | 7 | TS | 1455.7 | .03556 | .70000 | 144.85 | | B | |
| 11/11/1993 | Silver | 7 | TS | 1455.7 | .00113 | .30000 | 144.85 | | U | U |
| 11/11/1993 | Thallium | 7 | TS | 1455.7 | .03234 | .30000 | 144.85 | | U | U |
| 11/11/1993 | Vanadium | 7 | TS | 1455.7 | .01362 | .17000 | 144.85 | | | |
| 11/11/1993 | Zinc | 7 | TS | 1455.7 | .06435 | .00000 | 144.85 | | B | |
| 11/13/1993 | Aluminum | 1 | TS | 1449.4 | .55250 | 33.30000 | 73.14 | | | |
| 11/13/1993 | Arsenic | 1 | TS | 1449.4 | .00080 | .00057 | 73.14 | | | |
| 11/13/1993 | Barium | 1 | TS | 1449.4 | .01503 | .52000 | 73.14 | | | |
| 11/13/1993 | Beryllium | 1 | TS | 1449.4 | .00028 | .00100 | 73.14 | | B | |
| 11/13/1993 | Cadmium | 1 | TS | 1449.4 | .00408 | .00140 | 73.14 | | | |
| 11/13/1993 | Chromium | 1 | TS | 1449.4 | .00748 | .00020 | 73.14 | | | |
| 11/13/1993 | Manganese | 1 | TS | 1449.4 | .02139 | .42000 | 73.14 | | | |
| 11/13/1993 | Nickel | 1 | TS | 1449.4 | .00329 | .01000 | 73.14 | | U | U |
| 11/13/1993 | Particulate Fluoride | 1 | TS | 1449.4 | 7.41482 | 8.30000 | 73.14 | | | U |
| 11/13/1993 | Phosphorus | 1 | TS | 1449.4 | 1.46984 | .30000 | 73.14 | | | |
| 11/13/1993 | Selenium | 1 | TS | 1449.4 | .01647 | .70000 | 73.14 | | U | U |
| 11/13/1993 | Silver | 1 | TS | 1449.4 | .00115 | .30000 | 73.14 | | U | U |
| 11/13/1993 | Thallium | 1 | TS | 1449.4 | .03287 | .30000 | 73.14 | | U | U |
| 11/13/1993 | Vanadium | 1 | TS | 1449.4 | .00879 | .17000 | 73.14 | | | |
| 11/13/1993 | Zinc | 1 | TS | 1449.4 | .02749 | .00000 | 73.14 | | B | |
| 11/13/1993 | Aluminum | 2 | TS | 1434.3 | 2.19986 | 33.30000 | 235.03 | | | |
| 11/13/1993 | Arsenic | 2 | TS | 1434.3 | .00226 | .00057 | 235.03 | | | |

| Sample Date | Chemical Name | Site # | Typ | Run Time (min.) | Chem Conc. (ug/m3) | EPA Scr. L(ug/m3) | Part.C. Grav. (ug/m3) | Qual. Val | Qual. Lab | Qual. Val |
|---|---|---|---|---|---|---|---|---|---|---|
| 11/13/1993 | Barium | 2 | TS | 1434.3 | .02619 | .52000 | 235.03 | | | |
| 11/13/1993 | Beryllium | 2 | TS | 1434.3 | .00025 | .00100 | 235.03 | | B | |
| 11/13/1993 | Cadmium | 2 | TS | 1434.3 | .04058 | .00140 | 235.03 | | | |
| 11/13/1993 | Chromium | 2 | TS | 1434.3 | .07354 | .00020 | 235.03 | | | |
| 11/13/1993 | Manganese | 2 | TS | 1434.3 | .03845 | .42000 | 235.03 | | | |
| 11/13/1993 | Nickel | 2 | TS | 1434.3 | .01348 | .01000 | 235.03 | | | |
| 11/13/1993 | Particulate Fluoride | 2 | TS | 1434.3 | 5.22548 | 8.30000 | 235.03 | | | U |
| 11/13/1993 | Phosphorus | 2 | TS | 1434.3 | 16.64413 | .30000 | 235.03 | | | |
| 11/13/1993 | Selenium | 2 | TS | 1434.3 | .05013 | .70000 | 235.03 | | B | |
| 11/13/1993 | Silver | 2 | TS | 1434.3 | .00314 | .30000 | 235.03 | | B | |
| 11/13/1993 | Thallium | 2 | TS | 1434.3 | .03232 | .30000 | 235.03 | | U | U |
| 11/13/1993 | Vanadium | 2 | TS | 1434.3 | .07032 | .17000 | 235.03 | | | |
| 11/13/1993 | Zinc | 2 | TS | 1434.3 | .25353 | .00000 | 235.03 | | | |
| 11/13/1993 | Aluminum | 3 | TS | 1448.5 | .77930 | 33.30000 | 70.68 | | | |
| 11/13/1993 | Arsenic | 3 | TS | 1448.5 | .00055 | .00057 | 70.68 | | B | |
| 11/13/1993 | Barium | 3 | TS | 1448.5 | .01116 | .52000 | 70.68 | | | |
| 11/13/1993 | Beryllium | 3 | TS | 1448.5 | .00016 | .00100 | 70.68 | | U | U |
| 11/13/1993 | Cadmium | 3 | TS | 1448.5 | .00463 | .00140 | 70.68 | | | |
| 11/13/1993 | Chromium | 3 | TS | 1448.5 | .00546 | .00020 | 70.68 | | | |
| 11/13/1993 | Manganese | 3 | TS | 1448.5 | .02313 | .42000 | 70.68 | | | |
| 11/13/1993 | Nickel | 3 | TS | 1448.5 | .00312 | .01000 | 70.68 | | U | U |
| 11/13/1993 | Particulate Fluoride | 3 | TS | 1448.5 | 2.20698 | 8.30000 | 70.68 | | B | U |
| 11/13/1993 | Phosphorus | 3 | TS | 1448.5 | 1.73317 | .30000 | 70.68 | | | |
| 11/13/1993 | Selenium | 3 | TS | 1448.5 | .01565 | .70000 | 70.68 | | U | U |
| 11/13/1993 | Silver | 3 | TS | 1448.5 | .00109 | .30000 | 70.68 | | U | U |
| 11/13/1993 | Thallium | 3 | TS | 1448.5 | .03123 | .30000 | 70.68 | | U | U |
| 11/13/1993 | Vanadium | 3 | TS | 1448.5 | .00692 | .17000 | 70.68 | | | |
| 11/13/1993 | Zinc | 3 | TS | 1448.5 | .04034 | .00000 | 70.68 | | B | |
| 11/13/1993 | Aluminum | 4 | TS | 1423.3 | .46858 | 33.30000 | 46.36 | | | |
| 11/13/1993 | Arsenic | 4 | TS | 1423.3 | .00045 | .00057 | 46.36 | | B | |
| 11/13/1993 | Barium | 4 | TS | 1423.3 | .00899 | .52000 | 46.36 | | | U |
| 11/13/1993 | Beryllium | 4 | TS | 1423.3 | .00016 | .00100 | 46.36 | | U | U |
| 11/13/1993 | Cadmium | 4 | TS | 1423.3 | .00130 | .00140 | 46.36 | | U | U |
| 11/13/1993 | Chromium | 4 | TS | 1423.3 | .00147 | .00020 | 46.36 | | | U |
| 11/13/1993 | Manganese | 4 | TS | 1423.3 | .01571 | .42000 | 46.36 | | | |
| 11/13/1993 | Nickel | 4 | TS | 1423.3 | .00327 | .01000 | 46.36 | | U | U |
| 11/13/1993 | Particulate Fluoride | 4 | TS | 1423.3 | 1.34904 | 8.30000 | 46.36 | | B | U |
| 11/13/1993 | Phosphorus | 4 | TS | 1423.3 | .22875 | .30000 | 46.36 | | B | U |
| 11/13/1993 | Selenium | 4 | TS | 1423.3 | .01636 | .70000 | 46.36 | | U | U |
| 11/13/1993 | Silver | 4 | TS | 1423.3 | .00114 | .30000 | 46.36 | | U | U |
| 11/13/1993 | Thallium | 4 | TS | 1423.3 | .03265 | .30000 | 46.36 | | U | U |
| 11/13/1993 | Vanadium | 4 | TS | 1423.3 | .00248 | .17000 | 46.36 | | B | |
| 11/13/1993 | Zinc | 4 | TS | 1423.3 | .01518 | .00000 | 46.36 | | B | |
| 11/13/1993 | Aluminum | 5 | TS | 1438.0 | .42057 | 33.30000 | 40.08 | | | |
| 11/13/1993 | Arsenic | 5 | TS | 1438.0 | .00050 | .00057 | 40.08 | | B | |
| 11/13/1993 | Barium | 5 | TS | 1438.0 | .00832 | .52000 | 40.08 | | | |
| 11/13/1993 | Beryllium | 5 | TS | 1438.0 | .00016 | .00100 | 40.08 | | B | |
| 11/13/1993 | Cadmium | 5 | TS | 1438.0 | .00129 | .00140 | 40.08 | | U | U |
| 11/13/1993 | Chromium | 5 | TS | 1438.0 | .00186 | .00020 | 40.08 | | | U |

| Sample Date | Chemical Name | Site # | Typ | Run Time (min.) | Chem Conc. (ug/m3) | EPA Scr. L(ug/m3) | Part.C. (ug/m3) | Grav. Val | Qual. Lab | Qual. Val |
|---|---|---|---|---|---|---|---|---|---|---|
| 11/13/1993 | Manganese | 5 | TS | 1438.0 | .01387 | .42000 | 40.08 | | | |
| 11/13/1993 | Nickel | 5 | TS | 1438.0 | .00323 | .01000 | 40.08 | | U | U |
| 11/13/1993 | Particulate Fluoride | 5 | TS | 1438.0 | 2.21897 | 8.30000 | 40.08 | | B | U |
| 11/13/1993 | Phosphorus | 5 | TS | 1438.0 | .41090 | .30000 | 40.08 | | | U |
| 11/13/1993 | Selenium | 5 | TS | 1438.0 | .01619 | .70000 | 40.08 | | U | U |
| 11/13/1993 | Silver | 5 | TS | 1438.0 | .00113 | .30000 | 40.08 | | U | U |
| 11/13/1993 | Thallium | 5 | TS | 1438.0 | .03232 | .30000 | 40.08 | | U | U |
| 11/13/1993 | Vanadium | 5 | TS | 1438.0 | .00284 | .17000 | 40.08 | | B | |
| 11/13/1993 | Zinc | 5 | TS | 1438.0 | .01245 | .00000 | 40.08 | | B | |
| 11/13/1993 | Aluminum | 6 | TS | 1439.2 | .46226 | 33.30000 | 39.95 | | | |
| 11/13/1993 | Arsenic | 6 | TS | 1439.2 | .00040 | .00057 | 39.95 | | B | |
| 11/13/1993 | Barium | 6 | TS | 1439.2 | .00720 | .52000 | 39.95 | | | |
| 11/13/1993 | Beryllium | 6 | TS | 1439.2 | .00016 | .00100 | 39.95 | | U | U |
| 11/13/1993 | Cadmium | 6 | TS | 1439.2 | .00129 | .00140 | 39.95 | | U | U |
| 11/13/1993 | Chromium | 6 | TS | 1439.2 | .00115 | .00020 | 39.95 | | | U |
| 11/13/1993 | Manganese | 6 | TS | 1439.2 | .01511 | .42000 | 39.95 | | | |
| 11/13/1993 | Nickel | 6 | TS | 1439.2 | .00322 | .01000 | 39.95 | | U | U |
| 11/13/1993 | Particulate Fluoride | 6 | TS | 1439.2 | 1.40158 | 8.30000 | 39.95 | | B | U |
| 11/13/1993 | Phosphorus | 6 | TS | 1439.2 | .16266 | .30000 | 39.95 | | B | U |
| 11/13/1993 | Selenium | 6 | TS | 1439.2 | .01614 | .70000 | 39.95 | | U | U |
| 11/13/1993 | Silver | 6 | TS | 1439.2 | .00113 | .30000 | 39.95 | | U | U |
| 11/13/1993 | Thallium | 6 | TS | 1439.2 | .03221 | .30000 | 39.95 | | U | U |
| 11/13/1993 | Vanadium | 6 | TS | 1439.2 | .00161 | .17000 | 39.95 | | B | |
| 11/13/1993 | Zinc | 6 | TS | 1439.2 | .01151 | .00000 | 39.95 | | B | |
| 11/13/1993 | Aluminum | 7 | TS | 1456.8 | .40468 | 33.30000 | 36.34 | | | |
| 11/13/1993 | Arsenic | 7 | TS | 1456.8 | .00049 | .00057 | 36.34 | | B | |
| 11/13/1993 | Barium | 7 | TS | 1456.8 | .00785 | .52000 | 36.34 | | | |
| 11/13/1993 | Beryllium | 7 | TS | 1456.8 | .00016 | .00100 | 36.34 | | U | U |
| 11/13/1993 | Cadmium | 7 | TS | 1456.8 | .00128 | .00140 | 36.34 | | U | U |
| 11/13/1993 | Chromium | 7 | TS | 1456.8 | .00107 | .00020 | 36.34 | | | U |
| 11/13/1993 | Manganese | 7 | TS | 1456.8 | .01404 | .42000 | 36.34 | | | |
| 11/13/1993 | Nickel | 7 | TS | 1456.8 | .00344 | .01000 | 36.34 | | B | |
| 11/13/1993 | Particulate Fluoride | 7 | TS | 1456.8 | 1.69788 | 8.30000 | 36.34 | | B | U |
| 11/13/1993 | Phosphorus | 7 | TS | 1456.8 | .20617 | .30000 | 36.34 | | B | U |
| 11/13/1993 | Selenium | 7 | TS | 1456.8 | .01602 | .70000 | 36.34 | | U | U |
| 11/13/1993 | Silver | 7 | TS | 1456.8 | .00112 | .30000 | 36.34 | | U | U |
| 11/13/1993 | Thallium | 7 | TS | 1456.8 | .03198 | .30000 | 36.34 | | U | U |
| 11/13/1993 | Vanadium | 7 | TS | 1456.8 | .00160 | .17000 | 36.34 | | U | U |
| 11/13/1993 | Zinc | 7 | TS | 1456.8 | .01226 | .00000 | 36.34 | | B | |
| 11/13/1993 | Aluminum | 8 | TS | 1458.6 | .74320 | 33.30000 | 66.54 | | | |
| 11/13/1993 | Arsenic | 8 | TS | 1458.6 | .00054 | .00057 | 66.54 | | B | |
| 11/13/1993 | Barium | 8 | TS | 1458.6 | .01012 | .52000 | 66.54 | | | |
| 11/13/1993 | Beryllium | 8 | TS | 1458.6 | .00016 | .00100 | 66.54 | | U | U |
| 11/13/1993 | Cadmium | 8 | TS | 1458.6 | .00273 | .00140 | 66.54 | | | |
| 11/13/1993 | Chromium | 8 | TS | 1458.6 | .00506 | .00020 | 66.54 | | | |
| 11/13/1993 | Manganese | 8 | TS | 1458.6 | .01672 | .42000 | 66.54 | | | |
| 11/13/1993 | Nickel | 8 | TS | 1458.6 | .00321 | .01000 | 66.54 | | U | U |
| 11/13/1993 | Particulate Fluoride | 8 | TS | 1458.6 | 6.85534 | 8.30000 | 66.54 | | | |

| Sample Date | Chemical Name | Site # | Typ | Run Time (min.) | Chem Conc. (ug/m3) | EPA Scr. L(ug/m3) | Part.C. Grav. (ug/m3) | Qual. Val | Qual. Lab | Qual. Val |
|---|---|---|---|---|---|---|---|---|---|---|
| 11/13/1993 | Phosphorus | 8 | TS | 1458.6 | 1.12761 | .30000 | 66.54 | | | |
| 11/13/1993 | Selenium | 8 | TS | 1458.6 | .01608 | .70000 | 66.54 | | U | U |
| 11/13/1993 | Silver | 8 | TS | 1458.6 | .00112 | .30000 | 66.54 | | U | U |
| 11/13/1993 | Thallium | 8 | TS | 1458.6 | .03210 | .30000 | 66.54 | | U | U |
| 11/13/1993 | Vanadium | 8 | TS | 1458.6 | .00637 | .17000 | 66.54 | | | |
| 11/13/1993 | Zinc | 8 | TS | 1458.6 | .01941 | .00000 | 66.54 | | B | |
| 11/17/1993 | Aluminum | 1 | TS | 1450.2 | .36872 | 33.30000 | 48.88 | | | |
| 11/17/1993 | Arsenic | 1 | TS | 1450.2 | .00144 | .00057 | 48.88 | | | |
| 11/17/1993 | Barium | 1 | TS | 1450.2 | .01097 | .52000 | 48.88 | | | J |
| 11/17/1993 | Beryllium | 1 | TS | 1450.2 | .00017 | .00100 | 48.88 | | U | U |
| 11/17/1993 | Cadmium | 1 | TS | 1450.2 | .00134 | .00140 | 48.88 | | U | U |
| 11/17/1993 | Chromium | 1 | TS | 1450.2 | .00530 | .00020 | 48.88 | | | |
| 11/17/1993 | Manganese | 1 | TS | 1450.2 | .01231 | .42000 | 48.88 | | | |
| 11/17/1993 | Nickel | 1 | TS | 1450.2 | .00335 | .01000 | 48.88 | | U | U |
| 11/17/1993 | Particulate Fluoride | 1 | TS | 1450.2 | 2.07447 | 8.30000 | 48.88 | | B | U |
| 11/17/1993 | Phosphorus | 1 | TS | 1450.2 | .64375 | .30000 | 48.88 | | | U |
| 11/17/1993 | Selenium | 1 | TS | 1450.2 | .01680 | .70000 | 48.88 | | U | U |
| 11/17/1993 | Silver | 1 | TS | 1450.2 | .00117 | .30000 | 48.88 | | U | U |
| 11/17/1993 | Thallium | 1 | TS | 1450.2 | .03353 | .30000 | 48.88 | | U | U |
| 11/17/1993 | Vanadium | 1 | TS | 1450.2 | .00528 | .17000 | 48.88 | | | |
| 11/17/1993 | Zinc | 1 | TS | 1450.2 | .01961 | .00000 | 48.88 | | B | |
| 11/17/1993 | Aluminum | 2 | TS | 1438.9 | 1.72571 | 33.30000 | 199.99 | | | |
| 11/17/1993 | Arsenic | 2 | TS | 1438.9 | .00368 | .00057 | 199.99 | | | |
| 11/17/1993 | Barium | 2 | TS | 1438.9 | .02749 | .52000 | 199.99 | | | J |
| 11/17/1993 | Beryllium | 2 | TS | 1438.9 | .00028 | .00100 | 199.99 | | B | |
| 11/17/1993 | Cadmium | 2 | TS | 1438.9 | .02447 | .00140 | 199.99 | | | |
| 11/17/1993 | Chromium | 2 | TS | 1438.9 | .07546 | .00020 | 199.99 | | | |
| 11/17/1993 | Manganese | 2 | TS | 1438.9 | .04619 | .42000 | 199.99 | | | |
| 11/17/1993 | Nickel | 2 | TS | 1438.9 | .02152 | .01000 | 199.99 | | | |
| 11/17/1993 | Particulate Fluoride | 2 | TS | 1438.9 | 4.34381 | 8.30000 | 199.99 | | | U |
| 11/17/1993 | Phosphorus | 2 | TS | 1438.9 | 6.95535 | .30000 | 199.99 | | | |
| 11/17/1993 | Selenium | 2 | TS | 1438.9 | .01647 | .70000 | 199.99 | | U | U |
| 11/17/1993 | Silver | 2 | TS | 1438.9 | .00118 | .30000 | 199.99 | | B | |
| 11/17/1993 | Thallium | 2 | TS | 1438.9 | .03287 | .30000 | 199.99 | | U | U |
| 11/17/1993 | Vanadium | 2 | TS | 1438.9 | .10039 | .17000 | 199.99 | | | |
| 11/17/1993 | Zinc | 2 | TS | 1438.9 | .15551 | .00000 | 199.99 | | | |
| 11/17/1993 | Aluminum | 3 | TS | 1445.5 | .32766 | 33.30000 | 42.61 | | | |
| 11/17/1993 | Arsenic | 3 | TS | 1445.5 | .00140 | .00057 | 42.61 | | | |
| 11/17/1993 | Barium | 3 | TS | 1445.5 | .00752 | .52000 | 42.61 | | | J |
| 11/17/1993 | Beryllium | 3 | TS | 1445.5 | .00016 | .00100 | 42.61 | | U | U |
| 11/17/1993 | Cadmium | 3 | TS | 1445.5 | .00127 | .00140 | 42.61 | | U | U |
| 11/17/1993 | Chromium | 3 | TS | 1445.5 | .00259 | .00020 | 42.61 | | | |
| 11/17/1993 | Manganese | 3 | TS | 1445.5 | .01320 | .42000 | 42.61 | | | |
| 11/17/1993 | Nickel | 3 | TS | 1445.5 | .00319 | .01000 | 42.61 | | U | U |
| 11/17/1993 | Particulate Fluoride | 3 | TS | 1445.5 | 1.31956 | 8.30000 | 42.61 | | B | U |
| 11/17/1993 | Phosphorus | 3 | TS | 1445.5 | .26519 | .30000 | 42.61 | | B | U |
| 11/17/1993 | Selenium | 3 | TS | 1445.5 | .01600 | .70000 | 42.61 | | U | U |
| 11/17/1993 | Silver | 3 | TS | 1445.5 | .00112 | .30000 | 42.61 | | U | U |

| Sample Date | Chemical Name | Site # | Typ | Run Time (min.) | Chem Conc. (ug/m3) | EPA Scr. L(ug/m3) | Part.C. (ug/m3) | Grav. Val | Qual. Lab | Qual. Val |
|---|---|---|---|---|---|---|---|---|---|---|
| 11/17/1993 | Thallium | 3 | TS | 1445.5 | .03194 | .30000 | 42.61 | | U | U |
| 11/17/1993 | Vanadium | 3 | TS | 1445.5 | .00219 | .17000 | 42.61 | | B | |
| 11/17/1993 | Zinc | 3 | TS | 1445.5 | .01409 | .00000 | 42.61 | | B | U |
| 11/17/1993 | Aluminum | 4 | TS | 1428.8 | .70218 | 33.30000 | 79.47 | | | |
| 11/17/1993 | Arsenic | 4 | TS | 1428.8 | .00166 | .00057 | 79.47 | | | |
| 11/17/1993 | Barium | 4 | TS | 1428.8 | .01451 | .52000 | 79.47 | | | J |
| 11/17/1993 | Beryllium | 4 | TS | 1428.8 | .00023 | .00100 | 79.47 | | B | |
| 11/17/1993 | Cadmium | 4 | TS | 1428.8 | .00201 | .00140 | 79.47 | | | |
| 11/17/1993 | Chromium | 4 | TS | 1428.8 | .00432 | .00020 | 79.47 | | | |
| 11/17/1993 | Manganese | 4 | TS | 1428.8 | .02491 | .42000 | 79.47 | | | |
| 11/17/1993 | Nickel | 4 | TS | 1428.8 | .00332 | .01000 | 79.47 | | U | U |
| 11/17/1993 | Particulate Fluoride | 4 | TS | 1428.8 | 1.74220 | 8.30000 | 79.47 | | B | U |
| 11/17/1993 | Phosphorus | 4 | TS | 1428.8 | .45311 | .30000 | 79.47 | | | U |
| 11/17/1993 | Selenium | 4 | TS | 1428.8 | .01663 | .70000 | 79.47 | | U | U |
| 11/17/1993 | Silver | 4 | TS | 1428.8 | .00116 | .30000 | 79.47 | | U | U |
| 11/17/1993 | Thallium | 4 | TS | 1428.8 | .03319 | .30000 | 79.47 | | U | U |
| 11/17/1993 | Vanadium | 4 | TS | 1428.8 | .00478 | .17000 | 79.47 | | | |
| 11/17/1993 | Zinc | 4 | TS | 1428.8 | .02855 | .00000 | 79.47 | | B | |
| 11/17/1993 | Aluminum | 5 | TS | 1437.3 | .85607 | 33.30000 | 79.27 | | | |
| 11/17/1993 | Arsenic | 5 | TS | 1437.3 | .00190 | .00057 | 79.27 | | | |
| 11/17/1993 | Barium | 5 | TS | 1437.3 | .01264 | .52000 | 79.27 | | | |
| 11/17/1993 | Beryllium | 5 | TS | 1437.3 | .00018 | .00100 | 79.27 | | B | |
| 11/17/1993 | Cadmium | 5 | TS | 1437.3 | .00149 | .00140 | 79.27 | | | |
| 11/17/1993 | Chromium | 5 | TS | 1437.3 | .00556 | .00020 | 79.27 | | | |
| 11/17/1993 | Manganese | 5 | TS | 1437.3 | .03088 | .42000 | 79.27 | | | |
| 11/17/1993 | Nickel | 5 | TS | 1437.3 | .00330 | .01000 | 79.27 | | U | U |
| 11/17/1993 | Particulate Fluoride | 5 | TS | 1437.3 | 1.79117 | 8.30000 | 79.27 | | B | U |
| 11/17/1993 | Phosphorus | 5 | TS | 1437.3 | .91534 | .30000 | 79.27 | | | |
| 11/17/1993 | Selenium | 5 | TS | 1437.3 | .01653 | .70000 | 79.27 | | U | U |
| 11/17/1993 | Silver | 5 | TS | 1437.3 | .00115 | .30000 | 79.27 | | B | |
| 11/17/1993 | Thallium | 5 | TS | 1437.3 | .03299 | .30000 | 79.27 | | U | U |
| 11/17/1993 | Vanadium | 5 | TS | 1437.3 | .00487 | .17000 | 79.27 | | | |
| 11/17/1993 | Zinc | 5 | TS | 1437.3 | .02456 | .00000 | 79.27 | | B | |
| 11/17/1993 | Aluminum | 6 | TS | 1439.1 | .76105 | 33.30000 | 72.74 | | | |
| 11/17/1993 | Arsenic | 6 | TS | 1439.1 | .00148 | .00057 | 72.74 | | | |
| 11/17/1993 | Barium | 6 | TS | 1439.1 | .01279 | .52000 | 72.74 | | | |
| 11/17/1993 | Beryllium | 6 | TS | 1439.1 | .00018 | .00100 | 72.74 | | B | |
| 11/17/1993 | Cadmium | 6 | TS | 1439.1 | .00131 | .00140 | 72.74 | | U | U |
| 11/17/1993 | Chromium | 6 | TS | 1439.1 | .00163 | .00020 | 72.74 | | | U |
| 11/17/1993 | Manganese | 6 | TS | 1439.1 | .03418 | .42000 | 72.74 | | | |
| 11/17/1993 | Nickel | 6 | TS | 1439.1 | .00329 | .01000 | 72.74 | | U | U |
| 11/17/1993 | Particulate Fluoride | 6 | TS | 1439.1 | 1.78452 | 8.30000 | 72.74 | | B | U |
| 11/17/1993 | Phosphorus | 6 | TS | 1439.1 | .21716 | .30000 | 72.74 | | B | U |
| 11/17/1993 | Selenium | 6 | TS | 1439.1 | .01647 | .70000 | 72.74 | | U | U |
| 11/17/1993 | Silver | 6 | TS | 1439.1 | .00115 | .30000 | 72.74 | | U | U |
| 11/17/1993 | Thallium | 6 | TS | 1439.1 | .03287 | .30000 | 72.74 | | U | U |
| 11/17/1993 | Vanadium | 6 | TS | 1439.1 | .00215 | .17000 | 72.74 | | B | |
| 11/17/1993 | Zinc | 6 | TS | 1439.1 | .00951 | .00000 | 72.74 | | B | |
| 11/17/1993 | Aluminum | 7 | TS | 1452.2 | .20124 | 33.30000 | 30.07 | | | |

| Sample Date | Chemical Name | Site # | Typ | Run Time (min.) | Chem Conc. (ug/m3) | EPA Scr. L(ug/m3) | Part.C. (ug/m3) | Grav. Val | Qual. Lab | Qual. Val |
|---|---|---|---|---|---|---|---|---|---|---|
| 11/17/1993 | Arsenic | 7 | TS | 1452.2 | .00152 | .00057 | 30.07 | | | |
| 11/17/1993 | Barium | 7 | TS | 1452.2 | .00647 | .52000 | 30.07 | | | |
| 11/17/1993 | Beryllium | 7 | TS | 1452.2 | .00016 | .00100 | 30.07 | | U | U |
| 11/17/1993 | Cadmium | 7 | TS | 1452.2 | .00210 | .00140 | 30.07 | | | |
| 11/17/1993 | Chromium | 7 | TS | 1452.2 | .00278 | .00020 | 30.07 | | | |
| 11/17/1993 | Manganese | 7 | TS | 1452.2 | .00784 | .42000 | 30.07 | | | |
| 11/17/1993 | Nickel | 7 | TS | 1452.2 | .00327 | .01000 | 30.07 | | U | U |
| 11/17/1993 | Particulate Fluoride | 7 | TS | 1452.2 | 2.69190 | 8.30000 | 30.07 | | B | U |
| 11/17/1993 | Phosphorus | 7 | TS | 1452.2 | .93432 | .30000 | 30.07 | | | |
| 11/17/1993 | Selenium | 7 | TS | 1452.2 | .01640 | .70000 | 30.07 | | U | U |
| 11/17/1993 | Silver | 7 | TS | 1452.2 | .00114 | .30000 | 30.07 | | U | U |
| 11/17/1993 | Thallium | 7 | TS | 1452.2 | .03273 | .30000 | 30.07 | | U | U |
| 11/17/1993 | Vanadium | 7 | TS | 1452.2 | .00331 | .17000 | 30.07 | | B | |
| 11/17/1993 | Zinc | 7 | TS | 1452.2 | .01673 | .00000 | 30.07 | | B | |
| 11/17/1993 | Aluminum | 8 | TS | 1451.5 | .41519 | 33.30000 | 47.26 | | | |
| 11/17/1993 | Arsenic | 8 | TS | 1451.5 | .00128 | .00057 | 47.26 | | | |
| 11/17/1993 | Barium | 8 | TS | 1451.5 | .01104 | .52000 | 47.26 | | | |
| 11/17/1993 | Beryllium | 8 | TS | 1451.5 | .00016 | .00100 | 47.26 | | U | U |
| 11/17/1993 | Cadmium | 8 | TS | 1451.5 | .00211 | .00140 | 47.26 | | | |
| 11/17/1993 | Chromium | 8 | TS | 1451.5 | .00432 | .00020 | 47.26 | | | |
| 11/17/1993 | Manganese | 8 | TS | 1451.5 | .01294 | .42000 | 47.26 | | | |
| 11/17/1993 | Nickel | 8 | TS | 1451.5 | .00329 | .01000 | 47.26 | | U | U |
| 11/17/1993 | Particulate Fluoride | 8 | TS | 1451.5 | 3.17303 | 8.30000 | 47.26 | | B | U |
| 11/17/1993 | Phosphorus | 8 | TS | 1451.5 | .67008 | .30000 | 47.26 | | | U |
| 11/17/1993 | Selenium | 8 | TS | 1451.5 | .01645 | .70000 | 47.26 | | U | U |
| 11/17/1993 | Silver | 8 | TS | 1451.5 | .00115 | .30000 | 47.26 | | U | U |
| 11/17/1993 | Thallium | 8 | TS | 1451.5 | .03290 | .30000 | 47.26 | | U | U |
| 11/17/1993 | Vanadium | 8 | TS | 1451.5 | .00526 | .17000 | 47.26 | | | |
| 11/17/1993 | Zinc | 8 | TS | 1451.5 | .01908 | .00000 | 47.26 | | | |
| 11/21/1993 | Aluminum | 1 | TS | 1446.4 | .54062 | 33.30000 | 63.92 | | | |
| 11/21/1993 | Arsenic | 1 | TS | 1446.4 | .00287 | .00057 | 63.92 | | | |
| 11/21/1993 | Barium | 1 | TS | 1446.4 | .01544 | .52000 | 63.92 | | | |
| 11/21/1993 | Beryllium | 1 | TS | 1446.4 | .00017 | .00100 | 63.92 | | U | U |
| 11/21/1993 | Cadmium | 1 | TS | 1446.4 | .00290 | .00140 | 63.92 | | | |
| 11/21/1993 | Chromium | 1 | TS | 1446.4 | .00675 | .00020 | 63.92 | | | |
| 11/21/1993 | Manganese | 1 | TS | 1446.4 | .01604 | .42000 | 63.92 | | | |
| 11/21/1993 | Nickel | 1 | TS | 1446.4 | .00335 | .01000 | 63.92 | | U | U |
| 11/21/1993 | Particulate Fluoride | 1 | TS | 1446.4 | 1.83103 | 8.30000 | 63.92 | | B | U |
| 11/21/1993 | Phosphorus | 1 | TS | 1446.4 | .86874 | .30000 | 63.92 | | | U |
| 11/21/1993 | Selenium | 1 | TS | 1446.4 | .01677 | .70000 | 63.92 | | U | U |
| 11/21/1993 | Silver | 1 | TS | 1446.4 | .00117 | .30000 | 63.92 | | U | U |
| 11/21/1993 | Thallium | 1 | TS | 1446.4 | .03348 | .30000 | 63.92 | | U | U |
| 11/21/1993 | Vanadium | 1 | TS | 1446.4 | .00842 | .17000 | 63.92 | | | |
| 11/21/1993 | Zinc | 1 | TS | 1446.4 | .03047 | .00000 | 63.92 | | B | |
| 11/21/1993 | Aluminum | 2 | TS | 1434.4 | 2.01923 | 33.30000 | 199.42 | | | |
| 11/21/1993 | Arsenic | 2 | TS | 1434.4 | .00491 | .00057 | 199.42 | | | |
| 11/21/1993 | Barium | 2 | TS | 1434.4 | .02780 | .52000 | 199.42 | | | |
| 11/21/1993 | Beryllium | 2 | TS | 1434.4 | .00020 | .00100 | 199.42 | | B | |
| 11/21/1993 | Cadmium | 2 | TS | 1434.4 | .03304 | .00140 | 199.42 | | | |

| Sample Date | Chemical Name | Site # | Typ | Run Time (min.) | Chem Conc. (ug/m3) | EPA Scr. L(ug/m3) | Part.C. (ug/m3) | Grav. Val | Qual. Lab | Qual. Val |
|---|---|---|---|---|---|---|---|---|---|---|
| 11/21/1993 | Chromium | 2 | TS | 1434.4 | .07015 | .00020 | 199.42 | | | |
| 11/21/1993 | Manganese | 2 | TS | 1434.4 | .04799 | .42000 | 199.42 | | | |
| 11/21/1993 | Nickel | 2 | TS | 1434.4 | .02347 | .01000 | 199.42 | | | |
| 11/21/1993 | Particulate Fluoride | 2 | TS | 1434.4 | 4.55638 | 8.30000 | 199.42 | | | U |
| 11/21/1993 | Phosphorus | 2 | TS | 1434.4 | 6.81818 | .30000 | 199.42 | | | |
| 11/21/1993 | Selenium | 2 | TS | 1434.4 | .01646 | .70000 | 199.42 | | U | U |
| 11/21/1993 | Silver | 2 | TS | 1434.4 | .00143 | .30000 | 199.42 | | B | |
| 11/21/1993 | Thallium | 2 | TS | 1434.4 | .03285 | .30000 | 199.42 | | U | U |
| 11/21/1993 | Vanadium | 2 | TS | 1434.4 | .12128 | .17000 | 199.42 | | | |
| 11/21/1993 | Zinc | 2 | TS | 1434.4 | .16783 | .00000 | 199.42 | | | |
| 11/21/1993 | Aluminum | 3 | TS | 1450.6 | .63269 | 33.30000 | 53.87 | | | |
| 11/21/1993 | Arsenic | 3 | TS | 1450.6 | .00339 | .00057 | 53.87 | | | |
| 11/21/1993 | Barium | 3 | TS | 1450.6 | .01158 | .52000 | 53.87 | | | |
| 11/21/1993 | Beryllium | 3 | TS | 1450.6 | .00016 | .00100 | 53.87 | | B | |
| 11/21/1993 | Cadmium | 3 | TS | 1450.6 | .00127 | .00140 | 53.87 | | U | U |
| 11/21/1993 | Chromium | 3 | TS | 1450.6 | .00223 | .00020 | 53.87 | | | |
| 11/21/1993 | Manganese | 3 | TS | 1450.6 | .02284 | .42000 | 53.87 | | | |
| 11/21/1993 | Nickel | 3 | TS | 1450.6 | .00317 | .01000 | 53.87 | | U | U |
| 11/21/1993 | Particulate Fluoride | 3 | TS | 1450.6 | 1.70826 | 8.30000 | 53.87 | | B | U |
| 11/21/1993 | Phosphorus | 3 | TS | 1450.6 | .31381 | .30000 | 53.87 | | | U |
| 11/21/1993 | Selenium | 3 | TS | 1450.6 | .01588 | .70000 | 53.87 | | U | U |
| 11/21/1993 | Silver | 3 | TS | 1450.6 | .00111 | .30000 | 53.87 | | U | U |
| 11/21/1993 | Thallium | 3 | TS | 1450.6 | .03170 | .30000 | 53.87 | | U | U |
| 11/21/1993 | Vanadium | 3 | TS | 1450.6 | .00227 | .17000 | 53.87 | | B | |
| 11/21/1993 | Zinc | 3 | TS | 1450.6 | .01582 | .00000 | 53.87 | | B | |
| 11/21/1993 | Aluminum | 4 | TS | 1430.9 | 1.00141 | 33.30000 | 105.34 | | | |
| 11/21/1993 | Arsenic | 4 | TS | 1430.9 | .00355 | .00057 | 105.34 | | | |
| 11/21/1993 | Barium | 4 | TS | 1430.9 | .01601 | .52000 | 105.34 | | | J |
| 11/21/1993 | Beryllium | 4 | TS | 1430.9 | .00028 | .00100 | 105.34 | | B | |
| 11/21/1993 | Cadmium | 4 | TS | 1430.9 | .00175 | .00140 | 105.34 | | | |
| 11/21/1993 | Chromium | 4 | TS | 1430.9 | .00378 | .00020 | 105.34 | | | |
| 11/21/1993 | Manganese | 4 | TS | 1430.9 | .03103 | .42000 | 105.34 | | | |
| 11/21/1993 | Nickel | 4 | TS | 1430.9 | .00413 | .01000 | 105.34 | | B | U |
| 11/21/1993 | Particulate Fluoride | 4 | TS | 1430.9 | 1.76564 | 8.30000 | 105.34 | | B | U |
| 11/21/1993 | Phosphorus | 4 | TS | 1430.9 | .37948 | .30000 | 105.34 | | | U |
| 11/21/1993 | Selenium | 4 | TS | 1430.9 | .01654 | .70000 | 105.34 | | U | U |
| 11/21/1993 | Silver | 4 | TS | 1430.9 | .00115 | .30000 | 105.34 | | U | U |
| 11/21/1993 | Thallium | 4 | TS | 1430.9 | .03301 | .30000 | 105.34 | | U | U |
| 11/21/1993 | Vanadium | 4 | TS | 1430.9 | .00393 | .17000 | 105.34 | | B | |
| 11/21/1993 | Zinc | 4 | TS | 1430.9 | .02359 | .00000 | 105.34 | | B | |
| 11/21/1993 | Aluminum | 5 | TS | 1436.9 | .93162 | 33.30000 | 80.81 | | | |
| 11/21/1993 | Arsenic | 5 | TS | 1436.9 | .00211 | .00057 | 80.81 | | | |
| 11/21/1993 | Barium | 5 | TS | 1436.9 | .01050 | .52000 | 80.81 | | | J |
| 11/21/1993 | Beryllium | 5 | TS | 1436.9 | .00025 | .00100 | 80.81 | | B | |
| 11/21/1993 | Cadmium | 5 | TS | 1436.9 | .00257 | .00140 | 80.81 | | | |
| 11/21/1993 | Chromium | 5 | TS | 1436.9 | .00237 | .00020 | 80.81 | | | U |
| 11/21/1993 | Manganese | 5 | TS | 1436.9 | .03175 | .42000 | 80.81 | | | |
| 11/21/1993 | Nickel | 5 | TS | 1436.9 | .00329 | .01000 | 80.81 | | U | U |
| 11/21/1993 | Particulate | 5 | TS | 1436.9 | 1.75827 | 8.30000 | 80.81 | | B | U |

| Sample Date | Chemical Name | Site # | Typ | Run Time (min.) | Chem Conc. (ug/m3) | EPA Scr. L(ug/m3) | Part.C. (ug/m3) | Grav. Val | Qual. Lab | Qual. Val |
|---|---|---|---|---|---|---|---|---|---|---|
| | Fluoride | | | | | | | | | |
| 11/21/1993 | Phosphorus | 5 | TS | 1436.9 | .43760 | .30000 | 80.81 | | | U |
| 11/21/1993 | Selenium | 5 | TS | 1436.9 | .01647 | .70000 | 80.81 | | U | U |
| 11/21/1993 | Silver | 5 | TS | 1436.9 | .00115 | .30000 | 80.81 | | U | U |
| 11/21/1993 | Thallium | 5 | TS | 1436.9 | .03287 | .30000 | 80.81 | | U | U |
| 11/21/1993 | Vanadium | 5 | TS | 1436.9 | .00299 | .17000 | 80.81 | | B | |
| 11/21/1993 | Zinc | 5 | TS | 1436.9 | .01778 | .00000 | 80.81 | | B | |
| 11/21/1993 | Aluminum | 6 | TS | 1437.4 | .71311 | 33.30000 | 73.45 | | | |
| 11/21/1993 | Arsenic | 6 | TS | 1437.4 | .00387 | .00057 | 73.45 | | | |
| 11/21/1993 | Barium | 6 | TS | 1437.4 | .00994 | .52000 | 73.45 | | | J |
| 11/21/1993 | Beryllium | 6 | TS | 1437.4 | .00016 | .00100 | 73.45 | | B | |
| 11/21/1993 | Cadmium | 6 | TS | 1437.4 | .00131 | .00140 | 73.45 | | U | U |
| 11/21/1993 | Chromium | 6 | TS | 1437.4 | .00166 | .00020 | 73.45 | | | U |
| 11/21/1993 | Manganese | 6 | TS | 1437.4 | .02820 | .42000 | 73.45 | | | |
| 11/21/1993 | Nickel | 6 | TS | 1437.4 | .00328 | .01000 | 73.45 | | U | U |
| 11/21/1993 | Particulate Fluoride | 6 | TS | 1437.4 | 1.83183 | 8.30000 | 73.45 | | B | U |
| 11/21/1993 | Phosphorus | 6 | TS | 1437.4 | .20019 | .30000 | 73.45 | | B | U |
| 11/21/1993 | Selenium | 6 | TS | 1437.4 | .01642 | .70000 | 73.45 | | U | U |
| 11/21/1993 | Silver | 6 | TS | 1437.4 | .00114 | .30000 | 73.45 | | U | U |
| 11/21/1993 | Thallium | 6 | TS | 1437.4 | .03278 | .30000 | 73.45 | | U | U |
| 11/21/1993 | Vanadium | 6 | TS | 1437.4 | .00182 | .17000 | 73.45 | | B | |
| 11/21/1993 | Zinc | 6 | TS | 1437.4 | .00962 | .00000 | 73.45 | | B | U |
| 11/21/1993 | Aluminum | 7 | TS | 1456.4 | .27188 | 33.30000 | 25.84 | | | |
| 11/21/1993 | Arsenic | 7 | TS | 1456.4 | .00295 | .00057 | 25.84 | | | |
| 11/21/1993 | Barium | 7 | TS | 1456.4 | .00578 | .52000 | 25.84 | | | |
| 11/21/1993 | Beryllium | 7 | TS | 1456.4 | .00016 | .00100 | 25.84 | | U | U |
| 11/21/1993 | Cadmium | 7 | TS | 1456.4 | .00545 | .00140 | 25.84 | | | |
| 11/21/1993 | Chromium | 7 | TS | 1456.4 | .00189 | .00020 | 25.84 | | | |
| 11/21/1993 | Manganese | 7 | TS | 1456.4 | .00934 | .42000 | 25.84 | | | |
| 11/21/1993 | Nickel | 7 | TS | 1456.4 | .00325 | .01000 | 25.84 | | U | U |
| 11/21/1993 | Particulate Fluoride | 7 | TS | 1456.4 | 1.98560 | 8.30000 | 25.84 | | B | U |
| 11/21/1993 | Phosphorus | 7 | TS | 1456.4 | .62099 | .30000 | 25.84 | | | U |
| 11/21/1993 | Selenium | 7 | TS | 1456.4 | .01629 | .70000 | 25.84 | | U | U |
| 11/21/1993 | Silver | 7 | TS | 1456.4 | .00114 | .30000 | 25.84 | | U | U |
| 11/21/1993 | Thallium | 7 | TS | 1456.4 | .03251 | .30000 | 25.84 | | U | U |
| 11/21/1993 | Vanadium | 7 | TS | 1456.4 | .00163 | .17000 | 25.84 | | U | U |
| 11/21/1993 | Zinc | 7 | TS | 1456.4 | .01045 | .00000 | 25.84 | | B | |
| 11/21/1993 | Aluminum | 8 | TS | 1461.2 | .60448 | 33.30000 | 69.13 | | | |
| 11/21/1993 | Arsenic | 8 | TS | 1461.2 | .00309 | .00057 | 69.13 | | | |
| 11/21/1993 | Barium | 8 | TS | 1461.2 | .01924 | .52000 | 69.13 | | | |
| 11/21/1993 | Beryllium | 8 | TS | 1461.2 | .00018 | .00100 | 69.13 | | B | |
| 11/21/1993 | Cadmium | 8 | TS | 1461.2 | .00335 | .00140 | 69.13 | | | |
| 11/21/1993 | Chromium | 8 | TS | 1461.2 | .00238 | .00020 | 69.13 | | | |
| 11/21/1993 | Manganese | 8 | TS | 1461.2 | .01839 | .42000 | 69.13 | | | |
| 11/21/1993 | Nickel | 8 | TS | 1461.2 | .00391 | .01000 | 69.13 | | B | |
| 11/21/1993 | Particulate Fluoride | 8 | TS | 1461.2 | 2.35940 | 8.30000 | 69.13 | | B | U |
| 11/21/1993 | Phosphorus | 8 | TS | 1461.2 | .99446 | .30000 | 69.13 | | | |
| 11/21/1993 | Selenium | 8 | TS | 1461.2 | .01631 | .70000 | 69.13 | | U | U |

| Sample Date | Chemical Name | Site # | Typ | Run Time (min.) | Chem Conc. (ug/m3) | EPA Scr. L(ug/m3) | Part.C. (ug/m3) | Grav. Val | Qual. Lab | Qual. Val |
|---|---|---|---|---|---|---|---|---|---|---|
| 11/21/1993 | Silver | 8 | TS | 1461.2 | .00114 | .30000 | 69.13 | | U | U |
| 11/21/1993 | Thallium | 8 | TS | 1461.2 | .03256 | .30000 | 69.13 | | U | U |
| 11/21/1993 | Vanadium | 8 | TS | 1461.2 | .00923 | .17000 | 69.13 | | | |
| 11/21/1993 | Zinc | 8 | TS | 1461.2 | .03126 | .00000 | 69.13 | | B | |
| 11/25/1993 | Aluminum | 1 | TS | 1447.1 | .17876 | 33.30000 | 68.94 | | | |
| 11/25/1993 | Arsenic | 1 | TS | 1447.1 | .00020 | .00057 | 68.94 | | B | |
| 11/25/1993 | Barium | 1 | TS | 1447.1 | .00575 | .52000 | 68.94 | | | J |
| 11/25/1993 | Beryllium | 1 | TS | 1447.1 | .00016 | .00100 | 68.94 | | U | U |
| 11/25/1993 | Cadmium | 1 | TS | 1447.1 | .00326 | .00140 | 68.94 | | | |
| 11/25/1993 | Chromium | 1 | TS | 1447.1 | .00342 | .00020 | 68.94 | | | |
| 11/25/1993 | Manganese | 1 | TS | 1447.1 | .00603 | .42000 | 68.94 | | | |
| 11/25/1993 | Nickel | 1 | TS | 1447.1 | .00311 | .01000 | 68.94 | | U | U |
| 11/25/1993 | Particulate Fluoride | 1 | TS | 1447.1 | 1.30966 | 8.30000 | 68.94 | | B | U |
| 11/25/1993 | Phosphorus | 1 | TS | 1447.1 | .72000 | .30000 | 68.94 | | | U |
| 11/25/1993 | Selenium | 1 | TS | 1447.1 | .01558 | .70000 | 68.94 | | U | U |
| 11/25/1993 | Silver | 1 | TS | 1447.1 | .00109 | .30000 | 68.94 | | U | U |
| 11/25/1993 | Thallium | 1 | TS | 1447.1 | .03110 | .30000 | 68.94 | | U | U |
| 11/25/1993 | Vanadium | 1 | TS | 1447.1 | .00304 | .17000 | 68.94 | | B | |
| 11/25/1993 | Zinc | 1 | TS | 1447.1 | .02942 | .00000 | 68.94 | | B | |
| 11/25/1993 | Aluminum | 2 | TS | 1445.1 | .27877 | 33.30000 | 67.71 | | | |
| 11/25/1993 | Arsenic | 2 | TS | 1445.1 | .00028 | .00057 | 67.71 | | B | |
| 11/25/1993 | Barium | 2 | TS | 1445.1 | .00847 | .52000 | 67.71 | | | J |
| 11/25/1993 | Beryllium | 2 | TS | 1445.1 | .00021 | .00100 | 67.71 | | B | |
| 11/25/1993 | Cadmium | 2 | TS | 1445.1 | .00464 | .00140 | 67.71 | | | |
| 11/25/1993 | Chromium | 2 | TS | 1445.1 | .00738 | .00020 | 67.71 | | | |
| 11/25/1993 | Manganese | 2 | TS | 1445.1 | .01185 | .42000 | 67.71 | | | |
| 11/25/1993 | Nickel | 2 | TS | 1445.1 | .00447 | .01000 | 67.71 | | B | U |
| 11/25/1993 | Particulate Fluoride | 2 | TS | 1445.1 | 1.84436 | 8.30000 | 67.71 | | B | U |
| 11/25/1993 | Phosphorus | 2 | TS | 1445.1 | .93125 | .30000 | 67.71 | | | |
| 11/25/1993 | Selenium | 2 | TS | 1445.1 | .01518 | .70000 | 67.71 | | U | U |
| 11/25/1993 | Silver | 2 | TS | 1445.1 | .00106 | .30000 | 67.71 | | U | U |
| 11/25/1993 | Thallium | 2 | TS | 1445.1 | .03030 | .30000 | 67.71 | | U | U |
| 11/25/1993 | Vanadium | 2 | TS | 1445.1 | .00659 | .17000 | 67.71 | | | |
| 11/25/1993 | Zinc | 2 | TS | 1445.1 | .10341 | .00000 | 67.71 | | | |
| 11/25/1993 | Aluminum | 3 | TS | 1445.5 | .13275 | 33.30000 | 69.78 | | | |
| 11/25/1993 | Arsenic | 3 | TS | 1445.5 | .00038 | .00057 | 69.78 | | B | |
| 11/25/1993 | Barium | 3 | TS | 1445.5 | .00488 | .52000 | 69.78 | | | J |
| 11/25/1993 | Beryllium | 3 | TS | 1445.5 | .00015 | .00100 | 69.78 | | U | U |
| 11/25/1993 | Cadmium | 3 | TS | 1445.5 | .00333 | .00140 | 69.78 | | | |
| 11/25/1993 | Chromium | 3 | TS | 1445.5 | .00210 | .00020 | 69.78 | | | U |
| 11/25/1993 | Manganese | 3 | TS | 1445.5 | .00667 | .42000 | 69.78 | | | |
| 11/25/1993 | Nickel | 3 | TS | 1445.5 | .00296 | .01000 | 69.78 | | U | U |
| 11/25/1993 | Particulate Fluoride | 3 | TS | 1445.5 | 1.39832 | 8.30000 | 69.78 | | B | U |
| 11/25/1993 | Phosphorus | 3 | TS | 1445.5 | .61951 | .30000 | 69.78 | | | U |
| 11/25/1993 | Selenium | 3 | TS | 1445.5 | .01481 | .70000 | 69.78 | | U | U |
| 11/25/1993 | Silver | 3 | TS | 1445.5 | .00103 | .30000 | 69.78 | | U | U |
| 11/25/1993 | Thallium | 3 | TS | 1445.5 | .02956 | .30000 | 69.78 | | U | U |
| 11/25/1993 | Vanadium | 3 | TS | 1445.5 | .00223 | .17000 | 69.78 | | B | |
| 11/25/1993 | Zinc | 3 | TS | 1445.5 | .02366 | .00000 | 69.78 | | B | |

| Sample Date | Chemical Name | Site # | Typ | Run Time (min.) | Chem Conc. (ug/m3) | EPA Scr. L(ug/m3) | Part.C. (ug/m3) | Grav. Val | Qual. Lab | Qual. Val |
|---|---|---|---|---|---|---|---|---|---|---|
| 11/25/1993 | Aluminum | 4 | TS | 1429.2 | .19798 | 33.30000 | 88.32 | | | |
| 11/25/1993 | Arsenic | 4 | TS | 1429.2 | .00070 | .00057 | 88.32 | | | |
| 11/25/1993 | Barium | 4 | TS | 1429.2 | .00522 | .52000 | 88.32 | | | |
| 11/25/1993 | Beryllium | 4 | TS | 1429.2 | .00015 | .00100 | 88.32 | | U | U |
| 11/25/1993 | Cadmium | 4 | TS | 1429.2 | .00321 | .00140 | 88.32 | | | |
| 11/25/1993 | Chromium | 4 | TS | 1429.2 | .00458 | .00020 | 88.32 | | | |
| 11/25/1993 | Manganese | 4 | TS | 1429.2 | .00785 | .42000 | 88.32 | | | |
| 11/25/1993 | Nickel | 4 | TS | 1429.2 | .00307 | .01000 | 88.32 | | U | U |
| 11/25/1993 | Particulate Fluoride | 4 | TS | 1429.2 | 1.40978 | 8.30000 | 88.32 | | B | |
| 11/25/1993 | Phosphorus | 4 | TS | 1429.2 | .69876 | .30000 | 88.32 | | | |
| 11/25/1993 | Selenium | 4 | TS | 1429.2 | .01538 | .70000 | 88.32 | | U | U |
| 11/25/1993 | Silver | 4 | TS | 1429.2 | .00107 | .30000 | 88.32 | | U | U |
| 11/25/1993 | Thallium | 4 | TS | 1429.2 | .03071 | .30000 | 88.32 | | U | U |
| 11/25/1993 | Vanadium | 4 | TS | 1429.2 | .00294 | .17000 | 88.32 | | B | |
| 11/25/1993 | Zinc | 4 | TS | 1429.2 | .03855 | .00000 | 88.32 | | B | |
| 11/25/1993 | Aluminum | 5 | TS | 1441.2 | .19937 | 33.30000 | 52.18 | | | |
| 11/25/1993 | Arsenic | 5 | TS | 1441.2 | .00018 | .00057 | 52.18 | | B | |
| 11/25/1993 | Barium | 5 | TS | 1441.2 | .00252 | .52000 | 52.18 | | | |
| 11/25/1993 | Beryllium | 5 | TS | 1441.2 | .00015 | .00100 | 52.18 | | U | U |
| 11/25/1993 | Cadmium | 5 | TS | 1441.2 | .00312 | .00140 | 52.18 | | | |
| 11/25/1993 | Chromium | 5 | TS | 1441.2 | .00353 | .00020 | 52.18 | | | |
| 11/25/1993 | Manganese | 5 | TS | 1441.2 | .00349 | .42000 | 52.18 | | | |
| 11/25/1993 | Nickel | 5 | TS | 1441.2 | .00305 | .01000 | 52.18 | | U | U |
| 11/25/1993 | Particulate Fluoride | 5 | TS | 1441.2 | 2.19431 | 8.30000 | 52.18 | | B | |
| 11/25/1993 | Phosphorus | 5 | TS | 1441.2 | 1.05157 | .30000 | 52.18 | | | |
| 11/25/1993 | Selenium | 5 | TS | 1441.2 | .01830 | .70000 | 52.18 | | B | |
| 11/25/1993 | Silver | 5 | TS | 1441.2 | .00602 | .30000 | 52.18 | | B | |
| 11/25/1993 | Thallium | 5 | TS | 1441.2 | .03045 | .30000 | 52.18 | | U | U |
| 11/25/1993 | Vanadium | 5 | TS | 1441.2 | .00291 | .17000 | 52.18 | | B | |
| 11/25/1993 | Zinc | 5 | TS | 1441.2 | .02085 | .00000 | 52.18 | | B | |
| 11/25/1993 | Aluminum | 6 | TS | 1438.1 | .05967 | 33.30000 | 43.53 | | | U |
| 11/25/1993 | Arsenic | 6 | TS | 1438.1 | .00015 | .00057 | 43.53 | | U | U |
| 11/25/1993 | Barium | 6 | TS | 1438.1 | .00183 | .52000 | 43.53 | | | |
| 11/25/1993 | Beryllium | 6 | TS | 1438.1 | .00015 | .00100 | 43.53 | | U | U |
| 11/25/1993 | Cadmium | 6 | TS | 1438.1 | .00196 | .00140 | 43.53 | | | |
| 11/25/1993 | Chromium | 6 | TS | 1438.1 | .00159 | .00020 | 43.53 | | | U |
| 11/25/1993 | Manganese | 6 | TS | 1438.1 | .00166 | .42000 | 43.53 | | B | |
| 11/25/1993 | Nickel | 6 | TS | 1438.1 | .00304 | .01000 | 43.53 | | U | U |
| 11/25/1993 | Particulate Fluoride | 6 | TS | 1438.1 | 1.55559 | 8.30000 | 43.53 | | B | |
| 11/25/1993 | Phosphorus | 6 | TS | 1438.1 | .78387 | .30000 | 43.53 | | | |
| 11/25/1993 | Selenium | 6 | TS | 1438.1 | .01525 | .70000 | 43.53 | | U | U |
| 11/25/1993 | Silver | 6 | TS | 1438.1 | .00106 | .30000 | 43.53 | | U | U |
| 11/25/1993 | Thallium | 6 | TS | 1438.1 | .03044 | .30000 | 43.53 | | U | U |
| 11/25/1993 | Vanadium | 6 | TS | 1438.1 | .00153 | .17000 | 43.53 | | U | U |
| 11/25/1993 | Zinc | 6 | TS | 1438.1 | .01507 | .00000 | 43.53 | | B | |
| 11/25/1993 | Aluminum | 7 | TS | 1450.3 | .13745 | 33.30000 | 57.13 | | | |
| 11/25/1993 | Arsenic | 7 | TS | 1450.3 | .00025 | .00057 | 57.13 | | B | |
| 11/25/1993 | Barium | 7 | TS | 1450.3 | .00228 | .52000 | 57.13 | | | |
| 11/25/1993 | Beryllium | 7 | TS | 1450.3 | .00015 | .00100 | 57.13 | | U | U |

| Sample Date | Chemical Name | Site # | Typ | Run Time (min.) | Chem Conc. (ug/m3) | EPA Scr. L(ug/m3) | Part.C. (ug/m3) | Grav. Val | Qual. Lab | Qual. Val |
|---|---|---|---|---|---|---|---|---|---|---|
| 11/25/1993 | Cadmium | 7 | TS | 1450.3 | .00346 | .00140 | 57.13 | | | |
| 11/25/1993 | Chromium | 7 | TS | 1450.3 | .00273 | .00020 | 57.13 | | | |
| 11/25/1993 | Manganese | 7 | TS | 1450.3 | .00338 | .42000 | 57.13 | | | |
| 11/25/1993 | Nickel | 7 | TS | 1450.3 | .00303 | .01000 | 57.13 | | U | U |
| 11/25/1993 | Particulate Fluoride | 7 | TS | 1450.3 | 2.41604 | 8.30000 | 57.13 | | B | |
| 11/25/1993 | Phosphorus | 7 | TS | 1450.3 | .91434 | .30000 | 57.13 | | | |
| 11/25/1993 | Selenium | 7 | TS | 1450.3 | .02047 | .70000 | 57.13 | | B | |
| 11/25/1993 | Silver | 7 | TS | 1450.3 | .00106 | .30000 | 57.13 | | U | U |
| 11/25/1993 | Thallium | 7 | TS | 1450.3 | .03034 | .30000 | 57.13 | | U | U |
| 11/25/1993 | Vanadium | 7 | TS | 1450.3 | .00225 | .17000 | 57.13 | | B | |
| 11/25/1993 | Zinc | 7 | TS | 1450.3 | .01895 | .00000 | 57.13 | | B | |
| 11/25/1993 | Aluminum | 8 | TS | 1453.3 | .18401 | 33.30000 | 71.76 | | | |
| 11/25/1993 | Arsenic | 8 | TS | 1453.3 | .00040 | .00057 | 71.76 | | B | |
| 11/25/1993 | Barium | 8 | TS | 1453.3 | .00502 | .52000 | 71.76 | | | |
| 11/25/1993 | Beryllium | 8 | TS | 1453.3 | .00015 | .00100 | 71.76 | | U | U |
| 11/25/1993 | Cadmium | 8 | TS | 1453.3 | .00283 | .00140 | 71.76 | | | |
| 11/25/1993 | Chromium | 8 | TS | 1453.3 | .00364 | .00020 | 71.76 | | | |
| 11/25/1993 | Manganese | 8 | TS | 1453.3 | .00593 | .42000 | 71.76 | | | |
| 11/25/1993 | Nickel | 8 | TS | 1453.3 | .00304 | .01000 | 71.76 | | U | U |
| 11/25/1993 | Particulate Fluoride | 8 | TS | 1453.3 | 1.23885 | 8.30000 | 71.76 | | B | |
| 11/25/1993 | Phosphorus | 8 | TS | 1453.3 | .77125 | .30000 | 71.76 | | | |
| 11/25/1993 | Selenium | 8 | TS | 1453.3 | .01524 | .70000 | 71.76 | | U | U |
| 11/25/1993 | Silver | 8 | TS | 1453.3 | .00106 | .30000 | 71.76 | | U | U |
| 11/25/1993 | Thallium | 8 | TS | 1453.3 | .03042 | .30000 | 71.76 | | U | U |
| 11/25/1993 | Vanadium | 8 | TS | 1453.3 | .00280 | .17000 | 71.76 | | B | |
| 11/25/1993 | Zinc | 8 | TS | 1453.3 | .03061 | .00000 | 71.76 | | B | |
| 11/29/1993 | Aluminum | 1 | TS | 1442.9 | .27904 | 33.30000 | 62.37 | | | |
| 11/29/1993 | Arsenic | 1 | TS | 1442.9 | .00137 | .00057 | 62.37 | | | |
| 11/29/1993 | Barium | 1 | TS | 1442.9 | .00846 | .52000 | 62.37 | | | |
| 11/29/1993 | Beryllium | 1 | TS | 1442.9 | .00017 | .00100 | 62.37 | | U | U |
| 11/29/1993 | Cadmium | 1 | TS | 1442.9 | .00418 | .00140 | 62.37 | | | |
| 11/29/1993 | Chromium | 1 | TS | 1442.9 | .00979 | .00020 | 62.37 | | | |
| 11/29/1993 | Manganese | 1 | TS | 1442.9 | .00979 | .42000 | 62.37 | | | |
| 11/29/1993 | Nickel | 1 | TS | 1442.9 | .00334 | .01000 | 62.37 | | U | U |
| 11/29/1993 | Particulate Fluoride | 1 | TS | 1442.9 | 1.91134 | 8.30000 | 62.37 | | B | |
| 11/29/1993 | Phosphorus | 1 | TS | 1442.9 | 1.25869 | .30000 | 62.37 | | | |
| 11/29/1993 | Selenium | 1 | TS | 1442.9 | .01838 | .70000 | 62.37 | | B | |
| 11/29/1993 | Silver | 1 | TS | 1442.9 | .00117 | .30000 | 62.37 | | U | U |
| 11/29/1993 | Thallium | 1 | TS | 1442.9 | .03337 | .30000 | 62.37 | | U | U |
| 11/29/1993 | Vanadium | 1 | TS | 1442.9 | .00812 | .17000 | 62.37 | | | |
| 11/29/1993 | Zinc | 1 | TS | 1442.9 | .05441 | .00000 | 62.37 | | B | |
| 11/29/1993 | Aluminum | 2 | TS | 1436.4 | .90470 | 33.30000 | 112.34 | | | |
| 11/29/1993 | Arsenic | 2 | TS | 1436.4 | .00200 | .00057 | 112.34 | | | |
| 11/29/1993 | Barium | 2 | TS | 1436.4 | .01731 | .52000 | 112.34 | | | |
| 11/29/1993 | Beryllium | 2 | TS | 1436.4 | .00033 | .00100 | 112.34 | | B | |
| 11/29/1993 | Cadmium | 2 | TS | 1436.4 | .01250 | .00140 | 112.34 | | | |
| 11/29/1993 | Chromium | 2 | TS | 1436.4 | .04016 | .00020 | 112.34 | | | |
| 11/29/1993 | Manganese | 2 | TS | 1436.4 | .02135 | .42000 | 112.34 | | | |
| 11/29/1993 | Nickel | 2 | TS | 1436.4 | .00768 | .01000 | 112.34 | | B | |

| Sample Date | Chemical Name | Site # | Typ | Run Time (min.) | Chem Conc. (ug/m3) | EPA Scr. L(ug/m3) | Part.C. Grav. (ug/m3) | Qual. Val | Lab Val |
|---|---|---|---|---|---|---|---|---|---|
| 11/29/1993 | Particulate Fluoride | 2 | TS | 1436.4 | 3.54720 | 8.30000 | 112.34 | | |
| 11/29/1993 | Phosphorus | 2 | TS | 1436.4 | 4.14599 | .30000 | 112.34 | | |
| 11/29/1993 | Selenium | 2 | TS | 1436.4 | .02695 | .70000 | 112.34 | B | |
| 11/29/1993 | Silver | 2 | TS | 1436.4 | .00114 | .30000 | 112.34 | U | U |
| 11/29/1993 | Thallium | 2 | TS | 1436.4 | .03261 | .30000 | 112.34 | U | U |
| 11/29/1993 | Vanadium | 2 | TS | 1436.4 | .04354 | .17000 | 112.34 | | |
| 11/29/1993 | Zinc | 2 | TS | 1436.4 | .08917 | .00000 | 112.34 | | |
| 11/29/1993 | Aluminum | 3 | TS | 1446.4 | .09967 | 33.30000 | 35.92 | | |
| 11/29/1993 | Arsenic | 3 | TS | 1446.4 | .00121 | .00057 | 35.92 | | J |
| 11/29/1993 | Barium | 3 | TS | 1446.4 | .00379 | .52000 | 35.92 | | |
| 11/29/1993 | Beryllium | 3 | TS | 1446.4 | .00016 | .00100 | 35.92 | U | U |
| 11/29/1993 | Cadmium | 3 | TS | 1446.4 | .00234 | .00140 | 35.92 | | |
| 11/29/1993 | Chromium | 3 | TS | 1446.4 | .00302 | .00020 | 35.92 | | |
| 11/29/1993 | Manganese | 3 | TS | 1446.4 | .00675 | .42000 | 35.92 | | |
| 11/29/1993 | Nickel | 3 | TS | 1446.4 | .00316 | .01000 | 35.92 | U | U |
| 11/29/1993 | Particulate Fluoride | 3 | TS | 1446.4 | 1.54552 | 8.30000 | 35.92 | B | |
| 11/29/1993 | Phosphorus | 3 | TS | 1446.4 | .65606 | .30000 | 35.92 | | U |
| 11/29/1993 | Selenium | 3 | TS | 1446.4 | .01583 | .70000 | 35.92 | U | U |
| 11/29/1993 | Silver | 3 | TS | 1446.4 | .00110 | .30000 | 35.92 | U | U |
| 11/29/1993 | Thallium | 3 | TS | 1446.4 | .03160 | .30000 | 35.92 | U | U |
| 11/29/1993 | Vanadium | 3 | TS | 1446.4 | .00158 | .17000 | 35.92 | B | |
| 11/29/1993 | Zinc | 3 | TS | 1446.4 | .02151 | .00000 | 35.92 | B | |
| 11/29/1993 | Aluminum | 4 | TS | 1427.1 | .19767 | 33.30000 | 47.31 | | |
| 11/29/1993 | Arsenic | 4 | TS | 1427.1 | .00146 | .00057 | 47.31 | | J |
| 11/29/1993 | Barium | 4 | TS | 1427.1 | .00821 | .52000 | 47.31 | | |
| 11/29/1993 | Beryllium | 4 | TS | 1427.1 | .00016 | .00100 | 47.31 | U | U |
| 11/29/1993 | Cadmium | 4 | TS | 1427.1 | .00238 | .00140 | 47.31 | | |
| 11/29/1993 | Chromium | 4 | TS | 1427.1 | .00439 | .00020 | 47.31 | | |
| 11/29/1993 | Manganese | 4 | TS | 1427.1 | .01084 | .42000 | 47.31 | | |
| 11/29/1993 | Nickel | 4 | TS | 1427.1 | .00329 | .01000 | 47.31 | B | U |
| 11/29/1993 | Particulate Fluoride | 4 | TS | 1427.1 | 1.76658 | 8.30000 | 47.31 | B | |
| 11/29/1993 | Phosphorus | 4 | TS | 1427.1 | .80777 | .30000 | 47.31 | | U |
| 11/29/1993 | Selenium | 4 | TS | 1427.1 | .01648 | .70000 | 47.31 | U | U |
| 11/29/1993 | Silver | 4 | TS | 1427.1 | .00115 | .30000 | 47.31 | U | U |
| 11/29/1993 | Thallium | 4 | TS | 1427.1 | .03290 | .30000 | 47.31 | U | U |
| 11/29/1993 | Vanadium | 4 | TS | 1427.1 | .00328 | .17000 | 47.31 | B | |
| 11/29/1993 | Zinc | 4 | TS | 1427.1 | .03376 | .00000 | 47.31 | B | |
| 11/29/1993 | Aluminum | 5 | TS | 1436.1 | .30085 | 33.30000 | 57.01 | | |
| 11/29/1993 | Arsenic | 5 | TS | 1436.1 | .00174 | .00057 | 57.01 | | J |
| 11/29/1993 | Barium | 5 | TS | 1436.1 | .00581 | .52000 | 57.01 | | |
| 11/29/1993 | Beryllium | 5 | TS | 1436.1 | .00016 | .00100 | 57.01 | U | U |
| 11/29/1993 | Cadmium | 5 | TS | 1436.1 | .01142 | .00140 | 57.01 | | |
| 11/29/1993 | Chromium | 5 | TS | 1436.1 | .01253 | .00020 | 57.01 | | |
| 11/29/1993 | Manganese | 5 | TS | 1436.1 | .00718 | .42000 | 57.01 | | |
| 11/29/1993 | Nickel | 5 | TS | 1436.1 | .00532 | .01000 | 57.01 | B | U |
| 11/29/1993 | Particulate Fluoride | 5 | TS | 1436.1 | 2.85189 | 8.30000 | 57.01 | B | |
| 11/29/1993 | Phosphorus | 5 | TS | 1436.1 | 2.64958 | .30000 | 57.01 | | |

| Sample Date | Chemical Name | Site # | Typ | Run Time (min.) | Chem Conc. (ug/m3) | EPA Scr. L(ug/m3) | Part.C. (ug/m3) | Grav. Val | Qual. Lab | Qual. Val |
|---|---|---|---|---|---|---|---|---|---|---|
| 11/29/1993 | Selenium | 5 | TS | 1436.1 | .01716 | .70000 | 57.01 | | B | |
| 11/29/1993 | Silver | 5 | TS | 1436.1 | .00129 | .30000 | 57.01 | | B | |
| 11/29/1993 | Thallium | 5 | TS | 1436.1 | .03270 | .30000 | 57.01 | | U | U |
| 11/29/1993 | Vanadium | 5 | TS | 1436.1 | .01338 | .17000 | 57.01 | | | |
| 11/29/1993 | Zinc | 5 | TS | 1436.1 | .06148 | .00000 | 57.01 | | B | |
| 11/29/1993 | Aluminum | 6 | TS | 1436.2 | .07421 | 33.30000 | 29.51 | | | |
| 11/29/1993 | Arsenic | 6 | TS | 1436.2 | .00115 | .00057 | 29.51 | | | |
| 11/29/1993 | Barium | 6 | TS | 1436.2 | .00261 | .52000 | 29.51 | | | |
| 11/29/1993 | Beryllium | 6 | TS | 1436.2 | .00016 | .00100 | 29.51 | | U | U |
| 11/29/1993 | Cadmium | 6 | TS | 1436.2 | .00130 | .00140 | 29.51 | | U | U |
| 11/29/1993 | Chromium | 6 | TS | 1436.2 | .00148 | .00020 | 29.51 | | | U |
| 11/29/1993 | Manganese | 6 | TS | 1436.2 | .00408 | .42000 | 29.51 | | | |
| 11/29/1993 | Nickel | 6 | TS | 1436.2 | .00326 | .01000 | 29.51 | | U | U |
| 11/29/1993 | Particulate Fluoride | 6 | TS | 1436.2 | 1.96588 | 8.30000 | 29.51 | | B | U |
| 11/29/1993 | Phosphorus | 6 | TS | 1436.2 | .41921 | .30000 | 29.51 | | | U |
| 11/29/1993 | Selenium | 6 | TS | 1436.2 | .01634 | .70000 | 29.51 | | U | U |
| 11/29/1993 | Silver | 6 | TS | 1436.2 | .00114 | .30000 | 29.51 | | U | U |
| 11/29/1993 | Thallium | 6 | TS | 1436.2 | .03261 | .30000 | 29.51 | | U | U |
| 11/29/1993 | Vanadium | 6 | TS | 1436.2 | .00180 | .17000 | 29.51 | | B | |
| 11/29/1993 | Zinc | 6 | TS | 1436.2 | .01211 | .00000 | 29.51 | | B | |
| 11/29/1993 | Aluminum | 7 | TS | 1453.6 | .11117 | 33.30000 | 28.33 | | | |
| 11/29/1993 | Arsenic | 7 | TS | 1453.6 | .00202 | .00057 | 28.33 | | | J |
| 11/29/1993 | Barium | 7 | TS | 1453.6 | .00292 | .52000 | 28.33 | | | |
| 11/29/1993 | Beryllium | 7 | TS | 1453.6 | .00016 | .00100 | 28.33 | | U | U |
| 11/29/1993 | Cadmium | 7 | TS | 1453.6 | .00374 | .00140 | 28.33 | | | |
| 11/29/1993 | Chromium | 7 | TS | 1453.6 | .00314 | .00020 | 28.33 | | | |
| 11/29/1993 | Manganese | 7 | TS | 1453.6 | .00353 | .42000 | 28.33 | | | |
| 11/29/1993 | Nickel | 7 | TS | 1453.6 | .00365 | .01000 | 28.33 | | B | U |
| 11/29/1993 | Particulate Fluoride | 7 | TS | 1453.6 | 2.97965 | 8.30000 | 28.33 | | B | |
| 11/29/1993 | Phosphorus | 7 | TS | 1453.6 | .91135 | .30000 | 28.33 | | | |
| 11/29/1993 | Selenium | 7 | TS | 1453.6 | .01622 | .70000 | 28.33 | | U | U |
| 11/29/1993 | Silver | 7 | TS | 1453.6 | .00113 | .30000 | 28.33 | | U | U |
| 11/29/1993 | Thallium | 7 | TS | 1453.6 | .03238 | .30000 | 28.33 | | U | U |
| 11/29/1993 | Vanadium | 7 | TS | 1453.6 | .00337 | .17000 | 28.33 | | B | |
| 11/29/1993 | Zinc | 7 | TS | 1453.6 | .01752 | .00000 | 28.33 | | B | |
| 11/29/1993 | Aluminum | 8 | TS | 1452.3 | .26591 | 33.30000 | 62.58 | | | |
| 11/29/1993 | Arsenic | 8 | TS | 1452.3 | .00161 | .00057 | 62.58 | | | J |
| 11/29/1993 | Barium | 8 | TS | 1452.3 | .00865 | .52000 | 62.58 | | | |
| 11/29/1993 | Beryllium | 8 | TS | 1452.3 | .00016 | .00100 | 62.58 | | U | U |
| 11/29/1993 | Cadmium | 8 | TS | 1452.3 | .00406 | .00140 | 62.58 | | | |
| 11/29/1993 | Chromium | 8 | TS | 1452.3 | .00852 | .00020 | 62.58 | | | |
| 11/29/1993 | Manganese | 8 | TS | 1452.3 | .01021 | .42000 | 62.58 | | | |
| 11/29/1993 | Nickel | 8 | TS | 1452.3 | .00424 | .01000 | 62.58 | | B | U |
| 11/29/1993 | Particulate Fluoride | 8 | TS | 1452.3 | 3.10118 | 8.30000 | 62.58 | | B | |
| 11/29/1993 | Phosphorus | 8 | TS | 1452.3 | 1.15075 | .30000 | 62.58 | | | |
| 11/29/1993 | Selenium | 8 | TS | 1452.3 | .01632 | .70000 | 62.58 | | U | U |
| 11/29/1993 | Silver | 8 | TS | 1452.3 | .00114 | .30000 | 62.58 | | U | U |
| 11/29/1993 | Thallium | 8 | TS | 1452.3 | .03257 | .30000 | 62.58 | | U | U |
| 11/29/1993 | Vanadium | 8 | TS | 1452.3 | .00767 | .17000 | 62.58 | | | |

| Sample Date | Chemical Name | Site # | Typ | Run Time (min.) | Chem Conc. (ug/m3) | EPA Scr. L(ug/m3) | Part.C. Grav. (ug/m3) | Qual. Val | Lab | Val |
|---|---|---|---|---|---|---|---|---|---|---|
| 11/29/1993 | Zinc | 8 | TS | 1452.3 | .05227 | .00000 | 62.58 | | B | |
| 12/03/1993 | Aluminum | 1 | TS | 1446.4 | .26442 | 33.30000 | 33.84 | | | |
| 12/03/1993 | Arsenic | 1 | TS | 1446.4 | .00028 | .00057 | 33.84 | | B | |
| 12/03/1993 | Barium | 1 | TS | 1446.4 | .00718 | .52000 | 33.84 | | | |
| 12/03/1993 | Beryllium | 1 | TS | 1446.4 | .00017 | .00100 | 33.84 | | U | U |
| 12/03/1993 | Cadmium | 1 | TS | 1446.4 | .00167 | .00140 | 33.84 | | | |
| 12/03/1993 | Chromium | 1 | TS | 1446.4 | .00804 | .00020 | 33.84 | | | |
| 12/03/1993 | Manganese | 1 | TS | 1446.4 | .00877 | .42000 | 33.84 | | | |
| 12/03/1993 | Nickel | 1 | TS | 1446.4 | .00333 | .01000 | 33.84 | | U | U |
| 12/03/1993 | Particulate Fluoride | 1 | TS | 1446.4 | 2.95641 | 8.30000 | 33.84 | | B | U |
| 12/03/1993 | Phosphorus | 1 | TS | 1446.4 | .47967 | .30000 | 33.84 | | | U |
| 12/03/1993 | Selenium | 1 | TS | 1446.4 | .01668 | .70000 | 33.84 | | U | U |
| 12/03/1993 | Silver | 1 | TS | 1446.4 | .00116 | .30000 | 33.84 | | U | U |
| 12/03/1993 | Thallium | 1 | TS | 1446.4 | .03328 | .30000 | 33.84 | | U | U |
| 12/03/1993 | Vanadium | 1 | TS | 1446.4 | .00751 | .17000 | 33.84 | | | |
| 12/03/1993 | Zinc | 1 | TS | 1446.4 | .02066 | .00000 | 33.84 | | B | |
| 12/03/1993 | Aluminum | 2 | TS | 1436.1 | 2.15480 | 33.30000 | 170.53 | | | |
| 12/03/1993 | Arsenic | 2 | TS | 1436.1 | .00120 | .00057 | 170.53 | | | |
| 12/03/1993 | Barium | 2 | TS | 1436.1 | .02760 | .52000 | 170.53 | | | |
| 12/03/1993 | Beryllium | 2 | TS | 1436.1 | .00025 | .00100 | 170.53 | | B | |
| 12/03/1993 | Cadmium | 2 | TS | 1436.1 | .04114 | .00140 | 170.53 | | | |
| 12/03/1993 | Chromium | 2 | TS | 1436.1 | .10611 | .00020 | 170.53 | | | |
| 12/03/1993 | Manganese | 2 | TS | 1436.1 | .05169 | .42000 | 170.53 | | | |
| 12/03/1993 | Nickel | 2 | TS | 1436.1 | .01992 | .01000 | 170.53 | | | |
| 12/03/1993 | Particulate Fluoride | 2 | TS | 1436.1 | 4.00364 | 8.30000 | 170.53 | | | U |
| 12/03/1993 | Phosphorus | 2 | TS | 1436.1 | 6.06730 | .30000 | 170.53 | | | |
| 12/03/1993 | Selenium | 2 | TS | 1436.1 | .01634 | .70000 | 170.53 | | U | U |
| 12/03/1993 | Silver | 2 | TS | 1436.1 | .00248 | .30000 | 170.53 | | B | |
| 12/03/1993 | Thallium | 2 | TS | 1436.1 | .03261 | .30000 | 170.53 | | U | U |
| 12/03/1993 | Vanadium | 2 | TS | 1436.1 | .10676 | .17000 | 170.53 | | | |
| 12/03/1993 | Zinc | 2 | TS | 1436.1 | .14713 | .00000 | 170.53 | | | |
| 12/03/1993 | Aluminum | 3 | TS | 1446.6 | .23716 | 33.30000 | 20.64 | | | |
| 12/03/1993 | Arsenic | 3 | TS | 1446.6 | .00018 | .00057 | 20.64 | | B | J |
| 12/03/1993 | Barium | 3 | TS | 1446.6 | .00498 | .52000 | 20.64 | | | |
| 12/03/1993 | Beryllium | 3 | TS | 1446.6 | .00016 | .00100 | 20.64 | | U | U |
| 12/03/1993 | Cadmium | 3 | TS | 1446.6 | .00144 | .00140 | 20.64 | | | |
| 12/03/1993 | Chromium | 3 | TS | 1446.6 | .00500 | .00020 | 20.64 | | | |
| 12/03/1993 | Manganese | 3 | TS | 1446.6 | .00757 | .42000 | 20.64 | | | |
| 12/03/1993 | Nickel | 3 | TS | 1446.6 | .00356 | .01000 | 20.64 | | B | U |
| 12/03/1993 | Particulate Fluoride | 3 | TS | 1446.6 | 1.26147 | 8.30000 | 20.64 | | U | U |
| 12/03/1993 | Phosphorus | 3 | TS | 1446.6 | .36520 | .30000 | 20.64 | | | U |
| 12/03/1993 | Selenium | 3 | TS | 1446.6 | .01583 | .70000 | 20.64 | | U | U |
| 12/03/1993 | Silver | 3 | TS | 1446.6 | .00110 | .30000 | 20.64 | | U | U |
| 12/03/1993 | Thallium | 3 | TS | 1446.6 | .03160 | .30000 | 20.64 | | U | U |
| 12/03/1993 | Vanadium | 3 | TS | 1446.6 | .00479 | .17000 | 20.64 | | | |
| 12/03/1993 | Zinc | 3 | TS | 1446.6 | .01362 | .00000 | 20.64 | | B | |
| 12/03/1993 | Aluminum | 4 | TS | 1429.1 | .34364 | 33.30000 | 35.50 | | | |
| 12/03/1993 | Arsenic | 4 | TS | 1429.1 | .00033 | .00057 | 35.50 | | B | J |
| 12/03/1993 | Barium | 4 | TS | 1429.1 | .00839 | .52000 | 35.50 | | | |

| Sample Date | Chemical Name | Site # | Typ | Run Time (min.) | Chem Conc. (ug/m3) | EPA Scr. L(ug/m3) | Part.C. (ug/m3) | Grav. Val | Qual. Lab | Qual. Val |
|---|---|---|---|---|---|---|---|---|---|---|
| 12/03/1993 | Beryllium | 4 | TS | 1429.1 | .00016 | .00100 | 35.50 | | U | U |
| 12/03/1993 | Cadmium | 4 | TS | 1429.1 | .00145 | .00140 | 35.50 | | B | |
| 12/03/1993 | Chromium | 4 | TS | 1429.1 | .00513 | .00020 | 35.50 | | | |
| 12/03/1993 | Manganese | 4 | TS | 1429.1 | .01462 | .42000 | 35.50 | | | |
| 12/03/1993 | Nickel | 4 | TS | 1429.1 | .00403 | .01000 | 35.50 | | B | U |
| 12/03/1993 | Particulate Fluoride | 4 | TS | 1429.1 | 1.93462 | 8.30000 | 35.50 | | B | |
| 12/03/1993 | Phosphorus | 4 | TS | 1429.1 | .30232 | .30000 | 35.50 | | B | U |
| 12/03/1993 | Selenium | 4 | TS | 1429.1 | .01646 | .70000 | 35.50 | | U | U |
| 12/03/1993 | Silver | 4 | TS | 1429.1 | .00115 | .30000 | 35.50 | | U | U |
| 12/03/1993 | Thallium | 4 | TS | 1429.1 | .03286 | .30000 | 35.50 | | U | U |
| 12/03/1993 | Vanadium | 4 | TS | 1429.1 | .00365 | .17000 | 35.50 | | B | |
| 12/03/1993 | Zinc | 4 | TS | 1429.1 | .02479 | .00000 | 35.50 | | B | |
| 12/03/1993 | Aluminum | 5 | TS | 1440.7 | .17304 | 33.30000 | 30.59 | | | |
| 12/03/1993 | Arsenic | 5 | TS | 1440.7 | .00027 | .00057 | 30.59 | | B | J |
| 12/03/1993 | Barium | 5 | TS | 1440.7 | .00310 | .52000 | 30.59 | | | |
| 12/03/1993 | Beryllium | 5 | TS | 1440.7 | .00016 | .00100 | 30.59 | | U | U |
| 12/03/1993 | Cadmium | 5 | TS | 1440.7 | .00252 | .00140 | 30.59 | | | |
| 12/03/1993 | Chromium | 5 | TS | 1440.7 | .24915 | .00020 | 30.59 | | | |
| 12/03/1993 | Manganese | 5 | TS | 1440.7 | .02186 | .42000 | 30.59 | | | |
| 12/03/1993 | Nickel | 5 | TS | 1440.7 | .04567 | .01000 | 30.59 | | | |
| 12/03/1993 | Particulate Fluoride | 5 | TS | 1440.7 | 1.79544 | 8.30000 | 30.59 | | B | |
| 12/03/1993 | Phosphorus | 5 | TS | 1440.7 | 2.13371 | .30000 | 30.59 | | | |
| 12/03/1993 | Selenium | 5 | TS | 1440.7 | .01633 | .70000 | 30.59 | | U | U |
| 12/03/1993 | Silver | 5 | TS | 1440.7 | .00180 | .30000 | 30.59 | | B | |
| 12/03/1993 | Thallium | 5 | TS | 1440.7 | .03259 | .30000 | 30.59 | | U | U |
| 12/03/1993 | Vanadium | 5 | TS | 1440.7 | .25761 | .17000 | 30.59 | | | |
| 12/03/1993 | Zinc | 5 | TS | 1440.7 | .01698 | .00000 | 30.59 | | B | |
| 12/03/1993 | Aluminum | 6 | TS | 1439.6 | .05858 | 33.30000 | 9.03 | | | |
| 12/03/1993 | Arsenic | 6 | TS | 1439.6 | .00016 | .00057 | 9.03 | | U | U |
| 12/03/1993 | Barium | 6 | TS | 1439.6 | .00260 | .52000 | 9.03 | | | |
| 12/03/1993 | Beryllium | 6 | TS | 1439.6 | .00016 | .00100 | 9.03 | | U | U |
| 12/03/1993 | Cadmium | 6 | TS | 1439.6 | .00130 | .00140 | 9.03 | | U | U |
| 12/03/1993 | Chromium | 6 | TS | 1439.6 | .00056 | .00020 | 9.03 | | | U |
| 12/03/1993 | Manganese | 6 | TS | 1439.6 | .00189 | .42000 | 9.03 | | B | |
| 12/03/1993 | Nickel | 6 | TS | 1439.6 | .00325 | .01000 | 9.03 | | B | U |
| 12/03/1993 | Particulate Fluoride | 6 | TS | 1439.6 | 1.70147 | 8.30000 | 9.03 | | B | |
| 12/03/1993 | Phosphorus | 6 | TS | 1439.6 | .17729 | .30000 | 9.03 | | B | U |
| 12/03/1993 | Selenium | 6 | TS | 1439.6 | .01630 | .70000 | 9.03 | | U | U |
| 12/03/1993 | Silver | 6 | TS | 1439.6 | .00114 | .30000 | 9.03 | | U | U |
| 12/03/1993 | Thallium | 6 | TS | 1439.6 | .03254 | .30000 | 9.03 | | U | U |
| 12/03/1993 | Vanadium | 6 | TS | 1439.6 | .00163 | .17000 | 9.03 | | U | U |
| 12/03/1993 | Zinc | 6 | TS | 1439.6 | .00342 | .00000 | 9.03 | | B | |
| 12/03/1993 | Aluminum | 7 | TS | 1453.5 | .13057 | 33.30000 | 11.71 | | | |
| 12/03/1993 | Arsenic | 7 | TS | 1453.5 | .00021 | .00057 | 11.71 | | B | |
| 12/03/1993 | Barium | 7 | TS | 1453.5 | .00332 | .52000 | 11.71 | | | |
| 12/03/1993 | Beryllium | 7 | TS | 1453.5 | .00016 | .00100 | 11.71 | | U | U |
| 12/03/1993 | Cadmium | 7 | TS | 1453.5 | .00144 | .00140 | 11.71 | | B | |
| 12/03/1993 | Chromium | 7 | TS | 1453.5 | .00509 | .00020 | 11.71 | | | |
| 12/03/1993 | Manganese | 7 | TS | 1453.5 | .00476 | .42000 | 11.71 | | | |

| Sample Date | Chemical Name | Site # | Typ | Run Time (min.) | Chem Conc. (ug/m3) | EPA Scr. L(ug/m3) | Part.C. (ug/m3) | Grav. Val | Qual. Lab | Qual. Val |
|---|---|---|---|---|---|---|---|---|---|---|
| 12/03/1993 | Nickel | 7 | TS | 1453.5 | .00388 | .01000 | 11.71 | | B | |
| 12/03/1993 | Particulate Fluoride | 7 | TS | 1453.5 | 2.57263 | 8.30000 | 11.71 | | B | U |
| 12/03/1993 | Phosphorus | 7 | TS | 1453.5 | .39042 | .30000 | 11.71 | | | U |
| 12/03/1993 | Selenium | 7 | TS | 1453.5 | .01622 | .70000 | 11.71 | | U | U |
| 12/03/1993 | Silver | 7 | TS | 1453.5 | .00113 | .30000 | 11.71 | | U | U |
| 12/03/1993 | Thallium | 7 | TS | 1453.5 | .03238 | .30000 | 11.71 | | U | U |
| 12/03/1993 | Vanadium | 7 | TS | 1453.5 | .00496 | .17000 | 11.71 | | | |
| 12/03/1993 | Zinc | 7 | TS | 1453.5 | .01105 | .00000 | 11.71 | | B | |
| 12/03/1993 | Aluminum | 8 | TS | 1453.7 | .26370 | 33.30000 | 32.82 | | | |
| 12/03/1993 | Arsenic | 8 | TS | 1453.7 | .00030 | .00057 | 32.82 | | B | |
| 12/03/1993 | Barium | 8 | TS | 1453.7 | .00760 | .52000 | 32.82 | | | |
| 12/03/1993 | Beryllium | 8 | TS | 1453.7 | .00016 | .00100 | 32.82 | | U | U |
| 12/03/1993 | Cadmium | 8 | TS | 1453.7 | .00200 | .00140 | 32.82 | | | |
| 12/03/1993 | Chromium | 8 | TS | 1453.7 | .00799 | .00020 | 32.82 | | | |
| 12/03/1993 | Manganese | 8 | TS | 1453.7 | .00870 | .42000 | 32.82 | | | |
| 12/03/1993 | Nickel | 8 | TS | 1453.7 | .00325 | .01000 | 32.82 | | U | U |
| 12/03/1993 | Particulate Fluoride | 8 | TS | 1453.7 | 2.95530 | 8.30000 | 32.82 | | B | U |
| 12/03/1993 | Phosphorus | 8 | TS | 1453.7 | .46051 | .30000 | 32.82 | | | U |
| 12/03/1993 | Selenium | 8 | TS | 1453.7 | .01630 | .70000 | 32.82 | | U | U |
| 12/03/1993 | Silver | 8 | TS | 1453.7 | .00114 | .30000 | 32.82 | | U | U |
| 12/03/1993 | Thallium | 8 | TS | 1453.7 | .03663 | .30000 | 32.82 | | B | |
| 12/03/1993 | Vanadium | 8 | TS | 1453.7 | .00695 | .17000 | 32.82 | | | |
| 12/03/1993 | Zinc | 8 | TS | 1453.7 | .01923 | .00000 | 32.82 | | B | |
| 12/07/1993 | Aluminum | 1 | TS | 1442.4 | .27080 | 33.30000 | 29.01 | | | |
| 12/07/1993 | Arsenic | 1 | TS | 1442.4 | .00038 | .00057 | 29.01 | | B | |
| 12/07/1993 | Barium | 1 | TS | 1442.4 | .00725 | .52000 | 29.01 | | | |
| 12/07/1993 | Beryllium | 1 | TS | 1442.4 | .00017 | .00100 | 29.01 | | U | U |
| 12/07/1993 | Cadmium | 1 | TS | 1442.4 | .00132 | .00140 | 29.01 | | U | U |
| 12/07/1993 | Chromium | 1 | TS | 1442.4 | .01067 | .00020 | 29.01 | | | |
| 12/07/1993 | Manganese | 1 | TS | 1442.4 | .00817 | .42000 | 29.01 | | | |
| 12/07/1993 | Nickel | 1 | TS | 1442.4 | .00330 | .01000 | 29.01 | | U | U |
| 12/07/1993 | Particulate Fluoride | 1 | TS | 1442.4 | 1.77896 | 8.30000 | 29.01 | | B | |
| 12/07/1993 | Phosphorus | 1 | TS | 1442.4 | .46912 | .30000 | 29.01 | | | U |
| 12/07/1993 | Selenium | 1 | TS | 1442.4 | .01654 | .70000 | 29.01 | | U | U |
| 12/07/1993 | Silver | 1 | TS | 1442.4 | .00115 | .30000 | 29.01 | | U | U |
| 12/07/1993 | Thallium | 1 | TS | 1442.4 | .03301 | .30000 | 29.01 | | U | U |
| 12/07/1993 | Vanadium | 1 | TS | 1442.4 | .00955 | .17000 | 29.01 | | | |
| 12/07/1993 | Zinc | 1 | TS | 1442.4 | .01884 | .00000 | 29.01 | | B | |
| 12/07/1993 | Aluminum | 2 | TS | 1437.9 | 1.24105 | 33.30000 | 88.60 | | | |
| 12/07/1993 | Arsenic | 2 | TS | 1437.9 | .00092 | .00057 | 88.60 | | | |
| 12/07/1993 | Barium | 2 | TS | 1437.9 | .01839 | .52000 | 88.60 | | | |
| 12/07/1993 | Beryllium | 2 | TS | 1437.9 | .00016 | .00100 | 88.60 | | U | U |
| 12/07/1993 | Cadmium | 2 | TS | 1437.9 | .00720 | .00140 | 88.60 | | | |
| 12/07/1993 | Chromium | 2 | TS | 1437.9 | .12475 | .00020 | 88.60 | | | |
| 12/07/1993 | Manganese | 2 | TS | 1437.9 | .03414 | .42000 | 88.60 | | | |
| 12/07/1993 | Nickel | 2 | TS | 1437.9 | .02225 | .01000 | 88.60 | | | |
| 12/07/1993 | Particulate Fluoride | 2 | TS | 1437.9 | 2.35992 | 8.30000 | 88.60 | | B | |

| Sample Date | Chemical Name | Site # | Typ | Run Time (min.) | Chem Conc. (ug/m3) | EPA Scr. L(ug/m3) | Part.C. (ug/m3) | Grav. Val | Qual. Lab | Qual. Val |
|---|---|---|---|---|---|---|---|---|---|---|
| 12/07/1993 | Phosphorus | 2 | TS | 1437.9 | 2.49495 | .30000 | 88.60 | | | |
| 12/07/1993 | Selenium | 2 | TS | 1437.9 | .01614 | .70000 | 88.60 | | U | U |
| 12/07/1993 | Silver | 2 | TS | 1437.9 | .00113 | .30000 | 88.60 | | U | U |
| 12/07/1993 | Thallium | 2 | TS | 1437.9 | .03222 | .30000 | 88.60 | | U | U |
| 12/07/1993 | Vanadium | 2 | TS | 1437.9 | .13375 | .17000 | 88.60 | | | |
| 12/07/1993 | Zinc | 2 | TS | 1437.9 | .05639 | .00000 | 88.60 | | B | |
| 12/07/1993 | Aluminum | 3 | TS | 1444.3 | .17994 | 33.30000 | 16.69 | | | |
| 12/07/1993 | Arsenic | 3 | TS | 1444.3 | .00040 | .00057 | 16.69 | | B | |
| 12/07/1993 | Barium | 3 | TS | 1444.3 | .00407 | .52000 | 16.69 | | | |
| 12/07/1993 | Beryllium | 3 | TS | 1444.3 | .00016 | .00100 | 16.69 | | U | U |
| 12/07/1993 | Cadmium | 3 | TS | 1444.3 | .00125 | .00140 | 16.69 | | U | U |
| 12/07/1993 | Chromium | 3 | TS | 1444.3 | .00363 | .00020 | 16.69 | | | |
| 12/07/1993 | Manganese | 3 | TS | 1444.3 | .00656 | .42000 | 16.69 | | | |
| 12/07/1993 | Nickel | 3 | TS | 1444.3 | .00313 | .01000 | 16.69 | | U | U |
| 12/07/1993 | Particulate Fluoride | 3 | TS | 1444.3 | 1.98059 | 8.30000 | 16.69 | | B | |
| 12/07/1993 | Phosphorus | 3 | TS | 1444.3 | .19868 | .30000 | 16.69 | | B | U |
| 12/07/1993 | Selenium | 3 | TS | 1444.3 | .01568 | .70000 | 16.69 | | U | U |
| 12/07/1993 | Silver | 3 | TS | 1444.3 | .00109 | .30000 | 16.69 | | U | U |
| 12/07/1993 | Thallium | 3 | TS | 1444.3 | .03130 | .30000 | 16.69 | | U | U |
| 12/07/1993 | Vanadium | 3 | TS | 1444.3 | .00307 | .17000 | 16.69 | | B | |
| 12/07/1993 | Zinc | 3 | TS | 1444.3 | .01262 | .00000 | 16.69 | | B | |
| 12/07/1993 | Aluminum | 4 | TS | 1425.7 | .35367 | 33.30000 | 30.77 | | | |
| 12/07/1993 | Arsenic | 4 | TS | 1425.7 | .00056 | .00057 | 30.77 | | B | |
| 12/07/1993 | Barium | 4 | TS | 1425.7 | .00715 | .52000 | 30.77 | | | |
| 12/07/1993 | Beryllium | 4 | TS | 1425.7 | .00016 | .00100 | 30.77 | | U | U |
| 12/07/1993 | Cadmium | 4 | TS | 1425.7 | .00130 | .00140 | 30.77 | | U | U |
| 12/07/1993 | Chromium | 4 | TS | 1425.7 | .00780 | .00020 | 30.77 | | | |
| 12/07/1993 | Manganese | 4 | TS | 1425.7 | .01203 | .42000 | 30.77 | | | |
| 12/07/1993 | Nickel | 4 | TS | 1425.7 | .00326 | .01000 | 30.77 | | U | U |
| 12/07/1993 | Particulate Fluoride | 4 | TS | 1425.7 | 2.09993 | 8.30000 | 30.77 | | B | |
| 12/07/1993 | Phosphorus | 4 | TS | 1425.7 | .30491 | .30000 | 30.77 | | B | U |
| 12/07/1993 | Selenium | 4 | TS | 1425.7 | .01632 | .70000 | 30.77 | | U | U |
| 12/07/1993 | Silver | 4 | TS | 1425.7 | .00114 | .30000 | 30.77 | | U | U |
| 12/07/1993 | Thallium | 4 | TS | 1425.7 | .03257 | .30000 | 30.77 | | U | U |
| 12/07/1993 | Vanadium | 4 | TS | 1425.7 | .00663 | .17000 | 30.77 | | | |
| 12/07/1993 | Zinc | 4 | TS | 1425.7 | .02588 | .00000 | 30.77 | | B | |
| 12/07/1993 | Aluminum | 5 | TS | 1438.7 | .42457 | 33.30000 | 46.35 | | | |
| 12/07/1993 | Arsenic | 5 | TS | 1438.7 | .00080 | .00057 | 46.35 | | | |
| 12/07/1993 | Barium | 5 | TS | 1438.7 | .00838 | .52000 | 46.35 | | | |
| 12/07/1993 | Beryllium | 5 | TS | 1438.7 | .00016 | .00100 | 46.35 | | U | U |
| 12/07/1993 | Cadmium | 5 | TS | 1438.7 | .00423 | .00140 | 46.35 | | | |
| 12/07/1993 | Chromium | 5 | TS | 1438.7 | .02017 | .00020 | 46.35 | | | |
| 12/07/1993 | Manganese | 5 | TS | 1438.7 | .00792 | .42000 | 46.35 | | | |
| 12/07/1993 | Nickel | 5 | TS | 1438.7 | .00420 | .01000 | 46.35 | | B | |
| 12/07/1993 | Particulate Fluoride | 5 | TS | 1438.7 | 2.67367 | 8.30000 | 46.35 | | B | |
| 12/07/1993 | Phosphorus | 5 | TS | 1438.7 | 1.84258 | .30000 | 46.35 | | | |
| 12/07/1993 | Selenium | 5 | TS | 1438.7 | .01617 | .70000 | 46.35 | | B | |
| 12/07/1993 | Silver | 5 | TS | 1438.7 | .00113 | .30000 | 46.35 | | U | U |
| 12/07/1993 | Thallium | 5 | TS | 1438.7 | .03228 | .30000 | 46.35 | | U | U |

| Sample Date | Chemical Name | Site # | Typ | Run Time (min.) | Chem Conc. (ug/m3) | EPA Scr. L(ug/m3) | Part.C. Grav. (ug/m3) | Qual. Val | Lab Val |
|---|---|---|---|---|---|---|---|---|---|
| 12/07/1993 | Vanadium | 5 | TS | 1438.7 | .01939 | .17000 | 46.35 | | |
| 12/07/1993 | Zinc | 5 | TS | 1438.7 | .02796 | .00000 | 46.35 | B | |
| 12/07/1993 | Aluminum | 6 | TS | 1437.8 | .12604 | 33.30000 | 14.09 | | |
| 12/07/1993 | Arsenic | 6 | TS | 1437.8 | .00044 | .00057 | 14.09 | B | |
| 12/07/1993 | Barium | 6 | TS | 1437.8 | .00290 | .52000 | 14.09 | | |
| 12/07/1993 | Beryllium | 6 | TS | 1437.8 | .00016 | .00100 | 14.09 | U | U |
| 12/07/1993 | Cadmium | 6 | TS | 1437.8 | .00129 | .00140 | 14.09 | U | U |
| 12/07/1993 | Chromium | 6 | TS | 1437.8 | .00091 | .00020 | 14.09 | | |
| 12/07/1993 | Manganese | 6 | TS | 1437.8 | .00437 | .42000 | 14.09 | | |
| 12/07/1993 | Nickel | 6 | TS | 1437.8 | .00322 | .01000 | 14.09 | U | U |
| 12/07/1993 | Particulate Fluoride | 6 | TS | 1437.8 | 1.80061 | 8.30000 | 14.09 | B | |
| 12/07/1993 | Phosphorus | 6 | TS | 1437.8 | .19357 | .30000 | 14.09 | B | |
| 12/07/1993 | Selenium | 6 | TS | 1437.8 | .01614 | .70000 | 14.09 | U | U |
| 12/07/1993 | Silver | 6 | TS | 1437.8 | .00113 | .30000 | 14.09 | U | UJ |
| 12/07/1993 | Thallium | 6 | TS | 1437.8 | .03222 | .30000 | 14.09 | U | U |
| 12/07/1993 | Vanadium | 6 | TS | 1437.8 | .00161 | .17000 | 14.09 | U | U |
| 12/07/1993 | Zinc | 6 | TS | 1437.8 | .01492 | .00000 | 14.09 | B | |
| 12/07/1993 | Aluminum | 7 | TS | 1465.7 | .22252 | 33.30000 | 34.82 | | |
| 12/07/1993 | Arsenic | 7 | TS | 1465.7 | .00058 | .00057 | 34.82 | B | |
| 12/07/1993 | Barium | 7 | TS | 1465.7 | .00405 | .52000 | 34.82 | | |
| 12/07/1993 | Beryllium | 7 | TS | 1465.7 | .00016 | .00100 | 34.82 | U | U |
| 12/07/1993 | Cadmium | 7 | TS | 1465.7 | .00232 | .00140 | 34.82 | | |
| 12/07/1993 | Chromium | 7 | TS | 1465.7 | .00691 | .00020 | 34.82 | | |
| 12/07/1993 | Manganese | 7 | TS | 1465.7 | .00559 | .42000 | 34.82 | | |
| 12/07/1993 | Nickel | 7 | TS | 1465.7 | .00318 | .01000 | 34.82 | U | U |
| 12/07/1993 | Particulate Fluoride | 7 | TS | 1465.7 | 3.08736 | 8.30000 | 34.82 | B | |
| 12/07/1993 | Phosphorus | 7 | TS | 1465.7 | 1.02067 | .30000 | 34.82 | | |
| 12/07/1993 | Selenium | 7 | TS | 1465.7 | .01591 | .70000 | 34.82 | U | U |
| 12/07/1993 | Silver | 7 | TS | 1465.7 | .00111 | .30000 | 34.82 | U | UJ |
| 12/07/1993 | Thallium | 7 | TS | 1465.7 | .03176 | .30000 | 34.82 | U | U |
| 12/07/1993 | Vanadium | 7 | TS | 1465.7 | .00780 | .17000 | 34.82 | | |
| 12/07/1993 | Zinc | 7 | TS | 1465.7 | .01560 | .00000 | 34.82 | B | |
| 12/07/1993 | Aluminum | 8 | TS | 1456.1 | .26871 | 33.30000 | 29.71 | | |
| 12/07/1993 | Arsenic | 8 | TS | 1456.1 | .00044 | .00057 | 29.71 | B | |
| 12/07/1993 | Barium | 8 | TS | 1456.1 | .00802 | .52000 | 29.71 | | |
| 12/07/1993 | Beryllium | 8 | TS | 1456.1 | .00016 | .00100 | 29.71 | U | U |
| 12/07/1993 | Cadmium | 8 | TS | 1456.1 | .00128 | .00140 | 29.71 | U | U |
| 12/07/1993 | Chromium | 8 | TS | 1456.1 | .01270 | .00020 | 29.71 | | |
| 12/07/1993 | Manganese | 8 | TS | 1456.1 | .00891 | .42000 | 29.71 | | |
| 12/07/1993 | Nickel | 8 | TS | 1456.1 | .00402 | .01000 | 29.71 | B | |
| 12/07/1993 | Particulate Fluoride | 8 | TS | 1456.1 | 2.03295 | 8.30000 | 29.71 | B | |
| 12/07/1993 | Phosphorus | 8 | TS | 1456.1 | .50150 | .30000 | 29.71 | | U |
| 12/07/1993 | Selenium | 8 | TS | 1456.1 | .01610 | .70000 | 29.71 | U | U |
| 12/07/1993 | Silver | 8 | TS | 1456.1 | .00112 | .30000 | 29.71 | U | U |
| 12/07/1993 | Thallium | 8 | TS | 1456.1 | .03213 | .30000 | 29.71 | U | U |
| 12/07/1993 | Vanadium | 8 | TS | 1456.1 | .01058 | .17000 | 29.71 | | |
| 12/07/1993 | Zinc | 8 | TS | 1456.1 | .01975 | .00000 | 29.71 | B | |
| 12/11/1993 | Aluminum | 1 | TS | 1445.7 | .25606 | 33.30000 | 34.82 | | |
| 12/11/1993 | Arsenic | 1 | TS | 1445.7 | .00213 | .00057 | 34.82 | | |

| Sample Date | Chemical Name | Site # | Typ | Run Time (min.) | Chem Conc. (ug/m3) | EPA Scr. L(ug/m3) | Part.C. Grav. (ug/m3) | Qual. Val | Lab Val |
|---|---|---|---|---|---|---|---|---|---|
| 12/11/1993 | Barium | 1 | TS | 1445.7 | .00831 | .52000 | 34.82 | | |
| 12/11/1993 | Beryllium | 1 | TS | 1445.7 | .00017 | .00100 | 34.82 | U | U |
| 12/11/1993 | Cadmium | 1 | TS | 1445.7 | .00198 | .00140 | 34.82 | | |
| 12/11/1993 | Chromium | 1 | TS | 1445.7 | .00418 | .00020 | 34.82 | | |
| 12/11/1993 | Manganese | 1 | TS | 1445.7 | .00919 | .42000 | 34.82 | | |
| 12/11/1993 | Nickel | 1 | TS | 1445.7 | .00341 | .01000 | 34.82 | U | U |
| 12/11/1993 | Particulate Fluoride | 1 | TS | 1445.7 | 2.64916 | 8.30000 | 34.82 | B | |
| 12/11/1993 | Phosphorus | 1 | TS | 1445.7 | .65037 | .30000 | 34.82 | | |
| 12/11/1993 | Selenium | 1 | TS | 1445.7 | .01709 | .70000 | 34.82 | U | U |
| 12/11/1993 | Silver | 1 | TS | 1445.7 | .00119 | .30000 | 34.82 | U | UJ |
| 12/11/1993 | Thallium | 1 | TS | 1445.7 | .03412 | .30000 | 34.82 | U | U |
| 12/11/1993 | Vanadium | 1 | TS | 1445.7 | .00459 | .17000 | 34.82 | B | |
| 12/11/1993 | Zinc | 1 | TS | 1445.7 | .02063 | .00000 | 34.82 | B | |
| 12/11/1993 | Aluminum | 2 | TS | 1435.3 | .44847 | 33.30000 | 64.77 | | |
| 12/11/1993 | Arsenic | 2 | TS | 1435.3 | .00239 | .00057 | 64.77 | | |
| 12/11/1993 | Barium | 2 | TS | 1435.3 | .00961 | .52000 | 64.77 | | |
| 12/11/1993 | Beryllium | 2 | TS | 1435.3 | .00025 | .00100 | 64.77 | B | |
| 12/11/1993 | Cadmium | 2 | TS | 1435.3 | .00627 | .00140 | 64.77 | | |
| 12/11/1993 | Chromium | 2 | TS | 1435.3 | .01522 | .00020 | 64.77 | | |
| 12/11/1993 | Manganese | 2 | TS | 1435.3 | .01775 | .42000 | 64.77 | | |
| 12/11/1993 | Nickel | 2 | TS | 1435.3 | .00527 | .01000 | 64.77 | B | |
| 12/11/1993 | Particulate Fluoride | 2 | TS | 1435.3 | 2.54934 | 8.30000 | 64.77 | B | |
| 12/11/1993 | Phosphorus | 2 | TS | 1435.3 | 2.27572 | .30000 | 64.77 | | |
| 12/11/1993 | Selenium | 2 | TS | 1435.3 | .01675 | .70000 | 64.77 | U | U |
| 12/11/1993 | Silver | 2 | TS | 1435.3 | .00117 | .30000 | 64.77 | U | UJ |
| 12/11/1993 | Thallium | 2 | TS | 1435.3 | .03344 | .30000 | 64.77 | U | U |
| 12/11/1993 | Vanadium | 2 | TS | 1435.3 | .02089 | .17000 | 64.77 | | |
| 12/11/1993 | Zinc | 2 | TS | 1435.3 | .04218 | .00000 | 64.77 | B | |
| 12/11/1993 | Aluminum | 3 | TS | 1449.7 | .24247 | 33.30000 | 30.33 | | |
| 12/11/1993 | Arsenic | 3 | TS | 1449.7 | .00252 | .00057 | 30.33 | | |
| 12/11/1993 | Barium | 3 | TS | 1449.7 | .00574 | .52000 | 30.33 | | |
| 12/11/1993 | Beryllium | 3 | TS | 1449.7 | .00016 | .00100 | 30.33 | U | U |
| 12/11/1993 | Cadmium | 3 | TS | 1449.7 | .00129 | .00140 | 30.33 | U | U |
| 12/11/1993 | Chromium | 3 | TS | 1449.7 | .00241 | .00020 | 30.33 | | |
| 12/11/1993 | Manganese | 3 | TS | 1449.7 | .01103 | .42000 | 30.33 | | |
| 12/11/1993 | Nickel | 3 | TS | 1449.7 | .00323 | .01000 | 30.33 | U | U |
| 12/11/1993 | Particulate Fluoride | 3 | TS | 1449.7 | 1.57989 | 8.30000 | 30.33 | B | |
| 12/11/1993 | Phosphorus | 3 | TS | 1449.7 | .27471 | .30000 | 30.33 | B | |
| 12/11/1993 | Selenium | 3 | TS | 1449.7 | .01619 | .70000 | 30.33 | U | U |
| 12/11/1993 | Silver | 3 | TS | 1449.7 | .00113 | .30000 | 30.33 | U | UJ |
| 12/11/1993 | Thallium | 3 | TS | 1449.7 | .03231 | .30000 | 30.33 | U | U |
| 12/11/1993 | Vanadium | 3 | TS | 1449.7 | .00195 | .17000 | 30.33 | B | |
| 12/11/1993 | Zinc | 3 | TS | 1449.7 | .01812 | .00000 | 30.33 | B | |
| 12/11/1993 | Aluminum | 4 | TS | 1429.1 | .35007 | 33.30000 | 38.19 | | |
| 12/11/1993 | Arsenic | 4 | TS | 1429.1 | .00259 | .00057 | 38.19 | | |
| 12/11/1993 | Barium | 4 | TS | 1429.1 | .00833 | .52000 | 38.19 | | |
| 12/11/1993 | Beryllium | 4 | TS | 1429.1 | .00017 | .00100 | 38.19 | U | U |
| 12/11/1993 | Cadmium | 4 | TS | 1429.1 | .00194 | .00140 | 38.19 | | |
| 12/11/1993 | Chromium | 4 | TS | 1429.1 | .00323 | .00020 | 38.19 | | |

| Sample Date | Chemical Name | Site # | Typ | Run Time (min.) | Chem Conc. (ug/m3) | EPA Scr. L(ug/m3) | Part.C. Grav. (ug/m3) | Qual. Val | Lab Val |
|---|---|---|---|---|---|---|---|---|---|
| 12/11/1993 | Manganese | 4 | TS | 1429.1 | .01391 | .42000 | 38.19 | | |
| 12/11/1993 | Nickel | 4 | TS | 1429.1 | .00337 | .01000 | 38.19 | B | |
| 12/11/1993 | Particulate Fluoride | 4 | TS | 1429.1 | 2.28452 | 8.30000 | 38.19 | B | |
| 12/11/1993 | Phosphorus | 4 | TS | 1429.1 | .42465 | .30000 | 38.19 | | |
| 12/11/1993 | Selenium | 4 | TS | 1429.1 | .02103 | .70000 | 38.19 | B | |
| 12/11/1993 | Silver | 4 | TS | 1429.1 | .00118 | .30000 | 38.19 | U | UJ |
| 12/11/1993 | Thallium | 4 | TS | 1429.1 | .03366 | .30000 | 38.19 | U | U |
| 12/11/1993 | Vanadium | 4 | TS | 1429.1 | .00399 | .17000 | 38.19 | B | |
| 12/11/1993 | Zinc | 4 | TS | 1429.1 | .02560 | .00000 | 38.19 | B | |
| 12/11/1993 | Aluminum | 5 | TS | 1438.3 | .23233 | 33.30000 | 28.39 | | |
| 12/11/1993 | Arsenic | 5 | TS | 1438.3 | .00390 | .00057 | 28.39 | | |
| 12/11/1993 | Barium | 5 | TS | 1438.3 | .00443 | .52000 | 28.39 | | |
| 12/11/1993 | Beryllium | 5 | TS | 1438.3 | .00017 | .00100 | 28.39 | U | U |
| 12/11/1993 | Cadmium | 5 | TS | 1438.3 | .00186 | .00140 | 28.39 | | |
| 12/11/1993 | Chromium | 5 | TS | 1438.3 | .00218 | .00020 | 28.39 | | |
| 12/11/1993 | Manganese | 5 | TS | 1438.3 | .01041 | .42000 | 28.39 | | |
| 12/11/1993 | Nickel | 5 | TS | 1438.3 | .00334 | .01000 | 28.39 | U | U |
| 12/11/1993 | Particulate Fluoride | 5 | TS | 1438.3 | 1.72913 | 8.30000 | 28.39 | B | |
| 12/11/1993 | Phosphorus | 5 | TS | 1438.3 | .47334 | .30000 | 28.39 | | |
| 12/11/1993 | Selenium | 5 | TS | 1438.3 | .01676 | .70000 | 28.39 | U | U |
| 12/11/1993 | Silver | 5 | TS | 1438.3 | .00117 | .30000 | 28.39 | U | UJ |
| 12/11/1993 | Thallium | 5 | TS | 1438.3 | .03345 | .30000 | 28.39 | U | U |
| 12/11/1993 | Vanadium | 5 | TS | 1438.3 | .00211 | .17000 | 28.39 | B | |
| 12/11/1993 | Zinc | 5 | TS | 1438.3 | .01943 | .00000 | 28.39 | B | |
| 12/11/1993 | Aluminum | 6 | TS | 1438.9 | .11517 | 33.30000 | 19.78 | | |
| 12/11/1993 | Arsenic | 6 | TS | 1438.9 | .00208 | .00057 | 19.78 | | |
| 12/11/1993 | Barium | 6 | TS | 1438.9 | .00234 | .52000 | 19.78 | | |
| 12/11/1993 | Beryllium | 6 | TS | 1438.9 | .00017 | .00100 | 19.78 | U | U |
| 12/11/1993 | Cadmium | 6 | TS | 1438.9 | .00133 | .00140 | 19.78 | U | U |
| 12/11/1993 | Chromium | 6 | TS | 1438.9 | .00077 | .00020 | 19.78 | | |
| 12/11/1993 | Manganese | 6 | TS | 1438.9 | .00554 | .42000 | 19.78 | | |
| 12/11/1993 | Nickel | 6 | TS | 1438.9 | .00334 | .01000 | 19.78 | U | U |
| 12/11/1993 | Particulate Fluoride | 6 | TS | 1438.9 | 1.88392 | 8.30000 | 19.78 | B | |
| 12/11/1993 | Phosphorus | 6 | TS | 1438.9 | .21169 | .30000 | 19.78 | B | |
| 12/11/1993 | Selenium | 6 | TS | 1438.9 | .01671 | .70000 | 19.78 | U | U |
| 12/11/1993 | Silver | 6 | TS | 1438.9 | .00116 | .30000 | 19.78 | U | UJ |
| 12/11/1993 | Thallium | 6 | TS | 1438.9 | .03335 | .30000 | 19.78 | U | U |
| 12/11/1993 | Vanadium | 6 | TS | 1438.9 | .00167 | .17000 | 19.78 | U | U |
| 12/11/1993 | Zinc | 6 | TS | 1438.9 | .01065 | .00000 | 19.78 | B | |
| 12/11/1993 | Aluminum | 7 | TS | 1456.7 | .18371 | 33.30000 | 28.90 | | |
| 12/11/1993 | Arsenic | 7 | TS | 1456.7 | .00240 | .00057 | 28.90 | | |
| 12/11/1993 | Barium | 7 | TS | 1456.7 | .00282 | .52000 | 28.90 | | |
| 12/11/1993 | Beryllium | 7 | TS | 1456.7 | .00017 | .00100 | 28.90 | U | U |
| 12/11/1993 | Cadmium | 7 | TS | 1456.7 | .00260 | .00140 | 28.90 | | |
| 12/11/1993 | Chromium | 7 | TS | 1456.7 | .00220 | .00020 | 28.90 | | |
| 12/11/1993 | Manganese | 7 | TS | 1456.7 | .00720 | .42000 | 28.90 | | |
| 12/11/1993 | Nickel | 7 | TS | 1456.7 | .00331 | .01000 | 28.90 | U | U |
| 12/11/1993 | Particulate Fluoride | 7 | TS | 1456.7 | 2.60362 | 8.30000 | 28.90 | B | |

| Sample Date | Chemical Name | Site # | Typ | Run Time (min.) | Chem Conc. (ug/m3) | EPA Scr. L(ug/m3) | Part.C. Grav. (ug/m3) | Qual. Val | Lab | Val |
|---|---|---|---|---|---|---|---|---|---|---|
| 12/11/1993 | Phosphorus | 7 | TS | 1456.7 | .73351 | .30000 | 28.90 | | | |
| 12/11/1993 | Selenium | 7 | TS | 1456.7 | .01659 | .70000 | 28.90 | | U | U |
| 12/11/1993 | Silver | 7 | TS | 1456.7 | .00116 | .30000 | 28.90 | | U | UJ |
| 12/11/1993 | Thallium | 7 | TS | 1456.7 | .03311 | .30000 | 28.90 | | U | U |
| 12/11/1993 | Vanadium | 7 | TS | 1456.7 | .00219 | .17000 | 28.90 | | B | |
| 12/11/1993 | Zinc | 7 | TS | 1456.7 | .01659 | .00000 | 28.90 | | B | |
| 12/11/1993 | Aluminum | 8 | TS | 1339.5 | .27300 | 33.30000 | 42.85 | | | |
| 12/11/1993 | Arsenic | 8 | TS | 1339.5 | .00131 | .00057 | 42.85 | | | |
| 12/11/1993 | Barium | 8 | TS | 1339.5 | .00344 | .52000 | 42.85 | | | |
| 12/11/1993 | Beryllium | 8 | TS | 1339.5 | .00018 | .00100 | 42.85 | | U | U |
| 12/11/1993 | Cadmium | 8 | TS | 1339.5 | .00240 | .00140 | 42.85 | | | |
| 12/11/1993 | Chromium | 8 | TS | 1339.5 | .00630 | .00020 | 42.85 | | | |
| 12/11/1993 | Manganese | 8 | TS | 1339.5 | .00787 | .42000 | 42.85 | | | |
| 12/11/1993 | Nickel | 8 | TS | 1339.5 | .00425 | .01000 | 42.85 | | B | |
| 12/11/1993 | Particulate Fluoride | 8 | TS | 1339.5 | 5.32992 | 8.30000 | 42.85 | | | |
| 12/11/1993 | Phosphorus | 8 | TS | 1339.5 | 2.20997 | .30000 | 42.85 | | | |
| 12/11/1993 | Selenium | 8 | TS | 1339.5 | .01813 | .70000 | 42.85 | | U | U |
| 12/11/1993 | Silver | 8 | TS | 1339.5 | .00126 | .30000 | 42.85 | | U | UJ |
| 12/11/1993 | Thallium | 8 | TS | 1339.5 | .03618 | .30000 | 42.85 | | U | U |
| 12/11/1993 | Vanadium | 8 | TS | 1339.5 | .00576 | .17000 | 42.85 | | | |
| 12/11/1993 | Zinc | 8 | TS | 1339.5 | .01791 | .00000 | 42.85 | | B | |
| 12/15/1993 | Aluminum | 1 | TS | 1445.6 | .51524 | 33.30000 | 70.48 | | | |
| 12/15/1993 | Arsenic | 1 | TS | 1445.6 | .00076 | .00057 | 70.48 | | | |
| 12/15/1993 | Barium | 1 | TS | 1445.6 | .01232 | .52000 | 70.48 | | | |
| 12/15/1993 | Beryllium | 1 | TS | 1445.6 | .00017 | .00100 | 70.48 | | U | U |
| 12/15/1993 | Cadmium | 1 | TS | 1445.6 | .00396 | .00140 | 70.48 | | | |
| 12/15/1993 | Chromium | 1 | TS | 1445.6 | .01239 | .00020 | 70.48 | | | |
| 12/15/1993 | Manganese | 1 | TS | 1445.6 | .00988 | .42000 | 70.48 | | | |
| 12/15/1993 | Nickel | 1 | TS | 1445.6 | .00347 | .01000 | 70.48 | | B | |
| 12/15/1993 | Particulate Fluoride | 1 | TS | 1445.6 | 7.31355 | 8.30000 | 70.48 | | | |
| 12/15/1993 | Phosphorus | 1 | TS | 1445.6 | 1.79874 | .30000 | 70.48 | | | |
| 12/15/1993 | Selenium | 1 | TS | 1445.6 | .01654 | .70000 | 70.48 | | U | U |
| 12/15/1993 | Silver | 1 | TS | 1445.6 | .00115 | .30000 | 70.48 | | U | U |
| 12/15/1993 | Thallium | 1 | TS | 1445.6 | .03301 | .30000 | 70.48 | | U | U |
| 12/15/1993 | Vanadium | 1 | TS | 1445.6 | .01245 | .17000 | 70.48 | | | |
| 12/15/1993 | Zinc | 1 | TS | 1445.6 | .03584 | .00000 | 70.48 | | B | |
| 12/15/1993 | Aluminum | 2 | TS | 1435.9 | 2.23294 | 33.30000 | 202.76 | | | |
| 12/15/1993 | Arsenic | 2 | TS | 1435.9 | .00241 | .00057 | 202.76 | | | |
| 12/15/1993 | Barium | 2 | TS | 1435.9 | .03072 | .52000 | 202.76 | | | |
| 12/15/1993 | Beryllium | 2 | TS | 1435.9 | .00018 | .00100 | 202.76 | | B | |
| 12/15/1993 | Cadmium | 2 | TS | 1435.9 | .03007 | .00140 | 202.76 | | | |
| 12/15/1993 | Chromium | 2 | TS | 1435.9 | .07551 | .00020 | 202.76 | | | |
| 12/15/1993 | Manganese | 2 | TS | 1435.9 | .03201 | .42000 | 202.76 | | | |
| 12/15/1993 | Nickel | 2 | TS | 1435.9 | .01426 | .01000 | 202.76 | | | |
| 12/15/1993 | Particulate Fluoride | 2 | TS | 1435.9 | 5.27257 | 8.30000 | 202.76 | | | |
| 12/15/1993 | Phosphorus | 2 | TS | 1435.9 | 14.84322 | .30000 | 202.76 | | | |
| 12/15/1993 | Selenium | 2 | TS | 1435.9 | .02672 | .70000 | 202.76 | | B | |
| 12/15/1993 | Silver | 2 | TS | 1435.9 | .00205 | .30000 | 202.76 | | B | |

| Sample Date | Chemical Name | Site # | Typ | Run Time (min.) | Chem Conc. (ug/m3) | EPA Scr. L(ug/m3) | Part.C. (ug/m3) | Grav. Val | Qual. Lab | Qual. Val |
|---|---|---|---|---|---|---|---|---|---|---|
| 12/15/1993 | Thallium | 2 | TS | 1435.9 | .03233 | .30000 | 202.76 | | U | U |
| 12/15/1993 | Vanadium | 2 | TS | 1435.9 | .10132 | .17000 | 202.76 | | | |
| 12/15/1993 | Zinc | 2 | TS | 1435.9 | .14650 | .00000 | 202.76 | | | |
| 12/15/1993 | Aluminum | 3 | TS | 1442.0 | .43087 | 33.30000 | 42.42 | | | |
| 12/15/1993 | Arsenic | 3 | TS | 1442.0 | .00053 | .00057 | 42.42 | | B | |
| 12/15/1993 | Barium | 3 | TS | 1442.0 | .00715 | .52000 | 42.42 | | | |
| 12/15/1993 | Beryllium | 3 | TS | 1442.0 | .00016 | .00100 | 42.42 | | U | U |
| 12/15/1993 | Cadmium | 3 | TS | 1442.0 | .00443 | .00140 | 42.42 | | | |
| 12/15/1993 | Chromium | 3 | TS | 1442.0 | .01261 | .00020 | 42.42 | | | |
| 12/15/1993 | Manganese | 3 | TS | 1442.0 | .00840 | .42000 | 42.42 | | | |
| 12/15/1993 | Nickel | 3 | TS | 1442.0 | .00456 | .01000 | 42.42 | | B | |
| 12/15/1993 | Particulate Fluoride | 3 | TS | 1442.0 | 2.11360 | 8.30000 | 42.42 | | B | |
| 12/15/1993 | Phosphorus | 3 | TS | 1442.0 | 1.61812 | .30000 | 42.42 | | | |
| 12/15/1993 | Selenium | 3 | TS | 1442.0 | .01574 | .70000 | 42.42 | | U | U |
| 12/15/1993 | Silver | 3 | TS | 1442.0 | .00110 | .30000 | 42.42 | | U | U |
| 12/15/1993 | Thallium | 3 | TS | 1442.0 | .03142 | .30000 | 42.42 | | U | U |
| 12/15/1993 | Vanadium | 3 | TS | 1442.0 | .01518 | .17000 | 42.42 | | | |
| 12/15/1993 | Zinc | 3 | TS | 1442.0 | .02565 | .00000 | 42.42 | | B | |
| 12/15/1993 | Aluminum | 4 | TS | 1451.8 | .24636 | 33.30000 | 29.43 | | | |
| 12/15/1993 | Arsenic | 4 | TS | 1451.8 | .00046 | .00057 | 29.43 | | B | |
| 12/15/1993 | Barium | 4 | TS | 1451.8 | .00673 | .52000 | 29.43 | | | |
| 12/15/1993 | Beryllium | 4 | TS | 1451.8 | .00017 | .00100 | 29.43 | | U | U |
| 12/15/1993 | Cadmium | 4 | TS | 1451.8 | .00187 | .00140 | 29.43 | | | |
| 12/15/1993 | Chromium | 4 | TS | 1451.8 | .00366 | .00020 | 29.43 | | | |
| 12/15/1993 | Manganese | 4 | TS | 1451.8 | .00888 | .42000 | 29.43 | | | |
| 12/15/1993 | Nickel | 4 | TS | 1451.8 | .00337 | .01000 | 29.43 | | U | U |
| 12/15/1993 | Particulate Fluoride | 4 | TS | 1451.8 | 1.93854 | 8.30000 | 29.43 | | B | |
| 12/15/1993 | Phosphorus | 4 | TS | 1451.8 | .61589 | .30000 | 29.43 | | | U |
| 12/15/1993 | Selenium | 4 | TS | 1451.8 | .01689 | .70000 | 29.43 | | U | U |
| 12/15/1993 | Silver | 4 | TS | 1451.8 | .00118 | .30000 | 29.43 | | U | U |
| 12/15/1993 | Thallium | 4 | TS | 1451.8 | .03372 | .30000 | 29.43 | | U | U |
| 12/15/1993 | Vanadium | 4 | TS | 1451.8 | .00415 | .17000 | 29.43 | | B | |
| 12/15/1993 | Zinc | 4 | TS | 1451.8 | .02107 | .00000 | 29.43 | | B | |
| 12/15/1993 | Aluminum | 5 | TS | 1440.7 | .12509 | 33.30000 | 14.00 | | | |
| 12/15/1993 | Arsenic | 5 | TS | 1440.7 | .00042 | .00057 | 14.00 | | B | |
| 12/15/1993 | Barium | 5 | TS | 1440.7 | .00388 | .52000 | 14.00 | | | |
| 12/15/1993 | Beryllium | 5 | TS | 1440.7 | .00016 | .00100 | 14.00 | | U | U |
| 12/15/1993 | Cadmium | 5 | TS | 1440.7 | .00129 | .00140 | 14.00 | | U | U |
| 12/15/1993 | Chromium | 5 | TS | 1440.7 | .00197 | .00020 | 14.00 | | | U |
| 12/15/1993 | Manganese | 5 | TS | 1440.7 | .00399 | .42000 | 14.00 | | | |
| 12/15/1993 | Nickel | 5 | TS | 1440.7 | .00323 | .01000 | 14.00 | | U | U |
| 12/15/1993 | Particulate Fluoride | 5 | TS | 1440.7 | 2.05045 | 8.30000 | 14.00 | | B | |
| 12/15/1993 | Phosphorus | 5 | TS | 1440.7 | .42363 | .30000 | 14.00 | | | U |
| 12/15/1993 | Selenium | 5 | TS | 1440.7 | .01618 | .70000 | 14.00 | | U | U |
| 12/15/1993 | Silver | 5 | TS | 1440.7 | .00113 | .30000 | 14.00 | | U | U |
| 12/15/1993 | Thallium | 5 | TS | 1440.7 | .03230 | .30000 | 14.00 | | U | U |
| 12/15/1993 | Vanadium | 5 | TS | 1440.7 | .00253 | .17000 | 14.00 | | B | |
| 12/15/1993 | Zinc | 5 | TS | 1440.7 | .01535 | .00000 | 14.00 | | B | |
| 12/15/1993 | Aluminum | 6 | TS | 1438.8 | .11400 | 33.30000 | 11.54 | | | |

| Sample Date | Chemical Name | Site # | Typ | Run Time (min.) | Chem Conc. (ug/m3) | EPA Scr. L(ug/m3) | Part.C. (ug/m3) | Grav. Val | Qual. Lab | Qual. Val |
|---|---|---|---|---|---|---|---|---|---|---|
| 12/15/1993 | Arsenic | 6 | TS | 1438.8 | .00021 | .00057 | 11.54 | | B | |
| 12/15/1993 | Barium | 6 | TS | 1438.8 | .00250 | .52000 | 11.54 | | | |
| 12/15/1993 | Beryllium | 6 | TS | 1438.8 | .00016 | .00100 | 11.54 | | U | U |
| 12/15/1993 | Cadmium | 6 | TS | 1438.8 | .00129 | .00140 | 11.54 | | U | U |
| 12/15/1993 | Chromium | 6 | TS | 1438.8 | .00119 | .00020 | 11.54 | | | U |
| 12/15/1993 | Manganese | 6 | TS | 1438.8 | .00390 | .42000 | 11.54 | | | |
| 12/15/1993 | Nickel | 6 | TS | 1438.8 | .00323 | .01000 | 11.54 | | U | U |
| 12/15/1993 | Particulate Fluoride | 6 | TS | 1438.8 | 1.43625 | 8.30000 | 11.54 | | B | |
| 12/15/1993 | Phosphorus | 6 | TS | 1438.8 | .25505 | .30000 | 11.54 | | B | U |
| 12/15/1993 | Selenium | 6 | TS | 1438.8 | .01617 | .70000 | 11.54 | | U | U |
| 12/15/1993 | Silver | 6 | TS | 1438.8 | .00113 | .30000 | 11.54 | | U | U |
| 12/15/1993 | Thallium | 6 | TS | 1438.8 | .03227 | .30000 | 11.54 | | U | U |
| 12/15/1993 | Vanadium | 6 | TS | 1438.8 | .00162 | .17000 | 11.54 | | U | U |
| 12/15/1993 | Zinc | 6 | TS | 1438.8 | .00895 | .00000 | 11.54 | | B | |
| 12/15/1993 | Aluminum | 7 | TS | 1451.7 | .11868 | 33.30000 | 20.60 | | | |
| 12/15/1993 | Arsenic | 7 | TS | 1451.7 | .00049 | .00057 | 20.60 | | B | |
| 12/15/1993 | Barium | 7 | TS | 1451.7 | .00353 | .52000 | 20.60 | | | |
| 12/15/1993 | Beryllium | 7 | TS | 1451.7 | .00016 | .00100 | 20.60 | | U | U |
| 12/15/1993 | Cadmium | 7 | TS | 1451.7 | .00193 | .00140 | 20.60 | | | |
| 12/15/1993 | Chromium | 7 | TS | 1451.7 | .00210 | .00020 | 20.60 | | | U |
| 12/15/1993 | Manganese | 7 | TS | 1451.7 | .00343 | .42000 | 20.60 | | | |
| 12/15/1993 | Nickel | 7 | TS | 1451.7 | .00321 | .01000 | 20.60 | | U | U |
| 12/15/1993 | Particulate Fluoride | 7 | TS | 1451.7 | 2.14900 | 8.30000 | 20.60 | | B | |
| 12/15/1993 | Phosphorus | 7 | TS | 1451.7 | .71206 | .30000 | 20.60 | | | U |
| 12/15/1993 | Selenium | 7 | TS | 1451.7 | .01610 | .70000 | 20.60 | | U | U |
| 12/15/1993 | Silver | 7 | TS | 1451.7 | .00112 | .30000 | 20.60 | | U | U |
| 12/15/1993 | Thallium | 7 | TS | 1451.7 | .03214 | .30000 | 20.60 | | U | U |
| 12/15/1993 | Vanadium | 7 | TS | 1451.7 | .00252 | .17000 | 20.60 | | B | |
| 12/15/1993 | Zinc | 7 | TS | 1451.7 | .01174 | .00000 | 20.60 | | B | |
| 12/19/1993 | Aluminum | 1 | TS | 1448.8 | .25040 | 33.30000 | 45.14 | | | |
| 12/19/1993 | Arsenic | 1 | TS | 1448.8 | .00032 | .00057 | 45.14 | | B | |
| 12/19/1993 | Barium | 1 | TS | 1448.8 | .00752 | .52000 | 45.14 | | | |
| 12/19/1993 | Beryllium | 1 | TS | 1448.8 | .00016 | .00100 | 45.14 | | U | U |
| 12/19/1993 | Cadmium | 1 | TS | 1448.8 | .00194 | .00140 | 45.14 | | | |
| 12/19/1993 | Chromium | 1 | TS | 1448.8 | .00521 | .00020 | 45.14 | | | |
| 12/19/1993 | Manganese | 1 | TS | 1448.8 | .00619 | .42000 | 45.14 | | | |
| 12/19/1993 | Nickel | 1 | TS | 1448.8 | .00328 | .01000 | 45.14 | | U | U |
| 12/19/1993 | Particulate Fluoride | 1 | TS | 1448.8 | 4.51758 | 8.30000 | 45.14 | | | |
| 12/19/1993 | Phosphorus | 1 | TS | 1448.8 | .77799 | .30000 | 45.14 | | | U |
| 12/19/1993 | Selenium | 1 | TS | 1448.8 | .01641 | .70000 | 45.14 | | U | U |
| 12/19/1993 | Silver | 1 | TS | 1448.8 | .00114 | .30000 | 45.14 | | U | U |
| 12/19/1993 | Thallium | 1 | TS | 1448.8 | .03275 | .30000 | 45.14 | | U | U |
| 12/19/1993 | Vanadium | 1 | TS | 1448.8 | .00593 | .17000 | 45.14 | | | |
| 12/19/1993 | Zinc | 1 | TS | 1448.8 | .04374 | .00000 | 45.14 | | B | |
| 12/19/1993 | Aluminum | 2 | TS | 1430.8 | .76644 | 33.30000 | 89.00 | | | |
| 12/19/1993 | Arsenic | 2 | TS | 1430.8 | .00137 | .00057 | 89.00 | | | |
| 12/19/1993 | Barium | 2 | TS | 1430.8 | .01224 | .52000 | 89.00 | | | |
| 12/19/1993 | Beryllium | 2 | TS | 1430.8 | .00029 | .00100 | 89.00 | | B | |
| 12/19/1993 | Cadmium | 2 | TS | 1430.8 | .01211 | .00140 | 89.00 | | | |

| Sample Date | Chemical Name | Site # | Typ | Run Time (min.) | Chem Conc. (ug/m3) | EPA Scr. L(ug/m3) | Part.C. (ug/m3) | Grav. Val | Qual. Lab | Qual. Val |
|---|---|---|---|---|---|---|---|---|---|---|
| 12/19/1993 | Chromium | 2 | TS | 1430.8 | .02905 | .00020 | 89.00 | | | |
| 12/19/1993 | Manganese | 2 | TS | 1430.8 | .01423 | .42000 | 89.00 | | | |
| 12/19/1993 | Nickel | 2 | TS | 1430.8 | .00565 | .01000 | 89.00 | | B | |
| 12/19/1993 | Particulate Fluoride | 2 | TS | 1430.8 | 2.46032 | 8.30000 | 89.00 | | B | |
| 12/19/1993 | Phosphorus | 2 | TS | 1430.8 | 6.50504 | .30000 | 89.00 | | | |
| 12/19/1993 | Selenium | 2 | TS | 1430.8 | .01617 | .70000 | 89.00 | | U | U |
| 12/19/1993 | Silver | 2 | TS | 1430.8 | .00113 | .30000 | 89.00 | | U | U |
| 12/19/1993 | Thallium | 2 | TS | 1430.8 | .03227 | .30000 | 89.00 | | U | U |
| 12/19/1993 | Vanadium | 2 | TS | 1430.8 | .03826 | .17000 | 89.00 | | | |
| 12/19/1993 | Zinc | 2 | TS | 1430.8 | .09275 | .00000 | 89.00 | | | |
| 12/19/1993 | Aluminum | 3 | TS | 1448.5 | .19124 | 33.30000 | 31.93 | | | |
| 12/19/1993 | Arsenic | 3 | TS | 1448.5 | .00018 | .00057 | 31.93 | | B | |
| 12/19/1993 | Barium | 3 | TS | 1448.5 | .00490 | .52000 | 31.93 | | | |
| 12/19/1993 | Beryllium | 3 | TS | 1448.5 | .00016 | .00100 | 31.93 | | U | U |
| 12/19/1993 | Cadmium | 3 | TS | 1448.5 | .00185 | .00140 | 31.93 | | | |
| 12/19/1993 | Chromium | 3 | TS | 1448.5 | .00317 | .00020 | 31.93 | | | |
| 12/19/1993 | Manganese | 3 | TS | 1448.5 | .00671 | .42000 | 31.93 | | | |
| 12/19/1993 | Nickel | 3 | TS | 1448.5 | .00311 | .01000 | 31.93 | | U | U |
| 12/19/1993 | Particulate Fluoride | 3 | TS | 1448.5 | 1.57088 | 8.30000 | 31.93 | | B | |
| 12/19/1993 | Phosphorus | 3 | TS | 1448.5 | .58489 | .30000 | 31.93 | | | U |
| 12/19/1993 | Selenium | 3 | TS | 1448.5 | .01558 | .70000 | 31.93 | | U | U |
| 12/19/1993 | Silver | 3 | TS | 1448.5 | .00109 | .30000 | 31.93 | | U | U |
| 12/19/1993 | Thallium | 3 | TS | 1448.5 | .03111 | .30000 | 31.93 | | U | U |
| 12/19/1993 | Vanadium | 3 | TS | 1448.5 | .00333 | .17000 | 31.93 | | B | |
| 12/19/1993 | Zinc | 3 | TS | 1448.5 | .01683 | .00000 | 31.93 | | B | |
| 12/19/1993 | Aluminum | 4 | TS | 1427.2 | .20836 | 33.30000 | 36.18 | | | |
| 12/19/1993 | Arsenic | 4 | TS | 1427.2 | .00024 | .00057 | 36.18 | | B | |
| 12/19/1993 | Barium | 4 | TS | 1427.2 | .00729 | .52000 | 36.18 | | | |
| 12/19/1993 | Beryllium | 4 | TS | 1427.2 | .00017 | .00100 | 36.18 | | U | U |
| 12/19/1993 | Cadmium | 4 | TS | 1427.2 | .00136 | .00140 | 36.18 | | U | U |
| 12/19/1993 | Chromium | 4 | TS | 1427.2 | .00296 | .00020 | 36.18 | | | |
| 12/19/1993 | Manganese | 4 | TS | 1427.2 | .00838 | .42000 | 36.18 | | | |
| 12/19/1993 | Nickel | 4 | TS | 1427.2 | .00341 | .01000 | 36.18 | | U | U |
| 12/19/1993 | Particulate Fluoride | 4 | TS | 1427.2 | 1.58651 | 8.30000 | 36.18 | | B | |
| 12/19/1993 | Phosphorus | 4 | TS | 1427.2 | .44395 | .30000 | 36.18 | | | U |
| 12/19/1993 | Selenium | 4 | TS | 1427.2 | .01709 | .70000 | 36.18 | | U | U |
| 12/19/1993 | Silver | 4 | TS | 1427.2 | .00119 | .30000 | 36.18 | | U | U |
| 12/19/1993 | Thallium | 4 | TS | 1427.2 | .03411 | .30000 | 36.18 | | U | U |
| 12/19/1993 | Vanadium | 4 | TS | 1427.2 | .00296 | .17000 | 36.18 | | B | |
| 12/19/1993 | Zinc | 4 | TS | 1427.2 | .02050 | .00000 | 36.18 | | B | |
| 12/19/1993 | Aluminum | 5 | TS | 1436.7 | .05639 | 33.30000 | 11.13 | | | U |
| 12/19/1993 | Arsenic | 5 | TS | 1436.7 | .00016 | .00057 | 11.13 | | U | U |
| 12/19/1993 | Barium | 5 | TS | 1436.7 | .00169 | .52000 | 11.13 | | B | |
| 12/19/1993 | Beryllium | 5 | TS | 1436.7 | .00016 | .00100 | 11.13 | | U | U |
| 12/19/1993 | Cadmium | 5 | TS | 1436.7 | .00129 | .00140 | 11.13 | | U | U |
| 12/19/1993 | Chromium | 5 | TS | 1436.7 | .00103 | .00020 | 11.13 | | | U |
| 12/19/1993 | Manganese | 5 | TS | 1436.7 | .00204 | .42000 | 11.13 | | | |
| 12/19/1993 | Nickel | 5 | TS | 1436.7 | .00322 | .01000 | 11.13 | | U | U |
| 12/19/1993 | Particulate | 5 | TS | 1436.7 | 1.74897 | 8.30000 | 11.13 | | B | |

| Sample Date | Chemical Name | Site # | Typ | Run Time (min.) | Chem Conc. (ug/m3) | EPA Scr. L(ug/m3) | Part.C. Grav. (ug/m3) | Qual. Val | Lab Val |
|---|---|---|---|---|---|---|---|---|---|
| | Fluoride | | | | | | | | |
| 12/19/1993 | Phosphorus | 5 | TS | 1436.7 | .22248 | .30000 | 11.13 | B | U |
| 12/19/1993 | Selenium | 5 | TS | 1436.7 | .01614 | .70000 | 11.13 | U | U |
| 12/19/1993 | Silver | 5 | TS | 1436.7 | .00113 | .30000 | 11.13 | U | U |
| 12/19/1993 | Thallium | 5 | TS | 1436.7 | .03221 | .30000 | 11.13 | U | U |
| 12/19/1993 | Vanadium | 5 | TS | 1436.7 | .00161 | .17000 | 11.13 | U | U |
| 12/19/1993 | Zinc | 5 | TS | 1436.7 | .00887 | .00000 | 11.13 | B | |
| 12/19/1993 | Aluminum | 6 | TS | 1408.4 | .07394 | 33.30000 | 15.71 | | U |
| 12/19/1993 | Arsenic | 6 | TS | 1408.4 | .00023 | .00057 | 15.71 | B | |
| 12/19/1993 | Barium | 6 | TS | 1408.4 | .00304 | .52000 | 15.71 | | |
| 12/19/1993 | Beryllium | 6 | TS | 1408.4 | .00016 | .00100 | 15.71 | U | U |
| 12/19/1993 | Cadmium | 6 | TS | 1408.4 | .00202 | .00140 | 15.71 | | |
| 12/19/1993 | Chromium | 6 | TS | 1408.4 | .00096 | .00020 | 15.71 | | U |
| 12/19/1993 | Manganese | 6 | TS | 1408.4 | .00253 | .42000 | 15.71 | | |
| 12/19/1993 | Nickel | 6 | TS | 1408.4 | .00328 | .01000 | 15.71 | U | U |
| 12/19/1993 | Particulate Fluoride | 6 | TS | 1408.4 | 1.34133 | 8.30000 | 15.71 | B | |
| 12/19/1993 | Phosphorus | 6 | TS | 1408.4 | .22116 | .30000 | 15.71 | B | U |
| 12/19/1993 | Selenium | 6 | TS | 1408.4 | .01642 | .70000 | 15.71 | U | U |
| 12/19/1993 | Silver | 6 | TS | 1408.4 | .00115 | .30000 | 15.71 | U | U |
| 12/19/1993 | Thallium | 6 | TS | 1408.4 | .03278 | .30000 | 15.71 | U | U |
| 12/19/1993 | Vanadium | 6 | TS | 1408.4 | .00164 | .17000 | 15.71 | U | U |
| 12/19/1993 | Zinc | 6 | TS | 1408.4 | .00883 | .00000 | 15.71 | B | |
| 12/19/1993 | Aluminum | 7 | TS | 1454.2 | .07069 | 33.30000 | 14.59 | | U |
| 12/19/1993 | Arsenic | 7 | TS | 1454.2 | .00016 | .00057 | 14.59 | U | U |
| 12/19/1993 | Barium | 7 | TS | 1454.2 | .00224 | .52000 | 14.59 | | |
| 12/19/1993 | Beryllium | 7 | TS | 1454.2 | .00016 | .00100 | 14.59 | U | U |
| 12/19/1993 | Cadmium | 7 | TS | 1454.2 | .00127 | .00140 | 14.59 | U | U |
| 12/19/1993 | Chromium | 7 | TS | 1454.2 | .00138 | .00020 | 14.59 | | U |
| 12/19/1993 | Manganese | 7 | TS | 1454.2 | .00208 | .42000 | 14.59 | | |
| 12/19/1993 | Nickel | 7 | TS | 1454.2 | .00319 | .01000 | 14.59 | U | U |
| 12/19/1993 | Particulate Fluoride | 7 | TS | 1454.2 | 1.78951 | 8.30000 | 14.59 | B | |
| 12/19/1993 | Phosphorus | 7 | TS | 1454.2 | .26683 | .30000 | 14.59 | B | U |
| 12/19/1993 | Selenium | 7 | TS | 1454.2 | .01598 | .70000 | 14.59 | U | U |
| 12/19/1993 | Silver | 7 | TS | 1454.2 | .00111 | .30000 | 14.59 | U | U |
| 12/19/1993 | Thallium | 7 | TS | 1454.2 | .03191 | .30000 | 14.59 | U | U |
| 12/19/1993 | Vanadium | 7 | TS | 1454.2 | .00160 | .17000 | 14.59 | U | U |
| 12/19/1993 | Zinc | 7 | TS | 1454.2 | .00949 | .00000 | 14.59 | B | |
| 12/19/1993 | Aluminum | 8 | TS | 1440.0 | .26562 | 33.30000 | 44.30 | | |
| 12/19/1993 | Arsenic | 8 | TS | 1440.0 | .00019 | .00057 | 44.30 | B | |
| 12/19/1993 | Barium | 8 | TS | 1440.0 | .00727 | .52000 | 44.30 | | U |
| 12/19/1993 | Beryllium | 8 | TS | 1440.0 | .00013 | .00100 | 44.30 | U | U |
| 12/19/1993 | Cadmium | 8 | TS | 1440.0 | .00217 | .00140 | 44.30 | | |
| 12/19/1993 | Chromium | 8 | TS | 1440.0 | .00518 | .00020 | 44.30 | | |
| 12/19/1993 | Manganese | 8 | TS | 1440.0 | .00590 | .42000 | 44.30 | | |
| 12/19/1993 | Nickel | 8 | TS | 1440.0 | .00264 | .01000 | 44.30 | U | U |
| 12/19/1993 | Particulate Fluoride | 8 | TS | 1440.0 | 4.76950 | 8.30000 | 44.30 | | |
| 12/19/1993 | Phosphorus | 8 | TS | 1440.0 | .77998 | .30000 | 44.30 | | |
| 12/19/1993 | Selenium | 8 | TS | 1440.0 | .01323 | .70000 | 44.30 | U | U |

| Sample Date | Chemical Name | Site # | Typ | Run Time (min.) | Chem Conc. (ug/m3) | EPA Scr. L(ug/m3) | Part.C. (ug/m3) | Grav. Val | Qual. Lab | Qual. Val |
|---|---|---|---|---|---|---|---|---|---|---|
| 12/25/1993 | Selenium | 5 | TS | 1437.5 | .01888 | .70000 | 106.77 | | B | U |
| 12/25/1993 | Silver | 5 | TS | 1437.5 | .00110 | .30000 | 106.77 | | U | U |
| 12/25/1993 | Thallium | 5 | TS | 1437.5 | .03143 | .30000 | 106.77 | | U | U |
| 12/25/1993 | Vanadium | 5 | TS | 1437.5 | .01794 | .17000 | 106.77 | | | |
| 12/25/1993 | Zinc | 5 | TS | 1437.5 | .05784 | .00000 | 106.77 | | B | |
| 12/25/1993 | Aluminum | 6 | TS | 1444.0 | .07102 | 33.30000 | 23.25 | | | U |
| 12/25/1993 | Arsenic | 6 | TS | 1444.0 | .00018 | .00057 | 23.25 | | B | |
| 12/25/1993 | Barium | 6 | TS | 1444.0 | .00226 | .52000 | 23.25 | | | |
| 12/25/1993 | Beryllium | 6 | TS | 1444.0 | .00016 | .00100 | 23.25 | | U | U |
| 12/25/1993 | Cadmium | 6 | TS | 1444.0 | .00176 | .00140 | 23.25 | | | |
| 12/25/1993 | Chromium | 6 | TS | 1444.0 | .00113 | .00020 | 23.25 | | | |
| 12/25/1993 | Manganese | 6 | TS | 1444.0 | .00265 | .42000 | 23.25 | | | |
| 12/25/1993 | Nickel | 6 | TS | 1444.0 | .00312 | .01000 | 23.25 | | U | U |
| 12/25/1993 | Particulate Fluoride | 6 | TS | 1444.0 | 1.58859 | 8.30000 | 23.25 | | B | |
| 12/25/1993 | Phosphorus | 6 | TS | 1444.0 | .30277 | .30000 | 23.25 | | B | U |
| 12/25/1993 | Selenium | 6 | TS | 1444.0 | .01564 | .70000 | 23.25 | | U | U |
| 12/25/1993 | Silver | 6 | TS | 1444.0 | .00109 | .30000 | 23.25 | | U | U |
| 12/25/1993 | Thallium | 6 | TS | 1444.0 | .03121 | .30000 | 23.25 | | U | U |
| 12/25/1993 | Vanadium | 6 | TS | 1444.0 | .00156 | .17000 | 23.25 | | U | U |
| 12/25/1993 | Zinc | 6 | TS | 1444.0 | .01358 | .00000 | 23.25 | | B | |
| 12/25/1993 | Aluminum | 7 | TS | 1452.7 | .49288 | 33.30000 | 159.35 | | | |
| 12/25/1993 | Arsenic | 7 | TS | 1452.7 | .00062 | .00057 | 159.35 | | | |
| 12/25/1993 | Barium | 7 | TS | 1452.7 | .00647 | .52000 | 159.35 | | | |
| 12/25/1993 | Beryllium | 7 | TS | 1452.7 | .00016 | .00100 | 159.35 | | U | U |
| 12/25/1993 | Cadmium | 7 | TS | 1452.7 | .01083 | .00140 | 159.35 | | | |
| 12/25/1993 | Chromium | 7 | TS | 1452.7 | .01170 | .00020 | 159.35 | | | |
| 12/25/1993 | Manganese | 7 | TS | 1452.7 | .00502 | .42000 | 159.35 | | | |
| 12/25/1993 | Nickel | 7 | TS | 1452.7 | .00312 | .01000 | 159.35 | | U | U |
| 12/25/1993 | Particulate Fluoride | 7 | TS | 1452.7 | 3.73392 | 8.30000 | 159.35 | | | |
| 12/25/1993 | Phosphorus | 7 | TS | 1452.7 | 2.77555 | .30000 | 159.35 | | | |
| 12/25/1993 | Selenium | 7 | TS | 1452.7 | .03510 | .70000 | 159.35 | | B | U |
| 12/25/1993 | Silver | 7 | TS | 1452.7 | .00109 | .30000 | 159.35 | | U | U |
| 12/25/1993 | Thallium | 7 | TS | 1452.7 | .03118 | .30000 | 159.35 | | U | U |
| 12/25/1993 | Vanadium | 7 | TS | 1452.7 | .00605 | .17000 | 159.35 | | | |
| 12/25/1993 | Zinc | 7 | TS | 1452.7 | .02962 | .00000 | 159.35 | | B | |
| 12/27/1993 | Aluminum | 1 | TS | 1440.4 | .24632 | 33.30000 | 49.69 | | | |
| 12/27/1993 | Arsenic | 1 | TS | 1440.4 | .00064 | .00057 | 49.69 | | | |
| 12/27/1993 | Barium | 1 | TS | 1440.4 | .00783 | .52000 | 49.69 | | | |
| 12/27/1993 | Beryllium | 1 | TS | 1440.4 | .00017 | .00100 | 49.69 | | U | U |
| 12/27/1993 | Cadmium | 1 | TS | 1440.4 | .00491 | .00140 | 49.69 | | | U |
| 12/27/1993 | Chromium | 1 | TS | 1440.4 | .00717 | .00020 | 49.69 | | | |
| 12/27/1993 | Manganese | 1 | TS | 1440.4 | .00850 | .42000 | 49.69 | | | |
| 12/27/1993 | Nickel | 1 | TS | 1440.4 | .00499 | .01000 | 49.69 | | B | |
| 12/27/1993 | Particulate Fluoride | 1 | TS | 1440.4 | 3.04088 | 8.30000 | 49.69 | | B | U |
| 12/27/1993 | Phosphorus | 1 | TS | 1440.4 | 1.26814 | .30000 | 49.69 | | | |
| 12/27/1993 | Selenium | 1 | TS | 1440.4 | .01667 | .70000 | 49.69 | | U | U |
| 12/27/1993 | Silver | 1 | TS | 1440.4 | .00116 | .30000 | 49.69 | | U | U |
| 12/27/1993 | Thallium | 1 | TS | 1440.4 | .03326 | .30000 | 49.69 | | U | U |
| 12/27/1993 | Vanadium | 1 | TS | 1440.4 | .00823 | .17000 | 49.69 | | | |

| Sample Date | Chemical Name | Site # | Typ | Run Time (min.) | Chem Conc. (ug/m3) | EPA Scr. L(ug/m3) | Part.C. (ug/m3) | Grav. Val | Qual. Lab | Qual. Val |
|---|---|---|---|---|---|---|---|---|---|---|
| 12/23/1993 | Aluminum | 4 | TS | 1429.5 | .22057 | 33.30000 | 29.94 | | | |
| 12/23/1993 | Arsenic | 4 | TS | 1429.5 | .00021 | .00057 | 29.94 | | B | |
| 12/23/1993 | Barium | 4 | TS | 1429.5 | .00582 | .52000 | 29.94 | | | U |
| 12/23/1993 | Beryllium | 4 | TS | 1429.5 | .00017 | .00100 | 29.94 | | U | U |
| 12/23/1993 | Cadmium | 4 | TS | 1429.5 | .00196 | .00140 | 29.94 | | | |
| 12/23/1993 | Chromium | 4 | TS | 1429.5 | .00246 | .00020 | 29.94 | | | |
| 12/23/1993 | Manganese | 4 | TS | 1429.5 | .00760 | .42000 | 29.94 | | | |
| 12/23/1993 | Nickel | 4 | TS | 1429.5 | .00447 | .01000 | 29.94 | | B | |
| 12/23/1993 | Particulate Fluoride | 4 | TS | 1429.5 | 3.25479 | 8.30000 | 29.94 | | B | |
| 12/23/1993 | Phosphorus | 4 | TS | 1429.5 | .33557 | .30000 | 29.94 | | | U |
| 12/23/1993 | Selenium | 4 | TS | 1429.5 | .01688 | .70000 | 29.94 | | U | U |
| 12/23/1993 | Silver | 4 | TS | 1429.5 | .00118 | .30000 | 29.94 | | U | U |
| 12/23/1993 | Thallium | 4 | TS | 1429.5 | .03369 | .30000 | 29.94 | | U | U |
| 12/23/1993 | Vanadium | 4 | TS | 1429.5 | .00200 | .17000 | 29.94 | | B | |
| 12/23/1993 | Zinc | 4 | TS | 1429.5 | .01769 | .00000 | 29.94 | | B | |
| 12/23/1993 | Aluminum | 5 | TS | 1437.8 | .08008 | 33.30000 | 16.34 | | | U |
| 12/23/1993 | Arsenic | 5 | TS | 1437.8 | .00016 | .00057 | 16.34 | | U | |
| 12/23/1993 | Barium | 5 | TS | 1437.8 | .00239 | .52000 | 16.34 | | | U |
| 12/23/1993 | Beryllium | 5 | TS | 1437.8 | .00016 | .00100 | 16.34 | | U | U |
| 12/23/1993 | Cadmium | 5 | TS | 1437.8 | .00217 | .00140 | 16.34 | | | |
| 12/23/1993 | Chromium | 5 | TS | 1437.8 | .00121 | .00020 | 16.34 | | | U |
| 12/23/1993 | Manganese | 5 | TS | 1437.8 | .00229 | .42000 | 16.34 | | | |
| 12/23/1993 | Nickel | 5 | TS | 1437.8 | .00318 | .01000 | 16.34 | | U | U |
| 12/23/1993 | Particulate Fluoride | 5 | TS | 1437.8 | 1.44912 | 8.30000 | 16.34 | | B | |
| 12/23/1993 | Phosphorus | 5 | TS | 1437.8 | .37753 | .30000 | 16.34 | | | U |
| 12/23/1993 | Selenium | 5 | TS | 1437.8 | .02631 | .70000 | 16.34 | | B | |
| 12/23/1993 | Silver | 5 | TS | 1437.8 | .00111 | .30000 | 16.34 | | U | U |
| 12/23/1993 | Thallium | 5 | TS | 1437.8 | .03184 | .30000 | 16.34 | | U | U |
| 12/23/1993 | Vanadium | 5 | TS | 1437.8 | .00160 | .17000 | 16.34 | | U | U |
| 12/23/1993 | Zinc | 5 | TS | 1437.8 | .00699 | .00000 | 16.34 | | B | |
| 12/23/1993 | Aluminum | 6 | TS | 1438.7 | .07096 | 33.30000 | 10.97 | | | U |
| 12/23/1993 | Arsenic | 6 | TS | 1438.7 | .00016 | .00057 | 10.97 | | U | U |
| 12/23/1993 | Barium | 6 | TS | 1438.7 | .00381 | .52000 | 10.97 | | | U |
| 12/23/1993 | Beryllium | 6 | TS | 1438.7 | .00016 | .00100 | 10.97 | | U | U |
| 12/23/1993 | Cadmium | 6 | TS | 1438.7 | .00127 | .00140 | 10.97 | | U | U |
| 12/23/1993 | Chromium | 6 | TS | 1438.7 | .00077 | .00020 | 10.97 | | | U |
| 12/23/1993 | Manganese | 6 | TS | 1438.7 | .00260 | .42000 | 10.97 | | | |
| 12/23/1993 | Nickel | 6 | TS | 1438.7 | .00317 | .01000 | 10.97 | | U | U |
| 12/23/1993 | Particulate Fluoride | 6 | TS | 1438.7 | 1.26723 | 8.30000 | 10.97 | | U | U |
| 12/23/1993 | Phosphorus | 6 | TS | 1438.7 | .23000 | .30000 | 10.97 | | B | U |
| 12/23/1993 | Selenium | 6 | TS | 1438.7 | .01590 | .70000 | 10.97 | | U | U |
| 12/23/1993 | Silver | 6 | TS | 1438.7 | .00111 | .30000 | 10.97 | | U | U |
| 12/23/1993 | Thallium | 6 | TS | 1438.7 | .03174 | .30000 | 10.97 | | U | U |
| 12/23/1993 | Vanadium | 6 | TS | 1438.7 | .00159 | .17000 | 10.97 | | U | U |
| 12/23/1993 | Zinc | 6 | TS | 1438.7 | .00514 | .00000 | 10.97 | | B | |
| 12/23/1993 | Aluminum | 7 | TS | 1449.1 | .15615 | 33.30000 | 22.90 | | | |
| 12/23/1993 | Arsenic | 7 | TS | 1449.1 | .00016 | .00057 | 22.90 | | U | U |
| 12/23/1993 | Barium | 7 | TS | 1449.1 | .00405 | .52000 | 22.90 | | | U |
| 12/23/1993 | Beryllium | 7 | TS | 1449.1 | .00016 | .00100 | 22.90 | | U | U |

| Sample Date | Chemical Name | Site # | Typ | Run Time (min.) | Chem Conc. (ug/m3) | EPA Scr. L(ug/m3) | Part.C. (ug/m3) | Grav. Val | Qual. Lab | Qual. Val |
|---|---|---|---|---|---|---|---|---|---|---|
| 12/19/1993 | Silver | 8 | TS | 1440.0 | .00092 | .30000 | 44.30 | | U | U |
| 12/19/1993 | Thallium | 8 | TS | 1440.0 | .02640 | .30000 | 44.30 | | U | U |
| 12/19/1993 | Vanadium | 8 | TS | 1440.0 | .00473 | .17000 | 44.30 | | | |
| 12/19/1993 | Zinc | 8 | TS | 1440.0 | .02098 | .00000 | 44.30 | | B | |
| 12/23/1993 | Aluminum | 1 | TS | 1460.2 | .33624 | 33.30000 | 38.52 | | | |
| 12/23/1993 | Arsenic | 1 | TS | 1460.2 | .00016 | .00057 | 38.52 | | U | U |
| 12/23/1993 | Barium | 1 | TS | 1460.2 | .01014 | .52000 | 38.52 | | | U |
| 12/23/1993 | Beryllium | 1 | TS | 1460.2 | .00016 | .00100 | 38.52 | | U | U |
| 12/23/1993 | Cadmium | 1 | TS | 1460.2 | .00238 | .00140 | 38.52 | | | |
| 12/23/1993 | Chromium | 1 | TS | 1460.2 | .00566 | .00020 | 38.52 | | | |
| 12/23/1993 | Manganese | 1 | TS | 1460.2 | .00783 | .42000 | 38.52 | | | |
| 12/23/1993 | Nickel | 1 | TS | 1460.2 | .00515 | .01000 | 38.52 | | B | |
| 12/23/1993 | Particulate Fluoride | 1 | TS | 1460.2 | 6.32688 | 8.30000 | 38.52 | | | |
| 12/23/1993 | Phosphorus | 1 | TS | 1460.2 | .76359 | .30000 | 38.52 | | | |
| 12/23/1993 | Selenium | 1 | TS | 1460.2 | .01611 | .70000 | 38.52 | | U | U |
| 12/23/1993 | Silver | 1 | TS | 1460.2 | .00112 | .30000 | 38.52 | | U | U |
| 12/23/1993 | Thallium | 1 | TS | 1460.2 | .03215 | .30000 | 38.52 | | U | U |
| 12/23/1993 | Vanadium | 1 | TS | 1460.2 | .00638 | .17000 | 38.52 | | | |
| 12/23/1993 | Zinc | 1 | TS | 1460.2 | .02817 | .00000 | 38.52 | | B | |
| 12/23/1993 | Aluminum | 2 | TS | 1438.7 | .83004 | 33.30000 | 81.34 | | | |
| 12/23/1993 | Arsenic | 2 | TS | 1438.7 | .00086 | .00057 | 81.34 | | | |
| 12/23/1993 | Barium | 2 | TS | 1438.7 | .01685 | .52000 | 81.34 | | | |
| 12/23/1993 | Beryllium | 2 | TS | 1438.7 | .00022 | .00100 | 81.34 | | B | |
| 12/23/1993 | Cadmium | 2 | TS | 1438.7 | .01432 | .00140 | 81.34 | | | |
| 12/23/1993 | Chromium | 2 | TS | 1438.7 | .02446 | .00020 | 81.34 | | | |
| 12/23/1993 | Manganese | 2 | TS | 1438.7 | .01856 | .42000 | 81.34 | | | |
| 12/23/1993 | Nickel | 2 | TS | 1438.7 | .00627 | .01000 | 81.34 | | B | |
| 12/23/1993 | Particulate Fluoride | 2 | TS | 1438.7 | 4.65074 | 8.30000 | 81.34 | | | |
| 12/23/1993 | Phosphorus | 2 | TS | 1438.7 | 4.17552 | .30000 | 81.34 | | | |
| 12/23/1993 | Selenium | 2 | TS | 1438.7 | .01590 | .70000 | 81.34 | | U | U |
| 12/23/1993 | Silver | 2 | TS | 1438.7 | .00111 | .30000 | 81.34 | | U | U |
| 12/23/1993 | Thallium | 2 | TS | 1438.7 | .03174 | .30000 | 81.34 | | U | U |
| 12/23/1993 | Vanadium | 2 | TS | 1438.7 | .03605 | .17000 | 81.34 | | | |
| 12/23/1993 | Zinc | 2 | TS | 1438.7 | .06526 | .00000 | 81.34 | | B | |
| 12/23/1993 | Aluminum | 3 | TS | 1444.7 | .18536 | 33.30000 | 22.12 | | | |
| 12/23/1993 | Arsenic | 3 | TS | 1444.7 | .00020 | .00057 | 22.12 | | B | |
| 12/23/1993 | Barium | 3 | TS | 1444.7 | .00494 | .52000 | 22.12 | | | U |
| 12/23/1993 | Beryllium | 3 | TS | 1444.7 | .00015 | .00100 | 22.12 | | U | U |
| 12/23/1993 | Cadmium | 3 | TS | 1444.7 | .00123 | .00140 | 22.12 | | B | |
| 12/23/1993 | Chromium | 3 | TS | 1444.7 | .00147 | .00020 | 22.12 | | | U |
| 12/23/1993 | Manganese | 3 | TS | 1444.7 | .00702 | .42000 | 22.12 | | | |
| 12/23/1993 | Nickel | 3 | TS | 1444.7 | .00402 | .01000 | 22.12 | | B | |
| 12/23/1993 | Particulate Fluoride | 3 | TS | 1444.7 | 1.69965 | 8.30000 | 22.12 | | B | |
| 12/23/1993 | Phosphorus | 3 | TS | 1444.7 | .29498 | .30000 | 22.12 | | B | U |
| 12/23/1993 | Selenium | 3 | TS | 1444.7 | .01546 | .70000 | 22.12 | | U | U |
| 12/23/1993 | Silver | 3 | TS | 1444.7 | .00108 | .30000 | 22.12 | | U | U |
| 12/23/1993 | Thallium | 3 | TS | 1444.7 | .03085 | .30000 | 22.12 | | U | U |
| 12/23/1993 | Vanadium | 3 | TS | 1444.7 | .00155 | .17000 | 22.12 | | U | U |
| 12/23/1993 | Zinc | 3 | TS | 1444.7 | .01490 | .00000 | 22.12 | | B | |

| Sample Date | Chemical Name | Site # | Typ | Run Time (min.) | Chem Conc. (ug/m3) | EPA Scr. L(ug/m3) | Part.C. (ug/m3) | Grav. Val | Qual. Lab | Qual. Val |
|---|---|---|---|---|---|---|---|---|---|---|
| 12/25/1993 | Particulate Fluoride | 2 | TS | 1434.3 | 1.25438 | 8.30000 | 42.24 | | U | U |
| 12/25/1993 | Phosphorus | 2 | TS | 1434.3 | .68991 | .30000 | 42.24 | | | U |
| 12/25/1993 | Selenium | 2 | TS | 1434.3 | .01574 | .70000 | 42.24 | | U | U |
| 12/25/1993 | Silver | 2 | TS | 1434.3 | .00110 | .30000 | 42.24 | | U | U |
| 12/25/1993 | Thallium | 2 | TS | 1434.3 | .03142 | .30000 | 42.24 | | U | U |
| 12/25/1993 | Vanadium | 2 | TS | 1434.3 | .00677 | .17000 | 42.24 | | | |
| 12/25/1993 | Zinc | 2 | TS | 1434.3 | .02640 | .00000 | 42.24 | | B | |
| 12/25/1993 | Aluminum | 3 | TS | 1450.1 | .17739 | 33.30000 | 53.01 | | | |
| 12/25/1993 | Arsenic | 3 | TS | 1450.1 | .00024 | .00057 | 53.01 | | B | |
| 12/25/1993 | Barium | 3 | TS | 1450.1 | .00509 | .52000 | 53.01 | | | |
| 12/25/1993 | Beryllium | 3 | TS | 1450.1 | .00015 | .00100 | 53.01 | | U | U |
| 12/25/1993 | Cadmium | 3 | TS | 1450.1 | .00219 | .00140 | 53.01 | | | U |
| 12/25/1993 | Chromium | 3 | TS | 1450.1 | .00206 | .00020 | 53.01 | | | |
| 12/25/1993 | Manganese | 3 | TS | 1450.1 | .00733 | .42000 | 53.01 | | | |
| 12/25/1993 | Nickel | 3 | TS | 1450.1 | .00303 | .01000 | 53.01 | | U | U |
| 12/25/1993 | Particulate Fluoride | 3 | TS | 1450.1 | 1.21088 | 8.30000 | 53.01 | | U | U |
| 12/25/1993 | Phosphorus | 3 | TS | 1450.1 | .41594 | .30000 | 53.01 | | | U |
| 12/25/1993 | Selenium | 3 | TS | 1450.1 | .01520 | .70000 | 53.01 | | U | U |
| 12/25/1993 | Silver | 3 | TS | 1450.1 | .00106 | .30000 | 53.01 | | U | U |
| 12/25/1993 | Thallium | 3 | TS | 1450.1 | .03033 | .30000 | 53.01 | | U | U |
| 12/25/1993 | Vanadium | 3 | TS | 1450.1 | .00152 | .17000 | 53.01 | | U | U |
| 12/25/1993 | Zinc | 3 | TS | 1450.1 | .02046 | .00000 | 53.01 | | B | |
| 12/25/1993 | Aluminum | 4 | TS | 1430.3 | .34887 | 33.30000 | 56.74 | | | |
| 12/25/1993 | Arsenic | 4 | TS | 1430.3 | .00036 | .00057 | 56.74 | | B | |
| 12/25/1993 | Barium | 4 | TS | 1430.3 | .00789 | .52000 | 56.74 | | | |
| 12/25/1993 | Beryllium | 4 | TS | 1430.3 | .00017 | .00100 | 56.74 | | U | U |
| 12/25/1993 | Cadmium | 4 | TS | 1430.3 | .00213 | .00140 | 56.74 | | | |
| 12/25/1993 | Chromium | 4 | TS | 1430.3 | .00535 | .00020 | 56.74 | | | |
| 12/25/1993 | Manganese | 4 | TS | 1430.3 | .00915 | .42000 | 56.74 | | | |
| 12/25/1993 | Nickel | 4 | TS | 1430.3 | .00332 | .01000 | 56.74 | | U | U |
| 12/25/1993 | Particulate Fluoride | 4 | TS | 1430.3 | 1.37957 | 8.30000 | 56.74 | | B | |
| 12/25/1993 | Phosphorus | 4 | TS | 1430.3 | .70305 | .30000 | 56.74 | | | U |
| 12/25/1993 | Selenium | 4 | TS | 1430.3 | .02660 | .70000 | 56.74 | | B | U |
| 12/25/1993 | Silver | 4 | TS | 1430.3 | .00116 | .30000 | 56.74 | | U | U |
| 12/25/1993 | Thallium | 4 | TS | 1430.3 | .03323 | .30000 | 56.74 | | U | U |
| 12/25/1993 | Vanadium | 4 | TS | 1430.3 | .00414 | .17000 | 56.74 | | B | |
| 12/25/1993 | Zinc | 4 | TS | 1430.3 | .02560 | .00000 | 56.74 | | B | |
| 12/25/1993 | Aluminum | 5 | TS | 1437.5 | .64616 | 33.30000 | 106.77 | | | |
| 12/25/1993 | Arsenic | 5 | TS | 1437.5 | .00061 | .00057 | 106.77 | | | |
| 12/25/1993 | Barium | 5 | TS | 1437.5 | .00778 | .52000 | 106.77 | | | |
| 12/25/1993 | Beryllium | 5 | TS | 1437.5 | .00016 | .00100 | 106.77 | | U | U |
| 12/25/1993 | Cadmium | 5 | TS | 1437.5 | .01499 | .00140 | 106.77 | | | |
| 12/25/1993 | Chromium | 5 | TS | 1437.5 | .01619 | .00020 | 106.77 | | | |
| 12/25/1993 | Manganese | 5 | TS | 1437.5 | .00816 | .42000 | 106.77 | | | |
| 12/25/1993 | Nickel | 5 | TS | 1437.5 | .00464 | .01000 | 106.77 | | B | |
| 12/25/1993 | Particulate Fluoride | 5 | TS | 1437.5 | 1.90085 | 8.30000 | 106.77 | | B | |
| 12/25/1993 | Phosphorus | 5 | TS | 1437.5 | 2.98615 | .30000 | 106.77 | | | |

| Sample Date | Chemical Name | Site # | Typ | Run Time (min.) | Chem Conc. (ug/m3) | EPA Scr. L(ug/m3) | Part.C. (ug/m3) | Grav. Val | Qual. Lab | Qual. Val |
|---|---|---|---|---|---|---|---|---|---|---|
| 12/23/1993 | Cadmium | 7 | TS | 1449.1 | .00199 | .00140 | 22.90 | | | |
| 12/23/1993 | Chromium | 7 | TS | 1449.1 | .00276 | .00020 | 22.90 | | | |
| 12/23/1993 | Manganese | 7 | TS | 1449.1 | .00303 | .42000 | 22.90 | | | |
| 12/23/1993 | Nickel | 7 | TS | 1449.1 | .00317 | .01000 | 22.90 | | U | U |
| 12/23/1993 | Particulate Fluoride | 7 | TS | 1449.1 | 3.60976 | 8.30000 | 22.90 | | | |
| 12/23/1993 | Phosphorus | 7 | TS | 1449.1 | .50764 | .30000 | 22.90 | | | U |
| 12/23/1993 | Selenium | 7 | TS | 1449.1 | .01669 | .70000 | 22.90 | | B | |
| 12/23/1993 | Silver | 7 | TS | 1449.1 | .00111 | .30000 | 22.90 | | U | U |
| 12/23/1993 | Thallium | 7 | TS | 1449.1 | .03174 | .30000 | 22.90 | | U | U |
| 12/23/1993 | Vanadium | 7 | TS | 1449.1 | .00306 | .17000 | 22.90 | | B | |
| 12/23/1993 | Zinc | 7 | TS | 1449.1 | .00986 | .00000 | 22.90 | | B | |
| 12/23/1993 | Aluminum | 8 | TS | 1389.7 | .42054 | 33.30000 | 50.64 | | | |
| 12/23/1993 | Arsenic | 8 | TS | 1389.7 | .00017 | .00057 | 50.64 | | U | U |
| 12/23/1993 | Barium | 8 | TS | 1389.7 | .01121 | .52000 | 50.64 | | | U |
| 12/23/1993 | Beryllium | 8 | TS | 1389.7 | .00017 | .00100 | 50.64 | | B | |
| 12/23/1993 | Cadmium | 8 | TS | 1389.7 | .00313 | .00140 | 50.64 | | | |
| 12/23/1993 | Chromium | 8 | TS | 1389.7 | .00768 | .00020 | 50.64 | | | |
| 12/23/1993 | Manganese | 8 | TS | 1389.7 | .00978 | .42000 | 50.64 | | | |
| 12/23/1993 | Nickel | 8 | TS | 1389.7 | .00460 | .01000 | 50.64 | | B | |
| 12/23/1993 | Particulate Fluoride | 8 | TS | 1389.7 | 4.92553 | 8.30000 | 50.64 | | | |
| 12/23/1993 | Phosphorus | 8 | TS | 1389.7 | .73373 | .30000 | 50.64 | | | |
| 12/23/1993 | Selenium | 8 | TS | 1389.7 | .01875 | .70000 | 50.64 | | B | |
| 12/23/1993 | Silver | 8 | TS | 1389.7 | .00119 | .30000 | 50.64 | | U | U |
| 12/23/1993 | Thallium | 8 | TS | 1389.7 | .03404 | .30000 | 50.64 | | U | U |
| 12/23/1993 | Vanadium | 8 | TS | 1389.7 | .00671 | .17000 | 50.64 | | | |
| 12/23/1993 | Zinc | 8 | TS | 1389.7 | .02996 | .00000 | 50.64 | | B | |
| 12/25/1993 | Aluminum | 1 | TS | 1447.3 | .16163 | 33.30000 | 33.31 | | | |
| 12/25/1993 | Arsenic | 1 | TS | 1447.3 | .00016 | .00057 | 33.31 | | U | U |
| 12/25/1993 | Barium | 1 | TS | 1447.3 | .00537 | .52000 | 33.31 | | | |
| 12/25/1993 | Beryllium | 1 | TS | 1447.3 | .00016 | .00100 | 33.31 | | U | U |
| 12/25/1993 | Cadmium | 1 | TS | 1447.3 | .00211 | .00140 | 33.31 | | | U |
| 12/25/1993 | Chromium | 1 | TS | 1447.3 | .00307 | .00020 | 33.31 | | | |
| 12/25/1993 | Manganese | 1 | TS | 1447.3 | .00525 | .42000 | 33.31 | | | |
| 12/25/1993 | Nickel | 1 | TS | 1447.3 | .00320 | .01000 | 33.31 | | U | U |
| 12/25/1993 | Particulate Fluoride | 1 | TS | 1447.3 | 1.37357 | 8.30000 | 33.31 | | B | |
| 12/25/1993 | Phosphorus | 1 | TS | 1447.3 | .35841 | .30000 | 33.31 | | | U |
| 12/25/1993 | Selenium | 1 | TS | 1447.3 | .01604 | .70000 | 33.31 | | U | U |
| 12/25/1993 | Silver | 1 | TS | 1447.3 | .00112 | .30000 | 33.31 | | U | U |
| 12/25/1993 | Thallium | 1 | TS | 1447.3 | .03201 | .30000 | 33.31 | | U | U |
| 12/25/1993 | Vanadium | 1 | TS | 1447.3 | .00195 | .17000 | 33.31 | | B | |
| 12/25/1993 | Zinc | 1 | TS | 1447.3 | .01712 | .00000 | 33.31 | | B | |
| 12/25/1993 | Aluminum | 2 | TS | 1434.3 | .30481 | 33.30000 | 42.24 | | | |
| 12/25/1993 | Arsenic | 2 | TS | 1434.3 | .00025 | .00057 | 42.24 | | B | |
| 12/25/1993 | Barium | 2 | TS | 1434.3 | .00613 | .52000 | 42.24 | | | |
| 12/25/1993 | Beryllium | 2 | TS | 1434.3 | .00016 | .00100 | 42.24 | | U | U |
| 12/25/1993 | Cadmium | 2 | TS | 1434.3 | .00242 | .00140 | 42.24 | | | U |
| 12/25/1993 | Chromium | 2 | TS | 1434.3 | .00753 | .00020 | 42.24 | | | |
| 12/25/1993 | Manganese | 2 | TS | 1434.3 | .00809 | .42000 | 42.24 | | | |
| 12/25/1993 | Nickel | 2 | TS | 1434.3 | .00314 | .01000 | 42.24 | | U | U |

| Sample Date | Chemical Name | Site # | Typ | Run Time (min.) | Chem Conc. (ug/m3) | EPA Scr. L(ug/m3) | Part.C. (ug/m3) | Grav. Val | Qual. Lab | Qual. Val |
|---|---|---|---|---|---|---|---|---|---|---|
| 12/27/1993 | Zinc | 1 | TS | 1440.4 | .03147 | .00000 | 49.69 | | B | |
| 12/27/1993 | Aluminum | 2 | TS | 1435.0 | .52001 | 33.30000 | 68.77 | | | |
| 12/27/1993 | Arsenic | 2 | TS | 1435.0 | .00123 | .00057 | 68.77 | | | |
| 12/27/1993 | Barium | 2 | TS | 1435.0 | .01200 | .52000 | 68.77 | | | |
| 12/27/1993 | Beryllium | 2 | TS | 1435.0 | .00020 | .00100 | 68.77 | | B | |
| 12/27/1993 | Cadmium | 2 | TS | 1435.0 | .01128 | .00140 | 68.77 | | | |
| 12/27/1993 | Chromium | 2 | TS | 1435.0 | .02146 | .00020 | 68.77 | | | |
| 12/27/1993 | Manganese | 2 | TS | 1435.0 | .01349 | .42000 | 68.77 | | | |
| 12/27/1993 | Nickel | 2 | TS | 1435.0 | .00772 | .01000 | 68.77 | | B | |
| 12/27/1993 | Particulate Fluoride | 2 | TS | 1435.0 | 2.67785 | 8.30000 | 68.77 | | B | U |
| 12/27/1993 | Phosphorus | 2 | TS | 1435.0 | 3.42999 | .30000 | 68.77 | | | |
| 12/27/1993 | Selenium | 2 | TS | 1435.0 | .01627 | .70000 | 68.77 | | U | U |
| 12/27/1993 | Silver | 2 | TS | 1435.0 | .00113 | .30000 | 68.77 | | U | U |
| 12/27/1993 | Thallium | 2 | TS | 1435.0 | .03248 | .30000 | 68.77 | | U | U |
| 12/27/1993 | Vanadium | 2 | TS | 1435.0 | .02749 | .17000 | 68.77 | | | |
| 12/27/1993 | Zinc | 2 | TS | 1435.0 | .06173 | .00000 | 68.77 | | B | |
| 12/27/1993 | Aluminum | 3 | TS | 1447.3 | .14180 | 33.30000 | 36.29 | | | |
| 12/27/1993 | Arsenic | 3 | TS | 1447.3 | .00092 | .00057 | 36.29 | | | |
| 12/27/1993 | Barium | 3 | TS | 1447.3 | .00511 | .52000 | 36.29 | | | U |
| 12/27/1993 | Beryllium | 3 | TS | 1447.3 | .00016 | .00100 | 36.29 | | U | U |
| 12/27/1993 | Cadmium | 3 | TS | 1447.3 | .00317 | .00140 | 36.29 | | | U |
| 12/27/1993 | Chromium | 3 | TS | 1447.3 | .00357 | .00020 | 36.29 | | | |
| 12/27/1993 | Manganese | 3 | TS | 1447.3 | .00960 | .42000 | 36.29 | | | |
| 12/27/1993 | Nickel | 3 | TS | 1447.3 | .00338 | .01000 | 36.29 | | B | |
| 12/27/1993 | Particulate Fluoride | 3 | TS | 1447.3 | 1.25485 | 8.30000 | 36.29 | | U | U |
| 12/27/1993 | Phosphorus | 3 | TS | 1447.3 | .85957 | .30000 | 36.29 | | | |
| 12/27/1993 | Selenium | 3 | TS | 1447.3 | .01575 | .70000 | 36.29 | | U | U |
| 12/27/1993 | Silver | 3 | TS | 1447.3 | .00110 | .30000 | 36.29 | | U | U |
| 12/27/1993 | Thallium | 3 | TS | 1447.3 | .03143 | .30000 | 36.29 | | U | U |
| 12/27/1993 | Vanadium | 3 | TS | 1447.3 | .00352 | .17000 | 36.29 | | B | |
| 12/27/1993 | Zinc | 3 | TS | 1447.3 | .02183 | .00000 | 36.29 | | B | |
| 12/27/1993 | Aluminum | 4 | TS | 1426.8 | .22212 | 33.30000 | 45.69 | | | |
| 12/27/1993 | Arsenic | 4 | TS | 1426.8 | .00094 | .00057 | 45.69 | | | |
| 12/27/1993 | Barium | 4 | TS | 1426.8 | .00646 | .52000 | 45.69 | | | U |
| 12/27/1993 | Beryllium | 4 | TS | 1426.8 | .00017 | .00100 | 45.69 | | U | U |
| 12/27/1993 | Cadmium | 4 | TS | 1426.8 | .00472 | .00140 | 45.69 | | | U |
| 12/27/1993 | Chromium | 4 | TS | 1426.8 | .00413 | .00020 | 45.69 | | | |
| 12/27/1993 | Manganese | 4 | TS | 1426.8 | .01073 | .42000 | 45.69 | | | |
| 12/27/1993 | Nickel | 4 | TS | 1426.8 | .00466 | .01000 | 45.69 | | B | |
| 12/27/1993 | Particulate Fluoride | 4 | TS | 1426.8 | 1.63670 | 8.30000 | 45.69 | | B | U |
| 12/27/1993 | Phosphorus | 4 | TS | 1426.8 | 1.05216 | .30000 | 45.69 | | | |
| 12/27/1993 | Selenium | 4 | TS | 1426.8 | .01726 | .70000 | 45.69 | | U | U |
| 12/27/1993 | Silver | 4 | TS | 1426.8 | .00120 | .30000 | 45.69 | | U | U |
| 12/27/1993 | Thallium | 4 | TS | 1426.8 | .03445 | .30000 | 45.69 | | U | U |
| 12/27/1993 | Vanadium | 4 | TS | 1426.8 | .00589 | .17000 | 45.69 | | | |
| 12/27/1993 | Zinc | 4 | TS | 1426.8 | .03328 | .00000 | 45.69 | | B | |
| 12/27/1993 | Aluminum | 5 | TS | 1434.3 | .11120 | 33.30000 | 19.91 | | | |
| 12/27/1993 | Arsenic | 5 | TS | 1434.3 | .00081 | .00057 | 19.91 | | | |
| 12/27/1993 | Barium | 5 | TS | 1434.3 | .00326 | .52000 | 19.91 | | | |

| Sample Date | Chemical Name | Site # | Typ | Run Time (min.) | Chem Conc. (ug/m3) | EPA Scr. L(ug/m3) | Part.C. Grav. (ug/m3) | Qual. Val | Lab Val |
|---|---|---|---|---|---|---|---|---|---|
| 12/27/1993 | Beryllium | 5 | TS | 1434.3 | .00016 | .00100 | 19.91 | U | U |
| 12/27/1993 | Cadmium | 5 | TS | 1434.3 | .00380 | .00140 | 19.91 | | U |
| 12/27/1993 | Chromium | 5 | TS | 1434.3 | .00266 | .00020 | 19.91 | | |
| 12/27/1993 | Manganese | 5 | TS | 1434.3 | .00276 | .42000 | 19.91 | | |
| 12/27/1993 | Nickel | 5 | TS | 1434.3 | .00326 | .01000 | 19.91 | U | U |
| 12/27/1993 | Particulate Fluoride | 5 | TS | 1434.3 | 1.68430 | 8.30000 | 19.91 | B | |
| 12/27/1993 | Phosphorus | 5 | TS | 1434.3 | .76086 | .30000 | 19.91 | | U |
| 12/27/1993 | Selenium | 5 | TS | 1434.3 | .01632 | .70000 | 19.91 | U | U |
| 12/27/1993 | Silver | 5 | TS | 1434.3 | .00114 | .30000 | 19.91 | U | U |
| 12/27/1993 | Thallium | 5 | TS | 1434.3 | .03258 | .30000 | 19.91 | U | U |
| 12/27/1993 | Vanadium | 5 | TS | 1434.3 | .00332 | .17000 | 19.91 | B | |
| 12/27/1993 | Zinc | 5 | TS | 1434.3 | .01561 | .00000 | 19.91 | B | |
| 12/27/1993 | Aluminum | 6 | TS | 1436.6 | .08679 | 33.30000 | 19.38 | | |
| 12/27/1993 | Arsenic | 6 | TS | 1436.6 | .00077 | .00057 | 19.38 | | |
| 12/27/1993 | Barium | 6 | TS | 1436.6 | .00324 | .52000 | 19.38 | | |
| 12/27/1993 | Beryllium | 6 | TS | 1436.6 | .00016 | .00100 | 19.38 | U | U |
| 12/27/1993 | Cadmium | 6 | TS | 1436.6 | .00130 | .00140 | 19.38 | B | |
| 12/27/1993 | Chromium | 6 | TS | 1436.6 | .00102 | .00020 | 19.38 | | U |
| 12/27/1993 | Manganese | 6 | TS | 1436.6 | .00406 | .42000 | 19.38 | | |
| 12/27/1993 | Nickel | 6 | TS | 1436.6 | .00324 | .01000 | 19.38 | U | U |
| 12/27/1993 | Particulate Fluoride | 6 | TS | 1436.6 | 1.91062 | 8.30000 | 19.38 | B | |
| 12/27/1993 | Phosphorus | 6 | TS | 1436.6 | .89378 | .30000 | 19.38 | | |
| 12/27/1993 | Selenium | 6 | TS | 1436.6 | .01626 | .70000 | 19.38 | U | U |
| 12/27/1993 | Silver | 6 | TS | 1436.6 | .00140 | .30000 | 19.38 | B | UJ |
| 12/27/1993 | Thallium | 6 | TS | 1436.6 | .03245 | .30000 | 19.38 | U | U |
| 12/27/1993 | Vanadium | 6 | TS | 1436.6 | .00163 | .17000 | 19.38 | U | U |
| 12/27/1993 | Zinc | 6 | TS | 1436.6 | .01541 | .00000 | 19.38 | B | |
| 12/27/1993 | Aluminum | 7 | TS | 1455.5 | .18373 | 33.30000 | 38.70 | | |
| 12/27/1993 | Arsenic | 7 | TS | 1455.5 | .00110 | .00057 | 38.70 | | |
| 12/27/1993 | Barium | 7 | TS | 1455.5 | .00354 | .52000 | 38.70 | | |
| 12/27/1993 | Beryllium | 7 | TS | 1455.5 | .00016 | .00100 | 38.70 | U | U |
| 12/27/1993 | Cadmium | 7 | TS | 1455.5 | .00512 | .00140 | 38.70 | | |
| 12/27/1993 | Chromium | 7 | TS | 1455.5 | .00400 | .00020 | 38.70 | | |
| 12/27/1993 | Manganese | 7 | TS | 1455.5 | .00433 | .42000 | 38.70 | | |
| 12/27/1993 | Nickel | 7 | TS | 1455.5 | .00322 | .01000 | 38.70 | U | U |
| 12/27/1993 | Particulate Fluoride | 7 | TS | 1455.5 | 1.88230 | 8.30000 | 38.70 | B | |
| 12/27/1993 | Phosphorus | 7 | TS | 1455.5 | 1.67672 | .30000 | 38.70 | | |
| 12/27/1993 | Selenium | 7 | TS | 1455.5 | .01612 | .70000 | 38.70 | U | U |
| 12/27/1993 | Silver | 7 | TS | 1455.5 | .00163 | .30000 | 38.70 | B | UJ |
| 12/27/1993 | Thallium | 7 | TS | 1455.5 | .03219 | .30000 | 38.70 | U | U |
| 12/27/1993 | Vanadium | 7 | TS | 1455.5 | .00546 | .17000 | 38.70 | | |
| 12/27/1993 | Zinc | 7 | TS | 1455.5 | .02126 | .00000 | 38.70 | B | |
| 12/27/1993 | Aluminum | 8 | TS | 1450.7 | .25110 | 33.30000 | 50.58 | | |
| 12/27/1993 | Arsenic | 8 | TS | 1450.7 | .00088 | .00057 | 50.58 | | |
| 12/27/1993 | Barium | 8 | TS | 1450.7 | .00751 | .52000 | 50.58 | | |
| 12/27/1993 | Beryllium | 8 | TS | 1450.7 | .00017 | .00100 | 50.58 | U | U |
| 12/27/1993 | Cadmium | 8 | TS | 1450.7 | .00430 | .00140 | 50.58 | | |
| 12/27/1993 | Chromium | 8 | TS | 1450.7 | .01030 | .00020 | 50.58 | | |
| 12/27/1993 | Manganese | 8 | TS | 1450.7 | .00897 | .42000 | 50.58 | | |

| Sample Date | Chemical Name | Site # | Typ | Run Time (min.) | Chem Conc. (ug/m3) | EPA Scr. L(ug/m3) | Part.C. (ug/m3) | Grav. Val | Qual. Lab | Qual. Val |
|---|---|---|---|---|---|---|---|---|---|---|
| 12/27/1993 | Nickel | 8 | TS | 1450.7 | .00466 | .01000 | 50.58 | | B | U |
| 12/27/1993 | Particulate Fluoride | 8 | TS | 1450.7 | 3.00919 | 8.30000 | 50.58 | | B | |
| 12/27/1993 | Phosphorus | 8 | TS | 1450.7 | 1.22227 | .30000 | 50.58 | | | |
| 12/27/1993 | Selenium | 8 | TS | 1450.7 | .01667 | .70000 | 50.58 | | U | U |
| 12/27/1993 | Silver | 8 | TS | 1450.7 | .00151 | .30000 | 50.58 | | B | UJ |
| 12/27/1993 | Thallium | 8 | TS | 1450.7 | .03328 | .30000 | 50.58 | | U | U |
| 12/27/1993 | Vanadium | 8 | TS | 1450.7 | .00844 | .17000 | 50.58 | | | |
| 12/27/1993 | Zinc | 8 | TS | 1450.7 | .03295 | .00000 | 50.58 | | B | |
| 12/31/1993 | Aluminum | 1 | TS | 1445.1 | .37724 | 33.30000 | 47.78 | | | |
| 12/31/1993 | Arsenic | 1 | TS | 1445.1 | .00071 | .00057 | 47.78 | | | |
| 12/31/1993 | Barium | 1 | TS | 1445.1 | .00570 | .52000 | 47.78 | | | |
| 12/31/1993 | Beryllium | 1 | TS | 1445.1 | .00017 | .00100 | 47.78 | | U | U |
| 12/31/1993 | Cadmium | 1 | TS | 1445.1 | .00446 | .00140 | 47.78 | | | |
| 12/31/1993 | Chromium | 1 | TS | 1445.1 | .00849 | .00020 | 47.78 | | | |
| 12/31/1993 | Manganese | 1 | TS | 1445.1 | .00667 | .42000 | 47.78 | | | |
| 12/31/1993 | Nickel | 1 | TS | 1445.1 | .00511 | .01000 | 47.78 | | B | |
| 12/31/1993 | Particulate Fluoride | 1 | TS | 1445.1 | 5.81910 | 8.30000 | 47.78 | | | |
| 12/31/1993 | Phosphorus | 1 | TS | 1445.1 | 1.84606 | .30000 | 47.78 | | | |
| 12/31/1993 | Selenium | 1 | TS | 1445.1 | .01679 | .70000 | 47.78 | | B | U |
| 12/31/1993 | Silver | 1 | TS | 1445.1 | .00165 | .30000 | 47.78 | | B | UJ |
| 12/31/1993 | Thallium | 1 | TS | 1445.1 | .03351 | .30000 | 47.78 | | U | U |
| 12/31/1993 | Vanadium | 1 | TS | 1445.1 | .00843 | .17000 | 47.78 | | | |
| 12/31/1993 | Zinc | 1 | TS | 1445.1 | .02696 | .00000 | 47.78 | | B | |
| 12/31/1993 | Aluminum | 2 | TS | 1435.1 | 1.69361 | 33.30000 | 198.07 | | | |
| 12/31/1993 | Arsenic | 2 | TS | 1435.1 | .00232 | .00057 | 198.07 | | | |
| 12/31/1993 | Barium | 2 | TS | 1435.1 | .02030 | .52000 | 198.07 | | | |
| 12/31/1993 | Beryllium | 2 | TS | 1435.1 | .00036 | .00100 | 198.07 | | B | |
| 12/31/1993 | Cadmium | 2 | TS | 1435.1 | .02873 | .00140 | 198.07 | | | |
| 12/31/1993 | Chromium | 2 | TS | 1435.1 | .06150 | .00020 | 198.07 | | | |
| 12/31/1993 | Manganese | 2 | TS | 1435.1 | .02318 | .42000 | 198.07 | | | |
| 12/31/1993 | Nickel | 2 | TS | 1435.1 | .01392 | .01000 | 198.07 | | | |
| 12/31/1993 | Particulate Fluoride | 2 | TS | 1435.1 | 4.66258 | 8.30000 | 198.07 | | | |
| 12/31/1993 | Phosphorus | 2 | TS | 1435.1 | 17.00471 | .30000 | 198.07 | | | |
| 12/31/1993 | Selenium | 2 | TS | 1435.1 | .04299 | .70000 | 198.07 | | B | U |
| 12/31/1993 | Silver | 2 | TS | 1435.1 | .00328 | .30000 | 198.07 | | B | UJ |
| 12/31/1993 | Thallium | 2 | TS | 1435.1 | .03435 | .30000 | 198.07 | | U | U |
| 12/31/1993 | Vanadium | 2 | TS | 1435.1 | .08091 | .17000 | 198.07 | | | |
| 12/31/1993 | Zinc | 2 | TS | 1435.1 | .18925 | .00000 | 198.07 | | | |
| 12/31/1993 | Aluminum | 3 | TS | 1446.2 | .25448 | 33.30000 | 32.58 | | | |
| 12/31/1993 | Arsenic | 3 | TS | 1446.2 | .00070 | .00057 | 32.58 | | | |
| 12/31/1993 | Barium | 3 | TS | 1446.2 | .00541 | .52000 | 32.58 | | | |
| 12/31/1993 | Beryllium | 3 | TS | 1446.2 | .00016 | .00100 | 32.58 | | U | U |
| 12/31/1993 | Cadmium | 3 | TS | 1446.2 | .00272 | .00140 | 32.58 | | | |
| 12/31/1993 | Chromium | 3 | TS | 1446.2 | .00850 | .00020 | 32.58 | | | |
| 12/31/1993 | Manganese | 3 | TS | 1446.2 | .00742 | .42000 | 32.58 | | | |
| 12/31/1993 | Nickel | 3 | TS | 1446.2 | .00421 | .01000 | 32.58 | | B | |
| 12/31/1993 | Particulate Fluoride | 3 | TS | 1446.2 | 1.53577 | 8.30000 | 32.58 | | B | |

| Sample Date | Chemical Name | Site # | Typ | Run Time (min.) | Chem Conc. (ug/m3) | EPA Scr. L(ug/m3) | Part.C. (ug/m3) | Grav. Val | Qual. Lab | Qual. Val |
|---|---|---|---|---|---|---|---|---|---|---|
| 12/31/1993 | Phosphorus | 3 | TS | 1446.2 | 2.16403 | .30000 | 32.58 | | | |
| 12/31/1993 | Selenium | 3 | TS | 1446.2 | .01593 | .70000 | 32.58 | | U | U |
| 12/31/1993 | Silver | 3 | TS | 1446.2 | .00134 | .30000 | 32.58 | | B | UJ |
| 12/31/1993 | Thallium | 3 | TS | 1446.2 | .03179 | .30000 | 32.58 | | U | U |
| 12/31/1993 | Vanadium | 3 | TS | 1446.2 | .00946 | .17000 | 32.58 | | | |
| 12/31/1993 | Zinc | 3 | TS | 1446.2 | .02101 | .00000 | 32.58 | | B | |
| 12/31/1993 | Aluminum | 4 | TS | 1429.5 | .15262 | 33.30000 | 18.39 | | | |
| 12/31/1993 | Arsenic | 4 | TS | 1429.5 | .00080 | .00057 | 18.39 | | | |
| 12/31/1993 | Barium | 4 | TS | 1429.5 | .00513 | .52000 | 18.39 | | | |
| 12/31/1993 | Beryllium | 4 | TS | 1429.5 | .00017 | .00100 | 18.39 | | U | U |
| 12/31/1993 | Cadmium | 4 | TS | 1429.5 | .00139 | .00140 | 18.39 | | U | U |
| 12/31/1993 | Chromium | 4 | TS | 1429.5 | .00226 | .00020 | 18.39 | | | |
| 12/31/1993 | Manganese | 4 | TS | 1429.5 | .00588 | .42000 | 18.39 | | | |
| 12/31/1993 | Nickel | 4 | TS | 1429.5 | .00348 | .01000 | 18.39 | | U | U |
| 12/31/1993 | Particulate Fluoride | 4 | TS | 1429.5 | 1.74125 | 8.30000 | 18.39 | | B | |
| 12/31/1993 | Phosphorus | 4 | TS | 1429.5 | .25737 | .30000 | 18.39 | | B | U |
| 12/31/1993 | Selenium | 4 | TS | 1429.5 | .01741 | .70000 | 18.39 | | U | U |
| 12/31/1993 | Silver | 4 | TS | 1429.5 | .00155 | .30000 | 18.39 | | B | UJ |
| 12/31/1993 | Thallium | 4 | TS | 1429.5 | .03476 | .30000 | 18.39 | | U | U |
| 12/31/1993 | Vanadium | 4 | TS | 1429.5 | .00174 | .17000 | 18.39 | | U | U |
| 12/31/1993 | Zinc | 4 | TS | 1429.5 | .01540 | .00000 | 18.39 | | B | |
| 12/31/1993 | Aluminum | 5 | TS | 1439.4 | .06907 | 33.30000 | 6.15 | | | |
| 12/31/1993 | Arsenic | 5 | TS | 1439.4 | .00037 | .00057 | 6.15 | | B | |
| 12/31/1993 | Barium | 5 | TS | 1439.4 | .00173 | .52000 | 6.15 | | B | |
| 12/31/1993 | Beryllium | 5 | TS | 1439.4 | .00017 | .00100 | 6.15 | | U | U |
| 12/31/1993 | Cadmium | 5 | TS | 1439.4 | .00138 | .00140 | 6.15 | | U | U |
| 12/31/1993 | Chromium | 5 | TS | 1439.4 | .00363 | .00020 | 6.15 | | | |
| 12/31/1993 | Manganese | 5 | TS | 1439.4 | .00236 | .42000 | 6.15 | | | |
| 12/31/1993 | Nickel | 5 | TS | 1439.4 | .00346 | .01000 | 6.15 | | U | U |
| 12/31/1993 | Particulate Fluoride | 5 | TS | 1439.4 | 1.80976 | 8.30000 | 6.15 | | B | |
| 12/31/1993 | Phosphorus | 5 | TS | 1439.4 | .26317 | .30000 | 6.15 | | B | U |
| 12/31/1993 | Selenium | 5 | TS | 1439.4 | .01734 | .70000 | 6.15 | | U | U |
| 12/31/1993 | Silver | 5 | TS | 1439.4 | .00121 | .30000 | 6.15 | | U | UJ |
| 12/31/1993 | Thallium | 5 | TS | 1439.4 | .03461 | .30000 | 6.15 | | U | U |
| 12/31/1993 | Vanadium | 5 | TS | 1439.4 | .00324 | .17000 | 6.15 | | B | |
| 12/31/1993 | Zinc | 5 | TS | 1439.4 | .00649 | .00000 | 6.15 | | B | |
| 12/31/1993 | Aluminum | 6 | TS | 1439.4 | .08754 | 33.30000 | 8.96 | | | |
| 12/31/1993 | Arsenic | 6 | TS | 1439.4 | .00023 | .00057 | 8.96 | | B | |
| 12/31/1993 | Barium | 6 | TS | 1439.4 | .00164 | .52000 | 8.96 | | U | U |
| 12/31/1993 | Beryllium | 6 | TS | 1439.4 | .00016 | .00100 | 8.96 | | U | U |
| 12/31/1993 | Cadmium | 6 | TS | 1439.4 | .00131 | .00140 | 8.96 | | U | U |
| 12/31/1993 | Chromium | 6 | TS | 1439.4 | .00063 | .00020 | 8.96 | | | U |
| 12/31/1993 | Manganese | 6 | TS | 1439.4 | .00284 | .42000 | 8.96 | | | |
| 12/31/1993 | Nickel | 6 | TS | 1439.4 | .00327 | .01000 | 8.96 | | B | |
| 12/31/1993 | Particulate Fluoride | 6 | TS | 1439.4 | 1.97955 | 8.30000 | 8.96 | | B | |
| 12/31/1993 | Phosphorus | 6 | TS | 1439.4 | .19012 | .30000 | 8.96 | | B | U |
| 12/31/1993 | Selenium | 6 | TS | 1439.4 | .01640 | .70000 | 8.96 | | U | U |
| 12/31/1993 | Silver | 6 | TS | 1439.4 | .00114 | .30000 | 8.96 | | U | UJ |
| 12/31/1993 | Thallium | 6 | TS | 1439.4 | .03273 | .30000 | 8.96 | | U | U |

| Sample Date | Chemical Name | Site # | Typ | Run Time (min.) | Chem Conc. (ug/m3) | EPA Scr. L(ug/m3) | Part.C. (ug/m3) | Grav. Val | Qual. Lab | Qual. Val |
|---|---|---|---|---|---|---|---|---|---|---|
| 12/31/1993 | Vanadium | 6 | TS | 1439.4 | .00164 | .17000 | 8.96 | | U | U |
| 12/31/1993 | Zinc | 6 | TS | 1439.4 | .00389 | .00000 | 8.96 | | B | U |
| 12/31/1993 | Aluminum | 7 | TS | 1452.9 | .05664 | 33.30000 | 5.55 | | | |
| 12/31/1993 | Arsenic | 7 | TS | 1452.9 | .00018 | .00057 | 5.55 | | B | |
| 12/31/1993 | Barium | 7 | TS | 1452.9 | .00259 | .52000 | 5.55 | | | |
| 12/31/1993 | Beryllium | 7 | TS | 1452.9 | .00017 | .00100 | 5.55 | | U | U |
| 12/31/1993 | Cadmium | 7 | TS | 1452.9 | .00134 | .00140 | 5.55 | | U | U |
| 12/31/1993 | Chromium | 7 | TS | 1452.9 | .00162 | .00020 | 5.55 | | | U |
| 12/31/1993 | Manganese | 7 | TS | 1452.9 | .00179 | .42000 | 5.55 | | B | |
| 12/31/1993 | Nickel | 7 | TS | 1452.9 | .00360 | .01000 | 5.55 | | B | U |
| 12/31/1993 | Particulate Fluoride | 7 | TS | 1452.9 | 4.14567 | 8.30000 | 5.55 | | | |
| 12/31/1993 | Phosphorus | 7 | TS | 1452.9 | .22935 | .30000 | 5.55 | | B | U |
| 12/31/1993 | Selenium | 7 | TS | 1452.9 | .02093 | .70000 | 5.55 | | B | U |
| 12/31/1993 | Silver | 7 | TS | 1452.9 | .00117 | .30000 | 5.55 | | U | UJ |
| 12/31/1993 | Thallium | 7 | TS | 1452.9 | .03350 | .30000 | 5.55 | | U | U |
| 12/31/1993 | Vanadium | 7 | TS | 1452.9 | .00195 | .17000 | 5.55 | | B | |
| 12/31/1993 | Zinc | 7 | TS | 1452.9 | .00526 | .00000 | 5.55 | | B | U |
| 12/31/1993 | Aluminum | 8 | TS | 1453.2 | .32573 | 33.30000 | 46.27 | | | |
| 12/31/1993 | Arsenic | 8 | TS | 1453.2 | .00074 | .00057 | 46.27 | | | |
| 12/31/1993 | Barium | 8 | TS | 1453.2 | .00751 | .52000 | 46.27 | | | U |
| 12/31/1993 | Beryllium | 8 | TS | 1453.2 | .00017 | .00100 | 46.27 | | U | U |
| 12/31/1993 | Cadmium | 8 | TS | 1453.2 | .00487 | .00140 | 46.27 | | | U |
| 12/31/1993 | Chromium | 8 | TS | 1453.2 | .00697 | .00020 | 46.27 | | | |
| 12/31/1993 | Manganese | 8 | TS | 1453.2 | .00677 | .42000 | 46.27 | | | |
| 12/31/1993 | Nickel | 8 | TS | 1453.2 | .00495 | .01000 | 46.27 | | B | |
| 12/31/1993 | Particulate Fluoride | 8 | TS | 1453.2 | 6.00521 | 8.30000 | 46.27 | | | U |
| 12/31/1993 | Phosphorus | 8 | TS | 1453.2 | 1.74928 | .30000 | 46.27 | | | |
| 12/31/1993 | Selenium | 8 | TS | 1453.2 | .01682 | .70000 | 46.27 | | U | U |
| 12/31/1993 | Silver | 8 | TS | 1453.2 | .00117 | .30000 | 46.27 | | U | U |
| 12/31/1993 | Thallium | 8 | TS | 1453.2 | .03358 | .30000 | 46.27 | | U | U |
| 12/31/1993 | Vanadium | 8 | TS | 1453.2 | .00932 | .17000 | 46.27 | | | |
| 12/31/1993 | Zinc | 8 | TS | 1453.2 | .02453 | .00000 | 46.27 | | B | |
| 01/04/1994 | Aluminum | 1 | TS | 1441.5 | .23581 | 33.30000 | 30.44 | | | |
| 01/04/1994 | Arsenic | 1 | TS | 1441.5 | .00062 | .00057 | 30.44 | | B | |
| 01/04/1994 | Barium | 1 | TS | 1441.5 | .00759 | .52000 | 30.44 | | | |
| 01/04/1994 | Beryllium | 1 | TS | 1441.5 | .00017 | .00100 | 30.44 | | B | |
| 01/04/1994 | Cadmium | 1 | TS | 1441.5 | .00294 | .00140 | 30.44 | | | |
| 01/04/1994 | Chromium | 1 | TS | 1441.5 | .03361 | .00020 | 30.44 | | | |
| 01/04/1994 | Manganese | 1 | TS | 1441.5 | .00888 | .42000 | 30.44 | | | |
| 01/04/1994 | Nickel | 1 | TS | 1441.5 | .00712 | .01000 | 30.44 | | B | |
| 01/04/1994 | Particulate Fluoride | 1 | TS | 1441.5 | 2.37168 | 8.30000 | 30.44 | | B | U |
| 01/04/1994 | Phosphorus | 1 | TS | 1441.5 | 1.24005 | .30000 | 30.44 | | | |
| 01/04/1994 | Selenium | 1 | TS | 1441.5 | .01701 | .70000 | 30.44 | | U | U |
| 01/04/1994 | Silver | 1 | TS | 1441.5 | .00119 | .30000 | 30.44 | | U | U |
| 01/04/1994 | Thallium | 1 | TS | 1441.5 | .03395 | .30000 | 30.44 | | U | U |
| 01/04/1994 | Vanadium | 1 | TS | 1441.5 | .03110 | .17000 | 30.44 | | | |
| 01/04/1994 | Zinc | 1 | TS | 1441.5 | .02345 | .00000 | 30.44 | | B | |
| 01/04/1994 | Aluminum | 2 | TS | 1438.1 | .78137 | 33.30000 | 103.23 | | | |
| 01/04/1994 | Arsenic | 2 | TS | 1438.1 | .00241 | .00057 | 103.23 | | | |

| Sample Date | Chemical Name | Site # | Typ | Run Time (min.) | Chem Conc. (ug/m3) | EPA Scr. L(ug/m3) | Part.C. Grav. (ug/m3) | Qual. Val | Qual. Lab | Qual. Val |
|---|---|---|---|---|---|---|---|---|---|---|
| 01/04/1994 | Barium | 2 | TS | 1438.1 | .01293 | .52000 | 103.23 | | | |
| 01/04/1994 | Beryllium | 2 | TS | 1438.1 | .00021 | .00100 | 103.23 | | B | |
| 01/04/1994 | Cadmium | 2 | TS | 1438.1 | .02061 | .00140 | 103.23 | | | |
| 01/04/1994 | Chromium | 2 | TS | 1438.1 | .07261 | .00020 | 103.23 | | | |
| 01/04/1994 | Manganese | 2 | TS | 1438.1 | .02116 | .42000 | 103.23 | | | |
| 01/04/1994 | Nickel | 2 | TS | 1438.1 | .01632 | .01000 | 103.23 | | | |
| 01/04/1994 | Particulate Fluoride | 2 | TS | 1438.1 | 2.80049 | 8.30000 | 103.23 | | B | U |
| 01/04/1994 | Phosphorus | 2 | TS | 1438.1 | 6.85947 | .30000 | 103.23 | | | |
| 01/04/1994 | Selenium | 2 | TS | 1438.1 | .01736 | .70000 | 103.23 | | U | U |
| 01/04/1994 | Silver | 2 | TS | 1438.1 | .00158 | .30000 | 103.23 | | B | |
| 01/04/1994 | Thallium | 2 | TS | 1438.1 | .03464 | .30000 | 103.23 | | U | U |
| 01/04/1994 | Vanadium | 2 | TS | 1438.1 | .09128 | .17000 | 103.23 | | | |
| 01/04/1994 | Zinc | 2 | TS | 1438.1 | .09957 | .00000 | 103.23 | | | |
| 01/04/1994 | Aluminum | 3 | TS | 1441.7 | .11644 | 33.30000 | 13.71 | | | |
| 01/04/1994 | Arsenic | 3 | TS | 1441.7 | .00044 | .00057 | 13.71 | | B | |
| 01/04/1994 | Barium | 3 | TS | 1441.7 | .00379 | .52000 | 13.71 | | | |
| 01/04/1994 | Beryllium | 3 | TS | 1441.7 | .00016 | .00100 | 13.71 | | U | U |
| 01/04/1994 | Cadmium | 3 | TS | 1441.7 | .00153 | .00140 | 13.71 | | | |
| 01/04/1994 | Chromium | 3 | TS | 1441.7 | .01029 | .00020 | 13.71 | | | |
| 01/04/1994 | Manganese | 3 | TS | 1441.7 | .00520 | .42000 | 13.71 | | | |
| 01/04/1994 | Nickel | 3 | TS | 1441.7 | .00322 | .01000 | 13.71 | | U | U |
| 01/04/1994 | Particulate Fluoride | 3 | TS | 1441.7 | 1.28665 | 8.30000 | 13.71 | | U | U |
| 01/04/1994 | Phosphorus | 3 | TS | 1441.7 | .46255 | .30000 | 13.71 | | | U |
| 01/04/1994 | Selenium | 3 | TS | 1441.7 | .01615 | .70000 | 13.71 | | U | U |
| 01/04/1994 | Silver | 3 | TS | 1441.7 | .00113 | .30000 | 13.71 | | U | U |
| 01/04/1994 | Thallium | 3 | TS | 1441.7 | .03223 | .30000 | 13.71 | | U | U |
| 01/04/1994 | Vanadium | 3 | TS | 1441.7 | .00843 | .17000 | 13.71 | | | |
| 01/04/1994 | Zinc | 3 | TS | 1441.7 | .00965 | .00000 | 13.71 | | B | |
| 01/04/1994 | Aluminum | 4 | TS | 1428.7 | .22306 | 33.30000 | 22.11 | | | |
| 01/04/1994 | Arsenic | 4 | TS | 1428.7 | .00079 | .00057 | 22.11 | | | |
| 01/04/1994 | Barium | 4 | TS | 1428.7 | .00589 | .52000 | 22.11 | | | |
| 01/04/1994 | Beryllium | 4 | TS | 1428.7 | .00018 | .00100 | 22.11 | | U | U |
| 01/04/1994 | Cadmium | 4 | TS | 1428.7 | .00140 | .00140 | 22.11 | | U | U |
| 01/04/1994 | Chromium | 4 | TS | 1428.7 | .00383 | .00020 | 22.11 | | | |
| 01/04/1994 | Manganese | 4 | TS | 1428.7 | .01038 | .42000 | 22.11 | | | |
| 01/04/1994 | Nickel | 4 | TS | 1428.7 | .00351 | .01000 | 22.11 | | U | U |
| 01/04/1994 | Particulate Fluoride | 4 | TS | 1428.7 | 1.59931 | 8.30000 | 22.11 | | B | U |
| 01/04/1994 | Phosphorus | 4 | TS | 1428.7 | .33389 | .30000 | 22.11 | | B | U |
| 01/04/1994 | Selenium | 4 | TS | 1428.7 | .01761 | .70000 | 22.11 | | U | U |
| 01/04/1994 | Silver | 4 | TS | 1428.7 | .00123 | .30000 | 22.11 | | U | U |
| 01/04/1994 | Thallium | 4 | TS | 1428.7 | .03514 | .30000 | 22.11 | | U | U |
| 01/04/1994 | Vanadium | 4 | TS | 1428.7 | .00234 | .17000 | 22.11 | | B | |
| 01/04/1994 | Zinc | 4 | TS | 1428.7 | .02125 | .00000 | 22.11 | | B | |
| 01/04/1994 | Aluminum | 5 | TS | 1436.1 | .10985 | 33.30000 | 25.97 | | | |
| 01/04/1994 | Arsenic | 5 | TS | 1436.1 | .00059 | .00057 | 25.97 | | B | |
| 01/04/1994 | Barium | 5 | TS | 1436.1 | .00211 | .52000 | 25.97 | | | |
| 01/04/1994 | Beryllium | 5 | TS | 1436.1 | .00018 | .00100 | 25.97 | | U | U |
| 01/04/1994 | Cadmium | 5 | TS | 1436.1 | .00191 | .00140 | 25.97 | | | |
| 01/04/1994 | Chromium | 5 | TS | 1436.1 | .01714 | .00020 | 25.97 | | | |

| Sample Date | Chemical Name | Site # | Typ | Run Time (min.) | Chem Conc. (ug/m3) | EPA Scr. L(ug/m3) | Part.C. Grav. (ug/m3) | Val | Qual. Lab | Val |
|---|---|---|---|---|---|---|---|---|---|---|
| 01/04/1994 | Manganese | 5 | TS | 1436.1 | .00284 | .42000 | 25.97 | | | |
| 01/04/1994 | Nickel | 5 | TS | 1436.1 | .00430 | .01000 | 25.97 | | B | |
| 01/04/1994 | Particulate Fluoride | 5 | TS | 1436.1 | 1.57422 | 8.30000 | 25.97 | | B | U |
| 01/04/1994 | Phosphorus | 5 | TS | 1436.1 | .92354 | .30000 | 25.97 | | | |
| 01/04/1994 | Selenium | 5 | TS | 1436.1 | .01756 | .70000 | 25.97 | | U | U |
| 01/04/1994 | Silver | 5 | TS | 1436.1 | .00122 | .30000 | 25.97 | | U | U |
| 01/04/1994 | Thallium | 5 | TS | 1436.1 | .03505 | .30000 | 25.97 | | U | U |
| 01/04/1994 | Vanadium | 5 | TS | 1436.1 | .01616 | .17000 | 25.97 | | | |
| 01/04/1994 | Zinc | 5 | TS | 1436.1 | .01392 | .00000 | 25.97 | | B | |
| 01/04/1994 | Aluminum | 6 | TS | 1438.9 | .03474 | 33.30000 | 5.88 | | B | U |
| 01/04/1994 | Arsenic | 6 | TS | 1438.9 | .00028 | .00057 | 5.88 | | B | |
| 01/04/1994 | Barium | 6 | TS | 1438.9 | .00166 | .52000 | 5.88 | | U | U |
| 01/04/1994 | Beryllium | 6 | TS | 1438.9 | .00017 | .00100 | 5.88 | | U | U |
| 01/04/1994 | Cadmium | 6 | TS | 1438.9 | .00132 | .00140 | 5.88 | | U | U |
| 01/04/1994 | Chromium | 6 | TS | 1438.9 | .00059 | .00020 | 5.88 | | | U |
| 01/04/1994 | Manganese | 6 | TS | 1438.9 | .00119 | .42000 | 5.88 | | B | |
| 01/04/1994 | Nickel | 6 | TS | 1438.9 | .00331 | .01000 | 5.88 | | U | U |
| 01/04/1994 | Particulate Fluoride | 6 | TS | 1438.9 | 1.59830 | 8.30000 | 5.88 | | B | U |
| 01/04/1994 | Phosphorus | 6 | TS | 1438.9 | .17040 | .30000 | 5.88 | | B | U |
| 01/04/1994 | Selenium | 6 | TS | 1438.9 | .01658 | .70000 | 5.88 | | U | U |
| 01/04/1994 | Silver | 6 | TS | 1438.9 | .00116 | .30000 | 5.88 | | U | U |
| 01/04/1994 | Thallium | 6 | TS | 1438.9 | .03309 | .30000 | 5.88 | | U | U |
| 01/04/1994 | Vanadium | 6 | TS | 1438.9 | .00166 | .17000 | 5.88 | | U | U |
| 01/04/1994 | Zinc | 6 | TS | 1438.9 | .00326 | .00000 | 5.88 | | B | U |
| 01/04/1994 | Aluminum | 7 | TS | 1455.1 | .06410 | 33.30000 | 15.73 | | | U |
| 01/04/1994 | Arsenic | 7 | TS | 1455.1 | .00052 | .00057 | 15.73 | | B | |
| 01/04/1994 | Barium | 7 | TS | 1455.1 | .00211 | .52000 | 15.73 | | | |
| 01/04/1994 | Beryllium | 7 | TS | 1455.1 | .00017 | .00100 | 15.73 | | U | U |
| 01/04/1994 | Cadmium | 7 | TS | 1455.1 | .00152 | .00140 | 15.73 | | | |
| 01/04/1994 | Chromium | 7 | TS | 1455.1 | .00240 | .00020 | 15.73 | | | |
| 01/04/1994 | Manganese | 7 | TS | 1455.1 | .00186 | .42000 | 15.73 | | B | |
| 01/04/1994 | Nickel | 7 | TS | 1455.1 | .00338 | .01000 | 15.73 | | U | U |
| 01/04/1994 | Particulate Fluoride | 7 | TS | 1455.1 | 1.69351 | 8.30000 | 15.73 | | B | U |
| 01/04/1994 | Phosphorus | 7 | TS | 1455.1 | .97158 | .30000 | 15.73 | | | |
| 01/04/1994 | Selenium | 7 | TS | 1455.1 | .01694 | .70000 | 15.73 | | U | U |
| 01/04/1994 | Silver | 7 | TS | 1455.1 | .00118 | .30000 | 15.73 | | U | U |
| 01/04/1994 | Thallium | 7 | TS | 1455.1 | .03380 | .30000 | 15.73 | | U | U |
| 01/04/1994 | Vanadium | 7 | TS | 1455.1 | .00245 | .17000 | 15.73 | | B | |
| 01/04/1994 | Zinc | 7 | TS | 1455.1 | .00722 | .00000 | 15.73 | | B | |
| 01/06/1994 | Aluminum | 1 | TS | 1447.9 | .87412 | 33.30000 | 108.80 | | | |
| 01/06/1994 | Arsenic | 1 | TS | 1447.9 | .00096 | .00057 | 108.80 | | | |
| 01/06/1994 | Barium | 1 | TS | 1447.9 | .01384 | .52000 | 108.80 | | | |
| 01/06/1994 | Beryllium | 1 | TS | 1447.9 | .00017 | .00100 | 108.80 | | U | U |
| 01/06/1994 | Cadmium | 1 | TS | 1447.9 | .01457 | .00140 | 108.80 | | | |
| 01/06/1994 | Chromium | 1 | TS | 1447.9 | .25230 | .00020 | 108.80 | | | |
| 01/06/1994 | Manganese | 1 | TS | 1447.9 | .03040 | .42000 | 108.80 | | | |
| 01/06/1994 | Nickel | 1 | TS | 1447.9 | .04463 | .01000 | 108.80 | | | |
| 01/06/1994 | Particulate Fluoride | 1 | TS | 1447.9 | 4.80105 | 8.30000 | 108.80 | | | |

| Sample Date | Chemical Name | Site # | Typ | Run Time (min.) | Chem Conc. (ug/m3) | EPA Scr. L(ug/m3) | Part.C. (ug/m3) | Grav. Val | Qual. Lab | Qual. Val |
|---|---|---|---|---|---|---|---|---|---|---|
| 01/06/1994 | Phosphorus | 1 | TS | 1447.9 | 6.40360 | .30000 | 108.80 | | | |
| 01/06/1994 | Selenium | 1 | TS | 1447.9 | .01662 | .70000 | 108.80 | | U | U |
| 01/06/1994 | Silver | 1 | TS | 1447.9 | .00246 | .30000 | 108.80 | | B | U |
| 01/06/1994 | Thallium | 1 | TS | 1447.9 | .03318 | .30000 | 108.80 | | U | U |
| 01/06/1994 | Vanadium | 1 | TS | 1447.9 | .24701 | .17000 | 108.80 | | | |
| 01/06/1994 | Zinc | 1 | TS | 1447.9 | .09337 | .00000 | 108.80 | | | |
| 01/06/1994 | Aluminum | 2 | TS | 1436.1 | 2.72560 | 33.30000 | 297.82 | | | |
| 01/06/1994 | Arsenic | 2 | TS | 1436.1 | .00344 | .00057 | 297.82 | | | |
| 01/06/1994 | Barium | 2 | TS | 1436.1 | .02984 | .52000 | 297.82 | | | |
| 01/06/1994 | Beryllium | 2 | TS | 1436.1 | .00043 | .00100 | 297.82 | | B | |
| 01/06/1994 | Cadmium | 2 | TS | 1436.1 | .04615 | .00140 | 297.82 | | | |
| 01/06/1994 | Chromium | 2 | TS | 1436.1 | .75447 | .00020 | 297.82 | | | |
| 01/06/1994 | Manganese | 2 | TS | 1436.1 | .08156 | .42000 | 297.82 | | | |
| 01/06/1994 | Nickel | 2 | TS | 1436.1 | .13254 | .01000 | 297.82 | | | |
| 01/06/1994 | Particulate Fluoride | 2 | TS | 1436.1 | 6.38918 | 8.30000 | 297.82 | | | |
| 01/06/1994 | Phosphorus | 2 | TS | 1436.1 | 20.45896 | .30000 | 297.82 | | | |
| 01/06/1994 | Selenium | 2 | TS | 1436.1 | .03575 | .70000 | 297.82 | | B | |
| 01/06/1994 | Silver | 2 | TS | 1436.1 | .00741 | .30000 | 297.82 | | B | |
| 01/06/1994 | Thallium | 2 | TS | 1436.1 | .03405 | .30000 | 297.82 | | U | U |
| 01/06/1994 | Vanadium | 2 | TS | 1436.1 | .80205 | .17000 | 297.82 | | | |
| 01/06/1994 | Zinc | 2 | TS | 1436.1 | .36636 | .00000 | 297.82 | | | |
| 01/06/1994 | Aluminum | 3 | TS | 1443.9 | .22762 | 33.30000 | 23.22 | | | |
| 01/06/1994 | Arsenic | 3 | TS | 1443.9 | .00016 | .00057 | 23.22 | | U | U |
| 01/06/1994 | Barium | 3 | TS | 1443.9 | .00316 | .52000 | 23.22 | | | |
| 01/06/1994 | Beryllium | 3 | TS | 1443.9 | .00016 | .00100 | 23.22 | | U | U |
| 01/06/1994 | Cadmium | 3 | TS | 1443.9 | .00368 | .00140 | 23.22 | | | |
| 01/06/1994 | Chromium | 3 | TS | 1443.9 | .03474 | .00020 | 23.22 | | | |
| 01/06/1994 | Manganese | 3 | TS | 1443.9 | .00794 | .42000 | 23.22 | | | |
| 01/06/1994 | Nickel | 3 | TS | 1443.9 | .00851 | .01000 | 23.22 | | | U |
| 01/06/1994 | Particulate Fluoride | 3 | TS | 1443.9 | 1.50696 | 8.30000 | 23.22 | | B | |
| 01/06/1994 | Phosphorus | 3 | TS | 1443.9 | 1.39346 | .30000 | 23.22 | | | |
| 01/06/1994 | Selenium | 3 | TS | 1443.9 | .01583 | .70000 | 23.22 | | U | U |
| 01/06/1994 | Silver | 3 | TS | 1443.9 | .00112 | .30000 | 23.22 | | B | U |
| 01/06/1994 | Thallium | 3 | TS | 1443.9 | .03159 | .30000 | 23.22 | | U | U |
| 01/06/1994 | Vanadium | 3 | TS | 1443.9 | .03695 | .17000 | 23.22 | | | |
| 01/06/1994 | Zinc | 3 | TS | 1443.9 | .02415 | .00000 | 23.22 | | B | |
| 01/06/1994 | Aluminum | 4 | TS | 1429.4 | .12594 | 33.30000 | 15.29 | | | |
| 01/06/1994 | Arsenic | 4 | TS | 1429.4 | .00017 | .00057 | 15.29 | | U | U |
| 01/06/1994 | Barium | 4 | TS | 1429.4 | .00242 | .52000 | 15.29 | | | |
| 01/06/1994 | Beryllium | 4 | TS | 1429.4 | .00017 | .00100 | 15.29 | | U | U |
| 01/06/1994 | Cadmium | 4 | TS | 1429.4 | .00138 | .00140 | 15.29 | | U | U |
| 01/06/1994 | Chromium | 4 | TS | 1429.4 | .00368 | .00020 | 15.29 | | | |
| 01/06/1994 | Manganese | 4 | TS | 1429.4 | .00414 | .42000 | 15.29 | | | |
| 01/06/1994 | Nickel | 4 | TS | 1429.4 | .00345 | .01000 | 15.29 | | U | U |
| 01/06/1994 | Particulate Fluoride | 4 | TS | 1429.4 | 1.48653 | 8.30000 | 15.29 | | B | |
| 01/06/1994 | Phosphorus | 4 | TS | 1429.4 | .26358 | .30000 | 15.29 | | B | U |
| 01/06/1994 | Selenium | 4 | TS | 1429.4 | .01727 | .70000 | 15.29 | | U | U |
| 01/06/1994 | Silver | 4 | TS | 1429.4 | .00120 | .30000 | 15.29 | | U | U |

| Sample Date | Chemical Name | Site # | Typ | Run Time (min.) | Chem Conc. (ug/m3) | EPA Scr. L(ug/m3) | Part.C. (ug/m3) | Grav. Val | Qual. Lab | Qual. Val |
|---|---|---|---|---|---|---|---|---|---|---|
| 01/06/1994 | Thallium | 4 | TS | 1429.4 | .03448 | .30000 | 15.29 | | U | U |
| 01/06/1994 | Vanadium | 4 | TS | 1429.4 | .00264 | .17000 | 15.29 | | B | |
| 01/06/1994 | Zinc | 4 | TS | 1429.4 | .00647 | .00000 | 15.29 | | B | U |
| 01/06/1994 | Aluminum | 5 | TS | 1437.4 | .05777 | 33.30000 | 3.64 | | | U |
| 01/06/1994 | Arsenic | 5 | TS | 1437.4 | .00017 | .00057 | 3.64 | | U | U |
| 01/06/1994 | Barium | 5 | TS | 1437.4 | .00172 | .52000 | 3.64 | | U | U |
| 01/06/1994 | Beryllium | 5 | TS | 1437.4 | .00017 | .00100 | 3.64 | | U | U |
| 01/06/1994 | Cadmium | 5 | TS | 1437.4 | .00137 | .00140 | 3.64 | | U | U |
| 01/06/1994 | Chromium | 5 | TS | 1437.4 | .00089 | .00020 | 3.64 | | | U |
| 01/06/1994 | Manganese | 5 | TS | 1437.4 | .00170 | .42000 | 3.64 | | B | |
| 01/06/1994 | Nickel | 5 | TS | 1437.4 | .00344 | .01000 | 3.64 | | U | U |
| 01/06/1994 | Particulate Fluoride | 5 | TS | 1437.4 | 1.37232 | 8.30000 | 3.64 | | U | U |
| 01/06/1994 | Phosphorus | 5 | TS | 1437.4 | .18732 | .30000 | 3.64 | | B | U |
| 01/06/1994 | Selenium | 5 | TS | 1437.4 | .01722 | .70000 | 3.64 | | U | U |
| 01/06/1994 | Silver | 5 | TS | 1437.4 | .00120 | .30000 | 3.64 | | U | U |
| 01/06/1994 | Thallium | 5 | TS | 1437.4 | .03438 | .30000 | 3.64 | | U | U |
| 01/06/1994 | Vanadium | 5 | TS | 1437.4 | .00172 | .17000 | 3.64 | | U | U |
| 01/06/1994 | Zinc | 5 | TS | 1437.4 | .00485 | .00000 | 3.64 | | B | U |
| 01/06/1994 | Aluminum | 6 | TS | 1437.2 | .06620 | 33.30000 | 4.09 | | | |
| 01/06/1994 | Arsenic | 6 | TS | 1437.2 | .00016 | .00057 | 4.09 | | U | U |
| 01/06/1994 | Barium | 6 | TS | 1437.2 | .00163 | .52000 | 4.09 | | U | U |
| 01/06/1994 | Beryllium | 6 | TS | 1437.2 | .00016 | .00100 | 4.09 | | U | U |
| 01/06/1994 | Cadmium | 6 | TS | 1437.2 | .00130 | .00140 | 4.09 | | U | U |
| 01/06/1994 | Chromium | 6 | TS | 1437.2 | .00080 | .00020 | 4.09 | | | U |
| 01/06/1994 | Manganese | 6 | TS | 1437.2 | .00260 | .42000 | 4.09 | | | |
| 01/06/1994 | Nickel | 6 | TS | 1437.2 | .00325 | .01000 | 4.09 | | B | U |
| 01/06/1994 | Particulate Fluoride | 6 | TS | 1437.2 | 1.29814 | 8.30000 | 4.09 | | U | U |
| 01/06/1994 | Phosphorus | 6 | TS | 1437.2 | .18563 | .30000 | 4.09 | | B | U |
| 01/06/1994 | Selenium | 6 | TS | 1437.2 | .01629 | .70000 | 4.09 | | U | U |
| 01/06/1994 | Silver | 6 | TS | 1437.2 | .00114 | .30000 | 4.09 | | U | U |
| 01/06/1994 | Thallium | 6 | TS | 1437.2 | .03252 | .30000 | 4.09 | | U | U |
| 01/06/1994 | Vanadium | 6 | TS | 1437.2 | .00163 | .17000 | 4.09 | | U | U |
| 01/06/1994 | Zinc | 6 | TS | 1437.2 | .00251 | .00000 | 4.09 | | B | U |
| 01/06/1994 | Aluminum | 7 | TS | 1448.6 | .03898 | 33.30000 | 3.40 | | | U |
| 01/06/1994 | Arsenic | 7 | TS | 1448.6 | .00017 | .00057 | 3.40 | | U | U |
| 01/06/1994 | Barium | 7 | TS | 1448.6 | .00167 | .52000 | 3.40 | | U | U |
| 01/06/1994 | Beryllium | 7 | TS | 1448.6 | .00017 | .00100 | 3.40 | | U | U |
| 01/06/1994 | Cadmium | 7 | TS | 1448.6 | .00133 | .00140 | 3.40 | | U | U |
| 01/06/1994 | Chromium | 7 | TS | 1448.6 | .00096 | .00020 | 3.40 | | | U |
| 01/06/1994 | Manganese | 7 | TS | 1448.6 | .00126 | .42000 | 3.40 | | B | |
| 01/06/1994 | Nickel | 7 | TS | 1448.6 | .00333 | .01000 | 3.40 | | U | U |
| 01/06/1994 | Particulate Fluoride | 7 | TS | 1448.6 | 1.59663 | 8.30000 | 3.40 | | B | |
| 01/06/1994 | Phosphorus | 7 | TS | 1448.6 | .18494 | .30000 | 3.40 | | B | U |
| 01/06/1994 | Selenium | 7 | TS | 1448.6 | .01670 | .70000 | 3.40 | | U | U |
| 01/06/1994 | Silver | 7 | TS | 1448.6 | .00116 | .30000 | 3.40 | | U | U |
| 01/06/1994 | Thallium | 7 | TS | 1448.6 | .03333 | .30000 | 3.40 | | U | U |
| 01/06/1994 | Vanadium | 7 | TS | 1448.6 | .00167 | .17000 | 3.40 | | U | U |
| 01/06/1994 | Zinc | 7 | TS | 1448.6 | .00167 | .00000 | 3.40 | | B | U |
| 01/08/1994 | Aluminum | 1 | TS | 1445.0 | .26276 | 33.30000 | 29.61 | | | |

| Sample Date | Chemical Name | Site # | Typ | Run Time (min.) | Chem Conc. (ug/m3) | EPA Scr. L(ug/m3) | Part.C. (ug/m3) | Grav. Val | Qual. Lab | Qual. Val |
|---|---|---|---|---|---|---|---|---|---|---|
| 01/08/1994 | Arsenic | 1 | TS | 1445.0 | .00119 | .00057 | 29.61 | | | |
| 01/08/1994 | Barium | 1 | TS | 1445.0 | .00607 | .52000 | 29.61 | | | |
| 01/08/1994 | Beryllium | 1 | TS | 1445.0 | .00017 | .00100 | 29.61 | | U | U |
| 01/08/1994 | Cadmium | 1 | TS | 1445.0 | .00254 | .00140 | 29.61 | | | |
| 01/08/1994 | Chromium | 1 | TS | 1445.0 | .01009 | .00020 | 29.61 | | | |
| 01/08/1994 | Manganese | 1 | TS | 1445.0 | .00697 | .42000 | 29.61 | | | |
| 01/08/1994 | Nickel | 1 | TS | 1445.0 | .00349 | .01000 | 29.61 | | B | |
| 01/08/1994 | Particulate Fluoride | 1 | TS | 1445.0 | 1.95081 | 8.30000 | 29.61 | | B | U |
| 01/08/1994 | Phosphorus | 1 | TS | 1445.0 | .74317 | .30000 | 29.61 | | | |
| 01/08/1994 | Selenium | 1 | TS | 1445.0 | .01665 | .70000 | 29.61 | | U | U |
| 01/08/1994 | Silver | 1 | TS | 1445.0 | .00116 | .30000 | 29.61 | | U | U |
| 01/08/1994 | Thallium | 1 | TS | 1445.0 | .03324 | .30000 | 29.61 | | U | U |
| 01/08/1994 | Vanadium | 1 | TS | 1445.0 | .01155 | .17000 | 29.61 | | | |
| 01/08/1994 | Zinc | 1 | TS | 1445.0 | .02011 | .00000 | 29.61 | | B | |
| 01/08/1994 | Aluminum | 2 | TS | 1434.2 | 1.01409 | 33.30000 | 128.85 | | | |
| 01/08/1994 | Arsenic | 2 | TS | 1434.2 | .00230 | .00057 | 128.85 | | | |
| 01/08/1994 | Barium | 2 | TS | 1434.2 | .01681 | .52000 | 128.85 | | | |
| 01/08/1994 | Beryllium | 2 | TS | 1434.2 | .00017 | .00100 | 128.85 | | U | U |
| 01/08/1994 | Cadmium | 2 | TS | 1434.2 | .01443 | .00140 | 128.85 | | | |
| 01/08/1994 | Chromium | 2 | TS | 1434.2 | .05901 | .00020 | 128.85 | | | |
| 01/08/1994 | Manganese | 2 | TS | 1434.2 | .02675 | .42000 | 128.85 | | | |
| 01/08/1994 | Nickel | 2 | TS | 1434.2 | .01491 | .01000 | 128.85 | | | |
| 01/08/1994 | Particulate Fluoride | 2 | TS | 1434.2 | 3.28049 | 8.30000 | 128.85 | | B | |
| 01/08/1994 | Phosphorus | 2 | TS | 1434.2 | 4.82546 | .30000 | 128.85 | | | |
| 01/08/1994 | Selenium | 2 | TS | 1434.2 | .01708 | .70000 | 128.85 | | B | |
| 01/08/1994 | Silver | 2 | TS | 1434.2 | .00129 | .30000 | 128.85 | | B | |
| 01/08/1994 | Thallium | 2 | TS | 1434.2 | .03410 | .30000 | 128.85 | | U | U |
| 01/08/1994 | Vanadium | 2 | TS | 1434.2 | .07691 | .17000 | 128.85 | | | |
| 01/08/1994 | Zinc | 2 | TS | 1434.2 | .10073 | .00000 | 128.85 | | | |
| 01/08/1994 | Aluminum | 3 | TS | 1449.8 | .14820 | 33.30000 | 15.96 | | | |
| 01/08/1994 | Arsenic | 3 | TS | 1449.8 | .00111 | .00057 | 15.96 | | | |
| 01/08/1994 | Barium | 3 | TS | 1449.8 | .00464 | .52000 | 15.96 | | | |
| 01/08/1994 | Beryllium | 3 | TS | 1449.8 | .00016 | .00100 | 15.96 | | U | U |
| 01/08/1994 | Cadmium | 3 | TS | 1449.8 | .00126 | .00140 | 15.96 | | U | U |
| 01/08/1994 | Chromium | 3 | TS | 1449.8 | .00239 | .00020 | 15.96 | | | |
| 01/08/1994 | Manganese | 3 | TS | 1449.8 | .00598 | .42000 | 15.96 | | | |
| 01/08/1994 | Nickel | 3 | TS | 1449.8 | .00315 | .01000 | 15.96 | | U | U |
| 01/08/1994 | Particulate Fluoride | 3 | TS | 1449.8 | 1.28732 | 8.30000 | 15.96 | | B | |
| 01/08/1994 | Phosphorus | 3 | TS | 1449.8 | .26626 | .30000 | 15.96 | | B | U |
| 01/08/1994 | Selenium | 3 | TS | 1449.8 | .01576 | .70000 | 15.96 | | U | U |
| 01/08/1994 | Silver | 3 | TS | 1449.8 | .00110 | .30000 | 15.96 | | U | U |
| 01/08/1994 | Thallium | 3 | TS | 1449.8 | .03146 | .30000 | 15.96 | | U | U |
| 01/08/1994 | Vanadium | 3 | TS | 1449.8 | .00236 | .17000 | 15.96 | | B | |
| 01/08/1994 | Zinc | 3 | TS | 1449.8 | .00980 | .00000 | 15.96 | | B | |
| 01/08/1994 | Aluminum | 4 | TS | 1427.7 | .20533 | 33.30000 | 23.65 | | | |
| 01/08/1994 | Arsenic | 4 | TS | 1427.7 | .00138 | .00057 | 23.65 | | | |
| 01/08/1994 | Barium | 4 | TS | 1427.7 | .00562 | .52000 | 23.65 | | | |
| 01/08/1994 | Beryllium | 4 | TS | 1427.7 | .00017 | .00100 | 23.65 | | U | U |
| 01/08/1994 | Cadmium | 4 | TS | 1427.7 | .00138 | .00140 | 23.65 | | U | U |

| Sample Date | Chemical Name | Site # | Typ | Run Time (min.) | Chem Conc. (ug/m3) | EPA Scr. L(ug/m3) | Part.C. (ug/m3) | Grav. Val | Qual. Lab | Qual. Val |
|---|---|---|---|---|---|---|---|---|---|---|
| 01/08/1994 | Chromium | 4 | TS | 1427.7 | .00373 | .00020 | 23.65 | | | |
| 01/08/1994 | Manganese | 4 | TS | 1427.7 | .00875 | .42000 | 23.65 | | | |
| 01/08/1994 | Nickel | 4 | TS | 1427.7 | .00345 | .01000 | 23.65 | | U | U |
| 01/08/1994 | Particulate Fluoride | 4 | TS | 1427.7 | 1.46074 | 8.30000 | 23.65 | | B | |
| 01/08/1994 | Phosphorus | 4 | TS | 1427.7 | .59394 | .30000 | 23.65 | | | U |
| 01/08/1994 | Selenium | 4 | TS | 1427.7 | .01729 | .70000 | 23.65 | | U | U |
| 01/08/1994 | Silver | 4 | TS | 1427.7 | .00121 | .30000 | 23.65 | | U | U |
| 01/08/1994 | Thallium | 4 | TS | 1427.7 | .03452 | .30000 | 23.65 | | U | U |
| 01/08/1994 | Vanadium | 4 | TS | 1427.7 | .00461 | .17000 | 23.65 | | B | |
| 01/08/1994 | Zinc | 4 | TS | 1427.7 | .01812 | .00000 | 23.65 | | B | |
| 01/08/1994 | Aluminum | 5 | TS | 1437.9 | .14061 | 33.30000 | 12.22 | | | |
| 01/08/1994 | Arsenic | 5 | TS | 1437.9 | .00121 | .00057 | 12.22 | | | |
| 01/08/1994 | Barium | 5 | TS | 1437.9 | .00387 | .52000 | 12.22 | | | |
| 01/08/1994 | Beryllium | 5 | TS | 1437.9 | .00017 | .00100 | 12.22 | | U | U |
| 01/08/1994 | Cadmium | 5 | TS | 1437.9 | .00184 | .00140 | 12.22 | | | |
| 01/08/1994 | Chromium | 5 | TS | 1437.9 | .00346 | .00020 | 12.22 | | | |
| 01/08/1994 | Manganese | 5 | TS | 1437.9 | .00399 | .42000 | 12.22 | | | |
| 01/08/1994 | Nickel | 5 | TS | 1437.9 | .00344 | .01000 | 12.22 | | U | U |
| 01/08/1994 | Particulate Fluoride | 5 | TS | 1437.9 | 1.38556 | 8.30000 | 12.22 | | B | |
| 01/08/1994 | Phosphorus | 5 | TS | 1437.9 | .63585 | .30000 | 12.22 | | | U |
| 01/08/1994 | Selenium | 5 | TS | 1437.9 | .01722 | .70000 | 12.22 | | U | U |
| 01/08/1994 | Silver | 5 | TS | 1437.9 | .00120 | .30000 | 12.22 | | U | U |
| 01/08/1994 | Thallium | 5 | TS | 1437.9 | .03436 | .30000 | 12.22 | | U | U |
| 01/08/1994 | Vanadium | 5 | TS | 1437.9 | .00421 | .17000 | 12.22 | | B | |
| 01/08/1994 | Zinc | 5 | TS | 1437.9 | .01255 | .00000 | 12.22 | | B | |
| 01/08/1994 | Aluminum | 6 | TS | 1438.0 | .06014 | 33.30000 | 8.18 | | | |
| 01/08/1994 | Arsenic | 6 | TS | 1438.0 | .00090 | .00057 | 8.18 | | | |
| 01/08/1994 | Barium | 6 | TS | 1438.0 | .00179 | .52000 | 8.18 | | B | |
| 01/08/1994 | Beryllium | 6 | TS | 1438.0 | .00016 | .00100 | 8.18 | | U | U |
| 01/08/1994 | Cadmium | 6 | TS | 1438.0 | .00130 | .00140 | 8.18 | | U | U |
| 01/08/1994 | Chromium | 6 | TS | 1438.0 | .00081 | .00020 | 8.18 | | | U |
| 01/08/1994 | Manganese | 6 | TS | 1438.0 | .00272 | .42000 | 8.18 | | | |
| 01/08/1994 | Nickel | 6 | TS | 1438.0 | .00325 | .01000 | 8.18 | | U | U |
| 01/08/1994 | Particulate Fluoride | 6 | TS | 1438.0 | 1.29741 | 8.30000 | 8.18 | | U | U |
| 01/08/1994 | Phosphorus | 6 | TS | 1438.0 | .16931 | .30000 | 8.18 | | B | U |
| 01/08/1994 | Selenium | 6 | TS | 1438.0 | .01628 | .70000 | 8.18 | | U | U |
| 01/08/1994 | Silver | 6 | TS | 1438.0 | .00114 | .30000 | 8.18 | | U | U |
| 01/08/1994 | Thallium | 6 | TS | 1438.0 | .03250 | .30000 | 8.18 | | U | U |
| 01/08/1994 | Vanadium | 6 | TS | 1438.0 | .00163 | .17000 | 8.18 | | U | U |
| 01/08/1994 | Zinc | 6 | TS | 1438.0 | .00429 | .00000 | 8.18 | | B | U |
| 01/08/1994 | Aluminum | 7 | TS | 1454.5 | .22726 | 33.30000 | 31.36 | | | |
| 01/08/1994 | Arsenic | 7 | TS | 1454.5 | .00121 | .00057 | 31.36 | | | |
| 01/08/1994 | Barium | 7 | TS | 1454.5 | .00382 | .52000 | 31.36 | | | |
| 01/08/1994 | Beryllium | 7 | TS | 1454.5 | .00017 | .00100 | 31.36 | | U | U |
| 01/08/1994 | Cadmium | 7 | TS | 1454.5 | .00533 | .00140 | 31.36 | | | |
| 01/08/1994 | Chromium | 7 | TS | 1454.5 | .00822 | .00020 | 31.36 | | | |
| 01/08/1994 | Manganese | 7 | TS | 1454.5 | .00548 | .42000 | 31.36 | | | |
| 01/08/1994 | Nickel | 7 | TS | 1454.5 | .00332 | .01000 | 31.36 | | U | U |
| 01/08/1994 | Particulate | 7 | TS | 1454.5 | 1.32513 | 8.30000 | 31.36 | | U | U |

| Sample Date | Chemical Name | Site # | Typ | Run Time (min.) | Chem Conc. (ug/m3) | EPA Scr. L(ug/m3) | Part.C. (ug/m3) | Grav. Val | Qual. Lab | Qual. Val |
|---|---|---|---|---|---|---|---|---|---|---|
| | Fluoride | | | | | | | | | |
| 01/08/1994 | Phosphorus | 7 | TS | 1454.5 | 1.62328 | .30000 | 31.36 | | | |
| 01/08/1994 | Selenium | 7 | TS | 1454.5 | .01908 | .70000 | 31.36 | | B | |
| 01/08/1994 | Silver | 7 | TS | 1454.5 | .00116 | .30000 | 31.36 | | U | U |
| 01/08/1994 | Thallium | 7 | TS | 1454.5 | .03319 | .30000 | 31.36 | | U | U |
| 01/08/1994 | Vanadium | 7 | TS | 1454.5 | .01120 | .17000 | 31.36 | | | |
| 01/08/1994 | Zinc | 7 | TS | 1454.5 | .02710 | .00000 | 31.36 | | B | |
| 01/08/1994 | Aluminum | 8 | TS | 1450.9 | .20622 | 33.30000 | 28.53 | | | |
| 01/08/1994 | Arsenic | 8 | TS | 1450.9 | .00108 | .00057 | 28.53 | | | |
| 01/08/1994 | Barium | 8 | TS | 1450.9 | .00685 | .52000 | 28.53 | | | |
| 01/08/1994 | Beryllium | 8 | TS | 1450.9 | .00016 | .00100 | 28.53 | | U | U |
| 01/08/1994 | Cadmium | 8 | TS | 1450.9 | .00162 | .00140 | 28.53 | | | |
| 01/08/1994 | Chromium | 8 | TS | 1450.9 | .00666 | .00020 | 28.53 | | | |
| 01/08/1994 | Manganese | 8 | TS | 1450.9 | .00646 | .42000 | 28.53 | | | |
| 01/08/1994 | Nickel | 8 | TS | 1450.9 | .00327 | .01000 | 28.53 | | U | U |
| 01/08/1994 | Particulate Fluoride | 8 | TS | 1450.9 | 2.36235 | 8.30000 | 28.53 | | B | |
| 01/08/1994 | Phosphorus | 8 | TS | 1450.9 | .63953 | .30000 | 28.53 | | | U |
| 01/08/1994 | Selenium | 8 | TS | 1450.9 | .01801 | .70000 | 28.53 | | B | |
| 01/08/1994 | Silver | 8 | TS | 1450.9 | .00114 | .30000 | 28.53 | | U | U |
| 01/08/1994 | Thallium | 8 | TS | 1450.9 | .03269 | .30000 | 28.53 | | U | U |
| 01/08/1994 | Vanadium | 8 | TS | 1450.9 | .00848 | .17000 | 28.53 | | | |
| 01/08/1994 | Zinc | 8 | TS | 1450.9 | .01782 | .00000 | 28.53 | | B | |
| 01/12/1994 | Aluminum | 1 | TS | 1445.3 | .51019 | 33.30000 | 54.21 | | | |
| 01/12/1994 | Arsenic | 1 | TS | 1445.3 | .00057 | .00057 | 54.21 | | B | |
| 01/12/1994 | Barium | 1 | TS | 1445.3 | .01196 | .52000 | 54.21 | | | |
| 01/12/1994 | Beryllium | 1 | TS | 1445.3 | .00017 | .00100 | 54.21 | | U | U |
| 01/12/1994 | Cadmium | 1 | TS | 1445.3 | .00462 | .00140 | 54.21 | | | |
| 01/12/1994 | Chromium | 1 | TS | 1445.3 | .11763 | .00020 | 54.21 | | | |
| 01/12/1994 | Manganese | 1 | TS | 1445.3 | .01284 | .42000 | 54.21 | | | |
| 01/12/1994 | Nickel | 1 | TS | 1445.3 | .01889 | .01000 | 54.21 | | | |
| 01/12/1994 | Particulate Fluoride | 1 | TS | 1445.3 | 5.83455 | 8.30000 | 54.21 | | | |
| 01/12/1994 | Phosphorus | 1 | TS | 1445.3 | 2.86350 | .30000 | 54.21 | | | |
| 01/12/1994 | Selenium | 1 | TS | 1445.3 | .01687 | .70000 | 54.21 | | U | U |
| 01/12/1994 | Silver | 1 | TS | 1445.3 | .00118 | .30000 | 54.21 | | U | U |
| 01/12/1994 | Thallium | 1 | TS | 1445.3 | .03368 | .30000 | 54.21 | | U | U |
| 01/12/1994 | Vanadium | 1 | TS | 1445.3 | .09747 | .17000 | 54.21 | | | |
| 01/12/1994 | Zinc | 1 | TS | 1445.3 | .03435 | .00000 | 54.21 | | B | |
| 01/12/1994 | Aluminum | 2 | TS | 1437.4 | 2.27752 | 33.30000 | 232.71 | | | |
| 01/12/1994 | Arsenic | 2 | TS | 1437.4 | .00354 | .00057 | 232.71 | | | |
| 01/12/1994 | Barium | 2 | TS | 1437.4 | .02635 | .52000 | 232.71 | | | |
| 01/12/1994 | Beryllium | 2 | TS | 1437.4 | .00034 | .00100 | 232.71 | | B | |
| 01/12/1994 | Cadmium | 2 | TS | 1437.4 | .03089 | .00140 | 232.71 | | | |
| 01/12/1994 | Chromium | 2 | TS | 1437.4 | .30344 | .00020 | 232.71 | | | |
| 01/12/1994 | Manganese | 2 | TS | 1437.4 | .04349 | .42000 | 232.71 | | | |
| 01/12/1994 | Nickel | 2 | TS | 1437.4 | .05222 | .01000 | 232.71 | | | |
| 01/12/1994 | Particulate Fluoride | 2 | TS | 1437.4 | 5.05732 | 8.30000 | 232.71 | | | |
| 01/12/1994 | Phosphorus | 2 | TS | 1437.4 | 17.95865 | .30000 | 232.71 | | | |
| 01/12/1994 | Selenium | 2 | TS | 1437.4 | .04314 | .70000 | 232.71 | | B | |

| Sample Date | Chemical Name | Site # | Typ | Run Time (min.) | Chem Conc. (ug/m3) | EPA Scr. L(ug/m3) | Part.C. (ug/m3) | Grav. Val | Qual. Lab | Qual. Val |
|---|---|---|---|---|---|---|---|---|---|---|
| 01/12/1994 | Silver | 2 | TS | 1437.4 | .00226 | .30000 | 232.71 | | B | |
| 01/12/1994 | Thallium | 2 | TS | 1437.4 | .03447 | .30000 | 232.71 | | U | U |
| 01/12/1994 | Vanadium | 2 | TS | 1437.4 | .35160 | .17000 | 232.71 | | | |
| 01/12/1994 | Zinc | 2 | TS | 1437.4 | .18991 | .00000 | 232.71 | | | |
| 01/12/1994 | Aluminum | 3 | TS | 1442.8 | .24168 | 33.30000 | 24.69 | | | |
| 01/12/1994 | Arsenic | 3 | TS | 1442.8 | .00028 | .00057 | 24.69 | | B | |
| 01/12/1994 | Barium | 3 | TS | 1442.8 | .00393 | .52000 | 24.69 | | | |
| 01/12/1994 | Beryllium | 3 | TS | 1442.8 | .00016 | .00100 | 24.69 | | U | U |
| 01/12/1994 | Cadmium | 3 | TS | 1442.8 | .00196 | .00140 | 24.69 | | | |
| 01/12/1994 | Chromium | 3 | TS | 1442.8 | .03203 | .00020 | 24.69 | | | |
| 01/12/1994 | Manganese | 3 | TS | 1442.8 | .00710 | .42000 | 24.69 | | | |
| 01/12/1994 | Nickel | 3 | TS | 1442.8 | .00671 | .01000 | 24.69 | | B | |
| 01/12/1994 | Particulate Fluoride | 3 | TS | 1442.8 | 1.27871 | 8.30000 | 24.69 | | U | U |
| 01/12/1994 | Phosphorus | 3 | TS | 1442.8 | 1.36822 | .30000 | 24.69 | | | |
| 01/12/1994 | Selenium | 3 | TS | 1442.8 | .01605 | .70000 | 24.69 | | U | U |
| 01/12/1994 | Silver | 3 | TS | 1442.8 | .00112 | .30000 | 24.69 | | U | U |
| 01/12/1994 | Thallium | 3 | TS | 1442.8 | .03203 | .30000 | 24.69 | | U | U |
| 01/12/1994 | Vanadium | 3 | TS | 1442.8 | .03382 | .17000 | 24.69 | | | |
| 01/12/1994 | Zinc | 3 | TS | 1442.8 | .01618 | .00000 | 24.69 | | B | |
| 01/12/1994 | Aluminum | 4 | TS | 1428.4 | .13328 | 33.30000 | 12.50 | | | |
| 01/12/1994 | Arsenic | 4 | TS | 1428.4 | .00021 | .00057 | 12.50 | | B | |
| 01/12/1994 | Barium | 4 | TS | 1428.4 | .00341 | .52000 | 12.50 | | | |
| 01/12/1994 | Beryllium | 4 | TS | 1428.4 | .00018 | .00100 | 12.50 | | U | U |
| 01/12/1994 | Cadmium | 4 | TS | 1428.4 | .00140 | .00140 | 12.50 | | U | U |
| 01/12/1994 | Chromium | 4 | TS | 1428.4 | .00165 | .00020 | 12.50 | | | U |
| 01/12/1994 | Manganese | 4 | TS | 1428.4 | .00486 | .42000 | 12.50 | | | |
| 01/12/1994 | Nickel | 4 | TS | 1428.4 | .00350 | .01000 | 12.50 | | U | U |
| 01/12/1994 | Particulate Fluoride | 4 | TS | 1428.4 | 1.39560 | 8.30000 | 12.50 | | U | U |
| 01/12/1994 | Phosphorus | 4 | TS | 1428.4 | .21492 | .30000 | 12.50 | | B | U |
| 01/12/1994 | Selenium | 4 | TS | 1428.4 | .01751 | .70000 | 12.50 | | U | U |
| 01/12/1994 | Silver | 4 | TS | 1428.4 | .00122 | .30000 | 12.50 | | U | U |
| 01/12/1994 | Thallium | 4 | TS | 1428.4 | .03496 | .30000 | 12.50 | | U | U |
| 01/12/1994 | Vanadium | 4 | TS | 1428.4 | .00175 | .17000 | 12.50 | | U | U |
| 01/12/1994 | Zinc | 4 | TS | 1428.4 | .00837 | .00000 | 12.50 | | B | |
| 01/12/1994 | Aluminum | 5 | TS | 1437.6 | .03622 | 33.30000 | 1.46 | | B | U |
| 01/12/1994 | Arsenic | 5 | TS | 1437.6 | .00017 | .00057 | 1.46 | | U | U |
| 01/12/1994 | Barium | 5 | TS | 1437.6 | .00174 | .52000 | 1.46 | | U | U |
| 01/12/1994 | Beryllium | 5 | TS | 1437.6 | .00017 | .00100 | 1.46 | | U | U |
| 01/12/1994 | Cadmium | 5 | TS | 1437.6 | .00139 | .00140 | 1.46 | | U | U |
| 01/12/1994 | Chromium | 5 | TS | 1437.6 | .00068 | .00020 | 1.46 | | | U |
| 01/12/1994 | Manganese | 5 | TS | 1437.6 | .00076 | .42000 | 1.46 | | B | |
| 01/12/1994 | Nickel | 5 | TS | 1437.6 | .00348 | .01000 | 1.46 | | U | U |
| 01/12/1994 | Particulate Fluoride | 5 | TS | 1437.6 | 1.39028 | 8.30000 | 1.46 | | U | U |
| 01/12/1994 | Phosphorus | 5 | TS | 1437.6 | .19881 | .30000 | 1.46 | | B | U |
| 01/12/1994 | Selenium | 5 | TS | 1437.6 | .01745 | .70000 | 1.46 | | U | U |
| 01/12/1994 | Silver | 5 | TS | 1437.6 | .00122 | .30000 | 1.46 | | U | U |
| 01/12/1994 | Thallium | 5 | TS | 1437.6 | .03483 | .30000 | 1.46 | | U | U |
| 01/12/1994 | Vanadium | 5 | TS | 1437.6 | .00174 | .17000 | 1.46 | | U | U |
| 01/12/1994 | Zinc | 5 | TS | 1437.6 | .00437 | .00000 | 1.46 | | B | |

| Sample Date | Chemical Name | Site # | Typ | Run Time (min.) | Chem Conc. (ug/m3) | EPA Scr. L(ug/m3) | Part.C. (ug/m3) | Grav. Val | Qual. Lab | Qual. Val |
|---|---|---|---|---|---|---|---|---|---|---|
| 01/12/1994 | Aluminum | 6 | TS | 1437.6 | .04780 | 33.30000 | 2.70 | | | U |
| 01/12/1994 | Arsenic | 6 | TS | 1437.6 | .00017 | .00057 | 2.70 | | U | U |
| 01/12/1994 | Barium | 6 | TS | 1437.6 | .00165 | .52000 | 2.70 | | U | U |
| 01/12/1994 | Beryllium | 6 | TS | 1437.6 | .00017 | .00100 | 2.70 | | U | U |
| 01/12/1994 | Cadmium | 6 | TS | 1437.6 | .00131 | .00140 | 2.70 | | U | U |
| 01/12/1994 | Chromium | 6 | TS | 1437.6 | .00057 | .00020 | 2.70 | | | U |
| 01/12/1994 | Manganese | 6 | TS | 1437.6 | .00178 | .42000 | 2.70 | | B | |
| 01/12/1994 | Nickel | 6 | TS | 1437.6 | .00329 | .01000 | 2.70 | | U | U |
| 01/12/1994 | Particulate Fluoride | 6 | TS | 1437.6 | 1.40699 | 8.30000 | 2.70 | | B | |
| 01/12/1994 | Phosphorus | 6 | TS | 1437.6 | .16634 | .30000 | 2.70 | | B | U |
| 01/12/1994 | Selenium | 6 | TS | 1437.6 | .01650 | .70000 | 2.70 | | U | U |
| 01/12/1994 | Silver | 6 | TS | 1437.6 | .00115 | .30000 | 2.70 | | U | U |
| 01/12/1994 | Thallium | 6 | TS | 1437.6 | .03294 | .30000 | 2.70 | | U | U |
| 01/12/1994 | Vanadium | 6 | TS | 1437.6 | .00165 | .17000 | 2.70 | | U | U |
| 01/12/1994 | Zinc | 6 | TS | 1437.6 | .00320 | .00000 | 2.70 | | B | |
| 01/12/1994 | Aluminum | 7 | TS | 1452.7 | .02729 | 33.30000 | .81 | | B | U |
| 01/12/1994 | Arsenic | 7 | TS | 1452.7 | .00017 | .00057 | .81 | | U | U |
| 01/12/1994 | Barium | 7 | TS | 1452.7 | .00169 | .52000 | .81 | | U | U |
| 01/12/1994 | Beryllium | 7 | TS | 1452.7 | .00017 | .00100 | .81 | | U | U |
| 01/12/1994 | Cadmium | 7 | TS | 1452.7 | .00134 | .00140 | .81 | | U | U |
| 01/12/1994 | Chromium | 7 | TS | 1452.7 | .00057 | .00020 | .81 | | | U |
| 01/12/1994 | Manganese | 7 | TS | 1452.7 | .00073 | .42000 | .81 | | B | |
| 01/12/1994 | Nickel | 7 | TS | 1452.7 | .00337 | .01000 | .81 | | U | U |
| 01/12/1994 | Particulate Fluoride | 7 | TS | 1452.7 | 1.48548 | 8.30000 | .81 | | B | |
| 01/12/1994 | Phosphorus | 7 | TS | 1452.7 | .17207 | .30000 | .81 | | B | U |
| 01/12/1994 | Selenium | 7 | TS | 1452.7 | .01687 | .70000 | .81 | | U | U |
| 01/12/1994 | Silver | 7 | TS | 1452.7 | .00118 | .30000 | .81 | | U | U |
| 01/12/1994 | Thallium | 7 | TS | 1452.7 | .03368 | .30000 | .81 | | U | U |
| 01/12/1994 | Vanadium | 7 | TS | 1452.7 | .00169 | .17000 | .81 | | U | U |
| 01/12/1994 | Zinc | 7 | TS | 1452.7 | .00147 | .00000 | .81 | | B | |
| 01/16/1994 | Aluminum | 1 | TS | 1444.7 | .36197 | 33.30000 | 66.98 | | | |
| 01/16/1994 | Arsenic | 1 | TS | 1444.7 | .00064 | .00057 | 66.98 | | | |
| 01/16/1994 | Barium | 1 | TS | 1444.7 | .00792 | .52000 | 66.98 | | | |
| 01/16/1994 | Beryllium | 1 | TS | 1444.7 | .00017 | .00100 | 66.98 | | U | U |
| 01/16/1994 | Cadmium | 1 | TS | 1444.7 | .00852 | .00140 | 66.98 | | | |
| 01/16/1994 | Chromium | 1 | TS | 1444.7 | .01950 | .00020 | 66.98 | | | |
| 01/16/1994 | Manganese | 1 | TS | 1444.7 | .00852 | .42000 | 66.98 | | | |
| 01/16/1994 | Nickel | 1 | TS | 1444.7 | .00500 | .01000 | 66.98 | | B | |
| 01/16/1994 | Particulate Fluoride | 1 | TS | 1444.7 | 7.18619 | 8.30000 | 66.98 | | | |
| 01/16/1994 | Phosphorus | 1 | TS | 1444.7 | 3.25375 | .30000 | 66.98 | | | |
| 01/16/1994 | Selenium | 1 | TS | 1444.7 | .01670 | .70000 | 66.98 | | U | U |
| 01/16/1994 | Silver | 1 | TS | 1444.7 | .00116 | .30000 | 66.98 | | U | U |
| 01/16/1994 | Thallium | 1 | TS | 1444.7 | .03334 | .30000 | 66.98 | | U | U |
| 01/16/1994 | Vanadium | 1 | TS | 1444.7 | .02169 | .17000 | 66.98 | | | |
| 01/16/1994 | Zinc | 1 | TS | 1444.7 | .04285 | .00000 | 66.98 | | B | |
| 01/16/1994 | Aluminum | 2 | TS | 1432.2 | 2.44623 | 33.30000 | 281.96 | | | |
| 01/16/1994 | Arsenic | 2 | TS | 1432.2 | .00620 | .00057 | 281.96 | | | |
| 01/16/1994 | Barium | 2 | TS | 1432.2 | .03068 | .52000 | 281.96 | | | |
| 01/16/1994 | Beryllium | 2 | TS | 1432.2 | .00028 | .00100 | 281.96 | | B | |

| Sample Date | Chemical Name | Site # | Typ | Run Time (min.) | Chem Conc. (ug/m3) | EPA Scr. L(ug/m3) | Part.C. (ug/m3) | Grav. Val | Qual. Lab | Qual. Val |
|---|---|---|---|---|---|---|---|---|---|---|
| 01/16/1994 | Cadmium | 2 | TS | 1432.2 | .04742 | .00140 | 281.96 | | | |
| 01/16/1994 | Chromium | 2 | TS | 1432.2 | .17288 | .00020 | 281.96 | | | |
| 01/16/1994 | Manganese | 2 | TS | 1432.2 | .03956 | .42000 | 281.96 | | | |
| 01/16/1994 | Nickel | 2 | TS | 1432.2 | .02159 | .01000 | 281.96 | | | |
| 01/16/1994 | Particulate Fluoride | 2 | TS | 1432.2 | 6.27273 | 8.30000 | 281.96 | | | |
| 01/16/1994 | Phosphorus | 2 | TS | 1432.2 | 19.54250 | .30000 | 281.96 | | | |
| 01/16/1994 | Selenium | 2 | TS | 1432.2 | .06676 | .70000 | 281.96 | | B | |
| 01/16/1994 | Silver | 2 | TS | 1432.2 | .00366 | .30000 | 281.96 | | B | |
| 01/16/1994 | Thallium | 2 | TS | 1432.2 | .03423 | .30000 | 281.96 | | U | U |
| 01/16/1994 | Vanadium | 2 | TS | 1432.2 | .15648 | .17000 | 281.96 | | | |
| 01/16/1994 | Zinc | 2 | TS | 1432.2 | .29450 | .00000 | 281.96 | | | |
| 01/16/1994 | Aluminum | 3 | TS | 1448.3 | .19600 | 33.30000 | 28.82 | | | |
| 01/16/1994 | Arsenic | 3 | TS | 1448.3 | .00025 | .00057 | 28.82 | | B | |
| 01/16/1994 | Barium | 3 | TS | 1448.3 | .00387 | .52000 | 28.82 | | | |
| 01/16/1994 | Beryllium | 3 | TS | 1448.3 | .00016 | .00100 | 28.82 | | U | U |
| 01/16/1994 | Cadmium | 3 | TS | 1448.3 | .00286 | .00140 | 28.82 | | | |
| 01/16/1994 | Chromium | 3 | TS | 1448.3 | .01242 | .00020 | 28.82 | | | |
| 01/16/1994 | Manganese | 3 | TS | 1448.3 | .00580 | .42000 | 28.82 | | | |
| 01/16/1994 | Nickel | 3 | TS | 1448.3 | .00379 | .01000 | 28.82 | | B | |
| 01/16/1994 | Particulate Fluoride | 3 | TS | 1448.3 | 1.46843 | 8.30000 | 28.82 | | B | |
| 01/16/1994 | Phosphorus | 3 | TS | 1448.3 | 1.20374 | .30000 | 28.82 | | | |
| 01/16/1994 | Selenium | 3 | TS | 1448.3 | .01582 | .70000 | 28.82 | | U | U |
| 01/16/1994 | Silver | 3 | TS | 1448.3 | .00110 | .30000 | 28.82 | | U | U |
| 01/16/1994 | Thallium | 3 | TS | 1448.3 | .03157 | .30000 | 28.82 | | U | U |
| 01/16/1994 | Vanadium | 3 | TS | 1448.3 | .01500 | .17000 | 28.82 | | | |
| 01/16/1994 | Zinc | 3 | TS | 1448.3 | .01689 | .00000 | 28.82 | | B | |
| 01/16/1994 | Aluminum | 4 | TS | 1427.5 | .08153 | 33.30000 | 10.78 | | | |
| 01/16/1994 | Arsenic | 4 | TS | 1427.5 | .00017 | .00057 | 10.78 | | U | U |
| 01/16/1994 | Barium | 4 | TS | 1427.5 | .00199 | .52000 | 10.78 | | B | |
| 01/16/1994 | Beryllium | 4 | TS | 1427.5 | .00017 | .00100 | 10.78 | | U | U |
| 01/16/1994 | Cadmium | 4 | TS | 1427.5 | .00138 | .00140 | 10.78 | | U | U |
| 01/16/1994 | Chromium | 4 | TS | 1427.5 | .00144 | .00020 | 10.78 | | | U |
| 01/16/1994 | Manganese | 4 | TS | 1427.5 | .00314 | .42000 | 10.78 | | | |
| 01/16/1994 | Nickel | 4 | TS | 1427.5 | .00346 | .01000 | 10.78 | | U | U |
| 01/16/1994 | Particulate Fluoride | 4 | TS | 1427.5 | 1.38179 | 8.30000 | 10.78 | | U | U |
| 01/16/1994 | Phosphorus | 4 | TS | 1427.5 | .20243 | .30000 | 10.78 | | B | U |
| 01/16/1994 | Selenium | 4 | TS | 1427.5 | .01734 | .70000 | 10.78 | | U | U |
| 01/16/1994 | Silver | 4 | TS | 1427.5 | .00121 | .30000 | 10.78 | | U | U |
| 01/16/1994 | Thallium | 4 | TS | 1427.5 | .03461 | .30000 | 10.78 | | U | U |
| 01/16/1994 | Vanadium | 4 | TS | 1427.5 | .00173 | .17000 | 10.78 | | U | U |
| 01/16/1994 | Zinc | 4 | TS | 1427.5 | .00620 | .00000 | 10.78 | | B | U |
| 01/16/1994 | Aluminum | 5 | TS | 1437.2 | .05566 | 33.30000 | 5.65 | | | U |
| 01/16/1994 | Arsenic | 5 | TS | 1437.2 | .00017 | .00057 | 5.65 | | U | U |
| 01/16/1994 | Barium | 5 | TS | 1437.2 | .00173 | .52000 | 5.65 | | B | |
| 01/16/1994 | Beryllium | 5 | TS | 1437.2 | .00017 | .00100 | 5.65 | | U | U |
| 01/16/1994 | Cadmium | 5 | TS | 1437.2 | .00138 | .00140 | 5.65 | | U | U |
| 01/16/1994 | Chromium | 5 | TS | 1437.2 | .00102 | .00020 | 5.65 | | | U |
| 01/16/1994 | Manganese | 5 | TS | 1437.2 | .00126 | .42000 | 5.65 | | B | |
| 01/16/1994 | Nickel | 5 | TS | 1437.2 | .00345 | .01000 | 5.65 | | U | U |

| Sample Date | Chemical Name | Site # | Typ | Run Time (min.) | Chem Conc. (ug/m3) | EPA Scr. L(ug/m3) | Part.C. (ug/m3) | Grav. Val | Qual. Lab | Qual. Val |
|---|---|---|---|---|---|---|---|---|---|---|
| 01/16/1994 | Particulate Fluoride | 5 | TS | 1437.2 | 1.67189 | 8.30000 | 5.65 | | B | |
| 01/16/1994 | Phosphorus | 5 | TS | 1437.2 | .18301 | .30000 | 5.65 | | B | U |
| 01/16/1994 | Selenium | 5 | TS | 1437.2 | .01727 | .70000 | 5.65 | | U | U |
| 01/16/1994 | Silver | 5 | TS | 1437.2 | .00120 | .30000 | 5.65 | | U | U |
| 01/16/1994 | Thallium | 5 | TS | 1437.2 | .03447 | .30000 | 5.65 | | U | U |
| 01/16/1994 | Vanadium | 5 | TS | 1437.2 | .00173 | .17000 | 5.65 | | U | U |
| 01/16/1994 | Zinc | 5 | TS | 1437.2 | .00819 | .00000 | 5.65 | | B | |
| 01/16/1994 | Aluminum | 6 | TS | 1435.9 | .04670 | 33.30000 | 5.87 | | | U |
| 01/16/1994 | Arsenic | 6 | TS | 1435.9 | .00016 | .00057 | 5.87 | | U | U |
| 01/16/1994 | Barium | 6 | TS | 1435.9 | .00163 | .52000 | 5.87 | | U | U |
| 01/16/1994 | Beryllium | 6 | TS | 1435.9 | .00016 | .00100 | 5.87 | | U | U |
| 01/16/1994 | Cadmium | 6 | TS | 1435.9 | .00130 | .00140 | 5.87 | | U | U |
| 01/16/1994 | Chromium | 6 | TS | 1435.9 | .00080 | .00020 | 5.87 | | | U |
| 01/16/1994 | Manganese | 6 | TS | 1435.9 | .00132 | .42000 | 5.87 | | B | |
| 01/16/1994 | Nickel | 6 | TS | 1435.9 | .00326 | .01000 | 5.87 | | U | U |
| 01/16/1994 | Particulate Fluoride | 6 | TS | 1435.9 | 1.30265 | 8.30000 | 5.87 | | U | U |
| 01/16/1994 | Phosphorus | 6 | TS | 1435.9 | .18628 | .30000 | 5.87 | | B | U |
| 01/16/1994 | Selenium | 6 | TS | 1435.9 | .01635 | .70000 | 5.87 | | U | U |
| 01/16/1994 | Silver | 6 | TS | 1435.9 | .00114 | .30000 | 5.87 | | U | U |
| 01/16/1994 | Thallium | 6 | TS | 1435.9 | .03263 | .30000 | 5.87 | | U | U |
| 01/16/1994 | Vanadium | 6 | TS | 1435.9 | .00163 | .17000 | 5.87 | | U | U |
| 01/16/1994 | Zinc | 6 | TS | 1435.9 | .00442 | .00000 | 5.87 | | B | |
| 01/16/1994 | Aluminum | 7 | TS | 1460.5 | .02322 | 33.30000 | 5.10 | | B | |
| 01/16/1994 | Arsenic | 7 | TS | 1460.5 | .00017 | .00057 | 5.10 | | U | U |
| 01/16/1994 | Barium | 7 | TS | 1460.5 | .00166 | .52000 | 5.10 | | U | U |
| 01/16/1994 | Beryllium | 7 | TS | 1460.5 | .00017 | .00100 | 5.10 | | U | U |
| 01/16/1994 | Cadmium | 7 | TS | 1460.5 | .00132 | .00140 | 5.10 | | U | U |
| 01/16/1994 | Chromium | 7 | TS | 1460.5 | .00069 | .00020 | 5.10 | | | U |
| 01/16/1994 | Manganese | 7 | TS | 1460.5 | .00119 | .42000 | 5.10 | | B | |
| 01/16/1994 | Nickel | 7 | TS | 1460.5 | .00331 | .01000 | 5.10 | | U | U |
| 01/16/1994 | Particulate Fluoride | 7 | TS | 1460.5 | 1.32308 | 8.30000 | 5.10 | | U | U |
| 01/16/1994 | Phosphorus | 7 | TS | 1460.5 | .16340 | .30000 | 5.10 | | B | U |
| 01/16/1994 | Selenium | 7 | TS | 1460.5 | .01660 | .70000 | 5.10 | | U | U |
| 01/16/1994 | Silver | 7 | TS | 1460.5 | .00116 | .30000 | 5.10 | | B | |
| 01/16/1994 | Thallium | 7 | TS | 1460.5 | .03314 | .30000 | 5.10 | | U | U |
| 01/16/1994 | Vanadium | 7 | TS | 1460.5 | .00166 | .17000 | 5.10 | | U | U |
| 01/16/1994 | Zinc | 7 | TS | 1460.5 | .00163 | .00000 | 5.10 | | B | U |
| 01/18/1994 | Aluminum | 1 | TS | 1442.8 | .45239 | 33.30000 | 55.67 | | | |
| 01/18/1994 | Arsenic | 1 | TS | 1442.8 | .00063 | .00057 | 55.67 | | | |
| 01/18/1994 | Barium | 1 | TS | 1442.8 | .01019 | .52000 | 55.67 | | | |
| 01/18/1994 | Beryllium | 1 | TS | 1442.8 | .00017 | .00100 | 55.67 | | U | U |
| 01/18/1994 | Cadmium | 1 | TS | 1442.8 | .00280 | .00140 | 55.67 | | | |
| 01/18/1994 | Chromium | 1 | TS | 1442.8 | .02219 | .00020 | 55.67 | | | |
| 01/18/1994 | Manganese | 1 | TS | 1442.8 | .01186 | .42000 | 55.67 | | | |
| 01/18/1994 | Nickel | 1 | TS | 1442.8 | .00418 | .01000 | 55.67 | | B | |
| 01/18/1994 | Particulate Fluoride | 1 | TS | 1442.8 | 3.47124 | 8.30000 | 55.67 | | | U |
| 01/18/1994 | Phosphorus | 1 | TS | 1442.8 | 1.39249 | .30000 | 55.67 | | | |

| Sample Date | Chemical Name | Site # | Typ | Run Time (min.) | Chem Conc. (ug/m3) | EPA Scr. L(ug/m3) | Part.C. (ug/m3) | Grav. Val | Qual. Lab | Qual. Val |
|---|---|---|---|---|---|---|---|---|---|---|
| 01/18/1994 | Selenium | 1 | TS | 1442.8 | .01672 | .70000 | 55.67 | | U | U |
| 01/18/1994 | Silver | 1 | TS | 1442.8 | .00117 | .30000 | 55.67 | | U | U |
| 01/18/1994 | Thallium | 1 | TS | 1442.8 | .03338 | .30000 | 55.67 | | U | U |
| 01/18/1994 | Vanadium | 1 | TS | 1442.8 | .02005 | .17000 | 55.67 | | | |
| 01/18/1994 | Zinc | 1 | TS | 1442.8 | .02992 | .00000 | 55.67 | | B | |
| 01/18/1994 | Aluminum | 2 | TS | 1435.3 | 2.32504 | 33.30000 | 198.87 | | | |
| 01/18/1994 | Arsenic | 2 | TS | 1435.3 | .00222 | .00057 | 198.87 | | | |
| 01/18/1994 | Barium | 2 | TS | 1435.3 | .03280 | .52000 | 198.87 | | | |
| 01/18/1994 | Beryllium | 2 | TS | 1435.3 | .00023 | .00100 | 198.87 | | B | |
| 01/18/1994 | Cadmium | 2 | TS | 1435.3 | .02789 | .00140 | 198.87 | | | |
| 01/18/1994 | Chromium | 2 | TS | 1435.3 | .13637 | .00020 | 198.87 | | | |
| 01/18/1994 | Manganese | 2 | TS | 1435.3 | .04514 | .42000 | 198.87 | | | |
| 01/18/1994 | Nickel | 2 | TS | 1435.3 | .02223 | .01000 | 198.87 | | | |
| 01/18/1994 | Particulate Fluoride | 2 | TS | 1435.3 | 4.41143 | 8.30000 | 198.87 | | | U |
| 01/18/1994 | Phosphorus | 2 | TS | 1435.3 | 9.75015 | .30000 | 198.87 | | | |
| 01/18/1994 | Selenium | 2 | TS | 1435.3 | .02645 | .70000 | 198.87 | | B | |
| 01/18/1994 | Silver | 2 | TS | 1435.3 | .00203 | .30000 | 198.87 | | B | |
| 01/18/1994 | Thallium | 2 | TS | 1435.3 | .03416 | .30000 | 198.87 | | U | U |
| 01/18/1994 | Vanadium | 2 | TS | 1435.3 | .14182 | .17000 | 198.87 | | | |
| 01/18/1994 | Zinc | 2 | TS | 1435.3 | .15478 | .00000 | 198.87 | | | |
| 01/18/1994 | Aluminum | 3 | TS | 1444.2 | .34192 | 33.30000 | 38.77 | | | |
| 01/18/1994 | Arsenic | 3 | TS | 1444.2 | .00052 | .00057 | 38.77 | | B | |
| 01/18/1994 | Barium | 3 | TS | 1444.2 | .00777 | .52000 | 38.77 | | | |
| 01/18/1994 | Beryllium | 3 | TS | 1444.2 | .00016 | .00100 | 38.77 | | U | U |
| 01/18/1994 | Cadmium | 3 | TS | 1444.2 | .00187 | .00140 | 38.77 | | | |
| 01/18/1994 | Chromium | 3 | TS | 1444.2 | .00585 | .00020 | 38.77 | | | |
| 01/18/1994 | Manganese | 3 | TS | 1444.2 | .01176 | .42000 | 38.77 | | | |
| 01/18/1994 | Nickel | 3 | TS | 1444.2 | .00317 | .01000 | 38.77 | | U | U |
| 01/18/1994 | Particulate Fluoride | 3 | TS | 1444.2 | 2.03510 | 8.30000 | 38.77 | | B | U |
| 01/18/1994 | Phosphorus | 3 | TS | 1444.2 | .69522 | .30000 | 38.77 | | | U |
| 01/18/1994 | Selenium | 3 | TS | 1444.2 | .01586 | .70000 | 38.77 | | U | U |
| 01/18/1994 | Silver | 3 | TS | 1444.2 | .00111 | .30000 | 38.77 | | U | U |
| 01/18/1994 | Thallium | 3 | TS | 1444.2 | .03166 | .30000 | 38.77 | | U | U |
| 01/18/1994 | Vanadium | 3 | TS | 1444.2 | .00535 | .17000 | 38.77 | | | |
| 01/18/1994 | Zinc | 3 | TS | 1444.2 | .02218 | .00000 | 38.77 | | B | |
| 01/18/1994 | Aluminum | 4 | TS | 1428.9 | .67780 | 33.30000 | 76.45 | | | |
| 01/18/1994 | Arsenic | 4 | TS | 1428.9 | .00084 | .00057 | 76.45 | | | |
| 01/18/1994 | Barium | 4 | TS | 1428.9 | .01229 | .52000 | 76.45 | | | |
| 01/18/1994 | Beryllium | 4 | TS | 1428.9 | .00017 | .00100 | 76.45 | | B | |
| 01/18/1994 | Cadmium | 4 | TS | 1428.9 | .00138 | .00140 | 76.45 | | U | U |
| 01/18/1994 | Chromium | 4 | TS | 1428.9 | .01118 | .00020 | 76.45 | | | |
| 01/18/1994 | Manganese | 4 | TS | 1428.9 | .02112 | .42000 | 76.45 | | | |
| 01/18/1994 | Nickel | 4 | TS | 1428.9 | .00380 | .01000 | 76.45 | | B | |
| 01/18/1994 | Particulate Fluoride | 4 | TS | 1428.9 | 2.27082 | 8.30000 | 76.45 | | B | U |
| 01/18/1994 | Phosphorus | 4 | TS | 1428.9 | .86968 | .30000 | 76.45 | | | U |
| 01/18/1994 | Selenium | 4 | TS | 1428.9 | .01815 | .70000 | 76.45 | | B | |
| 01/18/1994 | Silver | 4 | TS | 1428.9 | .00121 | .30000 | 76.45 | | U | U |
| 01/18/1994 | Thallium | 4 | TS | 1428.9 | .03458 | .30000 | 76.45 | | U | U |
| 01/18/1994 | Vanadium | 4 | TS | 1428.9 | .00904 | .17000 | 76.45 | | | |

| Sample Date | Chemical Name | Site # | Typ | Run Time (min.) | Chem Conc. (ug/m3) | EPA Scr. L(ug/m3) | Part.C. (ug/m3) | Grav. Val | Qual. Lab | Qual. Val |
|---|---|---|---|---|---|---|---|---|---|---|
| 01/18/1994 | Zinc | 4 | TS | 1428.9 | .03078 | .00000 | 76.45 | | B | |
| 01/18/1994 | Aluminum | 5 | TS | 1436.0 | .37597 | 33.30000 | 56.08 | | | |
| 01/18/1994 | Arsenic | 5 | TS | 1436.0 | .00075 | .00057 | 56.08 | | | |
| 01/18/1994 | Barium | 5 | TS | 1436.0 | .00744 | .52000 | 56.08 | | | |
| 01/18/1994 | Beryllium | 5 | TS | 1436.0 | .00017 | .00100 | 56.08 | | U | U |
| 01/18/1994 | Cadmium | 5 | TS | 1436.0 | .00533 | .00140 | 56.08 | | | |
| 01/18/1994 | Chromium | 5 | TS | 1436.0 | .02293 | .00020 | 56.08 | | | |
| 01/18/1994 | Manganese | 5 | TS | 1436.0 | .00902 | .42000 | 56.08 | | | |
| 01/18/1994 | Nickel | 5 | TS | 1436.0 | .00673 | .01000 | 56.08 | | B | |
| 01/18/1994 | Particulate Fluoride | 5 | TS | 1436.0 | 2.52714 | 8.30000 | 56.08 | | B | U |
| 01/18/1994 | Phosphorus | 5 | TS | 1436.0 | 2.14153 | .30000 | 56.08 | | | |
| 01/18/1994 | Selenium | 5 | TS | 1436.0 | .01728 | .70000 | 56.08 | | U | U |
| 01/18/1994 | Silver | 5 | TS | 1436.0 | .00121 | .30000 | 56.08 | | U | U |
| 01/18/1994 | Thallium | 5 | TS | 1436.0 | .03450 | .30000 | 56.08 | | U | U |
| 01/18/1994 | Vanadium | 5 | TS | 1436.0 | .02314 | .17000 | 56.08 | | | |
| 01/18/1994 | Zinc | 5 | TS | 1436.0 | .03002 | .00000 | 56.08 | | B | |
| 01/18/1994 | Aluminum | 6 | TS | 1438.3 | .09233 | 33.30000 | 11.52 | | | U |
| 01/18/1994 | Arsenic | 6 | TS | 1438.3 | .00034 | .00057 | 11.52 | | B | |
| 01/18/1994 | Barium | 6 | TS | 1438.3 | .00358 | .52000 | 11.52 | | | |
| 01/18/1994 | Beryllium | 6 | TS | 1438.3 | .00016 | .00100 | 11.52 | | U | U |
| 01/18/1994 | Cadmium | 6 | TS | 1438.3 | .00130 | .00140 | 11.52 | | U | U |
| 01/18/1994 | Chromium | 6 | TS | 1438.3 | .00094 | .00020 | 11.52 | | | U |
| 01/18/1994 | Manganese | 6 | TS | 1438.3 | .00342 | .42000 | 11.52 | | | |
| 01/18/1994 | Nickel | 6 | TS | 1438.3 | .00326 | .01000 | 11.52 | | U | U |
| 01/18/1994 | Particulate Fluoride | 6 | TS | 1438.3 | 1.30048 | 8.30000 | 11.52 | | U | U |
| 01/18/1994 | Phosphorus | 6 | TS | 1438.3 | .17947 | .30000 | 11.52 | | B | U |
| 01/18/1994 | Selenium | 6 | TS | 1438.3 | .01632 | .70000 | 11.52 | | U | U |
| 01/18/1994 | Silver | 6 | TS | 1438.3 | .00114 | .30000 | 11.52 | | U | U |
| 01/18/1994 | Thallium | 6 | TS | 1438.3 | .03258 | .30000 | 11.52 | | U | U |
| 01/18/1994 | Vanadium | 6 | TS | 1438.3 | .00163 | .17000 | 11.52 | | U | U |
| 01/18/1994 | Zinc | 6 | TS | 1438.3 | .00494 | .00000 | 11.52 | | B | |
| 01/18/1994 | Aluminum | 7 | TS | 1450.7 | .31036 | 33.30000 | 66.44 | | | |
| 01/18/1994 | Arsenic | 7 | TS | 1450.7 | .00069 | .00057 | 66.44 | | | |
| 01/18/1994 | Barium | 7 | TS | 1450.7 | .00617 | .52000 | 66.44 | | | |
| 01/18/1994 | Beryllium | 7 | TS | 1450.7 | .00017 | .00100 | 66.44 | | U | U |
| 01/18/1994 | Cadmium | 7 | TS | 1450.7 | .00534 | .00140 | 66.44 | | | |
| 01/18/1994 | Chromium | 7 | TS | 1450.7 | .01066 | .00020 | 66.44 | | | |
| 01/18/1994 | Manganese | 7 | TS | 1450.7 | .00799 | .42000 | 66.44 | | | |
| 01/18/1994 | Nickel | 7 | TS | 1450.7 | .00509 | .01000 | 66.44 | | B | |
| 01/18/1994 | Particulate Fluoride | 7 | TS | 1450.7 | 4.66872 | 8.30000 | 66.44 | | | U |
| 01/18/1994 | Phosphorus | 7 | TS | 1450.7 | 2.13789 | .30000 | 66.44 | | | |
| 01/18/1994 | Selenium | 7 | TS | 1450.7 | .01672 | .70000 | 66.44 | | U | |
| 01/18/1994 | Silver | 7 | TS | 1450.7 | .00117 | .30000 | 66.44 | | U | U |
| 01/18/1994 | Thallium | 7 | TS | 1450.7 | .03337 | .30000 | 66.44 | | U | U |
| 01/18/1994 | Vanadium | 7 | TS | 1450.7 | .01026 | .17000 | 66.44 | | | |
| 01/18/1994 | Zinc | 7 | TS | 1450.7 | .02617 | .00000 | 66.44 | | B | |
| 01/20/1994 | Aluminum | 1 | TS | 1448.7 | .69663 | 33.30000 | 89.48 | | | |
| 01/20/1994 | Arsenic | 1 | TS | 1448.7 | .00106 | .00057 | 89.48 | | | |
| 01/20/1994 | Barium | 1 | TS | 1448.7 | .02050 | .52000 | 89.48 | | | |

| Sample Date | Chemical Name | Site # | Typ | Run Time (min.) | Chem Conc. (ug/m3) | EPA Scr. L(ug/m3) | Part.C. Grav. (ug/m3) | Qual. Val | Lab Val |
|---|---|---|---|---|---|---|---|---|---|
| 01/20/1994 | Beryllium | 1 | TS | 1448.7 | .00017 | .00100 | 89.48 | U | U |
| 01/20/1994 | Cadmium | 1 | TS | 1448.7 | .00427 | .00140 | 89.48 | | |
| 01/20/1994 | Chromium | 1 | TS | 1448.7 | .01199 | .00020 | 89.48 | | |
| 01/20/1994 | Manganese | 1 | TS | 1448.7 | .02063 | .42000 | 89.48 | | |
| 01/20/1994 | Nickel | 1 | TS | 1448.7 | .00621 | .01000 | 89.48 | B | |
| 01/20/1994 | Particulate Fluoride | 1 | TS | 1448.7 | 2.49178 | 8.30000 | 89.48 | B | |
| 01/20/1994 | Phosphorus | 1 | TS | 1448.7 | 1.55401 | .30000 | 89.48 | | |
| 01/20/1994 | Selenium | 1 | TS | 1448.7 | .01681 | .70000 | 89.48 | U | U |
| 01/20/1994 | Silver | 1 | TS | 1448.7 | .00131 | .30000 | 89.48 | B | |
| 01/20/1994 | Thallium | 1 | TS | 1448.7 | .03356 | .30000 | 89.48 | U | U |
| 01/20/1994 | Vanadium | 1 | TS | 1448.7 | .01440 | .17000 | 89.48 | | |
| 01/20/1994 | Zinc | 1 | TS | 1448.7 | .04937 | .00000 | 89.48 | B | |
| 01/20/1994 | Aluminum | 2 | TS | 1435.9 | 1.74807 | 33.30000 | 173.22 | | |
| 01/20/1994 | Arsenic | 2 | TS | 1435.9 | .00207 | .00057 | 173.22 | | |
| 01/20/1994 | Barium | 2 | TS | 1435.9 | .03090 | .52000 | 173.22 | | |
| 01/20/1994 | Beryllium | 2 | TS | 1435.9 | .00017 | .00100 | 173.22 | U | U |
| 01/20/1994 | Cadmium | 2 | TS | 1435.9 | .01159 | .00140 | 173.22 | | |
| 01/20/1994 | Chromium | 2 | TS | 1435.9 | .05346 | .00020 | 173.22 | | |
| 01/20/1994 | Manganese | 2 | TS | 1435.9 | .04397 | .42000 | 173.22 | | |
| 01/20/1994 | Nickel | 2 | TS | 1435.9 | .01342 | .01000 | 173.22 | | |
| 01/20/1994 | Particulate Fluoride | 2 | TS | 1435.9 | 3.53001 | 8.30000 | 173.22 | | |
| 01/20/1994 | Phosphorus | 2 | TS | 1435.9 | 4.79025 | .30000 | 173.22 | | |
| 01/20/1994 | Selenium | 2 | TS | 1435.9 | .01701 | .70000 | 173.22 | U | U |
| 01/20/1994 | Silver | 2 | TS | 1435.9 | .00119 | .30000 | 173.22 | B | |
| 01/20/1994 | Thallium | 2 | TS | 1435.9 | .03395 | .30000 | 173.22 | U | U |
| 01/20/1994 | Vanadium | 2 | TS | 1435.9 | .07792 | .17000 | 173.22 | | |
| 01/20/1994 | Zinc | 2 | TS | 1435.9 | .12128 | .00000 | 173.22 | | |
| 01/20/1994 | Aluminum | 3 | TS | 1444.7 | .38995 | 33.30000 | 78.76 | | |
| 01/20/1994 | Arsenic | 3 | TS | 1444.7 | .00104 | .00057 | 78.76 | | |
| 01/20/1994 | Barium | 3 | TS | 1444.7 | .01168 | .52000 | 78.76 | | |
| 01/20/1994 | Beryllium | 3 | TS | 1444.7 | .00017 | .00100 | 78.76 | U | U |
| 01/20/1994 | Cadmium | 3 | TS | 1444.7 | .00226 | .00140 | 78.76 | | |
| 01/20/1994 | Chromium | 3 | TS | 1444.7 | .00559 | .00020 | 78.76 | | |
| 01/20/1994 | Manganese | 3 | TS | 1444.7 | .01339 | .42000 | 78.76 | | |
| 01/20/1994 | Nickel | 3 | TS | 1444.7 | .00331 | .01000 | 78.76 | U | U |
| 01/20/1994 | Particulate Fluoride | 3 | TS | 1444.7 | 1.72871 | 8.30000 | 78.76 | B | |
| 01/20/1994 | Phosphorus | 3 | TS | 1444.7 | .79178 | .30000 | 78.76 | | |
| 01/20/1994 | Selenium | 3 | TS | 1444.7 | .01656 | .70000 | 78.76 | U | U |
| 01/20/1994 | Silver | 3 | TS | 1444.7 | .00115 | .30000 | 78.76 | U | U |
| 01/20/1994 | Thallium | 3 | TS | 1444.7 | .03306 | .30000 | 78.76 | U | U |
| 01/20/1994 | Vanadium | 3 | TS | 1444.7 | .00493 | .17000 | 78.76 | | |
| 01/20/1994 | Zinc | 3 | TS | 1444.7 | .03062 | .00000 | 78.76 | B | |
| 01/20/1994 | Aluminum | 4 | TS | 1431.3 | .80734 | 33.30000 | 103.00 | | |
| 01/20/1994 | Arsenic | 4 | TS | 1431.3 | .00119 | .00057 | 103.00 | | |
| 01/20/1994 | Barium | 4 | TS | 1431.3 | .01857 | .52000 | 103.00 | | |
| 01/20/1994 | Beryllium | 4 | TS | 1431.3 | .00027 | .00100 | 103.00 | B | |
| 01/20/1994 | Cadmium | 4 | TS | 1431.3 | .00383 | .00140 | 103.00 | | |
| 01/20/1994 | Chromium | 4 | TS | 1431.3 | .01070 | .00020 | 103.00 | | |
| 01/20/1994 | Manganese | 4 | TS | 1431.3 | .02563 | .42000 | 103.00 | | |

| Sample Date | Chemical Name | Site # | Typ | Run Time (min.) | Chem Conc. (ug/m3) | EPA Scr. L(ug/m3) | Part.C. (ug/m3) | Grav. Val | Qual. Lab | Qual. Val |
|---|---|---|---|---|---|---|---|---|---|---|
| 01/20/1994 | Nickel | 4 | TS | 1431.3 | .00556 | .01000 | 103.00 | | B | U |
| 01/20/1994 | Particulate Fluoride | 4 | TS | 1431.3 | 2.16637 | 8.30000 | 103.00 | | B | |
| 01/20/1994 | Phosphorus | 4 | TS | 1431.3 | 1.27157 | .30000 | 103.00 | | | |
| 01/20/1994 | Selenium | 4 | TS | 1431.3 | .01689 | .70000 | 103.00 | | U | U |
| 01/20/1994 | Silver | 4 | TS | 1431.3 | .00118 | .30000 | 103.00 | | U | U |
| 01/20/1994 | Thallium | 4 | TS | 1431.3 | .03371 | .30000 | 103.00 | | U | U |
| 01/20/1994 | Vanadium | 4 | TS | 1431.3 | .01043 | .17000 | 103.00 | | | |
| 01/20/1994 | Zinc | 4 | TS | 1431.3 | .04770 | .00000 | 103.00 | | B | |
| 01/20/1994 | Aluminum | 5 | TS | 1440.2 | .50441 | 33.30000 | 101.56 | | | |
| 01/20/1994 | Arsenic | 5 | TS | 1440.2 | .00118 | .00057 | 101.56 | | | |
| 01/20/1994 | Barium | 5 | TS | 1440.2 | .00915 | .52000 | 101.56 | | | |
| 01/20/1994 | Beryllium | 5 | TS | 1440.2 | .00017 | .00100 | 101.56 | | U | U |
| 01/20/1994 | Cadmium | 5 | TS | 1440.2 | .00611 | .00140 | 101.56 | | | |
| 01/20/1994 | Chromium | 5 | TS | 1440.2 | .01597 | .00020 | 101.56 | | | |
| 01/20/1994 | Manganese | 5 | TS | 1440.2 | .01235 | .42000 | 101.56 | | | |
| 01/20/1994 | Nickel | 5 | TS | 1440.2 | .00539 | .01000 | 101.56 | | B | U |
| 01/20/1994 | Particulate Fluoride | 5 | TS | 1440.2 | 3.10565 | 8.30000 | 101.56 | | B | |
| 01/20/1994 | Phosphorus | 5 | TS | 1440.2 | 2.42991 | .30000 | 101.56 | | | |
| 01/20/1994 | Selenium | 5 | TS | 1440.2 | .01713 | .70000 | 101.56 | | U | U |
| 01/20/1994 | Silver | 5 | TS | 1440.2 | .00119 | .30000 | 101.56 | | B | |
| 01/20/1994 | Thallium | 5 | TS | 1440.2 | .03420 | .30000 | 101.56 | | U | U |
| 01/20/1994 | Vanadium | 5 | TS | 1440.2 | .01727 | .17000 | 101.56 | | | |
| 01/20/1994 | Zinc | 5 | TS | 1440.2 | .06566 | .00000 | 101.56 | | B | |
| 01/20/1994 | Aluminum | 6 | TS | 1439.4 | .16859 | 33.30000 | 26.18 | | | |
| 01/20/1994 | Arsenic | 6 | TS | 1439.4 | .00068 | .00057 | 26.18 | | | |
| 01/20/1994 | Barium | 6 | TS | 1439.4 | .00413 | .52000 | 26.18 | | | |
| 01/20/1994 | Beryllium | 6 | TS | 1439.4 | .00016 | .00100 | 26.18 | | U | U |
| 01/20/1994 | Cadmium | 6 | TS | 1439.4 | .00129 | .00140 | 26.18 | | U | U |
| 01/20/1994 | Chromium | 6 | TS | 1439.4 | .00165 | .00020 | 26.18 | | | U |
| 01/20/1994 | Manganese | 6 | TS | 1439.4 | .00610 | .42000 | 26.18 | | | |
| 01/20/1994 | Nickel | 6 | TS | 1439.4 | .00324 | .01000 | 26.18 | | U | U |
| 01/20/1994 | Particulate Fluoride | 6 | TS | 1439.4 | 1.57607 | 8.30000 | 26.18 | | B | |
| 01/20/1994 | Phosphorus | 6 | TS | 1439.4 | .30746 | .30000 | 26.18 | | B | U |
| 01/20/1994 | Selenium | 6 | TS | 1439.4 | .01621 | .70000 | 26.18 | | U | U |
| 01/20/1994 | Silver | 6 | TS | 1439.4 | .00113 | .30000 | 26.18 | | U | U |
| 01/20/1994 | Thallium | 6 | TS | 1439.4 | .03236 | .30000 | 26.18 | | U | U |
| 01/20/1994 | Vanadium | 6 | TS | 1439.4 | .00162 | .17000 | 26.18 | | U | U |
| 01/20/1994 | Zinc | 6 | TS | 1439.4 | .01305 | .00000 | 26.18 | | B | |
| 01/20/1994 | Aluminum | 7 | TS | 1447.7 | .49561 | 33.30000 | 74.62 | | | |
| 01/20/1994 | Arsenic | 7 | TS | 1447.7 | .00131 | .00057 | 74.62 | | | |
| 01/20/1994 | Barium | 7 | TS | 1447.7 | .01148 | .52000 | 74.62 | | | |
| 01/20/1994 | Beryllium | 7 | TS | 1447.7 | .00017 | .00100 | 74.62 | | U | U |
| 01/20/1994 | Cadmium | 7 | TS | 1447.7 | .00267 | .00140 | 74.62 | | | |
| 01/20/1994 | Chromium | 7 | TS | 1447.7 | .00876 | .00020 | 74.62 | | | |
| 01/20/1994 | Manganese | 7 | TS | 1447.7 | .01732 | .42000 | 74.62 | | | |
| 01/20/1994 | Nickel | 7 | TS | 1447.7 | .00433 | .01000 | 74.62 | | B | U |
| 01/20/1994 | Particulate Fluoride | 7 | TS | 1447.7 | 2.66053 | 8.30000 | 74.62 | | B | |

| Sample Date | Chemical Name | Site # | Typ | Run Time (min.) | Chem Conc. (ug/m3) | EPA Scr. L(ug/m3) | Part.C. (ug/m3) | Grav. Val | Qual. Lab | Qual. Val |
|---|---|---|---|---|---|---|---|---|---|---|
| 01/20/1994 | Phosphorus | 7 | TS | 1447.7 | 1.37339 | .30000 | 74.62 | | | |
| 01/20/1994 | Selenium | 7 | TS | 1447.7 | .01665 | .70000 | 74.62 | | U | U |
| 01/20/1994 | Silver | 7 | TS | 1447.7 | .00153 | .30000 | 74.62 | | B | |
| 01/20/1994 | Thallium | 7 | TS | 1447.7 | .03324 | .30000 | 74.62 | | U | U |
| 01/20/1994 | Vanadium | 7 | TS | 1447.7 | .00652 | .17000 | 74.62 | | | |
| 01/20/1994 | Zinc | 7 | TS | 1447.7 | .03211 | .00000 | 74.62 | | B | |
| 01/20/1994 | Aluminum | 8 | TS | 1453.5 | .63891 | 33.30000 | 88.78 | | | |
| 01/20/1994 | Arsenic | 8 | TS | 1453.5 | .00105 | .00057 | 88.78 | | | |
| 01/20/1994 | Barium | 8 | TS | 1453.5 | .01889 | .52000 | 88.78 | | | |
| 01/20/1994 | Beryllium | 8 | TS | 1453.5 | .00017 | .00100 | 88.78 | | U | U |
| 01/20/1994 | Cadmium | 8 | TS | 1453.5 | .00412 | .00140 | 88.78 | | | |
| 01/20/1994 | Chromium | 8 | TS | 1453.5 | .01549 | .00020 | 88.78 | | | |
| 01/20/1994 | Manganese | 8 | TS | 1453.5 | .01709 | .42000 | 88.78 | | | |
| 01/20/1994 | Nickel | 8 | TS | 1453.5 | .00477 | .01000 | 88.78 | | B | U |
| 01/20/1994 | Particulate Fluoride | 8 | TS | 1453.5 | 2.91083 | 8.30000 | 88.78 | | B | |
| 01/20/1994 | Phosphorus | 8 | TS | 1453.5 | 1.52885 | .30000 | 88.78 | | | |
| 01/20/1994 | Selenium | 8 | TS | 1453.5 | .01676 | .70000 | 88.78 | | U | U |
| 01/20/1994 | Silver | 8 | TS | 1453.5 | .00126 | .30000 | 88.78 | | B | |
| 01/20/1994 | Thallium | 8 | TS | 1453.5 | .03345 | .30000 | 88.78 | | U | U |
| 01/20/1994 | Vanadium | 8 | TS | 1453.5 | .01195 | .17000 | 88.78 | | | |
| 01/20/1994 | Zinc | 8 | TS | 1453.5 | .04133 | .00000 | 88.78 | | B | |
| 01/24/1994 | Aluminum | 1 | TS | 1442.8 | .38209 | 33.30000 | 32.50 | | | |
| 01/24/1994 | Arsenic | 1 | TS | 1442.8 | .00204 | .00057 | 32.50 | | | |
| 01/24/1994 | Barium | 1 | TS | 1442.8 | .01207 | .52000 | 32.50 | | | |
| 01/24/1994 | Beryllium | 1 | TS | 1442.8 | .00017 | .00100 | 32.50 | | U | U |
| 01/24/1994 | Cadmium | 1 | TS | 1442.8 | .00157 | .00140 | 32.50 | | | |
| 01/24/1994 | Chromium | 1 | TS | 1442.8 | .00645 | .00020 | 32.50 | | | |
| 01/24/1994 | Manganese | 1 | TS | 1442.8 | .01235 | .42000 | 32.50 | | | |
| 01/24/1994 | Nickel | 1 | TS | 1442.8 | .00346 | .01000 | 32.50 | | U | U |
| 01/24/1994 | Particulate Fluoride | 1 | TS | 1442.8 | 1.66904 | 8.30000 | 32.50 | | B | |
| 01/24/1994 | Phosphorus | 1 | TS | 1442.8 | .65175 | .30000 | 32.50 | | | U |
| 01/24/1994 | Selenium | 1 | TS | 1442.8 | .01731 | .70000 | 32.50 | | U | U |
| 01/24/1994 | Silver | 1 | TS | 1442.8 | .00121 | .30000 | 32.50 | | B | |
| 01/24/1994 | Thallium | 1 | TS | 1442.8 | .03455 | .30000 | 32.50 | | U | U |
| 01/24/1994 | Vanadium | 1 | TS | 1442.8 | .00563 | .17000 | 32.50 | | | |
| 01/24/1994 | Zinc | 1 | TS | 1442.8 | .02779 | .00000 | 32.50 | | B | |
| 01/24/1994 | Aluminum | 2 | TS | 1435.5 | 1.09112 | 33.30000 | 117.87 | | | |
| 01/24/1994 | Arsenic | 2 | TS | 1435.5 | .00227 | .00057 | 117.87 | | | |
| 01/24/1994 | Barium | 2 | TS | 1435.5 | .01710 | .52000 | 117.87 | | | |
| 01/24/1994 | Beryllium | 2 | TS | 1435.5 | .00017 | .00100 | 117.87 | | U | U |
| 01/24/1994 | Cadmium | 2 | TS | 1435.5 | .01022 | .00140 | 117.87 | | | |
| 01/24/1994 | Chromium | 2 | TS | 1435.5 | .03746 | .00020 | 117.87 | | | |
| 01/24/1994 | Manganese | 2 | TS | 1435.5 | .03364 | .42000 | 117.87 | | | |
| 01/24/1994 | Nickel | 2 | TS | 1435.5 | .01334 | .01000 | 117.87 | | | |
| 01/24/1994 | Particulate Fluoride | 2 | TS | 1435.5 | 4.12123 | 8.30000 | 117.87 | | | |
| 01/24/1994 | Phosphorus | 2 | TS | 1435.5 | 6.53281 | .30000 | 117.87 | | | |
| 01/24/1994 | Selenium | 2 | TS | 1435.5 | .01744 | .70000 | 117.87 | | U | U |
| 01/24/1994 | Silver | 2 | TS | 1435.5 | .00122 | .30000 | 117.87 | | U | U |
| 01/24/1994 | Thallium | 2 | TS | 1435.5 | .03482 | .30000 | 117.87 | | U | U |

| Sample Date | Chemical Name | Site # | Typ | Run Time (min.) | Chem Conc. (ug/m3) | EPA Scr. L(ug/m3) | Part.C. (ug/m3) | Grav. Val | Qual. Lab | Qual. Val |
|---|---|---|---|---|---|---|---|---|---|---|
| 01/24/1994 | Vanadium | 2 | TS | 1435.5 | .04302 | .17000 | 117.87 | | | |
| 01/24/1994 | Zinc | 2 | TS | 1435.5 | .07992 | .00000 | 117.87 | | | |
| 01/24/1994 | Aluminum | 3 | TS | 1445.2 | .27664 | 33.30000 | 25.99 | | | |
| 01/24/1994 | Arsenic | 3 | TS | 1445.2 | .00214 | .00057 | 25.99 | | | |
| 01/24/1994 | Barium | 3 | TS | 1445.2 | .00737 | .52000 | 25.99 | | | |
| 01/24/1994 | Beryllium | 3 | TS | 1445.2 | .00017 | .00100 | 25.99 | | U | U |
| 01/24/1994 | Cadmium | 3 | TS | 1445.2 | .00135 | .00140 | 25.99 | | U | U |
| 01/24/1994 | Chromium | 3 | TS | 1445.2 | .00224 | .00020 | 25.99 | | | |
| 01/24/1994 | Manganese | 3 | TS | 1445.2 | .01123 | .42000 | 25.99 | | | |
| 01/24/1994 | Nickel | 3 | TS | 1445.2 | .00339 | .01000 | 25.99 | | U | U |
| 01/24/1994 | Particulate Fluoride | 3 | TS | 1445.2 | 1.87354 | 8.30000 | 25.99 | | B | |
| 01/24/1994 | Phosphorus | 3 | TS | 1445.2 | .22388 | .30000 | 25.99 | | B | U |
| 01/24/1994 | Selenium | 3 | TS | 1445.2 | .01698 | .70000 | 25.99 | | U | U |
| 01/24/1994 | Silver | 3 | TS | 1445.2 | .00118 | .30000 | 25.99 | | U | U |
| 01/24/1994 | Thallium | 3 | TS | 1445.2 | .03389 | .30000 | 25.99 | | U | U |
| 01/24/1994 | Vanadium | 3 | TS | 1445.2 | .00212 | .17000 | 25.99 | | B | |
| 01/24/1994 | Zinc | 3 | TS | 1445.2 | .01495 | .00000 | 25.99 | | B | |
| 01/24/1994 | Aluminum | 4 | TS | 1425.6 | .35949 | 33.30000 | 35.76 | | | |
| 01/24/1994 | Arsenic | 4 | TS | 1425.6 | .00224 | .00057 | 35.76 | | | |
| 01/24/1994 | Barium | 4 | TS | 1425.6 | .00956 | .52000 | 35.76 | | | |
| 01/24/1994 | Beryllium | 4 | TS | 1425.6 | .00017 | .00100 | 35.76 | | U | U |
| 01/24/1994 | Cadmium | 4 | TS | 1425.6 | .00139 | .00140 | 35.76 | | U | U |
| 01/24/1994 | Chromium | 4 | TS | 1425.6 | .00375 | .00020 | 35.76 | | | |
| 01/24/1994 | Manganese | 4 | TS | 1425.6 | .01628 | .42000 | 35.76 | | | |
| 01/24/1994 | Nickel | 4 | TS | 1425.6 | .00347 | .01000 | 35.76 | | U | U |
| 01/24/1994 | Particulate Fluoride | 4 | TS | 1425.6 | 1.68318 | 8.30000 | 35.76 | | B | |
| 01/24/1994 | Phosphorus | 4 | TS | 1425.6 | .38166 | .30000 | 35.76 | | | U |
| 01/24/1994 | Selenium | 4 | TS | 1425.6 | .01739 | .70000 | 35.76 | | U | U |
| 01/24/1994 | Silver | 4 | TS | 1425.6 | .00121 | .30000 | 35.76 | | U | U |
| 01/24/1994 | Thallium | 4 | TS | 1425.6 | .03470 | .30000 | 35.76 | | U | U |
| 01/24/1994 | Vanadium | 4 | TS | 1425.6 | .00217 | .17000 | 35.76 | | B | |
| 01/24/1994 | Zinc | 4 | TS | 1425.6 | .03041 | .00000 | 35.76 | | B | |
| 01/24/1994 | Aluminum | 5 | TS | 1434.8 | .17986 | 33.30000 | 14.13 | | | |
| 01/24/1994 | Arsenic | 5 | TS | 1434.8 | .00167 | .00057 | 14.13 | | | |
| 01/24/1994 | Barium | 5 | TS | 1434.8 | .00441 | .52000 | 14.13 | | | |
| 01/24/1994 | Beryllium | 5 | TS | 1434.8 | .00018 | .00100 | 14.13 | | U | U |
| 01/24/1994 | Cadmium | 5 | TS | 1434.8 | .00141 | .00140 | 14.13 | | U | U |
| 01/24/1994 | Chromium | 5 | TS | 1434.8 | .00289 | .00020 | 14.13 | | | |
| 01/24/1994 | Manganese | 5 | TS | 1434.8 | .00528 | .42000 | 14.13 | | | |
| 01/24/1994 | Nickel | 5 | TS | 1434.8 | .00352 | .01000 | 14.13 | | U | U |
| 01/24/1994 | Particulate Fluoride | 5 | TS | 1434.8 | 1.81964 | 8.30000 | 14.13 | | B | |
| 01/24/1994 | Phosphorus | 5 | TS | 1434.8 | .51779 | .30000 | 14.13 | | | U |
| 01/24/1994 | Selenium | 5 | TS | 1434.8 | .01763 | .70000 | 14.13 | | U | U |
| 01/24/1994 | Silver | 5 | TS | 1434.8 | .00160 | .30000 | 14.13 | | B | |
| 01/24/1994 | Thallium | 5 | TS | 1434.8 | .03520 | .30000 | 14.13 | | U | U |
| 01/24/1994 | Vanadium | 5 | TS | 1434.8 | .00257 | .17000 | 14.13 | | B | |
| 01/24/1994 | Zinc | 5 | TS | 1434.8 | .01475 | .00000 | 14.13 | | B | |
| 01/24/1994 | Aluminum | 6 | TS | 1436.1 | .15601 | 33.30000 | 16.54 | | | |
| 01/24/1994 | Arsenic | 6 | TS | 1436.1 | .00134 | .00057 | 16.54 | | | |

| Sample Date | Chemical Name | Site # | Typ | Run Time (min.) | Chem Conc. (ug/m3) | EPA Scr. L(ug/m3) | Part.C. (ug/m3) | Grav. Val | Qual. Lab | Qual. Val |
|---|---|---|---|---|---|---|---|---|---|---|
| 01/24/1994 | Barium | 6 | TS | 1436.1 | .00258 | .52000 | 16.54 | | | |
| 01/24/1994 | Beryllium | 6 | TS | 1436.1 | .00017 | .00100 | 16.54 | | U | U |
| 01/24/1994 | Cadmium | 6 | TS | 1436.1 | .00133 | .00140 | 16.54 | | U | U |
| 01/24/1994 | Chromium | 6 | TS | 1436.1 | .00063 | .00020 | 16.54 | | | U |
| 01/24/1994 | Manganese | 6 | TS | 1436.1 | .00544 | .42000 | 16.54 | | | |
| 01/24/1994 | Nickel | 6 | TS | 1436.1 | .00333 | .01000 | 16.54 | | U | U |
| 01/24/1994 | Particulate Fluoride | 6 | TS | 1436.1 | 1.53359 | 8.30000 | 16.54 | | B | U |
| 01/24/1994 | Phosphorus | 6 | TS | 1436.1 | .15668 | .30000 | 16.54 | | B | U |
| 01/24/1994 | Selenium | 6 | TS | 1436.1 | .01666 | .70000 | 16.54 | | U | U |
| 01/24/1994 | Silver | 6 | TS | 1436.1 | .00116 | .30000 | 16.54 | | U | U |
| 01/24/1994 | Thallium | 6 | TS | 1436.1 | .03326 | .30000 | 16.54 | | U | U |
| 01/24/1994 | Vanadium | 6 | TS | 1436.1 | .00167 | .17000 | 16.54 | | U | U |
| 01/24/1994 | Zinc | 6 | TS | 1436.1 | .00690 | .00000 | 16.54 | | B | U |
| 01/24/1994 | Aluminum | 7 | TS | 1455.1 | .12726 | 33.30000 | 11.72 | | | |
| 01/24/1994 | Arsenic | 7 | TS | 1455.1 | .00163 | .00057 | 11.72 | | | |
| 01/24/1994 | Barium | 7 | TS | 1455.1 | .00314 | .52000 | 11.72 | | | |
| 01/24/1994 | Beryllium | 7 | TS | 1455.1 | .00017 | .00100 | 11.72 | | U | U |
| 01/24/1994 | Cadmium | 7 | TS | 1455.1 | .00135 | .00140 | 11.72 | | U | U |
| 01/24/1994 | Chromium | 7 | TS | 1455.1 | .00114 | .00020 | 11.72 | | | U |
| 01/24/1994 | Manganese | 7 | TS | 1455.1 | .00421 | .42000 | 11.72 | | | |
| 01/24/1994 | Nickel | 7 | TS | 1455.1 | .00339 | .01000 | 11.72 | | U | U |
| 01/24/1994 | Particulate Fluoride | 7 | TS | 1455.1 | 1.74639 | 8.30000 | 11.72 | | B | U |
| 01/24/1994 | Phosphorus | 7 | TS | 1455.1 | .27144 | .30000 | 11.72 | | B | U |
| 01/24/1994 | Selenium | 7 | TS | 1455.1 | .01699 | .70000 | 11.72 | | U | U |
| 01/24/1994 | Silver | 7 | TS | 1455.1 | .00118 | .30000 | 11.72 | | U | U |
| 01/24/1994 | Thallium | 7 | TS | 1455.1 | .03391 | .30000 | 11.72 | | U | U |
| 01/24/1994 | Vanadium | 7 | TS | 1455.1 | .00170 | .17000 | 11.72 | | U | U |
| 01/24/1994 | Zinc | 7 | TS | 1455.1 | .00833 | .00000 | 11.72 | | B | |
| 01/28/1994 | Aluminum | 1 | TS | 1447.6 | .44613 | 33.30000 | 49.86 | | | |
| 01/28/1994 | Arsenic | 1 | TS | 1447.6 | .00037 | .00057 | 49.86 | | B | |
| 01/28/1994 | Barium | 1 | TS | 1447.6 | .01271 | .52000 | 49.86 | | | |
| 01/28/1994 | Beryllium | 1 | TS | 1447.6 | .00017 | .00100 | 49.86 | | U | U |
| 01/28/1994 | Cadmium | 1 | TS | 1447.6 | .00226 | .00140 | 49.86 | | | |
| 01/28/1994 | Chromium | 1 | TS | 1447.6 | .00843 | .00020 | 49.86 | | | |
| 01/28/1994 | Manganese | 1 | TS | 1447.6 | .01171 | .42000 | 49.86 | | | |
| 01/28/1994 | Nickel | 1 | TS | 1447.6 | .00335 | .01000 | 49.86 | | B | |
| 01/28/1994 | Particulate Fluoride | 1 | TS | 1447.6 | 5.09001 | 8.30000 | 49.86 | | | U |
| 01/28/1994 | Phosphorus | 1 | TS | 1447.6 | .95647 | .30000 | 49.86 | | | |
| 01/28/1994 | Selenium | 1 | TS | 1447.6 | .01679 | .70000 | 49.86 | | B | |
| 01/28/1994 | Silver | 1 | TS | 1447.6 | .00117 | .30000 | 49.86 | | U | U |
| 01/28/1994 | Thallium | 1 | TS | 1447.6 | .03351 | .30000 | 49.86 | | U | U |
| 01/28/1994 | Vanadium | 1 | TS | 1447.6 | .00836 | .17000 | 49.86 | | | |
| 01/28/1994 | Zinc | 1 | TS | 1447.6 | .03017 | .00000 | 49.86 | | B | |
| 01/28/1994 | Aluminum | 2 | TS | 1434.4 | .92715 | 33.30000 | 92.97 | | | |
| 01/28/1994 | Arsenic | 2 | TS | 1434.4 | .00097 | .00057 | 92.97 | | | |
| 01/28/1994 | Barium | 2 | TS | 1434.4 | .01638 | .52000 | 92.97 | | | |
| 01/28/1994 | Beryllium | 2 | TS | 1434.4 | .00017 | .00100 | 92.97 | | U | U |
| 01/28/1994 | Cadmium | 2 | TS | 1434.4 | .01137 | .00140 | 92.97 | | | |
| 01/28/1994 | Chromium | 2 | TS | 1434.4 | .02727 | .00020 | 92.97 | | | |

| Sample Date | Chemical Name | Site # | Typ | Run Time (min.) | Chem Conc. (ug/m3) | EPA Scr. L(ug/m3) | Part.C. (ug/m3) | Grav. Val | Qual. Lab | Qual. Val |
|---|---|---|---|---|---|---|---|---|---|---|
| 01/28/1994 | Manganese | 2 | TS | 1434.4 | .02206 | .42000 | 92.97 | | | |
| 01/28/1994 | Nickel | 2 | TS | 1434.4 | .00636 | .01000 | 92.97 | | B | |
| 01/28/1994 | Particulate Fluoride | 2 | TS | 1434.4 | 3.09953 | 8.30000 | 92.97 | | B | U |
| 01/28/1994 | Phosphorus | 2 | TS | 1434.4 | 5.27191 | .30000 | 92.97 | | | |
| 01/28/1994 | Selenium | 2 | TS | 1434.4 | .02118 | .70000 | 92.97 | | B | |
| 01/28/1994 | Silver | 2 | TS | 1434.4 | .00118 | .30000 | 92.97 | | U | U |
| 01/28/1994 | Thallium | 2 | TS | 1434.4 | .03391 | .30000 | 92.97 | | U | U |
| 01/28/1994 | Vanadium | 2 | TS | 1434.4 | .03377 | .17000 | 92.97 | | | |
| 01/28/1994 | Zinc | 2 | TS | 1434.4 | .09272 | .00000 | 92.97 | | | |
| 01/28/1994 | Aluminum | 3 | TS | 1448.7 | .16807 | 33.30000 | 33.44 | | | |
| 01/28/1994 | Arsenic | 3 | TS | 1448.7 | .00019 | .00057 | 33.44 | | B | |
| 01/28/1994 | Barium | 3 | TS | 1448.7 | .00412 | .52000 | 33.44 | | | |
| 01/28/1994 | Beryllium | 3 | TS | 1448.7 | .00016 | .00100 | 33.44 | | U | U |
| 01/28/1994 | Cadmium | 3 | TS | 1448.7 | .00209 | .00140 | 33.44 | | | |
| 01/28/1994 | Chromium | 3 | TS | 1448.7 | .00244 | .00020 | 33.44 | | | |
| 01/28/1994 | Manganese | 3 | TS | 1448.7 | .00670 | .42000 | 33.44 | | | |
| 01/28/1994 | Nickel | 3 | TS | 1448.7 | .00329 | .01000 | 33.44 | | U | U |
| 01/28/1994 | Particulate Fluoride | 3 | TS | 1448.7 | 1.49034 | 8.30000 | 33.44 | | B | U |
| 01/28/1994 | Phosphorus | 3 | TS | 1448.7 | 1.29994 | .30000 | 33.44 | | | |
| 01/28/1994 | Selenium | 3 | TS | 1448.7 | .02219 | .70000 | 33.44 | | B | |
| 01/28/1994 | Silver | 3 | TS | 1448.7 | .00115 | .30000 | 33.44 | | U | U |
| 01/28/1994 | Thallium | 3 | TS | 1448.7 | .03289 | .30000 | 33.44 | | U | U |
| 01/28/1994 | Vanadium | 3 | TS | 1448.7 | .00217 | .17000 | 33.44 | | B | |
| 01/28/1994 | Zinc | 3 | TS | 1448.7 | .02186 | .00000 | 33.44 | | B | |
| 01/28/1994 | Aluminum | 4 | TS | 1428.9 | .22392 | 33.30000 | 31.89 | | | |
| 01/28/1994 | Arsenic | 4 | TS | 1428.9 | .00024 | .00057 | 31.89 | | B | |
| 01/28/1994 | Barium | 4 | TS | 1428.9 | .00672 | .52000 | 31.89 | | | |
| 01/28/1994 | Beryllium | 4 | TS | 1428.9 | .00017 | .00100 | 31.89 | | U | U |
| 01/28/1994 | Cadmium | 4 | TS | 1428.9 | .00134 | .00140 | 31.89 | | U | U |
| 01/28/1994 | Chromium | 4 | TS | 1428.9 | .00297 | .00020 | 31.89 | | | |
| 01/28/1994 | Manganese | 4 | TS | 1428.9 | .01009 | .42000 | 31.89 | | | |
| 01/28/1994 | Nickel | 4 | TS | 1428.9 | .00337 | .01000 | 31.89 | | U | U |
| 01/28/1994 | Particulate Fluoride | 4 | TS | 1428.9 | 1.63400 | 8.30000 | 31.89 | | B | U |
| 01/28/1994 | Phosphorus | 4 | TS | 1428.9 | .20912 | .30000 | 31.89 | | B | U |
| 01/28/1994 | Selenium | 4 | TS | 1428.9 | .01688 | .70000 | 31.89 | | U | U |
| 01/28/1994 | Silver | 4 | TS | 1428.9 | .00118 | .30000 | 31.89 | | U | U |
| 01/28/1994 | Thallium | 4 | TS | 1428.9 | .03369 | .30000 | 31.89 | | U | U |
| 01/28/1994 | Vanadium | 4 | TS | 1428.9 | .00184 | .17000 | 31.89 | | B | |
| 01/28/1994 | Zinc | 4 | TS | 1428.9 | .01802 | .00000 | 31.89 | | B | |
| 01/28/1994 | Aluminum | 5 | TS | 1436.6 | .21916 | 33.30000 | 38.33 | | | |
| 01/28/1994 | Arsenic | 5 | TS | 1436.6 | .00022 | .00057 | 38.33 | | B | |
| 01/28/1994 | Barium | 5 | TS | 1436.6 | .00393 | .52000 | 38.33 | | | |
| 01/28/1994 | Beryllium | 5 | TS | 1436.6 | .00017 | .00100 | 38.33 | | U | U |
| 01/28/1994 | Cadmium | 5 | TS | 1436.6 | .00137 | .00140 | 38.33 | | U | U |
| 01/28/1994 | Chromium | 5 | TS | 1436.6 | .00591 | .00020 | 38.33 | | | |
| 01/28/1994 | Manganese | 5 | TS | 1436.6 | .00481 | .42000 | 38.33 | | | |
| 01/28/1994 | Nickel | 5 | TS | 1436.6 | .00342 | .01000 | 38.33 | | U | U |
| 01/28/1994 | Particulate Fluoride | 5 | TS | 1436.6 | 2.02096 | 8.30000 | 38.33 | | B | U |

| Sample Date | Chemical Name | Site # | Typ | Run Time (min.) | Chem Conc. (ug/m3) | EPA Scr. L(ug/m3) | Part.C. Grav. (ug/m3) | Qual. Val | Lab Val |
|---|---|---|---|---|---|---|---|---|---|
| 01/28/1994 | Phosphorus | 5 | TS | 1436.6 | 1.67275 | .30000 | 38.33 | | |
| 01/28/1994 | Selenium | 5 | TS | 1436.6 | .01714 | .70000 | 38.33 | U | U |
| 01/28/1994 | Silver | 5 | TS | 1436.6 | .00119 | .30000 | 38.33 | U | U |
| 01/28/1994 | Thallium | 5 | TS | 1436.6 | .03421 | .30000 | 38.33 | U | U |
| 01/28/1994 | Vanadium | 5 | TS | 1436.6 | .00500 | .17000 | 38.33 | | |
| 01/28/1994 | Zinc | 5 | TS | 1436.6 | .02089 | .00000 | 38.33 | B | |
| 01/28/1994 | Aluminum | 6 | TS | 1440.0 | .04986 | 33.30000 | 7.41 | | |
| 01/28/1994 | Arsenic | 6 | TS | 1440.0 | .00016 | .00057 | 7.41 | U | U |
| 01/28/1994 | Barium | 6 | TS | 1440.0 | .00258 | .52000 | 7.41 | | |
| 01/28/1994 | Beryllium | 6 | TS | 1440.0 | .00016 | .00100 | 7.41 | U | U |
| 01/28/1994 | Cadmium | 6 | TS | 1440.0 | .00129 | .00140 | 7.41 | U | U |
| 01/28/1994 | Chromium | 6 | TS | 1440.0 | .00050 | .00020 | 7.41 | | U |
| 01/28/1994 | Manganese | 6 | TS | 1440.0 | .00207 | .42000 | 7.41 | | |
| 01/28/1994 | Nickel | 6 | TS | 1440.0 | .00323 | .01000 | 7.41 | U | U |
| 01/28/1994 | Particulate Fluoride | 6 | TS | 1440.0 | 1.37222 | 8.30000 | 7.41 | B | U |
| 01/28/1994 | Phosphorus | 6 | TS | 1440.0 | .19714 | .30000 | 7.41 | B | U |
| 01/28/1994 | Selenium | 6 | TS | 1440.0 | .01617 | .70000 | 7.41 | U | U |
| 01/28/1994 | Silver | 6 | TS | 1440.0 | .00113 | .30000 | 7.41 | U | U |
| 01/28/1994 | Thallium | 6 | TS | 1440.0 | .03228 | .30000 | 7.41 | U | U |
| 01/28/1994 | Vanadium | 6 | TS | 1440.0 | .00162 | .17000 | 7.41 | U | U |
| 01/28/1994 | Zinc | 6 | TS | 1440.0 | .00520 | .00000 | 7.41 | B | U |
| 01/28/1994 | Aluminum | 7 | TS | 1452.4 | .04414 | 33.30000 | 8.39 | | |
| 01/28/1994 | Arsenic | 7 | TS | 1452.4 | .00017 | .00057 | 8.39 | U | U |
| 01/28/1994 | Barium | 7 | TS | 1452.4 | .00190 | .52000 | 8.39 | B | |
| 01/28/1994 | Beryllium | 7 | TS | 1452.4 | .00017 | .00100 | 8.39 | U | U |
| 01/28/1994 | Cadmium | 7 | TS | 1452.4 | .00132 | .00140 | 8.39 | U | U |
| 01/28/1994 | Chromium | 7 | TS | 1452.4 | .00092 | .00020 | 8.39 | | U |
| 01/28/1994 | Manganese | 7 | TS | 1452.4 | .00298 | .42000 | 8.39 | | |
| 01/28/1994 | Nickel | 7 | TS | 1452.4 | .00331 | .01000 | 8.39 | U | U |
| 01/28/1994 | Particulate Fluoride | 7 | TS | 1452.4 | 1.64306 | 8.30000 | 8.39 | B | U |
| 01/28/1994 | Phosphorus | 7 | TS | 1452.4 | .17552 | .30000 | 8.39 | B | U |
| 01/28/1994 | Selenium | 7 | TS | 1452.4 | .01656 | .70000 | 8.39 | U | U |
| 01/28/1994 | Silver | 7 | TS | 1452.4 | .00115 | .30000 | 8.39 | U | U |
| 01/28/1994 | Thallium | 7 | TS | 1452.4 | .03392 | .30000 | 8.39 | B | |
| 01/28/1994 | Vanadium | 7 | TS | 1452.4 | .00166 | .17000 | 8.39 | U | U |
| 01/28/1994 | Zinc | 7 | TS | 1452.4 | .00706 | .00000 | 8.39 | B | U |
| 02/01/1994 | Arsenic | 1 | TS | 1440.4 | .00041 | .00057 | 66.81 | B | |
| 02/01/1994 | Cadmium | 1 | TS | 1440.4 | .00334 | .00140 | 66.81 | | |
| 02/01/1994 | Chromium | 1 | TS | 1440.4 | .01674 | .00020 | 66.81 | | |
| 02/01/1994 | Nickel | 1 | TS | 1440.4 | .00506 | .01000 | 66.81 | B | |
| 02/01/1994 | Particulate Fluoride | 1 | TS | 1440.4 | 2.04486 | 8.30000 | 66.81 | B | |
| 02/01/1994 | Phosphorus | 1 | TS | 1440.4 | 1.31692 | .30000 | 66.81 | | |
| 02/01/1994 | Vanadium | 1 | TS | 1440.4 | .01635 | .17000 | 66.81 | | |
| 02/01/1994 | Zinc | 1 | TS | 1440.4 | .05473 | .00000 | 66.81 | B | |
| 02/01/1994 | Arsenic | 2 | TS | 1433.7 | .00157 | .00057 | 102.45 | | |
| 02/01/1994 | Cadmium | 2 | TS | 1433.7 | .01520 | .00140 | 102.45 | | |
| 02/01/1994 | Chromium | 2 | TS | 1433.7 | .09399 | .00020 | 102.45 | | |
| 02/01/1994 | Nickel | 2 | TS | 1433.7 | .01773 | .01000 | 102.45 | | |

| Sample Date | Chemical Name | Site # | Typ | Run Time (min.) | Chem Conc. (ug/m3) | EPA Scr. L(ug/m3) | Part.C. (ug/m3) | Grav. Val | Qual. Lab | Qual. Val |
|---|---|---|---|---|---|---|---|---|---|---|
| 02/01/1994 | Particulate Fluoride | 2 | TS | 1433.7 | 5.53922 | 8.30000 | 102.45 | | | |
| 02/01/1994 | Phosphorus | 2 | TS | 1433.7 | 5.87918 | .30000 | 102.45 | | | |
| 02/01/1994 | Vanadium | 2 | TS | 1433.7 | .10798 | .17000 | 102.45 | | | |
| 02/01/1994 | Zinc | 2 | TS | 1433.7 | .16198 | .00000 | 102.45 | | | |
| 02/01/1994 | Arsenic | 3 | TS | 1446.4 | .00016 | .00057 | 39.06 | | U | U |
| 02/01/1994 | Cadmium | 3 | TS | 1446.4 | .00129 | .00140 | 39.06 | | U | U |
| 02/01/1994 | Chromium | 3 | TS | 1446.4 | .00333 | .00020 | 39.06 | | | |
| 02/01/1994 | Nickel | 3 | TS | 1446.4 | .00324 | .01000 | 39.06 | | U | U |
| 02/01/1994 | Particulate Fluoride | 3 | TS | 1446.4 | 2.25933 | 8.30000 | 39.06 | | B | U |
| 02/01/1994 | Phosphorus | 3 | TS | 1446.4 | .31462 | .30000 | 39.06 | | B | U |
| 02/01/1994 | Vanadium | 3 | TS | 1446.4 | .00302 | .17000 | 39.06 | | B | |
| 02/01/1994 | Zinc | 3 | TS | 1446.4 | .02220 | .00000 | 39.06 | | B | |
| 02/01/1994 | Arsenic | 4 | TS | 1429.0 | .00043 | .00057 | 57.62 | | B | |
| 02/01/1994 | Cadmium | 4 | TS | 1429.0 | .00189 | .00140 | 57.62 | | | |
| 02/01/1994 | Chromium | 4 | TS | 1429.0 | .00715 | .00020 | 57.62 | | | U |
| 02/01/1994 | Nickel | 4 | TS | 1429.0 | .00332 | .01000 | 57.62 | | U | U |
| 02/01/1994 | Particulate Fluoride | 4 | TS | 1429.0 | 2.56171 | 8.30000 | 57.62 | | B | U |
| 02/01/1994 | Phosphorus | 4 | TS | 1429.0 | .45475 | .30000 | 57.62 | | | U |
| 02/01/1994 | Vanadium | 4 | TS | 1429.0 | .00604 | .17000 | 57.62 | | | |
| 02/01/1994 | Zinc | 4 | TS | 1429.0 | .03581 | .00000 | 57.62 | | B | |
| 02/01/1994 | Arsenic | 5 | TS | 1437.1 | .00017 | .00057 | 17.62 | | U | U |
| 02/01/1994 | Cadmium | 5 | TS | 1437.1 | .00632 | .00140 | 17.62 | | | |
| 02/01/1994 | Chromium | 5 | TS | 1437.1 | .00370 | .00020 | 17.62 | | | |
| 02/01/1994 | Nickel | 5 | TS | 1437.1 | .00370 | .01000 | 17.62 | | B | |
| 02/01/1994 | Particulate Fluoride | 5 | TS | 1437.1 | 2.43908 | 8.30000 | 17.62 | | B | U |
| 02/01/1994 | Phosphorus | 5 | TS | 1437.1 | .47505 | .30000 | 17.62 | | | U |
| 02/01/1994 | Vanadium | 5 | TS | 1437.1 | .00322 | .17000 | 17.62 | | B | |
| 02/01/1994 | Zinc | 5 | TS | 1437.1 | .02070 | .00000 | 17.62 | | B | |
| 02/01/1994 | Aluminum | 6 | TS | 1436.7 | .12777 | 33.30000 | 11.77 | | | |
| 02/01/1994 | Arsenic | 6 | TS | 1436.7 | .00016 | .00057 | 11.77 | | U | U |
| 02/01/1994 | Barium | 6 | TS | 1436.7 | .00374 | .52000 | 11.77 | | | |
| 02/01/1994 | Beryllium | 6 | TS | 1436.7 | .00016 | .00100 | 11.77 | | U | U |
| 02/01/1994 | Cadmium | 6 | TS | 1436.7 | .00127 | .00140 | 11.77 | | U | U |
| 02/01/1994 | Chromium | 6 | TS | 1436.7 | .00072 | .00020 | 11.77 | | | U |
| 02/01/1994 | Manganese | 6 | TS | 1436.7 | .00418 | .42000 | 11.77 | | | |
| 02/01/1994 | Nickel | 6 | TS | 1436.7 | .00318 | .01000 | 11.77 | | U | U |
| 02/01/1994 | Particulate Fluoride | 6 | TS | 1436.7 | 1.83715 | 8.30000 | 11.77 | | B | U |
| 02/01/1994 | Phosphorus | 6 | TS | 1436.7 | .15956 | .30000 | 11.77 | | B | U |
| 02/01/1994 | Selenium | 6 | TS | 1436.7 | .01596 | .70000 | 11.77 | | U | U |
| 02/01/1994 | Silver | 6 | TS | 1436.7 | .00111 | .30000 | 11.77 | | U | U |
| 02/01/1994 | Thallium | 6 | TS | 1436.7 | .03185 | .30000 | 11.77 | | U | U |
| 02/01/1994 | Vanadium | 6 | TS | 1436.7 | .00160 | .17000 | 11.77 | | U | U |
| 02/01/1994 | Zinc | 6 | TS | 1436.7 | .00459 | .00000 | 11.77 | | B | |
| 02/01/1994 | Arsenic | 7 | TS | 1452.4 | .00038 | .00057 | 58.89 | | B | |
| 02/01/1994 | Cadmium | 7 | TS | 1452.4 | .00438 | .00140 | 58.89 | | | |

| Sample Date | Chemical Name | Site # | Typ | Run Time (min.) | Chem Conc. (ug/m3) | EPA Scr. L(ug/m3) | Part.C. Grav. (ug/m3) | Qual. Val | Lab Val |
|---|---|---|---|---|---|---|---|---|---|
| 02/01/1994 | Chromium | 7 | TS | 1452.4 | .01033 | .00020 | 58.89 | | |
| 02/01/1994 | Nickel | 7 | TS | 1452.4 | .00350 | .01000 | 58.89 | B | |
| 02/01/1994 | Particulate Fluoride | 7 | TS | 1452.4 | 3.65736 | 8.30000 | 58.89 | | |
| 02/01/1994 | Phosphorus | 7 | TS | 1452.4 | 1.66303 | .30000 | 58.89 | | |
| 02/01/1994 | Vanadium | 7 | TS | 1452.4 | .01377 | .17000 | 58.89 | | |
| 02/01/1994 | Zinc | 7 | TS | 1452.4 | .03956 | .00000 | 58.89 | B | |
| 02/01/1994 | Arsenic | 8 | TS | 1452.5 | .00044 | .00057 | 68.03 | B | |
| 02/01/1994 | Cadmium | 8 | TS | 1452.5 | .00411 | .00140 | 68.03 | | |
| 02/01/1994 | Chromium | 8 | TS | 1452.5 | .01568 | .00020 | 68.03 | | |
| 02/01/1994 | Nickel | 8 | TS | 1452.5 | .00411 | .01000 | 68.03 | B | |
| 02/01/1994 | Particulate Fluoride | 8 | TS | 1452.5 | 2.27720 | 8.30000 | 68.03 | B | |
| 02/01/1994 | Phosphorus | 8 | TS | 1452.5 | 1.43720 | .30000 | 68.03 | | |
| 02/01/1994 | Vanadium | 8 | TS | 1452.5 | .01824 | .17000 | 68.03 | | |
| 02/01/1994 | Zinc | 8 | TS | 1452.5 | .05709 | .00000 | 68.03 | B | |
| 02/05/1994 | Aluminum | 1 | TS | 1445.3 | .43173 | 33.30000 | 70.62 | | |
| 02/05/1994 | Arsenic | 1 | TS | 1445.3 | .00053 | .00057 | 70.62 | B | |
| 02/05/1994 | Barium | 1 | TS | 1445.3 | .00951 | .52000 | 70.62 | | |
| 02/05/1994 | Beryllium | 1 | TS | 1445.3 | .00017 | .00100 | 70.62 | B | |
| 02/05/1994 | Cadmium | 1 | TS | 1445.3 | .00289 | .00140 | 70.62 | | |
| 02/05/1994 | Chromium | 1 | TS | 1445.3 | .00945 | .00020 | 70.62 | | |
| 02/05/1994 | Manganese | 1 | TS | 1445.3 | .01503 | .42000 | 70.62 | | |
| 02/05/1994 | Nickel | 1 | TS | 1445.3 | .00484 | .01000 | 70.62 | B | |
| 02/05/1994 | Particulate Fluoride | 1 | TS | 1445.3 | 2.69413 | 8.30000 | 70.62 | B | U |
| 02/05/1994 | Phosphorus | 1 | TS | 1445.3 | 1.84931 | .30000 | 70.62 | | |
| 02/05/1994 | Selenium | 1 | TS | 1445.3 | .01670 | .70000 | 70.62 | U | U |
| 02/05/1994 | Silver | 1 | TS | 1445.3 | .00116 | .30000 | 70.62 | U | U |
| 02/05/1994 | Thallium | 1 | TS | 1445.3 | .03333 | .30000 | 70.62 | U | U |
| 02/05/1994 | Vanadium | 1 | TS | 1445.3 | .00818 | .17000 | 70.62 | | |
| 02/05/1994 | Zinc | 1 | TS | 1445.3 | .04470 | .00000 | 70.62 | B | |
| 02/05/1994 | Arsenic | 2 | TS | 1431.7 | .00087 | .00057 | 130.83 | | |
| 02/05/1994 | Cadmium | 2 | TS | 1431.7 | .00720 | .00140 | 130.83 | | |
| 02/05/1994 | Chromium | 2 | TS | 1431.7 | .02787 | .00020 | 130.83 | | |
| 02/05/1994 | Nickel | 2 | TS | 1431.7 | .00658 | .01000 | 130.83 | B | |
| 02/05/1994 | Particulate Fluoride | 2 | TS | 1431.7 | 3.60872 | 8.30000 | 130.83 | | |
| 02/05/1994 | Phosphorus | 2 | TS | 1431.7 | 3.13743 | .30000 | 130.83 | | |
| 02/05/1994 | Vanadium | 2 | TS | 1431.7 | .03595 | .17000 | 130.83 | | |
| 02/05/1994 | Zinc | 2 | TS | 1431.7 | .07137 | .00000 | 130.83 | | |
| 02/05/1994 | Arsenic | 3 | TS | 1450.7 | .00052 | .00057 | 50.16 | B | |
| 02/05/1994 | Cadmium | 3 | TS | 1450.7 | .00130 | .00140 | 50.16 | U | U |
| 02/05/1994 | Chromium | 3 | TS | 1450.7 | .00354 | .00020 | 50.16 | | |
| 02/05/1994 | Nickel | 3 | TS | 1450.7 | .00326 | .01000 | 50.16 | B | |
| 02/05/1994 | Particulate Fluoride | 3 | TS | 1450.7 | 1.95308 | 8.30000 | 50.16 | B | |
| 02/05/1994 | Phosphorus | 3 | TS | 1450.7 | .74868 | .30000 | 50.16 | | |
| 02/05/1994 | Vanadium | 3 | TS | 1450.7 | .00225 | .17000 | 50.16 | B | |
| 02/05/1994 | Zinc | 3 | TS | 1450.7 | .02988 | .00000 | 50.16 | B | |

| Sample Date | Chemical Name | Site # | Typ | Run Time (min.) | Chem Conc. (ug/m3) | EPA Scr. L(ug/m3) | Part.C. (ug/m3) | Grav. Val | Qual. Lab | Qual. Val |
|---|---|---|---|---|---|---|---|---|---|---|
| 02/05/1994 | Aluminum | 4 | TS | 1430.0 | .42300 | 33.30000 | 72.03 | | | |
| 02/05/1994 | Arsenic | 4 | TS | 1430.0 | .00054 | .00057 | 72.03 | | B | |
| 02/05/1994 | Barium | 4 | TS | 1430.0 | .00921 | .52000 | 72.03 | | | |
| 02/05/1994 | Beryllium | 4 | TS | 1430.0 | .00017 | .00100 | 72.03 | | U | U |
| 02/05/1994 | Cadmium | 4 | TS | 1430.0 | .00222 | .00140 | 72.03 | | | |
| 02/05/1994 | Chromium | 4 | TS | 1430.0 | .00533 | .00020 | 72.03 | | | |
| 02/05/1994 | Manganese | 4 | TS | 1430.0 | .01474 | .42000 | 72.03 | | | |
| 02/05/1994 | Nickel | 4 | TS | 1430.0 | .00384 | .01000 | 72.03 | | B | |
| 02/05/1994 | Particulate Fluoride | 4 | TS | 1430.0 | 2.50196 | 8.30000 | 72.03 | | B | U |
| 02/05/1994 | Phosphorus | 4 | TS | 1430.0 | .90738 | .30000 | 72.03 | | | |
| 02/05/1994 | Selenium | 4 | TS | 1430.0 | .01675 | .70000 | 72.03 | | U | U |
| 02/05/1994 | Silver | 4 | TS | 1430.0 | .00117 | .30000 | 72.03 | | U | U |
| 02/05/1994 | Thallium | 4 | TS | 1430.0 | .03343 | .30000 | 72.03 | | U | U |
| 02/05/1994 | Vanadium | 4 | TS | 1430.0 | .00423 | .17000 | 72.03 | | B | |
| 02/05/1994 | Zinc | 4 | TS | 1430.0 | .02929 | .00000 | 72.03 | | B | |
| 02/05/1994 | Arsenic | 5 | TS | 1439.1 | .00036 | .00057 | 56.88 | | B | |
| 02/05/1994 | Cadmium | 5 | TS | 1439.1 | .00463 | .00140 | 56.88 | | | |
| 02/05/1994 | Chromium | 5 | TS | 1439.1 | .00675 | .00020 | 56.88 | | | |
| 02/05/1994 | Nickel | 5 | TS | 1439.1 | .00339 | .01000 | 56.88 | | U | U |
| 02/05/1994 | Particulate Fluoride | 5 | TS | 1439.1 | 2.22662 | 8.30000 | 56.88 | | B | |
| 02/05/1994 | Phosphorus | 5 | TS | 1439.1 | 1.48216 | .30000 | 56.88 | | | |
| 02/05/1994 | Vanadium | 5 | TS | 1439.1 | .00799 | .17000 | 56.88 | | | |
| 02/05/1994 | Zinc | 5 | TS | 1439.1 | .02917 | .00000 | 56.88 | | B | |
| 02/05/1994 | Arsenic | 6 | TS | 1438.8 | .00027 | .00057 | 12.17 | | B | |
| 02/05/1994 | Cadmium | 6 | TS | 1438.8 | .00128 | .00140 | 12.17 | | U | U |
| 02/05/1994 | Chromium | 6 | TS | 1438.8 | .00175 | .00020 | 12.17 | | | U |
| 02/05/1994 | Nickel | 6 | TS | 1438.8 | .00321 | .01000 | 12.17 | | U | U |
| 02/05/1994 | Particulate Fluoride | 6 | TS | 1438.8 | 1.57500 | 8.30000 | 12.17 | | B | |
| 02/05/1994 | Phosphorus | 6 | TS | 1438.8 | .16710 | .30000 | 12.17 | | B | U |
| 02/05/1994 | Vanadium | 6 | TS | 1438.8 | .00161 | .17000 | 12.17 | | U | U |
| 02/05/1994 | Zinc | 6 | TS | 1438.8 | .00597 | .00000 | 12.17 | | B | |
| 02/05/1994 | Arsenic | 7 | TS | 1459.1 | .00040 | .00057 | 74.92 | | B | |
| 02/05/1994 | Cadmium | 7 | TS | 1459.1 | .00226 | .00140 | 74.92 | | | |
| 02/05/1994 | Chromium | 7 | TS | 1459.1 | .00406 | .00020 | 74.92 | | | |
| 02/05/1994 | Nickel | 7 | TS | 1459.1 | .00327 | .01000 | 74.92 | | U | U |
| 02/05/1994 | Particulate Fluoride | 7 | TS | 1459.1 | 4.09594 | 8.30000 | 74.92 | | | |
| 02/05/1994 | Phosphorus | 7 | TS | 1459.1 | 1.34357 | .30000 | 74.92 | | | |
| 02/05/1994 | Vanadium | 7 | TS | 1459.1 | .00391 | .17000 | 74.92 | | B | |
| 02/05/1994 | Zinc | 7 | TS | 1459.1 | .01624 | .00000 | 74.92 | | B | |
| 02/09/1994 | Arsenic | 1 | TS | 1441.9 | .00048 | .00057 | 55.86 | | B | |
| 02/09/1994 | Cadmium | 1 | TS | 1441.9 | .00358 | .00140 | 55.86 | | | |
| 02/09/1994 | Chromium | 1 | TS | 1441.9 | .01490 | .00020 | 55.86 | | | |
| 02/09/1994 | Nickel | 1 | TS | 1441.9 | .00505 | .01000 | 55.86 | | B | |
| 02/09/1994 | Particulate Fluoride | 1 | TS | 1441.9 | 6.97846 | 8.30000 | 55.86 | | | |
| 02/09/1994 | Phosphorus | 1 | TS | 1441.9 | 1.69765 | .30000 | 55.86 | | | |

| Sample Date | Chemical Name | Site # | Typ | Run Time (min.) | Chem Conc. (ug/m3) | EPA Scr. L(ug/m3) | Part.C. (ug/m3) | Grav. Val | Qual. Lab | Qual. Val |
|---|---|---|---|---|---|---|---|---|---|---|
| 02/09/1994 | Vanadium | 1 | TS | 1441.9 | .01604 | .17000 | 55.86 | | | |
| 02/09/1994 | Zinc | 1 | TS | 1441.9 | .03261 | .00000 | 55.86 | | B | |
| 02/09/1994 | Arsenic | 2 | TS | 1442.3 | .00256 | .00057 | 166.56 | | | |
| 02/09/1994 | Cadmium | 2 | TS | 1442.3 | .03706 | .00140 | 166.56 | | | |
| 02/09/1994 | Chromium | 2 | TS | 1442.3 | .06389 | .00020 | 166.56 | | | |
| 02/09/1994 | Nickel | 2 | TS | 1442.3 | .01628 | .01000 | 166.56 | | | |
| 02/09/1994 | Particulate Fluoride | 2 | TS | 1442.3 | 4.80200 | 8.30000 | 166.56 | | | |
| 02/09/1994 | Phosphorus | 2 | TS | 1442.3 | 12.10588 | .30000 | 166.56 | | | |
| 02/09/1994 | Vanadium | 2 | TS | 1442.3 | .09348 | .17000 | 166.56 | | | |
| 02/09/1994 | Zinc | 2 | TS | 1442.3 | .17554 | .00000 | 166.56 | | | |
| 02/09/1994 | Arsenic | 3 | TS | 1442.2 | .00034 | .00057 | 35.34 | | B | |
| 02/09/1994 | Cadmium | 3 | TS | 1442.2 | .00249 | .00140 | 35.34 | | | |
| 02/09/1994 | Chromium | 3 | TS | 1442.2 | .00580 | .00020 | 35.34 | | | |
| 02/09/1994 | Nickel | 3 | TS | 1442.2 | .00380 | .01000 | 35.34 | | B | |
| 02/09/1994 | Particulate Fluoride | 3 | TS | 1442.2 | 1.99679 | 8.30000 | 35.34 | | B | |
| 02/09/1994 | Phosphorus | 3 | TS | 1442.2 | .93579 | .30000 | 35.34 | | | |
| 02/09/1994 | Vanadium | 3 | TS | 1442.2 | .00738 | .17000 | 35.34 | | | |
| 02/09/1994 | Zinc | 3 | TS | 1442.2 | .02162 | .00000 | 35.34 | | B | |
| 02/09/1994 | Arsenic | 4 | TS | 1428.8 | .00037 | .00057 | 23.59 | | B | |
| 02/09/1994 | Cadmium | 4 | TS | 1428.8 | .00135 | .00140 | 23.59 | | U | U |
| 02/09/1994 | Chromium | 4 | TS | 1428.8 | .00255 | .00020 | 23.59 | | | U |
| 02/09/1994 | Nickel | 4 | TS | 1428.8 | .00338 | .01000 | 23.59 | | U | U |
| 02/09/1994 | Particulate Fluoride | 4 | TS | 1428.8 | 1.76961 | 8.30000 | 23.59 | | B | |
| 02/09/1994 | Phosphorus | 4 | TS | 1428.8 | .24720 | .30000 | 23.59 | | B | U |
| 02/09/1994 | Vanadium | 4 | TS | 1428.8 | .00170 | .17000 | 23.59 | | U | U |
| 02/09/1994 | Zinc | 4 | TS | 1428.8 | .01864 | .00000 | 23.59 | | B | |
| 02/09/1994 | Arsenic | 5 | TS | 1437.9 | .00031 | .00057 | 33.15 | Q | B | |
| 02/09/1994 | Cadmium | 5 | TS | 1437.9 | .00145 | .00140 | 33.15 | Q | B | |
| 02/09/1994 | Chromium | 5 | TS | 1437.9 | .00253 | .00020 | 33.15 | Q | | U |
| 02/09/1994 | Nickel | 5 | TS | 1437.9 | .00341 | .01000 | 33.15 | Q | U | U |
| 02/09/1994 | Particulate Fluoride | 5 | TS | 1437.9 | 1.36327 | 8.30000 | 33.15 | Q | U | U |
| 02/09/1994 | Phosphorus | 5 | TS | 1437.9 | .23039 | .30000 | 33.15 | Q | B | U |
| 02/09/1994 | Vanadium | 5 | TS | 1437.9 | .00258 | .17000 | 33.15 | Q | B | |
| 02/09/1994 | Zinc | 5 | TS | 1437.9 | .01813 | .00000 | 33.15 | Q | B | |
| 02/09/1994 | Arsenic | 6 | TS | 1451.5 | .00017 | .00057 | 8.31 | | U | U |
| 02/09/1994 | Cadmium | 6 | TS | 1451.5 | .00137 | .00140 | 8.31 | | U | U |
| 02/09/1994 | Chromium | 6 | TS | 1451.5 | .00097 | .00020 | 8.31 | | | U |
| 02/09/1994 | Nickel | 6 | TS | 1451.5 | .00344 | .01000 | 8.31 | | U | U |
| 02/09/1994 | Particulate Fluoride | 6 | TS | 1451.5 | 1.48855 | 8.30000 | 8.31 | | B | |
| 02/09/1994 | Phosphorus | 6 | TS | 1451.5 | .19276 | .30000 | 8.31 | | B | U |
| 02/09/1994 | Vanadium | 6 | TS | 1451.5 | .00172 | .17000 | 8.31 | | B | |
| 02/09/1994 | Zinc | 6 | TS | 1451.5 | .00947 | .00000 | 8.31 | | B | |
| 02/09/1994 | Arsenic | 7 | TS | 1451.7 | .00017 | .00057 | 4.53 | | U | U |
| 02/09/1994 | Cadmium | 7 | TS | 1451.7 | .00161 | .00140 | 4.53 | | | |
| 02/09/1994 | Chromium | 7 | TS | 1451.7 | .00089 | .00020 | 4.53 | | | U |

| Sample Date | Chemical Name | Site # | Typ | Run Time (min.) | Chem Conc. (ug/m3) | EPA Scr. L(ug/m3) | Part.C. (ug/m3) | Grav. Val | Qual. Lab | Qual. Val |
|---|---|---|---|---|---|---|---|---|---|---|
| 02/09/1994 | Nickel | 7 | TS | 1451.7 | .00334 | .01000 | 4.53 | | U | U |
| 02/09/1994 | Particulate Fluoride | 7 | TS | 1451.7 | 2.17938 | 8.30000 | 4.53 | | B | |
| 02/09/1994 | Phosphorus | 7 | TS | 1451.7 | .18395 | .30000 | 4.53 | | B | U |
| 02/09/1994 | Vanadium | 7 | TS | 1451.7 | .00167 | .17000 | 4.53 | | U | U |
| 02/09/1994 | Zinc | 7 | TS | 1451.7 | .00481 | .00000 | 4.53 | | B | |
| 02/13/1994 | Arsenic | 1 | TS | 1446.1 | .00106 | .00057 | 33.01 | | | |
| 02/13/1994 | Cadmium | 1 | TS | 1446.1 | .00244 | .00140 | 33.01 | | | |
| 02/13/1994 | Chromium | 1 | TS | 1446.1 | .00855 | .00020 | 33.01 | | | |
| 02/13/1994 | Nickel | 1 | TS | 1446.1 | .00335 | .01000 | 33.01 | | U | U |
| 02/13/1994 | Particulate Fluoride | 1 | TS | 1446.1 | 1.69626 | 8.30000 | 33.01 | | B | |
| 02/13/1994 | Phosphorus | 1 | TS | 1446.1 | .62909 | .30000 | 33.01 | | | U |
| 02/13/1994 | Vanadium | 1 | TS | 1446.1 | .00652 | .17000 | 33.01 | | | |
| 02/13/1994 | Zinc | 1 | TS | 1446.1 | .02224 | .00000 | 33.01 | | B | |
| 02/13/1994 | Arsenic | 2 | TS | 1431.2 | .00167 | .00057 | 100.59 | | | |
| 02/13/1994 | Cadmium | 2 | TS | 1431.2 | .00940 | .00140 | 100.59 | | | |
| 02/13/1994 | Chromium | 2 | TS | 1431.2 | .03342 | .00020 | 100.59 | | | |
| 02/13/1994 | Nickel | 2 | TS | 1431.2 | .00778 | .01000 | 100.59 | | B | |
| 02/13/1994 | Particulate Fluoride | 2 | TS | 1431.2 | 2.85488 | 8.30000 | 100.59 | | B | |
| 02/13/1994 | Phosphorus | 2 | TS | 1431.2 | 2.81429 | .30000 | 100.59 | | | |
| 02/13/1994 | Vanadium | 2 | TS | 1431.2 | .04289 | .17000 | 100.59 | | | |
| 02/13/1994 | Zinc | 2 | TS | 1431.2 | .06576 | .00000 | 100.59 | | B | |
| 02/13/1994 | Arsenic | 3 | TS | 1451.4 | .00146 | .00057 | 19.29 | | | |
| 02/13/1994 | Cadmium | 3 | TS | 1451.4 | .00131 | .00140 | 19.29 | | U | U |
| 02/13/1994 | Chromium | 3 | TS | 1451.4 | .00257 | .00020 | 19.29 | | | |
| 02/13/1994 | Nickel | 3 | TS | 1451.4 | .00327 | .01000 | 19.29 | | B | |
| 02/13/1994 | Particulate Fluoride | 3 | TS | 1451.4 | 1.30724 | 8.30000 | 19.29 | | U | U |
| 02/13/1994 | Phosphorus | 3 | TS | 1451.4 | .22615 | .30000 | 19.29 | | B | U |
| 02/13/1994 | Vanadium | 3 | TS | 1451.4 | .00239 | .17000 | 19.29 | | B | |
| 02/13/1994 | Zinc | 3 | TS | 1451.4 | .01353 | .00000 | 19.29 | | B | |
| 02/13/1994 | Arsenic | 4 | TS | 1427.4 | .00149 | .00057 | 27.14 | | | |
| 02/13/1994 | Cadmium | 4 | TS | 1427.4 | .00135 | .00140 | 27.14 | | U | U |
| 02/13/1994 | Chromium | 4 | TS | 1427.4 | .00345 | .00020 | 27.14 | | | |
| 02/13/1994 | Nickel | 4 | TS | 1427.4 | .00347 | .01000 | 27.14 | | B | |
| 02/13/1994 | Particulate Fluoride | 4 | TS | 1427.4 | 1.34967 | 8.30000 | 27.14 | | U | U |
| 02/13/1994 | Phosphorus | 4 | TS | 1427.4 | .25711 | .30000 | 27.14 | | B | U |
| 02/13/1994 | Vanadium | 4 | TS | 1427.4 | .00240 | .17000 | 27.14 | | B | |
| 02/13/1994 | Zinc | 4 | TS | 1427.4 | .02031 | .00000 | 27.14 | | B | |
| 02/13/1994 | Arsenic | 5 | TS | 1438.3 | .00116 | .00057 | 37.16 | | | |
| 02/13/1994 | Cadmium | 5 | TS | 1438.3 | .00141 | .00140 | 37.16 | | B | |
| 02/13/1994 | Chromium | 5 | TS | 1438.3 | .00247 | .00020 | 37.16 | | | U |
| 02/13/1994 | Nickel | 5 | TS | 1438.3 | .00341 | .01000 | 37.16 | | U | U |
| 02/13/1994 | Particulate Fluoride | 5 | TS | 1438.3 | 1.65285 | 8.30000 | 37.16 | | B | |
| 02/13/1994 | Phosphorus | 5 | TS | 1438.3 | .39859 | .30000 | 37.16 | | | U |

| Sample Date | Chemical Name | Site # | Typ | Run Time (min.) | Chem Conc. (ug/m3) | EPA Scr. L(ug/m3) | Part.C. (ug/m3) | Grav. Val | Qual. Lab | Qual. Val |
|---|---|---|---|---|---|---|---|---|---|---|
| 02/13/1994 | Vanadium | 5 | TS | 1438.3 | .00220 | .17000 | 37.16 | | B | |
| 02/13/1994 | Zinc | 5 | TS | 1438.3 | .02251 | .00000 | 37.16 | | B | |
| 02/13/1994 | Arsenic | 6 | TS | 1435.1 | .00091 | .00057 | 14.55 | | | |
| 02/13/1994 | Cadmium | 6 | TS | 1435.1 | .00139 | .00140 | 14.55 | | U | U |
| 02/13/1994 | Chromium | 6 | TS | 1435.1 | .00102 | .00020 | 14.55 | | | U |
| 02/13/1994 | Nickel | 6 | TS | 1435.1 | .00347 | .01000 | 14.55 | | U | U |
| 02/13/1994 | Particulate Fluoride | 6 | TS | 1435.1 | 1.74515 | 8.30000 | 14.55 | | B | |
| 02/13/1994 | Phosphorus | 6 | TS | 1435.1 | .22230 | .30000 | 14.55 | | B | U |
| 02/13/1994 | Vanadium | 6 | TS | 1435.1 | .00174 | .17000 | 14.55 | | U | U |
| 02/13/1994 | Zinc | 6 | TS | 1435.1 | .00741 | .00000 | 14.55 | | B | |
| 02/13/1994 | Arsenic | 7 | TS | 1457.3 | .00111 | .00057 | 13.26 | | | |
| 02/13/1994 | Cadmium | 7 | TS | 1457.3 | .00204 | .00140 | 13.26 | | | |
| 02/13/1994 | Chromium | 7 | TS | 1457.3 | .00206 | .00020 | 13.26 | | | U |
| 02/13/1994 | Nickel | 7 | TS | 1457.3 | .00332 | .01000 | 13.26 | | U | U |
| 02/13/1994 | Particulate Fluoride | 7 | TS | 1457.3 | 1.93505 | 8.30000 | 13.26 | | B | |
| 02/13/1994 | Phosphorus | 7 | TS | 1457.3 | .42213 | .30000 | 13.26 | | | U |
| 02/13/1994 | Vanadium | 7 | TS | 1457.3 | .00274 | .17000 | 13.26 | | B | |
| 02/13/1994 | Zinc | 7 | TS | 1457.3 | .01438 | .00000 | 13.26 | | B | |
| 02/13/1994 | Arsenic | 8 | TS | 1456.5 | .00092 | .00057 | 32.31 | | | |
| 02/13/1994 | Cadmium | 8 | TS | 1456.5 | .00196 | .00140 | 32.31 | | | |
| 02/13/1994 | Chromium | 8 | TS | 1456.5 | .00802 | .00020 | 32.31 | | | |
| 02/13/1994 | Nickel | 8 | TS | 1456.5 | .00407 | .01000 | 32.31 | | B | |
| 02/13/1994 | Particulate Fluoride | 8 | TS | 1456.5 | 2.02894 | 8.30000 | 32.31 | | B | |
| 02/13/1994 | Phosphorus | 8 | TS | 1456.5 | .59343 | .30000 | 32.31 | | | U |
| 02/13/1994 | Vanadium | 8 | TS | 1456.5 | .00625 | .17000 | 32.31 | | | |
| 02/13/1994 | Zinc | 8 | TS | 1456.5 | .01996 | .00000 | 32.31 | | B | |
| 02/17/1994 | Arsenic | 2 | TS | 1436.6 | .00257 | .00057 | 172.75 | | | |
| 02/17/1994 | Cadmium | 2 | TS | 1436.6 | .01879 | .00140 | 172.75 | | | |
| 02/17/1994 | Chromium | 2 | TS | 1436.6 | .08131 | .00020 | 172.75 | | | |
| 02/17/1994 | Nickel | 2 | TS | 1436.6 | .01318 | .01000 | 172.75 | | | |
| 02/17/1994 | Particulate Fluoride | 2 | TS | 1436.6 | 5.13089 | 8.30000 | 172.75 | | | U |
| 02/17/1994 | Phosphorus | 2 | TS | 1436.6 | 7.71036 | .30000 | 172.75 | | | |
| 02/17/1994 | Vanadium | 2 | TS | 1436.6 | .10023 | .17000 | 172.75 | | | |
| 02/17/1994 | Zinc | 2 | TS | 1436.6 | .12617 | .00000 | 172.75 | | | |
| 02/17/1994 | Arsenic | 3 | TS | 1446.8 | .00111 | .00057 | 41.35 | | | |
| 02/17/1994 | Cadmium | 3 | TS | 1446.8 | .00145 | .00140 | 41.35 | | B | |
| 02/17/1994 | Chromium | 3 | TS | 1446.8 | .00379 | .00020 | 41.35 | | | |
| 02/17/1994 | Nickel | 3 | TS | 1446.8 | .00521 | .01000 | 41.35 | | B | |
| 02/17/1994 | Particulate Fluoride | 3 | TS | 1446.8 | 2.04582 | 8.30000 | 41.35 | | B | |
| 02/17/1994 | Phosphorus | 3 | TS | 1446.8 | .48213 | .30000 | 41.35 | | | U |
| 02/17/1994 | Vanadium | 3 | TS | 1446.8 | .00378 | .17000 | 41.35 | | B | |
| 02/17/1994 | Zinc | 3 | TS | 1446.8 | .01794 | .00000 | 41.35 | | B | |
| 02/17/1994 | Arsenic | 4 | TS | 1426.9 | .00089 | .00057 | 24.59 | | | |
| 02/17/1994 | Cadmium | 4 | TS | 1426.9 | .00140 | .00140 | 24.59 | | U | U |
| 02/17/1994 | Chromium | 4 | TS | 1426.9 | .00382 | .00020 | 24.59 | | | |

| Sample Date | Chemical Name | Site # | Typ | Run Time (min.) | Chem Conc. (ug/m3) | EPA Scr. L(ug/m3) | Part.C. Grav. (ug/m3) | Val | Qual. Lab | Qual. Val |
|---|---|---|---|---|---|---|---|---|---|---|
| 02/17/1994 | Nickel | 4 | TS | 1426.9 | .00414 | .01000 | 24.59 | | B | |
| 02/17/1994 | Particulate Fluoride | 4 | TS | 1426.9 | 2.03605 | 8.30000 | 24.59 | | B | |
| 02/17/1994 | Phosphorus | 4 | TS | 1426.9 | .23239 | .30000 | 24.59 | | B | U |
| 02/17/1994 | Vanadium | 4 | TS | 1426.9 | .00176 | .17000 | 24.59 | | U | U |
| 02/17/1994 | Zinc | 4 | TS | 1426.9 | .01811 | .00000 | 24.59 | | B | |
| 02/17/1994 | Arsenic | 5 | TS | 1437.5 | .00099 | .00057 | 14.70 | | | |
| 02/17/1994 | Cadmium | 5 | TS | 1437.5 | .00142 | .00140 | 14.70 | | U | U |
| 02/17/1994 | Chromium | 5 | TS | 1437.5 | .00163 | .00020 | 14.70 | | | U |
| 02/17/1994 | Nickel | 5 | TS | 1437.5 | .00356 | .01000 | 14.70 | | U | U |
| 02/17/1994 | Particulate Fluoride | 5 | TS | 1437.5 | 1.41930 | 8.30000 | 14.70 | | U | U |
| 02/17/1994 | Phosphorus | 5 | TS | 1437.5 | .43005 | .30000 | 14.70 | | | U |
| 02/17/1994 | Vanadium | 5 | TS | 1437.5 | .00178 | .17000 | 14.70 | | U | U |
| 02/17/1994 | Zinc | 5 | TS | 1437.5 | .01015 | .00000 | 14.70 | | B | |
| 02/17/1994 | Arsenic | 6 | TS | 1439.1 | .00083 | .00057 | 6.76 | | | |
| 02/17/1994 | Cadmium | 6 | TS | 1439.1 | .00144 | .00140 | 6.76 | | U | U |
| 02/17/1994 | Chromium | 6 | TS | 1439.1 | .00076 | .00020 | 6.76 | | | U |
| 02/17/1994 | Nickel | 6 | TS | 1439.1 | .00360 | .01000 | 6.76 | | U | U |
| 02/17/1994 | Particulate Fluoride | 6 | TS | 1439.1 | 2.07570 | 8.30000 | 6.76 | | B | U |
| 02/17/1994 | Phosphorus | 6 | TS | 1439.1 | .20182 | .30000 | 6.76 | | B | U |
| 02/17/1994 | Vanadium | 6 | TS | 1439.1 | .00180 | .17000 | 6.76 | | U | U |
| 02/17/1994 | Zinc | 6 | TS | 1439.1 | .00826 | .00000 | 6.76 | | B | |
| 02/17/1994 | Arsenic | 7 | TS | 1452.0 | .00095 | .00057 | -13.84 | PR | | |
| 02/17/1994 | Cadmium | 7 | TS | 1452.0 | .00138 | .00140 | -13.84 | PR | U | U |
| 02/17/1994 | Chromium | 7 | TS | 1452.0 | .00102 | .00020 | -13.84 | PR | | U |
| 02/17/1994 | Nickel | 7 | TS | 1452.0 | .00347 | .01000 | -13.84 | PR | U | U |
| 02/17/1994 | Particulate Fluoride | 7 | TS | 1452.0 | 1.66014 | 8.30000 | -13.84 | PR | B | |
| 02/17/1994 | Phosphorus | 7 | TS | 1452.0 | .22550 | .30000 | -13.84 | PR | B | U |
| 02/17/1994 | Vanadium | 7 | TS | 1452.0 | .00174 | .17000 | -13.84 | PR | U | U |
| 02/17/1994 | Zinc | 7 | TS | 1452.0 | .01141 | .00000 | -13.84 | PR | B | |
| 02/21/1994 | Arsenic | 1 | TS | 1442.7 | .00017 | .00057 | 26.82 | | U | U |
| 02/21/1994 | Cadmium | 1 | TS | 1442.7 | .00137 | .00140 | 26.82 | | U | U |
| 02/21/1994 | Chromium | 1 | TS | 1442.7 | .00466 | .00020 | 26.82 | | | |
| 02/21/1994 | Particulate Fluoride | 1 | TS | 1442.7 | 4.95804 | 8.30000 | 26.82 | | | U |
| 02/21/1994 | Phosphorus | 1 | TS | 1442.7 | .84800 | .30000 | 26.82 | | | |
| 02/21/1994 | Vanadium | 1 | TS | 1442.7 | .00497 | .17000 | 26.82 | | | U |
| 02/21/1994 | Zinc | 1 | TS | 1442.7 | .01751 | .00000 | 26.82 | | B | |
| 02/21/1994 | Arsenic | 2 | TS | 1433.4 | .00042 | .00057 | 54.40 | | B | |
| 02/21/1994 | Cadmium | 2 | TS | 1433.4 | .00601 | .00140 | 54.40 | | | |
| 02/21/1994 | Chromium | 2 | TS | 1433.4 | .00922 | .00020 | 54.40 | | | |
| 02/21/1994 | Particulate Fluoride | 2 | TS | 1433.4 | 2.69778 | 8.30000 | 54.40 | | B | U |
| 02/21/1994 | Phosphorus | 2 | TS | 1433.4 | 4.19351 | .30000 | 54.40 | | | |
| 02/21/1994 | Vanadium | 2 | TS | 1433.4 | .01024 | .17000 | 54.40 | | | |
| 02/21/1994 | Zinc | 2 | TS | 1433.4 | .04316 | .00000 | 54.40 | | B | |

| Sample Date | Chemical Name | Site # | Typ | Run Time (min.) | Chem Conc. (ug/m3) | EPA Scr. L(ug/m3) | Part.C. Grav. (ug/m3) | Qual. Val | Lab | Val |
|---|---|---|---|---|---|---|---|---|---|---|
| 02/21/1994 | Arsenic | 3 | TS | 1446.6 | .00033 | .00057 | 14.93 | | B | U |
| 02/21/1994 | Cadmium | 3 | TS | 1446.6 | .00133 | .00140 | 14.93 | | U | U |
| 02/21/1994 | Chromium | 3 | TS | 1446.6 | .00229 | .00020 | 14.93 | | | |
| 02/21/1994 | Particulate Fluoride | 3 | TS | 1446.6 | 1.96271 | 8.30000 | 14.93 | | B | U |
| 02/21/1994 | Phosphorus | 3 | TS | 1446.6 | .49665 | .30000 | 14.93 | | | U |
| 02/21/1994 | Vanadium | 3 | TS | 1446.6 | .00210 | .17000 | 14.93 | | B | U |
| 02/21/1994 | Zinc | 3 | TS | 1446.6 | .01339 | .00000 | 14.93 | | B | |
| 02/21/1994 | Arsenic | 4 | TS | 1428.8 | .00022 | .00057 | 13.78 | | B | |
| 02/21/1994 | Cadmium | 4 | TS | 1428.8 | .00136 | .00140 | 13.78 | | U | |
| 02/21/1994 | Chromium | 4 | TS | 1428.8 | .00750 | .00020 | 13.78 | | | |
| 02/21/1994 | Particulate Fluoride | 4 | TS | 1428.8 | 2.31085 | 8.30000 | 13.78 | | B | U |
| 02/21/1994 | Phosphorus | 4 | TS | 1428.8 | .18132 | .30000 | 13.78 | | B | U |
| 02/21/1994 | Vanadium | 4 | TS | 1428.8 | .00181 | .17000 | 13.78 | | B | U |
| 02/21/1994 | Zinc | 4 | TS | 1428.8 | .01275 | .00000 | 13.78 | | B | |
| 02/21/1994 | Arsenic | 5 | TS | 1436.7 | .00017 | .00057 | 2.76 | | U | U |
| 02/21/1994 | Cadmium | 5 | TS | 1436.7 | .00138 | .00140 | 2.76 | | U | U |
| 02/21/1994 | Chromium | 5 | TS | 1436.7 | .00072 | .00020 | 2.76 | | | U |
| 02/21/1994 | Particulate Fluoride | 5 | TS | 1436.7 | 1.93977 | 8.30000 | 2.76 | | B | U |
| 02/21/1994 | Phosphorus | 5 | TS | 1436.7 | .18155 | .30000 | 2.76 | | B | U |
| 02/21/1994 | Vanadium | 5 | TS | 1436.7 | .00173 | .17000 | 2.76 | | U | U |
| 02/21/1994 | Zinc | 5 | TS | 1436.7 | .00495 | .00000 | 2.76 | | B | |
| 02/21/1994 | Arsenic | 6 | TS | 1436.7 | .00018 | .00057 | 2.31 | | U | U |
| 02/21/1994 | Cadmium | 6 | TS | 1436.7 | .00140 | .00140 | 2.31 | | U | U |
| 02/21/1994 | Chromium | 6 | TS | 1436.7 | .00023 | .00020 | 2.31 | | | U |
| 02/21/1994 | Particulate Fluoride | 6 | TS | 1436.7 | 2.47602 | 8.30000 | 2.31 | | B | U |
| 02/21/1994 | Phosphorus | 6 | TS | 1436.7 | .18046 | .30000 | 2.31 | | B | U |
| 02/21/1994 | Vanadium | 6 | TS | 1436.7 | .00176 | .17000 | 2.31 | | U | U |
| 02/21/1994 | Zinc | 6 | TS | 1436.7 | .00239 | .00000 | 2.31 | | B | U |
| 02/21/1994 | Arsenic | 7 | TS | 1454.6 | .00017 | .00057 | .54 | | U | U |
| 02/21/1994 | Cadmium | 7 | TS | 1454.6 | .00134 | .00140 | .54 | | U | U |
| 02/21/1994 | Chromium | 7 | TS | 1454.6 | .00026 | .00020 | .54 | | | U |
| 02/21/1994 | Particulate Fluoride | 7 | TS | 1454.6 | 1.73866 | 8.30000 | .54 | | B | U |
| 02/21/1994 | Phosphorus | 7 | TS | 1454.6 | .14567 | .30000 | .54 | | B | U |
| 02/21/1994 | Vanadium | 7 | TS | 1454.6 | .00168 | .17000 | .54 | | U | U |
| 02/21/1994 | Zinc | 7 | TS | 1454.6 | .00219 | .00000 | .54 | | B | U |
| 02/25/1994 | Arsenic | 1 | TS | 1445.7 | .00039 | .00057 | 66.97 | | B | |
| 02/25/1994 | Cadmium | 1 | TS | 1445.7 | .00474 | .00140 | 66.97 | | | |
| 02/25/1994 | Chromium | 1 | TS | 1445.7 | .01551 | .00020 | 66.97 | | | |
| 02/25/1994 | Particulate Fluoride | 1 | TS | 1445.7 | 3.06110 | 8.30000 | 66.97 | | B | U |
| 02/25/1994 | Phosphorus | 1 | TS | 1445.7 | 2.52541 | .30000 | 66.97 | | | |
| 02/25/1994 | Vanadium | 1 | TS | 1445.7 | .01614 | .17000 | 66.97 | | | |
| 02/25/1994 | Zinc | 1 | TS | 1445.7 | .04919 | .00000 | 66.97 | | B | |
| 02/25/1994 | Arsenic | 2 | TS | 1434.1 | .00111 | .00057 | 108.28 | | | |

| Sample Date | Chemical Name | Site # | Typ | Run Time (min.) | Chem Conc. (ug/m3) | EPA Scr. L(ug/m3) | Part.C. (ug/m3) | Grav. Val | Qual. Lab | Qual. Val |
|---|---|---|---|---|---|---|---|---|---|---|
| 02/25/1994 | Cadmium | 2 | TS | 1434.1 | .01601 | .00140 | 108.28 | | | |
| 02/25/1994 | Chromium | 2 | TS | 1434.1 | .03438 | .00020 | 108.28 | | | |
| 02/25/1994 | Particulate Fluoride | 2 | TS | 1434.1 | 4.00844 | 8.30000 | 108.28 | | | U |
| 02/25/1994 | Phosphorus | 2 | TS | 1434.1 | 7.72459 | .30000 | 108.28 | | | |
| 02/25/1994 | Vanadium | 2 | TS | 1434.1 | .03591 | .17000 | 108.28 | | | |
| 02/25/1994 | Zinc | 2 | TS | 1434.1 | .16841 | .00000 | 108.28 | | | |
| 02/25/1994 | Arsenic | 3 | TS | 1446.4 | .00017 | .00057 | 16.64 | | U | U |
| 02/25/1994 | Cadmium | 3 | TS | 1446.4 | .00135 | .00140 | 16.64 | | U | U |
| 02/25/1994 | Chromium | 3 | TS | 1446.4 | .00173 | .00020 | 16.64 | | | |
| 02/25/1994 | Particulate Fluoride | 3 | TS | 1446.4 | 2.12280 | 8.30000 | 16.64 | | B | U |
| 02/25/1994 | Phosphorus | 3 | TS | 1446.4 | .46445 | .30000 | 16.64 | | | U |
| 02/25/1994 | Vanadium | 3 | TS | 1446.4 | .00190 | .17000 | 16.64 | | B | U |
| 02/25/1994 | Zinc | 3 | TS | 1446.4 | .00940 | .00000 | 16.64 | | B | |
| 02/25/1994 | Arsenic | 4 | TS | 1426.4 | .00029 | .00057 | 26.40 | | B | U |
| 02/25/1994 | Cadmium | 4 | TS | 1426.4 | .00139 | .00140 | 26.40 | | U | |
| 02/25/1994 | Chromium | 4 | TS | 1426.4 | .00228 | .00020 | 26.40 | | | |
| 02/25/1994 | Particulate Fluoride | 4 | TS | 1426.4 | 2.24137 | 8.30000 | 26.40 | | B | U |
| 02/25/1994 | Phosphorus | 4 | TS | 1426.4 | .54085 | .30000 | 26.40 | | | U |
| 02/25/1994 | Vanadium | 4 | TS | 1426.4 | .00251 | .17000 | 26.40 | | B | U |
| 02/25/1994 | Zinc | 4 | TS | 1426.4 | .01197 | .00000 | 26.40 | | B | |
| 02/25/1994 | Arsenic | 5 | TS | 1435.0 | .00020 | .00057 | 20.87 | | B | U |
| 02/25/1994 | Cadmium | 5 | TS | 1435.0 | .00187 | .00140 | 20.87 | | | |
| 02/25/1994 | Chromium | 5 | TS | 1435.0 | .00645 | .00020 | 20.87 | | | |
| 02/25/1994 | Particulate Fluoride | 5 | TS | 1435.0 | 2.62798 | 8.30000 | 20.87 | | B | U |
| 02/25/1994 | Phosphorus | 5 | TS | 1435.0 | 1.53592 | .30000 | 20.87 | | | |
| 02/25/1994 | Vanadium | 5 | TS | 1435.0 | .00740 | .17000 | 20.87 | | | U |
| 02/25/1994 | Zinc | 5 | TS | 1435.0 | .01212 | .00000 | 20.87 | | B | |
| 02/25/1994 | Arsenic | 6 | TS | 1438.1 | .00018 | .00057 | 6.20 | | U | U |
| 02/25/1994 | Cadmium | 6 | TS | 1438.1 | .00142 | .00140 | 6.20 | | U | U |
| 02/25/1994 | Chromium | 6 | TS | 1438.1 | .00040 | .00020 | 6.20 | | | U |
| 02/25/1994 | Particulate Fluoride | 6 | TS | 1438.1 | 1.99453 | 8.30000 | 6.20 | | B | U |
| 02/25/1994 | Phosphorus | 6 | TS | 1438.1 | .22510 | .30000 | 6.20 | | B | U |
| 02/25/1994 | Vanadium | 6 | TS | 1438.1 | .00179 | .17000 | 6.20 | | U | U |
| 02/25/1994 | Zinc | 6 | TS | 1438.1 | .00363 | .00000 | 6.20 | | B | U |
| 02/25/1994 | Arsenic | 7 | TS | 1452.8 | .00017 | .00057 | 24.41 | | U | U |
| 02/25/1994 | Cadmium | 7 | TS | 1452.8 | .00151 | .00140 | 24.41 | | B | |
| 02/25/1994 | Chromium | 7 | TS | 1452.8 | .00316 | .00020 | 24.41 | | | |
| 02/25/1994 | Particulate Fluoride | 7 | TS | 1452.8 | 2.51463 | 8.30000 | 24.41 | | B | U |
| 02/25/1994 | Phosphorus | 7 | TS | 1452.8 | 1.14426 | .30000 | 24.41 | | | |
| 02/25/1994 | Vanadium | 7 | TS | 1452.8 | .00349 | .17000 | 24.41 | | B | |
| 02/25/1994 | Zinc | 7 | TS | 1452.8 | .01117 | .00000 | 24.41 | | B | |
| 02/25/1994 | Arsenic | 8 | TS | 1450.2 | .00031 | .00057 | 67.77 | | B | U |
| 02/25/1994 | Cadmium | 8 | TS | 1450.2 | .00476 | .00140 | 67.77 | | | |

| Sample Date | Chemical Name | Site # | Typ | Run Time (min.) | Chem Conc. (ug/m3) | EPA Scr. L(ug/m3) | Part.C. (ug/m3) | Grav. Val | Qual. Lab | Qual. Val |
|---|---|---|---|---|---|---|---|---|---|---|
| 02/25/1994 | Chromium | 8 | TS | 1450.2 | .01083 | .00020 | 67.77 | | | |
| 02/25/1994 | Particulate Fluoride | 8 | TS | 1450.2 | 3.12751 | 8.30000 | 67.77 | | B | U |
| 02/25/1994 | Phosphorus | 8 | TS | 1450.2 | 2.54236 | .30000 | 67.77 | | | |
| 02/25/1994 | Vanadium | 8 | TS | 1450.2 | .01332 | .17000 | 67.77 | | | |
| 02/25/1994 | Zinc | 8 | TS | 1450.2 | .04869 | .00000 | 67.77 | | B | |
| 03/01/1994 | Arsenic | 1 | TS | 1438.3 | .00048 | .00057 | 51.16 | | B | |
| 03/01/1994 | Cadmium | 1 | TS | 1438.3 | .00425 | .00140 | 51.16 | | | |
| 03/01/1994 | Chromium | 1 | TS | 1438.3 | .01788 | .00020 | 51.16 | | | |
| 03/01/1994 | Particulate Fluoride | 1 | TS | 1438.3 | 2.23529 | 8.30000 | 51.16 | | B | U |
| 03/01/1994 | Phosphorus | 1 | TS | 1438.3 | 1.44596 | .30000 | 51.16 | | | |
| 03/01/1994 | Vanadium | 1 | TS | 1438.3 | .01690 | .17000 | 51.16 | | | |
| 03/01/1994 | Zinc | 1 | TS | 1438.3 | .04044 | .00000 | 51.16 | | B | |
| 03/01/1994 | Arsenic | 2 | TS | 1435.3 | .00102 | .00057 | 106.82 | | | |
| 03/01/1994 | Cadmium | 2 | TS | 1435.3 | .01500 | .00140 | 106.82 | | | |
| 03/01/1994 | Chromium | 2 | TS | 1435.3 | .06543 | .00020 | 106.82 | | | |
| 03/01/1994 | Particulate Fluoride | 2 | TS | 1435.3 | 3.58402 | 8.30000 | 106.82 | | | U |
| 03/01/1994 | Phosphorus | 2 | TS | 1435.3 | 4.54253 | .30000 | 106.82 | | | |
| 03/01/1994 | Vanadium | 2 | TS | 1435.3 | .06508 | .17000 | 106.82 | | | |
| 03/01/1994 | Zinc | 2 | TS | 1435.3 | .07224 | .00000 | 106.82 | | | |
| 03/01/1994 | Arsenic | 3 | TS | 1443.1 | .00039 | .00057 | 48.15 | | B | |
| 03/01/1994 | Cadmium | 3 | TS | 1443.1 | .00390 | .00140 | 48.15 | | | |
| 03/01/1994 | Chromium | 3 | TS | 1443.1 | .00961 | .00020 | 48.15 | | | |
| 03/01/1994 | Particulate Fluoride | 3 | TS | 1443.1 | 2.00353 | 8.30000 | 48.15 | | B | U |
| 03/01/1994 | Phosphorus | 3 | TS | 1443.1 | .77840 | .30000 | 48.15 | | | U |
| 03/01/1994 | Vanadium | 3 | TS | 1443.1 | .00961 | .17000 | 48.15 | | | |
| 03/01/1994 | Zinc | 3 | TS | 1443.1 | .02308 | .00000 | 48.15 | | B | |
| 03/01/1994 | Arsenic | 4 | TS | 1428.8 | .00048 | .00057 | 50.01 | | B | |
| 03/01/1994 | Cadmium | 4 | TS | 1428.8 | .00139 | .00140 | 50.01 | | U | U |
| 03/01/1994 | Chromium | 4 | TS | 1428.8 | .00594 | .00020 | 50.01 | | | |
| 03/01/1994 | Particulate Fluoride | 4 | TS | 1428.8 | 2.50591 | 8.30000 | 50.01 | | B | U |
| 03/01/1994 | Phosphorus | 4 | TS | 1428.8 | .51507 | .30000 | 50.01 | | | U |
| 03/01/1994 | Vanadium | 4 | TS | 1428.8 | .00532 | .17000 | 50.01 | | | |
| 03/01/1994 | Zinc | 4 | TS | 1428.8 | .03061 | .00000 | 50.01 | | B | |
| 03/01/1994 | Arsenic | 5 | TS | 1434.9 | .00036 | .00057 | 14.79 | | B | |
| 03/01/1994 | Cadmium | 5 | TS | 1434.9 | .00141 | .00140 | 14.79 | | U | U |
| 03/01/1994 | Chromium | 5 | TS | 1434.9 | .00667 | .00020 | 14.79 | | | |
| 03/01/1994 | Particulate Fluoride | 5 | TS | 1434.9 | 1.63995 | 8.30000 | 14.79 | | B | U |
| 03/01/1994 | Phosphorus | 5 | TS | 1434.9 | .36670 | .30000 | 14.79 | | | U |
| 03/01/1994 | Vanadium | 5 | TS | 1434.9 | .00652 | .17000 | 14.79 | | | |
| 03/01/1994 | Zinc | 5 | TS | 1434.9 | .01006 | .00000 | 14.79 | | B | |
| 03/01/1994 | Arsenic | 6 | TS | 1438.6 | .00018 | .00057 | 13.31 | Q | U | U |
| 03/01/1994 | Cadmium | 6 | TS | 1438.6 | .00142 | .00140 | 13.31 | Q | U | U |
| 03/01/1994 | Chromium | 6 | TS | 1438.6 | .00089 | .00020 | 13.31 | Q | | U |

| Sample Date | Chemical Name | Site # | Typ | Run Time (min.) | Chem Conc. (ug/m3) | EPA Scr. L(ug/m3) | Part.C. (ug/m3) | Grav. Val | Qual. Lab | Qual. Val |
|---|---|---|---|---|---|---|---|---|---|---|
| 03/01/1994 | Particulate Fluoride | 6 | TS | 1438.6 | 1.52933 | 8.30000 | 13.31 | Q | B | |
| 03/01/1994 | Phosphorus | 6 | TS | 1438.6 | .22976 | .30000 | 13.31 | Q | B | UJ |
| 03/01/1994 | Vanadium | 6 | TS | 1438.6 | .00179 | .17000 | 13.31 | Q | U | U |
| 03/01/1994 | Zinc | 6 | TS | 1438.6 | .00608 | .00000 | 13.31 | Q | B | J |
| 03/01/1994 | Arsenic | 7 | TS | 1451.6 | .00017 | .00057 | 13.50 | | U | U |
| 03/01/1994 | Cadmium | 7 | TS | 1451.6 | .00156 | .00140 | 13.50 | | | |
| 03/01/1994 | Chromium | 7 | TS | 1451.6 | .00318 | .00020 | 13.50 | | | |
| 03/01/1994 | Particulate Fluoride | 7 | TS | 1451.6 | 2.57565 | 8.30000 | 13.50 | | B | |
| 03/01/1994 | Phosphorus | 7 | TS | 1451.6 | .39662 | .30000 | 13.50 | | | UJ |
| 03/01/1994 | Vanadium | 7 | TS | 1451.6 | .00308 | .17000 | 13.50 | | B | |
| 03/01/1994 | Zinc | 7 | TS | 1451.6 | .00685 | .00000 | 13.50 | | B | J |
| 03/05/1994 | Arsenic | 1 | TS | 1443.9 | .00032 | .00057 | 41.01 | | B | |
| 03/05/1994 | Cadmium | 1 | TS | 1443.9 | .00313 | .00140 | 41.01 | | | |
| 03/05/1994 | Chromium | 1 | TS | 1443.9 | .02886 | .00020 | 41.01 | | | |
| 03/05/1994 | Particulate Fluoride | 1 | TS | 1443.9 | 3.92452 | 8.30000 | 41.01 | | | |
| 03/05/1994 | Phosphorus | 1 | TS | 1443.9 | 1.49173 | .30000 | 41.01 | | | J |
| 03/05/1994 | Vanadium | 1 | TS | 1443.9 | .02516 | .17000 | 41.01 | | | |
| 03/05/1994 | Zinc | 1 | TS | 1443.9 | .01994 | .00000 | 41.01 | | B | J |
| 03/05/1994 | Arsenic | 2 | TS | 1434.5 | .00118 | .00057 | 96.60 | | | |
| 03/05/1994 | Cadmium | 2 | TS | 1434.5 | .01764 | .00140 | 96.60 | | | |
| 03/05/1994 | Chromium | 2 | TS | 1434.5 | .10130 | .00020 | 96.60 | | | |
| 03/05/1994 | Particulate Fluoride | 2 | TS | 1434.5 | 3.52825 | 8.30000 | 96.60 | | | |
| 03/05/1994 | Phosphorus | 2 | TS | 1434.5 | 5.11320 | .30000 | 96.60 | | | J |
| 03/05/1994 | Vanadium | 2 | TS | 1434.5 | .10337 | .17000 | 96.60 | | | |
| 03/05/1994 | Zinc | 2 | TS | 1434.5 | .09303 | .00000 | 96.60 | | | J |
| 03/05/1994 | Arsenic | 3 | TS | 1447.9 | .00033 | .00057 | 28.00 | | B | |
| 03/05/1994 | Cadmium | 3 | TS | 1447.9 | .00193 | .00140 | 28.00 | | | |
| 03/05/1994 | Chromium | 3 | TS | 1447.9 | .00334 | .00020 | 28.00 | | | |
| 03/05/1994 | Particulate Fluoride | 3 | TS | 1447.9 | 1.35167 | 8.30000 | 28.00 | | U | U |
| 03/05/1994 | Phosphorus | 3 | TS | 1447.9 | .59947 | .30000 | 28.00 | | | UJ |
| 03/05/1994 | Vanadium | 3 | TS | 1447.9 | .00372 | .17000 | 28.00 | | B | |
| 03/05/1994 | Zinc | 3 | TS | 1447.9 | .01446 | .00000 | 28.00 | | B | J |
| 03/05/1994 | Arsenic | 4 | TS | 1432.1 | .00041 | .00057 | 30.62 | | B | |
| 03/05/1994 | Cadmium | 4 | TS | 1432.1 | .00181 | .00140 | 30.62 | | | |
| 03/05/1994 | Chromium | 4 | TS | 1432.1 | .00579 | .00020 | 30.62 | | | |
| 03/05/1994 | Particulate Fluoride | 4 | TS | 1432.1 | 1.58881 | 8.30000 | 30.62 | | B | |
| 03/05/1994 | Phosphorus | 4 | TS | 1432.1 | .81175 | .30000 | 30.62 | | | J |
| 03/05/1994 | Vanadium | 4 | TS | 1432.1 | .00454 | .17000 | 30.62 | | B | |
| 03/05/1994 | Zinc | 4 | TS | 1432.1 | .01846 | .00000 | 30.62 | | B | J |
| 03/05/1994 | Arsenic | 5 | TS | 1439.2 | .00018 | .00057 | 10.83 | | B | |
| 03/05/1994 | Cadmium | 5 | TS | 1439.2 | .00141 | .00140 | 10.83 | | U | U |
| 03/05/1994 | Chromium | 5 | TS | 1439.2 | .00201 | .00020 | 10.83 | | | U |
| 03/05/1994 | Particulate | 5 | TS | 1439.2 | 1.40600 | 8.30000 | 10.83 | | U | U |

| Sample Date | Chemical Name | Site # | Typ | Run Time (min.) | Chem Conc. (ug/m3) | EPA Scr. L(ug/m3) | Part.C. (ug/m3) | Grav. Val | Qual. Lab | Qual. Val |
|---|---|---|---|---|---|---|---|---|---|---|
| | Fluoride | | | | | | | | | |
| 03/05/1994 | Phosphorus | 5 | TS | 1439.2 | .23410 | .30000 | 10.83 | | B | UJ |
| 03/05/1994 | Vanadium | 5 | TS | 1439.2 | .00176 | .17000 | 10.83 | | U | U |
| 03/05/1994 | Zinc | 5 | TS | 1439.2 | .00949 | .00000 | 10.83 | | B | J |
| 03/05/1994 | Arsenic | 6 | TS | 1440.0 | .00029 | .00057 | 11.90 | | B | |
| 03/05/1994 | Cadmium | 6 | TS | 1440.0 | .00142 | .00140 | 11.90 | | U | U |
| 03/05/1994 | Chromium | 6 | TS | 1440.0 | .00083 | .00020 | 11.90 | | | U |
| 03/05/1994 | Particulate Fluoride | 6 | TS | 1440.0 | 1.51636 | 8.30000 | 11.90 | | B | |
| 03/05/1994 | Phosphorus | 6 | TS | 1440.0 | .21072 | .30000 | 11.90 | | B | UJ |
| 03/05/1994 | Vanadium | 6 | TS | 1440.0 | .00179 | .17000 | 11.90 | | U | U |
| 03/05/1994 | Zinc | 6 | TS | 1440.0 | .00491 | .00000 | 11.90 | | B | UJ |
| 03/05/1994 | Arsenic | 7 | TS | 1453.2 | .00017 | .00057 | 21.67 | | U | U |
| 03/05/1994 | Cadmium | 7 | TS | 1453.2 | .00280 | .00140 | 21.67 | | | |
| 03/05/1994 | Chromium | 7 | TS | 1453.2 | .00450 | .00020 | 21.67 | | | |
| 03/05/1994 | Particulate Fluoride | 7 | TS | 1453.2 | 2.43349 | 8.30000 | 21.67 | | B | |
| 03/05/1994 | Phosphorus | 7 | TS | 1453.2 | 1.30928 | .30000 | 21.67 | | | J |
| 03/05/1994 | Vanadium | 7 | TS | 1453.2 | .00476 | .17000 | 21.67 | | B | |
| 03/05/1994 | Zinc | 7 | TS | 1453.2 | .01734 | .00000 | 21.67 | | B | J |
| 03/09/1994 | Arsenic | 1 | TS | 1445.5 | .00049 | .00057 | 57.00 | | B | |
| 03/09/1994 | Cadmium | 1 | TS | 1445.5 | .00202 | .00140 | 57.00 | | | |
| 03/09/1994 | Chromium | 1 | TS | 1445.5 | .01301 | .00020 | 57.00 | | | |
| 03/09/1994 | Particulate Fluoride | 1 | TS | 1445.5 | 5.20272 | 8.30000 | 57.00 | | | U |
| 03/09/1994 | Phosphorus | 1 | TS | 1445.5 | 1.02941 | .30000 | 57.00 | | | |
| 03/09/1994 | Vanadium | 1 | TS | 1445.5 | .01182 | .17000 | 57.00 | | | |
| 03/09/1994 | Zinc | 1 | TS | 1445.5 | .03276 | .00000 | 57.00 | | B | |
| 03/09/1994 | Arsenic | 2 | TS | 1434.0 | .00138 | .00057 | 171.43 | | | |
| 03/09/1994 | Cadmium | 2 | TS | 1434.0 | .01901 | .00140 | 171.43 | | | |
| 03/09/1994 | Chromium | 2 | TS | 1434.0 | .07712 | .00020 | 171.43 | | | |
| 03/09/1994 | Particulate Fluoride | 2 | TS | 1434.0 | 5.06816 | 8.30000 | 171.43 | | | U |
| 03/09/1994 | Phosphorus | 2 | TS | 1434.0 | 5.66036 | .30000 | 171.43 | | | |
| 03/09/1994 | Vanadium | 2 | TS | 1434.0 | .08883 | .17000 | 171.43 | | | |
| 03/09/1994 | Zinc | 2 | TS | 1434.0 | .11431 | .00000 | 171.43 | | | |
| 03/09/1994 | Arsenic | 3 | TS | 1442.8 | .00046 | .00057 | 58.71 | | B | |
| 03/09/1994 | Cadmium | 3 | TS | 1442.8 | .00135 | .00140 | 58.71 | | U | U |
| 03/09/1994 | Chromium | 3 | TS | 1442.8 | .00432 | .00020 | 58.71 | | | |
| 03/09/1994 | Particulate Fluoride | 3 | TS | 1442.8 | 2.23573 | 8.30000 | 58.71 | | B | U |
| 03/09/1994 | Phosphorus | 3 | TS | 1442.8 | .38888 | .30000 | 58.71 | | | U |
| 03/09/1994 | Vanadium | 3 | TS | 1442.8 | .00455 | .17000 | 58.71 | | B | |
| 03/09/1994 | Zinc | 3 | TS | 1442.8 | .02818 | .00000 | 58.71 | | B | |
| 03/09/1994 | Arsenic | 4 | TS | 1428.4 | .00033 | .00057 | 52.70 | | B | |
| 03/09/1994 | Cadmium | 4 | TS | 1428.4 | .00176 | .00140 | 52.70 | | | |
| 03/09/1994 | Chromium | 4 | TS | 1428.4 | .00677 | .00020 | 52.70 | | | |
| 03/09/1994 | Particulate Fluoride | 4 | TS | 1428.4 | 2.95313 | 8.30000 | 52.70 | | B | U |

MONTHLY SUMMARY
WIND SPEED
(Miles Per Hour)
INPUT FILE: s7metJ04.met

Bechtel Environmental, Inc.

Met Data for Site 7
AUGUST 1994

| Day \ Hour | 1 | 2 | 3 | 4 | 5 | 6 | 7 | 8 | 9 | 10 | 11 | 12 | 13 | 14 | 15 | 16 | 17 | 18 | 19 | 20 | 21 | 22 | 23 | 24 | Mean | Max. | Min. |
|---|---|---|---|---|---|---|---|---|---|---|---|---|---|---|---|---|---|---|---|---|---|---|---|---|---|---|---|
| 1 | 8.4 | 8.2 | 3.7 | 7.2 | 11.6 | 8.2 | 2.4 | 2.6 | 4.8 | 5.0 | 5.2 | 6.6 | 7.3 | 6.4 | 7.1 | 9.1 | 10.7 | 15.1 | 13.8 | 19.7 | 6.0 | 11.1 | 12.4 | 14.3 | 8.6 | 19.7 | 2.4 |
| 2 | 14.9 | 7.1 | 8.1 | 3.2 | 3.0 | 7.2 | 11.2 | 3.9 | 6.0 | 5.7 | 7.6 | 7.2 | 8.0 | 8.6 | 8.4 | 8.5 | 9.1 | 9.4 | 9.8 | 13.6 | 12.3 | 9.9 | 11.4 | 12.8 | 8.6 | 14.9 | 3.0 |
| 3 | 11.7 | 12.9 | 6.0 | 8.1 | 7.9 | 2.5 | 2.0 | 3.2 | 4.1 | 7.2 | 7.0 | 8.5 | 9.7 | 9.6 | 9.8 | 10.2 | 9.1 | 9.1 | 5.5 | 4.1 | 8.9 | 12.8 | 14.9 | 15.7 | 8.4 | 15.7 | 2.0 |
| 4 | 14.1 | 13.9 | 6.0 | 3.8 | 12.1 | 16.5 | 12.5 | 15.1 | 16.6 | 14.0 | 11.3 | 9.2 | 11.2 | 15.5 | 17.1 | 14.8 | 13.3 | 10.4 | 10.3 | 5.4 | 5.4 | 9.4 | 13.1 | 10.3 | 11.7 | 17.1 | 3.8 |
| 5 | 11.2 | 10.9 | 6.2 | 5.9 | 7.0 | 6.7 | 7.1 | 4.1 | 5.5 | 4.0 | 5.1 | 6.5 | 9.7 | 12.6 | 18.4 | 20.4 | 23.1 | 17.8 | 12.8 | 13.0 | 21.1 | 19.4 | 19.8 | 23.4 | 12.2 | 23.4 | 4.0 |
| 6 | 24.1 | 25.1 | 20.1 | 11.0 | 15.9 | 19.3 | 19.9 | 23.8 | 23.3 | 20.0 | 17.9 | 20.1 | 21.5 | 19.4 | 22.3 | 23.6 | 22.3 | 17.5 | 15.0 | 11.4 | 15.1 | 15.4 | 13.2 | 12.6 | 18.7 | 25.1 | 11.0 |
| 7 | 13.4 | 13.5 | 9.0 | 3.1 | 2.5 | 1.9 | 3.9 | 4.5 | 5.3 | 4.1 | 4.4 | 6.0 | 6.8 | 14.7 | 16.5 | 9.9 | 8.0 | 5.2 | 4.2 | 4.8 | 8.1 | 11.9 | 16.2 | 18.0 | 8.2 | 18.0 | 1.9 |
| 8 | 14.9 | 10.7 | 11.8 | 11.2 | 9.5 | 10.1 | 6.5 | 6.1 | 10.6 | 16.1 | 16.4 | 19.6 | 22.6 | 30.1 | 8.5 | 7.1 | 6.0 | 5.6 | 9.9 | 24.3 | 18.5 | 17.1 | 22.9 | 21.1 | 14.0 | 30.1 | 5.6 |
| 9 | 18.6 | 19.8 | 20.7 | 18.1 | 16.0 | 15.7 | 14.5 | 8.6 | 7.9 | 9.4 | 17.2 | 18.3 | 17.1 | 12.5 | 13.6 | 15.0 | 16.5 | 12.9 | 7.3 | 6.9 | 12.7 | 19.8 | 23.9 | 18.4 | 15.1 | 23.9 | 6.9 |
| 10 | 18.7 | 17.2 | 14.6 | 6.9 | 12.7 | 14.4 | 7.5 | 4.8 | 11.6 | 9.6 | 10.8 | 13.5 | 11.5 | 14.2 | 10.2 | 8.8 | 12.0 | 9.5 | 14.4 | 15.5 | 5.9 | 23.1 | 23.1 | 21.5 | 13.0 | 23.1 | 4.8 |
| 11 | 11.8 | 7.5 | 5.3 | 5.2 | 4.4 | 9.9 | 10.6 | 4.7 | 4.8 | 5.4 | 6.5 | 6.8 | 6.9 | 6.7 | 9.8 | 10.9 | 10.7 | 19.0 | 20.5 | 12.6 | 10.9 | 13.6 | 10.0 | 5.7 | 9.2 | 20.5 | 4.4 |
| 12 | 2.7 | 3.4 | 7.1 | 4.7 | 8.0 | 4.0 | 8.4 | 8.1 | 5.0 | 4.8 | 8.5 | 10.0 | 8.5 | 8.0 | 7.8 | 7.6 | 12.7 | 27.6 | 19.2 | 22.5 | 11.1 | 9.5 | 11.6 | 11.8 | 9.7 | 27.6 | 2.7 |
| 13 | 6.6 | 7.1 | 4.6 | 6.2 | 6.7 | 3.5 | 6.6 | 3.1 | 3.9 | 5.1 | 6.5 | 6.0 | 6.6 | 7.2 | 8.6 | 7.2 | 6.8 | 7.6 | 5.1 | 8.9 | 10.9 | 10.2 | 7.9 | 11.1 | 6.8 | 11.1 | 3.1 |
| 14 | 2.7 | 4.5 | 3.6 | 2.1 | 4.0 | 2.1 | 4.5 | 6.3 | 4.6 | 4.4 | 4.5 | 4.7 | 6.9 | 9.2 | 9.3 | 10.2 | 12.5 | 12.5 | 23.6 | 18.4 | 11.8 | 5.3 | 6.2 | 9.2 | 7.6 | 23.6 | 2.1 |
| 15 | 9.5 | 11.9 | 10.8 | 9.8 | 7.8 | 5.0 | 3.6 | 4.2 | 5.0 | 10.6 | 16.1 | 19.7 | 20.6 | 20.5 | 19.2 | 16.9 | 14.6 | 16.2 | 16.6 | 15.3 | 15.9 | 16.8 | 20.0 | 19.3 | 13.6 | 20.6 | 3.6 |
| 16 | 17.1 | 9.1 | 4.4 | 4.0 | 1.3 | 2.9 | 1.2 | 2.7 | 7.4 | 9.0 | 14.5 | 15.4 | 14.8 | 10.8 | 12.7 | 17.5 | 21.6 | 24.7 | 25.0 | 21.0 | 17.9 | 18.4 | 19.4 | 21.0 | 13.1 | 25.0 | 1.2 |
| 17 | 22.1 | 22.1 | 20.6 | 14.6 | 2.6 | 3.0 | 2.0 | 5.9 | 11.5 | 14.6 | 17.0 | 13.7 | 9.4 | 9.6 | 13.0 | 17.6 | 17.8 | 14.2 | 9.3 | 7.4 | 10.9 | 13.7 | 13.4 | 14.0 | 12.5 | 22.1 | 2.0 |
| 18 | 17.5 | 14.6 | 9.4 | 9.5 | ***** | ***** | ***** | ***** | ***** | ***** | ***** | ***** | ***** | ***** | ***** | ***** | ***** | ***** | ***** | ***** | ***** | ***** | ***** | ***** | ***** | 17.5 | 9.4 |
| 19 | ***** | ***** | ***** | ***** | ***** | ***** | ***** | ***** | ***** | ***** | ***** | ***** | ***** | ***** | ***** | ***** | ***** | ***** | ***** | ***** | ***** | ***** | ***** | ***** | ***** | ***** | ***** |
| 20 | ***** | ***** | ***** | ***** | ***** | ***** | ***** | ***** | ***** | ***** | ***** | ***** | ***** | ***** | ***** | ***** | ***** | ***** | ***** | ***** | ***** | ***** | ***** | ***** | ***** | ***** | ***** |
| 21 | ***** | ***** | ***** | ***** | ***** | ***** | ***** | ***** | ***** | ***** | ***** | ***** | ***** | ***** | ***** | ***** | ***** | ***** | ***** | ***** | ***** | ***** | ***** | ***** | ***** | ***** | ***** |
| 22 | ***** | ***** | ***** | ***** | ***** | ***** | ***** | 17.3 | 20.6 | 24.5 | 28.2 | 24.3 | 26.6 | 28.0 | 27.0 | 30.3 | 29.1 | 31.6 | 22.1 | 22.4 | 22.0 | 23.8 | 22.6 | 19.8 | ***** | 31.6 | 17.3 |
| 23 | 18.4 | 16.7 | 7.1 | 11.0 | 11.9 | 9.8 | 3.8 | 2.3 | 3.4 | 3.8 | 4.9 | 6.1 | 5.8 | ***** | 11.7 | 11.9 | 8.3 | 6.6 | 3.9 | 7.8 | 10.4 | 7.8 | 8.7 | 14.3 | 8.5 | 18.4 | 2.3 |
| 24 | 17.7 | 11.4 | 6.2 | 6.2 | 10.4 | 7.9 | 5.7 | 4.8 | 4.8 | 6.7 | 9.1 | 10.0 | 20.0 | 20.2 | 18.0 | 21.5 | 19.6 | 17.4 | 14.4 | 20.8 | 19.3 | 20.8 | 16.6 | 15.4 | 13.5 | 21.5 | 4.8 |
| 25 | 16.1 | 14.7 | 9.1 | 7.1 | 6.0 | 7.0 | 4.5 | 2.2 | 4.4 | 7.1 | 10.3 | 10.3 | 9.8 | 10.0 | 12.3 | 14.2 | 10.5 | 9.2 | 5.4 | 6.2 | 11.7 | 10.5 | 9.8 | 3.9 | 8.8 | 16.1 | 2.2 |
| 26 | 4.2 | 3.7 | 8.7 | 5.1 | 11.1 | 14.5 | 12.8 | 14.0 | 14.3 | 21.9 | 21.8 | 17.2 | 19.6 | 22.4 | 19.6 | 18.0 | 15.9 | 17.1 | 11.4 | 8.8 | 9.4 | 5.6 | 5.2 | 2.9 | 12.7 | 22.4 | 2.9 |
| 27 | 2.6 | 3.6 | 5.2 | 3.0 | 4.1 | 3.2 | 4.4 | 4.1 | 6.0 | 4.0 | 7.5 | 9.9 | 7.1 | 7.9 | 9.1 | 9.8 | 4.6 | 4.9 | 14.4 | 18.2 | 21.5 | 23.1 | 14.7 | 15.4 | 8.7 | 23.1 | 2.6 |
| 28 | 14.6 | 12.8 | 7.5 | 3.9 | 10.8 | 5.9 | 10.8 | 12.6 | 6.0 | 11.6 | 11.2 | 7.9 | 10.9 | 13.6 | 11.9 | 19.8 | 19.4 | 23.3 | 14.4 | 10.1 | 10.4 | 12.8 | 12.1 | 10.2 | 11.9 | 23.3 | 3.9 |
| 29 | 8.2 | 8.3 | 2.8 | 14.0 | 11.9 | 13.1 | 9.9 | 18.0 | 21.0 | 25.8 | 24.3 | 22.1 | 26.0 | 24.4 | 24.9 | 28.5 | 27.2 | 22.6 | 21.4 | 22.2 | 26.1 | 30.7 | 31.1 | 26.1 | 20.4 | 31.1 | 2.8 |
| 30 | 24.9 | 25.8 | 19.8 | 16.6 | 16.6 | 18.9 | 16.2 | 13.4 | 12.2 | 14.8 | 13.6 | 13.9 | 15.4 | 13.6 | 12.7 | 10.7 | 8.3 | 4.0 | 3.2 | 3.0 | 3.7 | 5.6 | 6.3 | 5.0 | 12.4 | 25.8 | 3.0 |
| 31 | 3.4 | 4.5 | 3.9 | 6.5 | 3.9 | 6.1 | 8.2 | 3.9 | 3.5 | 3.8 | 4.8 | 5.7 | 6.7 | 8.7 | 11.2 | 14.2 | 13.9 | 17.4 | 14.0 | 13.2 | 12.7 | 10.0 | 6.8 | 7.4 | 8.1 | 17.4 | 3.4 |
| Mean | 13.0 | 11.9 | 9.0 | 7.7 | 8.5 | 8.4 | 7.7 | 7.6 | 8.7 | 10.1 | 11.6 | 11.8 | 12.9 | 14.0 | 13.7 | 14.6 | 14.2 | 14.4 | 12.8 | 13.2 | 13.0 | 14.4 | 14.6 | 14.1 | Monthly mean = | | 11.8 |
| Max. | 24.9 | 25.8 | 20.7 | 18.1 | 16.6 | 19.3 | 19.9 | 23.8 | 23.3 | 25.8 | 28.2 | 24.3 | 26.6 | 30.1 | 27.0 | 30.3 | 29.1 | 31.6 | 25.0 | 24.3 | 26.1 | 30.7 | 31.1 | 26.1 | Monthly max. = | | 31.6 |
| Min. | 2.6 | 3.4 | 2.8 | 2.1 | 1.3 | 1.9 | 1.2 | 2.2 | 3.4 | 3.8 | 4.4 | 4.7 | 5.8 | 6.4 | 7.1 | 7.1 | 4.6 | 4.0 | 3.2 | 3.0 | 3.7 | 5.3 | 5.2 | 2.9 | Monthly min. = | | 1.2 |

TOTAL NUMBER OF DATA HOURS IN MONTH: 744
Number of hours of bad or missing data: 100
Current % recovery = 86.6
**** designates missing or lost data

N/A: insufficient data available for calculation (a minimum of 75% is required)

table created at 11:34,12/14/1994

MONTHLY SUMMARY
WIND DIRECTION
(Degrees)
INPUT FILE: s7metJ04.met

Bechtel Environmental, Inc.

Met Data for Site 7
AUGUST 1994

| Day | Hour 1 | 2 | 3 | 4 | 5 | 6 | 7 | 8 | 9 | 10 | 11 | 12 | 13 | 14 | 15 | 16 | 17 | 18 | 19 | 20 | 21 | 22 | 23 | 24 | Mean | Max. | Min. |
|---|---|---|---|---|---|---|---|---|---|---|---|---|---|---|---|---|---|---|---|---|---|---|---|---|---|---|---|
| 1 | 257.0 | 202.0 | 103.0 | 116.0 | 129.0 | 113.0 | 35.0 | 300.0 | 293.0 | 6.0 | 337.0 | 326.0 | 290.0 | 324.0 | 332.0 | 353.0 | 337.0 | 357.0 | 231.0 | 274.0 | 317.0 | 131.0 | 151.0 | 142.0 | 2.3 | 357.0 | 6.0 |
| 2 | 132.0 | 113.0 | 144.0 | 264.0 | 299.0 | 130.0 | 134.0 | 113.0 | 58.0 | 60.0 | 34.0 | 32.0 | 12.0 | 1.0 | 357.0 | 3.0 | 359.0 | 344.0 | 295.0 | 264.0 | 296.0 | 88.0 | 92.0 | 117.0 | 35.9 | 359.0 | 1.0 |
| 3 | 108.0 | 102.0 | 96.0 | 128.0 | 136.0 | 267.0 | 135.0 | 92.0 | 24.0 | 34.0 | 34.0 | 4.0 | 4.0 | 14.0 | 5.0 | 8.0 | 15.0 | 15.0 | 27.0 | 54.0 | 132.0 | 145.0 | 150.0 | 149.0 | 63.2 | 267.0 | 4.0 |
| 4 | 149.0 | 150.0 | 211.0 | 70.0 | 142.0 | 143.0 | 136.0 | 138.0 | 143.0 | 129.0 | 111.0 | 190.0 | 201.0 | 312.0 | 305.0 | 306.0 | 310.0 | 311.0 | 293.0 | 263.0 | 171.0 | 117.0 | 60.0 | 63.0 | 184.3 | 312.0 | 60.0 |
| 5 | 69.0 | 52.0 | 300.0 | 261.0 | 253.0 | 150.0 | 141.0 | 282.0 | 294.0 | 344.0 | 351.0 | 316.0 | 310.0 | 285.0 | 274.0 | 280.0 | 281.0 | 281.0 | 272.0 | 248.0 | 233.0 | 237.0 | 230.0 | 226.0 | 248.7 | 351.0 | 52.0 |
| 6 | 230.0 | 233.0 | 235.0 | 235.0 | 236.0 | 237.0 | 236.0 | 237.0 | 241.0 | 245.0 | 249.0 | 260.0 | 268.0 | 271.0 | 271.0 | 265.0 | 272.0 | 265.0 | 261.0 | 232.0 | 225.0 | 225.0 | 223.0 | 229.0 | 245.0 | 272.0 | 223.0 |
| 7 | 229.0 | 228.0 | 204.0 | 151.0 | 273.0 | 264.0 | 135.0 | 245.0 | 308.0 | 345.0 | 2.0 | 350.0 | 3.0 | 284.0 | 302.0 | 331.0 | 314.0 | 4.0 | 96.0 | 125.0 | 135.0 | 200.0 | 194.0 | 188.0 | 324.6 | 350.0 | 2.0 |
| 8 | 186.0 | 184.0 | 185.0 | 186.0 | 131.0 | 120.0 | 133.0 | 130.0 | 227.0 | 245.0 | 248.0 | 279.0 | 275.0 | 270.0 | 211.0 | 291.0 | 346.0 | 15.0 | 185.0 | 194.0 | 164.0 | 144.0 | 164.0 | 164.0 | 194.9 | 346.0 | 15.0 |
| 9 | 129.0 | 165.0 | 127.0 | 135.0 | 144.0 | 153.0 | 152.0 | 183.0 | 186.0 | 183.0 | 268.0 | 261.0 | 251.0 | 265.0 | 280.0 | 285.0 | 278.0 | 277.0 | 262.0 | 206.0 | 182.0 | 202.0 | 197.0 | 176.0 | 206.1 | 285.0 | 127.0 |
| 10 | 146.0 | 149.0 | 159.0 | 127.0 | 133.0 | 142.0 | 147.0 | 121.0 | 125.0 | 100.0 | 105.0 | 105.0 | 102.0 | 115.0 | 102.0 | 203.0 | 168.0 | 160.0 | 209.0 | 258.0 | 178.0 | 138.0 | 141.0 | 137.0 | 144.6 | 258.0 | 100.0 |
| 11 | 134.0 | 136.0 | 119.0 | 98.0 | 140.0 | 145.0 | 147.0 | 105.0 | 294.0 | 13.0 | 50.0 | 38.0 | 23.0 | 32.0 | 162.0 | 145.0 | 170.0 | 186.0 | 190.0 | 54.0 | 120.0 | 151.0 | 173.0 | 95.0 | 121.7 | 294.0 | 13.0 |
| 12 | 84.0 | 87.0 | 145.0 | 159.0 | 219.0 | 99.0 | 136.0 | 106.0 | 7.0 | 337.0 | 224.0 | 216.0 | 303.0 | 258.0 | 251.0 | 224.0 | 223.0 | 238.0 | 152.0 | 154.0 | 117.0 | 135.0 | 139.0 | 135.0 | 172.8 | 337.0 | 7.0 |
| 13 | 87.0 | 113.0 | 126.0 | 149.0 | 152.0 | 172.0 | 143.0 | 313.0 | 359.0 | 26.0 | 34.0 | 57.0 | 58.0 | 42.0 | 28.0 | 23.0 | 19.0 | 10.0 | 27.0 | 74.0 | 120.0 | 138.0 | 139.0 | 250.0 | 65.8 | 359.0 | 10.0 |
| 14 | 260.0 | 160.0 | 251.0 | 59.0 | 133.0 | 282.0 | 209.0 | 97.0 | 35.0 | 330.0 | 348.0 | 352.0 | 355.0 | 358.0 | 12.0 | 22.0 | 319.0 | 267.0 | 230.0 | 215.0 | 238.0 | 155.0 | 72.0 | 141.0 | 354.2 | 358.0 | 12.0 |
| 15 | 156.0 | 152.0 | 148.0 | 147.0 | 164.0 | 4.0 | 58.0 | 65.0 | 75.0 | 270.0 | 264.0 | 273.0 | 267.0 | 268.0 | 269.0 | 274.0 | 270.0 | 267.0 | 267.0 | 245.0 | 233.0 | 231.0 | 232.0 | 230.0 | 201.2 | 274.0 | 4.0 |
| 16 | 223.0 | 240.0 | 272.0 | 110.0 | 288.0 | 267.0 | 121.0 | 283.0 | 297.0 | 290.0 | 265.0 | 262.0 | 264.0 | 277.0 | 284.0 | 280.0 | 275.0 | 273.0 | 265.0 | 247.0 | 231.0 | 226.0 | 226.0 | 227.0 | 249.7 | 297.0 | 110.0 |
| 17 | 222.0 | 229.0 | 228.0 | 235.0 | 329.0 | 182.0 | 287.0 | 228.0 | 250.0 | 259.0 | 244.0 | 260.0 | 301.0 | 280.0 | 282.0 | 285.0 | 291.0 | 283.0 | 259.0 | 241.0 | 239.0 | 228.0 | 238.0 | 236.0 | 254.8 | 329.0 | 182.0 |
| 18 | 234.0 | 235.0 | 205.0 | 178.0 | ***** | ***** | ***** | ***** | ***** | ***** | ***** | ***** | ***** | ***** | ***** | ***** | ***** | ***** | ***** | ***** | ***** | ***** | ***** | ***** | ***** | 235.0 | 178.0 |
| 19 | ***** | ***** | ***** | ***** | ***** | ***** | ***** | ***** | ***** | ***** | ***** | ***** | ***** | ***** | ***** | ***** | ***** | ***** | ***** | ***** | ***** | ***** | ***** | ***** | ***** | ***** | ***** |
| 20 | ***** | ***** | ***** | ***** | ***** | ***** | ***** | ***** | ***** | ***** | ***** | ***** | ***** | ***** | ***** | ***** | ***** | ***** | ***** | ***** | ***** | ***** | ***** | ***** | ***** | ***** | ***** |
| 21 | ***** | ***** | ***** | ***** | ***** | ***** | ***** | ***** | ***** | ***** | ***** | ***** | ***** | ***** | ***** | ***** | ***** | ***** | ***** | ***** | ***** | ***** | ***** | ***** | ***** | ***** | ***** |
| 22 | ***** | ***** | ***** | ***** | ***** | ***** | ***** | 242.0 | 247.0 | 242.0 | 255.0 | 241.0 | 242.0 | 258.0 | 261.0 | 262.0 | 262.0 | 263.0 | 250.0 | 238.0 | 233.0 | 231.0 | 232.0 | 232.0 | ***** | 263.0 | 231.0 |
| 23 | 233.0 | 232.0 | 262.0 | 229.0 | 227.0 | 223.0 | 271.0 | 321.0 | 20.0 | 337.0 | 350.0 | 355.0 | 353.0 | ***** | 291.0 | 289.0 | 305.0 | 346.0 | 92.0 | 141.0 | 151.0 | 140.0 | 143.0 | 148.0 | 237.3 | 355.0 | 20.0 |
| 24 | 151.0 | 155.0 | 151.0 | 153.0 | 142.0 | 150.0 | 140.0 | 186.0 | 294.0 | 275.0 | 267.0 | 284.0 | 269.0 | 278.0 | 276.0 | 281.0 | 276.0 | 273.0 | 248.0 | 237.0 | 241.0 | 234.0 | 228.0 | 226.0 | 225.6 | 294.0 | 140.0 |
| 25 | 232.0 | 224.0 | 232.0 | 263.0 | 251.0 | 239.0 | 233.0 | 351.0 | 314.0 | 294.0 | 268.0 | 287.0 | 312.0 | 344.0 | 304.0 | 291.0 | 279.0 | 281.0 | 350.0 | 152.0 | 196.0 | 192.0 | 175.0 | 244.0 | 262.8 | 351.0 | 152.0 |
| 26 | 172.0 | 124.0 | 141.0 | 173.0 | 170.0 | 234.0 | 221.0 | 248.0 | 254.0 | 256.0 | 258.0 | 257.0 | 271.0 | 282.0 | 272.0 | 269.0 | 268.0 | 274.0 | 269.0 | 247.0 | 243.0 | 238.0 | 239.0 | 256.0 | 234.8 | 282.0 | 124.0 |
| 27 | 287.0 | 118.0 | 189.0 | 283.0 | 128.0 | 243.0 | 284.0 | 124.0 | 158.0 | 311.0 | 270.0 | 256.0 | 264.0 | 261.0 | 263.0 | 285.0 | 11.0 | 217.0 | 191.0 | 196.0 | 196.0 | 200.0 | 151.0 | 142.0 | 209.5 | 311.0 | 11.0 |
| 28 | 140.0 | 141.0 | 178.0 | 109.0 | 145.0 | 172.0 | 153.0 | 147.0 | 85.0 | 109.0 | 115.0 | 246.0 | 281.0 | 284.0 | 265.0 | 222.0 | 206.0 | 208.0 | 208.0 | 193.0 | 186.0 | 146.0 | 144.0 | 149.0 | 176.3 | 284.0 | 85.0 |
| 29 | 140.0 | 153.0 | 268.0 | 139.0 | 145.0 | 148.0 | 177.0 | 239.0 | 241.0 | 247.0 | 255.0 | 250.0 | 258.0 | 258.0 | 263.0 | 264.0 | 259.0 | 246.0 | 240.0 | 242.0 | 235.0 | 231.0 | 231.0 | 234.0 | 223.5 | 268.0 | 139.0 |
| 30 | 237.0 | 235.0 | 238.0 | 232.0 | 236.0 | 236.0 | 241.0 | 246.0 | 263.0 | 267.0 | 259.0 | 272.0 | 280.0 | 276.0 | 292.0 | 285.0 | 271.0 | 357.0 | 59.0 | 232.0 | 157.0 | 242.0 | 247.0 | 260.0 | 246.7 | 357.0 | 59.0 |
| 31 | 309.0 | 227.0 | 74.0 | 115.0 | 136.0 | 251.0 | 139.0 | 263.0 | 325.0 | 321.0 | 345.0 | 353.0 | 326.0 | 301.0 | 300.0 | 282.0 | 279.0 | 271.0 | 261.0 | 233.0 | 223.0 | 226.0 | 217.0 | 143.0 | 246.7 | 353.0 | 74.0 |
| Mean | 182.8 | 168.1 | 184.9 | 166.8 | 187.7 | 183.3 | 167.1 | 200.2 | 334.0 | 324.3 | 321.9 | 303.0 | 307.5 | 307.6 | 307.9 | 300.3 | 313.4 | 299.6 | 210.7 | 202.2 | 199.7 | 184.1 | 178.8 | 182.9 | Monthly mean = | | 203.8 |
| Max. | 309.0 | 240.0 | 300.0 | 283.0 | 329.0 | 282.0 | 287.0 | 351.0 | 359.0 | 345.0 | 351.0 | 355.0 | 355.0 | 358.0 | 357.0 | 353.0 | 359.0 | 357.0 | 350.0 | 274.0 | 317.0 | 242.0 | 247.0 | 260.0 | Monthly max. = | | 359.0 |
| Min. | 69.0 | 52.0 | 74.0 | 59.0 | 128.0 | 4.0 | 35.0 | 65.0 | 7.0 | 6.0 | 2.0 | 4.0 | 3.0 | 1.0 | 5.0 | 3.0 | 11.0 | 4.0 | 27.0 | 54.0 | 117.0 | 88.0 | 60.0 | 63.0 | Monthly min. = | | 1.0 |

TOTAL NUMBER OF DATA HOURS IN MONTH: 744
Number of hours of bad or missing data: 100
Current % recovery = 86.6
**** designates missing or lost data

N/A: insufficient data available for calculation (a minimum of 75% is required)

table created at 11:34,12/14/1994

MONTHLY SUMMARY
TEMPERATURE
(Degrees Celsius)
INPUT FILE: s7metJ04.met

Bechtel Environmental, Inc.

Met Data for Site 7
AUGUST 1994

| Day | Hour 1 | 2 | 3 | 4 | 5 | 6 | 7 | 8 | 9 | 10 | 11 | 12 | 13 | 14 | 15 | 16 | 17 | 18 | 19 | 20 | 21 | 22 | 23 | 24 | Mean | Max. | Min. |
|---|---|---|---|---|---|---|---|---|---|---|---|---|---|---|---|---|---|---|---|---|---|---|---|---|---|---|---|
| 1 | 16.2 | 15.8 | 15.5 | 15.0 | 16.8 | 16.2 | 15.4 | 19.8 | 21.6 | 24.2 | 26.2 | 26.7 | 28.3 | 30.4 | 31.0 | 32.1 | 31.9 | 25.8 | 24.5 | 23.0 | 20.8 | 21.2 | 21.3 | 20.4 | 22.5 | 32.1 | 15.0 |
| 2 | 19.6 | 17.2 | 18.4 | 17.5 | 15.8 | 15.7 | 18.8 | 21.6 | 23.6 | 26.1 | 27.1 | 28.6 | 29.8 | 30.7 | 31.8 | 32.4 | 32.4 | 31.5 | 29.0 | 26.8 | 24.3 | 21.8 | 21.3 | 22.6 | 24.4 | 32.4 | 15.7 |
| 3 | 23.1 | 22.9 | 20.0 | 18.2 | 20.1 | 16.7 | 19.5 | 22.3 | 25.7 | 25.8 | 28.1 | 29.7 | 31.0 | 32.4 | 33.3 | 34.0 | 34.3 | 33.7 | 33.0 | 30.2 | 29.0 | 28.9 | 28.8 | 28.6 | 27.1 | 34.3 | 16.7 |
| 4 | 28.1 | 27.2 | 23.1 | 19.5 | 22.4 | 23.8 | 24.8 | 26.0 | 27.5 | 29.5 | 31.9 | 34.8 | 35.1 | 35.5 | 35.2 | 35.6 | 36.1 | 36.3 | 34.9 | 33.0 | 30.9 | 30.0 | 23.4 | 21.8 | 29.4 | 36.3 | 19.5 |
| 5 | 20.8 | 20.1 | 18.6 | 17.4 | 16.1 | 17.2 | 18.9 | 20.9 | 22.3 | 26.5 | 29.1 | 31.1 | 32.4 | 33.6 | 34.2 | 35.0 | 34.7 | 34.5 | 34.2 | 31.6 | 29.7 | 29.0 | 28.0 | 27.0 | 26.8 | 35.0 | 16.1 |
| 6 | 26.5 | 25.8 | 24.7 | 23.6 | 23.1 | 22.2 | 21.4 | 21.4 | 22.2 | 23.8 | 25.7 | 26.8 | 27.8 | 28.9 | 29.7 | 30.0 | 30.2 | 30.5 | 30.2 | 28.9 | 27.9 | 27.4 | 27.0 | 26.2 | 26.3 | 30.5 | 21.4 |
| 7 | 25.7 | 25.2 | 24.2 | 22.3 | 19.6 | 17.8 | 21.9 | 23.4 | 21.2 | 25.4 | 28.5 | 30.2 | 32.2 | 32.5 | 32.7 | 34.0 | 34.5 | 34.1 | 31.6 | 29.7 | 28.9 | 29.6 | 30.0 | 29.6 | 27.7 | 34.5 | 17.8 |
| 8 | 29.9 | 28.6 | 27.6 | 28.2 | 23.9 | 23.8 | 21.3 | 22.8 | 24.4 | 25.9 | 27.1 | 29.8 | 30.3 | 28.8 | 27.9 | 30.3 | 30.0 | 29.5 | 27.8 | 26.1 | 25.3 | 24.2 | 24.2 | 23.8 | 26.7 | 30.3 | 21.3 |
| 9 | 22.2 | 23.4 | 21.9 | 21.4 | 21.2 | 20.9 | 20.7 | 22.5 | 23.7 | 24.1 | 22.8 | 23.3 | 24.7 | 26.6 | 28.6 | 29.1 | 29.0 | 29.1 | 28.1 | 27.0 | 25.6 | 25.1 | 24.5 | 23.4 | 24.5 | 29.1 | 20.7 |
| 10 | 21.6 | 21.8 | 20.9 | 19.7 | 19.3 | 19.5 | 21.0 | 24.1 | 23.9 | 26.7 | 28.3 | 29.5 | 30.7 | 31.3 | 30.7 | 30.6 | 29.0 | 28.9 | 28.1 | 22.2 | 22.0 | 19.9 | 18.3 | 18.0 | 24.4 | 31.3 | 18.0 |
| 11 | 17.9 | 18.5 | 17.0 | 16.7 | 16.8 | 17.5 | 18.4 | 19.9 | 20.8 | 24.1 | 26.4 | 27.9 | 28.3 | 28.0 | 27.6 | 28.0 | 26.6 | 25.6 | 25.2 | 22.0 | 21.3 | 22.1 | 21.6 | 18.7 | 22.4 | 28.3 | 16.7 |
| 12 | 16.3 | 16.0 | 17.0 | 16.1 | 16.2 | 15.1 | 18.3 | 20.4 | 24.0 | 25.4 | 28.1 | 29.1 | 29.8 | 31.2 | 32.4 | 31.9 | 27.9 | 19.4 | 21.0 | 21.4 | 18.8 | 19.0 | 19.0 | 19.4 | 22.2 | 32.4 | 15.1 |
| 13 | 17.5 | 16.0 | 16.3 | 16.8 | 13.9 | 14.4 | 16.8 | 19.3 | 20.9 | 22.8 | 24.6 | 27.7 | 29.8 | 31.0 | 31.7 | 32.6 | 32.8 | 32.6 | 31.3 | 27.6 | 26.9 | 27.2 | 27.3 | 21.8 | 24.2 | 32.8 | 13.9 |
| 14 | 21.2 | 21.8 | 19.2 | 16.3 | 17.5 | 16.9 | 18.3 | 20.0 | 22.6 | 25.6 | 28.5 | 31.5 | 32.9 | 33.2 | 33.4 | 33.5 | 33.8 | 33.1 | 28.3 | 29.1 | 28.0 | 26.8 | 24.1 | 25.7 | 25.9 | 33.8 | 16.3 |
| 15 | 25.6 | 25.5 | 24.5 | 23.8 | 22.4 | 16.9 | 19.5 | 23.2 | 26.6 | 27.0 | 27.5 | 28.4 | 29.9 | 31.0 | 31.7 | 32.2 | 32.3 | 31.9 | 30.9 | 28.9 | 28.3 | 27.6 | 27.0 | 26.3 | 27.0 | 32.3 | 16.9 |
| 16 | 26.0 | 25.4 | 23.2 | 19.1 | 18.3 | 17.9 | 20.9 | 22.7 | 20.9 | 22.2 | 24.4 | 25.8 | 27.9 | 30.1 | 31.0 | 30.7 | 30.4 | 30.1 | 29.0 | 27.4 | 26.9 | 26.2 | 25.4 | 24.5 | 25.3 | 31.0 | 17.9 |
| 17 | 23.8 | 23.4 | 22.9 | 22.5 | 17.8 | 17.6 | 18.7 | 22.5 | 24.0 | 24.6 | 25.6 | 27.2 | 29.4 | 30.8 | 31.7 | 31.7 | 31.8 | 31.4 | 30.1 | 28.7 | 27.9 | 27.5 | 26.5 | 25.5 | 26.0 | 31.8 | 17.6 |
| 18 | 25.4 | 24.9 | 24.0 | 23.4 | ***** | ***** | ***** | ***** | ***** | ***** | ***** | ***** | ***** | ***** | ***** | ***** | ***** | ***** | ***** | ***** | ***** | ***** | ***** | ***** | ***** | 25.4 | 23.4 |
| 19 | ***** | ***** | ***** | ***** | ***** | ***** | ***** | ***** | ***** | ***** | ***** | ***** | ***** | ***** | ***** | ***** | ***** | ***** | ***** | ***** | ***** | ***** | ***** | ***** | ***** | ***** | ***** |
| 20 | ***** | ***** | ***** | ***** | ***** | ***** | ***** | ***** | ***** | ***** | ***** | ***** | ***** | ***** | ***** | ***** | ***** | ***** | ***** | ***** | ***** | ***** | ***** | ***** | ***** | ***** | ***** |
| 21 | ***** | ***** | ***** | ***** | ***** | ***** | ***** | ***** | ***** | ***** | ***** | ***** | ***** | ***** | ***** | ***** | ***** | ***** | ***** | ***** | ***** | ***** | ***** | ***** | ***** | ***** | ***** |
| 22 | ***** | ***** | ***** | ***** | ***** | ***** | ***** | 18.3 | 16.7 | 17.0 | 18.5 | 19.7 | 20.9 | 21.7 | 22.4 | 22.6 | 22.7 | 22.3 | 21.6 | 20.0 | 19.2 | 18.6 | 18.1 | 17.9 | ***** | 22.7 | 16.7 |
| 23 | 17.5 | 17.4 | 14.9 | 15.6 | 15.9 | 15.7 | 14.7 | 16.6 | 18.6 | 20.7 | 23.1 | 24.4 | 26.1 | ***** | 27.6 | 28.0 | 29.3 | 29.4 | 27.9 | 25.2 | 24.4 | 22.8 | 23.0 | 22.6 | 21.8 | 29.4 | 14.7 |
| 24 | 22.5 | 20.8 | 19.0 | 18.6 | 20.6 | 19.6 | 19.4 | 22.0 | 21.1 | 23.2 | 26.5 | 27.9 | 28.3 | 28.7 | 29.6 | 30.1 | 30.0 | 29.6 | 28.6 | 26.8 | 25.8 | 25.5 | 24.6 | 24.2 | 24.7 | 30.1 | 18.6 |
| 25 | 23.7 | 22.8 | 22.1 | 20.3 | 18.8 | 19.6 | 19.8 | 22.2 | 21.0 | 22.8 | 25.6 | 27.6 | 29.2 | 29.9 | 30.4 | 30.7 | 31.4 | 31.1 | 29.8 | 27.4 | 27.3 | 26.6 | 25.7 | 21.0 | 25.3 | 31.4 | 18.8 |
| 26 | 22.4 | 22.2 | 23.1 | 22.7 | 20.2 | 18.6 | 22.8 | 23.5 | 23.8 | 24.0 | 24.8 | 26.2 | 27.1 | 27.4 | 28.1 | 28.1 | 28.7 | 28.2 | 26.9 | 25.2 | 25.2 | 24.1 | 23.2 | 22.4 | 24.5 | 28.7 | 18.6 |
| 27 | 20.8 | 21.2 | 22.1 | 18.9 | 19.0 | 19.6 | 16.1 | 14.0 | 18.5 | 22.0 | 23.6 | 25.4 | 27.5 | 28.3 | 28.2 | 27.8 | 28.2 | 26.8 | 25.6 | 24.6 | 23.9 | 23.3 | 21.6 | 20.8 | 22.8 | 28.3 | 14.0 |
| 28 | 19.7 | 18.9 | 17.6 | 15.8 | 17.7 | 17.1 | 19.0 | 21.1 | 23.5 | 24.8 | 26.9 | 29.2 | 29.4 | 28.9 | 30.2 | 28.0 | 27.5 | 26.7 | 26.6 | 25.0 | 24.8 | 22.9 | 22.4 | 22.2 | 23.6 | 30.2 | 15.8 |
| 29 | 22.0 | 21.2 | 16.5 | 18.3 | 18.5 | 18.7 | 18.3 | 17.9 | 18.3 | 18.3 | 20.2 | 22.2 | 23.1 | 24.2 | 25.1 | 25.1 | 25.1 | 24.8 | 23.4 | 21.8 | 20.7 | 19.8 | 19.4 | 19.0 | 20.9 | 25.1 | 16.5 |
| 30 | 18.1 | 17.0 | 16.0 | 15.2 | 15.1 | 14.4 | 13.8 | 13.9 | 14.7 | 15.6 | 17.6 | 19.5 | 20.7 | 22.2 | 23.7 | 24.3 | 25.1 | 26.3 | 23.3 | 20.1 | 19.7 | 20.2 | 19.3 | 18.1 | 18.9 | 26.3 | 13.8 |
| 31 | 15.7 | 14.9 | 14.0 | 13.0 | 11.6 | 10.4 | 10.8 | 12.5 | 14.7 | 18.1 | 21.2 | 23.6 | 25.3 | 27.0 | 27.1 | 27.1 | 27.2 | 27.0 | 25.2 | 24.1 | 23.7 | 23.3 | 22.5 | 21.9 | 20.1 | 27.2 | 10.4 |
| Mean | 21.8 | 21.3 | 20.2 | 19.1 | 18.4 | 17.8 | 18.8 | 20.5 | 21.7 | 23.6 | 25.5 | 27.2 | 28.4 | 29.4 | 29.9 | 30.2 | 30.1 | 29.3 | 28.0 | 26.1 | 25.1 | 24.5 | 23.6 | 22.7 | Monthly mean = | | 24.3 |
| Max. | 29.9 | 28.6 | 27.6 | 28.2 | 23.9 | 23.8 | 24.8 | 26.0 | 27.5 | 29.5 | 31.9 | 34.8 | 35.1 | 35.5 | 35.2 | 35.6 | 36.1 | 36.3 | 34.9 | 33.0 | 30.9 | 30.0 | 30.0 | 29.6 | Monthly max. = | | 36.3 |
| Min. | 15.7 | 14.9 | 14.0 | 13.0 | 11.6 | 10.4 | 10.8 | 12.5 | 14.7 | 15.6 | 17.6 | 19.5 | 20.7 | 21.7 | 22.4 | 22.6 | 22.7 | 19.4 | 21.0 | 20.0 | 18.8 | 18.6 | 18.1 | 17.9 | Monthly min. = | | 10.4 |

TOTAL NUMBER OF DATA HOURS IN MONTH: 744
Number of hours of bad or missing data: 100
**** designates missing or lost data

Current % recovery = 86.6

N/A: insufficient data available for calculation (a minimum of 75% is required)

table created at 11:34,12/14/1994

MONTHLY SUMMARY
SIGMA THETA
(Degrees)
INPUT FILE: s7metJ04.met

Bechtel Environmental, Inc.

Met Data for Site 7
AUGUST 1994

| Day | Hour 1 | 2 | 3 | 4 | 5 | 6 | 7 | 8 | 9 | 10 | 11 | 12 | 13 | 14 | 15 | 16 | 17 | 18 | 19 | 20 | 21 | 22 | 23 | 24 | Mean | Max. | Min. |
|---|---|---|---|---|---|---|---|---|---|---|---|---|---|---|---|---|---|---|---|---|---|---|---|---|---|---|---|
| 1 | 15. | 38. | 27. | 29. | 10. | 22. | 43. | 38. | 18. | 27. | 26. | 25. | 26. | 33. | 25. | 21. | 12. | 13. | 48. | 17. | 44. | 14. | 26. | 5. | N/A | 48. | 5. |
| 2 | 21. | 19. | 17. | 48. | 43. | 10. | 9. | 49. | 20. | 23. | 24. | 29. | 32. | 24. | 26. | 21. | 22. | 17. | 20. | 13. | 18. | 26. | 11. | 10. | N/A | 49. | 9. |
| 3 | 10. | 9. | 45. | 22. | 5. | 44. | 30. | 47. | 29. | 19. | 26. | 17. | 24. | 22. | 17. | 17. | 16. | 13. | 17. | 25. | 11. | 8. | 5. | 5. | N/A | 47. | 5. |
| 4 | 4. | 5. | 54. | 55. | 17. | 7. | 11. | 11. | 9. | 13. | 44. | 50. | 30. | 23. | 17. | 19. | 18. | 19. | 11. | 14. | 13. | 20. | 13. | 20. | N/A | 55. | 4. |
| 5 | 15. | 11. | 29. | 31. | 14. | 15. | 26. | 48. | 25. | 40. | 29. | 24. | 26. | 18. | 12. | 13. | 11. | 10. | 9. | 15. | 10. | 10. | 8. | 9. | N/A | 48. | 8. |
| 6 | 8. | 8. | 9. | 14. | 11. | 9. | 10. | 9. | 12. | 15. | 16. | 13. | 12. | 14. | 11. | 12. | 10. | 12. | 10. | 11. | 10. | 10. | 8. | 9. | N/A | 16. | 8. |
| 7 | 8. | 8. | 20. | 46. | 43. | 46. | 44. | 47. | 20. | 24. | 32. | 23. | 27. | 27. | 15. | 22. | 26. | 40. | 19. | 10. | 7. | 18. | 6. | 6. | N/A | 47. | 6. |
| 8 | 7. | 34. | 25. | 50. | 22. | 13. | 46. | 59. | 20. | 14. | 14. | 12. | 10. | 8. | 33. | 33. | 30. | 17. | 22. | 12. | 10. | 11. | 9. | 10. | N/A | 59. | 7. |
| 9 | 10. | 13. | 9. | 12. | 9. | 6. | 6. | 21. | 19. | 23. | 9. | 13. | 15. | 16. | 18. | 14. | 13. | 12. | 15. | 14. | 16. | 10. | 8. | 11. | N/A | 23. | 6. |
| 10 | 6. | 8. | 21. | 47. | 21. | 5. | 40. | 61. | 13. | 18. | 21. | 18. | 25. | 17. | 19. | 36. | 35. | 11. | 17. | 19. | 59. | 9. | 7. | 8. | N/A | 61. | 5. |
| 11 | 10. | 35. | 21. | 36. | 20. | 6. | 7. | 29. | 19. | 27. | 28. | 35. | 37. | 38. | 22. | 17. | 23. | 14. | 37. | 14. | 8. | 6. | 21. | 31. | N/A | 38. | 6. |
| 12 | 53. | 28. | 34. | 42. | 37. | 56. | 61. | 17. | 35. | 40. | 57. | 45. | 45. | 57. | 53. | 39. | 34. | 29. | 13. | 13. | 33. | 10. | 7. | 5. | N/A | 61. | 5. |
| 13 | 50. | 34. | 38. | 50. | 19. | 49. | 34. | 57. | 26. | 23. | 20. | 29. | 29. | 34. | 29. | 37. | 24. | 22. | 9. | 13. | 11. | 7. | 52. | 18. | N/A | 57. | 7. |
| 14 | 44. | 22. | 46. | 33. | 20. | 47. | 36. | 12. | 18. | 22. | 37. | 35. | 25. | 17. | 23. | 14. | 19. | 22. | 10. | 9. | 35. | 27. | 28. | 7. | N/A | 47. | 7. |
| 15 | 32. | 6. | 14. | 7. | 37. | 25. | 47. | 21. | 34. | 10. | 16. | 9. | 11. | 12. | 10. | 14. | 13. | 10. | 7. | 13. | 10. | 9. | 7. | 8. | N/A | 47. | 6. |
| 16 | 7. | 14. | 37. | 36. | 33. | 22. | 39. | 34. | 13. | 15. | 11. | 11. | 13. | 17. | 21. | 11. | 10. | 7. | 6. | 13. | 11. | 9. | 9. | 9. | N/A | 39. | 6. |
| 17 | 8. | 8. | 9. | 17. | 39. | 67. | 37. | 40. | 17. | 13. | 15. | 16. | 24. | 23. | 23. | 14. | 10. | 11. | 9. | 10. | 10. | 9. | 12. | 10. | N/A | 67. | 8. |
| 18 | 8. | 10. | 19. | 24. | ***** | ***** | ***** | ***** | ***** | ***** | ***** | ***** | ***** | ***** | ***** | ***** | ***** | ***** | ***** | ***** | ***** | ***** | ***** | ***** | N/A | 24. | 8. |
| 19 | ***** | ***** | ***** | ***** | ***** | ***** | ***** | ***** | ***** | ***** | ***** | ***** | ***** | ***** | ***** | ***** | ***** | ***** | ***** | ***** | ***** | ***** | ***** | ***** | N/A | ***** | ***** |
| 20 | ***** | ***** | ***** | ***** | ***** | ***** | ***** | ***** | ***** | ***** | ***** | ***** | ***** | ***** | ***** | ***** | ***** | ***** | ***** | ***** | ***** | ***** | ***** | ***** | N/A | ***** | ***** |
| 21 | ***** | ***** | ***** | ***** | ***** | ***** | ***** | ***** | ***** | ***** | ***** | ***** | ***** | ***** | ***** | ***** | ***** | ***** | ***** | ***** | ***** | ***** | ***** | ***** | N/A | ***** | ***** |
| 22 | ***** | ***** | ***** | ***** | ***** | ***** | ***** | 25. | 15. | 14. | 15. | 14. | 14. | 13. | 15. | 11. | 11. | 9. | 16. | 12. | 10. | 8. | 8. | 9. | N/A | 25. | 8. |
| 23 | 8. | 9. | 35. | 12. | 12. | 21. | 22. | 20. | 20. | 31. | 30. | 38. | 36. | ***** | 16. | 15. | 23. | 21. | 16. | 8. | 6. | 17. | 11. | 9. | N/A | 38. | 6. |
| 24 | 5. | 40. | 29. | 38. | 6. | 42. | 32. | 59. | 22. | 19. | 16. | 17. | 7. | 12. | 14. | 11. | 11. | 9. | 12. | 9. | 12. | 9. | 7. | 8. | N/A | 59. | 5. |
| 25 | 9. | 9. | 32. | 23. | 32. | 39. | 45. | 40. | 21. | 18. | 13. | 17. | 16. | 18. | 20. | 17. | 20. | 16. | 31. | 8. | 14. | 11. | 17. | 29. | N/A | 45. | 8. |
| 26 | 31. | 33. | 15. | 65. | 27. | 15. | 17. | 12. | 13. | 12. | 11. | 16. | 14. | 10. | 56. | 9. | 10. | 9. | 8. | 11. | 10. | 12. | 61. | 40. | N/A | 65. | 8. |
| 27 | 25. | 35. | 12. | 49. | 25. | 26. | 38. | 50. | 25. | 42. | 29. | 14. | 22. | 17. | 25. | 15. | 31. | 32. | 9. | 8. | 9. | 10. | 13. | 9. | N/A | 50. | 8. |
| 28 | 8. | 9. | 28. | 47. | 12. | 37. | 15. | 10. | 30. | 16. | 37. | 50. | 22. | 17. | 34. | 18. | 11. | 11. | 12. | 10. | 9. | 8. | 7. | 6. | N/A | 50. | 6. |
| 29 | 39. | 40. | 45. | 12. | 25. | 9. | 36. | 13. | 13. | 14. | 15. | 15. | 12. | 14. | 13. | 12. | 13. | 17. | 14. | 12. | 10. | 9. | 8. | 9. | N/A | 45. | 8. |
| 30 | 9. | 7. | 10. | 9. | 8. | 8. | 11. | 14. | 14. | 11. | 16. | 12. | 15. | 14. | 15. | 19. | 26. | 46. | 35. | 46. | 14. | 15. | 11. | 21. | N/A | 46. | 7. |
| 31 | 53. | 40. | 62. | 10. | 26. | 24. | 29. | 19. | 16. | 21. | 24. | 24. | 26. | 27. | 18. | 15. | 13. | 12. | 10. | 10. | 8. | 8. | 10. | 12. | N/A | 62. | 8. |
| Mean | N/A | N/A | N/A | N/A | N/A | N/A | N/A | N/A | N/A | N/A | N/A | N/A | N/A | N/A | N/A | N/A | N/A | N/A | N/A | N/A | N/A | N/A | N/A | N/A | Monthly mean = | | N/A |
| Max. | 53. | 40. | 62. | 65. | 43. | 67. | 61. | 61. | 35. | 42. | 57. | 50. | 45. | 57. | 56. | 39. | 35. | 46. | 48. | 46. | 59. | 27. | 61. | 40. | Monthly max. = | | 67. |
| Min. | 4. | 5. | 9. | 7. | 5. | 5. | 6. | 9. | 9. | 10. | 9. | 9. | 7. | 8. | 10. | 9. | 10. | 7. | 6. | 8. | 6. | 6. | 5. | 5. | Monthly min. = | | 4. |

TOTAL NUMBER OF DATA HOURS IN MONTH: 744
Number of hours of bad or missing data: 100
**** designates missing or lost data

Current % recovery = 86.6

N/A: A sigma theta mean is not physically meaningful.

table created at 11:34,12/14/1994

MONTHLY SUMMARY
WIND SPEED
(Miles Per Hour)
INPUT FILE: s7metJ04.met

Bechtel Environmental, Inc.

Met Data for Site 7
SEPTEMBER 1994

| Day | Hour 1 | 2 | 3 | 4 | 5 | 6 | 7 | 8 | 9 | 10 | 11 | 12 | 13 | 14 | 15 | 16 | 17 | 18 | 19 | 20 | 21 | 22 | 23 | 24 | Mean | Max. | Min. |
|---|---|---|---|---|---|---|---|---|---|---|---|---|---|---|---|---|---|---|---|---|---|---|---|---|---|---|---|
| 1 | 6.7 | 6.1 | 7.8 | 12.0 | 3.9 | 4.6 | 4.1 | 7.5 | 8.2 | 5.6 | 4.7 | 6.5 | 7.2 | 15.2 | 13.6 | 15.5 | 15.4 | 10.5 | 5.3 | 6.6 | 7.3 | 6.5 | 3.6 | 7.0 | 8.0 | 15.5 | 3.6 |
| 2 | 8.0 | 6.1 | 4.9 | 3.3 | 4.9 | 6.4 | 9.2 | 7.6 | 4.5 | 5.2 | 19.8 | 21.4 | 20.5 | 21.9 | 21.7 | 21.0 | 18.4 | 14.4 | 11.7 | 14.3 | 17.0 | 15.8 | 13.6 | 6.3 | 12.4 | 21.9 | 3.3 |
| 3 | 15.4 | 30.5 | 32.4 | 32.4 | 33.0 | 26.7 | 13.7 | 14.5 | 22.1 | 23.1 | 22.8 | 22.3 | 25.9 | 27.6 | 27.6 | 26.0 | 24.3 | 23.7 | 15.4 | 13.3 | 16.4 | 19.5 | 20.4 | 19.9 | 22.9 | 33.0 | 13.3 |
| 4 | 19.6 | 20.0 | 19.9 | 21.9 | 22.9 | 25.4 | 25.3 | 24.3 | 24.0 | 26.3 | 27.1 | 24.5 | 23.4 | 23.2 | 24.0 | 22.8 | 21.4 | 15.6 | 12.3 | 12.4 | 14.8 | 15.2 | 14.3 | 14.0 | 20.6 | 27.1 | 12.3 |
| 5 | 10.1 | 11.6 | 7.4 | 2.0 | 2.2 | 2.7 | 2.0 | 2.3 | 3.0 | 3.9 | 5.6 | 7.2 | 7.4 | 10.2 | 9.6 | 12.6 | 12.6 | 9.6 | 5.0 | 4.0 | 7.2 | 7.2 | 8.7 | 6.8 | 6.7 | 12.6 | 2.0 |
| 6 | 3.4 | 2.3 | 2.1 | 4.6 | 3.1 | 6.1 | 3.6 | 2.9 | 3.5 | 8.4 | 8.3 | 6.2 | 5.4 | 7.8 | 8.6 | 11.5 | 17.6 | 15.9 | 15.6 | 14.3 | 15.5 | 15.3 | 17.4 | 18.5 | 9.1 | 18.5 | 2.1 |
| 7 | 17.4 | 10.8 | 13.3 | 12.8 | 14.7 | 16.3 | 12.1 | 9.4 | 7.6 | 7.8 | 7.8 | 8.4 | 8.8 | 13.7 | 17.2 | 14.5 | 12.6 | 7.8 | 4.7 | 12.1 | 11.7 | 10.4 | 16.2 | 19.2 | 12.0 | 19.2 | 4.7 |
| 8 | 20.7 | 14.4 | 10.3 | 12.5 | 11.1 | 11.9 | 4.5 | 3.5 | 7.2 | 6.1 | 12.6 | 11.4 | 11.5 | 12.1 | 18.0 | 15.0 | 13.6 | 16.7 | 16.0 | 18.5 | 17.5 | 13.8 | 7.2 | 9.7 | 12.3 | 20.7 | 3.5 |
| 9 | 10.5 | 12.8 | 14.1 | 4.5 | 8.6 | 18.0 | 24.6 | 23.9 | 24.9 | 21.5 | 21.5 | 22.7 | 21.9 | 19.1 | 18.1 | 17.4 | 18.7 | 17.7 | 11.0 | 11.6 | 14.8 | 18.2 | 21.8 | 23.2 | 17.5 | 24.9 | 4.5 |
| 10 | 22.8 | 27.5 | 26.6 | 24.5 | 8.7 | 6.4 | 15.0 | 8.1 | 12.7 | 14.3 | 9.8 | 10.7 | 11.5 | 11.6 | 13.7 | 12.3 | 12.4 | 14.5 | 15.1 | 12.7 | 11.6 | 13.1 | 16.4 | 16.1 | 14.5 | 27.5 | 6.4 |
| 11 | 20.3 | 17.9 | 15.4 | 20.0 | 17.6 | 4.7 | 4.3 | 8.4 | 11.5 | 12.8 | 12.0 | 10.2 | 8.5 | 9.3 | 10.7 | 11.1 | 9.9 | 9.1 | 4.7 | 6.0 | 6.7 | 7.3 | 16.8 | 21.8 | 11.5 | 21.8 | 4.3 |
| 12 | 27.3 | 29.1 | 28.1 | 28.0 | 27.0 | 23.9 | 19.5 | 14.8 | 13.3 | 11.2 | 9.5 | 8.4 | 9.4 | 11.3 | 10.6 | 10.6 | 8.6 | 6.0 | 1.7 | 3.7 | 5.7 | 11.2 | 6.0 | 8.9 | 13.9 | 29.1 | 1.7 |
| 13 | 6.2 | 8.0 | 12.8 | 9.0 | 11.6 | 15.1 | 13.2 | 6.0 | 13.6 | 13.2 | 13.7 | 14.2 | 12.1 | 9.1 | 13.9 | 17.5 | 22.4 | 20.8 | 26.6 | 24.8 | 26.8 | 30.7 | 28.6 | 25.9 | 16.5 | 30.7 | 6.0 |
| 14 | 26.9 | 25.4 | 26.4 | 27.9 | 26.6 | 20.8 | 21.3 | 14.9 | 13.2 | 14.1 | 13.6 | 18.0 | 14.2 | 10.4 | 11.9 | 17.3 | 22.7 | 14.0 | 14.2 | 13.2 | 10.8 | 11.8 | 11.7 | 9.6 | 17.1 | 27.9 | 9.6 |
| 15 | 7.5 | 11.0 | 7.2 | 8.0 | 3.1 | 7.3 | 5.4 | 5.6 | 5.7 | 11.9 | 8.7 | 7.1 | 6.8 | 7.2 | 7.9 | 7.8 | 7.3 | 5.1 | 3.0 | 6.5 | 6.4 | 7.0 | 5.9 | 6.4 | 6.9 | 11.9 | 3.0 |
| 16 | 6.0 | 2.9 | 1.2 | 1.3 | 1.4 | 2.3 | 1.3 | 2.8 | 5.1 | 4.8 | 5.4 | 6.7 | 6.1 | 6.6 | 9.2 | 11.7 | 8.8 | 6.6 | 4.6 | 5.7 | 9.0 | 10.3 | 10.3 | 13.4 | 6.0 | 13.4 | 1.2 |
| 17 | 13.7 | 10.1 | 8.4 | 12.3 | 4.9 | 4.8 | 3.0 | 5.1 | 8.2 | 9.4 | 7.4 | 7.5 | 4.8 | 5.1 | 7.1 | 17.9 | 12.0 | 9.8 | 14.0 | 20.9 | 13.4 | 15.0 | 13.4 | 9.3 | 9.9 | 20.9 | 3.0 |
| 18 | 7.9 | 4.6 | 5.3 | 8.4 | 7.6 | 6.0 | 2.2 | 2.9 | 2.8 | 4.9 | 5.4 | 7.5 | 8.2 | 7.3 | 7.8 | 7.7 | 5.9 | 7.5 | 8.6 | 10.2 | 9.6 | 8.5 | 6.9 | 6.7 | 6.7 | 10.2 | 2.2 |
| 19 | 4.8 | 3.8 | 1.7 | 2.4 | 3.9 | 3.8 | 4.8 | 3.7 | 3.0 | 4.0 | 4.1 | 5.6 | 7.5 | 8.0 | 8.8 | 9.5 | 8.4 | 4.9 | 2.7 | 6.0 | 5.9 | 7.6 | 4.5 | 3.5 | 5.1 | 9.5 | 1.7 |
| 20 | 5.3 | 3.4 | 2.1 | 5.1 | 3.9 | 2.7 | 4.1 | 3.5 | 2.7 | 5.4 | 9.8 | 13.3 | 11.6 | 8.9 | 6.9 | 6.9 | 3.6 | 2.2 | 8.7 | 10.4 | 11.2 | 9.9 | 10.5 | 9.1 | 6.7 | 13.3 | 2.1 |
| 21 | 7.2 | 11.3 | 4.4 | 5.7 | 1.8 | 1.9 | 2.2 | 3.0 | 5.9 | 17.2 | 24.7 | 21.1 | 19.4 | 17.3 | 15.1 | 15.1 | 14.7 | 12.6 | 10.2 | 6.5 | 4.0 | 4.6 | 7.3 | 5.9 | 10.0 | 24.7 | 1.8 |
| 22 | 7.2 | 8.6 | 4.6 | 5.7 | 11.9 | 7.0 | 10.6 | 12.7 | 3.8 | 5.0 | 4.8 | 5.2 | 5.3 | 5.2 | 6.0 | 5.6 | 6.6 | 4.8 | 2.8 | 5.8 | 5.8 | 6.1 | 4.0 | 2.3 | 6.1 | 12.7 | 2.3 |
| 23 | 1.1 | 3.5 | 3.3 | 1.5 | 2.0 | 2.0 | 2.6 | 2.7 | 2.8 | 3.7 | 4.2 | 6.7 | 9.2 | 9.6 | 8.5 | 8.2 | 5.4 | 3.3 | 2.0 | 4.7 | 2.3 | 2.4 | 2.7 | 2.9 | 4.1 | 9.6 | 1.1 |
| 24 | 2.3 | 2.3 | 1.0 | 2.0 | 5.6 | 6.9 | 6.0 | 4.2 | 3.4 | 2.2 | 3.5 | 4.6 | 5.2 | 7.5 | 11.1 | 10.0 | 9.4 | 6.6 | 5.1 | 8.4 | 10.0 | 10.8 | 10.0 | 6.0 | 6.0 | 11.1 | 1.0 |
| 25 | 5.6 | 3.4 | 5.6 | 4.6 | 3.0 | 3.5 | 4.9 | 2.8 | 2.6 | 3.1 | 3.7 | 5.1 | 6.2 | 7.3 | 9.4 | 10.4 | 9.4 | 5.4 | 2.5 | 3.4 | 7.3 | 12.2 | 16.6 | 13.2 | 6.3 | 16.6 | 2.5 |
| 26 | 11.9 | 7.5 | 4.4 | 4.4 | 4.0 | 11.1 | 9.3 | 12.5 | 17.8 | 13.3 | 20.3 | 17.6 | 15.0 | 17.2 | 14.9 | 15.9 | 18.5 | 15.2 | 18.6 | 21.0 | 16.2 | 13.8 | 13.5 | 12.7 | 13.6 | 21.0 | 4.0 |
| 27 | 11.1 | 6.0 | 3.5 | 3.4 | 3.4 | 2.1 | 3.0 | 9.2 | 3.9 | 3.0 | 6.3 | 5.5 | 9.0 | 12.1 | 11.0 | 9.2 | 8.0 | 7.5 | 8.9 | 11.0 | 7.5 | 4.0 | 13.1 | 11.5 | 7.2 | 13.1 | 2.1 |
| 28 | 7.7 | 7.5 | 6.7 | 5.6 | 3.8 | 3.8 | 9.1 | 11.5 | 3.3 | 4.8 | 8.1 | 7.1 | 8.5 | 8.4 | 7.1 | 5.1 | 14.0 | 19.3 | 19.5 | 18.4 | 17.2 | 15.6 | 17.7 | 16.4 | 10.3 | 19.5 | 3.3 |
| 29 | 24.4 | 17.2 | 13.9 | 16.8 | 11.2 | 11.4 | 12.8 | 3.9 | ***** | 9.2 | 10.0 | 12.1 | 15.1 | 17.9 | 18.6 | 20.0 | .9 | .9 | .9 | .9 | 2.5 | 7.6 | 8.5 | 5.5 | 10.5 | 24.4 | .9 |
| 30 | 2.3 | 1.7 | 4.0 | 7.5 | 1.9 | 1.4 | 1.7 | 3.0 | 3.1 | 2.5 | 1.0 | 1.1 | 1.2 | 2.3 | 3.4 | 4.2 | 3.7 | 2.2 | 3.7 | 3.6 | 3.1 | 4.7 | 2.7 | 2.5 | 2.9 | 7.5 | 1.0 |
| Mean | 11.4 | 10.9 | 10.0 | 10.3 | 9.0 | 8.9 | 8.5 | 7.9 | 8.4 | 9.3 | 10.5 | 10.9 | 10.9 | 11.7 | 12.4 | 13.0 | 12.2 | 10.3 | 9.2 | 10.4 | 10.5 | 11.2 | 11.7 | 11.1 | Monthly mean = | | 10.4 |
| Max. | 27.3 | 30.5 | 32.4 | 32.4 | 33.0 | 26.7 | 25.3 | 24.3 | 24.9 | 26.3 | 27.1 | 24.5 | 25.9 | 27.6 | 27.6 | 26.0 | 24.3 | 23.7 | 26.6 | 24.8 | 26.8 | 30.7 | 28.6 | 25.9 | Monthly max. = | | 33.0 |
| Min. | 1.1 | 1.7 | 1.0 | 1.3 | 1.4 | 1.4 | 1.3 | 2.3 | 2.6 | 2.2 | 1.0 | 1.1 | 1.2 | 2.3 | 3.4 | 4.2 | .9 | .9 | .9 | .9 | 2.3 | 2.4 | 2.7 | 2.3 | Monthly min. = | | .9 |

TOTAL NUMBER OF DATA HOURS IN MONTH: 720
Number of hours of bad or missing data: 1
**** designates missing or lost data

Current % recovery = 99.9

N/A: insufficient data available for calculation (a minimum of 75% is required)

table created at 11:34,12/14/1994

MONTHLY SUMMARY
WIND DIRECTION
(Degrees)
INPUT FILE: s7metJ04.met

Bechtel Environmental, Inc.

Met Data for Site 7
SEPTEMBER 1994

| Day | Hour 1 | 2 | 3 | 4 | 5 | 6 | 7 | 8 | 9 | 10 | 11 | 12 | 13 | 14 | 15 | 16 | 17 | 18 | 19 | 20 | 21 | 22 | 23 | 24 | Mean | Max. | Min. |
|---|---|---|---|---|---|---|---|---|---|---|---|---|---|---|---|---|---|---|---|---|---|---|---|---|---|---|---|
| 1 | 120.0 | 112.0 | 238.0 | 189.0 | 311.0 | 79.0 | 98.0 | 246.0 | 284.0 | 310.0 | 327.0 | 351.0 | 317.0 | 273.0 | 281.0 | 291.0 | 301.0 | 325.0 | 273.0 | 136.0 | 146.0 | 151.0 | 249.0 | 131.0 | 230.8 | 351.0 | 79.0 |
| 2 | 146.0 | 173.0 | 182.0 | 221.0 | 205.0 | 165.0 | 155.0 | 165.0 | 315.0 | 348.0 | 201.0 | 197.0 | 192.0 | 196.0 | 193.0 | 200.0 | 200.0 | 198.0 | 177.0 | 172.0 | 218.0 | 232.0 | 261.0 | 183.0 | 204.0 | 348.0 | 146.0 |
| 3 | 242.0 | 234.0 | 232.0 | 236.0 | 240.0 | 252.0 | 244.0 | 233.0 | 231.0 | 240.0 | 260.0 | 259.0 | 267.0 | 266.0 | 272.0 | 275.0 | 274.0 | 269.0 | 261.0 | 237.0 | 238.0 | 238.0 | 232.0 | 229.0 | 248.4 | 275.0 | 229.0 |
| 4 | 230.0 | 229.0 | 227.0 | 228.0 | 228.0 | 230.0 | 230.0 | 231.0 | 234.0 | 256.0 | 257.0 | 253.0 | 254.0 | 260.0 | 267.0 | 271.0 | 271.0 | 262.0 | 250.0 | 241.0 | 231.0 | 222.0 | 222.0 | 217.0 | 241.7 | 271.0 | 217.0 |
| 5 | 216.0 | 237.0 | 242.0 | 278.0 | 241.0 | 230.0 | 281.0 | 115.0 | 317.0 | 331.0 | 301.0 | 296.0 | 307.0 | 288.0 | 284.0 | 274.0 | 275.0 | 274.0 | 265.0 | 201.0 | 156.0 | 234.0 | 233.0 | 236.0 | 254.7 | 331.0 | 115.0 |
| 6 | 264.0 | 119.0 | 186.0 | 138.0 | 153.0 | 127.0 | 147.0 | 146.0 | 66.0 | 88.0 | 78.0 | 63.0 | 59.0 | 1.0 | 334.0 | 100.0 | 179.0 | 157.0 | 148.0 | 138.0 | 145.0 | 146.0 | 146.0 | 147.0 | 136.5 | 334.0 | 1.0 |
| 7 | 149.0 | 115.0 | 139.0 | 145.0 | 152.0 | 153.0 | 144.0 | 133.0 | 112.0 | 91.0 | 46.0 | 341.0 | 319.0 | 275.0 | 284.0 | 275.0 | 279.0 | 291.0 | 147.0 | 165.0 | 156.0 | 142.0 | 147.0 | 138.0 | 180.7 | 341.0 | 46.0 |
| 8 | 137.0 | 139.0 | 124.0 | 138.0 | 130.0 | 126.0 | 122.0 | 241.0 | 112.0 | 325.0 | 196.0 | 258.0 | 277.0 | 214.0 | 205.0 | 216.0 | 223.0 | 198.0 | 183.0 | 183.0 | 196.0 | 223.0 | 197.0 | 207.0 | 190.4 | 325.0 | 112.0 |
| 9 | 164.0 | 182.0 | 146.0 | 266.0 | 218.0 | 236.0 | 230.0 | 230.0 | 240.0 | 237.0 | 246.0 | 261.0 | 269.0 | 280.0 | 285.0 | 283.0 | 281.0 | 277.0 | 278.0 | 258.0 | 260.0 | 237.0 | 233.0 | 225.0 | 242.6 | 285.0 | 146.0 |
| 10 | 233.0 | 236.0 | 234.0 | 231.0 | 208.0 | 264.0 | 234.0 | 252.0 | 249.0 | 242.0 | 260.0 | 287.0 | 282.0 | 282.0 | 274.0 | 277.0 | 259.0 | 254.0 | 258.0 | 234.0 | 240.0 | 237.0 | 239.0 | 233.0 | 250.0 | 287.0 | 208.0 |
| 11 | 233.0 | 232.0 | 235.0 | 232.0 | 233.0 | 176.0 | 231.0 | 251.0 | 253.0 | 255.0 | 268.0 | 282.0 | 297.0 | 303.0 | 292.0 | 286.0 | 305.0 | 332.0 | 24.0 | 109.0 | 122.0 | 238.0 | 236.0 | 234.0 | 235.8 | 332.0 | 24.0 |
| 12 | 233.0 | 231.0 | 232.0 | 234.0 | 232.0 | 233.0 | 233.0 | 233.0 | 241.0 | 252.0 | 264.0 | 288.0 | 301.0 | 290.0 | 292.0 | 291.0 | 322.0 | 356.0 | 103.0 | 68.0 | 92.0 | 151.0 | 177.0 | 131.0 | 228.3 | 356.0 | 68.0 |
| 13 | 195.0 | 240.0 | 237.0 | 229.0 | 241.0 | 232.0 | 228.0 | 216.0 | 240.0 | 254.0 | 270.0 | 277.0 | 277.0 | 272.0 | 282.0 | 285.0 | 271.0 | 249.0 | 239.0 | 241.0 | 237.0 | 231.0 | 232.0 | 233.0 | 246.2 | 285.0 | 195.0 |
| 14 | 234.0 | 235.0 | 234.0 | 235.0 | 233.0 | 235.0 | 234.0 | 222.0 | 213.0 | 238.0 | 250.0 | 249.0 | 249.0 | 227.0 | 117.0 | 291.0 | 219.0 | 182.0 | 200.0 | 195.0 | 167.0 | 188.0 | 221.0 | 230.0 | 220.7 | 291.0 | 117.0 |
| 15 | 253.0 | 223.0 | 206.0 | 235.0 | 159.0 | 262.0 | 218.0 | 294.0 | 291.0 | 244.0 | 268.0 | 301.0 | 344.0 | 358.0 | 316.0 | 284.0 | 293.0 | 291.0 | 249.0 | 198.0 | 224.0 | 226.0 | 243.0 | 241.0 | 259.2 | 358.0 | 159.0 |
| 16 | 243.0 | 174.0 | 85.0 | 316.0 | 283.0 | 282.0 | 100.0 | 95.0 | 73.0 | 32.0 | 354.0 | 357.0 | 12.0 | 45.0 | 31.0 | 295.0 | 337.0 | 339.0 | 340.0 | 107.0 | 129.0 | 146.0 | 143.0 | 149.0 | 36.1 | 357.0 | 12.0 |
| 17 | 153.0 | 152.0 | 151.0 | 148.0 | 180.0 | 231.0 | 259.0 | 146.0 | 126.0 | 99.0 | 79.0 | 44.0 | 49.0 | 89.0 | 172.0 | 208.0 | 198.0 | 193.0 | 203.0 | 197.0 | 172.0 | 153.0 | 190.0 | 210.0 | 158.4 | 259.0 | 44.0 |
| 18 | 141.0 | 161.0 | 175.0 | 119.0 | 145.0 | 174.0 | 75.0 | 274.0 | 302.0 | 322.0 | 314.0 | 297.0 | 307.0 | 327.0 | 340.0 | 334.0 | 24.0 | 17.0 | 33.0 | 105.0 | 122.0 | 122.0 | 113.0 | 113.0 | 50.7 | 340.0 | 17.0 |
| 19 | 139.0 | 255.0 | 181.0 | 260.0 | 136.0 | 246.0 | 157.0 | 211.0 | 296.0 | 327.0 | 335.0 | 359.0 | 5.0 | 16.0 | 14.0 | 343.0 | 346.0 | 6.0 | 360.0 | 24.0 | 103.0 | 134.0 | 232.0 | 85.0 | 355.4 | 360.0 | 5.0 |
| 20 | 135.0 | 213.0 | 248.0 | 133.0 | 105.0 | 100.0 | 268.0 | 268.0 | 295.0 | 287.0 | 261.0 | 266.0 | 279.0 | 292.0 | 327.0 | 1.0 | 73.0 | 90.0 | 240.0 | 219.0 | 168.0 | 219.0 | 210.0 | 195.0 | 203.8 | 327.0 | 1.0 |
| 21 | 155.0 | 139.0 | 183.0 | 154.0 | 324.0 | 328.0 | 265.0 | 287.0 | 359.0 | 37.0 | 39.0 | 38.0 | 38.0 | 37.0 | 44.0 | 36.0 | 35.0 | 41.0 | 42.0 | 23.0 | 360.0 | 9.0 | 111.0 | 95.0 | 27.5 | 360.0 | 9.0 |
| 22 | 103.0 | 102.0 | 60.0 | 259.0 | 261.0 | 261.0 | 128.0 | 131.0 | 290.0 | 45.0 | 8.0 | 359.0 | 357.0 | 1.0 | 345.0 | 13.0 | 16.0 | 10.0 | 99.0 | 144.0 | 146.0 | 143.0 | 246.0 | 274.0 | 23.4 | 359.0 | 1.0 |
| 23 | 247.0 | 260.0 | 130.0 | 17.0 | 285.0 | 130.0 | 278.0 | 88.0 | 71.0 | 25.0 | 323.0 | 285.0 | 291.0 | 279.0 | 286.0 | 306.0 | 307.0 | 311.0 | 229.0 | 133.0 | 195.0 | 294.0 | 286.0 | 102.0 | 334.9 | 323.0 | 17.0 |
| 24 | 260.0 | 274.0 | 37.0 | 138.0 | 130.0 | 119.0 | 132.0 | 169.0 | 85.0 | 317.0 | 7.0 | 348.0 | 22.0 | 25.0 | 15.0 | 7.0 | 357.0 | 3.0 | 45.0 | 132.0 | 144.0 | 145.0 | 144.0 | 158.0 | 58.9 | 357.0 | 3.0 |
| 25 | 163.0 | 193.0 | 209.0 | 201.0 | 115.0 | 116.0 | 181.0 | 295.0 | 61.0 | 338.0 | 9.0 | 340.0 | 329.0 | 329.0 | 305.0 | 301.0 | 314.0 | 324.0 | 234.0 | 164.0 | 228.0 | 238.0 | 230.0 | 227.0 | 226.8 | 340.0 | 9.0 |
| 26 | 226.0 | 245.0 | 280.0 | 148.0 | 260.0 | 252.0 | 258.0 | 238.0 | 243.0 | 255.0 | 253.0 | 260.0 | 279.0 | 267.0 | 255.0 | 266.0 | 267.0 | 247.0 | 233.0 | 231.0 | 227.0 | 228.0 | 229.0 | 226.0 | 244.7 | 280.0 | 148.0 |
| 27 | 231.0 | 261.0 | 121.0 | 217.0 | 202.0 | 133.0 | 273.0 | 129.0 | 165.0 | 332.0 | 316.0 | 339.0 | 291.0 | 289.0 | 288.0 | 289.0 | 290.0 | 261.0 | 236.0 | 218.0 | 141.0 | 189.0 | 140.0 | 153.0 | 229.3 | 339.0 | 121.0 |
| 28 | 134.0 | 150.0 | 128.0 | 160.0 | 248.0 | 178.0 | 139.0 | 137.0 | 130.0 | 58.0 | 87.0 | 78.0 | 300.0 | 304.0 | 315.0 | 68.0 | 180.0 | 185.0 | 187.0 | 189.0 | 185.0 | 208.0 | 258.0 | 266.0 | 178.0 | 315.0 | 58.0 |
| 29 | 218.0 | 222.0 | 239.0 | 232.0 | 174.0 | 139.0 | 158.0 | 219.0 | ***** | 150.0 | 210.0 | 222.0 | 205.0 | 206.0 | 205.0 | 252.0 | 247.0 | 224.0 | 164.0 | 175.0 | 288.0 | 247.0 | 233.0 | 140.0 | 207.3 | 288.0 | 139.0 |
| 30 | 179.0 | 276.0 | 236.0 | 238.0 | 266.0 | 52.0 | 339.0 | 96.0 | 94.0 | 70.0 | 75.0 | 49.0 | 98.0 | 6.0 | 4.0 | 17.0 | 28.0 | 17.0 | 336.0 | 360.0 | 122.0 | 246.0 | 316.0 | 244.0 | 6.8 | 360.0 | 4.0 |
| Mean | 192.5 | 200.5 | 185.2 | 199.2 | 209.9 | 191.4 | 201.3 | 199.7 | 206.5 | 333.5 | 313.4 | 313.5 | 313.1 | 305.9 | 314.8 | 305.2 | 304.4 | 302.1 | 201.2 | 173.2 | 185.3 | 193.9 | 211.6 | 188.4 | Monthly mean = | | 205.9 |
| Max. | 264.0 | 276.0 | 280.0 | 316.0 | 324.0 | 328.0 | 339.0 | 295.0 | 359.0 | 348.0 | 354.0 | 359.0 | 357.0 | 358.0 | 345.0 | 343.0 | 357.0 | 356.0 | 360.0 | 360.0 | 360.0 | 294.0 | 316.0 | 274.0 | Monthly max. = | | 360.0 |
| Min. | 103.0 | 102.0 | 37.0 | 17.0 | 105.0 | 52.0 | 75.0 | 88.0 | 61.0 | 25.0 | 7.0 | 38.0 | 5.0 | 1.0 | 4.0 | 1.0 | 16.0 | 3.0 | 24.0 | 23.0 | 92.0 | 9.0 | 111.0 | 85.0 | Monthly min. = | | 1.0 |

TOTAL NUMBER OF DATA HOURS IN MONTH: 720
Number of hours of bad or missing data: 1
**** designates missing or lost data

Current % recovery = 99.9

N/A: insufficient data available for calculation (a minimum of 75% is required)

table created at 11:34,12/14/1994

MONTHLY SUMMARY
TEMPERATURE
(Degrees Celsius)
INPUT FILE: s7metJ04.met

Bechtel Environmental, Inc.

Met Data for Site 7
SEPTEMBER 1994

| Day | Hour 1 | 2 | 3 | 4 | 5 | 6 | 7 | 8 | 9 | 10 | 11 | 12 | 13 | 14 | 15 | 16 | 17 | 18 | 19 | 20 | 21 | 22 | 23 | 24 | Mean | Max. | Min. |
|---|---|---|---|---|---|---|---|---|---|---|---|---|---|---|---|---|---|---|---|---|---|---|---|---|---|---|---|
| 1 | 18.7 | 15.8 | 16.2 | 14.0 | 10.9 | 11.5 | 12.8 | 14.7 | 14.9 | 18.5 | 21.1 | 25.6 | 28.0 | 27.6 | 29.0 | 29.7 | 29.4 | 29.2 | 27.4 | 25.5 | 25.3 | 24.8 | 23.2 | 21.4 | 21.5 | 29.7 | 10.9 |
| 2 | 22.1 | 21.0 | 16.4 | 16.7 | 15.9 | 16.6 | 19.0 | 20.5 | 21.0 | 23.6 | 27.3 | 28.3 | 29.1 | 29.6 | 29.0 | 28.9 | 28.0 | 27.6 | 27.0 | 26.0 | 24.7 | 24.2 | 24.0 | 23.2 | 23.7 | 29.6 | 15.9 |
| 3 | 22.3 | 20.9 | 19.2 | 18.2 | 16.6 | 16.6 | 17.0 | 17.1 | 17.9 | 18.5 | 19.5 | 20.3 | 21.0 | 21.5 | 22.0 | 22.3 | 22.2 | 22.0 | 21.1 | 20.1 | 19.8 | 19.1 | 18.4 | 17.6 | 19.6 | 22.3 | 16.6 |
| 4 | 17.2 | 16.9 | 16.2 | 15.9 | 15.0 | 13.9 | 13.1 | 13.3 | 14.1 | 15.2 | 16.2 | 17.1 | 17.9 | 18.8 | 19.6 | 20.2 | 20.4 | 20.5 | 19.4 | 17.9 | 17.3 | 16.6 | 16.1 | 15.7 | 16.9 | 20.5 | 13.1 |
| 5 | 15.3 | 15.1 | 14.2 | 11.8 | 11.2 | 11.0 | 11.1 | 12.9 | 15.4 | 17.6 | 19.8 | 21.6 | 23.0 | 24.1 | 25.2 | 25.4 | 25.9 | 26.1 | 24.3 | 21.8 | 22.2 | 21.7 | 21.3 | 20.1 | 19.1 | 26.1 | 11.0 |
| 6 | 18.1 | 16.3 | 15.7 | 16.7 | 14.4 | 14.0 | 11.6 | 13.4 | 15.0 | 16.8 | 21.0 | 24.3 | 28.2 | 29.6 | 30.3 | 29.1 | 27.7 | 25.9 | 23.6 | 22.3 | 21.6 | 21.4 | 21.4 | 20.9 | 20.8 | 30.3 | 11.6 |
| 7 | 20.7 | 18.7 | 19.1 | 18.9 | 18.9 | 18.8 | 19.3 | 20.8 | 23.3 | 24.8 | 27.1 | 28.8 | 30.1 | 29.9 | 30.4 | 30.1 | 30.3 | 30.3 | 28.2 | 26.8 | 26.0 | 24.8 | 23.7 | 22.8 | 24.7 | 30.4 | 18.7 |
| 8 | 22.5 | 21.5 | 20.0 | 20.2 | 20.6 | 19.6 | 19.4 | 23.2 | 25.5 | 25.9 | 29.9 | 30.8 | 30.5 | 31.8 | 31.8 | 31.9 | 31.8 | 31.2 | 29.1 | 27.9 | 27.5 | 26.5 | 25.0 | 25.0 | 26.2 | 31.9 | 19.4 |
| 9 | 24.4 | 25.6 | 22.5 | 18.5 | 20.4 | 21.0 | 19.9 | 20.9 | 20.7 | 21.8 | 22.3 | 23.4 | 24.1 | 25.2 | 25.7 | 26.1 | 25.7 | 25.0 | 22.7 | 21.3 | 20.2 | 19.7 | 18.0 | 16.2 | 22.1 | 26.1 | 16.2 |
| 10 | 15.9 | 14.6 | 14.0 | 13.5 | 12.8 | 11.3 | 12.6 | 14.2 | 14.6 | 15.6 | 18.3 | 19.6 | 20.6 | 22.1 | 23.1 | 23.7 | 23.6 | 22.1 | 20.8 | 20.0 | 19.7 | 18.7 | 17.4 | 17.2 | 17.8 | 23.7 | 11.3 |
| 11 | 15.7 | 15.0 | 14.1 | 13.0 | 12.3 | 10.6 | 10.6 | 12.7 | 13.2 | 14.3 | 16.5 | 18.8 | 21.4 | 23.0 | 23.7 | 24.3 | 24.9 | 24.0 | 21.2 | 19.7 | 19.8 | 17.9 | 16.8 | 15.6 | 17.5 | 24.9 | 10.6 |
| 12 | 14.4 | 13.5 | 13.0 | 11.8 | 10.5 | 9.9 | 9.7 | 10.4 | 11.9 | 13.8 | 15.7 | 17.3 | 19.7 | 20.9 | 22.5 | 23.4 | 24.4 | 24.1 | 21.3 | 19.6 | 19.0 | 18.9 | 17.5 | 18.1 | 16.7 | 24.4 | 9.7 |
| 13 | 16.6 | 15.3 | 14.9 | 13.4 | 12.5 | 12.5 | 12.3 | 14.3 | 14.2 | 15.0 | 16.6 | 17.9 | 20.3 | 21.2 | 22.0 | 22.2 | 20.8 | 19.9 | 17.6 | 15.9 | 13.9 | 12.9 | 12.2 | 11.9 | 16.1 | 22.2 | 11.9 |
| 14 | 11.3 | 10.9 | 10.6 | 10.3 | 10.1 | 10.1 | 10.2 | 9.6 | 10.4 | 10.6 | 10.6 | 10.2 | 12.9 | 14.5 | 15.0 | 12.2 | 10.2 | 13.3 | 13.8 | 13.7 | 12.8 | 13.3 | 14.0 | 13.3 | 11.8 | 15.0 | 9.6 |
| 15 | 11.5 | 11.8 | 10.5 | 10.9 | 8.7 | 9.3 | 9.7 | 11.8 | 13.5 | 13.7 | 16.4 | 18.5 | 19.9 | 20.4 | 21.1 | 21.2 | 21.4 | 20.5 | 17.3 | 16.8 | 17.0 | 17.1 | 16.4 | 14.8 | 15.4 | 21.4 | 8.7 |
| 16 | 14.7 | 13.2 | 12.2 | 11.5 | 11.1 | 10.3 | 11.0 | 13.4 | 14.2 | 17.4 | 19.6 | 21.4 | 23.4 | 24.2 | 23.8 | 23.9 | 23.2 | 23.2 | 20.7 | 19.2 | 18.4 | 19.0 | 18.7 | 17.8 | 17.7 | 24.2 | 10.3 |
| 17 | 17.4 | 16.5 | 14.5 | 16.0 | 13.5 | 12.9 | 11.7 | 15.8 | 18.0 | 20.3 | 23.3 | 25.3 | 26.6 | 27.3 | 26.4 | 24.6 | 25.8 | 25.5 | 23.3 | 22.4 | 21.6 | 20.6 | 21.9 | 20.8 | 20.5 | 27.3 | 11.7 |
| 18 | 17.4 | 18.3 | 17.1 | 13.0 | 15.2 | 15.1 | 12.5 | 14.6 | 18.6 | 19.4 | 22.0 | 23.9 | 25.7 | 27.2 | 27.4 | 27.6 | 27.9 | 25.5 | 22.7 | 21.2 | 21.4 | 21.4 | 18.9 | 19.3 | 20.6 | 27.9 | 12.5 |
| 19 | 17.8 | 13.7 | 12.6 | 11.9 | 11.5 | 11.9 | 10.5 | 13.6 | 15.7 | 18.6 | 21.5 | 23.4 | 25.7 | 26.9 | 27.2 | 27.6 | 27.4 | 26.2 | 22.7 | 20.5 | 20.6 | 21.3 | 18.1 | 15.4 | 19.3 | 27.6 | 10.5 |
| 20 | 17.7 | 15.1 | 12.2 | 12.5 | 13.3 | 11.7 | 11.5 | 12.8 | 16.0 | 18.2 | 20.0 | 21.7 | 23.3 | 25.4 | 27.0 | 27.0 | 28.1 | 27.0 | 23.1 | 22.2 | 20.2 | 20.8 | 20.1 | 19.5 | 19.4 | 28.1 | 11.5 |
| 21 | 17.1 | 15.6 | 14.3 | 13.8 | 11.6 | 10.6 | 10.9 | 13.2 | 13.7 | 15.0 | 16.1 | 17.1 | 18.1 | 19.0 | 19.8 | 20.7 | 20.4 | 19.2 | 17.2 | 15.9 | 14.5 | 13.2 | 12.7 | 13.1 | 15.5 | 20.7 | 10.6 |
| 22 | 12.3 | 11.8 | 9.5 | 7.5 | 6.3 | 5.4 | 5.2 | 8.9 | 12.6 | 14.9 | 17.8 | 19.7 | 21.9 | 24.1 | 24.9 | 25.8 | 24.5 | 23.2 | 19.9 | 19.3 | 19.0 | 19.6 | 17.2 | 15.4 | 16.1 | 25.8 | 5.2 |
| 23 | 14.5 | 13.9 | 14.0 | 14.0 | 10.8 | 8.5 | 8.6 | 11.7 | 16.4 | 17.8 | 20.0 | 21.9 | 23.7 | 25.1 | 26.5 | 27.3 | 28.0 | 27.2 | 22.8 | 21.8 | 21.0 | 20.1 | 18.1 | 17.6 | 18.8 | 28.0 | 8.5 |
| 24 | 17.4 | 15.6 | 13.7 | 12.3 | 13.5 | 13.7 | 12.8 | 14.7 | 15.3 | 19.0 | 22.6 | 23.5 | 25.9 | 27.6 | 28.5 | 29.1 | 28.8 | 27.2 | 24.2 | 23.7 | 24.1 | 24.3 | 24.1 | 19.2 | 20.9 | 29.1 | 12.3 |
| 25 | 17.7 | 18.3 | 16.3 | 14.1 | 12.6 | 13.9 | 15.0 | 15.6 | 19.8 | 21.5 | 24.0 | 25.8 | 28.1 | 29.4 | 29.4 | 29.2 | 29.2 | 28.3 | 24.5 | 23.6 | 24.8 | 24.2 | 23.1 | 22.5 | 22.1 | 29.4 | 12.6 |
| 26 | 22.1 | 21.0 | 13.6 | 14.5 | 14.8 | 17.5 | 16.3 | 18.0 | 20.4 | 19.4 | 20.6 | 21.8 | 23.2 | 23.9 | 25.0 | 25.6 | 25.2 | 24.6 | 23.8 | 23.3 | 22.9 | 22.6 | 22.5 | 22.2 | 21.0 | 25.6 | 13.6 |
| 27 | 21.8 | 20.0 | 15.9 | 15.8 | 16.6 | 15.5 | 13.9 | 12.3 | 20.9 | 22.3 | 22.0 | 24.2 | 25.8 | 26.4 | 27.5 | 28.3 | 28.4 | 26.9 | 24.5 | 24.0 | 22.5 | 21.5 | 21.4 | 20.5 | 21.6 | 28.4 | 12.3 |
| 28 | 18.3 | 18.2 | 15.9 | 16.6 | 14.8 | 14.0 | 15.1 | 17.6 | 19.6 | 20.0 | 21.9 | 26.3 | 28.2 | 29.6 | 31.0 | 30.4 | 28.4 | 27.0 | 26.1 | 25.9 | 25.4 | 25.3 | 21.5 | 19.9 | 22.4 | 31.0 | 14.0 |
| 29 | 17.5 | 17.2 | 16.2 | 13.6 | 12.8 | 12.4 | 12.9 | 13.1 | ***** | 15.4 | 16.8 | 18.0 | 18.4 | 18.9 | 19.1 | 13.3 | 11.1 | 10.3 | 10.2 | 11.0 | 10.6 | 10.4 | 10.9 | 10.4 | 13.9 | 19.1 | 10.2 |
| 30 | 10.0 | 10.1 | 10.2 | 9.6 | 9.9 | 9.7 | 9.5 | 9.4 | 11.1 | 12.2 | 12.9 | 13.8 | 13.7 | 14.7 | 14.8 | 14.8 | 14.6 | 14.2 | 13.7 | 13.2 | 12.9 | 12.9 | 12.7 | 12.5 | 12.2 | 14.8 | 9.4 |
| Mean | 17.3 | 16.4 | 14.8 | 14.0 | 13.3 | 13.0 | 12.9 | 14.5 | 16.5 | 17.9 | 20.0 | 21.7 | 23.3 | 24.3 | 25.0 | 24.9 | 24.6 | 23.9 | 21.8 | 20.8 | 20.2 | 19.8 | 18.9 | 18.0 | Monthly mean = | | 19.1 |
| Max. | 24.4 | 25.6 | 22.5 | 20.2 | 20.6 | 21.0 | 19.9 | 23.2 | 25.5 | 25.9 | 29.9 | 30.8 | 30.5 | 31.8 | 31.8 | 31.9 | 31.8 | 31.2 | 29.1 | 27.9 | 27.5 | 26.5 | 25.0 | 25.0 | Monthly max. = | | 31.9 |
| Min. | 10.0 | 10.1 | 9.5 | 7.5 | 6.3 | 5.4 | 5.2 | 8.9 | 10.4 | 10.6 | 10.6 | 10.2 | 12.9 | 14.5 | 14.8 | 12.2 | 10.2 | 10.3 | 10.2 | 11.0 | 10.6 | 10.4 | 10.9 | 10.4 | Monthly min. = | | 5.2 |

TOTAL NUMBER OF DATA HOURS IN MONTH: 720
Number of hours of bad or missing data: 1
**** designates missing or lost data

Current % recovery = 99.9

N/A: insufficient data available for calculation (a minimum of 75% is required).

table created at 11:34,12/14/1994

MONTHLY SUMMARY
SIGMA THETA
(Degrees)
INPUT FILE: s7metJ04.met

Bechtel Environmental, Inc.

Met Data for Site 7
SEPTEMBER 1994

| Day | Hour 1 | 2 | 3 | 4 | 5 | 6 | 7 | 8 | 9 | 10 | 11 | 12 | 13 | 14 | 15 | 16 | 17 | 18 | 19 | 20 | 21 | 22 | 23 | 24 | Mean | Max. | Min. |
|---|---|---|---|---|---|---|---|---|---|---|---|---|---|---|---|---|---|---|---|---|---|---|---|---|---|---|---|
| 1 | 55. | 23. | 53. | 49. | 56. | 27. | 51. | 32. | 15. | 16. | 40. | 24. | 28. | 11. | 17. | 16. | 14. | 15. | 17. | 6. | 4. | 26. | 34. | 27. | N/A | 56. | 4. |
| 2 | 16. | 37. | 58. | 74. | 80. | 53. | 19. | 50. | 40. | 42. | 37. | 15. | 15. | 15. | 14. | 14. | 13. | 12. | 8. | 3. | 14. | 10. | 17. | 47. | N/A | 80. | 3. |
| 3 | 50. | 10. | 10. | 10. | 12. | 13. | 18. | 12. | 10. | 14. | 14. | 16. | 10. | 12. | 11. | 10. | 10. | 7. | 11. | 11. | 11. | 11. | 9. | 8. | N/A | 50. | 7. |
| 4 | 10. | 9. | 9. | 9. | 9. | 10. | 10. | 11. | 13. | 14. | 14. | 16. | 16. | 16. | 11. | 13. | 10. | 14. | 14. | 13. | 9. | 8. | 8. | 8. | N/A | 16. | 8. |
| 5 | 10. | 9. | 13. | 47. | 42. | 60. | 51. | 63. | 23. | 26. | 24. | 26. | 27. | 18. | 24. | 15. | 15. | 14. | 19. | 12. | 8. | 13. | 9. | 10. | N/A | 63. | 8. |
| 6 | 77. | 21. | 26. | 32. | 68. | 45. | 37. | 50. | 29. | 15. | 15. | 20. | 26. | 25. | 34. | 20. | 14. | 12. | 7. | 7. | 5. | 5. | 5. | 5. | N/A | 77. | 5. |
| 7 | 7. | 15. | 6. | 6. | 5. | 5. | 9. | 10. | 17. | 16. | 22. | 23. | 30. | 19. | 15. | 17. | 13. | 18. | 36. | 6. | 7. | 6. | 5. | 6. | N/A | 36. | 5. |
| 8 | 6. | 13. | 11. | 10. | 8. | 8. | 62. | 41. | 38. | 25. | 32. | 34. | 20. | 39. | 21. | 22. | 19. | 16. | 11. | 9. | 9. | 8. | 22. | 14. | N/A | 62. | 6. |
| 9 | 14. | 12. | 14. | 43. | 42. | 11. | 10. | 9. | 12. | 12. | 15. | 15. | 13. | 16. | 15. | 13. | 10. | 9. | 12. | 10. | 8. | 10. | 8. | 8. | N/A | 43. | 8. |
| 10 | 7. | 7. | 8. | 8. | 51. | 26. | 14. | 22. | 17. | 15. | 18. | 14. | 16. | 19. | 13. | 14. | 14. | 11. | 16. | 12. | 12. | 11. | 8. | 9. | N/A | 51. | 7. |
| 11 | 9. | 8. | 10. | 9. | 10. | 43. | 27. | 22. | 17. | 13. | 13. | 19. | 23. | 20. | 16. | 16. | 21. | 11. | 23. | 16. | 12. | 43. | 9. | 8. | N/A | 43. | 8. |
| 12 | 9. | 8. | 8. | 9. | 8. | 8. | 9. | 10. | 14. | 17. | 17. | 23. | 18. | 21. | 20. | 18. | 26. | 22. | 17. | 15. | 17. | 14. | 30. | 8. | N/A | 30. | 8. |
| 13 | 22. | 18. | 10. | 45. | 12. | 9. | 11. | 25. | 14. | 15. | 13. | 12. | 13. | 24. | 13. | 13. | 11. | 14. | 10. | 13. | 10. | 8. | 8. | 9. | N/A | 45. | 8. |
| 14 | 8. | 9. | 8. | 9. | 9. | 11. | 10. | 12. | 13. | 16. | 15. | 15. | 18. | 41. | 13. | 28. | 12. | 13. | 13. | 15. | 17. | 13. | 12. | 19. | N/A | 41. | 8. |
| 15 | 47. | 37. | 44. | 44. | 53. | 23. | 78. | 39. | 27. | 14. | 16. | 35. | 41. | 30. | 45. | 36. | 28. | 25. | 32. | 7. | 8. | 7. | 21. | 17. | N/A | 78. | 7. |
| 16 | 41. | 40. | 23. | 40. | 22. | 34. | 13. | 28. | 15. | 22. | 20. | 22. | 36. | 28. | 26. | 15. | 17. | 10. | 14. | 16. | 9. | 5. | 4. | 5. | N/A | 41. | 4. |
| 17 | 4. | 22. | 43. | 15. | 51. | 32. | 22. | 42. | 11. | 12. | 16. | 22. | 51. | 49. | 39. | 14. | 14. | 12. | 9. | 8. | 9. | 6. | 10. | 36. | N/A | 51. | 4. |
| 18 | 52. | 49. | 30. | 34. | 8. | 19. | 60. | 28. | 54. | 20. | 22. | 21. | 22. | 34. | 25. | 29. | 39. | 9. | 9. | 11. | 10. | 9. | 37. | 11. | N/A | 60. | 8. |
| 19 | 52. | 36. | 76. | 54. | 54. | 53. | 43. | 33. | 22. | 18. | 26. | 18. | 22. | 17. | 29. | 20. | 19. | 15. | 16. | 24. | 20. | 9. | 37. | 40. | N/A | 76. | 9. |
| 20 | 43. | 98. | 65. | 20. | 19. | 55. | 16. | 19. | 49. | 21. | 14. | 12. | 12. | 20. | 40. | 33. | 31. | 40. | 10. | 10. | 20. | 11. | 10. | 10. | N/A | 98. | 10. |
| 21 | 42. | 6. | 56. | 34. | 57. | 71. | 25. | 18. | 24. | 10. | 9. | 9. | 10. | 10. | 13. | 15. | 11. | 10. | 7. | 10. | 20. | 13. | 12. | 9. | N/A | 71. | 6. |
| 22 | 8. | 11. | 21. | 23. | 9. | 30. | 8. | 7. | 36. | 20. | 21. | 26. | 28. | 41. | 41. | 25. | 15. | 9. | 17. | 20. | 15. | 7. | 23. | 37. | N/A | 41. | 7. |
| 23 | 53. | 15. | 70. | 41. | 33. | 65. | 39. | 31. | 27. | 20. | 24. | 19. | 17. | 37. | 19. | 17. | 22. | 25. | 12. | 17. | 26. | 34. | 30. | 36. | N/A | 70. | 12. |
| 24 | 34. | 38. | 44. | 45. | 6. | 6. | 6. | 50. | 38. | 36. | 27. | 21. | 30. | 20. | 11. | 18. | 12. | 8. | 14. | 8. | 6. | 5. | 6. | 52. | N/A | 52. | 5. |
| 25 | 32. | 52. | 39. | 55. | 31. | 20. | 46. | 26. | 33. | 21. | 24. | 20. | 25. | 30. | 19. | 15. | 13. | 14. | 12. | 16. | 6. | 10. | 9. | 11. | N/A | 55. | 6. |
| 26 | 11. | 23. | 62. | 29. | 51. | 23. | 22. | 13. | 18. | 31. | 12. | 13. | 11. | 11. | 15. | 14. | 8. | 13. | 8. | 7. | 8. | 8. | 8. | 9. | N/A | 62. | 7. |
| 27 | 10. | 27. | 44. | 36. | 42. | 66. | 45. | 7. | 63. | 25. | 16. | 34. | 20. | 14. | 16. | 17. | 17. | 16. | 8. | 16. | 10. | 30. | 5. | 27. | N/A | 66. | 5. |
| 28 | 39. | 43. | 37. | 68. | 43. | 47. | 8. | 41. | 74. | 24. | 14. | 23. | 18. | 23. | 26. | 22. | 10. | 8. | 7. | 8. | 8. | 14. | 16. | 11. | N/A | 74. | 7. |
| 29 | 15. | 8. | 11. | 9. | 26. | 7. | 20. | 65. | ***** | 11. | 15. | 18. | 13. | 14. | 13. | 15. | 13. | 10. | 22. | 54. | 23. | 13. | 13. | 8. | N/A | 65. | 7. |
| 30 | 27. | 42. | 14. | 9. | 59. | 34. | 32. | 17. | 15. | 16. | 23. | 22. | 15. | 25. | 21. | 16. | 14. | 19. | 10. | 50. | 16. | 27. | 23. | 37. | N/A | 59. | 9. |
| Mean | N/A | N/A | N/A | N/A | N/A | N/A | N/A | N/A | N/A | N/A | N/A | N/A | N/A | N/A | N/A | N/A | N/A | N/A | N/A | N/A | N/A | N/A | N/A | N/A | Monthly mean = | | N/A |
| Max. | 77. | 98. | 76. | 74. | 80. | 71. | 78. | 65. | 74. | 42. | 40. | 35. | 51. | 49. | 45. | 36. | 39. | 40. | 36. | 54. | 26. | 43. | 37. | 52. | Monthly max. = | | 98. |
| Min. | 4. | 6. | 6. | 6. | 5. | 5. | 6. | 7. | 10. | 10. | 9. | 9. | 10. | 10. | 11. | 10. | 8. | 7. | 7. | 3. | 4. | 5. | 4. | 5. | Monthly min. = | | 3. |

TOTAL NUMBER OF DATA HOURS IN MONTH: 720
Number of hours of bad or missing data: 1
**** designates missing or lost data

Current % recovery = 99.9

N/A: A sigma theta mean is not physically meaningful.

table created at 11:34,12/14/1994

MONTHLY SUMMARY
WIND SPEED
(Miles Per Hour)
INPUT FILE: s7metJ04.met

Bechtel Environmental, Inc.

Met Data for Site 7
OCTOBER 1994

| Day | Hour 1 | 2 | 3 | 4 | 5 | 6 | 7 | 8 | 9 | 10 | 11 | 12 | 13 | 14 | 15 | 16 | 17 | 18 | 19 | 20 | 21 | 22 | 23 | 24 | Mean | Max. | Min. |
|---|---|---|---|---|---|---|---|---|---|---|---|---|---|---|---|---|---|---|---|---|---|---|---|---|---|---|---|
| 1 | 4.7 | 4.0 | 4.9 | 7.5 | 8.6 | 5.5 | 4.6 | 5.2 | 9.7 | 6.2 | 7.6 | 8.8 | 6.7 | 4.1 | 4.6 | 10.9 | 8.7 | 8.4 | 7.9 | 9.0 | 11.8 | 16.5 | 23.6 | 26.8 | 9.0 | 26.8 | 4.0 |
| 2 | 20.5 | 19.9 | 23.7 | 21.8 | 23.2 | 24.9 | 22.8 | 20.0 | 24.0 | 27.9 | 33.0 | 38.9 | 40.2 | 31.7 | 33.8 | 41.9 | 38.1 | 17.6 | 12.2 | 10.8 | 7.6 | 12.8 | 14.5 | 14.2 | 24.0 | 41.9 | 7.6 |
| 3 | 11.4 | 7.6 | 5.4 | 11.9 | 9.4 | 8.4 | 5.8 | 9.5 | 11.5 | 11.4 | 9.7 | 10.5 | 10.9 | 8.1 | 5.1 | 9.7 | 11.9 | 9.5 | 4.8 | 3.0 | 4.3 | 4.2 | 5.0 | 6.1 | 8.1 | 11.9 | 3.0 |
| 4 | 7.5 | 5.5 | 4.2 | 2.3 | 6.3 | 6.3 | 3.0 | 3.1 | 3.4 | 7.5 | 5.9 | 16.4 | 21.8 | 18.4 | ***** | ***** | ***** | ***** | ***** | ***** | ***** | ***** | ***** | ***** | ***** | 21.8 | 2.3 |
| 5 | ***** | ***** | ***** | 10.4 | 10.0 | 12.7 | 9.8 | 8.2 | 7.9 | 14.1 | 12.8 | 8.0 | 6.2 | 5.6 | 11.0 | 14.3 | 22.3 | 25.2 | 20.2 | 28.6 | 23.0 | 22.4 | 23.9 | 22.0 | 15.2 | 28.6 | 5.6 |
| 6 | 26.3 | 29.4 | 27.6 | 25.9 | 27.8 | 25.6 | 24.8 | 26.7 | 28.4 | 27.1 | 24.6 | 23.0 | 22.9 | 20.7 | 17.6 | 16.9 | 18.6 | 16.7 | 17.8 | 13.8 | 11.5 | 13.7 | 17.6 | 19.7 | 21.9 | 29.4 | 11.5 |
| 7 | 21.1 | 18.0 | 15.7 | 11.8 | 11.4 | 16.2 | 19.2 | 22.4 | 22.5 | 19.4 | 15.8 | 15.5 | 12.9 | 9.9 | 9.7 | 8.7 | 9.2 | 9.5 | 13.5 | 17.1 | 15.0 | 11.7 | 11.3 | 10.6 | 14.5 | 22.5 | 8.7 |
| 8 | 7.3 | 5.3 | 1.4 | 2.4 | 5.7 | 3.2 | 6.2 | 3.1 | 6.8 | 3.4 | 4.3 | 4.1 | 3.8 | 4.7 | 4.8 | 8.6 | 5.3 | 3.6 | 4.6 | 10.4 | 10.2 | 12.3 | 14.0 | 13.6 | 6.2 | 14.0 | 1.4 |
| 9 | 16.6 | 14.8 | 10.6 | 13.0 | 5.6 | 1.9 | 7.5 | 9.8 | 8.1 | 4.3 | 5.9 | 7.7 | 9.0 | 5.8 | 6.5 | 5.0 | 7.8 | 11.0 | 13.8 | 15.2 | 17.3 | 17.4 | 17.1 | 17.0 | 10.4 | 17.4 | 1.9 |
| 10 | 18.9 | 8.8 | 6.5 | 11.5 | 11.4 | 15.6 | 5.9 | 2.9 | 6.7 | 4.5 | 4.1 | 4.9 | 6.7 | 14.8 | 18.3 | 18.8 | 18.1 | 22.2 | 22.6 | 20.8 | 18.5 | 14.7 | 13.0 | 10.1 | 12.5 | 22.6 | 2.9 |
| 11 | 5.4 | 9.1 | 14.8 | 23.4 | 35.9 | 36.6 | 28.8 | 23.2 | 14.1 | 6.7 | 12.8 | 14.0 | 12.7 | 16.8 | 16.7 | 20.3 | 20.5 | 12.6 | 9.0 | 7.0 | 25.2 | 25.5 | 21.8 | 17.7 | 17.9 | 36.6 | 5.4 |
| 12 | 6.5 | 14.0 | 8.0 | 13.2 | 12.6 | 9.3 | 14.2 | 11.8 | 6.1 | 9.8 | 9.7 | 6.8 | 5.0 | 5.5 | 4.8 | 6.3 | 5.7 | 6.8 | 7.6 | 6.3 | 4.3 | 5.7 | 7.3 | 3.1 | 7.9 | 14.2 | 3.1 |
| 13 | 2.9 | 5.8 | 4.7 | 4.4 | 3.6 | 7.5 | 11.2 | 6.2 | 12.9 | 14.3 | 15.0 | 16.5 | 14.8 | 13.3 | 13.6 | 14.5 | 12.8 | 7.5 | 8.7 | 12.9 | 12.3 | 9.2 | 7.0 | 12.1 | 10.2 | 16.5 | 2.9 |
| 14 | 6.7 | 3.9 | 2.5 | 5.3 | 8.0 | 3.8 | 3.4 | 8.8 | 11.8 | 16.7 | 21.0 | 18.5 | 19.2 | 19.6 | 22.2 | 17.9 | 15.6 | 22.6 | 22.7 | 22.2 | 22.3 | 21.5 | 24.4 | 21.0 | 15.1 | 24.4 | 2.5 |
| 15 | 12.3 | 3.3 | 5.8 | 8.2 | 16.3 | 22.1 | 25.2 | 23.2 | 23.3 | 21.9 | 24.3 | 21.6 | 22.5 | 21.0 | 21.7 | 16.4 | 12.3 | 10.6 | 9.3 | 11.1 | 11.8 | 8.5 | 5.5 | 11.8 | 15.4 | 25.2 | 3.3 |
| 16 | 11.4 | 10.7 | 6.4 | 6.3 | 4.4 | 4.4 | 5.2 | 10.0 | 12.7 | 12.7 | 8.8 | 6.2 | 11.3 | 9.5 | 10.1 | 10.8 | 10.4 | 10.3 | 12.0 | 12.5 | 12.4 | 6.3 | 8.0 | 13.1 | 9.4 | 13.1 | 4.4 |
| 17 | 10.0 | 7.5 | 13.6 | 15.6 | 15.4 | 15.0 | 18.3 | 21.2 | 22.9 | 26.2 | 22.9 | 19.7 | 20.2 | 22.2 | 19.5 | 17.0 | 17.7 | 16.9 | 17.4 | 21.8 | 25.1 | 24.8 | 23.1 | 23.4 | 19.1 | 26.2 | 7.5 |
| 18 | 24.4 | 20.9 | 18.6 | 11.4 | 9.4 | 6.8 | 8.1 | 9.0 | 8.6 | 14.2 | 11.3 | 10.1 | 6.9 | 8.8 | 5.5 | 4.2 | 6.9 | 9.5 | 9.9 | 9.8 | 10.1 | 13.7 | 13.8 | 14.6 | 11.1 | 24.4 | 4.2 |
| 19 | 14.0 | 11.4 | 9.3 | 9.1 | 12.5 | 12.9 | 16.2 | 15.2 | 13.9 | 13.6 | 13.9 | 12.2 | 6.0 | 4.2 | 9.2 | 10.0 | 11.3 | 15.8 | 18.7 | 18.6 | 15.7 | 15.5 | 16.0 | 18.9 | 13.1 | 18.9 | 4.2 |
| 20 | 20.5 | 20.8 | 20.6 | 18.9 | 14.7 | 14.9 | 15.0 | 13.9 | 9.2 | 6.9 | 17.2 | 19.3 | 23.0 | 25.0 | 23.4 | 22.0 | 19.5 | 16.4 | 16.0 | 15.6 | 17.6 | 18.9 | 16.9 | 13.4 | 17.5 | 25.0 | 6.9 |
| 21 | 13.1 | 12.4 | 13.8 | 17.5 | 16.4 | 17.6 | 20.3 | 19.6 | 16.9 | 20.5 | 19.3 | 25.8 | 27.1 | 30.8 | 28.4 | 30.6 | 33.6 | 25.5 | 24.1 | 26.6 | 27.3 | 23.7 | 23.9 | 26.1 | 22.5 | 33.6 | 12.4 |
| 22 | 27.2 | 16.2 | 16.0 | 20.8 | 17.9 | 18.0 | 21.2 | 21.0 | 19.5 | 15.9 | 14.5 | 12.8 | 14.2 | 14.2 | 12.7 | 9.4 | 5.5 | 2.4 | 6.5 | 7.7 | 5.7 | 5.5 | 4.7 | 10.3 | 13.3 | 27.2 | 2.4 |
| 23 | 5.3 | 4.7 | 4.5 | 2.9 | 4.0 | 5.8 | 4.2 | 3.5 | 2.9 | 3.5 | 5.6 | 11.0 | 12.3 | 11.1 | 10.1 | 10.4 | 7.0 | 4.0 | 6.4 | 6.6 | 7.6 | 5.9 | 8.3 | 3.7 | 6.3 | 12.3 | 2.9 |
| 24 | 10.5 | 11.4 | 6.6 | 2.0 | 4.2 | 5.9 | 6.2 | 6.4 | 2.6 | 2.7 | 2.8 | 3.2 | 4.0 | 3.4 | 3.8 | 3.2 | 3.2 | 2.6 | 2.2 | 5.6 | 7.3 | 5.8 | 4.1 | 1.9 | 4.7 | 11.4 | 1.9 |
| 25 | 1.4 | 1.7 | 2.4 | 1.6 | 5.8 | 2.5 | 1.6 | 2.4 | 6.6 | 7.9 | 6.2 | 6.0 | 4.3 | 4.0 | 3.8 | 2.5 | 2.4 | 2.9 | 5.6 | 9.6 | 9.1 | 7.3 | 15.2 | 13.5 | 5.3 | 15.2 | 1.4 |
| 26 | 12.3 | 12.8 | 13.2 | 10.5 | 13.5 | 3.3 | 6.7 | 10.9 | 18.3 | 11.1 | 16.8 | 15.3 | 20.2 | 18.5 | 17.0 | 15.7 | 13.1 | 16.9 | 14.9 | 12.1 | 11.4 | 14.0 | 15.1 | 19.6 | 13.9 | 20.2 | 3.3 |
| 27 | 20.2 | 20.9 | 24.8 | 23.3 | 17.9 | 14.6 | 12.5 | 13.5 | 16.2 | 14.9 | 13.7 | 17.4 | 30.0 | 32.7 | 32.5 | 26.7 | 15.8 | 13.7 | 16.4 | 15.3 | 18.8 | 23.6 | 25.6 | 26.0 | 20.3 | 32.7 | 12.5 |
| 28 | 27.5 | 25.2 | 27.0 | 22.6 | 21.4 | 25.4 | 27.2 | 28.9 | 31.7 | 34.9 | 38.0 | 36.7 | 36.2 | 29.8 | 27.3 | 28.9 | 26.2 | 26.0 | 27.8 | 30.4 | 29.4 | 28.2 | 27.5 | 22.6 | 28.6 | 38.0 | 21.4 |
| 29 | 20.4 | 19.3 | 16.2 | 16.0 | 16.0 | 12.7 | 12.5 | 8.0 | 8.2 | 9.6 | 15.3 | 13.6 | 10.4 | 10.0 | 8.6 | 8.4 | 8.1 | 5.8 | 7.7 | 9.9 | 11.1 | 12.8 | 12.5 | 6.3 | 11.6 | 20.4 | 5.8 |
| 30 | 5.0 | 5.8 | 3.5 | 2.8 | 4.9 | 4.0 | 3.0 | 2.3 | 3.4 | 4.4 | 11.2 | 13.1 | 19.0 | 19.6 | 19.1 | 20.4 | 16.5 | 18.4 | 25.8 | 23.5 | 27.5 | 26.5 | 20.3 | 18.7 | 13.3 | 27.5 | 2.3 |
| 31 | 17.4 | 15.7 | 14.8 | 12.1 | 8.2 | 9.4 | 12.4 | 11.7 | 12.8 | 16.7 | 16.6 | 16.9 | 13.5 | 12.4 | 13.2 | 17.0 | 17.8 | 18.1 | 15.9 | 16.8 | 21.0 | 20.1 | 19.3 | 19.4 | 15.4 | 21.0 | 8.2 |
| Mean | 13.6 | 12.2 | 11.6 | 11.8 | 12.3 | 12.0 | 12.4 | 12.3 | 13.0 | 13.3 | 14.2 | 14.7 | 15.3 | 14.7 | 14.5 | 14.9 | 14.1 | 13.0 | 13.4 | 14.4 | 15.1 | 15.0 | 15.3 | 15.2 | Monthly mean = | | 13.7 |
| Max. | 27.5 | 29.4 | 27.6 | 25.9 | 35.9 | 36.6 | 28.8 | 28.9 | 31.7 | 34.9 | 38.0 | 38.9 | 40.2 | 32.7 | 33.8 | 41.9 | 38.1 | 26.0 | 27.8 | 30.4 | 29.4 | 28.2 | 27.5 | 26.8 | Monthly max. = | | 41.9 |
| Min. | 1.4 | 1.7 | 1.4 | 1.6 | 3.6 | 1.9 | 1.6 | 2.3 | 2.6 | 2.7 | 2.8 | 3.2 | 3.8 | 3.4 | 3.8 | 2.5 | 2.4 | 2.4 | 2.2 | 3.0 | 4.3 | 4.2 | 4.1 | 1.9 | Monthly min. = | | 1.4 |

TOTAL NUMBER OF DATA HOURS IN MONTH: 744
Number of hours of bad or missing data: 13
**** designates missing or lost data

Current % recovery = 98.3

N/A: insufficient data available for calculation (a minimum of 75% is required)

table created at 11:34,12/14/1994

MONTHLY SUMMARY
WIND DIRECTION
(Degrees)
INPUT FILE: s7metJ04.met

Bechtel Environmental, Inc.

Met Data for Site 7
OCTOBER 1994

| Day | Hour 1 | 2 | 3 | 4 | 5 | 6 | 7 | 8 | 9 | 10 | 11 | 12 | 13 | 14 | 15 | 16 | 17 | 18 | 19 | 20 | 21 | 22 | 23 | 24 | Mean | Max. | Min. |
|---|---|---|---|---|---|---|---|---|---|---|---|---|---|---|---|---|---|---|---|---|---|---|---|---|---|---|---|
| 1 | 253.0 | 276.0 | 281.0 | 250.0 | 252.0 | 211.0 | 218.0 | 226.0 | 245.0 | 195.0 | 256.0 | 258.0 | 244.0 | 39.0 | 215.0 | 278.0 | 265.0 | 249.0 | 197.0 | 182.0 | 192.0 | 201.0 | 218.0 | 229.0 | 241.2 | 281.0 | 39.0 |
| 2 | 245.0 | 241.0 | 232.0 | 226.0 | 225.0 | 233.0 | 236.0 | 238.0 | 239.0 | 242.0 | 264.0 | 267.0 | 267.0 | 250.0 | 249.0 | 264.0 | 275.0 | 29.0 | 19.0 | 40.0 | 29.0 | 8.0 | 17.0 | 25.0 | 286.7 | 275.0 | 8.0 |
| 3 | 15.0 | 25.0 | 28.0 | 16.0 | 16.0 | 15.0 | 39.0 | 21.0 | 18.0 | 20.0 | 22.0 | 28.0 | 24.0 | 26.0 | 342.0 | 18.0 | 37.0 | 28.0 | 15.0 | 52.0 | 28.0 | 23.0 | 52.0 | 44.0 | 24.7 | 342.0 | 15.0 |
| 4 | 53.0 | 76.0 | 91.0 | 165.0 | 132.0 | 159.0 | 251.0 | 76.0 | 110.0 | 266.0 | 274.0 | 133.0 | 137.0 | 159.0 | 26.0 | 82.0 | 66.0 | 45.0 | 82.0 | 100.0 | 126.0 | 117.0 | 228.0 | 236.0 | 132.9 | 274.0 | 26.0 |
| 5 | 119.0 | 149.0 | 138.0 | 235.0 | 205.0 | 133.0 | 152.0 | 219.0 | 150.0 | 139.0 | 169.0 | 174.0 | 271.0 | 256.0 | 243.0 | 233.0 | 236.0 | 233.0 | 236.0 | 238.0 | 243.0 | 243.0 | 239.0 | 242.0 | 204.0 | 271.0 | 119.0 |
| 6 | 240.0 | 236.0 | 236.0 | 239.0 | 239.0 | 241.0 | 239.0 | 237.0 | 236.0 | 240.0 | 243.0 | 241.0 | 243.0 | 240.0 | 254.0 | 253.0 | 254.0 | 241.0 | 238.0 | 231.0 | 228.0 | 226.0 | 231.0 | 231.0 | 239.0 | 254.0 | 226.0 |
| 7 | 233.0 | 235.0 | 233.0 | 240.0 | 245.0 | 237.0 | 234.0 | 235.0 | 238.0 | 235.0 | 244.0 | 269.0 | 275.0 | 274.0 | 288.0 | 277.0 | 254.0 | 255.0 | 237.0 | 229.0 | 224.0 | 222.0 | 228.0 | 218.0 | 244.1 | 288.0 | 218.0 |
| 8 | 204.0 | 149.0 | 343.0 | 138.0 | 144.0 | 172.0 | 153.0 | 252.0 | 117.0 | 121.0 | 77.0 | .0 | 20.0 | 338.0 | 24.0 | 291.0 | 279.0 | 263.0 | 181.0 | 174.0 | 167.0 | 159.0 | 148.0 | 147.0 | 169.2 | 343.0 | .0 |
| 9 | 149.0 | 144.0 | 141.0 | 140.0 | 147.0 | 163.0 | 145.0 | 138.0 | 135.0 | 75.0 | 57.0 | 94.0 | 111.0 | 220.0 | 178.0 | 198.0 | 183.0 | 178.0 | 134.0 | 145.0 | 147.0 | 136.0 | 144.0 | 145.0 | 143.6 | 220.0 | 57.0 |
| 10 | 147.0 | 160.0 | 145.0 | 154.0 | 153.0 | 151.0 | 186.0 | 202.0 | 207.0 | 283.0 | 340.0 | 322.0 | 252.0 | 187.0 | 175.0 | 179.0 | 189.0 | 185.0 | 189.0 | 191.0 | 192.0 | 187.0 | 160.0 | 151.0 | 195.3 | 340.0 | 145.0 |
| 11 | 213.0 | 137.0 | 168.0 | 226.0 | 232.0 | 231.0 | 231.0 | 231.0 | 230.0 | 217.0 | 276.0 | 273.0 | 277.0 | 267.0 | 265.0 | 267.0 | 272.0 | 268.0 | 242.0 | 244.0 | 228.0 | 205.0 | 146.0 | 141.0 | 228.6 | 277.0 | 137.0 |
| 12 | 149.0 | 141.0 | 143.0 | 139.0 | 139.0 | 140.0 | 140.0 | 129.0 | 116.0 | 108.0 | 87.0 | 50.0 | 62.0 | 55.0 | 83.0 | 69.0 | 114.0 | 115.0 | 45.0 | 46.0 | 64.0 | 120.0 | 131.0 | 76.0 | 102.5 | 149.0 | 45.0 |
| 13 | 97.0 | 266.0 | 269.0 | 257.0 | 165.0 | 127.0 | 134.0 | 237.0 | 247.0 | 246.0 | 245.0 | 244.0 | 242.0 | 250.0 | 258.0 | 259.0 | 242.0 | 224.0 | 240.0 | 240.0 | 235.0 | 232.0 | 239.0 | 235.0 | 226.3 | 269.0 | 97.0 |
| 14 | 175.0 | 190.0 | 135.0 | 151.0 | 183.0 | 265.0 | 84.0 | 131.0 | 138.0 | 159.0 | 180.0 | 189.0 | 195.0 | 240.0 | 264.0 | 261.0 | 243.0 | 240.0 | 234.0 | 239.0 | 235.0 | 238.0 | 238.0 | 261.0 | 202.8 | 265.0 | 84.0 |
| 15 | 269.0 | 64.0 | 141.0 | 249.0 | 239.0 | 234.0 | 234.0 | 237.0 | 241.0 | 242.0 | 241.0 | 240.0 | 239.0 | 238.0 | 239.0 | 249.0 | 325.0 | 342.0 | 354.0 | 350.0 | 1.0 | 329.0 | 337.0 | 30.0 | 296.0 | 354.0 | 1.0 |
| 16 | 42.0 | 37.0 | 26.0 | 23.0 | 357.0 | 276.0 | 274.0 | 252.0 | 241.0 | 243.0 | 267.0 | 315.0 | 256.0 | 292.0 | 279.0 | 273.0 | 257.0 | 255.0 | 231.0 | 225.0 | 225.0 | 241.0 | 232.0 | 239.0 | 283.2 | 357.0 | 23.0 |
| 17 | 239.0 | 226.0 | 225.0 | 217.0 | 230.0 | 234.0 | 236.0 | 236.0 | 232.0 | 236.0 | 242.0 | 245.0 | 249.0 | 258.0 | 248.0 | 235.0 | 230.0 | 235.0 | 239.0 | 240.0 | 236.0 | 244.0 | 245.0 | 238.0 | 237.3 | 258.0 | 217.0 |
| 18 | 234.0 | 236.0 | 230.0 | 239.0 | 239.0 | 192.0 | 218.0 | 228.0 | 211.0 | 210.0 | 216.0 | 211.0 | 227.0 | 251.0 | 84.0 | 90.0 | 127.0 | 155.0 | 152.0 | 156.0 | 183.0 | 159.0 | 148.0 | 147.0 | 189.3 | 251.0 | 84.0 |
| 19 | 153.0 | 157.0 | 157.0 | 143.0 | 143.0 | 144.0 | 145.0 | 144.0 | 140.0 | 143.0 | 138.0 | 144.0 | 207.0 | 250.0 | 200.0 | 199.0 | 177.0 | 180.0 | 185.0 | 187.0 | 175.0 | 149.0 | 145.0 | 144.0 | 164.5 | 250.0 | 138.0 |
| 20 | 145.0 | 144.0 | 145.0 | 146.0 | 155.0 | 147.0 | 143.0 | 147.0 | 151.0 | 258.0 | 250.0 | 249.0 | 243.0 | 253.0 | 263.0 | 258.0 | 257.0 | 245.0 | 238.0 | 225.0 | 224.0 | 226.0 | 226.0 | 219.0 | 206.5 | 263.0 | 143.0 |
| 21 | 226.0 | 203.0 | 213.0 | 221.0 | 219.0 | 220.0 | 226.0 | 228.0 | 228.0 | 239.0 | 243.0 | 246.0 | 252.0 | 259.0 | 252.0 | 259.0 | 264.0 | 259.0 | 242.0 | 241.0 | 238.0 | 238.0 | 233.0 | 237.0 | 236.9 | 264.0 | 203.0 |
| 22 | 235.0 | 254.0 | 244.0 | 235.0 | 235.0 | 232.0 | 217.0 | 217.0 | 218.0 | 236.0 | 248.0 | 252.0 | 265.0 | 263.0 | 263.0 | 280.0 | 275.0 | 335.0 | 147.0 | 154.0 | 135.0 | 154.0 | 191.0 | 191.0 | 228.2 | 335.0 | 135.0 |
| 23 | 184.0 | 155.0 | 222.0 | 31.0 | 168.0 | 162.0 | 251.0 | 290.0 | 95.0 | 80.0 | 279.0 | 276.0 | 283.0 | 286.0 | 279.0 | 277.0 | 265.0 | 230.0 | 215.0 | 219.0 | 194.0 | 216.0 | 215.0 | 228.0 | 212.5 | 290.0 | 31.0 |
| 24 | 128.0 | 123.0 | 135.0 | 341.0 | 122.0 | 127.0 | 118.0 | 135.0 | 268.0 | 321.0 | 357.0 | 341.0 | 1.0 | 13.0 | 327.0 | 4.0 | 348.0 | 288.0 | 93.0 | 130.0 | 138.0 | 140.0 | 144.0 | 261.0 | 48.5 | 357.0 | 1.0 |
| 25 | 283.0 | 288.0 | 254.0 | 265.0 | 138.0 | 150.0 | 330.0 | 143.0 | 110.0 | 125.0 | 95.0 | 51.0 | 30.0 | 36.0 | 34.0 | 40.0 | 103.0 | 112.0 | 141.0 | 143.0 | 134.0 | 141.0 | 142.0 | 149.0 | 143.2 | 330.0 | 30.0 |
| 26 | 141.0 | 138.0 | 142.0 | 147.0 | 147.0 | 257.0 | 134.0 | 140.0 | 155.0 | 211.0 | 233.0 | 243.0 | 243.0 | 241.0 | 260.0 | 259.0 | 234.0 | 226.0 | 219.0 | 210.0 | 194.0 | 225.0 | 221.0 | 226.0 | 201.9 | 260.0 | 134.0 |
| 27 | 225.0 | 227.0 | 227.0 | 227.0 | 225.0 | 209.0 | 186.0 | 175.0 | 208.0 | 222.0 | 211.0 | 232.0 | 256.0 | 263.0 | 259.0 | 250.0 | 240.0 | 211.0 | 209.0 | 200.0 | 207.0 | 213.0 | 221.0 | 222.0 | 221.9 | 263.0 | 175.0 |
| 28 | 226.0 | 228.0 | 257.0 | 258.0 | 243.0 | 255.0 | 259.0 | 245.0 | 241.0 | 235.0 | 240.0 | 245.0 | 255.0 | 248.0 | 256.0 | 256.0 | 247.0 | 238.0 | 233.0 | 232.0 | 233.0 | 232.0 | 232.0 | 230.0 | 242.7 | 259.0 | 226.0 |
| 29 | 235.0 | 235.0 | 236.0 | 232.0 | 236.0 | 240.0 | 239.0 | 247.0 | 254.0 | 251.0 | 250.0 | 244.0 | 259.0 | 290.0 | 276.0 | 277.0 | 272.0 | 242.0 | 230.0 | 227.0 | 235.0 | 233.0 | 229.0 | 248.0 | 246.5 | 290.0 | 227.0 |
| 30 | 251.0 | 246.0 | 248.0 | 305.0 | 254.0 | 138.0 | 270.0 | 299.0 | 284.0 | 277.0 | 245.0 | 253.0 | 265.0 | 259.0 | 247.0 | 241.0 | 241.0 | 234.0 | 230.0 | 234.0 | 229.0 | 228.0 | 218.0 | 219.0 | 246.5 | 305.0 | 138.0 |
| 31 | 219.0 | 219.0 | 225.0 | 222.0 | 189.0 | 174.0 | 159.0 | 174.0 | 165.0 | 198.0 | 195.0 | 204.0 | 175.0 | 170.0 | 180.0 | 192.0 | 164.0 | 185.0 | 172.0 | 187.0 | 192.0 | 187.0 | 171.0 | 177.0 | 187.3 | 225.0 | 159.0 |
| Mean | 184.7 | 180.8 | 190.6 | 196.0 | 194.1 | 189.3 | 196.2 | 197.1 | 189.3 | 202.4 | 215.6 | 210.7 | 296.9 | 296.5 | 219.7 | 293.2 | 223.7 | 210.5 | 187.7 | 190.7 | 177.8 | 189.4 | 192.5 | 186.6 | Monthly mean = | | 198.2 |
| Max. | 283.0 | 288.0 | 343.0 | 341.0 | 357.0 | 276.0 | 330.0 | 299.0 | 284.0 | 321.0 | 357.0 | 341.0 | 283.0 | 338.0 | 342.0 | 291.0 | 348.0 | 342.0 | 354.0 | 350.0 | 243.0 | 329.0 | 337.0 | 261.0 | Monthly max. = | | 357.0 |
| Min. | 15.0 | 25.0 | 26.0 | 16.0 | 16.0 | 15.0 | 39.0 | 21.0 | 18.0 | 20.0 | 22.0 | .0 | 1.0 | 13.0 | 24.0 | 4.0 | 37.0 | 28.0 | 15.0 | 40.0 | 1.0 | 8.0 | 17.0 | 25.0 | Monthly min. = | | .0 |

TOTAL NUMBER OF DATA HOURS IN MONTH: 744
Number of hours of bad or missing data: 0
**** designates missing or lost data

Current % recovery = 100.0

N/A: insufficient data available for calculation (a minimum of 75% is required)

table created at 11:34,12/14/1994

MONTHLY SUMMARY
TEMPERATURE
(Degrees Celsius)
INPUT FILE: s7metJ04.met

Bechtel Environmental, Inc.

Met Data for Site 7
OCTOBER 1994

| Day | Hour 1 | 2 | 3 | 4 | 5 | 6 | 7 | 8 | 9 | 10 | 11 | 12 | 13 | 14 | 15 | 16 | 17 | 18 | 19 | 20 | 21 | 22 | 23 | 24 | Mean | Max. | Min. |
|---|---|---|---|---|---|---|---|---|---|---|---|---|---|---|---|---|---|---|---|---|---|---|---|---|---|---|---|
| 1 | 12.4 | 12.0 | 12.1 | 12.2 | 12.1 | 12.0 | 11.9 | 12.4 | 12.2 | 12.3 | 12.4 | 13.1 | 13.6 | 15.7 | 16.7 | 17.1 | 17.0 | 16.1 | 14.8 | 14.8 | 15.0 | 14.9 | 15.1 | 14.8 | 13.9 | 17.1 | 11.9 |
| 2 | 13.7 | 12.3 | 11.6 | 11.1 | 10.8 | 10.4 | 10.3 | 10.2 | 11.1 | 11.8 | 12.6 | 12.8 | 13.1 | 13.3 | 13.7 | 13.5 | 12.8 | 6.8 | 3.9 | 3.1 | 3.1 | 2.7 | 2.0 | 2.0 | 9.5 | 13.7 | 2.0 |
| 3 | 2.4 | 2.7 | 2.2 | 1.5 | 1.2 | 1.1 | 1.2 | 1.4 | 1.6 | 1.9 | 2.7 | 3.7 | 3.8 | 4.0 | 5.4 | 5.5 | 5.0 | 4.3 | 2.5 | 1.3 | 1.0 | 1.0 | .8 | 1.3 | 2.5 | 5.5 | .8 |
| 4 | 1.3 | 1.2 | .6 | .5 | 1.2 | 2.1 | 1.6 | 2.8 | 3.7 | 5.4 | 5.3 | 7.7 | 9.9 | 10.0 | 10.5 | 10.7 | 10.5 | 10.4 | 10.1 | 9.9 | 9.5 | 9.7 | 10.3 | 9.6 | 6.4 | 10.7 | .5 |
| 5 | 9.7 | 11.0 | 12.1 | 11.0 | 10.2 | 10.1 | 10.9 | 8.9 | 9.3 | 9.4 | 10.3 | 10.9 | 10.7 | 10.7 | 10.8 | 10.2 | 8.6 | 7.4 | 8.0 | 8.2 | 8.0 | 8.0 | 7.7 | 7.4 | 9.6 | 12.1 | 7.4 |
| 6 | 7.0 | 6.6 | 6.2 | 6.0 | 6.4 | 6.2 | 6.0 | 5.7 | 5.7 | 6.2 | 6.1 | 7.2 | 8.8 | 10.2 | 10.9 | 11.9 | 12.2 | 11.7 | 10.9 | 10.7 | 10.0 | 10.2 | 10.1 | 9.7 | 8.4 | 12.2 | 5.7 |
| 7 | 9.5 | 9.4 | 9.2 | 8.9 | 8.5 | 8.1 | 7.7 | 7.5 | 7.1 | 8.4 | 9.9 | 11.3 | 12.6 | 14.0 | 14.7 | 15.1 | 14.5 | 13.4 | 12.1 | 11.9 | 11.5 | 11.3 | 11.3 | 11.2 | 10.8 | 15.1 | 7.1 |
| 8 | 11.0 | 10.3 | 7.9 | 6.7 | 8.3 | 6.7 | 7.9 | 7.6 | 8.3 | 12.5 | 15.5 | 17.3 | 18.1 | 19.4 | 19.0 | 18.5 | 18.4 | 16.8 | 14.3 | 14.3 | 13.3 | 13.0 | 12.1 | 11.9 | 12.9 | 19.4 | 6.7 |
| 9 | 11.7 | 11.3 | 10.6 | 10.0 | 9.5 | 7.4 | 8.2 | 9.4 | 11.6 | 14.1 | 15.9 | 18.1 | 19.9 | 22.2 | 22.2 | 23.3 | 21.5 | 18.8 | 15.9 | 15.1 | 14.7 | 13.4 | 13.5 | 13.5 | 14.7 | 23.3 | 7.4 |
| 10 | 13.3 | 12.6 | 10.6 | 12.4 | 12.2 | 12.5 | 10.8 | 10.0 | 12.9 | 14.2 | 16.5 | 19.7 | 21.4 | 22.1 | 21.6 | 21.6 | 20.7 | 18.3 | 17.8 | 17.8 | 17.9 | 17.9 | 16.5 | 14.4 | 16.1 | 22.1 | 10.0 |
| 11 | 11.2 | 13.5 | 15.6 | 13.5 | 10.3 | 9.3 | 8.7 | 8.8 | 9.1 | 11.6 | 12.3 | 13.9 | 13.9 | 15.1 | 15.3 | 15.2 | 15.1 | 14.2 | 12.8 | 12.5 | 9.4 | 9.0 | 7.8 | 6.5 | 11.9 | 15.6 | 6.5 |
| 12 | 6.2 | 6.0 | 5.3 | 5.6 | 5.5 | 4.8 | 5.5 | 5.1 | 7.4 | 9.3 | 10.4 | 12.9 | 16.1 | 17.6 | 17.6 | 16.6 | 16.3 | 15.2 | 13.0 | 12.1 | 11.2 | 11.6 | 11.0 | 9.5 | 10.5 | 17.6 | 4.8 |
| 13 | 8.8 | 8.3 | 7.2 | 7.2 | 7.8 | 8.4 | 11.7 | 9.2 | 8.0 | 8.4 | 9.1 | 10.2 | 10.8 | 12.2 | 12.9 | 12.8 | 12.4 | 11.3 | 10.1 | 10.2 | 9.9 | 10.0 | 8.1 | 8.2 | 9.7 | 12.9 | 7.2 |
| 14 | 7.6 | 7.1 | 6.3 | 7.4 | 8.0 | 7.0 | 5.4 | 7.0 | 9.9 | 12.3 | 13.0 | 14.1 | 13.4 | 10.5 | 6.8 | 6.0 | 5.5 | 4.3 | 3.4 | 3.4 | 2.8 | 2.6 | 2.2 | 2.4 | 7.0 | 14.1 | 2.2 |
| 15 | 1.3 | 1.4 | 2.1 | 2.1 | 1.7 | 1.1 | .7 | .6 | .5 | .5 | .6 | .7 | 1.0 | 1.6 | 1.8 | 2.4 | 3.3 | 2.2 | 2.1 | 2.4 | 2.8 | 3.0 | 3.4 | 3.6 | 1.8 | 3.6 | .5 |
| 16 | 3.4 | 3.0 | 2.8 | 2.6 | 2.5 | 2.1 | 2.0 | 2.4 | 2.2 | 3.1 | 4.7 | 7.7 | 6.2 | 7.7 | 9.0 | 10.0 | 9.6 | 8.3 | 6.8 | 6.9 | 6.3 | 5.5 | 5.1 | 4.9 | 5.2 | 10.0 | 2.0 |
| 17 | 5.0 | 5.1 | 5.0 | 5.1 | 4.9 | 4.6 | 4.4 | 4.7 | 5.0 | 4.8 | 5.6 | 6.2 | 6.9 | 7.5 | 8.0 | 8.3 | 8.6 | 8.9 | 8.6 | 8.1 | 7.8 | 7.6 | 7.2 | 6.7 | 6.4 | 8.9 | 4.4 |
| 18 | 6.3 | 5.7 | 5.9 | 5.5 | 5.1 | 5.1 | 5.2 | 4.9 | 4.9 | 5.2 | 6.0 | 6.6 | 7.6 | 9.8 | 11.3 | 11.0 | 10.6 | 9.0 | 8.4 | 8.3 | 8.5 | 7.2 | 6.3 | 5.9 | 7.1 | 11.3 | 4.9 |
| 19 | 5.8 | 5.5 | 5.4 | 5.5 | 5.4 | 5.3 | 5.2 | 6.1 | 7.7 | 9.0 | 10.1 | 12.3 | 12.5 | 12.7 | 13.4 | 13.6 | 13.0 | 12.0 | 11.1 | 11.0 | 10.5 | 9.0 | 8.6 | 8.6 | 9.1 | 13.6 | 5.2 |
| 20 | 8.5 | 8.6 | 9.0 | 8.7 | 8.4 | 8.3 | 7.9 | 8.6 | 10.4 | 12.0 | 12.1 | 12.6 | 13.2 | 13.3 | 13.3 | 13.3 | 13.0 | 11.7 | 10.9 | 10.4 | 10.4 | 10.4 | 10.2 | 10.0 | 10.6 | 13.3 | 7.9 |
| 21 | 9.9 | 9.8 | 10.9 | 10.9 | 10.9 | 10.8 | 10.6 | 9.8 | 10.4 | 10.9 | 10.6 | 11.9 | 11.9 | 11.9 | 11.6 | 12.0 | 11.9 | 10.6 | 9.8 | 9.5 | 9.2 | 9.2 | 8.5 | 7.2 | 10.4 | 12.0 | 7.2 |
| 22 | 6.3 | 4.2 | 3.6 | 3.3 | 3.1 | 2.8 | 3.0 | 3.6 | 3.9 | 5.4 | 6.6 | 7.8 | 8.3 | 8.8 | 9.4 | 10.3 | 10.6 | 8.3 | 6.8 | 7.2 | 6.8 | 6.9 | 6.9 | 8.2 | 6.3 | 10.6 | 2.8 |
| 23 | 6.9 | 6.2 | 4.3 | 2.5 | 1.5 | 2.1 | 2.6 | 2.7 | 6.0 | 8.8 | 11.2 | 10.8 | 11.8 | 12.9 | 14.1 | 14.3 | 14.2 | 11.9 | 11.3 | 11.4 | 11.4 | 11.1 | 11.1 | 8.7 | 8.7 | 14.3 | 1.5 |
| 24 | 6.1 | 4.3 | 5.2 | 2.8 | 1.7 | 1.5 | 1.1 | 4.0 | 5.1 | 6.8 | 10.2 | 13.2 | 14.7 | 16.6 | 18.0 | 17.8 | 16.8 | 13.1 | 10.1 | 10.9 | 10.9 | 10.5 | 9.4 | 6.4 | 9.1 | 18.0 | 1.1 |
| 25 | 5.0 | 4.5 | 2.6 | 2.5 | 3.9 | 3.7 | .5 | 1.8 | 2.5 | 6.6 | 10.6 | 12.3 | 14.7 | 16.6 | 17.9 | 19.3 | 18.2 | 14.3 | 13.3 | 13.2 | 12.3 | 11.1 | 11.5 | 11.2 | 9.6 | 19.3 | .5 |
| 26 | 10.6 | 9.6 | 9.5 | 9.0 | 9.2 | 6.8 | 6.6 | 9.1 | 11.0 | 13.7 | 15.2 | 14.3 | 14.3 | 13.9 | 14.0 | 13.7 | 13.2 | 13.0 | 12.8 | 12.5 | 12.2 | 12.9 | 13.4 | 13.3 | 11.8 | 15.2 | 6.6 |
| 27 | 13.0 | 13.1 | 13.2 | 13.0 | 13.0 | 12.9 | 13.5 | 12.8 | 15.0 | 15.4 | 15.9 | 17.1 | 17.5 | 17.7 | 18.0 | 18.0 | 16.6 | 16.4 | 16.8 | 16.6 | 16.8 | 17.3 | 17.4 | 16.9 | 15.6 | 18.0 | 12.8 |
| 28 | 16.9 | 16.4 | 15.6 | 13.4 | 12.7 | 11.3 | 9.5 | 8.1 | 6.3 | 5.0 | 5.6 | 6.8 | 7.1 | 7.5 | 8.1 | 7.8 | 6.8 | 5.4 | 4.7 | 4.2 | 3.8 | 3.4 | 2.8 | 2.4 | 8.0 | 16.9 | 2.4 |
| 29 | 2.1 | 1.5 | 1.4 | 1.0 | .7 | .1 | -.2 | .0 | .9 | 1.8 | 2.7 | 3.7 | 5.6 | 6.6 | 7.3 | 7.0 | 6.2 | 4.1 | 3.6 | 3.5 | 3.2 | 2.7 | 2.3 | 1.3 | 2.9 | 7.3 | -.2 |
| 30 | .5 | .5 | -.2 | -1.0 | -.8 | -1.1 | -1.7 | -1.9 | 1.8 | 3.4 | 3.3 | 4.4 | 4.9 | 5.7 | 6.2 | 6.5 | 6.1 | 5.6 | 5.4 | 5.3 | 5.4 | 5.3 | 4.9 | 4.9 | 3.1 | 6.5 | -1.9 |
| 31 | 4.8 | 4.8 | 5.0 | 4.8 | 4.1 | 4.2 | 3.3 | 4.8 | 4.2 | 7.6 | 8.7 | 9.0 | 8.5 | 8.9 | 9.9 | 10.4 | 9.5 | 10.1 | 9.9 | 10.6 | 11.7 | 11.5 | 10.9 | 11.2 | 7.9 | 11.7 | 3.3 |
| Mean | 7.7 | 7.4 | 7.1 | 6.6 | 6.5 | 6.1 | 5.9 | 6.1 | 7.0 | 8.3 | 9.4 | 10.7 | 11.4 | 12.2 | 12.6 | 12.7 | 12.2 | 10.8 | 9.7 | 9.6 | 9.3 | 9.0 | 8.7 | 8.2 | Monthly mean = | | 8.9 |
| Max. | 16.9 | 16.4 | 15.6 | 13.5 | 13.0 | 12.9 | 13.5 | 12.8 | 15.0 | 15.4 | 16.5 | 19.7 | 21.4 | 22.2 | 22.2 | 23.3 | 21.5 | 18.8 | 17.8 | 17.8 | 17.9 | 17.9 | 17.4 | 16.9 | Monthly max. = | | 23.3 |
| Min. | .5 | .5 | -.2 | -1.0 | -.8 | -1.1 | -1.7 | -1.9 | .5 | .5 | .6 | .7 | 1.0 | 1.6 | 1.8 | 2.4 | 3.3 | 2.2 | 2.1 | 1.3 | 1.0 | 1.0 | .8 | 1.3 | Monthly min. = | | -1.9 |

TOTAL NUMBER OF DATA HOURS IN MONTH: 744
Number of hours of bad or missing data: 0
**** designates missing or lost data

Current % recovery = 100.0

N/A: insufficient data available for calculation (a minimum of 75% is required)

table created at 11:34,12/14/1994

MONTHLY SUMMARY
SIGMA THETA
(Degrees)
INPUT FILE: s7metJ04.met

Bechtel Environmental, Inc.

Met Data for Site 7
OCTOBER 1994

| Day | Hour 1 | 2 | 3 | 4 | 5 | 6 | 7 | 8 | 9 | 10 | 11 | 12 | 13 | 14 | 15 | 16 | 17 | 18 | 19 | 20 | 21 | 22 | 23 | 24 | Mean | Max. | Min. |
|---|---|---|---|---|---|---|---|---|---|---|---|---|---|---|---|---|---|---|---|---|---|---|---|---|---|---|---|
| 1 | 40. | 34. | 15. | 10. | 13. | 54. | 23. | 50. | 13. | 37. | 22. | 16. | 17. | 46. | 39. | 14. | 16. | 13. | 13. | 10. | 11. | 11. | 11. | 10. | N/A | 54. | 10. |
| 2 | 11. | 13. | 8. | 7. | 9. | 9. | 11. | 13. | 13. | 14. | 11. | 8. | 7. | 16. | 16. | 11. | 19. | 12. | 29. | 13. | 17. | 9. | 8. | 10. | N/A | 29. | 7. |
| 3 | 10. | 19. | 10. | 9. | 10. | 10. | 14. | 11. | 11. | 13. | 12. | 15. | 14. | 21. | 45. | 12. | 9. | 11. | 44. | 61. | 22. | 34. | 22. | 13. | N/A | 61. | 9. |
| 4 | 10. | 15. | 29. | 48. | 26. | 50. | 51. | 75. | 48. | 25. | 56. | 12. | 8. | 19. | ***** | ***** | ***** | ***** | ***** | ***** | ***** | ***** | ***** | ***** | N/A | 75. | 8. |
| 5 | ***** | ***** | ***** | 13. | 17. | 7. | 32. | 20. | 69. | 10. | 25. | 23. | 13. | 18. | 16. | 12. | 9. | 9. | 10. | 10. | 14. | 14. | 11. | 13. | N/A | 69. | 7. |
| 6 | 11. | 8. | 8. | 10. | 9. | 10. | 9. | 8. | 8. | 18. | 12. | 12. | 13. | 13. | 15. | 15. | 13. | 13. | 10. | 12. | 10. | 8. | 10. | 9. | N/A | 18. | 8. |
| 7 | 10. | 13. | 13. | 15. | 15. | 11. | 11. | 12. | 14. | 20. | 14. | 10. | 11. | 16. | 14. | 16. | 15. | 14. | 10. | 7. | 7. | 7. | 7. | 6. | N/A | 20. | 6. |
| 8 | 7. | 24. | 68. | 65. | 34. | 26. | 40. | 27. | 10. | 64. | 28. | 47. | 44. | 41. | 27. | 32. | 18. | 11. | 13. | 15. | 7. | 6. | 4. | 4. | N/A | 68. | 4. |
| 9 | 4. | 5. | 5. | 4. | 31. | 28. | 11. | 6. | 51. | 52. | 19. | 22. | 39. | 72. | 49. | 47. | 24. | 10. | 5. | 7. | 6. | 7. | 6. | 5. | N/A | 72. | 4. |
| 10 | 5. | 33. | 51. | 7. | 6. | 5. | 23. | 33. | 33. | 14. | 21. | 24. | 26. | 15. | 13. | 12. | 12. | 9. | 8. | 7. | 7. | 6. | 7. | 30. | N/A | 51. | 5. |
| 11 | 22. | 11. | 13. | 26. | 8. | 9. | 8. | 9. | 11. | 43. | 12. | 11. | 15. | 13. | 10. | 11. | 7. | 11. | 11. | 14. | 12. | 13. | 9. | 6. | N/A | 43. | 6. |
| 12 | 31. | 17. | 23. | 5. | 29. | 53. | 5. | 7. | 39. | 12. | 13. | 17. | 25. | 39. | 23. | 17. | 13. | 15. | 15. | 20. | 23. | 12. | 30. | 63. | N/A | 63. | 5. |
| 13 | 28. | 24. | 13. | 64. | 77. | 49. | 8. | 37. | 13. | 13. | 16. | 16. | 14. | 17. | 13. | 12. | 13. | 29. | 14. | 9. | 10. | 23. | 33. | 12. | N/A | 77. | 8. |
| 14 | 22. | 29. | 41. | 24. | 23. | 62. | 57. | 10. | 7. | 12. | 13. | 15. | 12. | 12. | 10. | 9. | 15. | 11. | 10. | 12. | 10. | 9. | 9. | 12. | N/A | 62. | 7. |
| 15 | 15. | 32. | 10. | 33. | 11. | 7. | 7. | 8. | 10. | 12. | 10. | 12. | 9. | 10. | 8. | 11. | 13. | 10. | 12. | 11. | 10. | 15. | 24. | 11. | N/A | 33. | 7. |
| 16 | 12. | 11. | 13. | 18. | 27. | 34. | 23. | 12. | 15. | 21. | 21. | 29. | 15. | 27. | 20. | 14. | 15. | 11. | 8. | 11. | 8. | 29. | 18. | 12. | N/A | 34. | 8. |
| 17 | 27. | 37. | 13. | 9. | 9. | 10. | 10. | 10. | 8. | 9. | 17. | 19. | 20. | 15. | 19. | 17. | 11. | 12. | 17. | 15. | 16. | 17. | 16. | 16. | N/A | 37. | 8. |
| 18 | 15. | 15. | 11. | 14. | 16. | 19. | 18. | 39. | 60. | 13. | 15. | 12. | 18. | 19. | 32. | 16. | 9. | 4. | 4. | 5. | 10. | 7. | 4. | 4. | N/A | 60. | 4. |
| 19 | 4. | 22. | 8. | 19. | 6. | 6. | 5. | 5. | 7. | 8. | 9. | 16. | 43. | 21. | 19. | 17. | 11. | 7. | 7. | 7. | 8. | 6. | 5. | 5. | N/A | 43. | 4. |
| 20 | 5. | 5. | 5. | 7. | 6. | 6. | 5. | 7. | 21. | 58. | 17. | 14. | 16. | 15. | 11. | 14. | 14. | 13. | 14. | 13. | 10. | 10. | 11. | 10. | N/A | 58. | 5. |
| 21 | 10. | 8. | 10. | 12. | 12. | 11. | 11. | 11. | 13. | 14. | 16. | 16. | 16. | 13. | 15. | 13. | 9. | 13. | 12. | 13. | 10. | 11. | 12. | 11. | N/A | 16. | 8. |
| 22 | 11. | 15. | 14. | 10. | 10. | 9. | 9. | 9. | 10. | 13. | 17. | 14. | 16. | 14. | 15. | 16. | 16. | 49. | 11. | 13. | 7. | 5. | 10. | 5. | N/A | 49. | 5. |
| 23 | 52. | 55. | 35. | 19. | 34. | 28. | 15. | 22. | 73. | 63. | 30. | 11. | 13. | 14. | 13. | 11. | 13. | 13. | 10. | 8. | 4. | 7. | 7. | 42. | N/A | 73. | 4. |
| 24 | 7. | 3. | 25. | 49. | 54. | 44. | 26. | 44. | 31. | 18. | 26. | 30. | 31. | 36. | 49. | 25. | 18. | 25. | 25. | 6. | 4. | 13. | 36. | 26. | N/A | 54. | 3. |
| 25 | 62. | 32. | 73. | 41. | 16. | 43. | 25. | 37. | 10. | 8. | 15. | 15. | 21. | 20. | 19. | 17. | 15. | 9. | 8. | 9. | 8. | 15. | 4. | 6. | N/A | 73. | 4. |
| 26 | 8. | 7. | 4. | 12. | 19. | 52. | 40. | 23. | 6. | 21. | 13. | 15. | 15. | 14. | 12. | 12. | 13. | 10. | 11. | 15. | 15. | 10. | 10. | 10. | N/A | 52. | 4. |
| 27 | 9. | 10. | 9. | 10. | 10. | 12. | 13. | 12. | 12. | 13. | 13. | 16. | 13. | 11. | 13. | 15. | 15. | 13. | 12. | 14. | 11. | 11. | 11. | 11. | N/A | 16. | 9. |
| 28 | 11. | 12. | 14. | 14. | 17. | 15. | 13. | 14. | 15. | 12. | 13. | 16. | 15. | 16. | 16. | 13. | 15. | 12. | 9. | 9. | 8. | 8. | 8. | 9. | N/A | 17. | 8. |
| 29 | 7. | 7. | 9. | 10. | 11. | 13. | 12. | 20. | 22. | 17. | 14. | 16. | 17. | 15. | 19. | 18. | 12. | 8. | 6. | 8. | 9. | 9. | 8. | 17. | N/A | 22. | 6. |
| 30 | 13. | 15. | 31. | 51. | 39. | 40. | 45. | 40. | 37. | 45. | 16. | 15. | 11. | 15. | 15. | 13. | 14. | 12. | 9. | 10. | 9. | 9. | 10. | 10. | N/A | 51. | 9. |
| 31 | 10. | 9. | 10. | 11. | 21. | 14. | 13. | 13. | 12. | 11. | 12. | 12. | 12. | 13. | 16. | 13. | 8. | 12. | 14. | 12. | 11. | 11. | 10. | 11. | N/A | 21. | 8. |
| Mean | N/A | N/A | N/A | N/A | N/A | N/A | N/A | N/A | N/A | N/A | N/A | N/A | N/A | N/A | N/A | N/A | N/A | N/A | N/A | N/A | N/A | N/A | N/A | N/A | Monthly mean = | | N/A |
| Max. | 62. | 55. | 73. | 65. | 77. | 62. | 57. | 75. | 73. | 64. | 56. | 47. | 44. | 72. | 49. | 47. | 24. | 49. | 44. | 61. | 23. | 34. | 36. | 63. | Monthly max. = | | 77. |
| Min. | 4. | 3. | 4. | 4. | 6. | 5. | 5. | 5. | 6. | 8. | 9. | 8. | 7. | 10. | 8. | 9. | 7. | 4. | 4. | 5. | 4. | 5. | 4. | 4. | Monthly min. = | | 3. |

TOTAL NUMBER OF DATA HOURS IN MONTH: 744
Number of hours of bad or missing data: 13
**** designates missing or lost data

Current % recovery = 98.3

N/A: A sigma theta mean is not physically meaningful.

table created at 11:34,12/14/1994

| Sample Date | Chemical Name | Site # | Typ | Run Time (min.) | Chem Conc. (ug/m3) | EPA Scr. L(ug/m3) | Part.C. (ug/m3) | Grav. Val | Qual. Lab | Qual. Val |
|---|---|---|---|---|---|---|---|---|---|---|
| 03/15/1994 | Vanadium | 1 | TS | 1438.4 | .01213 | .17000 | 59.52 | | | |
| 03/15/1994 | Zinc | 1 | TS | 1438.4 | .03097 | .00000 | 59.52 | | B | |
| 03/15/1994 | Arsenic | 2 | TS | 1435.3 | .00233 | .00057 | 204.25 | | | |
| 03/15/1994 | Cadmium | 2 | TS | 1435.3 | .01115 | .00140 | 204.25 | | | |
| 03/15/1994 | Chromium | 2 | TS | 1435.3 | .06821 | .00020 | 204.25 | | | |
| 03/15/1994 | Particulate Fluoride | 2 | TS | 1435.3 | 5.54900 | 8.30000 | 204.25 | | | U |
| 03/15/1994 | Phosphorus | 2 | TS | 1435.3 | 6.33766 | .30000 | 204.25 | | | |
| 03/15/1994 | Vanadium | 2 | TS | 1435.3 | .10018 | .17000 | 204.25 | | | |
| 03/15/1994 | Zinc | 2 | TS | 1435.3 | .12007 | .00000 | 204.25 | | | |
| 03/15/1994 | Arsenic | 3 | TS | 1443.7 | .00116 | .00057 | 95.71 | | | |
| 03/15/1994 | Cadmium | 3 | TS | 1443.7 | .00140 | .00140 | 95.71 | | U | U |
| 03/15/1994 | Chromium | 3 | TS | 1443.7 | .00314 | .00020 | 95.71 | | | |
| 03/15/1994 | Particulate Fluoride | 3 | TS | 1443.7 | 2.18160 | 8.30000 | 95.71 | | B | U |
| 03/15/1994 | Phosphorus | 3 | TS | 1443.7 | .32794 | .30000 | 95.71 | | B | U |
| 03/15/1994 | Vanadium | 3 | TS | 1443.7 | .00235 | .17000 | 95.71 | | B | |
| 03/15/1994 | Zinc | 3 | TS | 1443.7 | .01769 | .00000 | 95.71 | | B | |
| 03/15/1994 | Arsenic | 4 | TS | 1430.5 | .00110 | .00057 | 64.89 | | | |
| 03/15/1994 | Cadmium | 4 | TS | 1430.5 | .00143 | .00140 | 64.89 | | U | U |
| 03/15/1994 | Chromium | 4 | TS | 1430.5 | .00386 | .00020 | 64.89 | | | |
| 03/15/1994 | Particulate Fluoride | 4 | TS | 1430.5 | 1.97765 | 8.30000 | 64.89 | | B | U |
| 03/15/1994 | Phosphorus | 4 | TS | 1430.5 | .37332 | .30000 | 64.89 | | | U |
| 03/15/1994 | Vanadium | 4 | TS | 1430.5 | .00273 | .17000 | 64.89 | | B | |
| 03/15/1994 | Zinc | 4 | TS | 1430.5 | .02565 | .00000 | 64.89 | | B | |
| 03/15/1994 | Arsenic | 5 | TS | 1435.3 | .00090 | .00057 | 38.52 | | | |
| 03/15/1994 | Cadmium | 5 | TS | 1435.3 | .00141 | .00140 | 38.52 | | U | U |
| 03/15/1994 | Chromium | 5 | TS | 1435.3 | .00507 | .00020 | 38.52 | | | |
| 03/15/1994 | Particulate Fluoride | 5 | TS | 1435.3 | 2.37620 | 8.30000 | 38.52 | | B | U |
| 03/15/1994 | Phosphorus | 5 | TS | 1435.3 | 1.27624 | .30000 | 38.52 | | | |
| 03/15/1994 | Vanadium | 5 | TS | 1435.3 | .00650 | .17000 | 38.52 | | | |
| 03/15/1994 | Zinc | 5 | TS | 1435.3 | .02827 | .00000 | 38.52 | | B | |
| 03/15/1994 | Arsenic | 6 | TS | 1439.0 | .00068 | .00057 | 81.77 | Q | | |
| 03/15/1994 | Cadmium | 6 | TS | 1439.0 | .00147 | .00140 | 81.77 | Q | U | U |
| 03/15/1994 | Chromium | 6 | TS | 1439.0 | .00210 | .00020 | 81.77 | Q | | |
| 03/15/1994 | Particulate Fluoride | 6 | TS | 1439.0 | 2.19006 | 8.30000 | 81.77 | Q | B | U |
| 03/15/1994 | Phosphorus | 6 | TS | 1439.0 | .37554 | .30000 | 81.77 | Q | | U |
| 03/15/1994 | Vanadium | 6 | TS | 1439.0 | .00184 | .17000 | 81.77 | Q | U | U |
| 03/15/1994 | Zinc | 6 | TS | 1439.0 | .01220 | .00000 | 81.77 | Q | B | |
| 03/15/1994 | Arsenic | 7 | TS | 1450.9 | .00072 | .00057 | 20.20 | | | |
| 03/15/1994 | Cadmium | 7 | TS | 1450.9 | .00142 | .00140 | 20.20 | | U | U |
| 03/15/1994 | Chromium | 7 | TS | 1450.9 | .00181 | .00020 | 20.20 | | | U |
| 03/15/1994 | Particulate Fluoride | 7 | TS | 1450.9 | 3.56974 | 8.30000 | 20.20 | | | U |
| 03/15/1994 | Phosphorus | 7 | TS | 1450.9 | .31943 | .30000 | 20.20 | | B | U |
| 03/15/1994 | Vanadium | 7 | TS | 1450.9 | .00178 | .17000 | 20.20 | | U | U |

| Sample Date | Chemical Name | Site # | Typ | Run Time (min.) | Chem Conc. (ug/m3) | EPA Scr. L(ug/m3) | Part.C. Grav. (ug/m3) | Val | Qual. Lab | Val |
|---|---|---|---|---|---|---|---|---|---|---|
| 03/15/1994 | Zinc | 7 | TS | 1450.9 | .00836 | .00000 | 20.20 | | B | |
| 03/15/1994 | Arsenic | 8 | TS | 1452.8 | .00120 | .00057 | 61.31 | | | |
| 03/15/1994 | Cadmium | 8 | TS | 1452.8 | .00172 | .00140 | 61.31 | | | |
| 03/15/1994 | Chromium | 8 | TS | 1452.8 | .01144 | .00020 | 61.31 | | | |
| 03/15/1994 | Particulate Fluoride | 8 | TS | 1452.8 | 3.99919 | 8.30000 | 61.31 | | | U |
| 03/15/1994 | Phosphorus | 8 | TS | 1452.8 | .88717 | .30000 | 61.31 | | | U |
| 03/15/1994 | Vanadium | 8 | TS | 1452.8 | .01407 | .17000 | 61.31 | | | |
| 03/15/1994 | Zinc | 8 | TS | 1452.8 | .03576 | .00000 | 61.31 | | B | |
| 03/17/1994 | Arsenic | 1 | TS | 1445.5 | .00203 | .00057 | 218.66 | | | |
| 03/17/1994 | Cadmium | 1 | TS | 1445.5 | .01685 | .00140 | 218.66 | | | |
| 03/17/1994 | Chromium | 1 | TS | 1445.5 | .12513 | .00020 | 218.66 | | | |
| 03/17/1994 | Particulate Fluoride | 1 | TS | 1445.5 | 7.47986 | 8.30000 | 218.66 | | | U |
| 03/17/1994 | Phosphorus | 1 | TS | 1445.5 | 8.80806 | .30000 | 218.66 | | | |
| 03/17/1994 | Vanadium | 1 | TS | 1445.5 | .13911 | .17000 | 218.66 | | | |
| 03/17/1994 | Zinc | 1 | TS | 1445.5 | .14680 | .00000 | 218.66 | | | |
| 03/17/1994 | Arsenic | 2 | TS | 1437.4 | .00527 | .00057 | 372.99 | | | |
| 03/17/1994 | Cadmium | 2 | TS | 1437.4 | .03666 | .00140 | 372.99 | | | |
| 03/17/1994 | Chromium | 2 | TS | 1437.4 | .31346 | .00020 | 372.99 | | | |
| 03/17/1994 | Particulate Fluoride | 2 | TS | 1437.4 | 7.11151 | 8.30000 | 372.99 | | | U |
| 03/17/1994 | Phosphorus | 2 | TS | 1437.4 | 18.84896 | .30000 | 372.99 | | | |
| 03/17/1994 | Vanadium | 2 | TS | 1437.4 | .31001 | .17000 | 372.99 | | | |
| 03/17/1994 | Zinc | 2 | TS | 1437.4 | .34936 | .00000 | 372.99 | | | |
| 03/17/1994 | Arsenic | 3 | TS | 1440.7 | .00080 | .00057 | 164.09 | | | |
| 03/17/1994 | Cadmium | 3 | TS | 1440.7 | .00280 | .00140 | 164.09 | | | |
| 03/17/1994 | Chromium | 3 | TS | 1440.7 | .01862 | .00020 | 164.09 | | | |
| 03/17/1994 | Particulate Fluoride | 3 | TS | 1440.7 | 1.99796 | 8.30000 | 164.09 | | B | |
| 03/17/1994 | Phosphorus | 3 | TS | 1440.7 | 1.46608 | .30000 | 164.09 | | | |
| 03/17/1994 | Vanadium | 3 | TS | 1440.7 | .01862 | .17000 | 164.09 | | | |
| 03/17/1994 | Zinc | 3 | TS | 1440.7 | .03539 | .00000 | 164.09 | | B | |
| 03/17/1994 | Arsenic | 4 | TS | 1428.1 | .00033 | .00057 | 62.97 | | B | |
| 03/17/1994 | Cadmium | 4 | TS | 1428.1 | .00140 | .00140 | 62.97 | | U | U |
| 03/17/1994 | Chromium | 4 | TS | 1428.1 | .00520 | .00020 | 62.97 | | | |
| 03/17/1994 | Particulate Fluoride | 4 | TS | 1428.1 | 1.76022 | 8.30000 | 62.97 | | B | |
| 03/17/1994 | Phosphorus | 4 | TS | 1428.1 | .59163 | .30000 | 62.97 | | | U |
| 03/17/1994 | Vanadium | 4 | TS | 1428.1 | .00623 | .17000 | 62.97 | | | |
| 03/17/1994 | Zinc | 4 | TS | 1428.1 | .01893 | .00000 | 62.97 | | B | |
| 03/17/1994 | Arsenic | 5 | TS | 1436.5 | .00040 | .00057 | 50.90 | | B | |
| 03/17/1994 | Cadmium | 5 | TS | 1436.5 | .00137 | .00140 | 50.90 | | U | U |
| 03/17/1994 | Chromium | 5 | TS | 1436.5 | .00177 | .00020 | 50.90 | | | |
| 03/17/1994 | Particulate Fluoride | 5 | TS | 1436.5 | 2.74249 | 8.30000 | 50.90 | | B | U |
| 03/17/1994 | Phosphorus | 5 | TS | 1436.5 | .23037 | .30000 | 50.90 | | B | U |
| 03/17/1994 | Vanadium | 5 | TS | 1436.5 | .00269 | .17000 | 50.90 | | B | |
| 03/17/1994 | Zinc | 5 | TS | 1436.5 | .00926 | .00000 | 50.90 | | B | |

| Sample Date | Chemical Name | Site # | Typ | Run Time (min.) | Chem Conc. (ug/m3) | EPA Scr. L(ug/m3) | Part.C. (ug/m3) | Grav. Val | Qual. Lab | Qual. Val |
|---|---|---|---|---|---|---|---|---|---|---|
| 03/17/1994 | Arsenic | 6 | TS | 1439.6 | .00032 | .00057 | 60.45 | | B | |
| 03/17/1994 | Cadmium | 6 | TS | 1439.6 | .00143 | .00140 | 60.45 | | U | U |
| 03/17/1994 | Chromium | 6 | TS | 1439.6 | .00132 | .00020 | 60.45 | | | U |
| 03/17/1994 | Particulate Fluoride | 6 | TS | 1439.6 | 2.55940 | 8.30000 | 60.45 | | B | U |
| 03/17/1994 | Phosphorus | 6 | TS | 1439.6 | .17944 | .30000 | 60.45 | | B | U |
| 03/17/1994 | Vanadium | 6 | TS | 1439.6 | .00179 | .17000 | 60.45 | | U | U |
| 03/17/1994 | Zinc | 6 | TS | 1439.6 | .01115 | .00000 | 60.45 | | B | |
| 03/17/1994 | Arsenic | 7 | TS | 1448.9 | .00035 | .00057 | 32.18 | | B | |
| 03/17/1994 | Cadmium | 7 | TS | 1448.9 | .00138 | .00140 | 32.18 | | U | U |
| 03/17/1994 | Chromium | 7 | TS | 1448.9 | .00161 | .00020 | 32.18 | | | U |
| 03/17/1994 | Particulate Fluoride | 7 | TS | 1448.9 | 3.65828 | 8.30000 | 32.18 | | | U |
| 03/17/1994 | Phosphorus | 7 | TS | 1448.9 | .25953 | .30000 | 32.18 | | B | U |
| 03/17/1994 | Vanadium | 7 | TS | 1448.9 | .00280 | .17000 | 32.18 | | B | |
| 03/17/1994 | Zinc | 7 | TS | 1448.9 | .00657 | .00000 | 32.18 | | B | |
| 03/19/1994 | Arsenic | 1 | TS | 1444.7 | .00107 | .00057 | 108.18 | | | |
| 03/19/1994 | Cadmium | 1 | TS | 1444.7 | .00629 | .00140 | 108.18 | | | |
| 03/19/1994 | Chromium | 1 | TS | 1444.7 | .01874 | .00020 | 108.18 | | | |
| 03/19/1994 | Particulate Fluoride | 1 | TS | 1444.7 | 13.14193 | 8.30000 | 108.18 | | | |
| 03/19/1994 | Phosphorus | 1 | TS | 1444.7 | 5.49194 | .30000 | 108.18 | | | |
| 03/19/1994 | Vanadium | 1 | TS | 1444.7 | .02428 | .17000 | 108.18 | | | |
| 03/19/1994 | Zinc | 1 | TS | 1444.7 | .05340 | .00000 | 108.18 | | B- | |
| 03/19/1994 | Arsenic | 2 | TS | 1431.2 | .00660 | .00057 | 334.43 | | | J |
| 03/19/1994 | Cadmium | 2 | TS | 1431.2 | .04265 | .00140 | 334.43 | | | |
| 03/19/1994 | Chromium | 2 | TS | 1431.2 | .09257 | .00020 | 334.43 | | | |
| 03/19/1994 | Particulate Fluoride | 2 | TS | 1431.2 | 6.24707 | 8.30000 | 334.43 | | | |
| 03/19/1994 | Phosphorus | 2 | TS | 1431.2 | 26.81232 | .30000 | 334.43 | | | |
| 03/19/1994 | Vanadium | 2 | TS | 1431.2 | .12618 | .17000 | 334.43 | | | |
| 03/19/1994 | Zinc | 2 | TS | 1431.2 | .28390 | .00000 | 334.43 | | | |
| 03/19/1994 | Arsenic | 3 | TS | 1447.3 | .00090 | .00057 | 115.39 | | | |
| 03/19/1994 | Cadmium | 3 | TS | 1447.3 | .00400 | .00140 | 115.39 | | | |
| 03/19/1994 | Chromium | 3 | TS | 1447.3 | .00967 | .00020 | 115.39 | | | |
| 03/19/1994 | Particulate Fluoride | 3 | TS | 1447.3 | 2.07419 | 8.30000 | 115.39 | | B | |
| 03/19/1994 | Phosphorus | 3 | TS | 1447.3 | 2.87970 | .30000 | 115.39 | | | |
| 03/19/1994 | Vanadium | 3 | TS | 1447.3 | .01369 | .17000 | 115.39 | | | |
| 03/19/1994 | Zinc | 3 | TS | 1447.3 | .03484 | .00000 | 115.39 | | B | |
| 03/19/1994 | Arsenic | 4 | TS | 1424.2 | .00027 | .00057 | 36.66 | | B | |
| 03/19/1994 | Cadmium | 4 | TS | 1424.2 | .00139 | .00140 | 36.66 | | U | U |
| 03/19/1994 | Chromium | 4 | TS | 1424.2 | .00127 | .00020 | 36.66 | | | U |
| 03/19/1994 | Particulate Fluoride | 4 | TS | 1424.2 | 2.38961 | 8.30000 | 36.66 | | B | U |
| 03/19/1994 | Phosphorus | 4 | TS | 1424.2 | .26043 | .30000 | 36.66 | | B | U |
| 03/19/1994 | Vanadium | 4 | TS | 1424.2 | .00174 | .17000 | 36.66 | | U | U |
| 03/19/1994 | Zinc | 4 | TS | 1424.2 | .00748 | .00000 | 36.66 | | B | |
| 03/19/1994 | Arsenic | 5 | TS | 1437.2 | .00020 | .00057 | 31.80 | | B | |

| Sample Date | Chemical Name | Site # | Typ | Run Time (min.) | Chem Conc. (ug/m3) | EPA Scr. L(ug/m3) | Part.C. (ug/m3) | Grav. Val | Qual. Lab | Qual. Val |
|---|---|---|---|---|---|---|---|---|---|---|
| 03/19/1994 | Cadmium | 5 | TS | 1437.2 | .00136 | .00140 | 31.80 | | U | U |
| 03/19/1994 | Chromium | 5 | TS | 1437.2 | .00077 | .00020 | 31.80 | | | U |
| 03/19/1994 | Particulate Fluoride | 5 | TS | 1437.2 | 1.90430 | 8.30000 | 31.80 | | B | |
| 03/19/1994 | Phosphorus | 5 | TS | 1437.2 | .16129 | .30000 | 31.80 | | B | U |
| 03/19/1994 | Vanadium | 5 | TS | 1437.2 | .00170 | .17000 | 31.80 | | U | U |
| 03/19/1994 | Zinc | 5 | TS | 1437.2 | .00447 | .00000 | 31.80 | | B | |
| 03/19/1994 | Arsenic | 6 | TS | 1438.7 | .00018 | .00057 | 36.31 | | U | U |
| 03/19/1994 | Cadmium | 6 | TS | 1438.7 | .00141 | .00140 | 36.31 | | U | U |
| 03/19/1994 | Chromium | 6 | TS | 1438.7 | .00073 | .00020 | 36.31 | | | U |
| 03/19/1994 | Particulate Fluoride | 6 | TS | 1438.7 | 2.39111 | 8.30000 | 36.31 | | B | |
| 03/19/1994 | Phosphorus | 6 | TS | 1438.7 | .18110 | .30000 | 36.31 | | B | U |
| 03/19/1994 | Vanadium | 6 | TS | 1438.7 | .00178 | .17000 | 36.31 | | U | U |
| 03/19/1994 | Zinc | 6 | TS | 1438.7 | .00571 | .00000 | 36.31 | | B | |
| 03/19/1994 | Arsenic | 7 | TS | 1451.7 | .00051 | .00057 | 24.68 | | B | U |
| 03/19/1994 | Cadmium | 7 | TS | 1451.7 | .00136 | .00140 | 24.68 | | U | U |
| 03/19/1994 | Chromium | 7 | TS | 1451.7 | .00087 | .00020 | 24.68 | | | U |
| 03/19/1994 | Particulate Fluoride | 7 | TS | 1451.7 | 2.49344 | 8.30000 | 24.68 | | B | |
| 03/19/1994 | Phosphorus | 7 | TS | 1451.7 | .14920 | .30000 | 24.68 | | B | U |
| 03/19/1994 | Vanadium | 7 | TS | 1451.7 | .00171 | .17000 | 24.68 | | U | U |
| 03/19/1994 | Zinc | 7 | TS | 1451.7 | .00379 | .00000 | 24.68 | | B | |
| 03/21/1994 | Arsenic | 1 | TS | 1441.6 | .00117 | .00057 | 56.48 | | | |
| 03/21/1994 | Cadmium | 1 | TS | 1441.6 | .00231 | .00140 | 56.48 | | | |
| 03/21/1994 | Chromium | 1 | TS | 1441.6 | .02521 | .00020 | 56.48 | | | |
| 03/21/1994 | Particulate Fluoride | 1 | TS | 1441.6 | 2.20256 | 8.30000 | 56.48 | | B | |
| 03/21/1994 | Phosphorus | 1 | TS | 1441.6 | 2.06091 | .30000 | 56.48 | | | |
| 03/21/1994 | Vanadium | 1 | TS | 1441.6 | .02677 | .17000 | 56.48 | | | |
| 03/21/1994 | Zinc | 1 | TS | 1441.6 | .04101 | .00000 | 56.48 | | B | |
| 03/21/1994 | Arsenic | 2 | TS | 1429.9 | .00215 | .00057 | 143.71 | | | |
| 03/21/1994 | Cadmium | 2 | TS | 1429.9 | .01522 | .00140 | 143.71 | | | |
| 03/21/1994 | Chromium | 2 | TS | 1429.9 | .10309 | .00020 | 143.71 | | | |
| 03/21/1994 | Particulate Fluoride | 2 | TS | 1429.9 | 4.14446 | 8.30000 | 143.71 | | | |
| 03/21/1994 | Phosphorus | 2 | TS | 1429.9 | 5.23843 | .30000 | 143.71 | | | |
| 03/21/1994 | Vanadium | 2 | TS | 1429.9 | .10168 | .17000 | 143.71 | | | |
| 03/21/1994 | Zinc | 2 | TS | 1429.9 | .10940 | .00000 | 143.71 | | | |
| 03/21/1994 | Arsenic | 3 | TS | 1447.0 | .00098 | .00057 | 85.73 | | | |
| 03/21/1994 | Cadmium | 3 | TS | 1447.0 | .00137 | .00140 | 85.73 | | U | U |
| 03/21/1994 | Chromium | 3 | TS | 1447.0 | .00405 | .00020 | 85.73 | | | |
| 03/21/1994 | Particulate Fluoride | 3 | TS | 1447.0 | 1.46799 | 8.30000 | 85.73 | | B | |
| 03/21/1994 | Phosphorus | 3 | TS | 1447.0 | .35053 | .30000 | 85.73 | | | U |
| 03/21/1994 | Vanadium | 3 | TS | 1447.0 | .00509 | .17000 | 85.73 | | | |
| 03/21/1994 | Zinc | 3 | TS | 1447.0 | .01715 | .00000 | 85.73 | | B | |
| 03/21/1994 | Arsenic | 4 | TS | 1428.6 | .00118 | .00057 | 56.19 | | | |
| 03/21/1994 | Cadmium | 4 | TS | 1428.6 | .00141 | .00140 | 56.19 | | U | U |

| Sample Date | Chemical Name | Site # | Typ | Run Time (min.) | Chem Conc. (ug/m3) | EPA Scr. L(ug/m3) | Part.C. (ug/m3) | Grav. Val | Qual. Lab | Qual. Val |
|---|---|---|---|---|---|---|---|---|---|---|
| 03/21/1994 | Chromium | 4 | TS | 1428.6 | .00621 | .00020 | 56.19 | | | |
| 03/21/1994 | Particulate Fluoride | 4 | TS | 1428.6 | 1.89074 | 8.30000 | 56.19 | | B | |
| 03/21/1994 | Phosphorus | 4 | TS | 1428.6 | .66670 | .30000 | 56.19 | | | U |
| 03/21/1994 | Vanadium | 4 | TS | 1428.6 | .00612 | .17000 | 56.19 | | | |
| 03/21/1994 | Zinc | 4 | TS | 1428.6 | .02335 | .00000 | 56.19 | | B | |
| 03/21/1994 | Arsenic | 5 | TS | 1433.0 | .00108 | .00057 | 40.37 | | | |
| 03/21/1994 | Cadmium | 5 | TS | 1433.0 | .00139 | .00140 | 40.37 | | U | U |
| 03/21/1994 | Chromium | 5 | TS | 1433.0 | .00167 | .00020 | 40.37 | | | U |
| 03/21/1994 | Particulate Fluoride | 5 | TS | 1433.0 | 1.69441 | 8.30000 | 40.37 | | B | |
| 03/21/1994 | Phosphorus | 5 | TS | 1433.0 | .19166 | .30000 | 40.37 | | B | U |
| 03/21/1994 | Vanadium | 5 | TS | 1433.0 | .00181 | .17000 | 40.37 | | B | |
| 03/21/1994 | Zinc | 5 | TS | 1433.0 | .00910 | .00000 | 40.37 | | B | |
| 03/21/1994 | Arsenic | 6 | TS | 1435.5 | .00091 | .00057 | 53.85 | | | |
| 03/21/1994 | Cadmium | 6 | TS | 1435.5 | .00145 | .00140 | 53.85 | | U | U |
| 03/21/1994 | Chromium | 6 | TS | 1435.5 | .00170 | .00020 | 53.85 | | | U |
| 03/21/1994 | Particulate Fluoride | 6 | TS | 1435.5 | 2.04280 | 8.30000 | 53.85 | | B | |
| 03/21/1994 | Phosphorus | 6 | TS | 1435.5 | .18545 | .30000 | 53.85 | | B | U |
| 03/21/1994 | Vanadium | 6 | TS | 1435.5 | .00182 | .17000 | 53.85 | | U | U |
| 03/21/1994 | Zinc | 6 | TS | 1435.5 | .00992 | .00000 | 53.85 | | B | |
| 03/21/1994 | Arsenic | 7 | TS | 1451.8 | .00063 | .00057 | 22.22 | | B | |
| 03/21/1994 | Cadmium | 7 | TS | 1451.8 | .00139 | .00140 | 22.22 | | U | U |
| 03/21/1994 | Chromium | 7 | TS | 1451.8 | .00118 | .00020 | 22.22 | | | U |
| 03/21/1994 | Particulate Fluoride | 7 | TS | 1451.8 | 2.22723 | 8.30000 | 22.22 | | B | |
| 03/21/1994 | Phosphorus | 7 | TS | 1451.8 | .15103 | .30000 | 22.22 | | B | U |
| 03/21/1994 | Vanadium | 7 | TS | 1451.8 | .00218 | .17000 | 22.22 | | B | |
| 03/21/1994 | Zinc | 7 | TS | 1451.8 | .00461 | .00000 | 22.22 | | B | U |
| 03/21/1994 | Arsenic | 8 | TS | 1448.5 | .00113 | .00057 | 80.77 | | | |
| 03/21/1994 | Cadmium | 8 | TS | 1448.5 | .00403 | .00140 | 80.77 | | | |
| 03/21/1994 | Chromium | 8 | TS | 1448.5 | .02878 | .00020 | 80.77 | | | |
| 03/21/1994 | Particulate Fluoride | 8 | TS | 1448.5 | 2.20783 | 8.30000 | 80.77 | | B | |
| 03/21/1994 | Phosphorus | 8 | TS | 1448.5 | 2.13948 | .30000 | 80.77 | | | |
| 03/21/1994 | Vanadium | 8 | TS | 1448.5 | .03014 | .17000 | 80.77 | | | |
| 03/21/1994 | Zinc | 8 | TS | 1448.5 | .04730 | .00000 | 80.77 | | B | |
| 03/23/1994 | Arsenic | 1 | TS | 1442.4 | .00033 | .00057 | 59.87 | | B | |
| 03/23/1994 | Cadmium | 1 | TS | 1442.4 | .00381 | .00140 | 59.87 | | | |
| 03/23/1994 | Chromium | 1 | TS | 1442.4 | .01351 | .00020 | 59.87 | | | |
| 03/23/1994 | Particulate Fluoride | 1 | TS | 1442.4 | 5.08962 | 8.30000 | 59.87 | | | |
| 03/23/1994 | Phosphorus | 1 | TS | 1442.4 | 2.08770 | .30000 | 59.87 | | | |
| 03/23/1994 | Vanadium | 1 | TS | 1442.4 | .01542 | .17000 | 59.87 | | | |
| 03/23/1994 | Zinc | 1 | TS | 1442.4 | .03691 | .00000 | 59.87 | | B | |
| 03/23/1994 | Arsenic | 2 | TS | 1435.2 | .00447 | .00057 | 246.29 | | | J |
| 03/23/1994 | Cadmium | 2 | TS | 1435.2 | .03475 | .00140 | 246.29 | | | |
| 03/23/1994 | Chromium | 2 | TS | 1435.2 | .06936 | .00020 | 246.29 | | | |

| Sample Date | Chemical Name | Site # | Typ | Run Time (min.) | Chem Conc. (ug/m3) | EPA Scr. L(ug/m3) | Part.C. (ug/m3) | Grav. Val | Qual. Lab | Qual. Val |
|---|---|---|---|---|---|---|---|---|---|---|
| 03/23/1994 | Particulate Fluoride | 2 | TS | 1435.2 | 3.80490 | 8.30000 | 246.29 | | | |
| 03/23/1994 | Phosphorus | 2 | TS | 1435.2 | 17.57661 | .30000 | 246.29 | | | |
| 03/23/1994 | Vanadium | 2 | TS | 1435.2 | .09899 | .17000 | 246.29 | | | |
| 03/23/1994 | Zinc | 2 | TS | 1435.2 | .23974 | .00000 | 246.29 | | | |
| 03/23/1994 | Arsenic | 3 | TS | 1442.4 | .00029 | .00057 | 47.32 | | B | |
| 03/23/1994 | Cadmium | 3 | TS | 1442.4 | .00352 | .00140 | 47.32 | | | |
| 03/23/1994 | Chromium | 3 | TS | 1442.4 | .00895 | .00020 | 47.32 | | | |
| 03/23/1994 | Particulate Fluoride | 3 | TS | 1442.4 | 1.57203 | 8.30000 | 47.32 | | B | |
| 03/23/1994 | Phosphorus | 3 | TS | 1442.4 | 1.45927 | .30000 | 47.32 | | | |
| 03/23/1994 | Vanadium | 3 | TS | 1442.4 | .00955 | .17000 | 47.32 | | | |
| 03/23/1994 | Zinc | 3 | TS | 1442.4 | .02361 | .00000 | 47.32 | | B | |
| 03/23/1994 | Arsenic | 4 | TS | 1427.1 | .00017 | .00057 | 22.00 | | U | U |
| 03/23/1994 | Cadmium | 4 | TS | 1427.1 | .00136 | .00140 | 22.00 | | U | U |
| 03/23/1994 | Chromium | 4 | TS | 1427.1 | .00208 | .00020 | 22.00 | | | U |
| 03/23/1994 | Particulate Fluoride | 4 | TS | 1427.1 | 2.00815 | 8.30000 | 22.00 | | B | |
| 03/23/1994 | Phosphorus | 4 | TS | 1427.1 | .22532 | .30000 | 22.00 | | B | U |
| 03/23/1994 | Vanadium | 4 | TS | 1427.1 | .00210 | .17000 | 22.00 | | B | |
| 03/23/1994 | Zinc | 4 | TS | 1427.1 | .01423 | .00000 | 22.00 | | B | |
| 03/23/1994 | Arsenic | 5 | TS | 1438.1 | .00017 | .00057 | 17.48 | | U | U |
| 03/23/1994 | Cadmium | 5 | TS | 1438.1 | .00133 | .00140 | 17.48 | | U | U |
| 03/23/1994 | Chromium | 5 | TS | 1438.1 | .00102 | .00020 | 17.48 | | | U |
| 03/23/1994 | Particulate Fluoride | 5 | TS | 1438.1 | 2.52115 | 8.30000 | 17.48 | | B | |
| 03/23/1994 | Phosphorus | 5 | TS | 1438.1 | .15474 | .30000 | 17.48 | | B | U |
| 03/23/1994 | Vanadium | 5 | TS | 1438.1 | .00167 | .17000 | 17.48 | | U | U |
| 03/23/1994 | Zinc | 5 | TS | 1438.1 | .00495 | .00000 | 17.48 | | B | |
| 03/23/1994 | Arsenic | 6 | TS | 1440.4 | .00017 | .00057 | 19.98 | | U | U |
| 03/23/1994 | Cadmium | 6 | TS | 1440.4 | .00139 | .00140 | 19.98 | | U | U |
| 03/23/1994 | Chromium | 6 | TS | 1440.4 | .00062 | .00020 | 19.98 | | | U |
| 03/23/1994 | Particulate Fluoride | 6 | TS | 1440.4 | 2.82517 | 8.30000 | 19.98 | | B | |
| 03/23/1994 | Phosphorus | 6 | TS | 1440.4 | .13847 | .30000 | 19.98 | | B | U |
| 03/23/1994 | Vanadium | 6 | TS | 1440.4 | .00175 | .17000 | 19.98 | | U | U |
| 03/23/1994 | Zinc | 6 | TS | 1440.4 | .00511 | .00000 | 19.98 | | B | |
| 03/23/1994 | Arsenic | 7 | TS | 1450.3 | .00017 | .00057 | 6.32 | | U | U |
| 03/23/1994 | Cadmium | 7 | TS | 1450.3 | .00134 | .00140 | 6.32 | | U | U |
| 03/23/1994 | Chromium | 7 | TS | 1450.3 | .00083 | .00020 | 6.32 | | | U |
| 03/23/1994 | Particulate Fluoride | 7 | TS | 1450.3 | 2.24973 | 8.30000 | 6.32 | | B | |
| 03/23/1994 | Phosphorus | 7 | TS | 1450.3 | .17998 | .30000 | 6.32 | | B | U |
| 03/23/1994 | Vanadium | 7 | TS | 1450.3 | .00169 | .17000 | 6.32 | | U | U |
| 03/23/1994 | Zinc | 7 | TS | 1450.3 | .00352 | .00000 | 6.32 | | B | |
| 03/25/1994 | Arsenic | 1 | TS | 1445.8 | .00036 | .00057 | 50.31 | | B | U |
| 03/25/1994 | Cadmium | 1 | TS | 1445.8 | .00236 | .00140 | 50.31 | | | |
| 03/25/1994 | Chromium | 1 | TS | 1445.8 | .00641 | .00020 | 50.31 | | | |
| 03/25/1994 | Particulate | 1 | TS | 1445.8 | 1.74989 | 8.30000 | 50.31 | | B | U |

| Sample Date | Chemical Name | Site # | Typ | Run Time (min.) | Chem Conc. (ug/m3) | EPA Scr. L(ug/m3) | Part.C. (ug/m3) | Grav. Val | Qual. Lab | Qual. Val |
|---|---|---|---|---|---|---|---|---|---|---|
| | Fluoride | | | | | | | | | |
| 03/25/1994 | Phosphorus | 1 | TS | 1445.8 | 1.26573 | .30000 | 50.31 | | | |
| 03/25/1994 | Vanadium | 1 | TS | 1445.8 | .00761 | .17000 | 50.31 | | | |
| 03/25/1994 | Zinc | 1 | TS | 1445.8 | .03382 | .00000 | 50.31 | | B | J |
| 03/25/1994 | Arsenic | 2 | TS | 1432.2 | .00065 | .00057 | 78.15 | | | |
| 03/25/1994 | Cadmium | 2 | TS | 1432.2 | .00471 | .00140 | 78.15 | | | U |
| 03/25/1994 | Chromium | 2 | TS | 1432.2 | .01557 | .00020 | 78.15 | | | |
| 03/25/1994 | Particulate Fluoride | 2 | TS | 1432.2 | 2.46872 | 8.30000 | 78.15 | | B | U |
| 03/25/1994 | Phosphorus | 2 | TS | 1432.2 | 3.43563 | .30000 | 78.15 | | | |
| 03/25/1994 | Vanadium | 2 | TS | 1432.2 | .02112 | .17000 | 78.15 | | | |
| 03/25/1994 | Zinc | 2 | TS | 1432.2 | .05363 | .00000 | 78.15 | | B | J |
| 03/25/1994 | Arsenic | 3 | TS | 1447.2 | .00035 | .00057 | 37.84 | | B | |
| 03/25/1994 | Cadmium | 3 | TS | 1447.2 | .00134 | .00140 | 37.84 | | U | U |
| 03/25/1994 | Chromium | 3 | TS | 1447.2 | .00204 | .00020 | 37.84 | | | |
| 03/25/1994 | Particulate Fluoride | 3 | TS | 1447.2 | 1.92132 | 8.30000 | 37.84 | | B | U |
| 03/25/1994 | Phosphorus | 3 | TS | 1447.2 | .23580 | .30000 | 37.84 | | B | U |
| 03/25/1994 | Vanadium | 3 | TS | 1447.2 | .00232 | .17000 | 37.84 | | B | |
| 03/25/1994 | Zinc | 3 | TS | 1447.2 | .01854 | .00000 | 37.84 | | B | J |
| 03/25/1994 | Arsenic | 4 | TS | 1427.9 | .00037 | .00057 | 48.70 | | B | |
| 03/25/1994 | Cadmium | 4 | TS | 1427.9 | .00160 | .00140 | 48.70 | | | U |
| 03/25/1994 | Chromium | 4 | TS | 1427.9 | .00360 | .00020 | 48.70 | | | |
| 03/25/1994 | Particulate Fluoride | 4 | TS | 1427.9 | 1.90120 | 8.30000 | 48.70 | | B | U |
| 03/25/1994 | Phosphorus | 4 | TS | 1427.9 | .48878 | .30000 | 48.70 | | | U |
| 03/25/1994 | Vanadium | 4 | TS | 1427.9 | .00454 | .17000 | 48.70 | | B | |
| 03/25/1994 | Zinc | 4 | TS | 1427.9 | .02828 | .00000 | 48.70 | | B | J |
| 03/25/1994 | Arsenic | 5 | TS | 1437.1 | .00063 | .00057 | 70.85 | | | |
| 03/25/1994 | Cadmium | 5 | TS | 1437.1 | .00456 | .00140 | 70.85 | | | U |
| 03/25/1994 | Chromium | 5 | TS | 1437.1 | .01173 | .00020 | 70.85 | | | |
| 03/25/1994 | Particulate Fluoride | 5 | TS | 1437.1 | 2.61117 | 8.30000 | 70.85 | | B | U |
| 03/25/1994 | Phosphorus | 5 | TS | 1437.1 | 1.85156 | .30000 | 70.85 | | | |
| 03/25/1994 | Vanadium | 5 | TS | 1437.1 | .01458 | .17000 | 70.85 | | | |
| 03/25/1994 | Zinc | 5 | TS | 1437.1 | .03534 | .00000 | 70.85 | | B | J |
| 03/25/1994 | Arsenic | 6 | TS | 1438.2 | .00031 | .00057 | 36.28 | | B | |
| 03/25/1994 | Cadmium | 6 | TS | 1438.2 | .00142 | .00140 | 36.28 | | U | U |
| 03/25/1994 | Chromium | 6 | TS | 1438.2 | .00166 | .00020 | 36.28 | | | U |
| 03/25/1994 | Particulate Fluoride | 6 | TS | 1438.2 | 1.93335 | 8.30000 | 36.28 | | B | U |
| 03/25/1994 | Phosphorus | 6 | TS | 1438.2 | .29673 | .30000 | 36.28 | | B | U |
| 03/25/1994 | Vanadium | 6 | TS | 1438.2 | .00210 | .17000 | 36.28 | | B | |
| 03/25/1994 | Zinc | 6 | TS | 1438.2 | .00970 | .00000 | 36.28 | | B | J |
| 03/25/1994 | Arsenic | 7 | TS | 1449.9 | .00032 | .00057 | 39.34 | | B | |
| 03/25/1994 | Cadmium | 7 | TS | 1449.9 | .00324 | .00140 | 39.34 | | | |
| 03/25/1994 | Chromium | 7 | TS | 1449.9 | .00635 | .00020 | 39.34 | | | |
| 03/25/1994 | Particulate Fluoride | 7 | TS | 1449.9 | 2.81917 | 8.30000 | 39.34 | | B | U |

| Sample Date | Chemical Name | Site # | Typ | Run Time (min.) | Chem Conc. (ug/m3) | EPA Scr. L(ug/m3) | Part.C. (ug/m3) | Grav. Val | Qual. Lab | Qual. Val |
|---|---|---|---|---|---|---|---|---|---|---|
| 03/25/1994 | Phosphorus | 7 | TS | 1449.9 | 1.59047 | .30000 | 39.34 | | | |
| 03/25/1994 | Vanadium | 7 | TS | 1449.9 | .00765 | .17000 | 39.34 | | | |
| 03/25/1994 | Zinc | 7 | TS | 1449.9 | .02239 | .00000 | 39.34 | | B | J |
| 03/29/1994 | Arsenic | 1 | TS | 1440.1 | .00031 | .00057 | 69.77 | | B | |
| 03/29/1994 | Cadmium | 1 | TS | 1440.1 | .00158 | .00140 | 69.77 | | | |
| 03/29/1994 | Chromium | 1 | TS | 1440.1 | .01000 | .00020 | 69.77 | | | |
| 03/29/1994 | Particulate Fluoride | 1 | TS | 1440.1 | 2.21714 | 8.30000 | 69.77 | | B | U |
| 03/29/1994 | Phosphorus | 1 | TS | 1440.1 | 1.07710 | .30000 | 69.77 | | | |
| 03/29/1994 | Vanadium | 1 | TS | 1440.1 | .01007 | .17000 | 69.77 | | | |
| 03/29/1994 | Zinc | 1 | TS | 1440.1 | .03210 | .00000 | 69.77 | | B | |
| 03/29/1994 | Arsenic | 2 | TS | 1434.1 | .00067 | .00057 | 88.90 | | | |
| 03/29/1994 | Cadmium | 2 | TS | 1434.1 | .00403 | .00140 | 88.90 | | | |
| 03/29/1994 | Chromium | 2 | TS | 1434.1 | .02856 | .00020 | 88.90 | | | |
| 03/29/1994 | Particulate Fluoride | 2 | TS | 1434.1 | 2.92474 | 8.30000 | 88.90 | | B | U |
| 03/29/1994 | Phosphorus | 2 | TS | 1434.1 | 2.12458 | .30000 | 88.90 | | | |
| 03/29/1994 | Vanadium | 2 | TS | 1434.1 | .03063 | .17000 | 88.90 | | | |
| 03/29/1994 | Zinc | 2 | TS | 1434.1 | .05532 | .00000 | 88.90 | | B | |
| 03/29/1994 | Arsenic | 3 | TS | 1443.4 | .00041 | .00057 | 74.67 | | B | |
| 03/29/1994 | Cadmium | 3 | TS | 1443.4 | .00136 | .00140 | 74.67 | | U | U |
| 03/29/1994 | Chromium | 3 | TS | 1443.4 | .00243 | .00020 | 74.67 | | | U |
| 03/29/1994 | Particulate Fluoride | 3 | TS | 1443.4 | 1.64859 | 8.30000 | 74.67 | | B | U |
| 03/29/1994 | Phosphorus | 3 | TS | 1443.4 | .29919 | .30000 | 74.67 | | B | U |
| 03/29/1994 | Vanadium | 3 | TS | 1443.4 | .00192 | .17000 | 74.67 | | B | |
| 03/29/1994 | Zinc | 3 | TS | 1443.4 | .01269 | .00000 | 74.67 | | B | |
| 03/29/1994 | Arsenic | 4 | TS | 1429.7 | .00092 | .00057 | 66.39 | | | |
| 03/29/1994 | Cadmium | 4 | TS | 1429.7 | .00216 | .00140 | 66.39 | | | |
| 03/29/1994 | Chromium | 4 | TS | 1429.7 | .00396 | .00020 | 66.39 | | | |
| 03/29/1994 | Particulate Fluoride | 4 | TS | 1429.7 | 1.89168 | 8.30000 | 66.39 | | B | U |
| 03/29/1994 | Phosphorus | 4 | TS | 1429.7 | .46388 | .30000 | 66.39 | | | U |
| 03/29/1994 | Vanadium | 4 | TS | 1429.7 | .00376 | .17000 | 66.39 | | B | |
| 03/29/1994 | Zinc | 4 | TS | 1429.7 | .02545 | .00000 | 66.39 | | B | |
| 03/29/1994 | Arsenic | 5 | TS | 1435.1 | .00045 | .00057 | 58.73 | | B | |
| 03/29/1994 | Cadmium | 5 | TS | 1435.1 | .00281 | .00140 | 58.73 | | | |
| 03/29/1994 | Chromium | 5 | TS | 1435.1 | .01526 | .00020 | 58.73 | | | |
| 03/29/1994 | Particulate Fluoride | 5 | TS | 1435.1 | 2.81158 | 8.30000 | 58.73 | | B | U |
| 03/29/1994 | Phosphorus | 5 | TS | 1435.1 | 1.45025 | .30000 | 58.73 | | | |
| 03/29/1994 | Vanadium | 5 | TS | 1435.1 | .01437 | .17000 | 58.73 | | | |
| 03/29/1994 | Zinc | 5 | TS | 1435.1 | .02983 | .00000 | 58.73 | | B | |
| 03/29/1994 | Arsenic | 6 | TS | 1438.0 | .00047 | .00057 | 82.66 | | B | |
| 03/29/1994 | Cadmium | 6 | TS | 1438.0 | .00191 | .00140 | 82.66 | | | |
| 03/29/1994 | Chromium | 6 | TS | 1438.0 | .00270 | .00020 | 82.66 | | | U |
| 03/29/1994 | Particulate Fluoride | 6 | TS | 1438.0 | 2.59680 | 8.30000 | 82.66 | | B | U |

| Sample Date | Chemical Name | Site # | Typ | Run Time (min.) | Chem Conc. (ug/m3) | EPA Scr. L(ug/m3) | Part.C. (ug/m3) | Grav. Val | Qual. Lab | Qual. Val |
|---|---|---|---|---|---|---|---|---|---|---|
| 03/29/1994 | Phosphorus | 6 | TS | 1438.0 | .38239 | .30000 | 82.66 | | | U |
| 03/29/1994 | Vanadium | 6 | TS | 1438.0 | .00307 | .17000 | 82.66 | | B | |
| 03/29/1994 | Zinc | 6 | TS | 1438.0 | .01263 | .00000 | 82.66 | | B | |
| 03/29/1994 | Arsenic | 7 | TS | 1452.7 | .00023 | .00057 | 26.57 | | B | |
| 03/29/1994 | Cadmium | 7 | TS | 1452.7 | .00137 | .00140 | 26.57 | | U | U |
| 03/29/1994 | Chromium | 7 | TS | 1452.7 | .00227 | .00020 | 26.57 | | | |
| 03/29/1994 | Particulate Fluoride | 7 | TS | 1452.7 | 1.96945 | 8.30000 | 26.57 | | B | U |
| 03/29/1994 | Phosphorus | 7 | TS | 1452.7 | .29576 | .30000 | 26.57 | | B | U |
| 03/29/1994 | Vanadium | 7 | TS | 1452.7 | .00217 | .17000 | 26.57 | | B | |
| 03/29/1994 | Zinc | 7 | TS | 1452.7 | .00844 | .00000 | 26.57 | | B | |
| 03/31/1994 | Arsenic | 1 | TS | 1445.2 | .00095 | .00057 | 103.94 | | | |
| 03/31/1994 | Cadmium | 1 | TS | 1445.2 | .00273 | .00140 | 103.94 | | | |
| 03/31/1994 | Chromium | 1 | TS | 1445.2 | .01571 | .00020 | 103.94 | | | |
| 03/31/1994 | Particulate Fluoride | 1 | TS | 1445.2 | 2.73424 | 8.30000 | 103.94 | | B | U |
| 03/31/1994 | Phosphorus | 1 | TS | 1445.2 | 1.67719 | .30000 | 103.94 | | | |
| 03/31/1994 | Vanadium | 1 | TS | 1445.2 | .01487 | .17000 | 103.94 | | | |
| 03/31/1994 | Zinc | 1 | TS | 1445.2 | .04418 | .00000 | 103.94 | | B | |
| 03/31/1994 | Arsenic | 2 | TS | 1436.0 | .00286 | .00057 | 230.35 | | | |
| 03/31/1994 | Cadmium | 2 | TS | 1436.0 | .01400 | .00140 | 230.35 | | | |
| 03/31/1994 | Chromium | 2 | TS | 1436.0 | .07314 | .00020 | 230.35 | | | |
| 03/31/1994 | Particulate Fluoride | 2 | TS | 1436.0 | 4.39524 | 8.30000 | 230.35 | | | U |
| 03/31/1994 | Phosphorus | 2 | TS | 1436.0 | 10.58759 | .30000 | 230.35 | | | |
| 03/31/1994 | Vanadium | 2 | TS | 1436.0 | .07941 | .17000 | 230.35 | | | |
| 03/31/1994 | Zinc | 2 | TS | 1436.0 | .14976 | .00000 | 230.35 | | | |
| 03/31/1994 | Arsenic | 3 | TS | 1442.5 | .00106 | .00057 | 160.10 | | | |
| 03/31/1994 | Cadmium | 3 | TS | 1442.5 | .00172 | .00140 | 160.10 | | | |
| 03/31/1994 | Chromium | 3 | TS | 1442.5 | .00789 | .00020 | 160.10 | | | |
| 03/31/1994 | Particulate Fluoride | 3 | TS | 1442.5 | 1.86017 | 8.30000 | 160.10 | | B | U |
| 03/31/1994 | Phosphorus | 3 | TS | 1442.5 | .74819 | .30000 | 160.10 | | | U |
| 03/31/1994 | Vanadium | 3 | TS | 1442.5 | .00721 | .17000 | 160.10 | | | |
| 03/31/1994 | Zinc | 3 | TS | 1442.5 | .03370 | .00000 | 160.10 | | B | |
| 03/31/1994 | Arsenic | 4 | TS | 1429.0 | .00101 | .00057 | 129.25 | | | |
| 03/31/1994 | Cadmium | 4 | TS | 1429.0 | .00272 | .00140 | 129.25 | | | |
| 03/31/1994 | Chromium | 4 | TS | 1429.0 | .00809 | .00020 | 129.25 | | | |
| 03/31/1994 | Particulate Fluoride | 4 | TS | 1429.0 | 1.96290 | 8.30000 | 129.25 | | B | U |
| 03/31/1994 | Phosphorus | 4 | TS | 1429.0 | .75280 | .30000 | 129.25 | | | U |
| 03/31/1994 | Vanadium | 4 | TS | 1429.0 | .00746 | .17000 | 129.25 | | | |
| 03/31/1994 | Zinc | 4 | TS | 1429.0 | .03511 | .00000 | 129.25 | | B | |
| 03/31/1994 | Arsenic | 5 | TS | 1435.3 | .00102 | .00057 | 88.85 | | | |
| 03/31/1994 | Cadmium | 5 | TS | 1435.3 | .00333 | .00140 | 88.85 | | | |
| 03/31/1994 | Chromium | 5 | TS | 1435.3 | .00844 | .00020 | 88.85 | | | |
| 03/31/1994 | Particulate Fluoride | 5 | TS | 1435.3 | 2.22004 | 8.30000 | 88.85 | | B | U |
| 03/31/1994 | Phosphorus | 5 | TS | 1435.3 | 1.25871 | .30000 | 88.85 | | | |

| Sample Date | Chemical Name | Site # | Typ | Run Time (min.) | Chem Conc. (ug/m3) | EPA Scr. L(ug/m3) | Part.C. Grav. (ug/m3) | Qual. Val | Lab | Val |
|---|---|---|---|---|---|---|---|---|---|---|
| 03/31/1994 | Vanadium | 5 | TS | 1435.3 | .00878 | .17000 | 88.85 | | | |
| 03/31/1994 | Zinc | 5 | TS | 1435.3 | .02967 | .00000 | 88.85 | | B | |
| 03/31/1994 | Arsenic | 6 | TS | 1439.2 | .00081 | .00057 | 78.82 | | | |
| 03/31/1994 | Cadmium | 6 | TS | 1439.2 | .00144 | .00140 | 78.82 | | U | U |
| 03/31/1994 | Chromium | 6 | TS | 1439.2 | .00278 | .00020 | 78.82 | | | |
| 03/31/1994 | Particulate Fluoride | 6 | TS | 1439.2 | 2.00367 | 8.30000 | 78.82 | | B | U |
| 03/31/1994 | Phosphorus | 6 | TS | 1439.2 | .41875 | .30000 | 78.82 | | | U |
| 03/31/1994 | Vanadium | 6 | TS | 1439.2 | .00200 | .17000 | 78.82 | | B | |
| 03/31/1994 | Zinc | 6 | TS | 1439.2 | .01802 | .00000 | 78.82 | | B | |
| 03/31/1994 | Arsenic | 7 | TS | 1448.1 | .00072 | .00057 | 56.27 | | | |
| 03/31/1994 | Cadmium | 7 | TS | 1448.1 | .00211 | .00140 | 56.27 | | | |
| 03/31/1994 | Chromium | 7 | TS | 1448.1 | .00503 | .00020 | 56.27 | | | |
| 03/31/1994 | Particulate Fluoride | 7 | TS | 1448.1 | 5.76332 | 8.30000 | 56.27 | | | U |
| 03/31/1994 | Phosphorus | 7 | TS | 1448.1 | .72389 | .30000 | 56.27 | | | U |
| 03/31/1994 | Vanadium | 7 | TS | 1448.1 | .00483 | .17000 | 56.27 | | B | |
| 03/31/1994 | Zinc | 7 | TS | 1448.1 | .02318 | .00000 | 56.27 | | B | |
| 04/14/1994 | Arsenic | 1 | TS | 1445.0 | .00102 | .00057 | 141.12 | | | |
| 04/14/1994 | Cadmium | 1 | TS | 1445.0 | .00860 | .00140 | 141.12 | | | |
| 04/14/1994 | Chromium | 1 | TS | 1445.0 | .03531 | .00020 | 141.12 | | | |
| 04/14/1994 | Particulate Fluoride | 1 | TS | 1445.0 | 5.51858 | 8.30000 | 141.12 | | | |
| 04/14/1994 | Phosphorus | 1 | TS | 1445.0 | 5.38467 | .30000 | 141.12 | | | |
| 04/14/1994 | Vanadium | 1 | TS | 1445.0 | .03376 | .17000 | 141.12 | | | |
| 04/14/1994 | Zinc | 1 | TS | 1445.0 | .05970 | .00000 | 141.12 | | B | |
| 04/14/1994 | Arsenic | 2 | TS | 1435.6 | .00454 | .00057 | 442.63 | | | |
| 04/14/1994 | Cadmium | 2 | TS | 1435.6 | .04891 | .00140 | 442.63 | | | |
| 04/14/1994 | Chromium | 2 | TS | 1435.6 | .19370 | .00020 | 442.63 | | | |
| 04/14/1994 | Particulate Fluoride | 2 | TS | 1435.6 | 1.83941 | 8.30000 | 442.63 | | B | |
| 04/14/1994 | Phosphorus | 2 | TS | 1435.6 | 21.11141 | .30000 | 442.63 | | | |
| 04/14/1994 | Vanadium | 2 | TS | 1435.6 | .20415 | .17000 | 442.63 | | | |
| 04/14/1994 | Zinc | 2 | TS | 1435.6 | .33165 | .00000 | 442.63 | | | |
| 04/14/1994 | Arsenic | 3 | TS | 1440.0 | .00069 | .00057 | 142.14 | | | |
| 04/14/1994 | Cadmium | 3 | TS | 1440.0 | .00288 | .00140 | 142.14 | | | |
| 04/14/1994 | Chromium | 3 | TS | 1440.0 | .01458 | .00020 | 142.14 | | | |
| 04/14/1994 | Particulate Fluoride | 3 | TS | 1440.0 | 1.45771 | 8.30000 | 142.14 | | B | |
| 04/14/1994 | Phosphorus | 3 | TS | 1440.0 | 1.61586 | .30000 | 142.14 | | | U |
| 04/14/1994 | Vanadium | 3 | TS | 1440.0 | .01361 | .17000 | 142.14 | | | |
| 04/14/1994 | Zinc | 3 | TS | 1440.0 | .03397 | .00000 | 142.14 | | B | |
| 04/14/1994 | Arsenic | 4 | TS | 1428.7 | .00039 | .00057 | 72.74 | | B | |
| 04/14/1994 | Cadmium | 4 | TS | 1428.7 | .00141 | .00140 | 72.74 | | U | U |
| 04/14/1994 | Chromium | 4 | TS | 1428.7 | .00529 | .00020 | 72.74 | | | |
| 04/14/1994 | Particulate Fluoride | 4 | TS | 1428.7 | 1.40740 | 8.30000 | 72.74 | | U | U |
| 04/14/1994 | Phosphorus | 4 | TS | 1428.7 | .51511 | .30000 | 72.74 | | | U |
| 04/14/1994 | Vanadium | 4 | TS | 1428.7 | .00494 | .17000 | 72.74 | | | |

| Sample Date | Chemical Name | Site # | Typ | Run Time (min.) | Chem Conc. (ug/m3) | EPA Scr. L(ug/m3) | Part.C. (ug/m3) | Grav. Val | Qual. Lab | Qual. Val |
|---|---|---|---|---|---|---|---|---|---|---|
| 04/14/1994 | Zinc | 4 | TS | 1428.7 | .01471 | .00000 | 72.74 | | B | |
| 04/14/1994 | Arsenic | 5 | TS | 1438.9 | .00041 | .00057 | 61.85 | | B | |
| 04/14/1994 | Cadmium | 5 | TS | 1438.9 | .00138 | .00140 | 61.85 | | U | U |
| 04/14/1994 | Chromium | 5 | TS | 1438.9 | .00242 | .00020 | 61.85 | | | U |
| 04/14/1994 | Particulate Fluoride | 5 | TS | 1438.9 | 1.83505 | 8.30000 | 61.85 | | B | |
| 04/14/1994 | Phosphorus | 5 | TS | 1438.9 | .24904 | .30000 | 61.85 | | B | U |
| 04/14/1994 | Vanadium | 5 | TS | 1438.9 | .00221 | .17000 | 61.85 | | B | |
| 04/14/1994 | Zinc | 5 | TS | 1438.9 | .01062 | .00000 | 61.85 | | B | |
| 04/14/1994 | Arsenic | 6 | TS | 1439.6 | .00031 | .00057 | 59.55 | | B | |
| 04/14/1994 | Cadmium | 6 | TS | 1439.6 | .00144 | .00140 | 59.55 | | U | U |
| 04/14/1994 | Chromium | 6 | TS | 1439.6 | .00210 | .00020 | 59.55 | | | U |
| 04/14/1994 | Particulate Fluoride | 6 | TS | 1439.6 | 1.89503 | 8.30000 | 59.55 | | B | |
| 04/14/1994 | Phosphorus | 6 | TS | 1439.6 | .23634 | .30000 | 59.55 | | B | U |
| 04/14/1994 | Vanadium | 6 | TS | 1439.6 | .00181 | .17000 | 59.55 | | U | U |
| 04/14/1994 | Zinc | 6 | TS | 1439.6 | .00865 | .00000 | 59.55 | | B | |
| 04/14/1994 | Arsenic | 7 | TS | 1448.7 | .00025 | .00057 | 48.04 | | B | |
| 04/14/1994 | Cadmium | 7 | TS | 1448.7 | .00139 | .00140 | 48.04 | | U | U |
| 04/14/1994 | Chromium | 7 | TS | 1448.7 | .00213 | .00020 | 48.04 | | | U |
| 04/14/1994 | Particulate Fluoride | 7 | TS | 1448.7 | 2.05948 | 8.30000 | 48.04 | | B | |
| 04/14/1994 | Phosphorus | 7 | TS | 1448.7 | .24769 | .30000 | 48.04 | | B | U |
| 04/14/1994 | Vanadium | 7 | TS | 1448.7 | .00180 | .17000 | 48.04 | | B | |
| 04/14/1994 | Zinc | 7 | TS | 1448.7 | .00751 | .00000 | 48.04 | | B | |
| 04/14/1994 | Arsenic | 8 | TS | 1453.3 | .00129 | .00057 | 137.84 | | | |
| 04/14/1994 | Cadmium | 8 | TS | 1453.3 | .00863 | .00140 | 137.84 | | | |
| 04/14/1994 | Chromium | 8 | TS | 1453.3 | .03901 | .00020 | 137.84 | | | |
| 04/14/1994 | Particulate Fluoride | 8 | TS | 1453.3 | 5.36878 | 8.30000 | 137.84 | | | |
| 04/14/1994 | Phosphorus | 8 | TS | 1453.3 | 5.38237 | .30000 | 137.84 | | | |
| 04/14/1994 | Vanadium | 8 | TS | 1453.3 | .03643 | .17000 | 137.84 | | | |
| 04/14/1994 | Zinc | 8 | TS | 1453.3 | .06266 | .00000 | 137.84 | | B | |
| 06/07/1994 | Arsenic | 1 | TS | 1442.2 | .00026 | .00057 | 36.59 | | B | |
| 06/07/1994 | Cadmium | 1 | TS | 1442.2 | .00280 | .00140 | 36.59 | | | |
| 06/07/1994 | Chromium | 1 | TS | 1442.2 | .00867 | .00020 | 36.59 | | | |
| 06/07/1994 | Particulate Fluoride | 1 | TS | 1442.2 | 1.36462 | 8.30000 | 36.59 | | U | U |
| 06/07/1994 | Phosphorus | 1 | TS | 1442.2 | 1.48743 | .30000 | 36.59 | | | |
| 06/07/1994 | Vanadium | 1 | TS | 1442.2 | .01071 | .17000 | 36.59 | | | |
| 06/07/1994 | Zinc | 1 | TS | 1442.2 | .02156 | .00000 | 36.59 | | B | |
| 06/07/1994 | Arsenic | 2 | TS | 1435.5 | .00090 | .00057 | 80.10 | | | |
| 06/07/1994 | Cadmium | 2 | TS | 1435.5 | .01013 | .00140 | 80.10 | | | |
| 06/07/1994 | Chromium | 2 | TS | 1435.5 | .02349 | .00020 | 80.10 | | | |
| 06/07/1994 | Particulate Fluoride | 2 | TS | 1435.5 | 1.50873 | 8.30000 | 80.10 | | B | |
| 06/07/1994 | Phosphorus | 2 | TS | 1435.5 | 3.36882 | .30000 | 80.10 | | | |
| 06/07/1994 | Vanadium | 2 | TS | 1435.5 | .03348 | .17000 | 80.10 | | | |
| 06/07/1994 | Zinc | 2 | TS | 1435.5 | .05353 | .00000 | 80.10 | | B | |

| Sample Date | Chemical Name | Site # | Typ | Run Time (min.) | Chem Conc. (ug/m3) | EPA Scr. L(ug/m3) | Part.C. (ug/m3) | Grav. Val | Qual. Lab | Qual. Val |
|---|---|---|---|---|---|---|---|---|---|---|
| 06/07/1994 | Arsenic | 3 | TS | 1445.7 | .00017 | .00057 | 43.50 | | U | U |
| 06/07/1994 | Cadmium | 3 | TS | 1445.7 | .00135 | .00140 | 43.50 | | U | U |
| 06/07/1994 | Chromium | 3 | TS | 1445.7 | .00196 | .00020 | 43.50 | | | U |
| 06/07/1994 | Particulate Fluoride | 3 | TS | 1445.7 | 1.34790 | 8.30000 | 43.50 | | U | U |
| 06/07/1994 | Phosphorus | 3 | TS | 1445.7 | .32417 | .30000 | 43.50 | | B | U |
| 06/07/1994 | Vanadium | 3 | TS | 1445.7 | .00199 | .17000 | 43.50 | | B | |
| 06/07/1994 | Zinc | 3 | TS | 1445.7 | .00842 | .00000 | 43.50 | | B | |
| 06/07/1994 | Arsenic | 4 | TS | 1428.0 | .00019 | .00057 | 56.62 | | B | |
| 06/07/1994 | Cadmium | 4 | TS | 1428.0 | .00139 | .00140 | 56.62 | | U | U |
| 06/07/1994 | Chromium | 4 | TS | 1428.0 | .00320 | .00020 | 56.62 | | | U |
| 06/07/1994 | Particulate Fluoride | 4 | TS | 1428.0 | 1.48575 | 8.30000 | 56.62 | | B | |
| 06/07/1994 | Phosphorus | 4 | TS | 1428.0 | .36033 | .30000 | 56.62 | | | U |
| 06/07/1994 | Vanadium | 4 | TS | 1428.0 | .00322 | .17000 | 56.62 | | B | |
| 06/07/1994 | Zinc | 4 | TS | 1428.0 | .01694 | .00000 | 56.62 | | B | |
| 06/07/1994 | Arsenic | 5 | TS | 1435.4 | .00018 | .00057 | 20.05 | | U | U |
| 06/07/1994 | Cadmium | 5 | TS | 1435.4 | .00141 | .00140 | 20.05 | | U | U |
| 06/07/1994 | Chromium | 5 | TS | 1435.4 | .00099 | .00020 | 20.05 | | | U |
| 06/07/1994 | Particulate Fluoride | 5 | TS | 1435.4 | 1.40606 | 8.30000 | 20.05 | | U | U |
| 06/07/1994 | Phosphorus | 5 | TS | 1435.4 | .19755 | .30000 | 20.05 | | B | U |
| 06/07/1994 | Vanadium | 5 | TS | 1435.4 | .00176 | .17000 | 20.05 | | U | U |
| 06/07/1994 | Zinc | 5 | TS | 1435.4 | .00405 | .00000 | 20.05 | | B | |
| 06/07/1994 | Arsenic | 6 | TS | 1438.7 | .00018 | .00057 | 19.27 | | U | U |
| 06/07/1994 | Cadmium | 6 | TS | 1438.7 | .00140 | .00140 | 19.27 | | U | U |
| 06/07/1994 | Chromium | 6 | TS | 1438.7 | .00089 | .00020 | 19.27 | | | U |
| 06/07/1994 | Particulate Fluoride | 6 | TS | 1438.7 | 1.39571 | 8.30000 | 19.27 | | U | U |
| 06/07/1994 | Phosphorus | 6 | TS | 1438.7 | .19261 | .30000 | 19.27 | | B | U |
| 06/07/1994 | Vanadium | 6 | TS | 1438.7 | .00175 | .17000 | 19.27 | | U | U |
| 06/07/1994 | Zinc | 6 | TS | 1438.7 | .00388 | .00000 | 19.27 | | B | |
| 06/07/1994 | Arsenic | 7 | TS | 1448.3 | .00017 | .00057 | 21.30 | | U | U |
| 06/07/1994 | Cadmium | 7 | TS | 1448.3 | .00134 | .00140 | 21.30 | | U | U |
| 06/07/1994 | Chromium | 7 | TS | 1448.3 | .00137 | .00020 | 21.30 | | | U |
| 06/07/1994 | Particulate Fluoride | 7 | TS | 1448.3 | 1.33888 | 8.30000 | 21.30 | | U | U |
| 06/07/1994 | Phosphorus | 7 | TS | 1448.3 | .20954 | .30000 | 21.30 | | B | U |
| 06/07/1994 | Vanadium | 7 | TS | 1448.3 | .00168 | .17000 | 21.30 | | U | U |
| 06/07/1994 | Zinc | 7 | TS | 1448.3 | .00381 | .00000 | 21.30 | | B | U |
| 06/07/1994 | Arsenic | 8 | TS | 1449.0 | .00032 | .00057 | 33.47 | | B | |
| 06/07/1994 | Cadmium | 8 | TS | 1449.0 | .00295 | .00140 | 33.47 | | | |
| 06/07/1994 | Chromium | 8 | TS | 1449.0 | .01142 | .00020 | 33.47 | | | |
| 06/07/1994 | Particulate Fluoride | 8 | TS | 1449.0 | 1.85154 | 8.30000 | 33.47 | | B | |
| 06/07/1994 | Phosphorus | 8 | TS | 1449.0 | 1.56773 | .30000 | 33.47 | | | |
| 06/07/1994 | Vanadium | 8 | TS | 1449.0 | .00993 | .17000 | 33.47 | | | |
| 06/07/1994 | Zinc | 8 | TS | 1449.0 | .02284 | .00000 | 33.47 | | B | |
| 09/21/1994 | Arsenic | 1 | TS | 1443.4 | .00148 | .00057 | 141.69 | | | |

| Sample Date | Chemical Name | Site # | Typ | Run Time (min.) | Chem Conc. (ug/m3) | EPA Scr. L(ug/m3) | Part.C. (ug/m3) | Grav. Val | Qual. Lab | Qual. Val |
|---|---|---|---|---|---|---|---|---|---|---|
| 09/21/1994 | Cadmium | 1 | TS | 1443.4 | .01103 | .00140 | 141.69 | | | |
| 09/21/1994 | Chromium | 1 | TS | 1443.4 | .01203 | .00020 | 141.69 | | | |
| 09/21/1994 | Particulate Fluoride | 1 | TS | 1443.4 | 1.43256 | 8.30000 | 141.69 | | U | U |
| 09/21/1994 | Phosphorus | 1 | TS | 1443.4 | 1.94112 | .30000 | 141.69 | | | |
| 09/21/1994 | Vanadium | 1 | TS | 1443.4 | .01132 | .17000 | 141.69 | | | |
| 09/21/1994 | Zinc | 1 | TS | 1443.4 | .06124 | .00000 | 141.69 | | B | |
| 09/21/1994 | Arsenic | 2 | TS | 1432.0 | .00212 | .00057 | 189.29 | | | |
| 09/21/1994 | Cadmium | 2 | TS | 1432.0 | .01982 | .00140 | 189.29 | | | |
| 09/21/1994 | Chromium | 2 | TS | 1432.0 | .05481 | .00020 | 189.29 | | | |
| 09/21/1994 | Particulate Fluoride | 2 | TS | 1432.0 | 2.13840 | 8.30000 | 189.29 | | B | |
| 09/21/1994 | Phosphorus | 2 | TS | 1432.0 | 5.44578 | .30000 | 189.29 | | | |
| 09/21/1994 | Vanadium | 2 | TS | 1432.0 | .06536 | .17000 | 189.29 | | | |
| 09/21/1994 | Zinc | 2 | TS | 1432.0 | .12973 | .00000 | 189.29 | | | |
| 09/21/1994 | Arsenic | 4 | TS | 1430.4 | .00156 | .00057 | 144.98 | | | |
| 09/21/1994 | Cadmium | 4 | TS | 1430.4 | .00692 | .00140 | 144.98 | | | |
| 09/21/1994 | Chromium | 4 | TS | 1430.4 | .00813 | .00020 | 144.98 | | | |
| 09/21/1994 | Particulate Fluoride | 4 | TS | 1430.4 | 1.43817 | 8.30000 | 144.98 | | U | U |
| 09/21/1994 | Phosphorus | 4 | TS | 1430.4 | .97077 | .30000 | 144.98 | | | U |
| 09/21/1994 | Vanadium | 4 | TS | 1430.4 | .00762 | .17000 | 144.98 | | | |
| 09/21/1994 | Zinc | 4 | TS | 1430.4 | .05314 | .00000 | 144.98 | | B | |
| 09/21/1994 | Arsenic | 5 | TS | 1438.1 | .00075 | .00057 | 87.85 | | | |
| 09/21/1994 | Cadmium | 5 | TS | 1438.1 | .01094 | .00140 | 87.85 | | | |
| 09/21/1994 | Chromium | 5 | TS | 1438.1 | .01086 | .00020 | 87.85 | | | |
| 09/21/1994 | Particulate Fluoride | 5 | TS | 1438.1 | 1.46811 | 8.30000 | 87.85 | | U | U |
| 09/21/1994 | Phosphorus | 5 | TS | 1438.1 | 1.39471 | .30000 | 87.85 | | | |
| 09/21/1994 | Vanadium | 5 | TS | 1438.1 | .01020 | .17000 | 87.85 | | | |
| 09/21/1994 | Zinc | 5 | TS | 1438.1 | .03846 | .00000 | 87.85 | | B | |
| 09/21/1994 | Arsenic | 6 | TS | 1438.0 | .00177 | .00057 | 287.58 | | | |
| 09/21/1994 | Cadmium | 6 | TS | 1438.0 | .00143 | .00140 | 287.58 | | U | U |
| 09/21/1994 | Chromium | 6 | TS | 1438.0 | .00659 | .00020 | 287.58 | | | |
| 09/21/1994 | Particulate Fluoride | 6 | TS | 1438.0 | 1.58793 | 8.30000 | 287.58 | | B | |
| 09/21/1994 | Phosphorus | 6 | TS | 1438.0 | .55220 | .30000 | 287.58 | | | U |
| 09/21/1994 | Vanadium | 6 | TS | 1438.0 | .00681 | .17000 | 287.58 | | | |
| 09/21/1994 | Zinc | 6 | TS | 1438.0 | .03727 | .00000 | 287.58 | | B | |
| 09/21/1994 | Arsenic | 7 | TS | 1450.0 | .00160 | .00057 | 102.69 | | | |
| 09/21/1994 | Cadmium | 7 | TS | 1450.0 | .04126 | .00140 | 102.69 | | | |
| 09/21/1994 | Chromium | 7 | TS | 1450.0 | .02341 | .00020 | 102.69 | | | |
| 09/21/1994 | Particulate Fluoride | 7 | TS | 1450.0 | 2.40269 | 8.30000 | 102.69 | | B | |
| 09/21/1994 | Phosphorus | 7 | TS | 1450.0 | 3.26766 | .30000 | 102.69 | | | |
| 09/21/1994 | Vanadium | 7 | TS | 1450.0 | .01531 | .17000 | 102.69 | | | |
| 09/21/1994 | Zinc | 7 | TS | 1450.0 | .06741 | .00000 | 102.69 | | B | |

| Sample Date | Chemical Name | Site No | Typ | Run Time (min.) | Chem Conc. (ug/m3) | EPA Scr. L(ug/m3) | Part.C. (ug/m3) | Grav. Val | Qual. Lb | Qual. Val |
|---|---|---|---|---|---|---|---|---|---|---|
| 10/01/1993 | Aluminum | 3 | LO | 44545.0 | 18.35702 | 33.30000 | 202.01 | Q | | |
| 10/01/1993 | Arsenic | 3 | LO | 44545.0 | .00824 | .00057 | 202.01 | Q | | |
| 10/01/1993 | Barium | 3 | LO | 44545.0 | .20805 | .52000 | 202.01 | Q | | |
| 10/01/1993 | Beryllium | 3 | LO | 44545.0 | .00094 | .00100 | 202.01 | Q | B | |
| 10/01/1993 | Cadmium | 3 | LO | 44545.0 | .01183 | .00140 | 202.01 | Q | | |
| 10/01/1993 | Chromium | 3 | LO | 44545.0 | .04006 | .00020 | 202.01 | Q | | |
| 10/01/1993 | Manganese | 3 | LO | 44545.0 | .56213 | .42000 | 202.01 | Q | | |
| 10/01/1993 | Nickel | 3 | LO | 44545.0 | .02097 | .01000 | 202.01 | Q | | |
| 10/01/1993 | Phosphorus | 3 | LO | 44545.0 | 4.97679 | .30000 | 202.01 | Q | | |
| 10/01/1993 | Selenium | 3 | LO | 44545.0 | .03231 | .70000 | 202.01 | Q | U | U |
| 10/01/1993 | Silver | 3 | LO | 44545.0 | .00226 | .30000 | 202.01 | Q | U | UJ |
| 10/01/1993 | Thallium | 3 | LO | 44545.0 | .06462 | .30000 | 202.01 | Q | U | U |
| 10/01/1993 | Vanadium | 3 | LO | 44545.0 | .03973 | .17000 | 202.01 | Q | | |
| 10/01/1993 | Zinc | 3 | LO | 44545.0 | .19418 | .00000 | 202.01 | Q | | |
| 10/01/1993 | Aluminum | 4 | LO | 44405.0 | 3.87641 | 33.30000 | 49.54 | | | |
| 10/01/1993 | Arsenic | 4 | LO | 44405.0 | .00530 | .00057 | 49.54 | | | |
| 10/01/1993 | Barium | 4 | LO | 44405.0 | .06904 | .52000 | 49.54 | | | |
| 10/01/1993 | Beryllium | 4 | LO | 44405.0 | .00030 | .00100 | 49.54 | | U | U |
| 10/01/1993 | Cadmium | 4 | LO | 44405.0 | .00721 | .00140 | 49.54 | | | |
| 10/01/1993 | Chromium | 4 | LO | 44405.0 | .01705 | .00020 | 49.54 | | | |
| 10/01/1993 | Manganese | 4 | LO | 44405.0 | .11392 | .42000 | 49.54 | | | |
| 10/01/1993 | Nickel | 4 | LO | 44405.0 | .00788 | .01000 | 49.54 | | B | |
| 10/01/1993 | Phosphorus | 4 | LO | 44405.0 | 3.48648 | .30000 | 49.54 | | | |
| 10/01/1993 | Selenium | 4 | LO | 44405.0 | .03028 | .70000 | 49.54 | | U | U |
| 10/01/1993 | Silver | 4 | LO | 44405.0 | .00212 | .30000 | 49.54 | | U | UJ |
| 10/01/1993 | Thallium | 4 | LO | 44405.0 | .06055 | .30000 | 49.54 | | U | U |
| 10/01/1993 | Vanadium | 4 | LO | 44405.0 | .01621 | .17000 | 49.54 | | | |
| 10/01/1993 | Zinc | 4 | LO | 44405.0 | .12692 | .00000 | 49.54 | | | |
| 10/01/1993 | Aluminum | 5 | LO | 44130.0 | 2.31754 | 33.30000 | 40.99 | T | | |
| 10/01/1993 | Arsenic | 5 | LO | 44130.0 | .00330 | .00057 | 40.99 | T | | |
| 10/01/1993 | Barium | 5 | LO | 44130.0 | .03277 | .52000 | 40.99 | T | | |
| 10/01/1993 | Beryllium | 5 | LO | 44130.0 | .00050 | .00100 | 40.99 | T | B | |
| 10/01/1993 | Cadmium | 5 | LO | 44130.0 | .01986 | .00140 | 40.99 | T | | |
| 10/01/1993 | Chromium | 5 | LO | 44130.0 | .01610 | .00020 | 40.99 | T | | |
| 10/01/1993 | Manganese | 5 | LO | 44130.0 | .06336 | .42000 | 40.99 | T | | |
| 10/01/1993 | Nickel | 5 | LO | 44130.0 | .01063 | .01000 | 40.99 | T | B | |
| 10/01/1993 | Phosphorus | 5 | LO | 44130.0 | 4.84058 | .30000 | 40.99 | T | | |
| 10/01/1993 | Selenium | 5 | LO | 44130.0 | .04521 | .70000 | 40.99 | T | U | U |
| 10/01/1993 | Silver | 5 | LO | 44130.0 | .00316 | .30000 | 40.99 | T | U | UJ |
| 10/01/1993 | Thallium | 5 | LO | 44130.0 | .09042 | .30000 | 40.99 | T | U | U |
| 10/01/1993 | Vanadium | 5 | LO | 44130.0 | .01781 | .17000 | 40.99 | T | | |
| 10/01/1993 | Zinc | 5 | LO | 44130.0 | .07192 | .00000 | 40.99 | T | B | |
| 10/01/1993 | Aluminum | 6 | LO | 45250.0 | 2.68925 | 33.30000 | 31.89 | | | |
| 10/01/1993 | Arsenic | 6 | LO | 45250.0 | .00347 | .00057 | 31.89 | | | |
| 10/01/1993 | Barium | 6 | LO | 45250.0 | .03965 | .52000 | 31.89 | | | |
| 10/01/1993 | Beryllium | 6 | LO | 45250.0 | .00029 | .00100 | 31.89 | | U | U |
| 10/01/1993 | Cadmium | 6 | LO | 45250.0 | .00247 | .00140 | 31.89 | | B | |
| 10/01/1993 | Chromium | 6 | LO | 45250.0 | .00655 | .00020 | 31.89 | | | |
| 10/01/1993 | Manganese | 6 | LO | 45250.0 | .09061 | .42000 | 31.89 | | | |
| 10/01/1993 | Nickel | 6 | LO | 45250.0 | .00732 | .01000 | 31.89 | | B | |
| 10/01/1993 | Phosphorus | 6 | LO | 45250.0 | .78285 | .30000 | 31.89 | | | |
| 10/01/1993 | Selenium | 6 | LO | 45250.0 | .02870 | .70000 | 31.89 | | U | U |
| 10/01/1993 | Silver | 6 | LO | 45250.0 | .00201 | .30000 | 31.89 | | U | UJ |
| 10/01/1993 | Thallium | 6 | LO | 45250.0 | .05741 | .30000 | 31.89 | | U | U |
| 10/01/1993 | Vanadium | 6 | LO | 45250.0 | .00790 | .17000 | 31.89 | | B | |

| Sample Date | Chemical Name | Site No | Typ | Run Time (min.) | Chem Conc. (ug/m3) | EPA Scr. L(ug/m3) | Part.C. (ug/m3) | Grav. Val | Qual. Lb | Qual. Val |
|---|---|---|---|---|---|---|---|---|---|---|
| 10/01/1993 | Zinc | 6 | LO | 45250.0 | .03675 | .00000 | 31.89 | | B | |
| 10/01/1993 | Aluminum | 9 | LO | 44545.0 | 2.27685 | 33.30000 | 142.72 | Q | | |
| 10/01/1993 | Arsenic | 9 | LO | 44545.0 | .00109 | .00057 | 142.72 | Q | | |
| 10/01/1993 | Barium | 9 | LO | 44545.0 | .02492 | .52000 | 142.72 | Q | | |
| 10/01/1993 | Beryllium | 9 | LO | 44545.0 | .00015 | .00100 | 142.72 | Q | B | |
| 10/01/1993 | Cadmium | 9 | LO | 44545.0 | .00196 | .00140 | 142.72 | Q | | |
| 10/01/1993 | Chromium | 9 | LO | 44545.0 | .00109 | .00020 | 142.72 | Q | | U |
| 10/01/1993 | Manganese | 9 | LO | 44545.0 | .07052 | .42000 | 142.72 | Q | | |
| 10/01/1993 | Nickel | 9 | LO | 44545.0 | .00231 | .01000 | 142.72 | Q | B | |
| 10/01/1993 | Phosphorus | 9 | LO | 44545.0 | .66089 | .30000 | 142.72 | Q | | |
| 10/01/1993 | Selenium | 9 | LO | 44545.0 | .00564 | .70000 | 142.72 | Q | B | |
| 10/01/1993 | Silver | 9 | LO | 44545.0 | .00038 | .30000 | 142.72 | Q | U | U |
| 10/01/1993 | Thallium | 9 | LO | 44545.0 | .01075 | .30000 | 142.72 | Q | U | U |
| 10/01/1993 | Vanadium | 9 | LO | 44545.0 | .00575 | .17000 | 142.72 | Q | | |
| 10/01/1993 | Zinc | 9 | LO | 44545.0 | .02599 | .00000 | 142.72 | Q | | |
| 11/01/1993 | Aluminum | 3 | LO | 43383.0 | .92574 | 33.30000 | 71.80 | | | |
| 11/01/1993 | Arsenic | 3 | LO | 43383.0 | .00114 | .00057 | 71.80 | | | |
| 11/01/1993 | Barium | 3 | LO | 43383.0 | .01674 | .52000 | 71.80 | | | |
| 11/01/1993 | Beryllium | 3 | LO | 43383.0 | .00008 | .00100 | 71.80 | | B | |
| 11/01/1993 | Cadmium | 3 | LO | 43383.0 | .00510 | .00140 | 71.80 | | | |
| 11/01/1993 | Chromium | 3 | LO | 43383.0 | .00589 | .00020 | 71.80 | | | |
| 11/01/1993 | Manganese | 3 | LO | 43383.0 | .03180 | .42000 | 71.80 | | | |
| 11/01/1993 | Nickel | 3 | LO | 43383.0 | .00258 | .01000 | 71.80 | | B | |
| 11/01/1993 | Phosphorus | 3 | LO | 43383.0 | 1.03039 | .30000 | 71.80 | | | |
| 11/01/1993 | Selenium | 3 | LO | 43383.0 | .00644 | .70000 | 71.80 | | U | U |
| 11/01/1993 | Silver | 3 | LO | 43383.0 | .00048 | .30000 | 71.80 | | B | |
| 11/01/1993 | Thallium | 3 | LO | 43383.0 | .01352 | .30000 | 71.80 | | B | |
| 11/01/1993 | Vanadium | 3 | LO | 43383.0 | .00634 | .17000 | 71.80 | | | |
| 11/01/1993 | Zinc | 3 | LO | 43383.0 | .03904 | .00000 | 71.80 | | | |
| 11/01/1993 | Aluminum | 4 | LO | 43444.0 | .44109 | 33.30000 | 46.79 | | | |
| 11/01/1993 | Arsenic | 4 | LO | 43444.0 | .00089 | .00057 | 46.79 | | | |
| 11/01/1993 | Barium | 4 | LO | 43444.0 | .01026 | .52000 | 46.79 | | | |
| 11/01/1993 | Beryllium | 4 | LO | 43444.0 | .00006 | .00100 | 46.79 | | U | U |
| 11/01/1993 | Cadmium | 4 | LO | 43444.0 | .00167 | .00140 | 46.79 | | | |
| 11/01/1993 | Chromium | 4 | LO | 43444.0 | .00293 | .00020 | 46.79 | | | |
| 11/01/1993 | Manganese | 4 | LO | 43444.0 | .01884 | .42000 | 46.79 | | | |
| 11/01/1993 | Nickel | 4 | LO | 43444.0 | .00141 | .01000 | 46.79 | | B | |
| 11/01/1993 | Phosphorus | 4 | LO | 43444.0 | .40586 | .30000 | 46.79 | | | |
| 11/01/1993 | Selenium | 4 | LO | 43444.0 | .00613 | .70000 | 46.79 | | U | U |
| 11/01/1993 | Silver | 4 | LO | 43444.0 | .00043 | .30000 | 46.79 | | B | |
| 11/01/1993 | Thallium | 4 | LO | 43444.0 | .01225 | .30000 | 46.79 | | U | U |
| 11/01/1993 | Vanadium | 4 | LO | 43444.0 | .00270 | .17000 | 46.79 | | | |
| 11/01/1993 | Zinc | 4 | LO | 43444.0 | .02389 | .00000 | 46.79 | | B | |
| 11/01/1993 | Aluminum | 5 | LO | 43375.0 | .60094 | 33.30000 | 51.72 | | | |
| 11/01/1993 | Arsenic | 5 | LO | 43375.0 | .00068 | .00057 | 51.72 | | | |
| 11/01/1993 | Barium | 5 | LO | 43375.0 | .00852 | .52000 | 51.72 | | | |
| 11/01/1993 | Beryllium | 5 | LO | 43375.0 | .00006 | .00100 | 51.72 | | B | |
| 11/01/1993 | Cadmium | 5 | LO | 43375.0 | .00238 | .00140 | 51.72 | | | |
| 11/01/1993 | Chromium | 5 | LO | 43375.0 | .00347 | .00020 | 51.72 | | | |
| 11/01/1993 | Manganese | 5 | LO | 43375.0 | .02066 | .42000 | 51.72 | | | |
| 11/01/1993 | Nickel | 5 | LO | 43375.0 | .00136 | .01000 | 51.72 | | B | |
| 11/01/1993 | Phosphorus | 5 | LO | 43375.0 | .79452 | .30000 | 51.72 | | | |
| 11/01/1993 | Selenium | 5 | LO | 43375.0 | .00578 | .70000 | 51.72 | | U | U |
| 11/01/1993 | Silver | 5 | LO | 43375.0 | .00040 | .30000 | 51.72 | | U | U |
| 11/01/1993 | Thallium | 5 | LO | 43375.0 | .01156 | .30000 | 51.72 | | U | U |

| Sample Date | Chemical Name | Site No | Typ | Run Time (min.) | Chem Conc. (ug/m3) | EPA Scr. L(ug/m3) | Part.C. (ug/m3) | Grav. Val | Qual. Lb | Qual. Val |
|---|---|---|---|---|---|---|---|---|---|---|
| 11/01/1993 | Vanadium | 5 | LO | 43375.0 | .00391 | .17000 | 51.72 | | | |
| 11/01/1993 | Zinc | 5 | LO | 43375.0 | .01777 | .00000 | 51.72 | | B | |
| 11/01/1993 | Aluminum | 6 | LO | 43247.0 | .52597 | 33.30000 | 26.65 | | | |
| 11/01/1993 | Arsenic | 6 | LO | 43247.0 | .00066 | .00057 | 26.65 | | | |
| 11/01/1993 | Barium | 6 | LO | 43247.0 | .00834 | .52000 | 26.65 | | | |
| 11/01/1993 | Beryllium | 6 | LO | 43247.0 | .00006 | .00100 | 26.65 | | U | U |
| 11/01/1993 | Cadmium | 6 | LO | 43247.0 | .00077 | .00140 | 26.65 | | | |
| 11/01/1993 | Chromium | 6 | LO | 43247.0 | .00160 | .00020 | 26.65 | | | |
| 11/01/1993 | Manganese | 6 | LO | 43247.0 | .02043 | .42000 | 26.65 | | | |
| 11/01/1993 | Nickel | 6 | LO | 43247.0 | .00113 | .01000 | 26.65 | | U | U |
| 11/01/1993 | Phosphorus | 6 | LO | 43247.0 | .22057 | .30000 | 26.65 | | | |
| 11/01/1993 | Selenium | 6 | LO | 43247.0 | .00566 | .70000 | 26.65 | | U | U |
| 11/01/1993 | Silver | 6 | LO | 43247.0 | .00040 | .30000 | 26.65 | | U | U |
| 11/01/1993 | Thallium | 6 | LO | 43247.0 | .01131 | .30000 | 26.65 | | U | U |
| 11/01/1993 | Vanadium | 6 | LO | 43247.0 | .00207 | .17000 | 26.65 | | | |
| 11/01/1993 | Zinc | 6 | LO | 43247.0 | .01032 | .00000 | 26.65 | | B | |
| 11/01/1993 | Aluminum | 9 | LO | 43384.0 | .74860 | 33.30000 | 53.81 | | | |
| 11/01/1993 | Arsenic | 9 | LO | 43384.0 | .00089 | .00057 | 53.81 | | | |
| 11/01/1993 | Barium | 9 | LO | 43384.0 | .01321 | .52000 | 53.81 | | | |
| 11/01/1993 | Beryllium | 9 | LO | 43384.0 | .00007 | .00100 | 53.81 | | B | |
| 11/01/1993 | Cadmium | 9 | LO | 43384.0 | .00349 | .00140 | 53.81 | | | |
| 11/01/1993 | Chromium | 9 | LO | 43384.0 | .00441 | .00020 | 53.81 | | | |
| 11/01/1993 | Manganese | 9 | LO | 43384.0 | .02422 | .42000 | 53.81 | | | |
| 11/01/1993 | Nickel | 9 | LO | 43384.0 | .00164 | .01000 | 53.81 | | B | |
| 11/01/1993 | Phosphorus | 9 | LO | 43384.0 | .77685 | .30000 | 53.81 | | | |
| 11/01/1993 | Selenium | 9 | LO | 43384.0 | .00565 | .70000 | 53.81 | | U | U |
| 11/01/1993 | Silver | 9 | LO | 43384.0 | .00060 | .30000 | 53.81 | | B | |
| 11/01/1993 | Thallium | 9 | LO | 43384.0 | .01130 | .30000 | 53.81 | | U | U |
| 11/01/1993 | Vanadium | 9 | LO | 43384.0 | .00460 | .17000 | 53.81 | | | |
| 11/01/1993 | Zinc | 9 | LO | 43384.0 | .02917 | .00000 | 53.81 | | | |
| 12/02/1993 | Aluminum | 3 | LO | 46047.0 | .17394 | 33.30000 | 34.86 | | | |
| 12/02/1993 | Arsenic | 3 | LO | 46047.0 | .00049 | .00057 | 34.86 | | | |
| 12/02/1993 | Barium | 3 | LO | 46047.0 | .00586 | .52000 | 34.86 | | | |
| 12/02/1993 | Beryllium | 3 | LO | 46047.0 | .00006 | .00100 | 34.86 | | U | U |
| 12/02/1993 | Cadmium | 3 | LO | 46047.0 | .00205 | .00140 | 34.86 | | | |
| 12/02/1993 | Chromium | 3 | LO | 46047.0 | .00795 | .00020 | 34.86 | | | |
| 12/02/1993 | Manganese | 3 | LO | 46047.0 | .00737 | .42000 | 34.86 | | | |
| 12/02/1993 | Nickel | 3 | LO | 46047.0 | .00217 | .01000 | 34.86 | | B | |
| 12/02/1993 | Phosphorus | 3 | LO | 46047.0 | .62439 | .30000 | 34.86 | | | |
| 12/02/1993 | Selenium | 3 | LO | 46047.0 | .00595 | .70000 | 34.86 | | U | U |
| 12/02/1993 | Silver | 3 | LO | 46047.0 | .00042 | .30000 | 34.86 | | U | U |
| 12/02/1993 | Thallium | 3 | LO | 46047.0 | .01189 | .30000 | 34.86 | | U | U |
| 12/02/1993 | Vanadium | 3 | LO | 46047.0 | .00937 | .17000 | 34.86 | | | |
| 12/02/1993 | Zinc | 3 | LO | 46047.0 | .01628 | .00000 | 34.86 | | B | |
| 12/02/1993 | Aluminum | 4 | LO | 46020.0 | .20700 | 33.30000 | 33.79 | P | | |
| 12/02/1993 | Arsenic | 4 | LO | 46020.0 | .00047 | .00057 | 33.79 | P | | |
| 12/02/1993 | Barium | 4 | LO | 46020.0 | .00672 | .52000 | 33.79 | P | | |
| 12/02/1993 | Beryllium | 4 | LO | 46020.0 | .00006 | .00100 | 33.79 | P | U | U |
| 12/02/1993 | Cadmium | 4 | LO | 46020.0 | .00133 | .00140 | 33.79 | P | | U |
| 12/02/1993 | Chromium | 4 | LO | 46020.0 | .00334 | .00020 | 33.79 | P | | |
| 12/02/1993 | Manganese | 4 | LO | 46020.0 | .00960 | .42000 | 33.79 | P | | |
| 12/02/1993 | Nickel | 4 | LO | 46020.0 | .00128 | .01000 | 33.79 | P | B | |
| 12/02/1993 | Phosphorus | 4 | LO | 46020.0 | .28881 | .30000 | 33.79 | P | | |
| 12/02/1993 | Selenium | 4 | LO | 46020.0 | .00569 | .70000 | 33.79 | P | U | U |
| 12/02/1993 | Silver | 4 | LO | 46020.0 | .00040 | .30000 | 33.79 | P | U | U |

| Sample Date | Chemical Name | Site No | Typ | Run Time (min.) | Chem Conc. (ug/m3) | EPA Scr. Part.C. L(ug/m3) | Grav. (ug/m3) | Qual. Val | Lb | Val |
|---|---|---|---|---|---|---|---|---|---|---|
| 12/02/1993 | Thallium | 4 | LO | 46020.0 | .01138 | .30000 | 33.79 | P | U | U |
| 12/02/1993 | Vanadium | 4 | LO | 46020.0 | .00209 | .17000 | 33.79 | P | | |
| 12/02/1993 | Zinc | 4 | LO | 46020.0 | .01921 | .00000 | 33.79 | P | B | |
| 12/02/1993 | Aluminum | 5 | LO | 46257.0 | .16348 | 33.30000 | 36.93 | | | |
| 12/02/1993 | Arsenic | 5 | LO | 46257.0 | .00049 | .00057 | 36.93 | | | |
| 12/02/1993 | Barium | 5 | LO | 46257.0 | .00315 | .52000 | 36.93 | | | U |
| 12/02/1993 | Beryllium | 5 | LO | 46257.0 | .00005 | .00100 | 36.93 | | U | U |
| 12/02/1993 | Cadmium | 5 | LO | 46257.0 | .00293 | .00140 | 36.93 | | | |
| 12/02/1993 | Chromium | 5 | LO | 46257.0 | .01345 | .00020 | 36.93 | | | |
| 12/02/1993 | Manganese | 5 | LO | 46257.0 | .00511 | .42000 | 36.93 | | | |
| 12/02/1993 | Nickel | 5 | LO | 46257.0 | .00336 | .01000 | 36.93 | | | |
| 12/02/1993 | Phosphorus | 5 | LO | 46257.0 | .95530 | .30000 | 36.93 | | | |
| 12/02/1993 | Selenium | 5 | LO | 46257.0 | .00592 | .70000 | 36.93 | | B | U |
| 12/02/1993 | Silver | 5 | LO | 46257.0 | .00038 | .30000 | 36.93 | | U | U |
| 12/02/1993 | Thallium | 5 | LO | 46257.0 | .01076 | .30000 | 36.93 | | U | U |
| 12/02/1993 | Vanadium | 5 | LO | 46257.0 | .01682 | .17000 | 36.93 | | | |
| 12/02/1993 | Zinc | 5 | LO | 46257.0 | .01352 | .00000 | 36.93 | | B | |
| 12/02/1993 | Aluminum | 6 | LO | 46346.0 | .06001 | 33.30000 | 14.81 | P | | |
| 12/02/1993 | Arsenic | 6 | LO | 46346.0 | .00031 | .00057 | 14.81 | P | | |
| 12/02/1993 | Barium | 6 | LO | 46346.0 | .00213 | .52000 | 14.81 | P | | U |
| 12/02/1993 | Beryllium | 6 | LO | 46346.0 | .00005 | .00100 | 14.81 | P | U | U |
| 12/02/1993 | Cadmium | 6 | LO | 46346.0 | .00089 | .00140 | 14.81 | P | | U |
| 12/02/1993 | Chromium | 6 | LO | 46346.0 | .00080 | .00020 | 14.81 | P | | |
| 12/02/1993 | Manganese | 6 | LO | 46346.0 | .00315 | .42000 | 14.81 | P | | |
| 12/02/1993 | Nickel | 6 | LO | 46346.0 | .00105 | .01000 | 14.81 | P | U | U |
| 12/02/1993 | Phosphorus | 6 | LO | 46346.0 | .16977 | .30000 | 14.81 | P | | U |
| 12/02/1993 | Selenium | 6 | LO | 46346.0 | .00526 | .70000 | 14.81 | P | U | U |
| 12/02/1993 | Silver | 6 | LO | 46346.0 | .00037 | .30000 | 14.81 | P | U | U |
| 12/02/1993 | Thallium | 6 | LO | 46346.0 | .01053 | .30000 | 14.81 | P | U | U |
| 12/02/1993 | Vanadium | 6 | LO | 46346.0 | .00088 | .17000 | 14.81 | P | B | |
| 12/02/1993 | Zinc | 6 | LO | 46346.0 | .00574 | .00000 | 14.81 | P | B | |
| 12/02/1993 | Aluminum | 9 | LO | 46047.0 | .15858 | 33.30000 | 31.19 | | | |
| 12/02/1993 | Arsenic | 9 | LO | 46047.0 | .00041 | .00057 | 31.19 | | | |
| 12/02/1993 | Barium | 9 | LO | 46047.0 | .00524 | .52000 | 31.19 | | | |
| 12/02/1993 | Beryllium | 9 | LO | 46047.0 | .00006 | .00100 | 31.19 | | B | |
| 12/02/1993 | Cadmium | 9 | LO | 46047.0 | .00204 | .00140 | 31.19 | | | U |
| 12/02/1993 | Chromium | 9 | LO | 46047.0 | .00629 | .00020 | 31.19 | | | |
| 12/02/1993 | Manganese | 9 | LO | 46047.0 | .00681 | .42000 | 31.19 | | | |
| 12/02/1993 | Nickel | 9 | LO | 46047.0 | .00239 | .01000 | 31.19 | | B | |
| 12/02/1993 | Phosphorus | 9 | LO | 46047.0 | .55568 | .30000 | 31.19 | | | |
| 12/02/1993 | Selenium | 9 | LO | 46047.0 | .00524 | .70000 | 31.19 | | U | U |
| 12/02/1993 | Silver | 9 | LO | 46047.0 | .00037 | .30000 | 31.19 | | U | U |
| 12/02/1993 | Thallium | 9 | LO | 46047.0 | .01048 | .30000 | 31.19 | | U | U |
| 12/02/1993 | Vanadium | 9 | LO | 46047.0 | .00793 | .17000 | 31.19 | | | |
| 12/02/1993 | Zinc | 9 | LO | 46047.0 | .01553 | .00000 | 31.19 | | B | |
| 12/02/1993 | Aluminum | L | BL | | .00398 | 33.30000 | -.21 | | U | U |
| 12/02/1993 | Arsenic | L | BL | | .00006 | .00057 | -.21 | | U | U |
| 12/02/1993 | Barium | L | BL | | .00057 | .52000 | -.21 | | U | U |
| 12/02/1993 | Beryllium | L | BL | | .00006 | .00100 | -.21 | | U | U |
| 12/02/1993 | Cadmium | L | BL | | .00046 | .00140 | -.21 | | U | U |
| 12/02/1993 | Chromium | L | BL | | .00017 | .00020 | -.21 | | | |
| 12/02/1993 | Manganese | L | BL | | .00017 | .42000 | -.21 | | U | U |
| 12/02/1993 | Nickel | L | BL | | .00114 | .01000 | -.21 | | U | U |
| 12/02/1993 | Phosphorus | L | BL | | .04055 | .30000 | -.21 | | B | |
| 12/02/1993 | Selenium | L | BL | | .00569 | .70000 | -.21 | | U | U |

| Sample Date | Chemical Name | Site No | Typ | Run Time (min.) | Chem Conc. (ug/m3) | EPA Scr. L(ug/m3) | Part.C. (ug/m3) | Grav. Val | Qual. Lb | Qual. Val |
|---|---|---|---|---|---|---|---|---|---|---|
| 12/02/1993 | Silver | L | BL | | .00040 | .30000 | -.21 | | U | U |
| 12/02/1993 | Thallium | L | BL | | .01138 | .30000 | -.21 | | U | U |
| 12/02/1993 | Vanadium | L | BL | | .00057 | .17000 | -.21 | | U | U |
| 12/02/1993 | Zinc | L | BL | | .00028 | .00000 | -.21 | | U | U |
| 12/15/1993 | Aluminum | L | BL | | .00481 | 33.30000 | -.28 | | B | |
| 12/15/1993 | Arsenic | L | BL | | .00006 | .00057 | -.28 | | U | U |
| 12/15/1993 | Barium | L | BL | | .00057 | .52000 | -.28 | | U | U |
| 12/15/1993 | Beryllium | L | BL | | .00006 | .00100 | -.28 | | U | U |
| 12/15/1993 | Cadmium | L | BL | | .00046 | .00140 | -.28 | | U | U |
| 12/15/1993 | Chromium | L | BL | | .00016 | .00020 | -.28 | | | |
| 12/15/1993 | Manganese | L | BL | | .00017 | .42000 | -.28 | | U | U |
| 12/15/1993 | Nickel | L | BL | | .00114 | .01000 | -.28 | | U | U |
| 12/15/1993 | Phosphorus | L | BL | | .04894 | .30000 | -.28 | | B | |
| 12/15/1993 | Selenium | L | BL | | .00569 | .70000 | -.28 | | U | U |
| 12/15/1993 | Silver | L | BL | | .00040 | .30000 | -.28 | | U | U |
| 12/15/1993 | Thallium | L | BL | | .01138 | .30000 | -.28 | | U | U |
| 12/15/1993 | Vanadium | L | BL | | .00057 | .17000 | -.28 | | U | U |
| 12/15/1993 | Zinc | L | BL | | .00033 | .00000 | -.28 | | B | |
| 01/03/1994 | Aluminum | 3 | LO | 41757.0 | .26926 | 33.30000 | 33.66 | | | |
| 01/03/1994 | Arsenic | 3 | LO | 41757.0 | .00067 | .00057 | 33.66 | | | |
| 01/03/1994 | Barium | 3 | LO | 41757.0 | .00722 | .52000 | 33.66 | | | |
| 01/03/1994 | Beryllium | 3 | LO | 41757.0 | .00009 | .00100 | 33.66 | | B | |
| 01/03/1994 | Cadmium | 3 | LO | 41757.0 | .00199 | .00140 | 33.66 | | | |
| 01/03/1994 | Chromium | 3 | LO | 41757.0 | .01461 | .00020 | 33.66 | | | |
| 01/03/1994 | Manganese | 3 | LO | 41757.0 | .01494 | .42000 | 33.66 | | | |
| 01/03/1994 | Nickel | 3 | LO | 41757.0 | .00338 | .01000 | 33.66 | | B | |
| 01/03/1994 | Phosphorus | 3 | LO | 41757.0 | .70271 | .30000 | 33.66 | | | |
| 01/03/1994 | Selenium | 3 | LO | 41757.0 | .00657 | .70000 | 33.66 | | U | U |
| 01/03/1994 | Silver | 3 | LO | 41757.0 | .00046 | .30000 | 33.66 | | U | U |
| 01/03/1994 | Thallium | 3 | LO | 41757.0 | .01313 | .30000 | 33.66 | | U | U |
| 01/03/1994 | Vanadium | 3 | LO | 41757.0 | .01133 | .17000 | 33.66 | | | |
| 01/03/1994 | Zinc | 3 | LO | 41757.0 | .02184 | .00000 | 33.66 | | B | |
| 01/03/1994 | Aluminum | 4 | LO | 41730.0 | .31600 | 33.30000 | 38.03 | | | |
| 01/03/1994 | Arsenic | 4 | LO | 41730.0 | .00067 | .00057 | 38.03 | | | |
| 01/03/1994 | Barium | 4 | LO | 41730.0 | .00831 | .52000 | 38.03 | | | |
| 01/03/1994 | Beryllium | 4 | LO | 41730.0 | .00011 | .00100 | 38.03 | | B | |
| 01/03/1994 | Cadmium | 4 | LO | 41730.0 | .00114 | .00140 | 38.03 | | | |
| 01/03/1994 | Chromium | 4 | LO | 41730.0 | .00431 | .00020 | 38.03 | | | |
| 01/03/1994 | Manganese | 4 | LO | 41730.0 | .01357 | .42000 | 38.03 | | | |
| 01/03/1994 | Nickel | 4 | LO | 41730.0 | .00173 | .01000 | 38.03 | | B | |
| 01/03/1994 | Phosphorus | 4 | LO | 41730.0 | .32619 | .30000 | 38.03 | | | |
| 01/03/1994 | Selenium | 4 | LO | 41730.0 | .00627 | .70000 | 38.03 | | U | U |
| 01/03/1994 | Silver | 4 | LO | 41730.0 | .00044 | .30000 | 38.03 | | U | U |
| 01/03/1994 | Thallium | 4 | LO | 41730.0 | .01255 | .30000 | 38.03 | | U | U |
| 01/03/1994 | Vanadium | 4 | LO | 41730.0 | .00314 | .17000 | 38.03 | | | |
| 01/03/1994 | Zinc | 4 | LO | 41730.0 | .01984 | .00000 | 38.03 | | B | |
| 01/03/1994 | Aluminum | 5 | LO | 41685.0 | .19115 | 33.30000 | 30.80 | | | |
| 01/03/1994 | Arsenic | 5 | LO | 41685.0 | .00051 | .00057 | 30.80 | | | |
| 01/03/1994 | Barium | 5 | LO | 41685.0 | .00449 | .52000 | 30.80 | | | |
| 01/03/1994 | Beryllium | 5 | LO | 41685.0 | .00006 | .00100 | 30.80 | | U | U |
| 01/03/1994 | Cadmium | 5 | LO | 41685.0 | .00159 | .00140 | 30.80 | | | |
| 01/03/1994 | Chromium | 5 | LO | 41685.0 | .00619 | .00020 | 30.80 | | | |
| 01/03/1994 | Manganese | 5 | LO | 41685.0 | .00692 | .42000 | 30.80 | | | |
| 01/03/1994 | Nickel | 5 | LO | 41685.0 | .00185 | .01000 | 30.80 | | B | |
| 01/03/1994 | Phosphorus | 5 | LO | 41685.0 | .91022 | .30000 | 30.80 | | | |

| Sample Date | Chemical Name | Site No | Typ | Run Time (min.) | Chem Conc. (ug/m3) | EPA Scr. L(ug/m3) | Part.C. (ug/m3) | Grav. Val | Qual. Lb | Qual. Val |
|---|---|---|---|---|---|---|---|---|---|---|
| 01/03/1994 | Selenium | 5 | LO | 41685.0 | .00607 | .70000 | 30.80 | | U | U |
| 01/03/1994 | Silver | 5 | LO | 41685.0 | .00042 | .30000 | 30.80 | | U | U |
| 01/03/1994 | Thallium | 5 | LO | 41685.0 | .01214 | .30000 | 30.80 | | U | U |
| 01/03/1994 | Vanadium | 5 | LO | 41685.0 | .00577 | .17000 | 30.80 | | | |
| 01/03/1994 | Zinc | 5 | LO | 41685.0 | .01358 | .00000 | 30.80 | | B | |
| 01/03/1994 | Aluminum | 6 | LO | 41717.0 | .08763 | 33.30000 | 12.67 | | | |
| 01/03/1994 | Arsenic | 6 | LO | 41717.0 | .00041 | .00057 | 12.67 | | | |
| 01/03/1994 | Barium | 6 | LO | 41717.0 | .00283 | .52000 | 12.67 | | | |
| 01/03/1994 | Beryllium | 6 | LO | 41717.0 | .00006 | .00100 | 12.67 | | U | U |
| 01/03/1994 | Cadmium | 6 | LO | 41717.0 | .00047 | .00140 | 12.67 | | U | U |
| 01/03/1994 | Chromium | 6 | LO | 41717.0 | .00065 | .00020 | 12.67 | | | |
| 01/03/1994 | Manganese | 6 | LO | 41717.0 | .00369 | .42000 | 12.67 | | | |
| 01/03/1994 | Nickel | 6 | LO | 41717.0 | .00118 | .01000 | 12.67 | | U | U |
| 01/03/1994 | Phosphorus | 6 | LO | 41717.0 | .08543 | .30000 | 12.67 | | B | |
| 01/03/1994 | Selenium | 6 | LO | 41717.0 | .00589 | .70000 | 12.67 | | U | U |
| 01/03/1994 | Silver | 6 | LO | 41717.0 | .00041 | .30000 | 12.67 | | U | U |
| 01/03/1994 | Thallium | 6 | LO | 41717.0 | .01178 | .30000 | 12.67 | | U | U |
| 01/03/1994 | Vanadium | 6 | LO | 41717.0 | .00059 | .17000 | 12.67 | | U | U |
| 01/03/1994 | Zinc | 6 | LO | 41717.0 | .00460 | .00000 | 12.67 | | B | |
| 01/03/1994 | Aluminum | 9 | LO | 41772.0 | .23393 | 33.30000 | 29.64 | | | |
| 01/03/1994 | Arsenic | 9 | LO | 41772.0 | .00056 | .00057 | 29.64 | | | |
| 01/03/1994 | Barium | 9 | LO | 41772.0 | .00620 | .52000 | 29.64 | | | |
| 01/03/1994 | Beryllium | 9 | LO | 41772.0 | .00007 | .00100 | 29.64 | | B | |
| 01/03/1994 | Cadmium | 9 | LO | 41772.0 | .00142 | .00140 | 29.64 | | | |
| 01/03/1994 | Chromium | 9 | LO | 41772.0 | .00962 | .00020 | 29.64 | | | |
| 01/03/1994 | Manganese | 9 | LO | 41772.0 | .01062 | .42000 | 29.64 | | | |
| 01/03/1994 | Nickel | 9 | LO | 41772.0 | .00247 | .01000 | 29.64 | | B | |
| 01/03/1994 | Phosphorus | 9 | LO | 41772.0 | .61424 | .30000 | 29.64 | | | |
| 01/03/1994 | Selenium | 9 | LO | 41772.0 | .00574 | .70000 | 29.64 | | U | U |
| 01/03/1994 | Silver | 9 | LO | 41772.0 | .00040 | .30000 | 29.64 | | U | U |
| 01/03/1994 | Thallium | 9 | LO | 41772.0 | .01148 | .30000 | 29.64 | | U | U |
| 01/03/1994 | Vanadium | 9 | LO | 41772.0 | .00933 | .17000 | 29.64 | | | |
| 01/03/1994 | Zinc | 9 | LO | 41772.0 | .01780 | .00000 | 29.64 | | B | |
| 01/03/1994 | Aluminum | L | BL | | .00696 | 33.30000 | -.44 | | B | U |
| 01/03/1994 | Arsenic | L | BL | | .00006 | .00057 | -.44 | | U | U |
| 01/03/1994 | Barium | L | BL | | .00058 | .52000 | -.44 | | U | U |
| 01/03/1994 | Beryllium | L | BL | | .00006 | .00100 | -.44 | | U | U |
| 01/03/1994 | Cadmium | L | BL | | .00047 | .00140 | -.44 | | U | U |
| 01/03/1994 | Chromium | L | BL | | .00019 | .00020 | -.44 | | | |
| 01/03/1994 | Manganese | L | BL | | .00018 | .42000 | -.44 | | U | U |
| 01/03/1994 | Nickel | L | BL | | .00117 | .01000 | -.44 | | U | U |
| 01/03/1994 | Phosphorus | L | BL | | .04299 | .30000 | -.44 | | B | |
| 01/03/1994 | Selenium | L | BL | | .00585 | .70000 | -.44 | | U | U |
| 01/03/1994 | Silver | L | BL | | .00041 | .30000 | -.44 | | U | U |
| 01/03/1994 | Thallium | L | BL | | .01170 | .30000 | -.44 | | U | U |
| 01/03/1994 | Vanadium | L | BL | | .00058 | .17000 | -.44 | | U | U |
| 01/03/1994 | Zinc | L | BL | | .00040 | .00000 | -.44 | | B | |
| 02/01/1994 | Arsenic | 3 | LO | 41700.0 | .00051 | .00057 | 29.21 | | | |
| 02/01/1994 | Cadmium | 3 | LO | 41700.0 | .00252 | .00140 | 29.21 | | | |
| 02/01/1994 | Chromium | 3 | LO | 41700.0 | .00377 | .00020 | 29.21 | | | |
| 02/01/1994 | Phosphorus | 3 | LO | 41700.0 | .54689 | .30000 | 29.21 | | | J |
| 02/01/1994 | Vanadium | 3 | LO | 41700.0 | .00330 | .17000 | 29.21 | | | |
| 02/01/1994 | Zinc | 3 | LO | 41700.0 | .01776 | .00000 | 29.21 | | B | J |
| 02/01/1994 | Arsenic | 4 | LO | 41700.0 | .00065 | .00057 | 29.84 | | | |
| 02/01/1994 | Cadmium | 4 | LO | 41700.0 | .00113 | .00140 | 29.84 | | | |

| Sample Date | Chemical Name | Site No | Typ | Run Time (min.) | Chem Conc. (ug/m3) | EPA Scr. L(ug/m3) | Part.C. (ug/m3) | Grav. Val | Qual. Lb | Qual. Val |
|---|---|---|---|---|---|---|---|---|---|---|
| 02/01/1994 | Chromium | 4 | LO | 41700.0 | .00289 | .00020 | 29.84 | | | |
| 02/01/1994 | Phosphorus | 4 | LO | 41700.0 | .24428 | .30000 | 29.84 | | | UJ |
| 02/01/1994 | Vanadium | 4 | LO | 41700.0 | .00207 | .17000 | 29.84 | | | |
| 02/01/1994 | Zinc | 4 | LO | 41700.0 | .01599 | .00000 | 29.84 | | B | J |
| 02/01/1994 | Arsenic | 5 | LO | 41880.0 | .00045 | .00057 | 27.42 | | | |
| 02/01/1994 | Cadmium | 5 | LO | 41880.0 | .00205 | .00140 | 27.42 | | | |
| 02/01/1994 | Chromium | 5 | LO | 41880.0 | .00552 | .00020 | 27.42 | | | |
| 02/01/1994 | Phosphorus | 5 | LO | 41880.0 | .75608 | .30000 | 27.42 | | | J |
| 02/01/1994 | Vanadium | 5 | LO | 41880.0 | .00526 | .17000 | 27.42 | | | |
| 02/01/1994 | Zinc | 5 | LO | 41880.0 | .01328 | .00000 | 27.42 | | B | J |
| 02/01/1994 | Arsenic | 6 | LO | 41755.0 | .00028 | .00057 | 8.78 | | | |
| 02/01/1994 | Cadmium | 6 | LO | 41755.0 | .00066 | .00140 | 8.78 | | | |
| 02/01/1994 | Chromium | 6 | LO | 41755.0 | .00061 | .00020 | 8.78 | | | U |
| 02/01/1994 | Phosphorus | 6 | LO | 41755.0 | .08255 | .30000 | 8.78 | | B | UJ |
| 02/01/1994 | Vanadium | 6 | LO | 41755.0 | .00060 | .17000 | 8.78 | | U | U |
| 02/01/1994 | Zinc | 6 | LO | 41755.0 | .00454 | .00000 | 8.78 | | B | J |
| 02/01/1994 | Arsenic | 9 | LO | 41703.0 | .00047 | .00057 | 26.63 | | | |
| 02/01/1994 | Cadmium | 9 | LO | 41703.0 | .00209 | .00140 | 26.63 | | | |
| 02/01/1994 | Chromium | 9 | LO | 41703.0 | .00264 | .00020 | 26.63 | | | |
| 02/01/1994 | Phosphorus | 9 | LO | 41703.0 | .44282 | .30000 | 26.63 | | | J |
| 02/01/1994 | Vanadium | 9 | LO | 41703.0 | .00290 | .17000 | 26.63 | | | |
| 02/01/1994 | Zinc | 9 | LO | 41703.0 | .01678 | .00000 | 26.63 | | B | J |
| 02/01/1994 | Arsenic | L | BL | | .00006 | .00057 | -.31 | | U | U |
| 02/01/1994 | Cadmium | L | BL | | .00050 | .00140 | -.31 | | U | U |
| 02/01/1994 | Chromium | L | BL | | .00015 | .00020 | -.31 | | | |
| 02/01/1994 | Phosphorus | L | BL | | .05530 | .30000 | -.31 | | B | J |
| 02/01/1994 | Vanadium | L | BL | | .00062 | .17000 | -.31 | | U | U |
| 02/01/1994 | Zinc | L | BL | | .00031 | .00000 | -.31 | | U | UJ |
| 03/02/1994 | Arsenic | 3 | LO | 43133.0 | .00066 | .00057 | 67.52 | | | |
| 03/02/1994 | Cadmium | 3 | LO | 43133.0 | .00218 | .00140 | 67.52 | | | U |
| 03/02/1994 | Chromium | 3 | LO | 43133.0 | .00113 | .00020 | 67.52 | | | |
| 03/02/1994 | Phosphorus | 3 | LO | 43133.0 | .60355 | .30000 | 67.52 | | | |
| 03/02/1994 | Vanadium | 3 | LO | 43133.0 | .00588 | .17000 | 67.52 | | | |
| 03/02/1994 | Zinc | 3 | LO | 43133.0 | .02126 | .00000 | 67.52 | | B | |
| 03/02/1994 | Arsenic | 4 | LO | 43192.0 | .00072 | .00057 | 47.42 | | | |
| 03/02/1994 | Cadmium | 4 | LO | 43192.0 | .00105 | .00140 | 47.42 | | | U |
| 03/02/1994 | Chromium | 4 | LO | 43192.0 | .00424 | .00020 | 47.42 | | | |
| 03/02/1994 | Phosphorus | 4 | LO | 43192.0 | .32086 | .30000 | 47.42 | | | |
| 03/02/1994 | Vanadium | 4 | LO | 43192.0 | .00401 | .17000 | 47.42 | | | |
| 03/02/1994 | Zinc | 4 | LO | 43192.0 | .01872 | .00000 | 47.42 | | B | |
| 03/02/1994 | Arsenic | 5 | LO | 43077.0 | .00064 | .00057 | 38.09 | | | |
| 03/02/1994 | Cadmium | 5 | LO | 43077.0 | .00207 | .00140 | 38.09 | | | U |
| 03/02/1994 | Chromium | 5 | LO | 43077.0 | .00513 | .00020 | 38.09 | | | |
| 03/02/1994 | Phosphorus | 5 | LO | 43077.0 | .61045 | .30000 | 38.09 | | | |
| 03/02/1994 | Vanadium | 5 | LO | 43077.0 | .00506 | .17000 | 38.09 | | | |
| 03/02/1994 | Zinc | 5 | LO | 43077.0 | .01246 | .00000 | 38.09 | | B | |
| 03/02/1994 | Arsenic | 6 | LO | 43197.0 | .00050 | .00057 | 33.89 | | | |
| 03/02/1994 | Cadmium | 6 | LO | 43197.0 | .00065 | .00140 | 33.89 | | | U |
| 03/02/1994 | Chromium | 6 | LO | 43197.0 | .00124 | .00020 | 33.89 | | | |
| 03/02/1994 | Phosphorus | 6 | LO | 43197.0 | .11890 | .30000 | 33.89 | | | U |
| 03/02/1994 | Vanadium | 6 | LO | 43197.0 | .00129 | .17000 | 33.89 | | B | |
| 03/02/1994 | Zinc | 6 | LO | 43197.0 | .00666 | .00000 | 33.89 | | B | |
| 03/02/1994 | Arsenic | 9 | LO | 43195.0 | .00063 | .00057 | 56.62 | | | |
| 03/02/1994 | Cadmium | 9 | LO | 43195.0 | .00291 | .00140 | 56.62 | | | |
| 03/02/1994 | Chromium | 9 | LO | 43195.0 | .00431 | .00020 | 56.62 | | | |

| Sample Date | Chemical Name | Site No | Typ | Run Time (min.) | Chem Conc. (ug/m3) | EPA Scr. Part.C. L(ug/m3) | Grav. (ug/m3) | Qual. Val | Lb | Val |
|---|---|---|---|---|---|---|---|---|---|---|
| 03/02/1994 | Phosphorus | 9 | LO | 43195.0 | .52481 | .30000 | 56.62 | | | |
| 03/02/1994 | Vanadium | 9 | LO | 43195.0 | .00416 | .17000 | 56.62 | | | |
| 03/02/1994 | Zinc | 9 | LO | 43195.0 | .01842 | .00000 | 56.62 | | B | |
| 03/02/1994 | Arsenic | L | BL | | .00006 | .00057 | -.16 | | U | |
| 03/02/1994 | Cadmium | L | BL | | .00050 | .00140 | -.16 | | B | |
| 03/02/1994 | Chromium | L | BL | | .00021 | .00020 | -.16 | | | |
| 03/02/1994 | Phosphorus | L | BL | | .03775 | .30000 | -.16 | | B | |
| 03/02/1994 | Vanadium | L | BL | | .00063 | .17000 | -.16 | | U | |
| 03/02/1994 | Zinc | L | BL | | .00031 | .00000 | -.16 | | U | |
| 04/01/1994 | Arsenic | 3 | LO | 44715.0 | .00052 | .00057 | 64.54 | | | |
| 04/01/1994 | Cadmium | 3 | LO | 44715.0 | .00146 | .00140 | 64.54 | | | |
| 04/01/1994 | Chromium | 3 | LO | 44715.0 | .00317 | .00020 | 64.54 | | | |
| 04/01/1994 | Phosphorus | 3 | LO | 44715.0 | .70251 | .30000 | 64.54 | | | |
| 04/01/1994 | Vanadium | 3 | LO | 44715.0 | .00389 | .17000 | 64.54 | | | |
| 04/01/1994 | Zinc | 3 | LO | 44715.0 | .01574 | .00000 | 64.54 | | B | |
| 04/01/1994 | Arsenic | 4 | LO | 44695.0 | .00055 | .00057 | 45.61 | | | |
| 04/01/1994 | Cadmium | 4 | LO | 44695.0 | .00049 | .00140 | 45.61 | | U | U |
| 04/01/1994 | Chromium | 4 | LO | 44695.0 | .00273 | .00020 | 45.61 | | | |
| 04/01/1994 | Phosphorus | 4 | LO | 44695.0 | .27059 | .30000 | 45.61 | | | |
| 04/01/1994 | Vanadium | 4 | LO | 44695.0 | .00247 | .17000 | 45.61 | | | |
| 04/01/1994 | Zinc | 4 | LO | 44695.0 | .01469 | .00000 | 45.61 | | B | |
| 04/01/1994 | Arsenic | 5 | LO | 44515.0 | .00060 | .00057 | 50.30 | | | |
| 04/01/1994 | Cadmium | 5 | LO | 44515.0 | .00103 | .00140 | 50.30 | | | |
| 04/01/1994 | Chromium | 5 | LO | 44515.0 | .00266 | .00020 | 50.30 | | | |
| 04/01/1994 | Phosphorus | 5 | LO | 44515.0 | .49575 | .30000 | 50.30 | | | |
| 04/01/1994 | Vanadium | 5 | LO | 44515.0 | .00322 | .17000 | 50.30 | | | |
| 04/01/1994 | Zinc | 5 | LO | 44515.0 | .01025 | .00000 | 50.30 | | B | |
| 04/01/1994 | Arsenic | 6 | LO | 44455.0 | .00041 | .00057 | 45.65 | | | |
| 04/01/1994 | Cadmium | 6 | LO | 44455.0 | .00047 | .00140 | 45.65 | | U | U |
| 04/01/1994 | Chromium | 6 | LO | 44455.0 | .00129 | .00020 | 45.65 | | | |
| 04/01/1994 | Phosphorus | 6 | LO | 44455.0 | .12957 | .30000 | 45.65 | | | |
| 04/01/1994 | Vanadium | 6 | LO | 44455.0 | .00118 | .17000 | 45.65 | | B | |
| 04/01/1994 | Zinc | 6 | LO | 44455.0 | .00613 | .00000 | 45.65 | | B | |
| 04/01/1994 | Arsenic | 9 | LO | 44675.0 | .00034 | .00057 | 43.80 | | | |
| 04/01/1994 | Cadmium | 9 | LO | 44675.0 | .00073 | .00140 | 43.80 | | | |
| 04/01/1994 | Chromium | 9 | LO | 44675.0 | .00178 | .00020 | 43.80 | | | |
| 04/01/1994 | Phosphorus | 9 | LO | 44675.0 | .49836 | .30000 | 43.80 | | | |
| 04/01/1994 | Vanadium | 9 | LO | 44675.0 | .00201 | .17000 | 43.80 | | | |
| 04/01/1994 | Zinc | 9 | LO | 44675.0 | .00934 | .00000 | 43.80 | | B | |
| 05/02/1994 | Arsenic | 3 | LO | 43208.0 | .00057 | .00057 | 54.93 | | | J |
| 05/02/1994 | Cadmium | 3 | LO | 43208.0 | .00209 | .00140 | 54.93 | | | J |
| 05/02/1994 | Chromium | 3 | LO | 43208.0 | .00566 | .00020 | 54.93 | | | J |
| 05/02/1994 | Phosphorus | 3 | LO | 43208.0 | .81636 | .30000 | 54.93 | | | J |
| 05/02/1994 | Vanadium | 3 | LO | 43208.0 | .00532 | .17000 | 54.93 | | | J |
| 05/02/1994 | Zinc | 3 | LO | 43208.0 | .02160 | .00000 | 54.93 | | B | J |
| 05/02/1994 | Arsenic | 4 | LO | 43185.0 | .00047 | .00057 | 41.78 | | | J |
| 05/02/1994 | Cadmium | 4 | LO | 43185.0 | .00136 | .00140 | 41.78 | | | J |
| 05/02/1994 | Chromium | 4 | LO | 43185.0 | .00395 | .00020 | 41.78 | | | J |
| 05/02/1994 | Phosphorus | 4 | LO | 43185.0 | .45382 | .30000 | 41.78 | | | J |
| 05/02/1994 | Vanadium | 4 | LO | 43185.0 | .00351 | .17000 | 41.78 | | | J |
| 05/02/1994 | Zinc | 4 | LO | 43185.0 | .01606 | .00000 | 41.78 | | B | J |
| 05/02/1994 | Arsenic | 5 | LO | 43211.0 | .00037 | .00057 | 34.81 | PR | | J |
| 05/02/1994 | Cadmium | 5 | LO | 43211.0 | .00083 | .00140 | 34.81 | PR | | J |
| 05/02/1994 | Chromium | 5 | LO | 43211.0 | .00420 | .00020 | 34.81 | PR | | J |
| 05/02/1994 | Phosphorus | 5 | LO | 43211.0 | .45407 | .30000 | 34.81 | PR | | J |

| Sample Date | Chemical Name | Site No | Run Typ | Time (min.) | Chem Conc. (ug/m3) | EPA Scr. L(ug/m3) | Part.C. (ug/m3) | Grav. Val | Qual. Lb | Qual. Val |
|---|---|---|---|---|---|---|---|---|---|---|
| 05/02/1994 | Vanadium | 5 | LO | 43211.0 | .00424 | .17000 | 34.81 | PR | | J |
| 05/02/1994 | Zinc | 5 | LO | 43211.0 | .00955 | .00000 | 34.81 | PR | B | J |
| 05/02/1994 | Arsenic | 6 | LO | 43185.0 | .00041 | .00057 | 46.73 | | | J |
| 05/02/1994 | Cadmium | 6 | LO | 43185.0 | .00050 | .00140 | 46.73 | | U | UJ |
| 05/02/1994 | Chromium | 6 | LO | 43185.0 | .00124 | .00020 | 46.73 | | | UJ |
| 05/02/1994 | Phosphorus | 6 | LO | 43185.0 | .14414 | .30000 | 46.73 | | | UJ |
| 05/02/1994 | Vanadium | 6 | LO | 43185.0 | .00141 | .17000 | 46.73 | | B | J |
| 05/02/1994 | Zinc | 6 | LO | 43185.0 | .00701 | .00000 | 46.73 | | B | J |
| 05/02/1994 | Arsenic | 9 | LO | 43226.0 | .00052 | .00057 | 51.46 | | | J |
| 05/02/1994 | Cadmium | 9 | LO | 43226.0 | .00196 | .00140 | 51.46 | | | J |
| 05/02/1994 | Chromium | 9 | LO | 43226.0 | .00621 | .00020 | 51.46 | | | J |
| 05/02/1994 | Phosphorus | 9 | LO | 43226.0 | .74086 | .30000 | 51.46 | | | J |
| 05/02/1994 | Vanadium | 9 | LO | 43226.0 | .00453 | .17000 | 51.46 | | | J |
| 05/02/1994 | Zinc | 9 | LO | 43226.0 | .01987 | .00000 | 51.46 | | B | J |
| 05/02/1994 | Arsenic | L | BL | | .00006 | .00057 | -.30 | | U | U |
| 05/02/1994 | Cadmium | L | BL | | .00048 | .00140 | -.30 | | U | U |
| 05/02/1994 | Chromium | L | BL | | .00016 | .00020 | -.30 | | | U |
| 05/02/1994 | Phosphorus | L | BL | | .05049 | .30000 | -.30 | | B | U |
| 05/02/1994 | Vanadium | L | BL | | .00060 | .17000 | -.30 | | U | U |
| 05/02/1994 | Zinc | L | BL | | .00047 | .00000 | -.30 | | B | U |
| 06/01/1994 | Arsenic | 3 | LO | 43254.0 | .00062 | .00057 | 134.10 | | | J |
| 06/01/1994 | Cadmium | 3 | LO | 43254.0 | .00478 | .00140 | 134.10 | | | J |
| 06/01/1994 | Chromium | 3 | LO | 43254.0 | .00380 | .00020 | 134.10 | | | J |
| 06/01/1994 | Phosphorus | 3 | LO | 43254.0 | .60437 | .30000 | 134.10 | | | J |
| 06/01/1994 | Vanadium | 3 | LO | 43254.0 | .00412 | .17000 | 134.10 | | | J |
| 06/01/1994 | Zinc | 3 | LO | 43254.0 | .02265 | .00000 | 134.10 | | B | J |
| 06/01/1994 | Arsenic | 4 | LO | 43285.0 | .00060 | .00057 | 73.85 | | | J |
| 06/01/1994 | Cadmium | 4 | LO | 43285.0 | .00343 | .00140 | 73.85 | | | J |
| 06/01/1994 | Chromium | 4 | LO | 43285.0 | .00450 | .00020 | 73.85 | | | J |
| 06/01/1994 | Phosphorus | 4 | LO | 43285.0 | .68915 | .30000 | 73.85 | | | J |
| 06/01/1994 | Vanadium | 4 | LO | 43285.0 | .00433 | .17000 | 73.85 | | | J |
| 06/01/1994 | Zinc | 4 | LO | 43285.0 | .02559 | .00000 | 73.85 | | B | J |
| 06/01/1994 | Arsenic | 5 | LO | 43248.0 | .00053 | .00057 | 53.66 | | | J |
| 06/01/1994 | Cadmium | 5 | LO | 43248.0 | .00495 | .00140 | 53.66 | | | J |
| 06/01/1994 | Chromium | 5 | LO | 43248.0 | .00375 | .00020 | 53.66 | | | J |
| 06/01/1994 | Phosphorus | 5 | LO | 43248.0 | .71022 | .30000 | 53.66 | | | J |
| 06/01/1994 | Vanadium | 5 | LO | 43248.0 | .00380 | .17000 | 53.66 | | | J |
| 06/01/1994 | Zinc | 5 | LO | 43248.0 | .01523 | .00000 | 53.66 | | B | J |
| 06/01/1994 | Arsenic | 6 | LO | 43260.0 | .00028 | .00057 | 43.88 | | | J |
| 06/01/1994 | Cadmium | 6 | LO | 43260.0 | .00061 | .00140 | 43.88 | | | J |
| 06/01/1994 | Chromium | 6 | LO | 43260.0 | .00104 | .00020 | 43.88 | | | UJ |
| 06/01/1994 | Phosphorus | 6 | LO | 43260.0 | .15339 | .30000 | 43.88 | | | UJ |
| 06/01/1994 | Vanadium | 6 | LO | 43260.0 | .00109 | .17000 | 43.88 | | B | J |
| 06/01/1994 | Zinc | 6 | LO | 43260.0 | .00562 | .00000 | 43.88 | | B | J |
| 06/01/1994 | Arsenic | 9 | LO | 43272.0 | .00063 | .00057 | 86.85 | | | J |
| 06/01/1994 | Cadmium | 9 | LO | 43272.0 | .00395 | .00140 | 86.85 | | | J |
| 06/01/1994 | Chromium | 9 | LO | 43272.0 | .00475 | .00020 | 86.85 | | | J |
| 06/01/1994 | Phosphorus | 9 | LO | 43272.0 | .55890 | .30000 | 86.85 | | | J |
| 06/01/1994 | Vanadium | 9 | LO | 43272.0 | .00416 | .17000 | 86.85 | | | J |
| 06/01/1994 | Zinc | 9 | LO | 43272.0 | .02043 | .00000 | 86.85 | | B | J |
| 06/01/1994 | Arsenic | L | BL | | .00007 | .00057 | | | U | U |
| 06/01/1994 | Cadmium | L | BL | | .00059 | .00140 | | | U | U |
| 06/01/1994 | Chromium | L | BL | | .00025 | .00020 | | | | U |
| 06/01/1994 | Phosphorus | L | BL | | .04828 | .30000 | | | B | U |
| 06/01/1994 | Vanadium | L | BL | | .00074 | .17000 | | | U | U |

| Sample Date | Chemical Name | Site No | Typ | Run Time (min.) | Chem Conc. (ug/m3) | EPA Scr. L(ug/m3) | Part.C. (ug/m3) | Grav. Val | Qual. Lb | Qual. Val |
|---|---|---|---|---|---|---|---|---|---|---|
| 06/01/1994 | Zinc | L | BL | | .00071 | .00000 | | | B | U |
| 07/01/1994 | Arsenic | 3 | LO | 44585.0 | .00059 | .00057 | 106.19 | | | J |
| 07/01/1994 | Cadmium | 3 | LO | 44585.0 | .00388 | .00140 | 106.19 | | | J |
| 07/01/1994 | Chromium | 3 | LO | 44585.0 | .00411 | .00020 | 106.19 | | | J |
| 07/01/1994 | Phosphorus | 3 | LO | 44585.0 | .58756 | .30000 | 106.19 | | | J |
| 07/01/1994 | Vanadium | 3 | LO | 44585.0 | .00421 | .17000 | 106.19 | | | J |
| 07/01/1994 | Zinc | 3 | LO | 44585.0 | .02342 | .00000 | 106.19 | | B | J |
| 07/01/1994 | Arsenic | 4 | LO | 44575.0 | .00062 | .00057 | 62.72 | | | J |
| 07/01/1994 | Cadmium | 4 | LO | 44575.0 | .00331 | .00140 | 62.72 | | | J |
| 07/01/1994 | Chromium | 4 | LO | 44575.0 | .00357 | .00020 | 62.72 | | | J |
| 07/01/1994 | Phosphorus | 4 | LO | 44575.0 | .53991 | .30000 | 62.72 | | | J |
| 07/01/1994 | Vanadium | 4 | LO | 44575.0 | .00352 | .17000 | 62.72 | | | J |
| 07/01/1994 | Zinc | 4 | LO | 44575.0 | .02148 | .00000 | 62.72 | | B | J |
| 07/01/1994 | Arsenic | 5 | LO | 44880.0 | .00048 | .00057 | 60.89 | | | J |
| 07/01/1994 | Cadmium | 5 | LO | 44880.0 | .00805 | .00140 | 60.89 | | | J |
| 07/01/1994 | Chromium | 5 | LO | 44880.0 | .00841 | .00020 | 60.89 | | | J |
| 07/01/1994 | Phosphorus | 5 | LO | 44880.0 | 1.08797 | .30000 | 60.89 | | | J |
| 07/01/1994 | Vanadium | 5 | LO | 44880.0 | .00841 | .17000 | 60.89 | | | J |
| 07/01/1994 | Zinc | 5 | LO | 44880.0 | .01819 | .00000 | 60.89 | | B | J |
| 07/01/1994 | Arsenic | 6 | LO | 44825.0 | .00048 | .00057 | 76.10 | | | J |
| 07/01/1994 | Cadmium | 6 | LO | 44825.0 | .00123 | .00140 | 76.10 | | | J |
| 07/01/1994 | Chromium | 6 | LO | 44825.0 | .00174 | .00020 | 76.10 | | | J |
| 07/01/1994 | Phosphorus | 6 | LO | 44825.0 | .29028 | .30000 | 76.10 | | | J |
| 07/01/1994 | Vanadium | 6 | LO | 44825.0 | .00224 | .17000 | 76.10 | | | J |
| 07/01/1994 | Zinc | 6 | LO | 44825.0 | .01138 | .00000 | 76.10 | | B | J |
| 07/01/1994 | Arsenic | 9 | LO | 44580.0 | .00057 | .00057 | 97.12 | | | J |
| 07/01/1994 | Cadmium | 9 | LO | 44580.0 | .00361 | .00140 | 97.12 | | | J |
| 07/01/1994 | Chromium | 9 | LO | 44580.0 | .00502 | .00020 | 97.12 | | | J |
| 07/01/1994 | Phosphorus | 9 | LO | 44580.0 | .54736 | .30000 | 97.12 | | | J |
| 07/01/1994 | Vanadium | 9 | LO | 44580.0 | .00430 | .17000 | 97.12 | | | J |
| 07/01/1994 | Zinc | 9 | LO | 44580.0 | .02059 | .00000 | 97.12 | | B | J |
| 07/01/1994 | Arsenic | L | BL | | .00007 | .00057 | -.09 | | U | U |
| 07/01/1994 | Cadmium | L | BL | | .00054 | .00140 | -.09 | | U | U |
| 07/01/1994 | Chromium | L | BL | | .00022 | .00020 | -.09 | | | U |
| 07/01/1994 | Phosphorus | L | BL | | .05177 | .30000 | -.09 | | B | U |
| 07/01/1994 | Vanadium | L | BL | | .00068 | .17000 | -.09 | | U | U |
| 07/01/1994 | Zinc | L | BL | | .00123 | .00000 | -.09 | | B | U |
| 08/01/1994 | Arsenic | 4 | LO | 43260.0 | .00103 | .00057 | 98.99 | | | |
| 08/01/1994 | Cadmium | 4 | LO | 43260.0 | .00605 | .00140 | 98.99 | | | |
| 08/01/1994 | Chromium | 4 | LO | 43260.0 | .00949 | .00020 | 98.99 | | | |
| 08/01/1994 | Phosphorus | 4 | LO | 43260.0 | .96614 | .30000 | 98.99 | | | |
| 08/01/1994 | Vanadium | 4 | LO | 43260.0 | .00793 | .17000 | 98.99 | | | |
| 08/01/1994 | Zinc | 4 | LO | 43260.0 | .03822 | .00000 | 98.99 | | | |
| 08/01/1994 | Arsenic | 5 | LO | 42960.0 | .00094 | .00057 | 92.46 | | | |
| 08/01/1994 | Cadmium | 5 | LO | 42960.0 | .00860 | .00140 | 92.46 | | | |
| 08/01/1994 | Chromium | 5 | LO | 42960.0 | .01219 | .00020 | 92.46 | | | |
| 08/01/1994 | Phosphorus | 5 | LO | 42960.0 | 1.09453 | .30000 | 92.46 | | | |
| 08/01/1994 | Vanadium | 5 | LO | 42960.0 | .00979 | .17000 | 92.46 | | | |
| 08/01/1994 | Zinc | 5 | LO | 42960.0 | .02496 | .00000 | 92.46 | | B | |
| 08/01/1994 | Arsenic | 6 | LO | 42905.0 | .00102 | .00057 | 123.07 | | | |
| 08/01/1994 | Cadmium | 6 | LO | 42905.0 | .00158 | .00140 | 123.07 | | | |
| 08/01/1994 | Chromium | 6 | LO | 42905.0 | .00354 | .00020 | 123.07 | | | |
| 08/01/1994 | Phosphorus | 6 | LO | 42905.0 | .37969 | .30000 | 123.07 | | | |
| 08/01/1994 | Vanadium | 6 | LO | 42905.0 | .00365 | .17000 | 123.07 | | | |
| 08/01/1994 | Zinc | 6 | LO | 42905.0 | .01593 | .00000 | 123.07 | | B | |

| Sample Date | Chemical Name | Site No | Run Typ | Time (min.) | Chem Conc. (ug/m3) | EPA Scr. L(ug/m3) | Part.C. (ug/m3) | Grav. Val | Qual. Lb | Qual. Val |
|---|---|---|---|---|---|---|---|---|---|---|
| 08/01/1994 | Arsenic | L | BL | | .00007 | .00057 | -.41 | | U | U |
| 08/01/1994 | Cadmium | L | BL | | .00053 | .00140 | -.41 | | U | U |
| 08/01/1994 | Chromium | L | BL | | .00019 | .00020 | -.41 | | | U |
| 08/01/1994 | Phosphorus | L | BL | | .04094 | .30000 | -.41 | | B | U |
| 08/01/1994 | Vanadium | L | BL | | .00066 | .17000 | -.41 | | U | U |
| 08/01/1994 | Zinc | L | BL | | .00033 | .00000 | -.41 | | U | U |
| 08/31/1994 | Arsenic | 4 | LO | 43320.0 | .00098 | .00057 | 106.56 | | | |
| 08/31/1994 | Cadmium | 4 | LO | 43320.0 | .00757 | .00140 | 106.56 | | | |
| 08/31/1994 | Chromium | 4 | LO | 43320.0 | .00657 | .00020 | 106.56 | | | |
| 08/31/1994 | Phosphorus | 4 | LO | 43320.0 | .89700 | .30000 | 106.56 | | | |
| 08/31/1994 | Vanadium | 4 | LO | 43320.0 | .00643 | .17000 | 106.56 | | | |
| 08/31/1994 | Zinc | 4 | LO | 43320.0 | .03480 | .00000 | 106.56 | | | |
| 08/31/1994 | Arsenic | 5 | LO | 43255.0 | .00073 | .00057 | 84.17 | | | |
| 08/31/1994 | Cadmium | 5 | LO | 43255.0 | .00977 | .00140 | 84.17 | | | |
| 08/31/1994 | Chromium | 5 | LO | 43255.0 | .00689 | .00020 | 84.17 | | | |
| 08/31/1994 | Phosphorus | 5 | LO | 43255.0 | 1.16818 | .30000 | 84.17 | | | |
| 08/31/1994 | Vanadium | 5 | LO | 43255.0 | .00642 | .17000 | 84.17 | | | |
| 08/31/1994 | Zinc | 5 | LO | 43255.0 | .02384 | .00000 | 84.17 | | B | |
| 08/31/1994 | Arsenic | 6 | LO | 43260.0 | .00081 | .00057 | 142.36 | | | |
| 08/31/1994 | Cadmium | 6 | LO | 43260.0 | .00089 | .00140 | 142.36 | | | |
| 08/31/1994 | Chromium | 6 | LO | 43260.0 | .00271 | .00020 | 142.36 | | | |
| 08/31/1994 | Phosphorus | 6 | LO | 43260.0 | .27952 | .30000 | 142.36 | | | |
| 08/31/1994 | Vanadium | 6 | LO | 43260.0 | .00271 | .17000 | 142.36 | | | |
| 08/31/1994 | Zinc | 6 | LO | 43260.0 | .01162 | .00000 | 142.36 | | B | |
| 08/31/1994 | Arsenic | L | BL | | .00008 | .00057 | -.19 | | U | U |
| 08/31/1994 | Cadmium | L | BL | | .00061 | .00140 | -.19 | | U | U |
| 08/31/1994 | Chromium | L | BL | | .00020 | .00020 | -.19 | | | U |
| 08/31/1994 | Phosphorus | L | BL | | .05400 | .30000 | -.19 | | B | U |
| 08/31/1994 | Vanadium | L | BL | | .00077 | .17000 | -.19 | | U | U |
| 08/31/1994 | Zinc | L | BL | | .00038 | .00000 | -.19 | | U | U |
| 09/30/1994 | Arsenic | 6 | LO | 46200.0 | .00090 | .00057 | 37.30 | | | |
| 09/30/1994 | Cadmium | 6 | LO | 46200.0 | .00057 | .00140 | 37.30 | | | |
| 09/30/1994 | Chromium | 6 | LO | 46200.0 | .00137 | .00020 | 37.30 | | | |
| 09/30/1994 | Phosphorus | 6 | LO | 46200.0 | .14035 | .30000 | 37.30 | | | |
| 09/30/1994 | Vanadium | 6 | LO | 46200.0 | .00146 | .17000 | 37.30 | | B | |
| 09/30/1994 | Zinc | 6 | LO | 46200.0 | .00630 | .00000 | 37.30 | | B | |

# Appendix AB-3

# Silica and Fluoride Data

| Sample Date | Chemical Name | Site No. | Typ | Run Time (min.) | Chem Conc (ugi/m3) | EPA Scr L(ug/m3) | Grav Val | Qual Lb | Qual Val |
|---|---|---|---|---|---|---|---|---|---|
| 10/16/1993 | Particulate Fluoride | F | BL | 1440.0 | 51.23640 | 8.30 | | U | U |
| 10/16/1993 | Gaseous Fluoride | F | BL | 1440.0 | .12809 | 8.30 | | U | U |
| 10/24/1993 | Particulate Fluoride | F | BL | 1440.0 | 51.78563 | 8.30 | | U | U |
| 10/24/1993 | Gaseous Fluoride | F | BL | 1440.0 | .12946 | 8.30 | | U | U |
| 11/05/1993 | Particulate Fluoride | F | BL | 1440.0 | 162.31131 | 8.30 | | | U |
| 11/05/1993 | Gaseous Fluoride | F | BL | 1440.0 | .12485 | 8.30 | | U | U |
| 11/05/1993 | Crystalline Quartz | S | BL | 1440.0 | -50.00000 | .00 | | | |
| 11/05/1993 | Cristobalite | S | BL | 1440.0 | -20.00000 | .00 | | B | U |
| 11/05/1993 | Tridymite | S | BL | 1440.0 | -40.00000 | .00 | | B | U |
| 11/25/1993 | Particulate Fluoride | F | BL | 1440.0 | 46.51325 | 8.30 | | U | UJ |
| 11/25/1993 | Gaseous Fluoride | F | BL | 1440.0 | .11628 | 8.30 | | U | UJ |
| 11/25/1993 | Crystalline Quartz | S | BL | 1440.0 | -120.00000 | .00 | | | |
| 11/25/1993 | Cristobalite | S | BL | 1440.0 | -20.00000 | .00 | | B | U |
| 11/25/1993 | Tridymite | S | BL | 1440.0 | -40.00000 | .00 | | B | U |
| 12/07/1993 | Particulate Fluoride | F | BL | 1440.0 | 49.21199 | 8.30 | | U | UJ |
| 12/07/1993 | Gaseous Fluoride | F | BL | 1440.0 | .12303 | 8.30 | | U | UJ |
| 12/07/1993 | Crystalline Quartz | S | BL | 1440.0 | -30.00000 | .00 | P | | U |
| 12/07/1993 | Cristobalite | S | BL | 1440.0 | -20.00000 | .00 | P | U | U |
| 12/07/1993 | Tridymite | S | BL | 1440.0 | -40.00000 | .00 | P | U | U |
| 12/23/1993 | Particulate Fluoride | F | BL | 1440.0 | 48.52014 | 8.30 | | U | UJ |
| 12/23/1993 | Gaseous Fluoride | F | BL | 1440.0 | .12130 | 8.30 | | U | UJ |
| 12/23/1993 | Crystalline Quartz | S | BL | 1440.0 | 3.63888 | .00 | | | U |
| 12/23/1993 | Cristobalite | S | BL | 1440.0 | 7.27776 | .00 | | U | U |
| 12/23/1993 | Tridymite | S | BL | 1440.0 | 14.55551 | .00 | | U | U |
| 01/06/1994 | Particulate Fluoride | F | BL | 1440.0 | 49.65182 | 8.30 | | U | UJ |
| 01/06/1994 | Gaseous Fluoride | F | BL | 1440.0 | .12413 | 8.30 | | U | UJ |
| 01/06/1994 | Crystalline Quartz | S | BL | 1440.0 | -30.00000 | .00 | | | U |
| 01/06/1994 | Cristobalite | S | BL | 1440.0 | -20.00000 | .00 | | U | U |
| 01/06/1994 | Tridymite | S | BL | 1440.0 | -40.00000 | .00 | | U | U |
| 01/20/1994 | Particulate Fluoride | F | BL | 1440.0 | 49.48841 | 8.30 | | U | UJ |
| 01/20/1994 | Gaseous Fluoride | F | BL | 1440.0 | .12372 | 8.30 | | U | UJ |
| 01/20/1994 | Crystalline Quartz | S | BL | 1440.0 | 3.53479 | .00 | | U | UJ |
| 01/20/1994 | Cristobalite | S | BL | 1440.0 | 7.06959 | .00 | | U | UJ |
| 01/20/1994 | Tridymite | S | BL | 1440.0 | 14.13917 | .00 | | U | UJ |
| 02/03/1994 | Particulate Fluoride | F | BL | 1440.0 | 50.62891 | 8.30 | | B | J |
| 02/03/1994 | Gaseous Fluoride | F | BL | 1440.0 | .12170 | 8.30 | | U | UJ |
| 02/03/1994 | Crystalline Quartz | S | BL | 1440.0 | 10.43231 | .00 | | | J |
| 02/03/1994 | Cristobalite | S | BL | 1440.0 | 6.95488 | .00 | | U | UJ |
| 02/03/1994 | Tridymite | S | BL | 1440.0 | 13.90975 | .00 | | U | UJ |
| 02/19/1994 | Particulate Fluoride | F | BL | 1440.0 | 56.20934 | 8.30 | | B | J |
| 02/19/1994 | Gaseous Fluoride | F | BL | 1440.0 | .12381 | 8.30 | | U | UJ |
| 02/19/1994 | Crystalline Quartz | S | BL | 1440.0 | 14.15068 | .00 | | | J |
| 02/19/1994 | Cristobalite | S | BL | 1440.0 | 7.07534 | .00 | | U | UJ |
| 02/19/1994 | Tridymite | S | BL | 1440.0 | 14.15068 | .00 | | U | UJ |
| 03/03/1994 | Particulate Fluoride | F | BL | 1440.0 | 51.58362 | 8.30 | | U | UJ |
| 03/03/1994 | Gaseous Fluoride | F | BL | 1440.0 | .12896 | 8.30 | | U | UJ |
| 03/03/1994 | Crystalline Quartz | S | BL | 1440.0 | 3.68406 | .00 | | U | UJ |
| 03/03/1994 | Cristobalite | S | BL | 1440.0 | 7.36811 | .00 | | U | UJ |
| 03/03/1994 | Tridymite | S | BL | 1440.0 | 14.73622 | .00 | | U | UJ |
| 03/19/1994 | Particulate Fluoride | F | BL | 1440.0 | 30.25902 | 8.30 | | U | UJ |
| 03/19/1994 | Gaseous Fluoride | F | BL | 1440.0 | .07565 | 8.30 | | U | UJ |
| 03/19/1994 | Crystalline Quartz | S | BL | 1440.0 | 18.00945 | .00 | | | J |
| 03/19/1994 | Cristobalite | S | BL | 1440.0 | 7.20378 | .00 | | U | UJ |

| Sample Date | Chemical Name | Site No. | Typ | Run Time (min.) | Chem Conc (ugi/m3) | EPA Scr L(ug/m3) | Grav Val | Qual Lb | Qual Val |
|---|---|---|---|---|---|---|---|---|---|
| 03/19/1994 | Tridymite | S | BL | 1440.0 | 14.40756 | .00 | | U | UJ |
| 03/31/1994 | Particulate Fluoride | F | BL | 1440.0 | 51.39274 | 8.30 | | U | UJ |
| 03/31/1994 | Gaseous Fluoride | F | BL | 1440.0 | .12848 | 8.30 | | U | UJ |
| 03/31/1994 | Crystalline Quartz | S | BL | 1440.0 | 55.08549 | .00 | | | J |
| 03/31/1994 | Cristobalite | S | BL | 1440.0 | 7.34473 | .00 | | U | UJ |
| 03/31/1994 | Tridymite | S | BL | 1440.0 | 14.68946 | .00 | | U | UJ |
| 04/16/1994 | Crystalline Quartz | S | BL | 1440.0 | 22.58478 | .00 | | | J |
| 04/16/1994 | Cristobalite | S | BL | 1440.0 | 7.52826 | .00 | | U | UJ |
| 04/16/1994 | Tridymite | S | BL | 1440.0 | 15.05652 | .00 | | U | UJ |
| 04/28/1994 | Particulate Fluoride | F | BL | 1440.0 | 50.60165 | 8.30 | | U | UJ |
| 04/28/1994 | Gaseous Fluoride | F | BL | 1440.0 | .12650 | 8.30 | | U | UJ |
| 04/28/1994 | Crystalline Quartz | S | BL | 1440.0 | 43.37115 | .00 | | | J |
| 04/28/1994 | Cristobalite | S | BL | 1440.0 | 7.22853 | .00 | | U | UJ |
| 04/28/1994 | Tridymite | S | BL | 1440.0 | 14.45705 | .00 | | U | UJ |
| 10/12/1993 | Particulate Fluoride | 1 | FL | 1440.0 | 56.73759 | 8.30 | | U | U |
| 10/12/1993 | Gaseous Fluoride | 1 | FL | 1440.0 | 1.91489 | 8.30 | | | J |
| 10/12/1993 | Particulate Fluoride | 2 | FL | 1438.0 | 51.94805 | 8.30 | | U | U |
| 10/12/1993 | Gaseous Fluoride | 2 | FL | 1438.0 | 2.72727 | 8.30 | | | J |
| 10/12/1993 | Particulate Fluoride | 6 | FL | 1438.0 | 51.94805 | 8.30 | | U | U |
| 10/12/1993 | Gaseous Fluoride | 6 | FL | 1438.0 | .12987 | 8.30 | | U | U |
| 10/12/1993 | Particulate Fluoride | 7 | FL | 1438.0 | 51.94805 | 8.30 | | U | U |
| 10/12/1993 | Gaseous Fluoride | 7 | FL | 1438.0 | .34156 | 8.30 | | | J |
| 10/16/1993 | Particulate Fluoride | 1 | FL | 1440.0 | 51.28205 | 8.30 | | U | U |
| 10/16/1993 | Gaseous Fluoride | 1 | FL | 1440.0 | .12821 | 8.30 | | U | U |
| 10/16/1993 | Particulate Fluoride | 2 | FL | 1440.0 | 51.28205 | 8.30 | | U | U |
| 10/16/1993 | Gaseous Fluoride | 2 | FL | 1440.0 | .59231 | 8.30 | | | J |
| 10/16/1993 | Particulate Fluoride | 6 | FL | 1440.0 | 51.28205 | 8.30 | | U | U |
| 10/16/1993 | Gaseous Fluoride | 6 | FL | 1440.0 | .12821 | 8.30 | | U | U |
| 10/16/1993 | Particulate Fluoride | 7 | FL | 1440.0 | 51.28205 | 8.30 | | U | U |
| 10/16/1993 | Gaseous Fluoride | 7 | FL | 1440.0 | .26346 | 8.30 | | B | J |
| 10/20/1993 | Particulate Fluoride | 1 | FL | 1440.0 | 50.96385 | 8.30 | | U | U |
| 10/20/1993 | Gaseous Fluoride | 1 | FL | 1440.0 | .12741 | 8.30 | | U | U |
| 10/20/1993 | Particulate Fluoride | 2 | FL | 1440.0 | 50.95541 | 8.30 | | U | U |
| 10/20/1993 | Gaseous Fluoride | 2 | FL | 1440.0 | .54076 | 8.30 | | | J |
| 10/20/1993 | Particulate Fluoride | 6 | FL | 1440.0 | 50.95541 | 8.30 | | U | U |
| 10/20/1993 | Gaseous Fluoride | 6 | FL | 1440.0 | .12739 | 8.30 | | U | U |
| 10/20/1993 | Particulate Fluoride | 7 | FL | 1440.0 | 50.95541 | 8.30 | | U | U |
| 10/20/1993 | Gaseous Fluoride | 7 | FL | 1440.0 | 1.12739 | 8.30 | | | J |
| 10/24/1993 | Particulate Fluoride | 1 | FL | 1440.0 | 51.94805 | 8.30 | | U | U |
| 10/24/1993 | Gaseous Fluoride | 1 | FL | 1440.0 | .98052 | 8.30 | | | J |
| 10/24/1993 | Particulate Fluoride | 2 | FL | 1440.0 | 51.94805 | 8.30 | | U | U |
| 10/24/1993 | Gaseous Fluoride | 2 | FL | 1440.0 | 3.82468 | 8.30 | | | J |
| 10/24/1993 | Particulate Fluoride | 6 | FL | 1440.0 | 51.94805 | 8.30 | | U | U |
| 10/24/1993 | Gaseous Fluoride | 6 | FL | 1440.0 | .12987 | 8.30 | | U | U |
| 10/24/1993 | Particulate Fluoride | 7 | FL | 1440.0 | 51.94805 | 8.30 | | U | U |
| 10/24/1993 | Gaseous Fluoride | 7 | FL | 1440.0 | 1.50649 | 8.30 | | | J |
| 10/28/1993 | Particulate Fluoride | 1 | FL | 1440.0 | 217.94872 | 8.30 | | | U |
| 10/28/1993 | Gaseous Fluoride | 1 | FL | 1440.0 | 1.14744 | 8.30 | | | J |
| 10/28/1993 | Particulate Fluoride | 2 | FL | 1440.0 | 225.64104 | 8.30 | | | U |
| 10/28/1993 | Gaseous Fluoride | 2 | FL | 1440.0 | 2.75000 | 8.30 | | | J |
| 10/28/1993 | Particulate Fluoride | 6 | FL | 1440.0 | 300.00000 | 8.30 | | | U |
| 10/28/1993 | Gaseous Fluoride | 6 | FL | 1440.0 | .12821 | 8.30 | | U | U |
| 10/28/1993 | Particulate Fluoride | 7 | FL | 1440.0 | 171.79488 | 8.30 | | | U |

| Sample Date | Chemical Name | Site No. | Typ | Run Time (min.) | Chem Conc (ugi/m3) | EPA Scr L(ug/m3) | Grav Val | Qual Lb | Qual Val |
|---|---|---|---|---|---|---|---|---|---|
| 10/28/1993 | Gaseous Fluoride | 7 | FL | 1440.0 | .85897 | 8.30 | | | J |
| 11/01/1993 | Particulate Fluoride | 1 | FL | 1440.0 | 179.74684 | 8.30 | | | U |
| 11/01/1993 | Gaseous Fluoride | 1 | FL | 1440.0 | 1.15823 | 8.30 | | | J |
| 11/01/1993 | Particulate Fluoride | 2 | FL | 1440.0 | 326.58228 | 8.30 | | | U |
| 11/01/1993 | Gaseous Fluoride | 2 | FL | 1440.0 | 4.39873 | 8.30 | | | J |
| 11/01/1993 | Particulate Fluoride | 6 | FL | 1440.0 | 410.12659 | 8.30 | | | U |
| 11/01/1993 | Gaseous Fluoride | 6 | FL | 1440.0 | .12658 | 8.30 | | U | U |
| 11/01/1993 | Particulate Fluoride | 7 | FL | 1440.0 | 339.24051 | 8.30 | | | U |
| 11/01/1993 | Gaseous Fluoride | 7 | FL | 1440.0 | 1.72785 | 8.30 | | | J |
| 11/05/1993 | Particulate Fluoride | 1 | FL | 1440.0 | 262.50000 | 8.30 | | | U |
| 11/05/1993 | Gaseous Fluoride | 1 | FL | 1440.0 | 1.01875 | 8.30 | | | J |
| 11/05/1993 | Particulate Fluoride | 2 | FL | 1440.0 | 325.74850 | 8.30 | | | U |
| 11/05/1993 | Gaseous Fluoride | 2 | FL | 1440.0 | .99401 | 8.30 | | | J |
| 11/05/1993 | Particulate Fluoride | 6 | FL | 1440.0 | 320.00000 | 8.30 | | | U |
| 11/05/1993 | Gaseous Fluoride | 6 | FL | 1440.0 | .12500 | 8.30 | | U | U |
| 11/05/1993 | Particulate Fluoride | 7 | FL | 1440.0 | 280.00000 | 8.30 | | | U |
| 11/05/1993 | Gaseous Fluoride | 7 | FL | 1440.0 | .86250 | 8.30 | | | J |
| 11/09/1993 | Particulate Fluoride | 1 | FL | 1440.0 | 378.14655 | 8.30 | | | U |
| 11/09/1993 | Gaseous Fluoride | 1 | FL | 1440.0 | .10682 | 8.30 | | U | U |
| 11/09/1993 | Particulate Fluoride | 2 | FL | 1440.0 | 247.50000 | 8.30 | | | U |
| 11/09/1993 | Gaseous Fluoride | 2 | FL | 1440.0 | .34375 | 8.30 | | | J |
| 11/09/1993 | Particulate Fluoride | 6 | FL | 1440.0 | 335.00000 | 8.30 | | | U |
| 11/09/1993 | Gaseous Fluoride | 6 | FL | 1440.0 | .12500 | 8.30 | | U | U |
| 11/09/1993 | Particulate Fluoride | 7 | FL | 1440.0 | 305.00000 | 8.30 | | | U |
| 11/09/1993 | Gaseous Fluoride | 7 | FL | 1440.0 | .71875 | 8.30 | | | J |
| 11/13/1993 | Particulate Fluoride | 1 | FL | 1440.0 | 310.25695 | 8.30 | | | U |
| 11/13/1993 | Gaseous Fluoride | 1 | FL | 1440.0 | 1.08959 | 8.30 | | | J |
| 11/13/1993 | Particulate Fluoride | 2 | FL | 1440.0 | 235.58282 | 8.30 | | | U |
| 11/13/1993 | Gaseous Fluoride | 2 | FL | 1440.0 | 1.75460 | 8.30 | | | J |
| 11/13/1993 | Particulate Fluoride | 6 | FL | 1440.0 | 49.07975 | 8.30 | | U | UJ |
| 11/13/1993 | Gaseous Fluoride | 6 | FL | 1440.0 | .12270 | 8.30 | | U | UJ |
| 11/13/1993 | Particulate Fluoride | 7 | FL | 1440.0 | 463.80368 | 8.30 | | | U |
| 11/13/1993 | Gaseous Fluoride | 7 | FL | 1440.0 | .20184 | 8.30 | | B | J |
| 11/17/1993 | Particulate Fluoride | 1 | FL | 1440.0 | 53.50000 | 8.30 | | B | J |
| 11/17/1993 | Gaseous Fluoride | 1 | FL | 1440.0 | 1.63750 | 8.30 | | | J |
| 11/17/1993 | Particulate Fluoride | 2 | FL | 1440.0 | 50.00000 | 8.30 | | U | UJ |
| 11/17/1993 | Gaseous Fluoride | 2 | FL | 1440.0 | .46063 | 8.30 | | | J |
| 11/17/1993 | Particulate Fluoride | 6 | FL | 1440.0 | 50.00000 | 8.30 | | U | UJ |
| 11/17/1993 | Gaseous Fluoride | 6 | FL | 1440.0 | .12500 | 8.30 | | U | UJ |
| 11/17/1993 | Particulate Fluoride | 7 | FL | 1440.0 | 85.62500 | 8.30 | | B | J |
| 11/17/1993 | Gaseous Fluoride | 7 | FL | 1440.0 | .63750 | 8.30 | | | J |
| 11/21/1993 | Particulate Fluoride | 1 | FL | 1440.0 | 50.00000 | 8.30 | | B | J |
| 11/21/1993 | Gaseous Fluoride | 1 | FL | 1440.0 | .12500 | 8.30 | | U | UJ |
| 11/21/1993 | Particulate Fluoride | 2 | FL | 1440.0 | 69.37500 | 8.30 | | B | J |
| 11/21/1993 | Gaseous Fluoride | 2 | FL | 1440.0 | .86250 | 8.30 | | | J |
| 11/21/1993 | Particulate Fluoride | 6 | FL | 1440.0 | 96.25000 | 8.30 | | B | J |
| 11/21/1993 | Gaseous Fluoride | 6 | FL | 1440.0 | .12500 | 8.30 | | U | UJ |
| 11/21/1993 | Particulate Fluoride | 7 | FL | 1440.0 | 75.62500 | 8.30 | | B | J |
| 11/21/1993 | Gaseous Fluoride | 7 | FL | 1440.0 | .35563 | 8.30 | | | J |
| 11/25/1993 | Particulate Fluoride | 1 | FL | 1440.0 | 48.88889 | 8.30 | | B | J |
| 11/25/1993 | Gaseous Fluoride | 1 | FL | 1440.0 | .11696 | 8.30 | | U | UJ |
| 11/25/1993 | Particulate Fluoride | 2 | FL | 1440.0 | 46.78363 | 8.30 | | U | UJ |
| 11/25/1993 | Gaseous Fluoride | 2 | FL | 1440.0 | .21462 | 8.30 | | B | J |

| Sample Date | Chemical Name | Site No. | Typ | Run Time (min.) | Chem Conc (ugi/m3) | EPA Scr L(ug/m3) | Grav Val | Qual Lb | Qual Val |
|---|---|---|---|---|---|---|---|---|---|
| 11/25/1993 | Particulate Fluoride | 6 | FL | 1440.0 | 46.78363 | 8.30 | | U | UJ |
| 11/25/1993 | Gaseous Fluoride | 6 | FL | 1440.0 | .28304 | 8.30 | | B | J |
| 11/25/1993 | Particulate Fluoride | 7 | FL | 1440.0 | 49.59064 | 8.30 | | B | J |
| 11/25/1993 | Gaseous Fluoride | 7 | FL | 1440.0 | .42164 | 8.30 | | | J |
| 11/29/1993 | Particulate Fluoride | 1 | FL | 1440.0 | 67.08075 | 8.30 | | B | J |
| 11/29/1993 | Gaseous Fluoride | 1 | FL | 1440.0 | .12422 | 8.30 | | U | UJ |
| 11/29/1993 | Particulate Fluoride | 2 | FL | 1440.0 | 49.68944 | 8.30 | | U | UJ |
| 11/29/1993 | Gaseous Fluoride | 2 | FL | 1440.0 | .50124 | 8.30 | | | J |
| 11/29/1993 | Particulate Fluoride | 6 | FL | 1440.0 | 68.32298 | 8.30 | | B | J |
| 11/29/1993 | Gaseous Fluoride | 6 | FL | 1440.0 | .12422 | 8.30 | | U | UJ |
| 11/29/1993 | Particulate Fluoride | 7 | FL | 1440.0 | 64.59627 | 8.30 | | B | J |
| 11/29/1993 | Gaseous Fluoride | 7 | FL | 1440.0 | .45776 | 8.30 | | | J |
| 12/07/1993 | Particulate Fluoride | 1 | FL | 1560.0 | 49.55739 | 8.30 | | U | UJ |
| 12/07/1993 | Gaseous Fluoride | 1 | FL | 1560.0 | .32708 | 8.30 | | | J |
| 12/07/1993 | Particulate Fluoride | 2 | FL | 1440.0 | 49.07975 | 8.30 | | U | UJ |
| 12/07/1993 | Gaseous Fluoride | 2 | FL | 1440.0 | .12270 | 8.30 | | U | UJ |
| 12/07/1993 | Particulate Fluoride | 6 | FL | 1440.0 | 64.59074 | 8.30 | | B | J |
| 12/07/1993 | Gaseous Fluoride | 6 | FL | 1440.0 | .12303 | 8.30 | | U | UJ |
| 12/07/1993 | Particulate Fluoride | 7 | FL | 1440.0 | 49.07975 | 8.30 | | U | UJ |
| 12/07/1993 | Gaseous Fluoride | 7 | FL | 1440.0 | .88344 | 8.30 | | | J |
| 12/11/1993 | Particulate Fluoride | 1 | FL | 1440.0 | 50.98237 | 8.30 | | U | UJ |
| 12/11/1993 | Gaseous Fluoride | 1 | FL | 1440.0 | .46776 | 8.30 | | | J |
| 12/11/1993 | Particulate Fluoride | 2 | FL | 1440.0 | 67.51592 | 8.30 | | B | J |
| 12/11/1993 | Gaseous Fluoride | 2 | FL | 1440.0 | .77070 | 8.30 | | | J |
| 12/11/1993 | Particulate Fluoride | 6 | FL | 1440.0 | 119.80856 | 8.30 | | B | J |
| 12/11/1993 | Gaseous Fluoride | 6 | FL | 1440.0 | .12746 | 8.30 | | U | UJ |
| 12/11/1993 | Particulate Fluoride | 7 | FL | 1440.0 | 50.95541 | 8.30 | | U | UJ |
| 12/11/1993 | Gaseous Fluoride | 7 | FL | 1440.0 | .84076 | 8.30 | | | J |
| 12/15/1993 | Particulate Fluoride | 1 | FL | 1440.0 | 49.07975 | 8.30 | | U | UJ |
| 12/15/1993 | Gaseous Fluoride | 1 | FL | 1440.0 | 2.00613 | 8.30 | | | J |
| 12/15/1993 | Particulate Fluoride | 6 | FL | 1440.0 | 49.32122 | 8.30 | | U | UJ |
| 12/15/1993 | Gaseous Fluoride | 6 | FL | 1440.0 | .12330 | 8.30 | | U | UJ |
| 12/15/1993 | Particulate Fluoride | 7 | FL | 1440.0 | 60.61350 | 8.30 | | B | J |
| 12/15/1993 | Gaseous Fluoride | 7 | FL | 1440.0 | .66871 | 8.30 | | | J |
| 12/19/1993 | Particulate Fluoride | 1 | FL | 1440.0 | 50.06135 | 8.30 | | B | J |
| 12/19/1993 | Gaseous Fluoride | 1 | FL | 1440.0 | 2.34356 | 8.30 | | | J |
| 12/19/1993 | Particulate Fluoride | 2 | FL | 1440.0 | 51.77914 | 8.30 | | B | J |
| 12/19/1993 | Gaseous Fluoride | 2 | FL | 1440.0 | .98773 | 8.30 | | | J |
| 12/19/1993 | Particulate Fluoride | 6 | FL | 1440.0 | 49.07975 | 8.30 | | U | UJ |
| 12/19/1993 | Gaseous Fluoride | 6 | FL | 1440.0 | .12270 | 8.30 | | U | UJ |
| 12/19/1993 | Particulate Fluoride | 7 | FL | 1440.0 | 49.07975 | 8.30 | | U | UJ |
| 12/19/1993 | Gaseous Fluoride | 7 | FL | 1440.0 | .31902 | 8.30 | | | J |
| 12/21/1993 | Particulate Fluoride | 2 | FL | 1440.0 | 48.78049 | 8.30 | | U | UJ |
| 12/21/1993 | Gaseous Fluoride | 2 | FL | 1440.0 | 1.14634 | 8.30 | | | J |
| 12/21/1993 | Particulate Fluoride | 8 | FL | 1440.0 | 48.88302 | 8.30 | Q | U | UJ |
| 12/21/1993 | Gaseous Fluoride | 8 | FL | 1440.0 | .66603 | 8.30 | Q | | J |
| 12/23/1993 | Particulate Fluoride | 1 | FL | 1440.0 | 48.19277 | 8.30 | | U | UJ |
| 12/23/1993 | Gaseous Fluoride | 1 | FL | 1440.0 | 1.45181 | 8.30 | | | J |
| 12/23/1993 | Particulate Fluoride | 2 | FL | 1440.0 | 48.19277 | 8.30 | | U | UJ |
| 12/23/1993 | Gaseous Fluoride | 2 | FL | 1440.0 | .91566 | 8.30 | | | J |
| 12/23/1993 | Particulate Fluoride | 6 | FL | 1440.0 | 48.19277 | 8.30 | | U | UJ |
| 12/23/1993 | Gaseous Fluoride | 6 | FL | 1440.0 | .12048 | 8.30 | | U | UJ |
| 12/23/1993 | Particulate Fluoride | 7 | FL | 1440.0 | 48.19277 | 8.30 | | U | UJ |

| Sample Date | Chemical Name | Site No. | Typ | Run Time (min.) | Chem Conc (ugi/m3) | EPA Scr L(ug/m3) | Grav Val | Qual Lb | Qual Val |
|---|---|---|---|---|---|---|---|---|---|
| 12/23/1993 | Gaseous Fluoride | 7 | FL | 1440.0 | .96386 | 8.30 | | | J |
| 12/27/1993 | Particulate Fluoride | 1 | FL | 1440.0 | 45.71350 | 8.30 | | U | UJ |
| 12/27/1993 | Gaseous Fluoride | 1 | FL | 1440.0 | .76570 | 8.30 | | | J |
| 12/27/1993 | Particulate Fluoride | 2 | FL | 1440.0 | 51.67491 | 8.30 | | U | UJ |
| 12/27/1993 | Gaseous Fluoride | 2 | FL | 1440.0 | 1.31125 | 8.30 | | | J |
| 12/27/1993 | Particulate Fluoride | 6 | FL | 1440.0 | 49.68944 | 8.30 | | U | UJ |
| 12/27/1993 | Gaseous Fluoride | 6 | FL | 1440.0 | .12422 | 8.30 | | U | UJ |
| 12/27/1993 | Particulate Fluoride | 7 | FL | 1440.0 | 47.54038 | 8.30 | | U | UJ |
| 12/27/1993 | Gaseous Fluoride | 7 | FL | 1440.0 | .91515 | 8.30 | | | J |
| 12/31/1993 | Particulate Fluoride | 1 | FL | 1440.0 | 50.00000 | 8.30 | | U | UJ |
| 12/31/1993 | Gaseous Fluoride | 1 | FL | 1440.0 | 2.13750 | 8.30 | | | J |
| 12/31/1993 | Particulate Fluoride | 2 | FL | 1440.0 | 50.00000 | 8.30 | | U | UJ |
| 12/31/1993 | Gaseous Fluoride | 2 | FL | 1440.0 | 1.71250 | 8.30 | | | J |
| 12/31/1993 | Particulate Fluoride | 6 | FL | 1440.0 | 50.00000 | 8.30 | | U | UJ |
| 12/31/1993 | Gaseous Fluoride | 6 | FL | 1440.0 | .12500 | 8.30 | | U | UJ |
| 12/31/1993 | Particulate Fluoride | 7 | FL | 1440.0 | 50.00000 | 8.30 | | U | UJ |
| 12/31/1993 | Gaseous Fluoride | 7 | FL | 1440.0 | .12500 | 8.30 | | U | UJ |
| 01/02/1994 | Particulate Fluoride | 2 | FL | 1440.0 | 50.63291 | 8.30 | | U | UJ |
| 01/02/1994 | Gaseous Fluoride | 2 | FL | 1440.0 | 1.32911 | 8.30 | | | J |
| 01/02/1994 | Particulate Fluoride | 8 | FL | 1440.0 | 50.45472 | 8.30 | | U | UJ |
| 01/02/1994 | Gaseous Fluoride | 8 | FL | 1440.0 | 1.71546 | 8.30 | | | J |
| 01/04/1994 | Particulate Fluoride | 1 | FL | 1440.0 | 50.63291 | 8.30 | | U | UJ |
| 01/04/1994 | Gaseous Fluoride | 1 | FL | 1440.0 | .88608 | 8.30 | | | UJ |
| 01/04/1994 | Particulate Fluoride | 2 | FL | 1440.0 | 50.63291 | 8.30 | | U | UJ |
| 01/04/1994 | Gaseous Fluoride | 2 | FL | 1440.0 | 1.24684 | 8.30 | | | J |
| 01/04/1994 | Particulate Fluoride | 6 | FL | 1440.0 | 50.63291 | 8.30 | | U | UJ |
| 01/04/1994 | Gaseous Fluoride | 6 | FL | 1440.0 | .12658 | 8.30 | | U | UJ |
| 01/04/1994 | Particulate Fluoride | 7 | FL | 1440.0 | 50.63291 | 8.30 | | U | UJ |
| 01/04/1994 | Gaseous Fluoride | 7 | FL | 1440.0 | .50063 | 8.30 | | | UJ |
| 01/06/1994 | Particulate Fluoride | 2 | FL | 1440.0 | 49.68944 | 8.30 | | U | UJ |
| 01/06/1994 | Gaseous Fluoride | 2 | FL | 1440.0 | 1.24845 | 8.30 | | | J |
| 01/06/1994 | Particulate Fluoride | 8 | FL | 1440.0 | 49.65182 | 8.30 | | U | UJ |
| 01/06/1994 | Gaseous Fluoride | 8 | FL | 1440.0 | 1.87436 | 8.30 | | | J |
| 01/08/1994 | Particulate Fluoride | 1 | FL | 1440.0 | 49.68944 | 8.30 | | U | UJ |
| 01/08/1994 | Gaseous Fluoride | 1 | FL | 1440.0 | .26584 | 8.30 | | B | UJ |
| 01/08/1994 | Particulate Fluoride | 2 | FL | 1440.0 | 45.97701 | 8.30 | | U | UJ |
| 01/08/1994 | Gaseous Fluoride | 2 | FL | 1440.0 | .75862 | 8.30 | | | UJ |
| 01/08/1994 | Particulate Fluoride | 6 | FL | 1440.0 | 45.83030 | 8.30 | | U | UJ |
| 01/08/1994 | Gaseous Fluoride | 6 | FL | 1440.0 | .11458 | 8.30 | | U | UJ |
| 01/08/1994 | Particulate Fluoride | 7 | FL | 1440.0 | 47.61905 | 8.30 | | U | UJ |
| 01/08/1994 | Gaseous Fluoride | 7 | FL | 1440.0 | .58988 | 8.30 | | | UJ |
| 01/12/1994 | Particulate Fluoride | 1 | FL | 1440.0 | 50.30845 | 8.30 | | U | UJ |
| 01/12/1994 | Gaseous Fluoride | 1 | FL | 1440.0 | .71061 | 8.30 | | | J |
| 01/12/1994 | Particulate Fluoride | 2 | FL | 1440.0 | 50.30845 | 8.30 | | U | UJ |
| 01/12/1994 | Gaseous Fluoride | 2 | FL | 1440.0 | 3.03108 | 8.30 | | | J |
| 01/12/1994 | Particulate Fluoride | 6 | FL | 1440.0 | 50.63291 | 8.30 | | U | UJ |
| 01/12/1994 | Gaseous Fluoride | 6 | FL | 1440.0 | .12658 | 8.30 | | U | UJ |
| 01/12/1994 | Particulate Fluoride | 7 | FL | 1440.0 | 50.63291 | 8.30 | | U | UJ |
| 01/12/1994 | Gaseous Fluoride | 7 | FL | 1440.0 | .12658 | 8.30 | | U | UJ |
| 01/16/1994 | Particulate Fluoride | 1 | FL | 1440.0 | 49.68944 | 8.30 | | U | UJ |
| 01/16/1994 | Gaseous Fluoride | 1 | FL | 1440.0 | 2.47826 | 8.30 | | | J |
| 01/16/1994 | Particulate Fluoride | 2 | FL | 1440.0 | 49.68944 | 8.30 | | U | UJ |
| 01/16/1994 | Gaseous Fluoride | 2 | FL | 1440.0 | 5.01242 | 8.30 | | | J |

| Sample Date | Chemical Name | Site No. | Typ | Run Time (min.) | Chem Conc (ugi/m3) | EPA Scr L(ug/m3) | Grav Val | Qual Lb | Qual Val |
|---|---|---|---|---|---|---|---|---|---|
| 01/16/1994 | Particulate Fluoride | 6 | FL | 1440.0 | 49.68944 | 8.30 | | U | UJ |
| 01/16/1994 | Gaseous Fluoride | 6 | FL | 1440.0 | .12422 | 8.30 | | U | UJ |
| 01/16/1994 | Particulate Fluoride | 7 | FL | 1440.0 | 49.68944 | 8.30 | | U | UJ |
| 01/16/1994 | Gaseous Fluoride | 7 | FL | 1440.0 | .12422 | 8.30 | | U | UJ |
| 01/20/1994 | Particulate Fluoride | 1 | FL | 1440.0 | 49.68944 | 8.30 | | U | UJ |
| 01/20/1994 | Gaseous Fluoride | 1 | FL | 1440.0 | .34720 | 8.30 | | | J |
| 01/20/1994 | Particulate Fluoride | 2 | FL | 1440.0 | 49.68944 | 8.30 | | U | UJ |
| 01/20/1994 | Gaseous Fluoride | 2 | FL | 1440.0 | .43913 | 8.30 | | | J |
| 01/20/1994 | Particulate Fluoride | 6 | FL | 1440.0 | 49.68944 | 8.30 | | U | UJ |
| 01/20/1994 | Gaseous Fluoride | 6 | FL | 1440.0 | .12422 | 8.30 | | U | UJ |
| 01/20/1994 | Particulate Fluoride | 7 | FL | 1440.0 | 49.68944 | 8.30 | | U | UJ |
| 01/20/1994 | Gaseous Fluoride | 7 | FL | 1440.0 | .62733 | 8.30 | | | J |
| 01/24/1994 | Particulate Fluoride | 1 | FL | 1440.0 | 50.95541 | 8.30 | | U | UJ |
| 01/24/1994 | Gaseous Fluoride | 1 | FL | 1440.0 | .12739 | 8.30 | | U | UJ |
| 01/24/1994 | Particulate Fluoride | 2 | FL | 1440.0 | 50.95541 | 8.30 | | U | UJ |
| 01/24/1994 | Gaseous Fluoride | 2 | FL | 1440.0 | .89809 | 8.30 | | | J |
| 01/24/1994 | Particulate Fluoride | 6 | FL | 1440.0 | 50.95541 | 8.30 | | U | UJ |
| 01/24/1994 | Gaseous Fluoride | 6 | FL | 1440.0 | .12739 | 8.30 | | U | UJ |
| 01/24/1994 | Particulate Fluoride | 7 | FL | 1440.0 | 50.95541 | 8.30 | | U | UJ |
| 01/24/1994 | Gaseous Fluoride | 7 | FL | 1440.0 | .12739 | 8.30 | | U | UJ |
| 01/28/1994 | Particulate Fluoride | 1 | FL | 1440.0 | 47.40235 | 8.30 | | U | UJ |
| 01/28/1994 | Gaseous Fluoride | 1 | FL | 1440.0 | 1.23246 | 8.30 | | | J |
| 01/28/1994 | Particulate Fluoride | 2 | FL | 1440.0 | 45.57833 | 8.30 | | U | UJ |
| 01/28/1994 | Gaseous Fluoride | 2 | FL | 1440.0 | .44895 | 8.30 | | | J |
| 01/28/1994 | Particulate Fluoride | 6 | FL | 1440.0 | 47.40235 | 8.30 | | U | UJ |
| 01/28/1994 | Gaseous Fluoride | 6 | FL | 1440.0 | .11851 | 8.30 | | U | UJ |
| 01/28/1994 | Particulate Fluoride | 7 | FL | 1440.0 | 49.37845 | 8.30 | | U | UJ |
| 01/28/1994 | Gaseous Fluoride | 7 | FL | 1440.0 | .12345 | 8.30 | | U | UJ |
| 02/01/1994 | Particulate Fluoride | 1 | FL | 1440.0 | 48.78049 | 8.30 | | U | UJ |
| 02/01/1994 | Gaseous Fluoride | 1 | FL | 1440.0 | .32622 | 8.30 | | | J |
| 02/01/1994 | Particulate Fluoride | 2 | FL | 1440.0 | 46.78363 | 8.30 | | U | UJ |
| 02/01/1994 | Gaseous Fluoride | 2 | FL | 1440.0 | .74854 | 8.30 | | | J |
| 02/01/1994 | Particulate Fluoride | 6 | FL | 1440.0 | 48.78049 | 8.30 | | U | UJ |
| 02/01/1994 | Gaseous Fluoride | 6 | FL | 1440.0 | .12195 | 8.30 | | U | UJ |
| 02/01/1994 | Particulate Fluoride | 7 | FL | 1440.0 | 50.63291 | 8.30 | | U | UJ |
| 02/01/1994 | Gaseous Fluoride | 7 | FL | 1440.0 | .96203 | 8.30 | | | J |
| 02/05/1994 | Particulate Fluoride | 1 | FL | 1440.0 | 49.07975 | 8.30 | | U | UJ |
| 02/05/1994 | Gaseous Fluoride | 1 | FL | 1440.0 | .49387 | 8.30 | | | J |
| 02/05/1994 | Particulate Fluoride | 2 | FL | 2095.0 | 31.00775 | 8.30 | TR | U | UJ |
| 02/05/1994 | Gaseous Fluoride | 2 | FL | 2095.0 | .34457 | 8.30 | TR | | J |
| 02/05/1994 | Particulate Fluoride | 6 | FL | 1440.0 | 49.07975 | 8.30 | | U | UJ |
| 02/05/1994 | Gaseous Fluoride | 6 | FL | 1440.0 | .12270 | 8.30 | | U | UJ |
| 02/05/1994 | Particulate Fluoride | 7 | FL | 1440.0 | 52.51534 | 8.30 | | B | UJ |
| 02/05/1994 | Gaseous Fluoride | 7 | FL | 1440.0 | 1.34969 | 8.30 | | | UJ |
| 02/09/1994 | Particulate Fluoride | 1 | FL | 1440.0 | 49.07975 | 8.30 | | U | UJ |
| 02/09/1994 | Gaseous Fluoride | 1 | FL | 1440.0 | 3.87117 | 8.30 | | | J |
| 02/09/1994 | Particulate Fluoride | 6 | FL | 1440.0 | 49.33886 | 8.30 | | U | UJ |
| 02/09/1994 | Gaseous Fluoride | 6 | FL | 1440.0 | .12335 | 8.30 | | U | UJ |
| 02/09/1994 | Particulate Fluoride | 7 | FL | 1440.0 | 51.79487 | 8.30 | | B | UJ |
| 02/09/1994 | Gaseous Fluoride | 7 | FL | 1440.0 | .12821 | 8.30 | | U | UJ |
| 02/13/1994 | Particulate Fluoride | 1 | FL | 1440.0 | 49.07975 | 8.30 | | U | UJ |
| 02/13/1994 | Gaseous Fluoride | 1 | FL | 1440.0 | .32393 | 8.30 | | | J |
| 02/13/1994 | Particulate Fluoride | 2 | FL | 1440.0 | 49.07975 | 8.30 | | U | UJ |

| Sample Date | Chemical Name | Site No. | Typ | Run Time (min.) | Chem Conc (ugi/m3) | EPA Scr L(ug/m3) | Grav Val | Qual Lb | Qual Val |
|---|---|---|---|---|---|---|---|---|---|
| 02/13/1994 | Gaseous Fluoride | 2 | FL | 1440.0 | .45337 | 8.30 | | | J |
| 02/13/1994 | Particulate Fluoride | 6 | FL | 1440.0 | 51.77914 | 8.30 | | B | UJ |
| 02/13/1994 | Gaseous Fluoride | 6 | FL | 1440.0 | .12270 | 8.30 | | U | UJ |
| 02/13/1994 | Particulate Fluoride | 7 | FL | 1440.0 | 49.07975 | 8.30 | | U | UJ |
| 02/13/1994 | Gaseous Fluoride | 7 | FL | 1440.0 | .32025 | 8.30 | | | J |
| 02/17/1994 | Particulate Fluoride | 1 | FL | 1440.0 | 51.22229 | 8.30 | | U | UJ |
| 02/17/1994 | Gaseous Fluoride | 1 | FL | 1440.0 | 1.90163 | 8.30 | | | J |
| 02/17/1994 | Particulate Fluoride | 2 | FL | 1440.0 | 52.26299 | 8.30 | | U | UJ |
| 02/17/1994 | Gaseous Fluoride | 2 | FL | 1440.0 | 1.13672 | 8.30 | | | J |
| 02/17/1994 | Particulate Fluoride | 6 | FL | 1440.0 | 51.22229 | 8.30 | | U | UJ |
| 02/17/1994 | Gaseous Fluoride | 6 | FL | 1440.0 | .12806 | 8.30 | | U | UJ |
| 02/17/1994 | Particulate Fluoride | 7 | FL | 1440.0 | 51.20328 | 8.30 | | U | UJ |
| 02/17/1994 | Gaseous Fluoride | 7 | FL | 1440.0 | .12801 | 8.30 | | U | UJ |
| 02/21/1994 | Particulate Fluoride | 2 | FL | 1440.0 | 49.78096 | 8.30 | | U | UJ |
| 02/21/1994 | Gaseous Fluoride | 2 | FL | 1440.0 | .74671 | 8.30 | | | J |
| 02/21/1994 | Particulate Fluoride | 6 | FL | 1440.0 | 49.78096 | 8.30 | | U | UJ |
| 02/21/1994 | Gaseous Fluoride | 6 | FL | 1440.0 | .12445 | 8.30 | | U | UJ |
| 02/21/1994 | Particulate Fluoride | 7 | FL | 1440.0 | 49.78096 | 8.30 | | U | UJ |
| 02/21/1994 | Gaseous Fluoride | 7 | FL | 1440.0 | .12445 | 8.30 | | U | UJ |
| 02/25/1994 | Particulate Fluoride | 1 | FL | 1440.0 | 50.76348 | 8.30 | | U | UJ |
| 02/25/1994 | Gaseous Fluoride | 1 | FL | 1440.0 | 1.00258 | 8.30 | | | J |
| 02/25/1994 | Particulate Fluoride | 2 | FL | 1440.0 | 50.78205 | 8.30 | | U | UJ |
| 02/25/1994 | Gaseous Fluoride | 2 | FL | 1440.0 | 1.49172 | 8.30 | | | J |
| 02/25/1994 | Particulate Fluoride | 6 | FL | 1440.0 | 50.78205 | 8.30 | | U | UJ |
| 02/25/1994 | Gaseous Fluoride | 6 | FL | 1440.0 | .12696 | 8.30 | | U | UJ |
| 02/25/1994 | Particulate Fluoride | 7 | FL | 1440.0 | 50.78205 | 8.30 | | U | UJ |
| 02/25/1994 | Gaseous Fluoride | 7 | FL | 1440.0 | .49068 | 8.30 | | | J |
| 03/01/1994 | Particulate Fluoride | 1 | FL | 1440.0 | 50.68937 | 8.30 | | U | UJ |
| 03/01/1994 | Gaseous Fluoride | 1 | FL | 1440.0 | .81103 | 8.30 | | | J |
| 03/01/1994 | Particulate Fluoride | 2 | FL | 1440.0 | 50.68937 | 8.30 | VOID | U | UJ |
| 03/01/1994 | Gaseous Fluoride | 2 | FL | 1440.0 | .46001 | 8.30 | VOID | | J |
| 03/01/1994 | Particulate Fluoride | 6 | FL | 1440.0 | 45.05722 | 8.30 | | U | UJ |
| 03/01/1994 | Gaseous Fluoride | 6 | FL | 1440.0 | .11264 | 8.30 | | U | UJ |
| 03/01/1994 | Particulate Fluoride | 7 | FL | 1440.0 | 60.57380 | 8.30 | | B | J |
| 03/01/1994 | Gaseous Fluoride | 7 | FL | 1440.0 | .31681 | 8.30 | | | J |
| 03/05/1994 | Particulate Fluoride | 1 | FL | 1440.0 | 50.80062 | 8.30 | | U | UJ |
| 03/05/1994 | Gaseous Fluoride | 1 | FL | 1440.0 | .90171 | 8.30 | | | J |
| 03/05/1994 | Particulate Fluoride | 2 | FL | 1440.0 | 50.78205 | 8.30 | | U | UJ |
| 03/05/1994 | Gaseous Fluoride | 2 | FL | 1440.0 | .86964 | 8.30 | | | J |
| 03/05/1994 | Particulate Fluoride | 6 | FL | 1440.0 | 50.78205 | 8.30 | | U | UJ |
| 03/05/1994 | Gaseous Fluoride | 6 | FL | 1440.0 | .12696 | 8.30 | | U | UJ |
| 03/05/1994 | Particulate Fluoride | 7 | FL | 1440.0 | 50.78205 | 8.30 | | U | UJ |
| 03/05/1994 | Gaseous Fluoride | 7 | FL | 1440.0 | .74269 | 8.30 | | | J |
| 03/09/1994 | Particulate Fluoride | 1 | FL | 1440.0 | 50.73566 | 8.30 | | U | UJ |
| 03/09/1994 | Gaseous Fluoride | 1 | FL | 1440.0 | .48072 | 8.30 | | | J |
| 03/09/1994 | Particulate Fluoride | 2 | FL | 1440.0 | 49.69191 | 8.30 | | U | UJ |
| 03/09/1994 | Gaseous Fluoride | 2 | FL | 1440.0 | 1.10564 | 8.30 | | | J |
| 03/09/1994 | Particulate Fluoride | 6 | FL | 1440.0 | 52.00406 | 8.30 | | B | J |
| 03/09/1994 | Gaseous Fluoride | 6 | FL | 1440.0 | .12684 | 8.30 | | U | UJ |
| 03/09/1994 | Particulate Fluoride | 7 | FL | 1440.0 | 50.73566 | 8.30 | | U | UJ |
| 03/09/1994 | Gaseous Fluoride | 7 | FL | 1440.0 | 2.98706 | 8.30 | | | J |
| 03/13/1994 | Particulate Fluoride | 1 | FL | 1440.0 | 51.34524 | 8.30 | | U | UJ |
| 03/13/1994 | Gaseous Fluoride | 1 | FL | 1440.0 | .12836 | 8.30 | | U | UJ |

| Sample Date | Chemical Name | Site No. | Typ | Run Time (min.) | Chem Conc (ugi/m3) | EPA Scr L(ug/m3) | Grav Val | Qual Lb | Qual Val |
|---|---|---|---|---|---|---|---|---|---|
| 03/13/1994 | Particulate Fluoride | 2 | FL | 1440.0 | 51.34524 | 8.30 | | U | UJ |
| 03/13/1994 | Gaseous Fluoride | 2 | FL | 1440.0 | 1.21945 | 8.30 | | | J |
| 03/13/1994 | Particulate Fluoride | 6 | FL | 1440.0 | 52.37215 | 8.30 | | B | J |
| 03/13/1994 | Gaseous Fluoride | 6 | FL | 1440.0 | .12836 | 8.30 | | U | UJ |
| 03/13/1994 | Particulate Fluoride | 7 | FL | 1440.0 | 51.34524 | 8.30 | | U | UJ |
| 03/13/1994 | Gaseous Fluoride | 7 | FL | 1440.0 | 7.44506 | 8.30 | | | J |
| 03/17/1994 | Particulate Fluoride | 1 | FL | 1440.0 | 51.01520 | 8.30 | | U | UJ |
| 03/17/1994 | Gaseous Fluoride | 1 | FL | 1440.0 | 2.08525 | 8.30 | | | J |
| 03/17/1994 | Particulate Fluoride | 2 | FL | 1440.0 | 51.01520 | 8.30 | | U | UJ |
| 03/17/1994 | Gaseous Fluoride | 2 | FL | 1440.0 | 1.94495 | 8.30 | | | J |
| 03/17/1994 | Particulate Fluoride | 6 | FL | 1440.0 | 51.01520 | 8.30 | | U | UJ |
| 03/17/1994 | Gaseous Fluoride | 6 | FL | 1440.0 | .12754 | 8.30 | | U | UJ |
| 03/17/1994 | Particulate Fluoride | 7 | FL | 1440.0 | 51.01520 | 8.30 | | U | UJ |
| 03/17/1994 | Gaseous Fluoride | 7 | FL | 1440.0 | 4.48934 | 8.30 | | | J |
| 03/21/1994 | Particulate Fluoride | 1 | FL | 1440.0 | 51.53577 | 8.30 | | U | UJ |
| 03/21/1994 | Gaseous Fluoride | 1 | FL | 1440.0 | 1.25618 | 8.30 | | | J |
| 03/21/1994 | Particulate Fluoride | 2 | FL | 1440.0 | 51.53577 | 8.30 | | U | UJ |
| 03/21/1994 | Gaseous Fluoride | 2 | FL | 1440.0 | 1.04360 | 8.30 | | | J |
| 03/21/1994 | Particulate Fluoride | 6 | FL | 1440.0 | 51.53577 | 8.30 | | U | UJ |
| 03/21/1994 | Gaseous Fluoride | 6 | FL | 1440.0 | .12884 | 8.30 | | U | UJ |
| 03/21/1994 | Particulate Fluoride | 7 | FL | 1440.0 | 51.53577 | 8.30 | | U | UJ |
| 03/21/1994 | Gaseous Fluoride | 7 | FL | 1440.0 | 8.69666 | 8.30 | | | J |
| 03/25/1994 | Particulate Fluoride | 1 | FL | 1440.0 | 50.45918 | 8.30 | | U | UJ |
| 03/25/1994 | Gaseous Fluoride | 1 | FL | 1440.0 | .12615 | 8.30 | | U | UJ |
| 03/25/1994 | Particulate Fluoride | 2 | FL | 1440.0 | 50.45918 | 8.30 | | U | UJ |
| 03/25/1994 | Gaseous Fluoride | 2 | FL | 1440.0 | .52225 | 8.30 | | | J |
| 03/25/1994 | Particulate Fluoride | 6 | FL | 1440.0 | 50.45918 | 8.30 | | U | UJ |
| 03/25/1994 | Gaseous Fluoride | 6 | FL | 1440.0 | .12615 | 8.30 | | U | UJ |
| 03/25/1994 | Particulate Fluoride | 7 | FL | 1440.0 | 51.97296 | 8.30 | | B | J |
| 03/25/1994 | Gaseous Fluoride | 7 | FL | 1440.0 | .56073 | 8.30 | | | J |
| 03/29/1994 | Particulate Fluoride | 1 | FL | 1440.0 | 50.82850 | 8.30 | | U | UJ |
| 03/29/1994 | Gaseous Fluoride | 1 | FL | 1440.0 | .12707 | 8.30 | | U | UJ |
| 03/29/1994 | Particulate Fluoride | 2 | FL | 1440.0 | 50.82850 | 8.30 | | U | UJ |
| 03/29/1994 | Gaseous Fluoride | 2 | FL | 1440.0 | .36978 | 8.30 | | | J |
| 03/29/1994 | Particulate Fluoride | 6 | FL | 1440.0 | 50.82850 | 8.30 | | U | UJ |
| 03/29/1994 | Gaseous Fluoride | 6 | FL | 1440.0 | .12707 | 8.30 | | U | UJ |
| 03/29/1994 | Particulate Fluoride | 7 | FL | 1440.0 | 50.82850 | 8.30 | | U | UJ |
| 03/29/1994 | Gaseous Fluoride | 7 | FL | 1440.0 | .80055 | 8.30 | | | J |
| 03/31/1994 | Particulate Fluoride | 2 | FL | 1440.0 | 51.39274 | 8.30 | | U | UJ |
| 03/31/1994 | Gaseous Fluoride | 2 | FL | 1440.0 | 1.00218 | 8.30 | | | J |
| 03/31/1994 | Particulate Fluoride | 8 | FL | 1440.0 | 51.39274 | 8.30 | | U | UJ |
| 03/31/1994 | Gaseous Fluoride | 8 | FL | 1440.0 | .66811 | 8.30 | | | J |
| 04/02/1994 | Particulate Fluoride | 1 | FL | 1440.0 | 51.58362 | 8.30 | | U | UJ |
| 04/02/1994 | Gaseous Fluoride | 1 | FL | 1440.0 | .53711 | 8.30 | | | J |
| 04/02/1994 | Particulate Fluoride | 2 | FL | 1440.0 | 51.58362 | 8.30 | | U | UJ |
| 04/02/1994 | Gaseous Fluoride | 2 | FL | 1440.0 | .12896 | 8.30 | | U | UJ |
| 04/02/1994 | Particulate Fluoride | 6 | FL | 1440.0 | 53.83290 | 8.30 | | U | UJ |
| 04/02/1994 | Gaseous Fluoride | 6 | FL | 1440.0 | .13458 | 8.30 | | U | UJ |
| 04/02/1994 | Particulate Fluoride | 7 | FL | 1440.0 | 53.83290 | 8.30 | | U | UJ |
| 04/02/1994 | Gaseous Fluoride | 7 | FL | 1440.0 | 2.22734 | 8.30 | | | J |
| 04/06/1994 | Particulate Fluoride | 1 | FL | 1440.0 | 51.01520 | 8.30 | | U | UJ |
| 04/06/1994 | Gaseous Fluoride | 1 | FL | 1440.0 | 2.90149 | 8.30 | | | J |
| 04/06/1994 | Particulate Fluoride | 2 | FL | 1440.0 | 51.01520 | 8.30 | | U | UJ |

| Sample Date | Chemical Name | Site No. | Typ | Run Time (min.) | Chem Conc (ugi/m3) | EPA Scr L(ug/m3) | Grav Val | Qual Lb | Qual Val |
|---|---|---|---|---|---|---|---|---|---|
| 04/06/1994 | Gaseous Fluoride | 2 | FL | 1440.0 | .89277 | 8.30 | | | J |
| 04/06/1994 | Particulate Fluoride | 6 | FL | 1440.0 | 51.01520 | 8.30 | | U | UJ |
| 04/06/1994 | Gaseous Fluoride | 6 | FL | 1440.0 | .12754 | 8.30 | | U | UJ |
| 04/06/1994 | Particulate Fluoride | 7 | FL | 1440.0 | 51.01520 | 8.30 | | U | UJ |
| 04/06/1994 | Gaseous Fluoride | 7 | FL | 1440.0 | .48082 | 8.30 | | | J |
| 04/10/1994 | Particulate Fluoride | 1 | FL | 1440.0 | 50.96840 | 8.30 | | U | UJ |
| 04/10/1994 | Gaseous Fluoride | 1 | FL | 1440.0 | 2.96254 | 8.30 | | | J |
| 04/10/1994 | Particulate Fluoride | 2 | FL | 1440.0 | 50.96840 | 8.30 | | U | UJ |
| 04/10/1994 | Gaseous Fluoride | 2 | FL | 1440.0 | 1.25510 | 8.30 | | | J |
| 04/10/1994 | Particulate Fluoride | 6 | FL | 1440.0 | 50.96840 | 8.30 | | U | UJ |
| 04/10/1994 | Gaseous Fluoride | 6 | FL | 1440.0 | .12742 | 8.30 | | U | UJ |
| 04/10/1994 | Particulate Fluoride | 7 | FL | 1440.0 | 50.96840 | 8.30 | | U | UJ |
| 04/10/1994 | Gaseous Fluoride | 7 | FL | 1440.0 | .12742 | 8.30 | | U | UJ |
| 04/10/1994 | Particulate Fluoride | 8 | FL | 1440.0 | 50.96840 | 8.30 | | U | UJ |
| 04/10/1994 | Gaseous Fluoride | 8 | FL | 1440.0 | 3.26835 | 8.30 | | | J |
| 04/14/1994 | Particulate Fluoride | 1 | FL | 1440.0 | 51.39274 | 8.30 | | U | UJ |
| 04/14/1994 | Gaseous Fluoride | 1 | FL | 1440.0 | 3.21205 | 8.30 | | | J |
| 04/14/1994 | Particulate Fluoride | 2 | FL | 1440.0 | 51.39274 | 8.30 | | U | UJ |
| 04/14/1994 | Gaseous Fluoride | 2 | FL | 1440.0 | 2.92296 | 8.30 | | | J |
| 04/14/1994 | Particulate Fluoride | 6 | FL | 1440.0 | 51.39274 | 8.30 | VOID | U | UJ |
| 04/14/1994 | Gaseous Fluoride | 6 | FL | 1440.0 | .12848 | 8.30 | VOID | U | UJ |
| 04/14/1994 | Particulate Fluoride | 7 | FL | 1440.0 | 51.39274 | 8.30 | | U | UJ |
| 04/14/1994 | Gaseous Fluoride | 7 | FL | 1440.0 | 6.16071 | 8.30 | | | J |
| 04/14/1994 | Particulate Fluoride | 8 | FL | 1440.0 | 51.40225 | 8.30 | | U | UJ |
| 04/14/1994 | Gaseous Fluoride | 8 | FL | 1440.0 | 1.02162 | 8.30 | | | J |
| 04/18/1994 | Particulate Fluoride | 1 | FL | 1440.0 | 53.31627 | 8.30 | | U | UJ |
| 04/18/1994 | Gaseous Fluoride | 1 | FL | 1440.0 | .15795 | 8.30 | | B | J |
| 04/18/1994 | Particulate Fluoride | 2 | FL | 1440.0 | 53.31627 | 8.30 | | U | UJ |
| 04/18/1994 | Gaseous Fluoride | 2 | FL | 1440.0 | 1.97270 | 8.30 | | | J |
| 04/18/1994 | Particulate Fluoride | 6 | FL | 1440.0 | 53.31627 | 8.30 | | U | UJ |
| 04/18/1994 | Gaseous Fluoride | 6 | FL | 1440.0 | .13329 | 8.30 | | U | UJ |
| 04/18/1994 | Particulate Fluoride | 7 | FL | 1440.0 | 53.31627 | 8.30 | | U | UJ |
| 04/18/1994 | Gaseous Fluoride | 7 | FL | 1440.0 | 1.61282 | 8.30 | | | J |
| 04/18/1994 | Particulate Fluoride | 8 | FL | 1440.0 | 53.31627 | 8.30 | | U | UJ |
| 04/18/1994 | Gaseous Fluoride | 8 | FL | 1440.0 | 2.19930 | 8.30 | | | J |
| 04/22/1994 | Particulate Fluoride | 1 | FL | 1440.0 | 52.46039 | 8.30 | | U | UJ |
| 04/22/1994 | Gaseous Fluoride | 1 | FL | 1440.0 | 1.69185 | 8.30 | | | J |
| 04/22/1994 | Particulate Fluoride | 2 | FL | 1440.0 | 52.46039 | 8.30 | | U | UJ |
| 04/22/1994 | Gaseous Fluoride | 2 | FL | 1440.0 | 2.35416 | 8.30 | | | J |
| 04/22/1994 | Particulate Fluoride | 6 | FL | 1440.0 | 52.46039 | 8.30 | | U | UJ |
| 04/22/1994 | Gaseous Fluoride | 6 | FL | 1440.0 | .13115 | 8.30 | | U | UJ |
| 04/22/1994 | Particulate Fluoride | 7 | FL | 1440.0 | 52.46039 | 8.30 | | U | UJ |
| 04/22/1994 | Gaseous Fluoride | 7 | FL | 1440.0 | 4.26241 | 8.30 | | | J |
| 04/22/1994 | Particulate Fluoride | 8 | FL | 1440.0 | 52.46039 | 8.30 | | U | UJ |
| 04/22/1994 | Gaseous Fluoride | 8 | FL | 1440.0 | 2.17711 | 8.30 | | | J |
| 04/26/1994 | Particulate Fluoride | 1 | FL | 1440.0 | 50.81921 | 8.30 | | U | UJ |
| 04/26/1994 | Gaseous Fluoride | 1 | FL | 1440.0 | .12705 | 8.30 | | U | UJ |
| 04/26/1994 | Particulate Fluoride | 2 | FL | 1440.0 | 50.81921 | 8.30 | | U | UJ |
| 04/26/1994 | Gaseous Fluoride | 2 | FL | 1440.0 | .12705 | 8.30 | | U | UJ |
| 04/26/1994 | Particulate Fluoride | 6 | FL | 1440.0 | 50.81921 | 8.30 | | U | UJ |
| 04/26/1994 | Gaseous Fluoride | 6 | FL | 1440.0 | .12705 | 8.30 | | U | UJ |
| 04/26/1994 | Particulate Fluoride | 7 | FL | 1440.0 | 50.81921 | 8.30 | | U | UJ |
| 04/26/1994 | Gaseous Fluoride | 7 | FL | 1440.0 | .12705 | 8.30 | | U | UJ |

| Sample Date | Chemical Name | Site No. | Typ | Run Time (min.) | Chem Conc (ugi/m3) | EPA Scr L(ug/m3) | Grav Val | Qual Lb | Qual Val |
|---|---|---|---|---|---|---|---|---|---|
| 04/26/1994 | Particulate Fluoride | 8 | FL | 1440.0 | 50.81921 | 8.30 | | U | UJ |
| 04/26/1994 | Gaseous Fluoride | 8 | FL | 1440.0 | .29666 | 8.30 | | B | J |
| 04/30/1994 | Particulate Fluoride | 1 | FL | 1440.0 | 51.12788 | 8.30 | | U | UJ |
| 04/30/1994 | Gaseous Fluoride | 1 | FL | 1440.0 | .97782 | 8.30 | | | J |
| 04/30/1994 | Particulate Fluoride | 2 | FL | 1440.0 | 51.12788 | 8.30 | | U | UJ |
| 04/30/1994 | Gaseous Fluoride | 2 | FL | 1440.0 | 2.74812 | 8.30 | | | J |
| 04/30/1994 | Particulate Fluoride | 6 | FL | 1440.0 | 51.12788 | 8.30 | | U | UJ |
| 04/30/1994 | Gaseous Fluoride | 6 | FL | 1440.0 | .12782 | 8.30 | | U | UJ |
| 04/30/1994 | Particulate Fluoride | 7 | FL | 1440.0 | 51.12788 | 8.30 | | U | UJ |
| 04/30/1994 | Gaseous Fluoride | 7 | FL | 1440.0 | 3.84737 | 8.30 | | | J |
| 04/30/1994 | Particulate Fluoride | 8 | FL | 1440.0 | 51.12788 | 8.30 | | U | UJ |
| 04/30/1994 | Gaseous Fluoride | 8 | FL | 1440.0 | 1.72557 | 8.30 | | | J |
| 10/04/1993 | Crystalline Quartz | 1 | SI | 1502.0 | 53.17714 | .00 | MR | | |
| 10/04/1993 | Cristobalite | 1 | SI | 1502.0 | 7.59673 | .00 | MR | U | U |
| 10/04/1993 | Tridymite | 1 | SI | 1502.0 | 15.19347 | .00 | MR | U | U |
| 10/04/1993 | Crystalline Quartz | 2 | SI | 1597.0 | 100.02786 | .00 | MSR | | |
| 10/04/1993 | Cristobalite | 2 | SI | 1597.0 | 7.14485 | .00 | MSR | U | U |
| 10/04/1993 | Tridymite | 2 | SI | 1597.0 | 14.28969 | .00 | MSR | U | U |
| 10/04/1993 | Crystalline Quartz | 6 | SI | 1662.0 | 48.05794 | .00 | MSR | | |
| 10/04/1993 | Cristobalite | 6 | SI | 1662.0 | 6.86542 | .00 | MSR | U | U |
| 10/04/1993 | Tridymite | 6 | SI | 1662.0 | 13.73084 | .00 | MSR | U | U |
| 10/04/1993 | Crystalline Quartz | 7 | SI | 1515.0 | 60.37736 | .00 | MSR | | |
| 10/04/1993 | Cristobalite | 7 | SI | 1515.0 | 7.54717 | .00 | MSR | U | U |
| 10/04/1993 | Tridymite | 7 | SI | 1515.0 | 15.09434 | .00 | MSR | U | U |
| 10/08/1993 | Crystalline Quartz | 1 | SI | 2232.0 | 49.26108 | .00 | MTR | | |
| 10/08/1993 | Cristobalite | 1 | SI | 2232.0 | 4.92611 | .00 | MTR | U | U |
| 10/08/1993 | Tridymite | 1 | SI | 2232.0 | 9.85222 | .00 | MTR | U | U |
| 10/08/1993 | Crystalline Quartz | 2 | SI | 2211.0 | 59.70149 | .00 | PMTR | | |
| 10/08/1993 | Cristobalite | 2 | SI | 2211.0 | 4.97512 | .00 | PMTR | U | U |
| 10/08/1993 | Tridymite | 2 | SI | 2211.0 | 9.95025 | .00 | PMTR | U | U |
| 10/08/1993 | Crystalline Quartz | 6 | SI | 2125.0 | 41.32498 | .00 | MTR | | |
| 10/08/1993 | Cristobalite | 6 | SI | 2125.0 | 5.16562 | .00 | MTR | U | U |
| 10/08/1993 | Tridymite | 6 | SI | 2125.0 | 10.33125 | .00 | MTR | U | U |
| 10/08/1993 | Crystalline Quartz | 7 | SI | 2175.0 | 40.37498 | .00 | MTR | | |
| 10/08/1993 | Cristobalite | 7 | SI | 2175.0 | 5.04687 | .00 | MTR | U | U |
| 10/08/1993 | Tridymite | 7 | SI | 2175.0 | 10.09375 | .00 | MTR | U | U |
| 10/12/1993 | Crystalline Quartz | 1 | SI | 1438.0 | 58.36576 | .00 | | | |
| 10/12/1993 | Cristobalite | 1 | SI | 1438.0 | 7.78210 | .00 | | U | U |
| 10/12/1993 | Tridymite | 1 | SI | 1438.0 | 15.56420 | .00 | | U | U |
| 10/12/1993 | Crystalline Quartz | 2 | SI | 1438.0 | 93.38521 | .00 | | | |
| 10/12/1993 | Cristobalite | 2 | SI | 1438.0 | 7.78210 | .00 | | U | U |
| 10/12/1993 | Tridymite | 2 | SI | 1438.0 | 15.56420 | .00 | | U | U |
| 10/12/1993 | Crystalline Quartz | 6 | SI | 1438.0 | 31.12840 | .00 | | | |
| 10/12/1993 | Cristobalite | 6 | SI | 1438.0 | 7.78210 | .00 | | U | U |
| 10/12/1993 | Tridymite | 6 | SI | 1438.0 | 15.56420 | .00 | | U | U |
| 10/12/1993 | Crystalline Quartz | 7 | SI | 1439.0 | 34.88372 | .00 | | | |
| 10/12/1993 | Cristobalite | 7 | SI | 1439.0 | 7.75194 | .00 | | U | U |
| 10/12/1993 | Tridymite | 7 | SI | 1439.0 | 15.50388 | .00 | | U | U |
| 10/16/1993 | Crystalline Quartz | 1 | SI | 1438.0 | 30.76923 | .00 | | | |
| 10/16/1993 | Cristobalite | 1 | SI | 1438.0 | 7.69231 | .00 | | U | U |
| 10/16/1993 | Tridymite | 1 | SI | 1438.0 | 15.38462 | .00 | | U | U |
| 10/16/1993 | Crystalline Quartz | 2 | SI | 1438.0 | 34.61538 | .00 | | | |
| 10/16/1993 | Cristobalite | 2 | SI | 1438.0 | 7.69231 | .00 | | U | U |

| Sample Date | Chemical Name | Site No. | Typ | Run Time (min.) | Chem Conc (ugi/m3) | EPA Scr L(ug/m3) | Grav Val | Qual Lb | Qual Val |
|---|---|---|---|---|---|---|---|---|---|
| 10/16/1993 | Tridymite | 2 | SI | 1438.0 | 15.38462 | .00 | | U | U |
| 10/16/1993 | Crystalline Quartz | 6 | SI | 1438.0 | 15.38462 | .00 | | | |
| 10/16/1993 | Cristobalite | 6 | SI | 1438.0 | 7.69231 | .00 | | U | U |
| 10/16/1993 | Tridymite | 6 | SI | 1438.0 | 15.38462 | .00 | | U | U |
| 10/16/1993 | Crystalline Quartz | 7 | SI | 1438.0 | 23.07692 | .00 | | | |
| 10/16/1993 | Cristobalite | 7 | SI | 1438.0 | 7.69231 | .00 | | U | U |
| 10/16/1993 | Tridymite | 7 | SI | 1438.0 | 15.38462 | .00 | | U | U |
| 10/20/1993 | Crystalline Quartz | 1 | SI | 1438.0 | 30.62131 | .00 | | | |
| 10/20/1993 | Cristobalite | 1 | SI | 1438.0 | 7.65533 | .00 | | U | U |
| 10/20/1993 | Tridymite | 1 | SI | 1438.0 | 15.31065 | .00 | | U | U |
| 10/20/1993 | Crystalline Quartz | 2 | SI | 1438.0 | 61.06870 | .00 | | | |
| 10/20/1993 | Cristobalite | 2 | SI | 1438.0 | 7.63359 | .00 | | U | U |
| 10/20/1993 | Tridymite | 2 | SI | 1438.0 | 15.26718 | .00 | | U | U |
| 10/20/1993 | Crystalline Quartz | 6 | SI | 1438.0 | 30.53435 | .00 | | | |
| 10/20/1993 | Cristobalite | 6 | SI | 1438.0 | 7.63359 | .00 | | U | U |
| 10/20/1993 | Tridymite | 6 | SI | 1438.0 | 15.26718 | .00 | | U | U |
| 10/20/1993 | Crystalline Quartz | 7 | SI | 1438.0 | 30.53435 | .00 | | | |
| 10/20/1993 | Cristobalite | 7 | SI | 1438.0 | 7.63359 | .00 | | U | U |
| 10/20/1993 | Tridymite | 7 | SI | 1438.0 | 15.26718 | .00 | | U | U |
| 10/24/1993 | Crystalline Quartz | 1 | SI | 1438.0 | 42.80156 | .00 | | | |
| 10/24/1993 | Cristobalite | 1 | SI | 1438.0 | 7.78210 | .00 | | U | U |
| 10/24/1993 | Tridymite | 1 | SI | 1438.0 | 15.56420 | .00 | | U | U |
| 10/24/1993 | Crystalline Quartz | 2 | SI | 1438.0 | 206.22568 | .00 | | | |
| 10/24/1993 | Cristobalite | 2 | SI | 1438.0 | 7.78210 | .00 | | U | U |
| 10/24/1993 | Tridymite | 2 | SI | 1438.0 | 15.56420 | .00 | | U | U |
| 10/24/1993 | Crystalline Quartz | 6 | SI | 1438.0 | 46.69261 | .00 | | | |
| 10/24/1993 | Cristobalite | 6 | SI | 1438.0 | 7.78210 | .00 | | U | U |
| 10/24/1993 | Tridymite | 6 | SI | 1438.0 | 15.56420 | .00 | | U | U |
| 10/24/1993 | Crystalline Quartz | 7 | SI | 1438.0 | 23.34630 | .00 | | | |
| 10/24/1993 | Cristobalite | 7 | SI | 1438.0 | 7.78210 | .00 | | U | U |
| 10/24/1993 | Tridymite | 7 | SI | 1438.0 | 15.56420 | .00 | | U | U |
| 10/28/1993 | Crystalline Quartz | 1 | SI | 1438.0 | 34.74903 | .00 | | | |
| 10/28/1993 | Cristobalite | 1 | SI | 1438.0 | 7.72201 | .00 | | U | U |
| 10/28/1993 | Tridymite | 1 | SI | 1438.0 | 15.44402 | .00 | | U | U |
| 10/28/1993 | Crystalline Quartz | 2 | SI | 1438.0 | 92.66409 | .00 | | | |
| 10/28/1993 | Cristobalite | 2 | SI | 1438.0 | 7.72201 | .00 | | U | U |
| 10/28/1993 | Tridymite | 2 | SI | 1438.0 | 15.44402 | .00 | | U | U |
| 10/28/1993 | Crystalline Quartz | 6 | SI | 1438.0 | 42.47104 | .00 | | | |
| 10/28/1993 | Cristobalite | 6 | SI | 1438.0 | 7.72201 | .00 | | U | U |
| 10/28/1993 | Tridymite | 6 | SI | 1438.0 | 15.44402 | .00 | | U | U |
| 10/28/1993 | Crystalline Quartz | 7 | SI | 1438.0 | 23.16602 | .00 | | | |
| 10/28/1993 | Cristobalite | 7 | SI | 1438.0 | 7.72201 | .00 | | U | U |
| 10/28/1993 | Tridymite | 7 | SI | 1438.0 | 15.44402 | .00 | | U | U |
| 11/01/1993 | Crystalline Quartz | 1 | SI | 1440.0 | 52.83019 | .00 | | | |
| 11/01/1993 | Cristobalite | 1 | SI | 1440.0 | 7.54717 | .00 | | U | U |
| 11/01/1993 | Tridymite | 1 | SI | 1440.0 | 15.09434 | .00 | | U | U |
| 11/01/1993 | Crystalline Quartz | 2 | SI | 1438.0 | 113.20755 | .00 | | | |
| 11/01/1993 | Cristobalite | 2 | SI | 1438.0 | 7.54717 | .00 | | U | U |
| 11/01/1993 | Tridymite | 2 | SI | 1438.0 | 15.09434 | .00 | | U | U |
| 11/01/1993 | Crystalline Quartz | 6 | SI | 1440.0 | 22.70414 | .00 | | | |
| 11/01/1993 | Cristobalite | 6 | SI | 1440.0 | 7.56805 | .00 | | U | U |
| 11/01/1993 | Tridymite | 6 | SI | 1440.0 | 15.13609 | .00 | | U | U |
| 11/01/1993 | Crystalline Quartz | 7 | SI | 1438.0 | 22.64151 | .00 | | | |

| Sample Date | Chemical Name | Site No. | Typ | Run Time (min.) | Chem Conc (ugi/m3) | EPA Scr L(ug/m3) | Grav Val | Qual Lb | Qual Val |
|---|---|---|---|---|---|---|---|---|---|
| 11/01/1993 | Cristobalite | 7 | SI | 1438.0 | 7.54717 | .00 | | U | U |
| 11/01/1993 | Tridymite | 7 | SI | 1438.0 | 15.09434 | .00 | | U | U |
| 11/05/1993 | Crystalline Quartz | 1 | SI | 1440.0 | 43.79562 | .00 | | | |
| 11/05/1993 | Cristobalite | 1 | SI | 1440.0 | 7.29927 | .00 | | U | U |
| 11/05/1993 | Tridymite | 1 | SI | 1440.0 | 14.59854 | .00 | | U | U |
| 11/05/1993 | Crystalline Quartz | 2 | SI | 1440.0 | 56.18483 | .00 | | | |
| 11/05/1993 | Cristobalite | 2 | SI | 1440.0 | 7.49131 | .00 | | U | U |
| 11/05/1993 | Tridymite | 2 | SI | 1440.0 | 14.98262 | .00 | | U | U |
| 11/05/1993 | Crystalline Quartz | 6 | SI | 1440.0 | 33.83459 | .00 | | | |
| 11/05/1993 | Cristobalite | 6 | SI | 1440.0 | 7.51880 | .00 | | U | U |
| 11/05/1993 | Tridymite | 6 | SI | 1440.0 | 15.03759 | .00 | | U | U |
| 11/05/1993 | Crystalline Quartz | 7 | SI | 1440.0 | 22.55639 | .00 | | | |
| 11/05/1993 | Cristobalite | 7 | SI | 1440.0 | 7.51880 | .00 | | U | U |
| 11/05/1993 | Tridymite | 7 | SI | 1440.0 | 15.03759 | .00 | | U | U |
| 11/13/1993 | Crystalline Quartz | 1 | SI | 1440.0 | 29.52030 | .00 | | | U |
| 11/13/1993 | Cristobalite | 1 | SI | 1440.0 | 7.38007 | .00 | | B | U |
| 11/13/1993 | Tridymite | 1 | SI | 1440.0 | 14.76015 | .00 | | B | U |
| 11/13/1993 | Crystalline Quartz | 2 | SI | 1440.0 | 55.35055 | .00 | | | U |
| 11/13/1993 | Cristobalite | 2 | SI | 1440.0 | 7.38007 | .00 | | B | U |
| 11/13/1993 | Tridymite | 2 | SI | 1440.0 | 14.76015 | .00 | | B | U |
| 11/13/1993 | Crystalline Quartz | 6 | SI | 1440.0 | 64.63826 | .00 | MTR | | U |
| 11/13/1993 | Cristobalite | 6 | SI | 1440.0 | 9.23404 | .00 | MTR | B | U |
| 11/13/1993 | Tridymite | 6 | SI | 1440.0 | 18.46807 | .00 | MTR | B | U |
| 11/13/1993 | Crystalline Quartz | 7 | SI | 1440.0 | 40.59041 | .00 | | | U |
| 11/13/1993 | Cristobalite | 7 | SI | 1440.0 | 7.38007 | .00 | | B | U |
| 11/13/1993 | Tridymite | 7 | SI | 1440.0 | 14.76015 | .00 | | B | U |
| 11/17/1993 | Crystalline Quartz | 1 | SI | 1440.0 | 30.18868 | .00 | | | U |
| 11/17/1993 | Cristobalite | 1 | SI | 1440.0 | 7.54717 | .00 | | B | U |
| 11/17/1993 | Tridymite | 1 | SI | 1440.0 | 15.09434 | .00 | | B | U |
| 11/17/1993 | Crystalline Quartz | 2 | SI | 1440.0 | 71.69811 | .00 | | | U |
| 11/17/1993 | Cristobalite | 2 | SI | 1440.0 | 7.54717 | .00 | | B | U |
| 11/17/1993 | Tridymite | 2 | SI | 1440.0 | 15.09434 | .00 | | B | U |
| 11/17/1993 | Crystalline Quartz | 6 | SI | 1440.0 | 67.92453 | .00 | | | U |
| 11/17/1993 | Cristobalite | 6 | SI | 1440.0 | 7.54717 | .00 | | B | U |
| 11/17/1993 | Tridymite | 6 | SI | 1440.0 | 15.09434 | .00 | | B | U |
| 11/17/1993 | Crystalline Quartz | 7 | SI | 1440.0 | 26.41509 | .00 | | | U |
| 11/17/1993 | Cristobalite | 7 | SI | 1440.0 | 7.54717 | .00 | | B | U |
| 11/17/1993 | Tridymite | 7 | SI | 1440.0 | 15.09434 | .00 | | B | U |
| 11/21/1993 | Crystalline Quartz | 1 | SI | 1440.0 | 60.15038 | .00 | | | U |
| 11/21/1993 | Cristobalite | 1 | SI | 1440.0 | 7.51880 | .00 | | B | U |
| 11/21/1993 | Tridymite | 1 | SI | 1440.0 | 15.03759 | .00 | | B | U |
| 11/21/1993 | Crystalline Quartz | 2 | SI | 1440.0 | 71.42857 | .00 | | | U |
| 11/21/1993 | Cristobalite | 2 | SI | 1440.0 | 7.51880 | .00 | | B | U |
| 11/21/1993 | Tridymite | 2 | SI | 1440.0 | 15.03759 | .00 | | B | U |
| 11/21/1993 | Crystalline Quartz | 6 | SI | 1440.0 | 60.15038 | .00 | | | U |
| 11/21/1993 | Cristobalite | 6 | SI | 1440.0 | 7.51880 | .00 | | B | U |
| 11/21/1993 | Tridymite | 6 | SI | 1440.0 | 15.03759 | .00 | | B | U |
| 11/21/1993 | Crystalline Quartz | 7 | SI | 1440.0 | 33.83459 | .00 | | | U |
| 11/21/1993 | Cristobalite | 7 | SI | 1440.0 | 7.51880 | .00 | | B | U |
| 11/21/1993 | Tridymite | 7 | SI | 1440.0 | 15.03759 | .00 | | B | U |
| 11/25/1993 | Crystalline Quartz | 1 | SI | 1440.0 | 10.46532 | .00 | | | U |
| 11/25/1993 | Cristobalite | 1 | SI | 1440.0 | 6.97688 | .00 | | B | U |
| 11/25/1993 | Tridymite | 1 | SI | 1440.0 | 13.95376 | .00 | | B | U |

| Sample Date | Chemical Name | Site No. | Typ | Run Time (min.) | Chem Conc (ugi/m3) | EPA Scr L(ug/m3) | Grav Val | Qual Lb | Qual Val |
|---|---|---|---|---|---|---|---|---|---|
| 11/25/1993 | Crystalline Quartz | 2 | SI | 1440.0 | 66.28038 | .00 | | | U |
| 11/25/1993 | Cristobalite | 2 | SI | 1440.0 | 6.97688 | .00 | | B | U |
| 11/25/1993 | Tridymite | 2 | SI | 1440.0 | 13.95376 | .00 | | B | U |
| 11/25/1993 | Crystalline Quartz | 6 | SI | 1440.0 | 73.25726 | .00 | | | U |
| 11/25/1993 | Cristobalite | 6 | SI | 1440.0 | 20.93065 | .00 | | | |
| 11/25/1993 | Tridymite | 6 | SI | 1440.0 | 13.95376 | .00 | | B | U |
| 11/25/1993 | Crystalline Quartz | 7 | SI | 1440.0 | 6.97688 | .00 | | | U |
| 11/25/1993 | Cristobalite | 7 | SI | 1440.0 | 6.97688 | .00 | | B | U |
| 11/25/1993 | Tridymite | 7 | SI | 1440.0 | 13.95376 | .00 | | B | U |
| 11/29/1993 | Crystalline Quartz | 1 | SI | 1440.0 | 11.19403 | .00 | | | U |
| 11/29/1993 | Cristobalite | 1 | SI | 1440.0 | 7.46269 | .00 | | U | U |
| 11/29/1993 | Tridymite | 1 | SI | 1440.0 | 14.92537 | .00 | | U | U |
| 11/29/1993 | Crystalline Quartz | 6 | SI | 1440.0 | 29.85576 | .00 | VOID | | |
| 11/29/1993 | Cristobalite | 6 | SI | 1440.0 | 7.46394 | .00 | VOID | U | U |
| 11/29/1993 | Tridymite | 6 | SI | 1440.0 | 14.92788 | .00 | VOID | U | U |
| 11/29/1993 | Crystalline Quartz | 7 | SI | 1440.0 | 3.73134 | .00 | | | U |
| 11/29/1993 | Cristobalite | 7 | SI | 1440.0 | 7.46269 | .00 | | U | U |
| 11/29/1993 | Tridymite | 7 | SI | 1440.0 | 14.92537 | .00 | | U | U |
| 12/07/1993 | Crystalline Quartz | 1 | SI | 1440.0 | 18.45018 | .00 | | | |
| 12/07/1993 | Cristobalite | 1 | SI | 1440.0 | 7.38007 | .00 | | U | U |
| 12/07/1993 | Tridymite | 1 | SI | 1440.0 | 14.76015 | .00 | | U | U |
| 12/07/1993 | Crystalline Quartz | 2 | SI | 1440.0 | 22.14022 | .00 | | | |
| 12/07/1993 | Cristobalite | 2 | SI | 1440.0 | 7.38007 | .00 | | U | U |
| 12/07/1993 | Tridymite | 2 | SI | 1440.0 | 14.76015 | .00 | | U | U |
| 12/07/1993 | Crystalline Quartz | 6 | SI | 1440.0 | 20.57613 | .00 | | | |
| 12/07/1993 | Cristobalite | 6 | SI | 1440.0 | 8.23045 | .00 | | U | U |
| 12/07/1993 | Tridymite | 6 | SI | 1440.0 | 16.46091 | .00 | | U | U |
| 12/07/1993 | Crystalline Quartz | 7 | SI | 1440.0 | 7.38007 | .00 | | | U |
| 12/07/1993 | Cristobalite | 7 | SI | 1440.0 | 7.38007 | .00 | | U | U |
| 12/07/1993 | Tridymite | 7 | SI | 1440.0 | 14.76015 | .00 | | U | U |
| 12/11/1993 | Crystalline Quartz | 1 | SI | 1440.0 | 26.71756 | .00 | | | |
| 12/11/1993 | Cristobalite | 1 | SI | 1440.0 | 7.63359 | .00 | | U | U |
| 12/11/1993 | Tridymite | 1 | SI | 1440.0 | 15.26718 | .00 | | U | U |
| 12/11/1993 | Crystalline Quartz | 2 | SI | 1440.0 | 22.90076 | .00 | | | |
| 12/11/1993 | Cristobalite | 2 | SI | 1440.0 | 7.63359 | .00 | | U | U |
| 12/11/1993 | Tridymite | 2 | SI | 1440.0 | 15.26718 | .00 | | U | U |
| 12/11/1993 | Crystalline Quartz | 6 | SI | 1440.0 | 19.11805 | .00 | | | |
| 12/11/1993 | Cristobalite | 6 | SI | 1440.0 | 7.64722 | .00 | | U | U |
| 12/11/1993 | Tridymite | 6 | SI | 1440.0 | 15.29444 | .00 | | U | U |
| 12/11/1993 | Crystalline Quartz | 7 | SI | 1440.0 | 7.64722 | .00 | | | U |
| 12/11/1993 | Cristobalite | 7 | SI | 1440.0 | 7.64722 | .00 | | U | U |
| 12/11/1993 | Tridymite | 7 | SI | 1440.0 | 15.29444 | .00 | | U | U |
| 12/15/1993 | Crystalline Quartz | 1 | SI | 1440.0 | 22.19501 | .00 | | | |
| 12/15/1993 | Cristobalite | 1 | SI | 1440.0 | 7.39834 | .00 | | U | U |
| 12/15/1993 | Tridymite | 1 | SI | 1440.0 | 14.79668 | .00 | | U | U |
| 12/15/1993 | Crystalline Quartz | 2 | SI | 1440.0 | 59.04059 | .00 | | | |
| 12/15/1993 | Cristobalite | 2 | SI | 1440.0 | 7.38007 | .00 | | U | U |
| 12/15/1993 | Tridymite | 2 | SI | 1440.0 | 14.76015 | .00 | | U | U |
| 12/15/1993 | Crystalline Quartz | 6 | SI | 1440.0 | 18.49584 | .00 | | | |
| 12/15/1993 | Cristobalite | 6 | SI | 1440.0 | 7.39834 | .00 | | U | U |
| 12/15/1993 | Tridymite | 6 | SI | 1440.0 | 14.79668 | .00 | | U | U |
| 12/15/1993 | Crystalline Quartz | 7 | SI | 1440.0 | 18.45018 | .00 | | | |
| 12/15/1993 | Cristobalite | 7 | SI | 1440.0 | 7.38007 | .00 | | U | U |

| Sample Date | Chemical Name | Site No. | Typ | Run Time (min.) | Chem Conc (ugi/m3) | EPA Scr L(ug/m3) | Grav Val | Qual Lb | Qual Val |
|---|---|---|---|---|---|---|---|---|---|
| 12/15/1993 | Tridymite | 7 | SI | 1440.0 | 14.76015 | .00 | | U | U |
| 12/19/1993 | Crystalline Quartz | 1 | SI | 1440.0 | 11.03578 | .00 | | | U |
| 12/19/1993 | Cristobalite | 1 | SI | 1440.0 | 7.35719 | .00 | | U | U |
| 12/19/1993 | Tridymite | 1 | SI | 1440.0 | 14.71438 | .00 | | U | U |
| 12/19/1993 | Crystalline Quartz | 2 | SI | 1440.0 | 36.76471 | .00 | | | |
| 12/19/1993 | Cristobalite | 2 | SI | 1440.0 | 7.35294 | .00 | | U | U |
| 12/19/1993 | Tridymite | 2 | SI | 1440.0 | 14.70588 | .00 | | U | U |
| 12/19/1993 | Crystalline Quartz | 6 | SI | 1440.0 | 11.03578 | .00 | | | U |
| 12/19/1993 | Cristobalite | 6 | SI | 1440.0 | 7.35719 | .00 | | U | U |
| 12/19/1993 | Tridymite | 6 | SI | 1440.0 | 14.71438 | .00 | | U | U |
| 12/19/1993 | Crystalline Quartz | 7 | SI | 1440.0 | 7.35294 | .00 | | | U |
| 12/19/1993 | Cristobalite | 7 | SI | 1440.0 | 7.35294 | .00 | | U | U |
| 12/19/1993 | Tridymite | 7 | SI | 1440.0 | 14.70588 | .00 | | U | U |
| 12/23/1993 | Crystalline Quartz | 1 | SI | 1440.0 | 14.54545 | .00 | | | U |
| 12/23/1993 | Cristobalite | 1 | SI | 1440.0 | 7.27273 | .00 | | U | U |
| 12/23/1993 | Tridymite | 1 | SI | 1440.0 | 14.54545 | .00 | | U | U |
| 12/23/1993 | Crystalline Quartz | 2 | SI | 1440.0 | 14.54545 | .00 | | | U |
| 12/23/1993 | Cristobalite | 2 | SI | 1440.0 | 7.27273 | .00 | | U | U |
| 12/23/1993 | Tridymite | 2 | SI | 1440.0 | 14.54545 | .00 | | U | U |
| 12/23/1993 | Crystalline Quartz | 6 | SI | 1440.0 | 10.90909 | .00 | | | U |
| 12/23/1993 | Cristobalite | 6 | SI | 1440.0 | 7.27273 | .00 | | U | U |
| 12/23/1993 | Tridymite | 6 | SI | 1440.0 | 14.54545 | .00 | | U | U |
| 12/23/1993 | Crystalline Quartz | 7 | SI | 1440.0 | 3.63636 | .00 | | | U |
| 12/23/1993 | Cristobalite | 7 | SI | 1440.0 | 7.27273 | .00 | | U | U |
| 12/23/1993 | Tridymite | 7 | SI | 1440.0 | 14.54545 | .00 | | U | U |
| 12/27/1993 | Crystalline Quartz | 1 | SI | 1440.0 | 11.14260 | .00 | | | U |
| 12/27/1993 | Cristobalite | 1 | SI | 1440.0 | 7.42840 | .00 | | U | U |
| 12/27/1993 | Tridymite | 1 | SI | 1440.0 | 14.85680 | .00 | | U | U |
| 12/27/1993 | Crystalline Quartz | 2 | SI | 1440.0 | 18.57100 | .00 | | | |
| 12/27/1993 | Cristobalite | 2 | SI | 1440.0 | 7.42840 | .00 | | U | U |
| 12/27/1993 | Tridymite | 2 | SI | 1440.0 | 14.85680 | .00 | | U | U |
| 12/27/1993 | Crystalline Quartz | 6 | SI | 1440.0 | 3.71420 | .00 | | | U |
| 12/27/1993 | Cristobalite | 6 | SI | 1440.0 | 7.42840 | .00 | | U | U |
| 12/27/1993 | Tridymite | 6 | SI | 1440.0 | 14.85680 | .00 | | U | U |
| 12/27/1993 | Crystalline Quartz | 7 | SI | 1440.0 | 3.71420 | .00 | | U | U |
| 12/27/1993 | Cristobalite | 7 | SI | 1440.0 | 7.42840 | .00 | | U | U |
| 12/27/1993 | Tridymite | 7 | SI | 1440.0 | 14.85680 | .00 | | U | U |
| 12/31/1993 | Crystalline Quartz | 1 | SI | 1440.0 | 18.79699 | .00 | | | |
| 12/31/1993 | Cristobalite | 1 | SI | 1440.0 | 7.51880 | .00 | | U | U |
| 12/31/1993 | Tridymite | 1 | SI | 1440.0 | 15.03759 | .00 | | U | U |
| 12/31/1993 | Crystalline Quartz | 2 | SI | 1440.0 | 52.63158 | .00 | | | |
| 12/31/1993 | Cristobalite | 2 | SI | 1440.0 | 7.51880 | .00 | | U | U |
| 12/31/1993 | Tridymite | 2 | SI | 1440.0 | 15.03759 | .00 | | U | U |
| 12/31/1993 | Crystalline Quartz | 6 | SI | 1440.0 | 11.27820 | .00 | | | U |
| 12/31/1993 | Cristobalite | 6 | SI | 1440.0 | 7.51880 | .00 | | U | U |
| 12/31/1993 | Tridymite | 6 | SI | 1440.0 | 15.03759 | .00 | | U | U |
| 12/31/1993 | Crystalline Quartz | 7 | SI | 1440.0 | 11.27820 | .00 | | | U |
| 12/31/1993 | Cristobalite | 7 | SI | 1440.0 | 7.51880 | .00 | | U | U |
| 12/31/1993 | Tridymite | 7 | SI | 1440.0 | 15.03759 | .00 | | U | U |
| 01/04/1994 | Crystalline Quartz | 1 | SI | 1440.0 | 18.93939 | .00 | | | |
| 01/04/1994 | Cristobalite | 1 | SI | 1440.0 | 7.57576 | .00 | | U | U |
| 01/04/1994 | Tridymite | 1 | SI | 1440.0 | 15.15152 | .00 | | U | U |
| 01/04/1994 | Crystalline Quartz | 2 | SI | 1440.0 | 30.30303 | .00 | | | |

| Sample Date | Chemical Name | Site No. | Typ | Run Time (min.) | Chem Conc (ugi/m3) | EPA Scr L(ug/m3) | Grav Val | Qual Lb | Qual Val |
|---|---|---|---|---|---|---|---|---|---|
| 01/04/1994 | Cristobalite | 2 | SI | 1440.0 | 7.57576 | .00 | | U | U |
| 01/04/1994 | Tridymite | 2 | SI | 1440.0 | 15.15152 | .00 | | U | U |
| 01/04/1994 | Crystalline Quartz | 6 | SI | 1440.0 | 7.58708 | .00 | P | | U |
| 01/04/1994 | Cristobalite | 6 | SI | 1440.0 | 7.58708 | .00 | P | U | U |
| 01/04/1994 | Tridymite | 6 | SI | 1440.0 | 15.17416 | .00 | P | U | U |
| 01/04/1994 | Crystalline Quartz | 7 | SI | 1440.0 | 3.78788 | .00 | | | U |
| 01/04/1994 | Cristobalite | 7 | SI | 1440.0 | 7.57576 | .00 | | U | U |
| 01/04/1994 | Tridymite | 7 | SI | 1440.0 | 15.15152 | .00 | | U | U |
| 01/08/1994 | Crystalline Quartz | 1 | SI | 1440.0 | 13.88889 | .00 | | | U |
| 01/08/1994 | Cristobalite | 1 | SI | 1440.0 | 6.94444 | .00 | | U | U |
| 01/08/1994 | Tridymite | 1 | SI | 1440.0 | 13.88889 | .00 | | U | U |
| 01/08/1994 | Crystalline Quartz | 2 | SI | 1440.0 | 67.02762 | .00 | | | |
| 01/08/1994 | Cristobalite | 2 | SI | 1440.0 | 7.44751 | .00 | | U | U |
| 01/08/1994 | Tridymite | 2 | SI | 1440.0 | 14.89503 | .00 | | U | U |
| 01/08/1994 | Crystalline Quartz | 6 | SI | 840.0 | 6.41026 | .00 | TR | U | UJ |
| 01/08/1994 | Cristobalite | 6 | SI | 840.0 | 12.82051 | .00 | TR | U | UJ |
| 01/08/1994 | Tridymite | 6 | SI | 840.0 | 25.64103 | .00 | TR | U | UJ |
| 01/08/1994 | Crystalline Quartz | 7 | SI | 1440.0 | 7.46269 | .00 | | | J |
| 01/08/1994 | Cristobalite | 7 | SI | 1440.0 | 7.46269 | .00 | | U | UJ |
| 01/08/1994 | Tridymite | 7 | SI | 1440.0 | 14.92537 | .00 | | U | UJ |
| 01/12/1994 | Crystalline Quartz | 1 | SI | 1440.0 | 15.09252 | .00 | | | J |
| 01/12/1994 | Cristobalite | 1 | SI | 1440.0 | 7.54626 | .00 | | U | UJ |
| 01/12/1994 | Tridymite | 1 | SI | 1440.0 | 15.09252 | .00 | | U | UJ |
| 01/12/1994 | Crystalline Quartz | 2 | SI | 1440.0 | 30.18868 | .00 | | | J |
| 01/12/1994 | Cristobalite | 2 | SI | 1440.0 | 7.54717 | .00 | | U | UJ |
| 01/12/1994 | Tridymite | 2 | SI | 1440.0 | 15.09434 | .00 | | U | UJ |
| 01/12/1994 | Crystalline Quartz | 6 | SI | 1440.0 | 7.54717 | .00 | | | J |
| 01/12/1994 | Cristobalite | 6 | SI | 1440.0 | 7.54717 | .00 | | U | UJ |
| 01/12/1994 | Tridymite | 6 | SI | 1440.0 | 15.09434 | .00 | | U | UJ |
| 01/12/1994 | Crystalline Quartz | 7 | SI | 1440.0 | 3.77313 | .00 | | U | UJ |
| 01/12/1994 | Cristobalite | 7 | SI | 1440.0 | 7.54626 | .00 | | U | UJ |
| 01/12/1994 | Tridymite | 7 | SI | 1440.0 | 15.09252 | .00 | | U | UJ |
| 01/16/1994 | Crystalline Quartz | 1 | SI | 1440.0 | 41.04478 | .00 | | | J |
| 01/16/1994 | Cristobalite | 1 | SI | 1440.0 | 7.46269 | .00 | | U | UJ |
| 01/16/1994 | Tridymite | 1 | SI | 1440.0 | 14.92537 | .00 | | U | UJ |
| 01/16/1994 | Crystalline Quartz | 2 | SI | 1440.0 | 70.89552 | .00 | | | J |
| 01/16/1994 | Cristobalite | 2 | SI | 1440.0 | 7.46269 | .00 | | U | UJ |
| 01/16/1994 | Tridymite | 2 | SI | 1440.0 | 14.92537 | .00 | | U | UJ |
| 01/16/1994 | Crystalline Quartz | 6 | SI | 1440.0 | 7.46269 | .00 | | | J |
| 01/16/1994 | Cristobalite | 6 | SI | 1440.0 | 7.46269 | .00 | | U | UJ |
| 01/16/1994 | Tridymite | 6 | SI | 1440.0 | 14.92537 | .00 | | U | UJ |
| 01/16/1994 | Crystalline Quartz | 7 | SI | 1440.0 | 3.73134 | .00 | | U | UJ |
| 01/16/1994 | Cristobalite | 7 | SI | 1440.0 | 7.46269 | .00 | | U | UJ |
| 01/16/1994 | Tridymite | 7 | SI | 1440.0 | 14.92537 | .00 | | U | UJ |
| 01/20/1994 | Crystalline Quartz | 1 | SI | 1440.0 | 29.73978 | .00 | | | J |
| 01/20/1994 | Cristobalite | 1 | SI | 1440.0 | 7.43494 | .00 | | U | UJ |
| 01/20/1994 | Tridymite | 1 | SI | 1440.0 | 14.86989 | .00 | | U | UJ |
| 01/20/1994 | Crystalline Quartz | 2 | SI | 1440.0 | 29.73978 | .00 | | | J |
| 01/20/1994 | Cristobalite | 2 | SI | 1440.0 | 7.43494 | .00 | | U | UJ |
| 01/20/1994 | Tridymite | 2 | SI | 1440.0 | 14.86989 | .00 | | U | UJ |
| 01/20/1994 | Crystalline Quartz | 6 | SI | 1440.0 | 18.58736 | .00 | | | J |
| 01/20/1994 | Cristobalite | 6 | SI | 1440.0 | 7.43494 | .00 | | U | UJ |
| 01/20/1994 | Tridymite | 6 | SI | 1440.0 | 14.86989 | .00 | | U | UJ |

| Sample Date | Chemical Name | Site No. | Typ | Run Time (min.) | Chem Conc (ugi/m3) | EPA L(ug/m3) | Scr | Grav Val | Qual Lb | Qual Val |
|---|---|---|---|---|---|---|---|---|---|---|
| 01/20/1994 | Crystalline Quartz | 7 | SI | 1440.0 | 44.60967 | .00 | | | | J |
| 01/20/1994 | Cristobalite | 7 | SI | 1440.0 | 7.43494 | .00 | | | U | UJ |
| 01/20/1994 | Tridymite | 7 | SI | 1440.0 | 14.86989 | .00 | | | U | UJ |
| 01/24/1994 | Crystalline Quartz | 1 | SI | 1440.0 | 15.26718 | .00 | | | | J |
| 01/24/1994 | Cristobalite | 1 | SI | 1440.0 | 7.63359 | .00 | | | U | UJ |
| 01/24/1994 | Tridymite | 1 | SI | 1440.0 | 15.26718 | .00 | | | U | UJ |
| 01/24/1994 | Crystalline Quartz | 2 | SI | 1440.0 | 45.80153 | .00 | | | | J |
| 01/24/1994 | Cristobalite | 2 | SI | 1440.0 | 7.63359 | .00 | | | U | UJ |
| 01/24/1994 | Tridymite | 2 | SI | 1440.0 | 15.26718 | .00 | | | U | UJ |
| 01/24/1994 | Crystalline Quartz | 6 | SI | 1440.0 | 19.08397 | .00 | | | | J |
| 01/24/1994 | Cristobalite | 6 | SI | 1440.0 | 7.63359 | .00 | | | U | UJ |
| 01/24/1994 | Tridymite | 6 | SI | 1440.0 | 15.26718 | .00 | | | U | UJ |
| 01/24/1994 | Crystalline Quartz | 7 | SI | 1440.0 | 7.63359 | .00 | | | | J |
| 01/24/1994 | Cristobalite | 7 | SI | 1440.0 | 7.63359 | .00 | | | U | UJ |
| 01/24/1994 | Tridymite | 7 | SI | 1440.0 | 15.26718 | .00 | | | U | UJ |
| 01/28/1994 | Crystalline Quartz | 1 | SI | 1440.0 | 14.81322 | .00 | | | | J |
| 01/28/1994 | Cristobalite | 1 | SI | 1440.0 | 7.40661 | .00 | | | U | UJ |
| 01/28/1994 | Tridymite | 1 | SI | 1440.0 | 14.81322 | .00 | | | U | UJ |
| 01/28/1994 | Crystalline Quartz | 2 | SI | 1440.0 | 40.73637 | .00 | | | | UJ |
| 01/28/1994 | Cristobalite | 2 | SI | 1440.0 | 7.40661 | .00 | | | U | UJ |
| 01/28/1994 | Tridymite | 2 | SI | 1440.0 | 14.81322 | .00 | | | U | UJ |
| 01/28/1994 | Crystalline Quartz | 6 | SI | 1440.0 | 3.70331 | .00 | | | | UJ |
| 01/28/1994 | Cristobalite | 6 | SI | 1440.0 | 7.40661 | .00 | | | U | UJ |
| 01/28/1994 | Tridymite | 6 | SI | 1440.0 | 14.81322 | .00 | | | U | UJ |
| 01/28/1994 | Crystalline Quartz | 7 | SI | 1440.0 | 3.70331 | .00 | | | U | UJ |
| 01/28/1994 | Cristobalite | 7 | SI | 1440.0 | 7.40661 | .00 | | | U | UJ |
| 01/28/1994 | Tridymite | 7 | SI | 1440.0 | 14.81322 | .00 | | | U | UJ |
| 02/01/1994 | Crystalline Quartz | 1 | SI | 1440.0 | 32.80840 | .00 | | | | UJ |
| 02/01/1994 | Cristobalite | 1 | SI | 1440.0 | 7.29076 | .00 | | | U | UJ |
| 02/01/1994 | Tridymite | 1 | SI | 1440.0 | 14.58151 | .00 | | | U | UJ |
| 02/01/1994 | Crystalline Quartz | 2 | SI | 1440.0 | 36.45378 | .00 | | | | UJ |
| 02/01/1994 | Cristobalite | 2 | SI | 1440.0 | 7.29076 | .00 | | | U | UJ |
| 02/01/1994 | Tridymite | 2 | SI | 1440.0 | 14.58151 | .00 | | | U | UJ |
| 02/01/1994 | Crystalline Quartz | 6 | SI | 1440.0 | 10.93613 | .00 | | | | UJ |
| 02/01/1994 | Cristobalite | 6 | SI | 1440.0 | 7.29076 | .00 | | | U | UJ |
| 02/01/1994 | Tridymite | 6 | SI | 1440.0 | 14.58151 | .00 | | | U | UJ |
| 02/01/1994 | Crystalline Quartz | 7 | SI | 1440.0 | 21.87226 | .00 | | | | UJ |
| 02/01/1994 | Cristobalite | 7 | SI | 1440.0 | 7.29076 | .00 | | | U | UJ |
| 02/01/1994 | Tridymite | 7 | SI | 1440.0 | 14.58151 | .00 | | | U | UJ |
| 02/05/1994 | Crystalline Quartz | 1 | SI | 1440.0 | 11.03461 | .00 | | | | UJ |
| 02/05/1994 | Cristobalite | 1 | SI | 1440.0 | 7.35640 | .00 | | | U | UJ |
| 02/05/1994 | Tridymite | 1 | SI | 1440.0 | 14.71281 | .00 | | | U | UJ |
| 02/05/1994 | Crystalline Quartz | 2 | SI | 2094.0 | 53.11787 | .00 | TR | | | J |
| 02/05/1994 | Cristobalite | 2 | SI | 2094.0 | 5.05884 | .00 | TR | | U | UJ |
| 02/05/1994 | Tridymite | 2 | SI | 2094.0 | 10.11769 | .00 | TR | | U | UJ |
| 02/05/1994 | Crystalline Quartz | 6 | SI | 1440.0 | 7.35640 | .00 | | | | UJ |
| 02/05/1994 | Cristobalite | 6 | SI | 1440.0 | 7.35640 | .00 | | | U | UJ |
| 02/05/1994 | Tridymite | 6 | SI | 1440.0 | 14.71281 | .00 | | | U | UJ |
| 02/05/1994 | Crystalline Quartz | 7 | SI | 1440.0 | 11.03461 | .00 | | | | UJ |
| 02/05/1994 | Cristobalite | 7 | SI | 1440.0 | 7.35640 | .00 | | | U | UJ |
| 02/05/1994 | Tridymite | 7 | SI | 1440.0 | 14.71281 | .00 | | | U | UJ |
| 02/09/1994 | Crystalline Quartz | 1 | SI | 1440.0 | 26.56345 | .00 | | | | UJ |
| 02/09/1994 | Cristobalite | 1 | SI | 1440.0 | 7.58956 | .00 | | | U | UJ |

| Sample Date | Chemical Name | Site No. | Typ | Run Time (min.) | Chem Conc (ugi/m3) | EPA Scr L(ug/m3) | Grav Val | Qual Lb | Qual Va |
|---|---|---|---|---|---|---|---|---|---|
| 02/09/1994 | Tridymite | 1 | SI | 1440.0 | 15.17911 | .00 | | U | UJ |
| 02/09/1994 | Crystalline Quartz | 6 | SI | 1440.0 | 29.59806 | .00 | | | UJ |
| 02/09/1994 | Cristobalite | 6 | SI | 1440.0 | 7.39951 | .00 | | U | UJ |
| 02/09/1994 | Tridymite | 6 | SI | 1440.0 | 14.79903 | .00 | | U | UJ |
| 02/09/1994 | Crystalline Quartz | 7 | SI | 1440.0 | 7.39951 | .00 | | | UJ |
| 02/09/1994 | Cristobalite | 7 | SI | 1440.0 | 7.39951 | .00 | | U | UJ |
| 02/09/1994 | Tridymite | 7 | SI | 1440.0 | 14.79903 | .00 | | U | UJ |
| 02/13/1994 | Crystalline Quartz | 1 | SI | 1440.0 | 17.58978 | .00 | | | UJ |
| 02/13/1994 | Cristobalite | 1 | SI | 1440.0 | 7.03591 | .00 | | U | UJ |
| 02/13/1994 | Tridymite | 1 | SI | 1440.0 | 14.07182 | .00 | | U | UJ |
| 02/13/1994 | Crystalline Quartz | 2 | SI | 1440.0 | 44.32624 | .00 | VOID | | UJ |
| 02/13/1994 | Cristobalite | 2 | SI | 1440.0 | 7.38771 | .00 | VOID | U | UJ |
| 02/13/1994 | Tridymite | 2 | SI | 1440.0 | 14.77541 | .00 | VOID | U | UJ |
| 02/13/1994 | Crystalline Quartz | 6 | SI | 1440.0 | 7.38771 | .00 | | | UJ |
| 02/13/1994 | Cristobalite | 6 | SI | 1440.0 | 7.38771 | .00 | | U | UJ |
| 02/13/1994 | Tridymite | 6 | SI | 1440.0 | 14.77541 | .00 | | U | UJ |
| 02/13/1994 | Crystalline Quartz | 7 | SI | 1440.0 | 7.38771 | .00 | | | UJ |
| 02/13/1994 | Cristobalite | 7 | SI | 1440.0 | 7.38771 | .00 | | U | UJ |
| 02/13/1994 | Tridymite | 7 | SI | 1440.0 | 14.77541 | .00 | | U | UJ |
| 02/17/1994 | Crystalline Quartz | 1 | SI | 1440.0 | 23.04572 | .00 | | | UJ |
| 02/17/1994 | Cristobalite | 1 | SI | 1440.0 | 7.68191 | .00 | | U | UJ |
| 02/17/1994 | Tridymite | 1 | SI | 1440.0 | 15.36382 | .00 | | U | UJ |
| 02/17/1994 | Crystalline Quartz | 2 | SI | 1440.0 | 184.36578 | .00 | P | | J |
| 02/17/1994 | Cristobalite | 2 | SI | 1440.0 | 7.68191 | .00 | P | U | UJ |
| 02/17/1994 | Tridymite | 2 | SI | 1440.0 | 15.36382 | .00 | P | U | UJ |
| 02/17/1994 | Crystalline Quartz | 6 | SI | 1440.0 | 15.36382 | .00 | | | UJ |
| 02/17/1994 | Cristobalite | 6 | SI | 1440.0 | 7.68191 | .00 | | U | UJ |
| 02/17/1994 | Tridymite | 6 | SI | 1440.0 | 15.36382 | .00 | | U | UJ |
| 02/17/1994 | Crystalline Quartz | 7 | SI | 1440.0 | 3.84095 | .00 | P | | UJ |
| 02/17/1994 | Cristobalite | 7 | SI | 1440.0 | 7.68191 | .00 | P | U | UJ |
| 02/17/1994 | Tridymite | 7 | SI | 1440.0 | 15.36382 | .00 | P | U | UJ |
| 02/21/1994 | Crystalline Quartz | 1 | SI | 1440.0 | 14.94232 | .00 | | | UJ |
| 02/21/1994 | Cristobalite | 1 | SI | 1440.0 | 7.47116 | .00 | | U | UJ |
| 02/21/1994 | Tridymite | 1 | SI | 1440.0 | 14.94232 | .00 | | U | UJ |
| 02/21/1994 | Crystalline Quartz | 2 | SI | 1440.0 | 18.67790 | .00 | | | UJ |
| 02/21/1994 | Cristobalite | 2 | SI | 1440.0 | 7.47116 | .00 | | U | UJ |
| 02/21/1994 | Tridymite | 2 | SI | 1440.0 | 14.94232 | .00 | | U | UJ |
| 02/21/1994 | Crystalline Quartz | 7 | SI | 1440.0 | 11.20674 | .00 | Q | | UJ |
| 02/21/1994 | Cristobalite | 7 | SI | 1440.0 | 7.47116 | .00 | Q | U | UJ |
| 02/21/1994 | Tridymite | 7 | SI | 1440.0 | 14.94232 | .00 | Q | U | UJ |
| 02/25/1994 | Crystalline Quartz | 1 | SI | 1440.0 | 30.45809 | .00 | | | UJ |
| 02/25/1994 | Cristobalite | 1 | SI | 1440.0 | 7.61452 | .00 | | U | UJ |
| 02/25/1994 | Tridymite | 1 | SI | 1440.0 | 15.22904 | .00 | | U | UJ |
| 02/25/1994 | Crystalline Quartz | 2 | SI | 1440.0 | 26.65083 | .00 | | | UJ |
| 02/25/1994 | Cristobalite | 2 | SI | 1440.0 | 7.61452 | .00 | | U | UJ |
| 02/25/1994 | Tridymite | 2 | SI | 1440.0 | 15.22904 | .00 | | U | UJ |
| 02/25/1994 | Crystalline Quartz | 6 | SI | 1440.0 | 15.22904 | .00 | | | UJ |
| 02/25/1994 | Cristobalite | 6 | SI | 1440.0 | 7.61452 | .00 | | U | UJ |
| 02/25/1994 | Tridymite | 6 | SI | 1440.0 | 15.22904 | .00 | | U | UJ |
| 02/25/1994 | Crystalline Quartz | 7 | SI | 1440.0 | 11.42178 | .00 | | | UJ |
| 02/25/1994 | Cristobalite | 7 | SI | 1440.0 | 7.61452 | .00 | | U | UJ |
| 02/25/1994 | Tridymite | 7 | SI | 1440.0 | 15.22904 | .00 | | U | UJ |
| 03/01/1994 | Crystalline Quartz | 1 | SI | 1440.0 | 26.62164 | .00 | | | UJ |

| Sample Date | Chemical Name | Site No. | Typ | Run Time (min.) | Chem Conc (ugi/m3) | EPA Scr L(ug/m3) | Grav Val | Qual Lb | Qual Val |
|---|---|---|---|---|---|---|---|---|---|
| 03/01/1994 | Tridymite | 1 | SI | 1440.0 | 15.21237 | .00 | | U | UJ |
| 03/01/1994 | Cristobalite | 1 | SI | 1440.0 | 7.60618 | .00 | | U | UJ |
| 03/01/1994 | Crystalline Quartz | 2 | SI | 1440.0 | 41.83464 | .00 | | | UJ |
| 03/01/1994 | Cristobalite | 2 | SI | 1440.0 | 7.60618 | .00 | | U | UJ |
| 03/01/1994 | Tridymite | 2 | SI | 1440.0 | 15.21237 | .00 | | U | UJ |
| 03/01/1994 | Crystalline Quartz | 6 | SI | 1440.0 | 3.80309 | .00 | P | | UJ |
| 03/01/1994 | Cristobalite | 6 | SI | 1440.0 | 7.60618 | .00 | P | U | UJ |
| 03/01/1994 | Tridymite | 6 | SI | 1440.0 | 15.21237 | .00 | P | U | UJ |
| 03/01/1994 | Crystalline Quartz | 7 | SI | 1440.0 | 15.21237 | .00 | | | UJ |
| 03/01/1994 | Cristobalite | 7 | SI | 1440.0 | 7.60618 | .00 | | U | UJ |
| 03/01/1994 | Tridymite | 7 | SI | 1440.0 | 15.21237 | .00 | | U | UJ |
| 03/05/1994 | Crystalline Quartz | 1 | SI | 1440.0 | 11.42805 | .00 | | | UJ |
| 03/05/1994 | Cristobalite | 1 | SI | 1440.0 | 7.61870 | .00 | | U | UJ |
| 03/05/1994 | Tridymite | 1 | SI | 1440.0 | 15.23740 | .00 | | U | UJ |
| 03/05/1994 | Crystalline Quartz | 2 | SI | 1440.0 | 49.52155 | .00 | | | UJ |
| 03/05/1994 | Cristobalite | 2 | SI | 1440.0 | 7.61870 | .00 | | U | UJ |
| 03/05/1994 | Tridymite | 2 | SI | 1440.0 | 15.23740 | .00 | | U | UJ |
| 03/05/1994 | Crystalline Quartz | 6 | SI | 1440.0 | 19.04675 | .00 | | | UJ |
| 03/05/1994 | Cristobalite | 6 | SI | 1440.0 | 7.61870 | .00 | | U | UJ |
| 03/05/1994 | Tridymite | 6 | SI | 1440.0 | 15.23740 | .00 | | U | UJ |
| 03/05/1994 | Crystalline Quartz | 7 | SI | 1440.0 | 3.80935 | .00 | | | UJ |
| 03/05/1994 | Cristobalite | 7 | SI | 1440.0 | 7.61870 | .00 | | U | UJ |
| 03/05/1994 | Tridymite | 7 | SI | 1440.0 | 15.23740 | .00 | | U | UJ |
| 03/09/1994 | Crystalline Quartz | 1 | SI | 1440.0 | 34.24657 | .00 | | | UJ |
| 03/09/1994 | Cristobalite | 1 | SI | 1440.0 | 7.61035 | .00 | | U | UJ |
| 03/09/1994 | Tridymite | 1 | SI | 1440.0 | 15.22070 | .00 | | U | UJ |
| 03/09/1994 | Crystalline Quartz | 2 | SI | 1440.0 | 64.68797 | .00 | | | UJ |
| 03/09/1994 | Cristobalite | 2 | SI | 1440.0 | 7.61035 | .00 | | U | UJ |
| 03/09/1994 | Tridymite | 2 | SI | 1440.0 | 15.22070 | .00 | | U | UJ |
| 03/09/1994 | Crystalline Quartz | 6 | SI | 1440.0 | 7.61035 | .00 | | | UJ |
| 03/09/1994 | Cristobalite | 6 | SI | 1440.0 | 7.61035 | .00 | | U | UJ |
| 03/09/1994 | Tridymite | 6 | SI | 1440.0 | 15.22070 | .00 | | U | UJ |
| 03/09/1994 | Crystalline Quartz | 7 | SI | 1440.0 | 3.80518 | .00 | | U | L |
| 03/09/1994 | Cristobalite | 7 | SI | 1440.0 | 7.61035 | .00 | | U | L |
| 03/09/1994 | Tridymite | 7 | SI | 1440.0 | 15.22070 | .00 | | U | L |
| 03/13/1994 | Crystalline Quartz | 1 | SI | 1440.0 | 19.25803 | .00 | | | UJ |
| 03/13/1994 | Cristobalite | 1 | SI | 1440.0 | 7.70321 | .00 | | U | UJ |
| 03/13/1994 | Tridymite | 1 | SI | 1440.0 | 15.40642 | .00 | | U | UJ |
| 03/13/1994 | Crystalline Quartz | 2 | SI | 1440.0 | 42.36766 | .00 | | | UJ |
| 03/13/1994 | Cristobalite | 2 | SI | 1440.0 | 7.70321 | .00 | | U | UJ |
| 03/13/1994 | Tridymite | 2 | SI | 1440.0 | 15.40642 | .00 | | U | UJ |
| 03/13/1994 | Crystalline Quartz | 6 | SI | 1440.0 | 15.40642 | .00 | | | UJ |
| 03/13/1994 | Cristobalite | 6 | SI | 1440.0 | 7.70321 | .00 | | U | UJ |
| 03/13/1994 | Tridymite | 6 | SI | 1440.0 | 15.40642 | .00 | | U | UJ |
| 03/13/1994 | Crystalline Quartz | 7 | SI | 1440.0 | 7.70321 | .00 | | | UJ |
| 03/13/1994 | Cristobalite | 7 | SI | 1440.0 | 7.70321 | .00 | | U | UJ |
| 03/13/1994 | Tridymite | 7 | SI | 1440.0 | 15.40642 | .00 | | U | UJ |
| 03/17/1994 | Crystalline Quartz | 1 | SI | 1440.0 | 84.12873 | .00 | | | UJ |
| 03/17/1994 | Cristobalite | 1 | SI | 1440.0 | 7.64807 | .00 | | U | UJ |
| 03/17/1994 | Tridymite | 1 | SI | 1440.0 | 15.29613 | .00 | | U | UJ |
| 03/17/1994 | Crystalline Quartz | 2 | SI | 1440.0 | 325.04282 | .00 | | | J |
| 03/17/1994 | Cristobalite | 2 | SI | 1440.0 | 7.64807 | .00 | | U | UJ |
| 03/17/1994 | Tridymite | 2 | SI | 1440.0 | 15.29613 | .00 | | U | UJ |

| Sample Date | Chemical Name | Site No. | Typ | Run Time (min.) | Chem Conc (ugi/m3) | EPA Scr L(ug/m3) | Grav Val | Qual Lb | Qual Val |
|---|---|---|---|---|---|---|---|---|---|
| 03/17/1994 | Crystalline Quartz | 6 | SI | 1440.0 | 53.53646 | .00 | | | UJ |
| 03/17/1994 | Cristobalite | 6 | SI | 1440.0 | 7.64807 | .00 | | U | UJ |
| 03/17/1994 | Tridymite | 6 | SI | 1440.0 | 15.29613 | .00 | | U | UJ |
| 03/17/1994 | Crystalline Quartz | 7 | SI | 1440.0 | 30.59227 | .00 | | | UJ |
| 03/17/1994 | Cristobalite | 7 | SI | 1440.0 | 7.64807 | .00 | | U | UJ |
| 03/17/1994 | Tridymite | 7 | SI | 1440.0 | 15.29613 | .00 | | U | UJ |
| 03/21/1994 | Crystalline Quartz | 1 | SI | 1440.0 | 27.05126 | .00 | | | UJ |
| 03/21/1994 | Cristobalite | 1 | SI | 1440.0 | 7.72893 | .00 | | U | UJ |
| 03/21/1994 | Tridymite | 1 | SI | 1440.0 | 15.45786 | .00 | | U | UJ |
| 03/21/1994 | Crystalline Quartz | 2 | SI | 1440.0 | 81.15377 | .00 | | | UJ |
| 03/21/1994 | Cristobalite | 2 | SI | 1440.0 | 7.72893 | .00 | | U | UJ |
| 03/21/1994 | Tridymite | 2 | SI | 1440.0 | 15.45786 | .00 | | U | UJ |
| 03/21/1994 | Crystalline Quartz | 6 | SI | 1440.0 | 61.83144 | .00 | | | UJ |
| 03/21/1994 | Cristobalite | 6 | SI | 1440.0 | 7.72893 | .00 | | U | UJ |
| 03/21/1994 | Tridymite | 6 | SI | 1440.0 | 15.45786 | .00 | | U | UJ |
| 03/21/1994 | Crystalline Quartz | 7 | SI | 1440.0 | 23.18679 | .00 | | | UJ |
| 03/21/1994 | Cristobalite | 7 | SI | 1440.0 | 7.72893 | .00 | | U | UJ |
| 03/21/1994 | Tridymite | 7 | SI | 1440.0 | 15.45786 | .00 | | U | UJ |
| 03/25/1994 | Crystalline Quartz | 1 | SI | 1440.0 | 15.13775 | .00 | | | UJ |
| 03/25/1994 | Cristobalite | 1 | SI | 1440.0 | 7.56888 | .00 | | U | UJ |
| 03/25/1994 | Tridymite | 1 | SI | 1440.0 | 15.13775 | .00 | | U | UJ |
| 03/25/1994 | Crystalline Quartz | 2 | SI | 1440.0 | 45.41326 | .00 | | | UJ |
| 03/25/1994 | Cristobalite | 2 | SI | 1440.0 | 7.56888 | .00 | | U | UJ |
| 03/25/1994 | Tridymite | 2 | SI | 1440.0 | 15.13775 | .00 | | U | UJ |
| 03/25/1994 | Crystalline Quartz | 6 | SI | 1440.0 | 75.68876 | .00 | | | UJ |
| 03/25/1994 | Cristobalite | 6 | SI | 1440.0 | 7.56888 | .00 | | U | UJ |
| 03/25/1994 | Tridymite | 6 | SI | 1440.0 | 15.13775 | .00 | | U | UJ |
| 03/25/1994 | Crystalline Quartz | 7 | SI | 1440.0 | 11.35331 | .00 | P | | UJ |
| 03/25/1994 | Cristobalite | 7 | SI | 1440.0 | 7.56888 | .00 | P | U | UJ |
| 03/25/1994 | Tridymite | 7 | SI | 1440.0 | 15.13775 | .00 | P | U | UJ |
| 03/29/1994 | Crystalline Quartz | 1 | SI | 1440.0 | 38.13533 | .00 | | | UJ |
| 03/29/1994 | Cristobalite | 1 | SI | 1440.0 | 7.62707 | .00 | | U | UJ |
| 03/29/1994 | Tridymite | 1 | SI | 1440.0 | 15.25413 | .00 | | U | UJ |
| 03/29/1994 | Crystalline Quartz | 2 | SI | 1440.0 | 80.08420 | .00 | | | UJ |
| 03/29/1994 | Cristobalite | 2 | SI | 1440.0 | 7.62707 | .00 | | U | UJ |
| 03/29/1994 | Tridymite | 2 | SI | 1440.0 | 15.25413 | .00 | | U | UJ |
| 03/29/1994 | Crystalline Quartz | 6 | SI | 1440.0 | 57.20300 | .00 | | | UJ |
| 03/29/1994 | Cristobalite | 6 | SI | 1440.0 | 7.62707 | .00 | | U | UJ |
| 03/29/1994 | Tridymite | 6 | SI | 1440.0 | 15.25413 | .00 | | U | UJ |
| 03/29/1994 | Crystalline Quartz | 7 | SI | 1440.0 | 26.69473 | .00 | | | UJ |
| 03/29/1994 | Cristobalite | 7 | SI | 1440.0 | 7.62707 | .00 | | U | UJ |
| 03/29/1994 | Tridymite | 7 | SI | 1440.0 | 15.25413 | .00 | | U | UJ |
| 04/02/1994 | Crystalline Quartz | 1 | SI | 1440.0 | 29.62368 | .00 | | | UJ |
| 04/02/1994 | Cristobalite | 1 | SI | 1440.0 | 6.58304 | .00 | | U | UJ |
| 04/02/1994 | Tridymite | 1 | SI | 1440.0 | 13.16608 | .00 | | U | UJ |
| 04/02/1994 | Crystalline Quartz | 2 | SI | 1440.0 | 24.17982 | .00 | VOID | | UJ |
| 04/02/1994 | Cristobalite | 2 | SI | 1440.0 | 9.67193 | .00 | VOID | U | UJ |
| 04/02/1994 | Tridymite | 2 | SI | 1440.0 | 19.34385 | .00 | VOID | U | UJ |
| 04/02/1994 | Crystalline Quartz | 6 | SI | 1440.0 | 19.33309 | .00 | | | UJ |
| 04/02/1994 | Cristobalite | 6 | SI | 1440.0 | 7.73323 | .00 | | U | UJ |
| 04/02/1994 | Tridymite | 6 | SI | 1440.0 | 15.46647 | .00 | | U | UJ |
| 04/02/1994 | Crystalline Quartz | 7 | SI | 1440.0 | 19.33309 | .00 | | | UJ |
| 04/02/1994 | Cristobalite | 7 | SI | 1440.0 | 7.73323 | .00 | | U | UJ |

| Sample Date | Chemical Name | Site No. | Typ | Run Time (min.) | Chem Conc (ugi/m3) | EPA Scr L(ug/m3) | Grav Val | Qual Lb | Qual Val |
|---|---|---|---|---|---|---|---|---|---|
| 04/02/1994 | Tridymite | 7 | SI | 1440.0 | 15.46647 | .00 | | U | UJ |
| 04/02/1994 | Crystalline Quartz | 8 | SI | 1440.0 | 19.33309 | .00 | | | UJ |
| 04/02/1994 | Cristobalite | 8 | SI | 1440.0 | 7.73323 | .00 | | U | J |
| 04/02/1994 | Tridymite | 8 | SI | 1440.0 | 15.46647 | .00 | | U | J |
| 04/06/1994 | Crystalline Quartz | 1 | SI | 1440.0 | 49.72612 | .00 | | | UJ |
| 04/06/1994 | Cristobalite | 1 | SI | 1440.0 | 7.65017 | .00 | | U | UJ |
| 04/06/1994 | Tridymite | 1 | SI | 1440.0 | 15.30035 | .00 | | U | UJ |
| 04/06/1994 | Crystalline Quartz | 2 | SI | 1440.0 | 65.02647 | .00 | | | UJ |
| 04/06/1994 | Cristobalite | 2 | SI | 1440.0 | 7.65017 | .00 | | U | UJ |
| 04/06/1994 | Tridymite | 2 | SI | 1440.0 | 15.30035 | .00 | | U | UJ |
| 04/06/1994 | Crystalline Quartz | 6 | SI | 1440.0 | 45.90104 | .00 | | | UJ |
| 04/06/1994 | Cristobalite | 6 | SI | 1440.0 | 7.65017 | .00 | | U | UJ |
| 04/06/1994 | Tridymite | 6 | SI | 1440.0 | 15.30035 | .00 | | U | UJ |
| 04/10/1994 | Crystalline Quartz | 1 | SI | 1440.0 | 26.76528 | .00 | | | UJ |
| 04/10/1994 | Cristobalite | 1 | SI | 1440.0 | 7.64722 | .00 | | U | UJ |
| 04/10/1994 | Tridymite | 1 | SI | 1440.0 | 15.29445 | .00 | | U | UJ |
| 04/10/1994 | Crystalline Quartz | 2 | SI | 1440.0 | 57.35418 | .00 | | | UJ |
| 04/10/1994 | Cristobalite | 2 | SI | 1440.0 | 7.64722 | .00 | | U | UJ |
| 04/10/1994 | Tridymite | 2 | SI | 1440.0 | 15.29445 | .00 | | U | UJ |
| 04/10/1994 | Crystalline Quartz | 6 | SI | 1440.0 | 22.94167 | .00 | | | UJ |
| 04/10/1994 | Cristobalite | 6 | SI | 1440.0 | 7.64722 | .00 | | U | UJ |
| 04/10/1994 | Tridymite | 6 | SI | 1440.0 | 15.29445 | .00 | | U | UJ |
| 04/10/1994 | Crystalline Quartz | 7 | SI | 1440.0 | 19.11806 | .00 | | | UJ |
| 04/10/1994 | Cristobalite | 7 | SI | 1440.0 | 7.64722 | .00 | | U | UJ |
| 04/10/1994 | Tridymite | 7 | SI | 1440.0 | 15.29445 | .00 | | U | UJ |
| 04/10/1994 | Crystalline Quartz | 8 | SI | 1440.0 | 19.11806 | .00 | | | UJ |
| 04/10/1994 | Cristobalite | 8 | SI | 1440.0 | 7.64722 | .00 | | U | UJ |
| 04/10/1994 | Tridymite | 8 | SI | 1440.0 | 15.29445 | .00 | | U | UJ |
| 04/14/1994 | Crystalline Quartz | 1 | SI | 1440.0 | 65.55000 | .00 | | | UJ |
| 04/14/1994 | Cristobalite | 1 | SI | 1440.0 | 7.71176 | .00 | | U | UJ |
| 04/14/1994 | Tridymite | 1 | SI | 1440.0 | 15.42353 | .00 | | U | UJ |
| 04/14/1994 | Crystalline Quartz | 2 | SI | 1440.0 | 123.38824 | .00 | | | UJ |
| 04/14/1994 | Cristobalite | 2 | SI | 1440.0 | 7.71176 | .00 | | U | UJ |
| 04/14/1994 | Tridymite | 2 | SI | 1440.0 | 15.42353 | .00 | | U | UJ |
| 04/14/1994 | Crystalline Quartz | 6 | SI | 1440.0 | 30.84706 | .00 | | | UJ |
| 04/14/1994 | Cristobalite | 6 | SI | 1440.0 | 7.71176 | .00 | | U | J |
| 04/14/1994 | Tridymite | 6 | SI | 1440.0 | 15.42353 | .00 | | U | J |
| 04/14/1994 | Crystalline Quartz | 7 | SI | 1440.0 | 15.42353 | .00 | | | UJ |
| 04/14/1994 | Cristobalite | 7 | SI | 1440.0 | 7.71176 | .00 | | U | UJ |
| 04/14/1994 | Tridymite | 7 | SI | 1440.0 | 15.42353 | .00 | | U | UJ |
| 04/14/1994 | Crystalline Quartz | 8 | SI | 1440.0 | 38.55882 | .00 | Q | | UJ |
| 04/14/1994 | Cristobalite | 8 | SI | 1440.0 | 7.71176 | .00 | Q | U | UJ |
| 04/14/1994 | Tridymite | 8 | SI | 1440.0 | 15.42353 | .00 | Q | U | UJ |
| 04/18/1994 | Crystalline Quartz | 1 | SI | 1440.0 | 36.00231 | .00 | | | UJ |
| 04/18/1994 | Cristobalite | 1 | SI | 1440.0 | 8.00051 | .00 | | U | UJ |
| 04/18/1994 | Tridymite | 1 | SI | 1440.0 | 16.00103 | .00 | | U | UJ |
| 04/18/1994 | Crystalline Quartz | 6 | SI | 1440.0 | 56.00359 | .00 | | | UJ |
| 04/18/1994 | Cristobalite | 6 | SI | 1440.0 | 8.00051 | .00 | | U | UJ |
| 04/18/1994 | Tridymite | 6 | SI | 1440.0 | 16.00103 | .00 | | U | UJ |
| 04/18/1994 | Crystalline Quartz | 7 | SI | 1440.0 | 20.00128 | .00 | P | | UJ |
| 04/18/1994 | Cristobalite | 7 | SI | 1440.0 | 8.00051 | .00 | P | U | UJ |
| 04/18/1994 | Tridymite | 7 | SI | 1440.0 | 16.00103 | .00 | P | U | UJ |
| 04/18/1994 | Crystalline Quartz | 8 | SI | 1440.0 | 24.00154 | .00 | | | UJ |

| Sample Date | Chemical Name | Site No. | Typ | Run Time (min.) | Chem Conc (ugi/m3) | EPA Scr L(ug/m3) | Grav Val | Qual Lb | Qual Val |
|---|---|---|---|---|---|---|---|---|---|
| 04/18/1994 | Cristobalite | 8 | SI | 1440.0 | 8.00051 | .00 | | U | UJ |
| 04/18/1994 | Tridymite | 8 | SI | 1440.0 | 16.00103 | .00 | | U | UJ |
| 04/22/1994 | Crystalline Quartz | 1 | SI | 1440.0 | 59.01794 | .00 | | | UJ |
| 04/22/1994 | Cristobalite | 1 | SI | 1440.0 | 7.86906 | .00 | | U | UJ |
| 04/22/1994 | Tridymite | 1 | SI | 1440.0 | 15.73812 | .00 | | U | UJ |
| 04/22/1994 | Crystalline Quartz | 2 | SI | 1440.0 | 62.95247 | .00 | | | UJ |
| 04/22/1994 | Cristobalite | 2 | SI | 1440.0 | 7.86906 | .00 | | U | UJ |
| 04/22/1994 | Tridymite | 2 | SI | 1440.0 | 15.73812 | .00 | | U | UJ |
| 04/22/1994 | Crystalline Quartz | 6 | SI | 1440.0 | 43.27982 | .00 | | | UJ |
| 04/22/1994 | Cristobalite | 6 | SI | 1440.0 | 7.86906 | .00 | | U | UJ |
| 04/22/1994 | Tridymite | 6 | SI | 1440.0 | 15.73812 | .00 | | U | UJ |
| 04/22/1994 | Crystalline Quartz | 7 | SI | 1440.0 | 19.67265 | .00 | | | UJ |
| 04/22/1994 | Cristobalite | 7 | SI | 1440.0 | 7.86906 | .00 | | U | UJ |
| 04/22/1994 | Tridymite | 7 | SI | 1440.0 | 15.73812 | .00 | | U | UJ |
| 04/22/1994 | Crystalline Quartz | 8 | SI | 1440.0 | 27.54171 | .00 | | | UJ |
| 04/22/1994 | Cristobalite | 8 | SI | 1440.0 | 7.86906 | .00 | | U | UJ |
| 04/22/1994 | Tridymite | 8 | SI | 1440.0 | 15.73812 | .00 | | U | UJ |
| 04/26/1994 | Crystalline Quartz | 1 | SI | 1440.0 | 60.98305 | .00 | | | UJ |
| 04/26/1994 | Cristobalite | 1 | SI | 1440.0 | 7.62288 | .00 | | U | UJ |
| 04/26/1994 | Tridymite | 1 | SI | 1440.0 | 15.24576 | .00 | | U | UJ |
| 04/26/1994 | Crystalline Quartz | 2 | SI | 1440.0 | 26.68008 | .00 | | | UJ |
| 04/26/1994 | Cristobalite | 2 | SI | 1440.0 | 7.62288 | .00 | | U | UJ |
| 04/26/1994 | Tridymite | 2 | SI | 1440.0 | 15.24576 | .00 | | U | UJ |
| 04/26/1994 | Crystalline Quartz | 6 | SI | 1440.0 | 76.22881 | .00 | | | UJ |
| 04/26/1994 | Cristobalite | 6 | SI | 1440.0 | 7.62288 | .00 | | U | UJ |
| 04/26/1994 | Tridymite | 6 | SI | 1440.0 | 15.24576 | .00 | | U | UJ |
| 04/26/1994 | Crystalline Quartz | 7 | SI | 1440.0 | 19.05720 | .00 | | | UJ |
| 04/26/1994 | Cristobalite | 7 | SI | 1440.0 | 7.62288 | .00 | | U | UJ |
| 04/26/1994 | Tridymite | 7 | SI | 1440.0 | 15.24576 | .00 | | U | UJ |
| 04/26/1994 | Crystalline Quartz | 8 | SI | 1440.0 | 19.05720 | .00 | | | UJ |
| 04/26/1994 | Cristobalite | 8 | SI | 1440.0 | 7.62288 | .00 | | U | UJ |
| 04/26/1994 | Tridymite | 8 | SI | 1440.0 | 15.24576 | .00 | | U | UJ |
| 04/30/1994 | Crystalline Quartz | 1 | SI | 1440.0 | 38.34591 | .00 | | | UJ |
| 04/30/1994 | Cristobalite | 1 | SI | 1440.0 | 7.66918 | .00 | | U | UJ |
| 04/30/1994 | Tridymite | 1 | SI | 1440.0 | 15.33836 | .00 | | U | UJ |
| 04/30/1994 | Crystalline Quartz | 2 | SI | 1440.0 | 26.84214 | .00 | | | UJ |
| 04/30/1994 | Cristobalite | 2 | SI | 1440.0 | 7.66918 | .00 | | U | UJ |
| 04/30/1994 | Tridymite | 2 | SI | 1440.0 | 15.33836 | .00 | | U | UJ |
| 04/30/1994 | Crystalline Quartz | 6 | SI | 1440.0 | 19.17295 | .00 | | | UJ |
| 04/30/1994 | Cristobalite | 6 | SI | 1440.0 | 7.66918 | .00 | | U | UJ |
| 04/30/1994 | Tridymite | 6 | SI | 1440.0 | 15.33836 | .00 | | U | UJ |
| 04/30/1994 | Crystalline Quartz | 7 | SI | 1440.0 | 11.50377 | .00 | P | | UJ |
| 04/30/1994 | Cristobalite | 7 | SI | 1440.0 | 7.66918 | .00 | P | U | UJ |
| 04/30/1994 | Tridymite | 7 | SI | 1440.0 | 15.33836 | .00 | P | U | UJ |
| 04/30/1994 | Crystalline Quartz | 8 | SI | 1440.0 | 19.17295 | .00 | | | UJ |
| 04/30/1994 | Cristobalite | 8 | SI | 1440.0 | 7.66918 | .00 | | U | UJ |
| 04/30/1994 | Tridymite | 8 | SI | 1440.0 | 15.33836 | .00 | | U | UJ |

# Appendix AB-4

## $PM_{10}$ Radionuclide Data and Lo-vol Radionuclide Data

Data Report for Radionuclide Concentrations from PM10 Samples 07/31/1995

(Validated) Page: 1

| Sample Date | Chemical Name | Site No. | Type | Run Time (min.) | Chem Conc (pCi/m3) | EPA Screen. Level (pCi/m3) | Particulate Conc. (ug/m3) | U-234 (0.0002) | U-235 (0.0002) | U-238 (0.0001) | Grav Val | Quality Lab | Quality Val |
|---|---|---|---|---|---|---|---|---|---|---|---|---|---|
| 10/04/1993 | Thorium-230 | 1 | PM | 1450.8 | .00008 | .00020 | 43.80 | | | | | B | UJ |
| 10/04/1993 | Thorium-232 | 1 | PM | 1450.8 | .00003 | .00020 | 43.80 | | | | | B | UJ |
| 10/04/1993 | Polonium-210 | 1 | PM | 1450.8 | .01178 | .00180 | 43.80 | | | | | | |
| 10/04/1993 | Lead-210 | 1 | PM | 1450.8 | .01984 | .00120 | 43.80 | | | | | | |
| 10/04/1993 | Radium-228 | 1 | PM | 1450.8 | .00083 | .00690 | 43.80 | | | | | U | U |
| 10/04/1993 | Uranium | 1 | PM | 1450.8 | .00026 | .00000 | 43.80 | .00013 | .00001 | .00012 | | | |
| 10/04/1993 | Radium-226 | 1 | PM | 1450.8 | .00039 | .00160 | 43.80 | | | | | U | U |
| 10/04/1993 | Thorium-230 | 2 | PM | 1480.4 | .00015 | .00020 | 47.06 | | | | | B | UJ |
| 10/04/1993 | Thorium-232 | 2 | PM | 1480.4 | .00001 | .00020 | 47.06 | | | | | U | U |
| 10/04/1993 | Polonium-210 | 2 | PM | 1480.4 | .01281 | .00180 | 47.06 | | | | | | |
| 10/04/1993 | Lead-210 | 2 | PM | 1480.4 | .02161 | .00120 | 47.06 | | | | | | |
| 10/04/1993 | Radium-228 | 2 | PM | 1480.4 | .00152 | .00690 | 47.06 | | | | | U | U |
| 10/04/1993 | Uranium | 2 | PM | 1480.4 | .00043 | .00000 | 47.06 | .00022 | .00001 | .00020 | | | |
| 10/04/1993 | Radium-226 | 2 | PM | 1480.4 | .00068 | .00160 | 47.06 | | | | | B | U |
| 10/04/1993 | Thorium-230 | 3 | PM | 1483.2 | .00010 | .00020 | 183.05 | | | | QR | B | UJ |
| 10/04/1993 | Thorium-232 | 3 | PM | 1483.2 | .00013 | .00020 | 183.05 | | | | QR | B | UJ |
| 10/04/1993 | Polonium-210 | 3 | PM | 1483.2 | .00519 | .00180 | 183.05 | | | | QR | | |
| 10/04/1993 | Lead-210 | 3 | PM | 1483.2 | .02182 | .00120 | 183.05 | | | | QR | | |
| 10/04/1993 | Radium-226 | 3 | PM | 1483.2 | .00022 | .00160 | 183.05 | | | | QR | U | U |
| 10/04/1993 | Radium-228 | 3 | PM | 1483.2 | -.00040 | .00690 | 183.05 | | | | QR | U | U |
| 10/04/1993 | Uranium | 3 | PM | 1483.2 | .00025 | .00000 | 183.05 | .00012 | .00001 | .00012 | QR | | |
| 10/04/1993 | Thorium-230 | 4 | PM | 1466.7 | .00003 | .00020 | 40.97 | | | | | B | UJ |
| 10/04/1993 | Polonium-210 | 4 | PM | 1466.7 | .00653 | .00180 | 40.97 | | | | | | |
| 10/04/1993 | Lead-210 | 4 | PM | 1466.7 | .02179 | .00120 | 40.97 | | | | | | |
| 10/04/1993 | Radium-226 | 4 | PM | 1466.7 | .00028 | .00160 | 40.97 | | | | | U | U |
| 10/04/1993 | Radium-228 | 4 | PM | 1466.7 | .00060 | .00690 | 40.97 | | | | | U | U |
| 10/04/1993 | Thorium-232 | 4 | PM | 1466.7 | .00003 | .00020 | 40.97 | | | | | U | U |
| 10/04/1993 | Uranium | 4 | PM | 1466.7 | .00020 | .00000 | 40.97 | .00010 | .00000 | .00010 | | | |
| 10/04/1993 | Thorium-230 | 5 | PM | 270.6 | .00017 | .00020 | 29.15 | | | | TR | U | U |
| 10/04/1993 | Thorium-232 | 5 | PM | 270.6 | .00000 | .00020 | 29.15 | | | | TR | U | U |
| 10/04/1993 | Polonium-210 | 5 | PM | 270.6 | .03921 | .00180 | 29.15 | | | | TR | | |
| 10/04/1993 | Radium-226 | 5 | PM | 270.6 | .00167 | .00160 | 29.15 | | | | TR | U | U |
| 10/04/1993 | Uranium | 5 | PM | 270.6 | .00056 | .00000 | 29.15 | .00028 | .00001 | .00027 | TR | | U |
| 10/04/1993 | Lead-210 | 5 | PM | 270.6 | .01315 | .00120 | 29.15 | | | | TR | | |
| 10/04/1993 | Radium-228 | 5 | PM | 270.6 | .00471 | .00690 | 29.15 | | | | TR | U | U |
| 10/04/1993 | Thorium-230 | 6 | PM | 1440.8 | .00007 | .00020 | 81.43 | | | | | B | UJ |
| 10/04/1993 | Thorium-232 | 6 | PM | 1440.8 | .00010 | .00020 | 81.43 | | | | | B | UJ |
| 10/04/1993 | Polonium-210 | 6 | PM | 1440.8 | .00487 | .00180 | 81.43 | | | | | | |
| 10/04/1993 | Radium-226 | 6 | PM | 1440.8 | .00004 | .00160 | 81.43 | | | | | U | U |
| 10/04/1993 | Radium-228 | 6 | PM | 1440.8 | .00270 | .00690 | 81.43 | | | | | B | U |
| 10/04/1993 | Uranium | 6 | PM | 1440.8 | .00036 | .00000 | 81.43 | .00018 | .00001 | .00017 | | | |
| 10/04/1993 | Lead-210 | 6 | PM | 1440.8 | .02041 | .00120 | 81.43 | | | | | | |
| 10/04/1993 | Thorium-230 | 7 | PM | 1488.6 | .00019 | .00020 | 58.86 | | | | | B | UJ |
| 10/04/1993 | Thorium-232 | 7 | PM | 1488.6 | .00001 | .00020 | 58.86 | | | | | U | U |
| 10/04/1993 | Polonium-210 | 7 | PM | 1488.6 | .03412 | .00180 | 58.86 | | | | | | |
| 10/04/1993 | Lead-210 | 7 | PM | 1488.6 | .02194 | .00120 | 58.86 | | | | | | |
| 10/04/1993 | Radium-226 | 7 | PM | 1488.6 | .00021 | .00160 | 58.86 | | | | | U | U |
| 10/04/1993 | Uranium | 7 | PM | 1488.6 | .00043 | .00000 | 58.86 | .00022 | .00001 | .00020 | | | |
| 10/04/1993 | Radium-228 | 7 | PM | 1488.6 | .00110 | .00690 | 58.86 | | | | | U | U |
| 10/04/1993 | Thorium-230 | 8 | PM | 936.0 | .00002 | .00020 | 42.14 | | | | TR | U | U |
| 10/04/1993 | Thorium-232 | 8 | PM | 936.0 | .00000 | .00020 | 42.14 | | | | TR | U | U |

Note: Concentrations of Uranium isotopes were calculated from total uranium based on naturally occuring ratios and are expressed in pCi/m3. EPA screening levels of uranium isotopes are given in parens.

Data Report for Radionuclide Concentrations from PM10 Samples
(Validated)

| Sample Date | Chemical Name | Site No. | Type | Run Time (min.) | Chem Conc (pCi/m3) | EPA Screen. Level (pCi/m3) | Particulate Conc. (ug/m3) | U-234 (0.0002) | U-235 (0.0002) | U-238 (0.0001) | Grav Val | Quality Lab | Quality Val |
|---|---|---|---|---|---|---|---|---|---|---|---|---|---|
| 10/04/1993 | Polonium-210 | 8 | PM | 936.0 | .01133 | .00180 | 42.14 | | | | TR | | |
| 10/04/1993 | Radium-226 | 8 | PM | 936.0 | .00027 | .00160 | 42.14 | | | | TR | U | U |
| 10/04/1993 | Radium-228 | 8 | PM | 936.0 | .00242 | .00690 | 42.14 | | | | TR | U | U |
| 10/04/1993 | Uranium | 8 | PM | 936.0 | .00022 | .00000 | 42.14 | .00011 | .00000 | .00011 | TR | | |
| 10/04/1993 | Lead-210 | 8 | PM | 936.0 | .01994 | .00120 | 42.14 | | | | TR | | |
| 10/08/1993 | Thorium-230 | 1 | PM | 1453.4 | .00006 | .00020 | 10.55 | | | | | U | U |
| 10/08/1993 | Thorium-232 | 1 | PM | 1453.4 | .00002 | .00020 | 10.55 | | | | | U | U |
| 10/08/1993 | Polonium-210 | 1 | PM | 1453.4 | .00630 | .00180 | 10.55 | | | | | | |
| 10/08/1993 | Lead-210 | 1 | PM | 1453.4 | .00256 | .00120 | 10.55 | | | | | | U |
| 10/08/1993 | Radium-228 | 1 | PM | 1453.4 | .00049 | .00690 | 10.55 | | | | | U | U |
| 10/08/1993 | Uranium | 1 | PM | 1453.4 | .00025 | .00000 | 10.55 | .00013 | .00001 | .00012 | | | |
| 10/08/1993 | Radium-226 | 1 | PM | 1453.4 | -.00016 | .00160 | 10.55 | | | | | U | U |
| 10/08/1993 | Thorium-230 | 2 | PM | 1478.4 | .00007 | .00020 | 17.73 | | | | | U | U |
| 10/08/1993 | Thorium-232 | 2 | PM | 1478.4 | .00000 | .00020 | 17.73 | | | | | U | U |
| 10/08/1993 | Polonium-210 | 2 | PM | 1478.4 | .04721 | .00180 | 17.73 | | | | | | |
| 10/08/1993 | Lead-210 | 2 | PM | 1478.4 | .00162 | .00120 | 17.73 | | | | | | U |
| 10/08/1993 | Radium-226 | 2 | PM | 1478.4 | -.00014 | .00160 | 17.73 | | | | | U | U |
| 10/08/1993 | Uranium | 2 | PM | 1478.4 | .00013 | .00000 | 17.73 | .00006 | .00000 | .00006 | | | U |
| 10/08/1993 | Radium-228 | 2 | PM | 1478.4 | .00000 | .00690 | 17.73 | | | | | U | U |
| 10/08/1993 | Thorium-230 | 3 | PM | 1486.1 | .00006 | .00020 | 6.95 | | | | | B | U |
| 10/08/1993 | Thorium-232 | 3 | PM | 1486.1 | .00000 | .00020 | 6.95 | | | | | U | U |
| 10/08/1993 | Polonium-210 | 3 | PM | 1486.1 | .00466 | .00180 | 6.95 | | | | | | |
| 10/08/1993 | Lead-210 | 3 | PM | 1486.1 | .00240 | .00120 | 6.95 | | | | | | U |
| 10/08/1993 | Radium-228 | 3 | PM | 1486.1 | .00059 | .00690 | 6.95 | | | | | U | U |
| 10/08/1993 | Uranium | 3 | PM | 1486.1 | .00005 | .00000 | 6.95 | .00002 | .00000 | .00002 | | B | U |
| 10/08/1993 | Radium-226 | 3 | PM | 1486.1 | -.00013 | .00160 | 6.95 | | | | | U | U |
| 10/08/1993 | Thorium-230 | 4 | PM | 1463.4 | .00002 | .00020 | 6.15 | | | | | B | UJ |
| 10/08/1993 | Thorium-232 | 4 | PM | 1463.4 | .00001 | .00020 | 6.15 | | | | | U | U |
| 10/08/1993 | Polonium-210 | 4 | PM | 1463.4 | .00124 | .00180 | 6.15 | | | | | B | U |
| 10/08/1993 | Lead-210 | 4 | PM | 1463.4 | .00231 | .00120 | 6.15 | | | | | | |
| 10/08/1993 | Radium-228 | 4 | PM | 1463.4 | .00171 | .00690 | 6.15 | | | | | U | U |
| 10/08/1993 | Uranium | 4 | PM | 1463.4 | .00005 | .00000 | 6.15 | .00002 | .00000 | .00002 | | B | U |
| 10/08/1993 | Radium-226 | 4 | PM | 1463.4 | -.00007 | .00160 | 6.15 | | | | | U | U |
| 10/08/1993 | Thorium-230 | 6 | PM | 1439.3 | .00000 | .00020 | 3.74 | | | | | U | U |
| 10/08/1993 | Thorium-232 | 6 | PM | 1439.3 | -.00003 | .00020 | 3.74 | | | | | U | U |
| 10/08/1993 | Lead-210 | 6 | PM | 1439.3 | .00053 | .00120 | 3.74 | | | | | B | U |
| 10/08/1993 | Radium-226 | 6 | PM | 1439.3 | .00017 | .00160 | 3.74 | | | | | U | U |
| 10/08/1993 | Radium-228 | 6 | PM | 1439.3 | .00228 | .00690 | 3.74 | | | | | B | U |
| 10/08/1993 | Uranium | 6 | PM | 1439.3 | .00002 | .00000 | 3.74 | .00001 | .00000 | .00001 | | B | U |
| 10/08/1993 | Polonium-210 | 6 | PM | 1439.3 | .00044 | .00180 | 3.74 | | | | | B | U |
| 10/08/1993 | Thorium-230 | 7 | PM | 1486.8 | .00005 | .00020 | 5.08 | | | | | U | U |
| 10/08/1993 | Thorium-232 | 7 | PM | 1486.8 | .00003 | .00020 | 5.08 | | | | | U | U |
| 10/08/1993 | Polonium-210 | 7 | PM | 1486.8 | .00148 | .00180 | 5.08 | | | | | B | U |
| 10/08/1993 | Lead-210 | 7 | PM | 1486.8 | .00054 | .00120 | 5.08 | | | | | U | U |
| 10/08/1993 | Radium-228 | 7 | PM | 1486.8 | .00055 | .00690 | 5.08 | | | | | U | U |
| 10/08/1993 | Uranium | 7 | PM | 1486.8 | .00003 | .00000 | 5.08 | .00002 | .00000 | .00002 | | B | U |
| 10/08/1993 | Radium-226 | 7 | PM | 1486.8 | -.00006 | .00160 | 5.08 | | | | | U | U |
| 10/08/1993 | Thorium-230 | 8 | PM | 1434.6 | .00007 | .00020 | 10.98 | | | | | U | U |
| 10/08/1993 | Polonium-210 | 8 | PM | 1434.6 | .00560 | .00180 | 10.98 | | | | | | |
| 10/08/1993 | Lead-210 | 8 | PM | 1434.6 | .00126 | .00120 | 10.98 | | | | | B | U |
| 10/08/1993 | Radium-226 | 8 | PM | 1434.6 | -.00013 | .00160 | 10.98 | | | | | U | U |

Note: Concentrations of Uranium isotopes were calculated from total uranium based on naturally occuring ratios and are expressed in pCi/m3. EPA screening levels of uranium isotopes are given in parens.

Data Report for Radionuclide Concentrations from PM10 Samples (Validated)

07/31/1995



| Sample Date | Chemical Name | Site No. | Type | Run Time (min.) | Chem Conc (pCi/m3) | EPA Screen. Level (pCi/m3) | Particulate Conc. (ug/m3) | U-234 (0.0002) | U-235 (0.0002) | U-238 (0.0001) | Grav Val | Quality Lab | Quality Val |
|---|---|---|---|---|---|---|---|---|---|---|---|---|---|
| 10/08/1993 | Uranium | 8 | PM | 1434.6 | .00024 | .00000 | 10.98 | .00012 | .00001 | .00012 | | | |
| 10/08/1993 | Thorium-232 | 8 | PM | 1434.6 | .00000 | .00020 | 10.98 | | | | | U | U |
| 10/08/1993 | Radium-228 | 8 | PM | 1434.6 | .00154 | .00690 | 10.98 | | | | | U | U |
| 10/12/1993 | Thorium-230 | 1 | PM | 1445.3 | .00002 | .00020 | 23.14 | | | | | U | U |
| 10/12/1993 | Thorium-232 | 1 | PM | 1445.3 | .00000 | .00020 | 23.14 | | | | | U | U |
| 10/12/1993 | Polonium-210 | 1 | PM | 1445.3 | .00000 | .00180 | 23.14 | | | | | L | L |
| 10/12/1993 | Lead-210 | 1 | PM | 1445.3 | .02891 | .00120 | 23.14 | | | | | | |
| 10/12/1993 | Radium-226 | 1 | PM | 1445.3 | .00006 | .00160 | 23.14 | | | | | U | U |
| 10/12/1993 | Radium-228 | 1 | PM | 1445.3 | .00074 | .00690 | 23.14 | | | | | U | U |
| 10/12/1993 | Uranium | 1 | PM | 1445.3 | .00015 | .00000 | 23.14 | .00008 | .00000 | .00007 | | | |
| 10/12/1993 | Thorium-230 | 2 | PM | 1461.1 | .00019 | .00020 | 50.04 | | | | | B | U |
| 10/12/1993 | Polonium-210 | 2 | PM | 1461.1 | .13208 | .00180 | 50.04 | | | | | | |
| 10/12/1993 | Lead-210 | 2 | PM | 1461.1 | .03559 | .00120 | 50.04 | | | | | | |
| 10/12/1993 | Radium-226 | 2 | PM | 1461.1 | -.00055 | .00160 | 50.04 | | | | | U | U |
| 10/12/1993 | Radium-228 | 2 | PM | 1461.1 | .00017 | .00690 | 50.04 | | | | | U | U |
| 10/12/1993 | Uranium | 2 | PM | 1461.1 | .00068 | .00000 | 50.04 | .00034 | .00001 | .00032 | | | |
| 10/12/1993 | Thorium-232 | 2 | PM | 1461.1 | -.00003 | .00020 | 50.04 | | | | | U | U |
| 10/12/1993 | Thorium-232 | 3 | PM | 1448.0 | .00000 | .00020 | 16.10 | | | | | U | U |
| 10/12/1993 | Polonium-210 | 3 | PM | 1448.0 | .01436 | .00180 | 16.10 | | | | | | |
| 10/12/1993 | Lead-210 | 3 | PM | 1448.0 | .03618 | .00120 | 16.10 | | | | | | |
| 10/12/1993 | Radium-226 | 3 | PM | 1448.0 | -.00020 | .00160 | 16.10 | | | | | U | U |
| 10/12/1993 | Radium-228 | 3 | PM | 1448.0 | .00051 | .00690 | 16.10 | | | | | U | U |
| 10/12/1993 | Thorium-230 | 3 | PM | 1448.0 | .00005 | .00020 | 16.10 | | | | | U | U |
| 10/12/1993 | Uranium | 3 | PM | 1448.0 | .00006 | .00000 | 16.10 | .00003 | .00000 | .00003 | | B | U |
| 10/12/1993 | Thorium-230 | 4 | PM | 1462.3 | .00003 | .00020 | 13.07 | | | | | U | U |
| 10/12/1993 | Thorium-232 | 4 | PM | 1462.3 | .00000 | .00020 | 13.07 | | | | | U | U |
| 10/12/1993 | Polonium-210 | 4 | PM | 1462.3 | .00049 | .00180 | 13.07 | | | | | B | U |
| 10/12/1993 | Lead-210 | 4 | PM | 1462.3 | .03044 | .00120 | 13.07 | | | | | | |
| 10/12/1993 | Radium-228 | 4 | PM | 1462.3 | .00123 | .00690 | 13.07 | | | | | U | U |
| 10/12/1993 | Uranium | 4 | PM | 1462.3 | .00007 | .00000 | 13.07 | .00003 | .00000 | .00003 | | B | U |
| 10/12/1993 | Radium-226 | 4 | PM | 1462.3 | -.00016 | .00160 | 13.07 | | | | | U | U |
| 10/12/1993 | Thorium-230 | 6 | PM | 1441.3 | .00004 | .00020 | 9.95 | | | | | B | U |
| 10/12/1993 | Thorium-232 | 6 | PM | 1441.3 | -.00001 | .00020 | 9.95 | | | | | U | U |
| 10/12/1993 | Polonium-210 | 6 | PM | 1441.3 | .00490 | .00180 | 9.95 | | | | | | |
| 10/12/1993 | Lead-210 | 6 | PM | 1441.3 | .03024 | .00120 | 9.95 | | | | | | |
| 10/12/1993 | Radium-228 | 6 | PM | 1441.3 | .00049 | .00690 | 9.95 | | | | | U | U |
| 10/12/1993 | Uranium | 6 | PM | 1441.3 | .00004 | .00000 | 9.95 | .00002 | .00000 | .00002 | | B | U |
| 10/12/1993 | Radium-226 | 6 | PM | 1441.3 | .00333 | .00160 | 9.95 | | | | | | |
| 10/12/1993 | Thorium-230 | 7 | PM | 1440.1 | .00004 | .00020 | 8.65 | | | | | U | U |
| 10/12/1993 | Thorium-232 | 7 | PM | 1440.1 | .00003 | .00020 | 8.65 | | | | | U | U |
| 10/12/1993 | Polonium-210 | 7 | PM | 1440.1 | .00461 | .00180 | 8.65 | | | | | | |
| 10/12/1993 | Radium-226 | 7 | PM | 1440.1 | -.00003 | .00160 | 8.65 | | | | | U | U |
| 10/12/1993 | Radium-228 | 7 | PM | 1440.1 | .00089 | .00690 | 8.65 | | | | | U | U |
| 10/12/1993 | Uranium | 7 | PM | 1440.1 | .00004 | .00000 | 8.65 | .00002 | .00000 | .00002 | | B | U |
| 10/12/1993 | Lead-210 | 7 | PM | 1440.1 | .02912 | .00120 | 8.65 | | | | | | |
| 10/12/1993 | Thorium-230 | 8 | PM | 1430.8 | .00005 | .00020 | 23.25 | | | | | U | U |
| 10/12/1993 | Thorium-232 | 8 | PM | 1430.8 | -.00001 | .00020 | 23.25 | | | | | U | U |
| 10/12/1993 | Polonium-210 | 8 | PM | 1430.8 | .04009 | .00180 | 23.25 | | | | | | |
| 10/12/1993 | Radium-226 | 8 | PM | 1430.8 | .00086 | .00160 | 23.25 | | | | | B | U |
| 10/12/1993 | Radium-228 | 8 | PM | 1430.8 | .00118 | .00690 | 23.25 | | | | | U | U |
| 10/12/1993 | Uranium | 8 | PM | 1430.8 | .00018 | .00000 | 23.25 | .00009 | .00000 | .00008 | | | |

Note: Concentrations of Uranium isotopes were calculated from total uranium based on naturally occuring ratios and are expressed in pCi/m3. EPA screening levels of uranium isotopes are given in parens.

Data Report for Radionuclide Concentrations from PM10 Samples
(Validated)

| Sample Date | Chemical Name | Site No. | Type | Run Time (min.) | Chem Conc (pCi/m3) | EPA Screen. Level (pCi/m3) | Particulate Conc. (ug/m3) | U-234 (0.0002) | U-235 (0.0002) | U-238 (0.0001) | Grav Val | Quality Lab | Quality Val |
|---|---|---|---|---|---|---|---|---|---|---|---|---|---|
| 10/12/1993 | Lead-210 | 8 | PM | 1430.8 | .03057 | .00120 | 23.25 | | | | | | |
| 10/14/1993 | Thorium-230 | T | BL | 1440.0 | .00004 | .00020 | 3.11 | | | | | B | U |
| 10/14/1993 | Thorium-232 | T | BL | 1440.0 | .00000 | .00020 | 3.11 | | | | | U | U |
| 10/14/1993 | Polonium-210 | T | BL | 1440.0 | .00058 | .00180 | 3.11 | | | | | B | U |
| 10/14/1993 | Lead-210 | T | BL | 1440.0 | -.00001 | .00120 | 3.11 | | | | | U | UJ |
| 10/14/1993 | Radium-226 | T | BL | 1440.0 | .00038 | .00160 | 3.11 | | | | | U | U |
| 10/14/1993 | Radium-228 | T | BL | 1440.0 | .00105 | .00690 | 3.11 | | | | | U | U |
| 10/14/1993 | Uranium | T | BL | 1440.0 | .00006 | .00000 | 3.11 | .00003 | .00000 | .00003 | | B | U |
| 10/14/1993 | Uranium | T | BL | 1440.0 | .00006 | .00000 | 3.11 | .00003 | .00000 | .00003 | | B | |
| 10/14/1993 | Uranium | T | BL | 1440.0 | .00006 | .00000 | 3.11 | .00003 | .00000 | .00003 | | B | U |
| 10/14/1993 | Uranium | T | BL | 1440.0 | .00006 | .00000 | 3.11 | .00003 | .00000 | .00003 | | B | |
| 10/16/1993 | Thorium-230 | 1 | PM | 1449.5 | .00001 | .00020 | 9.36 | | | | | U | U |
| 10/16/1993 | Thorium-232 | 1 | PM | 1449.5 | .00000 | .00020 | 9.36 | | | | | U | U |
| 10/16/1993 | Polonium-210 | 1 | PM | 1449.5 | .00422 | .00180 | 9.36 | | | | | | |
| 10/16/1993 | Lead-210 | 1 | PM | 1449.5 | .01259 | .00120 | 9.36 | | | | | | |
| 10/16/1993 | Radium-226 | 1 | PM | 1449.5 | -.00023 | .00160 | 9.36 | | | | | U | U |
| 10/16/1993 | Uranium | 1 | PM | 1449.5 | .00003 | .00000 | 9.36 | .00001 | .00000 | .00001 | | B | U |
| 10/16/1993 | Radium-228 | 1 | PM | 1449.5 | .00106 | .00690 | 9.36 | | | | | U | U |
| 10/16/1993 | Thorium-230 | 2 | PM | 1460.9 | .00008 | .00020 | 22.60 | | | | | B | U |
| 10/16/1993 | Thorium-232 | 2 | PM | 1460.9 | .00002 | .00020 | 22.60 | | | | | U | U |
| 10/16/1993 | Polonium-210 | 2 | PM | 1460.9 | .01724 | .00180 | 22.60 | | | | | | |
| 10/16/1993 | Lead-210 | 2 | PM | 1460.9 | .01147 | .00120 | 22.60 | | | | | | |
| 10/16/1993 | Radium-226 | 2 | PM | 1460.9 | .00003 | .00160 | 22.60 | | | | | U | U |
| 10/16/1993 | Radium-228 | 2 | PM | 1460.9 | .00015 | .00690 | 22.60 | | | | | U | U |
| 10/16/1993 | Uranium | 2 | PM | 1460.9 | .00024 | .00000 | 22.60 | .00012 | .00001 | .00011 | | | |
| 10/16/1993 | Thorium-230 | 3 | PM | 1444.4 | .00002 | .00020 | 11.25 | | | | | U | U |
| 10/16/1993 | Thorium-232 | 3 | PM | 1444.4 | .00000 | .00020 | 11.25 | | | | | U | U |
| 10/16/1993 | Polonium-210 | 3 | PM | 1444.4 | .00343 | .00180 | 11.25 | | | | | | |
| 10/16/1993 | Lead-210 | 3 | PM | 1444.4 | .01054 | .00120 | 11.25 | | | | | | |
| 10/16/1993 | Radium-228 | 3 | PM | 1444.4 | .00065 | .00690 | 11.25 | | | | | U | U |
| 10/16/1993 | Uranium | 3 | PM | 1444.4 | .00017 | .00000 | 11.25 | .00009 | .00000 | .00008 | | | |
| 10/16/1993 | Radium-226 | 3 | PM | 1444.4 | .00000 | .00160 | 11.25 | | | | | U | U |
| 10/16/1993 | Thorium-230 | 4 | PM | 1466.8 | .00002 | .00020 | 14.35 | | | | | U | U |
| 10/16/1993 | Thorium-232 | 4 | PM | 1466.8 | .00000 | .00020 | 14.35 | | | | | U | U |
| 10/16/1993 | Polonium-210 | 4 | PM | 1466.8 | .00587 | .00180 | 14.35 | | | | | | |
| 10/16/1993 | Lead-210 | 4 | PM | 1466.8 | .01362 | .00120 | 14.35 | | | | | | |
| 10/16/1993 | Radium-228 | 4 | PM | 1466.8 | .00109 | .00690 | 14.35 | | | | | U | U |
| 10/16/1993 | Uranium | 4 | PM | 1466.8 | .00010 | .00000 | 14.35 | .00005 | .00000 | .00005 | | | U |
| 10/16/1993 | Radium-226 | 4 | PM | 1466.8 | .00000 | .00160 | 14.35 | | | | | U | U |
| 10/16/1993 | Thorium-230 | 5 | PM | 1471.5 | .00016 | .00020 | 17.02 | | | | | B | UJ |
| 10/16/1993 | Thorium-232 | 5 | PM | 1471.5 | .00000 | .00020 | 17.02 | | | | | U | U |
| 10/16/1993 | Polonium-210 | 5 | PM | 1471.5 | .01430 | .00180 | 17.02 | | | | | | |
| 10/16/1993 | Lead-210 | 5 | PM | 1471.5 | .01072 | .00120 | 17.02 | | | | | | |
| 10/16/1993 | Radium-228 | 5 | PM | 1471.5 | .00112 | .00690 | 17.02 | | | | | U | U |
| 10/16/1993 | Uranium | 5 | PM | 1471.5 | .00005 | .00000 | 17.02 | .00002 | .00000 | .00002 | | B | U |
| 10/16/1993 | Radium-226 | 5 | PM | 1471.5 | .00012 | .00160 | 17.02 | | | | | U | U |
| 10/16/1993 | Thorium-230 | 6 | PM | 1440.6 | .00002 | .00020 | 7.99 | | | | | B | U |
| 10/16/1993 | Thorium-232 | 6 | PM | 1440.6 | .00001 | .00020 | 7.99 | | | | | U | U |
| 10/16/1993 | Polonium-210 | 6 | PM | 1440.6 | .00150 | .00180 | 7.99 | | | | | B | UJ |
| 10/16/1993 | Lead-210 | 6 | PM | 1440.6 | .01181 | .00120 | 7.99 | | | | | | |
| 10/16/1993 | Radium-228 | 6 | PM | 1440.6 | .00232 | .00690 | 7.99 | | | | | B | U |

Note: Concentrations of Uranium isotopes were calculated from total uranium based on naturally occuring ratios and are expressed in pCi/m3. EPA screening levels of uranium isotopes are given in parens.

Data Report for Radionuclide Concentrations from PM10 Samples
(Validated)

| Sample Date | Chemical Name | Site No. | Type | Run Time (min.) | Chem Conc (pCi/m3) | EPA Screen. Level (pCi/m3) | Particulate Conc. (ug/m3) | U-234 (0.0002) | U-235 (0.0002) | U-238 (0.0001) | Grav Val | Quality Lab Val |
|---|---|---|---|---|---|---|---|---|---|---|---|---|
| 10/16/1993 | Uranium | 6 | PM | 1440.6 | .00008 | .00000 | 7.99 | .00004 | .00000 | .00004 | | B U |
| 10/16/1993 | Radium-226 | 6 | PM | 1440.6 | -.00017 | .00160 | 7.99 | | | | | U U |
| 10/16/1993 | Thorium-230 | 7 | PM | 1438.0 | .00000 | .00020 | 26.67 | | | | | L L |
| 10/16/1993 | Thorium-232 | 7 | PM | 1438.0 | .00000 | .00020 | 26.67 | | | | | L L |
| 10/16/1993 | Polonium-210 | 7 | PM | 1438.0 | .01724 | .00180 | 26.67 | | | | | |
| 10/16/1993 | Lead-210 | 7 | PM | 1438.0 | .01168 | .00120 | 26.67 | | | | | |
| 10/16/1993 | Radium-228 | 7 | PM | 1438.0 | .00080 | .00690 | 26.67 | | | | | U U |
| 10/16/1993 | Uranium | 7 | PM | 1438.0 | .00007 | .00000 | 26.67 | .00004 | .00000 | .00003 | | B U |
| 10/16/1993 | Radium-226 | 7 | PM | 1438.0 | .00027 | .00160 | 26.67 | | | | | U U |
| 10/16/1993 | Thorium-232 | 8 | PM | 1435.2 | .00001 | .00020 | 10.94 | | | | | U U |
| 10/16/1993 | Polonium-210 | 8 | PM | 1435.2 | .00409 | .00180 | 10.94 | | | | | |
| 10/16/1993 | Lead-210 | 8 | PM | 1435.2 | .01392 | .00120 | 10.94 | | | | | |
| 10/16/1993 | Radium-226 | 8 | PM | 1435.2 | .00039 | .00160 | 10.94 | | | | | U U |
| 10/16/1993 | Uranium | 8 | PM | 1435.2 | .00003 | .00000 | 10.94 | .00001 | .00000 | .00001 | | B U |
| 10/16/1993 | Thorium-230 | 8 | PM | 1435.2 | .00001 | .00020 | 10.94 | | | | | U U |
| 10/16/1993 | Radium-228 | 8 | PM | 1435.2 | .00098 | .00690 | 10.94 | | | | | U U |
| 10/20/1993 | Thorium-230 | 1 | PM | 1448.3 | .00015 | .00020 | 34.30 | | | | | B U |
| 10/20/1993 | Thorium-232 | 1 | PM | 1448.3 | .00001 | .00020 | 34.30 | | | | | U U |
| 10/20/1993 | Polonium-210 | 1 | PM | 1448.3 | .01107 | .00180 | 34.30 | | | | | |
| 10/20/1993 | Lead-210 | 1 | PM | 1448.3 | .01118 | .00120 | 34.30 | | | | | J |
| 10/20/1993 | Radium-228 | 1 | PM | 1448.3 | .00006 | .00690 | 34.30 | | | | | U U |
| 10/20/1993 | Uranium | 1 | PM | 1448.3 | .00011 | .00000 | 34.30 | .00006 | .00000 | .00005 | | UJ |
| 10/20/1993 | Radium-226 | 1 | PM | 1448.3 | .00001 | .00160 | 34.30 | | | | | U U |
| 10/20/1993 | Thorium-230 | 2 | PM | 1445.4 | .00020 | .00020 | 40.10 | | | | | |
| 10/20/1993 | Thorium-232 | 2 | PM | 1445.4 | .00001 | .00020 | 40.10 | | | | | U U |
| 10/20/1993 | Polonium-210 | 2 | PM | 1445.4 | .02997 | .00180 | 40.10 | | | | | |
| 10/20/1993 | Radium-226 | 2 | PM | 1445.4 | .00027 | .00160 | 40.10 | | | | | U U |
| 10/20/1993 | Radium-228 | 2 | PM | 1445.4 | .00040 | .00690 | 40.10 | | | | | U U |
| 10/20/1993 | Uranium | 2 | PM | 1445.4 | .00029 | .00000 | 40.10 | .00015 | .00001 | .00014 | | J |
| 10/20/1993 | Lead-210 | 2 | PM | 1445.4 | .01074 | .00120 | 40.10 | | | | | J |
| 10/20/1993 | Thorium-230 | 3 | PM | 1451.6 | .00009 | .00020 | 24.80 | | | | | B U |
| 10/20/1993 | Thorium-232 | 3 | PM | 1451.6 | .00001 | .00020 | 24.80 | | | | | U U |
| 10/20/1993 | Polonium-210 | 3 | PM | 1451.6 | .01483 | .00180 | 24.80 | | | | | |
| 10/20/1993 | Lead-210 | 3 | PM | 1451.6 | .01255 | .00120 | 24.80 | | | | | J |
| 10/20/1993 | Radium-228 | 3 | PM | 1451.6 | .00085 | .00690 | 24.80 | | | | | U U |
| 10/20/1993 | Uranium | 3 | PM | 1451.6 | .00006 | .00000 | 24.80 | .00003 | .00000 | .00003 | | B UJ |
| 10/20/1993 | Radium-226 | 3 | PM | 1451.6 | .00002 | .00160 | 24.80 | | | | | U U |
| 10/20/1993 | Thorium-230 | 4 | PM | 1444.4 | .00006 | .00020 | 41.04 | | | | | B U |
| 10/20/1993 | Thorium-232 | 4 | PM | 1444.4 | .00001 | .00020 | 41.04 | | | | | U U |
| 10/20/1993 | Polonium-210 | 4 | PM | 1444.4 | .00948 | .00180 | 41.04 | | | | | |
| 10/20/1993 | Radium-226 | 4 | PM | 1444.4 | .00015 | .00160 | 41.04 | | | | | U U |
| 10/20/1993 | Radium-228 | 4 | PM | 1444.4 | .00006 | .00690 | 41.04 | | | | | U U |
| 10/20/1993 | Uranium | 4 | PM | 1444.4 | .00007 | .00000 | 41.04 | .00004 | .00000 | .00003 | | B UJ |
| 10/20/1993 | Lead-210 | 4 | PM | 1444.4 | .01167 | .00120 | 41.04 | | | | | J |
| 10/20/1993 | Thorium-230 | 5 | PM | 1461.5 | .00001 | .00020 | 9.96 | | | | | U U |
| 10/20/1993 | Thorium-232 | 5 | PM | 1461.5 | .00000 | .00020 | 9.96 | | | | | U U |
| 10/20/1993 | Polonium-210 | 5 | PM | 1461.5 | .00383 | .00180 | 9.96 | | | | | |
| 10/20/1993 | Radium-226 | 5 | PM | 1461.5 | -.00008 | .00160 | 9.96 | | | | | U U |
| 10/20/1993 | Radium-228 | 5 | PM | 1461.5 | -.00025 | .00690 | 9.96 | | | | | U U |
| 10/20/1993 | Uranium | 5 | PM | 1461.5 | .00002 | .00000 | 9.96 | .00001 | .00000 | .00001 | | B UJ |
| 10/20/1993 | Lead-210 | 5 | PM | 1461.5 | .01007 | .00120 | 9.96 | | | | | J |

Note: Concentrations of Uranium isotopes were calculated from total uranium based on naturally occuring ratios and are expressed in pCi/m3. EPA screening levels of uranium isotopes are given in parens.

Data Report for Radionuclide Concentrations from PM10 Samples
(Validated)

| Sample Date | Chemical Name | Site No. | Type | Run Time (min.) | Chem Conc (pCi/m3) | EPA Screen. Level (pCi/m3) | Particulate Conc. (ug/m3) | U-234 (0.0002) | U-235 (0.0002) | U-238 (0.0001) | Grav Val | Quality Lab | Quality Val |
|---|---|---|---|---|---|---|---|---|---|---|---|---|---|
| 10/20/1993 | Thorium-230 | 6 | PM | 1442.3 | .00002 | .00020 | 10.89 | | | | | B | U |
| 10/20/1993 | Thorium-232 | 6 | PM | 1442.3 | .00001 | .00020 | 10.89 | | | | | U | U |
| 10/20/1993 | Polonium-210 | 6 | PM | 1442.3 | .00213 | .00180 | 10.89 | | | | | | |
| 10/20/1993 | Lead-210 | 6 | PM | 1442.3 | .01015 | .00120 | 10.89 | | | | | | J |
| 10/20/1993 | Radium-228 | 6 | PM | 1442.3 | .00024 | .00690 | 10.89 | | | | | U | U |
| 10/20/1993 | Uranium | 6 | PM | 1442.3 | .00002 | .00000 | 10.89 | .00001 | .00000 | .00001 | | B | UJ |
| 10/20/1993 | Radium-226 | 6 | PM | 1442.3 | .00119 | .00160 | 10.89 | | | | | B | U |
| 10/20/1993 | Thorium-230 | 7 | PM | 1440.3 | .00023 | .00020 | 40.58 | | | | | | U |
| 10/20/1993 | Thorium-232 | 7 | PM | 1440.3 | .00006 | .00020 | 40.58 | | | | | B | U |
| 10/20/1993 | Lead-210 | 7 | PM | 1440.3 | .01042 | .00120 | 40.58 | | | | | | J |
| 10/20/1993 | Radium-226 | 7 | PM | 1440.3 | .00003 | .00160 | 40.58 | | | | | U | U |
| 10/20/1993 | Radium-228 | 7 | PM | 1440.3 | .00064 | .00690 | 40.58 | | | | | U | U |
| 10/20/1993 | Uranium | 7 | PM | 1440.3 | .00009 | .00000 | 40.58 | .00005 | .00000 | .00004 | | | UJ |
| 10/20/1993 | Polonium-210 | 7 | PM | 1440.3 | .01025 | .00180 | 40.58 | | | | | | |
| 10/20/1993 | Thorium-230 | 8 | PM | 1458.4 | .00005 | .00020 | 33.79 | | | | | U | U |
| 10/20/1993 | Thorium-232 | 8 | PM | 1458.4 | .00000 | .00020 | 33.79 | | | | | U | U |
| 10/20/1993 | Polonium-210 | 8 | PM | 1458.4 | .01018 | .00180 | 33.79 | | | | | | |
| 10/20/1993 | Radium-226 | 8 | PM | 1458.4 | .00000 | .00160 | 33.79 | | | | | U | U |
| 10/20/1993 | Radium-228 | 8 | PM | 1458.4 | .00011 | .00690 | 33.79 | | | | | U | U |
| 10/20/1993 | Uranium | 8 | PM | 1458.4 | .00012 | .00000 | 33.79 | .00006 | .00000 | .00006 | | | UJ |
| 10/20/1993 | Lead-210 | 8 | PM | 1458.4 | .01162 | .00120 | 33.79 | | | | | | J |
| 10/20/1993 | Thorium-230 | T | BL | 1440.0 | .00000 | .00020 | -1.78 | | | | | U | U |
| 10/20/1993 | Thorium-232 | T | BL | 1440.0 | .00000 | .00020 | -1.78 | | | | | U | U |
| 10/20/1993 | Polonium-210 | T | BL | 1440.0 | .00019 | .00180 | -1.78 | | | | | B | U |
| 10/20/1993 | Lead-210 | T | BL | 1440.0 | .00157 | .00120 | -1.78 | | | | | | J |
| 10/20/1993 | Radium-226 | T | BL | 1440.0 | -.00003 | .00160 | -1.78 | | | | | U | U |
| 10/20/1993 | Uranium | T | BL | 1440.0 | .00000 | .00000 | -1.78 | .00000 | .00000 | .00000 | | B | U |
| 10/20/1993 | Radium-228 | T | BL | 1440.0 | .00175 | .00690 | -1.78 | | | | | B | U |
| 10/24/1993 | Thorium-230 | 1 | PM | 1450.9 | .00008 | .00020 | 47.99 | | | | | B | U |
| 10/24/1993 | Thorium-232 | 1 | PM | 1450.9 | .00002 | .00020 | 47.99 | | | | | U | U |
| 10/24/1993 | Polonium-210 | 1 | PM | 1450.9 | .04472 | .00180 | 47.99 | | | | | | |
| 10/24/1993 | Lead-210 | 1 | PM | 1450.9 | .04233 | .00120 | 47.99 | | | | | | J |
| 10/24/1993 | Radium-226 | 1 | PM | 1450.9 | .00016 | .00160 | 47.99 | | | | | U | U |
| 10/24/1993 | Radium-228 | 1 | PM | 1450.9 | .00148 | .00690 | 47.99 | | | | | U | U |
| 10/24/1993 | Uranium | 1 | PM | 1450.9 | .00031 | .00000 | 47.99 | .00016 | .00001 | .00015 | | | |
| 10/24/1993 | Thorium-230 | 2 | PM | 1448.0 | .00065 | .00020 | 106.76 | | | | | | J |
| 10/24/1993 | Polonium-210 | 2 | PM | 1448.0 | .35059 | .00180 | 106.76 | | | | | | |
| 10/24/1993 | Lead-210 | 2 | PM | 1448.0 | .04770 | .00120 | 106.76 | | | | | | J |
| 10/24/1993 | Radium-226 | 2 | PM | 1448.0 | .00073 | .00160 | 106.76 | | | | | B | U |
| 10/24/1993 | Radium-228 | 2 | PM | 1448.0 | .00095 | .00690 | 106.76 | | | | | U | U |
| 10/24/1993 | Uranium | 2 | PM | 1448.0 | .00190 | .00000 | 106.76 | .00095 | .00004 | .00090 | | | |
| 10/24/1993 | Thorium-232 | 2 | PM | 1448.0 | .00022 | .00020 | 106.76 | | | | | U | J |
| 10/24/1993 | Thorium-230 | 3 | PM | 1447.5 | .00006 | .00020 | 21.26 | | | | | B | U |
| 10/24/1993 | Thorium-232 | 3 | PM | 1447.5 | .00000 | .00020 | 21.26 | | | | | U | U |
| 10/24/1993 | Polonium-210 | 3 | PM | 1447.5 | .02822 | .00180 | 21.26 | | | | | | |
| 10/24/1993 | Lead-210 | 3 | PM | 1447.5 | .03567 | .00120 | 21.26 | | | | | | J |
| 10/24/1993 | Radium-228 | 3 | PM | 1447.5 | .00038 | .00690 | 21.26 | | | | | U | U |
| 10/24/1993 | Uranium | 3 | PM | 1447.5 | .00010 | .00000 | 21.26 | .00005 | .00000 | .00005 | | | U |
| 10/24/1993 | Radium-226 | 3 | PM | 1447.5 | .00002 | .00160 | 21.26 | | | | | U | U |
| 10/24/1993 | Thorium-230 | 4 | PM | 1451.7 | .00004 | .00020 | 17.59 | | | | | B | U |
| 10/24/1993 | Polonium-210 | 4 | PM | 1451.7 | .01396 | .00180 | 17.59 | | | | | | |

Note: Concentrations of Uranium isotopes were calculated from total uranium based on naturally occuring ratios and are expressed in pCi/m3. EPA screening levels of uranium isotopes are given in parens.

Data Report for Radionuclide Concentrations from PM10 Samples (Validated)

07/31/1995



| Sample Date | Chemical Name | Site No. | Type | Run Time (min.) | Chem Conc (pCi/m3) | EPA Screen. Level (pCi/m3) | Particulate Conc. (ug/m3) | U-234 (0.0002) | U-235 (0.0002) | U-238 (0.0001) | Grav Val | Lab Val | Quality Val |
|---|---|---|---|---|---|---|---|---|---|---|---|---|---|
| 10/24/1993 | Lead-210 | 4 | PM | 1451.7 | .04388 | .00120 | 17.59 | | | | | | J |
| 10/24/1993 | Radium-226 | 4 | PM | 1451.7 | .00013 | .00160 | 17.59 | | | | | U | U |
| 10/24/1993 | Radium-228 | 4 | PM | 1451.7 | .00166 | .00690 | 17.59 | | | | | B | U |
| 10/24/1993 | Thorium-232 | 4 | PM | 1451.7 | .00000 | .00020 | 17.59 | | | | | U | U |
| 10/24/1993 | Uranium | 4 | PM | 1451.7 | .00003 | .00000 | 17.59 | .00002 | .00000 | .00002 | | B | U |
| 10/24/1993 | Thorium-232 | 5 | PM | 1457.7 | -.00001 | .00020 | 19.76 | | | | | U | U |
| 10/24/1993 | Polonium-210 | 5 | PM | 1457.7 | .04482 | .00180 | 19.76 | | | | | | |
| 10/24/1993 | Lead-210 | 5 | PM | 1457.7 | .03819 | .00120 | 19.76 | | | | | | J |
| 10/24/1993 | Radium-226 | 5 | PM | 1457.7 | .00018 | .00160 | 19.76 | | | | | U | U |
| 10/24/1993 | Radium-228 | 5 | PM | 1457.7 | .00145 | .00690 | 19.76 | | | | | U | U |
| 10/24/1993 | Thorium-230 | 5 | PM | 1457.7 | .00002 | .00020 | 19.76 | | | | | B | U |
| 10/24/1993 | Uranium | 5 | PM | 1457.7 | .00009 | .00000 | 19.76 | .00004 | .00000 | .00004 | | B | U |
| 10/24/1993 | Thorium-230 | 6 | PM | 1439.4 | .00002 | .00020 | 14.03 | | | | | B | U |
| 10/24/1993 | Thorium-232 | 6 | PM | 1439.4 | .00001 | .00020 | 14.03 | | | | | U | U |
| 10/24/1993 | Polonium-210 | 6 | PM | 1439.4 | .00696 | .00180 | 14.03 | | | | | | |
| 10/24/1993 | Radium-226 | 6 | PM | 1439.4 | -.00004 | .00160 | 14.03 | | | | | U | U |
| 10/24/1993 | Radium-228 | 6 | PM | 1439.4 | .00118 | .00690 | 14.03 | | | | | U | U |
| 10/24/1993 | Uranium | 6 | PM | 1439.4 | .00002 | .00000 | 14.03 | .00001 | .00000 | .00001 | | B | U |
| 10/24/1993 | Lead-210 | 6 | PM | 1439.4 | .04388 | .00120 | 14.03 | | | | | | J |
| 10/24/1993 | Thorium-230 | 7 | PM | 1367.0 | .00001 | .00020 | 8.41 | | | | SR | U | U |
| 10/24/1993 | Thorium-232 | 7 | PM | 1367.0 | .00000 | .00020 | 8.41 | | | | SR | U | U |
| 10/24/1993 | Polonium-210 | 7 | PM | 1367.0 | .00349 | .00180 | 8.41 | | | | SR | | |
| 10/24/1993 | Lead-210 | 7 | PM | 1367.0 | .02337 | .00120 | 8.41 | | | | SR | | J |
| 10/24/1993 | Radium-228 | 7 | PM | 1367.0 | .00221 | .00690 | 8.41 | | | | SR | B | U |
| 10/24/1993 | Uranium | 7 | PM | 1367.0 | .00002 | .00000 | 8.41 | .00001 | .00000 | .00001 | SR | B | U |
| 10/24/1993 | Radium-226 | 7 | PM | 1367.0 | .00024 | .00160 | 8.41 | | | | SR | U | U |
| 10/24/1993 | Thorium-230 | 8 | PM | 1464.5 | .00016 | .00020 | 47.23 | | | | | B | U |
| 10/24/1993 | Thorium-232 | 8 | PM | 1464.5 | .00000 | .00020 | 47.23 | | | | | U | U |
| 10/24/1993 | Polonium-210 | 8 | PM | 1464.5 | .05203 | .00180 | 47.23 | | | | | | |
| 10/24/1993 | Radium-226 | 8 | PM | 1464.5 | .00072 | .00160 | 47.23 | | | | | B | U |
| 10/24/1993 | Radium-228 | 8 | PM | 1464.5 | .00018 | .00690 | 47.23 | | | | | U | U |
| 10/24/1993 | Uranium | 8 | PM | 1464.5 | .00029 | .00000 | 47.23 | .00015 | .00001 | .00014 | | | |
| 10/24/1993 | Lead-210 | 8 | PM | 1464.5 | .04329 | .00120 | 47.23 | | | | | | J |
| 10/24/1993 | Thorium-230 | T | BL | 1440.0 | .00001 | .00020 | -1.18 | | | | Q | U | U |
| 10/24/1993 | Thorium-232 | T | BL | 1440.0 | .00000 | .00020 | -1.18 | | | | Q | U | U |
| 10/24/1993 | Polonium-210 | T | BL | 1440.0 | .00007 | .00180 | -1.18 | | | | Q | U | U |
| 10/24/1993 | Lead-210 | T | BL | 1440.0 | .00253 | .00120 | -1.18 | | | | Q | | J |
| 10/24/1993 | Radium-226 | T | BL | 1440.0 | -.00045 | .00160 | -1.18 | | | | Q | U | U |
| 10/24/1993 | Radium-228 | T | BL | 1440.0 | .00022 | .00690 | -1.18 | | | | Q | U | U |
| 10/24/1993 | Uranium | T | BL | 1440.0 | .00001 | .00000 | -1.18 | .00000 | .00000 | .00000 | Q | B | UJ |
| 10/28/1993 | Thorium-230 | 1 | PM | 1453.4 | .00001 | .00020 | 30.79 | | | | | U | U |
| 10/28/1993 | Thorium-232 | 1 | PM | 1453.4 | .00001 | .00020 | 30.79 | | | | | U | U |
| 10/28/1993 | Polonium-210 | 1 | PM | 1453.4 | .01148 | .00180 | 30.79 | | | | | | |
| 10/28/1993 | Lead-210 | 1 | PM | 1453.4 | .02216 | .00120 | 30.79 | | | | | | J |
| 10/28/1993 | Radium-228 | 1 | PM | 1453.4 | .00051 | .00690 | 30.79 | | | | | U | U |
| 10/28/1993 | Uranium | 1 | PM | 1453.4 | .00049 | .00000 | 30.79 | .00025 | .00001 | .00023 | | | |
| 10/28/1993 | Radium-226 | 1 | PM | 1453.4 | .00011 | .00160 | 30.79 | | | | | U | U |
| 10/28/1993 | Thorium-230 | 2 | PM | 1445.3 | .00064 | .00020 | 103.87 | | | | | | J |
| 10/28/1993 | Thorium-232 | 2 | PM | 1445.3 | .00000 | .00020 | 103.87 | | | | | U | U |
| 10/28/1993 | Lead-210 | 2 | PM | 1445.3 | .02617 | .00120 | 103.87 | | | | | | J |
| 10/28/1993 | Radium-226 | 2 | PM | 1445.3 | .00049 | .00160 | 103.87 | | | | | U | U |

Note: Concentrations of Uranium isotopes were calculated from total uranium based on naturally occuring ratios and are expressed in pCi/m3. EPA screening levels of uranium isotopes are given in parens.

Data Report for Radionuclide Concentrations from PM10 Samples (Validated) 07/31/1995



| Sample Date | Chemical Name | Site No. | Type | Run Time (min.) | Chem Conc (pCi/m3) | EPA Screen. Level (pCi/m3) | Particulate Conc. (ug/m3) | U-234 (0.0002) | U-235 (0.0002) | U-238 (0.0001) | Grav Val | Quality Lab | Quality Val |
|---|---|---|---|---|---|---|---|---|---|---|---|---|---|
| 10/28/1993 | Radium-228 | 2 | PM | 1445.3 | .00054 | .00690 | 103.87 | | | | | U | U |
| 10/28/1993 | Uranium | 2 | PM | 1445.3 | .00174 | .00000 | 103.87 | .00087 | .00004 | .00082 | | | |
| 10/28/1993 | Polonium-210 | 2 | PM | 1445.3 | .28076 | .00180 | 103.87 | | | | | | |
| 10/28/1993 | Thorium-232 | 3 | PM | 1456.0 | .00002 | .00020 | 21.71 | | | | | B | U |
| 10/28/1993 | Polonium-210 | 3 | PM | 1456.0 | .03091 | .00180 | 21.71 | | | | | | |
| 10/28/1993 | Lead-210 | 3 | PM | 1456.0 | .02223 | .00120 | 21.71 | | | | | | J |
| 10/28/1993 | Radium-226 | 3 | PM | 1456.0 | .00004 | .00160 | 21.71 | | | | | U | U |
| 10/28/1993 | Radium-228 | 3 | PM | 1456.0 | .00072 | .00690 | 21.71 | | | | | U | U |
| 10/28/1993 | Thorium-230 | 3 | PM | 1456.0 | .00005 | .00020 | 21.71 | | | | | B | U |
| 10/28/1993 | Uranium | 3 | PM | 1456.0 | .00020 | .00000 | 21.71 | .00010 | .00000 | .00009 | | | |
| 10/28/1993 | Thorium-230 | 4 | PM | 1450.3 | .00007 | .00020 | 16.61 | | | | | B | U |
| 10/28/1993 | Thorium-232 | 4 | PM | 1450.3 | .00001 | .00020 | 16.61 | | | | | U | U |
| 10/28/1993 | Polonium-210 | 4 | PM | 1450.3 | .00385 | .00180 | 16.61 | | | | | | |
| 10/28/1993 | Lead-210 | 4 | PM | 1450.3 | .01917 | .00120 | 16.61 | | | | | | J |
| 10/28/1993 | Radium-226 | 4 | PM | 1450.3 | -.00016 | .00160 | 16.61 | | | | | U | U |
| 10/28/1993 | Radium-228 | 4 | PM | 1450.3 | .00108 | .00690 | 16.61 | | | | | U | U |
| 10/28/1993 | Uranium | 4 | PM | 1450.3 | .00005 | .00000 | 16.61 | .00003 | .00000 | .00003 | | B | U |
| 10/28/1993 | Thorium-230 | 5 | PM | 1446.8 | .00008 | .00020 | 15.23 | | | | | B | U |
| 10/28/1993 | Thorium-232 | 5 | PM | 1446.8 | .00001 | .00020 | 15.23 | | | | | U | U |
| 10/28/1993 | Polonium-210 | 5 | PM | 1446.8 | .01132 | .00180 | 15.23 | | | | | | |
| 10/28/1993 | Radium-226 | 5 | PM | 1446.8 | -.00005 | .00160 | 15.23 | | | | | U | U |
| 10/28/1993 | Radium-228 | 5 | PM | 1446.8 | .00162 | .00690 | 15.23 | | | | | U | U |
| 10/28/1993 | Uranium | 5 | PM | 1446.8 | .00010 | .00000 | 15.23 | .00005 | .00000 | .00005 | | | U |
| 10/28/1993 | Lead-210 | 5 | PM | 1446.8 | .02118 | .00120 | 15.23 | | | | | | J |
| 10/28/1993 | Thorium-230 | 6 | PM | 1446.5 | .00004 | .00020 | 14.83 | | | | | B | U |
| 10/28/1993 | Thorium-232 | 6 | PM | 1446.5 | .00001 | .00020 | 14.83 | | | | | U | U |
| 10/28/1993 | Polonium-210 | 6 | PM | 1446.5 | .00383 | .00180 | 14.83 | | | | | | |
| 10/28/1993 | Lead-210 | 6 | PM | 1446.5 | .02011 | .00120 | 14.83 | | | | | | J |
| 10/28/1993 | Radium-228 | 6 | PM | 1446.5 | .00216 | .00690 | 14.83 | | | | | B | U |
| 10/28/1993 | Uranium | 6 | PM | 1446.5 | .00004 | .00000 | 14.83 | .00002 | .00000 | .00002 | | B | U |
| 10/28/1993 | Radium-226 | 6 | PM | 1446.5 | .00003 | .00160 | 14.83 | | | | | U | U |
| 10/28/1993 | Thorium-230 | 7 | PM | 1440.3 | .00002 | .00020 | 11.84 | | | | | B | U |
| 10/28/1993 | Thorium-232 | 7 | PM | 1440.3 | .00000 | .00020 | 11.84 | | | | | U | U |
| 10/28/1993 | Polonium-210 | 7 | PM | 1440.3 | .00402 | .00180 | 11.84 | | | | | | |
| 10/28/1993 | Lead-210 | 7 | PM | 1440.3 | .02040 | .00120 | 11.84 | | | | | | J |
| 10/28/1993 | Radium-226 | 7 | PM | 1440.3 | .00003 | .00160 | 11.84 | | | | | U | U |
| 10/28/1993 | Radium-228 | 7 | PM | 1440.3 | .00069 | .00690 | 11.84 | | | | | U | U |
| 10/28/1993 | Uranium | 7 | PM | 1440.3 | .00005 | .00000 | 11.84 | .00003 | .00000 | .00002 | | B | U |
| 10/28/1993 | Thorium-232 | 8 | PM | 1463.1 | .00002 | .00020 | 29.42 | | | | | U | U |
| 10/28/1993 | Polonium-210 | 8 | PM | 1463.1 | .01011 | .00180 | 29.42 | | | | | | |
| 10/28/1993 | Lead-210 | 8 | PM | 1463.1 | .02004 | .00120 | 29.42 | | | | | | J |
| 10/28/1993 | Radium-226 | 8 | PM | 1463.1 | .00004 | .00160 | 29.42 | | | | | U | U |
| 10/28/1993 | Radium-228 | 8 | PM | 1463.1 | .00111 | .00690 | 29.42 | | | | | U | U |
| 10/28/1993 | Uranium | 8 | PM | 1463.1 | .00049 | .00000 | 29.42 | .00024 | .00001 | .00023 | | | |
| 10/28/1993 | Thorium-230 | 8 | PM | 1463.1 | .00002 | .00020 | 29.42 | | | | | U | U |
| 10/28/1993 | Thorium-230 | P | BL | 1440.0 | .00002 | .00020 | -1.37 | | | | | U | U |
| 10/28/1993 | Thorium-232 | P | BL | 1440.0 | .00000 | .00020 | -1.37 | | | | | U | U |
| 10/28/1993 | Polonium-210 | P | BL | 1440.0 | .00004 | .00180 | -1.37 | | | | | U | U |
| 10/28/1993 | Lead-210 | P | BL | 1440.0 | -.00242 | .00120 | -1.37 | | | | | | UJ |
| 10/28/1993 | Radium-226 | P | BL | 1440.0 | .00016 | .00160 | -1.37 | | | | | U | U |
| 10/28/1993 | Radium-228 | P | BL | 1440.0 | .00084 | .00690 | -1.37 | | | | | U | U |

Note: Concentrations of Uranium isotopes were calculated from total uranium based on naturally occuring ratios and are expressed in pCi/m3. EPA screening levels of uranium isotopes are given in parens.

Data Report for Radionuclide Concentrations from PM10 Samples (Validated) 07/31/1995



| Sample Date | Chemical Name | Site No. | Type | Run Time (min.) | Chem Conc (pCi/m3) | EPA Screen. Level (pCi/m3) | Particulate Conc. (ug/m3) | U-234 (0.0002) | U-235 (0.0002) | U-238 (0.0001) | Grav Val | Quality Lab | Quality Val |
|---|---|---|---|---|---|---|---|---|---|---|---|---|---|
| 10/28/1993 | Uranium | P | BL | 1440.0 | .00001 | .00000 | -1.37 | .00001 | .00000 | .00001 | | B | U |
| 10/28/1993 | Thorium-230 | T | BL | 1440.0 | .00001 | .00020 | .95 | | | | | U | U |
| 10/28/1993 | Thorium-232 | T | BL | 1440.0 | .00001 | .00020 | .95 | | | | | U | U |
| 10/28/1993 | Polonium-210 | T | BL | 1440.0 | .00026 | .00180 | .95 | | | | | U | U |
| 10/28/1993 | Lead-210 | T | BL | 1440.0 | .00292 | .00120 | .95 | | | | | | J |
| 10/28/1993 | Radium-228 | T | BL | 1440.0 | -.00056 | .00690 | .95 | | | | | U | U |
| 10/28/1993 | Uranium | T | BL | 1440.0 | .00004 | .00000 | .95 | .00002 | .00000 | .00002 | | B | U |
| 10/28/1993 | Radium-226 | T | BL | 1440.0 | -.00003 | .00160 | .95 | | | | | U | U |
| 11/01/1993 | Thorium-230 | 1 | PM | 722.9 | .00018 | .00020 | 39.41 | | | | TMR | B | U |
| 11/01/1993 | Thorium-232 | 1 | PM | 722.9 | .00003 | .00020 | 39.41 | | | | TMR | U | U |
| 11/01/1993 | Polonium-210 | 1 | PM | 722.9 | .02872 | .00180 | 39.41 | | | | TMR | | |
| 11/01/1993 | Lead-210 | 1 | PM | 722.9 | .01707 | .00120 | 39.41 | | | | TMR | | J |
| 11/01/1993 | Radium-228 | 1 | PM | 722.9 | .00128 | .00690 | 39.41 | | | | TMR | U | U |
| 11/01/1993 | Uranium | 1 | PM | 722.9 | .00040 | .00000 | 39.41 | .00020 | .00001 | .00019 | TMR | | |
| 11/01/1993 | Radium-226 | 1 | PM | 722.9 | -.00060 | .00160 | 39.41 | | | | TMR | U | UJ |
| 11/01/1993 | Thorium-230 | 2 | PM | 1448.5 | .00061 | .00020 | 79.03 | | | | | | |
| 11/01/1993 | Thorium-232 | 2 | PM | 1448.5 | .00002 | .00020 | 79.03 | | | | | U | U |
| 11/01/1993 | Polonium-210 | 2 | PM | 1448.5 | .12653 | .00180 | 79.03 | | | | | | |
| 11/01/1993 | Lead-210 | 2 | PM | 1448.5 | .03044 | .00120 | 79.03 | | | | | | J |
| 11/01/1993 | Radium-228 | 2 | PM | 1448.5 | .00059 | .00690 | 79.03 | | | | | U | U |
| 11/01/1993 | Uranium | 2 | PM | 1448.5 | .00144 | .00000 | 79.03 | .00072 | .00003 | .00068 | | | |
| 11/01/1993 | Radium-226 | 2 | PM | 1448.5 | .00106 | .00160 | 79.03 | | | | | B | UJ |
| 11/01/1993 | Thorium-230 | 3 | PM | 1454.7 | .00012 | .00020 | 25.62 | | | | | B | U |
| 11/01/1993 | Thorium-232 | 3 | PM | 1454.7 | .00003 | .00020 | 25.62 | | | | | B | U |
| 11/01/1993 | Polonium-210 | 3 | PM | 1454.7 | .03032 | .00180 | 25.62 | | | | | | |
| 11/01/1993 | Lead-210 | 3 | PM | 1454.7 | .02171 | .00120 | 25.62 | | | | | | J |
| 11/01/1993 | Radium-228 | 3 | PM | 1454.7 | .00109 | .00690 | 25.62 | | | | | U | U |
| 11/01/1993 | Uranium | 3 | PM | 1454.7 | .00019 | .00000 | 25.62 | .00010 | .00000 | .00009 | | | |
| 11/01/1993 | Radium-226 | 3 | PM | 1454.7 | -.00004 | .00160 | 25.62 | | | | | U | UJ |
| 11/01/1993 | Thorium-230 | 4 | PM | 1448.3 | .00005 | .00020 | 14.95 | | | | | B | U |
| 11/01/1993 | Thorium-232 | 4 | PM | 1448.3 | .00001 | .00020 | 14.95 | | | | | U | U |
| 11/01/1993 | Polonium-210 | 4 | PM | 1448.3 | .01252 | .00180 | 14.95 | | | | | | |
| 11/01/1993 | Lead-210 | 4 | PM | 1448.3 | .02134 | .00120 | 14.95 | | | | | | J |
| 11/01/1993 | Radium-228 | 4 | PM | 1448.3 | .00008 | .00690 | 14.95 | | | | | U | U |
| 11/01/1993 | Uranium | 4 | PM | 1448.3 | .00005 | .00000 | 14.95 | .00002 | .00000 | .00002 | | B | U |
| 11/01/1993 | Radium-226 | 4 | PM | 1448.3 | .00122 | .00160 | 14.95 | | | | | B | UJ |
| 11/01/1993 | Thorium-230 | 5 | PM | 1438.0 | .00003 | .00020 | 13.75 | | | | | U | U |
| 11/01/1993 | Thorium-232 | 5 | PM | 1438.0 | .00001 | .00020 | 13.75 | | | | | U | U |
| 11/01/1993 | Polonium-210 | 5 | PM | 1438.0 | .00435 | .00180 | 13.75 | | | | | | |
| 11/01/1993 | Lead-210 | 5 | PM | 1438.0 | .02086 | .00120 | 13.75 | | | | | | J |
| 11/01/1993 | Radium-226 | 5 | PM | 1438.0 | .00000 | .00160 | 13.75 | | | | | U | UJ |
| 11/01/1993 | Radium-228 | 5 | PM | 1438.0 | -.00080 | .00690 | 13.75 | | | | | U | U |
| 11/01/1993 | Uranium | 5 | PM | 1438.0 | .00005 | .00000 | 13.75 | .00003 | .00000 | .00002 | | B | U |
| 11/01/1993 | Thorium-230 | 6 | PM | 1442.6 | .00004 | .00020 | 13.96 | | | | | B | U |
| 11/01/1993 | Thorium-232 | 6 | PM | 1442.6 | .00001 | .00020 | 13.96 | | | | | U | U |
| 11/01/1993 | Lead-210 | 6 | PM | 1442.6 | .02245 | .00120 | 13.96 | | | | | | J |
| 11/01/1993 | Radium-226 | 6 | PM | 1442.6 | .00003 | .00160 | 13.96 | | | | | U | UJ |
| 11/01/1993 | Radium-228 | 6 | PM | 1442.6 | .00031 | .00690 | 13.96 | | | | | U | U |
| 11/01/1993 | Uranium | 6 | PM | 1442.6 | .00002 | .00000 | 13.96 | .00001 | .00000 | .00001 | | B | U |
| 11/01/1993 | Polonium-210 | 6 | PM | 1442.6 | .00340 | .00180 | 13.96 | | | | | | |
| 11/01/1993 | Thorium-230 | 7 | PM | 1439.6 | .00001 | .00020 | 11.51 | | | | | U | U |

Note: Concentrations of Uranium isotopes were calculated from total uranium based on naturally occuring ratios and are expressed in pCi/m3. EPA screening levels of uranium isotopes are given in parens.

Data Report for Radionuclide Concentrations from PM10 Samples
(Validated)

| Sample Date | Chemical Name | Site No. | Type | Run Time (min.) | Chem Conc (pCi/m3) | EPA Screen. Level (pCi/m3) | Particulate Conc. (ug/m3) | U-234 (0.0002) | U-235 (0.0002) | U-238 (0.0001) | Grav Val | Quality Lab | Quality Val |
|---|---|---|---|---|---|---|---|---|---|---|---|---|---|
| 11/01/1993 | Thorium-232 | 7 | PM | 1439.6 | .00000 | .00020 | 11.51 | | | | | U | U |
| 11/01/1993 | Polonium-210 | 7 | PM | 1439.6 | .00443 | .00180 | 11.51 | | | | | | |
| 11/01/1993 | Radium-226 | 7 | PM | 1439.6 | .00000 | .00160 | 11.51 | | | | | U | UJ |
| 11/01/1993 | Radium-228 | 7 | PM | 1439.6 | .00045 | .00690 | 11.51 | | | | | U | U |
| 11/01/1993 | Uranium | 7 | PM | 1439.6 | .00001 | .00000 | 11.51 | .00000 | .00000 | .00000 | | B | U |
| 11/01/1993 | Lead-210 | 7 | PM | 1439.6 | .02204 | .00120 | 11.51 | | | | | | J |
| 11/01/1993 | Thorium-230 | 8 | PM | 1461.8 | .00020 | .00020 | 37.74 | | | | | | |
| 11/01/1993 | Thorium-232 | 8 | PM | 1461.8 | .00000 | .00020 | 37.74 | | | | | U | U |
| 11/01/1993 | Lead-210 | 8 | PM | 1461.8 | .02307 | .00120 | 37.74 | | | | | | J |
| 11/01/1993 | Radium-226 | 8 | PM | 1461.8 | -.00011 | .00160 | 37.74 | | | | | U | UJ |
| 11/01/1993 | Radium-228 | 8 | PM | 1461.8 | .00075 | .00690 | 37.74 | | | | | U | U |
| 11/01/1993 | Uranium | 8 | PM | 1461.8 | .00039 | .00000 | 37.74 | .00019 | .00001 | .00018 | | | |
| 11/01/1993 | Polonium-210 | 8 | PM | 1461.8 | .02157 | .00180 | 37.74 | | | | | | |
| 11/05/1993 | Thorium-230 | 1 | PM | 1455.7 | .00000 | .00020 | 24.50 | | | | | U | U |
| 11/05/1993 | Thorium-232 | 1 | PM | 1455.7 | .00000 | .00020 | 24.50 | | | | | U | U |
| 11/05/1993 | Polonium-210 | 1 | PM | 1455.7 | .00159 | .00180 | 24.50 | | | | | B | U |
| 11/05/1993 | Lead-210 | 1 | PM | 1455.7 | .00000 | .00120 | 24.50 | | | | | L | L |
| 11/05/1993 | Radium-226 | 1 | PM | 1455.7 | .00003 | .00160 | 24.50 | | | | | U | UJ |
| 11/05/1993 | Radium-228 | 1 | PM | 1455.7 | .00016 | .00690 | 24.50 | | | | | U | U |
| 11/05/1993 | Uranium | 1 | PM | 1455.7 | .00018 | .00000 | 24.50 | .00009 | .00000 | .00009 | | | U |
| 11/05/1993 | Thorium-230 | 2 | PM | 1445.2 | .00042 | .00020 | 46.29 | | | | | | |
| 11/05/1993 | Thorium-232 | 2 | PM | 1445.2 | .00002 | .00020 | 46.29 | | | | | U | U |
| 11/05/1993 | Polonium-210 | 2 | PM | 1445.2 | .07634 | .00180 | 46.29 | | | | | | |
| 11/05/1993 | Lead-210 | 2 | PM | 1445.2 | .01195 | .00120 | 46.29 | | | | | | |
| 11/05/1993 | Radium-228 | 2 | PM | 1445.2 | .00000 | .00690 | 46.29 | | | | | U | U |
| 11/05/1993 | Uranium | 2 | PM | 1445.2 | .00102 | .00000 | 46.29 | .00051 | .00002 | .00048 | | | |
| 11/05/1993 | Radium-226 | 2 | PM | 1445.2 | .00085 | .00160 | 46.29 | | | | | B | |
| 11/05/1993 | Thorium-230 | 3 | PM | 1456.0 | .00009 | .00020 | 15.36 | | | | | B | U |
| 11/05/1993 | Thorium-232 | 3 | PM | 1456.0 | .00002 | .00020 | 15.36 | | | | | B | U |
| 11/05/1993 | Polonium-210 | 3 | PM | 1456.0 | .02025 | .00180 | 15.36 | | | | | | |
| 11/05/1993 | Radium-226 | 3 | PM | 1456.0 | -.00032 | .00160 | 15.36 | | | | | U | UJ |
| 11/05/1993 | Radium-228 | 3 | PM | 1456.0 | -.00025 | .00690 | 15.36 | | | | | U | U |
| 11/05/1993 | Uranium | 3 | PM | 1456.0 | .00011 | .00000 | 15.36 | .00006 | .00000 | .00005 | | | U |
| 11/05/1993 | Lead-210 | 3 | PM | 1456.0 | .00786 | .00120 | 15.36 | | | | | | |
| 11/05/1993 | Thorium-230 | 4 | PM | 1446.7 | .00004 | .00020 | 14.18 | | | | | B | U |
| 11/05/1993 | Thorium-232 | 4 | PM | 1446.7 | .00000 | .00020 | 14.18 | | | | | U | U |
| 11/05/1993 | Polonium-210 | 4 | PM | 1446.7 | .00570 | .00180 | 14.18 | | | | | | |
| 11/05/1993 | Lead-210 | 4 | PM | 1446.7 | .01085 | .00120 | 14.18 | | | | | | |
| 11/05/1993 | Radium-228 | 4 | PM | 1446.7 | .00012 | .00690 | 14.18 | | | | | U | U |
| 11/05/1993 | Uranium | 4 | PM | 1446.7 | .00004 | .00000 | 14.18 | .00002 | .00000 | .00002 | | B | U |
| 11/05/1993 | Radium-226 | 4 | PM | 1446.7 | .00007 | .00160 | 14.18 | | | | | U | UJ |
| 11/05/1993 | Thorium-230 | 5 | PM | 1442.7 | .00007 | .00020 | 10.66 | | | | | B | U |
| 11/05/1993 | Thorium-232 | 5 | PM | 1442.7 | .00001 | .00020 | 10.66 | | | | | U | U |
| 11/05/1993 | Lead-210 | 5 | PM | 1442.7 | .01121 | .00120 | 10.66 | | | | | | |
| 11/05/1993 | Radium-226 | 5 | PM | 1442.7 | .00015 | .00160 | 10.66 | | | | | U | UJ |
| 11/05/1993 | Radium-228 | 5 | PM | 1442.7 | .00131 | .00690 | 10.66 | | | | | U | U |
| 11/05/1993 | Uranium | 5 | PM | 1442.7 | .00004 | .00000 | 10.66 | .00002 | .00000 | .00002 | | B | U |
| 11/05/1993 | Polonium-210 | 5 | PM | 1442.7 | .00319 | .00180 | 10.66 | | | | | | |
| 11/05/1993 | Thorium-230 | 6 | PM | 1449.9 | .00005 | .00020 | 17.21 | | | | | B | U |
| 11/05/1993 | Thorium-232 | 6 | PM | 1449.9 | .00001 | .00020 | 17.21 | | | | | U | U |
| 11/05/1993 | Lead-210 | 6 | PM | 1449.9 | .01080 | .00120 | 17.21 | | | | | | |

Note: Concentrations of Uranium isotopes were calculated from total uranium based on naturally occuring ratios and are expressed in pCi/m3. EPA screening levels of uranium isotopes are given in parens.

Data Report for Radionuclide Concentrations from PM10 Samples (Validated)

07/31/1995



| Sample Date | Chemical Name | Site No. | Type | Run Time (min.) | Chem Conc (pCi/m3) | EPA Screen. Level (pCi/m3) | Particulate Conc. (ug/m3) | U-234 (0.0002) | U-235 (0.0002) | U-238 (0.0001) | Grav Val | Quality Lab Val |
|---|---|---|---|---|---|---|---|---|---|---|---|---|
| 11/05/1993 | Radium-226 | 6 | PM | 1449.9 | .00006 | .00160 | 17.21 | | | | U | UJ |
| 11/05/1993 | Radium-228 | 6 | PM | 1449.9 | .00159 | .00690 | 17.21 | | | | U | U |
| 11/05/1993 | Uranium | 6 | PM | 1449.9 | .00000 | .00000 | 17.21 | .00000 | .00000 | .00000 | B | U |
| 11/05/1993 | Polonium-210 | 6 | PM | 1449.9 | .00179 | .00180 | 17.21 | | | | B | U |
| 11/05/1993 | Thorium-232 | 7 | PM | 1440.1 | .00001 | .00020 | 7.53 | | | | U | U |
| 11/05/1993 | Polonium-210 | 7 | PM | 1440.1 | .00381 | .00180 | 7.53 | | | | | |
| 11/05/1993 | Lead-210 | 7 | PM | 1440.1 | .01209 | .00120 | 7.53 | | | | | |
| 11/05/1993 | Radium-226 | 7 | PM | 1440.1 | -.00008 | .00160 | 7.53 | | | | U | UJ |
| 11/05/1993 | Radium-228 | 7 | PM | 1440.1 | .00107 | .00690 | 7.53 | | | | U | U |
| 11/05/1993 | Uranium | 7 | PM | 1440.1 | .00001 | .00000 | 7.53 | .00001 | .00000 | .00001 | B | U |
| 11/05/1993 | Thorium-230 | 7 | PM | 1440.1 | .00008 | .00020 | 7.53 | | | | B | U |
| 11/05/1993 | Thorium-230 | 8 | PM | 1464.6 | .00010 | .00020 | 24.66 | | | | B | U |
| 11/05/1993 | Polonium-210 | 8 | PM | 1464.6 | .01349 | .00180 | 24.66 | | | | | |
| 11/05/1993 | Lead-210 | 8 | PM | 1464.6 | .01203 | .00120 | 24.66 | | | | | |
| 11/05/1993 | Radium-226 | 8 | PM | 1464.6 | -.00006 | .00160 | 24.66 | | | | U | UJ |
| 11/05/1993 | Radium-228 | 8 | PM | 1464.6 | .00078 | .00690 | 24.66 | | | | U | U |
| 11/05/1993 | Thorium-232 | 8 | PM | 1464.6 | .00001 | .00020 | 24.66 | | | | U | U |
| 11/05/1993 | Uranium | 8 | PM | 1464.6 | .00023 | .00000 | 24.66 | .00011 | .00000 | .00011 | | U |
| 11/05/1993 | Thorium-230 | P | BL | 1440.0 | .00004 | .00020 | -2.05 | | | | B | U |
| 11/05/1993 | Thorium-232 | P | BL | 1440.0 | .00002 | .00020 | -2.05 | | | | U | U |
| 11/05/1993 | Polonium-210 | P | BL | 1440.0 | .00033 | .00180 | -2.05 | | | | B | U |
| 11/05/1993 | Lead-210 | P | BL | 1440.0 | .00035 | .00120 | -2.05 | | | | U | U |
| 11/05/1993 | Radium-226 | P | BL | 1440.0 | .00016 | .00160 | -2.05 | | | | U | UJ |
| 11/05/1993 | Uranium | P | BL | 1440.0 | .00028 | .00000 | -2.05 | .00014 | .00001 | .00013 | | |
| 11/05/1993 | Radium-228 | P | BL | 1440.0 | .00028 | .00690 | -2.05 | | | | U | U |
| 11/05/1993 | Thorium-230 | T | BL | 1440.0 | .00026 | .00020 | 10.76 | | | | | |
| 11/05/1993 | Thorium-232 | T | BL | 1440.0 | .00001 | .00020 | 10.76 | | | | U | U |
| 11/05/1993 | Polonium-210 | T | BL | 1440.0 | .00099 | .00180 | 10.76 | | | | B | U |
| 11/05/1993 | Lead-210 | T | BL | 1440.0 | -.00101 | .00120 | 10.76 | | | | B | U |
| 11/05/1993 | Radium-228 | T | BL | 1440.0 | .00208 | .00690 | 10.76 | | | | B | U |
| 11/05/1993 | Uranium | T | BL | 1440.0 | .00043 | .00000 | 10.76 | .00021 | .00001 | .00020 | | U |
| 11/05/1993 | Radium-226 | T | BL | 1440.0 | .00000 | .00160 | 10.76 | | | | U | UJ |
| 11/09/1993 | Thorium-230 | 1 | PM | 1448.3 | .00008 | .00020 | 28.16 | | | | B | U |
| 11/09/1993 | Thorium-232 | 1 | PM | 1448.3 | .00001 | .00020 | 28.16 | | | | U | U |
| 11/09/1993 | Polonium-210 | 1 | PM | 1448.3 | .00914 | .00180 | 28.16 | | | | | |
| 11/09/1993 | Lead-210 | 1 | PM | 1448.3 | .03336 | .00120 | 28.16 | | | | | |
| 11/09/1993 | Radium-228 | 1 | PM | 1448.3 | .00398 | .00690 | 28.16 | | | | B | U |
| 11/09/1993 | Uranium | 1 | PM | 1448.3 | .00012 | .00000 | 28.16 | .00006 | .00000 | .00006 | | U |
| 11/09/1993 | Radium-226 | 1 | PM | 1448.3 | -.00001 | .00160 | 28.16 | | | | U | U |
| 11/09/1993 | Thorium-230 | 2 | PM | 1450.0 | .00023 | .00020 | 48.97 | | | | | |
| 11/09/1993 | Thorium-232 | 2 | PM | 1450.0 | .00002 | .00020 | 48.97 | | | | B | U |
| 11/09/1993 | Polonium-210 | 2 | PM | 1450.0 | .02304 | .00180 | 48.97 | | | | | |
| 11/09/1993 | Lead-210 | 2 | PM | 1450.0 | .03474 | .00120 | 48.97 | | | | | |
| 11/09/1993 | Radium-226 | 2 | PM | 1450.0 | .00020 | .00160 | 48.97 | | | | U | U |
| 11/09/1993 | Uranium | 2 | PM | 1450.0 | .00055 | .00000 | 48.97 | .00028 | .00001 | .00026 | | U |
| 11/09/1993 | Radium-228 | 2 | PM | 1450.0 | .00627 | .00690 | 48.97 | | | | B | U |
| 11/09/1993 | Thorium-230 | 3 | PM | 1459.7 | .00003 | .00020 | 19.36 | | | | B | U |
| 11/09/1993 | Thorium-232 | 3 | PM | 1459.7 | .00001 | .00020 | 19.36 | | | | U | U |
| 11/09/1993 | Polonium-210 | 3 | PM | 1459.7 | .00633 | .00180 | 19.36 | | | | | |
| 11/09/1993 | Lead-210 | 3 | PM | 1459.7 | .03391 | .00120 | 19.36 | | | | | |
| 11/09/1993 | Radium-228 | 3 | PM | 1459.7 | .00235 | .00690 | 19.36 | | | | U | U |

Note: Concentrations of Uranium isotopes were calculated from total uranium based on naturally occuring ratios and are expressed in pCi/m3. EPA screening levels of uranium isotopes are given in parens.

Data Report for Radionuclide Concentrations from PM10 Samples
(Validated)

| Sample Date | Chemical Name | Site No. | Type | Run Time (min.) | Chem Conc (pCi/m3) | EPA Screen. Level (pCi/m3) | Particulate Conc. (ug/m3) | U-234 (0.0002) | U-235 (0.0002) | U-238 (0.0001) | Quality Grav Val | Quality Lab Val |
|---|---|---|---|---|---|---|---|---|---|---|---|---|
| 11/09/1993 | Uranium | 3 | PM | 1459.7 | .00003 | .00000 | 19.36 | .00002 | .00000 | .00002 | B | U |
| 11/09/1993 | Radium-226 | 3 | PM | 1459.7 | .00058 | .00160 | 19.36 | | | | B | U |
| 11/09/1993 | Thorium-230 | 4 | PM | 1449.8 | .00005 | .00020 | 33.72 | | | | B | U |
| 11/09/1993 | Polonium-210 | 4 | PM | 1449.8 | .00894 | .00180 | 33.72 | | | | | |
| 11/09/1993 | Lead-210 | 4 | PM | 1449.8 | .03256 | .00120 | 33.72 | | | | | |
| 11/09/1993 | Radium-226 | 4 | PM | 1449.8 | -.00003 | .00160 | 33.72 | | | | U | U |
| 11/09/1993 | Radium-228 | 4 | PM | 1449.8 | .00325 | .00690 | 33.72 | | | | U | U |
| 11/09/1993 | Uranium | 4 | PM | 1449.8 | .00008 | .00000 | 33.72 | .00004 | .00000 | .00004 | B | U |
| 11/09/1993 | Thorium-232 | 4 | PM | 1449.8 | .00001 | .00020 | 33.72 | | | | U | U |
| 11/09/1993 | Thorium-230 | 5 | PM | 1440.1 | .00012 | .00020 | 30.30 | | | | B | U |
| 11/09/1993 | Thorium-232 | 5 | PM | 1440.1 | .00002 | .00020 | 30.30 | | | | B | U |
| 11/09/1993 | Polonium-210 | 5 | PM | 1440.1 | .07625 | .00180 | 30.30 | | | | | |
| 11/09/1993 | Lead-210 | 5 | PM | 1440.1 | .02681 | .00120 | 30.30 | | | | | |
| 11/09/1993 | Radium-226 | 5 | PM | 1440.1 | -.00006 | .00160 | 30.30 | | | | U | U |
| 11/09/1993 | Uranium | 5 | PM | 1440.1 | .00023 | .00000 | 30.30 | .00012 | .00001 | .00011 | | U |
| 11/09/1993 | Radium-228 | 5 | PM | 1440.1 | .00279 | .00690 | 30.30 | | | | U | U |
| 11/09/1993 | Thorium-230 | 6 | PM | 1442.4 | .00007 | .00020 | 28.24 | | | | B | U |
| 11/09/1993 | Thorium-232 | 6 | PM | 1442.4 | .00003 | .00020 | 28.24 | | | | B | U |
| 11/09/1993 | Polonium-210 | 6 | PM | 1442.4 | .00816 | .00180 | 28.24 | | | | | |
| 11/09/1993 | Lead-210 | 6 | PM | 1442.4 | .03166 | .00120 | 28.24 | | | | | |
| 11/09/1993 | Radium-228 | 6 | PM | 1442.4 | .00318 | .00690 | 28.24 | | | | B | U |
| 11/09/1993 | Uranium | 6 | PM | 1442.4 | .00006 | .00000 | 28.24 | .00003 | .00000 | .00003 | B | U |
| 11/09/1993 | Radium-226 | 6 | PM | 1442.4 | -.00014 | .00160 | 28.24 | | | | U | U |
| 11/09/1993 | Thorium-230 | 7 | PM | 1441.9 | .00005 | .00020 | 33.76 | | | | B | U |
| 11/09/1993 | Thorium-232 | 7 | PM | 1441.9 | .00000 | .00020 | 33.76 | | | | U | U |
| 11/09/1993 | Lead-210 | 7 | PM | 1441.9 | .02984 | .00120 | 33.76 | | | | | |
| 11/09/1993 | Radium-226 | 7 | PM | 1441.9 | -.00006 | .00160 | 33.76 | | | | U | U |
| 11/09/1993 | Radium-228 | 7 | PM | 1441.9 | .01580 | .00690 | 33.76 | | | | | |
| 11/09/1993 | Uranium | 7 | PM | 1441.9 | .00012 | .00000 | 33.76 | .00006 | .00000 | .00006 | | U |
| 11/09/1993 | Polonium-210 | 7 | PM | 1441.9 | .05554 | .00180 | 33.76 | | | | | |
| 11/09/1993 | Thorium-230 | 8 | PM | 1463.7 | .00009 | .00020 | 29.04 | | | | B | U |
| 11/09/1993 | Thorium-232 | 8 | PM | 1463.7 | .00002 | .00020 | 29.04 | | | | B | U |
| 11/09/1993 | Polonium-210 | 8 | PM | 1463.7 | .01091 | .00180 | 29.04 | | | | | |
| 11/09/1993 | Radium-226 | 8 | PM | 1463.7 | -.00004 | .00160 | 29.04 | | | | U | U |
| 11/09/1993 | Radium-228 | 8 | PM | 1463.7 | .00399 | .00690 | 29.04 | | | | B | U |
| 11/09/1993 | Uranium | 8 | PM | 1463.7 | .00011 | .00000 | 29.04 | .00006 | .00000 | .00005 | | U |
| 11/09/1993 | Lead-210 | 8 | PM | 1463.7 | .03546 | .00120 | 29.04 | | | | | |
| 11/13/1993 | Thorium-230 | 1 | PM | 1452.6 | .00010 | .00020 | 33.78 | | | | B | U |
| 11/13/1993 | Thorium-232 | 1 | PM | 1452.6 | .00002 | .00020 | 33.78 | | | | U | U |
| 11/13/1993 | Polonium-210 | 1 | PM | 1452.6 | .01536 | .00180 | 33.78 | | | | | |
| 11/13/1993 | Lead-210 | 1 | PM | 1452.6 | .03553 | .00120 | 33.78 | | | | | |
| 11/13/1993 | Radium-228 | 1 | PM | 1452.6 | .00112 | .00690 | 33.78 | | | | U | U |
| 11/13/1993 | Uranium | 1 | PM | 1452.6 | .00024 | .00000 | 33.78 | .00012 | .00001 | .00012 | | U |
| 11/13/1993 | Radium-226 | 1 | PM | 1452.6 | .00018 | .00160 | 33.78 | | | | U | U |
| 11/13/1993 | Thorium-230 | 2 | PM | 1447.2 | -.00020 | .00020 | 102.87 | | | | U | L |
| 11/13/1993 | Thorium-232 | 2 | PM | 1447.2 | .00000 | .00020 | 102.87 | | | | U | L |
| 11/13/1993 | Polonium-210 | 2 | PM | 1447.2 | .33174 | .00180 | 102.87 | | | | | |
| 11/13/1993 | Radium-226 | 2 | PM | 1447.2 | .00078 | .00160 | 102.87 | | | | B | U |
| 11/13/1993 | Radium-228 | 2 | PM | 1447.2 | .00327 | .00690 | 102.87 | | | | U | U |
| 11/13/1993 | Uranium | 2 | PM | 1447.2 | .00114 | .00000 | 102.87 | .00057 | .00003 | .00054 | | U |
| 11/13/1993 | Lead-210 | 2 | PM | 1447.2 | .03885 | .00120 | 102.87 | | | | | |

Note: Concentrations of Uranium isotopes were calculated from total uranium based on naturally occuring ratios and are expressed in pCi/m3. EPA screening levels of uranium isotopes are given in parens.

Data Report for Radionuclide Concentrations from PM10 Samples
(Validated)

| Sample Date | Chemical Name | Site No. | Type | Run Time (min.) | Chem Conc (pCi/m3) | EPA Screen. Level (pCi/m3) | Particulate Conc. (ug/m3) | U-234 (0.0002) | U-235 (0.0002) | U-238 (0.0001) | Grav Val | Quality Lab | Quality Val |
|---|---|---|---|---|---|---|---|---|---|---|---|---|---|
| 11/13/1993 | Thorium-230 | 3 | PM | 1453.0 | .00006 | .00020 | 29.52 | | | | | B | UJ |
| 11/13/1993 | Thorium-232 | 3 | PM | 1453.0 | .00000 | .00020 | 29.52 | | | | | U | U |
| 11/13/1993 | Polonium-210 | 3 | PM | 1453.0 | .03540 | .00180 | 29.52 | | | | | | |
| 11/13/1993 | Lead-210 | 3 | PM | 1453.0 | .03893 | .00120 | 29.52 | | | | | | J |
| 11/13/1993 | Radium-226 | 3 | PM | 1453.0 | .00004 | .00160 | 29.52 | | | | | U | U |
| 11/13/1993 | Uranium | 3 | PM | 1453.0 | .00007 | .00000 | 29.52 | .00004 | .00000 | .00004 | | B | UJ |
| 11/13/1993 | Radium-228 | 3 | PM | 1453.0 | .00104 | .00690 | 29.52 | | | | | U | U |
| 11/13/1993 | Thorium-230 | 4 | PM | 1450.1 | .00003 | .00020 | 19.97 | | | | | B | U |
| 11/13/1993 | Thorium-232 | 4 | PM | 1450.1 | .00000 | .00020 | 19.97 | | | | | U | U |
| 11/13/1993 | Polonium-210 | 4 | PM | 1450.1 | .00699 | .00180 | 19.97 | | | | | | |
| 11/13/1993 | Radium-226 | 4 | PM | 1450.1 | .00067 | .00160 | 19.97 | | | | | U | U |
| 11/13/1993 | Radium-228 | 4 | PM | 1450.1 | .00396 | .00690 | 19.97 | | | | | B | U |
| 11/13/1993 | Uranium | 4 | PM | 1450.1 | .00001 | .00000 | 19.97 | .00000 | .00000 | .00000 | | B | UJ |
| 11/13/1993 | Lead-210 | 4 | PM | 1450.1 | .03554 | .00120 | 19.97 | | | | | | J |
| 11/13/1993 | Thorium-230 | 5 | PM | 1442.6 | .00006 | .00020 | 17.71 | | | | | B | U |
| 11/13/1993 | Thorium-232 | 5 | PM | 1442.6 | .00001 | .00020 | 17.71 | | | | | U | U |
| 11/13/1993 | Lead-210 | 5 | PM | 1442.6 | .03474 | .00120 | 17.71 | | | | | | |
| 11/13/1993 | Radium-226 | 5 | PM | 1442.6 | .00002 | .00160 | 17.71 | | | | | U | U |
| 11/13/1993 | Radium-228 | 5 | PM | 1442.6 | .00491 | .00690 | 17.71 | | | | | B | U |
| 11/13/1993 | Uranium | 5 | PM | 1442.6 | .00004 | .00000 | 17.71 | .00002 | .00000 | .00002 | | B | U |
| 11/13/1993 | Polonium-210 | 5 | PM | 1442.6 | .01019 | .00180 | 17.71 | | | | | | |
| 11/13/1993 | Thorium-232 | 6 | PM | 1441.8 | .00001 | .00020 | 17.57 | | | | | U | U |
| 11/13/1993 | Polonium-210 | 6 | PM | 1441.8 | .01104 | .00180 | 17.57 | | | | | | |
| 11/13/1993 | Lead-210 | 6 | PM | 1441.8 | .03477 | .00120 | 17.57 | | | | | | |
| 11/13/1993 | Radium-226 | 6 | PM | 1441.8 | -.00019 | .00160 | 17.57 | | | | | U | U |
| 11/13/1993 | Radium-228 | 6 | PM | 1441.8 | .00751 | .00690 | 17.57 | | | | | | |
| 11/13/1993 | Uranium | 6 | PM | 1441.8 | .00004 | .00000 | 17.57 | .00002 | .00000 | .00002 | | B | U |
| 11/13/1993 | Thorium-230 | 6 | PM | 1441.8 | .00006 | .00020 | 17.57 | | | | | B | U |
| 11/13/1993 | Thorium-230 | 7 | PM | 1439.7 | .00003 | .00020 | 16.15 | | | | | U | U |
| 11/13/1993 | Thorium-232 | 7 | PM | 1439.7 | -.00001 | .00020 | 16.15 | | | | | U | U |
| 11/13/1993 | Polonium-210 | 7 | PM | 1439.7 | .01472 | .00180 | 16.15 | | | | | | |
| 11/13/1993 | Lead-210 | 7 | PM | 1439.7 | .03671 | .00120 | 16.15 | | | | | | J |
| 11/13/1993 | Radium-228 | 7 | PM | 1439.7 | .00005 | .00690 | 16.15 | | | | | U | U |
| 11/13/1993 | Uranium | 7 | PM | 1439.7 | .00001 | .00000 | 16.15 | .00000 | .00000 | .00000 | | B | UJ |
| 11/13/1993 | Radium-226 | 7 | PM | 1439.7 | -.00002 | .00160 | 16.15 | | | | | U | U |
| 11/13/1993 | Thorium-230 | 8 | PM | 1465.4 | .00000 | .00020 | 37.93 | | | | | L | L |
| 11/13/1993 | Thorium-232 | 8 | PM | 1465.4 | .00000 | .00020 | 37.93 | | | | | L | L |
| 11/13/1993 | Polonium-210 | 8 | PM | 1465.4 | .00000 | .00180 | 37.93 | | | | | L | L |
| 11/13/1993 | Lead-210 | 8 | PM | 1465.4 | .00000 | .00120 | 37.93 | | | | | L | L |
| 11/13/1993 | Radium-226 | 8 | PM | 1465.4 | .00000 | .00160 | 37.93 | | | | | L | L |
| 11/13/1993 | Radium-228 | 8 | PM | 1465.4 | .00000 | .00690 | 37.93 | | | | | L | L |
| 11/13/1993 | Uranium | 8 | PM | 1465.4 | .00000 | .00000 | 37.93 | .00000 | .00000 | .00000 | | L | L |
| 11/13/1993 | Thorium-230 | P | BL | 1440.0 | .00002 | .00020 | -1.17 | | | | | B | U |
| 11/13/1993 | Thorium-232 | P | BL | 1440.0 | .00000 | .00020 | -1.17 | | | | | U | U |
| 11/13/1993 | Lead-210 | P | BL | 1440.0 | .00115 | .00120 | -1.17 | | | | | B | UJ |
| 11/13/1993 | Radium-226 | P | BL | 1440.0 | -.00003 | .00160 | -1.17 | | | | | U | U |
| 11/13/1993 | Radium-228 | P | BL | 1440.0 | .00103 | .00690 | -1.17 | | | | | U | U |
| 11/13/1993 | Uranium | P | BL | 1440.0 | .00001 | .00000 | -1.17 | .00001 | .00000 | .00001 | | B | UJ |
| 11/13/1993 | Polonium-210 | P | BL | 1440.0 | .00013 | .00180 | -1.17 | | | | | U | U |
| 11/13/1993 | Thorium-230 | T | BL | 1440.0 | .00007 | .00020 | 2.53 | | | | | B | U |
| 11/13/1993 | Thorium-232 | T | BL | 1440.0 | .00000 | .00020 | 2.53 | | | | | U | U |

Note: Concentrations of Uranium isotopes were calculated from total uranium based on naturally occuring ratios and are expressed in pCi/m3. EPA screening levels of uranium isotopes are given in parens.

Data Report for Radionuclide Concentrations from PM10 Samples
(Validated)

| Sample Date | Chemical Name | Site No. | Type | Run Time (min.) | Chem Conc (pCi/m3) | EPA Screen. Level (pCi/m3) | Particulate Conc. (ug/m3) | U-234 (0.0002) | U-235 (0.0002) | U-238 (0.0001) | Grav Val | Quality Lab | Quality Val |
|---|---|---|---|---|---|---|---|---|---|---|---|---|---|
| 11/13/1993 | Polonium-210 | T | BL | 1440.0 | .00023 | .00180 | 2.53 | | | | | B | U |
| 11/13/1993 | Radium-226 | T | BL | 1440.0 | -.00036 | .00160 | 2.53 | | | | | U | U |
| 11/13/1993 | Radium-228 | T | BL | 1440.0 | .00407 | .00690 | 2.53 | | | | | B | U |
| 11/13/1993 | Uranium | T | BL | 1440.0 | .00014 | .00000 | 2.53 | .00007 | .00000 | .00006 | | | J |
| 11/13/1993 | Lead-210 | T | BL | 1440.0 | .00125 | .00120 | 2.53 | | | | | B | UJ |
| 11/17/1993 | Thorium-230 | 1 | PM | 1448.8 | .00016 | .00020 | 16.36 | | | | | B | U |
| 11/17/1993 | Thorium-232 | 1 | PM | 1448.8 | .00002 | .00020 | 16.36 | | | | | B | U |
| 11/17/1993 | Polonium-210 | 1 | PM | 1448.8 | .01308 | .00180 | 16.36 | | | | | | |
| 11/17/1993 | Lead-210 | 1 | PM | 1448.8 | .04779 | .00120 | 16.36 | | | | | | J |
| 11/17/1993 | Radium-226 | 1 | PM | 1448.8 | -.00010 | .00160 | 16.36 | | | | | U | U |
| 11/17/1993 | Uranium | 1 | PM | 1448.8 | .00013 | .00000 | 16.36 | .00007 | .00000 | .00006 | | | J |
| 11/17/1993 | Radium-228 | 1 | PM | 1448.8 | .00049 | .00690 | 16.36 | | | | | U | U |
| 11/17/1993 | Thorium-230 | 2 | PM | 1445.0 | .00060 | .00020 | 48.16 | | | | | | |
| 11/17/1993 | Thorium-232 | 2 | PM | 1445.0 | .00005 | .00020 | 48.16 | | | | | B | U |
| 11/17/1993 | Polonium-210 | 2 | PM | 1445.0 | .04324 | .00180 | 48.16 | | | | | | |
| 11/17/1993 | Lead-210 | 2 | PM | 1445.0 | .05111 | .00120 | 48.16 | | | | | | |
| 11/17/1993 | Radium-226 | 2 | PM | 1445.0 | .00003 | .00160 | 48.16 | | | | | U | U |
| 11/17/1993 | Uranium | 2 | PM | 1445.0 | .00124 | .00000 | 48.16 | .00063 | .00003 | .00059 | | | |
| 11/17/1993 | Radium-228 | 2 | PM | 1445.0 | .00005 | .00690 | 48.16 | | | | | U | U |
| 11/17/1993 | Thorium-230 | 3 | PM | 1455.6 | .00004 | .00020 | 13.63 | | | | | B | U |
| 11/17/1993 | Thorium-232 | 3 | PM | 1455.6 | .00001 | .00020 | 13.63 | | | | | U | U |
| 11/17/1993 | Polonium-210 | 3 | PM | 1455.6 | .01750 | .00180 | 13.63 | | | | | | |
| 11/17/1993 | Lead-210 | 3 | PM | 1455.6 | .05242 | .00120 | 13.63 | | | | | | |
| 11/17/1993 | Radium-228 | 3 | PM | 1455.6 | .00005 | .00690 | 13.63 | | | | | U | U |
| 11/17/1993 | Uranium | 3 | PM | 1455.6 | .00004 | .00000 | 13.63 | .00002 | .00000 | .00002 | | B | U |
| 11/17/1993 | Radium-226 | 3 | PM | 1455.6 | .00003 | .00160 | 13.63 | | | | | B | U |
| 11/17/1993 | Thorium-230 | 4 | PM | 1448.1 | .00008 | .00020 | 21.80 | | | | | B | U |
| 11/17/1993 | Thorium-232 | 4 | PM | 1448.1 | .00001 | .00020 | 21.80 | | | | | U | U |
| 11/17/1993 | Polonium-210 | 4 | PM | 1448.1 | .01331 | .00180 | 21.80 | | | | | | |
| 11/17/1993 | Radium-226 | 4 | PM | 1448.1 | .00003 | .00160 | 21.80 | | | | | B | U |
| 11/17/1993 | Radium-228 | 4 | PM | 1448.1 | .00015 | .00690 | 21.80 | | | | | U | U |
| 11/17/1993 | Uranium | 4 | PM | 1448.1 | .00007 | .00000 | 21.80 | .00004 | .00000 | .00003 | | B | U |
| 11/17/1993 | Lead-210 | 4 | PM | 1448.1 | .05166 | .00120 | 21.80 | | | | | | |
| 11/17/1993 | Thorium-230 | 5 | PM | 1444.0 | .00008 | .00020 | 17.40 | | | | | B | U |
| 11/17/1993 | Thorium-232 | 5 | PM | 1444.0 | .00001 | .00020 | 17.40 | | | | | B | U |
| 11/17/1993 | Polonium-210 | 5 | PM | 1444.0 | .01331 | .00180 | 17.40 | | | | | | |
| 11/17/1993 | Lead-210 | 5 | PM | 1444.0 | .05046 | .00120 | 17.40 | | | | | | J |
| 11/17/1993 | Radium-226 | 5 | PM | 1444.0 | .00060 | .00160 | 17.40 | | | | | B | U |
| 11/17/1993 | Radium-228 | 5 | PM | 1444.0 | .00099 | .00690 | 17.40 | | | | | U | U |
| 11/17/1993 | Uranium | 5 | PM | 1444.0 | .00011 | .00000 | 17.40 | .00005 | .00000 | .00005 | | | UJ |
| 11/17/1993 | Thorium-230 | 6 | PM | 1442.2 | .00002 | .00020 | 22.97 | | | | | B | U |
| 11/17/1993 | Thorium-232 | 6 | PM | 1442.2 | .00003 | .00020 | 22.97 | | | | | B | U |
| 11/17/1993 | Polonium-210 | 6 | PM | 1442.2 | .01242 | .00180 | 22.97 | | | | | | |
| 11/17/1993 | Lead-210 | 6 | PM | 1442.2 | .04904 | .00120 | 22.97 | | | | | | J |
| 11/17/1993 | Radium-226 | 6 | PM | 1442.2 | .00004 | .00160 | 22.97 | | | | | U | U |
| 11/17/1993 | Uranium | 6 | PM | 1442.2 | .00003 | .00000 | 22.97 | .00001 | .00000 | .00001 | | B | UJ |
| 11/17/1993 | Radium-228 | 6 | PM | 1442.2 | .00152 | .00690 | 22.97 | | | | | U | U |
| 11/17/1993 | Thorium-230 | 7 | PM | 1439.9 | .00009 | .00020 | 10.96 | | | | P | B | U |
| 11/17/1993 | Thorium-232 | 7 | PM | 1439.9 | .00000 | .00020 | 10.96 | | | | P | U | U |
| 11/17/1993 | Lead-210 | 7 | PM | 1439.9 | .04747 | .00120 | 10.96 | | | | P | | J |
| 11/17/1993 | Radium-226 | 7 | PM | 1439.9 | .00000 | .00160 | 10.96 | | | | P | U | U |

Note: Concentrations of Uranium isotopes were calculated from total uranium based on naturally occuring ratios and are expressed in pCi/m3. EPA screening levels of uranium isotopes are given in parens.

Data Report for Radionuclide Concentrations from PM10 Samples
(Validated)

| Sample Date | Chemical Name | Site No. | Type | Run Time (min.) | Chem Conc (pCi/m3) | EPA Screen. Level (pCi/m3) | Particulate Conc. (ug/m3) | U-234 (0.0002) | U-235 (0.0002) | U-238 (0.0001) | Grav Val | Quality Lab | Quality Val |
|---|---|---|---|---|---|---|---|---|---|---|---|---|---|
| 11/17/1993 | Radium-228 | 7 | PM | 1439.9 | .00146 | .00690 | 10.96 | | | | P | U | U |
| 11/17/1993 | Uranium | 7 | PM | 1439.9 | .00014 | .00000 | 10.96 | .00007 | .00000 | .00007 | P | | J |
| 11/17/1993 | Polonium-210 | 7 | PM | 1439.9 | .02581 | .00180 | 10.96 | | | | P | | |
| 11/17/1993 | Thorium-230 | 8 | PM | 1461.1 | .00010 | .00020 | 16.69 | | | | | B | U |
| 11/17/1993 | Thorium-232 | 8 | PM | 1461.1 | .00001 | .00020 | 16.69 | | | | | U | U |
| 11/17/1993 | Radium-226 | 8 | PM | 1461.1 | .00016 | .00160 | 16.69 | | | | | U | U |
| 11/17/1993 | Radium-228 | 8 | PM | 1461.1 | .00017 | .00690 | 16.69 | | | | | B | U |
| 11/17/1993 | Uranium | 8 | PM | 1461.1 | .00011 | .00000 | 16.69 | .00005 | .00000 | .00005 | | | UJ |
| 11/17/1993 | Polonium-210 | 8 | PM | 1461.1 | .01443 | .00180 | 16.69 | | | | | | |
| 11/17/1993 | Lead-210 | 8 | PM | 1461.1 | .05084 | .00120 | 16.69 | | | | | | J |
| 11/21/1993 | Thorium-230 | 1 | PM | 1451.9 | .00072 | .00020 | 19.00 | | | | | | |
| 11/21/1993 | Thorium-232 | 1 | PM | 1451.9 | .00003 | .00020 | 19.00 | | | | | B | U |
| 11/21/1993 | Polonium-210 | 1 | PM | 1451.9 | .03186 | .00180 | 19.00 | | | | | | |
| 11/21/1993 | Lead-210 | 1 | PM | 1451.9 | .02017 | .00120 | 19.00 | | | | | | J |
| 11/21/1993 | Radium-228 | 1 | PM | 1451.9 | .00069 | .00690 | 19.00 | | | | | U | U |
| 11/21/1993 | Uranium | 1 | PM | 1451.9 | .00024 | .00000 | 19.00 | .00012 | .00001 | .00011 | | | J |
| 11/21/1993 | Radium-226 | 1 | PM | 1451.9 | .00004 | .00160 | 19.00 | | | | | U | U |
| 11/21/1993 | Thorium-230 | 2 | PM | 1450.8 | .00011 | .00020 | 53.19 | | | | | B | U |
| 11/21/1993 | Thorium-232 | 2 | PM | 1450.8 | .00000 | .00020 | 53.19 | | | | | U | U |
| 11/21/1993 | Polonium-210 | 2 | PM | 1450.8 | .00323 | .00180 | 53.19 | | | | | | |
| 11/21/1993 | Lead-210 | 2 | PM | 1450.8 | .02041 | .00120 | 53.19 | | | | | | J |
| 11/21/1993 | Radium-228 | 2 | PM | 1450.8 | -.00004 | .00690 | 53.19 | | | | | U | U |
| 11/21/1993 | Uranium | 2 | PM | 1450.8 | .00128 | .00000 | 53.19 | .00065 | .00003 | .00061 | | | J |
| 11/21/1993 | Radium-226 | 2 | PM | 1450.8 | .00016 | .00160 | 53.19 | | | | | U | U |
| 11/21/1993 | Thorium-230 | 3 | PM | 1454.5 | .00003 | .00020 | 12.35 | | | | | B | U |
| 11/21/1993 | Thorium-232 | 3 | PM | 1454.5 | .00001 | .00020 | 12.35 | | | | | U | U |
| 11/21/1993 | Polonium-210 | 3 | PM | 1454.5 | .00037 | .00180 | 12.35 | | | | | B | U |
| 11/21/1993 | Radium-226 | 3 | PM | 1454.5 | .00031 | .00160 | 12.35 | | | | | U | U |
| 11/21/1993 | Radium-228 | 3 | PM | 1454.5 | .00045 | .00690 | 12.35 | | | | | U | U |
| 11/21/1993 | Uranium | 3 | PM | 1454.5 | .00001 | .00000 | 12.35 | .00000 | .00000 | .00000 | | B | UJ |
| 11/21/1993 | Lead-210 | 3 | PM | 1454.5 | .01834 | .00120 | 12.35 | | | | | | J |
| 11/21/1993 | Thorium-230 | 4 | PM | 1449.2 | .00008 | .00020 | 22.70 | | | | | B | U |
| 11/21/1993 | Thorium-232 | 4 | PM | 1449.2 | .00001 | .00020 | 22.70 | | | | | U | U |
| 11/21/1993 | Polonium-210 | 4 | PM | 1449.2 | .00350 | .00180 | 22.70 | | | | | | |
| 11/21/1993 | Lead-210 | 4 | PM | 1449.2 | .02082 | .00120 | 22.70 | | | | | | |
| 11/21/1993 | Radium-228 | 4 | PM | 1449.2 | .00013 | .00690 | 22.70 | | | | | U | U |
| 11/21/1993 | Uranium | 4 | PM | 1449.2 | .00007 | .00000 | 22.70 | .00004 | .00000 | .00003 | | B | U |
| 11/21/1993 | Radium-226 | 4 | PM | 1449.2 | .00000 | .00160 | 22.70 | | | | | U | U |
| 11/21/1993 | Thorium-230 | 5 | PM | 1438.6 | .00008 | .00020 | 18.31 | | | | | B | U |
| 11/21/1993 | Thorium-232 | 5 | PM | 1438.6 | .00002 | .00020 | 18.31 | | | | | U | U |
| 11/21/1993 | Polonium-210 | 5 | PM | 1438.6 | .01482 | .00180 | 18.31 | | | | | | |
| 11/21/1993 | Lead-210 | 5 | PM | 1438.6 | .02012 | .00120 | 18.31 | | | | | | |
| 11/21/1993 | Radium-228 | 5 | PM | 1438.6 | .00012 | .00690 | 18.31 | | | | | U | U |
| 11/21/1993 | Uranium | 5 | PM | 1438.6 | .00004 | .00000 | 18.31 | .00002 | .00000 | .00002 | | B | U |
| 11/21/1993 | Radium-226 | 5 | PM | 1438.6 | .00001 | .00160 | 18.31 | | | | | U | U |
| 11/21/1993 | Thorium-230 | 6 | PM | 1439.3 | .00007 | .00020 | 20.54 | | | | | B | U |
| 11/21/1993 | Thorium-232 | 6 | PM | 1439.3 | .00002 | .00020 | 20.54 | | | | | B | U |
| 11/21/1993 | Polonium-210 | 6 | PM | 1439.3 | .00460 | .00180 | 20.54 | | | | | | |
| 11/21/1993 | Radium-226 | 6 | PM | 1439.3 | .00004 | .00160 | 20.54 | | | | | B | U |
| 11/21/1993 | Radium-228 | 6 | PM | 1439.3 | .00007 | .00690 | 20.54 | | | | | U | U |
| 11/21/1993 | Uranium | 6 | PM | 1439.3 | .00010 | .00000 | 20.54 | .00005 | .00000 | .00005 | | | U |

Note: Concentrations of Uranium isotopes were calculated from total uranium based on naturally occuring ratios and are expressed in pCi/m3. EPA screening levels of uranium isotopes are given in parens.

Data Report for Radionuclide Concentrations from PM10 Samples
(Validated)

| Sample Date | Chemical Name | Site No. | Type | Run Time (min.) | Chem Conc (pCi/m3) | EPA Screen. Level (pCi/m3) | Particulate Conc. (ug/m3) | U-234 (0.0002) | U-235 (0.0002) | U-238 (0.0001) | Grav Val | Quality Lab | Quality Val |
|---|---|---|---|---|---|---|---|---|---|---|---|---|---|
| 11/21/1993 | Lead-210 | 6 | PM | 1439.3 | .02080 | .00120 | 20.54 | | | | | | |
| 11/21/1993 | Thorium-230 | 7 | PM | 1392.2 | .00005 | .00020 | 5.20 | | | | | B | U |
| 11/21/1993 | Thorium-232 | 7 | PM | 1392.2 | .00000 | .00020 | 5.20 | | | | | U | U |
| 11/21/1993 | Polonium-210 | 7 | PM | 1392.2 | .00690 | .00180 | 5.20 | | | | | | |
| 11/21/1993 | Lead-210 | 7 | PM | 1392.2 | .01740 | .00120 | 5.20 | | | | | | J |
| 11/21/1993 | Radium-226 | 7 | PM | 1392.2 | .00000 | .00160 | 5.20 | | | | | U | U |
| 11/21/1993 | Uranium | 7 | PM | 1392.2 | .00006 | .00000 | 5.20 | .00003 | .00000 | .00003 | | B | UJ |
| 11/21/1993 | Radium-228 | 7 | PM | 1392.2 | .00008 | .00690 | 5.20 | | | | | U | U |
| 11/21/1993 | Thorium-230 | 8 | PM | 1464.0 | .00013 | .00020 | 19.13 | | | | | B | U |
| 11/21/1993 | Polonium-210 | 8 | PM | 1464.0 | .00897 | .00180 | 19.13 | | | | | | |
| 11/21/1993 | Lead-210 | 8 | PM | 1464.0 | .02257 | .00120 | 19.13 | | | | | | J |
| 11/21/1993 | Radium-226 | 8 | PM | 1464.0 | -.00008 | .00160 | 19.13 | | | | | U | U |
| 11/21/1993 | Radium-228 | 8 | PM | 1464.0 | .00012 | .00690 | 19.13 | | | | | U | U |
| 11/21/1993 | Uranium | 8 | PM | 1464.0 | .00019 | .00000 | 19.13 | .00010 | .00000 | .00009 | | | J |
| 11/21/1993 | Thorium-232 | 8 | PM | 1464.0 | .00001 | .00020 | 19.13 | | | | | U | U |
| 11/21/1993 | Thorium-230 | P | BL | 1440.0 | .00000 | .00020 | -1.06 | | | | | L | L |
| 11/21/1993 | Thorium-232 | P | BL | 1440.0 | .00000 | .00020 | -1.06 | | | | | L | L |
| 11/21/1993 | Polonium-210 | P | BL | 1440.0 | .00000 | .00180 | -1.06 | | | | | L | L |
| 11/21/1993 | Lead-210 | P | BL | 1440.0 | .00000 | .00120 | -1.06 | | | | | L | L |
| 11/21/1993 | Radium-226 | P | BL | 1440.0 | .00000 | .00160 | -1.06 | | | | | L | L |
| 11/21/1993 | Radium-228 | P | BL | 1440.0 | .00000 | .00690 | -1.06 | | | | | L | L |
| 11/21/1993 | Uranium | P | BL | 1440.0 | .00000 | .00000 | -1.06 | .00000 | .00000 | .00000 | | L | L |
| 11/21/1993 | Thorium-230 | T | BL | 1440.0 | .00021 | .00020 | 8.47 | | | | | | |
| 11/21/1993 | Thorium-232 | T | BL | 1440.0 | .00003 | .00020 | 8.47 | | | | | B | U |
| 11/21/1993 | Polonium-210 | T | BL | 1440.0 | .00753 | .00180 | 8.47 | | | | | | |
| 11/21/1993 | Lead-210 | T | BL | 1440.0 | -.00030 | .00120 | 8.47 | | | | | U | UJ |
| 11/21/1993 | Radium-226 | T | BL | 1440.0 | .00050 | .00160 | 8.47 | | | | | B | U |
| 11/21/1993 | Radium-228 | T | BL | 1440.0 | .00004 | .00690 | 8.47 | | | | | U | U |
| 11/21/1993 | Uranium | T | BL | 1440.0 | .00016 | .00000 | 8.47 | .00008 | .00000 | .00007 | | | J |
| 11/25/1993 | Thorium-230 | 1 | PM | 1450.6 | .00012 | .00020 | 58.72 | | | | | B | U |
| 11/25/1993 | Thorium-232 | 1 | PM | 1450.6 | .00000 | .00020 | 58.72 | | | | | U | U |
| 11/25/1993 | Polonium-210 | 1 | PM | 1450.6 | .01945 | .00180 | 58.72 | | | | | | |
| 11/25/1993 | Lead-210 | 1 | PM | 1450.6 | .04026 | .00120 | 58.72 | | | | | | |
| 11/25/1993 | Radium-228 | 1 | PM | 1450.6 | .00022 | .00690 | 58.72 | | | | | B | U |
| 11/25/1993 | Uranium | 1 | PM | 1450.6 | .00010 | .00000 | 58.72 | .00005 | .00000 | .00005 | | | U |
| 11/25/1993 | Radium-226 | 1 | PM | 1450.6 | .00003 | .00160 | 58.72 | | | | | B | U |
| 11/25/1993 | Thorium-230 | 2 | PM | 1441.3 | .00004 | .00020 | 44.75 | | | | | B | U |
| 11/25/1993 | Thorium-232 | 2 | PM | 1441.3 | .00000 | .00020 | 44.75 | | | | | U | U |
| 11/25/1993 | Polonium-210 | 2 | PM | 1441.3 | .01757 | .00180 | 44.75 | | | | | | |
| 11/25/1993 | Radium-226 | 2 | PM | 1441.3 | .00003 | .00160 | 44.75 | | | | | B | U |
| 11/25/1993 | Radium-228 | 2 | PM | 1441.3 | .00037 | .00690 | 44.75 | | | | | B | U |
| 11/25/1993 | Uranium | 2 | PM | 1441.3 | .00004 | .00000 | 44.75 | .00002 | .00000 | .00002 | | B | U |
| 11/25/1993 | Lead-210 | 2 | PM | 1441.3 | .03700 | .00120 | 44.75 | | | | | | |
| 11/25/1993 | Thorium-230 | 3 | PM | 1455.8 | .00004 | .00020 | 67.42 | | | | | B | U |
| 11/25/1993 | Polonium-210 | 3 | PM | 1455.8 | .01935 | .00180 | 67.42 | | | | | | |
| 11/25/1993 | Lead-210 | 3 | PM | 1455.8 | .03890 | .00120 | 67.42 | | | | | | |
| 11/25/1993 | Radium-226 | 3 | PM | 1455.8 | .00003 | .00160 | 67.42 | | | | | B | U |
| 11/25/1993 | Radium-228 | 3 | PM | 1455.8 | .00009 | .00690 | 67.42 | | | | | U | U |
| 11/25/1993 | Uranium | 3 | PM | 1455.8 | .00005 | .00000 | 67.42 | .00003 | .00000 | .00002 | | B | U |
| 11/25/1993 | Thorium-232 | 3 | PM | 1455.8 | .00000 | .00020 | 67.42 | | | | | U | U |
| 11/25/1993 | Thorium-230 | 4 | PM | 1445.7 | .00006 | .00020 | 72.73 | | | | | B | U |

Note: Concentrations of Uranium isotopes were calculated from total uranium based on naturally occuring ratios and are expressed in pCi/m3. EPA screening levels of uranium isotopes are given in parens.

Data Report for Radionuclide Concentrations from PM10 Samples
(Validated)

| Sample Date | Chemical Name | Site No. | Type | Run Time (min.) | Chem Conc (pCi/m3) | EPA Screen. Level (pCi/m3) | Particulate Conc. (ug/m3) | U-234 (0.0002) | U-235 (0.0002) | U-238 (0.0001) | Grav Val | Quality Lab | Quality Val |
|---|---|---|---|---|---|---|---|---|---|---|---|---|---|
| 11/25/1993 | Polonium-210 | 4 | PM | 1445.7 | .01888 | .00180 | 72.73 | | | | | | |
| 11/25/1993 | Lead-210 | 4 | PM | 1445.7 | .03617 | .00120 | 72.73 | | | | | | |
| 11/25/1993 | Radium-226 | 4 | PM | 1445.7 | .00002 | .00160 | 72.73 | | | | | U | U |
| 11/25/1993 | Radium-228 | 4 | PM | 1445.7 | .00020 | .00690 | 72.73 | | | | | B | U |
| 11/25/1993 | Thorium-232 | 4 | PM | 1445.7 | .00001 | .00020 | 72.73 | | | | | U | U |
| 11/25/1993 | Uranium | 4 | PM | 1445.7 | .00007 | .00000 | 72.73 | .00004 | .00000 | .00003 | | B | U |
| 11/25/1993 | Thorium-230 | 5 | PM | 1444.0 | .00020 | .00020 | 40.39 | | | | | | |
| 11/25/1993 | Thorium-232 | 5 | PM | 1444.0 | .00000 | .00020 | 40.39 | | | | | U | U |
| 11/25/1993 | Polonium-210 | 5 | PM | 1444.0 | .03004 | .00180 | 40.39 | | | | | | |
| 11/25/1993 | Lead-210 | 5 | PM | 1444.0 | .03245 | .00120 | 40.39 | | | | | | |
| 11/25/1993 | Radium-226 | 5 | PM | 1444.0 | -.00001 | .00160 | 40.39 | | | | | U | U |
| 11/25/1993 | Radium-228 | 5 | PM | 1444.0 | .00108 | .00690 | 40.39 | | | | | U | U |
| 11/25/1993 | Uranium | 5 | PM | 1444.0 | .00003 | .00000 | 40.39 | .00002 | .00000 | .00002 | | B | U |
| 11/25/1993 | Thorium-230 | 6 | PM | 1444.1 | .00022 | .00020 | 35.35 | | | | | | |
| 11/25/1993 | Thorium-232 | 6 | PM | 1444.1 | .00000 | .00020 | 35.35 | | | | | U | U |
| 11/25/1993 | Polonium-210 | 6 | PM | 1444.1 | .02653 | .00180 | 35.35 | | | | | | |
| 11/25/1993 | Lead-210 | 6 | PM | 1444.1 | .03166 | .00120 | 35.35 | | | | | | |
| 11/25/1993 | Radium-226 | 6 | PM | 1444.1 | .00005 | .00160 | 35.35 | | | | | U | U |
| 11/25/1993 | Uranium | 6 | PM | 1444.1 | .00000 | .00000 | 35.35 | .00000 | .00000 | .00000 | | B | U |
| 11/25/1993 | Radium-228 | 6 | PM | 1444.1 | .00130 | .00690 | 35.35 | | | | | U | U |
| 11/25/1993 | Thorium-230 | 7 | PM | 1442.0 | .00025 | .00020 | 47.21 | | | | | | |
| 11/25/1993 | Thorium-232 | 7 | PM | 1442.0 | .00000 | .00020 | 47.21 | | | | | U | U |
| 11/25/1993 | Polonium-210 | 7 | PM | 1442.0 | .03548 | .00180 | 47.21 | | | | | | |
| 11/25/1993 | Lead-210 | 7 | PM | 1442.0 | .03602 | .00120 | 47.21 | | | | | | |
| 11/25/1993 | Radium-226 | 7 | PM | 1442.0 | .00003 | .00160 | 47.21 | | | | | U | U |
| 11/25/1993 | Uranium | 7 | PM | 1442.0 | .00006 | .00000 | 47.21 | .00003 | .00000 | .00003 | | B | U |
| 11/25/1993 | Radium-228 | 7 | PM | 1442.0 | .00008 | .00690 | 47.21 | | | | | U | U |
| 11/25/1993 | Thorium-230 | 8 | PM | 1562.0 | .00005 | .00020 | 54.58 | | | | SR | B | U |
| 11/25/1993 | Thorium-232 | 8 | PM | 1562.0 | .00001 | .00020 | 54.58 | | | | SR | U | U |
| 11/25/1993 | Polonium-210 | 8 | PM | 1562.0 | .01906 | .00180 | 54.58 | | | | SR | | |
| 11/25/1993 | Lead-210 | 8 | PM | 1562.0 | .03421 | .00120 | 54.58 | | | | SR | | |
| 11/25/1993 | Radium-226 | 8 | PM | 1562.0 | .00000 | .00160 | 54.58 | | | | SR | U | U |
| 11/25/1993 | Uranium | 8 | PM | 1562.0 | .00007 | .00000 | 54.58 | .00003 | .00000 | .00003 | SR | B | U |
| 11/25/1993 | Radium-228 | 8 | PM | 1562.0 | .00101 | .00690 | 54.58 | | | | SR | U | U |
| 11/25/1993 | Thorium-230 | P | BL | 1440.0 | .00006 | .00020 | -1.11 | | | | | B | U |
| 11/25/1993 | Thorium-232 | P | BL | 1440.0 | .00001 | .00020 | -1.11 | | | | | U | U |
| 11/25/1993 | Polonium-210 | P | BL | 1440.0 | .00007 | .00180 | -1.11 | | | | | U | U |
| 11/25/1993 | Radium-226 | P | BL | 1440.0 | .00020 | .00160 | -1.11 | | | | | U | U |
| 11/25/1993 | Radium-228 | P | BL | 1440.0 | .00039 | .00690 | -1.11 | | | | | U | U |
| 11/25/1993 | Lead-210 | P | BL | 1440.0 | -.00008 | .00120 | -1.11 | | | | | U | U |
| 11/25/1993 | Uranium | P | BL | 1440.0 | .00001 | .00000 | -1.11 | .00001 | .00000 | .00001 | | B | U |
| 11/25/1993 | Thorium-230 | T | BL | 1440.0 | .00008 | .00020 | 3.31 | | | | | B | U |
| 11/25/1993 | Thorium-232 | T | BL | 1440.0 | .00001 | .00020 | 3.31 | | | | | U | U |
| 11/25/1993 | Polonium-210 | T | BL | 1440.0 | .00042 | .00180 | 3.31 | | | | | U | U |
| 11/25/1993 | Lead-210 | T | BL | 1440.0 | -.00029 | .00120 | 3.31 | | | | | U | U |
| 11/25/1993 | Radium-226 | T | BL | 1440.0 | -.00023 | .00160 | 3.31 | | | | | U | U |
| 11/25/1993 | Uranium | T | BL | 1440.0 | .00010 | .00000 | 3.31 | .00005 | .00000 | .00005 | | | U |
| 11/25/1993 | Radium-228 | T | BL | 1440.0 | .00121 | .00690 | 3.31 | | | | | U | U |
| 11/29/1993 | Thorium-230 | 1 | PM | 1446.0 | .00006 | .00020 | 43.15 | | | | | B | U |
| 11/29/1993 | Thorium-232 | 1 | PM | 1446.0 | .00002 | .00020 | 43.15 | | | | | B | U |
| 11/29/1993 | Polonium-210 | 1 | PM | 1446.0 | .02934 | .00180 | 43.15 | | | | | | |

Note: Concentrations of Uranium isotopes were calculated from total uranium based on naturally occuring ratios and are expressed in pCi/m3. EPA screening levels of uranium isotopes are given in parens.

Data Report for Radionuclide Concentrations from PM10 Samples
(Validated)

| Sample Date | Chemical Name | Site No. | Type | Run Time (min.) | Chem Conc (pCi/m3) | EPA Screen. Level (pCi/m3) | Particulate Conc. (ug/m3) | U-234 (0.0002) | U-235 (0.0002) | U-238 (0.0001) | Grav Val | Quality Lab | Quality Val |
|---|---|---|---|---|---|---|---|---|---|---|---|---|---|
| 11/29/1993 | Lead-210 | 1 | PM | 1446.0 | .05377 | .00120 | 43.15 | | | | | | |
| 11/29/1993 | Radium-226 | 1 | PM | 1446.0 | .00017 | .00160 | 43.15 | | | | | U | U |
| 11/29/1993 | Uranium | 1 | PM | 1446.0 | .00017 | .00000 | 43.15 | .00008 | .00000 | .00008 | | | |
| 11/29/1993 | Radium-228 | 1 | PM | 1446.0 | .00007 | .00690 | 43.15 | | | | | U | U |
| 11/29/1993 | Thorium-230 | 2 | PM | 1445.7 | .00024 | .00020 | 56.51 | | | | | | |
| 11/29/1993 | Thorium-232 | 2 | PM | 1445.7 | .00001 | .00020 | 56.51 | | | | | U | U |
| 11/29/1993 | Polonium-210 | 2 | PM | 1445.7 | .05315 | .00180 | 56.51 | | | | | | |
| 11/29/1993 | Radium-226 | 2 | PM | 1445.7 | .00018 | .00160 | 56.51 | | | | | U | U |
| 11/29/1993 | Radium-228 | 2 | PM | 1445.7 | .00056 | .00690 | 56.51 | | | | | U | U |
| 11/29/1993 | Uranium | 2 | PM | 1445.7 | .00051 | .00000 | 56.51 | .00026 | .00001 | .00024 | | | |
| 11/29/1993 | Lead-210 | 2 | PM | 1445.7 | .05432 | .00120 | 56.51 | | | | | | |
| 11/29/1993 | Thorium-230 | 3 | PM | 1454.1 | .00004 | .00020 | 31.36 | | | | | B | U |
| 11/29/1993 | Polonium-210 | 3 | PM | 1454.1 | .02051 | .00180 | 31.36 | | | | | | |
| 11/29/1993 | Lead-210 | 3 | PM | 1454.1 | .04612 | .00120 | 31.36 | | | | | | |
| 11/29/1993 | Radium-226 | 3 | PM | 1454.1 | .00000 | .00160 | 31.36 | | | | | U | U |
| 11/29/1993 | Radium-228 | 3 | PM | 1454.1 | -.00074 | .00690 | 31.36 | | | | | U | U |
| 11/29/1993 | Thorium-232 | 3 | PM | 1454.1 | .00001 | .00020 | 31.36 | | | | | U | U |
| 11/29/1993 | Uranium | 3 | PM | 1454.1 | .00005 | .00000 | 31.36 | .00003 | .00000 | .00003 | | B | U |
| 11/29/1993 | Thorium-230 | 4 | PM | 1446.9 | .00005 | .00020 | 34.79 | | | | | B | U |
| 11/29/1993 | Thorium-232 | 4 | PM | 1446.9 | .00001 | .00020 | 34.79 | | | | | B | U |
| 11/29/1993 | Polonium-210 | 4 | PM | 1446.9 | .02824 | .00180 | 34.79 | | | | | | J |
| 11/29/1993 | Lead-210 | 4 | PM | 1446.9 | .04914 | .00120 | 34.79 | | | | | | |
| 11/29/1993 | Radium-226 | 4 | PM | 1446.9 | .00056 | .00160 | 34.79 | | | | | B | U |
| 11/29/1993 | Radium-228 | 4 | PM | 1446.9 | .00148 | .00690 | 34.79 | | | | | U | U |
| 11/29/1993 | Uranium | 4 | PM | 1446.9 | .00009 | .00000 | 34.79 | .00004 | .00000 | .00004 | | | U |
| 11/29/1993 | Thorium-232 | 5 | PM | 1437.8 | .00000 | .00020 | 40.49 | | | | | U | U |
| 11/29/1993 | Polonium-210 | 5 | PM | 1437.8 | .09940 | .00180 | 40.49 | | | | | | J |
| 11/29/1993 | Lead-210 | 5 | PM | 1437.8 | .04693 | .00120 | 40.49 | | | | | | |
| 11/29/1993 | Radium-226 | 5 | PM | 1437.8 | .00131 | .00160 | 40.49 | | | | | B | U |
| 11/29/1993 | Radium-228 | 5 | PM | 1437.8 | .00124 | .00690 | 40.49 | | | | | U | U |
| 11/29/1993 | Thorium-230 | 5 | PM | 1437.8 | .00092 | .00020 | 40.49 | | | | | | |
| 11/29/1993 | Uranium | 5 | PM | 1437.8 | .00023 | .00000 | 40.49 | .00011 | .00001 | .00011 | | | |
| 11/29/1993 | Thorium-230 | 6 | PM | 1440.5 | .00005 | .00020 | 22.64 | | | | | B | U |
| 11/29/1993 | Thorium-232 | 6 | PM | 1440.5 | .00000 | .00020 | 22.64 | | | | | U | U |
| 11/29/1993 | Polonium-210 | 6 | PM | 1440.5 | .01762 | .00180 | 22.64 | | | | | | J |
| 11/29/1993 | Lead-210 | 6 | PM | 1440.5 | .05423 | .00120 | 22.64 | | | | | | |
| 11/29/1993 | Radium-226 | 6 | PM | 1440.5 | .00074 | .00160 | 22.64 | | | | | B | U |
| 11/29/1993 | Radium-228 | 6 | PM | 1440.5 | .00078 | .00690 | 22.64 | | | | | U | U |
| 11/29/1993 | Uranium | 6 | PM | 1440.5 | .00005 | .00000 | 22.64 | .00003 | .00000 | .00002 | | B | U |
| 11/29/1993 | Thorium-230 | 7 | PM | 1440.0 | .00009 | .00020 | 20.52 | | | | | B | U |
| 11/29/1993 | Thorium-232 | 7 | PM | 1440.0 | .00000 | .00020 | 20.52 | | | | | U | U |
| 11/29/1993 | Polonium-210 | 7 | PM | 1440.0 | .02953 | .00180 | 20.52 | | | | | | |
| 11/29/1993 | Lead-210 | 7 | PM | 1440.0 | .04241 | .00120 | 20.52 | | | | | | |
| 11/29/1993 | Radium-226 | 7 | PM | 1440.0 | .00038 | .00160 | 20.52 | | | | | U | U |
| 11/29/1993 | Radium-228 | 7 | PM | 1440.0 | .00135 | .00690 | 20.52 | | | | | U | U |
| 11/29/1993 | Uranium | 7 | PM | 1440.0 | .00008 | .00000 | 20.52 | .00004 | .00000 | .00004 | | B | U |
| 11/29/1993 | Thorium-232 | 8 | PM | 1460.8 | .00000 | .00020 | 44.48 | | | | | U | U |
| 11/29/1993 | Polonium-210 | 8 | PM | 1460.8 | .03312 | .00180 | 44.48 | | | | | | J |
| 11/29/1993 | Lead-210 | 8 | PM | 1460.8 | .05557 | .00120 | 44.48 | | | | | | |
| 11/29/1993 | Radium-226 | 8 | PM | 1460.8 | .00003 | .00160 | 44.48 | | | | | U | U |
| 11/29/1993 | Uranium | 8 | PM | 1460.8 | .00016 | .00000 | 44.48 | .00008 | .00000 | .00008 | | | |

Note: Concentrations of Uranium isotopes were calculated from total uranium based on naturally occuring ratios and are expressed in pCi/m3. EPA screening levels of uranium isotopes are given in parens.

Data Report for Radionuclide Concentrations from PM10 Samples
(Validated)

| Sample Date | Chemical Name | Site No. | Type | Run Time (min.) | Chem Conc (pCi/m3) | EPA Screen. Level (pCi/m3) | Particulate Conc. (ug/m3) | U-234 (0.0002) | U-235 (0.0002) | U-238 (0.0001) | Grav Val | Quality Lab | Quality Val |
|---|---|---|---|---|---|---|---|---|---|---|---|---|---|
| 11/29/1993 | Thorium-230 | 8 | PM | 1460.8 | .00011 | .00020 | 44.48 | | | | | B | U |
| 11/29/1993 | Radium-228 | 8 | PM | 1460.8 | .00202 | .00690 | 44.48 | | | | | B | U |
| 12/03/1993 | Thorium-230 | 1 | PM | 1453.9 | .00009 | .00020 | 15.23 | | | | | B | U |
| 12/03/1993 | Thorium-232 | 1 | PM | 1453.9 | .00000 | .00020 | 15.23 | | | | | U | U |
| 12/03/1993 | Polonium-210 | 1 | PM | 1453.9 | .00552 | .00180 | 15.23 | | | | | | |
| 12/03/1993 | Lead-210 | 1 | PM | 1453.9 | .00897 | .00120 | 15.23 | | | | | | |
| 12/03/1993 | Radium-226 | 1 | PM | 1453.9 | -.00016 | .00160 | 15.23 | | | | | U | U |
| 12/03/1993 | Uranium | 1 | PM | 1453.9 | .00007 | .00000 | 15.23 | .00004 | .00000 | .00003 | | B | U |
| 12/03/1993 | Radium-228 | 1 | PM | 1453.9 | .00073 | .00690 | 15.23 | | | | | U | U |
| 12/03/1993 | Thorium-230 | 2 | PM | 1444.3 | .00042 | .00020 | 40.03 | | | | | | |
| 12/03/1993 | Thorium-232 | 2 | PM | 1444.3 | .00002 | .00020 | 40.03 | | | | | U | U |
| 12/03/1993 | Polonium-210 | 2 | PM | 1444.3 | .06986 | .00180 | 40.03 | | | | | | |
| 12/03/1993 | Lead-210 | 2 | PM | 1444.3 | .01153 | .00120 | 40.03 | | | | | | |
| 12/03/1993 | Radium-228 | 2 | PM | 1444.3 | .00031 | .00690 | 40.03 | | | | | U | U |
| 12/03/1993 | Uranium | 2 | PM | 1444.3 | .00078 | .00000 | 40.03 | .00039 | .00002 | .00037 | | | |
| 12/03/1993 | Radium-226 | 2 | PM | 1444.3 | -.00009 | .00160 | 40.03 | | | | | U | U |
| 12/03/1993 | Thorium-230 | 3 | PM | 1454.3 | .00002 | .00020 | 9.37 | | | | | B | U |
| 12/03/1993 | Thorium-232 | 3 | PM | 1454.3 | .00000 | .00020 | 9.37 | | | | | U | U |
| 12/03/1993 | Polonium-210 | 3 | PM | 1454.3 | .00395 | .00180 | 9.37 | | | | | | |
| 12/03/1993 | Radium-226 | 3 | PM | 1454.3 | .00036 | .00160 | 9.37 | | | | | U | U |
| 12/03/1993 | Radium-228 | 3 | PM | 1454.3 | .00097 | .00690 | 9.37 | | | | | U | U |
| 12/03/1993 | Uranium | 3 | PM | 1454.3 | .00003 | .00000 | 9.37 | .00002 | .00000 | .00002 | | B | U |
| 12/03/1993 | Lead-210 | 3 | PM | 1454.3 | .01377 | .00120 | 9.37 | | | | | | |
| 12/03/1993 | Thorium-230 | 4 | PM | 1448.2 | .00005 | .00020 | 12.80 | | | | | B | U |
| 12/03/1993 | Thorium-232 | 4 | PM | 1448.2 | .00000 | .00020 | 12.80 | | | | | U | U |
| 12/03/1993 | Polonium-210 | 4 | PM | 1448.2 | .00262 | .00180 | 12.80 | | | | | | J |
| 12/03/1993 | Lead-210 | 4 | PM | 1448.2 | .00942 | .00120 | 12.80 | | | | | | |
| 12/03/1993 | Radium-226 | 4 | PM | 1448.2 | .00004 | .00160 | 12.80 | | | | | U | U |
| 12/03/1993 | Radium-228 | 4 | PM | 1448.2 | .00043 | .00690 | 12.80 | | | | | U | U |
| 12/03/1993 | Uranium | 4 | PM | 1448.2 | .00006 | .00000 | 12.80 | .00003 | .00000 | .00003 | | B | U |
| 12/03/1993 | Thorium-232 | 5 | PM | 1442.1 | .00001 | .00020 | 10.62 | | | | | U | U |
| 12/03/1993 | Polonium-210 | 5 | PM | 1442.1 | .00592 | .00180 | 10.62 | | | | | | J |
| 12/03/1993 | Lead-210 | 5 | PM | 1442.1 | .00884 | .00120 | 10.62 | | | | | | |
| 12/03/1993 | Radium-226 | 5 | PM | 1442.1 | .00110 | .00160 | 10.62 | | | | | B | U |
| 12/03/1993 | Uranium | 5 | PM | 1442.1 | .00047 | .00000 | 10.62 | .00024 | .00001 | .00022 | | | |
| 12/03/1993 | Thorium-230 | 5 | PM | 1442.1 | .00008 | .00020 | 10.62 | | | | | B | U |
| 12/03/1993 | Radium-228 | 5 | PM | 1442.1 | .00079 | .00690 | 10.62 | | | | | U | U |
| 12/03/1993 | Thorium-230 | 6 | PM | 1440.6 | .00008 | .00020 | 5.13 | | | | | B | U |
| 12/03/1993 | Thorium-232 | 6 | PM | 1440.6 | .00000 | .00020 | 5.13 | | | | | U | U |
| 12/03/1993 | Polonium-210 | 6 | PM | 1440.6 | .00299 | .00180 | 5.13 | | | | | | J |
| 12/03/1993 | Lead-210 | 6 | PM | 1440.6 | .00981 | .00120 | 5.13 | | | | | | |
| 12/03/1993 | Radium-226 | 6 | PM | 1440.6 | .00045 | .00160 | 5.13 | | | | | B | U |
| 12/03/1993 | Radium-228 | 6 | PM | 1440.6 | .00147 | .00690 | 5.13 | | | | | U | U |
| 12/03/1993 | Uranium | 6 | PM | 1440.6 | .00002 | .00000 | 5.13 | .00001 | .00000 | .00001 | | B | U |
| 12/03/1993 | Thorium-230 | 7 | PM | 1438.6 | .00010 | .00020 | 6.65 | | | | | B | U |
| 12/03/1993 | Thorium-232 | 7 | PM | 1438.6 | .00001 | .00020 | 6.65 | | | | | U | U |
| 12/03/1993 | Polonium-210 | 7 | PM | 1438.6 | .00350 | .00180 | 6.65 | | | | | | |
| 12/03/1993 | Lead-210 | 7 | PM | 1438.6 | .00882 | .00120 | 6.65 | | | | | | |
| 12/03/1993 | Radium-228 | 7 | PM | 1438.6 | .00163 | .00690 | 6.65 | | | | | U | U |
| 12/03/1993 | Uranium | 7 | PM | 1438.6 | .00006 | .00000 | 6.65 | .00003 | .00000 | .00003 | | B | U |
| 12/03/1993 | Radium-226 | 7 | PM | 1438.6 | -.00010 | .00160 | 6.65 | | | | | U | U |

Note: Concentrations of Uranium isotopes were calculated from total uranium based on naturally occuring ratios and are expressed in pCi/m3. EPA screening levels of uranium isotopes are given in parens.

Data Report for Radionuclide Concentrations from PM10 Samples
(Validated)

| Sample Date | Chemical Name | Site No. | Type | Run Time (min.) | Chem Conc (pCi/m3) | EPA Screen. Level (pCi/m3) | Particulate Conc. (ug/m3) | U-234 (0.0002) | U-235 (0.0002) | U-238 (0.0001) | Grav Val | Quality Lab | Quality Val |
|---|---|---|---|---|---|---|---|---|---|---|---|---|---|
| 12/03/1993 | Thorium-230 | 8 | PM | 1462.9 | .00011 | .00020 | 15.67 | | | | | B | U |
| 12/03/1993 | Thorium-232 | 8 | PM | 1462.9 | .00001 | .00020 | 15.67 | | | | | U | U |
| 12/03/1993 | Polonium-210 | 8 | PM | 1462.9 | .00582 | .00180 | 15.67 | | | | | | |
| 12/03/1993 | Lead-210 | 8 | PM | 1462.9 | .01031 | .00120 | 15.67 | | | | | | |
| 12/03/1993 | Radium-228 | 8 | PM | 1462.9 | .00099 | .00690 | 15.67 | | | | | U | U |
| 12/03/1993 | Uranium | 8 | PM | 1462.9 | .00009 | .00000 | 15.67 | .00005 | .00000 | .00004 | | | U |
| 12/03/1993 | Radium-226 | 8 | PM | 1462.9 | .00037 | .00160 | 15.67 | | | | | U | U |
| 12/03/1993 | Thorium-230 | P | BL | 1440.0 | .00007 | .00020 | -.79 | | | | | B | U |
| 12/03/1993 | Thorium-232 | P | BL | 1440.0 | .00000 | .00020 | -.79 | | | | | U | U |
| 12/03/1993 | Polonium-210 | P | BL | 1440.0 | .00005 | .00180 | -.79 | | | | | U | U |
| 12/03/1993 | Lead-210 | P | BL | 1440.0 | -.00021 | .00120 | -.79 | | | | | U | U |
| 12/03/1993 | Radium-228 | P | BL | 1440.0 | .00049 | .00690 | -.79 | | | | | U | U |
| 12/03/1993 | Uranium | P | BL | 1440.0 | .00004 | .00000 | -.79 | .00002 | .00000 | .00002 | | B | U |
| 12/03/1993 | Radium-226 | P | BL | 1440.0 | -.00011 | .00160 | -.79 | | | | | U | U |
| 12/03/1993 | Thorium-230 | T | BL | 1440.0 | .00007 | .00020 | 3.26 | | | | | B | U |
| 12/03/1993 | Thorium-232 | T | BL | 1440.0 | -.00001 | .00020 | 3.26 | | | | | U | U |
| 12/03/1993 | Polonium-210 | T | BL | 1440.0 | .00004 | .00180 | 3.26 | | | | | U | U |
| 12/03/1993 | Radium-226 | T | BL | 1440.0 | -.00013 | .00160 | 3.26 | | | | | U | U |
| 12/03/1993 | Radium-228 | T | BL | 1440.0 | .00153 | .00690 | 3.26 | | | | | U | U |
| 12/03/1993 | Uranium | T | BL | 1440.0 | .00013 | .00000 | 3.26 | .00007 | .00000 | .00006 | | | |
| 12/03/1993 | Lead-210 | T | BL | 1440.0 | -.00006 | .00120 | 3.26 | | | | | U | U |
| 12/07/1993 | Thorium-230 | 1 | PM | 1448.9 | .00010 | .00020 | 15.25 | | | | | B | U |
| 12/07/1993 | Thorium-232 | 1 | PM | 1448.9 | .00000 | .00020 | 15.25 | | | | | U | U |
| 12/07/1993 | Polonium-210 | 1 | PM | 1448.9 | .00694 | .00180 | 15.25 | | | | | | |
| 12/07/1993 | Lead-210 | 1 | PM | 1448.9 | .03208 | .00120 | 15.25 | | | | | | |
| 12/07/1993 | Radium-228 | 1 | PM | 1448.9 | .00198 | .00690 | 15.25 | | | | | U | U |
| 12/07/1993 | Uranium | 1 | PM | 1448.9 | .00007 | .00000 | 15.25 | .00004 | .00000 | .00003 | | B | U |
| 12/07/1993 | Radium-226 | 1 | PM | 1448.9 | .00022 | .00160 | 15.25 | | | | | U | U |
| 12/07/1993 | Thorium-230 | 2 | PM | 1444.5 | .00014 | .00020 | 23.49 | | | | | B | U |
| 12/07/1993 | Thorium-232 | 2 | PM | 1444.5 | .00001 | .00020 | 23.49 | | | | | U | U |
| 12/07/1993 | Polonium-210 | 2 | PM | 1444.5 | .01665 | .00180 | 23.49 | | | | | | |
| 12/07/1993 | Lead-210 | 2 | PM | 1444.5 | .03248 | .00120 | 23.49 | | | | | | |
| 12/07/1993 | Radium-226 | 2 | PM | 1444.5 | .00041 | .00160 | 23.49 | | | | | U | U |
| 12/07/1993 | Radium-228 | 2 | PM | 1444.5 | .00064 | .00690 | 23.49 | | | | | U | U |
| 12/07/1993 | Uranium | 2 | PM | 1444.5 | .00038 | .00000 | 23.49 | .00019 | .00001 | .00018 | | | |
| 12/07/1993 | Thorium-230 | 3 | PM | 1456.5 | .00009 | .00020 | 9.19 | | | | | B | U |
| 12/07/1993 | Thorium-232 | 3 | PM | 1456.5 | .00001 | .00020 | 9.19 | | | | | U | U |
| 12/07/1993 | Lead-210 | 3 | PM | 1456.5 | .03357 | .00120 | 9.19 | | | | | | |
| 12/07/1993 | Radium-226 | 3 | PM | 1456.5 | -.00017 | .00160 | 9.19 | | | | | U | U |
| 12/07/1993 | Radium-228 | 3 | PM | 1456.5 | .00164 | .00690 | 9.19 | | | | | U | U |
| 12/07/1993 | Polonium-210 | 3 | PM | 1456.5 | .00650 | .00180 | 9.19 | | | | | | |
| 12/07/1993 | Uranium | 3 | PM | 1456.5 | .00002 | .00000 | 9.19 | .00001 | .00000 | .00001 | | B | U |
| 12/07/1993 | Thorium-230 | 4 | PM | 1446.6 | .00009 | .00020 | 15.22 | | | | | B | U |
| 12/07/1993 | Thorium-232 | 4 | PM | 1446.6 | .00000 | .00020 | 15.22 | | | | | U | U |
| 12/07/1993 | Polonium-210 | 4 | PM | 1446.6 | .00552 | .00180 | 15.22 | | | | | | |
| 12/07/1993 | Lead-210 | 4 | PM | 1446.6 | .03170 | .00120 | 15.22 | | | | | | |
| 12/07/1993 | Radium-228 | 4 | PM | 1446.6 | -.00034 | .00690 | 15.22 | | | | | U | U |
| 12/07/1993 | Uranium | 4 | PM | 1446.6 | .00005 | .00000 | 15.22 | .00003 | .00000 | .00003 | | B | U |
| 12/07/1993 | Radium-226 | 4 | PM | 1446.6 | .00002 | .00160 | 15.22 | | | | | U | U |
| 12/07/1993 | Thorium-230 | 5 | PM | 1441.2 | .00072 | .00020 | 24.66 | | | | | | |
| 12/07/1993 | Thorium-232 | 5 | PM | 1441.2 | .00000 | .00020 | 24.66 | | | | | U | U |

Note: Concentrations of Uranium isotopes were calculated from total uranium based on naturally occuring ratios and are expressed in pCi/m3. EPA screening levels of uranium isotopes are given in parens.

Data Report for Radionuclide Concentrations from PM10 Samples (Validated) 07/31/1995



| Sample Date | Chemical Name | Site No. | Type | Run Time (min.) | Chem Conc (pCi/m3) | EPA Screen. Level (pCi/m3) | Particulate Conc. (ug/m3) | U-234 (0.0002) | U-235 (0.0002) | U-238 (0.0001) | Grav Val | Quality Lab | Quality Val |
|---|---|---|---|---|---|---|---|---|---|---|---|---|---|
| 12/07/1993 | Polonium-210 | 5 | PM | 1441.2 | .02160 | .00180 | 24.66 | | | | | | |
| 12/07/1993 | Lead-210 | 5 | PM | 1441.2 | .02614 | .00120 | 24.66 | | | | | | |
| 12/07/1993 | Radium-228 | 5 | PM | 1441.2 | .00009 | .00690 | 24.66 | | | | | U | U |
| 12/07/1993 | Uranium | 5 | PM | 1441.2 | .00028 | .00000 | 24.66 | .00014 | .00001 | .00013 | | | |
| 12/07/1993 | Radium-226 | 5 | PM | 1441.2 | -.00014 | .00160 | 24.66 | | | | | U | U |
| 12/07/1993 | Thorium-230 | 6 | PM | 1441.4 | .00012 | .00020 | 6.47 | | | | | B | U |
| 12/07/1993 | Thorium-232 | 6 | PM | 1441.4 | .00001 | .00020 | 6.47 | | | | | U | U |
| 12/07/1993 | Polonium-210 | 6 | PM | 1441.4 | .00664 | .00180 | 6.47 | | | | | | |
| 12/07/1993 | Lead-210 | 6 | PM | 1441.4 | .00000 | .00120 | 6.47 | | | | | | L |
| 12/07/1993 | Radium-226 | 6 | PM | 1441.4 | .00002 | .00160 | 6.47 | | | | | U | U |
| 12/07/1993 | Radium-228 | 6 | PM | 1441.4 | .00097 | .00690 | 6.47 | | | | | U | U |
| 12/07/1993 | Uranium | 6 | PM | 1441.4 | .00003 | .00000 | 6.47 | .00002 | .00000 | .00001 | | B | U |
| 12/07/1993 | Thorium-230 | 7 | PM | 1440.9 | .00007 | .00020 | 24.64 | | | | | B | U |
| 12/07/1993 | Thorium-232 | 7 | PM | 1440.9 | .00000 | .00020 | 24.64 | | | | | U | U |
| 12/07/1993 | Lead-210 | 7 | PM | 1440.9 | .02829 | .00120 | 24.64 | | | | | | |
| 12/07/1993 | Radium-226 | 7 | PM | 1440.9 | -.00018 | .00160 | 24.64 | | | | | U | U |
| 12/07/1993 | Radium-228 | 7 | PM | 1440.9 | .00118 | .00690 | 24.64 | | | | | U | U |
| 12/07/1993 | Uranium | 7 | PM | 1440.9 | .00015 | .00000 | 24.64 | .00007 | .00000 | .00007 | | | |
| 12/07/1993 | Polonium-210 | 7 | PM | 1440.9 | .01825 | .00180 | 24.64 | | | | | | |
| 12/07/1993 | Thorium-230 | 8 | PM | 1460.0 | .00013 | .00020 | 15.21 | | | | | B | U |
| 12/07/1993 | Thorium-232 | 8 | PM | 1460.0 | .00000 | .00020 | 15.21 | | | | | U | U |
| 12/07/1993 | Polonium-210 | 8 | PM | 1460.0 | .00746 | .00180 | 15.21 | | | | | | |
| 12/07/1993 | Radium-226 | 8 | PM | 1460.0 | .00011 | .00160 | 15.21 | | | | | U | U |
| 12/07/1993 | Radium-228 | 8 | PM | 1460.0 | .00293 | .00690 | 15.21 | | | | | U | U |
| 12/07/1993 | Uranium | 8 | PM | 1460.0 | .00007 | .00000 | 15.21 | .00004 | .00000 | .00004 | | B | U |
| 12/07/1993 | Lead-210 | 8 | PM | 1460.0 | .03578 | .00120 | 15.21 | | | | | | |
| 12/07/1993 | Thorium-230 | P | BL | 1440.0 | .00006 | .00020 | -.60 | | | | | B | U |
| 12/07/1993 | Thorium-232 | P | BL | 1440.0 | .00000 | .00020 | -.60 | | | | | U | U |
| 12/07/1993 | Polonium-210 | P | BL | 1440.0 | .00000 | .00180 | -.60 | | | | | U | U |
| 12/07/1993 | Lead-210 | P | BL | 1440.0 | -.00046 | .00120 | -.60 | | | | | U | U |
| 12/07/1993 | Radium-228 | P | BL | 1440.0 | -.00050 | .00690 | -.60 | | | | | U | U |
| 12/07/1993 | Uranium | P | BL | 1440.0 | .00002 | .00000 | -.60 | .00001 | .00000 | .00001 | | B | U |
| 12/07/1993 | Radium-226 | P | BL | 1440.0 | -.00025 | .00160 | -.60 | | | | | U | U |
| 12/07/1993 | Thorium-232 | T | BL | 1440.0 | .00001 | .00020 | 3.16 | | | | | U | U |
| 12/07/1993 | Polonium-210 | T | BL | 1440.0 | .00017 | .00180 | 3.16 | | | | | U | U |
| 12/07/1993 | Lead-210 | T | BL | 1440.0 | .00024 | .00120 | 3.16 | | | | | | U |
| 12/07/1993 | Radium-226 | T | BL | 1440.0 | -.00024 | .00160 | 3.16 | | | | | U | U |
| 12/07/1993 | Radium-228 | T | BL | 1440.0 | .00136 | .00690 | 3.16 | | | | | U | U |
| 12/07/1993 | Thorium-230 | T | BL | 1440.0 | .00013 | .00020 | 3.16 | | | | | B | U |
| 12/07/1993 | Uranium | T | BL | 1440.0 | .00008 | .00000 | 3.16 | .00004 | .00000 | .00004 | | B | U |
| 12/11/1993 | Thorium-230 | 1 | PM | 1454.2 | .00037 | .00020 | 19.92 | | | | | | |
| 12/11/1993 | Thorium-232 | 1 | PM | 1454.2 | -.00001 | .00020 | 19.92 | | | | | U | U |
| 12/11/1993 | Polonium-210 | 1 | PM | 1454.2 | .00764 | .00180 | 19.92 | | | | | | |
| 12/11/1993 | Lead-210 | 1 | PM | 1454.2 | .02786 | .00120 | 19.92 | | | | | | |
| 12/11/1993 | Radium-228 | 1 | PM | 1454.2 | .00140 | .00690 | 19.92 | | | | | U | U |
| 12/11/1993 | Uranium | 1 | PM | 1454.2 | .00014 | .00000 | 19.92 | .00007 | .00000 | .00007 | | | |
| 12/11/1993 | Radium-226 | 1 | PM | 1454.2 | .00016 | .00160 | 19.92 | | | | | U | U |
| 12/11/1993 | Thorium-230 | 2 | PM | 1445.4 | .00026 | .00020 | 31.45 | | | | | | |
| 12/11/1993 | Thorium-232 | 2 | PM | 1445.4 | .00001 | .00020 | 31.45 | | | | | U | U |
| 12/11/1993 | Polonium-210 | 2 | PM | 1445.4 | .02336 | .00180 | 31.45 | | | | | | |
| 12/11/1993 | Lead-210 | 2 | PM | 1445.4 | .02787 | .00120 | 31.45 | | | | | | |

Note: Concentrations of Uranium isotopes were calculated from total uranium based on naturally occuring ratios and are expressed in pCi/m3. EPA screening levels of uranium isotopes are given in parens.

Data Report for Radionuclide Concentrations from PM10 Samples (Validated)



| Sample Date | Chemical Name | Site No. | Type | Run Time (min.) | Chem Conc (pCi/m3) | EPA Screen. Level (pCi/m3) | Particulate Conc. (ug/m3) | U-234 (0.0002) | U-235 (0.0002) | U-238 (0.0001) | Grav Val | Quality Lab | Quality Val |
|---|---|---|---|---|---|---|---|---|---|---|---|---|---|
| 12/11/1993 | Radium-228 | 2 | PM | 1445.4 | .00170 | .00690 | 31.45 | | | | | U | U |
| 12/11/1993 | Uranium | 2 | PM | 1445.4 | .00043 | .00000 | 31.45 | .00022 | .00001 | .00021 | | | |
| 12/11/1993 | Radium-226 | 2 | PM | 1445.4 | -.00003 | .00160 | 31.45 | | | | | U | U |
| 12/11/1993 | Thorium-230 | 3 | PM | 1455.9 | .00008 | .00020 | 14.89 | | | | | B | U |
| 12/11/1993 | Thorium-232 | 3 | PM | 1455.9 | .00000 | .00020 | 14.89 | | | | | U | U |
| 12/11/1993 | Polonium-210 | 3 | PM | 1455.9 | .00629 | .00180 | 14.89 | | | | | | |
| 12/11/1993 | Lead-210 | 3 | PM | 1455.9 | .02665 | .00120 | 14.89 | | | | | | |
| 12/11/1993 | Radium-228 | 3 | PM | 1455.9 | -.00041 | .00690 | 14.89 | | | | | U | U |
| 12/11/1993 | Uranium | 3 | PM | 1455.9 | .00004 | .00000 | 14.89 | .00002 | .00000 | .00002 | | B | U |
| 12/11/1993 | Radium-226 | 3 | PM | 1455.9 | .00142 | .00160 | 14.89 | | | | | B | U |
| 12/11/1993 | Thorium-230 | 4 | PM | 1451.7 | .00006 | .00020 | 17.38 | | | | | B | U |
| 12/11/1993 | Thorium-232 | 4 | PM | 1451.7 | .00001 | .00020 | 17.38 | | | | | U | U |
| 12/11/1993 | Polonium-210 | 4 | PM | 1451.7 | .01048 | .00180 | 17.38 | | | | | | |
| 12/11/1993 | Lead-210 | 4 | PM | 1451.7 | .02842 | .00120 | 17.38 | | | | | | |
| 12/11/1993 | Radium-228 | 4 | PM | 1451.7 | .00156 | .00690 | 17.38 | | | | | U | U |
| 12/11/1993 | Uranium | 4 | PM | 1451.7 | .00008 | .00000 | 17.38 | .00004 | .00000 | .00004 | | B | U |
| 12/11/1993 | Radium-226 | 4 | PM | 1451.7 | .00025 | .00160 | 17.38 | | | | | U | U |
| 12/11/1993 | Thorium-230 | 5 | PM | 1442.8 | .00009 | .00020 | 13.52 | | | | | B | U |
| 12/11/1993 | Thorium-232 | 5 | PM | 1442.8 | .00001 | .00020 | 13.52 | | | | | U | U |
| 12/11/1993 | Polonium-210 | 5 | PM | 1442.8 | .01623 | .00180 | 13.52 | | | | | | |
| 12/11/1993 | Radium-226 | 5 | PM | 1442.8 | .00032 | .00160 | 13.52 | | | | | U | U |
| 12/11/1993 | Radium-228 | 5 | PM | 1442.8 | .00105 | .00690 | 13.52 | | | | | U | U |
| 12/11/1993 | Uranium | 5 | PM | 1442.8 | .00006 | .00000 | 13.52 | .00003 | .00000 | .00003 | | B | U |
| 12/11/1993 | Lead-210 | 5 | PM | 1442.8 | .02514 | .00120 | 13.52 | | | | | | |
| 12/11/1993 | Thorium-230 | 6 | PM | 1438.5 | .00005 | .00020 | 10.33 | | | | | B | U |
| 12/11/1993 | Thorium-232 | 6 | PM | 1438.5 | .00000 | .00020 | 10.33 | | | | | U | U |
| 12/11/1993 | Polonium-210 | 6 | PM | 1438.5 | .00641 | .00180 | 10.33 | | | | | | |
| 12/11/1993 | Lead-210 | 6 | PM | 1438.5 | .02922 | .00120 | 10.33 | | | | | | |
| 12/11/1993 | Radium-226 | 6 | PM | 1438.5 | .00002 | .00160 | 10.33 | | | | | U | U |
| 12/11/1993 | Radium-228 | 6 | PM | 1438.5 | -.00064 | .00690 | 10.33 | | | | | U | U |
| 12/11/1993 | Uranium | 6 | PM | 1438.5 | .00003 | .00000 | 10.33 | .00001 | .00000 | .00001 | | B | U |
| 12/11/1993 | Thorium-232 | 7 | PM | 1440.0 | .00001 | .00020 | 22.17 | | | | | U | U |
| 12/11/1993 | Polonium-210 | 7 | PM | 1440.0 | .02546 | .00180 | 22.17 | | | | | | |
| 12/11/1993 | Lead-210 | 7 | PM | 1440.0 | .02307 | .00120 | 22.17 | | | | | | |
| 12/11/1993 | Radium-226 | 7 | PM | 1440.0 | -.00014 | .00160 | 22.17 | | | | | U | U |
| 12/11/1993 | Uranium | 7 | PM | 1440.0 | .00011 | .00000 | 22.17 | .00006 | .00000 | .00005 | | | U |
| 12/11/1993 | Thorium-230 | 7 | PM | 1440.0 | .00007 | .00020 | 22.17 | | | | | B | U |
| 12/11/1993 | Radium-228 | 7 | PM | 1440.0 | .00063 | .00690 | 22.17 | | | | | U | U |
| 12/11/1993 | Thorium-230 | 8 | PM | 1466.0 | .00011 | .00020 | 20.98 | | | | | B | U |
| 12/11/1993 | Thorium-232 | 8 | PM | 1466.0 | .00001 | .00020 | 20.98 | | | | | U | U |
| 12/11/1993 | Polonium-210 | 8 | PM | 1466.0 | .00867 | .00180 | 20.98 | | | | | | |
| 12/11/1993 | Lead-210 | 8 | PM | 1466.0 | .02745 | .00120 | 20.98 | | | | | | |
| 12/11/1993 | Radium-226 | 8 | PM | 1466.0 | .00049 | .00160 | 20.98 | | | | | U | U |
| 12/11/1993 | Uranium | 8 | PM | 1466.0 | .00014 | .00000 | 20.98 | .00007 | .00000 | .00007 | | | |
| 12/11/1993 | Radium-228 | 8 | PM | 1466.0 | .00132 | .00690 | 20.98 | | | | | U | U |
| 12/15/1993 | Thorium-230 | 1 | PM | 1450.4 | .00013 | .00020 | 41.86 | | | | | B | UJ |
| 12/15/1993 | Thorium-232 | 1 | PM | 1450.4 | -.00005 | .00020 | 41.86 | | | | | B | UJ |
| 12/15/1993 | Polonium-210 | 1 | PM | 1450.4 | .02145 | .00180 | 41.86 | | | | | | |
| 12/15/1993 | Lead-210 | 1 | PM | 1450.4 | .02994 | .00120 | 41.86 | | | | | | |
| 12/15/1993 | Radium-228 | 1 | PM | 1450.4 | .00041 | .00690 | 41.86 | | | | | U | U |
| 12/15/1993 | Uranium | 1 | PM | 1450.4 | .00026 | .00000 | 41.86 | .00013 | .00001 | .00013 | | | |

Note: Concentrations of Uranium isotopes were calculated from total uranium based on naturally occuring ratios and are expressed in pCi/m3. EPA screening levels of uranium isotopes are given in parens.

Data Report for Radionuclide Concentrations from PM10 Samples (Validated)



| Sample Date | Chemical Name | Site No. | Type | Run Time (min.) | Chem Conc (pCi/m3) | EPA Screen. Level (pCi/m3) | Particulate Conc. (ug/m3) | U-234 (0.0002) | U-235 (0.0002) | U-238 (0.0001) | Grav Val | Quality Lab | Quality Val |
|---|---|---|---|---|---|---|---|---|---|---|---|---|---|
| 12/15/1993 | Radium-226 | 1 | PM | 1450.4 | .00058 | .00160 | 41.86 | | | | | U | U |
| 12/15/1993 | Thorium-230 | 2 | PM | 1444.4 | .00000 | .00020 | 84.12 | | | | | L | L |
| 12/15/1993 | Thorium-232 | 2 | PM | 1444.4 | .00000 | .00020 | 84.12 | | | | | L | L |
| 12/15/1993 | Polonium-210 | 2 | PM | 1444.4 | .06860 | .00180 | 84.12 | | | | | | |
| 12/15/1993 | Lead-210 | 2 | PM | 1444.4 | .02975 | .00120 | 84.12 | | | | | | |
| 12/15/1993 | Radium-226 | 2 | PM | 1444.4 | .00042 | .00160 | 84.12 | | | | | U | U |
| 12/15/1993 | Radium-228 | 2 | PM | 1444.4 | .00009 | .00690 | 84.12 | | | | | U | U |
| 12/15/1993 | Uranium | 2 | PM | 1444.4 | .00116 | .00000 | 84.12 | .00058 | .00003 | .00055 | | | |
| 12/15/1993 | Thorium-230 | 3 | PM | 1454.7 | .00017 | .00020 | 18.26 | | | | | B | U |
| 12/15/1993 | Thorium-232 | 3 | PM | 1454.7 | .00000 | .00020 | 18.26 | | | | | U | U |
| 12/15/1993 | Polonium-210 | 3 | PM | 1454.7 | .01335 | .00180 | 18.26 | | | | | | |
| 12/15/1993 | Lead-210 | 3 | PM | 1454.7 | .02717 | .00120 | 18.26 | | | | | | |
| 12/15/1993 | Radium-226 | 3 | PM | 1454.7 | .00021 | .00160 | 18.26 | | | | | U | U |
| 12/15/1993 | Radium-228 | 3 | PM | 1454.7 | -.00034 | .00690 | 18.26 | | | | | U | U |
| 12/15/1993 | Uranium | 3 | PM | 1454.7 | .00015 | .00000 | 18.26 | .00008 | .00000 | .00007 | | | |
| 12/15/1993 | Thorium-232 | 4 | PM | 1445.7 | .00001 | .00020 | 15.47 | | | | | U | U |
| 12/15/1993 | Polonium-210 | 4 | PM | 1445.7 | .01143 | .00180 | 15.47 | | | | | | |
| 12/15/1993 | Lead-210 | 4 | PM | 1445.7 | .03091 | .00120 | 15.47 | | | | | | |
| 12/15/1993 | Radium-226 | 4 | PM | 1445.7 | .00016 | .00160 | 15.47 | | | | | U | U |
| 12/15/1993 | Uranium | 4 | PM | 1445.7 | .00007 | .00000 | 15.47 | .00004 | .00000 | .00003 | | B | U |
| 12/15/1993 | Thorium-230 | 4 | PM | 1445.7 | .00009 | .00020 | 15.47 | | | | | B | U |
| 12/15/1993 | Radium-228 | 4 | PM | 1445.7 | .00048 | .00690 | 15.47 | | | | | U | U |
| 12/15/1993 | Thorium-230 | 5 | PM | 1440.3 | .00010 | .00020 | 7.60 | | | | | B | U |
| 12/15/1993 | Thorium-232 | 5 | PM | 1440.3 | .00000 | .00020 | 7.60 | | | | | U | U |
| 12/15/1993 | Polonium-210 | 5 | PM | 1440.3 | .00749 | .00180 | 7.60 | | | | | | |
| 12/15/1993 | Lead-210 | 5 | PM | 1440.3 | .02758 | .00120 | 7.60 | | | | | | |
| 12/15/1993 | Radium-226 | 5 | PM | 1440.3 | -.00012 | .00160 | 7.60 | | | | | U | U |
| 12/15/1993 | Radium-228 | 5 | PM | 1440.3 | .00220 | .00690 | 7.60 | | | | | B | UJ |
| 12/15/1993 | Uranium | 5 | PM | 1440.3 | .00003 | .00000 | 7.60 | .00002 | .00000 | .00002 | | B | U |
| 12/15/1993 | Thorium-230 | 6 | PM | 1441.1 | .00011 | .00020 | 2.29 | | | | | B | U |
| 12/15/1993 | Thorium-232 | 6 | PM | 1441.1 | .00000 | .00020 | 2.29 | | | | | U | U |
| 12/15/1993 | Polonium-210 | 6 | PM | 1441.1 | .00496 | .00180 | 2.29 | | | | | | |
| 12/15/1993 | Lead-210 | 6 | PM | 1441.1 | .02914 | .00120 | 2.29 | | | | | | |
| 12/15/1993 | Radium-228 | 6 | PM | 1441.1 | .00123 | .00690 | 2.29 | | | | | U | UJ |
| 12/15/1993 | Uranium | 6 | PM | 1441.1 | .00002 | .00000 | 2.29 | .00001 | .00000 | .00001 | | B | U |
| 12/15/1993 | Radium-226 | 6 | PM | 1441.1 | -.00007 | .00160 | 2.29 | | | | | U | U |
| 12/15/1993 | Thorium-230 | 7 | PM | 1443.4 | .00018 | .00020 | 17.37 | | | | | B | UJ |
| 12/15/1993 | Thorium-232 | 7 | PM | 1443.4 | -.00001 | .00020 | 17.37 | | | | | U | UJ |
| 12/15/1993 | Polonium-210 | 7 | PM | 1443.4 | .02200 | .00180 | 17.37 | | | | | | |
| 12/15/1993 | Lead-210 | 7 | PM | 1443.4 | .02802 | .00120 | 17.37 | | | | | | |
| 12/15/1993 | Radium-226 | 7 | PM | 1443.4 | -.00034 | .00160 | 17.37 | | | | | U | U |
| 12/15/1993 | Radium-228 | 7 | PM | 1443.4 | .00078 | .00690 | 17.37 | | | | | U | UJ |
| 12/15/1993 | Uranium | 7 | PM | 1443.4 | .00008 | .00000 | 17.37 | .00004 | .00000 | .00004 | | B | U |
| 12/15/1993 | Thorium-230 | 8 | PM | 1461.2 | .00000 | .00020 | 45.55 | | | | | L | L |
| 12/15/1993 | Thorium-232 | 8 | PM | 1461.2 | .00000 | .00020 | 45.55 | | | | | L | L |
| 12/15/1993 | Polonium-210 | 8 | PM | 1461.2 | .01902 | .00180 | 45.55 | | | | | | |
| 12/15/1993 | Lead-210 | 8 | PM | 1461.2 | .02805 | .00120 | 45.55 | | | | | | |
| 12/15/1993 | Radium-226 | 8 | PM | 1461.2 | .00026 | .00160 | 45.55 | | | | | U | U |
| 12/15/1993 | Uranium | 8 | PM | 1461.2 | .00029 | .00000 | 45.55 | .00015 | .00001 | .00014 | | | |
| 12/15/1993 | Radium-228 | 8 | PM | 1461.2 | .00069 | .00690 | 45.55 | | | | | U | UJ |
| 12/19/1993 | Thorium-230 | 1 | PM | 1452.8 | .00009 | .00020 | 30.69 | | | | | B | U |

Note: Concentrations of Uranium isotopes were calculated from total uranium based on naturally occuring ratios and are expressed in pCi/m3. EPA screening levels of uranium isotopes are given in parens.

Data Report for Radionuclide Concentrations from PM10 Samples
(Validated)

| Sample Date | Chemical Name | Site No. | Type | Run Time (min.) | Chem Conc (pCi/m3) | EPA Screen. Level (pCi/m3) | Particulate Conc. (ug/m3) | U-234 (0.0002) | U-235 (0.0002) | U-238 (0.0001) | Grav Val | Quality Lab | Quality Val |
|---|---|---|---|---|---|---|---|---|---|---|---|---|---|
| 12/19/1993 | Thorium-232 | 1 | PM | 1452.8 | .00001 | .00020 | 30.69 | | | | | U | U |
| 12/19/1993 | Polonium-210 | 1 | PM | 1452.8 | .01401 | .00180 | 30.69 | | | | | | |
| 12/19/1993 | Lead-210 | 1 | PM | 1452.8 | .05599 | .00120 | 30.69 | | | | | | |
| 12/19/1993 | Radium-228 | 1 | PM | 1452.8 | .00042 | .00690 | 30.69 | | | | | U | U |
| 12/19/1993 | Uranium | 1 | PM | 1452.8 | .00008 | .00000 | 30.69 | .00004 | .00000 | .00004 | | B | U |
| 12/19/1993 | Radium-226 | 1 | PM | 1452.8 | -.00011 | .00160 | 30.69 | | | | | U | U |
| 12/19/1993 | Thorium-230 | 2 | PM | 1443.9 | .00000 | .00020 | 40.43 | | | | | L | L |
| 12/19/1993 | Thorium-232 | 2 | PM | 1443.9 | .00000 | .00020 | 40.43 | | | | | L | L |
| 12/19/1993 | Polonium-210 | 2 | PM | 1443.9 | .03014 | .00180 | 40.43 | | | | | | |
| 12/19/1993 | Lead-210 | 2 | PM | 1443.9 | .05558 | .00120 | 40.43 | | | | | | |
| 12/19/1993 | Radium-226 | 2 | PM | 1443.9 | .00004 | .00160 | 40.43 | | | | | U | U |
| 12/19/1993 | Radium-228 | 2 | PM | 1443.9 | .00090 | .00690 | 40.43 | | | | | U | UJ |
| 12/19/1993 | Uranium | 2 | PM | 1443.9 | .00031 | .00000 | 40.43 | .00016 | .00001 | .00015 | | | |
| 12/19/1993 | Thorium-230 | 3 | PM | 1455.7 | .00008 | .00020 | 24.76 | | | | | B | U |
| 12/19/1993 | Thorium-232 | 3 | PM | 1455.7 | .00001 | .00020 | 24.76 | | | | | U | U |
| 12/19/1993 | Lead-210 | 3 | PM | 1455.7 | .05163 | .00120 | 24.76 | | | | | | |
| 12/19/1993 | Radium-226 | 3 | PM | 1455.7 | .00093 | .00160 | 24.76 | | | | | B | U |
| 12/19/1993 | Radium-228 | 3 | PM | 1455.7 | .00139 | .00690 | 24.76 | | | | | U | UJ |
| 12/19/1993 | Uranium | 3 | PM | 1455.7 | .00003 | .00000 | 24.76 | .00002 | .00000 | .00002 | | B | U |
| 12/19/1993 | Polonium-210 | 3 | PM | 1455.7 | .01074 | .00180 | 24.76 | | | | | | |
| 12/19/1993 | Thorium-230 | 4 | PM | 1446.7 | .00013 | .00020 | 25.88 | | | | | B | U |
| 12/19/1993 | Thorium-232 | 4 | PM | 1446.7 | .00000 | .00020 | 25.88 | | | | | U | U |
| 12/19/1993 | Polonium-210 | 4 | PM | 1446.7 | .00857 | .00180 | 25.88 | | | | | | |
| 12/19/1993 | Lead-210 | 4 | PM | 1446.7 | .05364 | .00120 | 25.88 | | | | | | |
| 12/19/1993 | Radium-226 | 4 | PM | 1446.7 | -.00013 | .00160 | 25.88 | | | | | U | U |
| 12/19/1993 | Uranium | 4 | PM | 1446.7 | .00004 | .00000 | 25.88 | .00002 | .00000 | .00002 | | B | U |
| 12/19/1993 | Radium-228 | 4 | PM | 1446.7 | .00146 | .00690 | 25.88 | | | | | U | UJ |
| 12/19/1993 | Thorium-232 | 5 | PM | 1438.8 | .00000 | .00020 | 10.75 | | | | | U | U |
| 12/19/1993 | Polonium-210 | 5 | PM | 1438.8 | .00619 | .00180 | 10.75 | | | | | | |
| 12/19/1993 | Lead-210 | 5 | PM | 1438.8 | .05209 | .00120 | 10.75 | | | | | | |
| 12/19/1993 | Radium-226 | 5 | PM | 1438.8 | .00014 | .00160 | 10.75 | | | | | U | U |
| 12/19/1993 | Uranium | 5 | PM | 1438.8 | .00002 | .00000 | 10.75 | .00001 | .00000 | .00001 | | B | U |
| 12/19/1993 | Thorium-230 | 5 | PM | 1438.8 | .00006 | .00020 | 10.75 | | | | | B | U |
| 12/19/1993 | Radium-228 | 5 | PM | 1438.8 | .00032 | .00690 | 10.75 | | | | | U | UJ |
| 12/19/1993 | Thorium-230 | 6 | PM | 1438.3 | .00007 | .00020 | 13.49 | | | | | B | U |
| 12/19/1993 | Thorium-232 | 6 | PM | 1438.3 | .00000 | .00020 | 13.49 | | | | | U | U |
| 12/19/1993 | Polonium-210 | 6 | PM | 1438.3 | .00716 | .00180 | 13.49 | | | | | | |
| 12/19/1993 | Lead-210 | 6 | PM | 1438.3 | .05211 | .00120 | 13.49 | | | | | | |
| 12/19/1993 | Radium-226 | 6 | PM | 1438.3 | .00016 | .00160 | 13.49 | | | | | U | U |
| 12/19/1993 | Uranium | 6 | PM | 1438.3 | .00001 | .00000 | 13.49 | .00001 | .00000 | .00001 | | B | U |
| 12/19/1993 | Radium-228 | 6 | PM | 1438.3 | .00114 | .00690 | 13.49 | | | | | U | UJ |
| 12/19/1993 | Thorium-230 | 7 | PM | 1434.0 | .00009 | .00020 | 11.78 | | | | | B | U |
| 12/19/1993 | Thorium-232 | 7 | PM | 1434.0 | -.00001 | .00020 | 11.78 | | | | | U | U |
| 12/19/1993 | Polonium-210 | 7 | PM | 1434.0 | .00758 | .00180 | 11.78 | | | | | | |
| 12/19/1993 | Lead-210 | 7 | PM | 1434.0 | .05709 | .00120 | 11.78 | | | | | | |
| 12/19/1993 | Radium-228 | 7 | PM | 1434.0 | .00084 | .00690 | 11.78 | | | | | U | UJ |
| 12/19/1993 | Uranium | 7 | PM | 1434.0 | .00002 | .00000 | 11.78 | .00001 | .00000 | .00001 | | B | U |
| 12/19/1993 | Radium-226 | 7 | PM | 1434.0 | -.00008 | .00160 | 11.78 | | | | | U | U |
| 12/19/1993 | Thorium-230 | 8 | PM | 1463.6 | .00060 | .00020 | 32.34 | | | | | | J |
| 12/19/1993 | Thorium-232 | 8 | PM | 1463.6 | .00002 | .00020 | 32.34 | | | | | U | UJ |
| 12/19/1993 | Polonium-210 | 8 | PM | 1463.6 | .01573 | .00180 | 32.34 | | | | | | |

Note: Concentrations of Uranium isotopes were calculated from total uranium based on naturally occuring ratios and are expressed in pCi/m3. EPA screening levels of uranium isotopes are given in parens.

Data Report for Radionuclide Concentrations from PM10 Samples (Validated)



| Sample Date | Chemical Name | Site No. | Type | Run Time (min.) | Chem Conc (pCi/m3) | EPA Level Screen. (pCi/m3) | Particulate Conc. (ug/m3) | U-234 (0.0002) | U-235 (0.0002) | U-238 (0.0001) | Grav Val | Quality Lab | Quality Val |
|---|---|---|---|---|---|---|---|---|---|---|---|---|---|
| 12/19/1993 | Lead-210 | 8 | PM | 1463.6 | .05331 | .00120 | 32.34 | | | | | | |
| 12/19/1993 | Radium-228 | 8 | PM | 1463.6 | .00004 | .00690 | 32.34 | | | | | U | U |
| 12/19/1993 | Uranium | 8 | PM | 1463.6 | .00009 | .00000 | 32.34 | .00005 | .00000 | .00004 | | | U |
| 12/19/1993 | Radium-226 | 8 | PM | 1463.6 | -.00033 | .00160 | 32.34 | | | | | U | U |
| 12/19/1993 | Thorium-230 | P | BL | 1440.0 | .00009 | .00020 | -1.43 | | | | | B | U |
| 12/19/1993 | Thorium-232 | P | BL | 1440.0 | -.00001 | .00020 | -1.43 | | | | | U | U |
| 12/19/1993 | Lead-210 | P | BL | 1440.0 | -.00010 | .00120 | -1.43 | | | | | U | U |
| 12/19/1993 | Radium-226 | P | BL | 1440.0 | .00051 | .00160 | -1.43 | | | | | B | U |
| 12/19/1993 | Radium-228 | P | BL | 1440.0 | .00104 | .00690 | -1.43 | | | | | U | U |
| 12/19/1993 | Uranium | P | BL | 1440.0 | .00001 | .00000 | -1.43 | .00000 | .00000 | .00000 | | B | U |
| 12/19/1993 | Polonium-210 | P | BL | 1440.0 | .00003 | .00180 | -1.43 | | | | | U | U |
| 12/19/1993 | Thorium-230 | T | BL | 1440.0 | .00023 | .00020 | 1.11 | | | | | | J |
| 12/19/1993 | Thorium-232 | T | BL | 1440.0 | .00000 | .00020 | 1.11 | | | | | U | UJ |
| 12/19/1993 | Polonium-210 | T | BL | 1440.0 | .00010 | .00180 | 1.11 | | | | | B | U |
| 12/19/1993 | Lead-210 | T | BL | 1440.0 | .00037 | .00120 | 1.11 | | | | | U | U |
| 12/19/1993 | Radium-228 | T | BL | 1440.0 | .00089 | .00690 | 1.11 | | | | | U | U |
| 12/19/1993 | Uranium | T | BL | 1440.0 | .00005 | .00000 | 1.11 | .00003 | .00000 | .00003 | | B | U |
| 12/19/1993 | Radium-226 | T | BL | 1440.0 | .00000 | .00160 | 1.11 | | | | | U | U |
| 12/23/1993 | Thorium-230 | 1 | PM | 1452.5 | .00010 | .00020 | 21.19 | | | | | B | U |
| 12/23/1993 | Thorium-232 | 1 | PM | 1452.5 | .00000 | .00020 | 21.19 | | | | | U | U |
| 12/23/1993 | Polonium-210 | 1 | PM | 1452.5 | .00941 | .00180 | 21.19 | | | | | | |
| 12/23/1993 | Lead-210 | 1 | PM | 1452.5 | .04632 | .00120 | 21.19 | | | | | | |
| 12/23/1993 | Radium-226 | 1 | PM | 1452.5 | -.00010 | .00160 | 21.19 | | | | | U | U |
| 12/23/1993 | Uranium | 1 | PM | 1452.5 | .00012 | .00000 | 21.19 | .00006 | .00000 | .00006 | | | U |
| 12/23/1993 | Radium-228 | 1 | PM | 1452.5 | .00070 | .00690 | 21.19 | | | | | U | U |
| 12/23/1993 | Thorium-230 | 2 | PM | 1443.4 | .00013 | .00020 | 28.07 | | | | | B | U |
| 12/23/1993 | Thorium-232 | 2 | PM | 1443.4 | .00000 | .00020 | 28.07 | | | | | U | U |
| 12/23/1993 | Polonium-210 | 2 | PM | 1443.4 | .03961 | .00180 | 28.07 | | | | | | |
| 12/23/1993 | Lead-210 | 2 | PM | 1443.4 | .04596 | .00120 | 28.07 | | | | | | |
| 12/23/1993 | Radium-226 | 2 | PM | 1443.4 | -.00097 | .00160 | 28.07 | | | | | B | U |
| 12/23/1993 | Uranium | 2 | PM | 1443.4 | .00025 | .00000 | 28.07 | .00012 | .00001 | .00012 | | | |
| 12/23/1993 | Radium-228 | 2 | PM | 1443.4 | .00080 | .00690 | 28.07 | | | | | U | U |
| 12/23/1993 | Thorium-230 | 3 | PM | 1454.3 | .00009 | .00020 | 15.51 | | | | | B | U |
| 12/23/1993 | Thorium-232 | 3 | PM | 1454.3 | .00000 | .00020 | 15.51 | | | | | U | U |
| 12/23/1993 | Polonium-210 | 3 | PM | 1454.3 | .00888 | .00180 | 15.51 | | | | | | |
| 12/23/1993 | Radium-226 | 3 | PM | 1454.3 | -.00003 | .00160 | 15.51 | | | | | U | U |
| 12/23/1993 | Radium-228 | 3 | PM | 1454.3 | -.00043 | .00690 | 15.51 | | | | | U | U |
| 12/23/1993 | Uranium | 3 | PM | 1454.3 | .00005 | .00000 | 15.51 | .00003 | .00000 | .00002 | | B | U |
| 12/23/1993 | Lead-210 | 3 | PM | 1454.3 | .04949 | .00120 | 15.51 | | | | | | |
| 12/23/1993 | Thorium-230 | 4 | PM | 1446.7 | .00009 | .00020 | 17.42 | | | | | B | U |
| 12/23/1993 | Polonium-210 | 4 | PM | 1446.7 | .00722 | .00180 | 17.42 | | | | | | |
| 12/23/1993 | Lead-210 | 4 | PM | 1446.7 | .05011 | .00120 | 17.42 | | | | | | |
| 12/23/1993 | Radium-226 | 4 | PM | 1446.7 | .00023 | .00160 | 17.42 | | | | | U | U |
| 12/23/1993 | Radium-228 | 4 | PM | 1446.7 | .00185 | .00690 | 17.42 | | | | | U | U |
| 12/23/1993 | Thorium-232 | 4 | PM | 1446.7 | .00000 | .00020 | 17.42 | | | | | U | U |
| 12/23/1993 | Uranium | 4 | PM | 1446.7 | .00005 | .00000 | 17.42 | .00002 | .00000 | .00002 | | B | U |
| 12/23/1993 | Thorium-230 | 5 | PM | 1443.1 | .00011 | .00020 | 11.42 | | | | | B | U |
| 12/23/1993 | Thorium-232 | 5 | PM | 1443.1 | .00000 | .00020 | 11.42 | | | | | U | U |
| 12/23/1993 | Polonium-210 | 5 | PM | 1443.1 | .00942 | .00180 | 11.42 | | | | | | |
| 12/23/1993 | Lead-210 | 5 | PM | 1443.1 | .04330 | .00120 | 11.42 | | | | | | |
| 12/23/1993 | Radium-226 | 5 | PM | 1443.1 | .00008 | .00160 | 11.42 | | | | | U | U |

Note: Concentrations of Uranium isotopes were calculated from total uranium based on naturally occuring ratios and are expressed in pCi/m3. EPA screening levels of uranium isotopes are given in parens.

Data Report for Radionuclide Concentrations from PM10 Samples (Validated)



| Sample Date | Chemical Name | Site No. | Type | Run Time (min.) | Chem Conc (pCi/m3) | EPA Screen. Level (pCi/m3) | Particulate Conc. (ug/m3) | U-234 (0.0002) | U-235 (0.0002) | U-238 (0.0001) | Grav Val | Quality Lab | Quality Val |
|---|---|---|---|---|---|---|---|---|---|---|---|---|---|
| 12/23/1993 | Radium-228 | 5 | PM | 1443.1 | .00035 | .00690 | 11.42 | | | | | U | U |
| 12/23/1993 | Uranium | 5 | PM | 1443.1 | .00002 | .00000 | 11.42 | .00001 | .00000 | .00001 | | B | U |
| 12/23/1993 | Thorium-232 | 6 | PM | 1443.7 | .00000 | .00020 | 8.18 | | | | | U | U |
| 12/23/1993 | Polonium-210 | 6 | PM | 1443.7 | .00671 | .00180 | 8.18 | | | | | | |
| 12/23/1993 | Lead-210 | 6 | PM | 1443.7 | .04770 | .00120 | 8.18 | | | | | | |
| 12/23/1993 | Radium-226 | 6 | PM | 1443.7 | -.00019 | .00160 | 8.18 | | | | | U | U |
| 12/23/1993 | Uranium | 6 | PM | 1443.7 | .00001 | .00000 | 8.18 | .00001 | .00000 | .00001 | | B | U |
| 12/23/1993 | Thorium-230 | 6 | PM | 1443.7 | .00005 | .00020 | 8.18 | | | | | B | U |
| 12/23/1993 | Radium-228 | 6 | PM | 1443.7 | .00087 | .00690 | 8.18 | | | | | U | U |
| 12/23/1993 | Thorium-230 | 7 | PM | 1440.3 | .00015 | .00020 | 11.03 | | | | | B | U |
| 12/23/1993 | Thorium-232 | 7 | PM | 1440.3 | .00001 | .00020 | 11.03 | | | | | U | U |
| 12/23/1993 | Polonium-210 | 7 | PM | 1440.3 | .00984 | .00180 | 11.03 | | | | | | |
| 12/23/1993 | Lead-210 | 7 | PM | 1440.3 | .04124 | .00120 | 11.03 | | | | | | J |
| 12/23/1993 | Radium-228 | 7 | PM | 1440.3 | .00099 | .00690 | 11.03 | | | | | U | U |
| 12/23/1993 | Uranium | 7 | PM | 1440.3 | .00002 | .00000 | 11.03 | .00001 | .00000 | .00001 | | B | U |
| 12/23/1993 | Radium-226 | 7 | PM | 1440.3 | .00017 | .00160 | 11.03 | | | | | U | U |
| 12/23/1993 | Thorium-230 | 8 | PM | 1461.2 | .00010 | .00020 | 23.01 | | | | | B | U |
| 12/23/1993 | Thorium-232 | 8 | PM | 1461.2 | .00000 | .00020 | 23.01 | | | | | U | U |
| 12/23/1993 | Polonium-210 | 8 | PM | 1461.2 | .00860 | .00180 | 23.01 | | | | | | |
| 12/23/1993 | Radium-226 | 8 | PM | 1461.2 | .00000 | .00160 | 23.01 | | | | | L | L |
| 12/23/1993 | Radium-228 | 8 | PM | 1461.2 | .00098 | .00690 | 23.01 | | | | | U | U |
| 12/23/1993 | Uranium | 8 | PM | 1461.2 | .00011 | .00000 | 23.01 | .00006 | .00000 | .00005 | | | U |
| 12/23/1993 | Lead-210 | 8 | PM | 1461.2 | .04631 | .00120 | 23.01 | | | | | | |
| 12/23/1993 | Thorium-230 | P | BL | 1440.0 | .00010 | .00020 | -1.46 | | | | | B | U |
| 12/23/1993 | Thorium-232 | P | BL | 1440.0 | .00000 | .00020 | -1.46 | | | | | U | U |
| 12/23/1993 | Radium-226 | P | BL | 1440.0 | .00017 | .00160 | -1.46 | | | | | B | U |
| 12/23/1993 | Radium-228 | P | BL | 1440.0 | .00051 | .00690 | -1.46 | | | | | U | U |
| 12/23/1993 | Uranium | P | BL | 1440.0 | .00000 | .00000 | -1.46 | .00000 | .00000 | .00000 | | U | U |
| 12/23/1993 | Polonium-210 | P | BL | 1440.0 | .00002 | .00180 | -1.46 | | | | | U | U |
| 12/23/1993 | Lead-210 | P | BL | 1440.0 | -.00258 | .00120 | -1.46 | | | | | U | UJ |
| 12/25/1993 | Thorium-230 | 1 | PM | 1455.5 | .00003 | .00020 | 28.16 | | | | | B | UJ |
| 12/25/1993 | Lead-210 | 1 | PM | 1455.5 | .04445 | .00120 | 28.16 | | | | | | J |
| 12/25/1993 | Radium-226 | 1 | PM | 1455.5 | -.00001 | .00160 | 28.16 | | | | | U | UJ |
| 12/25/1993 | Uranium | 1 | PM | 1455.5 | .00004 | .00000 | 28.16 | .00002 | .00000 | .00002 | | B | UJ |
| 12/25/1993 | Gross Alpha | 1 | PM | 1455.5 | .00224 | .00000 | 28.16 | | | | | | J |
| 12/25/1993 | Gross Beta | 1 | PM | 1455.5 | .04800 | .00000 | 28.16 | | | | | | J |
| 12/25/1993 | Polonium-210 | 1 | PM | 1455.5 | .03700 | .00180 | 28.16 | | | | | | J |
| 12/25/1993 | Thorium-230 | 2 | PM | 1444.6 | .00005 | .00020 | 25.55 | | | | | B | UJ |
| 12/25/1993 | Lead-210 | 2 | PM | 1444.6 | .03794 | .00120 | 25.55 | | | | | | J |
| 12/25/1993 | Radium-226 | 2 | PM | 1444.6 | .00007 | .00160 | 25.55 | | | | | U | UJ |
| 12/25/1993 | Uranium | 2 | PM | 1444.6 | .00005 | .00000 | 25.55 | .00003 | .00000 | .00002 | | B | UJ |
| 12/25/1993 | Gross Alpha | 2 | PM | 1444.6 | .00315 | .00000 | 25.55 | | | | | | J |
| 12/25/1993 | Gross Beta | 2 | PM | 1444.6 | .04027 | .00000 | 25.55 | | | | | | J |
| 12/25/1993 | Polonium-210 | 2 | PM | 1444.6 | .03808 | .00180 | 25.55 | | | | | | J |
| 12/25/1993 | Thorium-230 | 3 | PM | 1455.7 | .00000 | .00020 | 46.61 | | | | | U | UJ |
| 12/25/1993 | Lead-210 | 3 | PM | 1455.7 | .04923 | .00120 | 46.61 | | | | | | J |
| 12/25/1993 | Radium-226 | 3 | PM | 1455.7 | .00006 | .00160 | 46.61 | | | | | U | UJ |
| 12/25/1993 | Uranium | 3 | PM | 1455.7 | .00002 | .00000 | 46.61 | .00001 | .00000 | .00001 | | B | UJ |
| 12/25/1993 | Gross Alpha | 3 | PM | 1455.7 | .00197 | .00000 | 46.61 | | | | | | J |
| 12/25/1993 | Gross Beta | 3 | PM | 1455.7 | .03580 | .00000 | 46.61 | | | | | | J |
| 12/25/1993 | Polonium-210 | 3 | PM | 1455.7 | .03817 | .00180 | 46.61 | | | | | | J |

Note: Concentrations of Uranium isotopes were calculated from total uranium based on naturally occuring ratios and are expressed in pCi/m3. EPA screening levels of uranium isotopes are given in parens.

Data Report for Radionuclide Concentrations from PM10 Samples (Validated) 07/31/1995



| Sample Date | Chemical Name | Site No. | Type | Run Time (min.) | Chem Conc (pCi/m3) | EPA Screen. Level (pCi/m3) | Particulate Conc. (ug/m3) | U-234 (0.0002) | U-235 (0.0002) | U-238 (0.0001) | Grav Val | Quality Lab | Quality Val |
|---|---|---|---|---|---|---|---|---|---|---|---|---|---|
| 12/25/1993 | Thorium-230 | 4 | PM | 1448.3 | .00001 | .00020 | 40.54 | | | | | U | UJ |
| 12/25/1993 | Lead-210 | 4 | PM | 1448.3 | .05370 | .00120 | 40.54 | | | | | | J |
| 12/25/1993 | Radium-226 | 4 | PM | 1448.3 | .00005 | .00160 | 40.54 | | | | | U | UJ |
| 12/25/1993 | Uranium | 4 | PM | 1448.3 | .00004 | .00000 | 40.54 | .00002 | .00000 | .00002 | | B | UJ |
| 12/25/1993 | Gross Alpha | 4 | PM | 1448.3 | .00203 | .00000 | 40.54 | | | | | | J |
| 12/25/1993 | Gross Beta | 4 | PM | 1448.3 | .05331 | .00000 | 40.54 | | | | | | J |
| 12/25/1993 | Polonium-210 | 4 | PM | 1448.3 | .03640 | .00180 | 40.54 | | | | | | J |
| 12/25/1993 | Thorium-230 | 5 | PM | 1440.3 | .00003 | .00020 | 71.34 | | | | | B | UJ |
| 12/25/1993 | Lead-210 | 5 | PM | 1440.3 | .04380 | .00120 | 71.34 | | | | | | J |
| 12/25/1993 | Radium-226 | 5 | PM | 1440.3 | .00015 | .00160 | 71.34 | | | | | U | UJ |
| 12/25/1993 | Uranium | 5 | PM | 1440.3 | .00012 | .00000 | 71.34 | .00006 | .00000 | .00006 | | | UJ |
| 12/25/1993 | Gross Alpha | 5 | PM | 1440.3 | .00071 | .00000 | 71.34 | | | | | | UJ |
| 12/25/1993 | Gross Beta | 5 | PM | 1440.3 | .03928 | .00000 | 71.34 | | | | | | J |
| 12/25/1993 | Polonium-210 | 5 | PM | 1440.3 | .03802 | .00180 | 71.34 | | | | | | J |
| 12/25/1993 | Thorium-230 | 6 | PM | 1440.0 | .00002 | .00020 | 19.94 | | | | | U | UJ |
| 12/25/1993 | Lead-210 | 6 | PM | 1440.0 | .05272 | .00120 | 19.94 | | | | | | J |
| 12/25/1993 | Radium-226 | 6 | PM | 1440.0 | -.00010 | .00160 | 19.94 | | | | | U | UJ |
| 12/25/1993 | Uranium | 6 | PM | 1440.0 | .00001 | .00000 | 19.94 | .00001 | .00000 | .00000 | | B | UJ |
| 12/25/1993 | Gross Alpha | 6 | PM | 1440.0 | .00143 | .00000 | 19.94 | | | | | | UJ |
| 12/25/1993 | Gross Beta | 6 | PM | 1440.0 | .03609 | .00000 | 19.94 | | | | | | J |
| 12/25/1993 | Polonium-210 | 6 | PM | 1440.0 | .03926 | .00180 | 19.94 | | | | | | J |
| 12/25/1993 | Thorium-230 | 7 | PM | 1438.7 | .00008 | .00020 | 106.10 | | | | | B | UJ |
| 12/25/1993 | Lead-210 | 7 | PM | 1438.7 | .05228 | .00120 | 106.10 | | | | | | J |
| 12/25/1993 | Radium-226 | 7 | PM | 1438.7 | .00005 | .00160 | 106.10 | | | | | U | UJ |
| 12/25/1993 | Uranium | 7 | PM | 1438.7 | .00011 | .00000 | 106.10 | .00006 | .00000 | .00005 | | | UJ |
| 12/25/1993 | Gross Alpha | 7 | PM | 1438.7 | .00163 | .00000 | 106.10 | | | | | | J |
| 12/25/1993 | Gross Beta | 7 | PM | 1438.7 | .04568 | .00000 | 106.10 | | | | | | J |
| 12/25/1993 | Polonium-210 | 7 | PM | 1438.7 | .05087 | .00180 | 106.10 | | | | | | J |
| 12/27/1993 | Thorium-230 | 1 | PM | 1453.6 | .00005 | .00020 | 35.49 | | | | | U | U |
| 12/27/1993 | Thorium-232 | 1 | PM | 1453.6 | .00001 | .00020 | 35.49 | | | | | U | U |
| 12/27/1993 | Polonium-210 | 1 | PM | 1453.6 | .02539 | .00180 | 35.49 | | | | | | |
| 12/27/1993 | Lead-210 | 1 | PM | 1453.6 | .08544 | .00120 | 35.49 | | | | | | J |
| 12/27/1993 | Radium-228 | 1 | PM | 1453.6 | .00063 | .00690 | 35.49 | | | | | U | U |
| 12/27/1993 | Uranium | 1 | PM | 1453.6 | .00010 | .00000 | 35.49 | .00005 | .00000 | .00005 | | | U |
| 12/27/1993 | Radium-226 | 1 | PM | 1453.6 | .00003 | .00160 | 35.49 | | | | | U | U |
| 12/27/1993 | Thorium-230 | 2 | PM | 1445.4 | -.00001 | .00020 | 36.57 | | | | | U | U |
| 12/27/1993 | Thorium-232 | 2 | PM | 1445.4 | .00003 | .00020 | 36.57 | | | | | U | U |
| 12/27/1993 | Polonium-210 | 2 | PM | 1445.4 | .03904 | .00180 | 36.57 | | | | | | |
| 12/27/1993 | Lead-210 | 2 | PM | 1445.4 | .07459 | .00120 | 36.57 | | | | | | J |
| 12/27/1993 | Radium-226 | 2 | PM | 1445.4 | .00015 | .00160 | 36.57 | | | | | U | U |
| 12/27/1993 | Radium-228 | 2 | PM | 1445.4 | .00044 | .00690 | 36.57 | | | | | U | U |
| 12/27/1993 | Uranium | 2 | PM | 1445.4 | .00019 | .00000 | 36.57 | .00010 | .00000 | .00009 | | | |
| 12/27/1993 | Thorium-230 | 3 | PM | 1454.8 | .00001 | .00020 | 31.13 | | | | | U | U |
| 12/27/1993 | Thorium-232 | 3 | PM | 1454.8 | -.00001 | .00020 | 31.13 | | | | | U | U |
| 12/27/1993 | Polonium-210 | 3 | PM | 1454.8 | .02022 | .00180 | 31.13 | | | | | | |
| 12/27/1993 | Lead-210 | 3 | PM | 1454.8 | .08368 | .00120 | 31.13 | | | | | | J |
| 12/27/1993 | Radium-228 | 3 | PM | 1454.8 | .00157 | .00690 | 31.13 | | | | | U | U |
| 12/27/1993 | Uranium | 3 | PM | 1454.8 | .00005 | .00000 | 31.13 | .00002 | .00000 | .00002 | | B | U |
| 12/27/1993 | Radium-226 | 3 | PM | 1454.8 | -.00004 | .00160 | 31.13 | | | | | U | U |
| 12/27/1993 | Thorium-230 | 4 | PM | 1447.8 | .00004 | .00020 | 33.02 | | | | | B | U |
| 12/27/1993 | Thorium-232 | 4 | PM | 1447.8 | .00001 | .00020 | 33.02 | | | | | U | U |

Note: Concentrations of Uranium isotopes were calculated from total uranium based on naturally occuring ratios and are expressed in pCi/m3. EPA screening levels of uranium isotopes are given in parens.

Data Report for Radionuclide Concentrations from PM10 Samples
(Validated)

| Sample Date | Chemical Name | Site No. | Type | Run Time (min.) | Chem Conc (pCi/m3) | EPA Screen. Level (pCi/m3) | Particulate Conc. (ug/m3) | U-234 (0.0002) | U-235 (0.0002) | U-238 (0.0001) | Grav Val | Quality Lab | Quality Val |
|---|---|---|---|---|---|---|---|---|---|---|---|---|---|
| 12/27/1993 | Polonium-210 | 4 | PM | 1447.8 | .02346 | .00180 | 33.02 | | | | | | |
| 12/27/1993 | Lead-210 | 4 | PM | 1447.8 | .08073 | .00120 | 33.02 | | | | | | J |
| 12/27/1993 | Radium-226 | 4 | PM | 1447.8 | -.00020 | .00160 | 33.02 | | | | | U | U |
| 12/27/1993 | Uranium | 4 | PM | 1447.8 | .00006 | .00000 | 33.02 | .00003 | .00000 | .00003 | | B | U |
| 12/27/1993 | Radium-228 | 4 | PM | 1447.8 | .00124 | .00690 | 33.02 | | | | | U | U |
| 12/27/1993 | Thorium-230 | 5 | PM | 1436.8 | .00002 | .00020 | 15.12 | | | | | U | U |
| 12/27/1993 | Thorium-232 | 5 | PM | 1436.8 | .00001 | .00020 | 15.12 | | | | | U | U |
| 12/27/1993 | Polonium-210 | 5 | PM | 1436.8 | .02038 | .00180 | 15.12 | | | | | | |
| 12/27/1993 | Radium-226 | 5 | PM | 1436.8 | -.00007 | .00160 | 15.12 | | | | | U | U |
| 12/27/1993 | Radium-228 | 5 | PM | 1436.8 | .00160 | .00690 | 15.12 | | | | | U | U |
| 12/27/1993 | Uranium | 5 | PM | 1436.8 | .00003 | .00000 | 15.12 | .00002 | .00000 | .00002 | | B | U |
| 12/27/1993 | Lead-210 | 5 | PM | 1436.8 | .06246 | .00120 | 15.12 | | | | | | J |
| 12/27/1993 | Thorium-230 | 6 | PM | 1441.0 | .00009 | .00020 | 18.13 | | | | | U | UJ |
| 12/27/1993 | Thorium-232 | 6 | PM | 1441.0 | .00002 | .00020 | 18.13 | | | | | U | UJ |
| 12/27/1993 | Polonium-210 | 6 | PM | 1441.0 | .01739 | .00180 | 18.13 | | | | | | |
| 12/27/1993 | Lead-210 | 6 | PM | 1441.0 | .07660 | .00120 | 18.13 | | | | | | J |
| 12/27/1993 | Radium-226 | 6 | PM | 1441.0 | -.00013 | .00160 | 18.13 | | | | | U | U |
| 12/27/1993 | Radium-228 | 6 | PM | 1441.0 | .00206 | .00690 | 18.13 | | | | | B | U |
| 12/27/1993 | Uranium | 6 | PM | 1441.0 | .00002 | .00000 | 18.13 | .00001 | .00000 | .00001 | | B | U |
| 12/27/1993 | Thorium-230 | 7 | PM | 1438.2 | .00000 | .00020 | 29.82 | | | | | L | L |
| 12/27/1993 | Thorium-232 | 7 | PM | 1438.2 | .00000 | .00020 | 29.82 | | | | | L | L |
| 12/27/1993 | Polonium-210 | 7 | PM | 1438.2 | .03968 | .00180 | 29.82 | | | | | | |
| 12/27/1993 | Lead-210 | 7 | PM | 1438.2 | .06263 | .00120 | 29.82 | | | | | | J |
| 12/27/1993 | Radium-226 | 7 | PM | 1438.2 | -.00013 | .00160 | 29.82 | | | | | U | U |
| 12/27/1993 | Uranium | 7 | PM | 1438.2 | .00016 | .00000 | 29.82 | .00008 | .00000 | .00007 | | | |
| 12/27/1993 | Radium-228 | 7 | PM | 1438.2 | .00053 | .00690 | 29.82 | | | | | U | U |
| 12/27/1993 | Thorium-230 | 8 | PM | 1461.0 | .00011 | .00020 | 36.97 | | | | | B | UJ |
| 12/27/1993 | Thorium-232 | 8 | PM | 1461.0 | .00000 | .00020 | 36.97 | | | | | U | UJ |
| 12/27/1993 | Polonium-210 | 8 | PM | 1461.0 | .03028 | .00180 | 36.97 | | | | | | |
| 12/27/1993 | Lead-210 | 8 | PM | 1461.0 | .08266 | .00120 | 36.97 | | | | | | J |
| 12/27/1993 | Radium-226 | 8 | PM | 1461.0 | -.00001 | .00160 | 36.97 | | | | | U | U |
| 12/27/1993 | Uranium | 8 | PM | 1461.0 | .00011 | .00000 | 36.97 | .00005 | .00000 | .00005 | | | U |
| 12/27/1993 | Radium-228 | 8 | PM | 1461.0 | .00004 | .00690 | 36.97 | | | | | U | U |
| 12/31/1993 | Thorium-230 | 1 | PM | 1453.2 | .00012 | .00020 | 25.70 | | | | | | U |
| 12/31/1993 | Thorium-232 | 1 | PM | 1453.2 | .00000 | .00020 | 25.70 | | | | | | U |
| 12/31/1993 | Polonium-210 | 1 | PM | 1453.2 | .02817 | .00180 | 25.70 | | | | | | |
| 12/31/1993 | Lead-210 | 1 | PM | 1453.2 | .02074 | .00120 | 25.70 | | | | | | J |
| 12/31/1993 | Radium-226 | 1 | PM | 1453.2 | -.00005 | .00160 | 25.70 | | | | | | U |
| 12/31/1993 | Uranium | 1 | PM | 1453.2 | .00026 | .00000 | 25.70 | .00013 | .00001 | .00012 | | | |
| 12/31/1993 | Radium-228 | 1 | PM | 1453.2 | .00424 | .00690 | 25.70 | | | | | | U |
| 12/31/1993 | Thorium-230 | 2 | PM | 1444.5 | .00000 | .00020 | 81.87 | | | | | | L |
| 12/31/1993 | Thorium-232 | 2 | PM | 1444.5 | .00000 | .00020 | 81.87 | | | | | | L |
| 12/31/1993 | Polonium-210 | 2 | PM | 1444.5 | .08476 | .00180 | 81.87 | | | | | | |
| 12/31/1993 | Lead-210 | 2 | PM | 1444.5 | -.00656 | .00120 | 81.87 | | | | | | UJ |
| 12/31/1993 | Radium-226 | 2 | PM | 1444.5 | -.00040 | .00160 | 81.87 | | | | | | U |
| 12/31/1993 | Radium-228 | 2 | PM | 1444.5 | .00145 | .00690 | 81.87 | | | | | | U |
| 12/31/1993 | Uranium | 2 | PM | 1444.5 | .00094 | .00000 | 81.87 | .00047 | .00002 | .00044 | | | |
| 12/31/1993 | Thorium-232 | 4 | PM | 1446.8 | .00000 | .00020 | 9.35 | | | | | | U |
| 12/31/1993 | Polonium-210 | 4 | PM | 1446.8 | .00507 | .00180 | 9.35 | | | | | | |
| 12/31/1993 | Lead-210 | 4 | PM | 1446.8 | .02400 | .00120 | 9.35 | | | | | | J |
| 12/31/1993 | Radium-226 | 4 | PM | 1446.8 | .00011 | .00160 | 9.35 | | | | | | U |

Note: Concentrations of Uranium isotopes were calculated from total uranium based on naturally occuring ratios and are expressed in pCi/m3. EPA screening levels of uranium isotopes are given in parens.

Data Report for Radionuclide Concentrations from PM10 Samples
(Validated)

| Sample Date | Chemical Name | Site No. | Type | Run Time (min.) | Chem Conc (pCi/m3) | EPA Screen. Level (pCi/m3) | Particulate Conc. (ug/m3) | U-234 (0.0002) | U-235 (0.0002) | U-238 (0.0001) | Grav Val | Quality Lab | Quality Val |
|---|---|---|---|---|---|---|---|---|---|---|---|---|---|
| 12/31/1993 | Uranium | 4 | PM | 1446.8 | .00002 | .00000 | 9.35 | .00001 | .00000 | .00001 | | | U |
| 12/31/1993 | Thorium-230 | 4 | PM | 1446.8 | .00005 | .00020 | 9.35 | | | | | | U |
| 12/31/1993 | Radium-228 | 4 | PM | 1446.8 | -.00021 | .00690 | 9.35 | | | | | | U |
| 12/31/1993 | Thorium-230 | 5 | PM | 1440.7 | .00013 | .00020 | 1.90 | | | | | | U |
| 12/31/1993 | Thorium-232 | 5 | PM | 1440.7 | .00001 | .00020 | 1.90 | | | | | | U |
| 12/31/1993 | Polonium-210 | 5 | PM | 1440.7 | .00462 | .00180 | 1.90 | | | | | | |
| 12/31/1993 | Lead-210 | 5 | PM | 1440.7 | .01850 | .00120 | 1.90 | | | | | | J |
| 12/31/1993 | Radium-226 | 5 | PM | 1440.7 | -.00018 | .00160 | 1.90 | | | | | | U |
| 12/31/1993 | Radium-228 | 5 | PM | 1440.7 | .00018 | .00690 | 1.90 | | | | | | U |
| 12/31/1993 | Uranium | 5 | PM | 1440.7 | .00002 | .00000 | 1.90 | .00001 | .00000 | .00001 | | | U |
| 12/31/1993 | Thorium-232 | 6 | PM | 1441.3 | .00000 | .00020 | 3.30 | | | | | | U |
| 12/31/1993 | Polonium-210 | 6 | PM | 1441.3 | .00381 | .00180 | 3.30 | | | | | | |
| 12/31/1993 | Lead-210 | 6 | PM | 1441.3 | .01807 | .00120 | 3.30 | | | | | | J |
| 12/31/1993 | Radium-226 | 6 | PM | 1441.3 | .00016 | .00160 | 3.30 | | | | | | U |
| 12/31/1993 | Radium-228 | 6 | PM | 1441.3 | .00061 | .00690 | 3.30 | | | | | | U |
| 12/31/1993 | Thorium-230 | 6 | PM | 1441.3 | .00007 | .00020 | 3.30 | | | | | | U |
| 12/31/1993 | Uranium | 6 | PM | 1441.3 | .00001 | .00000 | 3.30 | .00000 | .00000 | .00000 | | | U |
| 12/31/1993 | Thorium-230 | 7 | PM | 1438.2 | .00011 | .00020 | 2.32 | | | | | B | U |
| 12/31/1993 | Thorium-232 | 7 | PM | 1438.2 | .00000 | .00020 | 2.32 | | | | | U | U |
| 12/31/1993 | Polonium-210 | 7 | PM | 1438.2 | .00311 | .00180 | 2.32 | | | | | | |
| 12/31/1993 | Lead-210 | 7 | PM | 1438.2 | .01535 | .00120 | 2.32 | | | | | | J |
| 12/31/1993 | Radium-228 | 7 | PM | 1438.2 | .00009 | .00690 | 2.32 | | | | | U | U |
| 12/31/1993 | Uranium | 7 | PM | 1438.2 | .00001 | .00000 | 2.32 | .00001 | .00000 | .00001 | | B | U |
| 12/31/1993 | Radium-226 | 7 | PM | 1438.2 | .00056 | .00160 | 2.32 | | | | | B | U |
| 12/31/1993 | Thorium-230 | 8 | PM | 1463.3 | .00001 | .00020 | 27.47 | | | | | | U |
| 12/31/1993 | Thorium-232 | 8 | PM | 1463.3 | .00000 | .00020 | 27.47 | | | | | | U |
| 12/31/1993 | Polonium-210 | 8 | PM | 1463.3 | .03335 | .00180 | 27.47 | | | | | | |
| 12/31/1993 | Lead-210 | 8 | PM | 1463.3 | .02081 | .00120 | 27.47 | | | | | | J |
| 12/31/1993 | Radium-226 | 8 | PM | 1463.3 | -.00013 | .00160 | 27.47 | | | | | | U |
| 12/31/1993 | Radium-228 | 8 | PM | 1463.3 | .00240 | .00690 | 27.47 | | | | | | U |
| 12/31/1993 | Uranium | 8 | PM | 1463.3 | .00026 | .00000 | 27.47 | .00013 | .00001 | .00012 | | | |
| 12/31/1993 | Thorium-230 | P | BL | 1440.0 | .00011 | .00020 | -1.45 | | | | | | U |
| 12/31/1993 | Thorium-232 | P | BL | 1440.0 | .00000 | .00020 | -1.45 | | | | | | U |
| 12/31/1993 | Polonium-210 | P | BL | 1440.0 | .00020 | .00180 | -1.45 | | | | | | U |
| 12/31/1993 | Lead-210 | P | BL | 1440.0 | -.00500 | .00120 | -1.45 | | | | | | UJ |
| 12/31/1993 | Radium-226 | P | BL | 1440.0 | .00024 | .00160 | -1.45 | | | | | | U |
| 12/31/1993 | Uranium | P | BL | 1440.0 | .00001 | .00000 | -1.45 | .00001 | .00000 | .00001 | | | U |
| 12/31/1993 | Radium-228 | P | BL | 1440.0 | .00680 | .00690 | -1.45 | | | | | | U |
| 01/04/1994 | Thorium-230 | 1 | PM | 1451.8 | .00005 | .00020 | 12.67 | | | | | B | U |
| 01/04/1994 | Thorium-232 | 1 | PM | 1451.8 | .00000 | .00020 | 12.67 | | | | | U | U |
| 01/04/1994 | Polonium-210 | 1 | PM | 1451.8 | .00820 | .00180 | 12.67 | | | | | | |
| 01/04/1994 | Lead-210 | 1 | PM | 1451.8 | .01338 | .00120 | 12.67 | | | | | | |
| 01/04/1994 | Radium-228 | 1 | PM | 1451.8 | .00123 | .00690 | 12.67 | | | | | U | U |
| 01/04/1994 | Uranium | 1 | PM | 1451.8 | .00014 | .00000 | 12.67 | .00007 | .00000 | .00007 | | | |
| 01/04/1994 | Radium-226 | 1 | PM | 1451.8 | .00022 | .00160 | 12.67 | | | | | U | U |
| 01/04/1994 | Thorium-230 | 2 | PM | 1444.5 | .00015 | .00020 | 37.09 | | | | | B | UJ |
| 01/04/1994 | Thorium-232 | 2 | PM | 1444.5 | .00000 | .00020 | 37.09 | | | | | U | UJ |
| 01/04/1994 | Polonium-210 | 2 | PM | 1444.5 | .07654 | .00180 | 37.09 | | | | | | |
| 01/04/1994 | Lead-210 | 2 | PM | 1444.5 | .01372 | .00120 | 37.09 | | | | | | |
| 01/04/1994 | Radium-226 | 2 | PM | 1444.5 | .00015 | .00160 | 37.09 | | | | | U | U |
| 01/04/1994 | Radium-228 | 2 | PM | 1444.5 | .00124 | .00690 | 37.09 | | | | | U | U |

Note: Concentrations of Uranium isotopes were calculated from total uranium based on naturally occuring ratios and are expressed in pCi/m3. EPA screening levels of uranium isotopes are given in parens.

| Sample Date | Chemical Name | Site No. | Type | Run Time (min.) | Chem Conc (pCi/m3) | EPA Screen. Level (pCi/m3) | Particulate Conc. (ug/m3) | U-234 (0.0002) | U-235 (0.0002) | U-238 (0.0001) | Grav Val | Quality Lab | Quality Val |
|---|---|---|---|---|---|---|---|---|---|---|---|---|---|
| 01/04/1994 | Uranium | 2 | PM | 1444.5 | .00044 | .00000 | 37.09 | .00022 | .00001 | .00021 | | | |
| 01/04/1994 | Thorium-230 | 3 | PM | 1453.3 | .00002 | .00020 | 6.84 | | | | | B | U |
| 01/04/1994 | Thorium-232 | 3 | PM | 1453.3 | .00000 | .00020 | 6.84 | | | | | U | U |
| 01/04/1994 | Polonium-210 | 3 | PM | 1453.3 | .00343 | .00180 | 6.84 | | | | | | |
| 01/04/1994 | Lead-210 | 3 | PM | 1453.3 | .01602 | .00120 | 6.84 | | | | | | |
| 01/04/1994 | Radium-228 | 3 | PM | 1453.3 | .00116 | .00690 | 6.84 | | | | | U | U |
| 01/04/1994 | Uranium | 3 | PM | 1453.3 | .00004 | .00000 | 6.84 | .00002 | .00000 | .00002 | | B | U |
| 01/04/1994 | Radium-226 | 3 | PM | 1453.3 | -.00015 | .00160 | 6.84 | | | | | U | U |
| 01/04/1994 | Thorium-230 | 4 | PM | 1447.9 | .00003 | .00020 | 7.39 | | | | | B | U |
| 01/04/1994 | Thorium-232 | 4 | PM | 1447.9 | .00001 | .00020 | 7.39 | | | | | U | U |
| 01/04/1994 | Polonium-210 | 4 | PM | 1447.9 | .00267 | .00180 | 7.39 | | | | | | |
| 01/04/1994 | Lead-210 | 4 | PM | 1447.9 | .01334 | .00120 | 7.39 | | | | | | |
| 01/04/1994 | Radium-226 | 4 | PM | 1447.9 | -.00011 | .00160 | 7.39 | | | | | U | U |
| 01/04/1994 | Uranium | 4 | PM | 1447.9 | .00005 | .00000 | 7.39 | .00003 | .00000 | .00002 | | B | U |
| 01/04/1994 | Radium-228 | 4 | PM | 1447.9 | .00024 | .00690 | 7.39 | | | | | U | U |
| 01/04/1994 | Thorium-230 | 5 | PM | 1439.4 | .00000 | .00020 | 13.24 | | | | | U | UJ |
| 01/04/1994 | Thorium-232 | 5 | PM | 1439.4 | .00001 | .00020 | 13.24 | | | | | U | UJ |
| 01/04/1994 | Polonium-210 | 5 | PM | 1439.4 | .00858 | .00180 | 13.24 | | | | | | |
| 01/04/1994 | Lead-210 | 5 | PM | 1439.4 | .01282 | .00120 | 13.24 | | | | | | |
| 01/04/1994 | Radium-228 | 5 | PM | 1439.4 | .00109 | .00690 | 13.24 | | | | | U | U |
| 01/04/1994 | Uranium | 5 | PM | 1439.4 | .00006 | .00000 | 13.24 | .00003 | .00000 | .00003 | | B | U |
| 01/04/1994 | Radium-226 | 5 | PM | 1439.4 | .00014 | .00160 | 13.24 | | | | | U | U |
| 01/04/1994 | Thorium-230 | 6 | PM | 1441.8 | .00010 | .00020 | 2.52 | | | | | B | U |
| 01/04/1994 | Thorium-232 | 6 | PM | 1441.8 | .00000 | .00020 | 2.52 | | | | | U | U |
| 01/04/1994 | Polonium-210 | 6 | PM | 1441.8 | .00255 | .00180 | 2.52 | | | | | | |
| 01/04/1994 | Lead-210 | 6 | PM | 1441.8 | .01550 | .00120 | 2.52 | | | | | | |
| 01/04/1994 | Radium-228 | 6 | PM | 1441.8 | .00152 | .00690 | 2.52 | | | | | U | U |
| 01/04/1994 | Uranium | 6 | PM | 1441.8 | .00001 | .00000 | 2.52 | .00000 | .00000 | .00000 | | B | U |
| 01/04/1994 | Radium-226 | 6 | PM | 1441.8 | .00020 | .00160 | 2.52 | | | | | U | U |
| 01/04/1994 | Thorium-230 | 7 | PM | 1439.6 | .00006 | .00020 | 11.44 | | | | | B | UJ |
| 01/04/1994 | Thorium-232 | 7 | PM | 1439.6 | -.00002 | .00020 | 11.44 | | | | | U | UJ |
| 01/04/1994 | Lead-210 | 7 | PM | 1439.6 | .01238 | .00120 | 11.44 | | | | | | |
| 01/04/1994 | Radium-228 | 7 | PM | 1439.6 | .00038 | .00690 | 11.44 | | | | | U | U |
| 01/04/1994 | Uranium | 7 | PM | 1439.6 | .00005 | .00000 | 11.44 | .00002 | .00000 | .00002 | | B | U |
| 01/04/1994 | Polonium-210 | 7 | PM | 1439.6 | .01424 | .00180 | 11.44 | | | | | | |
| 01/04/1994 | Radium-226 | 7 | PM | 1439.6 | -.00017 | .00160 | 11.44 | | | | | U | U |
| 01/06/1994 | Thorium-230 | 1 | PM | 1451.2 | .00030 | .00020 | 45.49 | | | | | | J |
| 01/06/1994 | Lead-210 | 1 | PM | 1451.2 | .00383 | .00120 | 45.49 | | | | | | J |
| 01/06/1994 | Radium-226 | 1 | PM | 1451.2 | .00003 | .00160 | 45.49 | | | | | U | UJ |
| 01/06/1994 | Uranium | 1 | PM | 1451.2 | .00006 | .00000 | 45.49 | .00003 | .00000 | .00003 | | B | UJ |
| 01/06/1994 | Gross Alpha | 1 | PM | 1451.2 | .00136 | .00000 | 45.49 | | | | | | UJ |
| 01/06/1994 | Gross Beta | 1 | PM | 1451.2 | .00678 | .00000 | 45.49 | | | | | | UJ |
| 01/06/1994 | Polonium-210 | 1 | PM | 1451.2 | .01934 | .00180 | 45.49 | | | | | | J |
| 01/06/1994 | Thorium-230 | 2 | PM | 1441.8 | .00074 | .00020 | 92.78 | | | | | | J |
| 01/06/1994 | Lead-210 | 2 | PM | 1441.8 | .00889 | .00120 | 92.78 | | | | | | J |
| 01/06/1994 | Radium-226 | 2 | PM | 1441.8 | .00075 | .00160 | 92.78 | | | | | B | UJ |
| 01/06/1994 | Uranium | 2 | PM | 1441.8 | .00070 | .00000 | 92.78 | .00035 | .00002 | .00033 | | | J |
| 01/06/1994 | Gross Alpha | 2 | PM | 1441.8 | .00300 | .00000 | 92.78 | | | | | | J |
| 01/06/1994 | Gross Beta | 2 | PM | 1441.8 | .01228 | .00000 | 92.78 | | | | | | J |
| 01/06/1994 | Polonium-210 | 2 | PM | 1441.8 | .02964 | .00180 | 92.78 | | | | | | J |
| 01/06/1994 | Thorium-230 | 3 | PM | 1456.2 | .00002 | .00020 | 7.86 | | | | | U | UJ |

Note: Concentrations of Uranium isotopes were calculated from total uranium based on naturally occuring ratios and are expressed in pCi/m3. EPA screening levels of uranium isotopes are given in parens.

Data Report for Radionuclide Concentrations from PM10 Samples (Validated)

07/31/1995



| Sample Date | Chemical Name | Site No. | Type | Run Time (min.) | Chem Conc (pCi/m3) | EPA Screen. Level (pCi/m3) | Particulate Conc. (ug/m3) | U-234 (0.0002) | U-235 (0.0002) | U-238 (0.0001) | Grav Val | Quality Lab | Val |
|---|---|---|---|---|---|---|---|---|---|---|---|---|---|
| 01/06/1994 | Lead-210 | 3 | PM | 1456.2 | .00228 | .00120 | 7.86 | | | | | | J |
| 01/06/1994 | Radium-226 | 3 | PM | 1456.2 | .00056 | .00160 | 7.86 | | | | | B | UJ |
| 01/06/1994 | Uranium | 3 | PM | 1456.2 | .00007 | .00000 | 7.86 | .00004 | .00000 | .00003 | | B | UJ |
| 01/06/1994 | Gross Alpha | 3 | PM | 1456.2 | .00038 | .00000 | 7.86 | | | | | | UJ |
| 01/06/1994 | Gross Beta | 3 | PM | 1456.2 | .00674 | .00000 | 7.86 | | | | | | UJ |
| 01/06/1994 | Polonium-210 | 3 | PM | 1456.2 | .00526 | .00180 | 7.86 | | | | | | J |
| 01/06/1994 | Thorium-230 | 4 | PM | 1446.5 | .00001 | .00020 | 3.76 | | | | | U | UJ |
| 01/06/1994 | Lead-210 | 4 | PM | 1446.5 | .00275 | .00120 | 3.76 | | | | | | J |
| 01/06/1994 | Radium-226 | 4 | PM | 1446.5 | .00062 | .00160 | 3.76 | | | | | B | UJ |
| 01/06/1994 | Uranium | 4 | PM | 1446.5 | .00002 | .00000 | 3.76 | .00001 | .00000 | .00001 | | B | UJ |
| 01/06/1994 | Gross Alpha | 4 | PM | 1446.5 | .00005 | .00000 | 3.76 | | | | | | UJ |
| 01/06/1994 | Gross Beta | 4 | PM | 1446.5 | .00391 | .00000 | 3.76 | | | | | | UJ |
| 01/06/1994 | Polonium-210 | 4 | PM | 1446.5 | .00245 | .00180 | 3.76 | | | | | | J |
| 01/06/1994 | Thorium-230 | 5 | PM | 1442.7 | .00002 | .00020 | .60 | | | | | U | UJ |
| 01/06/1994 | Lead-210 | 5 | PM | 1442.7 | .00294 | .00120 | .60 | | | | | | J |
| 01/06/1994 | Radium-226 | 5 | PM | 1442.7 | .00011 | .00160 | .60 | | | | | U | UJ |
| 01/06/1994 | Uranium | 5 | PM | 1442.7 | .00001 | .00000 | .60 | .00001 | .00000 | .00000 | | B | UJ |
| 01/06/1994 | Gross Alpha | 5 | PM | 1442.7 | -.00046 | .00000 | .60 | | | | | | UJ |
| 01/06/1994 | Gross Beta | 5 | PM | 1442.7 | .00372 | .00000 | .60 | | | | | | UJ |
| 01/06/1994 | Polonium-210 | 5 | PM | 1442.7 | .00207 | .00180 | .60 | | | | | | J |
| 01/06/1994 | Thorium-230 | 6 | PM | 1443.5 | .00002 | .00020 | 1.14 | | | | | U | UJ |
| 01/06/1994 | Lead-210 | 6 | PM | 1443.5 | .00342 | .00120 | 1.14 | | | | | | J |
| 01/06/1994 | Radium-226 | 6 | PM | 1443.5 | -.00034 | .00160 | 1.14 | | | | | U | UJ |
| 01/06/1994 | Uranium | 6 | PM | 1443.5 | .00001 | .00000 | 1.14 | .00001 | .00000 | .00000 | | B | UJ |
| 01/06/1994 | Gross Alpha | 6 | PM | 1443.5 | .00011 | .00000 | 1.14 | | | | | | UJ |
| 01/06/1994 | Gross Beta | 6 | PM | 1443.5 | .00374 | .00000 | 1.14 | | | | | | UJ |
| 01/06/1994 | Polonium-210 | 6 | PM | 1443.5 | .00107 | .00180 | 1.14 | | | | | | UJ |
| 01/06/1994 | Thorium-230 | 7 | PM | 1439.7 | .00002 | .00020 | 1.58 | | | | | U | UJ |
| 01/06/1994 | Lead-210 | 7 | PM | 1439.7 | .00220 | .00120 | 1.58 | | | | | | J |
| 01/06/1994 | Radium-226 | 7 | PM | 1439.7 | .00003 | .00160 | 1.58 | | | | | U | UJ |
| 01/06/1994 | Uranium | 7 | PM | 1439.7 | .00001 | .00000 | 1.58 | .00001 | .00000 | .00000 | | B | UJ |
| 01/06/1994 | Gross Alpha | 7 | PM | 1439.7 | .00025 | .00000 | 1.58 | | | | | | UJ |
| 01/06/1994 | Gross Beta | 7 | PM | 1439.7 | .00501 | .00000 | 1.58 | | | | | | UJ |
| 01/06/1994 | Polonium-210 | 7 | PM | 1439.7 | .00188 | .00180 | 1.58 | | | | | | UJ |
| 01/08/1994 | Thorium-230 | 1 | PM | 1454.6 | .00006 | .00020 | 11.64 | | | | | B | U |
| 01/08/1994 | Thorium-232 | 1 | PM | 1454.6 | .00000 | .00020 | 11.64 | | | | | U | U |
| 01/08/1994 | Polonium-210 | 1 | PM | 1454.6 | .00503 | .00180 | 11.64 | | | | | | |
| 01/08/1994 | Lead-210 | 1 | PM | 1454.6 | .01532 | .00120 | 11.64 | | | | | | |
| 01/08/1994 | Radium-228 | 1 | PM | 1454.6 | .00314 | .00690 | 11.64 | | | | | B | U |
| 01/08/1994 | Uranium | 1 | PM | 1454.6 | .00011 | .00000 | 11.64 | .00005 | .00000 | .00005 | | | U |
| 01/08/1994 | Radium-226 | 1 | PM | 1454.6 | .00002 | .00160 | 11.64 | | | | | U | U |
| 01/08/1994 | Thorium-230 | 2 | PM | 1445.6 | .00027 | .00020 | 35.77 | | | | | | |
| 01/08/1994 | Thorium-232 | 2 | PM | 1445.6 | .00000 | .00020 | 35.77 | | | | | U | U |
| 01/08/1994 | Polonium-210 | 2 | PM | 1445.6 | .02022 | .00180 | 35.77 | | | | | | |
| 01/08/1994 | Lead-210 | 2 | PM | 1445.6 | .01537 | .00120 | 35.77 | | | | | | |
| 01/08/1994 | Radium-226 | 2 | PM | 1445.6 | .00013 | .00160 | 35.77 | | | | | U | U |
| 01/08/1994 | Radium-228 | 2 | PM | 1445.6 | .00194 | .00690 | 35.77 | | | | | U | U |
| 01/08/1994 | Uranium | 2 | PM | 1445.6 | .00077 | .00000 | 35.77 | .00039 | .00002 | .00036 | | | |
| 01/08/1994 | Thorium-230 | 3 | PM | 1456.9 | .00002 | .00020 | 8.11 | | | | | B | U |
| 01/08/1994 | Polonium-210 | 3 | PM | 1456.9 | .00350 | .00180 | 8.11 | | | | | | |
| 01/08/1994 | Lead-210 | 3 | PM | 1456.9 | .01351 | .00120 | 8.11 | | | | | | |

Note: Concentrations of Uranium isotopes were calculated from total uranium based on naturally occuring ratios and are expressed in pCi/m3. EPA screening levels of uranium isotopes are given in parens.

Data Report for Radionuclide Concentrations from PM10 Samples
(Validated)

| Sample Date | Chemical Name | Site No. | Type | Run Time (min.) | Chem Conc (pCi/m3) | EPA Screen. Level (pCi/m3) | Particulate Conc. (ug/m3) | U-234 (0.0002) | U-235 (0.0002) | U-238 (0.0001) | Grav Val | Quality Lab | Quality Val |
|---|---|---|---|---|---|---|---|---|---|---|---|---|---|
| 01/08/1994 | Radium-226 | 3 | PM | 1456.9 | -.00021 | .00160 | 8.11 | | | | | U | U |
| 01/08/1994 | Radium-228 | 3 | PM | 1456.9 | .00122 | .00690 | 8.11 | | | | | U | U |
| 01/08/1994 | Thorium-232 | 3 | PM | 1456.9 | .00000 | .00020 | 8.11 | | | | | U | U |
| 01/08/1994 | Uranium | 3 | PM | 1456.9 | .00002 | .00000 | 8.11 | .00001 | .00000 | .00001 | | B | U |
| 01/08/1994 | Thorium-230 | 4 | PM | 1447.2 | .00006 | .00020 | 11.02 | | | | | B | U |
| 01/08/1994 | Thorium-232 | 4 | PM | 1447.2 | .00000 | .00020 | 11.02 | | | | | U | U |
| 01/08/1994 | Polonium-210 | 4 | PM | 1447.2 | .00535 | .00180 | 11.02 | | | | | | |
| 01/08/1994 | Lead-210 | 4 | PM | 1447.2 | .01277 | .00120 | 11.02 | | | | | | |
| 01/08/1994 | Radium-226 | 4 | PM | 1447.2 | -.00028 | .00160 | 11.02 | | | | | U | U |
| 01/08/1994 | Radium-228 | 4 | PM | 1447.2 | .00040 | .00690 | 11.02 | | | | | U | U |
| 01/08/1994 | Uranium | 4 | PM | 1447.2 | .00008 | .00000 | 11.02 | .00004 | .00000 | .00004 | | B | U |
| 01/08/1994 | Thorium-232 | 5 | PM | 1437.9 | .00003 | .00020 | 6.00 | | | | | U | U |
| 01/08/1994 | Polonium-210 | 5 | PM | 1437.9 | .00837 | .00180 | 6.00 | | | | | | |
| 01/08/1994 | Lead-210 | 5 | PM | 1437.9 | .01537 | .00120 | 6.00 | | | | | | |
| 01/08/1994 | Radium-226 | 5 | PM | 1437.9 | .00017 | .00160 | 6.00 | | | | | U | U |
| 01/08/1994 | Uranium | 5 | PM | 1437.9 | .00005 | .00000 | 6.00 | .00002 | .00000 | .00002 | | B | U |
| 01/08/1994 | Thorium-230 | 5 | PM | 1437.9 | .00003 | .00020 | 6.00 | | | | | B | U |
| 01/08/1994 | Radium-228 | 5 | PM | 1437.9 | .00117 | .00690 | 6.00 | | | | | U | U |
| 01/08/1994 | Thorium-230 | 6 | PM | 1439.7 | .00001 | .00020 | 4.89 | | | | | U | U |
| 01/08/1994 | Thorium-232 | 6 | PM | 1439.7 | .00000 | .00020 | 4.89 | | | | | U | U |
| 01/08/1994 | Polonium-210 | 6 | PM | 1439.7 | .00300 | .00180 | 4.89 | | | | | | |
| 01/08/1994 | Lead-210 | 6 | PM | 1439.7 | .01752 | .00120 | 4.89 | | | | | | |
| 01/08/1994 | Radium-226 | 6 | PM | 1439.7 | -.00007 | .00160 | 4.89 | | | | | U | U |
| 01/08/1994 | Radium-228 | 6 | PM | 1439.7 | .00000 | .00690 | 4.89 | | | | | U | U |
| 01/08/1994 | Uranium | 6 | PM | 1439.7 | .00001 | .00000 | 4.89 | .00001 | .00000 | .00001 | | B | U |
| 01/08/1994 | Thorium-232 | 7 | PM | 1437.0 | .00000 | .00020 | 16.97 | | | | | U | U |
| 01/08/1994 | Polonium-210 | 7 | PM | 1437.0 | .02655 | .00180 | 16.97 | | | | | | |
| 01/08/1994 | Lead-210 | 7 | PM | 1437.0 | .01175 | .00120 | 16.97 | | | | | | |
| 01/08/1994 | Radium-226 | 7 | PM | 1437.0 | .00000 | .00160 | 16.97 | | | | | U | U |
| 01/08/1994 | Uranium | 7 | PM | 1437.0 | .00019 | .00000 | 16.97 | .00010 | .00000 | .00009 | | | |
| 01/08/1994 | Thorium-230 | 7 | PM | 1437.0 | .00001 | .00020 | 16.97 | | | | | U | U |
| 01/08/1994 | Radium-228 | 7 | PM | 1437.0 | .00165 | .00690 | 16.97 | | | | | U | U |
| 01/08/1994 | Thorium-230 | 8 | PM | 1464.2 | .00002 | .00020 | 11.04 | | | | | U | U |
| 01/08/1994 | Thorium-232 | 8 | PM | 1464.2 | .00000 | .00020 | 11.04 | | | | | U | U |
| 01/08/1994 | Polonium-210 | 8 | PM | 1464.2 | .00135 | .00180 | 11.04 | | | | | B | |
| 01/08/1994 | Radium-226 | 8 | PM | 1464.2 | .00003 | .00160 | 11.04 | | | | | U | U |
| 01/08/1994 | Radium-228 | 8 | PM | 1464.2 | .00096 | .00690 | 11.04 | | | | | U | U |
| 01/08/1994 | Uranium | 8 | PM | 1464.2 | .00002 | .00000 | 11.04 | .00001 | .00000 | .00001 | | B | U |
| 01/08/1994 | Lead-210 | 8 | PM | 1464.2 | .00210 | .00120 | 11.04 | | | | | | |
| 01/08/1994 | Thorium-230 | P | BL | 1440.0 | .00002 | .00020 | -1.25 | | | | | B | U |
| 01/08/1994 | Thorium-232 | P | BL | 1440.0 | .00000 | .00020 | -1.25 | | | | | U | U |
| 01/08/1994 | Polonium-210 | P | BL | 1440.0 | .00002 | .00180 | -1.25 | | | | | U | U |
| 01/08/1994 | Lead-210 | P | BL | 1440.0 | .00019 | .00120 | -1.25 | | | | | | U |
| 01/08/1994 | Radium-228 | P | BL | 1440.0 | .00130 | .00690 | -1.25 | | | | | U | U |
| 01/08/1994 | Uranium | P | BL | 1440.0 | .00002 | .00000 | -1.25 | .00001 | .00000 | .00001 | | B | U |
| 01/08/1994 | Radium-226 | P | BL | 1440.0 | -.00015 | .00160 | -1.25 | | | | | U | U |
| 01/12/1994 | Thorium-230 | 1 | PM | 1447.5 | .00002 | .00020 | 25.67 | | | | | U | U |
| 01/12/1994 | Thorium-232 | 1 | PM | 1447.5 | .00000 | .00020 | 25.67 | | | | | U | U |
| 01/12/1994 | Polonium-210 | 1 | PM | 1447.5 | .02785 | .00180 | 25.67 | | | | | | |
| 01/12/1994 | Lead-210 | 1 | PM | 1447.5 | .00494 | .00120 | 25.67 | | | | | | |
| 01/12/1994 | Radium-226 | 1 | PM | 1447.5 | .00121 | .00160 | 25.67 | | | | | B | U |

Note: Concentrations of Uranium isotopes were calculated from total uranium based on naturally occuring ratios and are expressed in pCi/m3. EPA screening levels of uranium isotopes are given in parens.

Data Report for Radionuclide Concentrations from PM10 Samples (Validated) 07/31/1995



| Sample Date | Chemical Name | Site No. | Type | Run Time (min.) | Chem Conc (pCi/m3) | EPA Screen. Level (pCi/m3) | Particulate Conc. (ug/m3) | U-234 (0.0002) | U-235 (0.0002) | U-238 (0.0001) | Grav Val | Quality Lab | Quality Val |
|---|---|---|---|---|---|---|---|---|---|---|---|---|---|
| 01/12/1994 | Radium-228 | 1 | PM | 1447.5 | .00051 | .00690 | 25.67 | | | | | U | U |
| 01/12/1994 | Uranium | 1 | PM | 1447.5 | .00032 | .00000 | 25.67 | .00016 | .00001 | .00015 | | | |
| 01/12/1994 | Thorium-230 | 2 | PM | 1443.6 | .00000 | .00020 | 84.40 | | | | | L | L |
| 01/12/1994 | Thorium-232 | 2 | PM | 1443.6 | .00000 | .00020 | 84.40 | | | | | L | L |
| 01/12/1994 | Polonium-210 | 2 | PM | 1443.6 | .15132 | .00180 | 84.40 | | | | | | |
| 01/12/1994 | Lead-210 | 2 | PM | 1443.6 | .00783 | .00120 | 84.40 | | | | | | |
| 01/12/1994 | Radium-226 | 2 | PM | 1443.6 | .00002 | .00160 | 84.40 | | | | | U | U |
| 01/12/1994 | Radium-228 | 2 | PM | 1443.6 | .00072 | .00690 | 84.40 | | | | | U | U |
| 01/12/1994 | Uranium | 2 | PM | 1443.6 | .00106 | .00000 | 84.40 | .00053 | .00002 | .00050 | | | |
| 01/12/1994 | Thorium-230 | 3 | PM | 1456.9 | .00004 | .00020 | 10.05 | | | | | U | U |
| 01/12/1994 | Thorium-232 | 3 | PM | 1456.9 | .00000 | .00020 | 10.05 | | | | | U | U |
| 01/12/1994 | Polonium-210 | 3 | PM | 1456.9 | .00928 | .00180 | 10.05 | | | | | | |
| 01/12/1994 | Lead-210 | 3 | PM | 1456.9 | .00907 | .00120 | 10.05 | | | | | | |
| 01/12/1994 | Radium-226 | 3 | PM | 1456.9 | .00006 | .00160 | 10.05 | | | | | U | U |
| 01/12/1994 | Uranium | 3 | PM | 1456.9 | .00008 | .00000 | 10.05 | .00004 | .00000 | .00004 | | B | U |
| 01/12/1994 | Radium-228 | 3 | PM | 1456.9 | .00050 | .00690 | 10.05 | | | | | U | U |
| 01/12/1994 | Thorium-230 | 4 | PM | 1443.1 | .00006 | .00020 | 3.75 | | | | | B | U |
| 01/12/1994 | Thorium-232 | 4 | PM | 1443.1 | .00000 | .00020 | 3.75 | | | | | U | U |
| 01/12/1994 | Polonium-210 | 4 | PM | 1443.1 | .00653 | .00180 | 3.75 | | | | | | |
| 01/12/1994 | Lead-210 | 4 | PM | 1443.1 | .02099 | .00120 | 3.75 | | | | | | |
| 01/12/1994 | Radium-228 | 4 | PM | 1443.1 | .00000 | .00690 | 3.75 | | | | | U | U |
| 01/12/1994 | Uranium | 4 | PM | 1443.1 | .00012 | .00000 | 3.75 | .00006 | .00000 | .00005 | | | U |
| 01/12/1994 | Radium-226 | 4 | PM | 1443.1 | .00009 | .00160 | 3.75 | | | | | U | U |
| 01/12/1994 | Thorium-230 | 5 | PM | 1439.7 | .00001 | .00020 | .82 | | | | | U | U |
| 01/12/1994 | Thorium-232 | 5 | PM | 1439.7 | .00000 | .00020 | .82 | | | | | U | U |
| 01/12/1994 | Polonium-210 | 5 | PM | 1439.7 | .00182 | .00180 | .82 | | | | | B | U |
| 01/12/1994 | Radium-226 | 5 | PM | 1439.7 | .00030 | .00160 | .82 | | | | | U | U |
| 01/12/1994 | Radium-228 | 5 | PM | 1439.7 | .00080 | .00690 | .82 | | | | | U | U |
| 01/12/1994 | Uranium | 5 | PM | 1439.7 | .00002 | .00000 | .82 | .00001 | .00000 | .00001 | | B | U |
| 01/12/1994 | Lead-210 | 5 | PM | 1439.7 | .00574 | .00120 | .82 | | | | | | |
| 01/12/1994 | Thorium-230 | 6 | PM | 1440.8 | .00000 | .00020 | 1.90 | | | | | U | U |
| 01/12/1994 | Thorium-232 | 6 | PM | 1440.8 | .00000 | .00020 | 1.90 | | | | | U | U |
| 01/12/1994 | Polonium-210 | 6 | PM | 1440.8 | .00111 | .00180 | 1.90 | | | | | B | U |
| 01/12/1994 | Radium-226 | 6 | PM | 1440.8 | -.00041 | .00160 | 1.90 | | | | | U | U |
| 01/12/1994 | Radium-228 | 6 | PM | 1440.8 | .00035 | .00690 | 1.90 | | | | | U | U |
| 01/12/1994 | Uranium | 6 | PM | 1440.8 | .00001 | .00000 | 1.90 | .00000 | .00000 | .00000 | | B | U |
| 01/12/1994 | Lead-210 | 6 | PM | 1440.8 | .00661 | .00120 | 1.90 | | | | | | |
| 01/12/1994 | Thorium-230 | 7 | PM | 1440.5 | .00001 | .00020 | .60 | | | | | U | U |
| 01/12/1994 | Polonium-210 | 7 | PM | 1440.5 | .00164 | .00180 | .60 | | | | | B | U |
| 01/12/1994 | Lead-210 | 7 | PM | 1440.5 | .00572 | .00120 | .60 | | | | | | |
| 01/12/1994 | Radium-226 | 7 | PM | 1440.5 | -.00057 | .00160 | .60 | | | | | U | U |
| 01/12/1994 | Radium-228 | 7 | PM | 1440.5 | .00022 | .00690 | .60 | | | | | U | U |
| 01/12/1994 | Uranium | 7 | PM | 1440.5 | .00003 | .00000 | .60 | .00002 | .00000 | .00001 | | B | U |
| 01/12/1994 | Thorium-232 | 7 | PM | 1440.5 | .00000 | .00020 | .60 | | | | | U | U |
| 01/12/1994 | Thorium-230 | P | BL | 1440.0 | .00001 | .00020 | -.93 | | | | | U | U |
| 01/12/1994 | Thorium-232 | P | BL | 1440.0 | .00000 | .00020 | -.93 | | | | | U | U |
| 01/12/1994 | Polonium-210 | P | BL | 1440.0 | .00009 | .00180 | -.93 | | | | | U | UJ |
| 01/12/1994 | Lead-210 | P | BL | 1440.0 | .00011 | .00120 | -.93 | | | | | U | U |
| 01/12/1994 | Radium-226 | P | BL | 1440.0 | -.00017 | .00160 | -.93 | | | | | U | U |
| 01/12/1994 | Radium-228 | P | BL | 1440.0 | .00012 | .00690 | -.93 | | | | | U | U |
| 01/12/1994 | Uranium | P | BL | 1440.0 | .00002 | .00000 | -.93 | .00001 | .00000 | .00001 | | B | U |

Note: Concentrations of Uranium isotopes were calculated from total uranium based on naturally occuring ratios and are expressed in pCi/m3. EPA screening levels of uranium isotopes are given in parens.

Data Report for Radionuclide Concentrations from PM10 Samples
(Validated)

| Sample Date | Chemical Name | Site No. | Type | Run Time (min.) | Chem Conc (pCi/m3) | EPA Screen. Level (pCi/m3) | Particulate Conc. (ug/m3) | U-234 (0.0002) | U-235 (0.0002) | U-238 (0.0001) | Quality Grav Val | Quality Lab Val |
|---|---|---|---|---|---|---|---|---|---|---|---|---|
| 01/16/1994 | Thorium-230 | 1 | PM | 1453.4 | .00011 | .00020 | 35.61 | | | | B | U |
| 01/16/1994 | Thorium-232 | 1 | PM | 1453.4 | -.00001 | .00020 | 35.61 | | | | U | U |
| 01/16/1994 | Polonium-210 | 1 | PM | 1453.4 | .03821 | .00180 | 35.61 | | | | | |
| 01/16/1994 | Lead-210 | 1 | PM | 1453.4 | .01160 | .00120 | 35.61 | | | | | |
| 01/16/1994 | Radium-226 | 1 | PM | 1453.4 | -.00002 | .00160 | 35.61 | | | | U | U |
| 01/16/1994 | Radium-228 | 1 | PM | 1453.4 | .00115 | .00690 | 35.61 | | | | U | U |
| 01/16/1994 | Uranium | 1 | PM | 1453.4 | .00034 | .00000 | 35.61 | .00017 | .00001 | .00016 | | |
| 01/16/1994 | Thorium-230 | 2 | PM | 1445.9 | .00000 | .00020 | 116.99 | | | | L | L |
| 01/16/1994 | Thorium-232 | 2 | PM | 1445.9 | .00000 | .00020 | 116.99 | | | | L | L |
| 01/16/1994 | Polonium-210 | 2 | PM | 1445.9 | .23024 | .00180 | 116.99 | | | | | |
| 01/16/1994 | Lead-210 | 2 | PM | 1445.9 | .01545 | .00120 | 116.99 | | | | | |
| 01/16/1994 | Radium-226 | 2 | PM | 1445.9 | .00109 | .00160 | 116.99 | | | | B | U |
| 01/16/1994 | Radium-228 | 2 | PM | 1445.9 | .00108 | .00690 | 116.99 | | | | U | U |
| 01/16/1994 | Uranium | 2 | PM | 1445.9 | .00158 | .00000 | 116.99 | .00080 | .00003 | .00075 | | |
| 01/16/1994 | Thorium-230 | 3 | PM | 1454.3 | .00006 | .00020 | 11.58 | | | | B | U |
| 01/16/1994 | Thorium-232 | 3 | PM | 1454.3 | .00000 | .00020 | 11.58 | | | | U | U |
| 01/16/1994 | Polonium-210 | 3 | PM | 1454.3 | .01466 | .00180 | 11.58 | | | | | |
| 01/16/1994 | Lead-210 | 3 | PM | 1454.3 | .01090 | .00120 | 11.58 | | | | | |
| 01/16/1994 | Radium-226 | 3 | PM | 1454.3 | .00015 | .00160 | 11.58 | | | | U | U |
| 01/16/1994 | Uranium | 3 | PM | 1454.3 | .00010 | .00000 | 11.58 | .00005 | .00000 | .00005 | | U |
| 01/16/1994 | Radium-228 | 3 | PM | 1454.3 | .00008 | .00690 | 11.58 | | | | U | U |
| 01/16/1994 | Thorium-230 | 4 | PM | 1449.1 | .00002 | .00020 | 4.28 | | | | U | U |
| 01/16/1994 | Thorium-232 | 4 | PM | 1449.1 | .00000 | .00020 | 4.28 | | | | U | U |
| 01/16/1994 | Polonium-210 | 4 | PM | 1449.1 | .00265 | .00180 | 4.28 | | | | | |
| 01/16/1994 | Radium-226 | 4 | PM | 1449.1 | .00016 | .00160 | 4.28 | | | | U | U |
| 01/16/1994 | Radium-228 | 4 | PM | 1449.1 | -.00037 | .00690 | 4.28 | | | | U | U |
| 01/16/1994 | Uranium | 4 | PM | 1449.1 | .00001 | .00000 | 4.28 | .00001 | .00000 | .00001 | B | U |
| 01/16/1994 | Lead-210 | 4 | PM | 1449.1 | .01158 | .00120 | 4.28 | | | | | |
| 01/16/1994 | Thorium-230 | 5 | PM | 1437.7 | .00000 | .00020 | 3.24 | | | | U | U |
| 01/16/1994 | Thorium-232 | 5 | PM | 1437.7 | .00000 | .00020 | 3.24 | | | | U | U |
| 01/16/1994 | Polonium-210 | 5 | PM | 1437.7 | .00198 | .00180 | 3.24 | | | | | |
| 01/16/1994 | Radium-226 | 5 | PM | 1437.7 | -.00014 | .00160 | 3.24 | | | | U | U |
| 01/16/1994 | Radium-228 | 5 | PM | 1437.7 | .00189 | .00690 | 3.24 | | | | U | U |
| 01/16/1994 | Uranium | 5 | PM | 1437.7 | .00001 | .00000 | 3.24 | .00001 | .00000 | .00001 | B | U |
| 01/16/1994 | Lead-210 | 5 | PM | 1437.7 | .01327 | .00120 | 3.24 | | | | | |
| 01/16/1994 | Thorium-230 | 6 | PM | 1438.9 | .00001 | .00020 | 4.37 | | | | U | U |
| 01/16/1994 | Polonium-210 | 6 | PM | 1438.9 | .00233 | .00180 | 4.37 | | | | | |
| 01/16/1994 | Radium-226 | 6 | PM | 1438.9 | .00000 | .00160 | 4.37 | | | | U | U |
| 01/16/1994 | Radium-228 | 6 | PM | 1438.9 | .00231 | .00690 | 4.37 | | | | B | U |
| 01/16/1994 | Uranium | 6 | PM | 1438.9 | .00003 | .00000 | 4.37 | .00001 | .00000 | .00001 | B | U |
| 01/16/1994 | Thorium-232 | 6 | PM | 1438.9 | .00000 | .00020 | 4.37 | | | | U | U |
| 01/16/1994 | Lead-210 | 6 | PM | 1438.9 | .01436 | .00120 | 4.37 | | | | | |
| 01/16/1994 | Thorium-230 | 7 | PM | 1437.1 | .00001 | .00020 | 2.90 | | | | U | U |
| 01/16/1994 | Thorium-232 | 7 | PM | 1437.1 | .00000 | .00020 | 2.90 | | | | U | U |
| 01/16/1994 | Polonium-210 | 7 | PM | 1437.1 | .00244 | .00180 | 2.90 | | | | | |
| 01/16/1994 | Radium-226 | 7 | PM | 1437.1 | -.00016 | .00160 | 2.90 | | | | U | U |
| 01/16/1994 | Radium-228 | 7 | PM | 1437.1 | .00031 | .00690 | 2.90 | | | | U | U |
| 01/16/1994 | Uranium | 7 | PM | 1437.1 | .00001 | .00000 | 2.90 | .00000 | .00000 | .00000 | B | U |
| 01/16/1994 | Lead-210 | 7 | PM | 1437.1 | .01366 | .00120 | 2.90 | | | | | |
| 01/20/1994 | Thorium-230 | 1 | PM | 1477.7 | .00000 | .00020 | 49.41 | | | | L | L |
| 01/20/1994 | Thorium-232 | 1 | PM | 1477.7 | .00000 | .00020 | 49.41 | | | | L | L |

Note: Concentrations of Uranium isotopes were calculated from total uranium based on naturally occuring ratios and are expressed in pCi/m3. EPA screening levels of uranium isotopes are given in parens.

Data Report for Radionuclide Concentrations from PM10 Samples
(Validated)

| Sample Date | Chemical Name | Site No. | Type | Run Time (min.) | Chem Conc (pCi/m3) | EPA Screen. Level (pCi/m3) | Particulate Conc. (ug/m3) | U-234 (0.0002) | U-235 (0.0002) | U-238 (0.0001) | Grav Val | Quality Lab | Quality Val |
|---|---|---|---|---|---|---|---|---|---|---|---|---|---|
| 01/20/1994 | Polonium-210 | 1 | PM | 1477.7 | .00000 | .00180 | 49.41 | | | | | L | L |
| 01/20/1994 | Lead-210 | 1 | PM | 1477.7 | .00000 | .00120 | 49.41 | | | | | L | L |
| 01/20/1994 | Radium-226 | 1 | PM | 1477.7 | .00000 | .00160 | 49.41 | | | | | L | L |
| 01/20/1994 | Radium-228 | 1 | PM | 1477.7 | .00000 | .00690 | 49.41 | | | | | L | L |
| 01/20/1994 | Uranium | 1 | PM | 1477.7 | .00000 | .00000 | 49.41 | .00000 | .00000 | .00000 | | L | L |
| 01/20/1994 | Thorium-230 | 2 | PM | 1441.4 | .00024 | .00020 | 72.92 | | | | | | J |
| 01/20/1994 | Thorium-232 | 2 | PM | 1441.4 | .00000 | .00020 | 72.92 | | | | | U | U |
| 01/20/1994 | Polonium-210 | 2 | PM | 1441.4 | .01893 | .00180 | 72.92 | | | | | | |
| 01/20/1994 | Lead-210 | 2 | PM | 1441.4 | .05443 | .00120 | 72.92 | | | | | | |
| 01/20/1994 | Radium-228 | 2 | PM | 1441.4 | .00109 | .00690 | 72.92 | | | | | U | U |
| 01/20/1994 | Uranium | 2 | PM | 1441.4 | .00068 | .00000 | 72.92 | .00034 | .00001 | .00032 | | | |
| 01/20/1994 | Radium-226 | 2 | PM | 1441.4 | .00047 | .00160 | 72.92 | | | | | U | U |
| 01/20/1994 | Thorium-230 | 3 | PM | 1460.0 | .00001 | .00020 | 42.20 | | | | | U | U |
| 01/20/1994 | Thorium-232 | 3 | PM | 1460.0 | .00002 | .00020 | 42.20 | | | | | U | U |
| 01/20/1994 | Polonium-210 | 3 | PM | 1460.0 | .01197 | .00180 | 42.20 | | | | | | |
| 01/20/1994 | Lead-210 | 3 | PM | 1460.0 | .04947 | .00120 | 42.20 | | | | | | |
| 01/20/1994 | Radium-226 | 3 | PM | 1460.0 | -.00030 | .00160 | 42.20 | | | | | U | U |
| 01/20/1994 | Uranium | 3 | PM | 1460.0 | .00006 | .00000 | 42.20 | .00003 | .00000 | .00003 | | B | U |
| 01/20/1994 | Radium-228 | 3 | PM | 1460.0 | .00139 | .00690 | 42.20 | | | | | U | U |
| 01/20/1994 | Thorium-230 | 4 | PM | 1446.2 | .00005 | .00020 | 56.59 | | | | | B | U |
| 01/20/1994 | Thorium-232 | 4 | PM | 1446.2 | .00001 | .00020 | 56.59 | | | | | U | U |
| 01/20/1994 | Polonium-210 | 4 | PM | 1446.2 | .01353 | .00180 | 56.59 | | | | | | |
| 01/20/1994 | Radium-226 | 4 | PM | 1446.2 | -.00001 | .00160 | 56.59 | | | | | U | U |
| 01/20/1994 | Radium-228 | 4 | PM | 1446.2 | .00153 | .00690 | 56.59 | | | | | U | U |
| 01/20/1994 | Uranium | 4 | PM | 1446.2 | .00009 | .00000 | 56.59 | .00005 | .00000 | .00004 | | B | U |
| 01/20/1994 | Lead-210 | 4 | PM | 1446.2 | .04880 | .00120 | 56.59 | | | | | | |
| 01/20/1994 | Thorium-230 | 5 | PM | 1443.7 | .00005 | .00020 | 56.94 | | | | | U | U |
| 01/20/1994 | Thorium-232 | 5 | PM | 1443.7 | .00002 | .00020 | 56.94 | | | | | U | U |
| 01/20/1994 | Polonium-210 | 5 | PM | 1443.7 | .02907 | .00180 | 56.94 | | | | | | J |
| 01/20/1994 | Lead-210 | 5 | PM | 1443.7 | .04986 | .00120 | 56.94 | | | | | | |
| 01/20/1994 | Radium-226 | 5 | PM | 1443.7 | -.00046 | .00160 | 56.94 | | | | | U | U |
| 01/20/1994 | Radium-228 | 5 | PM | 1443.7 | -.00019 | .00690 | 56.94 | | | | | U | U |
| 01/20/1994 | Uranium | 5 | PM | 1443.7 | .00016 | .00000 | 56.94 | .00008 | .00000 | .00008 | | | |
| 01/20/1994 | Thorium-230 | 6 | PM | 1445.0 | .00001 | .00020 | 20.55 | | | | | U | U |
| 01/20/1994 | Thorium-232 | 6 | PM | 1445.0 | .00000 | .00020 | 20.55 | | | | | U | U |
| 01/20/1994 | Polonium-210 | 6 | PM | 1445.0 | .00990 | .00180 | 20.55 | | | | | | J |
| 01/20/1994 | Lead-210 | 6 | PM | 1445.0 | .05170 | .00120 | 20.55 | | | | | | |
| 01/20/1994 | Radium-228 | 6 | PM | 1445.0 | .00108 | .00690 | 20.55 | | | | | U | U |
| 01/20/1994 | Uranium | 6 | PM | 1445.0 | .00004 | .00000 | 20.55 | .00002 | .00000 | .00002 | | B | U |
| 01/20/1994 | Radium-226 | 6 | PM | 1445.0 | .00020 | .00160 | 20.55 | | | | | U | U |
| 01/20/1994 | Thorium-230 | 7 | PM | 1440.8 | .00000 | .00020 | 51.59 | | | | | L | L |
| 01/20/1994 | Thorium-232 | 7 | PM | 1440.8 | .00000 | .00020 | 51.59 | | | | | L | L |
| 01/20/1994 | Polonium-210 | 7 | PM | 1440.8 | .01997 | .00180 | 51.59 | | | | | | J |
| 01/20/1994 | Lead-210 | 7 | PM | 1440.8 | .04505 | .00120 | 51.59 | | | | | | |
| 01/20/1994 | Radium-226 | 7 | PM | 1440.8 | -.00045 | .00160 | 51.59 | | | | | U | U |
| 01/20/1994 | Uranium | 7 | PM | 1440.8 | .00012 | .00000 | 51.59 | .00006 | .00000 | .00006 | | | U |
| 01/20/1994 | Radium-228 | 7 | PM | 1440.8 | .00053 | .00690 | 51.59 | | | | | U | U |
| 01/20/1994 | Thorium-230 | 8 | PM | 1461.0 | .00013 | .00020 | 49.40 | | | | | U | UJ |
| 01/20/1994 | Thorium-232 | 8 | PM | 1461.0 | .00007 | .00020 | 49.40 | | | | | U | UJ |
| 01/20/1994 | Polonium-210 | 8 | PM | 1461.0 | .01238 | .00180 | 49.40 | | | | | | J |
| 01/20/1994 | Lead-210 | 8 | PM | 1461.0 | .05208 | .00120 | 49.40 | | | | | | |

Note: Concentrations of Uranium isotopes were calculated from total uranium based on naturally occuring ratios and are expressed in pCi/m3. EPA screening levels of uranium isotopes are given in parens.

Data Report for Radionuclide Concentrations from PM10 Samples
(Validated)

| Sample Date | Chemical Name | Site No. | Type | Run Time (min.) | Chem Conc (pCi/m3) | EPA Screen. Level (pCi/m3) | Particulate Conc. (ug/m3) | U-234 (0.0002) | U-235 (0.0002) | U-238 (0.0001) | Grav Val | Quality Lab | Quality Val |
|---|---|---|---|---|---|---|---|---|---|---|---|---|---|
| 01/20/1994 | Radium-228 | 8 | PM | 1461.0 | .00082 | .00690 | 49.40 | | | | | U | U |
| 01/20/1994 | Uranium | 8 | PM | 1461.0 | .00014 | .00000 | 49.40 | .00007 | .00000 | .00007 | | | |
| 01/20/1994 | Radium-226 | 8 | PM | 1461.0 | .00029 | .00160 | 49.40 | | | | | U | U |
| 01/20/1994 | Thorium-230 | P | BL | 1440.0 | .00001 | .00020 | -1.37 | | | | | U | U |
| 01/20/1994 | Thorium-232 | P | BL | 1440.0 | .00000 | .00020 | -1.37 | | | | | U | U |
| 01/20/1994 | Lead-210 | P | BL | 1440.0 | .00234 | .00120 | -1.37 | | | | | | |
| 01/20/1994 | Radium-226 | P | BL | 1440.0 | -.00013 | .00160 | -1.37 | | | | | U | U |
| 01/20/1994 | Radium-228 | P | BL | 1440.0 | -.00020 | .00690 | -1.37 | | | | | U | U |
| 01/20/1994 | Uranium | P | BL | 1440.0 | .00002 | .00000 | -1.37 | .00001 | .00000 | .00001 | | B | U |
| 01/20/1994 | Polonium-210 | P | BL | 1440.0 | .00023 | .00180 | -1.37 | | | | | B | U |
| 01/24/1994 | Thorium-230 | 1 | PM | 1453.8 | .00003 | .00020 | 15.07 | | | | | B | U |
| 01/24/1994 | Thorium-232 | 1 | PM | 1453.8 | .00001 | .00020 | 15.07 | | | | | U | U |
| 01/24/1994 | Polonium-210 | 1 | PM | 1453.8 | .00547 | .00180 | 15.07 | | | | | | |
| 01/24/1994 | Lead-210 | 1 | PM | 1453.8 | .03065 | .00120 | 15.07 | | | | | | |
| 01/24/1994 | Radium-226 | 1 | PM | 1453.8 | .00021 | .00160 | 15.07 | | | | | U | U |
| 01/24/1994 | Uranium | 1 | PM | 1453.8 | .00007 | .00000 | 15.07 | .00004 | .00000 | .00004 | | B | U |
| 01/24/1994 | Radium-228 | 1 | PM | 1453.8 | .00076 | .00690 | 15.07 | | | | | U | U |
| 01/24/1994 | Thorium-230 | 2 | PM | 1444.0 | .00011 | .00020 | 40.89 | | | | | B | UJ |
| 01/24/1994 | Thorium-232 | 2 | PM | 1444.0 | .00001 | .00020 | 40.89 | | | | | U | UJ |
| 01/24/1994 | Polonium-210 | 2 | PM | 1444.0 | .02135 | .00180 | 40.89 | | | | | | |
| 01/24/1994 | Lead-210 | 2 | PM | 1444.0 | .03235 | .00120 | 40.89 | | | | | | |
| 01/24/1994 | Radium-226 | 2 | PM | 1444.0 | .00145 | .00160 | 40.89 | | | | | B | U |
| 01/24/1994 | Radium-228 | 2 | PM | 1444.0 | .00069 | .00690 | 40.89 | | | | | U | U |
| 01/24/1994 | Uranium | 2 | PM | 1444.0 | .00090 | .00000 | 40.89 | .00045 | .00002 | .00043 | | | |
| 01/24/1994 | Thorium-230 | 3 | PM | 1455.7 | .00003 | .00020 | 14.58 | | | | | U | U |
| 01/24/1994 | Thorium-232 | 3 | PM | 1455.7 | .00000 | .00020 | 14.58 | | | | | U | U |
| 01/24/1994 | Lead-210 | 3 | PM | 1455.7 | .03163 | .00120 | 14.58 | | | | | | |
| 01/24/1994 | Radium-226 | 3 | PM | 1455.7 | .00035 | .00160 | 14.58 | | | | | U | U |
| 01/24/1994 | Radium-228 | 3 | PM | 1455.7 | .00038 | .00690 | 14.58 | | | | | U | U |
| 01/24/1994 | Uranium | 3 | PM | 1455.7 | .00004 | .00000 | 14.58 | .00002 | .00000 | .00002 | | B | U |
| 01/24/1994 | Polonium-210 | 3 | PM | 1455.7 | .00563 | .00180 | 14.58 | | | | | | |
| 01/24/1994 | Thorium-230 | 4 | PM | 1447.0 | .00003 | .00020 | 18.86 | | | | | B | U |
| 01/24/1994 | Thorium-232 | 4 | PM | 1447.0 | -.00001 | .00020 | 18.86 | | | | | U | U |
| 01/24/1994 | Polonium-210 | 4 | PM | 1447.0 | .00512 | .00180 | 18.86 | | | | | | |
| 01/24/1994 | Lead-210 | 4 | PM | 1447.0 | .03109 | .00120 | 18.86 | | | | | | |
| 01/24/1994 | Radium-228 | 4 | PM | 1447.0 | .00159 | .00690 | 18.86 | | | | | U | U |
| 01/24/1994 | Uranium | 4 | PM | 1447.0 | .00002 | .00000 | 18.86 | .00001 | .00000 | .00001 | | B | U |
| 01/24/1994 | Radium-226 | 4 | PM | 1447.0 | .00027 | .00160 | 18.86 | | | | | U | U |
| 01/24/1994 | Thorium-230 | 5 | PM | 1437.2 | .00003 | .00020 | 7.93 | | | | | U | U |
| 01/24/1994 | Thorium-232 | 5 | PM | 1437.2 | .00000 | .00020 | 7.93 | | | | | U | U |
| 01/24/1994 | Polonium-210 | 5 | PM | 1437.2 | .00679 | .00180 | 7.93 | | | | | | |
| 01/24/1994 | Lead-210 | 5 | PM | 1437.2 | .03153 | .00120 | 7.93 | | | | | | |
| 01/24/1994 | Radium-228 | 5 | PM | 1437.2 | .00185 | .00690 | 7.93 | | | | | U | U |
| 01/24/1994 | Uranium | 5 | PM | 1437.2 | .00001 | .00000 | 7.93 | .00001 | .00000 | .00001 | | B | U |
| 01/24/1994 | Radium-226 | 5 | PM | 1437.2 | .00001 | .00160 | 7.93 | | | | | U | U |
| 01/24/1994 | Thorium-230 | 6 | PM | 1439.6 | .00000 | .00020 | 5.00 | | | | | U | U |
| 01/24/1994 | Thorium-232 | 6 | PM | 1439.6 | .00001 | .00020 | 5.00 | | | | | U | U |
| 01/24/1994 | Polonium-210 | 6 | PM | 1439.6 | .00463 | .00180 | 5.00 | | | | | | |
| 01/24/1994 | Radium-226 | 6 | PM | 1439.6 | .00080 | .00160 | 5.00 | | | | | B | U |
| 01/24/1994 | Radium-228 | 6 | PM | 1439.6 | -.00071 | .00690 | 5.00 | | | | | U | U |
| 01/24/1994 | Uranium | 6 | PM | 1439.6 | .00001 | .00000 | 5.00 | .00001 | .00000 | .00001 | | B | U |

Note: Concentrations of Uranium isotopes were calculated from total uranium based on naturally occuring ratios and are expressed in pCi/m3. EPA screening levels of uranium isotopes are given in parens.

Data Report for Radionuclide Concentrations from PM10 Samples (Validated)



| Sample Date | Chemical Name | Site No. | Type | Run Time (min.) | Chem Conc (pCi/m3) | EPA Screen. Level (pCi/m3) | Particulate Conc. (ug/m3) | U-234 (0.0002) | U-235 (0.0002) | U-238 (0.0001) | Grav Val | Quality Lab | Quality Val |
|---|---|---|---|---|---|---|---|---|---|---|---|---|---|
| 01/24/1994 | Lead-210 | 6 | PM | 1439.6 | .03086 | .00120 | 5.00 | | | | | | |
| 01/24/1994 | Thorium-230 | 7 | PM | 1438.3 | .00002 | .00020 | 7.00 | | | | | U | U |
| 01/24/1994 | Thorium-232 | 7 | PM | 1438.3 | .00001 | .00020 | 7.00 | | | | | U | U |
| 01/24/1994 | Polonium-210 | 7 | PM | 1438.3 | .00452 | .00180 | 7.00 | | | | | | |
| 01/24/1994 | Lead-210 | 7 | PM | 1438.3 | .02918 | .00120 | 7.00 | | | | | | |
| 01/24/1994 | Radium-228 | 7 | PM | 1438.3 | .00041 | .00690 | 7.00 | | | | | U | U |
| 01/24/1994 | Uranium | 7 | PM | 1438.3 | .00003 | .00000 | 7.00 | .00001 | .00000 | .00001 | | B | U |
| 01/24/1994 | Radium-226 | 7 | PM | 1438.3 | .00000 | .00160 | 7.00 | | | | | U | U |
| 01/28/1994 | Thorium-230 | 1 | PM | 1453.7 | .00007 | .00020 | 27.28 | | | | | B | U |
| 01/28/1994 | Thorium-232 | 1 | PM | 1453.7 | .00002 | .00020 | 27.28 | | | | | B | U |
| 01/28/1994 | Polonium-210 | 1 | PM | 1453.7 | .00442 | .00180 | 27.28 | | | | | | |
| 01/28/1994 | Lead-210 | 1 | PM | 1453.7 | .02607 | .00120 | 27.28 | | | | | | |
| 01/28/1994 | Radium-226 | 1 | PM | 1453.7 | .00001 | .00160 | 27.28 | | | | | U | U |
| 01/28/1994 | Uranium | 1 | PM | 1453.7 | .00016 | .00000 | 27.28 | .00008 | .00000 | .00007 | | | U |
| 01/28/1994 | Radium-228 | 1 | PM | 1453.7 | .00068 | .00690 | 27.28 | | | | | U | U |
| 01/28/1994 | Thorium-230 | 2 | PM | 1441.8 | .00000 | .00020 | 38.90 | | | | | L | L |
| 01/28/1994 | Thorium-232 | 2 | PM | 1441.8 | .00000 | .00020 | 38.90 | | | | | L | L |
| 01/28/1994 | Polonium-210 | 2 | PM | 1441.8 | .04035 | .00180 | 38.90 | | | | | | |
| 01/28/1994 | Lead-210 | 2 | PM | 1441.8 | .02529 | .00120 | 38.90 | | | | | | |
| 01/28/1994 | Radium-226 | 2 | PM | 1441.8 | .00046 | .00160 | 38.90 | | | | | U | U |
| 01/28/1994 | Radium-228 | 2 | PM | 1441.8 | .00148 | .00690 | 38.90 | | | | | U | U |
| 01/28/1994 | Uranium | 2 | PM | 1441.8 | .00042 | .00000 | 38.90 | .00021 | .00001 | .00020 | | | |
| 01/28/1994 | Thorium-232 | 3 | PM | 1454.6 | .00000 | .00020 | 21.74 | | | | | L | L |
| 01/28/1994 | Polonium-210 | 3 | PM | 1454.6 | .00538 | .00180 | 21.74 | | | | | | |
| 01/28/1994 | Lead-210 | 3 | PM | 1454.6 | .01921 | .00120 | 21.74 | | | | | | |
| 01/28/1994 | Radium-226 | 3 | PM | 1454.6 | -.00018 | .00160 | 21.74 | | | | | U | U |
| 01/28/1994 | Radium-228 | 3 | PM | 1454.6 | .00050 | .00690 | 21.74 | | | | | U | U |
| 01/28/1994 | Thorium-230 | 3 | PM | 1454.6 | .00000 | .00020 | 21.74 | | | | | L | L |
| 01/28/1994 | Uranium | 3 | PM | 1454.6 | .00005 | .00000 | 21.74 | .00002 | .00000 | .00002 | | B | U |
| 01/28/1994 | Thorium-230 | 4 | PM | 1448.5 | .00004 | .00020 | 17.21 | | | | | B | U |
| 01/28/1994 | Thorium-232 | 4 | PM | 1448.5 | .00000 | .00020 | 17.21 | | | | | U | U |
| 01/28/1994 | Polonium-210 | 4 | PM | 1448.5 | .00240 | .00180 | 17.21 | | | | | | |
| 01/28/1994 | Lead-210 | 4 | PM | 1448.5 | .02661 | .00120 | 17.21 | | | | | | |
| 01/28/1994 | Radium-226 | 4 | PM | 1448.5 | .00022 | .00160 | 17.21 | | | | | U | U |
| 01/28/1994 | Radium-228 | 4 | PM | 1448.5 | .00004 | .00690 | 17.21 | | | | | U | U |
| 01/28/1994 | Uranium | 4 | PM | 1448.5 | .00007 | .00000 | 17.21 | .00003 | .00000 | .00003 | | B | U |
| 01/28/1994 | Thorium-230 | 5 | PM | 1441.5 | .00003 | .00020 | 27.21 | | | | | U | UJ |
| 01/28/1994 | Thorium-232 | 5 | PM | 1441.5 | .00000 | .00020 | 27.21 | | | | | U | U |
| 01/28/1994 | Polonium-210 | 5 | PM | 1441.5 | .00726 | .00180 | 27.21 | | | | | | |
| 01/28/1994 | Lead-210 | 5 | PM | 1441.5 | .02444 | .00120 | 27.21 | | | | | | |
| 01/28/1994 | Radium-226 | 5 | PM | 1441.5 | -.00081 | .00160 | 27.21 | | | | | B | U |
| 01/28/1994 | Radium-228 | 5 | PM | 1441.5 | .00055 | .00690 | 27.21 | | | | | U | U |
| 01/28/1994 | Uranium | 5 | PM | 1441.5 | .00008 | .00000 | 27.21 | .00004 | .00000 | .00004 | | B | U |
| 01/28/1994 | Thorium-230 | 6 | PM | 1441.1 | .00002 | .00020 | 6.12 | | | | | | U |
| 01/28/1994 | Thorium-232 | 6 | PM | 1441.1 | -.00001 | .00020 | 6.12 | | | | | | U |
| 01/28/1994 | Polonium-210 | 6 | PM | 1441.1 | .00252 | .00180 | 6.12 | | | | | | |
| 01/28/1994 | Lead-210 | 6 | PM | 1441.1 | .01879 | .00120 | 6.12 | | | | | | |
| 01/28/1994 | Radium-228 | 6 | PM | 1441.1 | .00078 | .00690 | 6.12 | | | | | U | U |
| 01/28/1994 | Uranium | 6 | PM | 1441.1 | .00001 | .00000 | 6.12 | .00001 | .00000 | .00001 | | B | U |
| 01/28/1994 | Radium-226 | 6 | PM | 1441.1 | .00000 | .00160 | 6.12 | | | | | U | U |
| 01/28/1994 | Thorium-230 | 7 | PM | 1440.9 | .00003 | .00020 | 5.50 | | | | | U | U |

Note: Concentrations of Uranium isotopes were calculated from total uranium based on naturally occuring ratios and are expressed in pCi/m3. EPA screening levels of uranium isotopes are given in parens.

Data Report for Radionuclide Concentrations from PM10 Samples
(Validated)

| Sample Date | Chemical Name | Site No. | Type | Run Time (min.) | Chem Conc (pCi/m3) | EPA Screen. Level (pCi/m3) | Particulate Conc. (ug/m3) | U-234 (0.0002) | U-235 (0.0002) | U-238 (0.0001) | Grav Val | Quality Lab | Quality Val |
|---|---|---|---|---|---|---|---|---|---|---|---|---|---|
| 01/28/1994 | Thorium-232 | 7 | PM | 1440.9 | .00000 | .00020 | 5.50 | | | | | U | U |
| 01/28/1994 | Lead-210 | 7 | PM | 1440.9 | .02494 | .00120 | 5.50 | | | | | | |
| 01/28/1994 | Radium-226 | 7 | PM | 1440.9 | -.00003 | .00160 | 5.50 | | | | | U | U |
| 01/28/1994 | Radium-228 | 7 | PM | 1440.9 | .00059 | .00690 | 5.50 | | | | | U | U |
| 01/28/1994 | Uranium | 7 | PM | 1440.9 | .00003 | .00000 | 5.50 | .00001 | .00000 | .00001 | | B | U |
| 01/28/1994 | Polonium-210 | 7 | PM | 1440.9 | .00252 | .00180 | 5.50 | | | | | | |
| 01/28/1994 | Thorium-230 | P | BL | 1440.0 | .00001 | .00020 | -.97 | | | | | U | U |
| 01/28/1994 | Polonium-210 | P | BL | 1440.0 | .00000 | .00180 | -.97 | | | | | U | U |
| 01/28/1994 | Lead-210 | P | BL | 1440.0 | -.00189 | .00120 | -.97 | | | | | | U |
| 01/28/1994 | Radium-226 | P | BL | 1440.0 | -.00005 | .00160 | -.97 | | | | | U | U |
| 01/28/1994 | Radium-228 | P | BL | 1440.0 | .00081 | .00690 | -.97 | | | | | U | U |
| 01/28/1994 | Thorium-232 | P | BL | 1440.0 | .00001 | .00020 | -.97 | | | | | U | U |
| 01/28/1994 | Uranium | P | BL | 1440.0 | .00001 | .00000 | -.97 | .00001 | .00000 | .00001 | | B | U |
| 02/01/1994 | Thorium-230 | 1 | PM | 1453.0 | .00015 | .00020 | 32.25 | | | | | B | U |
| 02/01/1994 | Lead-210 | 1 | PM | 1453.0 | .01902 | .00120 | 32.25 | | | | | | |
| 02/01/1994 | Radium-226 | 1 | PM | 1453.0 | .00006 | .00160 | 32.25 | | | | | U | U |
| 02/01/1994 | Uranium | 1 | PM | 1453.0 | .00023 | .00000 | 32.25 | .00012 | .00001 | .00011 | | | |
| 02/01/1994 | Polonium-210 | 1 | PM | 1453.0 | .01261 | .00180 | 32.25 | | | | | | |
| 02/01/1994 | Thorium-230 | 2 | PM | 1320.7 | .00075 | .00020 | 70.34 | | | | SR | | |
| 02/01/1994 | Lead-210 | 2 | PM | 1320.7 | .02219 | .00120 | 70.34 | | | | SR | | |
| 02/01/1994 | Radium-226 | 2 | PM | 1320.7 | .00048 | .00160 | 70.34 | | | | SR | U | U |
| 02/01/1994 | Uranium | 2 | PM | 1320.7 | .00127 | .00000 | 70.34 | .00064 | .00003 | .00060 | SR | | |
| 02/01/1994 | Polonium-210 | 2 | PM | 1320.7 | .02267 | .00180 | 70.34 | | | | SR | | |
| 02/01/1994 | Thorium-230 | 3 | PM | 1454.4 | .00003 | .00020 | 15.77 | | | | | | U |
| 02/01/1994 | Thorium-232 | 3 | PM | 1454.4 | .00000 | .00020 | 15.77 | | | | | | U |
| 02/01/1994 | Polonium-210 | 3 | PM | 1454.4 | .00430 | .00180 | 15.77 | | | | | | |
| 02/01/1994 | Lead-210 | 3 | PM | 1454.4 | .03320 | .00120 | 15.77 | | | | | | |
| 02/01/1994 | Radium-226 | 3 | PM | 1454.4 | .00011 | .00160 | 15.77 | | | | | U | U |
| 02/01/1994 | Radium-228 | 3 | PM | 1454.4 | .00070 | .00690 | 15.77 | | | | | U | U |
| 02/01/1994 | Uranium | 3 | PM | 1454.4 | .00005 | .00000 | 15.77 | .00003 | .00000 | .00003 | | B | U |
| 02/01/1994 | Thorium-230 | 4 | PM | 1447.2 | .00005 | .00020 | 24.92 | | | | | B | U |
| 02/01/1994 | Thorium-232 | 4 | PM | 1447.2 | .00002 | .00020 | 24.92 | | | | | B | U |
| 02/01/1994 | Polonium-210 | 4 | PM | 1447.2 | .00394 | .00180 | 24.92 | | | | | | |
| 02/01/1994 | Radium-226 | 4 | PM | 1447.2 | -.00009 | .00160 | 24.92 | | | | | U | U |
| 02/01/1994 | Radium-228 | 4 | PM | 1447.2 | .00044 | .00690 | 24.92 | | | | | U | U |
| 02/01/1994 | Uranium | 4 | PM | 1447.2 | .00013 | .00000 | 24.92 | .00006 | .00000 | .00006 | | | U |
| 02/01/1994 | Lead-210 | 4 | PM | 1447.2 | .02410 | .00120 | 24.92 | | | | | | |
| 02/01/1994 | Thorium-230 | 5 | PM | 1439.2 | .00005 | .00020 | 8.90 | | | | | B | U |
| 02/01/1994 | Thorium-232 | 5 | PM | 1439.2 | .00000 | .00020 | 8.90 | | | | | U | U |
| 02/01/1994 | Polonium-210 | 5 | PM | 1439.2 | .00417 | .00180 | 8.90 | | | | | | |
| 02/01/1994 | Radium-226 | 5 | PM | 1439.2 | .00030 | .00160 | 8.90 | | | | | U | U |
| 02/01/1994 | Radium-228 | 5 | PM | 1439.2 | .00099 | .00690 | 8.90 | | | | | U | U |
| 02/01/1994 | Uranium | 5 | PM | 1439.2 | .00006 | .00000 | 8.90 | .00003 | .00000 | .00003 | | B | U |
| 02/01/1994 | Lead-210 | 5 | PM | 1439.2 | .02323 | .00120 | 8.90 | | | | | | |
| 02/01/1994 | Thorium-230 | 6 | PM | 1437.6 | .00000 | .00020 | 5.65 | | | | | U | U |
| 02/01/1994 | Thorium-232 | 6 | PM | 1437.6 | .00000 | .00020 | 5.65 | | | | | U | U |
| 02/01/1994 | Lead-210 | 6 | PM | 1437.6 | .03705 | .00120 | 5.65 | | | | | | |
| 02/01/1994 | Radium-226 | 6 | PM | 1437.6 | .00043 | .00160 | 5.65 | | | | | U | U |
| 02/01/1994 | Radium-228 | 6 | PM | 1437.6 | .00078 | .00690 | 5.65 | | | | | U | U |
| 02/01/1994 | Uranium | 6 | PM | 1437.6 | .00002 | .00000 | 5.65 | .00001 | .00000 | .00001 | | B | U |
| 02/01/1994 | Polonium-210 | 6 | PM | 1437.6 | .00252 | .00180 | 5.65 | | | | | | |

Note: Concentrations of Uranium isotopes were calculated from total uranium based on naturally occuring ratios and are expressed in pCi/m3. EPA screening levels of uranium isotopes are given in parens.

Data Report for Radionuclide Concentrations from PM10 Samples
(Validated)

| Sample Date | Chemical Name | Site No. | Type | Run Time (min.) | Chem Conc (pCi/m3) | EPA Screen. Level (pCi/m3) | Particulate Conc. (ug/m3) | U-234 (0.0002) | U-235 (0.0002) | U-238 (0.0001) | Grav Val | Quality Lab | Quality Val |
|---|---|---|---|---|---|---|---|---|---|---|---|---|---|
| 02/01/1994 | Thorium-230 | 7 | PM | 1438.2 | .00000 | .00020 | 40.80 | | | | | L | L |
| 02/01/1994 | Thorium-232 | 7 | PM | 1438.2 | .00000 | .00020 | 40.80 | | | | | L | L |
| 02/01/1994 | Polonium-210 | 7 | PM | 1438.2 | .02227 | .00180 | 40.80 | | | | | | |
| 02/01/1994 | Radium-226 | 7 | PM | 1438.2 | .00081 | .00160 | 40.80 | | | | | B | U |
| 02/01/1994 | Radium-228 | 7 | PM | 1438.2 | .00042 | .00690 | 40.80 | | | | | U | U |
| 02/01/1994 | Uranium | 7 | PM | 1438.2 | .00025 | .00000 | 40.80 | .00012 | .00001 | .00012 | | | |
| 02/01/1994 | Lead-210 | 7 | PM | 1438.2 | .02779 | .00120 | 40.80 | | | | | | |
| 02/01/1994 | Thorium-230 | 8 | PM | 1458.0 | .00011 | .00020 | 31.75 | | | | | B | U |
| 02/01/1994 | Lead-210 | 8 | PM | 1458.0 | .01928 | .00120 | 31.75 | | | | | | |
| 02/01/1994 | Radium-226 | 8 | PM | 1458.0 | .00037 | .00160 | 31.75 | | | | | U | U |
| 02/01/1994 | Uranium | 8 | PM | 1458.0 | .00026 | .00000 | 31.75 | .00013 | .00001 | .00012 | | | |
| 02/01/1994 | Polonium-210 | 8 | PM | 1458.0 | .01241 | .00180 | 31.75 | | | | | | |
| 02/05/1994 | Thorium-230 | 1 | PM | 1455.7 | .00000 | .00020 | 45.74 | | | | | L | L |
| 02/05/1994 | Thorium-232 | 1 | PM | 1455.7 | .00000 | .00020 | 45.74 | | | | | L | L |
| 02/05/1994 | Polonium-210 | 1 | PM | 1455.7 | .01881 | .00180 | 45.74 | | | | | | |
| 02/05/1994 | Lead-210 | 1 | PM | 1455.7 | .11692 | .00120 | 45.74 | | | | | | |
| 02/05/1994 | Radium-226 | 1 | PM | 1455.7 | .00015 | .00160 | 45.74 | | | | | U | U |
| 02/05/1994 | Radium-228 | 1 | PM | 1455.7 | .00089 | .00690 | 45.74 | | | | | U | U |
| 02/05/1994 | Uranium | 1 | PM | 1455.7 | .00017 | .00000 | 45.74 | .00009 | .00000 | .00008 | | | |
| 02/05/1994 | Thorium-230 | 2 | PM | 1444.8 | .00020 | .00020 | 65.59 | | | | | B | U |
| 02/05/1994 | Lead-210 | 2 | PM | 1444.8 | .05571 | .00120 | 65.59 | | | | | | |
| 02/05/1994 | Radium-226 | 2 | PM | 1444.8 | -.00004 | .00160 | 65.59 | | | | | U | U |
| 02/05/1994 | Uranium | 2 | PM | 1444.8 | .00034 | .00000 | 65.59 | .00017 | .00001 | .00016 | | | |
| 02/05/1994 | Polonium-210 | 2 | PM | 1444.8 | .00022 | .00180 | 65.59 | | | | | U | U |
| 02/05/1994 | Thorium-230 | 3 | PM | 1456.0 | .00003 | .00020 | 31.04 | | | | | U | U |
| 02/05/1994 | Thorium-232 | 3 | PM | 1456.0 | .00000 | .00020 | 31.04 | | | | | U | U |
| 02/05/1994 | Polonium-210 | 3 | PM | 1456.0 | .01162 | .00180 | 31.04 | | | | | | |
| 02/05/1994 | Lead-210 | 3 | PM | 1456.0 | .06899 | .00120 | 31.04 | | | | | | |
| 02/05/1994 | Radium-226 | 3 | PM | 1456.0 | -.00011 | .00160 | 31.04 | | | | | U | U |
| 02/05/1994 | Uranium | 3 | PM | 1456.0 | .00007 | .00000 | 31.04 | .00003 | .00000 | .00003 | | B | U |
| 02/05/1994 | Radium-228 | 3 | PM | 1456.0 | .00298 | .00690 | 31.04 | | | | | B | U |
| 02/05/1994 | Thorium-232 | 4 | PM | 1448.6 | .00003 | .00020 | 51.01 | | | | | U | U |
| 02/05/1994 | Polonium-210 | 4 | PM | 1448.6 | .01610 | .00180 | 51.01 | | | | | | |
| 02/05/1994 | Lead-210 | 4 | PM | 1448.6 | .07133 | .00120 | 51.01 | | | | | | |
| 02/05/1994 | Radium-226 | 4 | PM | 1448.6 | .00006 | .00160 | 51.01 | | | | | U | U |
| 02/05/1994 | Uranium | 4 | PM | 1448.6 | .00011 | .00000 | 51.01 | .00006 | .00000 | .00005 | | | U |
| 02/05/1994 | Thorium-230 | 4 | PM | 1448.6 | .00001 | .00020 | 51.01 | | | | | U | U |
| 02/05/1994 | Radium-228 | 4 | PM | 1448.6 | .00230 | .00690 | 51.01 | | | | | U | U |
| 02/05/1994 | Thorium-230 | 5 | PM | 1440.7 | .00013 | .00020 | 42.32 | | | | | B | U |
| 02/05/1994 | Lead-210 | 5 | PM | 1440.7 | .05722 | .00120 | 42.32 | | | | | | |
| 02/05/1994 | Radium-226 | 5 | PM | 1440.7 | .00008 | .00160 | 42.32 | | | | | U | U |
| 02/05/1994 | Uranium | 5 | PM | 1440.7 | .00016 | .00000 | 42.32 | .00008 | .00000 | .00008 | | | |
| 02/05/1994 | Polonium-210 | 5 | PM | 1440.7 | .03429 | .00180 | 42.32 | | | | | | |
| 02/05/1994 | Thorium-230 | 6 | PM | 1440.5 | .00002 | .00020 | 8.66 | | | | | U | U |
| 02/05/1994 | Lead-210 | 6 | PM | 1440.5 | .05376 | .00120 | 8.66 | | | | | | |
| 02/05/1994 | Radium-226 | 6 | PM | 1440.5 | .00004 | .00160 | 8.66 | | | | | U | U |
| 02/05/1994 | Uranium | 6 | PM | 1440.5 | .00002 | .00000 | 8.66 | .00001 | .00000 | .00001 | | B | U |
| 02/05/1994 | Polonium-210 | 6 | PM | 1440.5 | .02209 | .00180 | 8.66 | | | | | | |
| 02/05/1994 | Thorium-230 | 7 | PM | 1442.1 | .00004 | .00020 | 61.86 | | | | | B | U |
| 02/05/1994 | Lead-210 | 7 | PM | 1442.1 | .05464 | .00120 | 61.86 | | | | | | |
| 02/05/1994 | Radium-226 | 7 | PM | 1442.1 | .00011 | .00160 | 61.86 | | | | | U | U |

Note: Concentrations of Uranium isotopes were calculated from total uranium based on naturally occuring ratios and are expressed in pCi/m3. EPA screening levels of uranium isotopes are given in parens.

Data Report for Radionuclide Concentrations from PM10 Samples (Validated) 07/31/1995



| Sample Date | Chemical Name | Site No. | Type | Run Time (min.) | Chem Conc (pCi/m3) | EPA Screen. Level (pCi/m3) | Particulate Conc. (ug/m3) | U-234 (0.0002) | U-235 (0.0002) | U-238 (0.0001) | Grav Val | Quality Lab | Quality Val |
|---|---|---|---|---|---|---|---|---|---|---|---|---|---|
| 02/05/1994 | Uranium | 7 | PM | 1442.1 | .00011 | .00000 | 61.86 | .00005 | .00000 | .00005 | | | U |
| 02/05/1994 | Polonium-210 | 7 | PM | 1442.1 | .03270 | .00180 | 61.86 | | | | | | |
| 02/05/1994 | Thorium-230 | P | BL | 1440.0 | .00003 | .00020 | -2.54 | | | | | U | U |
| 02/05/1994 | Lead-210 | P | BL | 1440.0 | -.00284 | .00120 | -2.54 | | | | | | U |
| 02/05/1994 | Radium-226 | P | BL | 1440.0 | -.00013 | .00160 | -2.54 | | | | | U | U |
| 02/05/1994 | Uranium | P | BL | 1440.0 | .00001 | .00000 | -2.54 | .00001 | .00000 | .00001 | | B | U |
| 02/05/1994 | Polonium-210 | P | BL | 1440.0 | .03471 | .00180 | -2.54 | | | | | | |
| 02/09/1994 | Thorium-230 | 1 | PM | 1450.6 | .00010 | .00020 | 26.73 | | | | | B | U |
| 02/09/1994 | Polonium-210 | 1 | PM | 1450.6 | .01407 | .00180 | 26.73 | | | | | | |
| 02/09/1994 | Lead-210 | 1 | PM | 1450.6 | .01428 | .00120 | 26.73 | | | | | | |
| 02/09/1994 | Radium-226 | 1 | PM | 1450.6 | .00045 | .00160 | 26.73 | | | | | U | U |
| 02/09/1994 | Uranium | 1 | PM | 1450.6 | .00016 | .00000 | 26.73 | .00008 | .00000 | .00008 | | | |
| 02/09/1994 | Thorium-230 | 2 | PM | 1446.3 | .00038 | .00020 | 65.47 | | | | | | |
| 02/09/1994 | Polonium-210 | 2 | PM | 1446.3 | .13354 | .00180 | 65.47 | | | | | | |
| 02/09/1994 | Lead-210 | 2 | PM | 1446.3 | .01512 | .00120 | 65.47 | | | | | | |
| 02/09/1994 | Radium-226 | 2 | PM | 1446.3 | .00010 | .00160 | 65.47 | | | | | U | U |
| 02/09/1994 | Uranium | 2 | PM | 1446.3 | .00088 | .00000 | 65.47 | .00044 | .00002 | .00042 | | | |
| 02/09/1994 | Thorium-230 | 3 | PM | 1458.5 | .00003 | .00020 | 10.44 | | | | | U | U |
| 02/09/1994 | Polonium-210 | 3 | PM | 1458.5 | .02068 | .00180 | 10.44 | | | | | | |
| 02/09/1994 | Lead-210 | 3 | PM | 1458.5 | .01387 | .00120 | 10.44 | | | | | | |
| 02/09/1994 | Radium-226 | 3 | PM | 1458.5 | -.00011 | .00160 | 10.44 | | | | | U | U |
| 02/09/1994 | Uranium | 3 | PM | 1458.5 | .00011 | .00000 | 10.44 | .00005 | .00000 | .00005 | | | U |
| 02/09/1994 | Thorium-230 | 4 | PM | 1485.3 | .00008 | .00020 | 8.18 | | | | | B | U |
| 02/09/1994 | Lead-210 | 4 | PM | 1485.3 | .01361 | .00120 | 8.18 | | | | | | |
| 02/09/1994 | Radium-226 | 4 | PM | 1485.3 | -.00009 | .00160 | 8.18 | | | | | U | U |
| 02/09/1994 | Uranium | 4 | PM | 1485.3 | .00005 | .00000 | 8.18 | .00002 | .00000 | .00002 | | B | U |
| 02/09/1994 | Polonium-210 | 4 | PM | 1485.3 | .00765 | .00180 | 8.18 | | | | | | |
| 02/09/1994 | Thorium-230 | 5 | PM | 1446.5 | .00001 | .00020 | 3.80 | | | | | U | U |
| 02/09/1994 | Polonium-210 | 5 | PM | 1446.5 | .00859 | .00180 | 3.80 | | | | | | |
| 02/09/1994 | Lead-210 | 5 | PM | 1446.5 | .01091 | .00120 | 3.80 | | | | | | |
| 02/09/1994 | Radium-226 | 5 | PM | 1446.5 | -.00016 | .00160 | 3.80 | | | | | U | U |
| 02/09/1994 | Uranium | 5 | PM | 1446.5 | .00003 | .00000 | 3.80 | .00002 | .00000 | .00002 | | B | U |
| 02/09/1994 | Thorium-230 | 6 | PM | 1451.3 | .00000 | .00020 | 2.64 | | | | | U | U |
| 02/09/1994 | Polonium-210 | 6 | PM | 1451.3 | .00664 | .00180 | 2.64 | | | | | | |
| 02/09/1994 | Lead-210 | 6 | PM | 1451.3 | .01291 | .00120 | 2.64 | | | | | | |
| 02/09/1994 | Radium-226 | 6 | PM | 1451.3 | .00021 | .00160 | 2.64 | | | | | U | U |
| 02/09/1994 | Uranium | 6 | PM | 1451.3 | .00001 | .00000 | 2.64 | .00000 | .00000 | .00000 | | B | U |
| 02/09/1994 | Thorium-230 | 7 | PM | 1440.5 | -.00001 | .00020 | .66 | | | | | U | U |
| 02/09/1994 | Polonium-210 | 7 | PM | 1440.5 | .00718 | .00180 | .66 | | | | | | |
| 02/09/1994 | Lead-210 | 7 | PM | 1440.5 | .01306 | .00120 | .66 | | | | | | |
| 02/09/1994 | Radium-226 | 7 | PM | 1440.5 | -.00002 | .00160 | .66 | | | | | U | U |
| 02/09/1994 | Uranium | 7 | PM | 1440.5 | .00002 | .00000 | .66 | .00001 | .00000 | .00001 | | B | U |
| 02/13/1994 | Thorium-230 | 1 | PM | 1458.9 | .00006 | .00020 | 11.64 | | | | | B | U |
| 02/13/1994 | Lead-210 | 1 | PM | 1458.9 | .01151 | .00120 | 11.64 | | | | | | |
| 02/13/1994 | Radium-226 | 1 | PM | 1458.9 | -.00011 | .00160 | 11.64 | | | | | U | U |
| 02/13/1994 | Uranium | 1 | PM | 1458.9 | .00009 | .00000 | 11.64 | .00004 | .00000 | .00004 | | | U |
| 02/13/1994 | Polonium-210 | 1 | PM | 1458.9 | .00624 | .00180 | 11.64 | | | | | | |
| 02/13/1994 | Thorium-230 | 2 | PM | 1446.9 | .00016 | .00020 | 27.32 | | | | | B | U |
| 02/13/1994 | Lead-210 | 2 | PM | 1446.9 | .01274 | .00120 | 27.32 | | | | | | |
| 02/13/1994 | Radium-226 | 2 | PM | 1446.9 | .00014 | .00160 | 27.32 | | | | | U | U |
| 02/13/1994 | Uranium | 2 | PM | 1446.9 | .00027 | .00000 | 27.32 | .00013 | .00001 | .00013 | | | |

Note: Concentrations of Uranium isotopes were calculated from total uranium based on naturally occuring ratios and are expressed in pCi/m3. EPA screening levels of uranium isotopes are given in parens.

Data Report for Radionuclide Concentrations from PM10 Samples (Validated)

07/31/1995



| Sample Date | Chemical Name | Site No. | Type | Run Time (min.) | Chem Conc (pCi/m3) | EPA Screen. Level (pCi/m3) | Particulate Conc. (ug/m3) | U-234 (0.0002) | U-235 (0.0002) | U-238 (0.0001) | Grav Val | Quality Lab | Quality Val |
|---|---|---|---|---|---|---|---|---|---|---|---|---|---|
| 02/13/1994 | Polonium-210 | 2 | PM | 1446.9 | .00791 | .00180 | 27.32 | | | | | | |
| 02/13/1994 | Thorium-230 | 3 | PM | 1453.1 | .00004 | .00020 | 6.56 | | | | | B | U |
| 02/13/1994 | Lead-210 | 3 | PM | 1453.1 | .00989 | .00120 | 6.56 | | | | | | |
| 02/13/1994 | Radium-226 | 3 | PM | 1453.1 | -.00008 | .00160 | 6.56 | | | | | U | U |
| 02/13/1994 | Uranium | 3 | PM | 1453.1 | .00003 | .00000 | 6.56 | .00001 | .00000 | .00001 | | B | U |
| 02/13/1994 | Polonium-210 | 3 | PM | 1453.1 | .00618 | .00180 | 6.56 | | | | | | |
| 02/13/1994 | Thorium-230 | 4 | PM | 1454.9 | .00001 | .00020 | 9.62 | | | | | U | U |
| 02/13/1994 | Lead-210 | 4 | PM | 1454.9 | .01092 | .00120 | 9.62 | | | | | | |
| 02/13/1994 | Radium-226 | 4 | PM | 1454.9 | .00001 | .00160 | 9.62 | | | | | U | U |
| 02/13/1994 | Uranium | 4 | PM | 1454.9 | .00004 | .00000 | 9.62 | .00002 | .00000 | .00002 | | B | U |
| 02/13/1994 | Polonium-210 | 4 | PM | 1454.9 | .00373 | .00180 | 9.62 | | | | | | |
| 02/13/1994 | Thorium-230 | 5 | PM | 1438.1 | .00005 | .00020 | 9.96 | | | | | B | U |
| 02/13/1994 | Lead-210 | 5 | PM | 1438.1 | .01106 | .00120 | 9.96 | | | | | | |
| 02/13/1994 | Radium-226 | 5 | PM | 1438.1 | -.00027 | .00160 | 9.96 | | | | | U | U |
| 02/13/1994 | Uranium | 5 | PM | 1438.1 | .00004 | .00000 | 9.96 | .00002 | .00000 | .00002 | | B | U |
| 02/13/1994 | Polonium-210 | 5 | PM | 1438.1 | .00650 | .00180 | 9.96 | | | | | | |
| 02/13/1994 | Thorium-230 | 6 | PM | 1418.2 | .00002 | .00020 | 8.93 | | | | | U | U |
| 02/13/1994 | Lead-210 | 6 | PM | 1418.2 | .01394 | .00120 | 8.93 | | | | | | |
| 02/13/1994 | Radium-226 | 6 | PM | 1418.2 | -.00020 | .00160 | 8.93 | | | | | U | U |
| 02/13/1994 | Uranium | 6 | PM | 1418.2 | .00001 | .00000 | 8.93 | .00001 | .00000 | .00001 | | B | U |
| 02/13/1994 | Polonium-210 | 6 | PM | 1418.2 | .00467 | .00180 | 8.93 | | | | | | |
| 02/13/1994 | Thorium-230 | 7 | PM | 1444.8 | .00004 | .00020 | 7.50 | | | | | U | U |
| 02/13/1994 | Lead-210 | 7 | PM | 1444.8 | .00912 | .00120 | 7.50 | | | | | | |
| 02/13/1994 | Radium-226 | 7 | PM | 1444.8 | -.00033 | .00160 | 7.50 | | | | | U | U |
| 02/13/1994 | Uranium | 7 | PM | 1444.8 | .00002 | .00000 | 7.50 | .00001 | .00000 | .00001 | | B | U |
| 02/13/1994 | Polonium-210 | 7 | PM | 1444.8 | .00693 | .00180 | 7.50 | | | | | | |
| 02/13/1994 | Thorium-230 | 8 | PM | 1462.7 | .00008 | .00020 | 11.70 | | | | | B | U |
| 02/13/1994 | Lead-210 | 8 | PM | 1462.7 | .01093 | .00120 | 11.70 | | | | | | |
| 02/13/1994 | Radium-226 | 8 | PM | 1462.7 | .00031 | .00160 | 11.70 | | | | | U | U |
| 02/13/1994 | Uranium | 8 | PM | 1462.7 | .00008 | .00000 | 11.70 | .00004 | .00000 | .00004 | | B | U |
| 02/13/1994 | Polonium-210 | 8 | PM | 1462.7 | .00554 | .00180 | 11.70 | | | | | | |
| 02/13/1994 | Thorium-230 | P | BL | 1440.0 | .00002 | .00020 | -1.35 | | | | | U | U |
| 02/13/1994 | Lead-210 | P | BL | 1440.0 | -.00184 | .00120 | -1.35 | | | | | | U |
| 02/13/1994 | Radium-226 | P | BL | 1440.0 | -.00004 | .00160 | -1.35 | | | | | U | U |
| 02/13/1994 | Uranium | P | BL | 1440.0 | .00001 | .00000 | -1.35 | .00000 | .00000 | .00000 | | B | U |
| 02/13/1994 | Polonium-210 | P | BL | 1440.0 | -.00006 | .00180 | -1.35 | | | | | U | U |
| 02/17/1994 | Thorium-230 | 1 | PM | 1452.0 | .00010 | .00020 | 11.49 | | | | | B | U |
| 02/17/1994 | Polonium-210 | 1 | PM | 1452.0 | .00929 | .00180 | 11.49 | | | | | | |
| 02/17/1994 | Lead-210 | 1 | PM | 1452.0 | .01449 | .00120 | 11.49 | | | | | | |
| 02/17/1994 | Radium-226 | 1 | PM | 1452.0 | .00009 | .00160 | 11.49 | | | | | U | U |
| 02/17/1994 | Uranium | 1 | PM | 1452.0 | .00013 | .00000 | 11.49 | .00007 | .00000 | .00006 | | | U |
| 02/17/1994 | Thorium-230 | 2 | PM | 1442.7 | .00054 | .00020 | 47.54 | | | | | | |
| 02/17/1994 | Polonium-210 | 2 | PM | 1442.7 | .06554 | .00180 | 47.54 | | | | | | |
| 02/17/1994 | Lead-210 | 2 | PM | 1442.7 | .01423 | .00120 | 47.54 | | | | | | |
| 02/17/1994 | Radium-226 | 2 | PM | 1442.7 | .00055 | .00160 | 47.54 | | | | | B | U |
| 02/17/1994 | Uranium | 2 | PM | 1442.7 | .00091 | .00000 | 47.54 | .00046 | .00002 | .00043 | | | |
| 02/17/1994 | Thorium-230 | 3 | PM | 1455.3 | .00005 | .00020 | 8.03 | | | | | B | U |
| 02/17/1994 | Polonium-210 | 3 | PM | 1455.3 | .01350 | .00180 | 8.03 | | | | | | |
| 02/17/1994 | Lead-210 | 3 | PM | 1455.3 | .01487 | .00120 | 8.03 | | | | | | |
| 02/17/1994 | Radium-226 | 3 | PM | 1455.3 | .00004 | .00160 | 8.03 | | | | | U | U |
| 02/17/1994 | Uranium | 3 | PM | 1455.3 | .00008 | .00000 | 8.03 | .00004 | .00000 | .00004 | | B | U |

Note: Concentrations of Uranium isotopes were calculated from total uranium based on naturally occuring ratios and are expressed in pCi/m3. EPA screening levels of uranium isotopes are given in parens.

Data Report for Radionuclide Concentrations from PM10 Samples
(Validated)

| Sample Date | Chemical Name | Site No. | Type | Run Time (min.) | Chem Conc (pCi/m3) | EPA Screen. Level (pCi/m3) | Particulate Conc. (ug/m3) | U-234 (0.0002) | U-235 (0.0002) | U-238 (0.0001) | Grav Val | Quality Lab Val | Quality Val |
|---|---|---|---|---|---|---|---|---|---|---|---|---|---|
| 02/17/1994 | Thorium-230 | 4 | PM | 1447.3 | .00001 | .00020 | 5.70 | | | | | U | U |
| 02/17/1994 | Polonium-210 | 4 | PM | 1447.3 | .00681 | .00180 | 5.70 | | | | | | |
| 02/17/1994 | Lead-210 | 4 | PM | 1447.3 | .01431 | .00120 | 5.70 | | | | | | |
| 02/17/1994 | Radium-226 | 4 | PM | 1447.3 | .00001 | .00160 | 5.70 | | | | | U | U |
| 02/17/1994 | Uranium | 4 | PM | 1447.3 | .00003 | .00000 | 5.70 | .00002 | .00000 | .00002 | | B | U |
| 02/17/1994 | Thorium-230 | 5 | PM | 1442.1 | .00002 | .00020 | 2.78 | | | | | B | U |
| 02/17/1994 | Polonium-210 | 5 | PM | 1442.1 | .00800 | .00180 | 2.78 | | | | | | |
| 02/17/1994 | Lead-210 | 5 | PM | 1442.1 | .01446 | .00120 | 2.78 | | | | | | |
| 02/17/1994 | Radium-226 | 5 | PM | 1442.1 | .00000 | .00160 | 2.78 | | | | | U | U |
| 02/17/1994 | Uranium | 5 | PM | 1442.1 | .00003 | .00000 | 2.78 | .00001 | .00000 | .00001 | | B | U |
| 02/17/1994 | Thorium-230 | 6 | PM | 1445.1 | .00000 | .00020 | 3.39 | | | | | U | U |
| 02/17/1994 | Polonium-210 | 6 | PM | 1445.1 | .00971 | .00180 | 3.39 | | | | | | |
| 02/17/1994 | Lead-210 | 6 | PM | 1445.1 | .01684 | .00120 | 3.39 | | | | | | |
| 02/17/1994 | Radium-226 | 6 | PM | 1445.1 | -.00025 | .00160 | 3.39 | | | | | U | U |
| 02/17/1994 | Uranium | 6 | PM | 1445.1 | .00001 | .00000 | 3.39 | .00001 | .00000 | .00000 | | B | U |
| 02/17/1994 | Thorium-230 | 7 | PM | 1441.1 | .00001 | .00020 | 2.79 | | | | | U | U |
| 02/17/1994 | Polonium-210 | 7 | PM | 1441.1 | .00753 | .00180 | 2.79 | | | | | | |
| 02/17/1994 | Lead-210 | 7 | PM | 1441.1 | .01532 | .00120 | 2.79 | | | | | | |
| 02/17/1994 | Radium-226 | 7 | PM | 1441.1 | .00021 | .00160 | 2.79 | | | | | U | U |
| 02/17/1994 | Uranium | 7 | PM | 1441.1 | .00002 | .00000 | 2.79 | .00001 | .00000 | .00001 | | B | U |
| 02/17/1994 | Thorium-230 | P | BL | 1440.0 | .00005 | .00020 | -1.40 | | | | | B | U |
| 02/17/1994 | Polonium-210 | P | BL | 1440.0 | .00009 | .00180 | -1.40 | | | | | B | U |
| 02/17/1994 | Lead-210 | P | BL | 1440.0 | -.00134 | .00120 | -1.40 | | | | | | U |
| 02/17/1994 | Radium-226 | P | BL | 1440.0 | .00001 | .00160 | -1.40 | | | | | U | U |
| 02/17/1994 | Uranium | P | BL | 1440.0 | .00002 | .00000 | -1.40 | .00001 | .00000 | .00001 | | B | U |
| 02/21/1994 | Thorium-230 | 1 | PM | 1453.2 | .00007 | .00020 | 10.32 | | | | | B | U |
| 02/21/1994 | Polonium-210 | 1 | PM | 1453.2 | .00269 | .00180 | 10.32 | | | | | | |
| 02/21/1994 | Lead-210 | 1 | PM | 1453.2 | .00285 | .00120 | 10.32 | | | | | | |
| 02/21/1994 | Radium-226 | 1 | PM | 1453.2 | -.00012 | .00160 | 10.32 | | | | | U | U |
| 02/21/1994 | Uranium | 1 | PM | 1453.2 | .00017 | .00000 | 10.32 | .00008 | .00000 | .00008 | | | |
| 02/21/1994 | Thorium-230 | 2 | PM | 1446.4 | .00022 | .00020 | 26.07 | | | | | | |
| 02/21/1994 | Polonium-210 | 2 | PM | 1446.4 | .00000 | .00180 | 26.07 | | | | | L | L |
| 02/21/1994 | Lead-210 | 2 | PM | 1446.4 | .00956 | .00120 | 26.07 | | | | | | |
| 02/21/1994 | Radium-226 | 2 | PM | 1446.4 | .00004 | .00160 | 26.07 | | | | | U | U |
| 02/21/1994 | Uranium | 2 | PM | 1446.4 | .00020 | .00000 | 26.07 | .00010 | .00000 | .00010 | | | |
| 02/21/1994 | Thorium-230 | 4 | PM | 1446.0 | .00003 | .00020 | 5.02 | | | | | B | U |
| 02/21/1994 | Polonium-210 | 4 | PM | 1446.0 | .00238 | .00180 | 5.02 | | | | | | |
| 02/21/1994 | Lead-210 | 4 | PM | 1446.0 | .00468 | .00120 | 5.02 | | | | | | |
| 02/21/1994 | Radium-226 | 4 | PM | 1446.0 | .00023 | .00160 | 5.02 | | | | | U | U |
| 02/21/1994 | Uranium | 4 | PM | 1446.0 | .00003 | .00000 | 5.02 | .00002 | .00000 | .00002 | | B | U |
| 02/21/1994 | Thorium-230 | 5 | PM | 1435.1 | .00003 | .00020 | -.41 | | | | R | B | U |
| 02/21/1994 | Polonium-210 | 5 | PM | 1435.1 | .00192 | .00180 | -.41 | | | | R | B | U |
| 02/21/1994 | Lead-210 | 5 | PM | 1435.1 | .00361 | .00120 | -.41 | | | | R | | |
| 02/21/1994 | Radium-226 | 5 | PM | 1435.1 | -.00017 | .00160 | -.41 | | | | R | U | U |
| 02/21/1994 | Uranium | 5 | PM | 1435.1 | .00001 | .00000 | -.41 | .00001 | .00000 | .00001 | R | B | U |
| 02/21/1994 | Thorium-230 | 6 | PM | 1440.1 | .00002 | .00020 | .41 | | | | | U | U |
| 02/21/1994 | Polonium-210 | 6 | PM | 1440.1 | .00176 | .00180 | .41 | | | | | B | U |
| 02/21/1994 | Lead-210 | 6 | PM | 1440.1 | .00329 | .00120 | .41 | | | | | | |
| 02/21/1994 | Radium-226 | 6 | PM | 1440.1 | -.00002 | .00160 | .41 | | | | | U | U |
| 02/21/1994 | Uranium | 6 | PM | 1440.1 | .00001 | .00000 | .41 | .00000 | .00000 | .00000 | | B | U |
| 02/25/1994 | Thorium-230 | 1 | PM | 1453.2 | .00009 | .00020 | 41.22 | | | | | B | U |

Note: Concentrations of Uranium isotopes were calculated from total uranium based on naturally occuring ratios and are expressed in pCi/m3. EPA screening levels of uranium isotopes are given in parens.

Data Report for Radionuclide Concentrations from PM10 Samples (Validated) 07/31/1995



| Sample Date | Chemical Name | Site No. | Type | Run Time (min.) | Chem Conc (pCi/m3) | EPA Screen. Level (pCi/m3) | Particulate Conc. (ug/m3) | U-234 (0.0002) | U-235 (0.0002) | U-238 (0.0001) | Grav Val | Quality Lab | Quality Val |
|---|---|---|---|---|---|---|---|---|---|---|---|---|---|
| 02/25/1994 | Polonium-210 | 1 | PM | 1453.2 | .01545 | .00180 | 41.22 | | | | | | |
| 02/25/1994 | Lead-210 | 1 | PM | 1453.2 | .00184 | .00120 | 41.22 | | | | | | U |
| 02/25/1994 | Radium-226 | 1 | PM | 1453.2 | .00048 | .00160 | 41.22 | | | | | B | U |
| 02/25/1994 | Uranium | 1 | PM | 1453.2 | .00001 | .00000 | 41.22 | .00001 | .00000 | .00001 | | B | U |
| 02/25/1994 | Thorium-230 | 2 | PM | 1442.0 | .00022 | .00020 | 47.91 | | | | | | |
| 02/25/1994 | Polonium-210 | 2 | PM | 1442.0 | .02665 | .00180 | 47.91 | | | | | | |
| 02/25/1994 | Lead-210 | 2 | PM | 1442.0 | .00597 | .00120 | 47.91 | | | | | | |
| 02/25/1994 | Radium-226 | 2 | PM | 1442.0 | -.00006 | .00160 | 47.91 | | | | | U | U |
| 02/25/1994 | Uranium | 2 | PM | 1442.0 | .00037 | .00000 | 47.91 | .00019 | .00001 | .00018 | | | |
| 02/25/1994 | Thorium-230 | 3 | PM | 1457.4 | .00005 | .00020 | 9.22 | | | | | B | U |
| 02/25/1994 | Polonium-210 | 3 | PM | 1457.4 | .00504 | .00180 | 9.22 | | | | | | |
| 02/25/1994 | Lead-210 | 3 | PM | 1457.4 | .00489 | .00120 | 9.22 | | | | | | |
| 02/25/1994 | Radium-226 | 3 | PM | 1457.4 | -.00017 | .00160 | 9.22 | | | | | U | U |
| 02/25/1994 | Uranium | 3 | PM | 1457.4 | .00003 | .00000 | 9.22 | .00002 | .00000 | .00001 | | B | U |
| 02/25/1994 | Thorium-230 | 4 | PM | 1447.3 | .00004 | .00020 | 14.22 | | | | | B | U |
| 02/25/1994 | Polonium-210 | 4 | PM | 1447.3 | .00239 | .00180 | 14.22 | | | | | | |
| 02/25/1994 | Lead-210 | 4 | PM | 1447.3 | .00389 | .00120 | 14.22 | | | | | | |
| 02/25/1994 | Radium-226 | 4 | PM | 1447.3 | .00002 | .00160 | 14.22 | | | | | U | U |
| 02/25/1994 | Uranium | 4 | PM | 1447.3 | .00004 | .00000 | 14.22 | .00002 | .00000 | .00002 | | B | U |
| 02/25/1994 | Thorium-230 | 5 | PM | 1441.8 | .00005 | .00020 | 14.75 | | | | | B | U |
| 02/25/1994 | Polonium-210 | 5 | PM | 1441.8 | .00855 | .00180 | 14.75 | | | | | | |
| 02/25/1994 | Lead-210 | 5 | PM | 1441.8 | .00241 | .00120 | 14.75 | | | | | | U |
| 02/25/1994 | Radium-226 | 5 | PM | 1441.8 | -.00001 | .00160 | 14.75 | | | | | U | U |
| 02/25/1994 | Uranium | 5 | PM | 1441.8 | .00007 | .00000 | 14.75 | .00003 | .00000 | .00003 | | B | U |
| 02/25/1994 | Thorium-230 | 6 | PM | 1441.7 | .00003 | .00020 | 5.19 | | | | | B | U |
| 02/25/1994 | Polonium-210 | 6 | PM | 1441.7 | .00205 | .00180 | 5.19 | | | | | | |
| 02/25/1994 | Lead-210 | 6 | PM | 1441.7 | .00459 | .00120 | 5.19 | | | | | | |
| 02/25/1994 | Radium-226 | 6 | PM | 1441.7 | -.00057 | .00160 | 5.19 | | | | | U | U |
| 02/25/1994 | Uranium | 6 | PM | 1441.7 | .00001 | .00000 | 5.19 | .00000 | .00000 | .00000 | | B | U |
| 02/25/1994 | Thorium-230 | 7 | PM | 1440.6 | .00007 | .00020 | 17.19 | | | | | B | U |
| 02/25/1994 | Polonium-210 | 7 | PM | 1440.6 | .00424 | .00180 | 17.19 | | | | | | |
| 02/25/1994 | Lead-210 | 7 | PM | 1440.6 | .00201 | .00120 | 17.19 | | | | | | U |
| 02/25/1994 | Radium-226 | 7 | PM | 1440.6 | -.00012 | .00160 | 17.19 | | | | | U | U |
| 02/25/1994 | Uranium | 7 | PM | 1440.6 | .00007 | .00000 | 17.19 | .00004 | .00000 | .00003 | | B | U |
| 02/25/1994 | Thorium-230 | 8 | PM | 1459.0 | .00026 | .00020 | 39.44 | | | | | | |
| 02/25/1994 | Polonium-210 | 8 | PM | 1459.0 | .00000 | .00180 | 39.44 | | | | | L | L |
| 02/25/1994 | Lead-210 | 8 | PM | 1459.0 | .00471 | .00120 | 39.44 | | | | | | |
| 02/25/1994 | Radium-226 | 8 | PM | 1459.0 | .00018 | .00160 | 39.44 | | | | | U | U |
| 02/25/1994 | Uranium | 8 | PM | 1459.0 | .00015 | .00000 | 39.44 | .00007 | .00000 | .00007 | | | |
| 02/25/1994 | Thorium-230 | P | BL | 1440.0 | .00002 | .00020 | -.73 | | | | | U | U |
| 02/25/1994 | Polonium-210 | P | BL | 1440.0 | .00008 | .00180 | -.73 | | | | | B | U |
| 02/25/1994 | Lead-210 | P | BL | 1440.0 | -.00184 | .00120 | -.73 | | | | | | U |
| 02/25/1994 | Radium-226 | P | BL | 1440.0 | -.00005 | .00160 | -.73 | | | | | U | U |
| 02/25/1994 | Uranium | P | BL | 1440.0 | .00001 | .00000 | -.73 | .00001 | .00000 | .00001 | | B | U |
| 03/01/1994 | Thorium-230 | 1 | PM | 1451.6 | .00009 | .00020 | 25.01 | | | | | B | U |
| 03/01/1994 | Polonium-210 | 1 | PM | 1451.6 | .01607 | .00180 | 25.01 | | | | | | |
| 03/01/1994 | Lead-210 | 1 | PM | 1451.6 | .01263 | .00120 | 25.01 | | | | | | |
| 03/01/1994 | Radium-226 | 1 | PM | 1451.6 | -.00010 | .00160 | 25.01 | | | | | U | U |
| 03/01/1994 | Uranium | 1 | PM | 1451.6 | .00023 | .00000 | 25.01 | .00012 | .00001 | .00011 | | | |
| 03/01/1994 | Thorium-230 | 2 | PM | 1445.5 | .00032 | .00020 | 41.44 | | | | | | |
| 03/01/1994 | Polonium-210 | 2 | PM | 1445.5 | .04143 | .00180 | 41.44 | | | | | | |

Note: Concentrations of Uranium isotopes were calculated from total uranium based on naturally occuring ratios and are expressed in pCi/m3. EPA screening levels of uranium isotopes are given in parens.

Data Report for Radionuclide Concentrations from PM10 Samples
(Validated)

| Sample Date | Chemical Name | Site No. | Type | Run Time (min.) | Chem Conc (pCi/m3) | EPA Screen. Level (pCi/m3) | Particulate Conc. (ug/m3) | U-234 (0.0002) | U-235 (0.0002) | U-238 (0.0001) | Grav Val | Quality Lab | Quality Val |
|---|---|---|---|---|---|---|---|---|---|---|---|---|---|
| 03/01/1994 | Lead-210 | 2 | PM | 1445.5 | .01318 | .00120 | 41.44 | | | | | | |
| 03/01/1994 | Radium-226 | 2 | PM | 1445.5 | .00017 | .00160 | 41.44 | | | | | U | U |
| 03/01/1994 | Uranium | 2 | PM | 1445.5 | .00064 | .00000 | 41.44 | .00032 | .00001 | .00030 | | | |
| 03/01/1994 | Thorium-230 | 3 | PM | 1454.5 | .00012 | .00020 | 19.59 | | | | | B | U |
| 03/01/1994 | Polonium-210 | 3 | PM | 1454.5 | .01212 | .00180 | 19.59 | | | | | | |
| 03/01/1994 | Lead-210 | 3 | PM | 1454.5 | .01201 | .00120 | 19.59 | | | | | | |
| 03/01/1994 | Radium-226 | 3 | PM | 1454.5 | .00015 | .00160 | 19.59 | | | | | U | U |
| 03/01/1994 | Uranium | 3 | PM | 1454.5 | .00009 | .00000 | 19.59 | .00005 | .00000 | .00004 | | B | U |
| 03/01/1994 | Thorium-230 | 4 | PM | 1447.0 | .00009 | .00020 | 24.36 | | | | | B | U |
| 03/01/1994 | Polonium-210 | 4 | PM | 1447.0 | .00615 | .00180 | 24.36 | | | | | | |
| 03/01/1994 | Lead-210 | 4 | PM | 1447.0 | .01175 | .00120 | 24.36 | | | | | | |
| 03/01/1994 | Radium-226 | 4 | PM | 1447.0 | -.00011 | .00160 | 24.36 | | | | | U | U |
| 03/01/1994 | Uranium | 4 | PM | 1447.0 | .00012 | .00000 | 24.36 | .00006 | .00000 | .00006 | | | U |
| 03/01/1994 | Thorium-230 | 5 | PM | 1437.9 | .00004 | .00020 | 8.97 | | | | | B | U |
| 03/01/1994 | Polonium-210 | 5 | PM | 1437.9 | .00826 | .00180 | 8.97 | | | | | | |
| 03/01/1994 | Lead-210 | 5 | PM | 1437.9 | .01322 | .00120 | 8.97 | | | | | | |
| 03/01/1994 | Radium-226 | 5 | PM | 1437.9 | -.00008 | .00160 | 8.97 | | | | | U | U |
| 03/01/1994 | Uranium | 5 | PM | 1437.9 | .00003 | .00000 | 8.97 | .00002 | .00000 | .00002 | | B | U |
| 03/01/1994 | Thorium-230 | 6 | PM | 1440.1 | .00004 | .00020 | 8.07 | | | | | B | U |
| 03/01/1994 | Polonium-210 | 6 | PM | 1440.1 | .00574 | .00180 | 8.07 | | | | | | |
| 03/01/1994 | Lead-210 | 6 | PM | 1440.1 | .01466 | .00120 | 8.07 | | | | | | |
| 03/01/1994 | Radium-226 | 6 | PM | 1440.1 | .00019 | .00160 | 8.07 | | | | | U | U |
| 03/01/1994 | Uranium | 6 | PM | 1440.1 | .00002 | .00000 | 8.07 | .00001 | .00000 | .00001 | | B | U |
| 03/01/1994 | Thorium-230 | 7 | PM | 1434.2 | .00002 | .00020 | 10.82 | | | | | U | U |
| 03/01/1994 | Polonium-210 | 7 | PM | 1434.2 | .00827 | .00180 | 10.82 | | | | | | |
| 03/01/1994 | Lead-210 | 7 | PM | 1434.2 | .00808 | .00120 | 10.82 | | | | | | |
| 03/01/1994 | Radium-226 | 7 | PM | 1434.2 | -.00003 | .00160 | 10.82 | | | | | U | U |
| 03/01/1994 | Uranium | 7 | PM | 1434.2 | .00005 | .00000 | 10.82 | .00002 | .00000 | .00002 | | B | U |
| 03/05/1994 | Thorium-230 | 1 | PM | 1453.2 | .00012 | .00020 | 19.23 | | | | | B | U |
| 03/05/1994 | Polonium-210 | 1 | PM | 1453.2 | .00103 | .00180 | 19.23 | | | | | B | U |
| 03/05/1994 | Lead-210 | 1 | PM | 1453.2 | .01410 | .00120 | 19.23 | | | | | | |
| 03/05/1994 | Radium-226 | 1 | PM | 1453.2 | -.00008 | .00160 | 19.23 | | | | | U | U |
| 03/05/1994 | Uranium | 1 | PM | 1453.2 | .00011 | .00000 | 19.23 | .00006 | .00000 | .00005 | | | U |
| 03/05/1994 | Thorium-230 | 2 | PM | 1444.7 | .00034 | .00020 | 25.52 | | | | | | |
| 03/05/1994 | Polonium-210 | 2 | PM | 1444.7 | .00000 | .00180 | 25.52 | | | | | L | L |
| 03/05/1994 | Lead-210 | 2 | PM | 1444.7 | .01504 | .00120 | 25.52 | | | | | | |
| 03/05/1994 | Radium-226 | 2 | PM | 1444.7 | .00005 | .00160 | 25.52 | | | | | U | U |
| 03/05/1994 | Uranium | 2 | PM | 1444.7 | .00031 | .00000 | 25.52 | .00016 | .00001 | .00015 | | | |
| 03/05/1994 | Thorium-230 | 3 | PM | 1455.5 | .00004 | .00020 | 12.42 | | | | | B | U |
| 03/05/1994 | Polonium-210 | 3 | PM | 1455.5 | .00952 | .00180 | 12.42 | | | | | | |
| 03/05/1994 | Lead-210 | 3 | PM | 1455.5 | .01362 | .00120 | 12.42 | | | | | | |
| 03/05/1994 | Radium-226 | 3 | PM | 1455.5 | -.00015 | .00160 | 12.42 | | | | | U | U |
| 03/05/1994 | Uranium | 3 | PM | 1455.5 | .00007 | .00000 | 12.42 | .00004 | .00000 | .00003 | | B | U |
| 03/05/1994 | Thorium-230 | 4 | PM | 1449.3 | .00004 | .00020 | 15.03 | | | | | B | U |
| 03/05/1994 | Polonium-210 | 4 | PM | 1449.3 | .01193 | .00180 | 15.03 | | | | | | |
| 03/05/1994 | Lead-210 | 4 | PM | 1449.3 | .01528 | .00120 | 15.03 | | | | | | |
| 03/05/1994 | Radium-226 | 4 | PM | 1449.3 | .00012 | .00160 | 15.03 | | | | | U | U |
| 03/05/1994 | Uranium | 4 | PM | 1449.3 | .00009 | .00000 | 15.03 | .00005 | .00000 | .00004 | | B | U |
| 03/05/1994 | Thorium-230 | 5 | PM | 1439.4 | .00006 | .00020 | 5.11 | | | | | B | U |
| 03/05/1994 | Polonium-210 | 5 | PM | 1439.4 | .00721 | .00180 | 5.11 | | | | | | |
| 03/05/1994 | Lead-210 | 5 | PM | 1439.4 | .01514 | .00120 | 5.11 | | | | | | |

Note: Concentrations of Uranium isotopes were calculated from total uranium based on naturally occuring ratios and are expressed in pCi/m3. EPA screening levels of uranium isotopes are given in parens.

Data Report for Radionuclide Concentrations from PM10 Samples (Validated) 07/31/1995



| Sample Date | Chemical Name | Site No. | Type | Run Time (min.) | Chem Conc (pCi/m3) | EPA Screen. Level (pCi/m3) | Particulate Conc. (ug/m3) | U-234 (0.0002) | U-235 (0.0002) | U-238 (0.0001) | Grav Val | Quality Lab | Quality Val |
|---|---|---|---|---|---|---|---|---|---|---|---|---|---|
| 03/05/1994 | Radium-226 | 5 | PM | 1439.4 | .00015 | .00160 | 5.11 | | | | | U | U |
| 03/05/1994 | Uranium | 5 | PM | 1439.4 | .00003 | .00000 | 5.11 | .00002 | .00000 | .00002 | | B | U |
| 03/05/1994 | Thorium-230 | 6 | PM | 1442.2 | .00004 | .00020 | 5.97 | | | | | B | U |
| 03/05/1994 | Polonium-210 | 6 | PM | 1442.2 | .00783 | .00180 | 5.97 | | | | | | |
| 03/05/1994 | Lead-210 | 6 | PM | 1442.2 | .01420 | .00120 | 5.97 | | | | | | |
| 03/05/1994 | Radium-226 | 6 | PM | 1442.2 | -.00028 | .00160 | 5.97 | | | | | U | U |
| 03/05/1994 | Uranium | 6 | PM | 1442.2 | .00001 | .00000 | 5.97 | .00001 | .00000 | .00001 | | B | U |
| 03/05/1994 | Thorium-230 | 7 | PM | 1440.5 | .00006 | .00020 | 13.09 | | | | | B | U |
| 03/05/1994 | Polonium-210 | 7 | PM | 1440.5 | .01180 | .00180 | 13.09 | | | | | | |
| 03/05/1994 | Lead-210 | 7 | PM | 1440.5 | .01323 | .00120 | 13.09 | | | | | | |
| 03/05/1994 | Radium-226 | 7 | PM | 1440.5 | .00006 | .00160 | 13.09 | | | | | U | U |
| 03/05/1994 | Uranium | 7 | PM | 1440.5 | .00012 | .00000 | 13.09 | .00006 | .00000 | .00005 | | | U |
| 03/05/1994 | Thorium-230 | P | BL | 1440.0 | .00002 | .00020 | -.99 | | | | | B | U |
| 03/05/1994 | Polonium-210 | P | BL | 1440.0 | .00008 | .00180 | -.99 | | | | | U | U |
| 03/05/1994 | Lead-210 | P | BL | 1440.0 | .00000 | .00120 | -.99 | | | | | U | U |
| 03/05/1994 | Radium-226 | P | BL | 1440.0 | -.00006 | .00160 | -.99 | | | | | U | U |
| 03/05/1994 | Uranium | P | BL | 1440.0 | .00002 | .00000 | -.99 | .00001 | .00000 | .00001 | | B | U |
| 03/09/1994 | Thorium-230 | 1 | PM | 1448.9 | .00015 | .00020 | 23.06 | | | | | B | U |
| 03/09/1994 | Polonium-210 | 1 | PM | 1448.9 | .01224 | .00180 | 23.06 | | | | | | |
| 03/09/1994 | Lead-210 | 1 | PM | 1448.9 | .02000 | .00120 | 23.06 | | | | | | |
| 03/09/1994 | Radium-226 | 1 | PM | 1448.9 | .00004 | .00160 | 23.06 | | | | | U | U |
| 03/09/1994 | Uranium | 1 | PM | 1448.9 | .00026 | .00000 | 23.06 | .00013 | .00001 | .00012 | | | U |
| 03/09/1994 | Thorium-230 | 2 | PM | 1443.5 | .00056 | .00020 | 50.76 | | | | | | |
| 03/09/1994 | Polonium-210 | 2 | PM | 1443.5 | .04936 | .00180 | 50.76 | | | | | | |
| 03/09/1994 | Lead-210 | 2 | PM | 1443.5 | .01702 | .00120 | 50.76 | | | | | | |
| 03/09/1994 | Radium-226 | 2 | PM | 1443.5 | .00036 | .00160 | 50.76 | | | | | U | U |
| 03/09/1994 | Uranium | 2 | PM | 1443.5 | .00145 | .00000 | 50.76 | .00073 | .00003 | .00069 | | | |
| 03/09/1994 | Thorium-230 | 3 | PM | 1456.5 | .00006 | .00020 | 24.19 | | | | | B | U |
| 03/09/1994 | Polonium-210 | 3 | PM | 1456.5 | .01115 | .00180 | 24.19 | | | | | | |
| 03/09/1994 | Lead-210 | 3 | PM | 1456.5 | .02083 | .00120 | 24.19 | | | | | | |
| 03/09/1994 | Radium-226 | 3 | PM | 1456.5 | -.00014 | .00160 | 24.19 | | | | | U | U |
| 03/09/1994 | Uranium | 3 | PM | 1456.5 | .00015 | .00000 | 24.19 | .00008 | .00000 | .00007 | | | U |
| 03/09/1994 | Thorium-230 | 4 | PM | 1445.7 | .00011 | .00020 | 24.40 | | | | | B | U |
| 03/09/1994 | Polonium-210 | 4 | PM | 1445.7 | .01457 | .00180 | 24.40 | | | | | | |
| 03/09/1994 | Lead-210 | 4 | PM | 1445.7 | .02112 | .00120 | 24.40 | | | | | | |
| 03/09/1994 | Radium-226 | 4 | PM | 1445.7 | -.00006 | .00160 | 24.40 | | | | | U | U |
| 03/09/1994 | Uranium | 4 | PM | 1445.7 | .00021 | .00000 | 24.40 | .00010 | .00000 | .00010 | | | U |
| 03/09/1994 | Thorium-230 | 5 | PM | 1440.0 | .00003 | .00020 | 8.41 | | | | | B | U |
| 03/09/1994 | Polonium-210 | 5 | PM | 1440.0 | .00781 | .00180 | 8.41 | | | | | | |
| 03/09/1994 | Lead-210 | 5 | PM | 1440.0 | .01825 | .00120 | 8.41 | | | | | | |
| 03/09/1994 | Radium-226 | 5 | PM | 1440.0 | .00015 | .00160 | 8.41 | | | | | U | U |
| 03/09/1994 | Uranium | 5 | PM | 1440.0 | .00012 | .00000 | 8.41 | .00006 | .00000 | .00006 | | | U |
| 03/09/1994 | Thorium-230 | 6 | PM | 1441.2 | .00004 | .00020 | 9.61 | | | | | B | U |
| 03/09/1994 | Polonium-210 | 6 | PM | 1441.2 | .00790 | .00180 | 9.61 | | | | | | |
| 03/09/1994 | Lead-210 | 6 | PM | 1441.2 | .01522 | .00120 | 9.61 | | | | | | |
| 03/09/1994 | Radium-226 | 6 | PM | 1441.2 | -.00003 | .00160 | 9.61 | | | | | U | U |
| 03/09/1994 | Uranium | 6 | PM | 1441.2 | .00003 | .00000 | 9.61 | .00002 | .00000 | .00002 | | B | U |
| 03/09/1994 | Thorium-230 | 7 | PM | 1440.9 | .00003 | .00020 | 6.74 | | | | | B | U |
| 03/09/1994 | Polonium-210 | 7 | PM | 1440.9 | .00929 | .00180 | 6.74 | | | | | | |
| 03/09/1994 | Lead-210 | 7 | PM | 1440.9 | .01521 | .00120 | 6.74 | | | | | | |
| 03/09/1994 | Radium-226 | 7 | PM | 1440.9 | -.00009 | .00160 | 6.74 | | | | | U | U |

Note: Concentrations of Uranium isotopes were calculated from total uranium based on naturally occuring ratios and are expressed in pCi/m3. EPA screening levels of uranium isotopes are given in parens.

Data Report for Radionuclide Concentrations from PM10 Samples
(Validated)

| Sample Date | Chemical Name | Site No. | Type | Run Time (min.) | Chem Conc (pCi/m3) | EPA Screen. Level (pCi/m3) | Particulate Conc. (ug/m3) | U-234 (0.0002) | U-235 (0.0002) | U-238 (0.0001) | Grav Val | Quality Lab | Quality Val |
|---|---|---|---|---|---|---|---|---|---|---|---|---|---|
| 03/09/1994 | Uranium | 7 | PM | 1440.9 | .00004 | .00000 | 6.74 | .00002 | .00000 | .00002 | | B | U |
| 03/09/1994 | Thorium-230 | 8 | PM | 1458.7 | .00013 | .00020 | 21.67 | | | | | B | U |
| 03/09/1994 | Polonium-210 | 8 | PM | 1458.7 | .01426 | .00180 | 21.67 | | | | | | |
| 03/09/1994 | Lead-210 | 8 | PM | 1458.7 | .01722 | .00120 | 21.67 | | | | | | |
| 03/09/1994 | Radium-226 | 8 | PM | 1458.7 | .00086 | .00160 | 21.67 | | | | | B | U |
| 03/09/1994 | Uranium | 8 | PM | 1458.7 | .00024 | .00000 | 21.67 | .00012 | .00001 | .00011 | | | |
| 03/09/1994 | Thorium-230 | P | BL | 1440.0 | .00006 | .00020 | 1.72 | | | | | B | U |
| 03/09/1994 | Polonium-210 | P | BL | 1440.0 | .00026 | .00180 | 1.72 | | | | | U | U |
| 03/09/1994 | Lead-210 | P | BL | 1440.0 | -.00105 | .00120 | 1.72 | | | | | B | U |
| 03/09/1994 | Radium-226 | P | BL | 1440.0 | -.00008 | .00160 | 1.72 | | | | | U | U |
| 03/09/1994 | Uranium | P | BL | 1440.0 | .00016 | .00000 | 1.72 | .00008 | .00000 | .00007 | | | |
| 03/13/1994 | Thorium-230 | 1 | PM | 1453.4 | .00007 | .00020 | 13.68 | | | | | B | U |
| 03/13/1994 | Polonium-210 | 1 | PM | 1453.4 | .00667 | .00180 | 13.68 | | | | | | |
| 03/13/1994 | Lead-210 | 1 | PM | 1453.4 | .01203 | .00120 | 13.68 | | | | | | |
| 03/13/1994 | Radium-226 | 1 | PM | 1453.4 | .00009 | .00160 | 13.68 | | | | | U | U |
| 03/13/1994 | Uranium | 1 | PM | 1453.4 | .00017 | .00000 | 13.68 | .00009 | .00000 | .00008 | | | |
| 03/13/1994 | Thorium-230 | 2 | PM | 1444.3 | .00021 | .00020 | 28.11 | | | | | B | U |
| 03/13/1994 | Polonium-210 | 2 | PM | 1444.3 | .01088 | .00180 | 28.11 | | | | | | |
| 03/13/1994 | Lead-210 | 2 | PM | 1444.3 | .01429 | .00120 | 28.11 | | | | | | |
| 03/13/1994 | Radium-226 | 2 | PM | 1444.3 | -.00030 | .00160 | 28.11 | | | | | U | U |
| 03/13/1994 | Uranium | 2 | PM | 1444.3 | .00049 | .00000 | 28.11 | .00025 | .00001 | .00023 | | | |
| 03/13/1994 | Thorium-230 | 3 | PM | 1453.7 | .00005 | .00020 | 15.34 | | | | | B | U |
| 03/13/1994 | Polonium-210 | 3 | PM | 1453.7 | .00733 | .00180 | 15.34 | | | | | | |
| 03/13/1994 | Lead-210 | 3 | PM | 1453.7 | .01209 | .00120 | 15.34 | | | | | | |
| 03/13/1994 | Radium-226 | 3 | PM | 1453.7 | -.00041 | .00160 | 15.34 | | | | | U | U |
| 03/13/1994 | Uranium | 3 | PM | 1453.7 | .00010 | .00000 | 15.34 | .00005 | .00000 | .00005 | | | U |
| 03/13/1994 | Thorium-230 | 4 | PM | 1445.8 | .00009 | .00020 | 17.71 | | | | | B | U |
| 03/13/1994 | Polonium-210 | 4 | PM | 1445.8 | .00976 | .00180 | 17.71 | | | | | | |
| 03/13/1994 | Lead-210 | 4 | PM | 1445.8 | .01261 | .00120 | 17.71 | | | | | | |
| 03/13/1994 | Radium-226 | 4 | PM | 1445.8 | .00046 | .00160 | 17.71 | | | | | U | U |
| 03/13/1994 | Uranium | 4 | PM | 1445.8 | .00010 | .00000 | 17.71 | .00005 | .00000 | .00005 | | | U |
| 03/13/1994 | Thorium-230 | 5 | PM | 1436.0 | .00001 | .00020 | 7.49 | | | | | U | U |
| 03/13/1994 | Polonium-210 | 5 | PM | 1436.0 | .00614 | .00180 | 7.49 | | | | | | |
| 03/13/1994 | Lead-210 | 5 | PM | 1436.0 | .01146 | .00120 | 7.49 | | | | | | |
| 03/13/1994 | Radium-226 | 5 | PM | 1436.0 | -.00020 | .00160 | 7.49 | | | | | U | U |
| 03/13/1994 | Uranium | 5 | PM | 1436.0 | .00005 | .00000 | 7.49 | .00002 | .00000 | .00002 | | B | U |
| 03/13/1994 | Thorium-230 | 6 | PM | 1440.5 | .00007 | .00020 | 10.09 | | | | | B | U |
| 03/13/1994 | Polonium-210 | 6 | PM | 1440.5 | .00655 | .00180 | 10.09 | | | | | | |
| 03/13/1994 | Lead-210 | 6 | PM | 1440.5 | .01201 | .00120 | 10.09 | | | | | | |
| 03/13/1994 | Radium-226 | 6 | PM | 1440.5 | .00076 | .00160 | 10.09 | | | | | B | U |
| 03/13/1994 | Uranium | 6 | PM | 1440.5 | .00003 | .00000 | 10.09 | .00002 | .00000 | .00001 | | B | U |
| 03/13/1994 | Thorium-230 | 7 | PM | 1440.4 | .00003 | .00020 | 12.30 | | | | | U | U |
| 03/13/1994 | Polonium-210 | 7 | PM | 1440.4 | .00682 | .00180 | 12.30 | | | | | | |
| 03/13/1994 | Lead-210 | 7 | PM | 1440.4 | .01216 | .00120 | 12.30 | | | | | | |
| 03/13/1994 | Radium-226 | 7 | PM | 1440.4 | -.00007 | .00160 | 12.30 | | | | | U | U |
| 03/13/1994 | Uranium | 7 | PM | 1440.4 | .00008 | .00000 | 12.30 | .00004 | .00000 | .00004 | | B | U |
| 03/17/1994 | Thorium-230 | 1 | PM | 1451.1 | .00080 | .00020 | 79.49 | | | | | | |
| 03/17/1994 | Polonium-210 | 1 | PM | 1451.1 | .02126 | .00180 | 79.49 | | | | | | |
| 03/17/1994 | Lead-210 | 1 | PM | 1451.1 | .01701 | .00120 | 79.49 | | | | | | |
| 03/17/1994 | Radium-226 | 1 | PM | 1451.1 | .00077 | .00160 | 79.49 | | | | | U | U |
| 03/17/1994 | Uranium | 1 | PM | 1451.1 | .00224 | .00000 | 79.49 | .00113 | .00005 | .00106 | | | |

Note: Concentrations of Uranium isotopes were calculated from total uranium based on naturally occuring ratios and are expressed in pCi/m3. EPA screening levels of uranium isotopes are given in parens.

Data Report for Radionuclide Concentrations from PM10 Samples (Validated) 07/31/1995



| Sample Date | Chemical Name | Site No. | Type | Run Time (min.) | Chem Conc (pCi/m3) | EPA Screen. Level (pCi/m3) | Particulate Conc. (ug/m3) | U-234 (0.0002) | U-235 (0.0002) | U-238 (0.0001) | Grav Val | Quality Lab Val | Quality Val |
|---|---|---|---|---|---|---|---|---|---|---|---|---|---|
| 03/17/1994 | Thorium-230 | 2 | PM | 1443.2 | .00150 | .00020 | 145.57 | | | | | | |
| 03/17/1994 | Polonium-210 | 2 | PM | 1443.2 | .05508 | .00180 | 145.57 | | | | | | |
| 03/17/1994 | Lead-210 | 2 | PM | 1443.2 | .02077 | .00120 | 145.57 | | | | | | |
| 03/17/1994 | Radium-226 | 2 | PM | 1443.2 | .00074 | .00160 | 145.57 | | | | | U | U |
| 03/17/1994 | Uranium | 2 | PM | 1443.2 | .00529 | .00000 | 145.57 | .00266 | .00012 | .00251 | | | |
| 03/17/1994 | Thorium-230 | 3 | PM | 1454.3 | .00014 | .00020 | 27.44 | | | | | B | R |
| 03/17/1994 | Polonium-210 | 3 | PM | 1454.3 | .00833 | .00180 | 27.44 | | | | | | R |
| 03/17/1994 | Lead-210 | 3 | PM | 1454.3 | .00849 | .00120 | 27.44 | | | | | | R |
| 03/17/1994 | Radium-226 | 3 | PM | 1454.3 | .00030 | .00160 | 27.44 | | | | | U | R |
| 03/17/1994 | Uranium | 3 | PM | 1454.3 | .00028 | .00000 | 27.44 | .00014 | .00001 | .00013 | | | R |
| 03/17/1994 | Thorium-230 | 4 | PM | 1444.7 | .00010 | .00020 | 20.48 | | | | | B | R |
| 03/17/1994 | Polonium-210 | 4 | PM | 1444.7 | .00356 | .00180 | 20.48 | | | | | | R |
| 03/17/1994 | Lead-210 | 4 | PM | 1444.7 | .00542 | .00120 | 20.48 | | | | | | R |
| 03/17/1994 | Radium-226 | 4 | PM | 1444.7 | -.00009 | .00160 | 20.48 | | | | | U | R |
| 03/17/1994 | Uranium | 4 | PM | 1444.7 | .00084 | .00000 | 20.48 | .00042 | .00002 | .00040 | | | R |
| 03/17/1994 | Thorium-230 | 5 | PM | 1443.1 | .00007 | .00020 | 15.22 | | | | | B | U |
| 03/17/1994 | Polonium-210 | 5 | PM | 1443.1 | .00335 | .00180 | 15.22 | | | | | | |
| 03/17/1994 | Lead-210 | 5 | PM | 1443.1 | .00609 | .00120 | 15.22 | | | | | | |
| 03/17/1994 | Radium-226 | 5 | PM | 1443.1 | .00017 | .00160 | 15.22 | | | | | U | U |
| 03/17/1994 | Uranium | 5 | PM | 1443.1 | .00010 | .00000 | 15.22 | .00005 | .00000 | .00005 | | | U |
| 03/17/1994 | Thorium-230 | 6 | PM | 1440.8 | .00005 | .00020 | 17.71 | | | | | B | U |
| 03/17/1994 | Polonium-210 | 6 | PM | 1440.8 | .00331 | .00180 | 17.71 | | | | | | |
| 03/17/1994 | Lead-210 | 6 | PM | 1440.8 | .00613 | .00120 | 17.71 | | | | | | |
| 03/17/1994 | Radium-226 | 6 | PM | 1440.8 | -.00020 | .00160 | 17.71 | | | | | U | U |
| 03/17/1994 | Uranium | 6 | PM | 1440.8 | .00006 | .00000 | 17.71 | .00003 | .00000 | .00003 | | B | U |
| 03/17/1994 | Thorium-230 | 7 | PM | 1442.1 | .00009 | .00020 | 13.33 | | | | | B | U |
| 03/17/1994 | Polonium-210 | 7 | PM | 1442.1 | .00242 | .00180 | 13.33 | | | | | | |
| 03/17/1994 | Lead-210 | 7 | PM | 1442.1 | .00561 | .00120 | 13.33 | | | | | | |
| 03/17/1994 | Radium-226 | 7 | PM | 1442.1 | .00012 | .00160 | 13.33 | | | | | U | U |
| 03/17/1994 | Uranium | 7 | PM | 1442.1 | .00006 | .00000 | 13.33 | .00003 | .00000 | .00003 | | B | U |
| 03/17/1994 | Thorium-230 | P | BL | 1440.0 | .00012 | .00020 | -1.53 | | | | | B | U |
| 03/17/1994 | Polonium-210 | P | BL | 1440.0 | .00024 | .00180 | -1.53 | | | | | U | U |
| 03/17/1994 | Lead-210 | P | BL | 1440.0 | -.00046 | .00120 | -1.53 | | | | | U | U |
| 03/17/1994 | Radium-226 | P | BL | 1440.0 | -.00002 | .00160 | -1.53 | | | | | U | U |
| 03/17/1994 | Uranium | P | BL | 1440.0 | .00002 | .00000 | -1.53 | .00001 | .00000 | .00001 | | B | U |
| 03/19/1994 | Thorium-230 | 1 | PM | 1451.3 | .00031 | .00020 | 50.77 | | | | | | |
| 03/19/1994 | Polonium-210 | 1 | PM | 1451.3 | .02432 | .00180 | 50.77 | | | | | | |
| 03/19/1994 | Lead-210 | 1 | PM | 1451.3 | .00355 | .00120 | 50.77 | | | | | | |
| 03/19/1994 | Radium-226 | 1 | PM | 1451.3 | -.00027 | .00160 | 50.77 | | | | | U | U |
| 03/19/1994 | Uranium | 1 | PM | 1451.3 | .00059 | .00000 | 50.77 | .00030 | .00001 | .00028 | | | |
| 03/19/1994 | Thorium-230 | 2 | PM | 1442.6 | .00057 | .00020 | 142.77 | | | | | | |
| 03/19/1994 | Polonium-210 | 2 | PM | 1442.6 | .20964 | .00180 | 142.77 | | | | | | |
| 03/19/1994 | Lead-210 | 2 | PM | 1442.6 | .00147 | .00120 | 142.77 | | | | | | U |
| 03/19/1994 | Radium-226 | 2 | PM | 1442.6 | .00061 | .00160 | 142.77 | | | | | U | U |
| 03/19/1994 | Uranium | 2 | PM | 1442.6 | .00129 | .00000 | 142.77 | .00065 | .00003 | .00061 | | | |
| 03/19/1994 | Thorium-230 | 3 | PM | 1451.7 | .00005 | .00020 | 24.12 | | | | | B | U |
| 03/19/1994 | Polonium-210 | 3 | PM | 1451.7 | .02096 | .00180 | 24.12 | | | | | | |
| 03/19/1994 | Lead-210 | 3 | PM | 1451.7 | .00286 | .00120 | 24.12 | | | | | | |
| 03/19/1994 | Radium-226 | 3 | PM | 1451.7 | .00015 | .00160 | 24.12 | | | | | U | U |
| 03/19/1994 | Uranium | 3 | PM | 1451.7 | .00023 | .00000 | 24.12 | .00011 | .00001 | .00011 | | | |
| 03/19/1994 | Thorium-230 | 4 | PM | 1448.0 | .00002 | .00020 | 8.36 | | | | PR | U | U |

Note: Concentrations of Uranium isotopes were calculated from total uranium based on naturally occuring ratios and are expressed in pCi/m3. EPA screening levels of uranium isotopes are given in parens.

| Sample Date | Chemical Name | Site No. | Type | Run Time (min.) | Chem Conc (pCi/m3) | EPA Screen. Level (pCi/m3) | Particulate Conc. (ug/m3) | U-234 (0.0002) | U-235 (0.0002) | U-238 (0.0001) | Grav Val | Quality Lab | Quality Val |
|---|---|---|---|---|---|---|---|---|---|---|---|---|---|
| 03/19/1994 | Polonium-210 | 4 | PM | 1448.0 | .00114 | .00180 | 8.36 | | | | PR | B | U |
| 03/19/1994 | Lead-210 | 4 | PM | 1448.0 | .00314 | .00120 | 8.36 | | | | PR | | |
| 03/19/1994 | Radium-226 | 4 | PM | 1448.0 | -.00010 | .00160 | 8.36 | | | | PR | U | U |
| 03/19/1994 | Uranium | 4 | PM | 1448.0 | .00004 | .00000 | 8.36 | .00002 | .00000 | .00002 | PR | B | U |
| 03/19/1994 | Thorium-230 | 5 | PM | 1440.8 | .00002 | .00020 | 6.92 | | | | | B | U |
| 03/19/1994 | Polonium-210 | 5 | PM | 1440.8 | .00210 | .00180 | 6.92 | | | | | | |
| 03/19/1994 | Lead-210 | 5 | PM | 1440.8 | .00259 | .00120 | 6.92 | | | | | | |
| 03/19/1994 | Radium-226 | 5 | PM | 1440.8 | .00013 | .00160 | 6.92 | | | | | U | U |
| 03/19/1994 | Uranium | 5 | PM | 1440.8 | .00002 | .00000 | 6.92 | .00001 | .00000 | .00001 | | B | U |
| 03/19/1994 | Thorium-230 | 6 | PM | 1442.1 | .00001 | .00020 | 8.57 | | | | | U | U |
| 03/19/1994 | Polonium-210 | 6 | PM | 1442.1 | .00185 | .00180 | 8.57 | | | | | B | U |
| 03/19/1994 | Lead-210 | 6 | PM | 1442.1 | .00167 | .00120 | 8.57 | | | | | | U |
| 03/19/1994 | Radium-226 | 6 | PM | 1442.1 | .00009 | .00160 | 8.57 | | | | | U | U |
| 03/19/1994 | Uranium | 6 | PM | 1442.1 | .00044 | .00000 | 8.57 | .00022 | .00001 | .00021 | | | |
| 03/19/1994 | Thorium-230 | 7 | PM | 1438.5 | .00000 | .00020 | 7.50 | | | | | U | U |
| 03/19/1994 | Polonium-210 | 7 | PM | 1438.5 | .00200 | .00180 | 7.50 | | | | | | |
| 03/19/1994 | Lead-210 | 7 | PM | 1438.5 | .00428 | .00120 | 7.50 | | | | | | |
| 03/19/1994 | Radium-226 | 7 | PM | 1438.5 | .00002 | .00160 | 7.50 | | | | | U | U |
| 03/19/1994 | Uranium | 7 | PM | 1438.5 | .00004 | .00000 | 7.50 | .00002 | .00000 | .00002 | | B | U |
| 03/21/1994 | Thorium-230 | 1 | PM | 1452.9 | .00037 | .00020 | 29.46 | | | | | | |
| 03/21/1994 | Polonium-210 | 1 | PM | 1452.9 | .01225 | .00180 | 29.46 | | | | | | |
| 03/21/1994 | Lead-210 | 1 | PM | 1452.9 | .01413 | .00120 | 29.46 | | | | | | |
| 03/21/1994 | Radium-226 | 1 | PM | 1452.9 | .00023 | .00160 | 29.46 | | | | | U | U |
| 03/21/1994 | Uranium | 1 | PM | 1452.9 | .00060 | .00000 | 29.46 | .00030 | .00001 | .00028 | | | |
| 03/21/1994 | Thorium-230 | 2 | PM | 1441.8 | .00030 | .00020 | 49.92 | | | | | | |
| 03/21/1994 | Polonium-210 | 2 | PM | 1441.8 | .02102 | .00180 | 49.92 | | | | | | |
| 03/21/1994 | Lead-210 | 2 | PM | 1441.8 | .01561 | .00120 | 49.92 | | | | | | |
| 03/21/1994 | Radium-226 | 2 | PM | 1441.8 | .00025 | .00160 | 49.92 | | | | | U | U |
| 03/21/1994 | Uranium | 2 | PM | 1441.8 | .00140 | .00000 | 49.92 | .00070 | .00003 | .00066 | | | |
| 03/21/1994 | Thorium-230 | 3 | PM | 778.7 | .00029 | .00020 | 12.28 | | | | TR | B | U |
| 03/21/1994 | Polonium-210 | 3 | PM | 778.7 | .00714 | .00180 | 12.28 | | | | TR | | |
| 03/21/1994 | Lead-210 | 3 | PM | 778.7 | .00917 | .00120 | 12.28 | | | | TR | | |
| 03/21/1994 | Radium-226 | 3 | PM | 778.7 | .00014 | .00160 | 12.28 | | | | TR | U | U |
| 03/21/1994 | Uranium | 3 | PM | 778.7 | .00023 | .00000 | 12.28 | .00011 | .00001 | .00011 | TR | | U |
| 03/21/1994 | Thorium-230 | 4 | PM | 1446.3 | .00014 | .00020 | 18.98 | | | | | B | U |
| 03/21/1994 | Polonium-210 | 4 | PM | 1446.3 | .00889 | .00180 | 18.98 | | | | | | |
| 03/21/1994 | Lead-210 | 4 | PM | 1446.3 | .01207 | .00120 | 18.98 | | | | | | |
| 03/21/1994 | Radium-226 | 4 | PM | 1446.3 | .00000 | .00160 | 18.98 | | | | | U | U |
| 03/21/1994 | Uranium | 4 | PM | 1446.3 | .00020 | .00000 | 18.98 | .00010 | .00000 | .00010 | | | |
| 03/21/1994 | Thorium-230 | 5 | PM | 1435.7 | .00007 | .00020 | 11.10 | | | | | B | U |
| 03/21/1994 | Polonium-210 | 5 | PM | 1435.7 | .00524 | .00180 | 11.10 | | | | | | |
| 03/21/1994 | Lead-210 | 5 | PM | 1435.7 | .01250 | .00120 | 11.10 | | | | | | |
| 03/21/1994 | Radium-226 | 5 | PM | 1435.7 | .00023 | .00160 | 11.10 | | | | | U | U |
| 03/21/1994 | Uranium | 5 | PM | 1435.7 | .00016 | .00000 | 11.10 | .00008 | .00000 | .00007 | | | |
| 03/21/1994 | Thorium-230 | 6 | PM | 1439.9 | .00009 | .00020 | 17.12 | | | | | B | U |
| 03/21/1994 | Polonium-210 | 6 | PM | 1439.9 | .00586 | .00180 | 17.12 | | | | | | |
| 03/21/1994 | Lead-210 | 6 | PM | 1439.9 | .01215 | .00120 | 17.12 | | | | | | |
| 03/21/1994 | Radium-226 | 6 | PM | 1439.9 | -.00044 | .00160 | 17.12 | | | | | U | U |
| 03/21/1994 | Uranium | 6 | PM | 1439.9 | .00006 | .00000 | 17.12 | .00003 | .00000 | .00003 | | B | U |
| 03/21/1994 | Thorium-230 | 7 | PM | 1440.0 | .00012 | .00020 | 10.27 | | | | Q | B | U |
| 03/21/1994 | Polonium-210 | 7 | PM | 1440.0 | .00519 | .00180 | 10.27 | | | | Q | | |

Note: Concentrations of Uranium isotopes were calculated from total uranium based on naturally occuring ratios and are expressed in pCi/m3. EPA screening levels of uranium isotopes are given in parens.

Data Report for Radionuclide Concentrations from PM10 Samples (Validated)

07/31/1995



| Sample Date | Chemical Name | Site No. | Type | Run Time (min.) | Chem Conc (pCi/m3) | EPA Screen. Level (pCi/m3) | Particulate Conc. (ug/m3) | U-234 (0.0002) | U-235 (0.0002) | U-238 (0.0001) | Grav Val | Quality Lab | Quality Val |
|---|---|---|---|---|---|---|---|---|---|---|---|---|---|
| 03/21/1994 | Lead-210 | 7 | PM | 1440.0 | .01266 | .00120 | 10.27 | | | | Q | | |
| 03/21/1994 | Radium-226 | 7 | PM | 1440.0 | .00006 | .00160 | 10.27 | | | | Q | U | U |
| 03/21/1994 | Uranium | 7 | PM | 1440.0 | .00005 | .00000 | 10.27 | .00003 | .00000 | .00003 | Q | B | U |
| 03/21/1994 | Thorium-230 | 8 | PM | 1461.3 | .00029 | .00020 | 29.22 | | | | | | |
| 03/21/1994 | Polonium-210 | 8 | PM | 1461.3 | .01553 | .00180 | 29.22 | | | | | | |
| 03/21/1994 | Lead-210 | 8 | PM | 1461.3 | .01317 | .00120 | 29.22 | | | | | | |
| 03/21/1994 | Radium-226 | 8 | PM | 1461.3 | -.00002 | .00160 | 29.22 | | | | | U | U |
| 03/21/1994 | Uranium | 8 | PM | 1461.3 | .00068 | .00000 | 29.22 | .00034 | .00001 | .00032 | | | |
| 03/25/1994 | Thorium-230 | 1 | PM | 1452.5 | .00015 | .00020 | 25.16 | | | | | B | U |
| 03/25/1994 | Polonium-210 | 1 | PM | 1452.5 | .00931 | .00180 | 25.16 | | | | | | |
| 03/25/1994 | Lead-210 | 1 | PM | 1452.5 | .01614 | .00120 | 25.16 | | | | | | |
| 03/25/1994 | Radium-226 | 1 | PM | 1452.5 | -.00026 | .00160 | 25.16 | | | | | U | U |
| 03/25/1994 | Uranium | 1 | PM | 1452.5 | .00018 | .00000 | 25.16 | .00009 | .00000 | .00008 | | | |
| 03/25/1994 | Thorium-230 | 2 | PM | 1441.3 | .00026 | .00020 | 32.65 | | | | | | |
| 03/25/1994 | Polonium-210 | 2 | PM | 1441.3 | .00489 | .00180 | 32.65 | | | | | | |
| 03/25/1994 | Lead-210 | 2 | PM | 1441.3 | .01653 | .00120 | 32.65 | | | | | | |
| 03/25/1994 | Radium-226 | 2 | PM | 1441.3 | .00022 | .00160 | 32.65 | | | | | U | U |
| 03/25/1994 | Uranium | 2 | PM | 1441.3 | .00052 | .00000 | 32.65 | .00026 | .00001 | .00025 | | | |
| 03/25/1994 | Thorium-230 | 3 | PM | 1451.3 | .00006 | .00020 | 17.16 | | | | | B | U |
| 03/25/1994 | Polonium-210 | 3 | PM | 1451.3 | .00451 | .00180 | 17.16 | | | | | | |
| 03/25/1994 | Lead-210 | 3 | PM | 1451.3 | .01651 | .00120 | 17.16 | | | | | | |
| 03/25/1994 | Radium-226 | 3 | PM | 1451.3 | .00000 | .00160 | 17.16 | | | | | U | U |
| 03/25/1994 | Uranium | 3 | PM | 1451.3 | .00005 | .00000 | 17.16 | .00003 | .00000 | .00003 | | B | U |
| 03/25/1994 | Thorium-230 | 4 | PM | 1445.7 | .00010 | .00020 | 24.93 | | | | | B | U |
| 03/25/1994 | Polonium-210 | 4 | PM | 1445.7 | .00697 | .00180 | 24.93 | | | | | | |
| 03/25/1994 | Lead-210 | 4 | PM | 1445.7 | .01452 | .00120 | 24.93 | | | | | | |
| 03/25/1994 | Radium-226 | 4 | PM | 1445.7 | .00075 | .00160 | 24.93 | | | | | B | U |
| 03/25/1994 | Uranium | 4 | PM | 1445.7 | .00014 | .00000 | 24.93 | .00007 | .00000 | .00007 | | | |
| 03/25/1994 | Thorium-230 | 5 | PM | 1440.0 | .00008 | .00020 | 31.69 | | | | | B | U |
| 03/25/1994 | Polonium-210 | 5 | PM | 1440.0 | .02257 | .00180 | 31.69 | | | | | | |
| 03/25/1994 | Lead-210 | 5 | PM | 1440.0 | .01490 | .00120 | 31.69 | | | | | | |
| 03/25/1994 | Radium-226 | 5 | PM | 1440.0 | .00004 | .00160 | 31.69 | | | | | U | U |
| 03/25/1994 | Uranium | 5 | PM | 1440.0 | .00027 | .00000 | 31.69 | .00014 | .00001 | .00013 | | | |
| 03/25/1994 | Thorium-230 | 6 | PM | 1442.7 | .00010 | .00020 | 14.01 | | | | | B | U |
| 03/25/1994 | Polonium-210 | 6 | PM | 1442.7 | .00615 | .00180 | 14.01 | | | | | | |
| 03/25/1994 | Lead-210 | 6 | PM | 1442.7 | .01725 | .00120 | 14.01 | | | | | | |
| 03/25/1994 | Radium-226 | 6 | PM | 1442.7 | -.00005 | .00160 | 14.01 | | | | | U | U |
| 03/25/1994 | Uranium | 6 | PM | 1442.7 | .00005 | .00000 | 14.01 | .00002 | .00000 | .00002 | | B | U |
| 03/25/1994 | Thorium-230 | 7 | PM | 1438.1 | .00006 | .00020 | 20.73 | | | | | B | U |
| 03/25/1994 | Polonium-210 | 7 | PM | 1438.1 | .01451 | .00180 | 20.73 | | | | | | |
| 03/25/1994 | Lead-210 | 7 | PM | 1438.1 | .01567 | .00120 | 20.73 | | | | | | |
| 03/25/1994 | Radium-226 | 7 | PM | 1438.1 | .00020 | .00160 | 20.73 | | | | | U | U |
| 03/25/1994 | Uranium | 7 | PM | 1438.1 | .00018 | .00000 | 20.73 | .00009 | .00000 | .00009 | | | |
| 03/25/1994 | Thorium-230 | P | BL | 1440.0 | .00004 | .00020 | -1.76 | | | | | B | U |
| 03/25/1994 | Polonium-210 | P | BL | 1440.0 | .00012 | .00180 | -1.76 | | | | | U | U |
| 03/25/1994 | Lead-210 | P | BL | 1440.0 | .00021 | .00120 | -1.76 | | | | | U | U |
| 03/25/1994 | Radium-226 | P | BL | 1440.0 | .00081 | .00160 | -1.76 | | | | | B | U |
| 03/25/1994 | Uranium | P | BL | 1440.0 | .00000 | .00000 | -1.76 | .00000 | .00000 | .00000 | | U | U |
| 03/29/1994 | Thorium-230 | 1 | PM | 1452.5 | .00014 | .00020 | 18.73 | | | | | B | U |
| 03/29/1994 | Polonium-210 | 1 | PM | 1452.5 | .00311 | .00180 | 18.73 | | | | | | |
| 03/29/1994 | Lead-210 | 1 | PM | 1452.5 | .00715 | .00120 | 18.73 | | | | | | |

Note: Concentrations of Uranium isotopes were calculated from total uranium based on naturally occuring ratios and are expressed in pCi/m3. EPA screening levels of uranium isotopes are given in parens.

Data Report for Radionuclide Concentrations from PM10 Samples
(Validated)

| Sample Date | Chemical Name | Site No. | Type | Run Time (min.) | Chem Conc (pCi/m3) | EPA Screen. Level (pCi/m3) | Particulate Conc. (ug/m3) | U-234 (0.0002) | U-235 (0.0002) | U-238 (0.0001) | Grav Val | Quality Lab | Quality Val |
|---|---|---|---|---|---|---|---|---|---|---|---|---|---|
| 03/29/1994 | Radium-226 | 1 | PM | 1452.5 | -.00015 | .00160 | 18.73 | | | | | U | U |
| 03/29/1994 | Uranium | 1 | PM | 1452.5 | .00011 | .00000 | 18.73 | .00005 | .00000 | .00005 | | | U |
| 03/29/1994 | Thorium-230 | 2 | PM | 1444.1 | .00021 | .00020 | 23.48 | | | | | | |
| 03/29/1994 | Polonium-210 | 2 | PM | 1444.1 | .00228 | .00180 | 23.48 | | | | | | |
| 03/29/1994 | Lead-210 | 2 | PM | 1444.1 | .00833 | .00120 | 23.48 | | | | | | |
| 03/29/1994 | Radium-226 | 2 | PM | 1444.1 | .00011 | .00160 | 23.48 | | | | | U | U |
| 03/29/1994 | Uranium | 2 | PM | 1444.1 | .00035 | .00000 | 23.48 | .00018 | .00001 | .00017 | | | |
| 03/29/1994 | Thorium-230 | 3 | PM | 1455.3 | .00005 | .00020 | 13.56 | | | | | B | U |
| 03/29/1994 | Polonium-210 | 3 | PM | 1455.3 | .00232 | .00180 | 13.56 | | | | | | |
| 03/29/1994 | Lead-210 | 3 | PM | 1455.3 | .00725 | .00120 | 13.56 | | | | | | |
| 03/29/1994 | Radium-226 | 3 | PM | 1455.3 | -.00029 | .00160 | 13.56 | | | | | U | U |
| 03/29/1994 | Uranium | 3 | PM | 1455.3 | .00011 | .00000 | 13.56 | .00006 | .00000 | .00005 | | | U |
| 03/29/1994 | Thorium-230 | 4 | PM | 1447.7 | .00008 | .00020 | 19.50 | | | | | B | U |
| 03/29/1994 | Polonium-210 | 4 | PM | 1447.7 | .00318 | .00180 | 19.50 | | | | | | |
| 03/29/1994 | Lead-210 | 4 | PM | 1447.7 | .00699 | .00120 | 19.50 | | | | | | |
| 03/29/1994 | Radium-226 | 4 | PM | 1447.7 | .00027 | .00160 | 19.50 | | | | | B | U |
| 03/29/1994 | Uranium | 4 | PM | 1447.7 | .00017 | .00000 | 19.50 | .00008 | .00000 | .00008 | | | |
| 03/29/1994 | Thorium-230 | 5 | PM | 1438.1 | .00016 | .00020 | 19.44 | | | | | B | U |
| 03/29/1994 | Polonium-210 | 5 | PM | 1438.1 | .00794 | .00180 | 19.44 | | | | | | |
| 03/29/1994 | Lead-210 | 5 | PM | 1438.1 | .00727 | .00120 | 19.44 | | | | | | |
| 03/29/1994 | Radium-226 | 5 | PM | 1438.1 | .00016 | .00160 | 19.44 | | | | | U | U |
| 03/29/1994 | Uranium | 5 | PM | 1438.1 | .00024 | .00000 | 19.44 | .00012 | .00001 | .00011 | | | |
| 03/29/1994 | Thorium-230 | 6 | PM | 1439.6 | .00012 | .00020 | 17.80 | | | | | B | U |
| 03/29/1994 | Polonium-210 | 6 | PM | 1439.6 | .00337 | .00180 | 17.80 | | | | | | |
| 03/29/1994 | Lead-210 | 6 | PM | 1439.6 | .00835 | .00120 | 17.80 | | | | | | |
| 03/29/1994 | Radium-226 | 6 | PM | 1439.6 | -.00015 | .00160 | 17.80 | | | | | U | U |
| 03/29/1994 | Uranium | 6 | PM | 1439.6 | .00004 | .00000 | 17.80 | .00002 | .00000 | .00002 | | B | U |
| 03/29/1994 | Thorium-230 | 7 | PM | 1434.7 | .00008 | .00020 | 8.51 | | | | | B | U |
| 03/29/1994 | Polonium-210 | 7 | PM | 1434.7 | .00361 | .00180 | 8.51 | | | | | | |
| 03/29/1994 | Lead-210 | 7 | PM | 1434.7 | .00647 | .00120 | 8.51 | | | | | | |
| 03/29/1994 | Radium-226 | 7 | PM | 1434.7 | .00001 | .00160 | 8.51 | | | | | U | U |
| 03/29/1994 | Uranium | 7 | PM | 1434.7 | .00005 | .00000 | 8.51 | .00002 | .00000 | .00002 | | B | U |
| 04/14/1994 | Gross Alpha | 1 | PM | 1448.3 | .01218 | .00000 | 53.12 | | | | | | |
| 04/14/1994 | Gross Beta | 1 | PM | 1448.3 | .00901 | .00000 | 53.12 | | | | | | |
| 04/14/1994 | Thorium-230 | 1 | PM | 1448.3 | .00026 | .00020 | 53.12 | | | | | | |
| 04/14/1994 | Polonium-210 | 1 | PM | 1448.3 | .02736 | .00180 | 53.12 | | | | | | |
| 04/14/1994 | Lead-210 | 1 | PM | 1448.3 | .00674 | .00120 | 53.12 | | | | | | J |
| 04/14/1994 | Radium-226 | 1 | PM | 1448.3 | .00004 | .00160 | 53.12 | | | | | U | U |
| 04/14/1994 | Uranium | 1 | PM | 1448.3 | .00048 | .00000 | 53.12 | .00024 | .00001 | .00023 | | | |
| 04/14/1994 | Polonium-210 | 2 | PM | 1442.9 | .10057 | .00180 | 150.74 | | | | | | |
| 04/14/1994 | Lead-210 | 2 | PM | 1442.9 | .01007 | .00120 | 150.74 | | | | | | J |
| 04/14/1994 | Radium-226 | 2 | PM | 1442.9 | .00097 | .00160 | 150.74 | | | | | B | U |
| 04/14/1994 | Thorium-230 | 2 | PM | 1442.9 | .00074 | .00020 | 150.74 | | | | | | |
| 04/14/1994 | Uranium | 2 | PM | 1442.9 | .00219 | .00000 | 150.74 | .00110 | .00005 | .00104 | | | |
| 04/14/1994 | Gross Alpha | 2 | PM | 1442.9 | .05232 | .00000 | 150.74 | | | | | | |
| 04/14/1994 | Gross Beta | 2 | PM | 1442.9 | .01174 | .00000 | 150.74 | | | | | | |
| 04/14/1994 | Gross Beta | 3 | PM | 1454.0 | .00421 | .00000 | 28.67 | | | | | | U |
| 04/14/1994 | Thorium-230 | 3 | PM | 1454.0 | .00010 | .00020 | 28.67 | | | | | B | U |
| 04/14/1994 | Polonium-210 | 3 | PM | 1454.0 | .01197 | .00180 | 28.67 | | | | | | |
| 04/14/1994 | Lead-210 | 3 | PM | 1454.0 | .00877 | .00120 | 28.67 | | | | | | J |
| 04/14/1994 | Radium-226 | 3 | PM | 1454.0 | -.00020 | .00160 | 28.67 | | | | | U | U |

Note: Concentrations of Uranium isotopes were calculated from total uranium based on naturally occuring ratios and are expressed in pCi/m3. EPA screening levels of uranium isotopes are given in parens.

Data Report for Radionuclide Concentrations from PM10 Samples (Validated) 07/31/1995



| Sample Date | Chemical Name | Site No. | Type | Run Time (min.) | Chem Conc (pCi/m3) | EPA Screen. Level (pCi/m3) | Particulate Conc. (ug/m3) | U-234 (0.0002) | U-235 (0.0002) | U-238 (0.0001) | Grav Val | Lab Val | Quality Val |
|---|---|---|---|---|---|---|---|---|---|---|---|---|---|
| 04/14/1994 | Uranium | 3 | PM | 1454.0 | .00012 | .00000 | 28.67 | .00006 | .00000 | .00005 | | | U |
| 04/14/1994 | Gross Alpha | 3 | PM | 1454.0 | .00567 | .00000 | 28.67 | | | | | | |
| 04/14/1994 | Thorium-230 | 4 | PM | 1446.3 | .00006 | .00020 | 19.47 | | | | | B | U |
| 04/14/1994 | Polonium-210 | 4 | PM | 1446.3 | .00747 | .00180 | 19.47 | | | | | | |
| 04/14/1994 | Lead-210 | 4 | PM | 1446.3 | .00708 | .00120 | 19.47 | | | | | | J |
| 04/14/1994 | Radium-226 | 4 | PM | 1446.3 | -.00047 | .00160 | 19.47 | | | | | U | U |
| 04/14/1994 | Uranium | 4 | PM | 1446.3 | .00007 | .00000 | 19.47 | .00004 | .00000 | .00003 | | B | U |
| 04/14/1994 | Gross Alpha | 4 | PM | 1446.3 | .00361 | .00000 | 19.47 | | | | | | |
| 04/14/1994 | Gross Beta | 4 | PM | 1446.3 | .00996 | .00000 | 19.47 | | | | | | |
| 04/14/1994 | Gross Alpha | 5 | PM | 1441.5 | .00223 | .00000 | 16.68 | | | | | | |
| 04/14/1994 | Gross Beta | 5 | PM | 1441.5 | .00644 | .00000 | 16.68 | | | | | | |
| 04/14/1994 | Thorium-230 | 5 | PM | 1441.5 | .00004 | .00020 | 16.68 | | | | | U | U |
| 04/14/1994 | Polonium-210 | 5 | PM | 1441.5 | .00871 | .00180 | 16.68 | | | | | | |
| 04/14/1994 | Lead-210 | 5 | PM | 1441.5 | .00611 | .00120 | 16.68 | | | | | | J |
| 04/14/1994 | Radium-226 | 5 | PM | 1441.5 | -.00013 | .00160 | 16.68 | | | | | U | U |
| 04/14/1994 | Uranium | 5 | PM | 1441.5 | .00003 | .00000 | 16.68 | .00002 | .00000 | .00001 | | B | U |
| 04/14/1994 | Thorium-230 | 6 | PM | 1442.7 | .00003 | .00020 | 17.75 | | | | | B | U |
| 04/14/1994 | Polonium-210 | 6 | PM | 1442.7 | .00689 | .00180 | 17.75 | | | | | | |
| 04/14/1994 | Lead-210 | 6 | PM | 1442.7 | .00793 | .00120 | 17.75 | | | | | | J |
| 04/14/1994 | Radium-226 | 6 | PM | 1442.7 | .00028 | .00160 | 17.75 | | | | | U | U |
| 04/14/1994 | Uranium | 6 | PM | 1442.7 | .00003 | .00000 | 17.75 | .00001 | .00000 | .00001 | | B | U |
| 04/14/1994 | Gross Alpha | 6 | PM | 1442.7 | .00177 | .00000 | 17.75 | | | | | | |
| 04/14/1994 | Gross Beta | 6 | PM | 1442.7 | .00833 | .00000 | 17.75 | | | | | | |
| 04/14/1994 | Uranium | 7 | PM | 1441.2 | .00004 | .00000 | 19.20 | .00002 | .00000 | .00002 | | B | U |
| 04/14/1994 | Gross Alpha | 7 | PM | 1441.2 | .00313 | .00000 | 19.20 | | | | | | |
| 04/14/1994 | Gross Beta | 7 | PM | 1441.2 | .00558 | .00000 | 19.20 | | | | | | |
| 04/14/1994 | Thorium-230 | 7 | PM | 1441.2 | .00009 | .00020 | 19.20 | | | | | B | U |
| 04/14/1994 | Polonium-210 | 7 | PM | 1441.2 | .00732 | .00180 | 19.20 | | | | | | |
| 04/14/1994 | Lead-210 | 7 | PM | 1441.2 | .00610 | .00120 | 19.20 | | | | | | J |
| 04/14/1994 | Radium-226 | 7 | PM | 1441.2 | .00007 | .00160 | 19.20 | | | | | U | U |
| 04/14/1994 | Thorium-230 | 8 | PM | 1460.5 | .00026 | .00020 | 56.10 | | | | | | |
| 04/14/1994 | Polonium-210 | 8 | PM | 1460.5 | .03101 | .00180 | 56.10 | | | | | | |
| 04/14/1994 | Lead-210 | 8 | PM | 1460.5 | .00794 | .00120 | 56.10 | | | | | | J |
| 04/14/1994 | Radium-226 | 8 | PM | 1460.5 | .00020 | .00160 | 56.10 | | | | | U | U |
| 04/14/1994 | Uranium | 8 | PM | 1460.5 | .00054 | .00000 | 56.10 | .00027 | .00001 | .00025 | | | |
| 04/14/1994 | Gross Alpha | 8 | PM | 1460.5 | .01531 | .00000 | 56.10 | | | | | | |
| 04/14/1994 | Gross Beta | 8 | PM | 1460.5 | .00893 | .00000 | 56.10 | | | | | | |
| 04/16/1994 | Radium-226 | P | BL | 1440.0 | -.00063 | .00160 | -.55 | | | | | U | U |
| 04/16/1994 | Uranium | P | BL | 1440.0 | .00002 | .00000 | -.55 | .00001 | .00000 | .00001 | | B | U |
| 04/16/1994 | Gross Alpha | P | BL | 1440.0 | -.00001 | .00000 | -.55 | | | | | | U |
| 04/16/1994 | Gross Beta | P | BL | 1440.0 | .00089 | .00000 | -.55 | | | | | | U |
| 04/16/1994 | Thorium-230 | P | BL | 1440.0 | .00002 | .00020 | -.55 | | | | | U | U |
| 04/16/1994 | Polonium-210 | P | BL | 1440.0 | .00011 | .00180 | -.55 | | | | | U | U |
| 04/16/1994 | Lead-210 | P | BL | 1440.0 | -.00368 | .00120 | -.55 | | | | | | UJ |
| 04/16/1994 | Gross Alpha | T | BL | 1440.0 | .01932 | .00000 | 2.39 | | | | | U | U |
| 04/16/1994 | Gross Beta | T | BL | 1440.0 | .01932 | .00000 | 2.39 | | | | | U | U |
| 06/07/1994 | Uranium | 1 | PM | 1450.8 | .00026 | .00000 | 9.97 | .00013 | .00001 | .00012 | | | |
| 06/07/1994 | Gross Alpha | 1 | PM | 1450.8 | .00077 | .00000 | 9.97 | | | | | | U |
| 06/07/1994 | Gross Beta | 1 | PM | 1450.8 | .00383 | .00000 | 9.97 | | | | | | U |
| 06/07/1994 | Thorium-230 | 1 | PM | 1450.8 | .00010 | .00020 | 9.97 | | | | | B | U |
| 06/07/1994 | Polonium-210 | 1 | PM | 1450.8 | .00158 | .00180 | 9.97 | | | | | B | U |

Note: Concentrations of Uranium isotopes were calculated from total uranium based on naturally occuring ratios and are expressed in pCi/m3. EPA screening levels of uranium isotopes are given in parens.

Data Report for Radionuclide Concentrations from PM10 Samples
(Validated)

| Sample Date | Chemical Name | Site No. | Type | Run Time (min.) | Chem Conc (pCi/m3) | EPA Screen. Level (pCi/m3) | Particulate Conc. (ug/m3) | U-234 (0.0002) | U-235 (0.0002) | U-238 (0.0001) | Grav Val | Quality Lab | Quality Val |
|---|---|---|---|---|---|---|---|---|---|---|---|---|---|
| 06/07/1994 | Lead-210 | 1 | PM | 1450.8 | .00270 | .00120 | 9.97 | | | | | | UJ |
| 06/07/1994 | Radium-226 | 1 | PM | 1450.8 | -.00009 | .00160 | 9.97 | | | | | U | U |
| 06/07/1994 | Thorium-230 | 2 | PM | 1443.2 | .00015 | .00020 | 19.34 | | | | | B | U |
| 06/07/1994 | Polonium-210 | 2 | PM | 1443.2 | .00507 | .00180 | 19.34 | | | | | | |
| 06/07/1994 | Lead-210 | 2 | PM | 1443.2 | .00194 | .00120 | 19.34 | | | | | | UJ |
| 06/07/1994 | Radium-226 | 2 | PM | 1443.2 | .00015 | .00160 | 19.34 | | | | | U | U |
| 06/07/1994 | Uranium | 2 | PM | 1443.2 | .00024 | .00000 | 19.34 | .00012 | .00001 | .00011 | | | |
| 06/07/1994 | Gross Alpha | 2 | PM | 1443.2 | .00187 | .00000 | 19.34 | | | | | | |
| 06/07/1994 | Gross Beta | 2 | PM | 1443.2 | .00476 | .00000 | 19.34 | | | | | | U |
| 06/07/1994 | Thorium-230 | 3 | PM | 1451.6 | .00002 | .00020 | 6.00 | | | | | U | U |
| 06/07/1994 | Polonium-210 | 3 | PM | 1451.6 | .00285 | .00180 | 6.00 | | | | | | |
| 06/07/1994 | Lead-210 | 3 | PM | 1451.6 | .00057 | .00120 | 6.00 | | | | | U | UJ |
| 06/07/1994 | Radium-226 | 3 | PM | 1451.6 | -.00003 | .00160 | 6.00 | | | | | U | U |
| 06/07/1994 | Uranium | 3 | PM | 1451.6 | .00002 | .00000 | 6.00 | .00001 | .00000 | .00001 | | B | U |
| 06/07/1994 | Gross Alpha | 3 | PM | 1451.6 | .00054 | .00000 | 6.00 | | | | | | U |
| 06/07/1994 | Gross Beta | 3 | PM | 1451.6 | .00749 | .00000 | 6.00 | | | | | | |
| 06/07/1994 | Gross Alpha | 4 | PM | 1448.0 | .00028 | .00000 | 11.15 | | | | | | U |
| 06/07/1994 | Gross Beta | 4 | PM | 1448.0 | .00457 | .00000 | 11.15 | | | | | | U |
| 06/07/1994 | Thorium-230 | 4 | PM | 1448.0 | .00003 | .00020 | 11.15 | | | | | B | U |
| 06/07/1994 | Polonium-210 | 4 | PM | 1448.0 | .00286 | .00180 | 11.15 | | | | | | |
| 06/07/1994 | Lead-210 | 4 | PM | 1448.0 | .00140 | .00120 | 11.15 | | | | | | UJ |
| 06/07/1994 | Radium-226 | 4 | PM | 1448.0 | -.00009 | .00160 | 11.15 | | | | | U | U |
| 06/07/1994 | Uranium | 4 | PM | 1448.0 | .00005 | .00000 | 11.15 | .00002 | .00000 | .00002 | | B | U |
| 06/07/1994 | Thorium-230 | 5 | PM | 1439.9 | .00003 | .00020 | 3.25 | | | | | B | U |
| 06/07/1994 | Polonium-210 | 5 | PM | 1439.9 | .00270 | .00180 | 3.25 | | | | | | |
| 06/07/1994 | Lead-210 | 5 | PM | 1439.9 | .00034 | .00120 | 3.25 | | | | | U | UJ |
| 06/07/1994 | Radium-226 | 5 | PM | 1439.9 | .00009 | .00160 | 3.25 | | | | | U | U |
| 06/07/1994 | Uranium | 5 | PM | 1439.9 | .00001 | .00000 | 3.25 | .00001 | .00000 | .00001 | | B | U |
| 06/07/1994 | Gross Alpha | 5 | PM | 1439.9 | .00096 | .00000 | 3.25 | | | | | | U |
| 06/07/1994 | Gross Beta | 5 | PM | 1439.9 | .00364 | .00000 | 3.25 | | | | | | U |
| 06/07/1994 | Gross Beta | 6 | PM | 1437.7 | .00176 | .00000 | 5.46 | | | | | | U |
| 06/07/1994 | Thorium-230 | 6 | PM | 1437.7 | .00001 | .00020 | 5.46 | | | | | U | U |
| 06/07/1994 | Polonium-210 | 6 | PM | 1437.7 | .00145 | .00180 | 5.46 | | | | | B | U |
| 06/07/1994 | Lead-210 | 6 | PM | 1437.7 | .00233 | .00120 | 5.46 | | | | | | J |
| 06/07/1994 | Radium-226 | 6 | PM | 1437.7 | .00086 | .00160 | 5.46 | | | | | B | U |
| 06/07/1994 | Uranium | 6 | PM | 1437.7 | .00001 | .00000 | 5.46 | .00000 | .00000 | .00000 | | B | U |
| 06/07/1994 | Gross Alpha | 6 | PM | 1437.7 | .00040 | .00000 | 5.46 | | | | | | U |
| 06/07/1994 | Thorium-230 | 7 | PM | 1435.7 | .00000 | .00020 | 6.43 | | | | | L | L |
| 06/07/1994 | Polonium-210 | 7 | PM | 1435.7 | .00198 | .00180 | 6.43 | | | | | | |
| 06/07/1994 | Lead-210 | 7 | PM | 1435.7 | .00077 | .00120 | 6.43 | | | | | B | UJ |
| 06/07/1994 | Radium-226 | 7 | PM | 1435.7 | .00021 | .00160 | 6.43 | | | | | U | U |
| 06/07/1994 | Uranium | 7 | PM | 1435.7 | .00003 | .00000 | 6.43 | .00002 | .00000 | .00002 | | B | U |
| 06/07/1994 | Gross Alpha | 7 | PM | 1435.7 | .00096 | .00000 | 6.43 | | | | | | U |
| 06/07/1994 | Gross Beta | 7 | PM | 1435.7 | .00616 | .00000 | 6.43 | | | | | | |
| 06/07/1994 | Thorium-230 | 8 | PM | 1460.8 | .00010 | .00020 | 9.75 | | | | | B | U |
| 06/07/1994 | Polonium-210 | 8 | PM | 1460.8 | .00167 | .00180 | 9.75 | | | | | B | U |
| 06/07/1994 | Lead-210 | 8 | PM | 1460.8 | .00105 | .00120 | 9.75 | | | | | B | UJ |
| 06/07/1994 | Radium-226 | 8 | PM | 1460.8 | -.00058 | .00160 | 9.75 | | | | | U | U |
| 06/07/1994 | Uranium | 8 | PM | 1460.8 | .00027 | .00000 | 9.75 | .00014 | .00001 | .00013 | | | |
| 06/07/1994 | Gross Alpha | 8 | PM | 1460.8 | .00096 | .00000 | 9.75 | | | | | | U |
| 06/07/1994 | Gross Beta | 8 | PM | 1460.8 | .00268 | .00000 | 9.75 | | | | | | U |

Note: Concentrations of Uranium isotopes were calculated from total uranium based on naturally occuring ratios and are expressed in pCi/m3. EPA screening levels of uranium isotopes are given in parens.

Data Report for Radionuclide Concentrations from PM10 Samples (Validated)

07/31/1995



| Sample Date | Chemical Name | Site No. | Type | Run Time (min.) | Chem Conc (pCi/m3) | EPA Screen. Level (pCi/m3) | Particulate Conc. (ug/m3) | U-234 (0.0002) | U-235 (0.0002) | U-238 (0.0001) | Grav Val | Quality Lab | Quality Val |
|---|---|---|---|---|---|---|---|---|---|---|---|---|---|
| 06/11/1994 | Thorium-230 | P | BL | 1440.0 | .00001 | .00020 | -1.52 | | | | | U | U |
| 06/11/1994 | Polonium-210 | P | BL | 1440.0 | .00021 | .00180 | -1.52 | | | | | B | U |
| 06/11/1994 | Lead-210 | P | BL | 1440.0 | -.00141 | .00120 | -1.52 | | | | | | UJ |
| 06/11/1994 | Radium-226 | P | BL | 1440.0 | .00019 | .00160 | -1.52 | | | | | U | U |
| 06/11/1994 | Uranium | P | BL | 1440.0 | .00001 | .00000 | -1.52 | .00000 | .00000 | .00000 | | B | U |
| 06/11/1994 | Gross Alpha | P | BL | 1440.0 | .00010 | .00000 | -1.52 | | | | | | U |
| 06/11/1994 | Gross Beta | P | BL | 1440.0 | .00137 | .00000 | -1.52 | | | | | | U |
| 06/11/1994 | Gross Alpha | T | BL | 1440.0 | .01932 | .00000 | 3.50 | | | | | U | U |
| 06/11/1994 | Gross Beta | T | BL | 1440.0 | .01932 | .00000 | 3.50 | | | | | U | U |
| 09/21/1994 | Thorium-230 | 1 | PM | 1452.1 | .00037 | .00020 | 49.76 | | | | | | |
| 09/21/1994 | Polonium-210 | 1 | PM | 1452.1 | .03213 | .00180 | 49.76 | | | | | | |
| 09/21/1994 | Lead-210 | 1 | PM | 1452.1 | .02054 | .00120 | 49.76 | | | | | | |
| 09/21/1994 | Radium-226 | 1 | PM | 1452.1 | .00040 | .00160 | 49.76 | | | | | U | U |
| 09/21/1994 | Uranium | 1 | PM | 1452.1 | .00038 | .00000 | 49.76 | .00019 | .00001 | .00018 | | | |
| 09/21/1994 | Gross Alpha | 1 | PM | 1452.1 | .00238 | .00000 | 49.76 | | | | | | |
| 09/21/1994 | Gross Beta | 1 | PM | 1452.1 | .02881 | .00000 | 49.76 | | | | | | |
| 09/21/1994 | Thorium-230 | 2 | PM | 1444.6 | .00004 | .00020 | 59.10 | | | | | B | U |
| 09/21/1994 | Polonium-210 | 2 | PM | 1444.6 | .04176 | .00180 | 59.10 | | | | | | |
| 09/21/1994 | Lead-210 | 2 | PM | 1444.6 | .02752 | .00120 | 59.10 | | | | | | |
| 09/21/1994 | Radium-226 | 2 | PM | 1444.6 | .00055 | .00160 | 59.10 | | | | | U | U |
| 09/21/1994 | Uranium | 2 | PM | 1444.6 | .00119 | .00000 | 59.10 | .00060 | .00003 | .00056 | | | |
| 09/21/1994 | Gross Alpha | 2 | PM | 1444.6 | .00391 | .00000 | 59.10 | | | | | | |
| 09/21/1994 | Gross Beta | 2 | PM | 1444.6 | .02061 | .00000 | 59.10 | | | | | | |
| 09/21/1994 | Thorium-230 | 4 | PM | 1449.9 | .00013 | .00020 | 39.48 | | | | Q | B | U |
| 09/21/1994 | Polonium-210 | 4 | PM | 1449.9 | .02339 | .00180 | 39.48 | | | | Q | | |
| 09/21/1994 | Lead-210 | 4 | PM | 1449.9 | .02045 | .00120 | 39.48 | | | | Q | | |
| 09/21/1994 | Radium-226 | 4 | PM | 1449.9 | .00026 | .00160 | 39.48 | | | | Q | U | U |
| 09/21/1994 | Uranium | 4 | PM | 1449.9 | .00021 | .00000 | 39.48 | .00010 | .00000 | .00010 | Q | | |
| 09/21/1994 | Gross Alpha | 4 | PM | 1449.9 | .00078 | .00000 | 39.48 | | | | Q | | U |
| 09/21/1994 | Gross Beta | 4 | PM | 1449.9 | .03075 | .00000 | 39.48 | | | | Q | | |
| 09/21/1994 | Thorium-230 | 5 | PM | 1441.3 | .00008 | .00020 | 31.70 | | | | | B | U |
| 09/21/1994 | Polonium-210 | 5 | PM | 1441.3 | .03529 | .00180 | 31.70 | | | | | | |
| 09/21/1994 | Lead-210 | 5 | PM | 1441.3 | .02665 | .00120 | 31.70 | | | | | | |
| 09/21/1994 | Radium-226 | 5 | PM | 1441.3 | -.00019 | .00160 | 31.70 | | | | | U | U |
| 09/21/1994 | Uranium | 5 | PM | 1441.3 | .00036 | .00000 | 31.70 | .00018 | .00001 | .00017 | | | |
| 09/21/1994 | Gross Alpha | 5 | PM | 1441.3 | .00494 | .00000 | 31.70 | | | | | | |
| 09/21/1994 | Gross Beta | 5 | PM | 1441.3 | .04192 | .00000 | 31.70 | | | | | | |
| 09/21/1994 | Thorium-230 | 6 | PM | 1441.2 | .00010 | .00020 | 105.62 | | | | | B | U |
| 09/21/1994 | Polonium-210 | 6 | PM | 1441.2 | .00872 | .00180 | 105.62 | | | | | | |
| 09/21/1994 | Lead-210 | 6 | PM | 1441.2 | .02530 | .00120 | 105.62 | | | | | | |
| 09/21/1994 | Radium-226 | 6 | PM | 1441.2 | .00023 | .00160 | 105.62 | | | | | U | U |
| 09/21/1994 | Uranium | 6 | PM | 1441.2 | .00025 | .00000 | 105.62 | .00012 | .00001 | .00012 | | | |
| 09/21/1994 | Gross Alpha | 6 | PM | 1441.2 | .00280 | .00000 | 105.62 | | | | | | |
| 09/21/1994 | Gross Beta | 6 | PM | 1441.2 | .03119 | .00000 | 105.62 | | | | | | |
| 09/21/1994 | Thorium-230 | 7 | PM | 1438.8 | .00008 | .00020 | 42.73 | | | | | B | U |
| 09/21/1994 | Polonium-210 | 7 | PM | 1438.8 | .10273 | .00180 | 42.73 | | | | | | |
| 09/21/1994 | Lead-210 | 7 | PM | 1438.8 | .02804 | .00120 | 42.73 | | | | | | |
| 09/21/1994 | Radium-226 | 7 | PM | 1438.8 | .00060 | .00160 | 42.73 | | | | | B | U |
| 09/21/1994 | Uranium | 7 | PM | 1438.8 | .00045 | .00000 | 42.73 | .00023 | .00001 | .00022 | | | |
| 09/21/1994 | Gross Alpha | 7 | PM | 1438.8 | .00338 | .00000 | 42.73 | | | | | | |
| 09/21/1994 | Gross Beta | 7 | PM | 1438.8 | .03038 | .00000 | 42.73 | | | | | | |

Note: Concentrations of Uranium isotopes were calculated from total uranium based on naturally occuring ratios and are expressed in pCi/m3. EPA screening levels of uranium isotopes are given in parens.

Data Report for Radionuclide Concentrations from PM10 Samples
(Validated)

| Sample Date | Chemical Name | Site No. | Type | Run Time (min.) | Chem Conc (pCi/m3) | EPA Screen. Level (pCi/m3) | Particulate Conc. (ug/m3) | U-234 (0.0002) | U-235 (0.0002) | U-238 (0.0001) | Grav Val | Quality Lab | Quality Val |
|---|---|---|---|---|---|---|---|---|---|---|---|---|---|
| 09/21/1994 | Thorium-230 | P | BL | 1440.0 | .00001 | .00020 | -.54 | | | | | U | U |
| 09/21/1994 | Polonium-210 | P | BL | 1440.0 | .00003 | .00180 | -.54 | | | | | U | U |
| 09/21/1994 | Lead-210 | P | BL | 1440.0 | -.00018 | .00120 | -.54 | | | | | U | U |
| 09/21/1994 | Radium-226 | P | BL | 1440.0 | .00027 | .00160 | -.54 | | | | | U | U |
| 09/21/1994 | Uranium | P | BL | 1440.0 | .00002 | .00000 | -.54 | .00001 | .00000 | .00001 | | B | U |
| 09/21/1994 | Gross Alpha | P | BL | 1440.0 | .00112 | .00000 | -.54 | | | | | | U |
| 09/21/1994 | Gross Beta | P | BL | 1440.0 | .00585 | .00000 | -.54 | | | | | | U |

Note: Concentrations of Uranium isotopes were calculated from total uranium based on naturally occuring ratios and are expressed in pCi/m3. EPA screening levels of uranium isotopes are given in parens.

Data Report for Radionuclide Concentrations from Lo-Vol Samples (Validated) 08/07/1995



| Sample Date | Chemical Name | Site No. | Type | Run Time (min.) | Chem Conc (pCi/m3) | EPA Screen. Level (pCi/m3) | Particulate Conc. (ug/m3) | U-234 (0.0002) | U-235 (0.0002) | U-238 (0.0001) | Grav Val | Quality Lab | Quality Val |
|---|---|---|---|---|---|---|---|---|---|---|---|---|---|
| 10/01/1993 | Thorium-230 | 3 | LO | 44545.0 | .00025 | .00020 | 202.01 | | | | Q | | |
| 10/01/1993 | Thorium-232 | 3 | LO | 44545.0 | .00015 | .00020 | 202.01 | | | | Q | B | U |
| 10/01/1993 | Polonium-210 | 3 | LO | 44545.0 | .01580 | .00180 | 202.01 | | | | Q | | |
| 10/01/1993 | Lead-210 | 3 | LO | 44545.0 | .01747 | .00120 | 202.01 | | | | Q | | J |
| 10/01/1993 | Radium-226 | 3 | LO | 44545.0 | -.00009 | .00160 | 202.01 | | | | Q | U | UJ |
| 10/01/1993 | Radium-228 | 3 | LO | 44545.0 | .00055 | .00690 | 202.01 | | | | Q | U | U |
| 10/01/1993 | Uranium | 3 | LO | 44545.0 | .00039 | .00000 | 202.01 | .00020 | .00001 | .00019 | Q | | |
| 10/01/1993 | Thorium-230 | 4 | LO | 44405.0 | .00012 | .00020 | 49.54 | | | | | B | U |
| 10/01/1993 | Thorium-232 | 4 | LO | 44405.0 | .00001 | .00020 | 49.54 | | | | | U | U |
| 10/01/1993 | Polonium-210 | 4 | LO | 44405.0 | .00904 | .00180 | 49.54 | | | | | | |
| 10/01/1993 | Lead-210 | 4 | LO | 44405.0 | .01606 | .00120 | 49.54 | | | | | | J |
| 10/01/1993 | Radium-226 | 4 | LO | 44405.0 | .00112 | .00160 | 49.54 | | | | | B | UJ |
| 10/01/1993 | Radium-228 | 4 | LO | 44405.0 | .00040 | .00690 | 49.54 | | | | | U | U |
| 10/01/1993 | Uranium | 4 | LO | 44405.0 | .00022 | .00000 | 49.54 | .00011 | .00000 | .00010 | | | |
| 10/01/1993 | Thorium-230 | 5 | LO | 44130.0 | .00023 | .00020 | 40.99 | | | | T | B | U |
| 10/01/1993 | Thorium-232 | 5 | LO | 44130.0 | .00004 | .00020 | 40.99 | | | | T | B | U |
| 10/01/1993 | Polonium-210 | 5 | LO | 44130.0 | .02316 | .00180 | 40.99 | | | | T | | |
| 10/01/1993 | Lead-210 | 5 | LO | 44130.0 | .01819 | .00120 | 40.99 | | | | T | | J |
| 10/01/1993 | Radium-226 | 5 | LO | 44130.0 | -.00032 | .00160 | 40.99 | | | | T | U | UJ |
| 10/01/1993 | Radium-228 | 5 | LO | 44130.0 | .00024 | .00690 | 40.99 | | | | T | U | U |
| 10/01/1993 | Uranium | 5 | LO | 44130.0 | .00037 | .00000 | 40.99 | .00019 | .00001 | .00018 | T | | |
| 10/01/1993 | Thorium-230 | 6 | LO | 45250.0 | .00007 | .00020 | 31.89 | | | | | B | U |
| 10/01/1993 | Thorium-232 | 6 | LO | 45250.0 | .00005 | .00020 | 31.89 | | | | | B | U |
| 10/01/1993 | Polonium-210 | 6 | LO | 45250.0 | .00594 | .00180 | 31.89 | | | | | | |
| 10/01/1993 | Lead-210 | 6 | LO | 45250.0 | .01737 | .00120 | 31.89 | | | | | | J |
| 10/01/1993 | Radium-226 | 6 | LO | 45250.0 | .00000 | .00160 | 31.89 | | | | | U | UJ |
| 10/01/1993 | Radium-228 | 6 | LO | 45250.0 | .00295 | .00690 | 31.89 | | | | | B | U |
| 10/01/1993 | Uranium | 6 | LO | 45250.0 | .00008 | .00000 | 31.89 | .00004 | .00000 | .00004 | | B | U |
| 10/01/1993 | Thorium-230 | 9 | LO | 44545.0 | .00015 | .00020 | 142.72 | | | | Q | B | U |
| 10/01/1993 | Thorium-232 | 9 | LO | 44545.0 | .00006 | .00020 | 142.72 | | | | Q | B | U |
| 10/01/1993 | Polonium-210 | 9 | LO | 44545.0 | .00900 | .00180 | 142.72 | | | | Q | | |
| 10/01/1993 | Lead-210 | 9 | LO | 44545.0 | .01513 | .00120 | 142.72 | | | | Q | | J |
| 10/01/1993 | Radium-226 | 9 | LO | 44545.0 | -.00007 | .00160 | 142.72 | | | | Q | U | U |
| 10/01/1993 | Radium-228 | 9 | LO | 44545.0 | .00085 | .00690 | 142.72 | | | | Q | U | U |
| 10/01/1993 | Uranium | 9 | LO | 44545.0 | .00025 | .00000 | 142.72 | .00013 | .00001 | .00012 | Q | | |
| 11/01/1993 | Thorium-230 | 3 | LO | 43383.0 | .00024 | .00020 | 71.80 | | | | | B | |
| 11/01/1993 | Thorium-232 | 3 | LO | 43383.0 | .00002 | .00020 | 71.80 | | | | | B | U |
| 11/01/1993 | Polonium-210 | 3 | LO | 43383.0 | .02073 | .00180 | 71.80 | | | | | | |
| 11/01/1993 | Lead-210 | 3 | LO | 43383.0 | .03173 | .00120 | 71.80 | | | | | | |
| 11/01/1993 | Radium-226 | 3 | LO | 43383.0 | -.00048 | .00160 | 71.80 | | | | | U | U |
| 11/01/1993 | Radium-228 | 3 | LO | 43383.0 | .00090 | .00690 | 71.80 | | | | | U | U |
| 11/01/1993 | Uranium | 3 | LO | 43383.0 | .00031 | .00000 | 71.80 | .00015 | .00001 | .00014 | | | |
| 11/01/1993 | Thorium-230 | 4 | LO | 43444.0 | .00025 | .00020 | 46.79 | | | | | | |
| 11/01/1993 | Thorium-232 | 4 | LO | 43444.0 | .00001 | .00020 | 46.79 | | | | | U | U |
| 11/01/1993 | Polonium-210 | 4 | LO | 43444.0 | .01189 | .00180 | 46.79 | | | | | | |
| 11/01/1993 | Lead-210 | 4 | LO | 43444.0 | .02828 | .00120 | 46.79 | | | | | | |
| 11/01/1993 | Radium-226 | 4 | LO | 43444.0 | .00003 | .00160 | 46.79 | | | | | U | U |
| 11/01/1993 | Radium-228 | 4 | LO | 43444.0 | .00064 | .00690 | 46.79 | | | | | U | U |
| 11/01/1993 | Uranium | 4 | LO | 43444.0 | .00020 | .00000 | 46.79 | .00010 | .00000 | .00009 | | | |
| 11/01/1993 | Thorium-230 | 5 | LO | 43375.0 | .00020 | .00020 | 51.72 | | | | | B | U |
| 11/01/1993 | Thorium-232 | 5 | LO | 43375.0 | .00002 | .00020 | 51.72 | | | | | U | U |

Note: Concentrations of Uranium isotopes were calculated from total uranium based on naturally occuring ratios and are expressed in pCi/m3. EPA screening levels of uranium isotopes are given in parens.

Data Report for Radionuclide Concentrations from Lo-Vol Samples
(Validated)

| Sample Date | Chemical Name | Site No. | Type | Run Time (min.) | Chem Conc (pCi/m3) | EPA Screen. Level (pCi/m3) | Particulate Conc. (ug/m3) | U-234 (0.0002) | U-235 (0.0002) | U-238 (0.0001) | Grav Val | Quality Lab | Val |
|---|---|---|---|---|---|---|---|---|---|---|---|---|---|
| 11/01/1993 | Polonium-210 | 5 | LO | 43375.0 | .02449 | .00180 | 51.72 | | | | | | |
| 11/01/1993 | Lead-210 | 5 | LO | 43375.0 | .02971 | .00120 | 51.72 | | | | | | |
| 11/01/1993 | Radium-226 | 5 | LO | 43375.0 | .00038 | .00160 | 51.72 | | | | | B | U |
| 11/01/1993 | Radium-228 | 5 | LO | 43375.0 | .00165 | .00690 | 51.72 | | | | | U | U |
| 11/01/1993 | Uranium | 5 | LO | 43375.0 | .00025 | .00000 | 51.72 | .00012 | .00001 | .00012 | | | |
| 11/01/1993 | Thorium-230 | 6 | LO | 43247.0 | .00010 | .00020 | 26.65 | | | | | B | U |
| 11/01/1993 | Thorium-232 | 6 | LO | 43247.0 | .00003 | .00020 | 26.65 | | | | | B | U |
| 11/01/1993 | Polonium-210 | 6 | LO | 43247.0 | .00978 | .00180 | 26.65 | | | | | | |
| 11/01/1993 | Lead-210 | 6 | LO | 43247.0 | .02447 | .00120 | 26.65 | | | | | | |
| 11/01/1993 | Radium-226 | 6 | LO | 43247.0 | .00003 | .00160 | 26.65 | | | | | U | U |
| 11/01/1993 | Radium-228 | 6 | LO | 43247.0 | .00090 | .00690 | 26.65 | | | | | U | U |
| 11/01/1993 | Uranium | 6 | LO | 43247.0 | .00008 | .00000 | 26.65 | .00004 | .00000 | .00004 | | B | U |
| 11/01/1993 | Thorium-230 | 9 | LO | 43384.0 | .00029 | .00020 | 53.81 | | | | | | |
| 11/01/1993 | Thorium-232 | 9 | LO | 43384.0 | .00003 | .00020 | 53.81 | | | | | U | U |
| 11/01/1993 | Polonium-210 | 9 | LO | 43384.0 | .02601 | .00180 | 53.81 | | | | | | |
| 11/01/1993 | Lead-210 | 9 | LO | 43384.0 | .02935 | .00120 | 53.81 | | | | | | |
| 11/01/1993 | Radium-226 | 9 | LO | 43384.0 | .00002 | .00160 | 53.81 | | | | | U | U |
| 11/01/1993 | Radium-228 | 9 | LO | 43384.0 | .00140 | .00690 | 53.81 | | | | | U | U |
| 11/01/1993 | Uranium | 9 | LO | 43384.0 | .00026 | .00000 | 53.81 | .00013 | .00001 | .00012 | | | |
| 12/02/1993 | Thorium-230 | 3 | LO | 46047.0 | .00022 | .00020 | 34.86 | | | | | B | U |
| 12/02/1993 | Thorium-232 | 3 | LO | 46047.0 | .00000 | .00020 | 34.86 | | | | | U | U |
| 12/02/1993 | Polonium-210 | 3 | LO | 46047.0 | .01337 | .00180 | 34.86 | | | | | | |
| 12/02/1993 | Lead-210 | 3 | LO | 46047.0 | .03500 | .00120 | 34.86 | | | | | | J |
| 12/02/1993 | Radium-226 | 3 | LO | 46047.0 | -.00009 | .00160 | 34.86 | | | | | U | U |
| 12/02/1993 | Radium-228 | 3 | LO | 46047.0 | .00121 | .00690 | 34.86 | | | | | U | U |
| 12/02/1993 | Uranium | 3 | LO | 46047.0 | .00024 | .00000 | 34.86 | .00012 | .00001 | .00011 | | | |
| 12/02/1993 | Thorium-230 | 4 | LO | 46020.0 | .00014 | .00020 | 33.79 | | | | P | B | U |
| 12/02/1993 | Thorium-232 | 4 | LO | 46020.0 | .00002 | .00020 | 33.79 | | | | P | U | U |
| 12/02/1993 | Polonium-210 | 4 | LO | 46020.0 | .00923 | .00180 | 33.79 | | | | P | | |
| 12/02/1993 | Lead-210 | 4 | LO | 46020.0 | .02965 | .00120 | 33.79 | | | | P | | J |
| 12/02/1993 | Radium-226 | 4 | LO | 46020.0 | .00028 | .00160 | 33.79 | | | | P | U | U |
| 12/02/1993 | Radium-228 | 4 | LO | 46020.0 | .00082 | .00690 | 33.79 | | | | P | U | U |
| 12/02/1993 | Uranium | 4 | LO | 46020.0 | .00016 | .00000 | 33.79 | .00008 | .00000 | .00008 | P | | |
| 12/02/1993 | Thorium-230 | 5 | LO | 46257.0 | .00005 | .00020 | 36.93 | | | | | U | U |
| 12/02/1993 | Thorium-232 | 5 | LO | 46257.0 | -.00001 | .00020 | 36.93 | | | | | U | U |
| 12/02/1993 | Polonium-210 | 5 | LO | 46257.0 | .02302 | .00180 | 36.93 | | | | | | |
| 12/02/1993 | Lead-210 | 5 | LO | 46257.0 | .03009 | .00120 | 36.93 | | | | | | J |
| 12/02/1993 | Radium-226 | 5 | LO | 46257.0 | -.00012 | .00160 | 36.93 | | | | | U | U |
| 12/02/1993 | Radium-228 | 5 | LO | 46257.0 | .00080 | .00690 | 36.93 | | | | | U | U |
| 12/02/1993 | Uranium | 5 | LO | 46257.0 | .00044 | .00000 | 36.93 | .00022 | .00001 | .00021 | | | |
| 12/02/1993 | Thorium-230 | 6 | LO | 46346.0 | .00009 | .00020 | 14.81 | | | | P | B | U |
| 12/02/1993 | Thorium-232 | 6 | LO | 46346.0 | .00000 | .00020 | 14.81 | | | | P | U | U |
| 12/02/1993 | Polonium-210 | 6 | LO | 46346.0 | .00890 | .00180 | 14.81 | | | | P | | |
| 12/02/1993 | Lead-210 | 6 | LO | 46346.0 | .03220 | .00120 | 14.81 | | | | P | | J |
| 12/02/1993 | Radium-226 | 6 | LO | 46346.0 | -.00025 | .00160 | 14.81 | | | | P | U | U |
| 12/02/1993 | Radium-228 | 6 | LO | 46346.0 | .00185 | .00690 | 14.81 | | | | P | B | U |
| 12/02/1993 | Uranium | 6 | LO | 46346.0 | .00004 | .00000 | 14.81 | .00002 | .00000 | .00002 | P | B | U |
| 12/02/1993 | Thorium-230 | 9 | LO | 46047.0 | .00011 | .00020 | 31.19 | | | | | B | U |
| 12/02/1993 | Thorium-232 | 9 | LO | 46047.0 | .00000 | .00020 | 31.19 | | | | | U | U |
| 12/02/1993 | Polonium-210 | 9 | LO | 46047.0 | .01398 | .00180 | 31.19 | | | | | | |
| 12/02/1993 | Lead-210 | 9 | LO | 46047.0 | .03202 | .00120 | 31.19 | | | | | | J |

Note: Concentrations of Uranium isotopes were calculated from total uranium based on naturally occuring ratios and are expressed in pCi/m3. EPA screening levels of uranium isotopes are given in parens.

Data Report for Radionuclide Concentrations from Lo-Vol Samples (Validated)



| Sample Date | Chemical Name | Site No. | Type | Run Time (min.) | Chem Conc (pCi/m3) | EPA Screen. Level (pCi/m3) | Particulate Conc. (ug/m3) | U-234 (0.0002) | U-235 (0.0002) | U-238 (0.0001) | Grav Val | Quality Lab | Quality Val |
|---|---|---|---|---|---|---|---|---|---|---|---|---|---|
| 12/02/1993 | Radium-226 | 9 | LO | 46047.0 | -.00017 | .00160 | 31.19 | | | | | U | U |
| 12/02/1993 | Radium-228 | 9 | LO | 46047.0 | .00168 | .00690 | 31.19 | | | | | B | U |
| 12/02/1993 | Uranium | 9 | LO | 46047.0 | .00022 | .00000 | 31.19 | .00011 | .00000 | .00010 | | | |
| 12/02/1993 | Thorium-230 | L | BL | | .00006 | .00020 | -.21 | | | | | B | U |
| 12/02/1993 | Thorium-232 | L | BL | | -.00001 | .00020 | -.21 | | | | | U | U |
| 12/02/1993 | Polonium-210 | L | BL | | .00030 | .00180 | -.21 | | | | | B | U |
| 12/02/1993 | Lead-210 | L | BL | | -.00134 | .00120 | -.21 | | | | | B | U |
| 12/02/1993 | Radium-226 | L | BL | | -.00005 | .00160 | -.21 | | | | | U | U |
| 12/02/1993 | Radium-228 | L | BL | | .00131 | .00690 | -.21 | | | | | U | U |
| 12/02/1993 | Uranium | L | BL | | .00000 | .00000 | -.21 | .00000 | .00000 | .00000 | | U | U |
| 12/15/1993 | Thorium-230 | L | BL | | .00010 | .00020 | -.28 | | | | | B | U |
| 12/15/1993 | Thorium-232 | L | BL | | -.00001 | .00020 | -.28 | | | | | U | U |
| 12/15/1993 | Polonium-210 | L | BL | | .00007 | .00180 | -.28 | | | | | U | U |
| 12/15/1993 | Lead-210 | L | BL | | -.00013 | .00120 | -.28 | | | | | U | U |
| 12/15/1993 | Radium-226 | L | BL | | .00075 | .00160 | -.28 | | | | | U | U |
| 12/15/1993 | Radium-228 | L | BL | | -.00045 | .00690 | -.28 | | | | | U | U |
| 12/15/1993 | Uranium | L | BL | | .00000 | .00000 | -.28 | .00000 | .00000 | .00000 | | U | U |
| 01/03/1994 | Thorium-230 | 3 | LO | 41757.0 | .00012 | .00020 | 33.66 | | | | | B | U |
| 01/03/1994 | Thorium-232 | 3 | LO | 41757.0 | .00000 | .00020 | 33.66 | | | | | U | U |
| 01/03/1994 | Polonium-210 | 3 | LO | 41757.0 | .00928 | .00180 | 33.66 | | | | | | |
| 01/03/1994 | Lead-210 | 3 | LO | 41757.0 | .02035 | .00120 | 33.66 | | | | | | |
| 01/03/1994 | Radium-226 | 3 | LO | 41757.0 | -.00016 | .00160 | 33.66 | | | | | U | U |
| 01/03/1994 | Radium-228 | 3 | LO | 41757.0 | .00201 | .00690 | 33.66 | | | | | U | U |
| 01/03/1994 | Uranium | 3 | LO | 41757.0 | .00030 | .00000 | 33.66 | .00015 | .00001 | .00014 | | | |
| 01/03/1994 | Thorium-230 | 4 | LO | 41730.0 | .00006 | .00020 | 38.03 | | | | | B | U |
| 01/03/1994 | Thorium-232 | 4 | LO | 41730.0 | .00003 | .00020 | 38.03 | | | | | U | U |
| 01/03/1994 | Polonium-210 | 4 | LO | 41730.0 | .00526 | .00180 | 38.03 | | | | | | |
| 01/03/1994 | Lead-210 | 4 | LO | 41730.0 | .02185 | .00120 | 38.03 | | | | | | |
| 01/03/1994 | Radium-226 | 4 | LO | 41730.0 | .00020 | .00160 | 38.03 | | | | | U | U |
| 01/03/1994 | Radium-228 | 4 | LO | 41730.0 | .00410 | .00690 | 38.03 | | | | | B | U |
| 01/03/1994 | Uranium | 4 | LO | 41730.0 | .00023 | .00000 | 38.03 | .00011 | .00001 | .00011 | | | |
| 01/03/1994 | Thorium-230 | 5 | LO | 41685.0 | .00014 | .00020 | 30.80 | | | | | B | U |
| 01/03/1994 | Thorium-232 | 5 | LO | 41685.0 | .00000 | .00020 | 30.80 | | | | | U | U |
| 01/03/1994 | Polonium-210 | 5 | LO | 41685.0 | .01464 | .00180 | 30.80 | | | | | | |
| 01/03/1994 | Lead-210 | 5 | LO | 41685.0 | .03891 | .00120 | 30.80 | | | | | | |
| 01/03/1994 | Radium-226 | 5 | LO | 41685.0 | .00014 | .00160 | 30.80 | | | | | U | U |
| 01/03/1994 | Radium-228 | 5 | LO | 41685.0 | .00033 | .00690 | 30.80 | | | | | U | U |
| 01/03/1994 | Uranium | 5 | LO | 41685.0 | .00036 | .00000 | 30.80 | .00018 | .00001 | .00017 | | | |
| 01/03/1994 | Thorium-230 | 6 | LO | 41717.0 | .00002 | .00020 | 12.67 | | | | | U | U |
| 01/03/1994 | Thorium-232 | 6 | LO | 41717.0 | .00001 | .00020 | 12.67 | | | | | U | U |
| 01/03/1994 | Polonium-210 | 6 | LO | 41717.0 | .00395 | .00180 | 12.67 | | | | | | |
| 01/03/1994 | Lead-210 | 6 | LO | 41717.0 | .04403 | .00120 | 12.67 | | | | | | |
| 01/03/1994 | Radium-226 | 6 | LO | 41717.0 | .00009 | .00160 | 12.67 | | | | | U | U |
| 01/03/1994 | Radium-228 | 6 | LO | 41717.0 | .00113 | .00690 | 12.67 | | | | | U | U |
| 01/03/1994 | Uranium | 6 | LO | 41717.0 | .00003 | .00000 | 12.67 | .00001 | .00000 | .00001 | | B | U |
| 01/03/1994 | Thorium-230 | 9 | LO | 41772.0 | .00008 | .00020 | 29.64 | | | | | | U |
| 01/03/1994 | Thorium-232 | 9 | LO | 41772.0 | .00002 | .00020 | 29.64 | | | | | | U |
| 01/03/1994 | Polonium-210 | 9 | LO | 41772.0 | .00900 | .00180 | 29.64 | | | | | | |
| 01/03/1994 | Lead-210 | 9 | LO | 41772.0 | .02880 | .00120 | 29.64 | | | | | | |
| 01/03/1994 | Radium-226 | 9 | LO | 41772.0 | .00020 | .00160 | 29.64 | | | | | | U |
| 01/03/1994 | Radium-228 | 9 | LO | 41772.0 | .00215 | .00690 | 29.64 | | | | | | U |

Note: Concentrations of Uranium isotopes were calculated from total uranium based on naturally occuring ratios and are expressed in pCi/m3. EPA screening levels of uranium isotopes are given in parens.

Data Report for Radionuclide Concentrations from Lo-Vol Samples
(Validated)

| Sample Date | Chemical Name | Site No. | Type | Run Time (min.) | Chem Conc (pCi/m3) | EPA Screen. Level (pCi/m3) | Particulate Conc. (ug/m3) | U-234 (0.0002) | U-235 (0.0002) | U-238 (0.0001) | Grav Val | Quality Lab | Quality Val |
|---|---|---|---|---|---|---|---|---|---|---|---|---|---|
| 01/03/1994 | Uranium | 9 | LO | 41772.0 | .00035 | .00000 | 29.64 | .00018 | .00001 | .00017 | | | |
| 01/03/1994 | Thorium-230 | L | BL | | .00001 | .00020 | -.44 | | | | | U | U |
| 01/03/1994 | Thorium-232 | L | BL | | .00001 | .00020 | -.44 | | | | | U | U |
| 01/03/1994 | Polonium-210 | L | BL | | -.00012 | .00180 | -.44 | | | | | U | U |
| 01/03/1994 | Lead-210 | L | BL | | -.00050 | .00120 | -.44 | | | | | U | U |
| 01/03/1994 | Radium-226 | L | BL | | .00021 | .00160 | -.44 | | | | | U | U |
| 01/03/1994 | Radium-228 | L | BL | | .00172 | .00690 | -.44 | | | | | U | U |
| 01/03/1994 | Uranium | L | BL | | .00001 | .00000 | -.44 | .00000 | .00000 | .00000 | | B | U |
| 02/01/1994 | Thorium-230 | 3 | LO | 41700.0 | .00015 | .00020 | 29.21 | | | | | B | U |
| 02/01/1994 | Polonium-210 | 3 | LO | 41700.0 | .01389 | .00180 | 29.21 | | | | | | |
| 02/01/1994 | Lead-210 | 3 | LO | 41700.0 | .01531 | .00120 | 29.21 | | | | | | |
| 02/01/1994 | Radium-226 | 3 | LO | 41700.0 | -.00070 | .00160 | 29.21 | | | | | U | U |
| 02/01/1994 | Uranium | 3 | LO | 41700.0 | .00018 | .00000 | 29.21 | .00009 | .00000 | .00008 | | | |
| 02/01/1994 | Thorium-230 | 4 | LO | 41700.0 | .00009 | .00020 | 29.84 | | | | | B | U |
| 02/01/1994 | Polonium-210 | 4 | LO | 41700.0 | .00944 | .00180 | 29.84 | | | | | | |
| 02/01/1994 | Lead-210 | 4 | LO | 41700.0 | .01319 | .00120 | 29.84 | | | | | | |
| 02/01/1994 | Radium-226 | 4 | LO | 41700.0 | -.00017 | .00160 | 29.84 | | | | | U | U |
| 02/01/1994 | Uranium | 4 | LO | 41700.0 | .00016 | .00000 | 29.84 | .00008 | .00000 | .00007 | | | U |
| 02/01/1994 | Thorium-230 | 5 | LO | 41880.0 | .00015 | .00020 | 27.42 | | | | | B | U |
| 02/01/1994 | Polonium-210 | 5 | LO | 41880.0 | .01198 | .00180 | 27.42 | | | | | | |
| 02/01/1994 | Lead-210 | 5 | LO | 41880.0 | .01465 | .00120 | 27.42 | | | | | | |
| 02/01/1994 | Radium-226 | 5 | LO | 41880.0 | .00017 | .00160 | 27.42 | | | | | U | U |
| 02/01/1994 | Uranium | 5 | LO | 41880.0 | .00022 | .00000 | 27.42 | .00011 | .00000 | .00011 | | | |
| 02/01/1994 | Thorium-230 | 6 | LO | 41755.0 | .00007 | .00020 | 8.78 | | | | | B | U |
| 02/01/1994 | Polonium-210 | 6 | LO | 41755.0 | .00959 | .00180 | 8.78 | | | | | | |
| 02/01/1994 | Lead-210 | 6 | LO | 41755.0 | .01646 | .00120 | 8.78 | | | | | | |
| 02/01/1994 | Radium-226 | 6 | LO | 41755.0 | .00004 | .00160 | 8.78 | | | | | U | U |
| 02/01/1994 | Uranium | 6 | LO | 41755.0 | .00003 | .00000 | 8.78 | .00002 | .00000 | .00002 | | B | U |
| 02/01/1994 | Thorium-230 | 9 | LO | 41703.0 | .00011 | .00020 | 26.63 | | | | | B | U |
| 02/01/1994 | Polonium-210 | 9 | LO | 41703.0 | .01578 | .00180 | 26.63 | | | | | | |
| 02/01/1994 | Lead-210 | 9 | LO | 41703.0 | .01393 | .00120 | 26.63 | | | | | | |
| 02/01/1994 | Radium-226 | 9 | LO | 41703.0 | -.00014 | .00160 | 26.63 | | | | | U | U |
| 02/01/1994 | Uranium | 9 | LO | 41703.0 | .00016 | .00000 | 26.63 | .00008 | .00000 | .00008 | | | |
| 02/01/1994 | Thorium-230 | L | BL | | .00005 | .00020 | -.31 | | | | | B | U |
| 02/01/1994 | Polonium-210 | L | BL | | -.00002 | .00180 | -.31 | | | | | U | U |
| 02/01/1994 | Lead-210 | L | BL | | -.00092 | .00120 | -.31 | | | | | B | U |
| 02/01/1994 | Radium-226 | L | BL | | -.00037 | .00160 | -.31 | | | | | U | U |
| 02/01/1994 | Uranium | L | BL | | .00000 | .00000 | -.31 | .00000 | .00000 | .00000 | | U | U |
| 03/02/1994 | Thorium-230 | 3 | LO | 43133.0 | .00033 | .00020 | 67.52 | | | | | | |
| 03/02/1994 | Polonium-210 | 3 | LO | 43133.0 | .01102 | .00180 | 67.52 | | | | | | |
| 03/02/1994 | Lead-210 | 3 | LO | 43133.0 | .01659 | .00120 | 67.52 | | | | | | |
| 03/02/1994 | Radium-226 | 3 | LO | 43133.0 | .00035 | .00160 | 67.52 | | | | | U | U |
| 03/02/1994 | Uranium | 3 | LO | 43133.0 | .00038 | .00000 | 67.52 | .00019 | .00001 | .00018 | | | |
| 03/02/1994 | Thorium-230 | 4 | LO | 43192.0 | .00017 | .00020 | 47.42 | | | | | B | U |
| 03/02/1994 | Polonium-210 | 4 | LO | 43192.0 | .00790 | .00180 | 47.42 | | | | | | |
| 03/02/1994 | Lead-210 | 4 | LO | 43192.0 | .01764 | .00120 | 47.42 | | | | | | |
| 03/02/1994 | Radium-226 | 4 | LO | 43192.0 | .00035 | .00160 | 47.42 | | | | | U | U |
| 03/02/1994 | Uranium | 4 | LO | 43192.0 | .00031 | .00000 | 47.42 | .00016 | .00001 | .00015 | | | |
| 03/02/1994 | Thorium-230 | 5 | LO | 43077.0 | .00018 | .00020 | 38.09 | | | | | B | U |
| 03/02/1994 | Polonium-210 | 5 | LO | 43077.0 | .01165 | .00180 | 38.09 | | | | | | |
| 03/02/1994 | Lead-210 | 5 | LO | 43077.0 | .01566 | .00120 | 38.09 | | | | | | |

Note: Concentrations of Uranium isotopes were calculated from total uranium based on naturally occuring ratios and are expressed in pCi/m3. EPA screening levels of uranium isotopes are given in parens.

Data Report for Radionuclide Concentrations from Lo-Vol Samples (Validated) 08/07/1995



| Sample Date | Chemical Name | Site No. | Type | Run Time (min.) | Chem Conc (pCi/m3) | EPA Screen. Level (pCi/m3) | Particulate Conc. (ug/m3) | U-234 (0.0002) | U-235 (0.0002) | U-238 (0.0001) | Grav Val | Quality Lab | Quality Val |
|---|---|---|---|---|---|---|---|---|---|---|---|---|---|
| 03/02/1994 | Radium-226 | 5 | LO | 43077.0 | .00026 | .00160 | 38.09 | | | | | U | U |
| 03/02/1994 | Uranium | 5 | LO | 43077.0 | .00040 | .00000 | 38.09 | .00020 | .00001 | .00019 | | | |
| 03/02/1994 | Thorium-230 | 6 | LO | 43197.0 | .00008 | .00020 | 33.89 | | | | | B | U |
| 03/02/1994 | Polonium-210 | 6 | LO | 43197.0 | .00411 | .00180 | 33.89 | | | | | | |
| 03/02/1994 | Lead-210 | 6 | LO | 43197.0 | .01318 | .00120 | 33.89 | | | | | | |
| 03/02/1994 | Radium-226 | 6 | LO | 43197.0 | -.00015 | .00160 | 33.89 | | | | | U | U |
| 03/02/1994 | Uranium | 6 | LO | 43197.0 | .00006 | .00000 | 33.89 | .00003 | .00000 | .00003 | | B | U |
| 03/02/1994 | Thorium-230 | 9 | LO | 43195.0 | .00018 | .00020 | 56.62 | | | | | B | U |
| 03/02/1994 | Polonium-210 | 9 | LO | 43195.0 | .00825 | .00180 | 56.62 | | | | | | |
| 03/02/1994 | Lead-210 | 9 | LO | 43195.0 | .01337 | .00120 | 56.62 | | | | | | |
| 03/02/1994 | Radium-226 | 9 | LO | 43195.0 | .00017 | .00160 | 56.62 | | | | | U | U |
| 03/02/1994 | Uranium | 9 | LO | 43195.0 | .00028 | .00000 | 56.62 | .00014 | .00001 | .00013 | | | |
| 03/02/1994 | Thorium-230 | L | BL | | .00002 | .00020 | -.16 | | | | | U | U |
| 03/02/1994 | Polonium-210 | L | BL | | .00013 | .00180 | -.16 | | | | | U | U |
| 03/02/1994 | Lead-210 | L | BL | | .00008 | .00120 | -.16 | | | | | U | U |
| 03/02/1994 | Radium-226 | L | BL | | -.00017 | .00160 | -.16 | | | | | U | U |
| 03/02/1994 | Uranium | L | BL | | .00000 | .00000 | -.16 | .00000 | .00000 | .00000 | | U | U |
| 04/01/1994 | Thorium-230 | 3 | LO | 44715.0 | .00001 | .00020 | 64.54 | | | | | U | UJ |
| 04/01/1994 | Polonium-210 | 3 | LO | 44715.0 | .00907 | .00180 | 64.54 | | | | | | J |
| 04/01/1994 | Lead-210 | 3 | LO | 44715.0 | .01387 | .00120 | 64.54 | | | | | | J |
| 04/01/1994 | Radium-226 | 3 | LO | 44715.0 | .00288 | .00160 | 64.54 | | | | | | J |
| 04/01/1994 | Uranium | 3 | LO | 44715.0 | .00020 | .00000 | 64.54 | .00010 | .00000 | .00009 | | | J |
| 04/01/1994 | Gross Alpha | 3 | LO | 44715.0 | .00096 | .00000 | 64.54 | | | | | | UJ |
| 04/01/1994 | Gross Beta | 3 | LO | 44715.0 | .01440 | .00000 | 64.54 | | | | | | J |
| 04/01/1994 | Thorium-230 | 4 | LO | 44695.0 | .00009 | .00020 | 45.61 | | | | | B | UJ |
| 04/01/1994 | Polonium-210 | 4 | LO | 44695.0 | .00683 | .00180 | 45.61 | | | | | | J |
| 04/01/1994 | Lead-210 | 4 | LO | 44695.0 | .02770 | .00120 | 45.61 | | | | | | J |
| 04/01/1994 | Radium-226 | 4 | LO | 44695.0 | -.00016 | .00160 | 45.61 | | | | | U | UJ |
| 04/01/1994 | Uranium | 4 | LO | 44695.0 | .00017 | .00000 | 45.61 | .00008 | .00000 | .00008 | | | J |
| 04/01/1994 | Gross Alpha | 4 | LO | 44695.0 | .00234 | .00000 | 45.61 | | | | | | J |
| 04/01/1994 | Gross Beta | 4 | LO | 44695.0 | .02232 | .00000 | 45.61 | | | | | | J |
| 04/01/1994 | Thorium-230 | 5 | LO | 44515.0 | .00001 | .00020 | 50.30 | | | | | U | UJ |
| 04/01/1994 | Polonium-210 | 5 | LO | 44515.0 | .00834 | .00180 | 50.30 | | | | | | J |
| 04/01/1994 | Lead-210 | 5 | LO | 44515.0 | .01562 | .00120 | 50.30 | | | | | | J |
| 04/01/1994 | Radium-226 | 5 | LO | 44515.0 | -.00024 | .00160 | 50.30 | | | | | U | UJ |
| 04/01/1994 | Uranium | 5 | LO | 44515.0 | .00020 | .00000 | 50.30 | .00010 | .00000 | .00010 | | | J |
| 04/01/1994 | Gross Alpha | 5 | LO | 44515.0 | .00260 | .00000 | 50.30 | | | | | | UJ |
| 04/01/1994 | Gross Beta | 5 | LO | 44515.0 | .01025 | .00000 | 50.30 | | | | | | UJ |
| 04/01/1994 | Thorium-230 | 6 | LO | 44455.0 | .00004 | .00020 | 45.65 | | | | | B | UJ |
| 04/01/1994 | Polonium-210 | 6 | LO | 44455.0 | .00548 | .00180 | 45.65 | | | | | | J |
| 04/01/1994 | Lead-210 | 6 | LO | 44455.0 | .01304 | .00120 | 45.65 | | | | | | J |
| 04/01/1994 | Radium-226 | 6 | LO | 44455.0 | -.00022 | .00160 | 45.65 | | | | | U | UJ |
| 04/01/1994 | Uranium | 6 | LO | 44455.0 | .00010 | .00000 | 45.65 | .00005 | .00000 | .00005 | | B | UJ |
| 04/01/1994 | Gross Alpha | 6 | LO | 44455.0 | .00258 | .00000 | 45.65 | | | | | | J |
| 04/01/1994 | Gross Beta | 6 | LO | 44455.0 | .00978 | .00000 | 45.65 | | | | | | UJ |
| 04/01/1994 | Thorium-230 | 9 | LO | 44675.0 | .00005 | .00020 | 43.80 | | | | | B | UJ |
| 04/01/1994 | Polonium-210 | 9 | LO | 44675.0 | .00827 | .00180 | 43.80 | | | | | | J |
| 04/01/1994 | Lead-210 | 9 | LO | 44675.0 | .01174 | .00120 | 43.80 | | | | | | J |
| 04/01/1994 | Radium-226 | 9 | LO | 44675.0 | .00012 | .00160 | 43.80 | | | | | U | UJ |
| 04/01/1994 | Uranium | 9 | LO | 44675.0 | .00013 | .00000 | 43.80 | .00007 | .00000 | .00006 | | | UJ |
| 04/01/1994 | Gross Alpha | 9 | LO | 44675.0 | .00286 | .00000 | 43.80 | | | | | | J |

Note: Concentrations of Uranium isotopes were calculated from total uranium based on naturally occuring ratios and are expressed in pCi/m3. EPA screening levels of uranium isotopes are given in parens.

| Sample Date | Chemical Name | Site No. | Type | Run Time (min.) | Chem Conc (pCi/m3) | EPA Screen. Level (pCi/m3) (Validated) | Particulate Conc. (ug/m3) | U-234 (0.0002) | U-235 (0.0002) | U-238 (0.0001) | Grav Val | Quality Lab | Quality Val |
|---|---|---|---|---|---|---|---|---|---|---|---|---|---|
| 04/01/1994 | Gross Beta | 9 | LO | 44675.0 | .02655 | .00000 | 43.80 | | | | | | J |
| 05/02/1994 | Polonium-210 | 3 | LO | 43208.0 | .01059 | .00180 | 54.93 | | | | | | |
| 05/02/1994 | Lead-210 | 3 | LO | 43208.0 | .01359 | .00120 | 54.93 | | | | | | |
| 05/02/1994 | Radium-226 | 3 | LO | 43208.0 | .00002 | .00160 | 54.93 | | | | | U | U |
| 05/02/1994 | Uranium | 3 | LO | 43208.0 | .00016 | .00000 | 54.93 | .00008 | .00000 | .00008 | | | U |
| 05/02/1994 | Gross Alpha | 3 | LO | 43208.0 | .00547 | .00000 | 54.93 | | | | | | |
| 05/02/1994 | Gross Beta | 3 | LO | 43208.0 | .01786 | .00000 | 54.93 | | | | | | |
| 05/02/1994 | Thorium-230 | 3 | LO | 43208.0 | .00012 | .00020 | 54.93 | | | | | B | UJ |
| 05/02/1994 | Thorium-230 | 4 | LO | 43185.0 | .00018 | .00020 | 41.78 | | | | | B | UJ |
| 05/02/1994 | Polonium-210 | 4 | LO | 43185.0 | .01102 | .00180 | 41.78 | | | | | | |
| 05/02/1994 | Lead-210 | 4 | LO | 43185.0 | .01506 | .00120 | 41.78 | | | | | | |
| 05/02/1994 | Radium-226 | 4 | LO | 43185.0 | .00018 | .00160 | 41.78 | | | | | U | U |
| 05/02/1994 | Uranium | 4 | LO | 43185.0 | .00021 | .00000 | 41.78 | .00011 | .00000 | .00010 | | | |
| 05/02/1994 | Gross Alpha | 4 | LO | 43185.0 | .01172 | .00000 | 41.78 | | | | | | |
| 05/02/1994 | Gross Beta | 4 | LO | 43185.0 | .02302 | .00000 | 41.78 | | | | | | |
| 05/02/1994 | Thorium-230 | 5 | LO | 43211.0 | .00008 | .00020 | 34.81 | | | | PR | B | UJ |
| 05/02/1994 | Polonium-210 | 5 | LO | 43211.0 | .01012 | .00180 | 34.81 | | | | PR | | |
| 05/02/1994 | Lead-210 | 5 | LO | 43211.0 | .01380 | .00120 | 34.81 | | | | PR | | |
| 05/02/1994 | Radium-226 | 5 | LO | 43211.0 | .00002 | .00160 | 34.81 | | | | PR | U | U |
| 05/02/1994 | Uranium | 5 | LO | 43211.0 | .00012 | .00000 | 34.81 | .00006 | .00000 | .00006 | PR | | U |
| 05/02/1994 | Gross Alpha | 5 | LO | 43211.0 | .00865 | .00000 | 34.81 | | | | PR | | |
| 05/02/1994 | Gross Beta | 5 | LO | 43211.0 | .02030 | .00000 | 34.81 | | | | PR | | |
| 05/02/1994 | Thorium-230 | 6 | LO | 43185.0 | .00002 | .00020 | 46.73 | | | | | U | UJ |
| 05/02/1994 | Polonium-210 | 6 | LO | 43185.0 | .00762 | .00180 | 46.73 | | | | | | |
| 05/02/1994 | Lead-210 | 6 | LO | 43185.0 | .01433 | .00120 | 46.73 | | | | | | |
| 05/02/1994 | Radium-226 | 6 | LO | 43185.0 | .00064 | .00160 | 46.73 | | | | | U | U |
| 05/02/1994 | Uranium | 6 | LO | 43185.0 | .00007 | .00000 | 46.73 | .00003 | .00000 | .00003 | | B | U |
| 05/02/1994 | Gross Alpha | 6 | LO | 43185.0 | .00671 | .00000 | 46.73 | | | | | | |
| 05/02/1994 | Gross Beta | 6 | LO | 43185.0 | .01666 | .00000 | 46.73 | | | | | | |
| 05/02/1994 | Lead-210 | 9 | LO | 43226.0 | .00317 | .00120 | 51.46 | | | | | | |
| 05/02/1994 | Radium-226 | 9 | LO | 43226.0 | -.00135 | .00160 | 51.46 | | | | | B | U |
| 05/02/1994 | Uranium | 9 | LO | 43226.0 | .00015 | .00000 | 51.46 | .00008 | .00000 | .00007 | | | |
| 05/02/1994 | Gross Alpha | 9 | LO | 43226.0 | .01078 | .00000 | 51.46 | | | | | | |
| 05/02/1994 | Gross Beta | 9 | LO | 43226.0 | .00943 | .00000 | 51.46 | | | | | | U |
| 05/02/1994 | Thorium-230 | 9 | LO | 43226.0 | .00012 | .00020 | 51.46 | | | | | B | UJ |
| 05/02/1994 | Polonium-210 | 9 | LO | 43226.0 | .01049 | .00180 | 51.46 | | | | | | |
| 05/02/1994 | Gross Beta | L | BL | | .00116 | .00000 | -.30 | | | | | | U |
| 05/02/1994 | Thorium-230 | L | BL | | .00001 | .00020 | -.30 | | | | | U | UJ |
| 05/02/1994 | Polonium-210 | L | BL | | -.00007 | .00180 | -.30 | | | | | U | U |
| 05/02/1994 | Lead-210 | L | BL | | .00008 | .00120 | -.30 | | | | | U | U |
| 05/02/1994 | Radium-226 | L | BL | | .00020 | .00160 | -.30 | | | | | U | U |
| 05/02/1994 | Uranium | L | BL | | .00000 | .00000 | -.30 | .00000 | .00000 | .00000 | | U | U |
| 05/02/1994 | Gross Alpha | L | BL | | -.00054 | .00000 | -.30 | | | | | | U |
| 06/01/1994 | Lead-210 | 3 | LO | 43254.0 | .01183 | .00120 | 134.10 | | | | | | |
| 06/01/1994 | Radium-226 | 3 | LO | 43254.0 | .00039 | .00160 | 134.10 | | | | | U | U |
| 06/01/1994 | Uranium | 3 | LO | 43254.0 | .00019 | .00000 | 134.10 | .00010 | .00000 | .00009 | | | |
| 06/01/1994 | Gross Alpha | 3 | LO | 43254.0 | .01110 | .00000 | 134.10 | | | | | | |
| 06/01/1994 | Gross Beta | 3 | LO | 43254.0 | .01352 | .00000 | 134.10 | | | | | | U |
| 06/01/1994 | Thorium-230 | 3 | LO | 43254.0 | .00010 | .00020 | 134.10 | | | | | B | UJ |
| 06/01/1994 | Polonium-210 | 3 | LO | 43254.0 | .00847 | .00180 | 134.10 | | | | | | |
| 06/01/1994 | Thorium-230 | 4 | LO | 43285.0 | .00024 | .00020 | 73.85 | | | | | B | UJ |

Note: Concentrations of Uranium isotopes were calculated from total uranium based on naturally occuring ratios and are expressed in pCi/m3. EPA screening levels of uranium isotopes are given in parens.

Data Report for Radionuclide Concentrations from Lo-Vol Samples
(Validated)

| Sample Date | Chemical Name | Site No. | Type | Run Time (min.) | Chem Conc (pCi/m3) | EPA Screen. Level (pCi/m3) | Particulate Conc. (ug/m3) | U-234 (0.0002) | U-235 (0.0002) | U-238 (0.0001) | Grav Val | Quality Lab | Quality Val |
|---|---|---|---|---|---|---|---|---|---|---|---|---|---|
| 06/01/1994 | Polonium-210 | 4 | LO | 43285.0 | .00975 | .00180 | 73.85 | | | | | | |
| 06/01/1994 | Lead-210 | 4 | LO | 43285.0 | .01202 | .00120 | 73.85 | | | | | | |
| 06/01/1994 | Radium-226 | 4 | LO | 43285.0 | -.00005 | .00160 | 73.85 | | | | | U | U |
| 06/01/1994 | Uranium | 4 | LO | 43285.0 | .00029 | .00000 | 73.85 | .00015 | .00001 | .00014 | | | |
| 06/01/1994 | Gross Alpha | 4 | LO | 43285.0 | .00706 | .00000 | 73.85 | | | | | | |
| 06/01/1994 | Gross Beta | 4 | LO | 43285.0 | .01464 | .00000 | 73.85 | | | | | | |
| 06/01/1994 | Gross Alpha | 5 | LO | 43248.0 | .00775 | .00000 | 53.66 | | | | | | |
| 06/01/1994 | Gross Beta | 5 | LO | 43248.0 | .00964 | .00000 | 53.66 | | | | | | U |
| 06/01/1994 | Thorium-230 | 5 | LO | 43248.0 | .00022 | .00020 | 53.66 | | | | | B | UJ |
| 06/01/1994 | Polonium-210 | 5 | LO | 43248.0 | .01131 | .00180 | 53.66 | | | | | | |
| 06/01/1994 | Lead-210 | 5 | LO | 43248.0 | .01342 | .00120 | 53.66 | | | | | | |
| 06/01/1994 | Radium-226 | 5 | LO | 43248.0 | -.00027 | .00160 | 53.66 | | | | | U | U |
| 06/01/1994 | Uranium | 5 | LO | 43248.0 | .00022 | .00000 | 53.66 | .00011 | .00000 | .00011 | | | |
| 06/01/1994 | Thorium-230 | 6 | LO | 43260.0 | .00004 | .00020 | 43.88 | | | | | U | UJ |
| 06/01/1994 | Polonium-210 | 6 | LO | 43260.0 | .00363 | .00180 | 43.88 | | | | | | |
| 06/01/1994 | Lead-210 | 6 | LO | 43260.0 | .00743 | .00120 | 43.88 | | | | | | |
| 06/01/1994 | Radium-226 | 6 | LO | 43260.0 | -.00027 | .00160 | 43.88 | | | | | U | U |
| 06/01/1994 | Uranium | 6 | LO | 43260.0 | .00007 | .00000 | 43.88 | .00004 | .00000 | .00003 | | B | U |
| 06/01/1994 | Gross Alpha | 6 | LO | 43260.0 | .00274 | .00000 | 43.88 | | | | | | U |
| 06/01/1994 | Gross Beta | 6 | LO | 43260.0 | .00964 | .00000 | 43.88 | | | | | | U |
| 06/01/1994 | Uranium | 9 | LO | 43272.0 | .00022 | .00000 | 86.85 | .00011 | .00000 | .00011 | | | |
| 06/01/1994 | Gross Alpha | 9 | LO | 43272.0 | .00824 | .00000 | 86.85 | | | | | | |
| 06/01/1994 | Gross Beta | 9 | LO | 43272.0 | .02165 | .00000 | 86.85 | | | | | | |
| 06/01/1994 | Thorium-230 | 9 | LO | 43272.0 | .00018 | .00020 | 86.85 | | | | | B | UJ |
| 06/01/1994 | Polonium-210 | 9 | LO | 43272.0 | .01129 | .00180 | 86.85 | | | | | | |
| 06/01/1994 | Lead-210 | 9 | LO | 43272.0 | .01096 | .00120 | 86.85 | | | | | | |
| 06/01/1994 | Radium-226 | 9 | LO | 43272.0 | .00079 | .00160 | 86.85 | | | | | B | U |
| 06/01/1994 | Thorium-230 | L | BL | | .00001 | .00020 | | | | | | U | UJ |
| 06/01/1994 | Polonium-210 | L | BL | | -.00004 | .00180 | | | | | | U | U |
| 06/01/1994 | Lead-210 | L | BL | | -.00007 | .00120 | | | | | | U | U |
| 06/01/1994 | Radium-226 | L | BL | | .00018 | .00160 | | | | | | U | U |
| 06/01/1994 | Uranium | L | BL | | .00000 | .00000 | | .00000 | .00000 | .00000 | | U | U |
| 06/01/1994 | Gross Alpha | L | BL | | .00048 | .00000 | | | | | | | U |
| 06/01/1994 | Gross Beta | L | BL | | -.00309 | .00000 | | | | | | | U |
| 07/01/1994 | Gross Beta | 3 | LO | 44585.0 | .02071 | .00000 | 106.19 | | | | | | |
| 07/01/1994 | Thorium-230 | 3 | LO | 44585.0 | .00035 | .00020 | 106.19 | | | | | | J |
| 07/01/1994 | Polonium-210 | 3 | LO | 44585.0 | .00932 | .00180 | 106.19 | | | | | | |
| 07/01/1994 | Lead-210 | 3 | LO | 44585.0 | .01625 | .00120 | 106.19 | | | | | | |
| 07/01/1994 | Radium-226 | 3 | LO | 44585.0 | .00063 | .00160 | 106.19 | | | | | U | U |
| 07/01/1994 | Uranium | 3 | LO | 44585.0 | .00031 | .00000 | 106.19 | .00015 | .00001 | .00015 | | | |
| 07/01/1994 | Gross Alpha | 3 | LO | 44585.0 | .00699 | .00000 | 106.19 | | | | | | |
| 07/01/1994 | Thorium-230 | 4 | LO | 44575.0 | .00013 | .00020 | 62.72 | | | | | B | UJ |
| 07/01/1994 | Polonium-210 | 4 | LO | 44575.0 | .00854 | .00180 | 62.72 | | | | | | |
| 07/01/1994 | Lead-210 | 4 | LO | 44575.0 | .01467 | .00120 | 62.72 | | | | | | |
| 07/01/1994 | Radium-226 | 4 | LO | 44575.0 | -.00042 | .00160 | 62.72 | | | | | U | U |
| 07/01/1994 | Uranium | 4 | LO | 44575.0 | .00023 | .00000 | 62.72 | .00012 | .00001 | .00011 | | | |
| 07/01/1994 | Gross Alpha | 4 | LO | 44575.0 | .00709 | .00000 | 62.72 | | | | | | |
| 07/01/1994 | Gross Beta | 4 | LO | 44575.0 | .01914 | .00000 | 62.72 | | | | | | |
| 07/01/1994 | Thorium-230 | 5 | LO | 44880.0 | .00025 | .00020 | 60.89 | | | | | B | UJ |
| 07/01/1994 | Polonium-210 | 5 | LO | 44880.0 | .01488 | .00180 | 60.89 | | | | | | |
| 07/01/1994 | Lead-210 | 5 | LO | 44880.0 | .01597 | .00120 | 60.89 | | | | | | |

Note: Concentrations of Uranium isotopes were calculated from total uranium based on naturally occuring ratios and are expressed in pCi/m3. EPA screening levels of uranium isotopes are given in parens.

Data Report for Radionuclide Concentrations from Lo-Vol Samples (Validated)



| Sample Date | Chemical Name | Site No. | Type | Run Time (min.) | Chem Conc (pCi/m3) | EPA Screen. Level (pCi/m3) | Particulate Conc. (ug/m3) | U-234 (0.0002) | U-235 (0.0002) | U-238 (0.0001) | Grav Val | Quality Lab | Quality Val |
|---|---|---|---|---|---|---|---|---|---|---|---|---|---|
| 07/01/1994 | Radium-226 | 5 | LO | 44880.0 | -.00054 | .00160 | 60.89 | | | | | U | U |
| 07/01/1994 | Uranium | 5 | LO | 44880.0 | .00034 | .00000 | 60.89 | .00017 | .00001 | .00016 | | | |
| 07/01/1994 | Gross Alpha | 5 | LO | 44880.0 | .01103 | .00000 | 60.89 | | | | | | |
| 07/01/1994 | Gross Beta | 5 | LO | 44880.0 | .02488 | .00000 | 60.89 | | | | | | |
| 07/01/1994 | Polonium-210 | 6 | LO | 44825.0 | .00516 | .00180 | 76.10 | | | | | | |
| 07/01/1994 | Lead-210 | 6 | LO | 44825.0 | .01347 | .00120 | 76.10 | | | | | | |
| 07/01/1994 | Radium-226 | 6 | LO | 44825.0 | .00011 | .00160 | 76.10 | | | | | U | U |
| 07/01/1994 | Uranium | 6 | LO | 44825.0 | .00013 | .00000 | 76.10 | .00006 | .00000 | .00006 | | | U |
| 07/01/1994 | Gross Alpha | 6 | LO | 44825.0 | .00418 | .00000 | 76.10 | | | | | | |
| 07/01/1994 | Gross Beta | 6 | LO | 44825.0 | .02625 | .00000 | 76.10 | | | | | | |
| 07/01/1994 | Thorium-230 | 6 | LO | 44825.0 | .00011 | .00020 | 76.10 | | | | | B | UJ |
| 07/01/1994 | Thorium-230 | 9 | LO | 44580.0 | .00011 | .00020 | 97.12 | | | | | B | UJ |
| 07/01/1994 | Polonium-210 | 9 | LO | 44580.0 | .00694 | .00180 | 97.12 | | | | | | |
| 07/01/1994 | Lead-210 | 9 | LO | 44580.0 | .01327 | .00120 | 97.12 | | | | | | |
| 07/01/1994 | Radium-226 | 9 | LO | 44580.0 | .00053 | .00160 | 97.12 | | | | | U | U |
| 07/01/1994 | Uranium | 9 | LO | 44580.0 | .00025 | .00000 | 97.12 | .00012 | .00001 | .00012 | | | |
| 07/01/1994 | Gross Alpha | 9 | LO | 44580.0 | .00369 | .00000 | 97.12 | | | | | | |
| 07/01/1994 | Gross Beta | 9 | LO | 44580.0 | .01761 | .00000 | 97.12 | | | | | | |
| 07/01/1994 | Gross Alpha | L | BL | | -.00026 | .00000 | -.09 | | | | | | U |
| 07/01/1994 | Gross Beta | L | BL | | .00189 | .00000 | -.09 | | | | | | U |
| 07/01/1994 | Thorium-230 | L | BL | | .00001 | .00020 | -.09 | | | | | U | UJ |
| 07/01/1994 | Polonium-210 | L | BL | | .00008 | .00180 | -.09 | | | | | U | U |
| 07/01/1994 | Lead-210 | L | BL | | -.00090 | .00120 | -.09 | | | | | B | U |
| 07/01/1994 | Radium-226 | L | BL | | .00076 | .00160 | -.09 | | | | | B | U |
| 07/01/1994 | Uranium | L | BL | | .00000 | .00000 | -.09 | .00000 | .00000 | .00000 | | B | U |
| 08/01/1994 | Thorium-230 | 4 | LO | 43260.0 | .00015 | .00020 | 98.99 | | | | | B | U |
| 08/01/1994 | Polonium-210 | 4 | LO | 43260.0 | .02354 | .00180 | 98.99 | | | | | | |
| 08/01/1994 | Lead-210 | 4 | LO | 43260.0 | .02025 | .00120 | 98.99 | | | | | | |
| 08/01/1994 | Radium-226 | 4 | LO | 43260.0 | .00023 | .00160 | 98.99 | | | | | U | U |
| 08/01/1994 | Uranium | 4 | LO | 43260.0 | .00065 | .00000 | 98.99 | .00032 | .00001 | .00031 | | | |
| 08/01/1994 | Gross Alpha | 4 | LO | 43260.0 | .00119 | .00000 | 98.99 | | | | | | U |
| 08/01/1994 | Gross Beta | 4 | LO | 43260.0 | .02842 | .00000 | 98.99 | | | | | | |
| 08/01/1994 | Thorium-230 | 5 | LO | 42960.0 | .00022 | .00020 | 92.46 | | | | | B | U |
| 08/01/1994 | Polonium-210 | 5 | LO | 42960.0 | .03371 | .00180 | 92.46 | | | | | | |
| 08/01/1994 | Lead-210 | 5 | LO | 42960.0 | .02608 | .00120 | 92.46 | | | | | | |
| 08/01/1994 | Radium-226 | 5 | LO | 42960.0 | .00028 | .00160 | 92.46 | | | | | U | U |
| 08/01/1994 | Uranium | 5 | LO | 42960.0 | .00058 | .00000 | 92.46 | .00029 | .00001 | .00028 | | | |
| 08/01/1994 | Gross Alpha | 5 | LO | 42960.0 | .00411 | .00000 | 92.46 | | | | | | |
| 08/01/1994 | Gross Beta | 5 | LO | 42960.0 | .03496 | .00000 | 92.46 | | | | | | |
| 08/01/1994 | Thorium-230 | 6 | LO | 42905.0 | .00012 | .00020 | 123.07 | | | | | B | U |
| 08/01/1994 | Polonium-210 | 6 | LO | 42905.0 | .01387 | .00180 | 123.07 | | | | | | |
| 08/01/1994 | Lead-210 | 6 | LO | 42905.0 | .01833 | .00120 | 123.07 | | | | | | |
| 08/01/1994 | Radium-226 | 6 | LO | 42905.0 | .00030 | .00160 | 123.07 | | | | | U | U |
| 08/01/1994 | Uranium | 6 | LO | 42905.0 | .00025 | .00000 | 123.07 | .00012 | .00001 | .00012 | | | |
| 08/01/1994 | Gross Alpha | 6 | LO | 42905.0 | .00104 | .00000 | 123.07 | | | | | | U |
| 08/01/1994 | Gross Beta | 6 | LO | 42905.0 | .02341 | .00000 | 123.07 | | | | | | |
| 08/01/1994 | Thorium-230 | L | BL | | .00000 | .00020 | -.41 | | | | | U | U |
| 08/01/1994 | Polonium-210 | L | BL | | -.00014 | .00180 | -.41 | | | | | U | U |
| 08/01/1994 | Lead-210 | L | BL | | -.00036 | .00120 | -.41 | | | | | U | U |
| 08/01/1994 | Radium-226 | L | BL | | -.00073 | .00160 | .41 | | | | | U | U |
| 08/01/1994 | Uranium | L | BL | | .00000 | .00000 | .41 | .00000 | .00000 | .00000 | | L | L |

Note: Concentrations of Uranium isotopes were calculated from total uranium based on naturally occuring ratios and are expressed in pCi/m3. EPA screening levels of uranium isotopes are given in parens.

Data Report for Radionuclide Concentrations from Lo-Vol Samples (Validated) 08/07/1995



| Sample Date | Chemical Name | Site No. | Type | Run Time (min.) | Chem Conc (pCi/m3) | EPA Screen. Level (pCi/m3) | Particulate Conc. (ug/m3) | U-234 (0.0002) | U-235 (0.0002) | U-238 (0.0001) | Grav Val | Quality Lab | Quality Val |
|---|---|---|---|---|---|---|---|---|---|---|---|---|---|
| 08/01/1994 | Gross Alpha | L | BL | | .00052 | .00000 | -.41 | | | | | | U |
| 08/01/1994 | Gross Beta | L | BL | | .00231 | .00000 | -.41 | | | | | | U |
| 08/31/1994 | Thorium-230 | 4 | LO | 43320.0 | .00019 | .00020 | 106.56 | | | | | B | U |
| 08/31/1994 | Polonium-210 | 4 | LO | 43320.0 | .02537 | .00180 | 106.56 | | | | | | |
| 08/31/1994 | Lead-210 | 4 | LO | 43320.0 | .02306 | .00120 | 106.56 | | | | | | |
| 08/31/1994 | Radium-226 | 4 | LO | 43320.0 | .00043 | .00160 | 106.56 | | | | | U | U |
| 08/31/1994 | Uranium | 4 | LO | 43320.0 | .00060 | .00000 | 106.56 | .00030 | .00001 | .00029 | | | |
| 08/31/1994 | Gross Alpha | 4 | LO | 43320.0 | .00477 | .00000 | 106.56 | | | | | | |
| 08/31/1994 | Gross Beta | 4 | LO | 43320.0 | .03394 | .00000 | 106.56 | | | | | | |
| 08/31/1994 | Thorium-230 | 5 | LO | 43255.0 | .00026 | .00020 | 84.17 | | | | | B | U |
| 08/31/1994 | Polonium-210 | 5 | LO | 43255.0 | .03252 | .00180 | 84.17 | | | | | | |
| 08/31/1994 | Lead-210 | 5 | LO | 43255.0 | .02355 | .00120 | 84.17 | | | | | | |
| 08/31/1994 | Radium-226 | 5 | LO | 43255.0 | .00070 | .00160 | 84.17 | | | | | U | U |
| 08/31/1994 | Uranium | 5 | LO | 43255.0 | .00067 | .00000 | 84.17 | .00034 | .00001 | .00032 | | | |
| 08/31/1994 | Gross Alpha | 5 | LO | 43255.0 | .00266 | .00000 | 84.17 | | | | | | |
| 08/31/1994 | Gross Beta | 5 | LO | 43255.0 | .03134 | .00000 | 84.17 | | | | | | |
| 08/31/1994 | Thorium-230 | 6 | LO | 43260.0 | .00012 | .00020 | 142.36 | | | | | B | U |
| 08/31/1994 | Polonium-210 | 6 | LO | 43260.0 | .01315 | .00180 | 142.36 | | | | | | |
| 08/31/1994 | Lead-210 | 6 | LO | 43260.0 | .02501 | .00120 | 142.36 | | | | | | |
| 08/31/1994 | Radium-226 | 6 | LO | 43260.0 | .00050 | .00160 | 142.36 | | | | | U | U |
| 08/31/1994 | Uranium | 6 | LO | 43260.0 | .00034 | .00000 | 142.36 | .00017 | .00001 | .00016 | | | |
| 08/31/1994 | Gross Alpha | 6 | LO | 43260.0 | .00260 | .00000 | 142.36 | | | | | | |
| 08/31/1994 | Gross Beta | 6 | LO | 43260.0 | .02670 | .00000 | 142.36 | | | | | | |
| 08/31/1994 | Thorium-230 | L | BL | | .00000 | .00020 | -.19 | | | | | U | U |
| 08/31/1994 | Polonium-210 | L | BL | | .00028 | .00180 | -.19 | | | | | U | U |
| 08/31/1994 | Lead-210 | L | BL | | -.00090 | .00120 | -.19 | | | | | B | U |
| 08/31/1994 | Radium-226 | L | BL | | .00028 | .00160 | -.19 | | | | | U | U |
| 08/31/1994 | Uranium | L | BL | | .00001 | .00000 | -.19 | .00000 | .00000 | .00000 | | B | U |
| 08/31/1994 | Gross Alpha | L | BL | | .00051 | .00000 | -.19 | | | | | | U |
| 08/31/1994 | Gross Beta | L | BL | | .01025 | .00000 | -.19 | | | | | | U |
| 09/30/1994 | Thorium-230 | 6 | LO | 46200.0 | .00002 | .00020 | 37.30 | | | | | U | U |
| 09/30/1994 | Polonium-210 | 6 | LO | 46200.0 | .00553 | .00180 | 37.30 | | | | | | |
| 09/30/1994 | Lead-210 | 6 | LO | 46200.0 | .01879 | .00120 | 37.30 | | | | | | |
| 09/30/1994 | Radium-226 | 6 | LO | 46200.0 | .00013 | .00160 | 37.30 | | | | | U | U |
| 09/30/1994 | Uranium | 6 | LO | 46200.0 | .00003 | .00000 | 37.30 | .00002 | .00000 | .00001 | | B | U |
| 09/30/1994 | Gross Alpha | 6 | LO | 46200.0 | .00019 | .00000 | 37.30 | | | | | | UJ |
| 09/30/1994 | Gross Beta | 6 | LO | 46200.0 | .02427 | .00000 | 37.30 | | | | | | |

Note: Concentrations of Uranium isotopes were calculated from total uranium based on naturally occuring ratios and are expressed in pCi/m3. EPA screening levels of uranium isotopes are given in parens.

## Appendix AC – Meteorological Data

Appendix AC comprises four attachments:

(1) Appendix AC-1 – Multiple Summaries for Sites 1 and 7

(2) Appendix AC-2 – Quarterly Wind Roses for Sites 1 and 7

(3) Appendix AC-3 – Mixing Height Data (Site 1)

(4) Appendix AC-4 – Local Climatic Data for Pocatello Airport – October 1993 through October 1994

# Appendix AC-1

## Multiple Summaries for Sites 1 and 7

MONTHLY SUMMARY
WIND SPEED
(Miles Per Hour)
INPUT FILE: octdec1.met

Bechtel Environmental, Inc.

Met Data from EMF Site 1
OCTOBER 1993

| Day | Hour 1 | 2 | 3 | 4 | 5 | 6 | 7 | 8 | 9 | 10 | 11 | 12 | 13 | 14 | 15 | 16 | 17 | 18 | 19 | 20 | 21 | 22 | 23 | 24 | Mean | Max. | Min. |
|---|---|---|---|---|---|---|---|---|---|---|---|---|---|---|---|---|---|---|---|---|---|---|---|---|---|---|---|
| 1 | 14.9 | 16.8 | 17.9 | 15.7 | 15.8 | 13.6 | 15.1 | 16.1 | 18.8 | 19.6 | 19.8 | 22.7 | 21.9 | 21.1 | 20.8 | 20.9 | 17.1 | 14.6 | 14.4 | 16.0 | 15.6 | 15.1 | 13.4 | 13.1 | 17.1 | 22.7 | 13.1 |
| 2 | 9.3 | 6.6 | 5.0 | 5.9 | 4.0 | 2.2 | 3.5 | 2.4 | 2.6 | 3.4 | 4.8 | 5.9 | 5.3 | 5.7 | 7.0 | 6.3 | 6.0 | 4.2 | 1.7 | 7.0 | 10.2 | 10.1 | 7.2 | 2.8 | 5.4 | 10.2 | 1.7 |
| 3 | 2.9 | 1.9 | 4.2 | 7.0 | 4.6 | 2.5 | 3.7 | 2.4 | 1.7 | 2.1 | 2.8 | 3.0 | 3.7 | 3.9 | 7.3 | 8.6 | 4.8 | 3.2 | 5.3 | 10.4 | 11.3 | 12.5 | 13.1 | 14.4 | 5.7 | 14.4 | 1.7 |
| 4 | 7.3 | 3.2 | 5.2 | 8.3 | 10.9 | 4.3 | 1.5 | 2.3 | 2.2 | 3.1 | 3.1 | 4.3 | 3.5 | 5.0 | 6.8 | 4.7 | 4.4 | 1.9 | 5.7 | 9.4 | 12.7 | 11.0 | 5.8 | 2.4 | 5.4 | 12.7 | 1.5 |
| 5 | 2.6 | 3.1 | 6.3 | 10.8 | 9.3 | 4.8 | 4.3 | 2.3 | 2.6 | 2.8 | 2.9 | 4.7 | 5.2 | 6.0 | 12.7 | 13.2 | 11.1 | 10.1 | 16.6 | 17.8 | 8.7 | 12.3 | 5.8 | 4.0 | 7.5 | 17.8 | 2.3 |
| 6 | 4.8 | 12.6 | 10.0 | 13.1 | 15.8 | 3.9 | 2.9 | 1.5 | 4.9 | 5.4 | 6.0 | 9.0 | 8.2 | 6.4 | 4.6 | 6.6 | 7.4 | 3.9 | 5.0 | 10.3 | 5.7 | 7.8 | 4.9 | 2.6 | 6.8 | 15.8 | 1.5 |
| 7 | 5.1 | 6.8 | 5.6 | 7.3 | 10.3 | 17.7 | 18.9 | 16.3 | 15.9 | 15.1 | 17.3 | 18.9 | 22.3 | 19.8 | 20.8 | 19.0 | 21.4 | 18.0 | 13.1 | 14.2 | 15.7 | 16.7 | 15.7 | 13.9 | 15.2 | 22.3 | 5.1 |
| 8 | 12.6 | 13.8 | 13.1 | 12.1 | 8.2 | 5.1 | 5.4 | 8.1 | 4.8 | 5.7 | 6.6 | 5.3 | 5.3 | 6.8 | 7.9 | 8.8 | 6.2 | 9.3 | 6.7 | 4.3 | 5.6 | 4.4 | 7.8 | 7.3 | 7.6 | 13.8 | 4.3 |
| 9 | 3.4 | 4.3 | 3.8 | 2.0 | 3.0 | 4.0 | 3.5 | 4.7 | 3.9 | 2.4 | 4.3 | 4.7 | 6.8 | 8.0 | 7.6 | 9.1 | 8.8 | 8.7 | 8.4 | 8.6 | 9.4 | 10.4 | 12.5 | 12.0 | 6.4 | 12.5 | 2.0 |
| 10 | 10.9 | 10.3 | 11.5 | 13.7 | 12.5 | 11.3 | 11.9 | 9.7 | 3.8 | 4.4 | 4.9 | 4.1 | 5.6 | 5.6 | 6.2 | 4.7 | 3.4 | 4.8 | 4.2 | 6.9 | 10.1 | 12.4 | 8.0 | 7.1 | 7.8 | 13.7 | 3.4 |
| 11 | 3.3 | 3.4 | 2.4 | 5.7 | 6.5 | 7.6 | 7.7 | 5.0 | 3.9 | 5.1 | 6.3 | 7.7 | 5.3 | 3.9 | 3.0 | 2.4 | 4.6 | 4.1 | 3.2 | 3.9 | 3.4 | 2.8 | 3.3 | 1.7 | 4.4 | 7.7 | 1.7 |
| 12 | 5.1 | 11.3 | 10.7 | 12.3 | 15.0 | 15.0 | 13.7 | 10.3 | 11.3 | 13.9 | 14.7 | 14.7 | 11.0 | 13.0 | 12.1 | 10.6 | 8.8 | 4.2 | 5.0 | 9.2 | 9.7 | 9.7 | 11.2 | 13.9 | 11.1 | 15.0 | 4.2 |
| 13 | 12.4 | 12.6 | 13.6 | 8.9 | 3.6 | 4.4 | 3.8 | 2.5 | 6.6 | 11.9 | 9.7 | 10.5 | 7.5 | 8.0 | 10.4 | 11.1 | 7.1 | 9.0 | 14.5 | 14.5 | 8.0 | 7.6 | 7.3 | 12.0 | 9.1 | 14.5 | 2.5 |
| 14 | 11.7 | 8.9 | 8.7 | 3.6 | 3.0 | 3.4 | 4.9 | 2.8 | 2.6 | 11.2 | 15.2 | 14.6 | 12.8 | 14.5 | 13.7 | 13.9 | 12.8 | 10.1 | 5.8 | 9.1 | 11.5 | 11.3 | 14.0 | 12.5 | 9.7 | 15.2 | 2.6 |
| 15 | 9.1 | 9.3 | 6.9 | 6.1 | 10.7 | 11.3 | 10.3 | 12.2 | 8.8 | 13.8 | 11.9 | 11.6 | 10.4 | 10.6 | 12.0 | 10.4 | 7.3 | 6.4 | 9.9 | 9.0 | 10.3 | 12.1 | 9.7 | 9.1 | 10.0 | 13.8 | 6.1 |
| 16 | 9.6 | 6.3 | 5.3 | 6.1 | 5.6 | 5.2 | 3.9 | 4.8 | 3.2 | 5.5 | 3.0 | 2.8 | 3.8 | 4.3 | 10.5 | 13.3 | 11.4 | 8.3 | 5.7 | 8.9 | 10.0 | 5.3 | 5.1 | 1.9 | 6.2 | 13.3 | 1.9 |
| 17 | 4.1 | 2.7 | 1.9 | 3.9 | 2.5 | 5.6 | 6.5 | 8.3 | 6.7 | 7.7 | 6.2 | 6.6 | 6.8 | 7.6 | 8.1 | 8.0 | 5.2 | 7.0 | 12.6 | 15.0 | 16.1 | 14.9 | 13.7 | 15.2 | 8.0 | 16.1 | 1.9 |
| 18 | 12.7 | 13.2 | 11.7 | 12.9 | 11.3 | 11.4 | 13.4 | 12.6 | 11.8 | 16.0 | 13.9 | 11.3 | 11.6 | 15.1 | 12.9 | 15.0 | 12.0 | 6.0 | 11.0 | 12.0 | 11.0 | 4.0 | 7.0 | 8.0 | 11.6 | 16.0 | 4.0 |
| 19 | 8.0 | 9.0 | 9.0 | 7.0 | 6.0 | 8.0 | 11.0 | 9.8 | 9.3 | 11.8 | 17.8 | 19.3 | 19.8 | 20.8 | 20.5 | 17.6 | 17.9 | 15.2 | 14.3 | 16.7 | 17.1 | 18.6 | 17.2 | 15.7 | 14.1 | 20.8 | 6.0 |
| 20 | 15.7 | 11.0 | 13.0 | 11.0 | 5.0 | 8.0 | 8.0 | 3.0 | 4.7 | 3.0 | 4.0 | 9.9 | 9.0 | 7.8 | 8.5 | 7.8 | 6.4 | 3.7 | 5.0 | 8.2 | 9.0 | 8.3 | 6.8 | 2.3 | 7.5 | 15.7 | 2.3 |
| 21 | 2.3 | 5.0 | 4.0 | 2.0 | 4.0 | 3.0 | 2.0 | 3.2 | 3.0 | 1.8 | 2.4 | 5.0 | 9.8 | 11.3 | 10.1 | 8.4 | 9.6 | 11.8 | 9.3 | 10.6 | 9.7 | 13.4 | 6.9 | 7.4 | 6.5 | 13.4 | 1.8 |
| 22 | 4.1 | 7.3 | 7.3 | 4.0 | 3.9 | 4.7 | 1.8 | 3.1 | 4.4 | 2.4 | 4.2 | 3.5 | 4.1 | 5.3 | 6.1 | 6.9 | 5.5 | 3.2 | 4.4 | 9.9 | 8.2 | 10.3 | 12.7 | 11.8 | 5.8 | 12.7 | 1.8 |
| 23 | 9.5 | 4.2 | 2.1 | 1.6 | 3.1 | 8.8 | 6.7 | 2.9 | 2.5 | 3.3 | 4.5 | 4.8 | 3.4 | 3.6 | 3.9 | 3.6 | 4.5 | 3.8 | 7.9 | 12.0 | 12.3 | 10.2 | 10.7 | 12.9 | 6.0 | 12.9 | 1.6 |
| 24 | 11.7 | 5.2 | 3.4 | 6.4 | 3.9 | 2.3 | 3.2 | 3.4 | 8.5 | 4.8 | 4.5 | 5.8 | 15.2 | 16.2 | 18.6 | 19.2 | 18.2 | 15.2 | 13.0 | 13.9 | 13.8 | 16.5 | 17.4 | 19.0 | 10.8 | 19.2 | 2.3 |
| 25 | 19.5 | 19.3 | 18.1 | 15.3 | 16.3 | 10.8 | 8.3 | 3.4 | 7.0 | 10.9 | 11.8 | 9.6 | 5.9 | 4.7 | 7.2 | 7.7 | 4.5 | 1.9 | 2.9 | 5.9 | 6.3 | 5.4 | 3.4 | 4.6 | 8.8 | 19.5 | 1.9 |
| 26 | 1.8 | 3.8 | 4.2 | 2.8 | 2.6 | 2.9 | 2.2 | 2.1 | 3.7 | 6.8 | 14.0 | 12.4 | 9.9 | 9.1 | 8.3 | 5.9 | 4.1 | 2.4 | 4.4 | 7.7 | 6.9 | 8.7 | 6.3 | 6.9 | 5.8 | 14.0 | 1.8 |
| 27 | 7.3 | 9.5 | 9.2 | 9.5 | 10.3 | 10.9 | 10.4 | 11.0 | 12.2 | 5.4 | 4.4 | 9.0 | 7.6 | 7.1 | 9.3 | 13.6 | 9.7 | 7.6 | 11.1 | 8.3 | 10.4 | 11.9 | 11.4 | 10.7 | 9.5 | 13.6 | 4.4 |
| 28 | 14.9 | 15.9 | 15.2 | 15.9 | 15.4 | 14.9 | 18.4 | 18.0 | 18.9 | 18.0 | 15.8 | 7.8 | 5.7 | 9.0 | 13.8 | 8.9 | 7.3 | 14.8 | 13.1 | 15.1 | 9.4 | 10.9 | 10.7 | 9.4 | 13.2 | 18.9 | 5.7 |
| 29 | 11.7 | 8.2 | 11.6 | 9.2 | 11.4 | 8.6 | 5.3 | 3.7 | 9.5 | 9.0 | 13.3 | 13.0 | 11.3 | 10.9 | 10.0 | 7.8 | 6.5 | 4.3 | 3.3 | 8.9 | 11.2 | 12.2 | 7.0 | 5.7 | 8.9 | 13.3 | 3.3 |
| 30 | 9.0 | 11.8 | 10.1 | 11.1 | 12.2 | 3.3 | 3.8 | 4.0 | 5.2 | 3.3 | 6.5 | 5.9 | 5.7 | 6.0 | 4.0 | 4.6 | 6.0 | 6.3 | 5.7 | 9.8 | 14.2 | 14.0 | 3.0 | 6.6 | 7.2 | 14.2 | 3.0 |
| 31 | 1.8 | 5.4 | 4.4 | 3.6 | 4.8 | 3.0 | 1.5 | 3.9 | 4.4 | 2.6 | 3.4 | 5.0 | 3.0 | 3.3 | 10.5 | 13.9 | 14.8 | 10.5 | 15.7 | 14.1 | 17.0 | 17.1 | 17.3 | 17.1 | 8.3 | 17.3 | 1.5 |
| Mean | 8.4 | 8.5 | 8.2 | 8.2 | 8.1 | 7.2 | 7.0 | 6.3 | 6.8 | 7.5 | 8.4 | 8.8 | 8.6 | 9.0 | 10.2 | 10.1 | 8.9 | 7.6 | 8.4 | 10.6 | 10.7 | 10.9 | 9.6 | 9.2 | Monthly mean = | | 8.6 |
| Max. | 19.5 | 19.3 | 18.1 | 15.9 | 16.3 | 17.7 | 18.9 | 18.0 | 18.9 | 19.6 | 19.8 | 22.7 | 22.3 | 21.1 | 20.8 | 20.9 | 21.4 | 18.0 | 16.6 | 17.8 | 17.1 | 18.6 | 17.4 | 19.0 | Monthly max. = | | 22.7 |
| Min. | 1.8 | 1.9 | 1.9 | 1.6 | 2.5 | 2.2 | 1.5 | 1.5 | 1.7 | 1.8 | 2.4 | 2.8 | 3.0 | 3.3 | 3.0 | 2.4 | 3.4 | 1.9 | 1.7 | 3.9 | 3.4 | 2.8 | 3.0 | 1.7 | Monthly min. = | | 1.5 |

TOTAL NUMBER OF DATA HOURS IN MONTH: 744
Number of hours of bad or missing data: 0
**** designates missing or lost data

Current % recovery = 100.0

N/A: insufficient data available for calculation (a minimum of 75% is required)

table created at 13:23, 1/14/1994

MONTHLY SUMMARY
WIND DIRECTION
(Degrees)
INPUT FILE: octdec1.met

Bechtel Environmental, Inc.

Met Data from EMF Site 1
OCTOBER 1993

| Day \ Hour | 1 | 2 | 3 | 4 | 5 | 6 | 7 | 8 | 9 | 10 | 11 | 12 | 13 | 14 | 15 | 16 | 17 | 18 | 19 | 20 | 21 | 22 | 23 | 24 | Mean | Max. | Min. |
|---|---|---|---|---|---|---|---|---|---|---|---|---|---|---|---|---|---|---|---|---|---|---|---|---|---|---|---|
| 1 | 231.0 | 233.0 | 235.0 | 232.0 | 233.0 | 230.0 | 231.0 | 233.0 | 244.0 | 248.0 | 245.0 | 258.0 | 258.0 | 261.0 | 266.0 | 259.0 | 255.0 | 240.0 | 223.0 | 224.0 | 227.0 | 231.0 | 233.0 | 232.0 | 240.1 | 266.0 | 223.0 |
| 2 | 209.0 | 111.0 | 112.0 | 112.0 | 309.0 | 304.0 | 110.0 | 319.0 | 338.0 | 8.0 | 14.0 | 13.0 | 29.0 | 331.0 | 334.0 | 341.0 | 357.0 | 331.0 | 152.0 | 116.0 | 119.0 | 119.0 | 128.0 | 106.0 | 34.3 | 357.0 | 8.0 |
| 3 | 30.0 | 21.0 | 117.0 | 114.0 | 296.0 | 53.0 | 85.0 | 315.0 | 36.0 | 70.0 | 48.0 | 47.0 | 35.0 | 350.0 | 318.0 | 280.0 | 302.0 | 7.0 | 139.0 | 120.0 | 119.0 | 122.0 | 117.0 | 122.0 | 46.0 | 350.0 | 7.0 |
| 4 | 218.0 | 39.0 | 108.0 | 110.0 | 119.0 | 305.0 | 351.0 | 106.0 | 296.0 | 308.0 | 52.0 | 56.0 | 31.0 | 344.0 | 340.0 | 339.0 | 325.0 | 22.0 | 136.0 | 124.0 | 116.0 | 118.0 | 245.0 | 295.0 | 22.6 | 351.0 | 22.0 |
| 5 | 53.0 | 303.0 | 111.0 | 115.0 | 139.0 | 301.0 | 302.0 | 357.0 | 14.0 | 53.0 | 66.0 | 50.0 | 7.0 | 344.0 | 201.0 | 190.0 | 186.0 | 173.0 | 231.0 | 234.0 | 224.0 | 242.0 | 230.0 | 6.0 | 337.2 | 357.0 | 6.0 |
| 6 | 326.0 | 252.0 | 214.0 | 118.0 | 144.0 | 66.0 | 84.0 | 357.0 | 282.0 | 307.0 | 291.0 | 282.0 | 268.0 | 285.0 | 296.0 | 223.0 | 92.0 | 111.0 | 116.0 | 133.0 | 127.0 | 123.0 | 129.0 | 288.0 | 204.7 | 357.0 | 66.0 |
| 7 | 277.0 | 115.0 | 124.0 | 120.0 | 219.0 | 242.0 | 238.0 | 235.0 | 242.0 | 244.0 | 242.0 | 258.0 | 258.0 | 258.0 | 259.0 | 255.0 | 258.0 | 257.0 | 245.0 | 238.0 | 233.0 | 238.0 | 235.0 | 234.0 | 230.2 | 277.0 | 115.0 |
| 8 | 230.0 | 242.0 | 248.0 | 267.0 | 284.0 | 5.0 | 6.0 | 16.0 | 27.0 | 8.0 | 350.0 | 334.0 | 304.0 | .0 | 9.0 | 18.0 | 29.0 | 18.0 | 19.0 | 14.0 | 5.0 | 28.0 | 23.0 | 33.0 | 344.9 | 350.0 | .0 |
| 9 | 26.0 | 244.0 | 283.0 | 323.0 | 44.0 | 42.0 | 40.0 | 10.0 | 4.0 | 78.0 | 119.0 | 257.0 | 275.0 | 284.0 | 286.0 | 127.0 | 135.0 | 138.0 | 135.0 | 123.0 | 134.0 | 130.0 | 133.0 | 130.0 | 40.8 | 323.0 | 4.0 |
| 10 | 127.0 | 130.0 | 132.0 | 131.0 | 127.0 | 122.0 | 117.0 | 131.0 | 300.0 | 46.0 | 82.0 | 102.0 | 107.0 | 110.0 | 318.0 | 341.0 | 10.0 | 341.0 | 89.0 | 129.0 | 126.0 | 124.0 | 133.0 | 131.0 | 86.1 | 341.0 | 10.0 |
| 11 | 100.0 | 298.0 | 91.0 | 103.0 | 119.0 | 105.0 | 78.0 | 41.0 | 30.0 | 44.0 | 25.0 | 19.0 | 290.0 | 355.0 | 32.0 | 288.0 | 285.0 | 75.0 | 79.0 | 82.0 | 359.0 | 290.0 | 323.0 | 131.0 | 31.8 | 359.0 | 19.0 |
| 12 | 173.0 | 228.0 | 260.0 | 249.0 | 234.0 | 235.0 | 226.0 | 229.0 | 234.0 | 248.0 | 254.0 | 249.0 | 246.0 | 258.0 | 264.0 | 250.0 | 271.0 | 263.0 | 167.0 | 125.0 | 122.0 | 114.0 | 120.0 | 124.0 | 214.3 | 271.0 | 114.0 |
| 13 | 118.0 | 117.0 | 119.0 | 124.0 | 112.0 | 112.0 | 130.0 | 301.0 | 122.0 | 136.0 | 131.0 | 132.0 | 177.0 | 297.0 | 215.0 | 194.0 | 164.0 | 145.0 | 134.0 | 272.0 | 225.0 | 189.0 | 148.0 | 127.0 | 164.2 | 301.0 | 112.0 |
| 14 | 126.0 | 123.0 | 134.0 | 204.0 | 305.0 | 121.0 | 217.0 | 313.0 | 13.0 | 267.0 | 242.0 | 261.0 | 266.0 | 267.0 | 263.0 | 260.0 | 249.0 | 256.0 | 100.0 | 215.0 | 210.0 | 131.0 | 130.0 | 126.0 | 200.0 | 313.0 | 13.0 |
| 15 | 125.0 | 108.0 | 111.0 | 60.0 | 123.0 | 127.0 | 133.0 | 133.0 | 141.0 | 251.0 | 263.0 | 267.0 | 246.0 | 239.0 | 246.0 | 218.0 | 166.0 | 157.0 | 121.0 | 130.0 | 124.0 | 125.0 | 124.0 | 121.0 | 160.8 | 267.0 | 60.0 |
| 16 | 118.0 | 114.0 | 107.0 | 105.0 | 126.0 | 122.0 | 70.0 | 295.0 | 337.0 | 317.0 | 30.0 | 56.0 | 21.0 | 65.0 | 120.0 | 133.0 | 129.0 | 128.0 | 155.0 | 122.0 | 128.0 | 64.0 | 316.0 | 303.0 | 70.0 | 337.0 | 21.0 |
| 17 | 115.0 | 69.0 | 20.0 | 329.0 | 318.0 | 294.0 | 289.0 | 279.0 | 275.0 | 295.0 | 269.0 | 15.0 | 9.0 | 349.0 | 354.0 | 15.0 | 356.0 | 273.0 | 236.0 | 232.0 | 233.0 | 227.0 | 228.0 | 231.0 | 311.2 | 356.0 | 9.0 |
| 18 | 230.0 | 234.0 | 238.0 | 234.0 | 232.0 | 231.0 | 234.0 | 233.0 | 250.0 | 259.0 | 251.0 | 259.0 | 268.0 | 267.0 | 263.0 | 260.0 | 275.0 | 260.0 | 235.0 | 230.0 | 220.0 | 300.0 | 170.0 | 140.0 | 240.5 | 300.0 | 140.0 |
| 19 | 120.0 | 125.0 | 130.0 | 120.0 | 125.0 | 130.0 | 125.0 | 111.0 | 122.0 | 251.0 | 253.0 | 258.0 | 258.0 | 259.0 | 263.0 | 265.0 | 261.0 | 246.0 | 229.0 | 232.0 | 233.0 | 233.0 | 235.0 | 234.0 | 200.7 | 265.0 | 111.0 |
| 20 | 234.0 | 220.0 | 240.0 | 235.0 | 120.0 | 130.0 | 40.0 | 317.0 | 288.0 | 344.0 | 313.0 | 279.0 | 288.0 | 296.0 | 288.0 | 287.0 | 294.0 | 245.0 | 129.0 | 121.0 | 120.0 | 115.0 | 129.0 | 274.0 | 222.7 | 344.0 | 40.0 |
| 21 | 274.0 | 300.0 | 290.0 | 320.0 | 130.0 | 300.0 | 50.0 | 299.0 | 289.0 | 49.0 | 308.0 | 105.0 | 134.0 | 123.0 | 140.0 | 149.0 | 141.0 | 142.0 | 130.0 | 126.0 | 121.0 | 124.0 | 119.0 | 104.0 | 177.8 | 320.0 | 49.0 |
| 22 | 200.0 | 108.0 | 141.0 | 294.0 | 71.0 | 28.0 | 330.0 | 349.0 | 105.0 | 119.0 | 42.0 | 9.0 | 300.0 | 304.0 | 303.0 | 303.0 | 289.0 | 134.0 | 120.0 | 120.0 | 119.0 | 121.0 | 121.0 | 121.0 | 38.0 | 349.0 | 9.0 |
| 23 | 121.0 | 221.0 | 356.0 | 275.0 | 305.0 | 121.0 | 124.0 | 10.0 | 83.0 | 85.0 | 82.0 | 66.0 | 76.0 | 45.0 | 343.0 | 56.0 | 320.0 | 198.0 | 127.0 | 123.0 | 121.0 | 125.0 | 121.0 | 119.0 | 46.0 | 356.0 | 10.0 |
| 24 | 112.0 | 285.0 | 45.0 | 122.0 | 276.0 | 104.0 | 324.0 | 287.0 | 136.0 | 291.0 | 73.0 | 245.0 | 259.0 | 255.0 | 237.0 | 242.0 | 251.0 | 238.0 | 228.0 | 230.0 | 231.0 | 230.0 | 238.0 | 237.0 | 215.7 | 324.0 | 45.0 |
| 25 | 241.0 | 236.0 | 241.0 | 236.0 | 234.0 | 252.0 | 230.0 | 323.0 | 303.0 | 272.0 | 267.0 | 274.0 | 310.0 | 19.0 | 9.0 | 18.0 | 20.0 | 164.0 | 131.0 | 117.0 | 96.0 | 102.0 | 105.0 | 98.0 | 344.1 | 323.0 | 9.0 |
| 26 | 12.0 | 124.0 | 112.0 | 96.0 | 96.0 | 86.0 | 311.0 | 306.0 | 79.0 | 24.0 | 28.0 | 35.0 | 31.0 | 16.0 | 13.0 | 23.0 | 17.0 | 207.0 | 131.0 | 120.0 | 125.0 | 123.0 | 118.0 | 187.0 | 40.8 | 311.0 | 12.0 |
| 27 | 141.0 | 115.0 | 120.0 | 117.0 | 117.0 | 121.0 | 123.0 | 123.0 | 120.0 | 116.0 | 142.0 | 280.0 | 272.0 | 245.0 | 270.0 | 257.0 | 248.0 | 192.0 | 197.0 | 201.0 | 191.0 | 219.0 | 212.0 | 217.0 | 181.5 | 280.0 | 115.0 |
| 28 | 226.0 | 232.0 | 235.0 | 239.0 | 238.0 | 239.0 | 235.0 | 237.0 | 237.0 | 254.0 | 276.0 | 260.0 | 149.0 | 213.0 | 253.0 | 285.0 | 18.0 | 37.0 | 40.0 | 56.0 | 74.0 | 49.0 | 31.0 | 42.0 | 308.1 | 285.0 | 18.0 |
| 29 | 57.0 | 51.0 | 63.0 | 73.0 | 65.0 | 79.0 | 84.0 | 50.0 | 10.0 | 29.0 | 40.0 | 36.0 | 31.0 | 46.0 | 39.0 | 43.0 | 49.0 | 105.0 | 126.0 | 118.0 | 119.0 | 117.0 | 272.0 | 111.0 | 60.5 | 272.0 | 10.0 |
| 30 | 116.0 | 120.0 | 124.0 | 123.0 | 128.0 | 298.0 | 61.0 | 118.0 | 123.0 | 74.0 | 69.0 | 50.0 | 57.0 | 100.0 | 140.0 | 160.0 | 98.0 | 78.0 | 162.0 | 137.0 | 138.0 | 137.0 | 300.0 | 295.0 | 88.6 | 300.0 | 50.0 |
| 31 | 313.0 | 304.0 | 296.0 | 305.0 | 291.0 | 304.0 | 328.0 | 289.0 | 296.0 | 359.0 | 340.0 | 317.0 | 12.0 | 350.0 | 254.0 | 238.0 | 243.0 | 238.0 | 236.0 | 252.0 | 246.0 | 240.0 | 244.0 | 235.0 | 287.1 | 359.0 | 12.0 |
| Mean | 161.3 | 174.9 | 166.4 | 180.8 | 183.2 | 168.0 | 8.6 | 344.6 | 359.2 | 350.1 | 353.8 | 339.6 | 344.3 | 328.2 | 316.6 | 319.9 | 347.5 | 174.8 | 151.5 | 155.4 | 160.8 | 156.5 | 174.5 | 166.3 | Monthly mean = | | 177.6 |
| Max. | 326.0 | 304.0 | 356.0 | 329.0 | 318.0 | 305.0 | 351.0 | 357.0 | 338.0 | 359.0 | 350.0 | 334.0 | 310.0 | 355.0 | 354.0 | 341.0 | 357.0 | 341.0 | 245.0 | 272.0 | 359.0 | 300.0 | 323.0 | 303.0 | Monthly max. = | | 359.0 |
| Min. | 12.0 | 21.0 | 20.0 | 60.0 | 44.0 | 5.0 | 6.0 | 10.0 | 4.0 | 8.0 | 14.0 | 9.0 | 7.0 | .0 | 9.0 | 15.0 | 10.0 | 7.0 | 19.0 | 14.0 | 5.0 | 28.0 | 23.0 | 6.0 | Monthly min. = | | .0 |

TOTAL NUMBER OF DATA HOURS IN MONTH: 744
Number of hours of bad or missing data: 0
Current % recovery = 100.0
**** designates missing or lost data

N/A: insufficient data available for calculation (a minimum of 75% is required)

table created at 13:23, 1/14/1994

MONTHLY SUMMARY
TEMPERATURE
(Degrees Celsius)
INPUT FILE: octdec1.met

Bechtel Environmental, Inc.

Met Data from EMF Site 1
OCTOBER 1993

| Day \ Hour | 1 | 2 | 3 | 4 | 5 | 6 | 7 | 8 | 9 | 10 | 11 | 12 | 13 | 14 | 15 | 16 | 17 | 18 | 19 | 20 | 21 | 22 | 23 | 24 | Mean | Max. | Min. |
|---|---|---|---|---|---|---|---|---|---|---|---|---|---|---|---|---|---|---|---|---|---|---|---|---|---|---|---|
| 1 | 18.3 | 17.8 | 16.9 | 16.6 | 16.1 | 15.7 | 15.3 | 15.5 | 16.4 | 17.2 | 18.0 | 18.7 | 19.8 | 21.7 | 22.7 | 22.7 | 22.8 | 22.3 | 20.4 | 19.8 | 19.6 | 19.0 | 18.0 | 17.5 | 18.7 | 22.8 | 15.3 |
| 2 | 16.0 | 11.3 | 9.1 | 8.0 | 6.1 | 3.8 | 4.4 | 7.0 | 10.4 | 14.8 | 15.7 | 18.5 | 20.7 | 22.2 | 22.9 | 23.4 | 23.4 | 22.5 | 17.8 | 15.7 | 14.2 | 12.8 | 12.1 | 9.7 | 14.3 | 23.4 | 3.8 |
| 3 | 8.1 | 6.6 | 6.3 | 7.6 | 5.3 | 2.7 | 3.2 | 4.7 | 10.8 | 14.3 | 17.7 | 20.8 | 23.0 | 25.3 | 25.4 | 25.3 | 25.7 | 24.7 | 20.6 | 17.4 | 16.4 | 15.2 | 14.6 | 14.5 | 14.8 | 25.7 | 2.7 |
| 4 | 11.9 | 8.4 | 9.1 | 9.3 | 9.7 | 7.5 | 4.3 | 8.0 | 13.6 | 15.8 | 19.4 | 20.8 | 24.2 | 26.1 | 26.0 | 26.9 | 26.5 | 24.8 | 20.9 | 18.8 | 17.3 | 16.1 | 14.0 | 11.2 | 16.3 | 26.9 | 4.3 |
| 5 | 10.6 | 10.5 | 10.2 | 11.0 | 10.9 | 8.2 | 5.4 | 7.2 | 10.9 | 13.3 | 17.6 | 20.5 | 24.3 | 25.7 | 26.9 | 26.4 | 25.7 | 24.6 | 22.8 | 17.9 | 17.6 | 16.3 | 14.4 | 13.9 | 16.4 | 26.9 | 5.4 |
| 6 | 13.6 | 13.9 | 12.1 | 12.0 | 12.8 | 12.1 | 10.7 | 10.4 | 11.8 | 14.1 | 16.5 | 16.9 | 16.8 | 17.7 | 18.2 | 15.7 | 14.4 | 14.4 | 14.0 | 14.2 | 13.4 | 11.8 | 11.5 | 9.6 | 13.7 | 18.2 | 9.6 |
| 7 | 9.0 | 9.9 | 9.8 | 10.7 | 12.8 | 12.7 | 11.2 | 10.8 | 10.4 | 10.0 | 10.5 | 10.3 | 10.3 | 11.0 | 11.5 | 12.2 | 12.4 | 11.7 | 10.2 | 9.2 | 8.3 | 7.4 | 6.9 | 6.7 | 10.2 | 12.8 | 6.7 |
| 8 | 6.5 | 6.4 | 6.3 | 5.6 | 5.0 | 3.9 | 3.7 | 3.1 | 3.1 | 3.9 | 4.3 | 5.2 | 6.0 | 6.6 | 7.1 | 7.3 | 7.1 | 7.1 | 6.4 | 5.4 | 5.1 | 4.8 | 4.2 | 3.4 | 5.3 | 7.3 | 3.1 |
| 9 | 2.9 | 2.4 | 2.2 | 2.2 | 2.6 | 2.6 | 2.7 | 2.8 | 3.0 | 3.8 | 4.8 | 5.9 | 6.8 | 7.6 | 7.9 | 7.5 | 7.8 | 7.8 | 7.4 | 7.2 | 7.4 | 7.5 | 7.1 | 7.1 | 5.3 | 7.9 | 2.2 |
| 10 | 7.2 | 6.9 | 6.4 | 6.1 | 5.6 | 4.7 | 4.3 | 5.3 | 5.3 | 8.9 | 10.8 | 12.9 | 13.7 | 14.8 | 14.4 | 15.3 | 15.1 | 14.2 | 12.1 | 11.4 | 11.6 | 10.9 | 10.1 | 9.1 | 9.9 | 15.3 | 4.3 |
| 11 | 7.7 | 6.1 | 4.6 | 5.2 | 5.3 | 5.0 | 4.9 | 4.5 | 5.4 | 7.1 | 8.4 | 9.9 | 11.4 | 12.0 | 12.5 | 11.3 | 10.0 | 9.3 | 9.0 | 8.8 | 8.5 | 8.5 | 8.6 | 8.4 | 8.0 | 12.5 | 4.5 |
| 12 | 8.4 | 8.8 | 8.8 | 8.5 | 8.3 | 8.4 | 9.0 | 9.6 | 9.8 | 10.4 | 10.8 | 11.7 | 12.7 | 13.1 | 13.7 | 14.5 | 14.4 | 13.6 | 12.9 | 11.4 | 10.7 | 9.6 | 9.4 | 9.2 | 10.7 | 14.5 | 8.3 |
| 13 | 9.2 | 8.8 | 8.8 | 8.5 | 7.4 | 6.9 | 6.7 | 5.9 | 8.0 | 11.0 | 13.2 | 14.6 | 15.2 | 15.1 | 14.9 | 15.5 | 15.5 | 14.1 | 12.6 | 10.9 | 11.2 | 10.8 | 10.2 | 9.5 | 11.0 | 15.5 | 5.9 |
| 14 | 9.8 | 9.0 | 8.9 | 8.1 | 7.6 | 7.5 | 6.9 | 6.0 | 8.6 | 10.6 | 11.0 | 11.9 | 12.6 | 13.5 | 14.2 | 14.7 | 14.8 | 14.0 | 11.0 | 11.2 | 11.2 | 10.1 | 9.5 | 9.3 | 10.5 | 14.8 | 6.0 |
| 15 | 9.0 | 9.4 | 8.9 | 8.1 | 7.5 | 7.6 | 7.6 | 7.9 | 8.7 | 8.4 | 7.9 | 6.5 | 7.6 | 8.8 | 9.8 | 10.1 | 10.0 | 9.6 | 8.6 | 8.4 | 8.1 | 7.8 | 6.8 | 6.3 | 8.3 | 10.1 | 6.3 |
| 16 | 7.1 | 7.6 | 7.6 | 7.3 | 6.6 | 6.8 | 5.7 | 4.2 | 6.4 | 6.1 | 7.1 | 9.0 | 9.9 | 10.2 | 10.2 | 9.8 | 9.8 | 9.3 | 8.9 | 8.1 | 7.9 | 7.1 | 5.6 | 5.0 | 7.6 | 10.2 | 4.2 |
| 17 | 4.2 | 3.2 | 2.5 | 2.2 | 2.0 | 1.2 | 1.5 | 1.8 | 2.3 | 2.8 | 5.8 | 8.2 | 10.3 | 12.2 | 13.3 | 13.4 | 13.4 | 12.2 | 10.8 | 9.8 | 9.0 | 8.4 | 8.0 | 7.6 | 6.9 | 13.4 | 1.2 |
| 18 | 7.3 | 7.0 | 6.5 | 6.2 | 6.0 | 5.7 | 5.4 | 5.5 | 5.9 | 5.8 | 7.0 | 8.4 | 8.6 | 8.7 | 9.3 | 10.0 | 10.0 | 8.0 | 8.0 | 8.0 | 7.0 | 7.0 | 6.0 | 5.0 | 7.2 | 10.0 | 5.0 |
| 19 | 3.0 | 3.0 | 3.0 | 3.0 | 2.0 | 1.0 | 2.0 | 2.9 | 4.4 | 8.9 | 9.1 | 9.6 | 10.9 | 12.1 | 12.7 | 12.9 | 12.9 | 12.1 | 10.4 | 10.0 | 9.6 | 8.8 | 7.8 | 6.9 | 7.5 | 12.9 | 1.0 |
| 20 | 6.9 | 6.0 | 5.0 | 4.0 | 1.0 | 1.0 | .0 | -.2 | .7 | 3.8 | 7.6 | 9.1 | 10.1 | 10.9 | 11.7 | 12.4 | 12.4 | 10.8 | 8.4 | 6.3 | 5.8 | 5.1 | 4.2 | 2.2 | 6.1 | 12.4 | -.2 |
| 21 | 2.2 | .0 | -1.0 | -1.0 | -1.0 | .0 | -1.0 | -1.6 | .0 | 4.6 | 10.9 | 13.2 | 14.5 | 15.6 | 16.2 | 16.4 | 15.3 | 14.1 | 13.2 | 12.5 | 11.2 | 10.8 | 8.8 | 7.6 | 7.6 | 16.4 | -1.6 |
| 22 | 6.4 | 6.2 | 6.4 | 4.6 | 4.3 | 5.1 | 2.9 | 1.9 | 5.9 | 11.7 | 12.8 | 15.1 | 16.9 | 17.5 | 18.0 | 18.1 | 18.0 | 15.9 | 12.6 | 11.7 | 10.2 | 9.9 | 10.5 | 9.6 | 10.5 | 18.1 | 1.9 |
| 23 | 7.4 | 5.8 | 3.7 | 2.4 | 2.6 | 3.9 | 4.3 | 4.3 | 6.4 | 10.3 | 13.2 | 15.5 | 17.7 | 19.2 | 19.7 | 20.1 | 19.4 | 17.1 | 13.8 | 13.6 | 12.8 | 11.8 | 11.4 | 10.9 | 11.1 | 20.1 | 2.4 |
| 24 | 10.0 | 6.5 | 4.3 | 6.1 | 4.3 | 4.0 | 3.5 | 3.1 | 8.0 | 8.3 | 12.2 | 15.8 | 16.2 | 16.7 | 17.1 | 17.0 | 16.0 | 14.6 | 13.4 | 12.9 | 12.2 | 11.8 | 11.2 | 10.3 | 10.6 | 17.1 | 3.1 |
| 25 | 9.8 | 9.3 | 8.9 | 8.5 | 7.9 | 6.5 | 6.0 | 2.0 | 4.7 | 7.1 | 7.5 | 8.8 | 10.5 | 12.1 | 12.4 | 10.8 | 12.4 | 10.1 | 6.6 | 5.1 | 3.6 | 2.3 | 1.1 | .8 | 7.3 | 12.4 | .8 |
| 26 | -1.4 | -.9 | -1.1 | -.1 | -.4 | -.7 | -1.6 | 1.0 | 2.5 | 5.0 | 6.7 | 8.2 | 9.6 | 10.7 | 11.2 | 11.5 | 11.6 | 9.1 | 6.1 | 4.6 | 3.2 | 2.8 | 3.5 | 4.6 | 4.4 | 11.6 | -1.6 |
| 27 | 4.2 | 1.9 | 1.5 | 1.4 | .3 | .1 | -.7 | -.6 | 2.3 | 7.4 | 8.9 | 9.4 | 9.6 | 10.8 | 12.1 | 13.0 | 12.5 | 12.0 | 12.3 | 12.1 | 11.2 | 12.0 | 11.6 | 11.6 | 7.4 | 13.0 | -.7 |
| 28 | 11.8 | 11.3 | 11.0 | 10.9 | 10.5 | 10.1 | 9.7 | 9.8 | 9.8 | 9.8 | 9.1 | 7.3 | 7.7 | 10.4 | 11.2 | 11.2 | 10.5 | 6.9 | 5.9 | 4.7 | 3.2 | 1.9 | .3 | -.9 | 8.1 | 11.8 | -.9 |
| 29 | -1.8 | -2.6 | -3.3 | -3.2 | -2.8 | -3.3 | -6.0 | -5.5 | -4.2 | -1.8 | -.3 | 1.0 | 1.8 | 2.8 | 3.8 | 4.3 | 4.4 | 2.7 | .2 | -.8 | -1.4 | -2.0 | -3.7 | -5.1 | -1.1 | 4.4 | -6.0 |
| 30 | -4.6 | -5.0 | -5.5 | -5.5 | -5.4 | -7.0 | -7.7 | -5.6 | -2.7 | .6 | 2.7 | 5.0 | 7.5 | 9.8 | 12.0 | 12.8 | 11.3 | 8.9 | 6.1 | 5.6 | 5.7 | 5.1 | 1.9 | -2.0 | 1.8 | 12.8 | -7.7 |
| 31 | -5.0 | -5.1 | -5.9 | -6.2 | -7.1 | -6.4 | -7.5 | -7.1 | -4.4 | .3 | 4.9 | 6.3 | 9.3 | 11.7 | 12.3 | 13.1 | 12.4 | 11.4 | 10.1 | 8.3 | 7.3 | 6.8 | 5.9 | 5.0 | 2.9 | 13.1 | -7.5 |
| Mean | 7.0 | 6.1 | 5.5 | 5.4 | 5.0 | 4.4 | 3.8 | 4.0 | 5.9 | 8.2 | 10.1 | 11.5 | 12.8 | 14.0 | 14.6 | 14.7 | 14.4 | 13.2 | 11.4 | 10.3 | 9.6 | 9.0 | 8.1 | 7.2 | Monthly mean = | | 9.0 |
| Max. | 18.3 | 17.8 | 16.9 | 16.6 | 16.1 | 15.7 | 15.3 | 15.5 | 16.4 | 17.2 | 19.4 | 20.8 | 24.3 | 26.1 | 26.9 | 26.9 | 26.5 | 24.8 | 22.8 | 19.8 | 19.6 | 19.0 | 18.0 | 17.5 | Monthly max. = | | 26.9 |
| Min. | -5.0 | -5.1 | -5.9 | -6.2 | -7.1 | -7.0 | -7.7 | -7.1 | -4.4 | -1.8 | -.3 | 1.0 | 1.8 | 2.8 | 3.8 | 4.3 | 4.4 | 2.7 | .2 | -.8 | -1.4 | -2.0 | -3.7 | -5.1 | Monthly min. = | | -7.7 |

TOTAL NUMBER OF DATA HOURS IN MONTH: 744
Number of hours of bad or missing data: 0
Current % recovery = 100.0
**** designates missing or lost data

N/A: insufficient data available for calculation (a minimum of 75% is required)

table created at 13:23, 1/14/1994

MONTHLY SUMMARY
SIGMA THETA
(Degrees)
INPUT FILE: octdec1.met

Bechtel Environmental, Inc.

Met Data from EMF Site 1
OCTOBER 1993

| Day | Hour 1 | 2 | 3 | 4 | 5 | 6 | 7 | 8 | 9 | 10 | 11 | 12 | 13 | 14 | 15 | 16 | 17 | 18 | 19 | 20 | 21 | 22 | 23 | 24 | Mean | Max. | Min. |
|---|---|---|---|---|---|---|---|---|---|---|---|---|---|---|---|---|---|---|---|---|---|---|---|---|---|---|---|
| 1 | 11. | 10. | 9. | 11. | 13. | 12. | 12. | 12. | 11. | 13. | 12. | 10. | 29. | 12. | 11. | 10. | 11. | 12. | 11. | 12. | 11. | 13. | 14. | 12. | N/A | 29. | 9. |
| 2 | 25. | 28. | 12. | 7. | 36. | 17. | 13. | 24. | 47. | 48. | 26. | 22. | 35. | 32. | 23. | 32. | 16. | 16. | 25. | 6. | 4. | 4. | 15. | 27. | N/A | 48. | 4. |
| 3 | 47. | 25. | 16. | 7. | 32. | 20. | 24. | 26. | 38. | 27. | 35. | 47. | 34. | 50. | 27. | 15. | 35. | 28. | 8. | 4. | 5. | 5. | 4. | 4. | N/A | 50. | 4. |
| 4 | 32. | 49. | 10. | 6. | 4. | 40. | 57. | 23. | 31. | 47. | 30. | 23. | 61. | 35. | 25. | 25. | 15. | 14. | 18. | 6. | 4. | 6. | 32. | 17. | N/A | 61. | 4. |
| 5 | 44. | 69. | 47. | 5. | 24. | 46. | 12. | 48. | 25. | 29. | 30. | 15. | 26. | 28. | 37. | 28. | 16. | 9. | 17. | 27. | 47. | 15. | 44. | 83. | N/A | 83. | 5. |
| 6 | 47. | 11. | 24. | 28. | 32. | 33. | 44. | 54. | 30. | 17. | 21. | 17. | 13. | 17. | 16. | 43. | 12. | 46. | 27. | 9. | 13. | 8. | 26. | 52. | N/A | 54. | 8. |
| 7 | 46. | 25. | 39. | 5. | 27. | 13. | 13. | 12. | 12. | 13. | 12. | 10. | 9. | 10. | 23. | 13. | 10. | 10. | 11. | 10. | 10. | 10. | 10. | 11. | N/A | 46. | 5. |
| 8 | 12. | 13. | 11. | 8. | 11. | 10. | 11. | 9. | 16. | 18. | 13. | 18. | 31. | 19. | 14. | 11. | 13. | 11. | 13. | 24. | 29. | 60. | 12. | 11. | N/A | 60. | 8. |
| 9 | 39. | 18. | 17. | 17. | 9. | 8. | 8. | 10. | 14. | 37. | 25. | 36. | 20. | 20. | 20. | 17. | 8. | 11. | 10. | 8. | 7. | 4. | 5. | 6. | N/A | 39. | 4. |
| 10 | 7. | 7. | 6. | 5. | 6. | 9. | 6. | 43. | 24. | 47. | 26. | 59. | 39. | 44. | 15. | 23. | 21. | 13. | 36. | 20. | 5. | 6. | 34. | 27. | N/A | 59. | 5. |
| 11 | 28. | 45. | 31. | 6. | 7. | 10. | 13. | 26. | 19. | 10. | 10. | 11. | 42. | 24. | 21. | 39. | 39. | 22. | 17. | 8. | 33. | 16. | 31. | 11. | N/A | 45. | 6. |
| 12 | 13. | 12. | 13. | 13. | 11. | 11. | 14. | 15. | 12. | 13. | 16. | 15. | 20. | 18. | 15. | 22. | 12. | 17. | 19. | 5. | 6. | 7. | 6. | 6. | N/A | 22. | 5. |
| 13 | 6. | 5. | 8. | 20. | 37. | 22. | 39. | 20. | 23. | 10. | 13. | 14. | 28. | 14. | 16. | 21. | 21. | 11. | 6. | 32. | 28. | 19. | 21. | 5. | N/A | 39. | 5. |
| 14 | 5. | 12. | 24. | 23. | 35. | 32. | 30. | 67. | 45. | 17. | 13. | 11. | 13. | 13. | 14. | 13. | 14. | 29. | 23. | 22. | 14. | 12. | 6. | 6. | N/A | 67. | 5. |
| 15 | 7. | 8. | 29. | 44. | 6. | 6. | 8. | 9. | 49. | 14. | 12. | 38. | 14. | 16. | 14. | 14. | 12. | 21. | 6. | 8. | 13. | 8. | 13. | 11. | N/A | 49. | 6. |
| 16 | 8. | 27. | 14. | 10. | 15. | 18. | 54. | 10. | 28. | 13. | 28. | 24. | 21. | 17. | 13. | 8. | 6. | 7. | 30. | 6. | 5. | 25. | 16. | 49. | N/A | 54. | 5. |
| 17 | 16. | 42. | 53. | 33. | 43. | 8. | 10. | 11. | 19. | 11. | 28. | 23. | 19. | 22. | 20. | 16. | 18. | 9. | 11. | 11. | 10. | 11. | 12. | 11. | N/A | 53. | 8. |
| 18 | 12. | 10. | 10. | 9. | 11. | 13. | 13. | 14. | 14. | 9. | 15. | 20. | 14. | 13. | ***** | ***** | ***** | ***** | ***** | ***** | ***** | ***** | ***** | ***** | N/A | 20. | 9. |
| 19 | ***** | ***** | ***** | ***** | ***** | ***** | ***** | 5. | 25. | 24. | 11. | 10. | 12. | 13. | 10. | 11. | 10. | 11. | 11. | 10. | 10. | 11. | 12. | 11. | N/A | 25. | 5. |
| 20 | 11. | ***** | ***** | ***** | ***** | ***** | ***** | 17. | 11. | 28. | 60. | 14. | 16. | 23. | 17. | 14. | 12. | 31. | 10. | 5. | 3. | 6. | 7. | 27. | N/A | 60. | 3. |
| 21 | 27. | ***** | ***** | ***** | ***** | ***** | ***** | 18. | 23. | 54. | 63. | 41. | 19. | 9. | 18. | 16. | 10. | 9. | 11. | 7. | 9. | 16. | 21. | 13. | N/A | 63. | 7. |
| 22 | 30. | 14. | 29. | 13. | 31. | 18. | 45. | 24. | 15. | 60. | 25. | 43. | 52. | 31. | 34. | 14. | 15. | 44. | 15. | 5. | 7. | 7. | 5. | 6. | N/A | 60. | 5. |
| 23 | 8. | 23. | 34. | 68. | 33. | 5. | 9. | 24. | 45. | 23. | 20. | 20. | 43. | 40. | 45. | 35. | 8. | 66. | 6. | 4. | 8. | 8. | 7. | 8. | N/A | 68. | 4. |
| 24 | 7. | 28. | 25. | 13. | 31. | 80. | 33. | 20. | 35. | 41. | 35. | 37. | 15. | 15. | 16. | 15. | 14. | 12. | 14. | 13. | 15. | 14. | 14. | 13. | N/A | 80. | 7. |
| 25 | 13. | 11. | 12. | 12. | 11. | 15. | 33. | 33. | 18. | 12. | 11. | 14. | 36. | 38. | 25. | 23. | 17. | 25. | 19. | 7. | 31. | 33. | 32. | 20. | N/A | 38. | 7. |
| 26 | 19. | 20. | 20. | 23. | 24. | 25. | 44. | 40. | 49. | 17. | 11. | 12. | 15. | 19. | 18. | 18. | 20. | 22. | 14. | 4. | 4. | 5. | 11. | 38. | N/A | 49. | 4. |
| 27 | 30. | 4. | 4. | 6. | 4. | 4. | 4. | 4. | 11. | 56. | 37. | 16. | 16. | 24. | 17. | 14. | 15. | 15. | 15. | 24. | 22. | 16. | 18. | 28. | N/A | 56. | 4. |
| 28 | 27. | 15. | 12. | 13. | 14. | 14. | 11. | 10. | 10. | 12. | 10. | 25. | 33. | 23. | 17. | 11. | 10. | 10. | 10. | 9. | 29. | 15. | 11. | 12. | N/A | 33. | 9. |
| 29 | 8. | 11. | 12. | 11. | 11. | 13. | 19. | 28. | 10. | 15. | 10. | 14. | 12. | 15. | 14. | 18. | 12. | 17. | 11. | 4. | 4. | 6. | 20. | 33. | N/A | 33. | 4. |
| 30 | 5. | 2. | 4. | 3. | 32. | 28. | 36. | 21. | 17. | 27. | 18. | 19. | 27. | 29. | 58. | 36. | 29. | 14. | 24. | 16. | 8. | 19. | 53. | 8. | N/A | 58. | 2. |
| 31 | 8. | 8. | 9. | 10. | 11. | 12. | 39. | 46. | 12. | 39. | 27. | 17. | 45. | 40. | 16. | 16. | 14. | 16. | 13. | 14. | 10. | 11. | 10. | 11. | N/A | 46. | 8. |
| Mean | N/A | N/A | N/A | N/A | N/A | N/A | N/A | N/A | N/A | N/A | N/A | N/A | N/A | N/A | N/A | N/A | N/A | N/A | N/A | N/A | N/A | N/A | N/A | N/A | Monthly mean = | | N/A |
| Max. | 47. | 69. | 53. | 68. | 43. | 80. | 57. | 67. | 49. | 60. | 63. | 59. | 61. | 50. | 58. | 43. | 39. | 66. | 36. | 32. | 47. | 60. | 53. | 83. | Monthly max. = | | 83. |
| Min. | 5. | 2. | 4. | 3. | 4. | 4. | 4. | 4. | 10. | 9. | 10. | 10. | 9. | 9. | 10. | 8. | 6. | 7. | 6. | 4. | 3. | 4. | 4. | 4. | Monthly min. = | | 2. |

TOTAL NUMBER OF DATA HOURS IN MONTH: 744
Number of hours of bad or missing data: 29
Current % recovery = 96.1
**** designates missing or lost data

N/A: A sigma theta mean is not physically meaningful.

table created at 13:23, 1/14/1994

MONTHLY SUMMARY
REL. HUMID.
(Degrees)
INPUT FILE: octdec1.met

Bechtel Environmental, Inc.

Met Data from EMF Site 1
OCTOBER 1993

| Day | Hour 1 | 2 | 3 | 4 | 5 | 6 | 7 | 8 | 9 | 10 | 11 | 12 | 13 | 14 | 15 | 16 | 17 | 18 | 19 | 20 | 21 | 22 | 23 | 24 | Mean | Max. | Min. |
|---|---|---|---|---|---|---|---|---|---|---|---|---|---|---|---|---|---|---|---|---|---|---|---|---|---|---|---|
| 1 | 19.3 | 20.9 | 22.6 | 23.5 | 24.5 | 26.3 | 26.8 | 27.3 | 26.2 | 24.0 | 22.1 | 20.7 | 18.7 | 16.2 | 14.3 | 14.3 | 15.5 | 17.0 | 18.9 | 19.7 | 20.9 | 21.8 | 23.1 | 23.7 | 21.2 | 27.3 | 14.3 |
| 2 | 27.1 | 37.2 | 43.0 | 46.7 | 57.3 | 69.7 | 65.2 | 59.0 | 46.8 | 35.0 | 35.1 | 30.5 | 26.0 | 21.9 | 18.2 | 16.6 | 16.4 | 19.3 | 28.7 | 31.1 | 33.2 | 36.4 | 37.5 | 46.6 | 36.9 | 69.7 | 16.4 |
| 3 | 52.8 | 62.7 | 59.0 | 51.5 | 62.1 | 80.1 | 72.2 | 68.8 | 49.2 | 39.6 | 33.8 | 29.1 | 24.5 | 19.0 | 17.0 | 15.6 | 15.9 | 17.2 | 21.1 | 26.9 | 30.2 | 32.3 | 33.4 | 33.4 | 39.5 | 80.1 | 15.6 |
| 4 | 41.6 | 55.5 | 52.0 | 49.4 | 47.3 | 56.6 | 74.4 | 58.7 | 41.4 | 39.0 | 31.2 | 29.6 | 22.0 | 18.0 | 16.8 | 13.0 | 13.0 | 16.1 | 20.4 | 25.0 | 27.8 | 28.2 | 34.2 | 44.3 | 35.6 | 74.4 | 13.0 |
| 5 | 43.6 | 43.4 | 43.7 | 38.5 | 38.4 | 50.5 | 66.8 | 62.3 | 51.4 | 46.2 | 33.1 | 27.8 | 22.8 | 20.3 | 17.7 | 19.1 | 21.4 | 23.2 | 27.9 | 46.3 | 47.6 | 57.2 | 71.7 | 75.3 | 41.5 | 75.3 | 17.7 |
| 6 | 77.4 | 77.7 | 82.7 | 81.2 | 72.2 | 76.2 | 82.5 | 87.4 | 83.6 | 74.9 | 66.1 | 58.4 | 58.1 | 56.7 | 55.2 | 65.7 | 76.1 | 78.7 | 84.7 | 75.8 | 76.0 | 81.7 | 79.4 | 87.5 | 74.8 | 87.5 | 55.2 |
| 7 | 88.5 | 85.9 | 87.1 | 82.0 | 65.3 | 62.4 | 71.1 | 76.3 | 81.7 | 84.4 | 76.2 | 71.5 | 69.1 | 61.9 | 46.1 | 41.8 | 35.9 | 39.1 | 46.7 | 49.7 | 52.5 | 56.2 | 59.5 | 60.9 | 64.7 | 88.5 | 35.9 |
| 8 | 62.8 | 64.8 | 67.5 | 72.8 | 80.7 | 87.3 | 90.1 | 91.2 | 90.4 | 86.5 | 84.3 | 78.8 | 73.1 | 72.3 | 69.6 | 71.5 | 79.8 | 77.8 | 79.9 | 79.8 | 76.3 | 72.8 | 74.9 | 79.2 | 77.7 | 91.2 | 62.8 |
| 9 | 85.8 | 88.4 | 92.9 | 96.3 | 96.8 | 97.0 | 97.2 | 96.4 | 94.3 | 90.7 | 85.5 | 82.0 | 76.0 | 70.9 | 66.9 | 72.8 | 71.3 | 72.1 | 73.5 | 74.5 | 71.3 | 69.8 | 73.6 | 73.0 | 82.0 | 97.2 | 66.9 |
| 10 | 72.2 | 72.7 | 73.5 | 71.7 | 72.0 | 75.8 | 78.7 | 75.2 | 80.5 | 69.1 | 57.7 | 46.5 | 44.1 | 41.2 | 41.7 | 39.1 | 39.3 | 42.8 | 51.5 | 54.5 | 53.0 | 55.0 | 56.3 | 61.8 | 59.4 | 80.5 | 39.1 |
| 11 | 70.1 | 77.5 | 86.3 | 80.4 | 79.5 | 80.3 | 79.6 | 81.2 | 83.0 | 77.1 | 70.5 | 64.7 | 60.9 | 57.2 | 56.9 | 68.3 | 81.5 | 88.6 | 89.8 | 95.4 | 95.7 | 95.1 | 95.9 | 97.2 | 79.7 | 97.2 | 56.9 |
| 12 | 97.2 | 97.2 | 97.2 | 97.2 | 96.9 | 91.0 | 82.5 | 75.0 | 71.9 | 76.1 | 75.4 | 71.2 | 63.8 | 60.9 | 56.8 | 54.3 | 54.6 | 57.9 | 61.4 | 70.2 | 72.7 | 79.3 | 79.5 | 79.8 | 75.8 | 97.2 | 54.3 |
| 13 | 80.2 | 81.5 | 81.0 | 83.3 | 88.2 | 89.7 | 90.1 | 92.9 | 85.7 | 71.8 | 61.5 | 55.5 | 51.9 | 55.5 | 53.2 | 46.6 | 50.1 | 54.6 | 58.4 | 72.0 | 67.4 | 68.8 | 72.6 | 77.6 | 70.4 | 92.9 | 46.6 |
| 14 | 74.9 | 84.1 | 83.8 | 90.1 | 92.7 | 90.3 | 91.1 | 97.2 | 86.1 | 71.6 | 69.5 | 65.7 | 63.1 | 54.8 | 51.0 | 46.6 | 46.0 | 49.5 | 58.5 | 58.8 | 59.2 | 64.3 | 66.9 | 66.6 | 70.1 | 97.2 | 46.0 |
| 15 | 68.2 | 67.4 | 73.0 | 83.5 | 88.2 | 84.6 | 83.8 | 80.4 | 79.0 | 87.0 | 92.3 | 86.4 | 89.4 | 84.8 | 77.0 | 76.2 | 73.3 | 75.3 | 80.8 | 76.1 | 79.3 | 79.4 | 84.8 | 87.6 | 80.7 | 92.3 | 67.4 |
| 16 | 83.8 | 81.8 | 81.6 | 85.2 | 89.8 | 85.5 | 90.3 | 94.6 | 88.2 | 89.7 | 86.1 | 80.9 | 75.8 | 73.1 | 71.0 | 65.4 | 65.7 | 71.0 | 73.9 | 79.3 | 80.0 | 81.7 | 87.5 | 90.7 | 81.4 | 94.6 | 65.4 |
| 17 | 94.6 | 96.2 | 97.2 | 97.2 | 97.2 | 97.2 | 97.3 | 97.3 | 97.3 | 94.7 | 81.9 | 71.0 | 62.4 | 50.7 | 41.9 | 36.2 | 39.4 | 47.8 | 61.1 | 70.0 | 74.6 | 80.1 | 81.6 | 84.8 | 77.1 | 97.3 | 36.2 |
| 18 | 86.8 | 87.3 | 87.2 | 84.7 | 82.9 | 82.4 | 81.7 | 81.7 | 78.5 | 78.9 | 74.1 | 65.6 | 61.7 | 65.9 | 66.8 | 61.9 | 53.8 | 53.4 | 55.9 | 55.5 | 55.6 | 56.4 | 67.1 | 62.2 | 70.3 | 87.3 | 53.4 |
| 19 | 68.9 | 74.5 | 73.9 | 75.8 | 77.0 | 83.2 | 85.3 | 82.2 | 73.3 | 54.5 | 54.1 | 53.6 | 50.7 | 45.7 | 42.0 | 40.4 | 41.2 | 46.5 | 51.3 | 52.7 | 54.1 | 58.6 | 63.7 | 66.3 | 61.2 | 85.3 | 40.4 |
| 20 | 66.8 | 66.5 | 66.3 | 74.5 | 74.6 | 85.6 | 86.4 | 92.0 | 84.7 | 75.4 | 62.1 | 49.0 | 44.2 | 42.5 | 41.0 | 37.8 | 35.9 | 40.2 | 48.9 | 60.2 | 64.3 | 66.6 | 71.6 | 81.1 | 63.3 | 92.0 | 35.9 |
| 21 | 88.5 | 86.1 | 91.8 | 96.9 | 95.9 | 90.0 | 92.0 | 94.7 | 92.3 | 79.0 | 53.0 | 42.7 | 37.5 | 35.5 | 34.5 | 33.4 | 36.3 | 40.4 | 44.6 | 45.5 | 49.8 | 49.5 | 58.2 | 62.7 | 63.8 | 96.9 | 33.4 |
| 22 | 68.5 | 68.8 | 67.3 | 78.5 | 80.4 | 73.0 | 87.2 | 91.8 | 71.5 | 48.9 | 46.3 | 38.9 | 34.5 | 34.5 | 32.4 | 30.5 | 31.6 | 38.5 | 47.3 | 46.9 | 51.3 | 50.5 | 48.6 | 51.1 | 55.0 | 91.8 | 30.5 |
| 23 | 62.3 | 70.7 | 80.9 | 88.5 | 86.0 | 76.9 | 74.7 | 76.2 | 69.7 | 53.9 | 46.2 | 41.2 | 35.1 | 31.5 | 29.8 | 29.5 | 27.4 | 33.6 | 41.4 | 39.6 | 44.0 | 47.3 | 49.3 | 51.6 | 53.6 | 88.5 | 27.4 |
| 24 | 54.8 | 70.6 | 79.3 | 72.0 | 79.2 | 80.0 | 81.1 | 83.1 | 64.4 | 66.9 | 55.0 | 40.3 | 33.9 | 33.7 | 33.6 | 33.8 | 37.7 | 41.4 | 45.4 | 48.5 | 51.5 | 51.2 | 51.6 | 53.0 | 55.9 | 83.1 | 33.6 |
| 25 | 51.4 | 45.2 | 44.8 | 48.2 | 50.4 | 56.4 | 58.0 | 79.0 | 70.0 | 60.9 | 59.2 | 54.8 | 42.8 | 32.8 | 28.4 | 24.5 | 18.7 | 24.4 | 34.2 | 39.6 | 43.1 | 47.9 | 53.5 | 55.4 | 46.8 | 79.0 | 18.7 |
| 26 | 69.6 | 62.8 | 65.3 | 62.2 | 62.2 | 63.1 | 67.7 | 56.2 | 53.0 | 47.0 | 40.9 | 35.3 | 31.3 | 26.5 | 22.6 | 21.5 | 22.1 | 28.0 | 35.1 | 38.4 | 42.2 | 43.0 | 41.2 | 40.6 | 44.9 | 69.6 | 21.5 |
| 27 | 42.1 | 47.9 | 50.4 | 52.0 | 57.7 | 59.5 | 63.1 | 62.5 | 52.2 | 37.1 | 33.7 | 30.9 | 31.6 | 28.0 | 25.2 | 21.7 | 23.5 | 24.5 | 23.5 | 24.2 | 26.5 | 24.2 | 25.9 | 26.4 | 37.3 | 63.1 | 21.7 |
| 28 | 26.4 | 26.7 | 27.0 | 26.4 | 26.7 | 27.8 | 28.4 | 28.4 | 29.0 | 29.3 | 32.4 | 48.5 | 53.8 | 39.2 | 34.9 | 37.4 | 45.8 | 67.9 | 57.5 | 50.3 | 46.8 | 46.6 | 50.9 | 52.6 | 39.2 | 67.9 | 26.4 |
| 29 | 53.8 | 55.7 | 56.9 | 47.4 | 36.7 | 37.6 | 52.3 | 49.3 | 46.4 | 36.3 | 30.5 | 28.0 | 27.1 | 28.5 | 20.8 | 20.2 | 20.4 | 23.5 | 28.5 | 32.4 | 32.7 | 34.1 | 41.9 | 52.7 | 37.2 | 56.9 | 20.2 |
| 30 | 45.3 | 47.1 | 49.2 | 49.0 | 47.8 | 59.8 | 67.0 | 51.6 | 42.0 | 33.6 | 30.4 | 27.0 | 21.4 | 16.7 | 14.9 | 14.2 | 17.0 | 21.5 | 27.4 | 27.9 | 29.2 | 31.7 | 41.3 | 53.3 | 36.1 | 67.0 | 14.2 |
| 31 | 73.4 | 73.1 | 71.8 | 74.0 | 81.2 | 75.7 | 85.2 | 81.7 | 70.5 | 55.7 | 39.4 | 32.0 | 27.8 | 24.9 | 26.3 | 26.9 | 29.6 | 31.0 | 33.6 | 37.6 | 38.1 | 40.5 | 45.2 | 49.8 | 51.0 | 85.2 | 24.9 |
| Mean | 64.5 | 67.0 | 68.9 | 69.7 | 70.6 | 72.6 | 75.8 | 75.2 | 68.8 | 61.8 | 55.5 | 50.3 | 46.3 | 42.6 | 39.5 | 38.6 | 39.9 | 44.0 | 48.8 | 51.8 | 53.1 | 55.1 | 58.8 | 62.2 | Monthly mean = | | 57.6 |
| Max. | 97.2 | 97.2 | 97.2 | 97.2 | 97.2 | 97.2 | 97.3 | 97.3 | 97.3 | 94.7 | 92.3 | 86.4 | 89.4 | 84.8 | 77.0 | 76.2 | 81.5 | 88.6 | 89.8 | 95.4 | 95.7 | 95.1 | 95.9 | 97.2 | Monthly max. = | | 97.3 |
| Min. | 19.3 | 20.9 | 22.6 | 23.5 | 24.5 | 26.3 | 26.8 | 27.3 | 26.2 | 24.0 | 22.1 | 20.7 | 18.7 | 16.2 | 14.3 | 13.0 | 13.0 | 16.1 | 18.9 | 19.7 | 20.9 | 21.8 | 23.1 | 23.7 | Monthly min. = | | 13.0 |

TOTAL NUMBER OF DATA HOURS IN MONTH: 744
Number of hours of bad or missing data: 0
**** designates missing or lost data

Current % recovery = 100.0

N/A: insufficient data available for calculation (a minimum of 75% is required)

table created at 13:23, 1/14/1994

MONTHLY SUMMARY
WIND SPEED
(Miles Per Hour)
INPUT FILE: octdec1.met

Bechtel Environmental, Inc.

Met Data from EMF Site 1
NOVEMBER 1993

| Day | Hour 1 | 2 | 3 | 4 | 5 | 6 | 7 | 8 | 9 | 10 | 11 | 12 | 13 | 14 | 15 | 16 | 17 | 18 | 19 | 20 | 21 | 22 | 23 | 24 | Mean | Max. | Min. |
|---|---|---|---|---|---|---|---|---|---|---|---|---|---|---|---|---|---|---|---|---|---|---|---|---|---|---|---|
| 1 | 18.0 | 17.7 | 19.6 | 18.7 | 19.4 | 18.7 | 17.3 | 20.2 | 17.6 | 18.1 | 14.4 | 10.3 | 8.9 | 10.8 | 12.0 | 11.0 | 9.8 | 8.4 | 11.3 | 8.4 | 11.0 | 10.4 | 15.7 | 14.1 | 14.2 | 20.2 | 8.4 |
| 2 | 13.6 | 14.3 | 12.6 | 7.5 | 5.2 | 7.6 | 9.9 | 9.6 | 8.3 | 11.4 | 12.9 | 15.2 | 17.6 | 17.0 | 16.2 | 14.4 | 9.7 | 11.1 | 9.8 | 14.0 | 14.3 | 16.6 | 17.5 | 12.9 | 12.5 | 17.6 | 5.2 |
| 3 | 16.3 | 12.8 | 16.0 | 17.2 | 21.0 | 13.8 | 12.7 | 14.3 | 15.2 | 16.9 | 21.6 | 25.5 | 28.0 | 28.6 | 28.2 | ***** | 32.8 | 29.7 | 22.5 | 18.7 | 19.1 | 16.5 | 6.3 | 3.3 | 19.0 | 32.8 | 3.3 |
| 4 | 10.0 | 8.4 | 6.0 | 16.7 | 15.9 | 18.1 | 16.7 | 17.5 | 20.1 | 19.9 | 18.2 | 18.7 | 16.9 | 16.2 | 16.3 | 15.4 | 14.7 | 11.2 | 11.0 | 6.9 | 10.5 | 6.3 | 3.4 | 4.4 | 13.3 | 20.1 | 3.4 |
| 5 | 5.9 | 8.9 | 6.1 | 5.9 | 4.9 | 8.3 | 7.5 | 12.4 | 11.9 | 11.1 | 10.8 | 9.8 | 8.6 | ***** | ***** | 7.6 | 11.6 | 11.7 | 11.8 | 12.2 | 13.6 | 8.4 | 11.4 | 9.8 | 9.6 | 13.6 | 4.9 |
| 6 | 10.3 | 11.7 | 11.5 | 14.5 | 12.9 | 7.0 | 3.3 | 2.5 | 2.0 | 3.1 | 3.0 | 7.7 | 14.0 | 15.8 | 17.4 | 17.0 | 16.9 | 13.1 | 11.2 | 8.0 | 9.0 | 11.4 | 11.9 | 11.1 | 10.3 | 17.4 | 2.0 |
| 7 | 3.7 | 1.6 | 4.1 | 5.4 | 9.7 | 8.2 | 9.4 | 5.7 | 2.9 | 1.7 | 5.3 | 13.3 | 12.2 | 13.3 | 14.8 | 14.8 | 10.0 | 9.3 | 9.1 | 9.9 | 8.7 | 8.3 | 10.1 | 8.7 | 8.3 | 14.8 | 1.6 |
| 8 | 9.3 | 8.7 | 10.1 | 9.2 | 4.9 | 2.2 | 6.7 | 8.6 | 3.5 | 2.6 | 2.2 | 5.4 | 8.2 | 8.2 | 12.4 | 11.9 | 9.9 | 8.6 | 8.4 | 5.7 | 8.2 | 9.7 | 9.8 | 10.4 | 7.7 | 12.4 | 2.2 |
| 9 | 9.0 | 3.5 | 2.9 | 6.0 | 5.7 | 4.2 | 1.9 | 2.6 | 3.9 | 6.9 | 5.7 | 4.8 | 5.8 | 5.5 | 5.5 | 5.3 | 2.4 | 3.6 | 9.2 | 14.7 | 13.0 | 5.9 | 4.4 | 3.8 | 5.7 | 14.7 | 1.9 |
| 10 | 4.9 | 2.5 | 2.4 | 3.1 | 4.5 | 3.3 | 6.3 | 5.6 | 5.5 | 5.5 | 4.2 | 3.6 | 2.4 | 3.0 | 7.8 | 4.8 | 3.7 | 3.3 | 2.5 | 5.5 | 6.2 | 2.1 | 1.9 | 3.6 | 4.1 | 7.8 | 1.9 |
| 11 | 4.9 | 3.1 | 3.6 | 2.7 | 1.5 | 1.1 | 1.4 | 3.0 | 1.4 | 2.2 | 2.4 | 2.6 | 3.2 | 3.4 | 6.2 | 7.5 | 6.4 | 4.9 | 3.0 | 11.7 | 13.4 | 17.8 | 15.2 | 11.5 | 5.6 | 17.8 | 1.1 |
| 12 | 13.3 | 15.1 | 16.3 | 17.9 | 15.1 | 15.6 | 16.1 | 13.3 | 9.7 | 13.6 | 15.1 | 15.1 | 13.8 | 12.3 | 13.2 | 15.0 | 15.5 | 16.5 | 16.8 | 18.8 | 15.9 | 15.1 | 13.8 | 16.8 | 15.0 | 18.8 | 9.7 |
| 13 | 18.5 | 18.5 | 16.7 | 18.4 | 17.3 | 16.6 | 15.7 | 16.6 | 15.8 | 16.0 | 13.0 | 12.8 | 9.8 | 6.0 | 9.3 | 10.8 | 7.8 | 6.2 | 6.1 | 3.7 | 3.8 | 3.9 | 2.3 | 3.1 | 11.2 | 18.5 | 2.3 |
| 14 | 4.4 | 3.8 | 2.5 | 3.7 | 1.9 | 1.9 | 4.6 | 4.9 | 4.3 | 6.6 | 7.4 | 9.2 | 8.6 | 8.5 | 7.1 | 7.4 | 10.9 | 14.5 | 14.2 | 14.1 | 13.1 | 11.4 | 10.7 | 9.6 | 7.7 | 14.5 | 1.9 |
| 15 | 6.7 | 10.2 | 11.3 | 11.5 | 12.9 | 12.0 | 12.7 | 13.3 | 8.8 | 5.4 | 3.0 | 2.8 | 6.9 | 9.7 | 10.1 | 11.4 | 10.5 | 5.3 | 7.5 | 9.7 | 9.2 | 14.9 | 17.7 | 18.3 | 10.1 | 18.3 | 2.8 |
| 16 | 19.7 | 20.1 | 19.5 | 19.4 | 20.3 | 16.9 | 17.7 | 17.3 | 12.3 | 11.0 | 17.8 | 14.3 | 11.0 | 11.1 | 10.3 | 9.2 | 9.3 | 12.8 | 13.9 | 14.4 | 14.4 | 22.0 | 22.7 | 18.6 | 15.7 | 22.7 | 9.2 |
| 17 | 16.5 | 15.7 | 6.1 | 6.3 | 4.2 | 5.1 | 6.5 | 4.1 | 5.0 | 3.6 | 3.7 | 5.3 | 6.0 | 15.0 | 15.1 | 12.5 | 16.1 | 14.6 | 15.3 | 13.7 | 12.9 | 12.6 | 11.5 | 15.1 | 10.1 | 16.5 | 3.6 |
| 18 | 13.8 | 16.5 | 14.7 | 14.7 | 16.0 | 17.0 | 16.7 | 18.3 | 24.8 | 22.4 | 23.6 | 26.4 | 28.8 | 29.0 | 28.8 | 10.8 | 8.1 | 8.1 | 3.9 | 7.0 | 9.7 | 12.3 | 12.5 | 12.4 | 16.5 | 29.0 | 3.9 |
| 19 | 15.2 | 15.9 | 11.7 | 6.8 | 8.7 | 7.2 | 7.0 | 8.4 | 9.3 | 7.1 | 9.7 | 11.8 | 14.1 | 13.3 | 14.3 | 13.8 | 9.8 | 4.2 | 2.7 | 7.7 | 9.2 | 10.8 | 7.6 | 10.6 | 9.9 | 15.9 | 2.7 |
| 20 | 8.9 | 9.6 | 3.1 | 3.7 | 2.5 | 6.1 | 3.7 | 4.3 | 2.5 | 3.1 | 4.4 | 4.3 | 3.3 | 3.0 | 2.4 | 4.1 | 2.4 | 4.5 | 11.8 | 15.2 | 17.2 | 18.6 | 19.4 | 20.5 | 7.4 | 20.5 | 2.4 |
| 21 | 20.8 | 16.0 | 7.0 | 5.4 | 3.5 | 4.4 | 6.5 | 6.9 | 4.2 | 5.9 | 5.1 | 8.9 | 23.0 | 19.3 | 13.2 | 16.7 | 18.4 | 20.9 | 19.9 | 18.6 | 16.2 | 20.1 | 21.6 | 24.2 | 13.6 | 24.2 | 3.5 |
| 22 | 22.2 | 22.0 | 11.2 | 7.7 | 15.8 | 16.6 | 16.4 | 16.8 | 17.2 | 20.2 | 18.3 | 17.8 | 18.2 | 21.8 | 24.7 | 24.3 | 21.1 | 13.5 | 14.0 | ***** | ***** | 14.3 | 17.2 | 12.2 | 17.4 | 24.7 | 7.7 |
| 23 | 13.5 | 16.9 | 16.8 | 14.9 | 16.6 | 14.1 | 14.8 | 12.2 | 21.3 | 17.8 | 12.8 | 16.7 | 18.0 | 19.3 | 18.6 | 16.9 | 15.0 | 14.6 | 15.0 | 14.0 | 14.1 | 14.1 | 14.3 | 14.2 | 15.7 | 21.3 | 12.2 |
| 24 | 16.4 | 14.3 | 15.1 | 16.0 | 15.8 | 19.9 | 22.8 | 18.5 | 19.8 | 20.7 | 21.6 | 19.6 | 16.0 | 14.0 | 13.1 | 12.3 | 9.8 | 6.8 | 3.5 | 1.7 | 3.2 | 2.4 | 1.7 | 2.6 | 12.8 | 22.8 | 1.7 |
| 25 | 2.9 | 1.5 | 1.4 | ***** | 4.8 | 2.6 | 2.0 | 3.5 | 3.1 | 2.3 | 1.3 | 4.3 | 3.4 | 4.1 | 4.1 | 5.0 | 4.0 | 1.6 | 3.4 | 4.4 | 4.9 | 4.7 | 2.6 | 2.2 | 3.2 | 5.0 | 1.3 |
| 26 | 2.0 | 1.8 | 2.4 | 3.2 | 3.6 | 1.3 | 1.5 | 1.6 | 1.7 | 1.6 | 5.0 | 3.2 | 1.8 | ***** | ***** | 2.5 | 2.0 | 3.1 | 2.4 | 4.6 | 1.8 | 3.3 | 1.8 | 3.4 | 2.5 | 5.0 | 1.3 |
| 27 | 3.7 | 2.6 | 1.3 | 3.3 | 2.8 | 1.9 | 3.8 | 5.2 | 2.0 | 2.5 | 3.5 | 2.9 | 3.5 | 4.4 | 4.6 | 4.0 | 5.6 | 5.4 | 4.3 | 5.8 | 3.8 | 3.5 | 3.4 | 6.6 | 3.8 | 6.6 | 1.3 |
| 28 | 3.4 | ***** | 5.3 | 1.8 | 5.8 | 6.2 | 3.4 | 3.4 | 6.9 | 4.1 | 3.1 | 3.5 | 4.3 | 5.1 | 4.1 | 2.0 | 3.5 | 7.0 | 7.5 | 15.5 | 4.4 | 4.2 | 2.7 | 3.2 | 4.8 | 15.5 | 1.8 |
| 29 | 2.6 | 7.8 | 8.7 | 6.2 | 7.1 | 8.2 | 7.9 | 3.7 | 4.6 | 16.4 | 12.7 | 9.2 | ***** | ***** | 5.6 | 2.0 | 2.9 | 2.4 | 5.2 | 4.7 | 4.9 | 6.3 | 5.1 | 3.1 | 6.2 | 16.4 | 2.0 |
| 30 | 3.0 | 1.6 | 3.0 | 3.6 | 5.7 | 3.1 | 7.7 | 5.5 | 3.5 | 5.1 | 19.3 | 14.9 | 15.6 | 17.0 | 17.3 | 18.0 | 17.2 | 19.4 | ***** | ***** | 22.9 | 22.7 | 20.4 | 19.4 | 12.1 | 22.9 | 1.6 |
| Mean | 10.4 | 10.5 | 9.0 | 9.4 | 9.5 | 9.0 | 9.4 | 9.3 | 9.0 | 9.5 | 10.0 | 10.7 | 11.4 | 12.4 | 12.6 | 10.6 | 10.6 | 9.9 | 9.6 | 10.3 | 10.6 | 11.0 | 10.6 | 10.3 | Monthly mean = | | 10.2 |
| Max. | 22.2 | 22.0 | 19.6 | 19.4 | 21.0 | 19.9 | 22.8 | 20.2 | 24.8 | 22.4 | 23.6 | 26.4 | 28.8 | 29.0 | 28.8 | 24.3 | 32.8 | 29.7 | 22.5 | 18.8 | 22.9 | 22.7 | 22.7 | 24.2 | Monthly max. = | | 32.8 |
| Min. | 2.0 | 1.5 | 1.3 | 1.8 | 1.5 | 1.1 | 1.4 | 1.6 | 1.4 | 1.6 | 1.3 | 2.6 | 1.8 | 3.0 | 2.4 | 2.0 | 2.0 | 1.6 | 2.4 | 1.7 | 1.8 | 2.1 | 1.7 | 2.2 | Monthly min. = | | 1.1 |

TOTAL NUMBER OF DATA HOURS IN MONTH: 718
Number of hours of bad or missing data: 13
Current % recovery = 98.2
***** designates missing or lost data

N/A: insufficient data available for calculation (a minimum of 75% is required)

table created at 13:23, 1/14/1994

MONTHLY SUMMARY
WIND DIRECTION
(Degrees)
INPUT FILE: octdec1.met

Bechtel Environmental, Inc.

Met Data from EMF Site 1
NOVEMBER 1993

| Day | Hour 1 | 2 | 3 | 4 | 5 | 6 | 7 | 8 | 9 | 10 | 11 | 12 | 13 | 14 | 15 | 16 | 17 | 18 | 19 | 20 | 21 | 22 | 23 | 24 | Mean | Max. | Min. |
|---|---|---|---|---|---|---|---|---|---|---|---|---|---|---|---|---|---|---|---|---|---|---|---|---|---|---|---|
| 1 | 242.0 | 244.0 | 247.0 | 247.0 | 236.0 | 237.0 | 240.0 | 243.0 | 246.0 | 257.0 | 262.0 | 270.0 | 279.0 | 266.0 | 267.0 | 262.0 | 261.0 | 243.0 | 259.0 | 255.0 | 242.0 | 234.0 | 235.0 | 229.0 | 250.1 | 279.0 | 229.0 |
| 2 | 233.0 | 237.0 | 231.0 | 196.0 | 80.0 | 108.0 | 112.0 | 113.0 | 204.0 | 232.0 | 246.0 | 258.0 | 255.0 | 255.0 | 256.0 | 260.0 | 249.0 | 234.0 | 169.0 | 130.0 | 134.0 | 137.0 | 132.0 | 145.0 | 191.9 | 260.0 | 80.0 |
| 3 | 143.0 | 149.0 | 142.0 | 144.0 | 140.0 | 144.0 | 187.0 | 201.0 | 204.0 | 215.0 | 232.0 | 227.0 | 253.0 | 254.0 | 262.0 | 255.0 | 256.0 | 255.0 | 247.0 | 247.0 | 246.0 | 265.0 | 350.0 | 50.0 | 211.2 | 350.0 | 50.0 |
| 4 | 42.0 | 105.0 | 256.0 | 242.0 | 244.0 | 235.0 | 234.0 | 243.0 | 235.0 | 239.0 | 239.0 | 251.0 | 252.0 | 253.0 | 254.0 | 256.0 | 259.0 | 258.0 | 346.0 | 152.0 | 89.0 | 316.0 | 103.0 | 124.0 | 217.8 | 346.0 | 42.0 |
| 5 | 253.0 | 258.0 | 281.0 | 207.0 | 232.0 | 269.0 | 295.0 | 237.0 | 235.0 | 244.0 | 260.0 | 269.0 | 286.0 | ***** | ***** | 263.0 | 242.0 | 227.0 | 227.0 | 230.0 | 224.0 | 202.0 | 212.0 | 148.0 | 241.0 | 295.0 | 148.0 |
| 6 | 119.0 | 123.0 | 117.0 | 126.0 | 120.0 | 127.0 | 299.0 | 296.0 | 324.0 | 303.0 | 60.0 | 252.0 | 255.0 | 258.0 | 257.0 | 249.0 | 253.0 | 237.0 | 214.0 | 139.0 | 158.0 | 141.0 | 147.0 | 124.0 | 195.7 | 324.0 | 60.0 |
| 7 | 307.0 | 261.0 | 122.0 | 123.0 | 121.0 | 121.0 | 124.0 | 109.0 | 62.0 | 52.0 | 274.0 | 267.0 | 261.0 | 256.0 | 250.0 | 258.0 | 255.0 | 244.0 | 227.0 | 225.0 | 201.0 | 121.0 | 115.0 | 117.0 | 186.4 | 307.0 | 52.0 |
| 8 | 118.0 | 115.0 | 119.0 | 117.0 | 113.0 | 73.0 | 123.0 | 124.0 | 111.0 | 93.0 | 56.0 | 303.0 | 282.0 | 272.0 | 264.0 | 267.0 | 275.0 | 255.0 | 231.0 | 215.0 | 119.0 | 114.0 | 121.0 | 120.0 | 166.7 | 303.0 | 56.0 |
| 9 | 122.0 | 130.0 | 66.0 | 107.0 | 107.0 | 110.0 | 360.0 | 328.0 | 91.0 | 83.0 | 14.0 | 36.0 | 57.0 | 33.0 | 20.0 | 31.0 | 57.0 | 100.0 | 128.0 | 137.0 | 139.0 | 284.0 | 298.0 | 290.0 | 55.3 | 360.0 | 14.0 |
| 10 | 286.0 | 264.0 | 103.0 | 311.0 | 289.0 | 291.0 | 282.0 | 276.0 | 296.0 | 299.0 | 306.0 | 334.0 | 41.0 | 67.0 | 99.0 | 346.0 | 337.0 | 285.0 | 163.0 | 116.0 | 123.0 | 59.0 | 119.0 | 297.0 | 359.5 | 346.0 | 41.0 |
| 11 | 285.0 | 106.0 | 323.0 | 118.0 | 102.0 | 290.0 | 63.0 | 94.0 | 292.0 | 338.0 | 38.0 | 87.0 | 332.0 | 290.0 | 280.0 | 280.0 | 292.0 | 266.0 | 164.0 | 225.0 | 232.0 | 236.0 | 234.0 | 256.0 | 337.6 | 338.0 | 38.0 |
| 12 | 245.0 | 236.0 | 239.0 | 236.0 | 242.0 | 236.0 | 236.0 | 237.0 | 235.0 | 247.0 | 255.0 | 264.0 | 267.0 | 271.0 | 268.0 | 265.0 | 243.0 | 235.0 | 234.0 | 236.0 | 232.0 | 237.0 | 236.0 | 235.0 | 244.5 | 271.0 | 232.0 |
| 13 | 235.0 | 238.0 | 237.0 | 236.0 | 236.0 | 236.0 | 240.0 | 244.0 | 245.0 | 252.0 | 265.0 | 266.0 | 266.0 | 284.0 | 238.0 | 240.0 | 319.0 | 354.0 | 354.0 | 39.0 | 108.0 | 95.0 | 78.0 | 296.0 | 293.4 | 354.0 | 39.0 |
| 14 | 100.0 | 116.0 | 152.0 | 128.0 | 141.0 | 167.0 | 42.0 | 61.0 | 119.0 | 41.0 | 22.0 | 13.0 | 16.0 | 13.0 | 2.0 | 312.0 | 249.0 | 227.0 | 226.0 | 232.0 | 233.0 | 221.0 | 224.0 | 208.0 | 136.0 | 312.0 | 2.0 |
| 15 | 119.0 | 115.0 | 115.0 | 117.0 | 119.0 | 122.0 | 122.0 | 125.0 | 132.0 | 268.0 | 323.0 | 108.0 | 281.0 | 271.0 | 265.0 | 264.0 | 263.0 | 232.0 | 131.0 | 122.0 | 129.0 | 129.0 | 128.0 | 129.0 | 172.0 | 323.0 | 108.0 |
| 16 | 131.0 | 129.0 | 125.0 | 124.0 | 128.0 | 129.0 | 130.0 | 131.0 | 148.0 | 142.0 | 135.0 | 139.0 | 195.0 | 209.0 | 206.0 | 191.0 | 176.0 | 139.0 | 118.0 | 116.0 | 120.0 | 137.0 | 136.0 | 127.0 | 144.2 | 209.0 | 116.0 |
| 17 | 125.0 | 121.0 | 151.0 | 294.0 | 302.0 | 301.0 | 289.0 | 311.0 | 295.0 | 335.0 | 356.0 | 360.0 | 197.0 | 194.0 | 192.0 | 174.0 | 183.0 | 184.0 | 198.0 | 210.0 | 191.0 | 195.0 | 193.0 | 218.0 | 232.0 | 360.0 | 121.0 |
| 18 | 221.0 | 228.0 | 222.0 | 224.0 | 218.0 | 235.0 | 248.0 | 248.0 | 255.0 | 242.0 | 240.0 | 244.0 | 251.0 | 259.0 | 258.0 | 301.0 | 330.0 | 342.0 | 303.0 | 272.0 | 244.0 | 222.0 | 228.0 | 228.0 | 252.6 | 342.0 | 218.0 |
| 19 | 222.0 | 219.0 | 224.0 | 150.0 | 114.0 | 119.0 | 122.0 | 123.0 | 118.0 | 139.0 | 249.0 | 252.0 | 265.0 | 266.0 | 262.0 | 269.0 | 280.0 | 253.0 | 159.0 | 121.0 | 118.0 | 120.0 | 128.0 | 119.0 | 183.8 | 280.0 | 114.0 |
| 20 | 124.0 | 118.0 | 94.0 | 100.0 | 325.0 | 113.0 | 129.0 | 308.0 | 321.0 | 359.0 | 39.0 | 55.0 | 36.0 | 337.0 | 1.0 | 8.0 | 129.0 | 102.0 | 124.0 | 133.0 | 132.0 | 129.0 | 127.0 | 124.0 | 69.5 | 359.0 | 1.0 |
| 21 | 125.0 | 125.0 | 126.0 | 275.0 | 150.0 | 239.0 | 270.0 | 282.0 | 293.0 | 286.0 | 331.0 | 173.0 | 123.0 | 133.0 | 160.0 | 151.0 | 135.0 | 137.0 | 137.0 | 136.0 | 191.0 | 200.0 | 203.0 | 185.0 | 190.2 | 331.0 | 123.0 |
| 22 | 196.0 | 196.0 | 195.0 | 181.0 | 193.0 | 206.0 | 173.0 | 206.0 | 185.0 | 182.0 | 182.0 | 183.0 | 179.0 | 171.0 | 179.0 | 186.0 | 207.0 | 250.0 | 238.0 | ***** | ***** | 246.0 | 245.0 | 242.0 | 201.0 | 250.0 | 171.0 |
| 23 | 234.0 | 231.0 | 222.0 | 225.0 | 232.0 | 230.0 | 239.0 | 227.0 | 246.0 | 250.0 | 235.0 | 235.0 | 248.0 | 260.0 | 274.0 | 265.0 | 254.0 | 245.0 | 233.0 | 249.0 | 240.0 | 240.0 | 252.0 | 265.0 | 243.0 | 274.0 | 222.0 |
| 24 | 253.0 | 244.0 | 244.0 | 241.0 | 234.0 | 244.0 | 245.0 | 246.0 | 247.0 | 249.0 | 244.0 | 245.0 | 241.0 | 244.0 | 243.0 | 251.0 | 243.0 | 271.0 | 302.0 | 120.0 | 106.0 | 40.0 | 297.0 | 53.0 | 222.8 | 302.0 | 40.0 |
| 25 | 313.0 | 8.0 | 106.0 | ***** | 112.0 | 50.0 | 47.0 | 109.0 | 91.0 | 84.0 | 333.0 | 8.0 | 59.0 | 38.0 | 63.0 | 81.0 | 65.0 | 42.0 | 117.0 | 121.0 | 123.0 | 303.0 | 314.0 | 298.0 | 47.2 | 333.0 | 8.0 |
| 26 | 288.0 | 303.0 | 299.0 | 103.0 | 302.0 | 103.0 | 29.0 | 17.0 | 349.0 | 344.0 | 292.0 | 348.0 | 73.0 | ***** | ***** | 85.0 | 34.0 | 311.0 | 113.0 | 296.0 | 128.0 | 280.0 | 50.0 | 112.0 | 13.6 | 349.0 | 17.0 |
| 27 | 331.0 | 304.0 | 348.0 | 303.0 | 302.0 | 24.0 | 94.0 | 278.0 | 74.0 | 320.0 | 291.0 | 86.0 | 70.0 | 32.0 | 352.0 | 291.0 | 272.0 | 290.0 | 83.0 | 98.0 | 299.0 | 279.0 | 109.0 | 116.0 | .3 | 352.0 | 24.0 |
| 28 | 93.0 | ***** | 93.0 | 74.0 | 75.0 | 55.0 | 72.0 | 72.0 | 107.0 | 313.0 | 340.0 | 3.0 | 18.0 | 43.0 | 50.0 | 32.0 | 293.0 | 277.0 | 220.0 | 120.0 | 295.0 | 345.0 | 83.0 | 97.0 | 28.3 | 345.0 | 3.0 |
| 29 | 101.0 | 110.0 | 248.0 | 288.0 | 115.0 | 158.0 | 135.0 | 287.0 | 149.0 | 130.0 | 139.0 | 138.0 | ***** | ***** | 351.0 | 21.0 | 83.0 | 51.0 | 306.0 | 305.0 | 295.0 | 293.0 | 280.0 | 39.0 | 35.5 | 351.0 | 21.0 |
| 30 | 44.0 | 50.0 | 304.0 | 304.0 | 291.0 | 313.0 | 286.0 | 287.0 | 153.0 | 88.0 | 240.0 | 225.0 | 235.0 | 250.0 | 248.0 | 242.0 | 234.0 | 244.0 | ***** | ***** | 235.0 | 235.0 | 232.0 | 232.0 | 226.0 | 313.0 | 44.0 |
| Mean | 188.3 | 175.3 | 191.7 | 191.1 | 187.2 | 176.2 | 182.2 | 202.1 | 202.1 | 328.9 | 312.6 | 328.6 | 316.3 | 309.6 | 310.8 | 307.9 | 224.3 | 226.3 | 205.9 | 178.5 | 183.7 | 201.8 | 187.0 | 174.1 | Monthly mean = | | 197.0 |
| Max. | 331.0 | 304.0 | 348.0 | 311.0 | 325.0 | 313.0 | 360.0 | 328.0 | 349.0 | 359.0 | 356.0 | 360.0 | 332.0 | 337.0 | 352.0 | 346.0 | 337.0 | 354.0 | 354.0 | 305.0 | 299.0 | 345.0 | 350.0 | 298.0 | Monthly max. = | | 360.0 |
| Min. | 42.0 | 8.0 | 66.0 | 74.0 | 75.0 | 24.0 | 29.0 | 17.0 | 62.0 | 41.0 | 14.0 | 3.0 | 16.0 | 13.0 | 1.0 | 8.0 | 34.0 | 42.0 | 83.0 | 39.0 | 89.0 | 40.0 | 50.0 | 39.0 | Monthly min. = | | 1.0 |

TOTAL NUMBER OF DATA HOURS IN MONTH: 718
Number of hours of bad or missing data: 12
***** designates missing or lost data

Current % recovery = 98.3

N/A: insufficient data available for calculation (a minimum of 75% is required)

table created at 13:23, 1/14/1994

MONTHLY SUMMARY
TEMPERATURE
(Degrees Celsius)
INPUT FILE: octdec1.met

Bechtel Environmental, Inc.

Met Data from EMF Site 1
NOVEMBER 1993

| Day \ Hour | 1 | 2 | 3 | 4 | 5 | 6 | 7 | 8 | 9 | 10 | 11 | 12 | 13 | 14 | 15 | 16 | 17 | 18 | 19 | 20 | 21 | 22 | 23 | 24 | Mean | Max. | Min. |
|---|---|---|---|---|---|---|---|---|---|---|---|---|---|---|---|---|---|---|---|---|---|---|---|---|---|---|---|
| 1 | 4.8 | 4.2 | 3.8 | 3.4 | 3.0 | 2.7 | 1.9 | 1.4 | 1.1 | 2.2 | 3.4 | 4.6 | 5.6 | 6.6 | 7.4 | 7.9 | 8.1 | 7.3 | 5.7 | 5.2 | 4.8 | 4.1 | 3.4 | 3.1 | 4.4 | 8.1 | 1.1 |
| 2 | 3.0 | 3.0 | 3.0 | 1.8 | -.4 | -1.0 | -1.5 | -1.2 | 3.0 | 5.1 | 5.7 | 6.3 | 7.2 | 7.8 | 8.4 | 8.6 | 9.1 | 8.5 | 7.4 | 5.2 | 5.5 | 6.1 | 5.9 | 6.8 | 4.7 | 9.1 | -1.5 |
| 3 | 6.5 | 7.1 | 7.1 | 7.1 | 6.7 | 7.7 | 10.0 | 10.6 | 10.5 | 10.5 | 10.6 | 11.0 | 12.4 | 13.1 | 13.3 | 13.6 | 12.8 | 11.6 | 10.9 | 10.5 | 10.2 | 8.7 | 5.0 | 3.9 | 9.6 | 13.6 | 3.9 |
| 4 | 4.4 | 3.7 | 4.2 | 3.0 | 2.1 | 1.0 | .6 | .4 | .7 | 1.5 | 2.7 | 3.8 | 4.7 | 5.5 | 5.9 | 6.2 | 6.0 | 5.5 | 3.1 | 2.4 | 1.7 | .1 | .1 | -.3 | 2.9 | 6.2 | -.3 |
| 5 | -.1 | .0 | -.6 | -1.0 | -1.6 | -1.7 | -1.8 | -.8 | -.7 | -.4 | .2 | 1.4 | 2.7 | ***** | ***** | 4.9 | 4.8 | 3.5 | 3.1 | 2.4 | 1.7 | 1.3 | 1.5 | -.5 | .8 | 4.9 | -1.8 |
| 6 | -2.5 | -2.9 | -3.4 | -3.2 | -4.4 | -5.7 | -7.5 | -8.4 | -4.8 | -.2 | 2.5 | 5.1 | 5.5 | 5.9 | 6.1 | 6.7 | 6.4 | 5.1 | 4.2 | 2.1 | 2.8 | 1.5 | 2.1 | .5 | .6 | 6.7 | -8.4 |
| 7 | -2.1 | -4.1 | -4.3 | -3.2 | -3.0 | -3.7 | -4.0 | -3.9 | -3.5 | .9 | 3.2 | 4.0 | 4.9 | 5.9 | 6.5 | 6.3 | 6.4 | 5.2 | 4.7 | 4.5 | 3.4 | .0 | -.8 | -1.2 | .9 | 6.5 | -4.3 |
| 8 | -1.9 | -2.4 | -3.5 | -3.9 | -5.2 | -6.6 | -6.2 | -5.2 | -3.4 | -.9 | 2.4 | 3.7 | 4.2 | 5.7 | 7.4 | 7.9 | 7.2 | 5.6 | 5.8 | 3.5 | -.2 | -.7 | -1.7 | -2.6 | .4 | 7.9 | -6.6 |
| 9 | -2.8 | -4.5 | -6.5 | -5.9 | -6.4 | -6.7 | -9.0 | -9.1 | -5.4 | -.9 | 1.8 | 3.6 | 5.7 | 7.5 | 8.0 | 8.8 | 8.1 | 6.8 | 7.4 | 7.4 | 7.7 | 1.6 | -.4 | -1.6 | .6 | 8.8 | -9.1 |
| 10 | -2.5 | -2.6 | -2.4 | -2.5 | -2.6 | -3.1 | -3.0 | -2.8 | -2.5 | -1.6 | .6 | 3.1 | 5.1 | 7.5 | 8.7 | 10.8 | 8.5 | 6.0 | 4.0 | 1.7 | .3 | -1.8 | -3.6 | -4.2 | .9 | 10.8 | -4.2 |
| 11 | -3.9 | -5.9 | -6.2 | -6.9 | -8.0 | -8.6 | -8.7 | -7.7 | -3.6 | -.8 | 1.6 | 3.5 | 6.7 | 9.0 | 8.7 | 7.9 | 6.9 | 5.0 | 3.2 | 6.1 | 6.2 | 5.2 | 5.1 | 4.3 | .8 | 9.0 | -8.7 |
| 12 | 3.6 | 3.5 | 2.8 | 2.1 | 1.9 | 1.5 | 1.1 | 1.0 | 1.0 | 1.9 | 2.7 | 3.6 | 4.5 | 5.4 | 5.9 | 6.1 | 5.9 | 4.7 | 4.1 | 3.0 | 3.0 | 3.2 | 3.2 | 2.7 | 3.3 | 6.1 | 1.0 |
| 13 | 1.7 | .5 | -.1 | -.4 | -.8 | -1.0 | -.9 | -.9 | -1.1 | -1.0 | -1.2 | -1.3 | -1.3 | -1.0 | .2 | .9 | .5 | -.5 | -.9 | -2.0 | -2.2 | -2.0 | -3.2 | -4.6 | -.9 | 1.7 | -4.6 |
| 14 | -3.3 | -2.9 | -3.6 | -3.4 | -4.1 | -3.8 | -2.6 | -3.0 | -2.7 | -1.3 | .0 | 1.4 | 2.6 | 4.1 | 5.1 | 5.3 | 4.4 | 2.6 | 1.5 | .9 | .5 | .4 | .3 | -.3 | -.1 | 5.3 | -4.1 |
| 15 | -4.0 | -4.9 | -5.1 | -5.9 | -6.2 | -6.5 | -6.9 | -6.6 | -4.2 | -2.7 | .5 | 3.8 | 4.5 | 4.6 | 5.7 | 6.0 | 5.6 | 3.5 | 2.0 | .9 | .2 | .8 | 1.2 | 1.4 | -.5 | 6.0 | -6.9 |
| 16 | 1.3 | .9 | .5 | .3 | -.3 | .0 | .4 | .9 | 1.5 | 2.8 | 4.8 | 6.5 | 8.3 | 9.0 | 9.4 | 9.5 | 8.2 | 6.6 | 5.6 | 5.1 | 4.8 | 5.3 | 5.0 | 4.6 | 4.2 | 9.5 | -.3 |
| 17 | 4.2 | 3.9 | .2 | -4.2 | -5.7 | -6.6 | -6.9 | -7.2 | -6.9 | -2.2 | 4.6 | 6.8 | 10.1 | 11.1 | 11.0 | 10.1 | 9.2 | 8.6 | 8.5 | 7.9 | 7.1 | 7.1 | 7.0 | 6.7 | 3.5 | 11.1 | -7.2 |
| 18 | 6.6 | 6.2 | 5.9 | 5.9 | 5.9 | 5.9 | 5.2 | 3.8 | 2.4 | 1.3 | .9 | .3 | 1.1 | 1.7 | 2.6 | 2.8 | 2.9 | .2 | -1.8 | -1.6 | -1.7 | -2.1 | -2.2 | -2.6 | 2.1 | 6.6 | -2.6 |
| 19 | -2.5 | -2.7 | -2.8 | -4.7 | -7.0 | -6.9 | -8.3 | -8.7 | -6.9 | -3.1 | -1.0 | .0 | .6 | 1.2 | 1.8 | 2.0 | 1.5 | -.7 | -1.7 | -3.1 | -3.9 | -4.4 | -4.2 | -4.8 | -2.9 | 2.0 | -8.7 |
| 20 | -5.5 | -5.4 | -7.2 | -7.7 | -9.4 | -8.9 | -8.4 | -10.3 | -9.2 | -4.5 | -2.2 | .6 | 3.8 | 5.7 | 7.3 | 6.5 | 5.8 | 2.3 | 1.8 | 1.5 | 1.1 | 1.0 | .5 | .2 | -1.7 | 7.3 | -10.3 |
| 21 | .1 | .1 | -1.1 | -5.4 | -3.8 | -5.2 | -5.8 | -8.6 | -6.6 | -4.2 | 1.0 | 7.7 | 9.1 | 10.3 | 11.6 | 10.4 | 9.2 | 7.9 | 7.6 | 7.6 | 11.0 | 11.5 | 11.2 | 9.5 | 3.5 | 11.6 | -8.6 |
| 22 | 9.3 | 7.7 | 5.2 | 5.0 | 5.4 | 5.8 | 6.4 | 6.7 | 6.5 | 6.4 | 6.9 | 7.1 | 7.4 | 7.0 | 6.5 | 5.6 | 4.2 | .4 | .2 | ***** | ***** | -2.5 | -2.5 | -2.8 | 4.6 | 9.3 | -2.8 |
| 23 | -3.3 | -4.0 | -4.0 | -3.6 | -3.2 | -3.0 | -3.5 | -4.3 | -4.6 | -5.3 | -5.1 | -5.3 | -5.3 | -5.6 | -6.1 | -6.1 | -5.9 | -6.0 | -5.9 | -5.9 | -6.4 | -6.4 | -6.6 | -7.4 | -5.1 | -3.0 | -7.4 |
| 24 | -8.0 | -8.2 | -8.2 | -8.6 | -9.3 | -10.3 | -11.3 | -11.4 | -11.5 | -12.0 | -12.2 | -12.1 | -11.6 | -11.2 | -10.9 | -10.9 | -11.0 | -11.3 | -11.6 | -12.1 | -14.1 | -16.8 | -19.6 | -18.7 | -11.8 | -8.0 | -19.6 |
| 25 | -20.0 | -20.1 | -20.6 | ***** | -20.6 | -21.4 | -21.6 | -21.0 | -20.9 | -18.3 | -12.1 | -14.6 | -16.1 | -15.3 | -15.6 | -16.0 | -16.5 | -17.6 | -17.6 | -15.9 | -17.6 | -19.3 | -19.7 | -20.6 | -18.2 | -12.1 | -21.6 |
| 26 | -20.7 | -22.1 | -22.5 | -22.4 | -22.3 | -23.5 | -23.9 | -23.6 | -21.8 | -18.3 | -19.9 | -16.2 | -11.8 | ***** | ***** | -10.2 | -13.4 | -15.3 | -16.7 | -17.0 | -19.1 | -17.8 | -19.3 | -19.4 | -19.0 | -10.2 | -23.9 |
| 27 | -19.3 | -20.3 | -21.4 | -21.4 | -21.2 | -21.4 | -21.7 | -21.5 | -19.4 | -17.3 | -15.5 | -13.2 | -11.8 | -9.9 | -9.6 | -8.8 | -9.1 | -9.7 | -11.1 | -10.5 | -12.3 | -11.5 | -11.2 | -11.7 | -15.0 | -8.8 | -21.7 |
| 28 | -9.3 | ***** | -7.2 | -9.2 | -7.7 | -6.9 | -7.2 | -9.5 | -9.5 | -8.1 | -6.1 | -4.5 | -4.6 | -4.4 | -3.5 | -2.2 | -2.7 | -3.1 | -2.6 | -.3 | -.8 | -3.1 | -4.2 | -4.0 | -5.2 | -.3 | -9.5 |
| 29 | -4.7 | -3.4 | -3.6 | -5.3 | -5.6 | -3.9 | -1.7 | -4.7 | -1.6 | 1.4 | 3.5 | 4.5 | ***** | ***** | 2.4 | 2.4 | .4 | -.7 | -1.4 | -1.5 | -1.2 | -.9 | -1.1 | -1.0 | -1.3 | 4.5 | -5.6 |
| 30 | -1.4 | -2.6 | -3.3 | -3.6 | -3.7 | -5.2 | -3.9 | -3.3 | -2.9 | -1.0 | 1.5 | .5 | .7 | -.2 | -.1 | 1.1 | 1.9 | 1.8 | ***** | ***** | .1 | -.1 | .1 | .5 | -1.0 | 1.9 | -5.2 |
| Mean | -2.4 | -2.7 | -3.5 | -3.6 | -4.6 | -4.9 | -5.0 | -5.3 | -4.2 | -2.3 | -.5 | .9 | 1.9 | 3.2 | 3.7 | 3.5 | 2.8 | 1.5 | .7 | .3 | -.3 | -1.1 | -1.6 | -2.1 | Monthly mean = | | -1.1 |
| Max. | 9.3 | 7.7 | 7.1 | 7.1 | 6.7 | 7.7 | 10.0 | 10.6 | 10.5 | 10.5 | 10.6 | 11.0 | 12.4 | 13.1 | 13.3 | 13.6 | 12.8 | 11.6 | 10.9 | 10.5 | 11.0 | 11.5 | 11.2 | 9.5 | Monthly max. = | | 13.6 |
| Min. | -20.7 | -22.1 | -22.5 | -22.4 | -22.3 | -23.5 | -23.9 | -23.6 | -21.8 | -18.3 | -19.9 | -16.2 | -16.1 | -15.3 | -15.6 | -16.0 | -16.5 | -17.6 | -17.6 | -17.0 | -19.1 | -19.3 | -19.7 | -20.6 | Monthly min. = | | -23.9 |

TOTAL NUMBER OF DATA HOURS IN MONTH: 718
Number of hours of bad or missing data: 12
Current % recovery = 98.3
***** designates missing or lost data

N/A: insufficient data available for calculation (a minimum of 75% is required)

table created at 13:23, 1/14/1994

MONTHLY SUMMARY
SIGMA THETA
(Degrees)
INPUT FILE: octdec1.met

Bechtel Environmental, Inc.

Met Data from EMF Site 1
NOVEMBER 1993

| Day \ Hour | 1 | 2 | 3 | 4 | 5 | 6 | 7 | 8 | 9 | 10 | 11 | 12 | 13 | 14 | 15 | 16 | 17 | 18 | 19 | 20 | 21 | 22 | 23 | 24 | Mean | Max. | Min. |
|---|---|---|---|---|---|---|---|---|---|---|---|---|---|---|---|---|---|---|---|---|---|---|---|---|---|---|---|
| 1 | 11. | 10. | 9. | 9. | 9. | 9. | 10. | 9. | 9. | 11. | 13. | 20. | 22. | 15. | 13. | 13. | 10. | 10. | 8. | 10. | 8. | 10. | 8. | 13. | N/A | 22. | 8. |
| 2 | 13. | 13. | 12. | 44. | 26. | 20. | 5. | 20. | 47. | 14. | 15. | 12. | 12. | 12. | 12. | 11. | 13. | 13. | 14. | 7. | 9. | 8. | 8. | 13. | N/A | 47. | 5. |
| 3 | 11. | 17. | 11. | 10. | 8. | 18. | 23. | 15. | 14. | 15. | 14. | 14. | 12. | 10. | 10. | 9. | 8. | 8. | 9. | 10. | 12. | 18. | 39. | 58. | N/A | 58. | 8. |
| 4 | 20. | 17. | 49. | 10. | 9. | 9. | 10. | 10. | 10. | 12. | 13. | 12. | 13. | 14. | 12. | 13. | 11. | 15. | 23. | 19. | 17. | 25. | 27. | 9. | N/A | 49. | 9. |
| 5 | 23. | 9. | 19. | 35. | 37. | 12. | 13. | 8. | 10. | 11. | 12. | 14. | 22. | ***** | ***** | 20. | 16. | 13. | 14. | 13. | 13. | 18. | 12. | 16. | N/A | 37. | 8. |
| 6 | 6. | 4. | 7. | 4. | 6. | 38. | 23. | 34. | 31. | 41. | 33. | 40. | 18. | 16. | 15. | 15. | 12. | 13. | 15. | 13. | 15. | 18. | 18. | 22. | N/A | 41. | 4. |
| 7 | 61. | 44. | 40. | 21. | 7. | 17. | 10. | 30. | 47. | 43. | 45. | 15. | 14. | 13. | 15. | 11. | 12. | 14. | 14. | 13. | 17. | 14. | 7. | 5. | N/A | 61. | 5. |
| 8 | 4. | 7. | 5. | 5. | 22. | 50. | 9. | 4. | 53. | 39. | 40. | 26. | 14. | 15. | 16. | 15. | 14. | 12. | 14. | 27. | 8. | 6. | 4. | 4. | N/A | 53. | 4. |
| 9 | 6. | 44. | 37. | 7. | 6. | 29. | 25. | 27. | 19. | 12. | 20. | 23. | 18. | 18. | 13. | 14. | 48. | 29. | 11. | 8. | 10. | 26. | 10. | 15. | N/A | 48. | 6. |
| 10 | 9. | 42. | 22. | 19. | 14. | 16. | 8. | 13. | 10. | 10. | 15. | 26. | 80. | 28. | 10. | 30. | 30. | 14. | 32. | 7. | 31. | 40. | 64. | 60. | N/A | 80. | 7. |
| 11 | 37. | 33. | 46. | 50. | 40. | 26. | 36. | 29. | 34. | 25. | 27. | 25. | 45. | 51. | 20. | 11. | 5. | 27. | 40. | 15. | 13. | 12. | 13. | 14. | N/A | 51. | 5. |
| 12 | 13. | 12. | 13. | 11. | 12. | 12. | 11. | 12. | 28. | 14. | 14. | 13. | 14. | 15. | 15. | 13. | 13. | 11. | 13. | 12. | 13. | 11. | 11. | 10. | N/A | 28. | 10. |
| 13 | 11. | 12. | 12. | 11. | 11. | 12. | 13. | 13. | 13. | 15. | 13. | 14. | 14. | 16. | 19. | 16. | 14. | 9. | 8. | 18. | 15. | 16. | 50. | 28. | N/A | 50. | 8. |
| 14 | 24. | 19. | 15. | 12. | 46. | 71. | 25. | 20. | 30. | 20. | 17. | 16. | 19. | 23. | 24. | 23. | 11. | 12. | 13. | 12. | 13. | 14. | 15. | 27. | N/A | 71. | 11. |
| 15 | 17. | 8. | 5. | 4. | 4. | 4. | 4. | 4. | 38. | 18. | 44. | 52. | 77. | 12. | 19. | 15. | 14. | 28. | 13. | 7. | 15. | 5. | 6. | 7. | N/A | 77. | 4. |
| 16 | 6. | 6. | 6. | 6. | 5. | 6. | 7. | 6. | 29. | 37. | 8. | 11. | 19. | 17. | 18. | 14. | 13. | 9. | 6. | 6. | 10. | 8. | 8. | 8. | N/A | 37. | 5. |
| 17 | 7. | 7. | 51. | 12. | 17. | 15. | 8. | 11. | 14. | 27. | 38. | 20. | 43. | 15. | 14. | 14. | 13. | 13. | 12. | 13. | 12. | 11. | 12. | 13. | N/A | 51. | 7. |
| 18 | 13. | 13. | 14. | 15. | 13. | 15. | 14. | 14. | 13. | 14. | 14. | 13. | 14. | 13. | 12. | 28. | 10. | 10. | 23. | 22. | 15. | 12. | 12. | 13. | N/A | 28. | 10. |
| 19 | 12. | 11. | 13. | 33. | 7. | 8. | 5. | 6. | 8. | 31. | 16. | 19. | 15. | 15. | 15. | 14. | 10. | 66. | 44. | 9. | 4. | 4. | 37. | 6. | N/A | 66. | 4. |
| 20 | 7. | 21. | 19. | 25. | 48. | 13. | 20. | 21. | 58. | 29. | 19. | 42. | 55. | 57. | 61. | 35. | 46. | 38. | 6. | 7. | 6. | 6. | 6. | 6. | N/A | 61. | 6. |
| 21 | 5. | 6. | 35. | 24. | 67. | 61. | 32. | 20. | 34. | 13. | 20. | 41. | 12. | 10. | 17. | 8. | 7. | 8. | 9. | 8. | 15. | 14. | 15. | 13. | N/A | 67. | 5. |
| 22 | 13. | 13. | 19. | 16. | 13. | 14. | 13. | 16. | 15. | 13. | 14. | 13. | 14. | 11. | 13. | 14. | 19. | 14. | 15. | ***** | ***** | 13. | 10. | 14. | N/A | 19. | 10. |
| 23 | 13. | 13. | 13. | 14. | 13. | 16. | 19. | 15. | 12. | 14. | 14. | 12. | 12. | 12. | 12. | 11. | 11. | 12. | 13. | 12. | 12. | 12. | 13. | 11. | N/A | 19. | 11. |
| 24 | 12. | 13. | 12. | 12. | 12. | 12. | 11. | 12. | 11. | 12. | 11. | 12. | 13. | 13. | 14. | 11. | 13. | 12. | 16. | 29. | 22. | 55. | 57. | 39. | N/A | 57. | 11. |
| 25 | 16. | 53. | 22. | ***** | 7. | 34. | 59. | 14. | 21. | 58. | 60. | 15. | 13. | 15. | 10. | 8. | 17. | 61. | 21. | 12. | 7. | 28. | 27. | 52. | N/A | 61. | 7. |
| 26 | 38. | 40. | 10. | 42. | 29. | 71. | 53. | 58. | 29. | 34. | 11. | 15. | 22. | ***** | ***** | 30. | 21. | 13. | 62. | 62. | 40. | 51. | 33. | 11. | N/A | 71. | 10. |
| 27 | 44. | 11. | 55. | 19. | 15. | 53. | 15. | 25. | 50. | 33. | 15. | 25. | 26. | 25. | 18. | 23. | 13. | 7. | 22. | 28. | 25. | 31. | 15. | 27. | N/A | 55. | 7. |
| 28 | 16. | ***** | 27. | 25. | 13. | 23. | 27. | 33. | 42. | 27. | 54. | 20. | 15. | 16. | 31. | 40. | 22. | 12. | 38. | 25. | 49. | 37. | 50. | 16. | N/A | 54. | 12. |
| 29 | 26. | 7. | 23. | 36. | 7. | 35. | 41. | 53. | 29. | 10. | 39. | 0. | ***** | ***** | 26. | 57. | 12. | 20. | 20. | 15. | 14. | 11. | 9. | 25. | N/A | 57. | 0. |
| 30 | 35. | 30. | 39. | 25. | 10. | 52. | 9. | 10. | 44. | 26. | 12. | 15. | 16. | 13. | 14. | 13. | 13. | 12. | ***** | ***** | 13. | 13. | 13. | 13. | N/A | 52. | 9. |
| Mean | N/A | N/A | N/A | N/A | N/A | N/A | N/A | N/A | N/A | N/A | N/A | N/A | N/A | N/A | N/A | N/A | N/A | N/A | N/A | N/A | N/A | N/A | N/A | N/A | Monthly mean = | | N/A |
| Max. | 61. | 53. | 55. | 50. | 67. | 71. | 59. | 58. | 58. | 58. | 60. | 52. | 80. | 57. | 61. | 57. | 48. | 66. | 62. | 62. | 49. | 55. | 64. | 60. | Monthly max. = | | 80. |
| Min. | 4. | 4. | 5. | 4. | 4. | 4. | 4. | 4. | 8. | 10. | 8. | 0. | 12. | 10. | 10. | 8. | 5. | 7. | 6. | 6. | 4. | 4. | 4. | 4. | Monthly min. = | | 0. |

TOTAL NUMBER OF DATA HOURS IN MONTH: 718
Number of hours of bad or missing data: 12
**** designates missing or lost data

Current % recovery = 98.3

N/A: A sigma theta mean is not physically meaningful.

table created at 13:23, 1/14/1994

MONTHLY SUMMARY
REL. HUMID.
(Degrees)
INPUT FILE: octdec1.met

Bechtel Environmental, Inc.

Met Data from EMF Site 1
NOVEMBER 1993

| Day | Hour 1 | 2 | 3 | 4 | 5 | 6 | 7 | 8 | 9 | 10 | 11 | 12 | 13 | 14 | 15 | 16 | 17 | 18 | 19 | 20 | 21 | 22 | 23 | 24 | Mean | Max. | Min. |
|---|---|---|---|---|---|---|---|---|---|---|---|---|---|---|---|---|---|---|---|---|---|---|---|---|---|---|---|
| 1 | 53.6 | 56.1 | 57.2 | 60.4 | 60.3 | 63.3 | 70.3 | 75.1 | 75.9 | 67.4 | 59.0 | 49.8 | 45.0 | 35.0 | 34.0 | 34.0 | 34.0 | 35.0 | 41.0 | 41.0 | 43.0 | 46.0 | 49.0 | 47.0 | 51.3 | 75.9 | 34.0 |
| 2 | 46.0 | 45.0 | 49.0 | 55.0 | 55.0 | 56.0 | 58.0 | 42.0 | 34.0 | 32.0 | 28.0 | 26.0 | 25.0 | 22.0 | 22.0 | 20.0 | 22.0 | 26.0 | 30.0 | 28.0 | 30.0 | 30.0 | 30.0 | 30.0 | 35.0 | 58.0 | 20.0 |
| 3 | 30.0 | 30.0 | 32.0 | 32.0 | 29.0 | 28.0 | 26.0 | 25.0 | 24.0 | 30.0 | 34.0 | 28.0 | 25.0 | 26.0 | 25.0 | ***** | 28.0 | 32.0 | 35.0 | 38.0 | 41.0 | 46.0 | 52.0 | 54.0 | 32.6 | 54.0 | 24.0 |
| 4 | 58.0 | 60.0 | 50.0 | 49.0 | 50.0 | 56.0 | 62.0 | 66.0 | 68.0 | 62.0 | 58.0 | 61.0 | 48.0 | 42.0 | 40.0 | 39.0 | 38.0 | 38.0 | 60.0 | 68.0 | 74.0 | 96.0 | 94.0 | 94.0 | 59.6 | 96.0 | 38.0 |
| 5 | 89.0 | 84.0 | 86.0 | 88.0 | 88.0 | 82.0 | 82.0 | 74.0 | 68.0 | 68.0 | 64.0 | 55.0 | 46.4 | ***** | ***** | 33.3 | 33.9 | 40.7 | 42.5 | 46.8 | 47.6 | 45.8 | 45.1 | 49.0 | 61.8 | 89.0 | 33.3 |
| 6 | 56.4 | 56.2 | 57.5 | 54.9 | 59.9 | 67.3 | 76.0 | 85.7 | 74.9 | 56.3 | 45.7 | 34.2 | 27.6 | 23.2 | 21.9 | 20.4 | 20.0 | 24.2 | 28.0 | 29.0 | 29.5 | 36.6 | 35.8 | 40.3 | 44.2 | 85.7 | 20.0 |
| 7 | 51.9 | 61.9 | 63.8 | 55.6 | 55.7 | 59.2 | 60.4 | 60.9 | 63.3 | 49.2 | 42.4 | 37.1 | 35.8 | 32.9 | 33.8 | 33.5 | 33.4 | 37.2 | 39.6 | 41.4 | 42.2 | 48.7 | 49.1 | 49.2 | 47.4 | 63.8 | 32.9 |
| 8 | 51.3 | 53.2 | 57.3 | 58.9 | 64.4 | 72.2 | 68.8 | 64.6 | 61.6 | 53.8 | 45.5 | 41.1 | 39.3 | 37.3 | 27.1 | 22.4 | 23.3 | 26.4 | 27.9 | 32.1 | 38.1 | 39.6 | 42.9 | 44.2 | 45.6 | 72.2 | 22.4 |
| 9 | 44.0 | 50.3 | 63.3 | 56.8 | 58.3 | 59.7 | 76.1 | 77.4 | 61.2 | 43.9 | 38.8 | 35.2 | 30.5 | 28.0 | 26.5 | 24.6 | 25.5 | 26.0 | 22.1 | 20.5 | 18.0 | 39.6 | 44.9 | 50.4 | 42.6 | 77.4 | 18.0 |
| 10 | 54.0 | 54.0 | 53.0 | 56.0 | 54.6 | 56.9 | 58.3 | 60.6 | 62.1 | 60.0 | 53.6 | 44.1 | 38.9 | 33.1 | 27.1 | 26.0 | 30.9 | 44.7 | 44.8 | 51.4 | 51.8 | 60.6 | 65.8 | 68.7 | 50.5 | 68.7 | 26.0 |
| 11 | 70.0 | 75.5 | 78.6 | 80.4 | 82.3 | 84.6 | 88.1 | 78.2 | 65.9 | 57.4 | 50.8 | 44.8 | 34.0 | 28.8 | 28.9 | 30.5 | 32.5 | 37.2 | 42.4 | 32.8 | 30.9 | 31.1 | 32.8 | 33.1 | 52.2 | 88.1 | 28.8 |
| 12 | 37.1 | 37.0 | 42.3 | 43.7 | 42.4 | 42.1 | 44.5 | 46.0 | 47.2 | 44.4 | 42.4 | 40.4 | 38.3 | 35.9 | 37.7 | 38.8 | 41.2 | 45.1 | 46.0 | 50.7 | 52.9 | 53.6 | 54.3 | 54.4 | 44.1 | 54.4 | 35.9 |
| 13 | 56.9 | 63.0 | 66.6 | 67.3 | 69.8 | 71.9 | 72.7 | 71.8 | 72.1 | 69.8 | 69.8 | 70.0 | 72.4 | 70.9 | 66.1 | 60.7 | 62.7 | 68.1 | 70.6 | 75.6 | 74.5 | 73.5 | 80.3 | 88.2 | 70.2 | 88.2 | 56.9 |
| 14 | 75.0 | 64.4 | 64.2 | 63.8 | 66.4 | 63.2 | 57.7 | 56.8 | 55.3 | 52.1 | 47.4 | 40.9 | 36.3 | 30.2 | 25.2 | 23.6 | 31.4 | 41.0 | 46.7 | 50.3 | 54.6 | 57.8 | 53.9 | 55.3 | 50.6 | 75.0 | 23.6 |
| 15 | 60.8 | 60.1 | 59.2 | 64.4 | 66.4 | 67.8 | 68.7 | 67.4 | 58.3 | 58.8 | 49.6 | 37.0 | 31.6 | 29.0 | 23.9 | 17.5 | 19.1 | 26.1 | 30.7 | 35.1 | 39.0 | 39.0 | 37.9 | 36.4 | 45.2 | 68.7 | 17.5 |
| 16 | 36.2 | 39.0 | 40.5 | 42.0 | 45.1 | 45.0 | 44.5 | 44.8 | 46.1 | 44.8 | 39.8 | 37.1 | 33.8 | 32.1 | 31.8 | 31.3 | 32.4 | 34.0 | 37.4 | 36.4 | 35.6 | 34.0 | 35.2 | 36.0 | 38.1 | 46.1 | 31.3 |
| 17 | 36.1 | 36.9 | 47.3 | 61.0 | 70.2 | 82.9 | 81.9 | 84.8 | 82.6 | 66.1 | 45.9 | 39.8 | 32.7 | 29.5 | 29.9 | 33.6 | 35.0 | 36.5 | 36.8 | 40.7 | 37.7 | 35.4 | 35.4 | 35.9 | 48.1 | 84.8 | 29.5 |
| 18 | 31.3 | 32.1 | 33.0 | 39.1 | 44.3 | 45.7 | 45.5 | 46.9 | 65.8 | 90.5 | 83.5 | 81.5 | 59.8 | 47.7 | 40.1 | 37.7 | 30.9 | 30.3 | 35.7 | 35.8 | 49.0 | 57.4 | 60.2 | 60.0 | 49.3 | 90.5 | 30.3 |
| 19 | 58.3 | 60.5 | 61.9 | 62.9 | 66.8 | 68.5 | 76.6 | 75.6 | 70.7 | 58.5 | 53.3 | 49.7 | 46.5 | 43.2 | 41.4 | 42.5 | 44.6 | 49.7 | 51.9 | 55.7 | 57.5 | 59.1 | 57.3 | 60.8 | 57.2 | 76.6 | 41.4 |
| 20 | 63.7 | 63.5 | 71.8 | 74.2 | 83.6 | 81.3 | 78.6 | 91.7 | 91.5 | 70.0 | 60.8 | 50.3 | 41.6 | 37.4 | 35.3 | 38.4 | 39.2 | 44.4 | 45.7 | 46.4 | 46.9 | 46.8 | 46.9 | 47.1 | 58.2 | 91.7 | 35.3 |
| 21 | 46.7 | 44.6 | 48.6 | 66.7 | 56.5 | 63.1 | 67.2 | 74.1 | 67.0 | 62.9 | 49.3 | 31.0 | 26.7 | 24.6 | 22.1 | 24.7 | 27.5 | 29.1 | 28.9 | 28.2 | 20.1 | 23.7 | 30.4 | 45.1 | 42.0 | 74.1 | 20.1 |
| 22 | 48.5 | 61.3 | 81.5 | 83.0 | 77.6 | 71.5 | 63.0 | 63.1 | 65.6 | 65.2 | 60.0 | 57.8 | 57.5 | 59.4 | 59.2 | 68.5 | 83.5 | 84.0 | 86.0 | 88.0 | 89.0 | 90.0 | 91.0 | 91.3 | 72.7 | 91.3 | 48.5 |
| 23 | 86.6 | 83.0 | 77.8 | 80.2 | 78.8 | 83.6 | 86.4 | 89.5 | 80.7 | 83.0 | 84.1 | 97.3 | 97.0 | 96.2 | 98.9 | 96.0 | 94.6 | 96.9 | 84.6 | 79.7 | 81.7 | 79.0 | 78.7 | 82.9 | 86.5 | 98.9 | 77.8 |
| 24 | 90.5 | 97.5 | 98.8 | 96.5 | 95.5 | 94.9 | 93.3 | 92.2 | 91.6 | 91.9 | 91.8 | 90.1 | 89.5 | 89.2 | 91.5 | 90.5 | 89.9 | 88.5 | 86.8 | 92.0 | 90.9 | 90.5 | 86.7 | 87.7 | 91.6 | 98.8 | 86.7 |
| 25 | 85.1 | 83.5 | 83.4 | 82.3 | 83.0 | 81.5 | 80.7 | 81.4 | 79.5 | 81.8 | 88.2 | 81.2 | 78.5 | 75.7 | 77.5 | 79.4 | 79.7 | 85.3 | 85.3 | 81.6 | 84.3 | 86.9 | 84.2 | 83.8 | 82.2 | 88.2 | 75.7 |
| 26 | 81.8 | 80.7 | 81.2 | 81.6 | 80.9 | 78.1 | 78.3 | 78.5 | 77.7 | 78.7 | 78.5 | 81.1 | 83.1 | ***** | ***** | 72.7 | 80.0 | 88.0 | 88.1 | 85.9 | 84.1 | 85.7 | 82.8 | 84.6 | 81.5 | 88.1 | 72.7 |
| 27 | 83.5 | 82.0 | 80.6 | 80.6 | 81.1 | 81.0 | 80.6 | 80.6 | 81.6 | 82.9 | 85.3 | 85.8 | 85.8 | 79.3 | 76.7 | 79.4 | 81.7 | 81.0 | 83.3 | 83.4 | 88.9 | 88.5 | 87.5 | 88.5 | 82.9 | 88.9 | 76.7 |
| 28 | 92.3 | 89.7 | 82.0 | 84.9 | 81.4 | 75.9 | 75.6 | 86.5 | 85.5 | 82.4 | 77.1 | 72.5 | 77.7 | 78.0 | 79.4 | 76.5 | 79.2 | 84.5 | 80.0 | 70.9 | 74.3 | 83.2 | 86.2 | 84.2 | 80.8 | 92.3 | 70.9 |
| 29 | 88.0 | 81.8 | 81.1 | 91.3 | 92.0 | 79.7 | 65.9 | 85.5 | 66.1 | 51.6 | 46.4 | 45.7 | 62.1 | 67.3 | 70.2 | 68.1 | 70.2 | 81.8 | 85.5 | 85.8 | 84.3 | 82.5 | 88.7 | 85.3 | 75.3 | 92.0 | 45.7 |
| 30 | 85.7 | 92.0 | 93.9 | 93.4 | 94.7 | 98.0 | 89.2 | 86.9 | 78.5 | 75.4 | 80.6 | 95.9 | 94.6 | 94.0 | 94.0 | 93.0 | 82.6 | 74.9 | 71.5 | 71.4 | 68.7 | 65.9 | 64.2 | 67.2 | 83.6 | 98.0 | 64.2 |
| Mean | 61.6 | 62.6 | 64.8 | 66.9 | 67.8 | 68.7 | 69.2 | 70.5 | 67.4 | 63.0 | 58.5 | 54.7 | 51.4 | 47.4 | 46.0 | 46.8 | 47.6 | 51.2 | 53.2 | 54.1 | 55.3 | 58.4 | 59.4 | 61.2 | Monthly mean = | | 58.7 |
| Max. | 92.3 | 97.5 | 98.8 | 96.5 | 95.5 | 98.0 | 93.3 | 92.2 | 91.6 | 91.9 | 91.8 | 97.3 | 97.0 | 96.2 | 98.9 | 96.0 | 94.6 | 96.9 | 88.1 | 92.0 | 90.9 | 96.0 | 94.0 | 94.0 | Monthly max. = | | 98.9 |
| Min. | 30.0 | 30.0 | 32.0 | 32.0 | 29.0 | 28.0 | 26.0 | 25.0 | 24.0 | 30.0 | 28.0 | 26.0 | 25.0 | 22.0 | 21.9 | 17.5 | 19.1 | 24.2 | 22.1 | 20.5 | 18.0 | 23.7 | 30.0 | 30.0 | Monthly min. = | | 17.5 |

TOTAL NUMBER OF DATA HOURS IN MONTH: 718
Number of hours of bad or missing data: 5
Current % recovery = 99.3
**** designates missing or lost data

N/A: insufficient data available for calculation (a minimum of 75% is required)

table created at 13:23, 1/14/1994

MONTHLY SUMMARY
WIND SPEED
(Miles Per Hour)
INPUT FILE: octdec1.met

Bechtel Environmental, Inc.

Met Data from EMF Site 1
DECEMBER 1993

| Day \ Hour | 1 | 2 | 3 | 4 | 5 | 6 | 7 | 8 | 9 | 10 | 11 | 12 | 13 | 14 | 15 | 16 | 17 | 18 | 19 | 20 | 21 | 22 | 23 | 24 | Mean | Max. | Min. |
|---|---|---|---|---|---|---|---|---|---|---|---|---|---|---|---|---|---|---|---|---|---|---|---|---|---|---|---|
| 1 | 19.2 | 15.9 | 9.7 | 9.8 | 11.7 | 12.5 | 10.0 | 10.4 | 8.3 | 11.3 | 9.2 | 12.4 | 11.3 | 16.4 | 18.1 | 19.3 | 19.3 | 19.7 | 15.6 | 11.8 | 13.9 | 15.0 | 14.0 | 12.9 | 13.7 | 19.7 | 8.3 |
| 2 | 16.1 | 18.9 | 24.6 | 26.5 | 23.3 | 20.6 | 21.9 | 21.3 | 19.6 | 20.5 | 19.8 | 23.5 | 24.5 | 22.0 | 22.3 | 17.8 | 17.9 | 18.9 | 19.0 | 19.0 | 17.7 | 16.0 | 14.2 | 13.6 | 20.0 | 26.5 | 13.6 |
| 3 | 12.4 | 11.6 | 10.0 | 9.2 | 9.3 | 9.5 | 11.1 | 11.4 | 10.4 | 6.2 | 5.4 | 5.3 | 4.3 | 4.2 | 3.9 | 10.8 | 10.8 | 12.9 | 20.1 | 19.0 | 22.4 | 21.4 | 18.8 | 14.9 | 11.5 | 22.4 | 3.9 |
| 4 | 11.0 | 13.3 | 16.1 | 13.2 | 13.9 | 13.3 | 9.1 | 18.2 | 25.3 | 15.7 | 15.2 | 22.9 | 22.3 | 23.3 | 27.1 | 28.7 | 28.8 | 25.0 | 23.3 | 22.5 | 19.8 | 14.3 | 16.2 | 17.4 | 19.0 | 28.8 | 9.1 |
| 5 | 17.6 | 16.0 | 17.9 | 17.6 | 14.0 | 8.5 | 8.6 | 8.6 | 10.4 | 10.6 | 8.7 | 2.9 | 6.6 | 4.9 | 3.9 | 3.6 | 2.2 | 1.5 | 1.3 | 2.5 | 2.3 | 2.6 | 2.4 | 2.3 | 7.4 | 17.9 | 1.3 |
| 6 | 2.6 | 3.0 | 4.3 | 3.7 | 4.3 | 4.6 | 3.8 | 3.3 | 5.6 | 3.8 | 4.5 | 7.1 | 6.7 | 6.5 | 14.3 | 16.3 | 16.7 | 15.1 | 16.0 | 12.7 | 14.0 | 12.0 | 10.9 | 14.1 | 8.6 | 16.7 | 2.6 |
| 7 | 10.8 | 5.6 | 3.6 | 3.5 | 2.2 | 5.3 | 3.6 | 3.0 | 3.7 | 2.5 | 3.6 | 4.0 | 5.4 | 7.1 | 7.3 | 4.1 | 4.0 | 2.5 | 3.0 | 3.4 | 7.8 | 5.0 | 4.2 | 5.4 | 4.6 | 10.8 | 2.2 |
| 8 | 10.1 | 5.9 | 3.6 | 12.1 | 13.2 | 10.0 | 14.4 | 18.3 | 16.7 | 17.5 | 20.5 | 16.4 | 20.7 | 23.5 | 18.6 | 21.0 | 23.9 | 18.7 | 23.1 | 22.4 | 22.2 | 23.0 | 19.3 | 19.5 | 17.3 | 23.9 | 3.6 |
| 9 | 19.4 | 17.5 | 13.5 | 17.2 | 17.2 | 12.6 | 14.1 | 14.5 | 11.5 | 11.9 | 9.5 | 11.3 | 7.9 | 6.0 | 6.5 | 4.3 | 2.2 | 1.5 | 5.6 | 10.7 | 8.1 | 9.2 | 12.1 | 16.5 | 10.9 | 19.4 | 1.5 |
| 10 | 13.8 | 16.1 | 14.4 | 14.3 | 14.3 | 12.8 | 8.8 | 6.4 | ***** | 4.0 | 4.2 | 3.8 | 4.6 | 9.6 | 13.8 | 12.7 | 6.8 | 11.5 | 11.9 | 12.1 | 8.0 | 7.1 | 4.2 | 6.1 | 9.6 | 16.1 | 3.8 |
| 11 | 8.6 | 5.8 | 5.6 | ***** | 6.1 | ***** | 4.9 | ***** | ***** | 4.6 | 4.3 | 5.0 | 8.4 | 8.6 | 13.9 | 12.5 | 8.2 | 12.8 | 13.9 | 4.5 | 6.1 | 17.7 | 19.7 | 19.2 | 9.5 | 19.7 | 4.3 |
| 12 | 13.1 | ***** | ***** | ***** | ***** | ***** | ***** | ***** | ***** | ***** | ***** | ***** | ***** | 24.0 | 22.8 | 21.4 | 19.0 | 18.4 | 16.8 | 17.6 | 16.6 | 19.0 | 15.4 | 15.1 | ***** | 24.0 | 13.1 |
| 13 | 12.6 | 11.2 | 8.8 | 13.5 | 11.2 | 10.3 | 10.7 | 6.4 | 6.7 | 3.8 | 4.3 | 4.9 | 5.5 | 5.6 | 5.1 | 1.9 | 3.4 | 8.1 | 10.7 | 7.6 | 3.9 | 4.7 | 4.3 | ***** | 7.2 | 13.5 | 1.9 |
| 14 | ***** | ***** | ***** | ***** | ***** | ***** | ***** | ***** | ***** | 3.0 | 2.2 | 3.2 | 2.4 | 2.2 | 3.6 | 4.3 | 2.4 | ***** | ***** | ***** | ***** | ***** | 3.2 | 3.7 | ***** | 4.3 | 2.2 |
| 15 | ***** | 4.9 | ***** | ***** | 15.4 | 13.9 | 14.2 | 14.6 | 15.4 | 16.0 | ***** | 21.3 | 20.1 | 19.6 | 18.7 | 16.9 | 19.2 | 17.1 | 19.6 | 15.9 | 14.9 | 16.1 | 15.4 | 17.5 | 16.3 | 21.3 | 4.9 |
| 16 | 15.8 | 16.0 | 18.2 | 18.7 | 19.9 | 16.5 | 17.6 | 16.5 | 16.3 | 14.9 | 15.7 | 16.6 | 17.6 | 15.6 | 15.3 | 13.9 | 9.0 | 9.3 | 12.8 | 11.7 | 11.2 | 8.2 | 8.2 | 6.8 | 14.3 | 19.9 | 6.8 |
| 17 | 3.4 | 6.6 | 5.5 | 4.5 | 3.7 | 5.5 | 5.3 | 4.5 | 2.9 | 2.8 | 4.2 | 3.9 | 3.9 | 3.6 | 3.5 | 5.0 | 2.9 | 2.2 | 4.2 | 6.5 | 3.8 | 6.1 | 3.8 | 1.7 | 4.2 | 6.6 | 1.7 |
| 18 | 2.4 | 4.1 | 2.0 | 1.8 | 3.7 | 2.5 | 4.2 | 3.8 | 3.1 | 1.5 | 1.9 | 2.1 | 2.5 | 2.9 | 4.3 | 2.9 | 2.3 | 2.6 | 6.1 | 8.2 | 7.2 | 3.5 | 3.7 | 7.5 | 3.6 | 8.2 | 1.5 |
| 19 | 4.2 | 4.8 | 3.4 | 2.8 | 2.9 | 9.2 | 8.5 | 7.5 | 9.5 | 6.7 | 5.6 | 5.1 | 7.6 | 8.4 | 8.0 | 9.4 | 12.4 | 9.4 | 8.2 | 4.9 | 4.8 | 6.7 | 9.6 | 7.8 | 7.0 | 12.4 | 2.8 |
| 20 | 7.2 | 4.7 | 3.5 | 3.9 | 6.1 | 7.6 | 8.0 | 5.4 | 5.9 | 6.5 | 4.5 | 3.9 | 5.5 | 11.0 | 7.9 | 4.9 | 4.6 | 3.8 | 4.1 | 4.9 | 4.3 | 2.7 | 1.9 | 4.2 | 5.3 | 11.0 | 1.9 |
| 21 | 4.2 | 2.7 | 4.4 | 4.7 | 3.8 | 5.6 | 4.9 | 5.6 | 7.1 | 8.9 | 8.0 | 7.2 | 6.1 | 5.9 | 5.7 | 4.1 | 4.4 | 6.7 | 10.4 | 12.5 | 10.1 | 9.6 | 9.4 | 12.0 | 6.8 | 12.5 | 2.7 |
| 22 | 12.1 | 13.3 | 10.5 | 10.1 | 8.6 | 6.7 | 5.6 | 6.9 | 3.5 | 2.6 | 4.8 | 3.7 | 3.8 | 3.3 | 6.5 | 2.7 | 5.2 | 8.5 | 10.2 | 9.0 | 6.1 | 8.3 | 6.7 | 7.9 | 6.9 | 13.3 | 2.6 |
| 23 | 7.6 | 4.7 | 2.5 | 4.3 | 4.3 | 2.7 | 4.4 | 2.1 | 3.9 | 2.0 | 2.6 | 8.0 | 9.6 | 13.2 | 12.8 | 8.3 | 6.7 | 6.6 | 7.7 | 8.0 | 7.9 | 7.3 | 9.5 | 9.2 | 6.5 | 13.2 | 2.0 |
| 24 | 4.4 | 3.4 | 3.6 | 3.1 | 4.1 | 6.7 | 2.4 | 3.3 | 2.1 | 2.5 | 3.1 | 3.3 | 3.5 | 4.0 | 4.7 | 4.7 | 3.8 | 2.9 | 2.5 | 2.3 | 1.7 | 2.6 | 5.1 | 4.8 | 3.5 | 6.7 | 1.7 |
| 25 | 4.7 | 3.1 | 3.9 | 3.3 | 2.6 | 2.6 | 2.2 | 2.6 | 1.6 | 2.6 | 2.5 | 3.8 | 4.0 | 4.7 | 5.2 | 2.3 | 4.5 | 1.8 | 2.8 | 2.1 | 4.4 | 5.2 | 4.0 | 6.0 | 3.4 | 6.0 | 1.6 |
| 26 | 6.2 | 2.2 | 5.0 | 2.5 | 4.9 | 2.0 | 3.1 | 3.1 | 2.8 | 3.8 | 3.6 | 4.8 | 4.5 | 3.0 | 2.7 | 2.2 | 2.5 | 2.5 | 6.7 | 6.2 | 2.0 | 3.5 | 5.8 | 3.2 | 3.7 | 6.7 | 2.0 |
| 27 | 5.3 | 4.3 | 2.4 | 5.8 | 5.3 | 5.5 | 4.5 | 4.8 | 4.9 | 3.4 | 5.4 | 7.9 | 9.5 | 7.8 | 9.9 | 9.9 | 8.5 | 7.7 | 6.9 | 4.1 | 2.6 | 3.7 | 3.5 | 3.2 | 5.7 | 9.9 | 2.4 |
| 28 | 5.9 | 5.2 | 3.8 | 3.1 | 2.7 | 3.6 | 2.4 | 2.3 | 3.4 | 2.1 | 4.2 | 2.9 | 3.2 | 4.0 | 5.3 | 5.0 | 4.5 | 4.7 | 3.7 | 3.6 | 5.6 | 4.5 | 5.7 | 5.2 | 4.0 | 5.9 | 2.1 |
| 29 | 6.5 | 5.9 | 7.3 | 8.0 | 6.2 | 7.3 | 7.5 | 5.1 | 2.5 | 4.6 | 4.7 | 4.2 | 11.0 | 6.7 | 6.8 | 6.1 | 3.6 | 4.2 | 4.8 | 1.8 | 1.7 | 4.5 | 14.2 | 5.0 | 5.8 | 14.2 | 1.7 |
| 30 | 5.8 | 3.0 | 3.1 | 3.6 | 2.3 | 4.4 | 2.9 | 5.2 | 2.6 | 4.2 | 4.8 | 3.6 | 3.6 | 5.8 | 5.0 | 3.8 | 5.2 | 2.6 | 5.2 | 8.0 | 2.4 | 3.2 | 14.1 | 12.1 | 4.9 | 14.1 | 2.3 |
| 31 | 14.5 | 8.0 | 5.9 | 18.2 | 20.3 | 20.4 | 18.0 | 17.6 | 19.6 | 20.2 | 18.2 | 17.6 | 14.1 | 11.7 | 10.9 | 11.6 | 8.4 | 7.3 | 10.0 | 10.2 | 10.3 | 16.7 | 16.6 | 17.5 | 14.3 | 20.4 | 5.9 |
| Mean | 9.6 | 8.2 | 7.8 | 8.9 | 8.9 | 8.7 | 8.2 | 8.3 | 8.3 | 7.4 | 7.1 | 8.1 | 8.7 | 9.5 | 10.1 | 9.4 | 8.8 | 8.9 | 10.2 | 9.5 | 8.8 | 9.3 | 9.6 | 9.7 | Monthly mean = | | 8.8 |
| Max. | 19.4 | 18.9 | 24.6 | 26.5 | 23.3 | 20.6 | 21.9 | 21.3 | 25.3 | 20.5 | 20.5 | 23.5 | 24.5 | 24.0 | 27.1 | 28.7 | 28.8 | 25.0 | 23.3 | 22.5 | 22.4 | 23.0 | 19.7 | 19.5 | Monthly max. = | | 28.8 |
| Min. | 2.4 | 2.2 | 2.0 | 1.8 | 2.2 | 2.0 | 2.2 | 2.1 | 1.6 | 1.5 | 1.9 | 2.1 | 2.4 | 2.2 | 2.7 | 1.9 | 2.2 | 1.5 | 1.3 | 1.8 | 1.7 | 2.6 | 1.9 | 1.7 | Monthly min. = | | 1.3 |

TOTAL NUMBER OF DATA HOURS IN MONTH: 744
Number of hours of bad or missing data: 36
***** designates missing or lost data

Current % recovery = 95.2

N/A: insufficient data available for calculation (a minimum of 75% is required)

table created at 13:23, 1/14/1994

MONTHLY SUMMARY
WIND DIRECTION
(Degrees)
INPUT FILE: octdec1.met

Bechtel Environmental, Inc.

Met Data from EMF Site 1
DECEMBER 1993

| Day | Hour 1 | 2 | 3 | 4 | 5 | 6 | 7 | 8 | 9 | 10 | 11 | 12 | 13 | 14 | 15 | 16 | 17 | 18 | 19 | 20 | 21 | 22 | 23 | 24 | Mean | Max. | Min. |
|---|---|---|---|---|---|---|---|---|---|---|---|---|---|---|---|---|---|---|---|---|---|---|---|---|---|---|---|
| 1 | 234.0 | 239.0 | 246.0 | 233.0 | 215.0 | 217.0 | 203.0 | 200.0 | 171.0 | 156.0 | 193.0 | 202.0 | 194.0 | 140.0 | 141.0 | 139.0 | 137.0 | 137.0 | 149.0 | 146.0 | 181.0 | 139.0 | 163.0 | 176.0 | 181.3 | 246.0 | 137.0 |
| 2 | 207.0 | 230.0 | 244.0 | 244.0 | 245.0 | 242.0 | 246.0 | 235.0 | 240.0 | 235.0 | 237.0 | 243.0 | 255.0 | 255.0 | 256.0 | 253.0 | 242.0 | 236.0 | 233.0 | 232.0 | 231.0 | 234.0 | 232.0 | 237.0 | 239.3 | 256.0 | 207.0 |
| 3 | 243.0 | 239.0 | 231.0 | 225.0 | 128.0 | 107.0 | 114.0 | 120.0 | 119.0 | 103.0 | 55.0 | 6.0 | 30.0 | 39.0 | 63.0 | 130.0 | 135.0 | 134.0 | 135.0 | 129.0 | 132.0 | 135.0 | 132.0 | 132.0 | 125.7 | 243.0 | 6.0 |
| 4 | 123.0 | 136.0 | 140.0 | 127.0 | 126.0 | 117.0 | 158.0 | 158.0 | 139.0 | 176.0 | 192.0 | 221.0 | 235.0 | 231.0 | 244.0 | 248.0 | 251.0 | 250.0 | 248.0 | 251.0 | 255.0 | 254.0 | 241.0 | 237.0 | 198.2 | 255.0 | 117.0 |
| 5 | 235.0 | 233.0 | 225.0 | 218.0 | 221.0 | 186.0 | 134.0 | 117.0 | 121.0 | 120.0 | 128.0 | 189.0 | 17.0 | 33.0 | 44.0 | 48.0 | 70.0 | 27.0 | 41.0 | 32.0 | 23.0 | 43.0 | 58.0 | 29.0 | 108.0 | 235.0 | 17.0 |
| 6 | 41.0 | 10.0 | 339.0 | 25.0 | 339.0 | 306.0 | 308.0 | 37.0 | 284.0 | 301.0 | 307.0 | 66.0 | 117.0 | 297.0 | 266.0 | 247.0 | 238.0 | 235.0 | 246.0 | 243.0 | 235.0 | 234.0 | 236.0 | 217.0 | 305.6 | 339.0 | 10.0 |
| 7 | 226.0 | 27.0 | 51.0 | 3.0 | 102.0 | 310.0 | 98.0 | 339.0 | 297.0 | 20.0 | 355.0 | 13.0 | 345.0 | .0 | 13.0 | 11.0 | 86.0 | 58.0 | 353.0 | 91.0 | 142.0 | 5.0 | 349.0 | 104.0 | 21.6 | 355.0 | .0 |
| 8 | 133.0 | 127.0 | 310.0 | 172.0 | 151.0 | 155.0 | 165.0 | 143.0 | 145.0 | 140.0 | 132.0 | 148.0 | 142.0 | 140.0 | 156.0 | 138.0 | 136.0 | 165.0 | 179.0 | 180.0 | 212.0 | 266.0 | 252.0 | 235.0 | 171.7 | 310.0 | 127.0 |
| 9 | 207.0 | 210.0 | 221.0 | 236.0 | 242.0 | 230.0 | 220.0 | 232.0 | 218.0 | 216.0 | 214.0 | 224.0 | 268.0 | 288.0 | 288.0 | 322.0 | 8.0 | 321.0 | 114.0 | 141.0 | 170.0 | 151.0 | 134.0 | 125.0 | 208.3 | 322.0 | 8.0 |
| 10 | 131.0 | 129.0 | 129.0 | 128.0 | 123.0 | 116.0 | 129.0 | 290.0 | 300.0 | 307.0 | 353.0 | 11.0 | 359.0 | 157.0 | 179.0 | 161.0 | 136.0 | 133.0 | 149.0 | 141.0 | 195.0 | 285.0 | 29.0 | 304.0 | 182.2 | 359.0 | 11.0 |
| 11 | 282.0 | 292.0 | 287.0 | 294.0 | 287.0 | 301.0 | 291.0 | 301.0 | 296.0 | 330.0 | 320.0 | 354.0 | 99.0 | 79.0 | 78.0 | 103.0 | 158.0 | 150.0 | 142.0 | 134.0 | 151.0 | 195.0 | 189.0 | 210.0 | 221.8 | 354.0 | 78.0 |
| 12 | 243.0 | 214.0 | 225.0 | 240.0 | 235.0 | 233.0 | 242.0 | 253.0 | 243.0 | 244.0 | 242.0 | 248.0 | 246.0 | 246.0 | 244.0 | 250.0 | 250.0 | 240.0 | 237.0 | 234.0 | 230.0 | 235.0 | 233.0 | 231.0 | 239.1 | 253.0 | 214.0 |
| 13 | 229.0 | 225.0 | 147.0 | 124.0 | 119.0 | 129.0 | 120.0 | 116.0 | 113.0 | 322.0 | 27.0 | 43.0 | 36.0 | 18.0 | 12.0 | 19.0 | 45.0 | 126.0 | 139.0 | 191.0 | 333.0 | 53.0 | 65.0 | 293.0 | 36.8 | 333.0 | 12.0 |
| 14 | 21.0 | 88.0 | 42.0 | 305.0 | 350.0 | 313.0 | 295.0 | 297.0 | 323.0 | 324.0 | 352.0 | 351.0 | 44.0 | 118.0 | 92.0 | 52.0 | 15.0 | 64.0 | 92.0 | 331.0 | 74.0 | 69.0 | 335.0 | 307.0 | 13.9 | 352.0 | 15.0 |
| 15 | 302.0 | 301.0 | 232.0 | 269.0 | 244.0 | 237.0 | 230.0 | 231.0 | 238.0 | 238.0 | 242.0 | 247.0 | 245.0 | 245.0 | 245.0 | 257.0 | 256.0 | 254.0 | 252.0 | 241.0 | 239.0 | 239.0 | 242.0 | 247.0 | 248.9 | 302.0 | 230.0 |
| 16 | 239.0 | 245.0 | 246.0 | 247.0 | 248.0 | 252.0 | 264.0 | 260.0 | 255.0 | 258.0 | 250.0 | 247.0 | 248.0 | 243.0 | 257.0 | 251.0 | 264.0 | 271.0 | 235.0 | 235.0 | 244.0 | 246.0 | 234.0 | 240.0 | 249.1 | 271.0 | 234.0 |
| 17 | 267.0 | 270.0 | 268.0 | 270.0 | 95.0 | 101.0 | 109.0 | 73.0 | 11.0 | 356.0 | 19.0 | 23.0 | 35.0 | 56.0 | 60.0 | 116.0 | 96.0 | 88.0 | 104.0 | 113.0 | 117.0 | 116.0 | 82.0 | 77.0 | 46.8 | 356.0 | 11.0 |
| 18 | 307.0 | 298.0 | 89.0 | 80.0 | 309.0 | 87.0 | 114.0 | 298.0 | 304.0 | 46.0 | 353.0 | 355.0 | 15.0 | 94.0 | 96.0 | 46.0 | 14.0 | 90.0 | 115.0 | 121.0 | 127.0 | 319.0 | 101.0 | 118.0 | 42.3 | 355.0 | 14.0 |
| 19 | 54.0 | 135.0 | 64.0 | 49.0 | 72.0 | 237.0 | 229.0 | 271.0 | 279.0 | 299.0 | 318.0 | 288.0 | 280.0 | 246.0 | 230.0 | 238.0 | 242.0 | 225.0 | 238.0 | 130.0 | 108.0 | 113.0 | 110.0 | 212.0 | 194.5 | 318.0 | 49.0 |
| 20 | 198.0 | 343.0 | 309.0 | 64.0 | 196.0 | 276.0 | 272.0 | 242.0 | 285.0 | 209.0 | 172.0 | 97.0 | 347.0 | 22.0 | 109.0 | 104.0 | 25.0 | 116.0 | 98.0 | 113.0 | 303.0 | 3.0 | 80.0 | 323.0 | 359.4 | 347.0 | 3.0 |
| 21 | 340.0 | 154.0 | 213.0 | 164.0 | 108.0 | 262.0 | 286.0 | 265.0 | 283.0 | 3.0 | 7.0 | 2.0 | 13.0 | 2.0 | 3.0 | 335.0 | 282.0 | 231.0 | 228.0 | 248.0 | 262.0 | 253.0 | 251.0 | 265.0 | 320.8 | 340.0 | 2.0 |
| 22 | 261.0 | 248.0 | 245.0 | 232.0 | 216.0 | 179.0 | 174.0 | 131.0 | 108.0 | 95.0 | 107.0 | 289.0 | 306.0 | .0 | 302.0 | 296.0 | 314.0 | 270.0 | 299.0 | 291.0 | 294.0 | 278.0 | 282.0 | 274.0 | 228.8 | 314.0 | .0 |
| 23 | 277.0 | 325.0 | 341.0 | 298.0 | 302.0 | 39.0 | 117.0 | 301.0 | 304.0 | 355.0 | 312.0 | 273.0 | 269.0 | 255.0 | 235.0 | 215.0 | 133.0 | 164.0 | 214.0 | 214.0 | 230.0 | 123.0 | 116.0 | 123.0 | 230.6 | 355.0 | 39.0 |
| 24 | 241.0 | 342.0 | 112.0 | 99.0 | 74.0 | 89.0 | 25.0 | 95.0 | 342.0 | 68.0 | .0 | 39.0 | 46.0 | 39.0 | 37.0 | 29.0 | 82.0 | 44.0 | 355.0 | 44.0 | 90.0 | 318.0 | 297.0 | 296.0 | 28.5 | 355.0 | .0 |
| 25 | 304.0 | 318.0 | 303.0 | 315.0 | 344.0 | 327.0 | 349.0 | 274.0 | 314.0 | 339.0 | 359.0 | 35.0 | 53.0 | .0 | 2.0 | 20.0 | 15.0 | 330.0 | 317.0 | 277.0 | 301.0 | 293.0 | 296.0 | 299.0 | 331.0 | 359.0 | .0 |
| 26 | 288.0 | 173.0 | 282.0 | 122.0 | 291.0 | 303.0 | 277.0 | 295.0 | 231.0 | 300.0 | 82.0 | 68.0 | 358.0 | 353.0 | 22.0 | 51.0 | 64.0 | 349.0 | 283.0 | 295.0 | 74.0 | 107.0 | 117.0 | 126.0 | 9.6 | 358.0 | 22.0 |
| 27 | 304.0 | 300.0 | 120.0 | 298.0 | 279.0 | 115.0 | 104.0 | 347.0 | 126.0 | 110.0 | 110.0 | 278.0 | 276.0 | 282.0 | 246.0 | 253.0 | 257.0 | 247.0 | 242.0 | 130.0 | 113.0 | 96.0 | 92.0 | 339.0 | 211.0 | 347.0 | 92.0 |
| 28 | 301.0 | 292.0 | 323.0 | 50.0 | 80.0 | 7.0 | 31.0 | 351.0 | 342.0 | 54.0 | 358.0 | 40.0 | 88.0 | 89.0 | 357.0 | 72.0 | 65.0 | 63.0 | 75.0 | 43.0 | 86.0 | 94.0 | 126.0 | 81.0 | 39.5 | 358.0 | 7.0 |
| 29 | 138.0 | 132.0 | 129.0 | 150.0 | 109.0 | 80.0 | 92.0 | 82.0 | 52.0 | 89.0 | 81.0 | 89.0 | 112.0 | 29.0 | 22.0 | 50.0 | 71.0 | 73.0 | 62.0 | 9.0 | 356.0 | 103.0 | 120.0 | 279.0 | 74.5 | 356.0 | 9.0 |
| 30 | 75.0 | 68.0 | 50.0 | 94.0 | 56.0 | 109.0 | 66.0 | 97.0 | 90.0 | 91.0 | 62.0 | 40.0 | 8.0 | 14.0 | 6.0 | 339.0 | 295.0 | 314.0 | 281.0 | 274.0 | 4.0 | 103.0 | 135.0 | 118.0 | 41.2 | 339.0 | 4.0 |
| 31 | 98.0 | 43.0 | 278.0 | 234.0 | 241.0 | 232.0 | 235.0 | 235.0 | 248.0 | 247.0 | 247.0 | 251.0 | 227.0 | 206.0 | 158.0 | 205.0 | 177.0 | 180.0 | 140.0 | 133.0 | 142.0 | 129.0 | 127.0 | 133.0 | 189.4 | 278.0 | 43.0 |
| Mean | 211.3 | 206.0 | 207.8 | 180.9 | 198.3 | 190.1 | 183.8 | 215.7 | 220.0 | 1.0 | 350.5 | 334.8 | 345.6 | 356.6 | 4.6 | 358.6 | 147.1 | 180.2 | 193.4 | 173.8 | 182.4 | 168.7 | 176.0 | 206.0 | Monthly mean = 183.9 | | |
| Max. | 340.0 | 343.0 | 341.0 | 315.0 | 350.0 | 327.0 | 349.0 | 351.0 | 342.0 | 356.0 | 359.0 | 355.0 | 359.0 | 353.0 | 357.0 | 339.0 | 314.0 | 349.0 | 355.0 | 331.0 | 356.0 | 319.0 | 349.0 | 339.0 | Monthly max. = 359.0 | | |
| Min. | 21.0 | 10.0 | 42.0 | 3.0 | 56.0 | 7.0 | 25.0 | 37.0 | 11.0 | 3.0 | .0 | 2.0 | 8.0 | .0 | 2.0 | 11.0 | 8.0 | 27.0 | 41.0 | 9.0 | 4.0 | 3.0 | 29.0 | 29.0 | Monthly min. = .0 | | |

TOTAL NUMBER OF DATA HOURS IN MONTH: 744
Number of hours of bad or missing data: 0
Current % recovery = 100.0
**** designates missing or lost data

N/A: insufficient data available for calculation (a minimum of 75% is required)

table created at 13:23, 1/14/1994

MONTHLY SUMMARY
TEMPERATURE
(Degrees Celsius)
INPUT FILE: octdec1.met

Bechtel Environmental, Inc.

Met Data from EMF Site 1
DECEMBER 1993

| Day | Hour 1 | 2 | 3 | 4 | 5 | 6 | 7 | 8 | 9 | 10 | 11 | 12 | 13 | 14 | 15 | 16 | 17 | 18 | 19 | 20 | 21 | 22 | 23 | 24 | Mean | Max. | Min. |
|---|---|---|---|---|---|---|---|---|---|---|---|---|---|---|---|---|---|---|---|---|---|---|---|---|---|---|---|
| 1 | .6 | .7 | .7 | .6 | 1.6 | 1.6 | 2.1 | 2.5 | 2.4 | 1.8 | 3.9 | 4.5 | 4.4 | 2.8 | 2.4 | 2.3 | 2.2 | 2.0 | 2.4 | 2.5 | 3.1 | 1.1 | 2.3 | 3.2 | 2.2 | 4.5 | .6 |
| 2 | 4.3 | 3.3 | 2.9 | 1.9 | 1.2 | .8 | .3 | -.1 | -.1 | .0 | .6 | 1.2 | 1.5 | 1.8 | 2.0 | 1.9 | 1.8 | 1.5 | 1.0 | .7 | .6 | .6 | .4 | .5 | 1.3 | 4.3 | -.1 |
| 3 | .4 | .4 | .2 | -.2 | -2.9 | -4.0 | -4.0 | -4.1 | -3.3 | -2.2 | -1.9 | -2.5 | -2.4 | -1.7 | -.5 | 1.9 | 2.0 | 1.9 | 1.6 | 1.6 | 1.7 | 1.7 | 2.2 | 2.2 | -.5 | 2.2 | -4.1 |
| 4 | 2.0 | 2.1 | 2.2 | 2.3 | 2.4 | 2.5 | .5 | 3.2 | .6 | 2.9 | 2.6 | 1.0 | 1.6 | 1.4 | 1.5 | 2.0 | 1.1 | -.1 | -.7 | -1.3 | -1.7 | -2.4 | -2.9 | -3.0 | .8 | 3.2 | -3.0 |
| 5 | -3.5 | -3.7 | -3.5 | -3.3 | -3.2 | -3.7 | -5.3 | -7.8 | -6.5 | -5.7 | -3.0 | .1 | -1.1 | -2.1 | -1.7 | -1.9 | -3.0 | -4.4 | -5.7 | -6.3 | -7.4 | -8.4 | -9.1 | -9.6 | -4.6 | .1 | -9.6 |
| 6 | -9.8 | -9.7 | -9.7 | -9.8 | -9.6 | -9.5 | -9.4 | -9.1 | -8.6 | -7.5 | -5.9 | -4.9 | -2.3 | -2.5 | .1 | .9 | -.2 | -.4 | -.4 | -.5 | -.8 | -.4 | .0 | .7 | -4.6 | .9 | -9.8 |
| 7 | .5 | -4.1 | -4.7 | -7.8 | -9.8 | -10.5 | -11.4 | -10.8 | -10.6 | -7.5 | -4.8 | -3.4 | -1.7 | -.1 | -.6 | -1.0 | -1.1 | -.9 | 1.1 | 2.3 | 2.6 | 1.2 | -.6 | .3 | -3.5 | 2.6 | -11.4 |
| 8 | 2.6 | 2.8 | .5 | 4.7 | 4.9 | 5.0 | 4.0 | 1.8 | 2.0 | 3.9 | 5.0 | 6.7 | 6.7 | 7.3 | 8.3 | 7.6 | 7.1 | 9.1 | 10.5 | 11.0 | 11.0 | 8.2 | 4.4 | 4.0 | 5.8 | 11.0 | .5 |
| 9 | 3.0 | 5.8 | 5.9 | 5.1 | 4.5 | 4.2 | 4.4 | 4.7 | 4.7 | 5.3 | 6.1 | 6.2 | 5.8 | 6.1 | 6.4 | 6.4 | 4.5 | 3.3 | 4.4 | 6.3 | 7.9 | 6.9 | 6.3 | 6.1 | 5.4 | 7.9 | 3.0 |
| 10 | 6.1 | 5.8 | 5.2 | 6.1 | 6.0 | 5.3 | 4.2 | .1 | -.6 | 1.7 | 4.5 | 6.8 | 9.8 | 13.1 | 13.5 | 12.6 | 10.8 | 10.0 | 9.5 | 9.0 | 6.9 | 1.4 | 2.4 | 2.6 | 6.4 | 13.5 | -.6 |
| 11 | 2.3 | 1.3 | .5 | -.2 | .9 | -.8 | -.1 | -1.7 | -1.3 | 1.6 | 4.5 | 7.8 | 12.9 | 12.4 | 12.2 | 12.2 | 11.8 | 11.1 | 10.7 | 9.2 | 7.3 | 12.4 | 11.8 | 10.1 | 6.2 | 12.9 | -1.7 |
| 12 | 5.6 | 3.3 | 2.8 | 1.0 | .0 | -.3 | -.6 | -1.2 | -2.0 | -2.4 | -2.4 | -1.9 | -1.6 | -1.1 | -.7 | -.6 | -.6 | -1.6 | -2.2 | -2.6 | -2.5 | -2.6 | -2.7 | -2.5 | -.8 | 5.6 | -2.7 |
| 13 | -2.3 | -2.3 | -4.0 | -6.0 | -7.3 | -7.6 | -8.2 | -8.5 | -7.7 | -6.4 | -6.1 | -5.3 | -3.6 | -1.7 | -.5 | 1.4 | -1.3 | -2.6 | -1.3 | -2.6 | -5.8 | -6.2 | -6.1 | -7.4 | -4.6 | 1.4 | -8.5 |
| 14 | -8.6 | -9.0 | -9.0 | -9.0 | -9.1 | -9.3 | -9.1 | -8.8 | -8.6 | -7.3 | -3.6 | -2.3 | -.8 | .7 | .6 | .5 | -.8 | -2.7 | -3.3 | -4.9 | -5.7 | -6.0 | -4.7 | -4.7 | -5.2 | .7 | -9.3 |
| 15 | -5.1 | -4.8 | -4.9 | -5.1 | -3.6 | -3.0 | -3.5 | -3.8 | -3.9 | -4.0 | -3.6 | -3.7 | -2.8 | -2.7 | -2.0 | -1.7 | -1.9 | -1.6 | -1.6 | -1.3 | -.9 | -.7 | -.8 | -1.4 | -2.9 | -.7 | -5.1 |
| 16 | -1.6 | -1.6 | -1.7 | -1.9 | -2.2 | -2.5 | -2.9 | -3.1 | -3.2 | -2.9 | -2.6 | -2.5 | -2.3 | -1.9 | -1.8 | -1.6 | -1.7 | -2.0 | -1.9 | -1.8 | -1.8 | -1.9 | -1.7 | -1.7 | -2.1 | -1.6 | -3.2 |
| 17 | -2.5 | -2.4 | -2.2 | -2.3 | -2.8 | -3.1 | -3.2 | -3.4 | -3.7 | -3.9 | -3.3 | -2.7 | -1.9 | -2.1 | -2.1 | -2.5 | -3.5 | -5.1 | -6.1 | -6.6 | -8.5 | -7.7 | -9.6 | -11.6 | -4.3 | -1.9 | -11.6 |
| 18 | -11.8 | -11.8 | -12.4 | -14.1 | -11.8 | -12.4 | -13.6 | -13.5 | -12.9 | -10.9 | -8.7 | -7.1 | -7.2 | -6.2 | -5.4 | -4.6 | -4.9 | -5.1 | -4.6 | -4.5 | -4.4 | -5.0 | -5.1 | -4.5 | -8.4 | -4.4 | -14.1 |
| 19 | -4.6 | -4.7 | -4.4 | -4.4 | -4.4 | -3.8 | -3.3 | -4.3 | -5.0 | -5.4 | -5.0 | -4.8 | -3.9 | -3.0 | -2.4 | -2.7 | -3.9 | -3.8 | -3.6 | -5.0 | -6.1 | -6.3 | -6.4 | -4.5 | -4.4 | -2.4 | -6.4 |
| 20 | -3.8 | -6.2 | -7.4 | -6.7 | -6.4 | -6.7 | -6.8 | -6.5 | -6.6 | -6.2 | -5.5 | -4.0 | -2.7 | -5.0 | -5.1 | -4.6 | -5.9 | -7.9 | -7.4 | -8.0 | -8.0 | -7.9 | -7.2 | -5.9 | -6.2 | -2.7 | -8.0 |
| 21 | -5.6 | -5.5 | -5.2 | -5.3 | -5.4 | -5.1 | -5.2 | -5.2 | -5.4 | -5.7 | -5.9 | -5.4 | -5.0 | -4.3 | -4.3 | -4.3 | -5.0 | -5.6 | -5.5 | -5.7 | -6.0 | -5.9 | -5.7 | -5.8 | -5.3 | -4.3 | -6.0 |
| 22 | -5.8 | -5.9 | -6.0 | -6.3 | -6.6 | -6.7 | -6.7 | -7.4 | -7.3 | -6.0 | -6.0 | -4.9 | -5.2 | -4.8 | -5.3 | -4.6 | -5.3 | -5.0 | -4.9 | -5.5 | -5.8 | -5.9 | -5.9 | -5.8 | -5.8 | -4.6 | -7.4 |
| 23 | -6.1 | -7.1 | -8.0 | -9.3 | -11.0 | -11.3 | -10.5 | -9.9 | -10.6 | -10.7 | -9.1 | -7.3 | -6.3 | -5.3 | -4.8 | -4.0 | -4.9 | -4.8 | -3.6 | -3.8 | -4.1 | -6.8 | -7.8 | -8.5 | -7.3 | -3.6 | -11.3 |
| 24 | -9.9 | -11.7 | -13.1 | -12.4 | -12.7 | -10.9 | -12.5 | -13.6 | -13.4 | -11.3 | -8.7 | -7.4 | -5.8 | -4.5 | -4.3 | -4.2 | -5.8 | -6.7 | -8.6 | -9.6 | -11.0 | -10.8 | -11.0 | -12.2 | -9.7 | -4.2 | -13.6 |
| 25 | -12.4 | -12.6 | -13.3 | -14.0 | -14.9 | -15.8 | -16.2 | -16.0 | -14.6 | -11.9 | -10.5 | -8.6 | -7.3 | -5.3 | -4.7 | -4.3 | -6.5 | -9.0 | -9.2 | -9.7 | -10.2 | -10.2 | -10.8 | -11.0 | -10.8 | -4.3 | -16.2 |
| 26 | -11.3 | -11.3 | -10.6 | -10.5 | -10.3 | -10.5 | -10.7 | -10.3 | -10.4 | -9.1 | -6.9 | -5.0 | -2.8 | -1.3 | -2.0 | -2.4 | -2.9 | -3.1 | -3.2 | -3.5 | -4.0 | -3.9 | -3.7 | -3.4 | -6.4 | -1.3 | -11.3 |
| 27 | -4.3 | -4.7 | -4.7 | -4.7 | -4.0 | -4.1 | -2.8 | -3.2 | -3.5 | -2.1 | -1.0 | ***** | .0 | -.8 | -.7 | -.9 | -.1 | -.1 | .0 | -.1 | -.1 | .0 | -.3 | -.6 | -1.9 | .0 | -4.7 |
| 28 | -1.5 | -2.9 | -3.2 | -3.4 | -3.3 | -3.5 | -4.4 | -4.6 | -5.2 | -4.7 | -4.6 | -3.4 | -3.1 | -2.8 | -2.9 | -3.2 | -3.7 | -3.9 | -3.7 | -3.9 | -4.4 | -4.6 | -4.9 | -5.4 | -3.8 | -1.5 | -5.4 |
| 29 | -5.8 | -5.7 | -6.3 | -6.7 | -6.6 | -6.6 | -6.2 | -6.2 | -6.0 | -5.7 | -4.9 | -2.8 | -2.2 | -3.1 | -2.9 | -2.6 | -3.5 | -3.9 | -5.3 | -7.1 | -7.8 | -8.1 | -5.9 | -7.3 | -5.4 | -2.2 | -8.1 |
| 30 | -6.2 | -6.9 | -7.1 | -7.8 | -9.1 | -9.2 | -8.5 | -9.1 | -8.4 | -6.4 | -4.4 | -3.3 | -1.8 | -2.0 | -1.8 | -2.3 | -4.1 | -5.2 | -6.3 | -6.2 | -7.8 | -8.0 | -5.3 | -3.2 | -5.9 | -1.8 | -9.2 |
| 31 | -1.2 | -1.3 | -3.4 | 1.9 | 1.2 | .7 | 1.1 | 1.4 | 1.5 | 1.5 | 1.9 | 2.4 | 2.9 | 2.9 | 2.1 | 3.2 | 2.6 | 2.4 | 1.1 | .5 | 1.2 | .5 | .2 | .0 | 1.1 | 3.2 | -3.4 |
| Mean | -3.1 | -3.6 | -4.0 | -4.1 | -4.3 | -4.5 | -4.8 | -5.1 | -5.1 | -4.1 | -2.9 | -1.9 | -.9 | -.5 | -.2 | .0 | -.9 | -1.4 | -1.5 | -1.9 | -2.3 | -2.8 | -2.8 | -2.9 | Monthly mean = | | -2.7 |
| Max. | 6.1 | 5.8 | 5.9 | 6.1 | 6.0 | 5.3 | 4.4 | 4.7 | 4.7 | 5.3 | 6.1 | 7.8 | 12.9 | 13.1 | 13.5 | 12.6 | 11.8 | 11.1 | 10.7 | 11.0 | 11.0 | 12.4 | 11.8 | 10.1 | Monthly max. = | | 13.5 |
| Min. | -12.4 | -12.6 | -13.3 | -14.1 | -14.9 | -15.8 | -16.2 | -16.0 | -14.6 | -11.9 | -10.5 | -8.6 | -7.3 | -6.2 | -5.4 | -4.6 | -6.5 | -9.0 | -9.2 | -9.7 | -11.0 | -10.8 | -11.0 | -12.2 | Monthly min. = | | -16.2 |

TOTAL NUMBER OF DATA HOURS IN MONTH: 744
Number of hours of bad or missing data: 1
Current % recovery = 99.9
***** designates missing or lost data

N/A: insufficient data available for calculation (a minimum of 75% is required)

table created at 13:23, 1/14/1994

MONTHLY SUMMARY
SIGMA THETA
(Degrees)
INPUT FILE: octdec1.met

Bechtel Environmental, Inc.

Met Data from EMF Site 1
DECEMBER 1993

| Day | Hour 1 | 2 | 3 | 4 | 5 | 6 | 7 | 8 | 9 | 10 | 11 | 12 | 13 | 14 | 15 | 16 | 17 | 18 | 19 | 20 | 21 | 22 | 23 | 24 | Mean | Max. | Min. |
|---|---|---|---|---|---|---|---|---|---|---|---|---|---|---|---|---|---|---|---|---|---|---|---|---|---|---|---|
| 1 | 13. | 14. | 17. | 17. | 19. | 15. | 18. | 20. | 24. | 16. | 25. | 16. | 19. | 9. | 10. | 9. | 7. | 6. | 12. | 14. | 17. | 8. | 16. | 21. | N/A | 25. | 6. |
| 2 | 16. | 15. | 13. | 13. | 12. | 14. | 11. | 13. | 13. | 12. | 14. | 11. | 12. | 13. | 11. | 13. | 12. | 13. | 12. | 13. | 12. | 12. | 12. | 13. | N/A | 16. | 11. |
| 3 | 14. | 14. | 20. | 28. | 20. | 9. | 8. | 8. | 8. | 24. | 41. | 12. | 14. | 12. | 32. | 7. | 11. | 11. | 6. | 7. | 7. | 7. | 7. | 9. | N/A | 41. | 6. |
| 4 | 13. | 10. | 11. | 10. | 11. | 15. | 46. | 16. | 9. | 17. | 24. | 14. | 14. | 13. | 13. | 13. | 13. | 14. | 13. | 12. | 12. | 12. | 11. | 13. | N/A | 46. | 9. |
| 5 | 11. | 12. | 13. | 12. | 13. | 15. | 13. | 6. | 6. | 6. | 24. | 59. | 20. | 14. | 13. | 16. | 29. | 16. | 22. | 31. | 46. | 20. | 37. | 26. | N/A | 59. | 6. |
| 6 | 16. | 33. | 19. | 18. | 20. | 16. | 15. | 59. | 16. | 37. | 34. | 16. | 35. | 15. | 11. | 12. | 11. | 14. | 12. | 13. | 12. | 14. | 14. | 12. | N/A | 59. | 11. |
| 7 | 34. | 26. | 25. | 15. | 30. | 14. | 50. | 26. | 33. | 23. | 18. | 18. | 15. | 10. | 38. | 24. | 13. | 53. | 56. | 53. | 51. | 59. | 34. | 34. | N/A | 59. | 10. |
| 8 | 43. | 30. | 32. | 32. | 11. | 12. | 14. | 9. | 9. | 9. | 7. | 14. | 8. | 8. | 10. | 8. | 7. | 13. | 13. | 14. | 17. | 19. | 15. | 14. | N/A | 43. | 7. |
| 9 | 14. | 14. | 14. | 13. | 14. | 15. | 13. | 13. | 12. | 12. | 15. | 16. | 17. | 22. | 14. | 16. | 75. | 36. | 45. | 14. | 22. | 16. | 8. | 6. | N/A | 75. | 6. |
| 10 | 9. | 7. | 6. | 6. | 8. | 6. | 53. | 16. | 32. | 35. | 25. | 26. | 22. | 21. | 14. | 18. | 44. | 14. | 14. | 16. | 33. | 17. | 46. | 54. | N/A | 54. | 6. |
| 11 | 44. | 42. | 29. | 47. | 30. | 57. | 19. | 19. | 32. | 59. | 78. | 48. | 35. | 47. | 17. | 12. | 16. | 9. | 8. | 15. | 21. | 14. | 14. | 15. | N/A | 78. | 8. |
| 12 | 20. | 13. | 13. | 14. | 13. | 13. | 13. | 12. | 13. | 12. | 12. | 12. | 13. | 13. | 13. | 12. | 12. | 12. | 13. | 12. | 13. | 12. | 12. | 12. | N/A | 20. | 12. |
| 13 | 13. | 13. | 21. | 3. | 5. | 8. | 10. | 20. | 37. | 57. | 12. | 10. | 11. | 12. | 13. | 47. | 21. | 19. | 11. | 47. | 24. | 60. | 68. | 28. | N/A | 68. | 3. |
| 14 | 44. | 30. | 45. | 46. | 42. | 70. | 43. | 33. | 19. | 29. | 32. | 18. | 57. | 51. | 14. | 8. | 46. | 17. | 18. | 34. | 33. | 23. | 32. | 23. | N/A | 70. | 8. |
| 15 | 14. | 27. | 35. | 34. | 12. | 12. | 13. | 13. | 12. | 13. | 11. | 8. | 10. | 11. | 9. | 8. | 8. | 9. | 8. | 10. | 10. | 10. | 11. | 8. | N/A | 35. | 8. |
| 16 | 10. | 10. | 8. | 7. | 7. | 9. | 8. | 9. | 9. | 9. | 10. | 10. | 10. | 11. | 8. | 9. | 10. | 9. | 9. | 10. | 11. | 12. | 11. | 27. | N/A | 27. | 7. |
| 17 | 42. | 23. | 11. | 29. | 26. | 10. | 8. | 12. | 36. | 21. | 13. | 11. | 14. | 16. | 13. | 8. | 15. | 17. | 12. | 4. | 30. | 9. | 11. | 37. | N/A | 42. | 4. |
| 18 | 27. | 10. | 20. | 37. | 12. | 24. | 11. | 49. | 30. | 22. | 24. | 19. | 32. | 12. | 13. | 14. | 27. | 14. | 12. | 5. | 22. | 52. | 30. | 5. | N/A | 52. | 5. |
| 19 | 39. | 37. | 43. | 53. | 33. | 14. | 16. | 17. | 14. | 10. | 12. | 10. | 11. | 16. | 18. | 14. | 12. | 13. | 14. | 35. | 18. | 16. | 7. | 39. | N/A | 53. | 7. |
| 20 | 24. | 48. | 20. | 59. | 33. | 7. | 8. | 22. | 15. | 20. | 17. | 21. | 28. | 10. | 13. | 26. | 40. | 35. | 19. | 9. | 35. | 44. | 73. | 27. | N/A | 73. | 7. |
| 21 | 14. | 30. | 29. | 18. | 29. | 45. | 13. | 11. | 13. | 11. | 11. | 12. | 13. | 17. | 13. | 16. | 7. | 18. | 15. | 12. | 13. | 14. | 14. | 11. | N/A | 45. | 7. |
| 22 | 13. | 13. | 16. | 17. | 15. | 14. | 17. | 7. | 14. | 32. | 13. | 45. | 13. | 38. | 13. | 45. | 13. | 17. | 14. | 11. | 11. | 8. | 10. | 6. | N/A | 45. | 6. |
| 23 | 6. | 21. | 40. | 34. | 19. | 45. | 7. | 47. | 21. | 45. | 54. | 12. | 12. | 12. | 13. | 23. | 18. | 21. | 22. | 28. | 71. | 27. | 6. | 5. | N/A | 71. | 5. |
| 24 | 25. | 21. | 36. | 25. | 32. | 14. | 48. | 25. | 33. | 26. | 24. | 27. | 17. | 13. | 10. | 13. | 25. | 17. | 45. | 19. | 69. | 23. | 10. | 11. | N/A | 69. | 10. |
| 25 | 10. | 14. | 29. | 10. | 27. | 15. | 48. | 17. | 40. | 27. | 35. | 19. | 17. | 21. | 15. | 24. | 38. | 49. | 12. | 29. | 15. | 6. | 16. | 9. | N/A | 49. | 6. |
| 26 | 9. | 58. | 12. | 42. | 13. | 54. | 29. | 18. | 38. | 18. | 19. | 16. | 12. | 15. | 21. | 18. | 13. | 24. | 6. | 9. | 17. | 8. | 3. | 56. | N/A | 58. | 3. |
| 27 | 14. | 30. | 31. | 8. | 39. | 19. | 37. | 48. | 12. | 20. | 43. | 39. | 9. | 10. | 13. | 5. | 10. | 13. | 15. | 36. | 42. | 65. | 44. | 25. | N/A | 65. | 5. |
| 28 | 20. | 11. | 16. | 13. | 30. | 16. | 16. | 22. | 29. | 20. | 10. | 24. | 14. | 20. | 11. | 10. | 8. | 11. | 19. | 18. | 10. | 30. | 15. | 17. | N/A | 30. | 8. |
| 29 | 8. | 8. | 8. | 9. | 16. | 10. | 9. | 40. | 26. | 12. | 10. | 23. | 24. | 9. | 10. | 11. | 28. | 14. | 21. | 90. | 57. | 22. | 21. | 65. | N/A | 90. | 8. |
| 30 | 21. | 34. | 34. | 44. | 47. | 16. | 36. | 11. | 19. | 16. | 24. | 37. | 25. | 15. | 10. | 21. | 22. | 32. | 43. | 14. | 64. | 29. | 13. | 21. | N/A | 64. | 10. |
| 31 | 12. | 49. | 44. | 14. | 13. | 13. | 14. | 15. | 12. | 12. | 12. | 13. | 14. | 14. | 19. | 13. | 16. | 21. | 11. | 13. | 16. | 5. | 4. | 5. | N/A | 49. | 4. |
| Mean | N/A | N/A | N/A | N/A | N/A | N/A | N/A | N/A | N/A | N/A | N/A | N/A | N/A | N/A | N/A | N/A | N/A | N/A | N/A | N/A | N/A | N/A | N/A | N/A | Monthly mean = | | N/A |
| Max. | 44. | 58. | 45. | 59. | 47. | 70. | 53. | 59. | 40. | 59. | 78. | 59. | 57. | 51. | 38. | 47. | 75. | 53. | 56. | 90. | 71. | 65. | 73. | 65. | Monthly max. = | | 90. |
| Min. | 6. | 7. | 6. | 3. | 5. | 6. | 7. | 6. | 6. | 6. | 7. | 8. | 8. | 8. | 8. | 5. | 7. | 6. | 6. | 4. | 7. | 5. | 3. | 5. | Monthly min. = | | 3. |

TOTAL NUMBER OF DATA HOURS IN MONTH: 744
Number of hours of bad or missing data: 0
**** designates missing or lost data

Current % recovery = 100.0

N/A: A sigma theta mean is not physically meaningful.

table created at 13:23, 1/14/1994

MONTHLY SUMMARY
REL. HUMID.
(Degrees)
INPUT FILE: octdec1.met

Bechtel Environmental, Inc.

Met Data from EMF Site 1
DECEMBER 1993

| Day | Hour 1 | 2 | 3 | 4 | 5 | 6 | 7 | 8 | 9 | 10 | 11 | 12 | 13 | 14 | 15 | 16 | 17 | 18 | 19 | 20 | 21 | 22 | 23 | 24 | Mean | Max. | Min. |
|---|---|---|---|---|---|---|---|---|---|---|---|---|---|---|---|---|---|---|---|---|---|---|---|---|---|---|---|
| 1 | 66.9 | 61.7 | 59.4 | 62.5 | 57.3 | 60.7 | 62.2 | 62.4 | 60.8 | 62.9 | 56.5 | 53.3 | 53.0 | 55.7 | 55.3 | 54.5 | 56.9 | 57.3 | 56.3 | 55.5 | 58.5 | 71.7 | 75.8 | 79.1 | 60.7 | 79.1 | 53.0 |
| 2 | 75.4 | 82.3 | 82.4 | 86.0 | 85.9 | 81.8 | 81.0 | 82.2 | 83.3 | 82.5 | 81.0 | 79.0 | 77.0 | 72.0 | 70.0 | 70.0 | 70.0 | 70.0 | 69.0 | 69.0 | 70.0 | 68.0 | 65.0 | 63.0 | 75.7 | 86.0 | 63.0 |
| 3 | 65.0 | 63.0 | 64.0 | 64.0 | 71.0 | 73.0 | 74.0 | 74.2 | 72.2 | 73.2 | 72.6 | 78.9 | 80.0 | 79.8 | 76.8 | 63.9 | 64.9 | 67.8 | 67.8 | 67.5 | 69.3 | 64.5 | 59.9 | 61.1 | 69.5 | 80.0 | 59.9 |
| 4 | 62.6 | 60.5 | 61.7 | 61.2 | 59.4 | 59.6 | 69.4 | 62.6 | 84.4 | 70.9 | 79.4 | 98.1 | 97.3 | 100.0 | 86.6 | 77.0 | 68.5 | 77.5 | 73.4 | 73.1 | 74.9 | 77.9 | 81.9 | 77.6 | 74.8 | 100.0 | 59.4 |
| 5 | 75.3 | 80.2 | 81.3 | 80.9 | 74.3 | 69.3 | 71.8 | 82.7 | 75.6 | 72.4 | 62.8 | 55.2 | 61.8 | 67.5 | 65.4 | 65.2 | 72.5 | 83.7 | 90.6 | 90.5 | 85.5 | 86.8 | 85.8 | 85.7 | 75.9 | 90.6 | 55.2 |
| 6 | 85.8 | 86.7 | 82.8 | 81.8 | 81.3 | 82.6 | 84.2 | 84.4 | 83.4 | 80.0 | 75.4 | 75.3 | 74.4 | 75.6 | 67.9 | 69.7 | 80.8 | 85.3 | 84.7 | 82.5 | 80.3 | 75.8 | 71.2 | 68.4 | 79.2 | 86.7 | 67.9 |
| 7 | 68.2 | 91.1 | 95.1 | 96.8 | 96.1 | 95.9 | 96.8 | 96.6 | 96.2 | 93.8 | 83.6 | 80.9 | 77.4 | 74.3 | 81.1 | 81.4 | 81.8 | 82.9 | 67.0 | 57.1 | 54.7 | 65.8 | 76.8 | 69.3 | 81.7 | 96.8 | 54.7 |
| 8 | 53.2 | 55.3 | 74.4 | 49.0 | 45.8 | 48.4 | 65.2 | 87.4 | 89.3 | 69.2 | 61.2 | 51.1 | 53.8 | 46.8 | 40.5 | 40.9 | 43.2 | 37.5 | 33.6 | 32.3 | 36.9 | 54.8 | 94.9 | 97.2 | 56.7 | 97.2 | 32.3 |
| 9 | 98.6 | 75.8 | 78.6 | 81.9 | 83.9 | 86.6 | 85.7 | 82.2 | 79.0 | 77.0 | 73.3 | 72.0 | 81.4 | 82.4 | 80.2 | 80.8 | 87.0 | 95.1 | 88.4 | 73.9 | 63.6 | 69.0 | 72.1 | 70.2 | 79.9 | 98.6 | 63.6 |
| 10 | 68.9 | 69.8 | 71.7 | 65.2 | 64.0 | 66.7 | 71.0 | 94.6 | ***** | 91.6 | 80.2 | 73.6 | 59.7 | 37.2 | 33.0 | 36.3 | 43.5 | 51.6 | 53.6 | 55.9 | 64.3 | 95.4 | 89.7 | 85.7 | 66.2 | 95.4 | 33.0 |
| 11 | 87.2 | 91.9 | 98.0 | ***** | 94.7 | ***** | 99.4 | ***** | ***** | 92.7 | 79.8 | 64.9 | 34.5 | 35.9 | 35.1 | 33.9 | 34.3 | 37.3 | 39.4 | 44.2 | 52.1 | 33.0 | 32.9 | 45.4 | 58.3 | 99.4 | 32.9 |
| 12 | 88.9 | ***** | ***** | ***** | ***** | ***** | ***** | ***** | ***** | ***** | ***** | ***** | ***** | 96.8 | 92.5 | 89.4 | 88.9 | 88.4 | 89.6 | 91.6 | 92.6 | 91.9 | 90.3 | 86.2 | ***** | 96.8 | 86.2 |
| 13 | 83.8 | 81.7 | 83.4 | 88.4 | 94.0 | 94.3 | 96.1 | 96.5 | 93.3 | 91.3 | 90.8 | 90.3 | 87.2 | 80.3 | 77.5 | 67.6 | 76.5 | 79.2 | 69.1 | 77.9 | 97.7 | 97.7 | 95.4 | ***** | 86.5 | 97.7 | 67.6 |
| 14 | ***** | ***** | ***** | ***** | ***** | ***** | ***** | ***** | ***** | 96.2 | 80.5 | 79.2 | 76.1 | 68.5 | 66.8 | 66.2 | 85.4 | ***** | ***** | ***** | ***** | ***** | 94.8 | 98.7 | ***** | 98.7 | 66.2 |
| 15 | ***** | 98.8 | ***** | ***** | 93.4 | 83.7 | 91.3 | 94.1 | 93.3 | 95.4 | ***** | 88.1 | 88.0 | 86.8 | 85.8 | 56.4 | 86.7 | 87.7 | 86.1 | 86.7 | 87.4 | 88.8 | 92.0 | 97.0 | 88.4 | 98.8 | 56.4 |
| 16 | 96.9 | 95.8 | 94.2 | 93.3 | 93.2 | 94.0 | 93.0 | 94.2 | 94.4 | 92.1 | 91.0 | 90.6 | 87.9 | 86.8 | 85.9 | 87.7 | 91.0 | 95.4 | 94.3 | 91.4 | 92.2 | 91.8 | 87.1 | 83.4 | 91.6 | 96.9 | 83.4 |
| 17 | 86.4 | 87.0 | 86.4 | 86.6 | 91.1 | 94.3 | 95.2 | 96.3 | 96.7 | 95.1 | 89.0 | 85.7 | 83.8 | 84.6 | 84.7 | 86.7 | 89.9 | 93.9 | 95.7 | 92.4 | 91.4 | 91.4 | 90.7 | 90.6 | 90.2 | 96.7 | 83.8 |
| 18 | 91.2 | 91.2 | 88.5 | 87.0 | 90.1 | 88.2 | 86.9 | 87.1 | 87.3 | 87.1 | 85.8 | 85.7 | 89.7 | 92.3 | 93.5 | 92.5 | 88.8 | 90.7 | 87.0 | 82.5 | 77.4 | 81.8 | 83.7 | 79.5 | 87.3 | 93.5 | 77.4 |
| 19 | 82.7 | 82.3 | 82.1 | 81.2 | 81.4 | 78.5 | 75.1 | 78.1 | 84.2 | 90.6 | 90.0 | 87.0 | 78.3 | 73.8 | 72.3 | 76.1 | 82.7 | 80.0 | 79.2 | 81.5 | 81.6 | 79.7 | 78.4 | 76.8 | 80.6 | 90.6 | 72.3 |
| 20 | 74.6 | 81.6 | 84.1 | 84.1 | 81.4 | 80.5 | 84.2 | 88.2 | 91.0 | 91.0 | 80.8 | 66.6 | 63.0 | 84.7 | 83.7 | 78.4 | 82.6 | 91.0 | 88.8 | 88.9 | 89.7 | 90.8 | 87.9 | 83.3 | 83.4 | 91.0 | 63.0 |
| 21 | 82.1 | 82.1 | 81.6 | 80.3 | 80.4 | 81.3 | 82.5 | 86.0 | 88.0 | 91.6 | 88.1 | 80.6 | 82.4 | 75.6 | 70.5 | 67.8 | 72.0 | 78.4 | 84.1 | 85.3 | 83.2 | 87.3 | 89.6 | 88.9 | 82.1 | 91.6 | 67.8 |
| 22 | 86.9 | 76.1 | 76.7 | 78.8 | 79.0 | 74.2 | 73.6 | 75.6 | 75.9 | 69.8 | 67.6 | 64.9 | 69.8 | 76.2 | 79.0 | 76.6 | 79.7 | 75.6 | 75.1 | 82.6 | 87.4 | 91.3 | 93.6 | 91.8 | 78.2 | 93.6 | 64.9 |
| 23 | 91.9 | 93.2 | 93.9 | 93.5 | 91.5 | 90.0 | 91.0 | 91.7 | 90.5 | 89.1 | 90.7 | 93.0 | 92.8 | 84.6 | 80.5 | 74.0 | 73.7 | 74.5 | 72.1 | 71.6 | 72.5 | 77.0 | 77.8 | 79.7 | 84.6 | 93.9 | 71.6 |
| 24 | 84.3 | 88.9 | 89.1 | 89.2 | 88.4 | 89.5 | 88.2 | 87.9 | 87.2 | 89.1 | 89.1 | 88.4 | 81.4 | 71.2 | 69.7 | 67.3 | 72.5 | 76.3 | 81.9 | 85.7 | 87.5 | 87.8 | 88.0 | 88.8 | 84.1 | 89.5 | 67.3 |
| 25 | 88.5 | 88.1 | 87.8 | 86.5 | 84.8 | 84.0 | 83.5 | 84.1 | 84.6 | 77.7 | 80.7 | 80.8 | 72.1 | 64.5 | 64.1 | 64.0 | 71.3 | 81.9 | 87.0 | 86.3 | 88.2 | 87.1 | 86.7 | 85.3 | 81.2 | 88.5 | 64.0 |
| 26 | 84.8 | 85.2 | 83.7 | 85.0 | 85.8 | 87.1 | 87.1 | 85.3 | 86.0 | 82.3 | 74.2 | 67.3 | 63.2 | 58.0 | 63.0 | 65.9 | 66.1 | 70.7 | 71.2 | 74.0 | 78.1 | 76.4 | 77.5 | 75.3 | 76.4 | 87.1 | 58.0 |
| 27 | 81.2 | 85.2 | 85.8 | 86.6 | 82.4 | 85.0 | 78.5 | 84.7 | 86.1 | 77.2 | 70.5 | 86.0 | 85.3 | 91.5 | 96.9 | 96.6 | 94.5 | 95.5 | 96.0 | 96.4 | 97.0 | 97.0 | 97.0 | 97.0 | 88.7 | 97.0 | 70.5 |
| 28 | 97.0 | 97.0 | 97.0 | 97.0 | 97.0 | 97.0 | 97.0 | 97.0 | 97.0 | 97.0 | 97.0 | 97.0 | 94.1 | 92.0 | 91.2 | 87.0 | 94.3 | 94.8 | 93.5 | 94.2 | 95.6 | 97.0 | 97.0 | 97.1 | 95.5 | 97.1 | 87.0 |
| 29 | 97.1 | 97.1 | 96.7 | 96.2 | 96.1 | 95.8 | 95.9 | 95.9 | 96.1 | 96.2 | 95.9 | 92.8 | 82.6 | 84.0 | 81.2 | 80.8 | 83.8 | 84.6 | 86.5 | 91.4 | 93.5 | 95.3 | 88.4 | 89.2 | 91.4 | 97.1 | 80.8 |
| 30 | 91.0 | 92.1 | 91.1 | 92.3 | 90.8 | 93.5 | 93.0 | 92.8 | 93.0 | 91.3 | 85.4 | 81.0 | 73.0 | 71.0 | 68.9 | 73.5 | 77.7 | 78.1 | 84.1 | 82.0 | 86.8 | 89.3 | 79.4 | 69.5 | 84.2 | 93.5 | 68.9 |
| 31 | 60.1 | 61.9 | 75.4 | 70.9 | 74.0 | 78.0 | 82.4 | 80.9 | 76.3 | 74.2 | 72.5 | 70.5 | 67.7 | 66.7 | 66.4 | 64.2 | 64.4 | 65.2 | 68.0 | 70.8 | 67.3 | 68.8 | 68.6 | 67.5 | 70.1 | 82.4 | 60.1 |
| Mean | 81.3 | 82.2 | 83.1 | 81.7 | 82.4 | 81.9 | 84.0 | 85.9 | 86.1 | 84.7 | 80.2 | 78.6 | 75.6 | 74.7 | 73.1 | 70.7 | 75.0 | 77.6 | 77.1 | 77.2 | 78.6 | 81.0 | 82.3 | 80.9 | Monthly mean = | | 79.7 |
| Max. | 98.6 | 98.8 | 98.0 | 97.0 | 97.0 | 97.0 | 99.4 | 97.0 | 97.0 | 97.0 | 97.0 | 98.1 | 97.3 | 100.0 | 96.9 | 96.6 | 94.5 | 95.5 | 96.0 | 96.4 | 97.7 | 97.7 | 97.0 | 98.7 | Monthly max. = | | 100.0 |
| Min. | 53.2 | 55.3 | 59.4 | 49.0 | 45.8 | 48.4 | 62.2 | 62.4 | 60.8 | 62.9 | 56.5 | 51.1 | 34.5 | 35.9 | 33.0 | 33.9 | 34.3 | 37.3 | 33.6 | 32.3 | 36.9 | 33.0 | 32.9 | 45.4 | Monthly min. = | | 32.3 |

TOTAL NUMBER OF DATA HOURS IN MONTH: 744
Number of hours of bad or missing data: 36
Current % recovery = 95.2
***** designates missing or lost data

N/A: insufficient data available for calculation (a minimum of 75% is required)

table created at 13:23, 1/14/1994

MONTHLY SUMMARY
WIND SPEED
(Miles Per Hour)
INPUT FILE: alls1met.out

Bechtel Environmental, Inc.

Met Data for Site 1
JANUARY 1994

| Day | Hour 1 | 2 | 3 | 4 | 5 | 6 | 7 | 8 | 9 | 10 | 11 | 12 | 13 | 14 | 15 | 16 | 17 | 18 | 19 | 20 | 21 | 22 | 23 | 24 | Mean | Max. | Min. |
|---|---|---|---|---|---|---|---|---|---|---|---|---|---|---|---|---|---|---|---|---|---|---|---|---|---|---|---|
| 1 | 16.3 | 18.1 | 14.4 | 16.6 | 18.3 | 19.7 | 21.1 | 18.9 | 16.0 | 14.2 | 12.1 | 11.2 | 16.2 | 11.5 | 16.6 | 19.0 | 19.5 | 22.4 | 26.4 | 27.5 | 23.7 | 19.6 | 22.0 | 16.0 | 18.2 | 27.5 | 11.2 |
| 2 | 17.5 | 17.7 | 18.8 | 16.5 | 18.2 | 17.0 | 16.4 | 14.3 | 15.1 | 11.6 | 10.3 | 11.1 | 10.3 | 8.6 | 8.3 | 9.7 | 13.8 | 14.1 | 12.2 | 12.8 | 10.2 | 13.0 | 13.0 | 13.0 | 13.5 | 18.8 | 8.3 |
| 3 | 11.5 | 11.0 | 9.8 | 18.9 | 22.0 | 19.4 | 17.3 | 14.4 | 7.1 | 9.6 | 15.5 | 15.6 | 15.9 | 13.8 | 14.3 | 12.6 | 8.3 | 11.9 | 9.6 | 12.8 | 10.4 | 7.0 | 9.6 | 12.2 | 12.9 | 22.0 | 7.0 |
| 4 | 12.4 | 4.0 | 3.3 | 2.7 | 2.3 | 2.6 | 3.1 | 5.3 | 3.3 | 4.3 | 8.4 | 11.9 | 9.7 | 10.7 | 14.8 | 17.0 | 14.4 | 12.8 | 12.2 | 10.5 | 11.1 | 9.8 | 12.4 | 17.3 | 9.0 | 17.3 | 2.3 |
| 5 | 18.3 | 16.5 | 17.1 | 20.8 | 18.5 | 20.2 | 24.7 | 24.1 | 23.3 | 24.0 | 25.7 | 26.2 | 29.7 | 30.6 | 28.0 | 24.9 | 22.1 | 20.4 | 20.7 | 19.9 | 20.8 | 19.7 | 19.0 | 22.0 | 22.4 | 30.6 | 16.5 |
| 6 | 24.6 | 23.3 | 18.7 | 17.9 | 18.5 | 18.4 | 18.6 | 19.5 | 18.6 | 18.3 | 17.4 | 18.1 | 17.9 | 19.9 | 24.2 | 23.3 | 25.0 | 21.4 | 20.6 | 20.9 | 21.4 | 21.1 | 18.7 | 19.1 | 20.2 | 25.0 | 17.4 |
| 7 | 18.2 | 18.8 | 19.9 | 16.0 | 13.7 | 10.0 | 9.9 | 9.0 | 8.9 | 14.2 | 13.6 | 11.7 | 12.2 | 12.1 | 10.9 | 9.2 | 9.1 | 9.0 | 13.2 | 14.1 | 14.0 | 15.1 | 15.7 | 17.5 | 13.2 | 19.9 | 8.9 |
| 8 | 17.8 | 16.6 | 13.2 | 8.1 | 8.6 | 5.0 | 5.1 | 3.1 | 4.5 | 4.2 | 3.8 | 4.1 | 9.6 | 8.5 | 8.6 | 9.0 | 10.4 | 7.6 | 7.7 | 10.3 | 13.4 | 5.5 | 7.4 | 9.7 | 8.4 | 17.8 | 3.1 |
| 9 | 4.4 | 7.9 | 12.1 | 14.4 | 13.8 | 14.6 | 16.2 | 17.2 | 18.8 | 16.4 | 15.4 | 18.0 | 17.3 | 16.5 | 16.0 | 16.2 | 14.8 | 14.0 | 13.2 | 12.7 | 15.6 | 14.3 | 13.3 | 12.7 | 14.4 | 18.8 | 4.4 |
| 10 | 14.3 | 12.8 | 14.1 | 16.3 | 15.3 | 17.7 | 15.9 | 15.5 | 13.7 | 11.4 | 5.4 | 5.1 | 10.4 | 13.9 | 10.5 | 11.1 | 8.2 | 8.7 | 7.6 | 7.1 | 11.3 | 12.6 | 13.3 | 13.5 | 11.9 | 17.7 | 5.1 |
| 11 | 15.3 | 17.8 | 19.0 | 21.7 | 18.7 | 17.9 | 17.6 | 17.4 | 17.1 | 10.9 | 13.6 | 11.0 | 9.7 | 9.9 | 10.3 | 12.2 | 11.3 | 12.1 | 12.1 | 12.2 | 11.4 | 10.9 | 10.5 | 13.0 | 13.9 | 21.7 | 9.7 |
| 12 | 13.6 | 12.4 | 13.5 | 13.2 | 15.1 | 10.9 | 7.1 | 8.8 | 13.2 | 15.7 | 13.1 | 15.4 | 17.5 | 15.9 | 12.3 | 12.0 | 12.9 | 11.9 | 11.0 | 11.1 | 11.8 | 11.2 | 11.1 | 13.9 | 12.7 | 17.5 | 7.1 |
| 13 | 13.8 | 15.7 | 19.1 | 18.1 | 17.2 | 13.5 | 17.5 | 18.8 | 12.6 | 12.6 | 16.7 | 16.0 | 14.8 | 15.7 | 15.9 | 14.0 | 12.1 | 10.9 | 10.1 | 11.0 | 15.6 | 12.0 | 10.7 | 11.4 | 14.4 | 19.1 | 10.1 |
| 14 | 7.9 | 7.9 | 11.4 | 10.4 | 6.7 | 5.0 | 4.1 | 2.2 | 5.8 | 8.2 | 5.6 | 5.6 | 6.7 | 6.4 | 6.6 | 4.1 | 5.1 | 3.5 | 2.2 | 3.2 | 3.8 | 3.8 | 4.0 | 2.9 | 5.5 | 11.4 | 2.2 |
| 15 | 2.7 | 2.8 | 2.7 | 3.4 | 3.4 | 4.3 | 5.2 | 4.3 | 4.8 | 3.7 | 3.2 | 5.0 | 5.8 | 4.4 | 14.3 | 22.9 | 23.0 | 23.2 | 21.9 | 20.3 | 24.3 | 21.2 | 17.7 | 21.2 | 11.1 | 24.3 | 2.7 |
| 16 | 22.0 | 21.6 | 21.3 | 21.3 | 20.8 | 15.9 | 18.0 | 20.4 | 19.7 | 20.4 | 19.4 | 14.7 | 14.3 | 14.4 | 18.6 | 17.2 | 13.9 | 12.0 | 10.2 | 11.7 | 14.6 | 17.5 | 20.1 | 17.5 | 17.4 | 22.0 | 10.2 |
| 17 | 18.8 | 15.9 | 15.2 | 17.1 | 14.3 | 14.5 | 12.4 | 13.5 | 18.3 | 17.1 | 16.3 | 18.7 | 18.9 | 20.1 | 22.2 | 21.1 | 15.0 | 12.7 | 14.9 | 13.1 | 13.3 | 9.1 | 9.9 | 9.7 | 15.5 | 22.2 | 9.1 |
| 18 | 12.8 | 12.1 | 11.9 | 10.7 | 8.6 | 4.8 | 4.3 | 5.7 | 5.1 | 4.5 | 3.1 | 3.7 | 4.3 | 4.8 | 4.3 | 5.2 | 4.4 | 2.7 | 2.6 | 2.7 | 3.1 | 3.4 | 2.2 | 2.3 | 5.4 | 12.8 | 2.2 |
| 19 | 2.4 | 2.5 | 2.3 | 1.8 | 5.3 | 3.8 | 2.9 | 3.4 | 2.9 | 3.7 | 3.3 | 2.9 | 2.8 | 7.2 | 11.0 | 10.0 | 7.7 | 2.8 | 5.4 | 8.2 | 4.7 | 2.8 | 3.9 | 2.8 | 4.4 | 11.0 | 1.8 |
| 20 | 6.4 | 6.1 | 2.9 | 5.3 | 3.4 | 2.0 | 2.1 | 3.8 | 4.4 | 2.8 | 2.2 | 3.2 | 3.1 | 4.4 | 5.1 | 5.7 | 5.7 | 2.5 | 2.2 | 1.9 | 3.4 | 6.0 | 4.3 | 3.6 | 3.9 | 6.4 | 1.9 |
| 21 | 3.3 | 3.4 | 2.3 | 3.9 | 3.1 | 3.1 | 2.4 | 2.1 | 2.5 | 1.8 | 2.9 | 4.7 | 4.8 | 5.6 | 5.5 | 5.2 | 5.4 | 2.3 | 2.4 | 2.1 | 4.7 | 4.3 | 3.2 | 3.0 | 3.5 | 5.6 | 1.8 |
| 22 | 1.7 | 2.9 | 1.6 | 1.8 | 1.6 | 2.5 | 3.0 | 2.4 | 2.3 | 3.9 | 2.7 | 5.6 | 6.6 | 6.3 | 6.7 | 6.4 | 6.3 | 2.5 | 3.0 | 3.2 | 6.8 | 6.1 | 3.0 | 3.1 | 3.8 | 6.8 | 1.6 |
| 23 | 5.3 | 4.1 | 2.6 | 3.1 | 3.7 | 3.6 | 2.8 | 4.0 | 3.9 | 3.4 | 3.2 | 3.3 | 3.9 | 3.8 | 5.8 | 11.5 | 18.0 | 24.7 | 19.3 | 14.0 | 18.0 | 17.3 | 13.7 | 10.4 | 8.5 | 24.7 | 2.6 |
| 24 | 14.2 | 8.3 | 6.3 | 9.0 | 8.4 | 7.0 | 10.4 | 6.4 | 13.3 | 14.2 | 12.1 | 10.1 | 7.5 | 7.1 | 10.5 | 11.8 | 8.8 | 5.0 | 6.1 | 7.5 | 4.7 | 3.4 | 3.3 | 3.9 | 8.3 | 14.2 | 3.3 |
| 25 | 3.7 | 3.9 | 3.0 | 2.5 | 4.3 | 6.1 | 6.4 | 6.3 | 3.8 | 3.2 | 3.1 | 3.3 | 6.8 | 6.4 | 6.0 | 8.7 | 5.8 | 2.1 | 2.8 | 13.8 | 20.6 | 20.3 | 19.0 | 18.7 | 7.5 | 20.6 | 2.1 |
| 26 | 19.6 | 20.8 | 16.8 | ***** | ***** | ***** | ***** | ***** | ***** | ***** | ***** | ***** | ***** | ***** | ***** | ***** | ***** | ***** | ***** | ***** | ***** | ***** | ***** | ***** | ***** | 20.8 | 16.8 |
| 27 | ***** | ***** | ***** | ***** | ***** | ***** | ***** | ***** | ***** | ***** | ***** | ***** | ***** | ***** | ***** | ***** | ***** | ***** | ***** | ***** | ***** | ***** | ***** | ***** | ***** | ***** | ***** |
| 28 | 1.9 | 2.8 | 3.7 | 2.9 | 3.3 | 2.9 | 5.0 | 5.1 | 2.8 | 2.7 | 5.0 | 5.9 | 7.9 | 7.3 | 8.1 | 5.9 | ***** | ***** | 9.8 | 12.1 | 12.2 | 11.6 | 10.5 | 11.7 | 6.4 | 12.2 | 1.9 |
| 29 | 15.4 | 17.4 | 17.5 | 18.1 | 12.4 | 12.6 | 12.4 | 12.9 | 11.7 | 12.5 | 13.2 | 15.2 | 14.9 | 12.9 | 13.1 | 14.5 | 12.9 | 13.4 | 13.1 | 12.1 | 8.8 | 6.2 | 6.3 | 5.8 | 12.7 | 18.1 | 5.8 |
| 30 | 4.1 | 2.3 | 4.8 | 4.9 | 3.9 | 6.0 | 8.3 | 9.1 | 8.2 | 8.4 | 7.6 | 10.8 | 9.1 | 10.6 | 11.6 | 12.2 | 9.6 | 5.8 | 5.2 | 7.2 | 7.7 | 3.0 | 1.7 | 3.4 | 6.9 | 12.2 | 1.7 |
| 31 | 5.5 | 1.9 | 4.8 | 4.9 | 4.6 | 4.8 | 5.1 | 7.6 | 8.9 | 7.3 | 4.3 | 6.4 | 9.9 | 11.3 | 10.9 | 9.5 | 12.0 | 11.9 | 8.8 | 6.2 | 6.3 | 7.6 | 7.1 | 7.6 | 7.3 | 12.0 | 1.9 |
| Mean | 11.5 | 11.0 | 10.8 | 11.1 | 10.6 | 9.9 | 10.2 | 10.2 | 10.0 | 9.8 | 9.6 | 10.2 | 11.0 | 11.1 | 12.1 | 12.5 | 12.0 | 10.9 | 10.6 | 11.1 | 12.0 | 10.9 | 10.6 | 11.0 | Monthly mean = | | 10.9 |
| Max. | 24.6 | 23.3 | 21.3 | 21.7 | 22.0 | 20.2 | 24.7 | 24.1 | 23.3 | 24.0 | 25.7 | 26.2 | 29.7 | 30.6 | 28.0 | 24.9 | 25.0 | 24.7 | 26.4 | 27.5 | 24.3 | 21.2 | 22.0 | 22.0 | Monthly max. = | | 30.6 |
| Min. | 1.7 | 1.9 | 1.6 | 1.8 | 1.6 | 2.0 | 2.1 | 2.1 | 2.3 | 1.8 | 2.2 | 2.9 | 2.8 | 3.8 | 4.3 | 4.1 | 4.4 | 2.1 | 2.2 | 1.9 | 3.1 | 2.8 | 1.7 | 2.3 | Monthly min. = | | 1.6 |

TOTAL NUMBER OF DATA HOURS IN MONTH: 744
Number of hours of bad or missing data: 47
**** designates missing or lost data

Current % recovery = 93.7

N/A: insufficient data available for calculation (a minimum of 75% is required)

table created at 11: 3, 4/12/1995

MONTHLY SUMMARY
WIND DIRECTION
(Degrees)
INPUT FILE: allslmet.out

Bechtel Environmental, Inc.

Met Data for Site 1
JANUARY 1994

| Day \ Hour | 1 | 2 | 3 | 4 | 5 | 6 | 7 | 8 | 9 | 10 | 11 | 12 | 13 | 14 | 15 | 16 | 17 | 18 | 19 | 20 | 21 | 22 | 23 | 24 | Mean | Max. | Min. |
|---|---|---|---|---|---|---|---|---|---|---|---|---|---|---|---|---|---|---|---|---|---|---|---|---|---|---|---|
| 1 | 133.0 | 130.0 | 132.0 | 122.0 | 128.0 | 127.0 | 132.0 | 137.0 | 135.0 | 149.0 | 143.0 | 147.0 | 145.0 | 203.0 | 243.0 | 265.0 | 239.0 | 238.0 | 240.0 | 253.0 | 257.0 | 251.0 | 263.0 | 244.0 | 185.7 | 265.0 | 122.0 |
| 2 | 234.0 | 234.0 | 233.0 | 233.0 | 235.0 | 236.0 | 236.0 | 232.0 | 224.0 | 235.0 | 209.0 | 204.0 | 185.0 | 171.0 | 161.0 | 138.0 | 135.0 | 140.0 | 140.0 | 144.0 | 163.0 | 193.0 | 144.0 | 172.0 | 193.0 | 236.0 | 135.0 |
| 3 | 206.0 | 186.0 | 208.0 | 225.0 | 232.0 | 233.0 | 250.0 | 266.0 | 277.0 | 262.0 | 230.0 | 229.0 | 239.0 | 250.0 | 246.0 | 244.0 | 173.0 | 132.0 | 140.0 | 131.0 | 123.0 | 124.0 | 113.0 | 129.0 | 202.0 | 277.0 | 113.0 |
| 4 | 134.0 | 294.0 | 327.0 | 358.0 | 293.0 | 303.0 | 353.0 | 289.0 | 311.0 | 328.0 | 261.0 | 214.0 | 145.0 | 134.0 | 138.0 | 138.0 | 182.0 | 236.0 | 241.0 | 200.0 | 144.0 | 154.0 | 218.0 | 210.0 | 233.5 | 358.0 | 134.0 |
| 5 | 236.0 | 240.0 | 239.0 | 240.0 | 245.0 | 244.0 | 243.0 | 245.0 | 245.0 | 249.0 | 245.0 | 250.0 | 253.0 | 255.0 | 257.0 | 258.0 | 253.0 | 246.0 | 249.0 | 245.0 | 244.0 | 251.0 | 249.0 | 258.0 | 247.5 | 258.0 | 236.0 |
| 6 | 258.0 | 257.0 | 253.0 | 248.0 | 242.0 | 240.0 | 245.0 | 259.0 | 249.0 | 255.0 | 239.0 | 239.0 | 253.0 | 253.0 | 262.0 | 264.0 | 261.0 | 257.0 | 251.0 | 240.0 | 240.0 | 237.0 | 236.0 | 238.0 | 249.0 | 264.0 | 236.0 |
| 7 | 238.0 | 244.0 | 247.0 | 243.0 | 230.0 | 209.0 | 182.0 | 182.0 | 151.0 | 138.0 | 146.0 | 166.0 | 177.0 | 192.0 | 184.0 | 174.0 | 144.0 | 138.0 | 126.0 | 133.0 | 126.0 | 130.0 | 131.0 | 129.0 | 173.3 | 247.0 | 126.0 |
| 8 | 128.0 | 132.0 | 140.0 | 173.0 | 165.0 | 296.0 | 348.0 | 306.0 | 305.0 | 290.0 | 15.0 | 345.0 | 132.0 | 131.0 | 152.0 | 134.0 | 135.0 | 134.0 | 167.0 | 130.0 | 141.0 | 331.0 | 175.0 | 132.0 | 84.0 | 348.0 | 15.0 |
| 9 | 143.0 | 225.0 | 234.0 | 250.0 | 265.0 | 262.0 | 260.0 | 253.0 | 247.0 | 249.0 | 249.0 | 247.0 | 248.0 | 258.0 | 262.0 | 260.0 | 250.0 | 260.0 | 267.0 | 244.0 | 251.0 | 264.0 | 248.0 | 252.0 | 247.8 | 267.0 | 143.0 |
| 10 | 250.0 | 268.0 | 258.0 | 259.0 | 257.0 | 246.0 | 245.0 | 247.0 | 248.0 | 269.0 | 296.0 | 280.0 | 272.0 | 265.0 | 271.0 | 268.0 | 246.0 | 212.0 | 177.0 | 158.0 | 178.0 | 183.0 | 141.0 | 139.0 | 234.7 | 296.0 | 139.0 |
| 11 | 140.0 | 143.0 | 144.0 | 132.0 | 143.0 | 139.0 | 135.0 | 135.0 | 136.0 | 147.0 | 238.0 | 250.0 | 264.0 | 276.0 | 248.0 | 230.0 | 253.0 | 254.0 | 261.0 | 252.0 | 258.0 | 251.0 | 259.0 | 255.0 | 206.0 | 276.0 | 132.0 |
| 12 | 248.0 | 245.0 | 245.0 | 245.0 | 253.0 | 272.0 | 291.0 | 242.0 | 247.0 | 245.0 | 244.0 | 249.0 | 255.0 | 255.0 | 271.0 | 253.0 | 241.0 | 235.0 | 220.0 | 225.0 | 223.0 | 216.0 | 230.0 | 232.0 | 245.1 | 291.0 | 216.0 |
| 13 | 233.0 | 240.0 | 243.0 | 243.0 | 247.0 | 243.0 | 248.0 | 245.0 | 255.0 | 251.0 | 248.0 | 253.0 | 246.0 | 250.0 | 246.0 | 243.0 | 244.0 | 229.0 | 227.0 | 231.0 | 236.0 | 229.0 | 222.0 | 241.0 | 241.4 | 255.0 | 222.0 |
| 14 | 222.0 | 217.0 | 227.0 | 222.0 | 181.0 | 2.0 | 314.0 | 36.0 | 108.0 | 128.0 | 108.0 | 220.0 | 211.0 | 335.0 | 22.0 | 33.0 | 26.0 | 344.0 | 305.0 | 349.0 | 24.0 | 37.0 | 51.0 | 30.0 | 336.3 | 349.0 | 2.0 |
| 15 | 92.0 | 3.0 | 47.0 | 63.0 | 34.0 | 21.0 | 14.0 | 35.0 | 18.0 | 27.0 | 347.0 | 292.0 | 299.0 | 141.0 | 236.0 | 242.0 | 250.0 | 248.0 | 265.0 | 250.0 | 247.0 | 252.0 | 257.0 | 241.0 | 328.4 | 347.0 | 3.0 |
| 16 | 239.0 | 236.0 | 251.0 | 248.0 | 248.0 | 241.0 | 240.0 | 243.0 | 248.0 | 259.0 | 249.0 | 244.0 | 246.0 | 248.0 | 257.0 | 264.0 | 264.0 | 243.0 | 227.0 | 227.0 | 226.0 | 235.0 | 242.0 | 245.0 | 244.6 | 264.0 | 226.0 |
| 17 | 237.0 | 238.0 | 234.0 | 234.0 | 239.0 | 232.0 | 233.0 | 229.0 | 229.0 | 242.0 | 241.0 | 246.0 | 251.0 | 260.0 | 253.0 | 252.0 | 252.0 | 243.0 | 236.0 | 235.0 | 231.0 | 228.0 | 234.0 | 228.0 | 239.0 | 260.0 | 228.0 |
| 18 | 234.0 | 233.0 | 235.0 | 231.0 | 122.0 | 74.0 | 318.0 | 302.0 | 301.0 | 339.0 | 25.0 | 5.0 | 1.0 | 6.0 | 7.0 | 24.0 | 15.0 | 51.0 | 342.0 | 351.0 | 319.0 | 320.0 | 72.0 | 357.0 | 343.5 | 357.0 | 1.0 |
| 19 | 319.0 | 321.0 | 342.0 | 32.0 | 284.0 | 4.0 | 71.0 | 52.0 | 309.0 | 324.0 | 323.0 | 311.0 | 336.0 | 280.0 | 263.0 | 268.0 | 270.0 | 186.0 | 124.0 | 125.0 | 1.0 | 314.0 | 305.0 | 300.0 | 332.7 | 342.0 | 1.0 |
| 20 | 283.0 | 277.0 | 128.0 | 294.0 | 316.0 | 65.0 | 98.0 | 283.0 | 300.0 | 40.0 | 5.0 | 19.0 | 33.0 | 40.0 | 40.0 | 33.0 | 30.0 | 74.0 | 83.0 | 348.0 | 298.0 | 283.0 | 284.0 | 295.0 | 359.5 | 348.0 | 5.0 |
| 21 | 294.0 | 115.0 | 303.0 | 318.0 | 91.0 | 300.0 | 339.0 | 325.0 | 315.0 | 7.0 | 46.0 | 45.0 | 25.0 | 23.0 | 23.0 | 28.0 | 9.0 | 92.0 | 104.0 | 82.0 | 285.0 | 287.0 | 321.0 | 302.0 | 5.0 | 339.0 | 7.0 |
| 22 | 34.0 | 306.0 | 357.0 | 79.0 | 345.0 | 73.0 | 316.0 | 31.0 | 76.0 | 298.0 | 353.0 | 53.0 | 32.0 | 40.0 | 25.0 | 30.0 | 25.0 | 77.0 | 339.0 | 98.0 | 117.0 | 285.0 | 345.0 | 80.0 | 23.9 | 357.0 | 25.0 |
| 23 | 288.0 | 308.0 | 314.0 | 285.0 | 8.0 | 302.0 | 330.0 | 318.0 | 338.0 | 303.0 | 343.0 | 68.0 | 39.0 | 32.0 | 211.0 | 157.0 | 185.0 | 192.0 | 194.0 | 178.0 | 193.0 | 198.0 | 192.0 | 159.0 | 214.0 | 343.0 | 8.0 |
| 24 | 139.0 | 139.0 | 109.0 | 204.0 | 209.0 | 126.0 | 126.0 | 135.0 | 127.0 | 134.0 | 137.0 | 140.0 | 138.0 | 122.0 | 131.0 | 139.0 | 157.0 | 138.0 | 140.0 | 118.0 | 94.0 | 120.0 | 313.0 | 304.0 | 151.6 | 313.0 | 94.0 |
| 25 | 301.0 | 305.0 | 302.0 | 313.0 | 300.0 | 106.0 | 268.0 | 282.0 | 301.0 | 303.0 | 317.0 | 41.0 | 23.0 | 6.0 | 11.0 | 18.0 | 16.0 | 107.0 | 315.0 | 249.0 | 234.0 | 236.0 | 245.0 | 246.0 | 321.9 | 317.0 | 6.0 |
| 26 | 247.0 | 248.0 | 254.0 | ***** | ***** | ***** | ***** | ***** | ***** | ***** | ***** | ***** | ***** | ***** | ***** | ***** | ***** | ***** | ***** | ***** | ***** | ***** | ***** | ***** | ***** | 254.0 | 247.0 |
| 27 | ***** | ***** | ***** | ***** | ***** | ***** | ***** | ***** | ***** | ***** | ***** | ***** | ***** | ***** | ***** | 297.0 | 277.0 | 279.0 | 273.0 | 273.0 | 270.0 | 280.0 | 89.0 | 66.0 | ***** | 297.0 | 66.0 |
| 28 | 103.0 | 108.0 | 90.0 | 88.0 | 77.0 | 59.0 | 60.0 | 79.0 | 110.0 | 109.0 | 350.0 | 37.0 | 37.0 | 31.0 | 11.0 | 359.0 | ***** | ***** | 246.0 | 227.0 | 229.0 | 235.0 | 234.0 | 240.0 | 10.9 | 359.0 | 11.0 |
| 29 | 242.0 | 250.0 | 249.0 | 250.0 | 252.0 | 245.0 | 260.0 | 240.0 | 238.0 | 251.0 | 253.0 | 260.0 | 260.0 | 265.0 | 262.0 | 244.0 | 233.0 | 232.0 | 232.0 | 230.0 | 258.0 | 265.0 | 268.0 | 263.0 | 250.1 | 268.0 | 230.0 |
| 30 | 313.0 | 33.0 | 77.0 | 53.0 | 74.0 | 91.0 | 79.0 | 77.0 | 72.0 | 55.0 | 43.0 | 38.0 | 38.0 | 41.0 | 44.0 | 47.0 | 48.0 | 47.0 | 99.0 | 115.0 | 114.0 | 92.0 | 99.0 | 291.0 | 56.7 | 313.0 | 33.0 |
| 31 | 271.0 | 87.0 | 116.0 | 101.0 | 321.0 | 104.0 | 115.0 | 118.0 | 120.0 | 119.0 | 115.0 | 266.0 | 245.0 | 271.0 | 270.0 | 269.0 | 254.0 | 241.0 | 229.0 | 211.0 | 108.0 | 121.0 | 122.0 | 126.0 | 180.0 | 321.0 | 87.0 |
| Mean | 214.6 | 208.7 | 217.9 | 206.4 | 208.1 | 337.1 | 330.7 | 200.8 | 215.2 | 207.1 | 331.7 | 321.3 | 173.4 | 335.0 | 321.6 | 185.8 | 174.7 | 189.8 | 215.3 | 208.4 | 194.4 | 220.1 | 210.1 | 213.5 | Monthly mean = | | 200.0 |
| Max. | 319.0 | 321.0 | 357.0 | 358.0 | 345.0 | 303.0 | 353.0 | 325.0 | 338.0 | 339.0 | 353.0 | 345.0 | 336.0 | 335.0 | 271.0 | 359.0 | 277.0 | 344.0 | 342.0 | 351.0 | 319.0 | 331.0 | 345.0 | 357.0 | Monthly max. = | | 359.0 |
| Min. | 34.0 | 3.0 | 47.0 | 32.0 | 8.0 | 2.0 | 14.0 | 31.0 | 18.0 | 7.0 | 5.0 | 5.0 | 1.0 | 6.0 | 7.0 | 18.0 | 9.0 | 47.0 | 83.0 | 82.0 | 1.0 | 37.0 | 51.0 | 30.0 | Monthly min. = | | 1.0 |

TOTAL NUMBER OF DATA HOURS IN MONTH: 744
Number of hours of bad or missing data: 38
Current % recovery = 94.9
**** designates missing or lost data

N/A: insufficient data available for calculation (a minimum of 75% is required)

table created at 11: 3, 4/12/1995

MONTHLY SUMMARY
TEMPERATURE
(Degrees Celsius)
INPUT FILE: allsimet.out

Bechtel Environmental, Inc.

Met Data for Site 1
JANUARY 1994

| Day \ Hour | 1 | 2 | 3 | 4 | 5 | 6 | 7 | 8 | 9 | 10 | 11 | 12 | 13 | 14 | 15 | 16 | 17 | 18 | 19 | 20 | 21 | 22 | 23 | 24 | Mean | Max. | Min. |
|---|---|---|---|---|---|---|---|---|---|---|---|---|---|---|---|---|---|---|---|---|---|---|---|---|---|---|---|
| 1 | -.2 | .0 | .2 | .6 | .5 | .5 | .7 | 1.6 | 1.9 | 2.5 | 3.8 | 4.3 | 5.1 | 7.1 | 5.7 | 1.9 | 1.7 | 2.0 | 2.0 | 2.5 | 2.0 | 2.1 | 1.5 | 1.6 | 2.2 | 7.1 | -.2 |
| 2 | 1.6 | 1.6 | 1.4 | 1.1 | 1.1 | .8 | .9 | .9 | 1.5 | 2.6 | 4.0 | 4.9 | 4.9 | 5.2 | 5.5 | 5.0 | 4.4 | 4.1 | 4.3 | 4.0 | 5.0 | 6.0 | 3.9 | 4.7 | 3.3 | 6.0 | .8 |
| 3 | 4.8 | 3.1 | 2.4 | 3.7 | 4.2 | 3.9 | 4.3 | 4.1 | 2.9 | 3.4 | 4.4 | 4.6 | 4.6 | 4.9 | 5.2 | 5.8 | 5.6 | 4.6 | 5.0 | 4.3 | 4.2 | 4.0 | 4.0 | 4.6 | 4.3 | 5.8 | 2.4 |
| 4 | 4.8 | 2.4 | .5 | -.2 | -.5 | -.7 | -.7 | -.6 | -.4 | .7 | 2.9 | 7.7 | 8.1 | 8.7 | 8.7 | 8.5 | 9.5 | 8.5 | 5.6 | 3.9 | 3.3 | 4.4 | 6.2 | 5.7 | 4.0 | 9.5 | -.7 |
| 5 | 5.5 | 4.2 | 3.1 | 2.1 | 1.5 | 1.5 | 1.3 | .8 | .5 | .7 | 1.1 | 1.4 | 1.4 | 1.5 | 1.5 | 1.5 | 1.7 | 1.2 | .5 | .2 | .3 | .1 | .0 | -.2 | 1.4 | 5.5 | -.2 |
| 6 | -.6 | -1.0 | -1.0 | -1.1 | -1.4 | -1.5 | -1.4 | -1.8 | -1.9 | -2.1 | -1.8 | -1.0 | -.3 | .7 | .9 | 1.4 | .9 | -.2 | -.8 | -1.8 | -2.2 | -2.4 | -2.6 | -2.5 | -1.1 | 1.4 | -2.6 |
| 7 | -2.4 | -2.1 | -2.0 | -1.6 | -2.0 | -2.0 | -2.0 | -2.1 | -2.8 | -2.3 | -1.0 | .6 | 1.3 | 1.4 | 1.6 | 1.5 | .6 | .0 | -.7 | -1.0 | -1.4 | -1.6 | -1.8 | -1.8 | -1.0 | 1.6 | -2.8 |
| 8 | -1.6 | -1.4 | -1.2 | -2.1 | -1.3 | -3.4 | -3.7 | -3.7 | -3.3 | -3.1 | -2.3 | -1.8 | -.3 | .3 | .7 | -.9 | -.5 | .6 | .4 | .7 | 1.3 | .9 | .1 | -.1 | -1.1 | 1.3 | -3.7 |
| 9 | .3 | .0 | .6 | .3 | -.2 | -.3 | -.5 | -.8 | -.8 | -.6 | -.5 | -.1 | .5 | .6 | .6 | .6 | .9 | .9 | .6 | .8 | .6 | -.2 | -.1 | .0 | .1 | .9 | -.8 |
| 10 | .3 | -.1 | .0 | .0 | -.1 | .1 | -.3 | -.2 | -.1 | -.3 | -.3 | .7 | 1.9 | 2.2 | 2.3 | 2.4 | 2.4 | 2.5 | 2.2 | 1.6 | 1.8 | 2.0 | .6 | .3 | .9 | 2.5 | -.3 |
| 11 | .7 | .1 | .1 | .2 | .5 | .6 | .4 | .5 | .7 | 1.4 | 2.2 | .1 | -.3 | -.4 | .1 | .8 | .5 | .3 | -.1 | .4 | .2 | .5 | .6 | .4 | .4 | 2.2 | -.4 |
| 12 | .3 | .4 | .4 | .4 | .5 | .3 | .0 | .6 | 1.3 | 1.5 | 2.3 | 2.7 | 3.1 | 3.6 | 3.4 | 3.9 | 4.4 | 4.1 | 4.3 | 4.5 | 4.4 | 4.4 | 4.3 | 4.3 | 2.5 | 4.5 | .0 |
| 13 | 4.0 | 4.0 | 3.6 | 3.3 | 3.1 | 2.7 | 2.6 | 3.0 | 3.0 | 3.1 | 3.5 | 3.5 | 4.0 | 4.6 | 5.0 | 4.9 | 5.1 | 5.5 | 5.9 | 5.7 | 4.9 | 5.1 | 5.4 | 5.1 | 4.2 | 5.9 | 2.6 |
| 14 | 4.5 | 4.9 | 5.7 | 6.0 | 5.1 | 3.4 | 2.8 | 2.6 | 2.8 | 3.7 | 4.6 | 6.0 | 7.1 | 6.9 | 4.3 | 4.0 | 4.1 | 2.1 | .3 | -.3 | -.9 | -1.1 | -1.4 | -1.7 | 3.1 | 7.1 | -1.7 |
| 15 | -2.1 | -2.5 | -2.3 | -2.6 | -2.4 | -2.4 | -2.5 | -2.1 | -2.4 | -2.2 | -1.6 | -.9 | -.1 | 1.0 | 5.1 | 7.5 | 6.8 | 5.2 | 2.5 | 1.6 | 1.0 | .1 | -.2 | -.2 | .2 | 7.5 | -2.6 |
| 16 | -.5 | -1.0 | -1.5 | -2.0 | -2.1 | -2.0 | -1.9 | -1.6 | -1.3 | -1.6 | -1.7 | -1.4 | -1.1 | -.2 | .7 | .8 | .7 | .8 | .9 | 1.1 | 1.1 | 1.4 | 1.7 | 1.6 | -.4 | 1.7 | -2.1 |
| 17 | 1.5 | 1.4 | 1.2 | 1.4 | 1.5 | 1.4 | 1.5 | 1.6 | 2.2 | 3.2 | 4.2 | 4.7 | 5.4 | 5.7 | 6.6 | 7.3 | 7.1 | 6.5 | 6.0 | 5.5 | 4.9 | 4.5 | 4.0 | 4.2 | 3.9 | 7.3 | 1.2 |
| 18 | 4.6 | 4.3 | 4.4 | 4.5 | .9 | -1.9 | -5.4 | -7.6 | -7.4 | -5.7 | -2.5 | .2 | 2.3 | 2.9 | 4.8 | 4.4 | 4.0 | 1.5 | -1.2 | -2.4 | -3.1 | -3.4 | -4.1 | -4.6 | -.4 | 4.8 | -7.6 |
| 19 | -5.0 | -5.3 | -5.9 | -6.6 | -6.4 | -7.4 | -7.6 | -7.7 | -6.9 | -5.1 | -3.9 | -.8 | 3.5 | 6.8 | 7.5 | 7.8 | 7.4 | 5.2 | 3.7 | 2.4 | .5 | -2.9 | -3.1 | -3.8 | -1.4 | 7.8 | -7.7 |
| 20 | -3.9 | -4.2 | -5.5 | -5.6 | -6.0 | -6.2 | -7.0 | -7.3 | -7.5 | -6.4 | -3.0 | .4 | 2.8 | 4.0 | 5.4 | 6.0 | 5.3 | 2.4 | -.2 | -1.5 | -1.8 | -1.5 | -2.4 | -4.0 | -2.0 | 6.0 | -7.5 |
| 21 | -4.0 | -5.2 | -6.0 | -5.7 | -6.6 | -7.3 | -7.7 | -8.4 | -7.2 | -4.6 | -1.7 | 1.2 | 4.0 | 5.5 | 7.0 | 7.9 | 6.5 | 3.2 | 1.9 | .6 | -.5 | -1.0 | -1.9 | -2.8 | -1.4 | 7.9 | -8.4 |
| 22 | -3.9 | -4.3 | -5.2 | -5.6 | -6.0 | -6.6 | -7.1 | -7.7 | -6.6 | -5.1 | -1.8 | .8 | 3.5 | 5.8 | 7.2 | 8.1 | 6.7 | 3.3 | 1.1 | -.8 | -.4 | -1.4 | -3.6 | -4.0 | -1.4 | 8.1 | -7.7 |
| 23 | -4.1 | -5.0 | -5.9 | -6.5 | -6.5 | -7.0 | -7.8 | -7.5 | -7.1 | -4.6 | -.8 | .6 | 5.8 | 9.5 | 11.7 | 11.3 | 11.8 | 11.7 | 10.9 | 10.4 | 9.7 | 8.4 | 7.6 | 5.4 | 2.2 | 11.8 | -7.8 |
| 24 | 3.9 | 3.8 | 3.4 | 4.9 | 4.5 | 2.6 | 2.2 | .9 | 2.8 | 4.2 | 5.7 | 7.4 | 8.7 | 8.9 | 9.0 | 8.9 | 8.7 | 7.5 | 6.6 | 6.5 | 4.9 | 2.9 | .1 | -1.3 | 4.9 | 9.0 | -1.3 |
| 25 | -1.0 | -1.1 | -1.7 | -1.3 | -1.5 | .3 | -.4 | -1.6 | -2.1 | -2.1 | -.1 | 5.1 | 6.6 | 7.6 | 8.8 | 8.5 | 7.3 | 4.6 | 3.2 | 3.1 | 2.9 | 1.1 | .4 | .3 | 2.0 | 8.8 | -2.1 |
| 26 | .0 | .0 | .2 | ***** | ***** | ***** | ***** | ***** | ***** | ***** | ***** | ***** | ***** | ***** | ***** | ***** | ***** | ***** | ***** | ***** | ***** | ***** | ***** | ***** | ***** | .2 | .0 |
| 27 | ***** | ***** | ***** | ***** | ***** | ***** | ***** | ***** | ***** | ***** | ***** | ***** | ***** | ***** | ***** | ***** | ***** | ***** | ***** | ***** | ***** | ***** | ***** | ***** | ***** | ***** | ***** |
| 28 | -2.7 | -3.3 | -3.9 | -5.5 | -6.1 | -5.7 | -5.5 | -6.3 | -6.9 | -5.8 | -3.5 | -1.6 | -.4 | .5 | 1.3 | 1.8 | ***** | ***** | -1.3 | -1.4 | -1.4 | -1.5 | -1.4 | -1.3 | -2.8 | 1.8 | -6.9 |
| 29 | -1.3 | -1.5 | -1.6 | -2.0 | -2.2 | -2.3 | -2.9 | -3.1 | -3.0 | -2.8 | -2.7 | -2.5 | -2.4 | -1.9 | -1.2 | -1.1 | -1.0 | -.9 | -1.2 | -1.8 | -2.4 | -2.8 | -3.1 | -3.1 | -2.1 | -.9 | -3.1 |
| 30 | -3.7 | -5.6 | -6.1 | -6.9 | -8.6 | -8.4 | -8.7 | -9.0 | -9.0 | -8.4 | -7.0 | -5.9 | -5.2 | -4.4 | -4.0 | -3.8 | -3.9 | -4.8 | -6.1 | -6.3 | -6.8 | -8.2 | -9.6 | -10.9 | -6.7 | -3.7 | -10.9 |
| 31 | -10.5 | -13.0 | -13.2 | -13.6 | -14.0 | -14.8 | -14.6 | -14.0 | -13.1 | -10.7 | -7.0 | -5.4 | -4.8 | -4.4 | -4.3 | -4.1 | -4.0 | -4.5 | -4.8 | -5.4 | -7.2 | -8.4 | -9.3 | -10.0 | -9.0 | -4.0 | -14.8 |
| Mean | -.4 | -.9 | -1.2 | -1.4 | -1.7 | -2.1 | -2.4 | -2.6 | -2.4 | -1.6 | -.2 | 1.2 | 2.4 | 3.3 | 3.8 | 3.9 | 3.7 | 2.8 | 1.8 | 1.3 | .9 | .4 | -.1 | -.5 | Monthly mean = | | .3 |
| Max. | 5.5 | 4.9 | 5.7 | 6.0 | 5.1 | 3.9 | 4.3 | 4.1 | 3.0 | 4.2 | 5.7 | 7.7 | 8.7 | 9.5 | 11.7 | 11.3 | 11.8 | 11.7 | 10.9 | 10.4 | 9.7 | 8.4 | 7.6 | 5.7 | Monthly max. = | | 11.8 |
| Min. | -10.5 | -13.0 | -13.2 | -13.6 | -14.0 | -14.8 | -14.6 | -14.0 | -13.1 | -10.7 | -7.0 | -5.9 | -5.2 | -4.4 | -4.3 | -4.1 | -4.0 | -4.8 | -6.1 | -6.3 | -7.2 | -8.4 | -9.6 | -10.9 | Monthly min. = | | -14.8 |

TOTAL NUMBER OF DATA HOURS IN MONTH: 744
Number of hours of bad or missing data: 47
Current % recovery = 93.7
**** designates missing or lost data

N/A: insufficient data available for calculation (a minimum of 75% is required)

table created at 11: 3, 4/12/1995

MONTHLY SUMMARY
SIGMA THETA
*(Degrees)*
INPUT FILE: allsimet.out

Bechtel Environmental, Inc.

Met Data for Site 1
JANUARY 1994

| Day \ Hour | 1 | 2 | 3 | 4 | 5 | 6 | 7 | 8 | 9 | 10 | 11 | 12 | 13 | 14 | 15 | 16 | 17 | 18 | 19 | 20 | 21 | 22 | 23 | 24 | Mean | Max. | Min. |
|---|---|---|---|---|---|---|---|---|---|---|---|---|---|---|---|---|---|---|---|---|---|---|---|---|---|---|---|
| 1 | 5. | 5. | 5. | 7. | 5. | 5. | 5. | 6. | 8. | 12. | 19. | 31. | 9. | 18. | 16. | 13. | 13. | 13. | 14. | 12. | 12. | 12. | 12. | 14. | N/A | 31. | 5. |
| 2 | 13. | 12. | 13. | 13. | 12. | 12. | 12. | 13. | 13. | 14. | 15. | 15. | 13. | 13. | 13. | 7. | 7. | 8. | 10. | 12. | 19. | 20. | 16. | 17. | N/A | 20. | 7. |
| 3 | 17. | 22. | 15. | 14. | 15. | 14. | 14. | 14. | 13. | 14. | 12. | 13. | 13. | 14. | 13. | 14. | 16. | 8. | 12. | 6. | 11. | 35. | 8. | 8. | N/A | 35. | 6. |
| 4 | 6. | 50. | 25. | 24. | 43. | 36. | 33. | 20. | 32. | 32. | 22. | 15. | 15. | 8. | 7. | 8. | 19. | 17. | 15. | 14. | 10. | 24. | 25. | 13. | N/A | 50. | 6. |
| 5 | 16. | 14. | 14. | 14. | 13. | 13. | 13. | 12. | 13. | 14. | 13. | 14. | 13. | 13. | 12. | 12. | 13. | 13. | 13. | 13. | 13. | 12. | 13. | 12. | N/A | 16. | 12. |
| 6 | 11. | 12. | 13. | 13. | 12. | 13. | 13. | 11. | 12. | 11. | 12. | 14. | 15. | 13. | 11. | 12. | 11. | 12. | 13. | 12. | 12. | 12. | 13. | 13. | N/A | 15. | 11. |
| 7 | 13. | 13. | 11. | 14. | 14. | 15. | 13. | 17. | 21. | 8. | 14. | 17. | 17. | 15. | 15. | 18. | 13. | 10. | 5. | 6. | 5. | 6. | 7. | 7. | N/A | 21. | 5. |
| 8 | 6. | 7. | 20. | 47. | 25. | 27. | 30. | 24. | 37. | 19. | 26. | 42. | 9. | 10. | 22. | 9. | 9. | 11. | 13. | 8. | 16. | 57. | 31. | 7. | N/A | 57. | 6. |
| 9 | 39. | 33. | 12. | 13. | 12. | 12. | 11. | 13. | 11. | 11. | 12. | 12. | 13. | 12. | 11. | 12. | 13. | 13. | 13. | 15. | 12. | 13. | 14. | 13. | N/A | 39. | 11. |
| 10 | 13. | 13. | 12. | 12. | 12. | 12. | 13. | 13. | 13. | 12. | 43. | 23. | 13. | 10. | 11. | 10. | 16. | 14. | 10. | 15. | 11. | 12. | 10. | 10. | N/A | 43. | 10. |
| 11 | 11. | 9. | 10. | 10. | 9. | 8. | 7. | 8. | 6. | 14. | 21. | 15. | 15. | 13. | 14. | 13. | 17. | 15. | 14. | 14. | 16. | 15. | 15. | 15. | N/A | 21. | 6. |
| 12 | 13. | 14. | 14. | 14. | 13. | 13. | 14. | 18. | 13. | 13. | 15. | 13. | 13. | 14. | 14. | 15. | 12. | 12. | 16. | 16. | 14. | 15. | 15. | 12. | N/A | 18. | 12. |
| 13 | 12. | 13. | 12. | 13. | 13. | 16. | 13. | 13. | 16. | 15. | 12. | 13. | 15. | 14. | 14. | 13. | 15. | 16. | 15. | 17. | 13. | 15. | 17. | 16. | N/A | 17. | 12. |
| 14 | 30. | 40. | 15. | 21. | 29. | 23. | 28. | 35. | 23. | 8. | 71. | 48. | 22. | 43. | 11. | 12. | 10. | 23. | 37. | 25. | 17. | 18. | 13. | 30. | N/A | 71. | 8. |
| 15 | 22. | 37. | 22. | 21. | 29. | 15. | 12. | 11. | 11. | 15. | 55. | 15. | 19. | 74. | 32. | 14. | 14. | 13. | 13. | 13. | 12. | 13. | 13. | 13. | N/A | 74. | 11. |
| 16 | 12. | 12. | 12. | 11. | 11. | 13. | 13. | 13. | 12. | 12. | 13. | 15. | 16. | 15. | 14. | 12. | 14. | 15. | 15. | 14. | 14. | 14. | 13. | 13. | N/A | 16. | 11. |
| 17 | 13. | 15. | 14. | 14. | 14. | 13. | 12. | 13. | 14. | 14. | 15. | 14. | 14. | 12. | 13. | 13. | 14. | 14. | 14. | 13. | 14. | 16. | 15. | 17. | N/A | 17. | 12. |
| 18 | 14. | 12. | 14. | 14. | 34. | 27. | 47. | 14. | 14. | 17. | 23. | 23. | 20. | 15. | 23. | 12. | 13. | 44. | 32. | 38. | 37. | 56. | 73. | 40. | N/A | 73. | 12. |
| 19 | 23. | 54. | 37. | 54. | 19. | 56. | 34. | 25. | 61. | 30. | 27. | 49. | 27. | 36. | 10. | 10. | 10. | 36. | 9. | 6. | 24. | 42. | 11. | 13. | N/A | 61. | 6. |
| 20 | 7. | 5. | 29. | 13. | 11. | 28. | 43. | 23. | 14. | 22. | 62. | 26. | 42. | 20. | 13. | 9. | 10. | 24. | 32. | 45. | 11. | 6. | 44. | 25. | N/A | 62. | 5. |
| 21 | 50. | 15. | 27. | 24. | 50. | 26. | 24. | 18. | 23. | 40. | 17. | 14. | 16. | 15. | 16. | 13. | 60. | 42. | 31. | 34. | 36. | 11. | 12. | 40. | N/A | 60. | 11. |
| 22 | 51. | 10. | 36. | 35. | 27. | 19. | 11. | 52. | 21. | 14. | 28. | 12. | 10. | 11. | 10. | 10. | 33. | 76. | 37. | 35. | 18. | 19. | 35. | 38. | N/A | 76. | 10. |
| 23 | 19. | 20. | 38. | 51. | 34. | 30. | 51. | 28. | 25. | 37. | 36. | 26. | 27. | 25. | 41. | 13. | 14. | 12. | 16. | 13. | 11. | 12. | 15. | 22. | N/A | 51. | 11. |
| 24 | 10. | 20. | 23. | 19. | 15. | 56. | 4. | 24. | 7. | 7. | 9. | 11. | 22. | 25. | 35. | 11. | 12. | 15. | 10. | 8. | 49. | 65. | 32. | 41. | N/A | 65. | 4. |
| 25 | 13. | 16. | 30. | 64. | 35. | 15. | 30. | 7. | 14. | 20. | 26. | 53. | 12. | 13. | 14. | 11. | 10. | 43. | 37. | 9. | 8. | 10. | 10. | 10. | N/A | 64. | 7. |
| 26 | 10. | 7. | 9. | ***** | ***** | ***** | ***** | ***** | ***** | ***** | ***** | ***** | ***** | ***** | ***** | ***** | ***** | ***** | ***** | ***** | ***** | ***** | ***** | ***** | N/A | 10. | 7. |
| 27 | ***** | ***** | ***** | ***** | ***** | ***** | ***** | ***** | ***** | ***** | ***** | ***** | ***** | ***** | ***** | 19. | 9. | 8. | 7. | 7. | 11. | 36. | 15. | 25. | N/A | 36. | 7. |
| 28 | 25. | 45. | 21. | 30. | 51. | 27. | 18. | 17. | 26. | 40. | 19. | 15. | 12. | 12. | 12. | 16. | ***** | ***** | 13. | 13. | 13. | 12. | 14. | 14. | N/A | 51. | 12. |
| 29 | 11. | 12. | 11. | 11. | 14. | 12. | 11. | 11. | 13. | 11. | 11. | 11. | 12. | 13. | 15. | 15. | 12. | 12. | 12. | 12. | 13. | 12. | 12. | 12. | N/A | 15. | 11. |
| 30 | 18. | 32. | 11. | 15. | 16. | 9. | 10. | 11. | 11. | 10. | 12. | 12. | 11. | 13. | 11. | 11. | 9. | 11. | 15. | 9. | 6. | 23. | 35. | 25. | N/A | 35. | 6. |
| 31 | 53. | 47. | 9. | 33. | 38. | 12. | 24. | 3. | 4. | 7. | 28. | 26. | 15. | 12. | 12. | 11. | 9. | 10. | 11. | 41. | 22. | 6. | 5. | 4. | N/A | 53. | 3. |
| Mean | N/A | N/A | N/A | N/A | N/A | N/A | N/A | N/A | N/A | N/A | N/A | N/A | N/A | N/A | N/A | N/A | N/A | N/A | N/A | N/A | N/A | N/A | N/A | N/A | Monthly mean = | | N/A |
| Max. | 53. | 54. | 38. | 64. | 51. | 56. | 51. | 52. | 61. | 40. | 71. | 53. | 42. | 74. | 41. | 19. | 60. | 76. | 37. | 45. | 49. | 65. | 73. | 41. | Monthly max. = | | 76. |
| Min. | 5. | 5. | 5. | 7. | 5. | 5. | 4. | 3. | 4. | 7. | 9. | 11. | 9. | 8. | 7. | 7. | 7. | 8. | 5. | 6. | 5. | 6. | 5. | 4. | Monthly min. = | | 3. |

TOTAL NUMBER OF DATA HOURS IN MONTH: 744
Number of hours of bad or missing data: 38
**** designates missing or lost data

Current % recovery = 94.9

N/A: A sigma theta mean is not physically meaningful.

table created at 11: 3, 4/12/1995

MONTHLY SUMMARY
REL. HUMID.
(Degrees)
INPUT FILE: alls1met.out

Bechtel Environmental, Inc.

Met Data for Site 1
JANUARY 1994

| Day | Hour 1 | 2 | 3 | 4 | 5 | 6 | 7 | 8 | 9 | 10 | 11 | 12 | 13 | 14 | 15 | 16 | 17 | 18 | 19 | 20 | 21 | 22 | 23 | 24 | Mean | Max. | Min. |
|---|---|---|---|---|---|---|---|---|---|---|---|---|---|---|---|---|---|---|---|---|---|---|---|---|---|---|---|
| 1 | 66.5 | 64.5 | 62.7 | 60.2 | 58.7 | 59.4 | 59.1 | 55.9 | 56.2 | 55.0 | 52.2 | 52.0 | 47.4 | 42.6 | 49.0 | 88.4 | 96.2 | 93.1 | 93.9 | 90.8 | 91.2 | 90.7 | 90.4 | 91.2 | 69.5 | 96.2 | 42.6 |
| 2 | 89.4 | 85.7 | 85.2 | 87.9 | 88.7 | 88.2 | 87.0 | 85.9 | 81.0 | 73.1 | 64.5 | 63.3 | 57.3 | 54.3 | 49.5 | 53.6 | 57.9 | 56.3 | 52.7 | 54.9 | 49.0 | 45.9 | 58.7 | 53.7 | 67.7 | 89.4 | 45.9 |
| 3 | 59.9 | 75.9 | 87.8 | 84.3 | 82.8 | 88.9 | 91.1 | 89.6 | 94.7 | 92.5 | 90.1 | 91.0 | 89.9 | 87.4 | 87.4 | 85.7 | 83.2 | 83.0 | 81.3 | 84.1 | 83.6 | 84.0 | 83.0 | 79.9 | 85.0 | 94.7 | 59.9 |
| 4 | 77.9 | 87.7 | 96.7 | 97.1 | 97.1 | 97.1 | 97.1 | 97.1 | 97.1 | 97.1 | 85.5 | 60.6 | 57.6 | 52.3 | 51.3 | 51.2 | 45.2 | 50.9 | 75.6 | 90.4 | 90.8 | 83.6 | 76.2 | 78.7 | 78.8 | 97.1 | 45.2 |
| 5 | 79.6 | 91.6 | 89.6 | 85.9 | 89.1 | 86.0 | 86.3 | 86.1 | 84.1 | 83.0 | 77.6 | 72.8 | 71.0 | 70.0 | 68.6 | 66.3 | 67.0 | 70.1 | 73.0 | 76.5 | 77.2 | 77.9 | 79.4 | 78.5 | 78.6 | 91.6 | 66.3 |
| 6 | 79.6 | 81.5 | 82.5 | 83.1 | 84.3 | 83.7 | 82.9 | 82.0 | 84.1 | 84.1 | 81.0 | 73.5 | 67.9 | 62.8 | 60.4 | 56.5 | 59.4 | 65.4 | 72.7 | 77.8 | 79.1 | 78.5 | 77.5 | 74.1 | 75.6 | 84.3 | 56.5 |
| 7 | 69.7 | 65.9 | 65.7 | 65.1 | 65.2 | 62.7 | 57.3 | 57.3 | 60.1 | 57.5 | 50.9 | 42.5 | 37.2 | 35.7 | 34.9 | 38.2 | 46.2 | 47.4 | 49.2 | 48.9 | 49.4 | 49.3 | 49.4 | 49.7 | 52.3 | 69.7 | 34.9 |
| 8 | 49.3 | 48.9 | 49.3 | 60.4 | 55.1 | 72.7 | 73.5 | 76.0 | 74.9 | 77.5 | 75.1 | 82.0 | 80.6 | 70.9 | 70.2 | 91.6 | 88.3 | 70.6 | 69.9 | 64.9 | 59.0 | 65.8 | 81.5 | 83.3 | 70.5 | 91.6 | 48.9 |
| 9 | 86.5 | 92.6 | 93.2 | 96.8 | 97.1 | 97.1 | 94.9 | 96.8 | 97.1 | 96.6 | 97.1 | 96.6 | 91.9 | 92.1 | 91.1 | 91.0 | 90.3 | 89.2 | 88.4 | 89.0 | 90.6 | 97.0 | 97.1 | 93.9 | 93.5 | 97.1 | 86.5 |
| 10 | 92.3 | 93.5 | 93.3 | 91.8 | 93.1 | 86.8 | 88.8 | 88.5 | 90.3 | 89.6 | 92.3 | 88.3 | 79.0 | 75.0 | 76.1 | 72.4 | 73.9 | 70.5 | 68.6 | 69.5 | 65.7 | 61.3 | 67.9 | 68.8 | 80.7 | 93.5 | 61.3 |
| 11 | 64.4 | 67.7 | 67.1 | 65.9 | 64.7 | 63.8 | 64.6 | 63.6 | 62.3 | 58.9 | 58.6 | 90.2 | 97.1 | 97.1 | 96.9 | 88.8 | 82.8 | 84.7 | 86.5 | 86.7 | 87.4 | 84.5 | 85.0 | 88.2 | 77.4 | 97.1 | 58.6 |
| 12 | 88.4 | 89.1 | 86.6 | 87.7 | 87.1 | 87.6 | 90.5 | 85.0 | 80.2 | 79.0 | 75.6 | 73.0 | 71.0 | 69.3 | 71.4 | 70.2 | 64.9 | 66.8 | 62.3 | 60.5 | 61.1 | 61.2 | 62.4 | 62.9 | 74.7 | 90.5 | 60.5 |
| 13 | 65.0 | 66.7 | 72.9 | 79.4 | 82.0 | 87.0 | 91.0 | 89.6 | 87.8 | 86.7 | 85.9 | 88.5 | 87.2 | 83.8 | 84.1 | 86.3 | 83.4 | 80.4 | 78.7 | 82.6 | 88.3 | 85.0 | 83.1 | 81.6 | 82.8 | 91.0 | 65.0 |
| 14 | 82.7 | 81.0 | 77.8 | 75.6 | 76.6 | 84.6 | 89.2 | 90.7 | 87.6 | 79.6 | 77.6 | 71.5 | 65.6 | 71.2 | 86.0 | 86.9 | 87.4 | 93.8 | 97.1 | 97.1 | 97.1 | 97.1 | 97.1 | 97.1 | 85.3 | 97.1 | 65.6 |
| 15 | 97.1 | 97.1 | 97.1 | 97.1 | 97.1 | 97.1 | 97.1 | 97.1 | 97.1 | 97.1 | 97.1 | 97.1 | 97.1 | 97.1 | 78.8 | 57.2 | 58.4 | 64.1 | 75.2 | 80.1 | 83.2 | 86.7 | 84.9 | 83.8 | 88.0 | 97.1 | 57.2 |
| 16 | 84.2 | 85.8 | 87.9 | 90.2 | 90.0 | 87.7 | 85.4 | 83.8 | 82.9 | 85.2 | 86.8 | 85.0 | 81.5 | 77.3 | 74.6 | 78.3 | 81.0 | 79.8 | 73.8 | 66.0 | 66.4 | 63.2 | 61.2 | 60.3 | 79.1 | 90.2 | 60.3 |
| 17 | 60.2 | 61.1 | 59.7 | 56.1 | 54.2 | 27.4 | 19.4 | 51.2 | 50.6 | 49.4 | 47.6 | 47.2 | 48.1 | 49.2 | 47.5 | 45.5 | 45.5 | 44.8 | 47.3 | 48.8 | 50.6 | 52.4 | 54.6 | 53.5 | 48.8 | 61.1 | 19.4 |
| 18 | 51.0 | 51.9 | 51.3 | 49.7 | 60.3 | 72.2 | 85.0 | 92.1 | 92.9 | 89.5 | 80.0 | 72.4 | 67.5 | 66.6 | 63.0 | 65.3 | 65.2 | 76.8 | 88.1 | 94.1 | 96.3 | 96.4 | 97.0 | 97.0 | 75.9 | 97.0 | 49.7 |
| 19 | 96.7 | 96.7 | 96.9 | 97.0 | 96.6 | 95.6 | 95.5 | 94.4 | 94.2 | 93.1 | 92.8 | 89.0 | 72.4 | 43.5 | 35.3 | 34.0 | 37.3 | 45.2 | 48.5 | 53.4 | 68.5 | 88.9 | 89.6 | 90.7 | 76.9 | 97.0 | 34.0 |
| 20 | 90.8 | 91.4 | 93.2 | 95.6 | 96.5 | 96.4 | 96.3 | 95.7 | 93.0 | 94.3 | 91.8 | 69.6 | 58.8 | 57.0 | 51.9 | 49.7 | 55.4 | 67.4 | 76.9 | 82.9 | 88.9 | 85.8 | 85.9 | 93.8 | 81.6 | 96.5 | 49.7 |
| 21 | 94.9 | 96.6 | 96.9 | 97.0 | 96.1 | 94.3 | 91.1 | 92.4 | 88.0 | 86.5 | 85.1 | 70.8 | 55.9 | 49.0 | 45.2 | 44.8 | 52.1 | 62.4 | 64.6 | 71.4 | 79.3 | 81.0 | 88.4 | 91.2 | 78.1 | 97.0 | 44.8 |
| 22 | 93.6 | 95.5 | 94.3 | 95.5 | 94.5 | 93.5 | 92.9 | 93.2 | 92.2 | 87.2 | 80.9 | 68.8 | 56.8 | 47.8 | 46.3 | 43.6 | 51.0 | 60.8 | 67.5 | 78.1 | 72.3 | 79.5 | 90.2 | 90.4 | 77.8 | 95.5 | 43.6 |
| 23 | 87.0 | 89.5 | 90.8 | 90.4 | 88.3 | 89.0 | 89.9 | 86.4 | 83.9 | 79.9 | 75.7 | 70.8 | 49.7 | 36.4 | 26.3 | 23.4 | 18.1 | 18.2 | 26.3 | 27.1 | 32.3 | 36.2 | 34.7 | 62.5 | 58.9 | 90.8 | 18.1 |
| 24 | 78.3 | 81.5 | 82.1 | 70.4 | 72.6 | 81.8 | 80.7 | 83.6 | 76.5 | 70.9 | 65.4 | 60.2 | 54.4 | 52.8 | 51.1 | 51.4 | 48.8 | 53.7 | 57.3 | 59.8 | 67.1 | 74.5 | 89.1 | 94.9 | 69.1 | 94.9 | 48.8 |
| 25 | 94.9 | 94.6 | 96.1 | 95.5 | 93.6 | 83.4 | 87.5 | 92.1 | 94.0 | 95.5 | 90.6 | 66.5 | 56.6 | 49.1 | 46.1 | 48.0 | 53.1 | 62.0 | 66.7 | 66.5 | 74.9 | 90.2 | 94.9 | 94.2 | 78.6 | 96.1 | 46.1 |
| 26 | 95.4 | 97.1 | 96.0 | ***** | ***** | ***** | ***** | ***** | ***** | ***** | ***** | ***** | ***** | ***** | ***** | ***** | ***** | ***** | ***** | ***** | ***** | ***** | ***** | ***** | ***** | 97.1 | 95.4 |
| 27 | ***** | ***** | ***** | ***** | ***** | ***** | ***** | ***** | ***** | ***** | ***** | ***** | ***** | ***** | ***** | ***** | ***** | ***** | ***** | ***** | ***** | ***** | ***** | ***** | ***** | ***** | ***** |
| 28 | 97.1 | 97.1 | 95.8 | 95.4 | 97.0 | 97.1 | 96.2 | 94.9 | 96.8 | 96.0 | 89.8 | 74.7 | 65.0 | 53.5 | 47.8 | 46.6 | ***** | ***** | 58.3 | 77.3 | 80.8 | 81.4 | 84.4 | 81.2 | 82.0 | 97.1 | 46.6 |
| 29 | 74.7 | 79.7 | 78.6 | 77.6 | 74.7 | 72.5 | 72.5 | 73.8 | 78.0 | 76.8 | 74.7 | 72.8 | 74.8 | 74.6 | 73.5 | 73.2 | 74.6 | 75.6 | 75.5 | 84.3 | 90.5 | 93.7 | 96.7 | 95.7 | 78.7 | 96.7 | 72.5 |
| 30 | 90.2 | 92.5 | 83.8 | 62.8 | 68.1 | 66.1 | 60.8 | 59.0 | 59.3 | 59.0 | 56.0 | 48.4 | 42.9 | 37.0 | 35.1 | 35.1 | 35.6 | 38.9 | 43.3 | 43.8 | 47.4 | 55.5 | 61.6 | 68.6 | 56.3 | 92.5 | 35.1 |
| 31 | 67.2 | 81.4 | 80.2 | 79.9 | 81.1 | 82.1 | 82.7 | 77.1 | 73.4 | 66.3 | 56.1 | 50.7 | 52.4 | 48.0 | 45.8 | 44.1 | 52.6 | 63.0 | 66.5 | 67.6 | 70.2 | 72.9 | 75.0 | 75.5 | 67.2 | 82.7 | 44.1 |
| Mean | 80.1 | 82.7 | 83.0 | 81.8 | 82.1 | 82.1 | 82.3 | 83.1 | 82.4 | 80.6 | 77.0 | 72.1 | 66.7 | 62.2 | 60.2 | 60.9 | 62.7 | 65.5 | 68.5 | 71.5 | 73.7 | 75.9 | 78.5 | 79.8 | Monthly mean = | | 74.9 |
| Max. | 97.1 | 97.1 | 97.1 | 97.1 | 97.1 | 97.1 | 97.1 | 97.1 | 97.1 | 97.1 | 97.1 | 97.1 | 97.1 | 97.1 | 96.9 | 91.6 | 96.2 | 93.8 | 97.1 | 97.1 | 97.1 | 97.1 | 97.1 | 97.1 | Monthly max. = | | 97.1 |
| Min. | 49.3 | 48.9 | 49.3 | 49.7 | 54.2 | 27.4 | 19.4 | 51.2 | 50.6 | 49.4 | 47.6 | 42.5 | 37.2 | 35.7 | 26.3 | 23.4 | 18.1 | 18.2 | 26.3 | 27.1 | 32.3 | 36.2 | 34.7 | 49.7 | Monthly min. = | | 18.1 |

TOTAL NUMBER OF DATA HOURS IN MONTH: 744
Number of hours of bad or missing data: 47
**** designates missing or lost data

Current % recovery = 93.7

N/A: insufficient data available for calculation (a minimum of 75% is required)

table created at 11: 3, 4/12/1995

MONTHLY SUMMARY
WIND SPEED
(Miles Per Hour)
INPUT FILE: allslmet.out

Bechtel Environmental, Inc.

Met Data for Site 1
FEBRUARY 1994

| Day \ Hour | 1 | 2 | 3 | 4 | 5 | 6 | 7 | 8 | 9 | 10 | 11 | 12 | 13 | 14 | 15 | 16 | 17 | 18 | 19 | 20 | 21 | 22 | 23 | 24 | Mean | Max. | Min. |
|---|---|---|---|---|---|---|---|---|---|---|---|---|---|---|---|---|---|---|---|---|---|---|---|---|---|---|---|
| 1 | 10.1 | 5.3 | 2.1 | 2.3 | 9.9 | 7.2 | 3.6 | 8.6 | 4.7 | 3.7 | 5.1 | 4.3 | 3.6 | 7.2 | 7.9 | 7.6 | 5.2 | 3.8 | 4.7 | 8.9 | 10.1 | 11.8 | 14.7 | 16.0 | 7.0 | 16.0 | 2.1 |
| 2 | 15.0 | 5.2 | 2.0 | 4.0 | 4.1 | 2.0 | 2.9 | 2.5 | 2.9 | 3.4 | 3.3 | 3.7 | 4.1 | 2.5 | 4.2 | 5.1 | 5.2 | 2.8 | 3.6 | 6.0 | 8.9 | 4.8 | 2.1 | 1.9 | 4.3 | 15.0 | 1.9 |
| 3 | 5.3 | 4.4 | 3.3 | 2.3 | 3.3 | 2.7 | 3.8 | 4.9 | 4.8 | 3.5 | 3.2 | 3.8 | 3.0 | 2.4 | 4.7 | 9.7 | 11.0 | 7.7 | 6.6 | 7.5 | 7.7 | 13.9 | 11.4 | 4.4 | 5.6 | 13.9 | 2.3 |
| 4 | 2.0 | 1.5 | 3.7 | 3.2 | 1.5 | 1.6 | 3.8 | 2.6 | 1.5 | 5.5 | 4.5 | 3.6 | 4.1 | 7.3 | 7.3 | 7.7 | 7.0 | 3.9 | 2.5 | 7.3 | 7.8 | 10.5 | 5.5 | 1.9 | 4.5 | 10.5 | 1.5 |
| 5 | 2.9 | 2.8 | 9.1 | 10.5 | 5.9 | 4.4 | 3.5 | 1.5 | 2.4 | 4.2 | 3.6 | 4.1 | 2.9 | 3.9 | 8.2 | 12.1 | 11.2 | 8.1 | 7.6 | 3.0 | 4.1 | 10.0 | 12.4 | 12.3 | 6.3 | 12.4 | 1.5 |
| 6 | 14.4 | 17.2 | 14.5 | 5.7 | 1.9 | 3.6 | 4.6 | 2.6 | 2.7 | 3.6 | 3.8 | 2.8 | 4.8 | 10.2 | 9.6 | 10.4 | 9.9 | 10.7 | 13.3 | 13.8 | 16.0 | 14.6 | 16.5 | 11.7 | 9.1 | 17.2 | 1.9 |
| 7 | 13.5 | 15.2 | 12.7 | 13.0 | 16.0 | 15.2 | 14.0 | 11.1 | 7.9 | 8.1 | 9.5 | 10.5 | 11.7 | 14.7 | 14.6 | 12.3 | 10.7 | 10.8 | 12.6 | 12.2 | 14.9 | 14.7 | 15.6 | 12.1 | 12.7 | 16.0 | 7.9 |
| 8 | 15.4 | 16.1 | 15.2 | 14.5 | 15.8 | 16.8 | 16.4 | 8.6 | 5.7 | 6.3 | 7.3 | 10.4 | 18.6 | 20.0 | 20.0 | 18.9 | 19.1 | 16.7 | ***** | ***** | ***** | ***** | ***** | ***** | 14.5 | 20.0 | 5.7 |
| 9 | 13.8 | 11.1 | 12.6 | 9.4 | 10.0 | 9.7 | 9.6 | 15.4 | 15.4 | 15.7 | 17.5 | 13.5 | 13.1 | 15.0 | 18.2 | 14.4 | 12.8 | 17.7 | 17.5 | 19.3 | 19.2 | 17.2 | 16.9 | 14.0 | 14.5 | 19.3 | 9.4 |
| 10 | 14.4 | 15.7 | 16.5 | 15.7 | 11.7 | 9.2 | 6.7 | 3.4 | 3.7 | 4.1 | 5.0 | 4.2 | 5.2 | 4.7 | 3.2 | 3.7 | 3.5 | 5.2 | 3.0 | 2.3 | 2.3 | 4.6 | 7.2 | 5.8 | 6.7 | 16.5 | 2.3 |
| 11 | 4.1 | 6.3 | 5.8 | 8.0 | 7.4 | 9.7 | 6.3 | 7.3 | 11.8 | 11.2 | 11.7 | 11.2 | 16.7 | 19.3 | ***** | ***** | ***** | 18.8 | 19.0 | 18.4 | 16.8 | 16.0 | 16.6 | 8.8 | 12.0 | 19.3 | 4.1 |
| 12 | 5.0 | 6.7 | 6.5 | 8.1 | 9.7 | 8.0 | 10.8 | 10.6 | 8.6 | 6.2 | 4.0 | 4.5 | 5.2 | 3.7 | 4.1 | 3.4 | 3.3 | 3.1 | 2.0 | 9.6 | 15.1 | 17.1 | 17.1 | 18.0 | 7.9 | 18.0 | 2.0 |
| 13 | 15.7 | 15.8 | 8.0 | 8.0 | 7.3 | 8.1 | 7.2 | 7.4 | 5.5 | 4.5 | 5.0 | 5.6 | 6.1 | 15.1 | 21.3 | 22.8 | 27.2 | 25.4 | 15.8 | 16.0 | 15.6 | 12.1 | 13.0 | 11.4 | 12.5 | 27.2 | 4.5 |
| 14 | 11.8 | 10.1 | 3.9 | 2.6 | 4.0 | 7.5 | 6.7 | 9.4 | 10.3 | 11.3 | 12.2 | 9.7 | 9.0 | 9.7 | 9.9 | 8.6 | 6.8 | 5.9 | 3.4 | 7.8 | 7.1 | 8.5 | 6.3 | 2.3 | 7.7 | 12.2 | 2.3 |
| 15 | 3.5 | 3.4 | 5.2 | 8.1 | 4.1 | 2.5 | 2.8 | 4.3 | 3.1 | 3.0 | 3.5 | 4.6 | 3.6 | 4.4 | 6.2 | 4.2 | 2.6 | 9.7 | 17.7 | 18.5 | 17.5 | 18.0 | 19.1 | 17.3 | 7.8 | 19.1 | 2.5 |
| 16 | 15.5 | 6.7 | 4.7 | 4.2 | 3.6 | 2.4 | 6.4 | 3.5 | 5.5 | 11.1 | 4.5 | 4.7 | 6.3 | 13.1 | 16.4 | 16.2 | 6.6 | 10.2 | 12.9 | 17.3 | 10.4 | 10.7 | 6.8 | 7.5 | 8.6 | 17.3 | 2.4 |
| 17 | 5.7 | 20.1 | 25.4 | 25.4 | 19.4 | 15.4 | 18.7 | 21.8 | 24.2 | 25.4 | 22.1 | 16.9 | 25.6 | 12.7 | 10.3 | 18.1 | 23.8 | 21.3 | 21.8 | 20.2 | 20.8 | 17.8 | 15.6 | 12.2 | 19.2 | 25.6 | 5.7 |
| 18 | 10.9 | 11.1 | 8.0 | 10.3 | 13.2 | 13.5 | 16.6 | 18.7 | 19.1 | 14.2 | 14.7 | 17.1 | 15.3 | 15.0 | 22.3 | 19.2 | 14.2 | 16.8 | 12.3 | 10.8 | 12.3 | 12.7 | 12.4 | 13.2 | 14.3 | 22.3 | 8.0 |
| 19 | 12.2 | 11.3 | 14.5 | 13.0 | 12.7 | 13.3 | 14.9 | 15.1 | 13.6 | 12.1 | 9.6 | 10.1 | 13.5 | 13.4 | 12.8 | 11.1 | 7.9 | 6.0 | 4.8 | 8.6 | 12.6 | 13.2 | 13.0 | 16.1 | 11.9 | 16.1 | 4.8 |
| 20 | 16.3 | 16.7 | 18.6 | 20.3 | 22.1 | 21.4 | 19.9 | 14.1 | 16.3 | 19.3 | 21.0 | 14.8 | 12.7 | 10.4 | 13.1 | 11.1 | 12.8 | 15.1 | 17.0 | 16.9 | 11.6 | 11.3 | 10.8 | 10.2 | 15.6 | 22.1 | 10.2 |
| 21 | 9.4 | 12.1 | 11.5 | 11.3 | 11.8 | 7.9 | 4.2 | 8.8 | 8.4 | 8.2 | 9.2 | 8.7 | ***** | ***** | ***** | ***** | ***** | ***** | ***** | 9.5 | 13.3 | 13.3 | 15.1 | 14.8 | ***** | 15.1 | 4.2 |
| 22 | 11.4 | 12.8 | 10.8 | 14.9 | 16.9 | 19.3 | 20.1 | 20.4 | 19.1 | 20.2 | 22.9 | 22.6 | 21.2 | 18.1 | 17.1 | 16.5 | 17.7 | 15.5 | 15.1 | 15.9 | 18.0 | 15.0 | 15.2 | 14.8 | 17.1 | 22.9 | 10.8 |
| 23 | 16.1 | 14.6 | 12.8 | 13.9 | 12.1 | 10.8 | 9.6 | 10.9 | 12.9 | 14.6 | 15.5 | 16.8 | 17.2 | 18.1 | 19.1 | 18.8 | 18.3 | 17.3 | 17.2 | 13.4 | 18.4 | 16.8 | 14.6 | 16.6 | 15.3 | 19.1 | 9.6 |
| 24 | 18.2 | 23.3 | 23.2 | 22.2 | 20.0 | 18.5 | 18.5 | 17.9 | 21.7 | 20.4 | 26.9 | 28.6 | 29.8 | 29.9 | 33.4 | 33.3 | 28.0 | 25.3 | 26.4 | 28.7 | 25.4 | 20.1 | 18.5 | 20.2 | 24.1 | 33.4 | 17.9 |
| 25 | 19.3 | 16.6 | 15.0 | 14.3 | 13.2 | 10.7 | 13.1 | 14.0 | 11.4 | 9.7 | 4.4 | 5.2 | 5.5 | 5.3 | 4.4 | 5.6 | 7.4 | 5.4 | 6.1 | 3.8 | 2.9 | 6.0 | 5.1 | 4.3 | 8.7 | 19.3 | 2.9 |
| 26 | 5.5 | 3.6 | 2.8 | 3.0 | 8.2 | 9.2 | 9.3 | 2.4 | 4.2 | 8.1 | 3.6 | 4.5 | 4.5 | 1.9 | 4.9 | 10.2 | 7.9 | 5.5 | 8.9 | 9.0 | 7.9 | 9.4 | 6.8 | 8.7 | 6.3 | 10.2 | 1.9 |
| 27 | 12.2 | 10.8 | 12.8 | 12.3 | 12.4 | 13.6 | 12.8 | 12.0 | 15.8 | 16.7 | 16.0 | 14.5 | 11.3 | 14.2 | 12.5 | 11.0 | 12.3 | 11.0 | 12.5 | 14.7 | 14.2 | 16.9 | 17.7 | 17.9 | 13.7 | 17.9 | 10.8 |
| 28 | 17.9 | 18.5 | 18.0 | 16.6 | 17.7 | 17.9 | 18.6 | 18.1 | 22.1 | 20.3 | 18.7 | 15.5 | 13.7 | 16.2 | 16.5 | 15.0 | 13.1 | 8.1 | 4.1 | 11.0 | 12.4 | 12.3 | 11.0 | 11.1 | 15.2 | 22.1 | 4.1 |
| Mean | 11.3 | 11.3 | 10.7 | 10.6 | 10.6 | 10.1 | 10.2 | 9.9 | 10.2 | 10.5 | 10.3 | 9.9 | 10.7 | 11.4 | 12.4 | 12.6 | 11.7 | 11.4 | 11.1 | 12.2 | 12.7 | 12.9 | 12.5 | 11.3 | Monthly mean = | | 11.2 |
| Max. | 19.3 | 23.3 | 25.4 | 25.4 | 22.1 | 21.4 | 20.1 | 21.8 | 24.2 | 25.4 | 26.9 | 28.6 | 29.8 | 29.9 | 33.4 | 33.3 | 28.0 | 25.4 | 26.4 | 28.7 | 25.4 | 20.1 | 19.1 | 20.2 | Monthly max. = | | 33.4 |
| Min. | 2.0 | 1.5 | 2.0 | 2.3 | 1.5 | 1.6 | 2.8 | 1.5 | 1.5 | 3.0 | 3.2 | 2.8 | 2.9 | 1.9 | 3.2 | 3.4 | 2.6 | 2.8 | 2.0 | 2.3 | 2.3 | 4.6 | 2.1 | 1.9 | Monthly min. = | | 1.5 |

TOTAL NUMBER OF DATA HOURS IN MONTH: 672
Number of hours of bad or missing data: 16
**** designates missing or lost data

Current % recovery = 97.6

N/A: insufficient data available for calculation (a minimum of 75% is required)

table created at 11: 3, 4/12/1995

MONTHLY SUMMARY
WIND DIRECTION
(Degrees)
INPUT FILE: allslmet.out

Bechtel Environmental, Inc.

Met Data for Site 1
FEBRUARY 1994

| Day \ Hour | 1 | 2 | 3 | 4 | 5 | 6 | 7 | 8 | 9 | 10 | 11 | 12 | 13 | 14 | 15 | 16 | 17 | 18 | 19 | 20 | 21 | 22 | 23 | 24 | Mean | Max. | Min. |
|---|---|---|---|---|---|---|---|---|---|---|---|---|---|---|---|---|---|---|---|---|---|---|---|---|---|---|---|
| 1 | 122.0 | 120.0 | 353.0 | 83.0 | 121.0 | 149.0 | 80.0 | 136.0 | 141.0 | 294.0 | 286.0 | 299.0 | 328.0 | 288.0 | 281.0 | 271.0 | 216.0 | 143.0 | 114.0 | 133.0 | 128.0 | 129.0 | 131.0 | 124.0 | 186.2 | 353.0 | 80.0 |
| 2 | 121.0 | 50.0 | 76.0 | 307.0 | 310.0 | 19.0 | 89.0 | 61.0 | 326.0 | 313.0 | 342.0 | 28.0 | 41.0 | 67.0 | 323.0 | 311.0 | 310.0 | 293.0 | 125.0 | 117.0 | 124.0 | 161.0 | 353.0 | 306.0 | 25.5 | 353.0 | 19.0 |
| 3 | 290.0 | 295.0 | 312.0 | 310.0 | 318.0 | 77.0 | 112.0 | 295.0 | 309.0 | 320.0 | 23.0 | 344.0 | 44.0 | 28.0 | 274.0 | 227.0 | 241.0 | 223.0 | 196.0 | 127.0 | 165.0 | 127.0 | 120.0 | 330.0 | 347.8 | 344.0 | 23.0 |
| 4 | 357.0 | 338.0 | 306.0 | 291.0 | 285.0 | 323.0 | 311.0 | 317.0 | 88.0 | 128.0 | 7.0 | 349.0 | 323.0 | 314.0 | 307.0 | 258.0 | 284.0 | 278.0 | 151.0 | 120.0 | 122.0 | 121.0 | 127.0 | 55.0 | 6.7 | 357.0 | 7.0 |
| 5 | 124.0 | 125.0 | 125.0 | 125.0 | 134.0 | 251.0 | 309.0 | 329.0 | 307.0 | 304.0 | 37.0 | 64.0 | 350.0 | 325.0 | 286.0 | 264.0 | 261.0 | 213.0 | 175.0 | 65.0 | 103.0 | 139.0 | 132.0 | 136.0 | 195.1 | 350.0 | 37.0 |
| 6 | 130.0 | 114.0 | 117.0 | 73.0 | 6.0 | 309.0 | 304.0 | 317.0 | 355.0 | 328.0 | 13.0 | 19.0 | 301.0 | 212.0 | 209.0 | 213.0 | 186.0 | 155.0 | 163.0 | 165.0 | 183.0 | 184.0 | 184.0 | 162.0 | 183.4 | 355.0 | 6.0 |
| 7 | 179.0 | 184.0 | 144.0 | 180.0 | 193.0 | 195.0 | 200.0 | 194.0 | 162.0 | 155.0 | 172.0 | 139.0 | 165.0 | 178.0 | 192.0 | 166.0 | 163.0 | 146.0 | 194.0 | 185.0 | 216.0 | 248.0 | 247.0 | 237.0 | 184.7 | 248.0 | 139.0 |
| 8 | 234.0 | 235.0 | 236.0 | 253.0 | 264.0 | 263.0 | 262.0 | 337.0 | 330.0 | 314.0 | 300.0 | 282.0 | 246.0 | 253.0 | 250.0 | 244.0 | 245.0 | 245.0 | 237.0 | 235.0 | 244.0 | 236.0 | 242.0 | 245.0 | 259.7 | 337.0 | 234.0 |
| 9 | 250.0 | 231.0 | 231.0 | 209.0 | 226.0 | 128.0 | 125.0 | 124.0 | 133.0 | 141.0 | 142.0 | 172.0 | 207.0 | 220.0 | 247.0 | 236.0 | 210.0 | 211.0 | 206.0 | 207.0 | 225.0 | 229.0 | 234.0 | 235.0 | 199.1 | 250.0 | 124.0 |
| 10 | 233.0 | 240.0 | 232.0 | 229.0 | 262.0 | 303.0 | 285.0 | 305.0 | 308.0 | 3.0 | 13.0 | 27.0 | 25.0 | 20.0 | 29.0 | 25.0 | 29.0 | 13.0 | 53.0 | 54.0 | 75.0 | 31.0 | 355.0 | 325.0 | 339.8 | 355.0 | 3.0 |
| 11 | 357.0 | 345.0 | 318.0 | 341.0 | 303.0 | 320.0 | 320.0 | 271.0 | 258.0 | 248.0 | 245.0 | 259.0 | 251.0 | 245.0 | ***** | ***** | ***** | 231.0 | 236.0 | 233.0 | 227.0 | 231.0 | 232.0 | 197.0 | 269.9 | 357.0 | 197.0 |
| 12 | 101.0 | 119.0 | 118.0 | 119.0 | 120.0 | 121.0 | 133.0 | 202.0 | 117.0 | 115.0 | 1.0 | 300.0 | 301.0 | 35.0 | 78.0 | 46.0 | 10.0 | 58.0 | 327.0 | 128.0 | 134.0 | 133.0 | 135.0 | 139.0 | 68.8 | 327.0 | 1.0 |
| 13 | 132.0 | 133.0 | 203.0 | 269.0 | 285.0 | 293.0 | 299.0 | 302.0 | 298.0 | 306.0 | 315.0 | 27.0 | 172.0 | 135.0 | 133.0 | 135.0 | 133.0 | 134.0 | 144.0 | 142.0 | 142.0 | 170.0 | 154.0 | 184.0 | 193.3 | 315.0 | 27.0 |
| 14 | 190.0 | 139.0 | 359.0 | 65.0 | 59.0 | 151.0 | 110.0 | 126.0 | 104.0 | 182.0 | 239.0 | 282.0 | 282.0 | 271.0 | 279.0 | 280.0 | 285.0 | 277.0 | 114.0 | 122.0 | 123.0 | 126.0 | 127.0 | 259.0 | 189.6 | 359.0 | 59.0 |
| 15 | 276.0 | 60.0 | 68.0 | 290.0 | 308.0 | 319.0 | 317.0 | 300.0 | 330.0 | 1.0 | 10.0 | 360.0 | 14.0 | 33.0 | 16.0 | 9.0 | 39.0 | 132.0 | 133.0 | 139.0 | 135.0 | 125.0 | 126.0 | 125.0 | 32.7 | 360.0 | 1.0 |
| 16 | 120.0 | 129.0 | 108.0 | 269.0 | 296.0 | 97.0 | 259.0 | 322.0 | 89.0 | 115.0 | 322.0 | 65.0 | 315.0 | 120.0 | 119.0 | 125.0 | 28.0 | 156.0 | 154.0 | 146.0 | 111.0 | 72.0 | 84.0 | 356.0 | 60.7 | 356.0 | 28.0 |
| 17 | 262.0 | 187.0 | 184.0 | 168.0 | 168.0 | 141.0 | 142.0 | 165.0 | 169.0 | 164.0 | 165.0 | 178.0 | 200.0 | 213.0 | 96.0 | 171.0 | 172.0 | 169.0 | 169.0 | 171.0 | 227.0 | 230.0 | 221.0 | 216.0 | 181.2 | 262.0 | 96.0 |
| 18 | 198.0 | 214.0 | 188.0 | 220.0 | 229.0 | 240.0 | 243.0 | 242.0 | 238.0 | 243.0 | 244.0 | 261.0 | 262.0 | 250.0 | 261.0 | 260.0 | 239.0 | 244.0 | 233.0 | 216.0 | 222.0 | 231.0 | 228.0 | 229.0 | 234.8 | 262.0 | 188.0 |
| 19 | 235.0 | 236.0 | 236.0 | 229.0 | 228.0 | 242.0 | 258.0 | 246.0 | 246.0 | 272.0 | 282.0 | 272.0 | 273.0 | 265.0 | 264.0 | 253.0 | 247.0 | 215.0 | 170.0 | 122.0 | 122.0 | 122.0 | 120.0 | 122.0 | 219.9 | 282.0 | 120.0 |
| 20 | 123.0 | 135.0 | 135.0 | 138.0 | 138.0 | 135.0 | 136.0 | 139.0 | 139.0 | 140.0 | 141.0 | 143.0 | 143.0 | 135.0 | 141.0 | 143.0 | 146.0 | 143.0 | 141.0 | 143.0 | 149.0 | 137.0 | 146.0 | 142.0 | 139.6 | 149.0 | 123.0 |
| 21 | 154.0 | 229.0 | 231.0 | 226.0 | 215.0 | 193.0 | 58.0 | 198.0 | 196.0 | 160.0 | 207.0 | 219.0 | 215.0 | 116.0 | 208.0 | 217.0 | 190.0 | 168.0 | 129.0 | 134.0 | 141.0 | 131.0 | 127.0 | 128.0 | 174.6 | 231.0 | 58.0 |
| 22 | 123.0 | 131.0 | 136.0 | 242.0 | 241.0 | 244.0 | 247.0 | 253.0 | 246.0 | 244.0 | 253.0 | 250.0 | 261.0 | 260.0 | 258.0 | 254.0 | 254.0 | 253.0 | 237.0 | 232.0 | 232.0 | 226.0 | 230.0 | 227.0 | 230.6 | 261.0 | 123.0 |
| 23 | 235.0 | 229.0 | 226.0 | 215.0 | 210.0 | 180.0 | 173.0 | 154.0 | 183.0 | 175.0 | 170.0 | 156.0 | 181.0 | 184.0 | 174.0 | 178.0 | 187.0 | 188.0 | 190.0 | 203.0 | 207.0 | 196.0 | 193.0 | 203.0 | 191.3 | 235.0 | 154.0 |
| 24 | 224.0 | 230.0 | 239.0 | 243.0 | 246.0 | 246.0 | 249.0 | 246.0 | 247.0 | 253.0 | 257.0 | 259.0 | 259.0 | 258.0 | 258.0 | 256.0 | 248.0 | 253.0 | 246.0 | 256.0 | 256.0 | 251.0 | 245.0 | 245.0 | 248.7 | 259.0 | 224.0 |
| 25 | 246.0 | 250.0 | 249.0 | 246.0 | 258.0 | 261.0 | 253.0 | 232.0 | 219.0 | 251.0 | 11.0 | 339.0 | 356.0 | 25.0 | 54.0 | 90.0 | 178.0 | 29.0 | 351.0 | 298.0 | 99.0 | 315.0 | 297.0 | 346.0 | 323.9 | 356.0 | 11.0 |
| 26 | 70.0 | 281.0 | 6.0 | 291.0 | 285.0 | 112.0 | 122.0 | 142.0 | 111.0 | 261.0 | 346.0 | 303.0 | 277.0 | 68.0 | 189.0 | 215.0 | 186.0 | 152.0 | 158.0 | 144.0 | 133.0 | 129.0 | 136.0 | 126.0 | 176.8 | 346.0 | 6.0 |
| 27 | 132.0 | 123.0 | 127.0 | 126.0 | 124.0 | 124.0 | 128.0 | 163.0 | 238.0 | 247.0 | 248.0 | 235.0 | 240.0 | 260.0 | 268.0 | 264.0 | 263.0 | 257.0 | 254.0 | 250.0 | 241.0 | 244.0 | 235.0 | 234.0 | 209.4 | 268.0 | 123.0 |
| 28 | 235.0 | 239.0 | 238.0 | 238.0 | 244.0 | 252.0 | 250.0 | 249.0 | 246.0 | 242.0 | 247.0 | 254.0 | 242.0 | 267.0 | 263.0 | 260.0 | 274.0 | 287.0 | 312.0 | 237.0 | 231.0 | 226.0 | 216.0 | 224.0 | 248.9 | 312.0 | 216.0 |
| Mean | 194.7 | 190.7 | 196.5 | 214.1 | 217.0 | 203.1 | 206.2 | 227.4 | 219.0 | 211.4 | 347.1 | 351.6 | 314.1 | 180.2 | 202.1 | 198.9 | 193.5 | 188.1 | 189.7 | 168.7 | 168.5 | 175.0 | 192.0 | 209.2 | Monthly mean = | | 198.3 |
| Max. | 357.0 | 345.0 | 359.0 | 341.0 | 318.0 | 323.0 | 320.0 | 337.0 | 355.0 | 328.0 | 346.0 | 360.0 | 356.0 | 325.0 | 323.0 | 311.0 | 310.0 | 293.0 | 351.0 | 298.0 | 256.0 | 315.0 | 355.0 | 356.0 | Monthly max. = | | 360.0 |
| Min. | 70.0 | 50.0 | 6.0 | 65.0 | 6.0 | 19.0 | 58.0 | 61.0 | 88.0 | 1.0 | 1.0 | 19.0 | 14.0 | 20.0 | 16.0 | 9.0 | 10.0 | 13.0 | 53.0 | 54.0 | 75.0 | 31.0 | 84.0 | 55.0 | Monthly min. = | | 1.0 |

TOTAL NUMBER OF DATA HOURS IN MONTH: 672
Number of hours of bad or missing data: 3
**** designates missing or lost data

Current % recovery = 99.6

N/A: insufficient data available for calculation (a minimum of 75% is required)

table created at 11: 3, 4/12/1995

MONTHLY SUMMARY
TEMPERATURE
(Degrees Celsius)
INPUT FILE: alls1met.out

Bechtel Environmental, Inc.

Met Data for Site 1
FEBRUARY 1994

| Day \ Hour | 1 | 2 | 3 | 4 | 5 | 6 | 7 | 8 | 9 | 10 | 11 | 12 | 13 | 14 | 15 | 16 | 17 | 18 | 19 | 20 | 21 | 22 | 23 | 24 | Mean | Max. | Min. |
|---|---|---|---|---|---|---|---|---|---|---|---|---|---|---|---|---|---|---|---|---|---|---|---|---|---|---|---|
| 1 | -10.2 | -11.5 | -12.8 | -13.4 | -11.6 | -11.9 | -13.6 | -11.8 | -11.1 | -8.1 | -7.8 | -6.2 | -1.2 | -1.7 | -.9 | -.6 | .0 | -1.6 | -3.7 | -4.0 | -4.5 | -4.8 | -5.0 | -5.4 | -6.8 | .0 | -13.6 |
| 2 | -5.5 | -9.4 | -10.8 | -11.7 | -12.8 | -13.8 | -14.1 | -14.5 | -14.0 | -12.0 | -7.7 | -4.6 | -3.6 | .0 | .4 | .3 | .0 | -1.5 | -3.8 | -5.1 | -5.5 | -7.0 | -8.9 | -10.7 | -7.3 | .4 | -14.5 |
| 3 | -10.3 | -10.5 | -11.6 | -12.1 | -12.6 | -13.4 | -13.2 | -13.8 | -13.8 | -12.3 | -10.1 | -6.9 | -3.0 | -.1 | 2.1 | 1.8 | 1.5 | .8 | -.2 | -2.1 | -1.0 | -2.0 | -3.2 | -6.5 | -6.4 | 2.1 | -13.8 |
| 4 | -8.7 | -9.8 | -10.0 | -10.4 | -11.9 | -12.4 | -12.8 | -13.5 | -11.7 | -8.8 | -5.7 | -3.5 | -1.7 | -1.0 | -.2 | .9 | .9 | -.2 | -3.0 | -3.6 | -4.6 | -5.0 | -6.4 | -8.7 | -6.3 | .9 | -13.5 |
| 5 | -8.7 | -9.0 | -8.6 | -9.1 | -10.0 | -11.2 | -13.1 | -13.1 | -11.3 | -10.1 | -6.2 | -4.2 | -.3 | 1.8 | 2.4 | 3.5 | 3.3 | 2.5 | .9 | -2.1 | -2.6 | -.4 | -.8 | -.4 | -4.5 | 3.5 | -13.1 |
| 6 | -.9 | -1.6 | -1.9 | -5.8 | -8.8 | -9.8 | -10.6 | -11.6 | -10.6 | -8.7 | -4.0 | .6 | 3.8 | 5.7 | 6.1 | 5.9 | 5.3 | 4.5 | 4.0 | 4.2 | 4.9 | 4.9 | 3.5 | 2.9 | -.7 | 6.1 | -11.6 |
| 7 | 3.8 | 2.7 | 1.8 | 3.1 | 3.5 | 2.7 | 2.8 | 2.6 | 1.9 | 1.8 | 2.8 | 3.2 | 5.7 | 6.1 | 5.6 | 4.7 | 4.2 | 3.4 | 4.3 | 4.0 | 3.9 | 4.1 | 4.0 | 3.9 | 3.6 | 6.1 | 1.8 |
| 8 | 3.5 | 2.5 | 2.5 | 2.3 | 1.3 | .0 | -1.4 | -3.2 | -4.0 | -4.0 | -3.8 | -4.0 | -5.1 | -5.6 | -5.3 | -5.2 | -5.1 | -5.5 | -5.7 | -5.5 | -5.9 | -6.3 | -6.5 | -6.6 | -3.2 | 3.5 | -6.6 |
| 9 | -6.5 | -7.0 | -6.8 | -6.2 | -5.6 | -8.4 | -8.3 | -7.6 | -5.7 | -3.6 | -3.1 | -.2 | 1.7 | 1.4 | .5 | -.9 | -.8 | -.6 | -.2 | -.4 | .0 | .2 | -.1 | .1 | -2.8 | 1.7 | -8.4 |
| 10 | -.4 | .0 | .1 | .4 | .1 | -.8 | -1.6 | -1.8 | -1.7 | -1.4 | -1.4 | -1.5 | -1.7 | -1.5 | -.7 | -.7 | -1.2 | -2.0 | -3.0 | -3.5 | -3.6 | -3.1 | -2.0 | -2.4 | -1.5 | .4 | -3.6 |
| 11 | -2.5 | -2.8 | -3.0 | -3.2 | -3.6 | -4.0 | -4.2 | -4.3 | -3.9 | -3.6 | -3.8 | -3.1 | -3.0 | -3.3 | ***** | ***** | ***** | -4.1 | -4.8 | -5.0 | -4.8 | -5.0 | -5.2 | -6.9 | -4.0 | -2.5 | -6.9 |
| 12 | -10.1 | -10.9 | -11.6 | -12.3 | -12.9 | -13.1 | -11.2 | -7.1 | -9.2 | -7.6 | -5.8 | -4.9 | -4.3 | -3.6 | -2.1 | -1.4 | -2.1 | -3.6 | -6.8 | -5.7 | -4.5 | -4.7 | -4.7 | -4.7 | -6.9 | -1.4 | -13.1 |
| 13 | -4.9 | -4.7 | -7.5 | -11.1 | -12.6 | -14.4 | -15.8 | -16.0 | -14.1 | -10.2 | -4.1 | 1.0 | 3.6 | 3.5 | 3.0 | 2.8 | 2.4 | 2.0 | 2.9 | 1.5 | 1.5 | 4.3 | 2.6 | 4.6 | -3.3 | 4.6 | -16.0 |
| D 14 | 4.9 | 3.0 | -4.1 | -6.9 | -4.2 | -.5 | -1.8 | -2.5 | -1.6 | 1.8 | 4.7 | 3.9 | 4.7 | 5.3 | 5.8 | 5.7 | 5.1 | 3.6 | 1.0 | .5 | -.1 | -.3 | -1.0 | -2.6 | 1.0 | 5.8 | -6.9 |
| a 15 | -3.8 | -6.3 | -4.6 | -8.1 | -10.3 | -11.2 | -11.4 | -11.7 | -10.0 | -5.8 | -2.6 | -.5 | 1.9 | 4.1 | 4.3 | 4.8 | 4.7 | 6.5 | 6.6 | 6.3 | 5.9 | 5.1 | 4.8 | 5.0 | -1.1 | 6.6 | -11.7 |
| y 16 | 4.9 | 3.3 | 1.0 | 1.3 | -.4 | -1.1 | -.4 | -3.9 | -2.6 | 2.6 | 4.1 | 9.2 | 10.3 | 11.3 | 11.7 | 11.8 | 11.1 | 10.3 | 10.1 | 9.5 | 7.7 | 7.9 | 7.3 | 5.4 | 5.5 | 11.8 | -3.9 |
| 17 | 5.3 | 10.5 | 10.4 | 9.5 | 9.1 | 7.4 | 6.8 | 9.5 | 10.1 | 10.1 | 10.6 | 10.9 | 9.9 | 7.0 | 7.6 | 9.7 | 9.5 | 9.0 | 7.9 | 7.3 | 1.7 | .3 | .2 | .4 | 7.5 | 10.9 | .2 |
| 18 | .8 | 1.4 | 1.6 | 2.6 | 2.3 | 1.5 | 1.6 | 1.0 | -.2 | -.1 | 1.0 | .9 | 1.0 | 1.3 | 1.4 | .8 | 1.4 | .6 | -.2 | -.1 | -.4 | -.6 | -.6 | -.8 | .8 | 2.6 | -.8 |
| 19 | -.9 | -1.2 | -1.5 | -2.0 | -1.9 | -1.8 | -3.0 | -3.1 | -2.8 | -2.6 | -2.9 | -1.8 | -.2 | .1 | .2 | 1.1 | 1.2 | .6 | -1.4 | -2.9 | -3.7 | -4.0 | -4.2 | -4.1 | -1.8 | 1.2 | -4.2 |
| 20 | -4.0 | -3.6 | -3.9 | -3.8 | -3.9 | -4.5 | -4.8 | -4.2 | -3.1 | -2.1 | -1.5 | .1 | .3 | .1 | .7 | .8 | .7 | .1 | -.9 | -.9 | -.9 | -1.0 | -1.5 | -2.0 | -1.8 | .8 | -4.8 |
| 21 | -1.8 | -1.1 | -.9 | -.9 | -.7 | -.7 | -2.0 | -.9 | -.6 | .3 | 1.3 | .8 | -.2 | .7 | 2.4 | 2.1 | 2.5 | 1.4 | -.8 | -1.2 | -1.3 | -1.9 | -2.1 | -1.8 | -.3 | 2.5 | -2.1 |
| 22 | -1.9 | -1.8 | -1.6 | -2.1 | -2.6 | -2.9 | -3.6 | -4.0 | -4.2 | -3.8 | -3.4 | -3.1 | -3.3 | -3.0 | -2.5 | -1.6 | -.8 | -.6 | -2.0 | -2.4 | -2.6 | -2.8 | -2.8 | -2.6 | -2.6 | -.6 | -4.2 |
| 23 | -2.1 | -1.8 | -1.7 | -1.7 | -1.7 | -2.4 | -2.6 | -3.6 | -1.2 | -.6 | -.6 | -.8 | -.3 | -.1 | .9 | .8 | .8 | .2 | -.3 | -.5 | .3 | -.3 | .0 | .1 | -.8 | .9 | -3.6 |
| 24 | 1.0 | 2.8 | 3.5 | 3.4 | 3.3 | 3.3 | 3.4 | 3.7 | 4.4 | 4.5 | 4.5 | 4.7 | 5.3 | 5.6 | 6.0 | 6.1 | 6.0 | 6.3 | 5.4 | 5.5 | 5.4 | 5.0 | 4.5 | 4.5 | 4.5 | 6.3 | 1.0 |
| 25 | 4.6 | 4.5 | 4.3 | 4.4 | 4.1 | 3.5 | 3.6 | 3.7 | 4.2 | 4.3 | 3.5 | 4.8 | 7.0 | 8.3 | 9.5 | 10.4 | 11.7 | 9.2 | 5.4 | 3.4 | 2.3 | 1.7 | 1.4 | 1.0 | 5.0 | 11.7 | 1.0 |
| 26 | .9 | .5 | .9 | .8 | .6 | .8 | 2.1 | 2.7 | 3.2 | 2.8 | 2.6 | 3.2 | 3.6 | 4.8 | 5.4 | 5.5 | 5.5 | 5.5 | 4.7 | 4.4 | 4.2 | 3.8 | 3.6 | 3.3 | 3.1 | 5.5 | .5 |
| 27 | 3.4 | 3.3 | 3.5 | 3.8 | 3.8 | 4.0 | 3.8 | 4.3 | 3.2 | 2.6 | 2.1 | 1.7 | 2.1 | 3.0 | 3.3 | 4.4 | 4.8 | 5.0 | 5.1 | 4.6 | 4.3 | 4.0 | 3.5 | 3.3 | 3.6 | 5.1 | 1.7 |
| 28 | 2.9 | 2.8 | 2.5 | 2.3 | 2.0 | 1.7 | 1.5 | 1.6 | 1.6 | 2.2 | 2.8 | 4.1 | 6.0 | 6.3 | 6.4 | 6.9 | 7.1 | 7.0 | 5.9 | 6.0 | 6.2 | 6.5 | 6.1 | 6.2 | 4.4 | 7.1 | 1.5 |
| Mean | -1.7 | -2.0 | -2.5 | -3.1 | -3.5 | -4.1 | -4.4 | -4.4 | -3.9 | -2.6 | -1.2 | .1 | 1.4 | 2.0 | 2.7 | 3.0 | 3.0 | 2.1 | 1.0 | .4 | .1 | .0 | -.5 | -.9 | Monthly mean = | | -.8 |
| Max. | 5.3 | 10.5 | 10.4 | 9.5 | 9.1 | 7.4 | 6.8 | 9.5 | 10.1 | 10.1 | 10.6 | 10.9 | 10.3 | 11.3 | 11.7 | 11.8 | 11.7 | 10.3 | 10.1 | 9.5 | 7.7 | 7.9 | 7.3 | 6.2 | Monthly max. = | | 11.8 |
| Min. | -10.3 | -11.5 | -12.8 | -13.4 | -12.9 | -14.4 | -15.8 | -16.0 | -14.1 | -12.3 | -10.1 | -6.9 | -5.1 | -5.6 | -5.3 | -5.2 | -5.1 | -5.5 | -6.8 | -5.7 | -5.9 | -7.0 | -8.9 | -10.7 | Monthly min. = | | -16.0 |

TOTAL NUMBER OF DATA HOURS IN MONTH: 672
Number of hours of bad or missing data: 3
**** designates missing or lost data

Current % recovery = 99.6

N/A: insufficient data available for calculation (a minimum of 75% is required)

table created at 11: 3, 4/12/1995

MONTHLY SUMMARY
SIGMA THETA
(Degrees)
INPUT FILE: allslmet.out

Bechtel Environmental, Inc.

Met Data for Site 1
FEBRUARY 1994

| Day \ Hour | 1 | 2 | 3 | 4 | 5 | 6 | 7 | 8 | 9 | 10 | 11 | 12 | 13 | 14 | 15 | 16 | 17 | 18 | 19 | 20 | 21 | 22 | 23 | 24 | Mean | Max. | Min. |
|---|---|---|---|---|---|---|---|---|---|---|---|---|---|---|---|---|---|---|---|---|---|---|---|---|---|---|---|
| 1 | 4. | 53. | 39. | 42. | 4. | 24. | 26. | 17. | 39. | 27. | 12. | 25. | 33. | 18. | 17. | 18. | 29. | 51. | 21. | 8. | 7. | 5. | 5. | 5. | N/A | 53. | 4. |
| 2 | 14. | 40. | 44. | 49. | 16. | 36. | 14. | 20. | 28. | 16. | 23. | 28. | 28. | 43. | 27. | 13. | 6. | 25. | 12. | 5. | 4. | 37. | 39. | 24. | N/A | 49. | 4. |
| 3 | 11. | 14. | 11. | 18. | 14. | 20. | 34. | 11. | 9. | 18. | 23. | 25. | 33. | 40. | 82. | 18. | 15. | 15. | 19. | 19. | 17. | 5. | 13. | 23. | N/A | 82. | 5. |
| 4 | 47. | 72. | 36. | 39. | 50. | 53. | 13. | 33. | 49. | 11. | 21. | 27. | 36. | 12. | 13. | 14. | 12. | 42. | 19. | 10. | 4. | 4. | 41. | 54. | N/A | 72. | 4. |
| 5 | 28. | 15. | 4. | 3. | 12. | 26. | 15. | 37. | 18. | 15. | 30. | 19. | 37. | 28. | 14. | 14. | 12. | 15. | 19. | 44. | 45. | 12. | 8. | 9. | N/A | 45. | 3. |
| 6 | 6. | 6. | 12. | 41. | 53. | 31. | 12. | 26. | 37. | 18. | 21. | 39. | 31. | 19. | 22. | 15. | 13. | 9. | 10. | 11. | 13. | 14. | 13. | 16. | N/A | 53. | 6. |
| 7 | 16. | 13. | 7. | 17. | 14. | 15. | 15. | 15. | 20. | 15. | 20. | 16. | 16. | 16. | 13. | 16. | 16. | 9. | 17. | 16. | 14. | 14. | 13. | 14. | N/A | 20. | 7. |
| 8 | 13. | 12. | 12. | 13. | 12. | 11. | 13. | 19. | 14. | 12. | 14. | 12. | 10. | 9. | 9. | 10. | 10. | 13. | 12. | 11. | 12. | 12. | 15. | 15. | N/A | 19. | 9. |
| 9 | 13. | 14. | 15. | 23. | 27. | 8. | 10. | 6. | 14. | 17. | 12. | 16. | 19. | 16. | 14. | 15. | 16. | 15. | 14. | 13. | 15. | 14. | 13. | 14. | N/A | 27. | 6. |
| 10 | 13. | 13. | 12. | 14. | 15. | 10. | 10. | 15. | 10. | 12. | 11. | 12. | 10. | 10. | 13. | 10. | 16. | 9. | 24. | 35. | 29. | 18. | 12. | 24. | N/A | 35. | 9. |
| 11 | 35. | 21. | 23. | 34. | 17. | 12. | 20. | 14. | 7. | 10. | 10. | 10. | 8. | 9. | ***** | ***** | ***** | 10. | 9. | 10. | 13. | 12. | 11. | 24. | N/A | 35. | 7. |
| 12 | 51. | 29. | 20. | 9. | 5. | 6. | 14. | 45. | 22. | 64. | 50. | 16. | 13. | 24. | 13. | 17. | 15. | 40. | 59. | 41. | 7. | 6. | 7. | 8. | N/A | 64. | 5. |
| 13 | 9. | 9. | 47. | 30. | 17. | 15. | 14. | 14. | 25. | 25. | 30. | 56. | 41. | 32. | 8. | 7. | 7. | 6. | 14. | 13. | 11. | 17. | 14. | 18. | N/A | 56. | 6. |
| 14 | 17. | 36. | 63. | 51. | 57. | 34. | 41. | 22. | 12. | 25. | 16. | 10. | 9. | 10. | 10. | 11. | 10. | 23. | 59. | 5. | 14. | 36. | 35. | 60. | N/A | 63. | 5. |
| 15 | 64. | 18. | 25. | 12. | 17. | 23. | 16. | 14. | 15. | 18. | 21. | 15. | 27. | 15. | 13. | 23. | 21. | 40. | 7. | 6. | 7. | 5. | 5. | 6. | N/A | 64. | 5. |
| 16 | 5. | 30. | 39. | 48. | 15. | 32. | 38. | 31. | 15. | 30. | 33. | 49. | 65. | 10. | 10. | 9. | 60. | 35. | 12. | 9. | 29. | 13. | 32. | 33. | N/A | 65. | 5. |
| 17 | 61. | 14. | 13. | 10. | 11. | 10. | 8. | 12. | 13. | 11. | 14. | 21. | 15. | 44. | 38. | 21. | 14. | 14. | 13. | 12. | 17. | 12. | 13. | 15. | N/A | 61. | 8. |
| 18 | 17. | 18. | 15. | 15. | 14. | 14. | 13. | 13. | 13. | 12. | 14. | 12. | 13. | 15. | 12. | 13. | 13. | 14. | 15. | 14. | 14. | 15. | 16. | 15. | N/A | 18. | 12. |
| 19 | 14. | 15. | 13. | 13. | 13. | 13. | 12. | 12. | 13. | 14. | 13. | 11. | 12. | 12. | 10. | 18. | 20. | 18. | 61. | 14. | 5. | 4. | 5. | 5. | N/A | 61. | 4. |
| 20 | 5. | 6. | 6. | 7. | 6. | 6. | 7. | 11. | 9. | 8. | 8. | 11. | 13. | 14. | 13. | 13. | 12. | 10. | 9. | 10. | 13. | 11. | 10. | 10. | N/A | 14. | 5. |
| 21 | 12. | 14. | 14. | 13. | 11. | 20. | 42. | 35. | 17. | 21. | 17. | 21. | 19. | 30. | 47. | 19. | 29. | 15. | 28. | 11. | 9. | 7. | 6. | 7. | N/A | 47. | 6. |
| 22 | 12. | 9. | 25. | 14. | 13. | 12. | 11. | 10. | 11. | 9. | 10. | 10. | 9. | 8. | 10. | 10. | 10. | 10. | 10. | 11. | 11. | 13. | 13. | 13. | N/A | 25. | 8. |
| 23 | 13. | 14. | 14. | 12. | 13. | 15. | 18. | 15. | 16. | 13. | 12. | 11. | 14. | 14. | 12. | 13. | 14. | 15. | 13. | 18. | 14. | 13. | 15. | 14. | N/A | 18. | 11. |
| 24 | 15. | 14. | 14. | 13. | 12. | 12. | 13. | 12. | 11. | 10. | 8. | 8. | 8. | 8. | 8. | 8. | 10. | 14. | 13. | 12. | 12. | 14. | 12. | 12. | N/A | 15. | 8. |
| 25 | 12. | 14. | 14. | 13. | 13. | 16. | 14. | 13. | 14. | 16. | 18. | 20. | 23. | 23. | 28. | 28. | 24. | 28. | 51. | 38. | 40. | 16. | 14. | 35. | N/A | 51. | 12. |
| 26 | 22. | 41. | 50. | 58. | 10. | 37. | 31. | 56. | 55. | 44. | 25. | 14. | 14. | 51. | 37. | 13. | 17. | 19. | 13. | 7. | 8. | 6. | 11. | 4. | N/A | 58. | 4. |
| 27 | 5. | 5. | 5. | 7. | 5. | 5. | 5. | 45. | 10. | 9. | 8. | 9. | 10. | 9. | 9. | 9. | 7. | 9. | 7. | 9. | 12. | 9. | 9. | 9. | N/A | 45. | 5. |
| 28 | 9. | 10. | 10. | 10. | 9. | 7. | 8. | 8. | 7. | 10. | 10. | 12. | 18. | 12. | 11. | 12. | 11. | 10. | 33. | 13. | 13. | 13. | 14. | 15. | N/A | 33. | 7. |
| Mean | N/A | N/A | N/A | N/A | N/A | N/A | N/A | N/A | N/A | N/A | N/A | N/A | N/A | N/A | N/A | N/A | N/A | N/A | N/A | N/A | N/A | N/A | N/A | N/A | Monthly mean = | | N/A |
| Max. | 64. | 72. | 63. | 58. | 57. | 53. | 42. | 56. | 55. | 64. | 50. | 56. | 65. | 51. | 82. | 28. | 60. | 51. | 61. | 44. | 45. | 37. | 41. | 60. | Monthly max. = | | 82. |
| Min. | 4. | 5. | 4. | 3. | 4. | 5. | 5. | 6. | 7. | 8. | 8. | 8. | 8. | 8. | 8. | 7. | 6. | 6. | 7. | 5. | 4. | 4. | 5. | 4. | Monthly min. = | | 3. |

TOTAL NUMBER OF DATA HOURS IN MONTH: 672
Number of hours of bad or missing data: 3
**** designates missing or lost data

Current % recovery = 99.6

N/A: A sigma theta mean is not physically meaningful.

table created at 11: 3, 4/12/1995

MONTHLY SUMMARY
REL. HUMID.
(Degrees)
INPUT FILE: allslmet.out

Bechtel Environmental, Inc.

Met Data for Site 1
FEBRUARY 1994

| Day \ Hour | 1 | 2 | 3 | 4 | 5 | 6 | 7 | 8 | 9 | 10 | 11 | 12 | 13 | 14 | 15 | 16 | 17 | 18 | 19 | 20 | 21 | 22 | 23 | 24 | Mean | Max. | Min. |
|---|---|---|---|---|---|---|---|---|---|---|---|---|---|---|---|---|---|---|---|---|---|---|---|---|---|---|---|
| 1 | 74.9 | 78.7 | 84.4 | 88.1 | 79.6 | 77.6 | 86.7 | 78.4 | 76.4 | 68.3 | 69.5 | 61.2 | 46.9 | 46.9 | 41.1 | 40.5 | 39.7 | 43.7 | 49.5 | 46.9 | 47.6 | 47.8 | 48.0 | 49.3 | 61.3 | 88.1 | 39.7 |
| 2 | 50.4 | 70.4 | 76.7 | 82.9 | 86.9 | 87.8 | 86.0 | 86.1 | 85.6 | 83.3 | 70.2 | 57.8 | 53.3 | 44.1 | 45.4 | 44.3 | 44.0 | 45.3 | 56.8 | 63.9 | 63.8 | 69.2 | 78.3 | 86.3 | 67.5 | 87.8 | 44.0 |
| 3 | 86.7 | 88.0 | 90.8 | 91.3 | 89.4 | 87.3 | 87.0 | 87.3 | 86.1 | 87.2 | 88.6 | 84.7 | 64.4 | 54.9 | 40.1 | 38.5 | 36.4 | 40.1 | 41.7 | 45.7 | 41.7 | 44.2 | 48.7 | 65.6 | 67.3 | 91.3 | 36.4 |
| 4 | 76.8 | 82.7 | 81.8 | 75.7 | 86.5 | 89.8 | 89.1 | 88.3 | 88.6 | 83.9 | 68.4 | 62.2 | 53.5 | 47.8 | 46.7 | 43.0 | 41.9 | 46.0 | 56.3 | 58.0 | 61.7 | 61.2 | 65.9 | 79.5 | 68.1 | 89.8 | 41.9 |
| 5 | 79.6 | 78.1 | 74.1 | 75.1 | 78.3 | 80.0 | 85.2 | 87.8 | 90.0 | 89.8 | 76.5 | 67.7 | 55.7 | 47.8 | 43.8 | 37.8 | 38.4 | 42.5 | 42.8 | 54.2 | 57.2 | 46.0 | 46.8 | 45.2 | 63.4 | 90.0 | 37.8 |
| 6 | 46.8 | 49.9 | 51.1 | 64.1 | 78.2 | 83.7 | 83.4 | 88.5 | 84.8 | 80.5 | 67.1 | 54.9 | 49.2 | 41.5 | 41.4 | 43.3 | 44.0 | 48.7 | 49.4 | 46.9 | 44.8 | 44.8 | 56.5 | 62.2 | 58.6 | 88.5 | 41.4 |
| 7 | 53.8 | 66.1 | 71.0 | 63.2 | 60.7 | 71.6 | 73.6 | 75.4 | 79.2 | 82.7 | 76.3 | 74.7 | 58.3 | 55.1 | 58.0 | 66.1 | 72.1 | 79.6 | 75.7 | 78.5 | 80.3 | 76.1 | 77.1 | 77.5 | 70.9 | 82.7 | 53.8 |
| 8 | 80.9 | 90.2 | 88.4 | 86.6 | 90.1 | 93.9 | 97.1 | 97.1 | 97.1 | 95.2 | 92.5 | 91.3 | 91.5 | 86.1 | 83.7 | 80.4 | 77.5 | 80.6 | ***** | ***** | ***** | ***** | ***** | ***** | 88.9 | 97.1 | 77.5 |
| 9 | 51.7 | 53.2 | 50.3 | 48.6 | 44.9 | 55.3 | 56.6 | 54.4 | 46.1 | 36.0 | 40.1 | 29.9 | 21.8 | 32.4 | 52.1 | 78.8 | 77.6 | 82.1 | 81.9 | 87.3 | 83.4 | 84.7 | 91.4 | 90.5 | 59.6 | 91.4 | 21.8 |
| 10 | 96.9 | 96.5 | 94.9 | 86.0 | 86.5 | 91.4 | 97.1 | 97.1 | 97.1 | 97.1 | 97.1 | 97.1 | 97.1 | 97.1 | 97.1 | 97.1 | 97.1 | 97.1 | 97.1 | 97.1 | 97.1 | 97.1 | 97.1 | 97.1 | 95.8 | 97.1 | 86.0 |
| 11 | 97.1 | 97.1 | 97.1 | 97.1 | 97.1 | 97.1 | 97.1 | 97.1 | 94.4 | 87.5 | 86.6 | 76.8 | 82.5 | 93.1 | ***** | ***** | ***** | 80.3 | 81.3 | 85.2 | 85.3 | 83.2 | 83.2 | 82.0 | 89.4 | 97.1 | 76.8 |
| 12 | 85.1 | 88.6 | 86.7 | 85.1 | 85.2 | 84.6 | 83.1 | 82.3 | 82.1 | 80.1 | 76.0 | 74.2 | 72.8 | 73.5 | 66.9 | 63.8 | 66.6 | 71.3 | 80.6 | 74.7 | 67.0 | 67.8 | 67.2 | 66.1 | 76.3 | 88.6 | 63.8 |
| 13 | 64.9 | 62.7 | 72.1 | 77.8 | 84.1 | 85.7 | 85.5 | 84.7 | 84.6 | 81.0 | 64.2 | 47.8 | 40.0 | 37.1 | 35.9 | 36.0 | 36.5 | 36.5 | 30.7 | 35.0 | 33.6 | 24.4 | 29.0 | 23.4 | 53.9 | 85.7 | 23.4 |
| 14 | 23.6 | 30.3 | 53.8 | 67.7 | 55.0 | 42.3 | 45.8 | 49.6 | 46.2 | 42.2 | 37.9 | 43.5 | 43.3 | 43.9 | 42.6 | 43.8 | 45.0 | 47.9 | 58.4 | 59.8 | 59.5 | 57.4 | 60.4 | 68.1 | 48.7 | 68.1 | 23.6 |
| 15 | 70.8 | 81.0 | 72.8 | 84.5 | 89.7 | 90.8 | 91.4 | 89.6 | 86.1 | 76.5 | 60.5 | 56.3 | 51.8 | 48.3 | 48.4 | 46.1 | 49.4 | 35.4 | 33.2 | 33.8 | 34.7 | 36.8 | 36.9 | 35.1 | 60.0 | 91.4 | 33.2 |
| 16 | 35.2 | 42.9 | 56.0 | 53.9 | 61.6 | 71.3 | 63.7 | 82.5 | 76.9 | 55.0 | 55.0 | 37.4 | 36.6 | 25.0 | 23.6 | 22.5 | 29.8 | 27.1 | 22.5 | 23.2 | 28.7 | 28.3 | 30.3 | 37.8 | 42.8 | 82.5 | 22.5 |
| 17 | 40.5 | 23.7 | 21.8 | 24.1 | 29.0 | 35.0 | 39.7 | 39.0 | 37.8 | 38.3 | 37.8 | 37.0 | 42.7 | 66.9 | 64.4 | 52.4 | 52.8 | 57.4 | 64.0 | 69.2 | 91.1 | 97.1 | 97.1 | 97.2 | 52.3 | 97.2 | 21.8 |
| 18 | 93.4 | 82.9 | 75.2 | 65.1 | 66.3 | 69.8 | 70.6 | 75.2 | 88.7 | 97.1 | 89.1 | 81.0 | 84.2 | 85.2 | 76.5 | 78.9 | 74.7 | 76.6 | 81.0 | 78.6 | 79.4 | 82.8 | 78.9 | 83.7 | 79.8 | 97.1 | 65.1 |
| 19 | 83.6 | 83.9 | 84.4 | 90.4 | 83.9 | 83.5 | 94.4 | 96.5 | 94.1 | 88.6 | 88.7 | 81.6 | 73.9 | 70.5 | 64.1 | 58.0 | 58.0 | 57.6 | 62.3 | 66.9 | 69.7 | 74.7 | 77.2 | 77.9 | 77.7 | 96.5 | 57.6 |
| 20 | 78.5 | 73.9 | 72.6 | 72.1 | 73.5 | 74.5 | 73.1 | 69.3 | 64.9 | 58.8 | 55.8 | 52.6 | 54.7 | 61.2 | 58.4 | 60.4 | 61.3 | 65.8 | 77.7 | 76.9 | 77.0 | 79.2 | 86.0 | 96.1 | 69.8 | 96.1 | 52.6 |
| 21 | 97.1 | 97.1 | 97.1 | 97.1 | 87.2 | 75.1 | 82.2 | 70.1 | 67.6 | 65.8 | 57.7 | 61.4 | ***** | ***** | ***** | ***** | ***** | ***** | ***** | 59.3 | 62.1 | 64.7 | 65.8 | 64.0 | ***** | 97.1 | 57.7 |
| 22 | 66.8 | 65.9 | 65.4 | 82.3 | 91.2 | 95.6 | 95.9 | 87.9 | 81.9 | 77.5 | 73.7 | 77.7 | 86.6 | 86.1 | 84.3 | 75.0 | 67.8 | 67.1 | 73.3 | 71.7 | 69.8 | 67.0 | 64.7 | 66.6 | 76.7 | 95.9 | 64.7 |
| 23 | 64.6 | 63.0 | 64.1 | 62.4 | 58.5 | 57.9 | 55.8 | 58.3 | 49.3 | 46.9 | 49.0 | 49.9 | 46.2 | 46.8 | 43.6 | 43.5 | 47.0 | 56.3 | 62.5 | 76.7 | 77.5 | 90.6 | 96.3 | 97.1 | 61.0 | 97.1 | 43.5 |
| 24 | 94.9 | 81.2 | 71.8 | 69.7 | 68.6 | 68.1 | 67.9 | 67.7 | 64.9 | 68.2 | 70.6 | 74.9 | 72.7 | 72.1 | 70.9 | 70.6 | 76.1 | 74.1 | 77.3 | 76.9 | 77.2 | 79.6 | 84.8 | 84.7 | 74.4 | 94.9 | 64.9 |
| 25 | 84.5 | 84.9 | 85.6 | 84.5 | 85.0 | 91.0 | 92.1 | 92.5 | 89.3 | 87.0 | 91.6 | 88.7 | 79.5 | 75.8 | 71.9 | 65.8 | 53.9 | 66.6 | 87.7 | 92.6 | 94.2 | 95.6 | 96.5 | 95.9 | 84.7 | 96.5 | 53.9 |
| 26 | 95.7 | 97.1 | 97.1 | 97.1 | 97.1 | 97.1 | 97.1 | 97.0 | 97.1 | 97.1 | 97.1 | 97.1 | 97.1 | 97.1 | 92.5 | 86.7 | 85.8 | 85.6 | 88.7 | 89.9 | 93.0 | 95.5 | 95.7 | 97.1 | 94.5 | 97.1 | 85.6 |
| 27 | 92.6 | 92.5 | 91.9 | 88.0 | 88.9 | 86.5 | 87.4 | 84.6 | 96.8 | 97.1 | 97.0 | 97.1 | 97.1 | 97.1 | 97.1 | 92.0 | 88.5 | 90.1 | 85.7 | 88.6 | 89.5 | 91.7 | 92.9 | 91.5 | 91.8 | 97.1 | 84.6 |
| 28 | 92.1 | 92.0 | 92.3 | 92.7 | 92.2 | 90.9 | 91.3 | 89.2 | 88.1 | 85.5 | 81.5 | 77.3 | 63.2 | 59.1 | 60.9 | 58.8 | 56.2 | 58.3 | 65.3 | 73.1 | 72.3 | 72.8 | 75.0 | 74.3 | 77.3 | 92.7 | 56.2 |
| Mean | 73.6 | 74.8 | 75.8 | 76.9 | 77.7 | 79.1 | 80.6 | 80.5 | 79.4 | 76.2 | 72.0 | 67.6 | 63.6 | 62.7 | 59.7 | 58.6 | 58.4 | 61.5 | 64.7 | 67.1 | 68.1 | 68.9 | 71.4 | 73.8 | Monthly mean = | | 70.7 |
| Max. | 97.1 | 97.1 | 97.1 | 97.1 | 97.1 | 97.1 | 97.1 | 97.1 | 97.1 | 97.1 | 97.1 | 97.1 | 97.1 | 97.1 | 97.1 | 97.1 | 97.1 | 97.1 | 97.1 | 97.1 | 97.1 | 97.1 | 97.1 | 97.2 | Monthly max. = | | 97.2 |
| Min. | 23.6 | 23.7 | 21.8 | 24.1 | 29.0 | 35.0 | 39.7 | 39.0 | 37.8 | 36.0 | 37.8 | 29.9 | 21.8 | 25.0 | 23.6 | 22.5 | 29.8 | 27.1 | 22.5 | 23.2 | 28.7 | 24.4 | 29.0 | 23.4 | Monthly min. = | | 21.8 |

TOTAL NUMBER OF DATA HOURS IN MONTH: 672
Number of hours of bad or missing data: 16
**** designates missing or lost data

Current % recovery = 97.6

N/A: insufficient data available for calculation (a minimum of 75% is required)

table created at 11: 3, 4/12/1995

MONTHLY SUMMARY
WIND SPEED
(Miles Per Hour)
INPUT FILE: alls1met.out

Bechtel Environmental, Inc.

Met Data for Site 1
MARCH 1994

| Day | Hour 1 | 2 | 3 | 4 | 5 | 6 | 7 | 8 | 9 | 10 | 11 | 12 | 13 | 14 | 15 | 16 | 17 | 18 | 19 | 20 | 21 | 22 | 23 | 24 | Mean | Max. | Min. |
|---|---|---|---|---|---|---|---|---|---|---|---|---|---|---|---|---|---|---|---|---|---|---|---|---|---|---|---|
| 1 | 12.2 | 8.0 | 9.8 | 9.0 | 6.3 | 1.7 | 1.4 | 5.8 | 7.0 | 6.7 | 7.2 | ***** | ***** | ***** | ***** | 4.0 | 6.5 | 5.2 | 3.4 | 7.3 | 11.5 | 13.1 | 15.2 | 7.6 | 7.4 | 15.2 | 1.4 |
| 2 | 3.6 | 2.7 | 2.6 | 2.9 | 2.9 | 4.9 | 5.1 | 4.6 | 2.3 | 3.3 | 4.3 | 4.7 | 4.3 | 7.5 | 7.3 | 8.9 | 9.0 | 10.0 | 8.8 | 14.4 | 18.3 | 17.4 | 16.7 | 16.5 | 7.6 | 18.3 | 2.3 |
| 3 | 14.3 | 8.4 | 4.1 | 3.3 | 7.2 | 2.6 | 4.0 | 2.8 | 3.3 | 3.9 | 7.6 | 13.3 | 9.2 | 8.0 | 7.5 | 9.7 | 9.3 | 6.1 | 3.0 | 3.9 | 7.8 | 10.0 | 12.4 | 11.9 | 7.2 | 14.3 | 2.6 |
| 4 | 9.0 | 5.8 | 2.7 | 3.1 | 2.5 | 12.0 | 11.0 | 3.9 | 9.2 | 7.5 | 11.9 | 17.3 | 17.8 | 18.3 | 18.5 | 17.1 | 18.6 | 17.3 | 12.8 | 11.1 | 13.7 | 13.1 | 11.5 | 11.5 | 11.5 | 18.6 | 2.5 |
| 5 | 7.6 | 7.7 | 7.5 | 3.6 | 5.2 | 2.7 | 4.1 | 3.7 | 4.0 | 7.1 | 7.8 | 8.9 | 6.9 | 3.7 | 7.4 | 8.6 | 7.3 | 4.8 | 2.3 | 2.7 | 5.9 | 10.2 | 10.8 | 12.4 | 6.4 | 12.4 | 2.3 |
| 6 | 10.1 | 9.1 | 10.3 | 14.0 | 14.3 | 13.4 | 13.4 | 11.6 | 12.1 | 10.7 | 11.3 | 10.9 | 10.4 | 8.6 | 7.1 | 5.3 | 5.4 | 6.7 | 7.4 | 9.6 | 8.8 | 10.4 | 10.4 | 12.2 | 10.1 | 14.3 | 5.3 |
| 7 | 10.8 | 9.4 | 10.3 | 9.5 | 5.5 | 6.0 | 7.7 | 7.0 | 5.6 | 9.1 | 14.0 | 13.9 | 12.3 | 10.1 | 8.5 | 8.3 | 7.0 | 3.8 | 2.0 | 2.8 | 8.8 | 6.0 | 5.5 | 3.8 | 7.8 | 14.0 | 2.0 |
| 8 | 4.2 | 5.5 | 7.1 | 11.3 | 12.3 | 9.4 | 9.0 | 6.2 | 6.2 | 11.5 | 14.1 | 13.6 | 12.0 | 9.8 | 6.0 | 5.9 | 7.4 | 5.7 | 4.9 | 11.1 | 13.1 | 12.0 | 10.9 | 10.5 | 9.2 | 14.1 | 4.2 |
| 9 | 11.4 | 8.1 | 7.9 | 7.9 | 8.3 | 9.1 | 9.5 | 9.3 | 7.2 | 10.4 | 11.3 | 11.1 | 10.4 | 9.8 | 9.3 | 7.5 | 6.8 | 4.0 | 2.1 | 3.3 | 9.0 | 12.2 | 10.0 | 10.9 | 8.6 | 12.2 | 2.1 |
| 10 | 12.4 | 13.2 | 4.6 | 4.4 | 5.2 | 5.3 | 4.2 | 4.1 | 3.7 | 3.4 | 3.5 | 4.5 | 8.0 | 11.6 | 11.4 | 14.0 | 14.1 | 13.1 | 16.3 | 11.4 | 10.2 | 9.3 | 5.6 | 7.6 | 8.4 | 16.3 | 3.4 |
| 11 | 6.4 | 7.9 | 4.3 | 3.4 | 5.3 | 6.7 | 8.1 | 11.6 | 8.5 | 6.0 | 5.0 | 10.9 | 10.1 | 12.2 | 14.8 | 15.8 | 17.6 | 13.8 | 10.1 | 5.7 | 3.1 | 4.1 | 1.9 | 3.4 | 8.2 | 17.6 | 1.9 |
| 12 | 6.0 | 4.6 | 2.9 | 3.1 | 4.9 | 2.9 | 4.2 | 4.5 | 4.5 | 4.7 | 4.4 | 7.2 | 8.7 | 7.6 | 8.2 | 6.7 | 5.3 | 8.3 | 11.5 | 14.6 | 14.1 | 14.0 | 12.2 | 10.4 | 7.3 | 14.6 | 2.9 |
| 13 | 7.5 | 8.5 | 9.5 | 9.2 | 8.9 | 9.7 | 9.2 | 9.4 | 6.1 | 5.3 | 5.1 | 7.7 | 9.3 | 8.4 | 10.0 | 10.6 | 10.7 | 12.2 | 9.2 | 9.1 | 9.3 | 12.7 | 16.1 | 17.4 | 9.6 | 17.4 | 5.1 |
| 14 | 16.0 | 15.9 | 15.9 | 6.3 | 10.1 | 13.0 | 10.5 | 2.9 | 3.8 | 10.8 | 12.3 | 15.4 | 15.3 | 15.0 | 19.2 | 18.0 | 18.0 | 14.2 | 11.7 | 11.0 | 10.4 | 10.9 | 16.3 | 15.9 | 12.9 | 19.2 | 2.9 |
| 15 | 15.3 | 18.4 | 17.7 | 15.7 | 12.6 | 6.9 | 14.2 | 9.2 | 8.3 | 6.0 | 10.9 | 12.9 | 14.9 | 11.0 | 13.0 | 13.9 | 12.7 | 14.2 | 13.8 | 13.8 | 13.0 | 15.3 | 17.3 | 17.8 | 13.3 | 18.4 | 6.0 |
| 16 | 18.9 | 20.7 | 18.8 | 13.0 | 14.4 | 9.7 | 2.5 | 11.4 | 17.5 | 16.7 | 12.5 | 11.8 | 11.1 | 11.1 | 14.6 | 14.4 | 9.9 | 7.3 | 11.0 | 11.8 | 12.5 | 18.6 | 21.7 | 22.0 | 13.9 | 22.0 | 2.5 |
| 17 | 30.8 | 27.9 | 25.5 | 24.8 | 20.0 | 19.5 | 17.0 | 21.8 | 20.4 | 20.5 | 23.8 | 21.3 | 22.7 | 21.3 | 22.5 | 22.8 | 20.6 | 15.2 | 10.6 | 5.7 | 7.8 | 9.1 | 5.6 | 4.2 | 18.4 | 30.8 | 4.2 |
| 18 | 4.3 | 8.2 | 14.9 | 14.7 | 12.3 | 5.2 | 4.8 | 4.4 | 5.1 | 3.3 | 8.7 | 20.7 | 19.3 | 21.9 | 19.6 | 17.5 | 18.1 | 22.7 | 18.8 | 16.6 | 19.7 | 18.0 | 18.9 | 19.7 | 14.1 | 22.7 | 3.3 |
| 19 | 19.6 | 17.1 | 15.4 | 14.6 | 18.6 | 19.4 | 18.4 | 20.0 | 20.9 | 17.7 | 18.2 | 20.2 | 19.2 | 21.4 | 20.7 | 21.7 | 21.4 | 22.9 | 18.3 | 17.0 | 16.4 | 15.9 | 16.4 | 16.1 | 18.6 | 22.9 | 14.6 |
| 20 | 14.6 | 11.7 | 10.6 | 4.9 | 3.4 | 6.6 | 8.1 | 7.5 | 5.6 | 11.7 | 12.7 | 12.0 | 11.6 | 11.2 | 11.2 | 11.0 | 9.6 | 14.1 | 17.2 | 20.2 | 18.1 | 20.0 | 22.6 | 20.8 | 12.4 | 22.6 | 3.4 |
| 21 | 20.9 | 19.7 | 16.0 | 16.1 | 19.4 | 17.5 | 20.5 | 18.0 | 17.0 | 17.5 | 23.4 | 28.4 | 25.5 | 21.8 | 17.9 | 13.9 | 15.9 | 10.4 | 7.6 | 7.1 | 5.5 | 5.0 | 7.8 | 6.9 | 15.8 | 28.4 | 5.0 |
| 22 | 8.5 | 6.5 | 16.7 | 10.4 | 15.9 | 16.3 | 13.7 | 9.5 | 7.4 | 5.2 | 3.9 | 7.7 | 6.8 | 5.4 | 7.6 | 12.8 | 19.7 | 20.5 | 20.3 | 21.2 | 24.8 | 25.7 | 23.8 | 24.6 | 14.0 | 25.7 | 3.9 |
| 23 | 20.7 | 22.3 | 21.0 | 25.9 | 23.5 | 20.6 | 17.6 | 14.7 | 17.1 | 16.8 | 17.7 | 17.6 | 15.1 | 13.2 | 13.8 | 12.5 | 8.2 | 13.3 | 13.0 | 15.7 | 14.3 | 15.7 | 15.8 | 14.9 | 16.7 | 25.9 | 8.2 |
| 24 | 14.6 | 14.2 | 11.9 | 10.0 | 9.4 | 8.6 | 9.7 | 3.0 | 7,7 | 6.3 | 5.2 | 5.4 | 5.6 | 5.3 | 5.0 | 6.8 | 7.3 | 10.3 | 7.5 | 7.1 | 10.6 | 12.4 | 11.7 | 8.6 | 8.5 | 14.6 | 3.0 |
| 25 | 3.6 | 4.5 | 7.0 | 7.3 | 7.4 | 2.7 | 2.0 | 2.0 | 1.5 | 4.4 | 4.8 | 4.6 | 5.5 | 7.6 | 7.9 | 7.4 | 7.0 | 4.4 | 3.4 | 4.8 | 10.0 | 5.7 | 5.3 | 3.5 | 5.2 | 10.0 | 1.5 |
| 26 | 4.6 | 3.6 | 2.2 | 3.9 | 4.8 | 7.4 | 8.0 | 3.4 | 8.9 | 6.9 | 9.6 | 13.1 | 14.4 | 14.7 | 14.4 | 14.1 | 13.0 | 12.8 | 12.5 | 6.8 | 9.2 | 12.8 | 12.2 | 13.3 | 9.4 | 14.7 | 2.2 |
| 27 | 11.9 | 8.3 | 6.0 | 6.9 | 6.8 | 3.4 | 5.7 | 4.3 | 4.1 | 6.7 | 9.6 | 9.5 | 6.0 | 6.4 | 6.9 | 9.0 | 10.5 | 12.8 | 12.4 | 10.6 | 11.7 | 11.5 | 12.9 | 14.8 | 8.7 | 14.8 | 3.4 |
| 28 | 13.3 | 10.2 | 12.0 | 12.7 | 13.5 | 14.5 | 16.2 | 15.8 | 11.9 | 13.1 | 17.2 | 21.0 | 22.8 | 20.4 | 19.8 | 16.8 | 20.2 | 20.1 | 16.7 | 10.2 | 7.0 | 5.2 | 3.5 | 7.5 | 14.2 | 22.8 | 3.5 |
| 29 | 5.9 | 6.3 | 6.5 | 7.4 | 8.7 | 5.2 | 5.5 | 2.6 | 10.3 | 15.5 | 13.1 | 10.4 | 8.4 | 8.3 | 9.8 | 10.2 | 11.6 | 9.7 | 4.0 | 5.1 | 5.3 | 8.7 | 9.9 | 7.7 | 8.2 | 15.5 | 2.6 |
| 30 | 10.0 | 6.4 | 3.3 | 6.7 | 11.9 | 9.4 | 6.5 | 3.2 | 6.8 | 6.0 | 5.2 | 4.6 | 5.8 | 5.4 | 5.8 | 5.3 | 5.8 | 6.8 | 4.9 | 3.9 | 3.6 | 12.0 | 13.7 | 13.3 | 6.9 | 13.7 | 3.2 |
| 31 | 9.6 | 7.0 | 10.0 | 8.4 | 8.3 | 4.2 | 5.0 | 4.0 | 2.4 | 4.4 | 4.6 | 6.3 | 13.6 | 19.6 | 16.2 | 17.2 | 18.3 | 16.6 | 20.6 | 18.3 | 16.5 | 16.1 | 5.2 | 4.5 | 10.7 | 20.6 | 2.4 |
| Mean | 11.6 | 10.6 | 10.2 | 9.5 | 10.0 | 8.9 | 8.9 | 7.8 | 8.3 | 9.0 | 10.4 | 12.2 | 12.1 | 11.9 | 12.1 | 11.9 | 12.0 | 11.6 | 10.3 | 10.1 | 11.3 | 12.4 | 12.3 | 12.0 | Monthly mean = | | 10.7 |
| Max. | 30.8 | 27.9 | 25.5 | 25.9 | 23.5 | 20.6 | 20.5 | 21.8 | 20.9 | 20.5 | 23.8 | 28.4 | 25.5 | 21.9 | 22.5 | 22.8 | 21.4 | 22.9 | 20.6 | 21.2 | 24.8 | 25.7 | 23.8 | 24.6 | Monthly max. = | | 30.8 |
| Min. | 3.6 | 2.7 | 2.2 | 2.9 | 2.5 | 1.7 | 1.4 | 2.0 | 1.5 | 3.3 | 3.5 | 4.5 | 4.3 | 3.7 | 5.0 | 4.0 | 5.3 | 3.8 | 2.0 | 2.7 | 3.1 | 4.1 | 1.9 | 3.4 | Monthly min. = | | 1.4 |

TOTAL NUMBER OF DATA HOURS IN MONTH: 744
Number of hours of bad or missing data: 4
**** designates missing or lost data

Current % recovery = 99.5

N/A: insufficient data available for calculation (a minimum of 75% is required)

table created at 11: 3, 4/12/1995

MONTHLY SUMMARY
WIND DIRECTION
(Degrees)
INPUT FILE: allsimet.out

Bechtel Environmental, Inc.

Met Data for Site 1
MARCH 1994

| Day | Hour 1 | 2 | 3 | 4 | 5 | 6 | 7 | 8 | 9 | 10 | 11 | 12 | 13 | 14 | 15 | 16 | 17 | 18 | 19 | 20 | 21 | 22 | 23 | 24 | Mean | Max. | Min. |
|---|---|---|---|---|---|---|---|---|---|---|---|---|---|---|---|---|---|---|---|---|---|---|---|---|---|---|---|
| 1 | 232.0 | 250.0 | 264.0 | 271.0 | 306.0 | 75.0 | 107.0 | 120.0 | 119.0 | 126.0 | 125.0 | ***** | ***** | ***** | ***** | 228.0 | 203.0 | 199.0 | 123.0 | 123.0 | 118.0 | 117.0 | 118.0 | 135.0 | 167.9 | 306.0 | 75.0 |
| 2 | 278.0 | 59.0 | 279.0 | 309.0 | 82.0 | 86.0 | 93.0 | 295.0 | 310.0 | 324.0 | 17.0 | 28.0 | 37.0 | 134.0 | 193.0 | 158.0 | 163.0 | 174.0 | 162.0 | 134.0 | 131.0 | 130.0 | 129.0 | 132.0 | 159.9 | 324.0 | 17.0 |
| 3 | 119.0 | 127.0 | 293.0 | 44.0 | 121.0 | 303.0 | 116.0 | 275.0 | 276.0 | 295.0 | 127.0 | 135.0 | 145.0 | 289.0 | 292.0 | 295.0 | 286.0 | 284.0 | 132.0 | 124.0 | 116.0 | 118.0 | 118.0 | 121.0 | 189.6 | 303.0 | 44.0 |
| 4 | 122.0 | 134.0 | 258.0 | 303.0 | 341.0 | 125.0 | 122.0 | 318.0 | 115.0 | 14.0 | 268.0 | 262.0 | 255.0 | 258.0 | 259.0 | 256.0 | 257.0 | 257.0 | 237.0 | 225.0 | 228.0 | 229.0 | 222.0 | 222.0 | 220.3 | 341.0 | 14.0 |
| 5 | 201.0 | 132.0 | 119.0 | 312.0 | 266.0 | 132.0 | 210.0 | 42.0 | 126.0 | 300.0 | 310.0 | 291.0 | 277.0 | 306.0 | 308.0 | 286.0 | 268.0 | 291.0 | 342.0 | 236.0 | 230.0 | 255.0 | 230.0 | 236.0 | 237.8 | 342.0 | 42.0 |
| 6 | 245.0 | 246.0 | 269.0 | 238.0 | 235.0 | 242.0 | 233.0 | 236.0 | 241.0 | 265.0 | 275.0 | 286.0 | 289.0 | 283.0 | 289.0 | 294.0 | 280.0 | 282.0 | 262.0 | 219.0 | 222.0 | 220.0 | 220.0 | 218.0 | 253.7 | 294.0 | 218.0 |
| 7 | 225.0 | 221.0 | 218.0 | 220.0 | 179.0 | 112.0 | 121.0 | 119.0 | 110.0 | 274.0 | 264.0 | 263.0 | 278.0 | 280.0 | 299.0 | 296.0 | 307.0 | 293.0 | 210.0 | 136.0 | 123.0 | 122.0 | 118.0 | 112.0 | 204.2 | 307.0 | 110.0 |
| 8 | 105.0 | 111.0 | 239.0 | 253.0 | 234.0 | 247.0 | 232.0 | 212.0 | 218.0 | 277.0 | 267.0 | 258.0 | 264.0 | 276.0 | 299.0 | 286.0 | 269.0 | 230.0 | 230.0 | 225.0 | 221.0 | 223.0 | 225.0 | 230.0 | 234.6 | 299.0 | 105.0 |
| 9 | 231.0 | 204.0 | 117.0 | 113.0 | 122.0 | 123.0 | 122.0 | 120.0 | 111.0 | 257.0 | 274.0 | 277.0 | 278.0 | 284.0 | 290.0 | 295.0 | 315.0 | 347.0 | 107.0 | 144.0 | 125.0 | 123.0 | 127.0 | 129.0 | 193.1 | 347.0 | 107.0 |
| 10 | 133.0 | 118.0 | 97.0 | 302.0 | 294.0 | 303.0 | 308.0 | 296.0 | 299.0 | 312.0 | 337.0 | 327.0 | 293.0 | 280.0 | 273.0 | 263.0 | 236.0 | 222.0 | 233.0 | 210.0 | 217.0 | 221.0 | 242.0 | 269.0 | 253.5 | 337.0 | 97.0 |
| 11 | 280.0 | 270.0 | 291.0 | 341.0 | 297.0 | 276.0 | 255.0 | 245.0 | 267.0 | 308.0 | 346.0 | 10.0 | 22.0 | 7.0 | 7.0 | 10.0 | 9.0 | 8.0 | 14.0 | 17.0 | 97.0 | 94.0 | 112.0 | 109.0 | 348.8 | 346.0 | 7.0 |
| 12 | 110.0 | 102.0 | 89.0 | 109.0 | 117.0 | 299.0 | 279.0 | 277.0 | 291.0 | 295.0 | 19.0 | 22.0 | 353.0 | 279.0 | 295.0 | 295.0 | 287.0 | 262.0 | 243.0 | 230.0 | 231.0 | 232.0 | 232.0 | 223.0 | 320.5 | 353.0 | 19.0 |
| 13 | 114.0 | 115.0 | 118.0 | 122.0 | 125.0 | 115.0 | 125.0 | 128.0 | 134.0 | 117.0 | 296.0 | 288.0 | 301.0 | 312.0 | 280.0 | 284.0 | 279.0 | 277.0 | 237.0 | 208.0 | 134.0 | 124.0 | 124.0 | 126.0 | 186.8 | 312.0 | 114.0 |
| 14 | 124.0 | 125.0 | 123.0 | 132.0 | 124.0 | 124.0 | 126.0 | 203.0 | 185.0 | 195.0 | 231.0 | 253.0 | 257.0 | 265.0 | 266.0 | 264.0 | 265.0 | 268.0 | 234.0 | 215.0 | 210.0 | 127.0 | 125.0 | 120.0 | 190.0 | 268.0 | 120.0 |
| 15 | 122.0 | 124.0 | 124.0 | 119.0 | 119.0 | 114.0 | 96.0 | 103.0 | 105.0 | 25.0 | 135.0 | 147.0 | 133.0 | 181.0 | 177.0 | 191.0 | 173.0 | 178.0 | 180.0 | 179.0 | 157.0 | 150.0 | 129.0 | 132.0 | 137.2 | 191.0 | 25.0 |
| 16 | 131.0 | 134.0 | 126.0 | 122.0 | 131.0 | 132.0 | 266.0 | 144.0 | 146.0 | 145.0 | 158.0 | 195.0 | 210.0 | 219.0 | 282.0 | 274.0 | 264.0 | 246.0 | 202.0 | 190.0 | 228.0 | 251.0 | 249.0 | 247.0 | 195.5 | 282.0 | 122.0 |
| 17 | 255.0 | 257.0 | 251.0 | 236.0 | 235.0 | 233.0 | 227.0 | 241.0 | 240.0 | 246.0 | 254.0 | 250.0 | 250.0 | 254.0 | 254.0 | 261.0 | 268.0 | 269.0 | 265.0 | 241.0 | 186.0 | 127.0 | 128.0 | 98.0 | 230.2 | 269.0 | 98.0 |
| 18 | 201.0 | 117.0 | 127.0 | 131.0 | 126.0 | 256.0 | 301.0 | 290.0 | 285.0 | 350.0 | 203.0 | 197.0 | 195.0 | 204.0 | 210.0 | 218.0 | 163.0 | 192.0 | 233.0 | 173.0 | 185.0 | 172.0 | 173.0 | 188.0 | 203.7 | 350.0 | 117.0 |
| 19 | 196.0 | 226.0 | 226.0 | 226.0 | 234.0 | 234.0 | 231.0 | 233.0 | 241.0 | 243.0 | 238.0 | 244.0 | 244.0 | 244.0 | 241.0 | 251.0 | 244.0 | 251.0 | 253.0 | 232.0 | 231.0 | 226.0 | 224.0 | 233.0 | 235.2 | 253.0 | 196.0 |
| 20 | 228.0 | 229.0 | 227.0 | 217.0 | 88.0 | 114.0 | 122.0 | 116.0 | 122.0 | 238.0 | 254.0 | 264.0 | 263.0 | 256.0 | 267.0 | 268.0 | 215.0 | 188.0 | 171.0 | 154.0 | 145.0 | 140.0 | 129.0 | 138.0 | 189.7 | 268.0 | 88.0 |
| 21 | 137.0 | 133.0 | 139.0 | 138.0 | 127.0 | 180.0 | 197.0 | 189.0 | 196.0 | 223.0 | 252.0 | 261.0 | 264.0 | 268.0 | 258.0 | 265.0 | 269.0 | 266.0 | 274.0 | 262.0 | 261.0 | 131.0 | 121.0 | 153.0 | 206.8 | 274.0 | 121.0 |
| 22 | 243.0 | 177.0 | 242.0 | 228.0 | 244.0 | 237.0 | 242.0 | 245.0 | 292.0 | 305.0 | 27.0 | 107.0 | 137.0 | 272.0 | 301.0 | 279.0 | 250.0 | 259.0 | 247.0 | 243.0 | 247.0 | 245.0 | 242.0 | 238.0 | 231.2 | 305.0 | 27.0 |
| 23 | 229.0 | 233.0 | 230.0 | 231.0 | 229.0 | 225.0 | 230.0 | 227.0 | 236.0 | 252.0 | 254.0 | 245.0 | 241.0 | 267.0 | 261.0 | 269.0 | 231.0 | 151.0 | 143.0 | 141.0 | 130.0 | 125.0 | 131.0 | 128.0 | 210.0 | 269.0 | 125.0 |
| 24 | 122.0 | 114.0 | 127.0 | 108.0 | 111.0 | 106.0 | 92.0 | 116.0 | 114.0 | 57.0 | 70.0 | 37.0 | 84.0 | 91.0 | 111.0 | 97.0 | 125.0 | 123.0 | 138.0 | 131.0 | 138.0 | 133.0 | 127.0 | 124.0 | 108.2 | 138.0 | 37.0 |
| 25 | 271.0 | 115.0 | 118.0 | 120.0 | 128.0 | 293.0 | 340.0 | 75.0 | 72.0 | 349.0 | 3.0 | 44.0 | 32.0 | 16.0 | 42.0 | 10.0 | 24.0 | 64.0 | 78.0 | 123.0 | 123.0 | 199.0 | 105.0 | 149.0 | 45.5 | 349.0 | 3.0 |
| 26 | 119.0 | 115.0 | 346.0 | 102.0 | 127.0 | 210.0 | 265.0 | 145.0 | 289.0 | 296.0 | 29.0 | 29.0 | 20.0 | 21.0 | 23.0 | 35.0 | 45.0 | 48.0 | 54.0 | 66.0 | 85.0 | 62.0 | 53.0 | 63.0 | 35.3 | 346.0 | 20.0 |
| 27 | 69.0 | 81.0 | 10.0 | 275.0 | 271.0 | 88.0 | 125.0 | 112.0 | 66.0 | 37.0 | 18.0 | 8.0 | 336.0 | 289.0 | 289.0 | 278.0 | 265.0 | 258.0 | 255.0 | 227.0 | 223.0 | 223.0 | 219.0 | 217.0 | 326.6 | 336.0 | 8.0 |
| 28 | 214.0 | 206.0 | 142.0 | 141.0 | 130.0 | 132.0 | 130.0 | 126.0 | 151.0 | 216.0 | 241.0 | 253.0 | 262.0 | 265.0 | 264.0 | 279.0 | 28.0 | 42.0 | 51.0 | 51.0 | 57.0 | 44.0 | 47.0 | 50.0 | 146.7 | 279.0 | 28.0 |
| 29 | 94.0 | 94.0 | 48.0 | 89.0 | 92.0 | 68.0 | 292.0 | 298.0 | 67.0 | 60.0 | 45.0 | 39.0 | 35.0 | 13.0 | 14.0 | 12.0 | 12.0 | 18.0 | 30.0 | 99.0 | 113.0 | 121.0 | 126.0 | 130.0 | 53.7 | 298.0 | 12.0 |
| 30 | 125.0 | 130.0 | 102.0 | 99.0 | 122.0 | 124.0 | 120.0 | 105.0 | 103.0 | 55.0 | 65.0 | 67.0 | 55.0 | 76.0 | 36.0 | 23.0 | 12.0 | 23.0 | 47.0 | 178.0 | 114.0 | 120.0 | 122.0 | 122.0 | 89.4 | 178.0 | 12.0 |
| 31 | 122.0 | 123.0 | 117.0 | 121.0 | 109.0 | 111.0 | 117.0 | 298.0 | 304.0 | 73.0 | 62.0 | 314.0 | 276.0 | 267.0 | 274.0 | 280.0 | 284.0 | 276.0 | 266.0 | 241.0 | 234.0 | 233.0 | 120.0 | 111.0 | 197.2 | 314.0 | 62.0 |
| Mean | 174.1 | 155.5 | 176.6 | 186.2 | 176.3 | 174.8 | 188.5 | 191.9 | 188.1 | 326.7 | 338.8 | 324.0 | 322.9 | 299.2 | 305.8 | 300.6 | 319.2 | 201.5 | 182.4 | 173.5 | 169.7 | 162.5 | 154.4 | 158.2 | Monthly mean = | | 185.0 |
| Max. | 280.0 | 270.0 | 346.0 | 341.0 | 341.0 | 303.0 | 340.0 | 318.0 | 310.0 | 350.0 | 346.0 | 327.0 | 353.0 | 312.0 | 308.0 | 296.0 | 315.0 | 347.0 | 342.0 | 262.0 | 261.0 | 255.0 | 249.0 | 269.0 | Monthly max. = | | 353.0 |
| Min. | 69.0 | 59.0 | 10.0 | 44.0 | 82.0 | 68.0 | 92.0 | 42.0 | 66.0 | 14.0 | 3.0 | 8.0 | 20.0 | 7.0 | 7.0 | 10.0 | 9.0 | 8.0 | 14.0 | 17.0 | 57.0 | 44.0 | 47.0 | 50.0 | Monthly min. = | | 3.0 |

TOTAL NUMBER OF DATA HOURS IN MONTH: 744
Number of hours of bad or missing data: 4
**** designates missing or lost data

Current % recovery = 99.5

N/A: insufficient data available for calculation (a minimum of 75% is required)

table created at 11: 3, 4/12/1995

MONTHLY SUMMARY
TEMPERATURE
(Degrees Celsius)
INPUT FILE: allslmet.out

Bechtel Environmental, Inc.

Met Data for Site 1
MARCH 1994

| Day | Hour 1 | 2 | 3 | 4 | 5 | 6 | 7 | 8 | 9 | 10 | 11 | 12 | 13 | 14 | 15 | 16 | 17 | 18 | 19 | 20 | 21 | 22 | 23 | 24 | Mean | Max. | Min. |
|---|---|---|---|---|---|---|---|---|---|---|---|---|---|---|---|---|---|---|---|---|---|---|---|---|---|---|---|
| 1 | 6.2 | 6.0 | 5.4 | 4.7 | 2.1 | .5 | -.1 | .2 | 2.4 | 5.3 | 8.7 | ***** | ***** | ***** | ***** | 14.0 | 8.0 | 4.8 | 5.7 | 5.1 | 3.6 | 3.1 | 3.3 | .9 | 4.5 | 14.0 | -.1 |
| 2 | ***** | ***** | ***** | ***** | ***** | ***** | ***** | ***** | 1.2 | 6.2 | 8.5 | 10.2 | 13.1 | 14.6 | 15.5 | 15.5 | 15.3 | 14.0 | 12.5 | 11.3 | 10.5 | 9.8 | 9.5 | 9.2 | ***** | 15.5 | 1.2 |
| 3 | 8.1 | 6.9 | 3.3 | 1.9 | 3.8 | 2.3 | 1.3 | 2.5 | 6.3 | 8.1 | 12.9 | 13.7 | 15.7 | 15.8 | 16.4 | 17.0 | 16.7 | 15.4 | 13.1 | 11.1 | 10.7 | 9.4 | 8.4 | 7.4 | 9.5 | 17.0 | 1.3 |
| 4 | 6.3 | 5.8 | 3.3 | 2.4 | 1.2 | 3.2 | 3.4 | 2.4 | 5.6 | 8.5 | 10.6 | 11.6 | 12.2 | 12.3 | 12.3 | 12.5 | 12.3 | 11.5 | 10.7 | 10.2 | 9.7 | 9.2 | 9.0 | 8.8 | 8.1 | 12.5 | 1.2 |
| 5 | 8.1 | 6.5 | 5.0 | 3.5 | 4.2 | 3.9 | 4.6 | 3.6 | 4.6 | 5.5 | 5.7 | 5.8 | 5.8 | 7.8 | 7.1 | 5.9 | 5.3 | 4.9 | 4.6 | 4.5 | 5.0 | 4.6 | 4.2 | 4.0 | 5.2 | 8.1 | 3.5 |
| 6 | 3.8 | 3.8 | 3.5 | 2.9 | 2.4 | 1.6 | 1.1 | .8 | 1.2 | 2.2 | 3.0 | 3.8 | 4.8 | 6.3 | 7.3 | 8.6 | 9.0 | 8.3 | 6.9 | 6.5 | 6.1 | 5.4 | 4.7 | 3.9 | 4.5 | 9.0 | .8 |
| 7 | 3.3 | 2.9 | 2.7 | 2.3 | .6 | -1.6 | -2.1 | -1.9 | 1.1 | 3.2 | 3.2 | 3.9 | 4.9 | 6.0 | 6.9 | 7.4 | 7.6 | 7.7 | 5.0 | 2.8 | 2.6 | 2.1 | 2.0 | 2.2 | 3.1 | 7.7 | -2.1 |
| 8 | 2.3 | 2.4 | 3.0 | 3.4 | 3.4 | 2.8 | 2.4 | 2.1 | 3.4 | 2.9 | 4.1 | 4.9 | 6.0 | 6.9 | 7.6 | 8.5 | 8.1 | 7.7 | 7.4 | 7.0 | 6.2 | 6.0 | 5.5 | 5.5 | 5.0 | 8.5 | 2.1 |
| 9 | 5.1 | 3.7 | .3 | .2 | -1.0 | -1.8 | -2.1 | -1.1 | 1.4 | 5.4 | 5.9 | 7.0 | 8.0 | 8.9 | 9.8 | 10.7 | 11.1 | 11.2 | 8.5 | 5.4 | 5.0 | 5.1 | 4.8 | 4.9 | 4.9 | 11.2 | -2.1 |
| 10 | 4.8 | 4.5 | 3.2 | 1.0 | -.2 | -.7 | -1.6 | -1.7 | 1.0 | 5.6 | 9.4 | 12.0 | 11.8 | 11.8 | 12.1 | 12.2 | 11.6 | 10.7 | 8.1 | 6.6 | 7.2 | 7.1 | 6.4 | 4.5 | 6.1 | 12.2 | -1.7 |
| 11 | 4.1 | 4.5 | 3.9 | 3.5 | 3.1 | 2.7 | 3.1 | 3.1 | 2.7 | 3.2 | 5.0 | 6.1 | 7.1 | 8.6 | 10.1 | 10.5 | 10.3 | 9.3 | 7.9 | 5.8 | 4.1 | 4.0 | 2.5 | 2.4 | 5.3 | 10.5 | 2.4 |
| 12 | 2.3 | 1.8 | 1.0 | .4 | 1.0 | -.5 | -.9 | .4 | 3.1 | 4.5 | 6.9 | 7.7 | 8.8 | 9.9 | 10.3 | 11.4 | 12.1 | 12.6 | 10.6 | 9.0 | 8.5 | 8.0 | 7.7 | 7.4 | 6.0 | 12.6 | -.9 |
| 13 | 4.0 | 2.3 | 1.8 | .9 | .7 | .3 | .6 | .0 | 3.5 | 7.5 | 10.5 | 11.4 | 11.5 | 12.9 | 14.4 | 15.1 | 15.8 | 14.9 | 13.9 | 13.5 | 11.1 | 9.8 | 9.7 | 9.5 | 8.2 | 15.8 | .0 |
| 14 | 9.3 | 9.1 | 9.0 | 7.2 | 7.2 | 7.3 | 6.6 | 4.7 | 8.7 | 12.6 | 14.3 | 15.6 | 16.2 | 17.1 | 17.8 | 18.1 | 18.2 | 17.9 | 16.1 | 15.3 | 15.0 | 11.6 | 10.1 | 8.9 | 12.2 | 18.2 | 4.7 |
| 15 | 8.9 | 9.6 | 9.2 | 8.2 | 6.9 | 6.0 | 5.9 | 6.4 | 9.2 | 10.5 | 15.5 | 18.1 | 19.5 | 20.6 | 21.4 | 21.6 | 20.8 | 19.6 | 18.2 | 17.9 | 17.3 | 16.6 | 14.6 | 14.6 | 14.0 | 21.6 | 5.9 |
| 16 | 13.7 | 12.6 | 12.2 | 12.6 | 12.7 | 10.7 | 6.7 | 11.8 | 14.1 | 14.7 | 16.2 | 17.2 | 17.3 | 17.6 | 16.7 | 16.2 | 15.6 | 14.8 | 15.1 | 15.2 | 15.0 | 13.4 | 11.7 | 8.6 | 13.9 | 17.6 | 6.7 |
| 17 | 6.7 | 5.5 | 4.9 | 4.4 | 3.8 | 3.3 | 3.0 | 3.9 | 4.4 | 5.2 | 5.8 | 6.8 | 8.0 | 8.7 | 9.6 | 10.1 | 10.3 | 10.5 | 9.0 | 7.9 | 7.4 | 5.4 | 4.3 | 2.8 | 6.3 | 10.5 | 2.8 |
| 18 | 1.9 | 3.0 | 5.5 | 6.1 | 5.5 | 3.5 | .0 | 1.5 | 5.4 | 10.9 | 13.2 | 13.8 | 13.3 | 12.9 | 12.0 | 10.9 | 10.9 | 11.2 | 6.8 | 7.9 | 10.6 | 10.9 | 10.4 | 11.6 | 8.3 | 13.8 | .0 |
| 19 | 11.1 | 10.1 | 7.6 | 6.5 | 4.8 | 3.2 | 1.9 | 1.3 | 1.1 | 1.1 | 1.3 | 1.8 | 2.0 | 2.3 | 3.0 | 3.3 | 3.6 | 4.2 | 2.8 | 1.4 | 1.1 | .8 | .3 | -.3 | 3.2 | 11.1 | -.3 |
| 20 | -1.0 | -1.6 | -1.9 | -3.1 | -5.9 | -6.3 | -6.1 | -4.4 | -.4 | 1.6 | 2.6 | 3.4 | 4.5 | 6.1 | 7.3 | 8.3 | 8.6 | 8.5 | 6.7 | 5.6 | 4.8 | 5.1 | 4.4 | 3.8 | 2.1 | 8.6 | -6.3 |
| 21 | 4.0 | 4.4 | 5.6 | 5.9 | 5.5 | 8.9 | 9.2 | 9.1 | 9.6 | 10.8 | 11.4 | 11.7 | 12.0 | 12.3 | 12.7 | 13.0 | 12.8 | 11.8 | 10.6 | 10.1 | 10.0 | 8.1 | 6.7 | 4.4 | 9.2 | 13.0 | 4.0 |
| 22 | 6.6 | 5.5 | 5.9 | 5.1 | 4.3 | 3.3 | 2.4 | 1.6 | 1.3 | 1.6 | 2.2 | 1.0 | 2.1 | 3.3 | 3.5 | 2.4 | .6 | .0 | -.6 | -.5 | -1.3 | -1.7 | -1.5 | -1.6 | 1.9 | 6.6 | -1.7 |
| 23 | -2.0 | -2.3 | -2.9 | -3.1 | -3.2 | -3.5 | -3.6 | -2.9 | -1.9 | -1.2 | -.5 | .2 | .6 | .8 | 2.1 | 2.2 | 2.6 | 1.3 | .5 | -.3 | -.8 | -1.3 | -1.6 | -2.0 | -.9 | 2.6 | -3.6 |
| 24 | -2.7 | -4.3 | -5.1 | -5.9 | -6.1 | -6.1 | -6.3 | -4.8 | -2.4 | -.8 | 1.3 | 3.9 | 5.9 | 7.7 | 9.4 | 9.3 | 8.6 | 8.0 | 6.8 | 5.2 | 4.1 | 3.7 | 2.2 | 1.5 | 1.4 | 9.4 | -6.3 |
| 25 | -1.6 | -1.5 | -1.3 | -1.8 | -2.2 | -4.0 | -5.0 | -2.0 | 2.1 | 4.2 | 5.8 | 8.0 | 9.0 | 9.4 | 9.9 | 10.5 | 10.6 | 10.6 | 9.0 | 5.4 | 4.6 | 2.3 | .4 | .3 | 3.4 | 10.6 | -5.0 |
| 26 | -.5 | -1.7 | -3.2 | -3.1 | -1.0 | .4 | -1.2 | .3 | 2.5 | 3.9 | 6.0 | 7.2 | 8.3 | 8.9 | 9.4 | 9.0 | 8.4 | 7.9 | 6.3 | 4.3 | 3.0 | 1.8 | .9 | .9 | 3.3 | 9.4 | -3.2 |
| 27 | .8 | .6 | -.4 | -2.4 | -1.9 | -3.5 | -3.2 | -1.4 | 1.6 | 2.8 | 4.4 | 5.3 | 6.5 | 7.0 | 8.2 | 8.5 | 9.0 | 9.7 | 9.2 | 8.6 | 8.1 | 7.9 | 7.8 | 8.2 | 4.2 | 9.7 | -3.5 |
| 28 | 8.1 | 7.6 | 4.8 | 4.3 | 3.7 | 3.2 | 3.1 | 4.0 | 7.0 | 10.0 | 11.5 | 12.5 | 13.9 | 15.1 | 16.4 | 17.3 | 13.7 | 10.3 | 9.6 | 9.1 | 7.9 | 6.7 | 4.4 | 5.6 | 8.7 | 17.3 | 3.1 |
| 29 | 5.1 | 4.8 | .7 | -.4 | .3 | .0 | -3.2 | .8 | 5.2 | 6.3 | 7.4 | 8.2 | 9.4 | 10.4 | 11.0 | 11.3 | 11.5 | 11.3 | 9.9 | 7.3 | 4.2 | 3.4 | 2.3 | 1.6 | 5.4 | 11.5 | -3.2 |
| 30 | 1.8 | 1.3 | -.6 | -1.1 | -.3 | -1.7 | -1.6 | 1.8 | 4.7 | 6.5 | 9.4 | 12.5 | 14.2 | 16.0 | 17.3 | 18.1 | 18.4 | 17.4 | 14.9 | 12.8 | 8.9 | 9.2 | 8.1 | 7.0 | 8.1 | 18.4 | -1.7 |
| 31 | 5.5 | 3.9 | 3.0 | 2.1 | 1.8 | .1 | -.4 | 2.9 | 8.3 | 12.2 | 14.5 | 16.5 | 15.5 | 15.9 | 15.6 | 15.0 | 13.4 | 11.8 | 10.5 | 7.9 | 7.2 | 7.3 | 7.4 | 6.6 | 8.5 | 16.5 | -.4 |
| Mean | 4.5 | 3.9 | 3.0 | 2.3 | 1.9 | 1.3 | .6 | 1.5 | 3.8 | 5.8 | 7.6 | 8.7 | 9.6 | 10.5 | 11.1 | 11.4 | 11.0 | 10.3 | 8.9 | 7.7 | 7.0 | 6.3 | 5.5 | 4.9 | Monthly mean = | | 6.2 |
| Max. | 13.7 | 12.6 | 12.2 | 12.6 | 12.7 | 10.7 | 9.2 | 11.8 | 14.1 | 14.7 | 16.2 | 18.1 | 19.5 | 20.6 | 21.4 | 21.6 | 20.8 | 19.6 | 18.2 | 17.9 | 17.3 | 16.6 | 14.6 | 14.6 | Monthly max. = | | 21.6 |
| Min. | -2.7 | -4.3 | -5.1 | -5.9 | -6.1 | -6.3 | -6.3 | -4.8 | -2.4 | -1.2 | -.5 | .2 | .6 | .8 | 2.1 | 2.2 | .6 | .0 | -.6 | -.5 | -1.3 | -1.7 | -1.6 | -2.0 | Monthly min. = | | -6.3 |

TOTAL NUMBER OF DATA HOURS IN MONTH: 744
Number of hours of bad or missing data: 12
Current % recovery = 98.4
**** designates missing or lost data

N/A: insufficient data available for calculation (a minimum of 75% is required)

table created at 11: 3, 4/12/1995

MONTHLY SUMMARY
SIGMA THETA
(Degrees)
INPUT FILE: allsimet.out

Bechtel Environmental, Inc.

Met Data for Site 1
MARCH 1994

| Day \ Hour | 1 | 2 | 3 | 4 | 5 | 6 | 7 | 8 | 9 | 10 | 11 | 12 | 13 | 14 | 15 | 16 | 17 | 18 | 19 | 20 | 21 | 22 | 23 | 24 | Mean | Max. | Min. |
|---|---|---|---|---|---|---|---|---|---|---|---|---|---|---|---|---|---|---|---|---|---|---|---|---|---|---|---|
| 1 | 13. | 18. | 15. | 14. | 30. | 63. | 52. | 8. | 11. | 50. | 46. | ***** | ***** | ***** | ***** | 81. | 19. | 21. | 48. | 7. | 5. | 5. | 4. | 30. | N/A | 81. | 4. |
| 2 | 18. | 34. | 32. | 12. | 40. | 13. | 42. | 24. | 18. | 24. | 28. | 27. | 40. | 32. | 44. | 26. | 34. | 12. | 12. | 5. | 6. | 6. | 6. | 6. | N/A | 44. | 5. |
| 3 | 7. | 21. | 16. | 38. | 12. | 61. | 51. | 57. | 35. | 16. | 49. | 9. | 34. | 16. | 20. | 12. | 9. | 10. | 56. | 32. | 8. | 8. | 4. | 4. | N/A | 61. | 4. |
| 4 | 5. | 40. | 57. | 22. | 22. | 4. | 29. | 49. | 9. | 28. | 15. | 10. | 10. | 9. | 9. | 12. | 9. | 9. | 12. | 13. | 14. | 14. | 14. | 14. | N/A | 57. | 4. |
| 5 | 26. | 13. | 17. | 23. | 44. | 63. | 48. | 25. | 77. | 12. | 9. | 9. | 13. | 60. | 22. | 9. | 10. | 33. | 16. | 39. | 19. | 14. | 15. | 11. | N/A | 77. | 9. |
| 6 | 14. | 15. | 15. | 13. | 12. | 12. | 12. | 13. | 13. | 16. | 16. | 15. | 14. | 19. | 23. | 35. | 27. | 12. | 9. | 10. | 13. | 12. | 13. | 12. | N/A | 35. | 9. |
| 7 | 14. | 14. | 12. | 15. | 33. | 9. | 6. | 6. | 54. | 14. | 11. | 12. | 13. | 16. | 18. | 17. | 12. | 15. | 28. | 56. | 3. | 9. | 16. | 14. | N/A | 56. | 3. |
| 8 | 14. | 15. | 30. | 15. | 11. | 16. | 24. | 26. | 21. | 11. | 10. | 12. | 16. | 20. | 28. | 22. | 15. | 21. | 31. | 14. | 13. | 14. | 14. | 14. | N/A | 31. | 10. |
| 9 | 14. | 20. | 11. | 13. | 5. | 5. | 4. | 5. | 36. | 14. | 12. | 16. | 17. | 17. | 17. | 19. | 17. | 22. | 20. | 22. | 4. | 6. | 13. | 8. | N/A | 36. | 4. |
| 10 | 25. | 7. | 40. | 46. | 13. | 10. | 12. | 13. | 12. | 19. | 27. | 28. | 13. | 12. | 13. | 13. | 15. | 15. | 14. | 13. | 13. | 16. | 55. | 8. | N/A | 55. | 7. |
| 11 | 12. | 8. | 35. | 23. | 18. | 10. | 12. | 12. | 12. | 14. | 34. | 13. | 14. | 12. | 15. | 12. | 10. | 10. | 12. | 18. | 30. | 26. | 49. | 22. | N/A | 49. | 8. |
| 12 | 14. | 22. | 37. | 30. | 17. | 37. | 23. | 17. | 22. | 30. | 44. | 19. | 23. | 30. | 26. | 29. | 26. | 27. | 11. | 10. | 12. | 14. | 13. | 26. | N/A | 44. | 10. |
| 13 | 18. | 7. | 5. | 4. | 4. | 6. | 4. | 5. | 20. | 18. | 49. | 35. | 15. | 19. | 20. | 12. | 15. | 9. | 14. | 14. | 13. | 6. | 4. | 5. | N/A | 49. | 4. |
| 14 | 6. | 6. | 8. | 44. | 18. | 9. | 19. | 42. | 57. | 22. | 19. | 17. | 15. | 14. | 11. | 11. | 10. | 9. | 14. | 13. | 13. | 15. | 5. | 6. | N/A | 57. | 5. |
| 15 | 7. | 5. | 6. | 5. | 9. | 19. | 6. | 9. | 48. | 16. | 29. | 20. | 21. | 22. | 22. | 24. | 17. | 14. | 14. | 14. | 12. | 11. | 6. | 5. | N/A | 48. | 5. |
| 16 | 4. | 5. | 5. | 9. | 7. | 38. | 46. | 20. | 8. | 9. | 18. | 15. | 18. | 23. | 12. | 10. | 10. | 31. | 14. | 15. | 16. | 14. | 15. | 14. | N/A | 46. | 4. |
| 17 | 13. | 13. | 14. | 15. | 15. | 13. | 15. | 14. | 15. | 16. | 14. | 17. | 17. | 17. | 17. | 16. | 15. | 14. | 7. | 20. | 23. | 7. | 16. | 16. | N/A | 23. | 7. |
| 18 | 30. | 42. | 9. | 11. | 14. | 43. | 27. | 24. | 22. | 44. | 35. | 13. | 14. | 14. | 14. | 24. | 12. | 17. | 15. | 15. | 15. | 13. | 13. | 13. | N/A | 44. | 9. |
| 19 | 13. | 14. | 14. | 15. | 14. | 13. | 13. | 14. | 13. | 15. | 15. | 14. | 16. | 14. | 16. | 15. | 14. | 14. | 13. | 13. | 13. | 14. | 14. | 12. | N/A | 16. | 12. |
| 20 | 13. | 14. | 13. | 36. | 17. | 8. | 4. | 7. | 36. | 19. | 20. | 21. | 24. | 25. | 19. | 20. | 27. | 14. | 11. | 10. | 11. | 12. | 8. | 9. | N/A | 36. | 4. |
| 21 | 9. | 7. | 12. | 9. | 8. | 15. | 13. | 15. | 15. | 19. | 15. | 15. | 15. | 12. | 14. | 16. | 14. | 13. | 13. | 12. | 13. | 30. | 8. | 22. | N/A | 30. | 7. |
| 22 | 17. | 50. | 10. | 23. | 13. | 12. | 12. | 16. | 11. | 22. | 37. | 11. | 13. | 37. | 11. | 9. | 9. | 8. | 10. | 10. | 9. | 10. | 10. | 11. | N/A | 50. | 8. |
| 23 | 13. | 13. | 17. | 13. | 15. | 14. | 14. | 14. | 14. | 15. | 16. | 17. | 19. | 15. | 17. | 15. | 44. | 13. | 8. | 8. | 8. | 6. | 4. | 5. | N/A | 44. | 4. |
| 24 | 5. | 6. | 4. | 6. | 8. | 9. | 12. | 27. | 20. | 15. | 22. | 27. | 37. | 45. | 41. | 36. | 20. | 10. | 8. | 11. | 7. | 6. | 5. | 20. | N/A | 45. | 4. |
| 25 | 44. | 19. | 9. | 6. | 17. | 54. | 35. | 27. | 34. | 34. | 36. | 55. | 49. | 38. | 34. | 29. | 19. | 28. | 16. | 9. | 4. | 44. | 10. | 38. | N/A | 55. | 4. |
| 26 | 11. | 34. | 39. | 20. | 60. | 40. | 36. | 60. | 13. | 21. | 23. | 15. | 13. | 15. | 14. | 11. | 11. | 11. | 11. | 22. | 18. | 10. | 11. | 8. | N/A | 60. | 8. |
| 27 | 9. | 10. | 24. | 9. | 10. | 27. | 9. | 12. | 16. | 19. | 21. | 21. | 60. | 48. | 49. | 23. | 16. | 13. | 9. | 12. | 14. | 15. | 15. | 14. | N/A | 60. | 9. |
| 28 | 15. | 17. | 12. | 11. | 9. | 8. | 7. | 6. | 21. | 16. | 18. | 18. | 15. | 16. | 12. | 14. | 21. | 10. | 10. | 12. | 15. | 19. | 31. | 10. | N/A | 31. | 6. |
| 29 | 14. | 15. | 13. | 10. | 8. | 37. | 13. | 48. | 16. | 12. | 15. | 16. | 24. | 33. | 18. | 20. | 14. | 12. | 18. | 11. | 17. | 8. | 5. | 40. | N/A | 48. | 5. |
| 30 | 4. | 11. | 35. | 10. | 5. | 4. | 21. | 67. | 14. | 15. | 21. | 35. | 31. | 34. | 47. | 42. | 41. | 12. | 29. | 44. | 28. | 5. | 5. | 16. | N/A | 67. | 4. |
| 31 | 13. | 7. | 6. | 6. | 5. | 54. | 28. | 29. | 38. | 48. | 24. | 32. | 12. | 11. | 11. | 11. | 10. | 9. | 10. | 10. | 11. | 11. | 20. | 17. | N/A | 54. | 5. |
| Mean | N/A | N/A | N/A | N/A | N/A | N/A | N/A | N/A | N/A | N/A | N/A | N/A | N/A | N/A | N/A | N/A | N/A | N/A | N/A | N/A | N/A | N/A | N/A | N/A | Monthly mean = | | N/A |
| Max. | 44. | 50. | 57. | 46. | 60. | 63. | 52. | 67. | 77. | 50. | 49. | 55. | 60. | 60. | 49. | 81. | 44. | 33. | 56. | 56. | 30. | 44. | 55. | 40. | Monthly max. = | | 81. |
| Min. | 4. | 5. | 4. | 4. | 4. | 4. | 4. | 5. | 8. | 9. | 9. | 9. | 10. | 9. | 9. | 9. | 9. | 8. | 7. | 5. | 3. | 5. | 4. | 4. | Monthly min. = | | 3. |

TOTAL NUMBER OF DATA HOURS IN MONTH: 744
Number of hours of bad or missing data: 4
**** designates missing or lost data

Current % recovery = 99.5

N/A: A sigma theta mean is not physically meaningful.

table created at 11: 3, 4/12/1995

MONTHLY SUMMARY
REL. HUMID.
(Degrees)
INPUT FILE: alls1met.out

Bechtel Environmental, Inc.

Met Data for Site 1
MARCH 1994

| Day | Hour 1 | 2 | 3 | 4 | 5 | 6 | 7 | 8 | 9 | 10 | 11 | 12 | 13 | 14 | 15 | 16 | 17 | 18 | 19 | 20 | 21 | 22 | 23 | 24 | Mean | Max. | Min. |
|---|---|---|---|---|---|---|---|---|---|---|---|---|---|---|---|---|---|---|---|---|---|---|---|---|---|---|---|
| 1 | 72.7 | 73.4 | 75.8 | 78.1 | 90.0 | 97.1 | 97.1 | 97.1 | 94.1 | 82.1 | 64.8 | ***** | ***** | ***** | ***** | 53.6 | 47.8 | 48.8 | 58.9 | 64.9 | 70.2 | 72.2 | 70.8 | 74.5 | 74.2 | 97.1 | 47.8 |
| 2 | 92.0 | 97.1 | 97.1 | 97.1 | 97.1 | 96.7 | 96.3 | 97.0 | 96.2 | 80.9 | 70.2 | 63.0 | 53.9 | 46.5 | 40.5 | 41.1 | 41.7 | 43.2 | 47.1 | 52.3 | 57.1 | 59.4 | 58.5 | 58.5 | 70.0 | 97.1 | 40.5 |
| 3 | 61.9 | 66.8 | 85.3 | 92.3 | 78.8 | 82.7 | 90.3 | 85.4 | 70.5 | 67.4 | 47.8 | 43.6 | 38.2 | 44.8 | 38.4 | 32.8 | 31.8 | 37.9 | 40.3 | 44.4 | 50.3 | 59.8 | 63.7 | 67.5 | 59.3 | 92.3 | 31.8 |
| 4 | 71.3 | 71.6 | 83.4 | 88.6 | 94.8 | 85.0 | 81.1 | 86.9 | 74.0 | 65.2 | 50.2 | 42.6 | 41.2 | 45.1 | 49.0 | 49.3 | 51.2 | 53.5 | 54.3 | 58.2 | 58.1 | 59.0 | 58.0 | 56.9 | 63.7 | 94.8 | 41.2 |
| 5 | 54.3 | 60.5 | 63.9 | 74.0 | 72.7 | 75.5 | 73.5 | 80.9 | 76.1 | 74.1 | 76.3 | 70.4 | 67.8 | 59.2 | 62.3 | 71.7 | 75.2 | 80.8 | 83.5 | 84.1 | 79.6 | 87.9 | 88.9 | 85.2 | 74.1 | 88.9 | 54.3 |
| 6 | 81.9 | 79.4 | 80.3 | 79.6 | 71.7 | 72.8 | 73.7 | 72.3 | 70.8 | 69.1 | 64.8 | 60.4 | 57.3 | 51.6 | 45.2 | 34.6 | 36.3 | 38.7 | 48.0 | 49.4 | 51.6 | 56.8 | 61.8 | 65.1 | 61.4 | 81.9 | 34.6 |
| 7 | 68.7 | 72.6 | 72.2 | 67.8 | 69.1 | 79.6 | 82.4 | 81.7 | 67.3 | 46.7 | 40.2 | 40.5 | 40.4 | 39.9 | 38.7 | 38.0 | 35.8 | 32.3 | 43.0 | 50.0 | 48.2 | 50.6 | 50.6 | 52.6 | 54.5 | 82.4 | 32.3 |
| 8 | 55.5 | 53.9 | 50.4 | 46.9 | 44.1 | 44.0 | 44.2 | 46.4 | 45.8 | 51.0 | 39.4 | 37.7 | 36.9 | 36.1 | 35.6 | 35.9 | 36.9 | 39.0 | 42.0 | 42.8 | 40.5 | 40.9 | 39.9 | 36.6 | 42.6 | 55.5 | 35.6 |
| 9 | 36.2 | 41.5 | 56.1 | 57.1 | 62.4 | 63.0 | 64.6 | 61.1 | 52.9 | 35.0 | 35.5 | 35.2 | 34.0 | 32.7 | 31.2 | 29.4 | 29.4 | 29.7 | 36.8 | 47.1 | 46.7 | 48.1 | 49.8 | 50.5 | 44.4 | 64.6 | 29.4 |
| 10 | 50.5 | 51.2 | 55.2 | 67.1 | 76.4 | 81.6 | 86.3 | 86.4 | 78.4 | 60.5 | 43.0 | 34.2 | 36.5 | 33.3 | 33.2 | 34.6 | 37.5 | 44.1 | 67.6 | 79.9 | 71.7 | 71.5 | 73.8 | 87.7 | 60.1 | 87.7 | 33.2 |
| 11 | 90.0 | 86.3 | 89.7 | 93.1 | 96.2 | 97.2 | 95.1 | 95.2 | 94.2 | 92.4 | 82.2 | 70.5 | 65.2 | 54.6 | 39.9 | 32.6 | 30.1 | 32.4 | 38.2 | 46.2 | 51.0 | 49.4 | 53.3 | 51.4 | 67.8 | 97.2 | 30.1 |
| 12 | 51.3 | 52.6 | 55.4 | 57.8 | 55.0 | 62.1 | 63.4 | 59.8 | 51.9 | 49.8 | 40.5 | 36.3 | 30.7 | 33.0 | 29.9 | 26.1 | 28.4 | 26.3 | 32.7 | 37.8 | 38.2 | 37.7 | 38.0 | 37.7 | 43.0 | 63.4 | 26.1 |
| 13 | 48.4 | 54.6 | 55.7 | 58.3 | 57.8 | 58.9 | 56.2 | 62.9 | 53.5 | 41.2 | 37.4 | 32.6 | 31.8 | 29.3 | 26.7 | 23.7 | 18.7 | 19.1 | 21.1 | 21.6 | 25.5 | 30.8 | 29.5 | 29.2 | 38.5 | 62.9 | 18.7 |
| 14 | 30.9 | 30.1 | 30.9 | 36.8 | 35.5 | 35.8 | 38.0 | 47.4 | 39.3 | 25.1 | 21.8 | 20.0 | 20.9 | 20.5 | 16.5 | 15.1 | 12.8 | 12.4 | 14.9 | 14.9 | 12.1 | 14.8 | 20.4 | 25.8 | 24.7 | 47.4 | 12.1 |
| 15 | 27.0 | 28.1 | 32.2 | 36.0 | 42.1 | 45.3 | 45.6 | 45.6 | 39.4 | 39.2 | 25.2 | 16.8 | 16.1 | 12.5 | 11.6 | 12.4 | 12.6 | 13.2 | 13.5 | 11.4 | 11.0 | 12.2 | 16.7 | 17.9 | 24.3 | 45.6 | 11.0 |
| 16 | 20.6 | 23.5 | 25.8 | 24.8 | 23.8 | 31.5 | 43.6 | 29.2 | 24.1 | 24.6 | 23.2 | 21.5 | 22.6 | 22.3 | 22.7 | 22.1 | 22.4 | 20.7 | 22.0 | 21.1 | 21.4 | 24.1 | 30.5 | 47.2 | 25.6 | 47.2 | 20.6 |
| 17 | 45.8 | 50.3 | 50.7 | 49.0 | 48.9 | 52.9 | 55.9 | 50.0 | 48.7 | 45.1 | 42.6 | 41.3 | 35.8 | 34.0 | 32.6 | 30.9 | 30.9 | 31.5 | 36.0 | 38.3 | 38.5 | 44.6 | 48.0 | 55.3 | 43.2 | 55.9 | 30.9 |
| 18 | 59.2 | 54.5 | 44.2 | 40.4 | 40.6 | 49.9 | 67.6 | 62.3 | 52.4 | 31.4 | 26.4 | 23.2 | 25.7 | 31.5 | 37.7 | 43.1 | 45.2 | 44.6 | 86.3 | 72.6 | 50.0 | 48.5 | 52.0 | 44.8 | 47.3 | 86.3 | 23.2 |
| 19 | 46.8 | 46.0 | 49.1 | 59.2 | 66.1 | 66.5 | 68.1 | 70.5 | 70.1 | 70.4 | 70.6 | 67.3 | 59.9 | 54.8 | 45.6 | 40.5 | 37.3 | 29.7 | 31.0 | 33.8 | 31.9 | 32.4 | 34.3 | 36.2 | 50.8 | 70.6 | 29.7 |
| 20 | 39.8 | 42.1 | 42.2 | 46.7 | 57.0 | 60.4 | 58.2 | 54.8 | 42.5 | 33.8 | 30.1 | 27.2 | 25.9 | 23.0 | 21.6 | 20.5 | 20.4 | 20.1 | 23.0 | 25.8 | 29.2 | 28.2 | 31.8 | 35.8 | 35.0 | 60.4 | 20.1 |
| 21 | 38.0 | 38.7 | 36.8 | 37.5 | 40.2 | 31.5 | 32.5 | 32.1 | 33.2 | 32.3 | 30.3 | 29.3 | 27.8 | 27.2 | 25.0 | 24.1 | 23.6 | 27.6 | 31.1 | 30.1 | 27.8 | 33.6 | 36.2 | 44.7 | 32.1 | 44.7 | 23.6 |
| 22 | 36.2 | 40.9 | 40.4 | 46.7 | 50.4 | 54.7 | 57.7 | 61.1 | 63.5 | 63.2 | 62.5 | 87.1 | 90.8 | 88.2 | 88.9 | 93.7 | 96.8 | 97.1 | 97.1 | 97.1 | 94.0 | 82.0 | 75.9 | 75.0 | 72.5 | 97.1 | 36.2 |
| 23 | 75.5 | 72.8 | 73.9 | 69.0 | 67.9 | 68.9 | 68.8 | 67.1 | 63.7 | 61.2 | 56.0 | 50.7 | 47.7 | 46.3 | 39.5 | 36.7 | 36.7 | 55.1 | 58.3 | 57.2 | 55.9 | 55.2 | 55.4 | 56.1 | 58.1 | 75.5 | 36.7 |
| 24 | 58.1 | 65.9 | 67.2 | 69.4 | 68.9 | 68.7 | 67.9 | 61.9 | 50.8 | 50.3 | 43.0 | 36.0 | 30.7 | 27.3 | 24.3 | 24.2 | 25.5 | 28.4 | 33.6 | 39.0 | 43.8 | 46.2 | 53.1 | 56.5 | 47.5 | 69.4 | 24.2 |
| 25 | 73.5 | 74.9 | 71.6 | 73.9 | 75.2 | 83.3 | 90.9 | 77.4 | 60.8 | 53.8 | 47.8 | 39.8 | 32.2 | 27.7 | 24.7 | 21.9 | 18.0 | 18.3 | 19.6 | 28.0 | 30.6 | 39.1 | 47.2 | 45.8 | 49.0 | 90.9 | 18.0 |
| 26 | 48.6 | 53.4 | 64.4 | 64.7 | 53.7 | 49.2 | 59.5 | 62.1 | 49.8 | 44.2 | 32.7 | 28.8 | 26.2 | 24.2 | 24.1 | 24.1 | 24.3 | 22.6 | 26.9 | 31.9 | 33.7 | 34.8 | 42.4 | 38.4 | 40.2 | 64.7 | 22.6 |
| 27 | 36.8 | 33.9 | 35.7 | 48.7 | 59.4 | 67.4 | 61.5 | 57.2 | 43.3 | 38.2 | 32.8 | 33.2 | 32.4 | 32.7 | 30.8 | 30.5 | 28.5 | 26.9 | 26.5 | 28.8 | 28.8 | 30.8 | 32.1 | 31.3 | 37.8 | 67.4 | 26.5 |
| 28 | 31.5 | 33.0 | 37.8 | 40.9 | 44.3 | 47.3 | 49.0 | 48.8 | 41.1 | 33.0 | 28.9 | 26.4 | 23.5 | 21.1 | 18.4 | 15.4 | 24.4 | 32.5 | 32.4 | 31.2 | 31.2 | 31.2 | 35.3 | 28.3 | 32.8 | 49.0 | 15.4 |
| 29 | 23.5 | 23.5 | 38.3 | 40.0 | 36.5 | 37.2 | 54.6 | 49.9 | 28.8 | 20.4 | 16.0 | 14.6 | 13.7 | 14.0 | 13.8 | 13.4 | 13.0 | 13.0 | 15.6 | 18.4 | 26.5 | 29.4 | 32.3 | 33.1 | 25.8 | 54.6 | 13.0 |
| 30 | 31.8 | 32.1 | 40.5 | 38.9 | 35.8 | 41.5 | 42.1 | 36.3 | 28.8 | 28.6 | 22.9 | 17.3 | 14.5 | 12.1 | 10.1 | 8.9 | 8.6 | 9.4 | 13.2 | 16.2 | 25.1 | 23.1 | 25.4 | 27.9 | 24.6 | 42.1 | 8.6 |
| 31 | 31.4 | 35.0 | 37.2 | 39.5 | 40.3 | 48.1 | 49.5 | 42.5 | 31.4 | 24.6 | 20.8 | 17.9 | 18.5 | 18.9 | 24.4 | 28.6 | 36.3 | 45.5 | 48.8 | 65.3 | 68.7 | 70.6 | 66.7 | 67.8 | 40.8 | 70.6 | 17.9 |
| Mean | 51.3 | 52.9 | 56.1 | 58.7 | 59.8 | 62.5 | 65.0 | 63.5 | 56.0 | 49.5 | 42.8 | 38.8 | 36.6 | 34.8 | 32.8 | 32.6 | 32.8 | 34.7 | 40.1 | 43.2 | 43.5 | 45.3 | 47.5 | 49.1 | Monthly mean = | | 47.1 |
| Max. | 92.0 | 97.1 | 97.1 | 97.1 | 97.1 | 97.2 | 97.1 | 97.1 | 96.2 | 92.4 | 82.2 | 87.1 | 90.8 | 88.2 | 88.9 | 93.7 | 96.8 | 97.1 | 97.1 | 97.1 | 94.0 | 87.9 | 88.9 | 87.7 | Monthly max. = | | 97.2 |
| Min. | 20.6 | 23.5 | 25.8 | 24.8 | 23.8 | 31.5 | 32.5 | 29.2 | 24.1 | 20.4 | 16.0 | 14.6 | 13.7 | 12.1 | 10.1 | 8.9 | 8.6 | 9.4 | 13.2 | 11.4 | 11.0 | 12.2 | 16.7 | 17.9 | Monthly min. = | | 8.6 |

TOTAL NUMBER OF DATA HOURS IN MONTH: 744
Number of hours of bad or missing data: 4
**** designates missing or lost data

Current % recovery = 99.5

N/A: insufficient data available for calculation (a minimum of 75% is required)

table created at 11: 3, 4/12/1995

MONTHLY SUMMARY
WIND SPEED
(Miles Per Hour)
INPUT FILE: allsimet.out

Bechtel Environmental, Inc.

Met Data for Site 1
APRIL 1994

| Day | Hour 1 | 2 | 3 | 4 | 5 | 6 | 7 | 8 | 9 | 10 | 11 | 12 | 13 | 14 | 15 | 16 | 17 | 18 | 19 | 20 | 21 | 22 | 23 | 24 | Mean | Max. | Min. |
|---|---|---|---|---|---|---|---|---|---|---|---|---|---|---|---|---|---|---|---|---|---|---|---|---|---|---|---|
| 1 | 6.0 | 15.7 | 18.8 | 14.5 | 11.7 | 9.2 | 9.4 | 14.8 | 16.7 | 16.0 | 15.3 | 15.5 | 13.2 | 12.4 | 11.7 | 8.3 | 6.8 | 7.3 | 11.2 | 14.4 | 12.1 | 11.7 | 11.9 | 9.4 | 12.3 | 18.8 | 6.0 |
| 2 | 5.8 | 3.3 | 5.0 | 4.8 | 3.6 | 5.9 | 7.5 | 7.2 | 3.5 | 6.6 | 4.5 | 7.9 | 6.6 | 5.2 | 5.1 | 10.0 | 15.8 | 13.4 | 12.5 | 12.3 | 13.5 | 15.5 | 17.7 | 15.9 | 8.7 | 17.7 | 3.3 |
| 3 | 18.3 | 22.5 | 23.4 | 15.3 | 12.2 | 15.1 | 17.5 | 14.9 | 18.3 | 16.5 | 17.7 | 13.3 | 11.6 | 14.1 | 17.8 | 19.5 | 17.4 | 16.3 | 18.2 | 15.4 | 17.3 | 17.2 | 17.3 | 18.9 | 16.9 | 23.4 | 11.6 |
| 4 | 19.2 | 18.1 | 17.2 | 19.1 | 15.8 | 19.2 | 20.2 | 18.9 | 20.6 | 20.0 | 21.1 | 20.2 | 18.2 | 14.2 | 9.8 | 12.4 | 8.2 | 8.2 | 8.6 | 7.7 | 7.0 | 9.3 | 6.3 | 5.3 | 14.4 | 21.1 | 5.3 |
| 5 | 6.9 | 4.5 | 6.7 | 6.2 | 6.8 | 7.4 | 6.0 | 5.6 | 6.7 | 7.0 | 10.0 | 10.5 | 13.1 | 12.7 | 14.9 | 13.4 | 11.0 | 11.2 | 9.0 | 9.1 | 8.2 | 12.0 | 12.5 | 13.8 | 9.4 | 14.9 | 4.5 |
| 6 | 12.9 | 12.8 | 12.1 | 11.0 | 10.2 | 9.4 | 13.7 | 13.0 | 13.8 | 14.3 | 17.5 | 18.1 | 18.0 | 19.6 | 17.8 | 16.0 | 15.9 | 12.2 | 14.1 | 15.9 | 17.2 | 14.7 | 13.5 | 15.2 | 14.5 | 19.6 | 9.4 |
| 7 | 17.3 | 18.8 | 15.2 | 14.8 | 18.0 | 18.4 | 17.8 | 15.9 | 22.0 | 28.7 | 25.5 | 25.9 | 27.3 | 28.6 | 25.4 | 26.1 | 27.3 | 26.2 | 23.8 | 19.4 | 16.7 | 14.7 | 15.2 | 15.6 | 21.0 | 28.7 | 14.7 |
| 8 | 15.5 | 12.6 | 11.6 | 8.9 | 4.0 | 1.8 | 6.7 | 7.2 | 7.6 | 4.4 | 4.4 | 4.9 | 5.1 | 7.9 | 8.8 | 8.6 | 9.2 | 11.7 | 9.9 | 6.8 | 5.9 | 6.1 | 9.4 | 11.2 | 7.9 | 15.5 | 1.8 |
| 9 | 6.0 | 8.3 | 6.0 | 11.0 | 11.9 | 12.9 | 8.3 | 4.7 | 6.8 | 5.0 | 5.0 | 5.5 | 8.3 | 9.1 | 6.1 | 10.2 | 19.1 | 18.3 | 16.1 | 16.1 | 15.9 | 18.0 | 18.8 | 16.9 | 11.0 | 19.1 | 4.7 |
| 10 | 17.6 | 17.8 | 20.3 | 19.0 | 17.8 | 15.2 | 13.0 | 13.0 | 13.1 | 12.1 | 9.3 | 6.0 | 5.2 | 11.2 | 18.2 | 17.3 | 18.0 | 18.1 | 17.6 | 16.2 | 16.7 | 17.4 | 18.0 | 20.5 | 15.4 | 20.5 | 5.2 |
| 11 | 19.6 | 19.3 | 18.2 | 17.2 | 16.4 | 14.8 | 15.0 | 16.0 | 15.5 | 16.2 | 15.6 | 15.6 | 12.5 | 10.2 | 10.1 | 10.0 | 13.8 | 15.2 | 13.4 | 13.5 | 12.5 | 12.8 | 10.2 | 10.8 | 14.3 | 19.6 | 10.0 |
| 12 | 12.6 | 15.9 | 14.8 | 16.8 | 18.8 | 19.2 | 19.7 | 18.8 | 19.3 | 13.8 | 13.5 | 15.0 | 15.9 | 16.5 | 16.5 | 17.8 | 18.2 | 17.1 | 16.7 | 17.8 | 13.7 | 16.7 | 14.2 | 13.1 | 16.4 | 19.7 | 12.6 |
| 13 | 14.3 | 16.4 | 16.9 | 14.6 | 18.0 | 21.0 | 23.2 | 23.4 | 23.1 | 23.3 | 22.9 | 26.4 | 24.7 | 24.3 | 23.3 | 24.0 | 23.9 | 22.7 | 16.6 | 17.5 | 16.8 | 15.7 | 14.1 | 14.2 | 20.1 | 26.4 | 14.1 |
| 14 | 15.3 | 14.3 | 18.4 | 18.3 | 20.5 | 24.9 | 21.9 | 21.8 | 20.9 | 23.2 | 24.9 | 21.1 | 20.5 | 21.0 | 21.4 | 20.5 | 22.9 | 24.1 | 18.9 | 17.2 | 19.3 | 19.4 | 19.8 | 17.2 | 20.3 | 24.9 | 14.3 |
| 15 | 16.4 | 16.9 | 16.6 | 14.5 | 9.8 | 9.5 | 7.3 | 12.2 | 12.6 | 12.3 | 10.5 | 9.2 | 7.7 | 5.9 | 9.4 | 9.7 | 8.7 | 6.5 | 3.9 | 3.2 | 10.3 | 15.9 | 18.7 | 16.1 | 11.0 | 18.7 | 3.2 |
| 16 | 11.8 | 13.1 | 12.4 | 7.7 | 7.9 | 3.0 | 5.2 | 4.2 | 3.9 | 6.0 | 9.9 | 12.3 | 9.7 | 9.0 | 6.3 | 14.3 | 15.1 | 14.3 | 16.6 | 13.6 | 14.6 | 16.3 | 16.4 | 18.6 | 10.9 | 18.6 | 3.0 |
| 17 | 13.6 | 10.4 | 14.6 | 8.1 | 4.3 | 1.9 | 9.6 | 9.9 | 8.1 | 6.1 | 4.4 | 4.3 | 6.2 | 9.5 | 10.3 | 11.0 | 13.5 | 9.9 | 11.5 | 13.0 | 13.0 | 10.8 | 12.6 | 12.6 | 9.6 | 14.6 | 1.9 |
| 18 | 12.5 | 14.0 | 10.6 | 5.2 | 4.3 | 4.6 | 9.9 | 7.7 | 4.7 | 3.5 | 6.1 | 5.9 | 4.7 | 4.4 | 7.5 | 6.8 | 8.2 | 6.0 | 14.2 | 8.1 | 7.4 | 5.9 | 11.1 | 9.6 | 7.6 | 14.2 | 3.5 |
| 19 | 9.8 | 13.7 | 5.7 | 11.0 | 11.0 | 6.2 | 5.1 | 5.8 | 8.5 | 6.4 | 3.4 | 3.9 | 5.5 | 10.2 | 9.1 | 9.8 | 16.9 | 10.2 | 9.5 | 12.1 | 13.5 | 5.6 | 8.9 | 11.7 | 8.9 | 16.9 | 3.4 |
| 20 | 12.3 | 4.5 | 5.4 | 5.6 | 10.4 | 10.0 | 2.9 | 2.2 | 3.1 | 6.0 | 4.5 | 4.7 | 6.6 | 8.5 | 11.2 | 10.3 | 9.7 | 7.7 | 5.3 | 6.9 | 10.5 | 12.9 | 16.6 | 15.5 | 8.1 | 16.6 | 2.2 |
| 21 | 16.3 | 10.6 | 9.0 | 7.8 | 5.3 | 5.8 | 4.9 | 8.6 | 12.3 | 4.7 | 7.1 | 7.6 | 9.5 | 16.8 | 17.1 | 18.5 | 19.4 | 16.8 | 13.0 | 6.8 | 7.7 | 11.9 | 15.8 | 13.0 | 11.1 | 19.4 | 4.7 |
| 22 | 9.8 | 18.0 | 17.2 | 21.5 | 19.8 | 18.0 | 18.0 | 18.7 | 21.3 | 21.4 | 17.3 | 15.8 | 20.5 | 23.3 | 18.9 | 14.7 | 12.5 | 10.2 | 12.1 | 15.9 | 17.0 | 15.5 | 8.8 | 8.8 | 16.5 | 23.3 | 8.8 |
| 23 | 11.7 | 7.9 | 3.6 | 2.6 | 3.9 | 7.6 | 8.1 | 4.8 | 5.1 | 6.4 | 6.4 | 7.2 | 6.5 | 16.8 | 20.4 | 18.6 | 20.2 | 28.0 | 15.8 | 6.7 | 5.1 | 5.4 | 2.9 | 10.2 | 9.7 | 28.0 | 2.6 |
| 24 | 4.7 | 5.1 | 4.3 | 10.6 | 4.5 | 5.6 | 13.6 | 12.5 | 6.5 | 4.4 | 7.5 | 12.1 | 12.2 | 12.8 | 19.3 | 22.3 | 11.2 | 5.1 | 4.1 | 3.6 | 5.2 | 9.3 | 4.9 | 8.6 | 8.8 | 22.3 | 3.6 |
| 25 | 4.3 | 7.1 | 8.4 | 5.0 | 5.9 | 6.5 | 6.3 | 4.2 | 3.3 | 7.2 | 6.3 | 9.1 | 10.4 | 11.9 | 13.3 | 15.8 | 12.8 | 7.7 | 7.3 | 8.6 | 8.3 | 3.3 | 9.0 | 14.5 | 8.2 | 15.8 | 3.3 |
| 26 | 14.0 | 7.5 | 3.7 | 2.4 | 2.1 | 2.3 | 2.9 | 7.1 | 12.3 | 13.5 | 11.3 | 10.6 | 13.0 | 11.6 | 11.9 | 13.0 | 13.0 | 15.6 | 15.1 | 9.4 | 10.8 | 11.2 | 7.6 | 6.8 | 9.5 | 15.6 | 2.1 |
| 27 | 9.8 | 5.1 | 2.3 | 1.6 | 3.7 | 5.0 | 5.3 | 7.0 | 11.2 | 13.8 | 13.5 | 15.0 | 15.0 | 11.2 | 9.6 | 6.3 | 4.9 | 5.3 | 6.7 | 5.0 | 5.8 | 6.4 | 8.7 | 5.8 | 7.7 | 15.0 | 1.6 |
| 28 | 3.4 | 2.6 | 4.2 | 5.0 | 2.8 | 2.6 | 4.2 | 7.7 | 10.9 | 9.8 | ***** | 10.2 | 8.2 | 7.6 | 8.4 | 8.1 | 10.0 | 9.4 | 10.4 | 8.5 | 4.3 | 6.5 | 7.0 | 5.1 | 6.8 | 10.9 | 2.6 |
| 29 | 4.4 | 6.2 | 4.1 | 3.3 | 4.1 | 5.9 | 4.6 | 2.8 | 4.7 | 5.4 | 5.4 | 5.7 | 7.0 | 7.4 | 9.8 | 11.0 | 8.5 | 5.9 | 5.1 | 6.2 | 8.3 | 11.6 | 12.2 | 13.3 | 6.8 | 13.3 | 2.8 |
| 30 | 14.1 | 15.7 | 15.8 | 15.3 | 9.7 | 3.3 | 4.4 | 9.1 | 10.2 | 9.2 | 7.7 | 8.0 | 8.8 | 9.2 | 9.7 | 9.4 | 18.4 | 19.1 | 20.7 | 15.5 | 8.5 | 9.0 | 9.4 | 16.5 | 11.5 | 20.7 | 3.3 |
| Mean | 11.9 | 12.0 | 11.4 | 10.6 | 9.8 | 9.7 | 10.4 | 10.7 | 11.6 | 11.4 | 11.3 | 11.6 | 11.7 | 12.8 | 13.3 | 13.8 | 14.4 | 13.3 | 12.6 | 11.4 | 11.4 | 12.0 | 12.3 | 12.8 | Monthly mean = | | 11.8 |
| Max. | 19.6 | 22.5 | 23.4 | 21.5 | 20.5 | 24.9 | 23.2 | 23.4 | 23.1 | 28.7 | 25.5 | 26.4 | 27.3 | 28.6 | 25.4 | 26.1 | 27.3 | 28.0 | 23.8 | 19.4 | 19.3 | 19.4 | 19.8 | 20.5 | Monthly max. = | | 28.7 |
| Min. | 3.4 | 2.6 | 2.3 | 1.6 | 2.1 | 1.8 | 2.9 | 2.2 | 3.1 | 3.5 | 3.4 | 3.9 | 4.7 | 4.4 | 5.1 | 6.3 | 4.9 | 5.1 | 3.9 | 3.2 | 4.3 | 3.3 | 2.9 | 5.1 | Monthly min. = | | 1.6 |

TOTAL NUMBER OF DATA HOURS IN MONTH: 720
Number of hours of bad or missing data: 1
**** designates missing or lost data

Current % recovery = 99.9

N/A: insufficient data available for calculation (a minimum of 75% is required)

table created at 11: 3, 4/12/1995

MONTHLY SUMMARY
WIND DIRECTION
(Degrees)
INPUT FILE: alls1met.out

Bechtel Environmental, Inc.

Met Data for Site 1
APRIL 1994

| Day \ Hour | 1 | 2 | 3 | 4 | 5 | 6 | 7 | 8 | 9 | 10 | 11 | 12 | 13 | 14 | 15 | 16 | 17 | 18 | 19 | 20 | 21 | 22 | 23 | 24 | Mean | Max. | Min. |
|---|---|---|---|---|---|---|---|---|---|---|---|---|---|---|---|---|---|---|---|---|---|---|---|---|---|---|---|
| 1 | 293.0 | 242.0 | 235.0 | 242.0 | 233.0 | 217.0 | 254.0 | 246.0 | 250.0 | 242.0 | 239.0 | 257.0 | 267.0 | 254.0 | 223.0 | 218.0 | 209.0 | 156.0 | 139.0 | 127.0 | 121.0 | 112.0 | 112.0 | 204.0 | 212.2 | 293.0 | 112.0 |
| 2 | 145.0 | 2.0 | 193.0 | 100.0 | 108.0 | 117.0 | 122.0 | 130.0 | 121.0 | 113.0 | 331.0 | 302.0 | 318.0 | 67.0 | 83.0 | 150.0 | 143.0 | 152.0 | 147.0 | 144.0 | 148.0 | 136.0 | 139.0 | 147.0 | 148.2 | 331.0 | 2.0 |
| 3 | 143.0 | 138.0 | 137.0 | 149.0 | 189.0 | 183.0 | 137.0 | 142.0 | 201.0 | 248.0 | 252.0 | 247.0 | 273.0 | 271.0 | 262.0 | 253.0 | 241.0 | 232.0 | 233.0 | 233.0 | 246.0 | 234.0 | 235.0 | 245.0 | 213.5 | 273.0 | 137.0 |
| 4 | 233.0 | 230.0 | 236.0 | 234.0 | 229.0 | 245.0 | 241.0 | 245.0 | 245.0 | 244.0 | 248.0 | 248.0 | 260.0 | 265.0 | 246.0 | 258.0 | 268.0 | 261.0 | 269.0 | 257.0 | 263.0 | 258.0 | 272.0 | 280.0 | 251.5 | 280.0 | 229.0 |
| 5 | 273.0 | 261.0 | 261.0 | 129.0 | 123.0 | 121.0 | 126.0 | 119.0 | 123.0 | 182.0 | 228.0 | 233.0 | 233.0 | 241.0 | 254.0 | 239.0 | 239.0 | 235.0 | 195.0 | 184.0 | 174.0 | 134.0 | 167.0 | 190.0 | 194.3 | 273.0 | 119.0 |
| 6 | 197.0 | 204.0 | 222.0 | 192.0 | 143.0 | 140.0 | 138.0 | 164.0 | 240.0 | 235.0 | 256.0 | 258.0 | 248.0 | 253.0 | 246.0 | 238.0 | 245.0 | 250.0 | 189.0 | 225.0 | 204.0 | 242.0 | 217.0 | 217.0 | 215.1 | 258.0 | 138.0 |
| 7 | 225.0 | 236.0 | 248.0 | 256.0 | 257.0 | 256.0 | 250.0 | 255.0 | 246.0 | 257.0 | 252.0 | 252.0 | 252.0 | 257.0 | 259.0 | 264.0 | 265.0 | 259.0 | 259.0 | 252.0 | 238.0 | 225.0 | 225.0 | 230.0 | 249.0 | 265.0 | 225.0 |
| 8 | 233.0 | 217.0 | 216.0 | 152.0 | 324.0 | 58.0 | 114.0 | 124.0 | 100.0 | 45.0 | 63.0 | 79.0 | 104.0 | 184.0 | 152.0 | 163.0 | 142.0 | 135.0 | 144.0 | 143.0 | 129.0 | 121.0 | 127.0 | 132.0 | 141.7 | 324.0 | 45.0 |
| 9 | 142.0 | 160.0 | 132.0 | 128.0 | 125.0 | 127.0 | 113.0 | 82.0 | 21.0 | 34.0 | 30.0 | 6.0 | 303.0 | 284.0 | 325.0 | 265.0 | 257.0 | 252.0 | 238.0 | 230.0 | 232.0 | 228.0 | 224.0 | 234.0 | 173.8 | 325.0 | 6.0 |
| 10 | 236.0 | 234.0 | 234.0 | 235.0 | 234.0 | 232.0 | 229.0 | 226.0 | 228.0 | 230.0 | 244.0 | 253.0 | 247.0 | 250.0 | 253.0 | 241.0 | 240.0 | 233.0 | 224.0 | 222.0 | 225.0 | 231.0 | 227.0 | 233.0 | 235.0 | 253.0 | 222.0 |
| 11 | 234.0 | 235.0 | 235.0 | 235.0 | 236.0 | 235.0 | 235.0 | 237.0 | 243.0 | 253.0 | 251.0 | 257.0 | 267.0 | 253.0 | 263.0 | 261.0 | 254.0 | 250.0 | 230.0 | 218.0 | 215.0 | 203.0 | 154.0 | 121.0 | 232.3 | 267.0 | 121.0 |
| 12 | 119.0 | 120.0 | 125.0 | 122.0 | 115.0 | 115.0 | 117.0 | 121.0 | 136.0 | 152.0 | 195.0 | 194.0 | 198.0 | 213.0 | 203.0 | 206.0 | 197.0 | 195.0 | 188.0 | 207.0 | 249.0 | 247.0 | 234.0 | 222.0 | 174.6 | 249.0 | 115.0 |
| 13 | 227.0 | 229.0 | 232.0 | 225.0 | 236.0 | 247.0 | 248.0 | 247.0 | 248.0 | 251.0 | 253.0 | 259.0 | 252.0 | 256.0 | 254.0 | 249.0 | 256.0 | 258.0 | 252.0 | 231.0 | 217.0 | 226.0 | 227.0 | 225.0 | 241.9 | 259.0 | 217.0 |
| 14 | 221.0 | 235.0 | 246.0 | 246.0 | 246.0 | 245.0 | 254.0 | 261.0 | 265.0 | 268.0 | 264.0 | 265.0 | 260.0 | 263.0 | 251.0 | 259.0 | 257.0 | 254.0 | 244.0 | 233.0 | 232.0 | 232.0 | 233.0 | 236.0 | 248.7 | 268.0 | 221.0 |
| 15 | 235.0 | 236.0 | 234.0 | 233.0 | 224.0 | 217.0 | 170.0 | 232.0 | 240.0 | 246.0 | 259.0 | 277.0 | 277.0 | 326.0 | 315.0 | 312.0 | 290.0 | 300.0 | 337.0 | 160.0 | 122.0 | 127.0 | 128.0 | 128.0 | 234.4 | 337.0 | 122.0 |
| 16 | 135.0 | 112.0 | 80.0 | 109.0 | 116.0 | 102.0 | 112.0 | 107.0 | 339.0 | 71.0 | 129.0 | 125.0 | 226.0 | 291.0 | 271.0 | 162.0 | 166.0 | 193.0 | 196.0 | 160.0 | 129.0 | 126.0 | 127.0 | 125.0 | 154.5 | 339.0 | 71.0 |
| 17 | 126.0 | 116.0 | 114.0 | 132.0 | 115.0 | 94.0 | 115.0 | 119.0 | 113.0 | 58.0 | 70.0 | 63.0 | 303.0 | 311.0 | 291.0 | 277.0 | 266.0 | 221.0 | 212.0 | 205.0 | 204.0 | 144.0 | 114.0 | 118.0 | 162.5 | 311.0 | 58.0 |
| 18 | 119.0 | 123.0 | 125.0 | 140.0 | 88.0 | 111.0 | 116.0 | 81.0 | 84.0 | 40.0 | 34.0 | 52.0 | 101.0 | 49.0 | 166.0 | 120.0 | 122.0 | 124.0 | 213.0 | 174.0 | 117.0 | 97.0 | 109.0 | 124.0 | 109.5 | 213.0 | 34.0 |
| 19 | 120.0 | 119.0 | 222.0 | 113.0 | 122.0 | 128.0 | 107.0 | 49.0 | 117.0 | 112.0 | 74.0 | 342.0 | 7.0 | 323.0 | 292.0 | 132.0 | 202.0 | 40.0 | 50.0 | 204.0 | 140.0 | 134.0 | 127.0 | 122.0 | 141.6 | 342.0 | 7.0 |
| 20 | 126.0 | 286.0 | 97.0 | 100.0 | 121.0 | 138.0 | 270.0 | 52.0 | 113.0 | 55.0 | 40.0 | 356.0 | 302.0 | 296.0 | 275.0 | 290.0 | 292.0 | 291.0 | 285.0 | 134.0 | 123.0 | 119.0 | 121.0 | 119.0 | 33.4 | 356.0 | 40.0 |
| 21 | 122.0 | 108.0 | 118.0 | 74.0 | 120.0 | 294.0 | 61.0 | 81.0 | 132.0 | 1.0 | 325.0 | 354.0 | 250.0 | 211.0 | 214.0 | 203.0 | 203.0 | 197.0 | 228.0 | 245.0 | 126.0 | 139.0 | 144.0 | 155.0 | 171.0 | 354.0 | 1.0 |
| 22 | 258.0 | 230.0 | 232.0 | 237.0 | 242.0 | 246.0 | 249.0 | 249.0 | 255.0 | 256.0 | 251.0 | 254.0 | 261.0 | 265.0 | 267.0 | 280.0 | 284.0 | 289.0 | 279.0 | 279.0 | 267.0 | 249.0 | 243.0 | 133.0 | 252.3 | 289.0 | 133.0 |
| 23 | 126.0 | 242.0 | 206.0 | 74.0 | 107.0 | 120.0 | 120.0 | 98.0 | 16.0 | 1.0 | 19.0 | 21.0 | 359.0 | 208.0 | 218.0 | 199.0 | 186.0 | 226.0 | 246.0 | 218.0 | 345.0 | 266.0 | 70.0 | 255.0 | 164.4 | 359.0 | 1.0 |
| 24 | 175.0 | 134.0 | 70.0 | 117.0 | 300.0 | 300.0 | 237.0 | 256.0 | 311.0 | 42.0 | 310.0 | 241.0 | 252.0 | 281.0 | 266.0 | 262.0 | 271.0 | 311.0 | 37.0 | 159.0 | 118.0 | 257.0 | 235.0 | 215.0 | 214.9 | 311.0 | 37.0 |
| 25 | 275.0 | 247.0 | 202.0 | 120.0 | 113.0 | 117.0 | 116.0 | 105.0 | 8.0 | 296.0 | 274.0 | 250.0 | 256.0 | 224.0 | 222.0 | 210.0 | 221.0 | 219.0 | 253.0 | 214.0 | 193.0 | 53.0 | 205.0 | 216.0 | 192.0 | 296.0 | 8.0 |
| 26 | 240.0 | 350.0 | 126.0 | 226.0 | 318.0 | 360.0 | 357.0 | 1.0 | .0 | 356.0 | 348.0 | 349.0 | 339.0 | 346.0 | 346.0 | 12.0 | 10.0 | 8.0 | 11.0 | 40.0 | 58.0 | 50.0 | 55.0 | 48.0 | 1.4 | 360.0 | .0 |
| 27 | 3.0 | 359.0 | 95.0 | 49.0 | 36.0 | 29.0 | 7.0 | 21.0 | 9.0 | 10.0 | 19.0 | 19.0 | 16.0 | 12.0 | 11.0 | 29.0 | 34.0 | 337.0 | 114.0 | 116.0 | 132.0 | 129.0 | 25.0 | 59.0 | 39.6 | 359.0 | 3.0 |
| 28 | 16.0 | 24.0 | 29.0 | 353.0 | 21.0 | 22.0 | 316.0 | 35.0 | 28.0 | 43.0 | ***** | 24.0 | 49.0 | 49.0 | 28.0 | 24.0 | 29.0 | 31.0 | 18.0 | 19.0 | 53.0 | 66.0 | 89.0 | 102.0 | 32.5 | 353.0 | 16.0 |
| 29 | 97.0 | 91.0 | 88.0 | 294.0 | 295.0 | 280.0 | 320.0 | 346.0 | 29.0 | 8.0 | 6.0 | 20.0 | 322.0 | 303.0 | 263.0 | 288.0 | 278.0 | 302.0 | 269.0 | 181.0 | 139.0 | 120.0 | 119.0 | 118.0 | 355.7 | 346.0 | 6.0 |
| 30 | 117.0 | 122.0 | 118.0 | 121.0 | 127.0 | 292.0 | 107.0 | 110.0 | 124.0 | 125.0 | 179.0 | 304.0 | 279.0 | 264.0 | 230.0 | 259.0 | 257.0 | 258.0 | 249.0 | 232.0 | 191.0 | 124.0 | 252.0 | 237.0 | 194.9 | 304.0 | 107.0 |
| Mean | 173.7 | 188.1 | 170.3 | 171.2 | 175.4 | 179.6 | 178.6 | 151.4 | 152.8 | 341.1 | 324.2 | 313.4 | 296.0 | 283.7 | 231.6 | 210.8 | 210.8 | 215.6 | 198.3 | 188.2 | 178.3 | 167.6 | 165.2 | 173.0 | Monthly mean = | | 187.3 |
| Max. | 293.0 | 359.0 | 261.0 | 353.0 | 324.0 | 360.0 | 357.0 | 346.0 | 339.0 | 356.0 | 348.0 | 356.0 | 359.0 | 346.0 | 346.0 | 312.0 | 292.0 | 337.0 | 337.0 | 279.0 | 345.0 | 266.0 | 272.0 | 280.0 | Monthly max. = | | 360.0 |
| Min. | 3.0 | 2.0 | 29.0 | 49.0 | 21.0 | 22.0 | 7.0 | 1.0 | .0 | 1.0 | 6.0 | 6.0 | 7.0 | 12.0 | 11.0 | 12.0 | 10.0 | 8.0 | 11.0 | 19.0 | 53.0 | 50.0 | 25.0 | 48.0 | Monthly min. = | | .0 |

TOTAL NUMBER OF DATA HOURS IN MONTH: 720
Number of hours of bad or missing data: 1
**** designates missing or lost data

Current % recovery = 99.9

N/A: insufficient data available for calculation (a minimum of 75% is required)

table created at 11: 3, 4/12/1995

MONTHLY SUMMARY
TEMPERATURE
(Degrees Celsius)
INPUT FILE: allslmet.out

Bechtel Environmental, Inc.

Met Data for Site 1
APRIL 1994

| Day \ Hour | 1 | 2 | 3 | 4 | 5 | 6 | 7 | 8 | 9 | 10 | 11 | 12 | 13 | 14 | 15 | 16 | 17 | 18 | 19 | 20 | 21 | 22 | 23 | 24 | Mean | Max. | Min. |
|---|---|---|---|---|---|---|---|---|---|---|---|---|---|---|---|---|---|---|---|---|---|---|---|---|---|---|---|
| 1 | 6.1 | 6.6 | 6.0 | 5.7 | 5.6 | 5.7 | 5.5 | 5.3 | 4.8 | 4.7 | 4.0 | 4.1 | 3.9 | 4.9 | 6.6 | 8.6 | 10.0 | 10.4 | 9.0 | 8.5 | 7.2 | 6.8 | 6.1 | 7.8 | 6.4 | 10.4 | 3.9 |
| 2 | 6.3 | 3.2 | 2.3 | 2.2 | 1.6 | 1.6 | 1.5 | 4.0 | 8.3 | 9.5 | 13.0 | 12.8 | 14.6 | 15.3 | 16.6 | 15.7 | 15.0 | 14.9 | 13.9 | 12.5 | 11.4 | 10.7 | 10.0 | 9.4 | 9.4 | 16.6 | 1.5 |
| 3 | 9.2 | 10.1 | 10.0 | 10.9 | 13.2 | 13.1 | 9.2 | 9.4 | 13.5 | 12.1 | 10.0 | 9.0 | 9.5 | 9.8 | 8.3 | 6.6 | 5.7 | 5.9 | 6.8 | 6.4 | 6.0 | 5.3 | 4.7 | 4.0 | 8.7 | 13.5 | 4.0 |
| 4 | 3.3 | 2.7 | 2.1 | 2.0 | 1.6 | 1.3 | 1.0 | .7 | 1.0 | 1.2 | 2.3 | 2.5 | 2.9 | 1.8 | 1.7 | 1.5 | 1.0 | 2.6 | 2.3 | 2.2 | 1.9 | 1.4 | .6 | -.6 | 1.7 | 3.3 | -.6 |
| 5 | -1.0 | -1.5 | -2.0 | -2.4 | -3.3 | -3.9 | -3.8 | -2.7 | -.7 | 2.1 | 3.5 | 4.8 | 5.7 | 6.5 | 7.4 | 7.9 | 8.5 | 8.7 | 8.2 | 7.4 | 7.1 | 5.2 | 6.4 | 7.2 | 3.1 | 8.7 | -3.9 |
| 6 | 7.5 | 7.3 | 6.1 | 4.4 | 3.3 | 3.2 | 3.0 | 3.9 | 4.8 | 4.5 | 5.7 | 6.8 | 7.9 | 8.9 | 10.2 | 10.3 | 10.2 | 9.4 | 8.6 | 8.0 | 6.5 | 3.2 | 3.3 | 3.7 | 6.3 | 10.3 | 3.0 |
| 7 | 4.1 | 3.4 | 2.9 | 2.6 | 2.2 | 1.8 | 1.5 | 1.5 | 2.1 | 2.6 | 3.6 | 4.6 | 5.3 | 5.8 | 5.8 | 6.3 | 6.3 | 6.6 | 6.0 | 4.9 | 4.2 | 3.4 | 3.2 | 3.3 | 3.9 | 6.6 | 1.5 |
| 8 | 3.4 | 3.1 | 3.0 | 1.4 | -1.8 | -4.3 | -2.1 | .8 | 3.3 | 5.9 | 5.6 | 6.8 | 8.3 | 9.4 | 10.2 | 10.4 | 10.8 | 10.1 | 9.1 | 7.9 | 6.8 | 6.1 | 6.1 | 5.9 | 5.3 | 10.8 | -4.3 |
| 9 | 6.6 | 5.8 | 5.1 | 4.5 | 3.6 | 3.0 | 2.7 | 3.6 | 4.7 | 6.3 | 8.1 | 9.3 | 9.5 | 9.6 | 8.9 | 9.1 | 7.5 | 6.2 | 5.1 | 4.7 | 4.8 | 3.9 | 3.0 | 3.1 | 5.8 | 9.6 | 2.7 |
| 10 | 3.5 | 3.3 | 3.1 | 2.6 | 2.2 | 2.1 | 2.4 | 2.3 | 2.4 | 2.9 | 3.7 | 5.8 | 8.4 | 8.4 | 8.1 | 9.5 | 10.2 | 10.7 | 10.2 | 10.5 | 10.3 | 10.0 | 9.2 | 7.9 | 6.2 | 10.7 | 2.1 |
| 11 | 6.8 | 6.0 | 5.5 | 5.0 | 4.5 | 4.1 | 4.1 | 4.6 | 5.6 | 6.6 | 8.2 | 9.8 | 11.3 | 12.6 | 13.5 | 14.1 | 14.3 | 14.2 | 13.5 | 12.5 | 11.9 | 11.7 | 9.8 | 7.3 | 9.1 | 14.3 | 4.1 |
| 12 | 6.2 | 6.2 | 6.1 | 6.1 | 6.2 | 6.0 | 6.2 | 8.2 | 10.6 | 12.6 | 14.4 | 15.0 | 15.3 | 16.1 | 16.3 | 17.4 | 17.3 | 16.8 | 16.0 | 15.3 | 15.1 | 14.4 | 12.9 | 11.9 | 12.0 | 17.4 | 6.0 |
| 13 | 11.5 | 10.5 | 9.4 | 8.6 | 7.5 | 7.0 | 7.0 | 7.5 | 7.9 | 8.7 | 9.4 | 10.7 | 11.7 | 12.5 | 12.9 | 12.7 | 12.8 | 12.7 | 12.2 | 11.2 | 10.6 | 10.4 | 10.1 | 10.2 | 10.2 | 12.9 | 7.0 |
| 14 | 9.9 | 9.5 | 8.9 | 8.1 | 7.5 | 6.6 | 5.6 | 5.0 | 5.7 | 6.7 | 7.3 | 8.4 | 9.6 | 10.7 | 10.9 | 11.5 | 11.5 | 11.2 | 10.6 | 9.0 | 8.4 | 7.8 | 7.4 | 7.0 | 8.5 | 11.5 | 5.0 |
| 15 | 6.6 | 6.4 | 6.2 | 5.7 | 5.4 | 4.6 | 4.4 | 6.9 | 8.4 | 9.8 | 11.2 | 12.9 | 14.5 | 17.0 | 17.6 | 18.1 | 18.8 | 19.1 | 18.7 | 15.2 | 13.7 | 13.8 | 12.9 | 12.2 | 11.7 | 19.1 | 4.4 |
| 16 | 11.7 | 10.5 | 8.4 | 6.7 | 5.7 | 4.3 | 4.9 | 8.8 | 12.7 | 14.6 | 18.0 | 20.6 | 22.7 | 22.9 | 24.1 | 23.9 | 23.1 | 22.5 | 21.5 | 20.1 | 18.7 | 17.3 | 15.6 | 15.3 | 15.6 | 24.1 | 4.3 |
| 17 | 13.5 | 11.7 | 11.8 | 11.1 | 9.0 | 6.8 | 8.3 | 10.2 | 14.9 | 18.0 | 21.6 | 24.3 | 25.1 | 25.1 | 25.9 | 25.7 | 25.8 | 25.5 | 24.6 | 23.2 | 22.6 | 20.6 | 17.9 | 17.2 | 18.4 | 25.9 | 6.8 |
| 18 | 15.2 | 15.6 | 14.6 | 12.6 | 11.1 | 11.8 | 12.1 | 13.6 | 16.7 | 19.7 | 22.0 | 23.9 | 26.0 | 26.4 | 25.8 | 26.1 | 25.8 | 25.6 | 23.2 | 22.1 | 20.2 | 17.1 | 15.6 | 15.4 | 19.1 | 26.4 | 11.1 |
| 19 | 13.4 | 13.2 | 12.6 | 12.6 | 11.4 | 11.7 | 11.5 | 12.2 | 14.1 | 18.5 | 22.3 | 24.7 | 25.3 | 25.1 | 26.0 | 25.8 | 24.8 | 21.7 | 19.6 | 20.5 | 19.9 | 18.2 | 16.4 | 14.7 | 18.2 | 26.0 | 11.4 |
| 20 | 14.5 | 12.2 | 11.5 | 11.3 | 10.5 | 10.2 | 10.4 | 14.2 | 17.1 | 18.4 | 20.9 | 23.6 | 24.5 | 25.3 | 25.9 | 26.1 | 26.5 | 26.5 | 27.1 | 21.7 | 19.4 | 17.5 | 17.5 | 17.0 | 18.7 | 27.1 | 10.2 |
| 21 | 17.3 | 15.7 | 14.4 | 14.1 | 12.6 | 10.6 | 12.6 | 14.0 | 18.4 | 21.5 | 23.6 | 25.3 | 26.4 | 27.1 | 27.4 | 27.3 | 27.2 | 26.8 | 25.0 | 22.4 | 19.9 | 21.9 | 20.9 | 22.4 | 20.6 | 27.4 | 10.6 |
| 22 | 18.5 | 16.4 | 15.4 | 13.3 | 10.8 | 10.2 | 10.4 | 10.9 | 11.8 | 13.4 | 13.7 | 15.4 | 16.5 | 17.1 | 17.7 | 18.2 | 18.4 | 18.1 | 16.7 | 14.3 | 12.3 | 11.6 | 10.9 | 10.0 | 14.2 | 18.5 | 10.0 |
| 23 | 9.4 | 8.6 | 8.9 | 7.4 | 6.4 | 6.1 | 7.6 | 9.3 | 10.5 | 11.4 | 12.8 | 15.0 | 18.0 | 20.0 | 20.0 | 20.0 | 19.6 | 17.3 | 11.8 | 12.3 | 9.3 | 8.7 | 8.9 | 8.3 | 12.0 | 20.0 | 6.1 |
| 24 | 8.4 | 8.1 | 7.2 | 7.2 | 6.7 | 4.9 | 5.3 | 6.5 | 8.0 | 11.1 | 13.2 | 12.9 | 12.8 | 13.1 | 12.9 | 10.5 | 10.3 | 11.0 | 10.2 | 9.5 | 9.1 | 8.6 | 6.1 | 6.4 | 9.2 | 13.2 | 4.9 |
| 25 | 5.3 | 4.8 | 4.6 | 3.2 | 2.4 | 1.8 | 2.2 | 3.9 | 7.5 | 7.0 | 7.5 | 7.4 | 8.0 | 6.2 | 4.9 | 6.4 | 6.9 | 8.2 | 7.5 | 6.9 | 6.8 | 6.6 | 7.2 | 6.8 | 5.8 | 8.2 | 1.8 |
| 26 | 5.8 | 2.0 | 1.9 | 2.6 | 2.8 | 2.7 | 2.5 | 3.2 | 3.5 | 3.9 | 4.9 | 6.9 | 8.0 | 8.9 | 9.2 | 9.5 | 9.4 | 9.0 | 8.3 | 6.6 | 5.3 | 3.7 | 3.1 | 3.2 | 5.3 | 9.5 | 1.9 |
| 27 | 2.4 | 2.3 | 2.1 | 1.9 | 2.0 | 2.0 | 1.9 | 2.0 | 2.3 | 3.7 | 4.3 | 4.9 | 5.7 | 6.8 | 7.7 | 7.7 | 8.3 | 8.8 | 7.5 | 7.2 | 6.8 | 6.6 | 6.1 | 5.4 | 4.9 | 8.8 | 1.9 |
| 28 | 4.5 | 3.4 | 2.8 | 1.7 | .6 | .5 | 1.0 | 2.1 | 2.9 | 2.3 | ***** | 2.7 | 4.6 | 6.5 | 7.6 | 8.4 | 9.1 | 9.1 | 8.9 | 7.0 | 4.2 | 3.1 | 2.4 | 1.8 | 4.2 | 9.1 | .5 |
| 29 | 1.0 | .5 | -.2 | -1.7 | -2.0 | -3.0 | -1.3 | 1.9 | 3.5 | 5.8 | 7.4 | 8.9 | 9.6 | 10.2 | 10.5 | 10.7 | 11.5 | 12.3 | 12.2 | 10.5 | 8.2 | 5.7 | 4.1 | 3.1 | 5.4 | 12.3 | -3.0 |
| 30 | 2.7 | 3.4 | 3.5 | 3.9 | 3.5 | 1.0 | 3.0 | 7.0 | 9.3 | 11.3 | 13.3 | 13.9 | 14.8 | 15.8 | 16.1 | 15.7 | 14.5 | 13.6 | 11.8 | 10.0 | 10.3 | 10.0 | 9.4 | 8.2 | 9.4 | 16.1 | 1.0 |
| Mean | 7.8 | 7.0 | 6.5 | 5.8 | 5.1 | 4.4 | 4.7 | 6.0 | 7.9 | 9.2 | 10.9 | 11.8 | 12.9 | 13.5 | 13.9 | 14.1 | 14.0 | 13.8 | 12.9 | 11.7 | 10.6 | 9.7 | 8.9 | 8.5 | Monthly mean = | | 9.7 |
| Max. | 18.5 | 16.4 | 15.4 | 14.1 | 13.2 | 13.1 | 12.6 | 14.2 | 18.4 | 21.5 | 23.6 | 25.3 | 26.4 | 27.1 | 27.4 | 27.3 | 27.2 | 26.8 | 27.1 | 23.2 | 22.6 | 21.9 | 20.9 | 22.4 | Monthly max. = | | 27.4 |
| Min. | -1.0 | -1.5 | -2.0 | -2.4 | -3.3 | -4.3 | -3.8 | -2.7 | -.7 | 1.2 | 2.3 | 2.5 | 2.9 | 1.8 | 1.7 | 1.5 | 1.0 | 2.6 | 2.3 | 2.2 | 1.9 | 1.4 | .6 | -.6 | Monthly min. = | | -4.3 |

TOTAL NUMBER OF DATA HOURS IN MONTH: 720
Number of hours of bad or missing data: 1
**** designates missing or lost data

Current % recovery = 99.9

N/A: insufficient data available for calculation (a minimum of 75% is required)

table created at 11: 3, 4/12/1995

MONTHLY SUMMARY
SIGMA THETA
(Degrees)
INPUT FILE: alls1met.out

Bechtel Environmental, Inc.

Met Data for Site 1
APRIL 1994

| Day \ Hour | 1 | 2 | 3 | 4 | 5 | 6 | 7 | 8 | 9 | 10 | 11 | 12 | 13 | 14 | 15 | 16 | 17 | 18 | 19 | 20 | 21 | 22 | 23 | 24 | Mean | Max. | Min. |
|---|---|---|---|---|---|---|---|---|---|---|---|---|---|---|---|---|---|---|---|---|---|---|---|---|---|---|---|
| 1 | 42. | 13. | 10. | 12. | 11. | 15. | 20. | 14. | 14. | 14. | 15. | 13. | 13. | 17. | 15. | 25. | 33. | 18. | 6. | 5. | 14. | 12. | 10. | 33. | N/A | 42. | 5. |
| 2 | 31. | 42. | 33. | 22. | 17. | 9. | 6. | 10. | 44. | 14. | 44. | 25. | 36. | 32. | 59. | 30. | 9. | 9. | 8. | 8. | 8. | 7. | 7. | 9. | N/A | 59. | 6. |
| 3 | 8. | 8. | 8. | 15. | 19. | 16. | 7. | 13. | 16. | 15. | 14. | 15. | 16. | 12. | 8. | 9. | 12. | 13. | 14. | 14. | 14. | 14. | 15. | 13. | N/A | 19. | 7. |
| 4 | 13. | 14. | 13. | 13. | 14. | 14. | 13. | 14. | 15. | 15. | 15. | 14. | 15. | 11. | 15. | 20. | 12. | 14. | 15. | 9. | 12. | 8. | 21. | 19. | N/A | 21. | 8. |
| 5 | 14. | 41. | 44. | 40. | 10. | 6. | 13. | 7. | 6. | 37. | 21. | 21. | 20. | 19. | 17. | 19. | 20. | 18. | 14. | 11. | 11. | 8. | 13. | 13. | N/A | 44. | 6. |
| 6 | 14. | 16. | 14. | 13. | 12. | 11. | 8. | 15. | 16. | 15. | 14. | 13. | 12. | 10. | 12. | 16. | 17. | 16. | 14. | 17. | 16. | 15. | 14. | 14. | N/A | 17. | 8. |
| 7 | 15. | 13. | 14. | 14. | 13. | 13. | 13. | 15. | 14. | 13. | 14. | 14. | 14. | 15. | 11. | 10. | 9. | 9. | 8. | 8. | 10. | 14. | 13. | 13. | N/A | 15. | 8. |
| 8 | 13. | 13. | 13. | 17. | 34. | 17. | 8. | 9. | 13. | 30. | 61. | 31. | 72. | 48. | 42. | 22. | 28. | 13. | 9. | 9. | 8. | 6. | 5. | 13. | N/A | 72. | 5. |
| 9 | 50. | 17. | 12. | 7. | 6. | 6. | 11. | 11. | 11. | 23. | 25. | 35. | 20. | 18. | 42. | 23. | 11. | 9. | 10. | 13. | 13. | 13. | 13. | 13. | N/A | 50. | 6. |
| 10 | 13. | 13. | 12. | 12. | 12. | 12. | 15. | 13. | 14. | 13. | 16. | 59. | 29. | 19. | 14. | 15. | 13. | 13. | 13. | 12. | 13. | 13. | 13. | 13. | N/A | 59. | 12. |
| 11 | 12. | 12. | 11. | 12. | 12. | 12. | 13. | 12. | 15. | 16. | 16. | 17. | 22. | 22. | 21. | 22. | 19. | 17. | 14. | 13. | 13. | 11. | 14. | 12. | N/A | 22. | 11. |
| 12 | 8. | 5. | 5. | 4. | 4. | 4. | 5. | 6. | 7. | 17. | 15. | 17. | 17. | 19. | 20. | 17. | 13. | 13. | 15. | 15. | 14. | 14. | 14. | 14. | N/A | 20. | 4. |
| 13 | 15. | 13. | 14. | 15. | 13. | 12. | 13. | 13. | 14. | 14. | 15. | 12. | 12. | 10. | 12. | 11. | 10. | 8. | 11. | 13. | 14. | 14. | 14. | 14. | N/A | 15. | 8. |
| 14 | 13. | 13. | 13. | 13. | 13. | 14. | 13. | 13. | 14. | 15. | 15. | 16. | 15. | 17. | 16. | 17. | 11. | 10. | 13. | 13. | 14. | 13. | 13. | 13. | N/A | 17. | 10. |
| 15 | 13. | 12. | 13. | 13. | 15. | 35. | 25. | 16. | 18. | 19. | 21. | 26. | 34. | 63. | 30. | 22. | 18. | 15. | 15. | 28. | 7. | 5. | 5. | 7. | N/A | 63. | 5. |
| 16 | 9. | 7. | 11. | 12. | 9. | 61. | 19. | 33. | 33. | 17. | 20. | 38. | 30. | 30. | 50. | 22. | 16. | 15. | 12. | 18. | 7. | 4. | 5. | 5. | N/A | 61. | 4. |
| 17 | 10. | 12. | 6. | 14. | 35. | 61. | 6. | 6. | 11. | 17. | 32. | 44. | 61. | 29. | 22. | 29. | 16. | 16. | 20. | 14. | 12. | 15. | 6. | 6. | N/A | 61. | 6. |
| 18 | 6. | 4. | 6. | 36. | 30. | 11. | 9. | 32. | 34. | 65. | 18. | 32. | 48. | 66. | 50. | 43. | 20. | 25. | 14. | 25. | 9. | 44. | 15. | 32. | N/A | 66. | 4. |
| 19 | 5. | 5. | 40. | 63. | 16. | 37. | 37. | 30. | 8. | 12. | 24. | 50. | 31. | 18. | 33. | 38. | 37. | 45. | 27. | 28. | 18. | 27. | 9. | 8. | N/A | 63. | 5. |
| 20 | 30. | 37. | 40. | 37. | 4. | 21. | 37. | 29. | 29. | 12. | 30. | 34. | 35. | 30. | 28. | 18. | 17. | 13. | 10. | 10. | 3. | 4. | 3. | 4. | N/A | 40. | 3. |
| 21 | 4. | 30. | 43. | 20. | 84. | 51. | 38. | 14. | 32. | 40. | 22. | 38. | 49. | 22. | 28. | 25. | 22. | 22. | 27. | 26. | 15. | 18. | 8. | 27. | N/A | 84. | 4. |
| 22 | 20. | 10. | 10. | 10. | 12. | 10. | 11. | 15. | 14. | 16. | 15. | 17. | 18. | 13. | 16. | 14. | 15. | 12. | 9. | 9. | 9. | 10. | 35. | 6. | N/A | 35. | 6. |
| 23 | 6. | 29. | 44. | 53. | 13. | 7. | 7. | 15. | 17. | 16. | 19. | 28. | 56. | 32. | 17. | 19. | 19. | 20. | 14. | 50. | 41. | 22. | 23. | 15. | N/A | 56. | 6. |
| 24 | 42. | 32. | 32. | 5. | 48. | 31. | 18. | 15. | 42. | 31. | 25. | 35. | 29. | 16. | 14. | 11. | 22. | 40. | 13. | 23. | 28. | 57. | 51. | 14. | N/A | 57. | 5. |
| 25 | 40. | 18. | 15. | 27. | 8. | 6. | 9. | 30. | 64. | 25. | 36. | 42. | 44. | 34. | 39. | 28. | 27. | 30. | 27. | 27. | 39. | 66. | 26. | 26. | N/A | 66. | 6. |
| 26 | 36. | 32. | 38. | 60. | 37. | 28. | 31. | 27. | 26. | 26. | 27. | 28. | 28. | 27. | 27. | 14. | 13. | 11. | 10. | 11. | 10. | 10. | 12. | 19. | N/A | 60. | 10. |
| 27 | 9. | 12. | 19. | 65. | 21. | 15. | 15. | 20. | 9. | 13. | 10. | 10. | 12. | 16. | 18. | 17. | 27. | 21. | 25. | 11. | 14. | 16. | 23. | 16. | N/A | 65. | 9. |
| 28 | 24. | 33. | 19. | 16. | 48. | 31. | 23. | 12. | 12. | 12. | ***** | 13. | 23. | 24. | 23. | 29. | 18. | 15. | 10. | 9. | 15. | 13. | 15. | 15. | N/A | 48. | 9. |
| 29 | 25. | 15. | 25. | 23. | 15. | 13. | 14. | 37. | 25. | 38. | 42. | 47. | 49. | 43. | 35. | 20. | 27. | 34. | 47. | 11. | 11. | 6. | 4. | 3. | N/A | 49. | 3. |
| 30 | 4. | 4. | 5. | 5. | 14. | 55. | 36. | 8. | 10. | 15. | 53. | 27. | 53. | 35. | 31. | 21. | 22. | 11. | 11. | 14. | 28. | 15. | 38. | 10. | N/A | 55. | 4. |
| Mean | N/A | N/A | N/A | N/A | N/A | N/A | N/A | N/A | N/A | N/A | N/A | N/A | N/A | N/A | N/A | N/A | N/A | N/A | N/A | N/A | N/A | N/A | N/A | N/A | Monthly mean = | | N/A |
| Max. | 50. | 42. | 44. | 65. | 84. | 61. | 38. | 37. | 64. | 65. | 61. | 59. | 72. | 66. | 59. | 43. | 37. | 45. | 47. | 50. | 41. | 66. | 51. | 33. | Monthly max. = | | 84. |
| Min. | 4. | 4. | 5. | 4. | 4. | 4. | 5. | 6. | 6. | 12. | 10. | 10. | 12. | 10. | 8. | 9. | 9. | 8. | 6. | 5. | 3. | 4. | 3. | 3. | Monthly min. = | | 3. |

TOTAL NUMBER OF DATA HOURS IN MONTH: 720
Number of hours of bad or missing data: 1
**** designates missing or lost data

Current % recovery = 99.9

N/A: A sigma theta mean is not physically meaningful.

table created at 11: 3, 4/12/1995

MONTHLY SUMMARY
REL. HUMID.
(Degrees)
INPUT FILE: alls1met.out

Bechtel Environmental, Inc.

Met Data for Site 1
APRIL 1994

| Day \ Hour | 1 | 2 | 3 | 4 | 5 | 6 | 7 | 8 | 9 | 10 | 11 | 12 | 13 | 14 | 15 | 16 | 17 | 18 | 19 | 20 | 21 | 22 | 23 | 24 | Mean | Max. | Min. |
|---|---|---|---|---|---|---|---|---|---|---|---|---|---|---|---|---|---|---|---|---|---|---|---|---|---|---|---|
| 1 | 69.0 | 72.0 | 64.7 | 64.7 | 64.9 | 65.0 | 67.0 | 70.4 | 74.3 | 76.5 | 84.3 | 85.3 | 91.2 | 89.1 | 80.8 | 70.4 | 62.9 | 61.1 | 66.4 | 67.3 | 73.4 | 74.1 | 76.4 | 62.4 | 72.2 | 91.2 | 61.1 |
| 2 | 73.5 | 84.6 | 87.6 | 90.7 | 94.0 | 94.8 | 94.4 | 85.8 | 69.1 | 61.3 | 47.5 | 46.2 | 42.1 | 40.3 | 36.5 | 38.8 | 39.7 | 39.7 | 41.8 | 44.5 | 46.9 | 50.5 | 51.8 | 52.1 | 60.6 | 94.8 | 36.5 |
| 3 | 51.0 | 44.7 | 43.4 | 36.8 | 31.6 | 34.5 | 48.5 | 48.3 | 36.3 | 48.0 | 59.8 | 71.8 | 72.1 | 69.8 | 79.4 | 92.1 | 95.7 | 89.5 | 74.8 | 58.8 | 53.6 | 50.9 | 52.7 | 56.7 | 58.4 | 95.7 | 31.6 |
| 4 | 56.7 | 57.8 | 59.6 | 57.5 | 60.2 | 63.9 | 71.3 | 81.6 | 81.5 | 76.1 | 69.6 | 70.8 | 72.6 | 91.3 | 95.1 | 93.7 | 97.1 | 91.8 | 88.6 | 90.4 | 91.3 | 91.7 | 90.0 | 85.4 | 78.6 | 97.1 | 56.7 |
| 5 | 87.2 | 85.2 | 95.1 | 92.0 | 94.0 | 93.8 | 91.0 | 88.6 | 80.9 | 72.3 | 67.6 | 62.7 | 57.6 | 50.9 | 44.1 | 41.2 | 39.0 | 36.6 | 38.4 | 40.1 | 39.0 | 51.2 | 46.2 | 43.7 | 64.1 | 95.1 | 36.6 |
| 6 | 44.9 | 47.8 | 60.2 | 76.1 | 86.3 | 87.4 | 90.6 | 83.3 | 82.4 | 88.5 | 78.1 | 68.0 | 60.1 | 52.3 | 49.5 | 48.6 | 47.0 | 53.0 | 53.0 | 58.2 | 72.2 | 95.3 | 91.8 | 86.4 | 69.2 | 95.3 | 44.9 |
| 7 | 76.7 | 84.2 | 86.3 | 88.7 | 89.4 | 90.1 | 89.2 | 84.7 | 80.1 | 75.2 | 67.3 | 57.0 | 49.9 | 39.9 | 37.5 | 34.9 | 35.9 | 36.1 | 38.4 | 43.8 | 50.9 | 58.3 | 58.1 | 54.5 | 62.8 | 90.1 | 34.9 |
| 8 | 53.0 | 54.0 | 53.9 | 58.4 | 72.7 | 85.9 | 75.4 | 62.8 | 52.8 | 46.0 | 43.9 | 37.8 | 32.6 | 29.6 | 27.6 | 26.8 | 27.3 | 29.5 | 31.8 | 35.4 | 39.9 | 42.5 | 43.2 | 45.2 | 46.2 | 85.9 | 26.8 |
| 9 | 50.6 | 56.5 | 62.1 | 68.9 | 79.5 | 86.9 | 91.9 | 88.5 | 78.4 | 66.8 | 57.3 | 52.8 | 52.1 | 50.4 | 55.3 | 55.9 | 74.5 | 85.5 | 95.5 | 96.0 | 95.4 | 95.3 | 94.4 | 93.5 | 74.3 | 96.0 | 50.4 |
| 10 | 91.1 | 94.0 | 94.7 | 96.8 | 97.1 | 97.1 | 97.1 | 97.1 | 97.1 | 97.1 | 97.1 | 87.8 | 76.4 | 76.7 | 77.3 | 74.2 | 70.2 | 67.8 | 67.4 | 59.7 | 60.1 | 60.7 | 63.8 | 66.9 | 81.9 | 97.1 | 59.7 |
| 11 | 69.0 | 70.5 | 71.9 | 73.6 | 74.8 | 75.8 | 75.0 | 73.0 | 70.1 | 67.6 | 60.6 | 54.2 | 45.9 | 39.7 | 36.6 | 34.5 | 35.4 | 36.4 | 39.7 | 42.1 | 46.7 | 44.9 | 48.6 | 56.0 | 55.9 | 75.8 | 34.5 |
| 12 | 59.7 | 57.1 | 55.9 | 54.5 | 55.5 | 58.6 | 60.3 | 56.5 | 51.6 | 40.1 | 34.6 | 34.5 | 27.2 | 28.5 | 29.6 | 30.3 | 31.5 | 33.8 | 36.0 | 38.8 | 35.5 | 32.5 | 36.1 | 39.5 | 42.4 | 60.3 | 27.2 |
| 13 | 40.1 | 43.5 | 47.8 | 51.5 | 52.4 | 53.1 | 50.5 | 46.0 | 42.6 | 39.6 | 37.8 | 29.9 | 29.3 | 27.5 | 24.4 | 15.0 | 13.2 | 21.0 | 22.7 | 23.4 | 26.1 | 26.9 | 26.0 | 24.2 | 33.9 | 53.1 | 13.2 |
| 14 | 24.8 | 27.8 | 31.9 | 35.8 | 39.2 | 44.1 | 51.4 | 49.3 | 42.1 | 36.7 | 35.0 | 32.0 | 28.6 | 28.0 | 28.3 | 27.6 | 27.8 | 28.8 | 29.3 | 30.7 | 28.7 | 29.9 | 32.9 | 36.2 | 33.6 | 51.4 | 24.8 |
| 15 | 37.9 | 38.8 | 39.6 | 40.9 | 42.5 | 44.4 | 45.7 | 38.9 | 35.0 | 31.5 | 28.5 | 26.9 | 25.5 | 22.7 | 21.8 | 20.8 | 18.3 | 17.7 | 18.3 | 23.8 | 27.7 | 27.8 | 30.6 | 34.0 | 30.8 | 45.7 | 17.7 |
| 16 | 34.8 | 38.8 | 47.2 | 52.0 | 56.0 | 61.0 | 58.2 | 48.0 | 41.4 | 36.3 | 26.2 | 20.1 | 16.2 | 17.9 | 16.3 | 13.5 | 12.6 | 13.5 | 11.6 | 12.5 | 14.0 | 16.3 | 20.3 | 20.7 | 29.4 | 61.0 | 11.6 |
| 17 | 25.0 | 28.9 | 29.4 | 31.0 | 38.6 | 47.3 | 39.7 | 38.2 | 29.8 | 27.4 | 23.5 | 19.8 | 19.3 | 18.5 | 17.2 | 16.0 | 15.6 | 17.8 | 17.5 | 19.7 | 19.6 | 22.4 | 26.5 | 27.3 | 25.7 | 47.3 | 15.6 |
| 18 | 31.8 | 30.9 | 34.6 | 41.4 | 46.3 | 43.8 | 45.2 | 42.8 | 36.4 | 29.8 | 25.3 | 20.2 | 15.6 | 15.1 | 16.3 | 16.3 | 16.8 | 17.1 | 22.6 | 21.3 | 24.7 | 32.4 | 35.2 | 35.1 | 29.0 | 46.3 | 15.1 |
| 19 | 40.4 | 41.5 | 44.8 | 45.3 | 48.0 | 48.4 | 49.9 | 54.7 | 47.3 | 33.9 | 26.8 | 20.7 | 20.0 | 20.0 | 19.0 | 20.6 | 21.6 | 28.1 | 36.6 | 30.0 | 32.3 | 35.6 | 39.6 | 46.7 | 35.5 | 54.7 | 19.0 |
| 20 | 46.2 | 59.6 | 61.7 | 61.0 | 62.1 | 63.4 | 65.1 | 55.8 | 44.7 | 44.6 | 38.6 | 30.8 | 26.2 | 20.3 | 10.7 | 12.8 | 12.0 | 10.4 | 11.8 | 20.7 | 27.5 | 36.1 | 36.8 | 36.6 | 37.3 | 65.1 | 10.4 |
| 21 | 35.4 | 41.0 | 45.4 | 43.6 | 50.9 | 58.8 | 52.0 | 50.0 | 34.6 | 33.1 | 27.7 | 24.6 | 18.9 | 12.7 | 12.1 | 11.7 | 11.7 | 12.3 | 18.8 | 24.0 | 26.8 | 22.0 | 25.5 | 21.4 | 29.8 | 58.8 | 11.7 |
| 22 | 30.2 | 33.2 | 37.1 | 45.4 | 60.3 | 65.3 | 65.1 | 62.2 | 58.1 | 51.6 | 50.9 | 45.9 | 40.8 | 38.3 | 35.9 | 34.0 | 33.3 | 34.1 | 38.8 | 47.5 | 57.8 | 61.7 | 64.1 | 65.3 | 48.2 | 65.3 | 30.2 |
| 23 | 65.8 | 65.5 | 67.0 | 76.3 | 78.9 | 75.4 | 69.0 | 66.4 | 65.0 | 63.2 | 59.9 | 52.5 | 39.0 | 20.7 | 17.7 | 19.0 | 20.0 | 28.0 | 60.0 | 52.0 | 73.0 | 74.0 | 75.0 | 82.0 | 56.9 | 82.0 | 17.7 |
| 24 | 84.0 | 86.0 | 91.0 | 83.0 | 82.0 | 93.0 | 97.0 | 98.0 | 92.0 | 78.0 | 56.0 | 53.0 | 52.0 | 50.0 | 52.0 | 62.0 | 63.0 | 64.0 | 66.0 | 66.0 | 63.0 | 63.0 | 72.0 | 70.0 | 72.3 | 98.0 | 50.0 |
| 25 | 75.0 | 80.0 | 88.0 | 86.0 | 86.0 | 88.0 | 87.0 | 83.0 | 72.0 | 73.0 | 72.0 | 72.0 | 68.0 | 92.0 | 91.0 | 82.4 | 77.7 | 69.7 | 70.5 | 74.4 | 73.7 | 75.3 | 71.2 | 75.3 | 78.5 | 92.0 | 68.0 |
| 26 | 82.7 | 97.0 | 96.2 | 92.2 | 91.9 | 86.3 | 84.3 | 72.4 | 62.9 | 60.0 | 55.3 | 44.4 | 38.1 | 36.6 | 35.4 | 33.9 | 33.4 | 34.9 | 37.5 | 52.1 | 64.9 | 79.3 | 85.6 | 79.6 | 64.0 | 97.0 | 33.4 |
| 27 | 82.8 | 88.7 | 92.1 | 96.0 | 97.1 | 97.1 | 97.1 | 95.4 | 92.7 | 82.3 | 74.6 | 69.9 | 63.8 | 58.3 | 53.1 | 52.7 | 50.5 | 47.6 | 61.7 | 62.4 | 65.2 | 64.2 | 64.6 | 63.4 | 73.9 | 97.1 | 47.6 |
| 28 | 57.6 | 61.9 | 63.9 | 67.8 | 72.4 | 73.7 | 72.5 | 66.3 | 60.8 | 73.1 | ***** | 78.3 | 68.6 | 57.3 | 47.1 | 39.7 | 33.3 | 28.5 | 27.9 | 33.3 | 44.6 | 45.8 | 45.3 | 45.6 | 55.0 | 78.3 | 27.9 |
| 29 | 48.5 | 50.4 | 53.2 | 59.3 | 60.4 | 67.4 | 64.8 | 53.1 | 46.4 | 39.1 | 32.2 | 25.9 | 28.0 | 26.5 | 19.9 | 20.8 | 22.2 | 22.4 | 22.2 | 22.3 | 28.0 | 36.1 | 40.0 | 44.0 | 38.9 | 67.4 | 19.9 |
| 30 | 46.5 | 43.9 | 43.1 | 44.7 | 49.4 | 62.6 | 58.0 | 46.0 | 43.0 | 39.5 | 34.2 | 35.6 | 32.2 | 25.6 | 24.4 | 26.4 | 38.3 | 42.2 | 55.4 | 67.1 | 58.7 | 59.0 | 66.3 | 83.0 | 46.9 | 83.0 | 24.4 |
| Mean | 55.7 | 58.9 | 61.6 | 63.7 | 67.1 | 70.2 | 70.1 | 66.2 | 60.0 | 56.3 | 50.8 | 47.7 | 43.7 | 41.5 | 39.7 | 38.9 | 39.3 | 40.0 | 43.4 | 45.3 | 48.7 | 51.9 | 53.7 | 54.4 | Monthly mean = | | 52.9 |
| Max. | 91.1 | 97.0 | 96.2 | 96.8 | 97.1 | 97.1 | 97.1 | 98.0 | 97.1 | 97.1 | 97.1 | 87.8 | 91.2 | 92.0 | 95.1 | 93.7 | 97.1 | 91.8 | 95.5 | 96.0 | 95.4 | 95.3 | 94.4 | 93.5 | Monthly max. = | | 98.0 |
| Min. | 24.8 | 27.8 | 29.4 | 31.0 | 31.6 | 34.5 | 39.7 | 38.2 | 29.8 | 27.4 | 23.5 | 19.8 | 15.6 | 12.7 | 10.7 | 11.7 | 11.7 | 10.4 | 11.6 | 12.5 | 14.0 | 16.3 | 20.3 | 20.7 | Monthly min. = | | 10.4 |

TOTAL NUMBER OF DATA HOURS IN MONTH: 720
Number of hours of bad or missing data: 1
**** designates missing or lost data

Current % recovery = 99.9

N/A: insufficient data available for calculation (a minimum of 75% is required)

table created at 11: 3, 4/12/1995

MONTHLY SUMMARY
WIND SPEED
(Miles Per Hour)
INPUT FILE: alls1met.out

Bechtel Environmental, Inc.

Met Data for Site 1
MAY 1994

| Day | Hour 1 | 2 | 3 | 4 | 5 | 6 | 7 | 8 | 9 | 10 | 11 | 12 | 13 | 14 | 15 | 16 | 17 | 18 | 19 | 20 | 21 | 22 | 23 | 24 | Mean | Max. | Min. |
|---|---|---|---|---|---|---|---|---|---|---|---|---|---|---|---|---|---|---|---|---|---|---|---|---|---|---|---|
| 1 | 16.2 | 14.9 | 12.5 | 12.9 | 14.6 | 13.8 | 14.7 | 16.6 | 15.9 | 16.0 | 18.1 | 18.3 | 16.9 | 18.6 | 17.8 | 16.7 | 15.4 | 15.4 | 14.5 | 11.2 | 10.8 | 10.0 | 11.8 | 14.1 | 14.9 | 18.6 | 10.0 |
| 2 | 14.1 | 15.3 | 16.4 | 16.5 | 16.0 | 16.8 | 15.8 | 12.9 | 10.1 | 10.6 | 12.4 | 12.9 | 13.9 | 14.4 | 14.5 | 15.9 | 13.7 | 14.2 | 13.3 | 13.0 | 11.4 | 13.7 | 9.8 | 7.6 | 13.5 | 16.8 | 7.6 |
| 3 | 8.0 | 8.3 | 12.3 | 9.9 | 12.7 | 7.8 | 5.7 | 2.9 | 11.2 | 12.0 | 10.1 | 13.1 | 14.3 | 16.5 | 14.5 | 14.5 | 15.1 | 13.9 | 11.0 | 9.1 | 10.0 | 9.7 | 12.4 | 14.5 | 11.2 | 16.5 | 2.9 |
| 4 | 12.8 | 14.1 | 16.6 | 17.0 | 18.4 | 17.4 | 18.8 | 17.9 | 18.1 | 16.6 | 11.5 | 10.9 | 9.9 | 12.2 | 11.3 | 7.9 | 8.3 | 12.9 | 5.7 | 8.2 | 7.6 | 5.4 | 6.5 | 13.7 | 12.5 | 18.8 | 5.4 |
| 5 | 14.7 | 14.9 | 11.8 | 6.3 | 6.7 | 5.2 | 7.7 | 5.1 | 6.2 | 6.0 | 3.9 | 4.9 | 6.9 | 7.0 | 6.6 | 5.5 | 5.4 | 6.6 | 5.5 | 3.3 | 6.4 | 8.4 | 7.5 | 2.6 | 6.9 | 14.9 | 2.6 |
| 6 | 5.1 | 6.7 | 2.9 | 3.0 | 4.3 | 7.0 | 4.6 | 9.0 | 12.1 | 14.3 | 17.4 | 16.6 | 16.6 | 18.1 | 16.8 | 18.1 | 11.8 | 10.0 | 21.3 | 18.7 | 13.9 | 6.8 | 11.2 | 12.0 | 11.6 | 21.3 | 2.9 |
| 7 | 13.9 | 7.7 | 9.2 | 7.3 | 5.9 | 1.8 | 3.1 | 5.7 | 5.9 | 8.1 | 8.3 | 7.3 | 7.9 | 9.7 | 10.0 | 10.3 | 11.1 | 9.7 | 7.1 | 21.1 | 21.4 | 14.5 | 9.1 | 11.3 | 9.5 | 21.4 | 1.8 |
| 8 | 10.2 | 14.0 | 12.5 | 14.5 | 15.3 | 13.8 | 11.4 | 11.5 | 7.7 | 5.2 | 6.8 | 8.0 | 4.9 | 4.7 | 3.5 | 3.8 | 5.0 | 5.2 | 4.8 | 3.2 | 7.6 | 9.9 | 6.0 | 3.9 | 8.1 | 15.3 | 3.2 |
| 9 | 3.7 | 7.8 | 10.1 | 9.0 | 3.4 | 4.1 | 2.2 | 3.3 | 6.9 | 7.6 | 6.2 | 8.2 | 7.3 | 6.2 | 6.6 | 7.9 | 9.2 | 7.1 | 4.3 | 2.9 | 6.1 | 7.5 | 6.6 | 6.3 | 6.3 | 10.1 | 2.2 |
| 10 | 9.1 | 8.5 | 11.7 | 11.8 | 9.3 | 9.7 | 4.3 | 4.1 | 9.8 | 12.2 | 14.1 | 10.6 | 8.7 | 7.3 | 8.6 | 10.3 | 9.0 | 9.3 | 9.2 | 10.8 | 14.2 | 15.1 | 15.5 | 13.1 | 10.3 | 15.5 | 4.1 |
| 11 | 7.3 | 6.7 | 8.6 | 8.5 | 6.2 | 7.8 | 3.9 | 3.6 | 3.8 | 3.2 | 4.6 | 6.1 | 8.6 | 9.5 | 9.2 | 7.3 | 7.0 | 6.7 | 4.1 | 2.9 | 5.5 | 11.9 | 9.7 | 12.6 | 6.9 | 12.6 | 2.9 |
| 12 | 14.1 | 14.2 | 13.4 | 13.0 | 13.2 | 11.9 | 11.8 | 16.4 | 16.0 | 13.2 | 14.8 | 13.4 | 12.0 | 6.6 | 9.6 | 10.8 | 10.6 | 10.7 | 24.0 | 20.5 | 21.2 | 15.8 | 8.5 | 8.3 | 13.5 | 24.0 | 6.6 |
| 13 | 11.9 | 15.6 | 18.8 | 16.2 | 18.8 | 18.6 | 19.9 | 21.4 | 22.2 | 22.4 | 22.3 | 21.7 | 21.4 | 17.6 | 14.7 | 19.1 | 20.5 | 19.6 | 16.6 | 16.3 | 16.0 | 13.9 | 13.7 | 14.2 | 18.1 | 22.4 | 11.9 |
| 14 | 15.4 | 14.1 | 11.5 | 4.5 | 7.5 | 9.4 | 11.0 | 9.5 | 6.9 | 4.6 | 6.0 | 7.9 | 8.6 | 10.7 | 7.9 | 5.9 | 7.9 | 10.1 | 14.4 | 13.7 | 14.1 | 15.2 | 17.7 | 19.5 | 10.6 | 19.5 | 4.5 |
| 15 | 19.8 | 17.4 | 14.2 | 9.2 | 11.7 | 20.9 | 23.6 | 25.4 | 24.5 | 25.2 | 25.7 | 24.9 | 19.5 | 14.6 | 16.4 | 23.2 | 22.8 | 16.7 | 15.6 | 11.4 | 8.8 | 10.3 | 10.2 | 9.9 | 17.6 | 25.7 | 8.8 |
| 16 | 10.6 | 10.0 | 9.2 | 8.4 | 9.2 | 4.4 | 4.4 | 4.3 | 5.4 | 7.9 | 6.9 | 14.2 | 15.0 | 12.5 | 9.2 | 4.6 | 7.5 | 8.2 | 7.4 | 11.6 | 16.6 | 15.3 | 16.0 | 7.7 | 9.4 | 16.6 | 4.3 |
| 17 | 6.0 | 9.9 | 9.9 | 8.6 | 10.8 | 15.6 | 18.8 | 15.2 | 14.7 | 17.6 | 16.0 | 14.3 | 9.9 | 6.5 | 8.4 | 7.9 | 8.7 | 7.2 | 5.1 | 4.1 | 5.8 | 7.2 | 8.6 | 6.8 | 10.2 | 18.8 | 4.1 |
| 18 | 6.3 | 8.8 | 9.7 | 8.0 | 6.3 | 4.9 | 3.9 | 7.2 | 4.6 | 6.8 | 7.2 | 9.1 | ***** | ***** | ***** | 9.7 | 11.1 | 14.4 | 15.5 | 13.4 | 11.6 | 10.8 | 10.2 | 13.0 | 9.2 | 15.5 | 3.9 |
| 19 | 11.7 | 11.4 | 9.0 | 3.9 | 4.0 | 4.4 | 4.7 | 4.3 | 7.6 | 7.1 | 8.8 | 11.7 | 16.7 | 16.6 | 21.3 | 17.5 | 13.8 | 14.1 | 10.3 | 11.3 | 7.0 | 13.4 | 10.3 | 13.6 | 10.6 | 21.3 | 3.9 |
| 20 | 10.4 | 11.6 | 11.6 | 4.4 | 6.3 | 6.3 | 7.0 | 9.6 | 12.4 | 17.0 | 16.1 | 16.4 | 13.8 | 14.7 | 16.1 | 16.0 | 11.6 | 16.8 | 13.2 | 12.1 | 10.6 | 11.1 | 9.4 | 10.1 | 11.9 | 17.0 | 4.4 |
| 21 | 10.1 | 11.4 | 12.1 | 10.7 | 11.8 | 9.7 | 4.5 | 2.7 | 4.4 | 4.4 | 5.7 | 6.2 | 6.5 | 7.2 | 10.1 | 7.4 | 7.7 | 7.0 | 4.3 | 8.6 | 9.8 | 13.5 | 15.2 | 14.0 | 8.5 | 15.2 | 2.7 |
| 22 | 11.7 | 10.6 | 9.7 | 8.8 | 1.8 | 2.1 | 12.8 | 16.8 | 16.7 | 14.3 | 14.1 | 12.3 | 11.9 | 13.8 | 14.3 | 13.5 | 12.5 | 11.7 | 8.4 | 8.5 | 8.5 | 9.2 | 9.3 | 6.4 | 10.8 | 16.8 | 1.8 |
| 23 | 9.1 | 8.5 | 4.7 | 4.1 | 2.5 | 4.5 | 3.4 | 3.6 | 3.6 | 5.5 | 5.7 | 7.4 | 7.7 | 8.3 | 9.0 | 8.4 | 8.6 | 9.5 | 11.7 | 10.6 | 13.3 | 12.5 | 11.0 | 7.3 | 7.5 | 13.3 | 2.5 |
| 24 | 8.6 | 6.7 | 3.6 | 5.0 | 4.1 | 2.6 | 2.1 | 4.8 | 10.4 | 9.2 | 8.5 | 9.2 | 10.7 | 9.3 | 9.6 | 9.2 | 6.7 | 5.1 | 5.8 | 3.3 | 5.1 | 9.4 | 11.4 | 11.0 | 7.1 | 11.4 | 2.1 |
| 25 | 11.1 | 9.1 | 9.2 | 7.5 | 2.9 | 3.8 | 7.5 | 5.1 | 3.9 | 4.6 | 6.2 | 6.9 | 7.2 | 8.7 | 9.4 | 11.4 | 11.8 | 10.4 | 6.6 | 3.9 | 4.0 | 6.7 | 12.1 | 5.0 | 7.3 | 12.1 | 2.9 |
| 26 | 5.3 | 11.4 | 8.9 | 5.1 | 4.1 | 3.1 | 2.0 | ***** | ***** | 6.0 | 10.5 | 10.3 | 9.7 | 11.8 | 17.7 | 20.9 | 15.8 | 12.0 | 17.2 | 17.8 | 19.8 | 20.1 | 16.7 | 14.3 | 11.8 | 20.9 | 2.0 |
| 27 | 8.7 | 11.8 | 12.7 | 5.6 | 11.0 | 11.4 | 16.3 | 15.1 | 13.0 | 12.3 | 12.9 | 15.1 | 8.4 | 14.1 | 6.0 | 10.8 | 16.5 | 13.7 | 13.7 | 12.0 | 8.7 | 9.9 | 10.6 | 10.6 | 11.7 | 16.5 | 5.6 |
| 28 | 10.7 | 12.3 | 8.5 | 12.3 | 13.4 | 15.6 | 13.6 | 11.9 | 9.2 | 4.5 | 5.3 | 6.3 | 5.3 | 10.7 | 14.9 | 11.3 | 7.8 | 15.0 | 9.9 | 12.5 | 9.1 | 9.2 | 6.7 | 7.5 | 10.1 | 15.6 | 4.5 |
| 29 | 11.5 | 11.4 | 11.1 | 13.0 | 12.6 | 10.0 | 3.6 | 3.4 | 4.5 | 8.7 | 10.0 | 15.1 | 18.5 | 20.0 | 18.5 | 17.5 | 16.3 | 11.9 | 10.6 | 7.3 | 8.8 | 9.9 | 7.6 | 3.4 | 11.0 | 20.0 | 3.4 |
| 30 | 10.0 | 10.2 | 10.3 | 11.4 | 13.7 | 14.8 | 13.6 | 15.6 | 16.1 | 16.0 | 12.5 | 10.9 | 11.1 | 10.8 | 9.5 | 8.5 | 7.8 | 6.6 | 5.0 | 3.4 | 5.6 | 9.1 | 11.3 | 11.4 | 10.6 | 16.1 | 3.4 |
| 31 | 12.7 | 8.6 | 5.3 | 3.7 | 4.3 | 8.4 | ***** | ***** | ***** | ***** | 13.6 | 17.2 | 9.7 | 6.7 | 6.2 | 12.8 | 12.5 | 5.9 | 9.6 | 12.6 | 9.9 | 7.5 | 9.6 | 13.1 | 9.5 | 17.2 | 3.7 |
| Mean | 10.7 | 11.1 | 10.6 | 9.0 | 9.1 | 9.3 | 9.2 | 9.8 | 10.5 | 10.6 | 11.0 | 11.9 | 11.3 | 11.5 | 11.6 | 11.8 | 11.3 | 10.9 | 10.5 | 10.3 | 10.6 | 11.1 | 10.7 | 10.3 | Monthly mean = | | 10.6 |
| Max. | 19.8 | 17.4 | 18.8 | 17.0 | 18.8 | 20.9 | 23.6 | 25.4 | 24.5 | 25.2 | 25.7 | 24.9 | 21.4 | 20.0 | 21.3 | 23.2 | 22.8 | 19.6 | 24.0 | 21.1 | 21.4 | 20.1 | 17.7 | 19.5 | Monthly max. = | | 25.7 |
| Min. | 3.7 | 6.7 | 2.9 | 3.0 | 1.8 | 1.8 | 2.0 | 2.7 | 3.6 | 3.2 | 3.9 | 4.9 | 4.9 | 4.7 | 3.5 | 3.8 | 5.0 | 5.1 | 4.1 | 2.9 | 4.0 | 5.4 | 6.0 | 2.6 | Monthly min. = | | 1.8 |

TOTAL NUMBER OF DATA HOURS IN MONTH: 740
Number of hours of bad or missing data: 9
**** designates missing or lost data

Current % recovery = 98.8

N/A: insufficient data available for calculation (a minimum of 75% is required)

table created at 11: 3, 4/12/1995

MONTHLY SUMMARY
WIND DIRECTION
(Degrees)
INPUT FILE: allsimet.out

Bechtel Environmental, Inc.

Met Data for Site 1
MAY 1994

| Day | Hour 1 | 2 | 3 | 4 | 5 | 6 | 7 | 8 | 9 | 10 | 11 | 12 | 13 | 14 | 15 | 16 | 17 | 18 | 19 | 20 | 21 | 22 | 23 | 24 | Mean | Max. | Min. |
|---|---|---|---|---|---|---|---|---|---|---|---|---|---|---|---|---|---|---|---|---|---|---|---|---|---|---|---|
| 1 | 236.0 | 239.0 | 231.0 | 244.0 | 236.0 | 244.0 | 240.0 | 249.0 | 261.0 | 261.0 | 259.0 | 259.0 | 259.0 | 262.0 | 255.0 | 257.0 | 262.0 | 260.0 | 255.0 | 221.0 | 210.0 | 206.0 | 135.0 | 124.0 | 236.0 | 262.0 | 124.0 |
| 2 | 124.0 | 125.0 | 125.0 | 122.0 | 120.0 | 124.0 | 124.0 | 126.0 | 121.0 | 277.0 | 243.0 | 260.0 | 247.0 | 259.0 | 262.0 | 250.0 | 227.0 | 262.0 | 267.0 | 208.0 | 182.0 | 133.0 | 153.0 | 207.0 | 189.5 | 277.0 | 120.0 |
| 3 | 207.0 | 124.0 | 129.0 | 138.0 | 125.0 | 117.0 | 55.0 | 345.0 | 251.0 | 263.0 | 286.0 | 266.0 | 274.0 | 262.0 | 258.0 | 262.0 | 266.0 | 260.0 | 272.0 | 254.0 | 197.0 | 184.0 | 138.0 | 134.0 | 211.1 | 345.0 | 55.0 |
| 4 | 128.0 | 129.0 | 136.0 | 132.0 | 127.0 | 122.0 | 133.0 | 134.0 | 138.0 | 132.0 | 185.0 | 197.0 | 245.0 | 205.0 | 151.0 | 202.0 | 136.0 | 322.0 | 64.0 | 116.0 | 116.0 | 119.0 | 89.0 | 131.0 | 149.5 | 322.0 | 64.0 |
| 5 | 141.0 | 139.0 | 193.0 | 138.0 | 150.0 | 162.0 | 182.0 | 294.0 | 107.0 | 117.0 | 20.0 | 21.0 | 10.0 | 16.0 | 7.0 | 4.0 | 11.0 | 357.0 | 8.0 | 110.0 | 125.0 | 116.0 | 97.0 | 108.0 | 109.7 | 357.0 | 4.0 |
| 6 | 111.0 | 62.0 | 88.0 | 69.0 | 85.0 | 44.0 | 60.0 | 14.0 | 17.0 | 23.0 | 23.0 | 25.0 | 24.0 | 19.0 | 21.0 | 12.0 | 160.0 | 9.0 | 189.0 | 154.0 | 74.0 | 112.0 | 111.0 | 111.0 | 67.4 | 189.0 | 9.0 |
| 7 | 104.0 | 116.0 | 111.0 | 119.0 | 115.0 | 34.0 | 326.0 | 296.0 | 287.0 | 288.0 | 294.0 | 306.0 | 301.0 | 301.0 | 291.0 | 283.0 | 275.0 | 290.0 | 8.0 | 181.0 | 198.0 | 212.0 | 125.0 | 127.0 | 207.8 | 326.0 | 8.0 |
| 8 | 130.0 | 127.0 | 126.0 | 130.0 | 131.0 | 133.0 | 133.0 | 132.0 | 134.0 | 69.0 | 297.0 | 346.0 | 7.0 | 3.0 | 4.0 | 311.0 | 304.0 | 308.0 | 279.0 | 109.0 | 114.0 | 120.0 | 101.0 | 337.0 | 56.9 | 346.0 | 3.0 |
| 9 | 219.0 | 125.0 | 121.0 | 123.0 | 251.0 | 115.0 | 26.0 | 353.0 | 311.0 | 293.0 | 351.0 | 9.0 | .0 | 18.0 | 320.0 | 324.0 | 303.0 | 318.0 | 325.0 | 259.0 | 227.0 | 117.0 | 119.0 | 123.0 | 2.9 | 353.0 | .0 |
| 10 | 120.0 | 121.0 | 123.0 | 124.0 | 121.0 | 126.0 | 122.0 | 98.0 | 263.0 | 261.0 | 257.0 | 267.0 | 275.0 | 287.0 | 285.0 | 291.0 | 265.0 | 242.0 | 245.0 | 227.0 | 221.0 | 222.0 | 223.0 | 227.0 | 208.9 | 291.0 | 98.0 |
| 11 | 221.0 | 229.0 | 129.0 | 110.0 | 87.0 | 114.0 | 334.0 | 75.0 | 74.0 | 75.0 | 46.0 | 334.0 | 301.0 | 306.0 | 302.0 | 308.0 | 299.0 | 307.0 | 319.0 | 119.0 | 131.0 | 125.0 | 125.0 | 128.0 | 26.6 | 334.0 | 46.0 |
| 12 | 126.0 | 129.0 | 127.0 | 127.0 | 232.0 | 225.0 | 236.0 | 259.0 | 240.0 | 236.0 | 261.0 | 268.0 | 287.0 | 314.0 | 295.0 | 272.0 | 290.0 | 284.0 | 259.0 | 244.0 | 217.0 | 151.0 | 134.0 | 135.0 | 222.8 | 314.0 | 126.0 |
| 13 | 216.0 | 238.0 | 239.0 | 237.0 | 234.0 | 236.0 | 234.0 | 237.0 | 236.0 | 245.0 | 252.0 | 248.0 | 249.0 | 249.0 | 250.0 | 256.0 | 253.0 | 254.0 | 239.0 | 231.0 | 227.0 | 216.0 | 221.0 | 222.0 | 238.3 | 256.0 | 216.0 |
| 14 | 220.0 | 225.0 | 239.0 | 325.0 | 115.0 | 117.0 | 121.0 | 119.0 | 111.0 | 67.0 | 154.0 | 304.0 | 311.0 | 293.0 | 311.0 | 311.0 | 253.0 | 192.0 | 167.0 | 177.0 | 155.0 | 134.0 | 137.0 | 135.0 | 195.5 | 325.0 | 67.0 |
| 15 | 132.0 | 137.0 | 154.0 | 129.0 | 142.0 | 140.0 | 142.0 | 153.0 | 159.0 | 175.0 | 180.0 | 201.0 | 237.0 | 237.0 | 256.0 | 262.0 | 272.0 | 276.0 | 274.0 | 268.0 | 273.0 | 252.0 | 253.0 | 234.0 | 205.7 | 276.0 | 129.0 |
| 16 | 230.0 | 240.0 | 238.0 | 229.0 | 229.0 | 133.0 | 105.0 | 115.0 | 5.0 | 343.0 | 340.0 | 296.0 | 291.0 | 291.0 | 305.0 | 35.0 | 87.0 | 49.0 | 38.0 | 270.0 | 246.0 | 241.0 | 243.0 | 194.0 | 319.7 | 343.0 | 5.0 |
| 17 | 185.0 | 246.0 | 241.0 | 242.0 | 229.0 | 233.0 | 231.0 | 228.0 | 231.0 | 230.0 | 239.0 | 234.0 | 218.0 | 122.0 | 292.0 | 312.0 | 311.0 | 331.0 | 340.0 | 93.0 | 118.0 | 119.0 | 117.0 | 102.0 | 218.5 | 340.0 | 93.0 |
| 18 | 239.0 | 248.0 | 227.0 | 227.0 | 176.0 | 121.0 | 74.0 | 95.0 | 35.0 | 7.0 | 21.0 | 355.0 | ***** | ***** | ***** | 321.0 | 304.0 | 278.0 | 267.0 | 260.0 | 256.0 | 278.0 | 287.0 | 273.0 | 327.1 | 355.0 | 7.0 |
| 19 | 278.0 | 265.0 | 266.0 | 308.0 | 66.0 | 41.0 | 24.0 | 29.0 | 75.0 | 87.0 | 122.0 | 148.0 | 180.0 | 192.0 | 224.0 | 277.0 | 260.0 | 273.0 | 277.0 | 278.0 | 254.0 | 247.0 | 238.0 | 236.0 | 193.5 | 308.0 | 24.0 |
| 20 | 229.0 | 234.0 | 222.0 | 94.0 | 103.0 | 110.0 | 97.0 | 263.0 | 259.0 | 263.0 | 271.0 | 275.0 | 265.0 | 267.0 | 275.0 | 238.0 | 237.0 | 261.0 | 235.0 | 234.0 | 240.0 | 207.0 | 206.0 | 124.0 | 217.0 | 275.0 | 94.0 |
| 21 | 125.0 | 126.0 | 120.0 | 123.0 | 123.0 | 131.0 | 128.0 | 103.0 | 98.0 | 36.0 | 345.0 | 322.0 | 345.0 | 48.0 | 324.0 | 343.0 | 297.0 | 309.0 | 333.0 | 183.0 | 159.0 | 130.0 | 122.0 | 115.0 | 52.0 | 345.0 | 36.0 |
| 22 | 125.0 | 125.0 | 136.0 | 133.0 | 164.0 | 63.0 | 243.0 | 242.0 | 251.0 | 242.0 | 255.0 | 262.0 | 278.0 | 282.0 | 284.0 | 269.0 | 271.0 | 272.0 | 285.0 | 277.0 | 258.0 | 252.0 | 252.0 | 117.0 | 222.4 | 285.0 | 63.0 |
| 23 | 117.0 | 108.0 | 120.0 | 103.0 | 100.0 | 110.0 | 105.0 | 11.0 | 326.0 | 337.0 | 313.0 | 290.0 | 306.0 | 278.0 | 301.0 | 286.0 | 290.0 | 272.0 | 269.0 | 256.0 | 234.0 | 226.0 | 224.0 | 184.0 | 215.2 | 337.0 | 11.0 |
| 24 | 106.0 | 104.0 | 340.0 | 121.0 | 89.0 | 95.0 | 64.0 | 308.0 | 291.0 | 304.0 | 291.0 | 285.0 | 282.0 | 297.0 | 291.0 | 288.0 | 310.0 | 315.0 | 294.0 | 153.0 | 122.0 | 127.0 | 125.0 | 123.0 | 18.5 | 340.0 | 64.0 |
| 25 | 121.0 | 125.0 | 116.0 | 131.0 | 55.0 | 113.0 | 119.0 | 100.0 | 333.0 | 6.0 | 18.0 | 13.0 | 1.0 | 341.0 | 347.0 | 355.0 | 6.0 | 7.0 | 17.0 | 47.0 | 90.0 | 111.0 | 123.0 | 235.0 | 47.1 | 355.0 | 1.0 |
| 26 | 120.0 | 114.0 | 113.0 | 130.0 | 290.0 | 325.0 | 321.0 | ***** | ***** | 306.0 | 287.0 | 301.0 | 292.0 | 257.0 | 176.0 | 147.0 | 153.0 | 143.0 | 135.0 | 139.0 | 136.0 | 136.0 | 134.0 | 136.0 | 195.0 | 325.0 | 113.0 |
| 27 | 222.0 | 130.0 | 125.0 | 96.0 | 140.0 | 225.0 | 229.0 | 230.0 | 238.0 | 248.0 | 260.0 | 243.0 | 185.0 | 129.0 | 80.0 | 129.0 | 204.0 | 234.0 | 236.0 | 137.0 | 138.0 | 229.0 | 231.0 | 231.0 | 189.5 | 260.0 | 80.0 |
| 28 | 225.0 | 216.0 | 168.0 | 127.0 | 124.0 | 123.0 | 122.0 | 123.0 | 121.0 | 84.0 | 92.0 | 12.0 | 13.0 | 246.0 | 194.0 | 210.0 | 105.0 | 136.0 | 179.0 | 240.0 | 252.0 | 230.0 | 117.0 | 112.0 | 148.8 | 252.0 | 12.0 |
| 29 | 120.0 | 117.0 | 117.0 | 120.0 | 121.0 | 126.0 | 307.0 | 90.0 | 216.0 | 296.0 | 261.0 | 262.0 | 258.0 | 269.0 | 259.0 | 254.0 | 273.0 | 279.0 | 265.0 | 207.0 | 171.0 | 198.0 | 210.0 | 330.0 | 213.6 | 330.0 | 90.0 |
| 30 | 242.0 | 232.0 | 226.0 | 234.0 | 234.0 | 234.0 | 233.0 | 236.0 | 252.0 | 256.0 | 259.0 | 253.0 | 267.0 | 262.0 | 265.0 | 292.0 | 286.0 | 306.0 | 39.0 | 91.0 | 115.0 | 123.0 | 119.0 | 114.0 | 215.4 | 306.0 | 39.0 |
| 31 | 122.0 | 122.0 | 123.0 | 326.0 | 306.0 | 281.0 | ***** | ***** | ***** | ***** | 231.0 | 213.0 | 126.0 | 287.0 | 283.0 | 281.0 | 233.0 | 219.0 | 196.0 | 208.0 | 201.0 | 168.0 | 213.0 | 227.0 | 218.3 | 326.0 | 122.0 |
| Mean | 169.1 | 161.8 | 166.7 | 161.6 | 155.5 | 145.7 | 162.3 | 174.4 | 187.6 | 338.2 | 309.5 | 297.9 | 295.1 | 304.0 | 310.9 | 304.6 | 232.4 | 304.0 | 316.6 | 192.0 | 182.5 | 175.5 | 165.2 | 172.1 | Monthly mean = 192.4 | | |
| Max. | 278.0 | 265.0 | 340.0 | 326.0 | 306.0 | 325.0 | 334.0 | 353.0 | 333.0 | 343.0 | 351.0 | 355.0 | 345.0 | 341.0 | 347.0 | 355.0 | 311.0 | 357.0 | 340.0 | 278.0 | 273.0 | 278.0 | 287.0 | 337.0 | Monthly max. = 357.0 | | |
| Min. | 104.0 | 62.0 | 88.0 | 69.0 | 55.0 | 34.0 | 24.0 | 11.0 | 5.0 | 6.0 | 18.0 | 9.0 | .0 | 3.0 | 4.0 | 4.0 | 6.0 | 7.0 | 8.0 | 47.0 | 74.0 | 111.0 | 89.0 | 102.0 | Monthly min. = .0 | | |

TOTAL NUMBER OF DATA HOURS IN MONTH: 740
Number of hours of bad or missing data: 9
**** designates missing or lost data

Current % recovery = 98.8

N/A: insufficient data available for calculation (a minimum of 75% is required)

table created at 11: 3, 4/12/1995

MONTHLY SUMMARY
TEMPERATURE
(Degrees Celsius)
INPUT FILE: alls1met.out

Bechtel Environmental, Inc.

Met Data for Site 1
MAY 1994

| Day | Hour 1 | 2 | 3 | 4 | 5 | 6 | 7 | 8 | 9 | 10 | 11 | 12 | 13 | 14 | 15 | 16 | 17 | 18 | 19 | 20 | 21 | 22 | 23 | 24 | Mean | Max. | Min. |
|---|---|---|---|---|---|---|---|---|---|---|---|---|---|---|---|---|---|---|---|---|---|---|---|---|---|---|---|
| 1 | 7.5 | 7.1 | 6.2 | 6.3 | 6.2 | 6.3 | 6.4 | 6.4 | 6.4 | 7.3 | 8.6 | 9.8 | 11.0 | 11.7 | 12.2 | 12.6 | 13.1 | 13.0 | 12.9 | 11.8 | 10.9 | 10.3 | 7.9 | 5.7 | 9.1 | 13.1 | 5.7 |
| 2 | 5.4 | 5.4 | 5.4 | 5.4 | 5.2 | 5.7 | 5.2 | 8.0 | 11.3 | 13.4 | 13.9 | 15.2 | 15.8 | 16.2 | 16.8 | 17.5 | 16.2 | 16.2 | 15.6 | 14.0 | 12.9 | 11.2 | 11.7 | 12.5 | 11.5 | 17.5 | 5.2 |
| 3 | 12.3 | 9.4 | 9.2 | 9.4 | 8.9 | 8.3 | 7.7 | 10.6 | 11.8 | 12.7 | 14.1 | 14.9 | 15.9 | 16.5 | 17.0 | 17.5 | 17.9 | 18.0 | 17.5 | 16.1 | 15.4 | 14.9 | 13.5 | 12.9 | 13.4 | 18.0 | 7.7 |
| 4 | 12.4 | 11.9 | 12.0 | 12.0 | 12.0 | 11.8 | 12.2 | 12.8 | 13.7 | 15.4 | 18.7 | 19.6 | 19.8 | 19.6 | 19.9 | 20.9 | 20.1 | 15.3 | 14.1 | 13.7 | 13.6 | 12.3 | 11.0 | 10.9 | 14.8 | 20.9 | 10.9 |
| 5 | 11.3 | 11.3 | 10.9 | 10.1 | 9.6 | 9.6 | 10.1 | 10.9 | 12.3 | 13.9 | 16.4 | 17.1 | 17.8 | 18.5 | 19.0 | 19.5 | 19.8 | 19.7 | 19.2 | 17.3 | 16.1 | 14.3 | 13.6 | 12.8 | 14.6 | 19.8 | 9.6 |
| 6 | 11.9 | 10.8 | 10.3 | 8.8 | 9.3 | 9.1 | 10.4 | 11.7 | 12.9 | 15.7 | 18.5 | 19.9 | 21.1 | 22.4 | 23.4 | 23.7 | 22.4 | 21.3 | 19.2 | 17.9 | 17.4 | 16.9 | 14.9 | 15.0 | 16.0 | 23.7 | 8.8 |
| 7 | 15.2 | 12.3 | 11.8 | 10.1 | 9.1 | 8.9 | 10.3 | 12.6 | 15.1 | 16.4 | 16.7 | 17.8 | 19.6 | 20.4 | 20.8 | 20.9 | 21.3 | 20.5 | 19.4 | 16.5 | 13.9 | 13.4 | 11.6 | 12.0 | 15.3 | 21.3 | 8.9 |
| 8 | 11.7 | 11.1 | 10.6 | 10.1 | 9.8 | 10.0 | 10.1 | 11.8 | 13.8 | 15.7 | 16.3 | 16.5 | 17.2 | 18.1 | 18.8 | 19.3 | 20.6 | 19.5 | 18.0 | 16.5 | 15.0 | 14.9 | 15.3 | 15.0 | 14.8 | 20.6 | 9.8 |
| 9 | 13.1 | 12.6 | 11.2 | 9.9 | 8.5 | 8.2 | 11.5 | 14.2 | 15.1 | 16.7 | 19.8 | 21.3 | 23.2 | 24.7 | 25.4 | 25.8 | 25.8 | 25.8 | 25.6 | 22.5 | 20.4 | 17.3 | 15.2 | 14.0 | 17.8 | 25.8 | 8.2 |
| 10 | 13.5 | 12.8 | 11.8 | 11.9 | 10.9 | 10.4 | 11.8 | 15.1 | 18.9 | 18.6 | 19.7 | 21.2 | 22.8 | 24.1 | 25.0 | 25.4 | 26.1 | 26.3 | 26.4 | 25.1 | 23.4 | 22.3 | 21.9 | 21.6 | 19.5 | 26.4 | 10.4 |
| 11 | 20.1 | 19.2 | 16.7 | 14.1 | 12.2 | 12.0 | 13.2 | 16.3 | 18.1 | 21.1 | 22.3 | 23.5 | 23.6 | 24.9 | 26.1 | 27.2 | 27.6 | 27.8 | 27.7 | 25.8 | 22.8 | 20.7 | 18.5 | 17.4 | 20.8 | 27.8 | 12.0 |
| 12 | 16.7 | 15.9 | 15.3 | 15.3 | 16.6 | 16.5 | 16.6 | 16.8 | 17.1 | 18.4 | 20.2 | 21.2 | 21.8 | 23.0 | 23.8 | 23.9 | 23.9 | 23.1 | 21.0 | 18.4 | 17.3 | 15.4 | 14.6 | 14.4 | 18.6 | 23.9 | 14.4 |
| 13 | 16.5 | 16.2 | 14.7 | 13.6 | 13.2 | 12.1 | 11.2 | 10.5 | 11.5 | 12.6 | 13.7 | 15.2 | 16.1 | 17.2 | 17.7 | 18.2 | 18.5 | 18.6 | 18.1 | 16.4 | 15.6 | 15.0 | 14.3 | 14.2 | 15.0 | 18.6 | 10.5 |
| 14 | 14.1 | 13.9 | 12.8 | 7.8 | 6.5 | 5.2 | 6.6 | 10.4 | 14.3 | 17.1 | 19.2 | 19.7 | 20.8 | 21.5 | 22.3 | 23.1 | 23.9 | 23.0 | 22.1 | 21.0 | 20.0 | 18.0 | 18.3 | 17.5 | 16.6 | 23.9 | 5.2 |
| 15 | 17.2 | 17.3 | 19.8 | 18.0 | 19.3 | 18.6 | 19.4 | 20.2 | 21.4 | 22.4 | 23.2 | 24.8 | 22.5 | 18.2 | 18.6 | 19.7 | 18.4 | 17.0 | 15.9 | 14.6 | 13.4 | 12.8 | 12.4 | 11.6 | 18.2 | 24.8 | 11.6 |
| 16 | 11.8 | 11.4 | 10.7 | 10.2 | 9.7 | 8.7 | 8.8 | 9.9 | 11.4 | 11.7 | 13.1 | 12.3 | 11.5 | 10.5 | 10.2 | 11.1 | 11.5 | 12.7 | 12.2 | 10.9 | 9.4 | 8.1 | 7.4 | 6.7 | 10.5 | 13.1 | 6.7 |
| 17 | 6.4 | 6.4 | 6.5 | 6.5 | 6.4 | 5.1 | 3.1 | 4.2 | 5.6 | 6.5 | 7.9 | 8.7 | 9.0 | 8.5 | 10.1 | 11.0 | 12.1 | 11.9 | 12.7 | 11.1 | 9.4 | 8.6 | 8.0 | 7.7 | 8.1 | 12.7 | 3.1 |
| 18 | 7.1 | 7.2 | 7.9 | 5.6 | 5.5 | 4.8 | 7.1 | 7.4 | 10.3 | 12.6 | 15.0 | 15.9 | ***** | ***** | ***** | 17.5 | 17.6 | 16.9 | 15.6 | 14.0 | 13.2 | 11.9 | 10.4 | 10.0 | 11.1 | 17.6 | 4.8 |
| 19 | 9.2 | 8.7 | 8.6 | 8.3 | 8.1 | 7.9 | 7.7 | 7.7 | 9.0 | 10.8 | 12.2 | 12.1 | 14.7 | 16.4 | 16.8 | 14.4 | 14.3 | 14.8 | 15.1 | 13.2 | 12.3 | 11.5 | 9.2 | 9.0 | 11.3 | 16.8 | 7.7 |
| 20 | 8.7 | 8.7 | 8.6 | 6.5 | 5.8 | 5.5 | 7.3 | 9.6 | 9.9 | 10.3 | 11.3 | 11.9 | 12.9 | 14.3 | 14.6 | 14.3 | 14.9 | 14.3 | 14.5 | 13.5 | 12.1 | 11.0 | 10.8 | 8.2 | 10.8 | 14.9 | 5.5 |
| 21 | 6.8 | 5.6 | 4.9 | 4.3 | 3.9 | 4.2 | 6.9 | 10.9 | 12.9 | 15.4 | 16.9 | 17.6 | 17.3 | 18.9 | 18.5 | 19.6 | 20.4 | 20.7 | 20.5 | 19.5 | 17.4 | 14.6 | 11.7 | 10.6 | 13.3 | 20.7 | 3.9 |
| 22 | 9.9 | 9.4 | 9.0 | 8.4 | 6.5 | 6.9 | 9.4 | 11.0 | 12.0 | 13.2 | 15.0 | 16.6 | 17.9 | 19.0 | 20.2 | 21.4 | 22.0 | 22.5 | 21.7 | 20.7 | 19.4 | 18.8 | 17.9 | 14.8 | 15.1 | 22.5 | 6.5 |
| 23 | 12.1 | 10.9 | 9.7 | 8.2 | 6.8 | 6.8 | 9.9 | 13.9 | 16.3 | 17.4 | 18.1 | 19.7 | 20.4 | 21.8 | 22.6 | 23.7 | 24.2 | 24.4 | 24.1 | 22.3 | 20.5 | 19.8 | 19.4 | 18.1 | 17.1 | 24.4 | 6.8 |
| 24 | 15.4 | 12.6 | 10.4 | 10.1 | 8.6 | 7.4 | 11.6 | 14.2 | 14.9 | 16.2 | 18.8 | 20.7 | 22.0 | 22.7 | 23.6 | 23.9 | 24.7 | 25.1 | 25.3 | 23.3 | 20.0 | 17.1 | 14.8 | 13.6 | 17.4 | 25.3 | 7.4 |
| 25 | 12.3 | 11.6 | 10.6 | 9.6 | 8.1 | 6.9 | 9.5 | 14.2 | 17.5 | 19.8 | 21.1 | 23.7 | 25.3 | 25.7 | 26.2 | 26.6 | 26.7 | 26.7 | 26.2 | 24.3 | 20.8 | 18.3 | 17.5 | 14.3 | 18.5 | 26.7 | 6.9 |
| 26 | 14.2 | 14.1 | 13.6 | 13.0 | 11.3 | 9.8 | 13.9 | ***** | ***** | 22.3 | 22.0 | 23.4 | 24.7 | 24.9 | 24.6 | 21.8 | 21.8 | 22.9 | 21.7 | 20.9 | 20.3 | 19.8 | 18.3 | 18.4 | 19.0 | 24.9 | 9.8 |
| 27 | 18.9 | 17.3 | 16.1 | 15.1 | 14.1 | 16.4 | 15.8 | 16.2 | 17.4 | 18.2 | 18.5 | 15.8 | 16.0 | 17.6 | 20.6 | 20.0 | 16.5 | 12.4 | 12.9 | 12.6 | 12.3 | 13.5 | 13.0 | 12.9 | 15.8 | 20.6 | 12.3 |
| 28 | 12.7 | 12.7 | 11.4 | 8.6 | 7.6 | 7.8 | 9.4 | 11.7 | 14.3 | 16.6 | 18.1 | 19.1 | 21.0 | 20.9 | 19.2 | 16.4 | 14.6 | 15.2 | 17.2 | 17.8 | 16.8 | 16.3 | 13.6 | 12.5 | 14.6 | 21.0 | 7.6 |
| 29 | 11.4 | 10.8 | 10.6 | 10.3 | 9.7 | 9.1 | 10.0 | 13.8 | 17.3 | 16.5 | 18.7 | 19.9 | 21.3 | 22.0 | 22.8 | 23.6 | 23.8 | 22.9 | 23.5 | 23.3 | 21.9 | 21.7 | 21.0 | 16.8 | 17.6 | 23.8 | 9.1 |
| 30 | 16.7 | 18.5 | 18.3 | 17.2 | 15.7 | 15.2 | 15.2 | 16.4 | 17.2 | 17.5 | 19.2 | 20.2 | 21.3 | 22.1 | 23.0 | 23.7 | 24.5 | 24.7 | 25.0 | 23.9 | 19.9 | 19.7 | 17.3 | 16.4 | 19.5 | 25.0 | 15.2 |
| 31 | 15.5 | 15.0 | 15.1 | 13.0 | 12.1 | 12.2 | ***** | ***** | ***** | ***** | 17.8 | 16.1 | 16.6 | 17.5 | 19.2 | 17.0 | 15.0 | 15.2 | 14.2 | 14.7 | 14.6 | 14.2 | 14.9 | 14.9 | 15.2 | 19.2 | 12.1 |
| Mean | 12.5 | 11.9 | 11.3 | 10.2 | 9.6 | 9.3 | 10.3 | 12.0 | 13.8 | 15.4 | 16.9 | 17.8 | 18.7 | 19.3 | 20.0 | 20.0 | 20.0 | 19.6 | 19.2 | 17.9 | 16.4 | 15.3 | 14.2 | 13.3 | Monthly mean = | | 15.2 |
| Max. | 20.1 | 19.2 | 19.8 | 18.0 | 19.3 | 18.6 | 19.4 | 20.2 | 21.4 | 22.4 | 23.2 | 24.8 | 25.3 | 25.7 | 26.2 | 27.2 | 27.6 | 27.8 | 27.7 | 25.8 | 23.4 | 22.3 | 21.9 | 21.6 | Monthly max. = | | 27.8 |
| Min. | 5.4 | 5.4 | 4.9 | 4.3 | 3.9 | 4.2 | 3.1 | 4.2 | 5.6 | 6.5 | 7.9 | 8.7 | 9.0 | 8.5 | 10.1 | 11.0 | 11.5 | 11.9 | 12.2 | 10.9 | 9.4 | 8.1 | 7.4 | 5.7 | Monthly min. = | | 3.1 |

TOTAL NUMBER OF DATA HOURS IN MONTH: 740
Number of hours of bad or missing data: 9
Current % recovery = 98.8
**** designates missing or lost data

N/A: insufficient data available for calculation (a minimum of 75% is required)

table created at 11: 3, 4/12/1995

MONTHLY SUMMARY
SIGMA THETA
(Degrees)
INPUT FILE: allsimet.out

Bechtel Environmental, Inc.

Met Data for Site 1
MAY 1994

| Day \ Hour | 1 | 2 | 3 | 4 | 5 | 6 | 7 | 8 | 9 | 10 | 11 | 12 | 13 | 14 | 15 | 16 | 17 | 18 | 19 | 20 | 21 | 22 | 23 | 24 | Mean | Max. | Min. |
|---|---|---|---|---|---|---|---|---|---|---|---|---|---|---|---|---|---|---|---|---|---|---|---|---|---|---|---|
| 1 | 10. | 10. | 12. | 14. | 12. | 14. | 15. | 14. | 13. | 16. | 15. | 17. | 14. | 15. | 13. | 14. | 15. | 12. | 12. | 12. | 13. | 12. | 14. | 4. | N/A | 17. | 4. |
| 2 | 4. | 5. | 4. | 5. | 6. | 5. | 6. | 7. | 31. | 18. | 19. | 22. | 10. | 20. | 18. | 18. | 24. | 19. | 11. | 15. | 15. | 7. | 19. | 25. | N/A | 31. | 4. |
| 3 | 40. | 13. | 9. | 12. | 6. | 15. | 38. | 35. | 20. | 21. | 18. | 22. | 16. | 19. | 17. | 16. | 18. | 17. | 15. | 15. | 12. | 12. | 10. | 8. | N/A | 40. | 6. |
| 4 | 9. | 11. | 8. | 8. | 6. | 9. | 8. | 7. | 7. | 10. | 24. | 22. | 26. | 20. | 20. | 50. | 29. | 14. | 55. | 11. | 15. | 21. | 26. | 10. | N/A | 55. | 6. |
| 5 | 8. | 8. | 21. | 21. | 26. | 40. | 19. | 27. | 15. | 26. | 56. | 44. | 20. | 23. | 20. | 23. | 21. | 14. | 10. | 20. | 7. | 6. | 27. | 33. | N/A | 56. | 6. |
| 6 | 14. | 33. | 49. | 35. | 27. | 13. | 32. | 11. | 11. | 11. | 10. | 11. | 12. | 12. | 12. | 10. | 39. | 45. | 23. | 26. | 16. | 18. | 12. | 10. | N/A | 49. | 10. |
| 7 | 8. | 19. | 12. | 43. | 33. | 63. | 29. | 11. | 14. | 12. | 10. | 14. | 15. | 15. | 14. | 15. | 15. | 11. | 11. | 32. | 12. | 20. | 9. | 7. | N/A | 63. | 7. |
| 8 | 12. | 9. | 8. | 7. | 7. | 6. | 8. | 8. | 19. | 47. | 26. | 23. | 31. | 34. | 61. | 43. | 25. | 11. | 19. | 45. | 5. | 12. | 41. | 55. | N/A | 61. | 5. |
| 9 | 32. | 30. | 4. | 7. | 51. | 26. | 28. | 39. | 16. | 15. | 32. | 22. | 28. | 52. | 40. | 38. | 18. | 15. | 12. | 37. | 39. | 6. | 40. | 32. | N/A | 52. | 4. |
| 10 | 5. | 6. | 4. | 4. | 4. | 3. | 21. | 35. | 18. | 11. | 14. | 16. | 22. | 26. | 26. | 19. | 30. | 23. | 19. | 10. | 11. | 14. | 13. | 14. | N/A | 35. | 3. |
| 11 | 50. | 33. | 21. | 11. | 28. | 31. | 28. | 52. | 19. | 39. | 22. | 32. | 16. | 16. | 15. | 22. | 18. | 14. | 12. | 19. | 9. | 4. | 48. | 4. | N/A | 52. | 4. |
| 12 | 4. | 4. | 4. | 29. | 20. | 14. | 15. | 14. | 13. | 17. | 17. | 17. | 13. | 22. | 18. | 20. | 15. | 10. | 9. | 12. | 15. | 30. | 28. | 20. | N/A | 30. | 4. |
| 13 | 15. | 14. | 13. | 14. | 12. | 12. | 13. | 13. | 15. | 15. | 16. | 16. | 17. | 19. | 19. | 16. | 16. | 15. | 15. | 13. | 14. | 14. | 15. | 14. | N/A | 19. | 12. |
| 14 | 14. | 15. | 17. | 38. | 17. | 4. | 4. | 7. | 18. | 45. | 53. | 51. | 29. | 23. | 31. | 63. | 78. | 23. | 11. | 13. | 11. | 7. | 6. | 5. | N/A | 78. | 4. |
| 15 | 5. | 8. | 16. | 41. | 33. | 13. | 9. | 11. | 12. | 15. | 18. | 19. | 17. | 17. | 22. | 13. | 10. | 11. | 10. | 11. | 13. | 10. | 12. | 13. | N/A | 41. | 5. |
| 16 | 12. | 15. | 14. | 15. | 15. | 18. | 11. | 21. | 20. | 19. | 32. | 16. | 13. | 12. | 12. | 32. | 14. | 13. | 16. | 16. | 12. | 17. | 15. | 35. | N/A | 35. | 11. |
| 17 | 58. | 16. | 15. | 16. | 13. | 13. | 13. | 14. | 13. | 14. | 16. | 17. | 31. | 29. | 24. | 23. | 19. | 20. | 23. | 15. | 7. | 7. | 6. | 12. | N/A | 58. | 6. |
| 18 | 16. | 25. | 25. | 62. | 22. | 64. | 30. | 9. | 30. | 18. | 18. | 15. | ***** | ***** | ***** | 17. | 11. | 10. | 9. | 8. | 10. | 10. | 9. | 9. | N/A | 64. | 8. |
| 19 | 10. | 8. | 10. | 22. | 10. | 10. | 11. | 20. | 13. | 19. | 22. | 13. | 20. | 17. | 20. | 13. | 13. | 13. | 14. | 8. | 12. | 10. | 11. | 9. | N/A | 22. | 8. |
| 20 | 12. | 12. | 11. | 28. | 16. | 10. | 25. | 17. | 17. | 11. | 13. | 14. | 18. | 17. | 14. | 15. | 25. | 13. | 17. | 14. | 15. | 11. | 22. | 5. | N/A | 28. | 5. |
| 21 | 5. | 4. | 4. | 5. | 5. | 9. | 11. | 38. | 22. | 34. | 30. | 42. | 32. | 39. | 16. | 29. | 31. | 34. | 48. | 18. | 11. | 4. | 5. | 5. | N/A | 48. | 4. |
| 22 | 10. | 6. | 18. | 10. | 66. | 48. | 22. | 12. | 12. | 15. | 14. | 16. | 21. | 15. | 15. | 13. | 15. | 13. | 9. | 8. | 9. | 11. | 10. | 21. | N/A | 66. | 6. |
| 23 | 7. | 22. | 35. | 9. | 19. | 9. | 11. | 33. | 43. | 32. | 24. | 22. | 18. | 21. | 17. | 26. | 20. | 18. | 12. | 12. | 11. | 11. | 13. | 22. | N/A | 43. | 7. |
| 24 | 17. | 37. | 34. | 36. | 28. | 34. | 41. | 52. | 11. | 15. | 24. | 21. | 16. | 20. | 21. | 26. | 26. | 33. | 17. | 25. | 14. | 5. | 4. | 4. | N/A | 52. | 4. |
| 25 | 4. | 5. | 5. | 6. | 68. | 42. | 5. | 30. | 34. | 35. | 16. | 24. | 42. | 22. | 22. | 19. | 14. | 12. | 10. | 17. | 15. | 7. | 4. | 65. | N/A | 68. | 4. |
| 26 | 25. | 8. | 9. | 40. | 23. | 30. | 27. | ***** | ***** | 25. | 10. | 15. | 20. | 19. | 21. | 14. | 23. | 14. | 9. | 8. | 6. | 7. | 9. | 37. | N/A | 40. | 6. |
| 27 | 54. | 10. | 44. | 30. | 27. | 14. | 14. | 16. | 20. | 19. | 15. | 13. | 19. | 10. | 29. | 25. | 15. | 14. | 15. | 21. | 29. | 16. | 15. | 14. | N/A | 54. | 10. |
| 28 | 14. | 13. | 18. | 5. | 5. | 5. | 6. | 6. | 10. | 38. | 26. | 35. | 32. | 32. | 15. | 19. | 24. | 8. | 37. | 16. | 20. | 15. | 44. | 16. | N/A | 44. | 5. |
| 29 | 5. | 5. | 5. | 4. | 4. | 23. | 42. | 21. | 47. | 25. | 19. | 14. | 16. | 16. | 18. | 18. | 14. | 10. | 10. | 17. | 10. | 11. | 34. | 58. | N/A | 58. | 4. |
| 30 | 13. | 11. | 14. | 13. | 14. | 13. | 15. | 15. | 15. | 15. | 18. | 22. | 22. | 22. | 27. | 27. | 27. | 18. | 29. | 29. | 17. | 6. | 5. | 5. | N/A | 29. | 5. |
| 31 | 5. | 13. | 73. | 34. | 30. | 13. | ***** | ***** | ***** | ***** | 15. | 30. | 29. | 28. | 35. | 12. | 15. | 39. | 17. | 13. | 13. | 17. | 19. | 16. | N/A | 73. | 5. |
| Mean | N/A | N/A | N/A | N/A | N/A | N/A | N/A | N/A | N/A | N/A | N/A | N/A | N/A | N/A | N/A | N/A | N/A | N/A | N/A | N/A | N/A | N/A | N/A | N/A | Monthly mean = | | N/A |
| Max. | 58. | 37. | 73. | 62. | 68. | 64. | 42. | 52. | 47. | 47. | 56. | 51. | 42. | 52. | 61. | 63. | 78. | 45. | 55. | 45. | 39. | 30. | 48. | 65. | Monthly max. = | | 78. |
| Min. | 4. | 4. | 4. | 4. | 4. | 3. | 4. | 6. | 7. | 10. | 10. | 11. | 10. | 10. | 12. | 10. | 10. | 8. | 9. | 8. | 5. | 4. | 4. | 4. | Monthly min. = | | 3. |

TOTAL NUMBER OF DATA HOURS IN MONTH: 740
Number of hours of bad or missing data: 9
**** designates missing or lost data

Current % recovery = 98.8

N/A: A sigma theta mean is not physically meaningful.

table created at 11: 3, 4/12/1995

MONTHLY SUMMARY
REL. HUMID.
(Degrees)
INPUT FILE: alls1met.out

Bechtel Environmental, Inc.

Met Data for Site 1
MAY 1994

| Day | Hour 1 | 2 | 3 | 4 | 5 | 6 | 7 | 8 | 9 | 10 | 11 | 12 | 13 | 14 | 15 | 16 | 17 | 18 | 19 | 20 | 21 | 22 | 23 | 24 | Mean | Max. | Min. |
|---|---|---|---|---|---|---|---|---|---|---|---|---|---|---|---|---|---|---|---|---|---|---|---|---|---|---|---|
| 1 | 89.4 | 88.1 | 90.8 | 93.3 | 95.9 | 93.4 | 88.6 | 84.7 | 80.8 | 71.3 | 60.8 | 51.4 | 44.0 | 41.2 | 38.4 | 35.4 | 33.0 | 31.9 | 30.7 | 34.5 | 35.7 | 35.7 | 41.2 | 47.4 | 59.9 | 95.9 | 30.7 |
| 2 | 46.3 | 44.7 | 45.2 | 45.7 | 47.8 | 46.5 | 49.8 | 45.7 | 40.8 | 38.2 | 33.1 | 27.8 | 29.6 | 26.9 | 25.8 | 25.6 | 32.0 | 31.8 | 34.3 | 44.0 | 46.6 | 56.9 | 52.4 | 47.7 | 40.2 | 56.9 | 25.6 |
| 3 | 49.9 | 64.5 | 65.2 | 64.4 | 68.5 | 72.6 | 78.0 | 67.0 | 59.2 | 50.2 | 39.4 | 26.1 | 23.8 | 22.6 | 21.9 | 23.2 | 23.7 | 24.4 | 25.7 | 31.9 | 34.6 | 40.0 | 46.7 | 49.0 | 44.7 | 78.0 | 21.9 |
| 4 | 50.8 | 53.2 | 52.0 | 52.0 | 51.3 | 52.1 | 50.7 | 50.4 | 47.6 | 45.0 | 36.0 | 33.7 | 34.3 | 36.0 | 38.8 | 35.2 | 40.0 | 63.7 | 70.9 | 69.7 | 68.6 | 79.0 | 93.4 | 94.0 | 54.1 | 94.0 | 33.7 |
| 5 | 88.0 | 83.0 | 89.0 | 91.0 | 95.0 | 94.0 | 92.0 | 90.0 | 86.0 | 75.0 | 61.0 | 62.0 | 56.0 | 48.0 | 47.0 | 47.0 | 48.0 | 48.0 | 52.0 | 60.0 | 62.0 | 70.0 | 73.0 | 74.0 | 70.5 | 95.0 | 47.0 |
| 6 | 76.0 | 78.0 | 74.0 | 84.0 | 77.0 | 78.0 | 72.0 | 68.7 | 67.0 | 56.3 | 39.2 | 33.1 | 29.2 | 24.6 | 21.6 | 21.1 | 23.8 | 26.4 | 37.2 | 43.2 | 45.0 | 47.5 | 59.1 | 55.0 | 51.5 | 84.0 | 21.1 |
| 7 | 53.2 | 66.9 | 67.8 | 75.5 | 79.0 | 80.4 | 76.8 | 70.5 | 55.5 | 56.3 | 54.3 | 46.4 | 39.8 | 36.8 | 35.3 | 32.0 | 30.2 | 32.1 | 34.6 | 38.5 | 48.5 | 55.7 | 65.6 | 58.2 | 53.7 | 80.4 | 30.2 |
| 8 | 59.6 | 59.2 | 61.1 | 60.9 | 59.9 | 58.8 | 60.8 | 56.8 | 49.7 | 44.6 | 45.8 | 48.1 | 45.1 | 42.5 | 41.5 | 42.1 | 38.1 | 38.6 | 40.5 | 45.6 | 53.2 | 53.9 | 52.2 | 56.8 | 50.6 | 61.1 | 38.1 |
| 9 | 70.0 | 64.4 | 65.9 | 69.0 | 79.3 | 80.2 | 69.3 | 64.4 | 63.5 | 57.9 | 43.5 | 38.1 | 28.5 | 21.7 | 19.3 | 18.4 | 17.5 | 16.8 | 18.6 | 26.0 | 28.6 | 38.1 | 42.5 | 46.7 | 45.3 | 80.2 | 16.8 |
| 10 | 46.5 | 47.9 | 52.1 | 51.4 | 56.2 | 58.8 | 57.7 | 51.4 | 42.9 | 45.4 | 44.6 | 38.0 | 33.6 | 30.0 | 29.6 | 26.4 | 22.4 | 20.5 | 20.7 | 27.0 | 31.9 | 31.4 | 30.0 | 28.5 | 38.5 | 58.8 | 20.5 |
| 11 | 31.5 | 29.9 | 38.9 | 47.5 | 56.2 | 56.8 | 55.0 | 50.7 | 42.0 | 33.9 | 30.1 | 30.0 | 32.5 | 28.8 | 25.5 | 22.3 | 20.8 | 18.9 | 19.6 | 24.1 | 29.0 | 35.1 | 41.6 | 45.5 | 35.3 | 56.8 | 18.9 |
| 12 | 48.5 | 51.9 | 54.4 | 55.6 | 51.4 | 48.3 | 50.9 | 52.5 | 53.6 | 50.3 | 45.2 | 42.1 | 42.2 | 35.4 | 31.8 | 35.7 | 34.4 | 36.0 | 49.6 | 52.2 | 56.4 | 70.1 | 77.1 | 74.7 | 50.0 | 77.1 | 31.8 |
| 13 | 60.5 | 63.3 | 72.7 | 79.9 | 77.8 | 75.6 | 68.4 | 64.5 | 57.2 | 53.0 | 46.3 | 40.1 | 36.3 | 31.8 | 27.9 | 26.0 | 23.4 | 19.0 | 17.3 | 17.3 | 17.3 | 17.0 | 17.7 | 16.6 | 42.8 | 79.9 | 16.6 |
| 14 | 15.4 | 15.6 | 17.8 | 33.3 | 37.5 | 43.8 | 43.3 | 40.3 | 26.5 | 20.7 | 17.5 | 19.2 | 18.5 | 17.4 | 16.0 | 15.1 | 16.3 | 17.8 | 18.0 | 17.8 | 17.5 | 20.8 | 20.7 | 23.5 | 22.9 | 43.8 | 15.1 |
| 15 | 24.4 | 23.6 | 22.2 | 26.9 | 31.1 | 33.6 | 32.7 | 31.0 | 30.0 | 29.0 | 28.0 | 22.0 | 28.0 | 45.0 | 48.0 | 29.0 | 25.0 | 28.0 | 30.0 | 34.0 | 35.0 | 37.0 | 35.0 | 39.0 | 31.1 | 48.0 | 22.0 |
| 16 | 35.0 | 36.0 | 40.0 | 43.0 | 47.0 | 51.0 | 53.0 | 50.0 | 46.0 | 43.0 | 37.0 | 46.0 | 52.0 | 59.0 | 63.0 | 62.0 | 57.0 | 54.0 | 59.0 | 72.0 | 82.0 | 96.0 | 97.0 | 97.0 | 57.4 | 97.0 | 35.0 |
| 17 | 97.0 | 97.0 | 96.0 | 96.0 | 96.0 | 97.0 | 97.0 | 94.0 | 86.0 | 78.0 | 70.0 | 61.0 | 63.0 | 72.0 | 64.0 | 62.0 | 56.0 | 54.0 | 52.0 | 57.0 | 66.0 | 68.0 | 75.0 | 77.0 | 76.3 | 97.0 | 52.0 |
| 18 | 84.0 | 81.0 | 81.0 | 90.0 | 90.0 | 95.0 | 86.0 | 84.0 | 76.0 | 69.0 | 51.0 | 46.0 | ***** | ***** | ***** | 39.0 | 34.0 | 34.0 | 38.0 | 51.0 | 52.0 | 59.0 | 68.0 | 72.0 | 65.7 | 95.0 | 34.0 |
| 19 | 80.0 | 83.0 | 84.0 | 91.0 | 94.0 | 93.0 | 95.0 | 95.0 | 93.0 | 72.0 | 62.0 | 58.0 | 43.0 | 30.0 | 27.0 | 44.0 | 38.0 | 35.0 | 32.0 | 43.0 | 45.0 | 50.0 | 65.0 | 64.0 | 63.2 | 95.0 | 27.0 |
| 20 | 64.0 | 62.0 | 63.0 | 74.0 | 76.0 | 79.0 | 73.0 | 64.0 | 61.0 | 61.0 | 60.0 | 58.0 | 54.0 | 45.0 | 43.0 | 44.0 | 41.0 | 44.0 | 42.0 | 44.0 | 52.0 | 56.0 | 52.0 | 65.0 | 57.4 | 79.0 | 41.0 |
| 21 | 71.0 | 77.0 | 81.0 | 85.0 | 88.0 | 85.0 | 76.0 | 64.0 | 52.0 | 48.0 | 41.0 | 36.0 | 35.0 | 31.0 | 32.0 | 30.0 | 26.0 | 25.0 | 24.0 | 16.0 | 19.0 | 24.0 | 33.0 | 40.0 | 47.5 | 88.0 | 16.0 |
| 22 | 43.0 | 46.0 | 46.0 | 48.0 | 59.0 | 60.0 | 60.0 | 70.0 | 73.0 | 67.0 | 56.0 | 44.0 | 42.0 | 42.0 | 37.0 | 30.0 | 28.0 | 22.0 | 26.0 | 30.0 | 32.0 | 31.0 | 31.0 | 40.0 | 44.3 | 73.0 | 22.0 |
| 23 | 48.0 | 51.0 | 56.0 | 61.0 | 71.0 | 68.0 | 57.0 | 53.0 | 47.0 | 44.0 | 42.0 | 33.0 | 23.0 | 25.0 | 24.0 | 21.0 | 21.0 | 20.0 | 18.0 | 25.0 | 30.0 | 31.0 | 29.0 | 29.0 | 38.6 | 71.0 | 18.0 |
| 24 | 35.0 | 44.0 | 53.0 | 58.0 | 58.0 | 67.0 | 52.0 | 52.0 | 58.0 | 54.0 | 41.0 | 35.0 | 28.0 | 22.0 | 18.0 | 24.0 | 22.0 | 19.0 | 16.0 | 20.0 | 24.0 | 28.0 | 34.0 | 38.0 | 37.5 | 67.0 | 16.0 |
| 25 | 41.0 | 44.0 | 48.0 | 52.0 | 65.0 | 74.0 | 62.0 | 49.0 | 42.0 | 36.0 | 35.0 | 28.0 | 20.0 | 19.0 | 20.0 | 19.0 | 19.0 | 19.0 | 21.0 | 24.0 | 32.0 | 32.0 | 31.0 | 44.0 | 36.5 | 74.0 | 19.0 |
| 26 | 44.0 | 42.0 | 45.0 | 46.0 | 56.0 | 66.0 | 52.0 | ***** | ***** | 37.0 | 31.0 | 29.0 | 28.0 | 26.0 | 22.0 | 29.0 | 32.0 | 29.0 | 32.0 | 34.0 | 35.0 | 36.0 | 42.0 | 41.0 | 37.9 | 66.0 | 22.0 |
| 27 | 40.0 | 45.0 | 50.0 | 54.0 | 59.0 | 52.0 | 60.0 | 66.0 | 57.0 | 55.0 | 53.0 | 74.0 | 74.0 | 65.0 | 50.0 | 54.0 | 86.0 | 88.0 | 89.0 | 84.0 | 80.0 | 66.0 | 70.0 | 72.0 | 64.3 | 89.0 | 40.0 |
| 28 | 75.0 | 72.0 | 68.0 | 82.0 | 87.0 | 83.0 | 88.0 | 76.0 | 60.0 | 43.0 | 45.0 | 48.0 | 45.0 | 40.0 | 40.0 | 60.0 | 74.0 | 78.0 | 64.0 | 55.0 | 48.0 | 48.0 | 62.0 | 65.0 | 62.8 | 88.0 | 40.0 |
| 29 | 70.0 | 73.0 | 75.0 | 75.0 | 80.0 | 84.0 | 82.0 | 70.0 | 55.0 | 58.0 | 50.0 | 42.0 | 40.0 | 32.0 | 32.0 | 30.0 | 30.0 | 35.0 | 32.0 | 32.0 | 32.0 | 31.0 | 33.0 | 45.0 | 50.7 | 84.0 | 30.0 |
| 30 | 49.0 | 40.0 | 38.0 | 41.0 | 44.0 | 43.0 | 44.0 | 41.0 | 41.0 | 42.0 | 37.0 | 34.0 | 32.0 | 31.0 | 29.0 | 29.0 | 27.0 | 26.0 | 25.0 | 28.0 | 40.0 | 41.0 | 52.0 | 54.0 | 37.8 | 54.0 | 25.0 |
| 31 | 57.0 | 59.0 | 63.0 | 73.0 | 76.0 | 74.0 | ***** | ***** | ***** | ***** | 54.0 | 72.0 | 72.0 | 71.0 | 63.0 | 75.0 | 77.0 | 76.0 | 81.0 | 79.0 | 78.0 | 80.0 | 77.0 | 80.0 | 71.9 | 81.0 | 54.0 |
| Mean | 56.2 | 57.6 | 59.9 | 64.5 | 68.1 | 69.2 | 66.1 | 62.6 | 56.9 | 51.1 | 44.8 | 42.0 | 39.1 | 36.6 | 34.4 | 35.0 | 35.4 | 35.9 | 37.1 | 40.6 | 43.8 | 47.3 | 51.6 | 54.2 | Monthly mean = | | 49.6 |
| Max. | 97.0 | 97.0 | 96.0 | 96.0 | 96.0 | 97.0 | 97.0 | 95.0 | 93.0 | 78.0 | 70.0 | 74.0 | 74.0 | 72.0 | 64.0 | 75.0 | 86.0 | 88.0 | 89.0 | 84.0 | 82.0 | 96.0 | 97.0 | 97.0 | Monthly max. = | | 97.0 |
| Min. | 15.4 | 15.6 | 17.8 | 26.9 | 31.1 | 33.6 | 32.7 | 31.0 | 26.5 | 20.7 | 17.5 | 19.2 | 18.5 | 17.4 | 16.0 | 15.1 | 16.3 | 16.8 | 16.0 | 16.0 | 17.3 | 17.0 | 17.7 | 16.6 | Monthly min. = | | 15.1 |

TOTAL NUMBER OF DATA HOURS IN MONTH: 740
Number of hours of bad or missing data: 9
**** designates missing or lost data

Current % recovery = 98.8

N/A: insufficient data available for calculation (a minimum of 75% is required)

table created at 11: 3, 4/12/1995

MONTHLY SUMMARY
WIND SPEED
(Miles Per Hour)
INPUT FILE: alls1met.out

Bechtel Environmental, Inc.

Met Data for Site 1
JUNE 1994

| Day \ Hour | 1 | 2 | 3 | 4 | 5 | 6 | 7 | 8 | 9 | 10 | 11 | 12 | 13 | 14 | 15 | 16 | 17 | 18 | 19 | 20 | 21 | 22 | 23 | 24 | Mean | Max. | Min. |
|---|---|---|---|---|---|---|---|---|---|---|---|---|---|---|---|---|---|---|---|---|---|---|---|---|---|---|---|
| 1 | 15.7 | 15.6 | 16.9 | 13.3 | 10.6 | 7.9 | 13.4 | 14.9 | 17.3 | ***** | 14.8 | 16.7 | 22.0 | 20.6 | 21.8 | 17.3 | 16.7 | 17.3 | 14.6 | 12.2 | 12.4 | 15.3 | 13.2 | 9.0 | 15.2 | 22.0 | 7.9 |
| 2 | 4.9 | 7.6 | 7.4 | 6.5 | 7.0 | 9.7 | 6.3 | 4.1 | 3.4 | 4.4 | 4.6 | 4.7 | 5.9 | 7.9 | 7.7 | 6.8 | 7.7 | 8.0 | 7.9 | 5.6 | 7.3 | 10.6 | 13.2 | 7.7 | 7.0 | 13.2 | 3.4 |
| 3 | 3.6 | 3.5 | 7.8 | 13.7 | 10.3 | 7.2 | 9.9 | 11.0 | 15.6 | 8.4 | 9.9 | 10.3 | 12.4 | 12.6 | 10.9 | 15.4 | 9.9 | 16.7 | 7.1 | 6.2 | 5.2 | 11.7 | 7.9 | 4.2 | 9.6 | 16.7 | 3.5 |
| 4 | 4.4 | 4.3 | 4.0 | 11.4 | 14.4 | 19.0 | 20.8 | 25.8 | 27.0 | 27.0 | 27.1 | 19.4 | 15.2 | 12.4 | 13.1 | 15.5 | 16.7 | 15.9 | 11.6 | 8.3 | 6.1 | 3.7 | 5.6 | 8.8 | 14.1 | 27.1 | 3.7 |
| 5 | 10.1 | 12.2 | 11.5 | 11.5 | 7.9 | 8.4 | 8.3 | 5.6 | 5.3 | 5.7 | 7.1 | 7.2 | 7.9 | 8.5 | 8.6 | 9.5 | 13.9 | 15.2 | 13.0 | 11.9 | 14.1 | 13.4 | 17.2 | 18.0 | 10.5 | 18.0 | 5.3 |
| 6 | 18.6 | 17.8 | 13.1 | 16.6 | 14.6 | 13.5 | 13.8 | 22.1 | 20.5 | 25.0 | 25.1 | 25.1 | 24.6 | 23.4 | 21.3 | 23.3 | 23.4 | 18.4 | 22.8 | 22.8 | 16.4 | 13.0 | 15.9 | 17.6 | 19.5 | 25.1 | 13.0 |
| 7 | 8.5 | 6.4 | 13.2 | 13.0 | 11.7 | 9.4 | 14.1 | 14.7 | 13.2 | 12.7 | 13.5 | 14.6 | 15.3 | 14.2 | 13.8 | 16.2 | 18.5 | 11.1 | 13.0 | 15.1 | 10.6 | 9.0 | 14.7 | 14.9 | 13.0 | 18.5 | 6.4 |
| 8 | 16.0 | 15.3 | 15.3 | 11.9 | 14.7 | 14.9 | 18.3 | 17.2 | 15.9 | 14.5 | 14.0 | 13.7 | 14.0 | 14.5 | 16.2 | 15.9 | 15.7 | 15.8 | 14.1 | 10.7 | 9.7 | 8.1 | 11.3 | 10.1 | 14.1 | 18.3 | 8.1 |
| 9 | 12.3 | 11.9 | 10.4 | 5.0 | 3.9 | 9.4 | 7.6 | 5.3 | 7.9 | 9.2 | 9.1 | 8.7 | 9.3 | 12.4 | 15.7 | 16.5 | 16.9 | 16.3 | 14.2 | 11.4 | 13.9 | 12.3 | 9.8 | 5.7 | 10.6 | 16.9 | 3.9 |
| 10 | 8.8 | 9.3 | 4.4 | 2.5 | 2.0 | 1.3 | 1.8 | 2.8 | 8.8 | 10.3 | 10.6 | 12.0 | 11.5 | 10.8 | 11.6 | 13.5 | 12.0 | 13.6 | 13.9 | 9.5 | 8.0 | 9.2 | 9.5 | 11.4 | 8.7 | 13.9 | 1.3 |
| 11 | 11.1 | 10.7 | 8.2 | 2.7 | 7.0 | 10.8 | 9.7 | 5.8 | 2.8 | 5.8 | 10.6 | 12.7 | 10.8 | 11.1 | 11.2 | 12.4 | 12.6 | 8.9 | 8.1 | 5.9 | 6.3 | 9.4 | 8.1 | 8.2 | 8.8 | 12.7 | 2.7 |
| 12 | 7.0 | 8.9 | 8.2 | 1.7 | 2.3 | 5.6 | 4.1 | 6.2 | 13.1 | 16.4 | 13.6 | 13.1 | 11.9 | 10.4 | 10.9 | 15.0 | 11.1 | 10.6 | 8.0 | 8.4 | 8.4 | 11.9 | 11.9 | 8.6 | 9.5 | 16.4 | 1.7 |
| 13 | 6.1 | 15.9 | 15.7 | 15.6 | 14.4 | 14.0 | 15.3 | 16.3 | 16.4 | 13.8 | 12.7 | 12.3 | 14.2 | 17.1 | 19.7 | 18.9 | 13.1 | 11.6 | 11.2 | 14.8 | 12.8 | 11.2 | 9.7 | 7.9 | 13.8 | 19.7 | 6.1 |
| 14 | 10.9 | 14.6 | 15.3 | 19.4 | 16.7 | 15.5 | 19.3 | 23.8 | 26.3 | 28.1 | 30.6 | 30.0 | 26.2 | 25.7 | 24.0 | 22.6 | 21.9 | 19.6 | 17.2 | 8.1 | 6.0 | 7.5 | 6.3 | 7.3 | 18.5 | 30.6 | 6.0 |
| 15 | 6.7 | 8.7 | 7.9 | 4.0 | 4.6 | 3.0 | 4.7 | 5.6 | 6.0 | 6.2 | 5.3 | 9.0 | 11.1 | 14.6 | 17.9 | 17.9 | 17.0 | 16.1 | 13.4 | 11.1 | 12.0 | 9.6 | 12.4 | 13.5 | 9.9 | 17.9 | 3.0 |
| 16 | 11.8 | 12.0 | 8.8 | 6.9 | 8.7 | 11.7 | 15.2 | 14.4 | 16.9 | 13.8 | 14.9 | 12.6 | 13.1 | 15.1 | 15.9 | 16.7 | 16.2 | 15.4 | 15.1 | 13.4 | 8.2 | 9.8 | 9.6 | 8.9 | 12.7 | 16.9 | 6.9 |
| 17 | 10.2 | 10.4 | 6.5 | 5.7 | 9.3 | 7.8 | 7.4 | 4.5 | 6.6 | 7.7 | 9.2 | 9.7 | 10.3 | 10.1 | 9.5 | 10.5 | 9.9 | 8.1 | 6.8 | 5.5 | 4.6 | 7.1 | 9.5 | 11.2 | 8.3 | 11.2 | 4.5 |
| 18 | 4.3 | 4.5 | 5.0 | 8.0 | 9.3 | 8.6 | 6.2 | 10.1 | 14.9 | 15.0 | 14.0 | 11.7 | 10.0 | 8.3 | 8.4 | 8.1 | 9.1 | 6.3 | 3.4 | 2.7 | 2.4 | 5.0 | 5.1 | 4.7 | 7.7 | 15.0 | 2.4 |
| 19 | 2.1 | 5.4 | 5.4 | 3.9 | 8.1 | 11.7 | 10.5 | 14.1 | 15.5 | 12.0 | 10.8 | 9.9 | 8.7 | 8.1 | 8.7 | 10.4 | 9.1 | 5.1 | 5.5 | 4.2 | 7.9 | 13.5 | 13.9 | 10.8 | 9.0 | 15.5 | 2.1 |
| 20 | 7.4 | 3.5 | 8.7 | 7.0 | 7.5 | 10.7 | 4.8 | 3.9 | 4.3 | 7.5 | 7.2 | 9.2 | 9.5 | 9.5 | 10.6 | 11.1 | 8.2 | 6.2 | 5.5 | 8.4 | 11.5 | 12.4 | 13.6 | 15.0 | 8.5 | 15.0 | 3.5 |
| 21 | 16.3 | 18.5 | 15.5 | 9.6 | 4.7 | 6.7 | 11.1 | 7.0 | 12.9 | 14.5 | 12.0 | 9.6 | 9.1 | 12.6 | 10.7 | 8.5 | 7.0 | 15.3 | 20.4 | 18.8 | 28.1 | 20.2 | 8.1 | 7.5 | 12.7 | 28.1 | 4.7 |
| 22 | 9.7 | 14.1 | 10.5 | 4.6 | 8.1 | 7.7 | 5.4 | 6.3 | 4.6 | 4.9 | 5.2 | 6.5 | 9.2 | 8.3 | 7.0 | 6.8 | 12.5 | 20.3 | 10.5 | 6.3 | 11.5 | 12.7 | 10.2 | 7.3 | 8.8 | 20.3 | 4.6 |
| 23 | 13.1 | 9.7 | 4.6 | 3.4 | 2.6 | 5.5 | 2.4 | 6.2 | 8.3 | 10.7 | 14.7 | 15.7 | 16.7 | 16.8 | 17.0 | 18.2 | 18.4 | 14.9 | 13.3 | 9.2 | 8.8 | 10.6 | 5.6 | 10.0 | 10.7 | 18.4 | 2.4 |
| 24 | 13.2 | 13.9 | 12.2 | 12.9 | 4.8 | 7.0 | 16.5 | 20.7 | 17.7 | 20.6 | 19.6 | 15.9 | 17.5 | 13.2 | 17.3 | 15.4 | 13.3 | 12.6 | 13.2 | 12.4 | 8.6 | 7.1 | 9.7 | 11.1 | 13.6 | 20.7 | 4.8 |
| 25 | 12.0 | 12.5 | 10.4 | 7.6 | 11.9 | 7.0 | 3.1 | 6.6 | 4.4 | 4.4 | 5.4 | 5.8 | 7.8 | 9.9 | 10.1 | 10.6 | 8.8 | 6.3 | 5.7 | 4.2 | 8.1 | 5.9 | 5.2 | 7.1 | 7.5 | 12.5 | 3.1 |
| 26 | 6.8 | 17.2 | 18.7 | 21.7 | 21.1 | 17.7 | 19.7 | 21.0 | 22.2 | 22.7 | 23.2 | 27.8 | 24.7 | 21.7 | 22.6 | 25.3 | 24.5 | 26.2 | 21.6 | 20.1 | 16.4 | 15.4 | 16.4 | 16.6 | 20.5 | 27.8 | 6.8 |
| 27 | 13.2 | 11.7 | 8.3 | 8.4 | 8.6 | 11.3 | 8.3 | 6.5 | 8.9 | 8.6 | 7.5 | 7.9 | 9.0 | 9.2 | 10.4 | 10.7 | 9.0 | 9.2 | 7.9 | 8.3 | 6.2 | 7.1 | 11.5 | 10.5 | 9.1 | 13.2 | 6.2 |
| 28 | 11.0 | 8.6 | 14.2 | 6.5 | 6.5 | 4.6 | 7.3 | 6.9 | 5.5 | 6.2 | 6.0 | 6.8 | 7.2 | 8.6 | 9.7 | 8.1 | 8.6 | 10.4 | 8.7 | 5.1 | 6.3 | 10.4 | 10.6 | 11.3 | 8.1 | 14.2 | 4.6 |
| 29 | 6.6 | 3.6 | 5.0 | 5.4 | 10.7 | 9.9 | 4.2 | 2.6 | 10.5 | 15.1 | 19.1 | 20.2 | 25.1 | 25.2 | 23.5 | 21.6 | 20.2 | 16.4 | 14.9 | 13.5 | 11.8 | 12.0 | 12.7 | 12.0 | 13.4 | 25.2 | 2.6 |
| 30 | 10.4 | 6.7 | 8.9 | 12.1 | 8.3 | 5.4 | 8.4 | 3.9 | 4.8 | 4.5 | 5.8 | 7.5 | 8.5 | 12.4 | 12.7 | 11.9 | 11.6 | 10.9 | 10.0 | 8.2 | 11.1 | 13.3 | 5.2 | 7.2 | 8.7 | 13.3 | 3.9 |
| Mean | 9.8 | 10.5 | 10.1 | 9.1 | 9.1 | 9.4 | 9.9 | 10.5 | 11.9 | 12.3 | 12.8 | 12.9 | 13.3 | 13.5 | 14.0 | 14.4 | 13.8 | 13.3 | 11.8 | 10.1 | 10.0 | 10.6 | 10.5 | 10.1 | Monthly mean = | | 11.4 |
| Max. | 18.6 | 18.5 | 18.7 | 21.7 | 21.1 | 19.0 | 20.8 | 25.8 | 27.0 | 28.1 | 30.6 | 30.0 | 26.2 | 25.7 | 24.0 | 25.3 | 24.5 | 26.2 | 22.8 | 22.8 | 28.1 | 20.2 | 17.2 | 18.0 | Monthly max. = | | 30.6 |
| Min. | 2.1 | 3.5 | 4.0 | 1.7 | 2.0 | 1.3 | 1.8 | 2.6 | 2.8 | 4.4 | 4.6 | 4.7 | 5.9 | 7.9 | 7.0 | 6.8 | 7.0 | 5.1 | 3.4 | 2.7 | 2.4 | 3.7 | 5.1 | 4.2 | Monthly min. = | | 1.3 |

TOTAL NUMBER OF DATA HOURS IN MONTH: 720
Number of hours of bad or missing data: 1
**** designates missing or lost data

Current % recovery = 99.9

N/A: insufficient data available for calculation (a minimum of 75% is required)

table created at 11: 3, 4/12/1995

MONTHLY SUMMARY
WIND DIRECTION
(Degrees)
INPUT FILE: allslmet.out

Bechtel Environmental, Inc.

Met Data for Site 1
JUNE 1994

| Day | Hour 1 | 2 | 3 | 4 | 5 | 6 | 7 | 8 | 9 | 10 | 11 | 12 | 13 | 14 | 15 | 16 | 17 | 18 | 19 | 20 | 21 | 22 | 23 | 24 | Mean | Max. | Min. |
|---|---|---|---|---|---|---|---|---|---|---|---|---|---|---|---|---|---|---|---|---|---|---|---|---|---|---|---|
| 1 | 235.0 | 235.0 | 234.0 | 236.0 | 231.0 | 243.0 | 235.0 | 241.0 | 236.0 | ***** | 256.0 | 265.0 | 274.0 | 266.0 | 257.0 | 243.0 | 247.0 | 251.0 | 246.0 | 234.0 | 231.0 | 229.0 | 226.0 | 212.0 | 241.9 | 274.0 | 212.0 |
| 2 | 114.0 | 120.0 | 120.0 | 117.0 | 117.0 | 124.0 | 121.0 | 298.0 | 52.0 | 31.0 | 60.0 | 44.0 | 359.0 | 330.0 | 354.0 | 18.0 | 11.0 | 8.0 | 17.0 | 46.0 | 118.0 | 123.0 | 121.0 | 121.0 | 62.7 | 359.0 | 8.0 |
| 3 | 102.0 | 80.0 | 130.0 | 122.0 | 139.0 | 288.0 | 107.0 | 139.0 | 146.0 | 322.0 | 15.0 | 28.0 | 16.0 | 9.0 | 160.0 | 194.0 | 209.0 | 278.0 | 220.0 | 112.0 | 124.0 | 124.0 | 126.0 | 117.0 | 137.8 | 322.0 | 9.0 |
| 4 | 77.0 | 302.0 | 135.0 | 229.0 | 229.0 | 228.0 | 233.0 | 246.0 | 246.0 | 253.0 | 258.0 | 263.0 | 265.0 | 264.0 | 262.0 | 267.0 | 270.0 | 267.0 | 272.0 | 233.0 | 241.0 | 180.0 | 127.0 | 128.0 | 228.1 | 302.0 | 77.0 |
| 5 | 122.0 | 125.0 | 125.0 | 127.0 | 106.0 | 109.0 | 123.0 | 87.0 | 52.0 | 20.0 | 14.0 | 19.0 | 21.0 | 31.0 | 357.0 | 197.0 | 202.0 | 181.0 | 190.0 | 180.0 | 178.0 | 140.0 | 133.0 | 129.0 | 123.7 | 357.0 | 14.0 |
| 6 | 132.0 | 136.0 | 146.0 | 232.0 | 232.0 | 235.0 | 240.0 | 247.0 | 239.0 | 249.0 | 253.0 | 256.0 | 268.0 | 262.0 | 267.0 | 268.0 | 273.0 | 268.0 | 267.0 | 264.0 | 248.0 | 210.0 | 135.0 | 129.0 | 227.3 | 273.0 | 129.0 |
| 7 | 135.0 | 125.0 | 221.0 | 215.0 | 225.0 | 277.0 | 250.0 | 235.0 | 238.0 | 240.0 | 256.0 | 259.0 | 256.0 | 259.0 | 257.0 | 263.0 | 253.0 | 233.0 | 270.0 | 270.0 | 209.0 | 175.0 | 216.0 | 231.0 | 232.0 | 277.0 | 125.0 |
| 8 | 232.0 | 221.0 | 243.0 | 245.0 | 236.0 | 232.0 | 238.0 | 245.0 | 257.0 | 254.0 | 261.0 | 266.0 | 266.0 | 259.0 | 260.0 | 264.0 | 264.0 | 260.0 | 255.0 | 239.0 | 227.0 | 215.0 | 204.0 | 204.0 | 243.6 | 266.0 | 204.0 |
| 9 | 212.0 | 215.0 | 218.0 | 101.0 | 125.0 | 121.0 | 119.0 | 119.0 | 285.0 | 289.0 | 282.0 | 276.0 | 257.0 | 250.0 | 249.0 | 257.0 | 252.0 | 244.0 | 245.0 | 234.0 | 224.0 | 220.0 | 218.0 | 164.0 | 215.7 | 289.0 | 101.0 |
| 10 | 188.0 | 112.0 | 305.0 | 83.0 | 100.0 | 34.0 | 87.0 | 275.0 | 294.0 | 274.0 | 288.0 | 286.0 | 292.0 | 296.0 | 287.0 | 275.0 | 257.0 | 258.0 | 260.0 | 247.0 | 209.0 | 114.0 | 112.0 | 116.0 | 210.4 | 305.0 | 34.0 |
| 11 | 111.0 | 113.0 | 111.0 | 330.0 | 128.0 | 133.0 | 121.0 | 115.0 | 63.0 | 337.0 | 302.0 | 270.0 | 278.0 | 296.0 | 289.0 | 272.0 | 272.0 | 228.0 | 215.0 | 186.0 | 127.0 | 264.0 | 280.0 | 126.0 | 207.0 | 337.0 | 63.0 |
| 12 | 90.0 | 124.0 | 5.0 | 162.0 | 333.0 | 191.0 | 128.0 | 215.0 | 237.0 | 254.0 | 259.0 | 266.0 | 254.0 | 255.0 | 246.0 | 264.0 | 254.0 | 253.0 | 214.0 | 155.0 | 128.0 | 116.0 | 122.0 | 129.0 | 193.9 | 333.0 | 5.0 |
| 13 | 271.0 | 196.0 | 233.0 | 234.0 | 224.0 | 227.0 | 231.0 | 243.0 | 241.0 | 237.0 | 244.0 | 274.0 | 284.0 | 282.0 | 276.0 | 271.0 | 259.0 | 258.0 | 246.0 | 254.0 | 275.0 | 270.0 | 244.0 | 199.0 | 248.9 | 284.0 | 196.0 |
| 14 | 183.0 | 183.0 | 237.0 | 252.0 | 248.0 | 241.0 | 254.0 | 256.0 | 254.0 | 257.0 | 259.0 | 263.0 | 257.0 | 263.0 | 262.0 | 259.0 | 263.0 | 270.0 | 271.0 | 225.0 | 219.0 | 233.0 | 126.0 | 114.0 | 235.4 | 271.0 | 114.0 |
| 15 | 123.0 | 119.0 | 96.0 | 88.0 | 115.0 | 323.0 | 292.0 | 322.0 | 329.0 | 333.0 | 33.0 | 315.0 | 298.0 | 286.0 | 275.0 | 272.0 | 273.0 | 268.0 | 265.0 | 267.0 | 257.0 | 222.0 | 242.0 | 235.0 | 325.3 | 333.0 | 33.0 |
| 16 | 231.0 | 235.0 | 253.0 | 242.0 | 225.0 | 239.0 | 245.0 | 241.0 | 260.0 | 259.0 | 260.0 | 240.0 | 254.0 | 274.0 | 272.0 | 277.0 | 269.0 | 268.0 | 262.0 | 259.0 | 234.0 | 234.0 | 235.0 | 231.0 | 250.0 | 277.0 | 225.0 |
| 17 | 121.0 | 124.0 | 100.0 | 118.0 | 119.0 | 117.0 | 111.0 | 34.0 | 16.0 | 9.0 | 2.0 | 4.0 | 7.0 | 3.0 | 8.0 | 2.0 | 350.0 | 6.0 | 31.0 | 75.0 | 69.0 | 96.0 | 120.0 | 123.0 | 58.5 | 350.0 | 2.0 |
| 18 | 132.0 | 114.0 | 135.0 | 277.0 | 151.0 | 208.0 | 230.0 | 264.0 | 267.0 | 266.0 | 272.0 | 269.0 | 292.0 | 300.0 | 317.0 | 310.0 | 299.0 | 303.0 | 313.0 | 70.0 | 143.0 | 126.0 | 125.0 | 120.0 | 221.0 | 317.0 | 70.0 |
| 19 | 80.0 | 141.0 | 177.0 | 123.0 | 240.0 | 238.0 | 236.0 | 248.0 | 262.0 | 272.0 | 285.0 | 305.0 | 314.0 | 310.0 | 314.0 | 305.0 | 299.0 | 342.0 | 62.0 | 132.0 | 126.0 | 123.0 | 123.0 | 125.0 | 215.9 | 342.0 | 62.0 |
| 20 | 136.0 | 105.0 | 115.0 | 160.0 | 112.0 | 116.0 | 247.0 | 317.0 | 46.0 | 48.0 | 24.0 | 10.0 | 354.0 | 356.0 | 6.0 | 330.0 | 356.0 | 21.0 | 36.0 | 104.0 | 196.0 | 144.0 | 139.0 | 126.0 | 45.2 | 356.0 | 6.0 |
| 21 | 130.0 | 134.0 | 142.0 | 144.0 | 151.0 | 112.0 | 118.0 | 291.0 | 268.0 | 269.0 | 260.0 | 266.0 | 273.0 | 272.0 | 278.0 | 314.0 | 22.0 | 173.0 | 114.0 | 138.0 | 130.0 | 138.0 | 124.0 | 93.0 | 181.4 | 314.0 | 22.0 |
| 22 | 101.0 | 129.0 | 101.0 | 92.0 | 114.0 | 112.0 | 106.0 | 64.0 | 50.0 | 58.0 | 78.0 | 356.0 | 315.0 | 330.0 | 36.0 | 337.0 | 232.0 | 210.0 | 50.0 | 96.0 | 125.0 | 125.0 | 123.0 | 116.0 | 54.0 | 356.0 | 36.0 |
| 23 | 120.0 | 129.0 | 128.0 | 86.0 | 91.0 | 301.0 | 339.0 | 294.0 | 291.0 | 275.0 | 266.0 | 266.0 | 260.0 | 255.0 | 259.0 | 273.0 | 273.0 | 253.0 | 256.0 | 256.0 | 219.0 | 219.0 | 120.0 | 127.0 | 223.2 | 339.0 | 86.0 |
| 24 | 124.0 | 125.0 | 125.0 | 129.0 | 134.0 | 126.0 | 252.0 | 247.0 | 262.0 | 267.0 | 267.0 | 257.0 | 259.0 | 274.0 | 275.0 | 272.0 | 261.0 | 240.0 | 246.0 | 252.0 | 232.0 | 130.0 | 121.0 | 125.0 | 208.4 | 275.0 | 121.0 |
| 25 | 124.0 | 125.0 | 123.0 | 108.0 | 121.0 | 166.0 | 165.0 | 116.0 | 50.0 | 44.0 | 16.0 | 19.0 | 358.0 | 330.0 | 338.0 | 355.0 | 321.0 | 358.0 | 59.0 | 120.0 | 137.0 | 210.0 | 26.0 | 117.0 | 57.8 | 358.0 | 16.0 |
| 26 | 119.0 | 239.0 | 242.0 | 245.0 | 252.0 | 241.0 | 244.0 | 250.0 | 249.0 | 248.0 | 241.0 | 257.0 | 265.0 | 254.0 | 252.0 | 261.0 | 252.0 | 256.0 | 240.0 | 242.0 | 243.0 | 234.0 | 228.0 | 224.0 | 240.7 | 265.0 | 119.0 |
| 27 | 227.0 | 222.0 | 129.0 | 121.0 | 118.0 | 122.0 | 105.0 | 285.0 | 297.0 | 292.0 | 309.0 | 295.0 | 311.0 | 305.0 | 309.0 | 291.0 | 281.0 | 271.0 | 275.0 | 254.0 | 154.0 | 117.0 | 128.0 | 128.0 | 222.7 | 311.0 | 105.0 |
| 28 | 122.0 | 129.0 | 119.0 | 128.0 | 95.0 | 96.0 | 122.0 | 109.0 | 58.0 | 33.0 | 22.0 | 30.0 | 353.0 | 306.0 | 269.0 | 278.0 | 266.0 | 267.0 | 283.0 | 268.0 | 152.0 | 117.0 | 120.0 | 117.0 | 40.8 | 353.0 | 22.0 |
| 29 | 129.0 | 247.0 | 126.0 | 299.0 | 126.0 | 125.0 | 118.0 | 96.0 | 259.0 | 263.0 | 270.0 | 257.0 | 256.0 | 257.0 | 260.0 | 261.0 | 258.0 | 257.0 | 247.0 | 246.0 | 233.0 | 235.0 | 224.0 | 224.0 | 219.7 | 299.0 | 96.0 |
| 30 | 206.0 | 106.0 | 117.0 | 127.0 | 126.0 | 108.0 | 124.0 | 113.0 | 320.0 | 334.0 | 328.0 | 329.0 | 308.0 | 297.0 | 286.0 | 280.0 | 273.0 | 268.0 | 258.0 | 224.0 | 242.0 | 231.0 | 239.0 | 118.0 | 223.4 | 334.0 | 106.0 |
| Mean | 147.6 | 157.0 | 156.4 | 172.4 | 165.4 | 181.1 | 184.7 | 208.4 | 312.1 | 303.7 | 306.0 | 301.0 | 296.8 | 293.7 | 299.2 | 281.7 | 276.4 | 281.9 | 290.2 | 196.1 | 188.3 | 177.1 | 160.9 | 148.9 | Monthly mean = | | 200.0 |
| Max. | 271.0 | 302.0 | 305.0 | 330.0 | 333.0 | 323.0 | 339.0 | 322.0 | 329.0 | 337.0 | 328.0 | 356.0 | 359.0 | 356.0 | 357.0 | 355.0 | 356.0 | 358.0 | 313.0 | 270.0 | 275.0 | 270.0 | 280.0 | 235.0 | Monthly max. = | | 359.0 |
| Min. | 77.0 | 80.0 | 5.0 | 83.0 | 91.0 | 34.0 | 87.0 | 34.0 | 16.0 | 9.0 | 2.0 | 4.0 | 7.0 | 3.0 | 6.0 | 2.0 | 11.0 | 6.0 | 17.0 | 46.0 | 69.0 | 96.0 | 26.0 | 93.0 | Monthly min. = | | 2.0 |

TOTAL NUMBER OF DATA HOURS IN MONTH: 720
Number of hours of bad or missing data: 1
**** designates missing or lost data

Current % recovery = 99.9

N/A: insufficient data available for calculation (a minimum of 75% is required)

table created at 11: 3, 4/12/1995

MONTHLY SUMMARY
TEMPERATURE
(Degrees Celsius)
INPUT FILE: allslmet.out

Bechtel Environmental, Inc.

Met Data for Site 1
JUNE 1994

| Day \ Hour | 1 | 2 | 3 | 4 | 5 | 6 | 7 | 8 | 9 | 10 | 11 | 12 | 13 | 14 | 15 | 16 | 17 | 18 | 19 | 20 | 21 | 22 | 23 | 24 | Mean | Max. | Min. |
|---|---|---|---|---|---|---|---|---|---|---|---|---|---|---|---|---|---|---|---|---|---|---|---|---|---|---|---|
| 1 | 14.4 | 14.1 | 14.1 | 14.3 | 14.0 | 13.6 | 14.1 | 15.0 | 15.8 | ***** | 17.6 | 18.0 | 16.6 | 17.4 | 17.7 | 18.0 | 18.5 | 18.8 | 18.6 | 17.7 | 16.0 | 15.4 | 15.2 | 14.6 | 16.1 | 18.8 | 13.6 |
| 2 | 12.1 | 9.9 | 8.8 | 7.5 | 6.9 | 6.8 | 8.7 | 12.5 | 14.8 | 16.0 | 17.9 | 19.5 | 20.8 | 22.0 | 22.8 | 23.7 | 24.4 | 24.2 | 23.7 | 20.8 | 18.9 | 18.9 | 18.6 | 16.9 | 16.5 | 24.4 | 6.8 |
| 3 | 16.0 | 14.4 | 14.6 | 16.7 | 17.1 | 11.4 | 14.2 | 14.6 | 18.6 | 20.5 | 22.4 | 23.4 | 25.0 | 26.4 | 27.5 | 27.0 | 26.5 | 22.6 | 21.6 | 21.4 | 20.5 | 20.4 | 20.0 | 18.1 | 20.0 | 27.5 | 11.4 |
| 4 | 17.9 | 16.4 | 15.3 | 19.2 | 18.6 | 17.9 | 17.4 | 17.7 | 17.7 | 18.5 | 18.9 | 19.9 | 20.6 | 21.3 | 22.1 | 22.7 | 22.6 | 22.9 | 22.4 | 21.4 | 20.0 | 18.1 | 16.8 | 15.7 | 19.2 | 22.9 | 15.3 |
| 5 | 13.5 | 12.4 | 11.1 | 10.4 | 9.4 | 9.9 | 11.1 | 14.1 | 17.2 | 20.1 | 21.9 | 23.8 | 25.3 | 26.8 | 27.4 | 28.3 | 28.9 | 28.8 | 28.4 | 27.1 | 26.1 | 23.6 | 21.3 | 20.6 | 20.3 | 28.9 | 9.4 |
| 6 | 20.5 | 21.6 | 20.9 | 18.2 | 16.9 | 16.8 | 17.7 | 17.1 | 17.4 | 17.8 | 18.6 | 18.9 | 18.8 | 19.0 | 18.9 | 18.3 | 17.1 | 16.1 | 15.0 | 12.4 | 10.7 | 9.3 | 8.2 | 8.1 | 16.4 | 21.6 | 8.1 |
| 7 | 8.3 | 8.5 | 10.4 | 9.9 | 9.4 | 7.2 | 8.1 | 8.8 | 10.0 | 11.5 | 12.3 | 13.6 | 14.7 | 15.4 | 15.5 | 14.9 | 13.4 | 13.4 | 12.8 | 9.3 | 8.5 | 8.3 | 9.7 | 9.7 | 11.0 | 15.5 | 7.2 |
| 8 | 9.2 | 8.5 | 7.3 | 5.7 | 5.2 | 5.3 | 6.2 | 7.1 | 8.2 | 9.5 | 10.7 | 11.9 | 13.2 | 14.4 | 15.3 | 16.2 | 16.9 | 17.1 | 17.0 | 16.0 | 15.4 | 15.4 | 15.7 | 15.5 | 11.8 | 17.1 | 5.2 |
| 9 | 15.2 | 15.2 | 14.2 | 9.5 | 9.9 | 9.2 | 9.9 | 13.2 | 15.7 | 16.3 | 17.3 | 18.1 | 19.3 | 20.2 | 20.8 | 21.2 | 21.6 | 21.7 | 21.6 | 20.9 | 19.7 | 19.0 | 18.6 | 15.9 | 16.8 | 21.7 | 9.2 |
| 10 | 16.6 | 12.0 | 8.9 | 6.4 | 6.5 | 7.5 | 11.5 | 15.8 | 16.3 | 18.0 | 19.5 | 20.2 | 21.4 | 22.6 | 24.0 | 24.7 | 25.5 | 25.7 | 25.5 | 24.8 | 23.1 | 19.4 | 17.2 | 16.7 | 17.9 | 25.7 | 6.4 |
| 11 | 16.4 | 15.5 | 14.9 | 12.6 | 11.7 | 12.6 | 13.8 | 18.0 | 22.0 | 23.5 | 24.0 | 25.4 | 26.5 | 27.4 | 28.6 | 29.1 | 29.0 | 29.0 | 29.0 | 27.3 | 25.4 | 24.3 | 22.7 | 20.8 | 22.1 | 29.1 | 11.7 |
| 12 | 20.7 | 19.4 | 16.6 | 14.3 | 13.2 | 14.3 | 15.4 | 18.0 | 19.4 | 19.4 | 20.9 | 22.0 | 23.0 | 23.9 | 25.1 | 25.5 | 25.6 | 25.7 | 25.6 | 24.5 | 23.1 | 21.5 | 21.4 | 20.4 | 20.8 | 25.7 | 13.2 |
| 13 | 20.5 | 26.0 | 24.9 | 22.1 | 20.7 | 20.2 | 20.4 | 20.3 | 20.3 | 20.9 | 21.8 | 22.8 | 23.8 | 24.4 | 25.3 | 25.2 | 24.5 | 23.9 | 23.9 | 22.2 | 19.3 | 17.7 | 16.8 | 14.8 | 21.8 | 26.0 | 14.8 |
| 14 | 13.6 | 12.5 | 11.3 | 10.4 | 10.2 | 9.8 | 9.3 | 9.7 | 9.9 | 10.2 | 10.9 | 11.3 | 11.6 | 12.2 | 12.7 | 13.3 | 13.9 | 14.1 | 13.8 | 13.4 | 12.1 | 12.0 | 10.4 | 9.6 | 11.6 | 14.1 | 9.3 |
| 15 | 9.5 | 9.0 | 8.6 | 5.9 | 6.0 | 5.0 | 6.3 | 9.3 | 12.9 | 15.0 | 17.0 | 17.8 | 17.8 | 18.6 | 18.9 | 18.8 | 18.5 | 18.1 | 18.0 | 16.9 | 15.7 | 14.8 | 14.2 | 13.4 | 13.6 | 18.9 | 5.0 |
| 16 | 12.7 | 12.2 | 11.8 | 11.1 | 11.0 | 10.5 | 10.2 | 10.4 | 11.3 | 11.8 | 12.1 | 13.0 | 15.7 | 16.6 | 17.2 | 17.8 | 18.2 | 18.4 | 18.1 | 17.2 | 15.7 | 15.0 | 14.5 | 14.2 | 14.0 | 18.4 | 10.2 |
| 17 | 10.7 | 9.0 | 7.2 | 7.2 | 6.1 | 5.8 | 8.3 | 12.3 | 13.9 | 15.8 | 17.8 | 19.3 | 20.3 | 22.2 | 23.9 | 25.0 | 25.6 | 25.7 | 24.8 | 23.2 | 20.5 | 19.1 | 17.0 | 16.0 | 16.5 | 25.7 | 5.8 |
| 18 | 14.3 | 11.8 | 11.2 | 10.6 | 14.6 | 16.1 | 18.3 | 19.3 | 19.7 | 20.6 | 21.7 | 23.0 | 23.8 | 24.8 | 25.4 | 26.3 | 26.8 | 27.7 | 28.9 | 27.6 | 22.4 | 19.6 | 17.9 | 16.4 | 20.4 | 28.9 | 10.6 |
| 19 | 14.4 | 15.6 | 16.1 | 13.8 | 14.6 | 16.8 | 17.7 | 18.3 | 18.9 | 20.4 | 22.0 | 23.3 | 25.2 | 26.8 | 28.2 | 29.3 | 30.3 | 31.1 | 30.2 | 29.0 | 25.3 | 22.7 | 20.6 | 18.3 | 22.0 | 31.1 | 13.8 |
| 20 | 17.7 | 14.9 | 15.7 | 14.1 | 12.2 | 14.5 | 16.5 | 18.5 | 21.9 | 24.2 | 27.0 | 29.5 | 31.5 | 32.8 | 33.5 | 33.6 | 32.9 | 33.6 | 33.4 | 31.1 | 31.6 | 29.1 | 26.8 | 26.5 | 25.1 | 33.6 | 12.2 |
| 21 | 25.3 | 25.7 | 25.2 | 23.7 | 23.1 | 21.8 | 21.1 | 24.6 | 24.7 | 24.2 | 24.5 | 25.4 | 26.4 | 27.7 | 28.8 | 28.9 | 28.3 | 26.0 | 22.6 | 18.4 | 16.9 | 18.1 | 18.2 | 17.1 | 23.6 | 28.9 | 16.9 |
| 22 | 16.7 | 16.9 | 15.7 | 14.2 | 13.9 | 14.0 | 16.5 | 17.7 | 19.8 | 22.3 | 24.5 | 26.5 | 27.7 | 28.7 | 29.5 | 31.0 | 31.0 | 28.2 | 26.4 | 25.0 | 24.6 | 22.9 | 20.8 | 19.4 | 22.2 | 31.0 | 13.9 |
| 23 | 18.0 | 17.4 | 15.4 | 12.9 | 12.3 | 11.9 | 14.6 | 17.5 | 18.9 | 22.6 | 24.8 | 26.1 | 27.9 | 29.2 | 29.7 | 30.0 | 29.8 | 30.1 | 30.2 | 28.7 | 27.6 | 27.3 | 23.0 | 18.7 | 22.7 | 30.2 | 11.9 |
| 24 | 17.3 | 15.8 | 14.5 | 14.2 | 12.1 | 11.7 | 19.8 | 20.5 | 20.5 | 21.6 | 23.1 | 24.6 | 25.8 | 26.8 | 28.2 | 28.8 | 29.3 | 29.2 | 29.2 | 28.2 | 26.7 | 24.2 | 21.0 | 19.1 | 22.2 | 29.3 | 11.7 |
| 25 | 17.9 | 16.9 | 15.7 | 14.6 | 15.2 | 12.9 | 15.4 | 18.3 | 20.9 | 23.1 | 25.3 | 27.3 | 29.4 | 31.5 | 32.3 | 32.9 | 33.0 | 33.2 | 32.0 | 31.1 | 28.2 | 26.5 | 20.6 | 21.2 | 24.0 | 33.2 | 12.9 |
| 26 | 20.3 | 23.2 | 23.4 | 22.6 | 21.7 | 20.7 | 20.4 | 19.7 | 20.1 | 19.4 | 19.7 | 20.1 | 20.2 | 20.2 | 20.5 | 21.0 | 21.4 | 21.1 | 20.3 | 19.6 | 18.2 | 17.2 | 16.5 | 16.3 | 20.2 | 23.4 | 16.3 |
| 27 | 15.9 | 15.8 | 12.6 | 10.3 | 9.0 | 8.3 | 10.6 | 13.4 | 15.6 | 17.4 | 18.6 | 20.0 | 21.3 | 22.6 | 23.8 | 25.1 | 25.3 | 25.4 | 25.2 | 24.6 | 21.8 | 19.7 | 18.2 | 17.8 | 18.3 | 25.4 | 8.3 |
| 28 | 16.8 | 16.5 | 16.5 | 14.3 | 13.3 | 13.6 | 15.4 | 17.8 | 20.5 | 22.5 | 24.7 | 26.9 | 28.7 | 29.5 | 30.6 | 31.5 | 31.9 | 32.1 | 32.0 | 31.6 | 28.2 | 24.3 | 22.3 | 22.1 | 23.5 | 32.1 | 13.3 |
| 29 | 20.0 | 17.8 | 17.1 | 14.7 | 15.4 | 17.8 | 18.8 | 22.8 | 26.6 | 26.8 | 27.3 | 28.3 | 29.2 | 29.9 | 30.5 | 30.8 | 31.0 | 31.2 | 31.0 | 30.0 | 28.3 | 27.4 | 26.9 | 26.6 | 25.3 | 31.2 | 14.7 |
| 30 | 25.4 | 19.2 | 16.7 | 15.5 | 14.5 | 14.1 | 16.4 | 20.9 | 24.5 | 26.4 | 27.8 | 29.0 | 30.0 | 30.7 | 31.5 | 32.1 | 32.5 | 32.6 | 32.2 | 30.9 | 29.1 | 27.3 | 26.0 | 22.6 | 25.3 | 32.6 | 14.1 |
| Mean | 16.3 | 15.5 | 14.6 | 13.2 | 12.8 | 12.6 | 14.1 | 16.1 | 17.8 | 19.2 | 20.4 | 21.6 | 22.7 | 23.7 | 24.5 | 25.0 | 25.1 | 24.9 | 24.4 | 23.1 | 21.3 | 20.0 | 18.6 | 17.4 | Monthly mean = | | 19.4 |
| Max. | 25.4 | 26.0 | 25.2 | 23.7 | 23.1 | 21.8 | 21.1 | 24.6 | 26.6 | 26.8 | 27.8 | 29.5 | 31.5 | 32.8 | 33.5 | 33.6 | 33.0 | 33.6 | 33.4 | 31.6 | 31.6 | 29.1 | 26.9 | 26.6 | Monthly max. = | | 33.6 |
| Min. | 8.3 | 8.5 | 7.2 | 5.7 | 5.2 | 5.0 | 6.2 | 7.1 | 8.2 | 9.5 | 10.7 | 11.3 | 11.6 | 12.2 | 12.7 | 13.3 | 13.4 | 13.4 | 12.8 | 9.3 | 8.5 | 8.3 | 8.2 | 8.1 | Monthly min. = | | 5.0 |

TOTAL NUMBER OF DATA HOURS IN MONTH: 720
Number of hours of bad or missing data: 1
**** designates missing or lost data

Current % recovery = 99.9

N/A: insufficient data available for calculation (a minimum of 75% is required)

table created at 11: 3, 4/12/1995

MONTHLY SUMMARY
SIGMA THETA
(Degrees)
INPUT FILE: alls1met.out

Bechtel Environmental, Inc.

Met Data for Site 1
JUNE 1994

| Day | Hour 1 | 2 | 3 | 4 | 5 | 6 | 7 | 8 | 9 | 10 | 11 | 12 | 13 | 14 | 15 | 16 | 17 | 18 | 19 | 20 | 21 | 22 | 23 | 24 | Mean | Max. | Min. |
|---|---|---|---|---|---|---|---|---|---|---|---|---|---|---|---|---|---|---|---|---|---|---|---|---|---|---|---|
| 1 | 13. | 13. | 12. | 13. | 14. | 15. | 14. | 16. | 14. | ***** | 15. | 12. | 11. | 13. | 12. | 17. | 19. | 16. | 16. | 13. | 13. | 13. | 14. | 16. | N/A | 19. | 11. |
| 2 | 45. | 20. | 9. | 10. | 11. | 5. | 9. | 29. | 30. | 31. | 51. | 48. | 38. | 25. | 26. | 25. | 15. | 12. | 9. | 19. | 11. | 4. | 5. | 51. | N/A | 51. | 4. |
| 3 | 61. | 30. | 19. | 6. | 42. | 48. | 42. | 38. | 23. | 19. | 14. | 14. | 13. | 11. | 37. | 19. | 19. | 16. | 22. | 42. | 33. | 6. | 8. | 48. | N/A | 61. | 6. |
| 4 | 62. | 22. | 34. | 14. | 14. | 14. | 14. | 12. | 12. | 14. | 13. | 17. | 19. | 20. | 18. | 15. | 11. | 11. | 12. | 18. | 24. | 20. | 53. | 5. | N/A | 62. | 5. |
| 5 | 4. | 3. | 4. | 4. | 17. | 7. | 5. | 15. | 14. | 19. | 18. | 22. | 20. | 23. | 37. | 62. | 26. | 27. | 24. | 14. | 13. | 9. | 4. | 3. | N/A | 62. | 3. |
| 6 | 4. | 5. | 46. | 14. | 13. | 13. | 16. | 15. | 15. | 15. | 15. | 15. | 15. | 12. | 12. | 10. | 10. | 11. | 10. | 10. | 13. | 20. | 10. | 7. | N/A | 46. | 4. |
| 7 | 22. | 33. | 13. | 13. | 19. | 37. | 11. | 15. | 16. | 21. | 17. | 17. | 18. | 20. | 15. | 13. | 13. | 18. | 15. | 12. | 19. | 17. | 16. | 14. | N/A | 37. | 11. |
| 8 | 14. | 14. | 14. | 13. | 14. | 14. | 14. | 15. | 16. | 18. | 20. | 20. | 19. | 26. | 17. | 18. | 15. | 11. | 11. | 13. | 15. | 21. | 14. | 16. | N/A | 26. | 11. |
| 9 | 13. | 14. | 19. | 29. | 15. | 5. | 9. | 14. | 41. | 17. | 21. | 26. | 31. | 25. | 19. | 17. | 17. | 17. | 16. | 13. | 13. | 13. | 18. | 44. | N/A | 44. | 5. |
| 10 | 33. | 7. | 46. | 34. | 32. | 57. | 26. | 63. | 15. | 16. | 18. | 14. | 14. | 21. | 19. | 14. | 17. | 13. | 10. | 13. | 19. | 19. | 8. | 6. | N/A | 63. | 6. |
| 11 | 11. | 7. | 31. | 46. | 10. | 8. | 8. | 12. | 29. | 25. | 13. | 16. | 22. | 18. | 13. | 16. | 13. | 15. | 16. | 14. | 24. | 36. | 28. | 11. | N/A | 46. | 7. |
| 12 | 18. | 11. | 45. | 67. | 27. | 20. | 39. | 29. | 15. | 15. | 16. | 16. | 19. | 20. | 20. | 11. | 15. | 14. | 15. | 11. | 9. | 4. | 17. | 29. | N/A | 67. | 4. |
| 13 | 62. | 14. | 16. | 15. | 14. | 14. | 14. | 14. | 14. | 15. | 20. | 15. | 14. | 12. | 12. | 12. | 12. | 12. | 12. | 10. | 10. | 11. | 20. | 20. | N/A | 62. | 10. |
| 14 | 19. | 16. | 20. | 14. | 14. | 15. | 14. | 14. | 14. | 15. | 15. | 15. | 15. | 17. | 15. | 16. | 16. | 16. | 15. | 18. | 22. | 17. | 35. | 12. | N/A | 35. | 12. |
| 15 | 11. | 6. | 10. | 28. | 15. | 63. | 28. | 17. | 27. | 29. | 40. | 33. | 20. | 18. | 14. | 14. | 13. | 13. | 12. | 11. | 9. | 18. | 13. | 14. | N/A | 63. | 6. |
| 16 | 15. | 15. | 20. | 17. | 12. | 13. | 13. | 15. | 15. | 17. | 13. | 15. | 24. | 16. | 15. | 14. | 14. | 13. | 10. | 10. | 13. | 13. | 13. | 20. | N/A | 24. | 10. |
| 17 | 7. | 4. | 24. | 9. | 4. | 8. | 7. | 22. | 17. | 20. | 18. | 17. | 15. | 18. | 15. | 12. | 15. | 16. | 10. | 34. | 21. | 14. | 10. | 5. | N/A | 34. | 4. |
| 18 | 29. | 43. | 31. | 41. | 22. | 37. | 48. | 15. | 11. | 11. | 12. | 15. | 15. | 22. | 24. | 19. | 14. | 13. | 16. | 28. | 23. | 35. | 32. | 17. | N/A | 48. | 11. |
| 19 | 54. | 44. | 47. | 50. | 31. | 12. | 17. | 15. | 15. | 18. | 15. | 15. | 14. | 13. | 13. | 11. | 16. | 27. | 8. | 8. | 6. | 4. | 3. | 9. | N/A | 54. | 3. |
| 20 | 27. | 33. | 8. | 18. | 41. | 5. | 31. | 21. | 37. | 9. | 11. | 14. | 20. | 20. | 14. | 15. | 12. | 13. | 10. | 20. | 26. | 18. | 9. | 8. | N/A | 41. | 5. |
| 21 | 10. | 6. | 8. | 40. | 23. | 28. | 6. | 76. | 17. | 17. | 15. | 16. | 18. | 13. | 21. | 14. | 16. | 42. | 10. | 14. | 9. | 14. | 71. | 20. | N/A | 76. | 6. |
| 22 | 11. | 9. | 12. | 18. | 8. | 7. | 10. | 12. | 17. | 23. | 33. | 24. | 17. | 29. | 37. | 40. | 41. | 14. | 27. | 20. | 9. | 6. | 26. | 11. | N/A | 41. | 6. |
| 23 | 6. | 7. | 54. | 34. | 56. | 10. | 28. | 12. | 14. | 19. | 14. | 13. | 13. | 13. | 13. | 13. | 11. | 14. | 13. | 11. | 12. | 13. | 37. | 9. | N/A | 56. | 6. |
| 24 | 4. | 4. | 3. | 4. | 50. | 35. | 22. | 10. | 11. | 9. | 11. | 14. | 13. | 16. | 12. | 13. | 14. | 14. | 15. | 15. | 15. | 20. | 6. | 4. | N/A | 50. | 3. |
| 25 | 4. | 4. | 11. | 10. | 7. | 17. | 26. | 11. | 20. | 23. | 20. | 22. | 19. | 15. | 15. | 16. | 14. | 17. | 6. | 18. | 14. | 57. | 43. | 8. | N/A | 57. | 4. |
| 26 | 33. | 13. | 11. | 11. | 12. | 15. | 15. | 15. | 16. | 15. | 17. | 14. | 16. | 17. | 16. | 16. | 16. | 14. | 15. | 14. | 14. | 13. | 13. | 13. | N/A | 33. | 11. |
| 27 | 15. | 14. | 23. | 5. | 7. | 6. | 17. | 16. | 14. | 15. | 22. | 24. | 18. | 20. | 15. | 15. | 15. | 14. | 11. | 14. | 25. | 10. | 7. | 4. | N/A | 25. | 4. |
| 28 | 5. | 8. | 5. | 38. | 10. | 15. | 8. | 10. | 12. | 13. | 15. | 12. | 25. | 19. | 25. | 29. | 22. | 15. | 9. | 19. | 31. | 5. | 6. | 8. | N/A | 38. | 5. |
| 29 | 42. | 46. | 43. | 54. | 15. | 6. | 10. | 30. | 30. | 14. | 12. | 13. | 10. | 10. | 10. | 11. | 10. | 11. | 12. | 11. | 12. | 15. | 14. | 14. | N/A | 54. | 6. |
| 30 | 16. | 14. | 7. | 4. | 32. | 53. | 11. | 32. | 16. | 21. | 27. | 23. | 16. | 13. | 17. | 13. | 15. | 15. | 16. | 15. | 14. | 16. | 43. | 29. | N/A | 53. | 4. |
| Mean | N/A | N/A | N/A | N/A | N/A | N/A | N/A | N/A | N/A | N/A | N/A | N/A | N/A | N/A | N/A | N/A | N/A | N/A | N/A | N/A | N/A | N/A | N/A | N/A | Monthly mean = | | N/A |
| Max. | 62. | 46. | 54. | 67. | 56. | 63. | 48. | 76. | 41. | 31. | 51. | 48. | 38. | 29. | 37. | 62. | 41. | 42. | 27. | 42. | 33. | 57. | 71. | 51. | Monthly max. = | | 76. |
| Min. | 4. | 3. | 3. | 4. | 4. | 5. | 5. | 10. | 11. | 9. | 11. | 12. | 10. | 10. | 10. | 10. | 10. | 11. | 6. | 8. | 6. | 4. | 3. | 3. | Monthly min. = | | 3. |

TOTAL NUMBER OF DATA HOURS IN MONTH: 720
Number of hours of bad or missing data: 1
**** designates missing or lost data

Current % recovery = 99.9

N/A: A sigma theta mean is not physically meaningful.

table created at 11: 3, 4/12/1995

MONTHLY SUMMARY
REL. HUMID.
(Degrees)
INPUT FILE: alls1met.out

Bechtel Environmental, Inc.

Met Data for Site 1
JUNE 1994

| Day | Hour 1 | 2 | 3 | 4 | 5 | 6 | 7 | 8 | 9 | 10 | 11 | 12 | 13 | 14 | 15 | 16 | 17 | 18 | 19 | 20 | 21 | 22 | 23 | 24 | Mean | Max. | Min. |
|---|---|---|---|---|---|---|---|---|---|---|---|---|---|---|---|---|---|---|---|---|---|---|---|---|---|---|---|
| 1 | 83.0 | 82.0 | 80.0 | 78.0 | 77.0 | 80.0 | 80.0 | 72.0 | 66.0 | ***** | 58.0 | 59.0 | 64.0 | 54.0 | 50.0 | 48.0 | 42.0 | 37.0 | 36.0 | 39.0 | 44.0 | 48.0 | 49.0 | 48.0 | 59.7 | 83.0 | 36.0 |
| 2 | 57.0 | 67.0 | 72.0 | 79.0 | 80.0 | 80.0 | 76.0 | 67.0 | 56.0 | 53.0 | 37.0 | 36.0 | 34.0 | 31.0 | 29.0 | 29.0 | 27.0 | 28.0 | 30.0 | 41.0 | 44.0 | 42.0 | 42.0 | 48.0 | 49.4 | 80.0 | 27.0 |
| 3 | 53.0 | 49.0 | 49.0 | 46.0 | 44.0 | 81.0 | 66.0 | 66.0 | 50.0 | 50.0 | 42.0 | 39.0 | 38.0 | 36.0 | 32.0 | 21.0 | 22.0 | 40.0 | 42.0 | 42.0 | 45.0 | 41.0 | 40.0 | 48.0 | 45.1 | 81.0 | 21.0 |
| 4 | 48.0 | 56.0 | 59.0 | 32.0 | 23.0 | 23.0 | 29.0 | 31.0 | 36.0 | 39.0 | 39.0 | 31.0 | 29.0 | 27.0 | 24.0 | 22.0 | 24.0 | 25.0 | 27.0 | 27.0 | 29.0 | 30.0 | 34.0 | 37.0 | 32.5 | 59.0 | 22.0 |
| 5 | 44.0 | 46.0 | 51.0 | 53.0 | 60.0 | 59.0 | 57.0 | 54.0 | 42.0 | 37.0 | 32.0 | 30.0 | 26.0 | 22.0 | 20.0 | 17.0 | 10.0 | 9.0 | 9.0 | 10.0 | 13.0 | 19.0 | 23.0 | 23.0 | 31.9 | 60.0 | 9.0 |
| 6 | 23.0 | 20.0 | 22.0 | 32.0 | 35.0 | 34.0 | 32.0 | 36.0 | 37.0 | 36.0 | 33.0 | 28.0 | 26.0 | 24.0 | 25.0 | 26.0 | 27.0 | 30.0 | 33.0 | 45.0 | 56.0 | 65.0 | 78.0 | 76.0 | 36.6 | 78.0 | 20.0 |
| 7 | 69.0 | 65.0 | 43.0 | 41.0 | 41.0 | 53.0 | 52.0 | 52.0 | 48.0 | 43.0 | 41.0 | 35.0 | 29.0 | 28.0 | 26.0 | 31.2 | 41.1 | 40.9 | 45.2 | 69.6 | 73.4 | 68.8 | 58.0 | 53.6 | 47.8 | 73.4 | 26.0 |
| 8 | 57.0 | 61.3 | 68.5 | 73.7 | 73.8 | 72.1 | 67.6 | 64.6 | 58.6 | 51.8 | 45.7 | 41.1 | 30.8 | 25.4 | 20.2 | 18.5 | 16.6 | 17.5 | 20.0 | 22.2 | 23.5 | 20.6 | 16.3 | 15.7 | 41.0 | 73.8 | 15.7 |
| 9 | 15.4 | 17.1 | 23.6 | 47.1 | 40.8 | 48.1 | 49.0 | 40.4 | 24.6 | 22.8 | 23.4 | 21.3 | 20.4 | 20.2 | 18.9 | 18.1 | 17.7 | 18.4 | 18.6 | 19.6 | 20.4 | 19.1 | 19.3 | 26.4 | 25.4 | 49.0 | 15.4 |
| 10 | 23.9 | 37.7 | 53.1 | 68.4 | 67.3 | 65.1 | 50.0 | 41.6 | 43.2 | 34.6 | 31.0 | 28.5 | 26.4 | 24.6 | 22.5 | 20.1 | 19.7 | 19.3 | 20.2 | 22.3 | 22.2 | 29.9 | 36.8 | 37.0 | 35.2 | 68.4 | 19.3 |
| 11 | 37.3 | 39.9 | 42.0 | 52.3 | 56.0 | 53.3 | 53.6 | 44.4 | 34.6 | 33.9 | 34.0 | 24.1 | 24.8 | 22.2 | 18.8 | 15.8 | 16.1 | 15.5 | 15.2 | 17.8 | 22.5 | 25.3 | 33.1 | 36.8 | 32.1 | 56.0 | 15.2 |
| 12 | 35.8 | 39.5 | 53.2 | 66.7 | 71.4 | 64.8 | 59.4 | 53.3 | 46.2 | 51.4 | 48.8 | 43.4 | 37.9 | 36.1 | 32.1 | 30.4 | 29.7 | 28.3 | 28.7 | 32.8 | 36.7 | 41.4 | 40.6 | 42.6 | 43.8 | 71.4 | 28.3 |
| 13 | 41.2 | 22.1 | 23.7 | 34.8 | 43.7 | 43.7 | 39.9 | 38.6 | 38.4 | 36.1 | 33.8 | 34.1 | 33.9 | 34.2 | 31.0 | 28.2 | 28.3 | 30.3 | 28.7 | 32.8 | 39.5 | 36.2 | 36.2 | 40.8 | 34.6 | 43.7 | 22.1 |
| 14 | 42.6 | 46.9 | 54.6 | 60.9 | 52.7 | 48.9 | 47.2 | 38.4 | 34.7 | 31.9 | 27.9 | 27.8 | 28.2 | 28.6 | 27.8 | 26.2 | 23.5 | 22.5 | 22.5 | 22.8 | 23.5 | 24.7 | 29.5 | 31.0 | 34.4 | 60.9 | 22.5 |
| 15 | 30.8 | 33.2 | 36.4 | 56.7 | 49.5 | 62.8 | 61.5 | 54.7 | 44.2 | 41.2 | 37.6 | 37.0 | 32.4 | 28.1 | 21.3 | 21.0 | 21.8 | 22.1 | 21.9 | 27.2 | 29.3 | 29.2 | 30.0 | 33.5 | 36.0 | 62.8 | 21.0 |
| 16 | 37.2 | 38.0 | 38.0 | 40.7 | 39.7 | 41.7 | 43.5 | 45.1 | 42.2 | 41.0 | 43.1 | 36.8 | 31.1 | 27.9 | 27.6 | 25.2 | 22.5 | 21.7 | 21.9 | 25.1 | 28.8 | 27.6 | 27.2 | 29.1 | 33.4 | 45.1 | 21.7 |
| 17 | 38.0 | 41.2 | 51.9 | 52.1 | 51.9 | 53.1 | 46.5 | 41.2 | 44.4 | 39.0 | 30.3 | 24.2 | 26.4 | 25.5 | 24.1 | 22.1 | 21.8 | 21.3 | 28.2 | 32.0 | 32.8 | 25.4 | 27.7 | 28.8 | 34.6 | 53.1 | 21.3 |
| 18 | 35.9 | 47.3 | 46.9 | 49.7 | 35.3 | 30.1 | 28.3 | 28.9 | 26.6 | 23.4 | 16.7 | 14.9 | 14.7 | 13.8 | 16.1 | 15.8 | 14.9 | 14.2 | 15.0 | 17.8 | 24.7 | 28.3 | 31.9 | 36.2 | 26.1 | 49.7 | 13.8 |
| 19 | 42.2 | 35.9 | 33.6 | 39.4 | 35.6 | 29.7 | 29.0 | 27.9 | 27.8 | 28.0 | 25.9 | 25.1 | 21.3 | 20.6 | 20.2 | 16.8 | 14.0 | 15.0 | 17.4 | 16.8 | 19.7 | 23.6 | 27.7 | 33.4 | 26.1 | 42.2 | 14.0 |
| 20 | 33.5 | 44.9 | 39.4 | 48.3 | 54.6 | 43.3 | 43.5 | 44.4 | 40.9 | 35.4 | 31.1 | 27.9 | 21.1 | 16.6 | 12.9 | 12.4 | 14.4 | 15.3 | 15.7 | 16.5 | 10.5 | 14.0 | 18.3 | 20.2 | 28.1 | 54.6 | 10.5 |
| 21 | 23.0 | 22.3 | 24.1 | 28.1 | 28.2 | 33.2 | 36.0 | 17.9 | 34.1 | 29.2 | 31.7 | 30.6 | 29.4 | 30.2 | 30.7 | 32.1 | 34.2 | 32.5 | 60.3 | 64.0 | 76.0 | 62.2 | 60.2 | 68.3 | 38.3 | 76.0 | 17.9 |
| 22 | 69.4 | 68.1 | 78.2 | 87.9 | 88.7 | 87.4 | 75.5 | 73.0 | 64.7 | 55.3 | 46.5 | 40.0 | 29.3 | 26.1 | 25.2 | 20.1 | 15.2 | 22.6 | 30.2 | 34.4 | 27.4 | 29.5 | 35.7 | 38.7 | 48.7 | 88.7 | 15.2 |
| 23 | 43.2 | 44.4 | 54.3 | 70.8 | 71.0 | 72.7 | 64.7 | 55.9 | 58.8 | 43.3 | 29.6 | 27.1 | 23.6 | 16.9 | 15.8 | 15.3 | 14.7 | 13.6 | 12.3 | 15.9 | 13.7 | 11.5 | 18.4 | 25.5 | 34.7 | 72.7 | 11.5 |
| 24 | 27.2 | 30.1 | 33.0 | 32.3 | 42.1 | 43.8 | 19.3 | 23.2 | 30.7 | 31.9 | 31.3 | 27.4 | 22.2 | 20.8 | 15.1 | 11.7 | 10.1 | 10.6 | 11.9 | 15.0 | 16.2 | 17.8 | 24.1 | 26.4 | 23.9 | 43.8 | 10.1 |
| 25 | 28.6 | 29.8 | 32.0 | 40.0 | 31.9 | 44.6 | 41.3 | 33.6 | 34.5 | 35.1 | 35.0 | 30.1 | 23.9 | 15.1 | 13.4 | 13.5 | 14.3 | 15.0 | 19.1 | 18.5 | 17.5 | 19.5 | 34.9 | 28.7 | 27.1 | 44.6 | 13.4 |
| 26 | 27.2 | 24.0 | 23.6 | 24.7 | 25.1 | 24.6 | 19.4 | 23.4 | 27.7 | 32.1 | 29.2 | 26.1 | 26.4 | 27.2 | 25.1 | 19.8 | 19.4 | 16.5 | 18.1 | 15.6 | 19.5 | 20.4 | 24.5 | 25.4 | 23.5 | 32.1 | 15.6 |
| 27 | 26.6 | 26.7 | 32.4 | 37.5 | 42.8 | 47.1 | 45.4 | 44.4 | 37.0 | 28.0 | 25.3 | 25.2 | 25.2 | 22.9 | 18.5 | 14.2 | 11.8 | 12.2 | 9.6 | 14.2 | 17.8 | 19.6 | 23.6 | 24.4 | 26.3 | 47.1 | 9.6 |
| 28 | 27.0 | 25.6 | 23.5 | 29.6 | 35.8 | 38.5 | 33.0 | 31.3 | 30.0 | 29.5 | 29.4 | 25.3 | 19.5 | 15.2 | 11.7 | 11.3 | 11.5 | 11.6 | 13.1 | 13.8 | 18.6 | 23.5 | 28.4 | 27.3 | 23.5 | 38.5 | 11.3 |
| 29 | 34.4 | 41.5 | 41.5 | 52.5 | 48.0 | 38.2 | 40.1 | 34.6 | 20.1 | 17.4 | 17.1 | 16.3 | 16.5 | 15.9 | 13.6 | 11.3 | 10.0 | 9.9 | 11.2 | 11.8 | 12.3 | 12.7 | 14.8 | 15.4 | 23.2 | 52.5 | 9.9 |
| 30 | 16.7 | 25.2 | 29.6 | 32.2 | 35.8 | 39.5 | 35.3 | 30.1 | 28.6 | 26.5 | 23.5 | 19.0 | 16.0 | 14.8 | 13.0 | 12.0 | 12.0 | 11.2 | 12.8 | 16.2 | 17.4 | 19.7 | 21.4 | 26.8 | 22.3 | 39.5 | 11.2 |
| Mean | 39.0 | 40.9 | 43.8 | 49.6 | 49.4 | 51.2 | 47.4 | 43.6 | 40.3 | 36.4 | 33.7 | 30.4 | 27.6 | 25.0 | 22.7 | 20.9 | 20.2 | 20.9 | 23.2 | 26.6 | 29.2 | 29.9 | 32.8 | 35.1 | Monthly mean = | | 34.1 |
| Max. | 83.0 | 82.0 | 80.0 | 87.9 | 88.7 | 87.4 | 80.0 | 73.0 | 66.0 | 55.3 | 58.0 | 59.0 | 64.0 | 54.0 | 50.0 | 48.0 | 42.0 | 40.9 | 60.3 | 69.6 | 76.0 | 68.8 | 78.0 | 76.0 | Monthly max. = | | 88.7 |
| Min. | 15.4 | 17.1 | 22.0 | 24.7 | 23.0 | 23.0 | 19.3 | 17.9 | 20.1 | 17.4 | 16.7 | 14.9 | 14.7 | 13.8 | 11.7 | 11.3 | 10.0 | 9.0 | 9.0 | 10.0 | 10.5 | 11.5 | 14.8 | 15.4 | Monthly min. = | | 9.0 |

TOTAL NUMBER OF DATA HOURS IN MONTH: 720
Number of hours of bad or missing data: 1
**** designates missing or lost data

Current % recovery = 99.9

N/A: insufficient data available for calculation (a minimum of 75% is required)

table created at 11: 3, 4/12/1995

MONTHLY SUMMARY
WIND SPEED
(Miles Per Hour)
INPUT FILE: alls1met.out

Bechtel Environmental, Inc.

Met Data for Site 1
JULY 1994

| Day | Hour 1 | 2 | 3 | 4 | 5 | 6 | 7 | 8 | 9 | 10 | 11 | 12 | 13 | 14 | 15 | 16 | 17 | 18 | 19 | 20 | 21 | 22 | 23 | 24 | Mean | Max. | Min. |
|---|---|---|---|---|---|---|---|---|---|---|---|---|---|---|---|---|---|---|---|---|---|---|---|---|---|---|---|
| 1 | 13.5 | 13.1 | 9.1 | 4.9 | 5.4 | 14.3 | 13.2 | 15.2 | 14.8 | 16.6 | 16.9 | 17.1 | 14.4 | 15.6 | 16.1 | 16.2 | 12.7 | 12.8 | 13.1 | 9.9 | 8.1 | 6.9 | 13.4 | 11.2 | 12.7 | 17.1 | 4.9 |
| 2 | 4.9 | 14.3 | 14.9 | 6.2 | 3.8 | 16.7 | 22.3 | 19.4 | 22.3 | 20.3 | 22.9 | 22.1 | 23.3 | 21.7 | 19.3 | 19.0 | 15.9 | 18.0 | 17.2 | 13.6 | 12.5 | 12.8 | 13.9 | 12.9 | 16.3 | 23.3 | 3.8 |
| 3 | 13.5 | 13.9 | 11.9 | 12.6 | 15.7 | 19.3 | 16.5 | 14.9 | 14.6 | 17.5 | 18.4 | 18.6 | 18.8 | 16.0 | 19.1 | 18.6 | 21.2 | 18.1 | 15.9 | 12.7 | 12.6 | 14.3 | 14.9 | 13.7 | 16.0 | 21.2 | 11.9 |
| 4 | 11.6 | 9.9 | 5.0 | 10.4 | 12.6 | 11.6 | 13.2 | 12.4 | 15.0 | 16.2 | 12.8 | 12.9 | 15.1 | 16.7 | 18.0 | 15.4 | 17.0 | 15.5 | 12.6 | 9.0 | 8.7 | 7.0 | 13.5 | 13.0 | 12.7 | 18.0 | 5.0 |
| 5 | 12.4 | 12.2 | 13.7 | 9.8 | 7.5 | 7.1 | 4.8 | 13.9 | 8.3 | 9.7 | 8.6 | 9.5 | 7.4 | 8.8 | 20.8 | 30.5 | 31.1 | 25.8 | 22.5 | 15.2 | 14.7 | 12.9 | 10.4 | 10.8 | 13.7 | 31.1 | 4.8 |
| 6 | 10.7 | 12.4 | 15.5 | 17.1 | 13.9 | 15.3 | 14.8 | 12.8 | 13.7 | 15.7 | 15.3 | 13.3 | 9.9 | 8.8 | 8.3 | 7.2 | 9.0 | 7.0 | 7.0 | 5.6 | 8.4 | 6.9 | 7.3 | 6.2 | 10.9 | 17.1 | 5.6 |
| 7 | 4.0 | 1.9 | 2.2 | 1.7 | 2.2 | 2.7 | 2.2 | 2.0 | 5.5 | 6.3 | 5.6 | 7.0 | 7.1 | 7.7 | 6.9 | 5.5 | 4.1 | 4.2 | 4.9 | 4.9 | 4.2 | 7.5 | 8.1 | 3.2 | 4.6 | 8.1 | 1.7 |
| 8 | 8.8 | 9.3 | 6.3 | 2.4 | 5.0 | 8.0 | 4.4 | 2.4 | 2.9 | 3.8 | 5.9 | 6.7 | 8.2 | 9.3 | 8.5 | 9.5 | 5.0 | 5.0 | 6.5 | 3.1 | 5.2 | 9.5 | 12.6 | 9.1 | 6.6 | 12.6 | 2.4 |
| 9 | 11.3 | 11.0 | 11.9 | 3.8 | 4.8 | 8.0 | 3.8 | 2.9 | 6.7 | 6.0 | 6.1 | 5.8 | 6.4 | 5.9 | 8.0 | 12.0 | 11.1 | 9.8 | 13.7 | 11.1 | 12.5 | 10.5 | 15.5 | 18.4 | 9.0 | 18.4 | 2.9 |
| 10 | 10.6 | 4.4 | 6.9 | 5.0 | 12.3 | 21.0 | 21.2 | 21.5 | 20.6 | 19.0 | 19.1 | 24.1 | 23.3 | 18.1 | 20.9 | 26.1 | 23.2 | 20.3 | 18.2 | 14.9 | 15.7 | 16.3 | 16.2 | 16.1 | 17.3 | 26.1 | 4.4 |
| 11 | 14.7 | 13.8 | 10.0 | 8.7 | 8.3 | 11.7 | 9.6 | 9.8 | 7.6 | 5.7 | 13.3 | 13.5 | 15.4 | 17.6 | 18.9 | 19.7 | 21.0 | 18.7 | 16.0 | 13.6 | 14.8 | 14.8 | 15.1 | 13.1 | 13.6 | 21.0 | 5.7 |
| 12 | 8.8 | 4.6 | 5.5 | 14.7 | 6.6 | 5.5 | 5.2 | 7.2 | 9.8 | 10.3 | 9.9 | 10.2 | 8.4 | 10.2 | 13.4 | 15.7 | 18.1 | 19.9 | 17.4 | 13.3 | 14.0 | 16.2 | 13.2 | 16.4 | 11.4 | 19.9 | 4.6 |
| 13 | 15.9 | 16.9 | 10.7 | 7.0 | 4.9 | 2.3 | 2.9 | 3.9 | 4.9 | 5.6 | 7.8 | 6.1 | 5.3 | 6.6 | 10.8 | 9.0 | 8.2 | 9.2 | 11.6 | 9.8 | 3.4 | 3.9 | 9.1 | 11.2 | 7.8 | 16.9 | 2.3 |
| 14 | 11.1 | 4.0 | 6.7 | 4.6 | 2.7 | 4.1 | 3.5 | 5.2 | 7.2 | 10.7 | 16.4 | 14.4 | 13.7 | 13.8 | 15.3 | 16.6 | 17.8 | 18.1 | 15.2 | 13.6 | 12.4 | 7.6 | 4.9 | 3.2 | 10.1 | 18.1 | 2.7 |
| 15 | 7.6 | 3.9 | 4.0 | 4.7 | 4.2 | 3.4 | 2.1 | 4.0 | 5.6 | 4.5 | 4.8 | 6.9 | 7.7 | 7.4 | 6.9 | 6.7 | 5.7 | 7.9 | 7.0 | 8.6 | 11.6 | 12.5 | 11.7 | 6.8 | 6.5 | 12.5 | 2.1 |
| 16 | 6.1 | 8.2 | 8.2 | 4.9 | 5.3 | 3.9 | 3.3 | 6.9 | 6.1 | 7.0 | 6.7 | 8.7 | 7.5 | 6.8 | 8.4 | 13.3 | 14.7 | 15.9 | 12.4 | 12.1 | 11.9 | 10.5 | 9.1 | 12.8 | 8.8 | 15.9 | 3.3 |
| 17 | 13.3 | 13.8 | 5.9 | 7.9 | 4.4 | 8.5 | 8.4 | 4.5 | 2.7 | 8.5 | 10.7 | 13.3 | 12.5 | 12.8 | 13.5 | 16.0 | 16.6 | 17.1 | 13.6 | 12.7 | 13.8 | 12.3 | 11.5 | 6.7 | 10.9 | 17.1 | 2.7 |
| 18 | 7.0 | 10.5 | 10.4 | 3.6 | 7.3 | 7.1 | 3.9 | 13.5 | 17.4 | 19.8 | 19.7 | 22.0 | 21.0 | 21.7 | 25.3 | 26.1 | 26.6 | 25.5 | 21.4 | 20.2 | 18.3 | 12.3 | 14.2 | 17.9 | 16.4 | 26.6 | 3.6 |
| 19 | 14.5 | 16.8 | 16.5 | 13.6 | 15.1 | 16.7 | 15.8 | 16.2 | 14.9 | 12.7 | 7.8 | 5.9 | 5.8 | 7.7 | 7.8 | 9.7 | 7.0 | 7.8 | 9.2 | 5.9 | 2.2 | 3.5 | 7.4 | 8.2 | 10.4 | 16.8 | 2.2 |
| 20 | 6.2 | 7.1 | 3.6 | 2.9 | 2.5 | 4.6 | 4.5 | 5.3 | 5.1 | 8.3 | 15.9 | 17.3 | 14.9 | 13.7 | 11.9 | 11.3 | 11.5 | 8.0 | 6.2 | 2.9 | 2.7 | 3.0 | 4.0 | 2.5 | 7.3 | 17.3 | 2.5 |
| 21 | 1.9 | 4.0 | 3.2 | 2.0 | 2.7 | 2.9 | 5.9 | 3.1 | 4.2 | 5.3 | 6.2 | 7.3 | 7.8 | 8.7 | 10.1 | 9.5 | 8.9 | 8.3 | 5.5 | 3.6 | 6.3 | 11.9 | 14.7 | 3.9 | 6.2 | 14.7 | 1.9 |
| 22 | 5.5 | 10.2 | 4.7 | 7.0 | 10.7 | 2.6 | 3.4 | 3.5 | 4.2 | 4.6 | 6.8 | 5.9 | 7.7 | 10.3 | 11.0 | 9.5 | 8.9 | 8.0 | 4.9 | 11.3 | 21.6 | 28.9 | 24.7 | 20.8 | 9.9 | 28.9 | 2.6 |
| 23 | 10.2 | 11.0 | 7.1 | 7.5 | 14.0 | 7.2 | 8.4 | 4.4 | 7.0 | 6.6 | 5.3 | 7.2 | 10.3 | 9.9 | 9.2 | 16.4 | 21.7 | 16.7 | 17.5 | 8.5 | 6.1 | 4.0 | 9.2 | 8.0 | 9.7 | 21.7 | 4.0 |
| 24 | 6.2 | 4.9 | 3.7 | 4.2 | 4.2 | 3.1 | 3.0 | 7.2 | 4.9 | 4.8 | 4.1 | 5.0 | 5.0 | 8.6 | 7.9 | 9.1 | 7.6 | 10.5 | 11.3 | 8.1 | 11.1 | 12.2 | 15.3 | 6.8 | 7.0 | 15.3 | 3.0 |
| 25 | 3.9 | 6.2 | 6.6 | 10.3 | 7.0 | 3.7 | 5.6 | 5.1 | 3.7 | 5.6 | 7.3 | 6.4 | 6.0 | 7.8 | 6.6 | 7.1 | 15.6 | 11.9 | 11.1 | 11.7 | 13.9 | 13.5 | 14.1 | 8.2 | 8.3 | 15.6 | 3.7 |
| 26 | 11.4 | 9.7 | 11.6 | 8.0 | 3.1 | 2.8 | 2.8 | 2.9 | 4.4 | 6.0 | 5.4 | 7.3 | 7.6 | 7.5 | 6.6 | 9.7 | 12.1 | 15.7 | 13.2 | 7.5 | 9.4 | 9.8 | 8.7 | 6.3 | 7.9 | 15.7 | 2.8 |
| 27 | 3.3 | 3.3 | 1.5 | 1.9 | 1.5 | 1.6 | 2.8 | 4.7 | 3.0 | 4.5 | 7.8 | 7.0 | 7.9 | 7.2 | 22.6 | 18.2 | 14.1 | 8.3 | 6.2 | 11.1 | 7.2 | 3.9 | 9.1 | 12.8 | 7.1 | 22.6 | 1.5 |
| 28 | 5.6 | 3.2 | 2.4 | 3.2 | 4.7 | 2.4 | 2.7 | 4.1 | 3.3 | 4.9 | 6.9 | 7.0 | 5.1 | 9.5 | 12.5 | 13.5 | 14.1 | 13.7 | 12.4 | 5.9 | 11.1 | 5.5 | 4.4 | 6.3 | 6.9 | 14.1 | 2.4 |
| 29 | 7.5 | 4.4 | 3.0 | 1.9 | 2.1 | 4.0 | 3.2 | 2.8 | 4.3 | 5.0 | 5.6 | 6.3 | 5.7 | 6.6 | 6.9 | 8.1 | 7.8 | 7.2 | 13.3 | 7.7 | 7.6 | 6.6 | 4.7 | 5.4 | 5.7 | 13.3 | 1.9 |
| 30 | 5.6 | 3.5 | 7.2 | 7.3 | 1.8 | 2.7 | 1.4 | 2.6 | 3.6 | 4.0 | 3.6 | 9.0 | 8.7 | 11.8 | 10.8 | 9.4 | 12.3 | 16.8 | 14.1 | 6.9 | 5.9 | 7.7 | 5.3 | 6.9 | 7.0 | 16.8 | 1.4 |
| 31 | 5.4 | 9.2 | 4.5 | 2.2 | 2.5 | 5.7 | 4.7 | 2.1 | 8.4 | 7.9 | 7.3 | 6.4 | 5.6 | 10.0 | 11.0 | 14.4 | 13.7 | 9.2 | 11.6 | 23.7 | 8.5 | 17.2 | 15.6 | 5.4 | 8.8 | 23.7 | 2.1 |
| Mean | 8.8 | 8.8 | 7.6 | 6.5 | 6.4 | 7.4 | 7.1 | 7.6 | 8.3 | 9.1 | 10.0 | 10.7 | 10.4 | 11.1 | 12.7 | 13.8 | 14.0 | 13.3 | 12.3 | 10.3 | 10.2 | 10.4 | 11.3 | 9.8 | Monthly mean = | | 9.9 |
| Max. | 15.9 | 16.9 | 16.5 | 17.1 | 15.7 | 21.0 | 22.3 | 21.5 | 22.3 | 20.3 | 22.9 | 24.1 | 23.3 | 21.7 | 25.3 | 30.5 | 31.1 | 25.8 | 22.5 | 23.7 | 21.6 | 28.9 | 24.7 | 20.8 | Monthly max. = | | 31.1 |
| Min. | 1.9 | 1.9 | 1.5 | 1.7 | 1.5 | 1.6 | 1.4 | 2.0 | 2.7 | 3.8 | 3.6 | 5.0 | 5.0 | 5.9 | 6.6 | 5.5 | 4.1 | 4.2 | 4.9 | 2.9 | 2.2 | 3.0 | 4.0 | 2.5 | Monthly min. = | | 1.4 |

TOTAL NUMBER OF DATA HOURS IN MONTH: 744
Number of hours of bad or missing data: 0

Current % recovery = 100.0

**** designates missing or lost data

N/A: insufficient data available for calculation (a minimum of 75% is required)

table created at 11: 3, 4/12/1995

MONTHLY SUMMARY
WIND DIRECTION
(Degrees)
INPUT FILE: alls1met.out

Bechtel Environmental, Inc.

Met Data for Site 1
JULY 1994

| Day | Hour 1 | 2 | 3 | 4 | 5 | 6 | 7 | 8 | 9 | 10 | 11 | 12 | 13 | 14 | 15 | 16 | 17 | 18 | 19 | 20 | 21 | 22 | 23 | 24 | Mean | Max. | Min. |
|---|---|---|---|---|---|---|---|---|---|---|---|---|---|---|---|---|---|---|---|---|---|---|---|---|---|---|---|
| 1 | 125.0 | 120.0 | 98.0 | 84.0 | 230.0 | 234.0 | 249.0 | 253.0 | 250.0 | 259.0 | 260.0 | 265.0 | 284.0 | 280.0 | 281.0 | 277.0 | 270.0 | 267.0 | 256.0 | 224.0 | 219.0 | 119.0 | 122.0 | 122.0 | 214.5 | 284.0 | 84.0 |
| 2 | 123.0 | 124.0 | 121.0 | 228.0 | 322.0 | 236.0 | 236.0 | 234.0 | 245.0 | 238.0 | 257.0 | 256.0 | 257.0 | 257.0 | 254.0 | 261.0 | 249.0 | 257.0 | 258.0 | 260.0 | 241.0 | 221.0 | 229.0 | 232.0 | 233.2 | 322.0 | 121.0 |
| 3 | 225.0 | 222.0 | 226.0 | 235.0 | 238.0 | 233.0 | 235.0 | 233.0 | 242.0 | 258.0 | 263.0 | 264.0 | 262.0 | 260.0 | 263.0 | 267.0 | 249.0 | 249.0 | 238.0 | 225.0 | 219.0 | 217.0 | 220.0 | 222.0 | 240.2 | 267.0 | 217.0 |
| 4 | 222.0 | 240.0 | 294.0 | 238.0 | 240.0 | 233.0 | 237.0 | 243.0 | 265.0 | 266.0 | 256.0 | 271.0 | 279.0 | 274.0 | 266.0 | 262.0 | 264.0 | 261.0 | 253.0 | 219.0 | 192.0 | 116.0 | 123.0 | 120.0 | 234.8 | 294.0 | 116.0 |
| 5 | 121.0 | 128.0 | 124.0 | 127.0 | 118.0 | 105.0 | 173.0 | 124.0 | 108.0 | 284.0 | 300.0 | 297.0 | 306.0 | 308.0 | 266.0 | 247.0 | 253.0 | 266.0 | 265.0 | 251.0 | 252.0 | 242.0 | 192.0 | 193.0 | 210.4 | 308.0 | 105.0 |
| 6 | 207.0 | 227.0 | 230.0 | 215.0 | 228.0 | 240.0 | 211.0 | 219.0 | 240.0 | 250.0 | 242.0 | 254.0 | 248.0 | 285.0 | 283.0 | 282.0 | 285.0 | 5.0 | 41.0 | 64.0 | 82.0 | 82.0 | 104.0 | 96.0 | 192.5 | 285.0 | 5.0 |
| 7 | 37.0 | 4.0 | 327.0 | 28.0 | 42.0 | 14.0 | 302.0 | 11.0 | 354.0 | 8.0 | 25.0 | 16.0 | 12.0 | 1.0 | 3.0 | 22.0 | 55.0 | 20.0 | 4.0 | 38.0 | 120.0 | 115.0 | 126.0 | 118.0 | 30.1 | 354.0 | 1.0 |
| 8 | 126.0 | 124.0 | 136.0 | 99.0 | 102.0 | 130.0 | 125.0 | 341.0 | 334.0 | 21.0 | 341.0 | 318.0 | 309.0 | 308.0 | 309.0 | 318.0 | 358.0 | 49.0 | 314.0 | 321.0 | 132.0 | 125.0 | 123.0 | 118.0 | 42.5 | 358.0 | 21.0 |
| 9 | 115.0 | 122.0 | 125.0 | 281.0 | 94.0 | 124.0 | 121.0 | 121.0 | 81.0 | 29.0 | 33.0 | 17.0 | 22.0 | 7.0 | 299.0 | 227.0 | 216.0 | 264.0 | 226.0 | 214.0 | 203.0 | 177.0 | 129.0 | 123.0 | 140.4 | 299.0 | 7.0 |
| 10 | 123.0 | 295.0 | 279.0 | 102.0 | 236.0 | 246.0 | 240.0 | 242.0 | 249.0 | 248.0 | 260.0 | 263.0 | 261.0 | 244.0 | 247.0 | 257.0 | 253.0 | 247.0 | 247.0 | 228.0 | 222.0 | 224.0 | 236.0 | 234.0 | 236.8 | 295.0 | 102.0 |
| 11 | 236.0 | 239.0 | 236.0 | 250.0 | 233.0 | 251.0 | 262.0 | 270.0 | 44.0 | 300.0 | 269.0 | 276.0 | 262.0 | 264.0 | 261.0 | 257.0 | 258.0 | 248.0 | 241.0 | 243.0 | 227.0 | 221.0 | 223.0 | 221.0 | 256.3 | 300.0 | 44.0 |
| 12 | 223.0 | 106.0 | 272.0 | 239.0 | 132.0 | 110.0 | 302.0 | 296.0 | 280.0 | 283.0 | 282.0 | 287.0 | 312.0 | 289.0 | 280.0 | 257.0 | 246.0 | 251.0 | 254.0 | 244.0 | 228.0 | 223.0 | 234.0 | 228.0 | 244.1 | 312.0 | 106.0 |
| 13 | 243.0 | 239.0 | 256.0 | 284.0 | 285.0 | 297.0 | 345.0 | 7.0 | 16.0 | 49.0 | 8.0 | 9.0 | 355.0 | 325.0 | 287.0 | 288.0 | 272.0 | 277.0 | 269.0 | 303.0 | 33.0 | 105.0 | 122.0 | 122.0 | 334.8 | 355.0 | 7.0 |
| 14 | 114.0 | 354.0 | 115.0 | 104.0 | 80.0 | 113.0 | 118.0 | 313.0 | 319.0 | 268.0 | 272.0 | 282.0 | 288.0 | 277.0 | 273.0 | 271.0 | 254.0 | 257.0 | 252.0 | 254.0 | 225.0 | 291.0 | 347.0 | 300.0 | 239.2 | 354.0 | 80.0 |
| 15 | 278.0 | 318.0 | 115.0 | 111.0 | 318.0 | 296.0 | 334.0 | 336.0 | 355.0 | 6.0 | 15.0 | 3.0 | 359.0 | 12.0 | 13.0 | 355.0 | 28.0 | 293.0 | 251.0 | 232.0 | 225.0 | 224.0 | 225.0 | 239.0 | 325.9 | 359.0 | 3.0 |
| 16 | 140.0 | 126.0 | 276.0 | 294.0 | 270.0 | 205.0 | 83.0 | 294.0 | 302.0 | 323.0 | 335.0 | 295.0 | 292.0 | 291.0 | 284.0 | 264.0 | 250.0 | 257.0 | 252.0 | 224.0 | 219.0 | 198.0 | 120.0 | 118.0 | 238.0 | 335.0 | 83.0 |
| 17 | 118.0 | 117.0 | 124.0 | 135.0 | 123.0 | 123.0 | 124.0 | 118.0 | 318.0 | 280.0 | 293.0 | 284.0 | 286.0 | 277.0 | 263.0 | 255.0 | 251.0 | 257.0 | 248.0 | 234.0 | 220.0 | 225.0 | 222.0 | 268.0 | 215.1 | 318.0 | 117.0 |
| 18 | 112.0 | 122.0 | 115.0 | 7.0 | 115.0 | 203.0 | 112.0 | 248.0 | 260.0 | 253.0 | 258.0 | 262.0 | 258.0 | 251.0 | 252.0 | 253.0 | 256.0 | 256.0 | 249.0 | 239.0 | 233.0 | 246.0 | 250.0 | 240.0 | 210.4 | 262.0 | 7.0 |
| 19 | 252.0 | 238.0 | 233.0 | 242.0 | 237.0 | 235.0 | 241.0 | 262.0 | 268.0 | 275.0 | 290.0 | 12.0 | 320.0 | 296.0 | 290.0 | 282.0 | 273.0 | 286.0 | 282.0 | 300.0 | 83.0 | 122.0 | 117.0 | 123.0 | 231.6 | 320.0 | 12.0 |
| 20 | 124.0 | 217.0 | 75.0 | 99.0 | 329.0 | 312.0 | 309.0 | 328.0 | 10.0 | 18.0 | 14.0 | 10.0 | 6.0 | 10.0 | 3.0 | 19.0 | 16.0 | 29.0 | 34.0 | 38.0 | 91.0 | 80.0 | 97.0 | 92.0 | 23.3 | 329.0 | 3.0 |
| 21 | 70.0 | 283.0 | 219.0 | 299.0 | 8.0 | 35.0 | 74.0 | 346.0 | 33.0 | 6.0 | 12.0 | 6.0 | 11.0 | 12.0 | 9.0 | 332.0 | 323.0 | 355.0 | 36.0 | 108.0 | 121.0 | 123.0 | 121.0 | 246.0 | 12.8 | 355.0 | 6.0 |
| 22 | 122.0 | 131.0 | 280.0 | 107.0 | 127.0 | 307.0 | 309.0 | 35.0 | 50.0 | 40.0 | 11.0 | 355.0 | 346.0 | 326.0 | 312.0 | 290.0 | 346.0 | 5.0 | 25.0 | 156.0 | 156.0 | 151.0 | 156.0 | 174.0 | 44.9 | 355.0 | 5.0 |
| 23 | 184.0 | 125.0 | 172.0 | 127.0 | 233.0 | 191.0 | 141.0 | 112.0 | 109.0 | 47.0 | 36.0 | 32.0 | 359.0 | 4.0 | 334.0 | 243.0 | 194.0 | 154.0 | 127.0 | 58.0 | 87.0 | 83.0 | 121.0 | 131.0 | 141.8 | 359.0 | 4.0 |
| 24 | 90.0 | 79.0 | 85.0 | 104.0 | 108.0 | 56.0 | 134.0 | 106.0 | 46.0 | 11.0 | 13.0 | 7.0 | 351.0 | 336.0 | 308.0 | 301.0 | 310.0 | 228.0 | 189.0 | 129.0 | 123.0 | 117.0 | 119.0 | 121.0 | 39.6 | 351.0 | 7.0 |
| 25 | 340.0 | 120.0 | 104.0 | 115.0 | 200.0 | 301.0 | 123.0 | 95.0 | 29.0 | 5.0 | 358.0 | 7.0 | 18.0 | 9.0 | 8.0 | 342.0 | 4.0 | 53.0 | 77.0 | 134.0 | 133.0 | 111.0 | 108.0 | 110.0 | 46.0 | 358.0 | 4.0 |
| 26 | 122.0 | 121.0 | 103.0 | 118.0 | 286.0 | 328.0 | 324.0 | 337.0 | 37.0 | 44.0 | 5.0 | 1.0 | 12.0 | 10.0 | 29.0 | 357.0 | .0 | 34.0 | 50.0 | 35.0 | 104.0 | 122.0 | 116.0 | 67.0 | 40.1 | 357.0 | .0 |
| 27 | 320.0 | 306.0 | 189.0 | 14.0 | 38.0 | 345.0 | 297.0 | 310.0 | 56.0 | 46.0 | 15.0 | 359.0 | 11.0 | 337.0 | 214.0 | 162.0 | 127.0 | 37.0 | 90.0 | 65.0 | 82.0 | 323.0 | 141.0 | 125.0 | 17.0 | 359.0 | 11.0 |
| 28 | 330.0 | 112.0 | 112.0 | 39.0 | 100.0 | 47.0 | 301.0 | 318.0 | 22.0 | 18.0 | 2.0 | 23.0 | 17.0 | 2.0 | 16.0 | 13.0 | 11.0 | 353.0 | 246.0 | 236.0 | 38.0 | 63.0 | 101.0 | 76.0 | 18.2 | 353.0 | 2.0 |
| 29 | 131.0 | 335.0 | 120.0 | 52.0 | 300.0 | 307.0 | 302.0 | .0 | 34.0 | 33.0 | 358.0 | 2.0 | 6.0 | 353.0 | 13.0 | 10.0 | 14.0 | 300.0 | 279.0 | 280.0 | 80.0 | 65.0 | 82.0 | 296.0 | 6.3 | 358.0 | .0 |
| 30 | 286.0 | 304.0 | 113.0 | 103.0 | 33.0 | 42.0 | 21.0 | 27.0 | 31.0 | 30.0 | 14.0 | 333.0 | 329.0 | 296.0 | 283.0 | 287.0 | 285.0 | 285.0 | 345.0 | 359.0 | 85.0 | 306.0 | 311.0 | 100.0 | 357.0 | 359.0 | 14.0 |
| 31 | 100.0 | 140.0 | 265.0 | 287.0 | 98.0 | 114.0 | 112.0 | 87.0 | 130.0 | 119.0 | 103.0 | 51.0 | 6.0 | 127.0 | 126.0 | 133.0 | 133.0 | 128.0 | 185.0 | 271.0 | 331.0 | 108.0 | 129.0 | 303.0 | 149.4 | 331.0 | 6.0 |
| Mean | 172.9 | 185.1 | 178.7 | 153.8 | 177.5 | 194.0 | 209.6 | 341.5 | 350.9 | 336.6 | 330.3 | 327.6 | 324.0 | 320.3 | 308.7 | 308.1 | 307.8 | 317.0 | 300.7 | 199.5 | 161.5 | 166.0 | 163.4 | 170.3 | Monthly mean = 343.6 | | |
| Max. | 340.0 | 354.0 | 327.0 | 299.0 | 329.0 | 345.0 | 345.0 | 346.0 | 355.0 | 323.0 | 358.0 | 359.0 | 359.0 | 353.0 | 334.0 | 357.0 | 358.0 | 355.0 | 345.0 | 359.0 | 331.0 | 323.0 | 347.0 | 303.0 | Monthly max. = 359.0 | | |
| Min. | 37.0 | 4.0 | 75.0 | 7.0 | 8.0 | 14.0 | 21.0 | .0 | 10.0 | 5.0 | 2.0 | 1.0 | 6.0 | 1.0 | 3.0 | 10.0 | .0 | 5.0 | 4.0 | 35.0 | 33.0 | 63.0 | 82.0 | 67.0 | Monthly min. = .0 | | |

TOTAL NUMBER OF DATA HOURS IN MONTH: 744
Number of hours of bad or missing data: 0
Current % recovery = 100.0
**** designates missing or lost data

N/A: insufficient data available for calculation (a minimum of 75% is required)

table created at 11: 3, 4/12/1995

MONTHLY SUMMARY
TEMPERATURE
(Degrees Celsius)
INPUT FILE: alls1met.out

Bechtel Environmental, Inc.

Met Data for Site 1
JULY 1994

| Day \ Hour | 1 | 2 | 3 | 4 | 5 | 6 | 7 | 8 | 9 | 10 | 11 | 12 | 13 | 14 | 15 | 16 | 17 | 18 | 19 | 20 | 21 | 22 | 23 | 24 | Mean | Max. | Min. |
|---|---|---|---|---|---|---|---|---|---|---|---|---|---|---|---|---|---|---|---|---|---|---|---|---|---|---|---|
| 1 | 21.5 | 20.0 | 18.4 | 14.3 | 17.9 | 22.9 | 23.6 | 23.6 | 24.4 | 25.5 | 26.2 | 27.2 | 28.4 | 29.0 | 29.4 | 29.8 | 30.3 | 30.2 | 29.7 | 28.9 | 27.8 | 24.2 | 20.8 | 19.3 | 24.7 | 30.3 | 14.3 |
| 2 | 16.8 | 16.6 | 17.8 | 14.7 | 11.6 | 17.3 | 20.1 | 20.6 | 21.2 | 22.0 | 22.6 | 22.8 | 23.6 | 23.1 | 23.8 | 24.6 | 25.4 | 25.9 | 24.9 | 23.9 | 22.3 | 21.4 | 20.9 | 20.6 | 21.0 | 25.9 | 11.6 |
| 3 | 20.4 | 20.3 | 19.4 | 18.4 | 16.4 | 15.6 | 15.3 | 15.4 | 16.6 | 18.0 | 19.1 | 20.3 | 21.0 | 21.9 | 23.0 | 23.1 | 23.0 | 23.4 | 22.8 | 21.7 | 20.3 | 19.3 | 19.2 | 18.9 | 19.7 | 23.4 | 15.3 |
| 4 | 18.4 | 17.4 | 12.9 | 15.3 | 15.9 | 15.5 | 16.3 | 17.0 | 17.7 | 19.1 | 20.4 | 21.2 | 21.9 | 23.1 | 23.1 | 22.7 | 23.8 | 24.7 | 24.9 | 24.6 | 23.3 | 19.4 | 17.4 | 16.2 | 19.7 | 24.9 | 12.9 |
| 5 | 15.0 | 14.0 | 13.2 | 13.0 | 13.7 | 13.3 | 15.3 | 19.4 | 22.5 | 22.7 | 22.0 | 24.3 | 25.4 | 26.3 | 25.4 | 19.3 | 19.2 | 18.4 | 16.8 | 16.0 | 14.9 | 13.4 | 13.2 | 13.3 | 17.9 | 26.3 | 13.0 |
| 6 | 12.9 | 11.9 | 10.6 | 9.6 | 9.2 | 7.5 | 6.3 | 7.2 | 8.2 | 9.3 | 9.8 | 11.3 | 12.8 | 14.9 | 16.1 | 16.9 | 17.8 | 17.1 | 15.2 | 14.6 | 15.3 | 15.2 | 15.0 | 14.4 | 12.5 | 17.8 | 6.3 |
| 7 | 11.2 | 9.1 | 7.8 | 6.9 | 6.4 | 6.6 | 8.8 | 13.8 | 14.3 | 15.8 | 17.8 | 19.3 | 20.7 | 21.7 | 22.7 | 23.7 | 24.8 | 25.3 | 24.8 | 22.5 | 20.4 | 18.5 | 17.2 | 14.7 | 16.4 | 25.3 | 6.4 |
| 8 | 14.3 | 13.1 | 12.3 | 11.0 | 10.3 | 10.6 | 12.9 | 18.0 | 20.8 | 22.6 | 24.2 | 25.6 | 26.5 | 27.3 | 28.2 | 28.6 | 30.1 | 30.2 | 29.9 | 29.3 | 25.8 | 22.7 | 20.5 | 19.2 | 21.4 | 30.2 | 10.3 |
| 9 | 18.2 | 17.2 | 17.3 | 14.1 | 12.6 | 14.4 | 17.1 | 22.4 | 23.3 | 24.5 | 26.7 | 30.1 | 32.4 | 32.9 | 34.3 | 34.7 | 34.7 | 34.8 | 34.0 | 33.2 | 32.1 | 30.7 | 26.8 | 25.1 | 26.0 | 34.8 | 12.6 |
| 10 | 23.6 | 18.9 | 16.5 | 16.7 | 21.5 | 22.0 | 22.0 | 21.9 | 22.4 | 23.4 | 24.5 | 25.9 | 27.1 | 28.8 | 29.5 | 29.9 | 29.9 | 30.1 | 29.5 | 28.4 | 26.8 | 25.5 | 24.5 | 23.3 | 24.7 | 30.1 | 16.5 |
| 11 | 22.6 | 21.3 | 19.6 | 17.1 | 16.8 | 15.5 | 16.3 | 17.3 | 13.5 | 21.1 | 22.5 | 23.6 | 25.4 | 26.3 | 27.1 | 27.8 | 28.1 | 28.2 | 28.0 | 27.0 | 25.4 | 24.8 | 24.6 | 24.0 | 22.7 | 28.2 | 13.5 |
| 12 | 22.5 | 16.9 | 15.5 | 20.2 | 14.6 | 11.5 | 14.6 | 16.7 | 18.7 | 20.3 | 22.4 | 24.0 | 25.5 | 26.5 | 27.5 | 28.4 | 28.9 | 29.1 | 28.5 | 27.7 | 26.1 | 25.4 | 23.8 | 23.1 | 22.4 | 29.1 | 11.5 |
| 13 | 21.0 | 19.0 | 18.2 | 15.8 | 13.8 | 11.6 | 16.2 | 17.5 | 18.3 | 19.8 | 21.3 | 22.8 | 24.9 | 26.4 | 26.8 | 27.2 | 27.8 | 28.2 | 27.9 | 26.3 | 21.7 | 19.5 | 18.7 | 17.7 | 21.2 | 28.2 | 11.6 |
| 14 | 16.5 | 13.7 | 13.4 | 11.5 | 9.5 | 10.8 | 14.1 | 17.3 | 18.9 | 23.4 | 24.0 | 24.5 | 26.0 | 27.1 | 28.1 | 28.6 | 29.2 | 29.3 | 29.0 | 27.4 | 26.5 | 23.2 | 20.3 | 16.9 | 21.2 | 29.3 | 9.5 |
| 15 | 16.5 | 14.5 | 13.0 | 13.0 | 10.9 | 10.8 | 14.6 | 18.1 | 19.1 | 21.6 | 24.4 | 26.7 | 28.4 | 28.9 | 29.7 | 30.4 | 30.5 | 30.8 | 31.0 | 30.2 | 28.1 | 27.6 | 27.2 | 21.0 | 22.8 | 31.0 | 10.8 |
| 16 | 19.1 | 19.4 | 15.2 | 14.3 | 13.4 | 13.7 | 15.1 | 17.8 | 20.2 | 22.3 | 24.2 | 26.1 | 27.7 | 29.4 | 30.1 | 30.8 | 31.1 | 30.9 | 30.8 | 29.6 | 28.7 | 27.2 | 22.4 | 20.7 | 23.3 | 31.1 | 13.4 |
| 17 | 19.1 | 18.7 | 16.5 | 15.7 | 14.6 | 15.1 | 16.5 | 20.1 | 24.4 | 26.2 | 27.0 | 28.6 | 30.0 | 31.3 | 32.3 | 33.1 | 33.6 | 33.2 | 32.3 | 31.0 | 30.4 | 29.5 | 29.4 | 24.4 | 25.5 | 33.6 | 14.6 |
| 18 | 20.8 | 20.6 | 21.0 | 17.3 | 16.9 | 15.8 | 17.9 | 24.4 | 24.9 | 26.1 | 27.7 | 29.0 | 30.0 | 30.6 | 31.5 | 31.5 | 31.4 | 31.0 | 30.4 | 28.9 | 27.6 | 26.0 | 25.0 | 25.2 | 25.5 | 31.5 | 15.8 |
| 19 | 24.0 | 22.1 | 21.7 | 21.1 | 19.9 | 19.0 | 19.1 | 19.1 | 19.9 | 21.0 | 22.6 | 24.2 | 25.6 | 26.2 | 26.9 | 27.1 | 28.4 | 28.7 | 28.4 | 26.8 | 22.9 | 21.8 | 20.4 | 19.5 | 23.2 | 28.7 | 19.0 |
| 20 | 18.6 | 21.4 | 15.9 | 14.0 | 11.4 | 10.8 | 13.9 | 16.5 | 19.6 | 22.2 | 24.8 | 26.4 | 27.4 | 27.6 | 28.0 | 28.5 | 29.0 | 29.4 | 28.9 | 26.7 | 22.7 | 20.1 | 18.3 | 16.0 | 21.6 | 29.4 | 10.8 |
| 21 | 14.4 | 14.2 | 13.4 | 12.3 | 11.3 | 10.2 | 13.8 | 17.7 | 20.2 | 23.1 | 26.2 | 28.3 | 30.1 | 31.2 | 31.8 | 32.6 | 32.7 | 33.3 | 32.2 | 30.3 | 26.6 | 24.3 | 23.3 | 19.6 | 23.0 | 33.3 | 10.2 |
| 22 | 19.4 | 19.5 | 16.2 | 15.4 | 16.6 | 14.9 | 16.9 | 19.5 | 22.0 | 27.4 | 28.8 | 32.0 | 33.0 | 33.6 | 34.1 | 34.4 | 35.2 | 35.0 | 34.3 | 32.3 | 29.2 | 26.1 | 27.2 | 29.0 | 26.3 | 35.2 | 14.9 |
| 23 | 27.0 | 24.5 | 23.4 | 22.1 | 22.9 | 22.3 | 21.3 | 21.0 | 21.6 | 24.4 | 26.9 | 28.9 | 29.9 | 31.2 | 30.6 | 27.8 | 22.4 | 23.4 | 22.4 | 21.8 | 21.2 | 20.0 | 18.8 | 19.3 | 24.0 | 31.2 | 18.8 |
| 24 | 16.8 | 15.4 | 14.0 | 13.3 | 13.3 | 13.0 | 15.1 | 18.1 | 21.1 | 23.3 | 25.9 | 28.3 | 30.0 | 31.0 | 31.7 | 32.0 | 31.5 | 30.7 | 31.7 | 29.3 | 27.1 | 24.0 | 24.4 | 23.3 | 23.5 | 32.0 | 13.0 |
| 25 | 18.4 | 19.2 | 19.2 | 17.7 | 16.0 | 14.8 | 16.6 | 20.5 | 24.1 | 26.2 | 27.8 | 30.0 | 31.9 | 32.8 | 34.0 | 34.5 | 31.6 | 30.1 | 30.0 | 28.9 | 27.6 | 25.5 | 23.7 | 22.2 | 25.1 | 34.5 | 14.8 |
| 26 | 21.5 | 19.2 | 18.9 | 17.4 | 14.9 | 13.3 | 16.1 | 20.1 | 22.8 | 25.4 | 28.4 | 31.4 | 33.3 | 34.3 | 35.2 | 35.6 | 35.2 | 29.6 | 29.5 | 27.1 | 26.7 | 27.3 | 24.7 | 21.6 | 25.4 | 35.6 | 13.3 |
| 27 | 18.3 | 17.5 | 16.1 | 15.3 | 13.8 | 13.4 | 16.2 | 18.4 | 22.5 | 24.8 | 27.3 | 30.2 | 32.8 | 33.4 | 32.3 | 31.8 | 31.5 | 29.8 | 29.6 | 28.3 | 26.1 | 26.2 | 27.0 | 25.8 | 24.5 | 33.4 | 13.4 |
| 28 | 23.2 | 20.3 | 19.2 | 17.3 | 16.1 | 16.1 | 19.8 | 19.1 | 21.9 | 25.0 | 27.4 | 29.2 | 31.4 | 33.4 | 33.5 | 34.1 | 32.9 | 29.7 | 28.6 | 28.3 | 27.1 | 25.5 | 24.5 | 23.8 | 25.3 | 34.1 | 16.1 |
| 29 | 23.1 | 20.5 | 17.5 | 16.5 | 14.5 | 13.8 | 15.7 | 19.7 | 22.7 | 25.7 | 28.7 | 31.1 | 32.8 | 33.7 | 34.9 | 35.5 | 35.4 | 34.0 | 30.5 | 28.3 | 26.6 | 25.4 | 24.4 | 22.7 | 25.6 | 35.5 | 13.8 |
| 30 | 21.1 | 20.0 | 18.1 | 18.7 | 17.3 | 16.3 | 18.6 | 21.6 | 24.0 | 26.3 | 30.4 | 30.3 | 31.0 | 32.8 | 33.1 | 33.7 | 34.1 | 30.9 | 26.3 | 24.8 | 24.3 | 23.4 | 22.4 | 21.4 | 25.0 | 34.1 | 16.3 |
| 31 | 21.6 | 22.4 | 20.3 | 18.4 | 18.6 | 19.1 | 20.3 | 22.5 | 24.1 | 25.0 | 26.9 | 28.6 | 30.5 | 30.8 | 30.6 | 30.5 | 30.8 | 31.0 | 28.9 | 19.5 | 17.2 | 17.1 | 18.7 | 17.1 | 23.8 | 31.0 | 17.1 |
| Mean | 19.3 | 18.0 | 16.5 | 15.4 | 14.6 | 14.4 | 16.3 | 18.8 | 20.5 | 22.7 | 24.5 | 26.2 | 27.7 | 28.6 | 29.2 | 29.3 | 29.4 | 28.9 | 28.1 | 26.6 | 24.8 | 23.2 | 22.1 | 20.6 | Monthly mean = | | 22.7 |
| Max. | 27.0 | 24.5 | 23.4 | 22.1 | 22.9 | 22.9 | 23.6 | 24.4 | 24.9 | 27.4 | 30.4 | 32.0 | 33.3 | 34.3 | 35.2 | 35.6 | 35.4 | 35.0 | 34.3 | 33.2 | 32.1 | 30.7 | 29.4 | 29.0 | Monthly max. = | | 35.6 |
| Min. | 11.2 | 9.1 | 7.8 | 6.9 | 6.4 | 6.6 | 6.3 | 7.2 | 8.2 | 9.3 | 9.8 | 11.3 | 12.8 | 14.9 | 16.1 | 16.9 | 17.8 | 17.1 | 15.2 | 14.6 | 14.9 | 13.4 | 13.2 | 13.3 | Monthly min. = | | 6.3 |

TOTAL NUMBER OF DATA HOURS IN MONTH: 744
Number of hours of bad or missing data: 0

Current % recovery = 100.0

**** designates missing or lost data

N/A: insufficient data available for calculation (a minimum of 75% is required)

table created at 11: 3, 4/12/1995

MONTHLY SUMMARY
SIGMA THETA
(Degrees)
INPUT FILE: allslmet.out

Bechtel Environmental, Inc.

Met Data for Site 1
JULY 1994

| Day \ Hour | 1 | 2 | 3 | 4 | 5 | 6 | 7 | 8 | 9 | 10 | 11 | 12 | 13 | 14 | 15 | 16 | 17 | 18 | 19 | 20 | 21 | 22 | 23 | 24 | Mean | Max. | Min. |
|---|---|---|---|---|---|---|---|---|---|---|---|---|---|---|---|---|---|---|---|---|---|---|---|---|---|---|---|
| 1 | 3. | 4. | 36. | 26. | 49. | 14. | 15. | 16. | 16. | 13. | 13. | 11. | 11. | 12. | 12. | 12. | 13. | 12. | 12. | 12. | 11. | 27. | 4. | 11. | N/A | 49. | 3. |
| 2 | 28. | 5. | 7. | 31. | 38. | 17. | 15. | 15. | 16. | 14. | 12. | 11. | 11. | 11. | 13. | 14. | 16. | 16. | 14. | 14. | 15. | 14. | 14. | 15. | N/A | 38. | 5. |
| 3 | 15. | 14. | 14. | 13. | 14. | 13. | 15. | 16. | 17. | 16. | 16. | 18. | 16. | 20. | 17. | 13. | 12. | 14. | 13. | 13. | 13. | 15. | 15. | 14. | N/A | 20. | 12. |
| 4 | 15. | 21. | 18. | 19. | 15. | 15. | 15. | 16. | 15. | 15. | 18. | 20. | 13. | 14. | 13. | 11. | 10. | 12. | 15. | 17. | 13. | 23. | 4. | 4. | N/A | 23. | 4. |
| 5 | 5. | 9. | 5. | 14. | 10. | 15. | 55. | 10. | 26. | 45. | 19. | 23. | 22. | 13. | 11. | 12. | 11. | 10. | 10. | 13. | 16. | 14. | 13. | 12. | N/A | 55. | 5. |
| 6 | 12. | 15. | 14. | 14. | 14. | 14. | 13. | 14. | 16. | 17. | 17. | 15. | 23. | 39. | 32. | 34. | 27. | 27. | 10. | 15. | 10. | 8. | 10. | 20. | N/A | 39. | 8. |
| 7 | 16. | 59. | 57. | 31. | 25. | 40. | 30. | 55. | 22. | 24. | 28. | 22. | 28. | 29. | 36. | 40. | 54. | 39. | 17. | 14. | 10. | 7. | 18. | 25. | N/A | 59. | 7. |
| 8 | 4. | 4. | 35. | 20. | 14. | 6. | 13. | 31. | 37. | 23. | 25. | 36. | 22. | 21. | 19. | 17. | 43. | 34. | 21. | 40. | 9. | 4. | 5. | 5. | N/A | 43. | 4. |
| 9 | 3. | 6. | 7. | 67. | 11. | 20. | 16. | 54. | 13. | 12. | 16. | 19. | 19. | 30. | 38. | 31. | 60. | 18. | 17. | 27. | 34. | 29. | 4. | 4. | N/A | 67. | 3. |
| 10 | 33. | 46. | 24. | 27. | 30. | 13. | 14. | 15. | 16. | 17. | 14. | 10. | 12. | 16. | 14. | 9. | 11. | 12. | 12. | 11. | 14. | 14. | 14. | 14. | N/A | 46. | 9. |
| 11 | 13. | 14. | 30. | 43. | 49. | 14. | 17. | 17. | 40. | 46. | 19. | 14. | 15. | 15. | 12. | 11. | 10. | 11. | 12. | 16. | 13. | 14. | 14. | 14. | N/A | 49. | 10. |
| 12 | 21. | 32. | 74. | 9. | 24. | 17. | 27. | 15. | 13. | 12. | 15. | 14. | 21. | 25. | 15. | 15. | 13. | 12. | 11. | 10. | 12. | 11. | 15. | 13. | N/A | 74. | 9. |
| 13 | 16. | 13. | 20. | 11. | 67. | 41. | 29. | 32. | 25. | 29. | 21. | 35. | 53. | 33. | 11. | 22. | 24. | 17. | 10. | 29. | 60. | 41. | 6. | 5. | N/A | 67. | 5. |
| 14 | 45. | 32. | 11. | 27. | 30. | 11. | 33. | 15. | 11. | 22. | 11. | 13. | 14. | 15. | 15. | 13. | 13. | 11. | 12. | 12. | 11. | 43. | 27. | 64. | N/A | 64. | 11. |
| 15 | 8. | 41. | 27. | 27. | 15. | 68. | 76. | 24. | 19. | 25. | 30. | 23. | 23. | 33. | 30. | 41. | 52. | 19. | 21. | 14. | 12. | 12. | 11. | 34. | N/A | 76. | 8. |
| 16 | 14. | 28. | 18. | 60. | 74. | 71. | 22. | 37. | 19. | 17. | 26. | 18. | 24. | 39. | 26. | 19. | 15. | 11. | 11. | 11. | 12. | 16. | 14. | 5. | N/A | 74. | 5. |
| 17 | 5. | 5. | 29. | 30. | 42. | 6. | 6. | 15. | 41. | 13. | 11. | 11. | 14. | 16. | 15. | 14. | 15. | 11. | 11. | 12. | 13. | 15. | 13. | 55. | N/A | 55. | 5. |
| 18 | 11. | 6. | 5. | 42. | 20. | 31. | 35. | 21. | 11. | 13. | 12. | 10. | 11. | 13. | 13. | 12. | 10. | 10. | 12. | 15. | 15. | 14. | 14. | 11. | N/A | 42. | 5. |
| 19 | 11. | 10. | 13. | 14. | 11. | 11. | 13. | 14. | 14. | 13. | 30. | 49. | 49. | 38. | 38. | 25. | 41. | 18. | 11. | 46. | 55. | 25. | 6. | 4. | N/A | 55. | 4. |
| 20 | 32. | 20. | 23. | 22. | 41. | 10. | 10. | 11. | 18. | 15. | 10. | 10. | 13. | 15. | 15. | 13. | 11. | 13. | 13. | 17. | 26. | 53. | 17. | 18. | N/A | 53. | 10. |
| 21 | 26. | 30. | 74. | 44. | 69. | 34. | 16. | 29. | 20. | 21. | 19. | 17. | 16. | 26. | 16. | 13. | 13. | 15. | 14. | 15. | 6. | 4. | 3. | 79. | N/A | 79. | 3. |
| 22 | 17. | 20. | 30. | 10. | 26. | 57. | 23. | 15. | 17. | 16. | 13. | 25. | 19. | 15. | 15. | 20. | 18. | 13. | 22. | 51. | 20. | 14. | 24. | 47. | N/A | 57. | 10. |
| 23 | 34. | 13. | 59. | 59. | 17. | 37. | 22. | 51. | 16. | 19. | 34. | 24. | 15. | 25. | 16. | 17. | 27. | 24. | 7. | 39. | 28. | 22. | 11. | 15. | N/A | 59. | 7. |
| 24 | 22. | 21. | 27. | 25. | 17. | 31. | 27. | 8. | 16. | 24. | 41. | 30. | 39. | 21. | 28. | 28. | 13. | 36. | 57. | 6. | 6. | 5. | 6. | 33. | N/A | 57. | 5. |
| 25 | 40. | 11. | 22. | 7. | 29. | 18. | 12. | 19. | 23. | 19. | 17. | 22. | 18. | 16. | 21. | 31. | 13. | 11. | 16. | 7. | 7. | 8. | 9. | 12. | N/A | 40. | 7. |
| 26 | 6. | 24. | 11. | 25. | 29. | 21. | 19. | 27. | 17. | 13. | 22. | 19. | 29. | 27. | 22. | 16. | 16. | 11. | 10. | 13. | 14. | 13. | 11. | 47. | N/A | 47. | 6. |
| 27 | 30. | 71. | 65. | 35. | 45. | 62. | 42. | 17. | 23. | 17. | 13. | 16. | 15. | 13. | 43. | 45. | 28. | 13. | 32. | 14. | 31. | 56. | 22. | 7. | N/A | 71. | 7. |
| 28 | 59. | 31. | 69. | 35. | 18. | 66. | 60. | 17. | 22. | 25. | 21. | 17. | 23. | 22. | 13. | 12. | 11. | 13. | 30. | 42. | 17. | 24. | 25. | 37. | N/A | 69. | 11. |
| 29 | 36. | 28. | 60. | 42. | 34. | 7. | 13. | 30. | 18. | 19. | 25. | 21. | 32. | 32. | 26. | 17. | 13. | 14. | 12. | 12. | 35. | 19. | 17. | 35. | N/A | 60. | 7. |
| 30 | 19. | 18. | 11. | 9. | 55. | 68. | 44. | 33. | 28. | 23. | 41. | 11. | 14. | 17. | 15. | 20. | 17. | 20. | 15. | 25. | 34. | 15. | 20. | 13. | N/A | 68. | 9. |
| 31 | 41. | 13. | 43. | 32. | 20. | 10. | 9. | 39. | 13. | 19. | 28. | 24. | 53. | 42. | 21. | 15. | 13. | 12. | 16. | 15. | 19. | 11. | 18. | 26. | N/A | 53. | 9. |
| Mean | N/A | N/A | N/A | N/A | N/A | N/A | N/A | N/A | N/A | N/A | N/A | N/A | N/A | N/A | N/A | N/A | N/A | N/A | N/A | N/A | N/A | N/A | N/A | N/A | Monthly mean = | | N/A |
| Max. | 59. | 71. | 74. | 67. | 74. | 71. | 76. | 55. | 41. | 46. | 41. | 49. | 53. | 42. | 43. | 45. | 60. | 39. | 57. | 51. | 60. | 56. | 27. | 79. | Monthly max. = | | 79. |
| Min. | 3. | 4. | 5. | 7. | 10. | 6. | 6. | 8. | 11. | 12. | 10. | 10. | 11. | 11. | 11. | 9. | 10. | 10. | 7. | 6. | 6. | 4. | 3. | 4. | Monthly min. = | | 3. |

TOTAL NUMBER OF DATA HOURS IN MONTH: 744
Number of hours of bad or missing data: 0
**** designates missing or lost data

Current % recovery = 100.0

N/A: A sigma theta mean is not physically meaningful.

table created at 11: 3, 4/12/1995

MONTHLY SUMMARY
REL. HUMID.
(Degrees)
INPUT FILE: allslmet.out

Bechtel Environmental, Inc.

Met Data for Site 1
JULY 1994

| Day \ Hour | 1 | 2 | 3 | 4 | 5 | 6 | 7 | 8 | 9 | 10 | 11 | 12 | 13 | 14 | 15 | 16 | 17 | 18 | 19 | 20 | 21 | 22 | 23 | 24 | Mean | Max. | Min. |
|---|---|---|---|---|---|---|---|---|---|---|---|---|---|---|---|---|---|---|---|---|---|---|---|---|---|---|---|
| 1 | 26.4 | 29.3 | 35.3 | 50.8 | 31.5 | 17.5 | 17.2 | 21.3 | 22.2 | 21.9 | 21.1 | 20.2 | 17.3 | 14.2 | 11.5 | 10.0 | 9.7 | 12.4 | 13.3 | 12.4 | 12.5 | 16.1 | 19.7 | 22.0 | 20.2 | 50.8 | 9.7 |
| 2 | 27.4 | 26.4 | 23.3 | 34.3 | 47.0 | 30.8 | 31.2 | 35.3 | 37.1 | 36.6 | 34.4 | 33.2 | 31.2 | 34.3 | 33.3 | 31.9 | 28.9 | 27.6 | 30.6 | 34.5 | 38.1 | 37.7 | 39.5 | 38.5 | 33.5 | 47.0 | 23.3 |
| 3 | 31.3 | 25.6 | 26.9 | 28.1 | 35.6 | 34.3 | 34.0 | 33.5 | 32.5 | 28.2 | 26.0 | 24.2 | 22.8 | 21.6 | 18.3 | 19.4 | 15.7 | 11.4 | 17.0 | 18.1 | 18.6 | 16.5 | 13.7 | 12.9 | 23.6 | 35.6 | 11.4 |
| 4 | 13.6 | 15.5 | 24.8 | 23.5 | 21.0 | 22.2 | 22.2 | 22.3 | 25.7 | 22.4 | 19.2 | 19.9 | 20.2 | 19.7 | 19.3 | 21.4 | 15.9 | 14.8 | 16.7 | 17.1 | 17.1 | 24.9 | 28.8 | 31.4 | 20.8 | 31.4 | 13.6 |
| 5 | 34.1 | 37.0 | 38.5 | 40.0 | 39.1 | 43.7 | 42.4 | 34.8 | 31.0 | 36.4 | 38.4 | 27.1 | 21.6 | 23.0 | 26.9 | 34.6 | 34.9 | 32.6 | 29.1 | 31.1 | 33.6 | 32.8 | 25.5 | 23.4 | 33.0 | 43.7 | 21.6 |
| 6 | 25.9 | 31.7 | 46.1 | 55.8 | 62.2 | 86.6 | 91.2 | 88.1 | 87.8 | 80.5 | 73.7 | 64.3 | 54.2 | 44.5 | 41.5 | 39.2 | 36.9 | 44.3 | 54.8 | 57.8 | 50.8 | 50.9 | 52.3 | 57.1 | 57.4 | 91.2 | 25.9 |
| 7 | 86.4 | 96.8 | 97.2 | 97.2 | 97.1 | 97.1 | 94.6 | 71.5 | 70.8 | 65.6 | 57.5 | 48.9 | 40.3 | 33.0 | 28.3 | 25.2 | 23.2 | 24.3 | 26.3 | 38.4 | 35.5 | 39.5 | 41.2 | 50.3 | 57.8 | 97.2 | 23.2 |
| 8 | 48.9 | 53.3 | 57.1 | 63.8 | 69.5 | 65.6 | 60.2 | 47.0 | 44.9 | 40.7 | 33.8 | 29.3 | 25.2 | 23.9 | 23.3 | 21.7 | 17.1 | 16.9 | 17.8 | 20.3 | 21.8 | 27.7 | 32.6 | 36.1 | 37.4 | 69.5 | 16.9 |
| 9 | 39.0 | 42.2 | 40.2 | 58.0 | 62.3 | 50.2 | 44.6 | 34.7 | 36.5 | 39.8 | 34.1 | 25.2 | 17.5 | 15.5 | 10.7 | 9.3 | 9.6 | 10.0 | 10.6 | 10.8 | 10.8 | 12.4 | 15.6 | 16.8 | 27.4 | 62.3 | 9.3 |
| 10 | 20.3 | 36.1 | 53.1 | 51.3 | 30.1 | 31.1 | 28.0 | 25.0 | 24.0 | 24.9 | 25.5 | 23.0 | 22.0 | 19.8 | 18.4 | 15.4 | 15.3 | 15.0 | 14.3 | 14.5 | 14.9 | 13.7 | 12.8 | 13.1 | 23.4 | 53.1 | 12.8 |
| 11 | 13.4 | 14.8 | 18.5 | 22.9 | 29.8 | 42.9 | 40.0 | 35.9 | 27.7 | 24.8 | 27.0 | 21.6 | 14.9 | 12.1 | 10.2 | 8.0 | 7.1 | 7.4 | 9.0 | 10.4 | 10.0 | 9.4 | 9.1 | 9.0 | 18.2 | 42.9 | 7.1 |
| 12 | 9.8 | 18.2 | 20.8 | 10.3 | 21.7 | 30.0 | 26.4 | 32.8 | 33.0 | 25.0 | 23.0 | 18.2 | 15.7 | 13.5 | 11.9 | 9.7 | 10.4 | 10.2 | 11.9 | 12.6 | 13.0 | 12.6 | 14.1 | 14.3 | 17.5 | 33.0 | 9.7 |
| 13 | 19.8 | 26.3 | 29.0 | 39.2 | 48.4 | 59.3 | 45.8 | 45.3 | 45.0 | 43.0 | 40.0 | 39.2 | 33.0 | 23.6 | 18.0 | 19.2 | 16.2 | 11.4 | 11.2 | 18.8 | 30.7 | 35.0 | 27.0 | 26.6 | 31.3 | 59.3 | 11.2 |
| 14 | 29.1 | 39.8 | 38.4 | 48.3 | 59.9 | 50.5 | 39.2 | 49.3 | 48.0 | 25.6 | 21.3 | 23.6 | 20.9 | 18.0 | 14.4 | 13.1 | 12.0 | 11.2 | 14.3 | 18.8 | 15.7 | 20.9 | 34.2 | 48.4 | 29.8 | 59.9 | 11.2 |
| 15 | 49.7 | 57.0 | 65.3 | 62.3 | 72.1 | 73.1 | 61.3 | 47.5 | 46.9 | 42.7 | 38.6 | 30.1 | 17.1 | 16.7 | 15.1 | 15.0 | 15.6 | 11.4 | 11.2 | 13.6 | 16.3 | 15.0 | 14.9 | 32.8 | 35.1 | 73.1 | 11.2 |
| 16 | 37.0 | 31.4 | 55.6 | 58.6 | 63.0 | 62.5 | 59.3 | 53.6 | 42.0 | 33.6 | 31.5 | 26.3 | 21.4 | 18.2 | 14.4 | 11.3 | 9.7 | 10.2 | 10.2 | 10.7 | 11.1 | 13.0 | 17.0 | 19.1 | 30.0 | 63.0 | 9.7 |
| 17 | 21.6 | 21.9 | 29.1 | 29.6 | 33.7 | 30.9 | 31.4 | 28.3 | 22.8 | 17.0 | 17.9 | 18.4 | 17.0 | 14.4 | 11.8 | 10.1 | 9.7 | 11.3 | 14.0 | 15.1 | 14.5 | 15.0 | 14.5 | 25.6 | 19.8 | 33.7 | 9.7 |
| 18 | 30.2 | 26.7 | 25.1 | 37.1 | 36.5 | 40.3 | 37.5 | 23.0 | 25.8 | 24.7 | 24.0 | 22.8 | 21.3 | 19.9 | 15.0 | 15.8 | 14.0 | 12.7 | 13.7 | 12.7 | 13.8 | 16.0 | 18.1 | 18.4 | 22.7 | 40.3 | 12.7 |
| 19 | 21.1 | 27.1 | 28.5 | 30.1 | 35.0 | 40.4 | 43.3 | 45.4 | 41.2 | 37.3 | 32.8 | 29.4 | 27.7 | 25.0 | 24.7 | 22.1 | 21.4 | 20.4 | 19.4 | 26.1 | 34.9 | 35.7 | 34.7 | 34.4 | 30.8 | 45.4 | 19.4 |
| 20 | 36.1 | 29.6 | 46.5 | 53.5 | 65.9 | 73.7 | 60.5 | 51.1 | 43.3 | 35.4 | 30.7 | 25.5 | 22.4 | 21.5 | 20.0 | 17.5 | 12.8 | 11.9 | 16.9 | 24.0 | 29.2 | 29.1 | 33.2 | 37.6 | 34.5 | 73.7 | 11.9 |
| 21 | 45.3 | 44.6 | 46.2 | 48.1 | 53.8 | 53.3 | 47.7 | 42.8 | 39.9 | 34.1 | 30.1 | 22.7 | 17.8 | 15.4 | 16.3 | 12.0 | 11.4 | 10.0 | 14.4 | 15.5 | 13.7 | 14.6 | 16.2 | 27.3 | 28.9 | 53.8 | 10.0 |
| 22 | 26.4 | 25.2 | 26.0 | 40.2 | 33.8 | 41.3 | 44.1 | 43.3 | 40.3 | 29.6 | 28.6 | 23.5 | 18.3 | 16.1 | 13.6 | 13.5 | 11.9 | 12.8 | 14.0 | 17.5 | 27.8 | 38.6 | 28.9 | 22.3 | 26.6 | 44.1 | 11.9 |
| 23 | 28.6 | 38.1 | 44.6 | 52.7 | 48.6 | 50.8 | 57.8 | 61.3 | 66.1 | 54.6 | 47.2 | 39.3 | 35.4 | 31.8 | 32.0 | 38.9 | 44.0 | 43.2 | 49.7 | 55.0 | 53.9 | 58.6 | 65.1 | 60.2 | 48.2 | 66.1 | 28.6 |
| 24 | 73.6 | 78.6 | 89.9 | 95.4 | 92.8 | 93.0 | 83.9 | 69.3 | 58.7 | 55.1 | 47.0 | 39.7 | 31.3 | 26.0 | 22.0 | 21.2 | 22.2 | 23.5 | 19.8 | 25.9 | 28.0 | 37.7 | 34.7 | 38.6 | 50.3 | 95.4 | 19.8 |
| 25 | 59.1 | 52.6 | 52.8 | 60.1 | 67.5 | 71.3 | 67.0 | 52.7 | 47.3 | 42.9 | 40.3 | 33.6 | 25.5 | 21.3 | 18.5 | 16.7 | 22.1 | 26.5 | 24.5 | 25.5 | 26.9 | 31.9 | 37.2 | 40.9 | 40.2 | 71.3 | 16.7 |
| 26 | 41.3 | 48.6 | 48.4 | 54.2 | 66.0 | 76.4 | 64.7 | 55.3 | 47.7 | 37.2 | 35.1 | 28.8 | 21.9 | 18.1 | 13.7 | 13.2 | 13.2 | 25.3 | 21.6 | 26.7 | 24.5 | 22.6 | 27.5 | 39.6 | 36.3 | 76.4 | 13.2 |
| 27 | 53.1 | 56.7 | 65.4 | 69.6 | 79.6 | 81.8 | 64.8 | 55.7 | 46.7 | 40.8 | 35.0 | 27.5 | 20.6 | 19.9 | 20.2 | 20.3 | 21.8 | 26.6 | 24.7 | 27.4 | 29.4 | 27.4 | 24.7 | 26.5 | 40.3 | 81.8 | 19.9 |
| 28 | 33.7 | 43.4 | 49.2 | 54.5 | 64.8 | 62.6 | 47.7 | 57.8 | 48.4 | 39.4 | 32.5 | 29.5 | 24.7 | 18.0 | 17.2 | 16.5 | 18.6 | 24.5 | 24.8 | 24.9 | 27.7 | 30.7 | 32.8 | 34.7 | 35.8 | 64.8 | 16.5 |
| 29 | 34.4 | 44.2 | 55.6 | 60.6 | 69.5 | 73.3 | 64.5 | 52.3 | 43.6 | 37.3 | 32.2 | 25.0 | 20.3 | 18.0 | 13.2 | 10.9 | 10.9 | 12.5 | 23.2 | 28.3 | 32.3 | 32.1 | 34.0 | 38.9 | 36.1 | 73.3 | 10.9 |
| 30 | 44.5 | 49.7 | 57.9 | 52.4 | 58.0 | 57.8 | 54.6 | 47.7 | 40.4 | 35.3 | 27.9 | 29.4 | 26.8 | 20.3 | 19.8 | 19.5 | 19.4 | 28.1 | 38.3 | 41.2 | 38.1 | 40.3 | 45.6 | 50.9 | 39.3 | 58.0 | 19.4 |
| 31 | 49.8 | 47.2 | 58.8 | 65.7 | 67.4 | 65.2 | 62.8 | 58.9 | 54.7 | 51.6 | 43.8 | 37.1 | 32.2 | 31.6 | 30.7 | 29.5 | 28.6 | 25.3 | 29.9 | 70.9 | 89.6 | 92.1 | 72.8 | 84.1 | 53.3 | 92.1 | 25.3 |
| Mean | 35.8 | 39.2 | 45.0 | 49.9 | 53.7 | 55.1 | 50.6 | 45.9 | 42.6 | 37.5 | 33.9 | 29.2 | 24.5 | 21.6 | 19.5 | 18.8 | 18.1 | 18.9 | 20.9 | 25.1 | 26.9 | 29.0 | 29.6 | 33.3 | Monthly mean = | | 33.5 |
| Max. | 86.4 | 96.8 | 97.2 | 97.2 | 97.1 | 97.1 | 94.6 | 88.1 | 87.8 | 80.5 | 73.7 | 64.3 | 54.2 | 44.5 | 41.5 | 39.2 | 44.0 | 44.3 | 54.8 | 70.9 | 89.6 | 92.1 | 72.8 | 84.1 | Monthly max. = | | 97.2 |
| Min. | 9.8 | 14.8 | 18.5 | 10.3 | 21.0 | 17.5 | 17.2 | 21.3 | 22.2 | 17.0 | 17.9 | 18.2 | 14.9 | 12.1 | 10.2 | 8.0 | 7.1 | 7.4 | 9.0 | 10.4 | 10.0 | 9.4 | 9.1 | 9.0 | Monthly min. = | | 7.1 |

TOTAL NUMBER OF DATA HOURS IN MONTH: 744
Number of hours of bad or missing data: 0
**** designates missing or lost data

Current % recovery = 100.0

N/A: insufficient data available for calculation (a minimum of 75% is required)

table created at 11: 3, 4/12/1995

MONTHLY SUMMARY
WIND SPEED
(Miles Per Hour)
INPUT FILE: allsimet.out

Bechtel Environmental, Inc.

Met Data for Site 1
AUGUST 1994

| Day | Hour 1 | 2 | 3 | 4 | 5 | 6 | 7 | 8 | 9 | 10 | 11 | 12 | 13 | 14 | 15 | 16 | 17 | 18 | 19 | 20 | 21 | 22 | 23 | 24 | Mean | Max. | Min. |
|---|---|---|---|---|---|---|---|---|---|---|---|---|---|---|---|---|---|---|---|---|---|---|---|---|---|---|---|
| 1 | 8.2 | 5.2 | 3.2 | 5.1 | 8.2 | 7.5 | 2.3 | 2.9 | 6.1 | 4.0 | 5.2 | 6.0 | 6.8 | 7.4 | 6.7 | 9.4 | 10.8 | 12.4 | 12.7 | 14.0 | 5.0 | 9.4 | 8.9 | 14.5 | 7.6 | 14.5 | 2.3 |
| 2 | 11.1 | 6.8 | 7.6 | 5.2 | 2.7 | 6.0 | 9.9 | 5.1 | 3.2 | ***** | 5.9 | 7.2 | 6.6 | 7.2 | 6.5 | 8.0 | 8.0 | 7.3 | 8.4 | 12.4 | 8.9 | 8.1 | 9.6 | 10.3 | 7.5 | 12.4 | 2.7 |
| 3 | 9.3 | 9.4 | 3.5 | 4.2 | 5.7 | 4.4 | 1.6 | 3.8 | 3.3 | 6.9 | 6.4 | 8.5 | 9.3 | 8.7 | 8.1 | 8.3 | 7.9 | 7.7 | 5.0 | 3.8 | 6.4 | 10.9 | 11.9 | 12.8 | 7.0 | 12.8 | 1.6 |
| 4 | 14.2 | 13.9 | 6.1 | 4.1 | 1.8 | 3.4 | 3.9 | 3.5 | 8.4 | 12.7 | 8.9 | 7.8 | 11.0 | 13.7 | 13.6 | 11.1 | 9.6 | 9.8 | 6.7 | 3.6 | 8.0 | 10.0 | 8.5 | 5.2 | 8.3 | 14.2 | 1.8 |
| 5 | 6.0 | 5.3 | 6.0 | 6.2 | 5.9 | 6.4 | 8.4 | 4.5 | 5.4 | 2.8 | 3.8 | 6.6 | 9.0 | 10.1 | 13.9 | ***** | 16.4 | 12.1 | 8.8 | 10.6 | 13.8 | 13.0 | 12.7 | 14.4 | 8.8 | 16.4 | 2.8 |
| 6 | 14.0 | 14.8 | 6.6 | 3.7 | 6.6 | 12.0 | 14.2 | 20.4 | 19.5 | 17.1 | 16.1 | 16.3 | 17.3 | 15.2 | 16.6 | 17.2 | 15.1 | 12.7 | 10.8 | 8.6 | 10.0 | 7.9 | 8.1 | 9.3 | 12.9 | 20.4 | 3.7 |
| 7 | 11.4 | 12.7 | 11.9 | 9.9 | 3.3 | 4.7 | 11.3 | 6.4 | 4.5 | 3.4 | 3.9 | 6.1 | 6.2 | 11.5 | 13.3 | 8.4 | 6.1 | 4.5 | 3.3 | 3.5 | 6.6 | 8.3 | 12.3 | 16.1 | 7.9 | 16.1 | 3.3 |
| 8 | 6.2 | 5.3 | 3.9 | 5.2 | 6.9 | 7.6 | 4.8 | 5.5 | 6.7 | 14.8 | 14.6 | 16.0 | 17.2 | 21.8 | 8.2 | 4.9 | 4.8 | 6.5 | 8.8 | 22.2 | 17.9 | 13.6 | 18.7 | 16.9 | 10.8 | 22.2 | 3.9 |
| 9 | 20.4 | 16.8 | 22.8 | 12.5 | 12.4 | 12.2 | 12.8 | 8.8 | 6.3 | 6.6 | 14.2 | 13.7 | 13.7 | 10.6 | 10.8 | 11.8 | 12.2 | 10.5 | 5.6 | 5.7 | 7.4 | 16.5 | 18.1 | 15.0 | 12.4 | 22.8 | 5.6 |
| 10 | 12.8 | 7.8 | 8.3 | 5.0 | 9.2 | 7.3 | 4.4 | 3.3 | 9.6 | 7.3 | 9.2 | 12.8 | 12.8 | 13.7 | 9.4 | 7.9 | 12.0 | 7.4 | 13.8 | 9.3 | 5.5 | 20.3 | 21.0 | 17.5 | 10.3 | 21.0 | 3.3 |
| 11 | 11.7 | 7.1 | 5.1 | 3.9 | 3.5 | 7.4 | 8.1 | ***** | 3.9 | 4.0 | 4.4 | 6.3 | 5.9 | 5.1 | 9.9 | 10.8 | 8.5 | 18.9 | 16.8 | 10.8 | 9.1 | 11.1 | 7.0 | 2.8 | 7.9 | 18.9 | 2.8 |
| 12 | 2.7 | 1.6 | 2.9 | 2.4 | 3.6 | 2.5 | 5.7 | 7.3 | 4.8 | 3.4 | 6.4 | 8.9 | 6.2 | 6.6 | 6.2 | 6.1 | 10.0 | 16.4 | 12.5 | 15.4 | 9.5 | 5.3 | 7.9 | 9.2 | 6.8 | 16.4 | 1.6 |
| 13 | 7.2 | 4.8 | 3.7 | 3.6 | 2.5 | 2.6 | 6.1 | 3.7 | 3.3 | 3.7 | 4.2 | 3.6 | 4.1 | 4.5 | 6.3 | 5.3 | 5.0 | 5.5 | 3.2 | 6.2 | 7.3 | 8.7 | 8.9 | 6.1 | 5.0 | 8.9 | 2.5 |
| 14 | 6.3 | 3.7 | 2.3 | 1.6 | 3.2 | .9 | 2.5 | 2.0 | 3.2 | 3.3 | 2.7 | 3.7 | 5.4 | 7.7 | 6.7 | 7.7 | 9.3 | 9.2 | 16.7 | 11.0 | 6.9 | 4.0 | 4.9 | 3.2 | 5.3 | 16.7 | .9 |
| 15 | 3.8 | 4.9 | 6.4 | 7.5 | 6.6 | 4.1 | 2.9 | 2.5 | 2.2 | 7.9 | 11.5 | 13.5 | 15.0 | ***** | ***** | 10.9 | 10.4 | 10.5 | 10.7 | ***** | 10.3 | 10.2 | 10.6 | 10.9 | 8.3 | 15.0 | 2.2 |
| 16 | 8.3 | 8.2 | 9.3 | 3.4 | 6.0 | 2.6 | 8.7 | 3.9 | ***** | ***** | ***** | ***** | ***** | ***** | ***** | ***** | 13.3 | 15.2 | 15.9 | 13.8 | 11.3 | 10.2 | 10.8 | 11.9 | ***** | 15.9 | 2.6 |
| 17 | 11.5 | 12.2 | 10.1 | 7.8 | 2.2 | 7.4 | 7.9 | 6.1 | ***** | ***** | ***** | 9.4 | 6.3 | 7.1 | 8.1 | 10.1 | 10.8 | 7.7 | 4.9 | 2.5 | 4.3 | 6.8 | 5.3 | 5.9 | 7.4 | 12.2 | 2.2 |
| 18 | 7.5 | 9.2 | 10.3 | 9.7 | 4.0 | 6.1 | 8.9 | 2.7 | ***** | ***** | 7.0 | 5.0 | 5.7 | 8.5 | 6.5 | 6.5 | 5.2 | 5.0 | 4.6 | 2.3 | 6.7 | 11.4 | 11.7 | 14.3 | 7.2 | 14.3 | 2.3 |
| 19 | 13.8 | 12.5 | 7.1 | 4.0 | 2.8 | 4.1 | 4.8 | 2.8 | 3.2 | 1.8 | 3.7 | 4.0 | 5.6 | 5.7 | 7.5 | 7.0 | 4.0 | 3.5 | 2.7 | 2.9 | 9.2 | 11.6 | 12.4 | 6.7 | 6.0 | 13.8 | 1.8 |
| 20 | 9.1 | 7.4 | 4.8 | 3.3 | 8.3 | 6.2 | 3.3 | 2.5 | 3.5 | 2.3 | 4.6 | 5.0 | 2.7 | 5.8 | 9.8 | 8.5 | 12.2 | 12.8 | 13.9 | 8.4 | 11.1 | 10.3 | 13.9 | 6.7 | 7.4 | 13.9 | 2.3 |
| 21 | 4.9 | 8.8 | 5.4 | 7.6 | 10.3 | 8.9 | 11.8 | 19.3 | 17.2 | 18.9 | 14.2 | 12.2 | 12.0 | 11.2 | 8.4 | 5.3 | 12.0 | 17.2 | 14.0 | 19.2 | 23.9 | 18.8 | 19.4 | 19.4 | 13.3 | 23.9 | 4.9 |
| 22 | 18.5 | 14.3 | 13.0 | 14.1 | 11.5 | 3.3 | 3.7 | 8.9 | 17.0 | ***** | 19.3 | 18.4 | 19.1 | ***** | ***** | 18.8 | 20.2 | 21.2 | 15.2 | 12.8 | 11.9 | 10.3 | 10.5 | 9.2 | 13.9 | 21.2 | 3.3 |
| 23 | 8.1 | 7.1 | 2.5 | 7.2 | 8.5 | 8.2 | 8.9 | 1.5 | 2.2 | 2.5 | 2.8 | 4.2 | 4.1 | 7.9 | 9.2 | 6.7 | 4.8 | 3.8 | 2.8 | 5.0 | 9.8 | 6.4 | 3.8 | 7.4 | 5.6 | 9.8 | 1.5 |
| 24 | 4.7 | 4.9 | 1.0 | 3.1 | 4.2 | 2.5 | 3.9 | 4.9 | 5.8 | 5.6 | 4.6 | 5.5 | 11.3 | 13.1 | 11.1 | 14.3 | 12.8 | 10.4 | 8.2 | 12.7 | 12.5 | 11.1 | 9.3 | 7.2 | 7.7 | 14.3 | 1.0 |
| 25 | 8.2 | 8.6 | 7.6 | 3.4 | 4.3 | 7.7 | 7.6 | 4.8 | 3.9 | 5.3 | 7.3 | 6.8 | 7.9 | 7.9 | 9.0 | 9.4 | 7.5 | 6.0 | 4.0 | 3.0 | 6.0 | 8.3 | 7.5 | 2.7 | 6.4 | 9.4 | 2.7 |
| 26 | 2.6 | 4.2 | 2.5 | 1.5 | 4.3 | 4.6 | 9.8 | 6.9 | 11.8 | 18.1 | 14.9 | 12.5 | 14.6 | 14.4 | 13.3 | 11.3 | 10.9 | 10.2 | 6.1 | 1.5 | 4.5 | 8.7 | 9.4 | 9.8 | 8.7 | 18.1 | 1.5 |
| 27 | 8.1 | 7.6 | 5.8 | 1.3 | 1.6 | 3.2 | 4.0 | 3.5 | 7.6 | 3.0 | 6.9 | 6.5 | 5.7 | 6.3 | 6.6 | 6.7 | 3.8 | 3.0 | 8.8 | 12.6 | 10.8 | 5.9 | 8.3 | 10.6 | 6.2 | 12.6 | 1.3 |
| 28 | 11.6 | 13.5 | 4.3 | 2.6 | 6.3 | 4.0 | 6.3 | 5.2 | 2.5 | 7.5 | 10.8 | 5.7 | 8.1 | 9.6 | 8.8 | 17.1 | 16.9 | 20.9 | 10.4 | 8.4 | 9.3 | 11.5 | 12.8 | 11.7 | 9.4 | 20.9 | 2.5 |
| 29 | 12.0 | 7.9 | 1.9 | 8.2 | 8.6 | 6.6 | 6.8 | 8.5 | 15.3 | 16.5 | 18.5 | 18.8 | 19.5 | 18.6 | 18.5 | 20.6 | 20.4 | 18.3 | 14.9 | 13.8 | 13.8 | 16.8 | 16.6 | 13.0 | 13.9 | 20.6 | 1.9 |
| 30 | 14.7 | 15.5 | 13.3 | 10.8 | 7.6 | 3.2 | 10.7 | 9.0 | 7.2 | 8.6 | 8.9 | 8.5 | 8.9 | 8.7 | 9.3 | 7.4 | 4.1 | 3.0 | 2.0 | 2.2 | 6.2 | 8.3 | 8.0 | 7.3 | 8.1 | 15.5 | 2.0 |
| 31 | 2.8 | 4.0 | 2.0 | 3.0 | 4.8 | 5.8 | 7.3 | 5.2 | 2.2 | 2.4 | 2.6 | 4.8 | 4.8 | 7.0 | 7.1 | 9.6 | 8.0 | 11.5 | 8.8 | 8.8 | 5.6 | 8.3 | 9.8 | 11.7 | 6.2 | 11.7 | 2.0 |
| Mean | 9.4 | 8.6 | 6.5 | 5.5 | 5.7 | 5.6 | 6.9 | 5.8 | 6.8 | 7.3 | 8.4 | 8.8 | 9.4 | 9.8 | 9.6 | 9.9 | 10.1 | 10.4 | 9.1 | 8.9 | 9.3 | 10.4 | 10.9 | 10.3 | Monthly mean = | | 8.5 |
| Max. | 20.4 | 16.8 | 22.8 | 14.1 | 12.4 | 12.2 | 14.2 | 20.4 | 19.5 | 18.9 | 19.3 | 18.8 | 19.5 | 21.8 | 18.5 | 20.6 | 20.4 | 21.2 | 16.8 | 22.2 | 23.9 | 20.3 | 21.0 | 19.4 | Monthly max. = | | 23.9 |
| Min. | 2.6 | 1.6 | 1.0 | 1.3 | 1.6 | .9 | 1.6 | 1.5 | 2.2 | 1.8 | 2.6 | 3.6 | 2.7 | 4.5 | 6.2 | 4.9 | 3.8 | 3.0 | 2.0 | 1.5 | 4.3 | 4.0 | 3.8 | 2.7 | Monthly min. = | | .9 |

TOTAL NUMBER OF DATA HOURS IN MONTH: 744
Number of hours of bad or missing data: 22
**** designates missing or lost data

Current % recovery = 97.0

N/A: insufficient data available for calculation (a minimum of 75% is required)

table created at 11: 3, 4/12/1995

MONTHLY SUMMARY
WIND DIRECTION
(Degrees)
INPUT FILE: allslmet.out

Bechtel Environmental, Inc.

Met Data for Site 1
AUGUST 1994

| Day | Hour 1 | 2 | 3 | 4 | 5 | 6 | 7 | 8 | 9 | 10 | 11 | 12 | 13 | 14 | 15 | 16 | 17 | 18 | 19 | 20 | 21 | 22 | 23 | 24 | Mean | Max. | Min. |
|---|---|---|---|---|---|---|---|---|---|---|---|---|---|---|---|---|---|---|---|---|---|---|---|---|---|---|---|
| 1 | 272.0 | 256.0 | 55.0 | 107.0 | 103.0 | 27.0 | 39.0 | 313.0 | 314.0 | 16.0 | 337.0 | 328.0 | 343.0 | 339.0 | 340.0 | 328.0 | 327.0 | 2.0 | 229.0 | 303.0 | 155.0 | 125.0 | 128.0 | 127.0 | 9.7 | 343.0 | 2.0 |
| 2 | 95.0 | 123.0 | 116.0 | 124.0 | 4.0 | 97.0 | 110.0 | 232.0 | 81.0 | 26.0 | 19.0 | 2.0 | 358.0 | 356.0 | .0 | 3.0 | 332.0 | 326.0 | 300.0 | 277.0 | 328.0 | 97.0 | 116.0 | 113.0 | 31.5 | 358.0 | .0 |
| 3 | 115.0 | 112.0 | 35.0 | 110.0 | 141.0 | 304.0 | 26.0 | 77.0 | 61.0 | 15.0 | 17.0 | 358.0 | 357.0 | 354.0 | 6.0 | 4.0 | 9.0 | 11.0 | 22.0 | 70.0 | 116.0 | 125.0 | 122.0 | 121.0 | 52.0 | 358.0 | 4.0 |
| 4 | 121.0 | 123.0 | 293.0 | 301.0 | 358.0 | 305.0 | 301.0 | 309.0 | 182.0 | 137.0 | 124.0 | 251.0 | 193.0 | 333.0 | 319.0 | 318.0 | 310.0 | 321.0 | 310.0 | 128.0 | 122.0 | 82.0 | 61.0 | 103.0 | .2 | 358.0 | 61.0 |
| 5 | 109.0 | 67.0 | 302.0 | 287.0 | 282.0 | 112.0 | 118.0 | 95.0 | 339.0 | 51.0 | 1.0 | 332.0 | 330.0 | 274.0 | 274.0 | 283.0 | 278.0 | 280.0 | 271.0 | 248.0 | 225.0 | 228.0 | 226.0 | 227.0 | 323.3 | 339.0 | 1.0 |
| 6 | 230.0 | 234.0 | 315.0 | 98.0 | 233.0 | 242.0 | 248.0 | 248.0 | 250.0 | 248.0 | 260.0 | 254.0 | 267.0 | 269.0 | 263.0 | 268.0 | 268.0 | 262.0 | 266.0 | 226.0 | 218.0 | 215.0 | 116.0 | 126.0 | 234.3 | 315.0 | 98.0 |
| 7 | 123.0 | 124.0 | 121.0 | 118.0 | 355.0 | 115.0 | 124.0 | 126.0 | 339.0 | 43.0 | 12.0 | 328.0 | 336.0 | 292.0 | 314.0 | 343.0 | 311.0 | 359.0 | 81.0 | 114.0 | 115.0 | 120.0 | 132.0 | 125.0 | 55.4 | 359.0 | 12.0 |
| 8 | 117.0 | 275.0 | 339.0 | 72.0 | 95.0 | 75.0 | 326.0 | 110.0 | 254.0 | 258.0 | 261.0 | 269.0 | 270.0 | 264.0 | 196.0 | 308.0 | 8.0 | 356.0 | 161.0 | 191.0 | 157.0 | 137.0 | 155.0 | 146.0 | 200.0 | 356.0 | 8.0 |
| 9 | 131.0 | 140.0 | 127.0 | 135.0 | 136.0 | 138.0 | 143.0 | 118.0 | 103.0 | 255.0 | 275.0 | 267.0 | 258.0 | 267.0 | 260.0 | 275.0 | 278.0 | 279.0 | 265.0 | 187.0 | 155.0 | 200.0 | 193.0 | 157.0 | 197.6 | 279.0 | 103.0 |
| 10 | 137.0 | 92.0 | 122.0 | 52.0 | 95.0 | 115.0 | 94.0 | 137.0 | 120.0 | 98.0 | 103.0 | 115.0 | 113.0 | 126.0 | 115.0 | 199.0 | 168.0 | 145.0 | 229.0 | 273.0 | 108.0 | 137.0 | 135.0 | 132.0 | 131.7 | 273.0 | 52.0 |
| 11 | 119.0 | 93.0 | 78.0 | 40.0 | 111.0 | 115.0 | 123.0 | 295.0 | 351.0 | 25.0 | 50.0 | 5.0 | 57.0 | 61.0 | 151.0 | 141.0 | 150.0 | 179.0 | 158.0 | 52.0 | 108.0 | 121.0 | 175.0 | 348.0 | 84.4 | 351.0 | 5.0 |
| 12 | 112.0 | 74.0 | 65.0 | 287.0 | 310.0 | 48.0 | 107.0 | 81.0 | 357.0 | 356.0 | 182.0 | 227.0 | 306.0 | 342.0 | 338.0 | 200.0 | 227.0 | 239.0 | 122.0 | 121.0 | 98.0 | 118.0 | 116.0 | 116.0 | 9.5 | 357.0 | 48.0 |
| 13 | 90.0 | 94.0 | 91.0 | 130.0 | 87.0 | 81.0 | 103.0 | 290.0 | 15.0 | 31.0 | 59.0 | 63.0 | 82.0 | 63.0 | 17.0 | 31.0 | 22.0 | 7.0 | 24.0 | 74.0 | 120.0 | 121.0 | 129.0 | 262.0 | 56.9 | 290.0 | 7.0 |
| 14 | 114.0 | 109.0 | 244.0 | 304.0 | 102.0 | 69.0 | 332.0 | 341.0 | 14.0 | 338.0 | 39.0 | 328.0 | 334.0 | 325.0 | 356.0 | 3.0 | 335.0 | 273.0 | 230.0 | 213.0 | 254.0 | 97.0 | 52.0 | 110.0 | 354.8 | 356.0 | 3.0 |
| 15 | 130.0 | 114.0 | 129.0 | 125.0 | 226.0 | 103.0 | 113.0 | 104.0 | 13.0 | 278.0 | 268.0 | 272.0 | 267.0 | ***** | ***** | 255.0 | 260.0 | 262.0 | 262.0 | 243.0 | 220.0 | 223.0 | 229.0 | 224.0 | 196.4 | 278.0 | 13.0 |
| 16 | 181.0 | 119.0 | 126.0 | 106.0 | 107.0 | 103.0 | 117.0 | 264.0 | ***** | ***** | ***** | ***** | ***** | ***** | ***** | ***** | 272.0 | 268.0 | 263.0 | 245.0 | 219.0 | 217.0 | 219.0 | 220.0 | ***** | 272.0 | 103.0 |
| 17 | 220.0 | 224.0 | 218.0 | 117.0 | 79.0 | 122.0 | 129.0 | 122.0 | ***** | ***** | ***** | 269.0 | 306.0 | 309.0 | 296.0 | 280.0 | 287.0 | 294.0 | 290.0 | 137.0 | 115.0 | 114.0 | 122.0 | 117.0 | 198.4 | 309.0 | 79.0 |
| 18 | 115.0 | 119.0 | 123.0 | 121.0 | 130.0 | 119.0 | 123.0 | 289.0 | ***** | ***** | 296.0 | 296.0 | 304.0 | 314.0 | 319.0 | 331.0 | 299.0 | 280.0 | 245.0 | 104.0 | 121.0 | 125.0 | 122.0 | 157.0 | 202.4 | 331.0 | 104.0 |
| 19 | 155.0 | 149.0 | 89.0 | 146.0 | 298.0 | 298.0 | 296.0 | 308.0 | 318.0 | 57.0 | 87.0 | 4.0 | 333.0 | 324.0 | 330.0 | 319.0 | 9.0 | 63.0 | 98.0 | 137.0 | 122.0 | 123.0 | 119.0 | 118.0 | 44.2 | 333.0 | 4.0 |
| 20 | 121.0 | 120.0 | 298.0 | 102.0 | 115.0 | 127.0 | 321.0 | 288.0 | 304.0 | 308.0 | 359.0 | 331.0 | 11.0 | 292.0 | 325.0 | 58.0 | 112.0 | 304.0 | 69.0 | 107.0 | 230.0 | 176.0 | 126.0 | 126.0 | 32.1 | 359.0 | 11.0 |
| 21 | 130.0 | 129.0 | 151.0 | 120.0 | 137.0 | 137.0 | 142.0 | 139.0 | 142.0 | 132.0 | 149.0 | 195.0 | 198.0 | 210.0 | 231.0 | 282.0 | 273.0 | 287.0 | 146.0 | 181.0 | 150.0 | 139.0 | 139.0 | 135.0 | 169.7 | 287.0 | 120.0 |
| 22 | 143.0 | 136.0 | 137.0 | 139.0 | 145.0 | 190.0 | 353.0 | 259.0 | 259.0 | 139.0 | 248.0 | 250.0 | 248.0 | 211.0 | 199.0 | 261.0 | 261.0 | 265.0 | 258.0 | 235.0 | 226.0 | 230.0 | 233.0 | 227.0 | 218.8 | 353.0 | 136.0 |
| 23 | 224.0 | 116.0 | 125.0 | 119.0 | 116.0 | 118.0 | 128.0 | 124.0 | 88.0 | 337.0 | 350.0 | 345.0 | 18.0 | 294.0 | 295.0 | 293.0 | 317.0 | 6.0 | 97.0 | 132.0 | 123.0 | 108.0 | 111.0 | 92.0 | 49.8 | 350.0 | 6.0 |
| 24 | 82.0 | 282.0 | 344.0 | 116.0 | 115.0 | 315.0 | 110.0 | 290.0 | 302.0 | 288.0 | 283.0 | 268.0 | 271.0 | 273.0 | 267.0 | 271.0 | 275.0 | 273.0 | 247.0 | 234.0 | 238.0 | 226.0 | 226.0 | 144.0 | 239.2 | 344.0 | 82.0 |
| 25 | 122.0 | 123.0 | 123.0 | 133.0 | 126.0 | 120.0 | 127.0 | 144.0 | 316.0 | 311.0 | 291.0 | 296.0 | 335.0 | 350.0 | 319.0 | 296.0 | 299.0 | 297.0 | 76.0 | 133.0 | 141.0 | 136.0 | 94.0 | 263.0 | 42.1 | 350.0 | 76.0 |
| 26 | 122.0 | 131.0 | 307.0 | 304.0 | 274.0 | 248.0 | 118.0 | 266.0 | 264.0 | 262.0 | 260.0 | 265.0 | 278.0 | 277.0 | 273.0 | 273.0 | 274.0 | 273.0 | 279.0 | 133.0 | 110.0 | 125.0 | 126.0 | 124.0 | 223.6 | 307.0 | 110.0 |
| 27 | 126.0 | 130.0 | 135.0 | 299.0 | 97.0 | 128.0 | 340.0 | 127.0 | 123.0 | 71.0 | 272.0 | 263.0 | 290.0 | 272.0 | 284.0 | 290.0 | 13.0 | 354.0 | 192.0 | 192.0 | 180.0 | 139.0 | 152.0 | 124.0 | 191.4 | 354.0 | 13.0 |
| 28 | 127.0 | 129.0 | 194.0 | 109.0 | 120.0 | 122.0 | 113.0 | 126.0 | 74.0 | 112.0 | 127.0 | 296.0 | 272.0 | 277.0 | 271.0 | 219.0 | 199.0 | 200.0 | 199.0 | 126.0 | 119.0 | 124.0 | 120.0 | 121.0 | 162.3 | 296.0 | 74.0 |
| 29 | 125.0 | 132.0 | 317.0 | 122.0 | 128.0 | 122.0 | 246.0 | 261.0 | 252.0 | 245.0 | 261.0 | 263.0 | 259.0 | 261.0 | 258.0 | 261.0 | 258.0 | 250.0 | 242.0 | 240.0 | 235.0 | 233.0 | 234.0 | 242.0 | 227.0 | 317.0 | 122.0 |
| 30 | 243.0 | 238.0 | 235.0 | 232.0 | 236.0 | 160.0 | 241.0 | 273.0 | 285.0 | 276.0 | 277.0 | 277.0 | 274.0 | 282.0 | 299.0 | 307.0 | 289.0 | 33.0 | 57.0 | 131.0 | 123.0 | 125.0 | 123.0 | 123.0 | 214.1 | 307.0 | 33.0 |
| 31 | 129.0 | 123.0 | 61.0 | 105.0 | 286.0 | 296.0 | 110.0 | 298.0 | 345.0 | 7.0 | 9.0 | 338.0 | 336.0 | 333.0 | 301.0 | 294.0 | 274.0 | 267.0 | 255.0 | 227.0 | 209.0 | 124.0 | 126.0 | 122.0 | 357.3 | 345.0 | 7.0 |
| Mean | 141.3 | 142.9 | 174.7 | 151.0 | 166.0 | 150.7 | 55.5 | 208.2 | 350.9 | 1.4 | 343.3 | 305.2 | 313.5 | 311.2 | 310.9 | 305.1 | 318.5 | 319.2 | 191.7 | 174.6 | 166.5 | 148.7 | 144.4 | 157.8 | Monthly mean = | | 189.3 |
| Max. | 272.0 | 282.0 | 344.0 | 304.0 | 358.0 | 315.0 | 353.0 | 341.0 | 357.0 | 356.0 | 359.0 | 358.0 | 358.0 | 356.0 | 356.0 | 343.0 | 335.0 | 359.0 | 310.0 | 303.0 | 328.0 | 233.0 | 234.0 | 348.0 | Monthly max. = | | 359.0 |
| Min. | 82.0 | 67.0 | 35.0 | 40.0 | 4.0 | 27.0 | 26.0 | 77.0 | 13.0 | 7.0 | 1.0 | 2.0 | 11.0 | 61.0 | .0 | 3.0 | 8.0 | 2.0 | 22.0 | 52.0 | 98.0 | 82.0 | 52.0 | 92.0 | Monthly min. = | | .0 |

TOTAL NUMBER OF DATA HOURS IN MONTH: 744
Number of hours of bad or missing data: 15
**** designates missing or lost data

Current % recovery = 98.0

N/A: insufficient data available for calculation (a minimum of 75% is required)

table created at 11: 3, 4/12/1995

MONTHLY SUMMARY
TEMPERATURE
(Degrees Celsius)
INPUT FILE: allslmet.out

Bechtel Environmental, Inc.

Met Data for Site 1
AUGUST 1994

| Day | Hour 1 | 2 | 3 | 4 | 5 | 6 | 7 | 8 | 9 | 10 | 11 | 12 | 13 | 14 | 15 | 16 | 17 | 18 | 19 | 20 | 21 | 22 | 23 | 24 | Mean | Max. | Min. |
|---|---|---|---|---|---|---|---|---|---|---|---|---|---|---|---|---|---|---|---|---|---|---|---|---|---|---|---|
| 1 | 16.6 | 16.4 | 16.0 | 15.5 | 16.8 | 16.0 | 15.9 | 19.0 | 19.8 | 23.1 | 24.9 | 25.9 | 27.6 | 29.0 | 30.1 | 30.7 | 30.6 | 26.0 | 25.6 | 24.0 | 22.0 | 21.7 | 21.3 | 20.5 | 22.3 | 30.7 | 15.5 |
| 2 | 19.3 | 17.6 | 17.6 | 16.3 | 13.9 | 14.3 | 16.4 | 19.3 | 24.1 | 25.5 | 26.6 | 28.1 | 29.2 | 30.3 | 31.5 | 31.7 | 31.8 | 31.4 | 29.6 | 27.8 | 24.1 | 22.1 | 22.0 | 23.3 | 23.9 | 31.8 | 13.9 |
| 3 | 23.0 | 22.4 | 17.6 | 16.8 | 16.7 | 14.5 | 17.7 | 19.9 | 23.4 | 25.2 | 27.6 | 29.4 | 30.8 | 32.2 | 33.3 | 33.9 | 34.1 | 33.8 | 32.8 | 29.5 | 27.9 | 26.1 | 24.8 | 24.0 | 25.7 | 34.1 | 14.5 |
| 4 | 22.4 | 21.4 | 16.5 | 14.6 | 13.9 | 13.3 | 16.6 | 21.8 | 26.6 | 29.9 | 31.9 | 33.8 | 35.1 | 34.7 | 35.0 | 35.5 | 36.1 | 35.7 | 35.1 | 32.8 | 28.2 | 25.9 | 23.9 | 22.1 | 26.8 | 36.1 | 13.3 |
| 5 | 21.2 | 20.1 | 18.2 | 17.5 | 16.5 | 14.8 | 16.2 | 19.5 | 22.1 | 25.4 | 28.2 | 30.5 | 31.4 | 33.8 | 34.8 | 35.5 | 35.5 | 35.5 | 35.0 | 32.4 | 30.1 | 29.8 | 28.7 | 27.7 | 26.7 | 35.5 | 14.8 |
| 6 | 26.9 | 26.2 | 20.5 | 17.9 | 19.6 | 21.6 | 21.6 | 22.3 | 23.1 | 24.6 | 26.5 | 27.6 | 28.7 | 29.7 | 30.4 | 31.0 | 31.3 | 31.6 | 31.1 | 29.7 | 28.6 | 27.9 | 23.4 | 20.8 | 25.9 | 31.6 | 17.9 |
| 7 | 19.6 | 18.3 | 17.7 | 16.8 | 14.4 | 13.2 | 15.9 | 18.7 | 20.1 | 24.4 | 27.3 | 29.2 | 31.5 | 32.6 | 32.6 | 33.5 | 34.1 | 34.0 | 32.1 | 29.1 | 26.0 | 25.7 | 26.1 | 25.1 | 24.9 | 34.1 | 13.2 |
| 8 | 24.3 | 19.8 | 19.2 | 22.1 | 23.5 | 23.2 | 19.3 | 20.6 | 24.3 | 26.6 | 27.8 | 30.3 | 31.3 | 30.0 | 28.7 | 30.2 | 30.3 | 29.9 | 28.7 | 27.4 | 26.8 | 25.2 | 25.4 | 24.8 | 25.8 | 31.3 | 19.2 |
| 9 | 23.5 | 23.3 | 23.4 | 22.5 | 22.2 | 22.0 | 21.8 | 22.6 | 23.7 | 24.4 | 23.6 | 24.4 | 25.5 | 26.7 | 28.7 | 29.4 | 29.7 | 29.9 | 29.1 | 28.1 | 26.4 | 26.4 | 25.8 | 24.3 | 25.3 | 29.9 | 21.8 |
| 10 | 22.4 | 21.3 | 21.4 | 19.6 | 18.9 | 17.4 | 19.2 | 22.5 | 24.0 | 26.3 | 28.0 | 29.4 | 30.2 | 31.1 | 30.9 | 31.0 | 29.4 | 29.5 | 29.0 | 23.0 | 22.3 | 21.0 | 19.5 | 19.2 | 24.4 | 31.1 | 17.4 |
| 11 | 19.0 | 19.0 | 18.3 | 17.5 | 16.9 | 17.3 | 18.3 | 18.5 | 20.6 | 23.8 | 25.5 | 26.9 | 28.2 | 28.4 | 28.2 | 28.2 | 27.4 | 26.4 | 25.7 | 22.9 | 22.0 | 22.1 | 20.4 | 17.9 | 22.5 | 28.4 | 16.9 |
| 12 | 17.0 | 16.1 | 15.2 | 14.2 | 13.6 | 12.8 | 15.6 | 19.5 | 21.7 | 25.1 | 27.8 | 28.8 | 29.0 | 30.0 | 31.5 | 31.8 | 29.1 | 22.1 | 20.7 | 20.3 | 19.4 | 18.4 | 16.6 | 16.0 | 21.3 | 31.8 | 12.8 |
| 13 | 16.6 | 16.3 | 14.1 | 13.8 | 12.9 | 12.4 | 14.4 | 17.0 | 19.9 | 22.0 | 24.5 | 27.3 | 29.4 | 30.6 | 31.8 | 32.4 | 32.8 | 32.6 | 31.9 | 27.7 | 26.3 | 23.5 | 20.9 | 21.0 | 23.0 | 32.8 | 12.4 |
| 14 | 18.5 | 16.5 | 15.2 | 12.7 | 12.5 | 11.4 | 13.5 | 18.1 | 21.5 | 24.4 | 27.6 | 30.6 | 32.2 | 32.5 | 33.2 | 33.6 | 33.5 | 33.5 | 29.7 | 30.1 | 28.0 | 27.3 | 23.7 | 23.3 | 24.3 | 33.6 | 11.4 |
| 15 | 21.8 | 20.8 | 20.0 | 20.3 | 18.2 | 14.1 | 18.9 | 22.1 | 25.7 | 27.2 | 28.0 | 29.1 | 30.3 | ***** | ***** | 33.1 | 33.0 | 33.0 | 32.0 | 29.8 | 28.9 | 28.2 | 27.6 | 27.0 | 25.9 | 33.1 | 14.1 |
| 16 | 25.3 | 20.0 | 18.4 | 13.5 | 13.9 | 12.0 | 14.6 | 17.7 | ***** | ***** | ***** | ***** | ***** | ***** | ***** | ***** | 15.7 | 15.4 | 15.0 | 15.6 | 13.9 | 9.4 | 8.3 | 8.0 | ***** | 25.3 | 8.0 |
| 17 | 7.0 | 5.7 | 5.5 | 6.0 | 6.3 | 8.5 | 9.5 | 12.0 | ***** | ***** | ***** | 27.4 | 29.0 | 30.1 | 31.6 | 32.1 | 32.3 | 32.2 | 30.7 | 28.3 | 24.7 | 22.7 | 21.4 | 19.8 | 20.1 | 32.3 | 5.5 |
| 18 | 19.6 | 19.0 | 17.8 | 17.3 | 16.2 | 16.2 | 16.2 | 17.1 | ***** | ***** | 24.5 | 26.8 | 28.9 | 29.8 | 30.8 | 31.6 | 32.3 | 32.3 | 31.5 | 27.5 | 24.6 | 23.1 | 22.2 | 26.1 | 24.2 | 32.3 | 16.2 |
| 19 | 25.3 | 25.0 | 23.7 | 21.1 | 15.2 | 14.0 | 15.1 | 18.0 | 22.8 | 27.8 | 28.2 | 29.5 | 30.1 | 30.6 | 30.7 | 30.9 | 31.6 | 31.9 | 30.3 | 27.3 | 24.7 | 22.9 | 22.4 | 22.0 | 25.0 | 31.9 | 14.0 |
| 20 | 21.9 | 20.8 | 15.8 | 14.3 | 16.9 | 16.3 | 14.2 | 18.8 | 22.5 | 27.5 | 29.1 | 29.8 | 31.4 | 30.0 | 28.2 | 26.3 | 25.7 | 23.9 | 20.6 | 21.7 | 21.6 | 22.9 | 21.6 | 20.7 | 22.6 | 31.4 | 14.2 |
| 21 | 20.7 | 21.0 | 21.7 | 21.6 | 21.8 | 21.1 | 21.1 | 23.0 | 24.7 | 26.0 | 27.5 | 29.2 | 30.0 | 30.7 | 30.4 | 27.9 | 26.8 | 19.8 | 21.2 | 23.0 | 22.0 | 22.6 | 21.4 | 20.3 | 24.0 | 30.7 | 19.8 |
| 22 | 19.9 | 19.4 | 19.2 | 18.8 | 18.6 | 16.4 | 15.1 | 17.8 | 17:6 | ***** | ***** | ***** | ***** | ***** | ***** | 24.0 | 23.9 | 23.6 | 22.8 | 21.0 | 19.9 | 19.3 | 18.8 | 18.7 | 19.7 | 24.0 | 15.1 |
| 23 | 18.3 | 14.8 | 11.3 | 10.9 | 10.6 | 10.3 | 9.8 | 12.6 | 16.3 | 19.4 | 22.5 | 23.6 | 25.4 | 26.8 | 27.4 | 28.2 | 29.1 | 29.2 | 27.7 | 24.5 | 21.6 | 20.6 | 18.8 | 19.0 | 19.9 | 29.2 | 9.8 |
| 24 | 19.2 | 13.8 | 12.6 | 11.9 | 13.5 | 11.7 | 12.1 | 15.4 | 17.6 | 22.0 | 25.4 | 27.8 | 28.7 | 29.5 | 30.4 | 30.9 | 30.7 | 30.6 | 29.5 | 27.6 | 26.6 | 26.1 | 25.3 | 21.8 | 22.5 | 30.9 | 11.7 |
| 25 | 19.1 | 18.0 | 16.3 | 14.2 | 12.0 | 13.2 | 13.7 | 15.9 | 18.2 | 22.2 | 25.1 | 27.1 | 28.4 | 29.4 | 30.0 | 30.8 | 31.5 | 31.4 | 29.9 | 25.7 | 24.6 | 24.3 | 22.1 | 19.1 | 22.6 | 31.5 | 12.0 |
| 26 | 16.6 | 16.0 | 13.7 | 12.1 | 12.1 | 15.9 | 15.8 | 20.8 | 24.0 | 25.2 | 25.8 | 26.9 | 27.7 | 28.4 | 28.9 | 29.1 | 29.7 | 29.5 | 28.3 | 24.1 | 21.7 | 20.5 | 18.8 | 17.7 | 22.1 | 29.7 | 12.1 |
| 27 | 16.8 | 15.9 | 15.1 | 13.3 | 12.3 | 13.1 | 11.9 | 12.1 | 15.0 | 19.8 | 22.9 | 25.4 | 27.1 | 27.9 | 28.3 | 28.1 | 28.3 | 27.0 | 26.5 | 26.0 | 24.9 | 23.4 | 22.5 | 21.2 | 21.0 | 28.3 | 11.9 |
| 28 | 19.7 | 18.9 | 17.6 | 14.7 | 14.1 | 13.7 | 15.1 | 18.9 | 22.6 | 24.6 | 26.6 | 28.7 | 28.8 | 29.2 | 30.2 | 28.8 | 28.1 | 27.1 | 27.3 | 24.7 | 22.2 | 20.7 | 19.7 | 18.7 | 22.5 | 30.2 | 13.7 |
| 29 | 17.6 | 16.7 | 14.8 | 16.1 | 17.8 | 17.0 | 16.7 | 17.2 | 19.6 | 19.5 | 21.0 | 22.7 | 24.0 | 25.2 | 26.1 | 26.3 | 26.4 | 26.0 | 24.7 | 23.1 | 21.4 | 20.7 | 20.3 | 19.6 | 20.9 | 26.4 | 14.8 |
| 30 | 18.9 | 17.9 | 17.1 | 16.4 | 15.9 | 12.2 | 14.3 | 14.3 | 15.2 | 16.3 | 17.9 | 19.5 | 20.9 | 22.6 | 23.4 | 24.2 | 25.2 | 25.6 | 23.2 | 19.8 | 17.8 | 16.4 | 15.4 | 14.2 | 18.5 | 25.6 | 12.2 |
| 31 | 12.5 | 10.9 | 9.6 | 8.1 | 9.0 | 6.9 | 8.2 | 10.3 | 13.6 | 17.4 | 20.8 | 22.5 | 24.5 | 25.8 | 26.8 | 27.3 | 27.9 | 28.1 | 26.6 | 25.2 | 23.8 | 19.3 | 17.1 | 16.4 | 18.3 | 28.1 | 6.9 |
| Mean | 19.7 | 18.4 | 16.8 | 15.8 | 15.4 | 14.7 | 15.6 | 18.2 | 21.1 | 23.9 | 25.8 | 27.5 | 28.8 | 29.6 | 30.1 | 30.3 | 29.8 | 29.0 | 27.9 | 25.8 | 24.0 | 22.8 | 21.5 | 20.7 | Monthly mean = | | 22.9 |
| Max. | 26.9 | 26.2 | 23.7 | 22.5 | 23.5 | 23.2 | 21.8 | 23.0 | 26.6 | 29.9 | 31.9 | 33.8 | 35.1 | 34.7 | 35.0 | 35.5 | 36.1 | 35.7 | 35.1 | 32.8 | 30.1 | 29.8 | 28.7 | 27.7 | Monthly max. = | | 36.1 |
| Min. | 7.0 | 5.7 | 5.5 | 6.0 | 6.3 | 6.9 | 8.2 | 10.3 | 13.6 | 16.3 | 17.9 | 19.5 | 20.9 | 22.6 | 23.4 | 24.0 | 15.7 | 15.4 | 15.0 | 15.6 | 13.9 | 9.4 | 8.3 | 8.0 | Monthly min. = | | 5.5 |

TOTAL NUMBER OF DATA HOURS IN MONTH: 744
Number of hours of bad or missing data: 21
Current % recovery = 97.2
**** designates missing or lost data

N/A: insufficient data available for calculation (a minimum of 75% is required)

table created at 11: 3, 4/12/1995

MONTHLY SUMMARY
SIGMA THETA
(Degrees)
INPUT FILE: allslmet.out

Bechtel Environmental, Inc.

Met Data for Site 1
AUGUST 1994

| Day | Hour 1 | 2 | 3 | 4 | 5 | 6 | 7 | 8 | 9 | 10 | 11 | 12 | 13 | 14 | 15 | 16 | 17 | 18 | 19 | 20 | 21 | 22 | 23 | 24 | Mean | Max. | Min. |
|---|---|---|---|---|---|---|---|---|---|---|---|---|---|---|---|---|---|---|---|---|---|---|---|---|---|---|---|
| 1 | 12. | 34. | 24. | 19. | 12. | 24. | 55. | 42. | 14. | 35. | 24. | 19. | 23. | 29. | 20. | 12. | 12. | 21. | 20. | 18. | 33. | 8. | 17. | 6. | N/A | 55. | 6. |
| 2 | 15. | 11. | 10. | 33. | 38. | 13. | 8. | 31. | 21. | 23. | 24. | 20. | 27. | 41. | 33. | 25. | 15. | 12. | 19. | 12. | 20. | 13. | 15. | 11. | N/A | 41. | 8. |
| 3 | 8. | 16. | 40. | 30. | 30. | 12. | 31. | 18. | 19. | 13. | 17. | 20. | 20. | 21. | 20. | 26. | 19. | 13. | 11. | 22. | 10. | 11. | 5. | 5. | N/A | 40. | 5. |
| 4 | 4. | 32. | 36. | 24. | 40. | 37. | 15. | 21. | 31. | 12. | 26. | 48. | 56. | 36. | 15. | 15. | 21. | 11. | 6. | 19. | 7. | 22. | 16. | 25. | N/A | 56. | 4. |
| 5 | 15. | 19. | 46. | 26. | 18. | 10. | 7. | 23. | 18. | 35. | 32. | 28. | 24. | 22. | 14. | 13. | 12. | 12. | 9. | 12. | 11. | 11. | 13. | 13. | N/A | 46. | 7. |
| 6 | 13. | 13. | 38. | 19. | 42. | 16. | 15. | 14. | 15. | 17. | 13. | 12. | 14. | 14. | 16. | 13. | 14. | 14. | 10. | 14. | 11. | 22. | 14. | 7. | N/A | 42. | 7. |
| 7 | 6. | 6. | 5. | 4. | 32. | 22. | 4. | 20. | 23. | 41. | 37. | 22. | 24. | 23. | 14. | 28. | 28. | 19. | 20. | 20. | 9. | 10. | 18. | 5. | N/A | 41. | 4. |
| 8 | 80. | 41. | 42. | 69. | 28. | 34. | 41. | 61. | 45. | 11. | 12. | 14. | 13. | 10. | 31. | 36. | 27. | 13. | 22. | 36. | 34. | 11. | 17. | 17. | N/A | 80. | 10. |
| 9 | 12. | 11. | 9. | 25. | 10. | 9. | 9. | 14. | 26. | 65. | 15. | 13. | 14. | 19. | 22. | 17. | 13. | 14. | 21. | 26. | 33. | 39. | 42. | 31. | N/A | 65. | 9. |
| 10 | 12. | 36. | 23. | 38. | 14. | 25. | 46. | 48. | 11. | 25. | 25. | 19. | 21. | 25. | 27. | 62. | 42. | 28. | 60. | 31. | 34. | 9. | 8. | 8. | N/A | 62. | 8. |
| 11 | 9. | 12. | 22. | 14. | 35. | 7. | 32. | 10. | 20. | 27. | 32. | 27. | 32. | 60. | 41. | 23. | 39. | 27. | 40. | 12. | 13. | 6. | 28. | 36. | N/A | 60. | 6. |
| 12 | 33. | 44. | 15. | 49. | 46. | 27. | 14. | 12. | 23. | 42. | 55. | 53. | 53. | 33. | 48. | 58. | 27. | 31. | 26. | 27. | 13. | 13. | 12. | 8. | N/A | 58. | 8. |
| 13 | 39. | 19. | 21. | 24. | 36. | 32. | 11. | 23. | 35. | 29. | 32. | 31. | 43. | 38. | 28. | 33. | 29. | 19. | 11. | 13. | 11. | 7. | 19. | 10. | N/A | 43. | 7. |
| 14 | 15. | 15. | 41. | 40. | 8. | 13. | 23. | 30. | 25. | 29. | 35. | 36. | 23. | 16. | 34. | 19. | 16. | 18. | 13. | 47. | 42. | 78. | 50. | 19. | N/A | 78. | 8. |
| 15 | 47. | 10. | 30. | 10. | 33. | 57. | 53. | 17. | 32. | 18. | 16. | 12. | 12. | ***** | ***** | 15. | 19. | 15. | 10. | 12. | 11. | 13. | 11. | 13. | N/A | 57. | 10. |
| 16 | 32. | 6. | 12. | 48. | 10. | 48. | 5. | 35. | ***** | ***** | ***** | ***** | ***** | ***** | ***** | ***** | 12. | 11. | 10. | 11. | 11. | 15. | 14. | 13. | N/A | 48. | 5. |
| 17 | 13. | 10. | 26. | 10. | 38. | 5. | 8. | 10. | ***** | ***** | ***** | 17. | 34. | 23. | 21. | 18. | 15. | 12. | 27. | 36. | 11. | 7. | 9. | 8. | N/A | 38. | 5. |
| 18 | 8. | 7. | 5. | 4. | 26. | 6. | 4. | 19. | ***** | ***** | 13. | 21. | 31. | 12. | 15. | 15. | 28. | 23. | 17. | 28. | 5. | 4. | 11. | 17. | N/A | 31. | 4. |
| 19 | 20. | 22. | 38. | 64. | 34. | 11. | 8. | 8. | 17. | 38. | 34. | 57. | 49. | 28. | 22. | 19. | 18. | 16. | 13. | 12. | 4. | 5. | 4. | 51. | N/A | 64. | 4. |
| 20 | 8. | 21. | 15. | 21. | 11. | 18. | 42. | 32. | 20. | 59. | 37. | 27. | 61. | 29. | 20. | 24. | 25. | 48. | 15. | 37. | 26. | 18. | 8. | 18. | N/A | 61. | 8. |
| 21 | 99. | 18. | 46. | 43. | 9. | 10. | 13. | 9. | 9. | 8. | 23. | 26. | 28. | 21. | 27. | 24. | 16. | 26. | 16. | 18. | 28. | 18. | 9. | 7. | N/A | 99. | 7. |
| 22 | 9. | 9. | 8. | 8. | 14. | 75. | 39. | 24. | 13. | ***** | 7. | 14. | 16. | ***** | ***** | 12. | 14. | 12. | 13. | 14. | 14. | 14. | 14. | 13. | N/A | 75. | 7. |
| 23 | 14. | 25. | 40. | 8. | 5. | 6. | 8. | 27. | 23. | 26. | 27. | 33. | 42. | 18. | 16. | 25. | 26. | 20. | 13. | 8. | 4. | 14. | 20. | 16. | N/A | 42. | 4. |
| 24 | 30. | 9. | 53. | 20. | 23. | 27. | 24. | 36. | 12. | 15. | 23. | 23. | 16. | 15. | 16. | 12. | 11. | 11. | 13. | 13. | 12. | 12. | 13. | 13. | N/A | 53. | 9. |
| 25 | 8. | 7. | 5. | 37. | 32. | 5. | 5. | 26. | 15. | 18. | 17. | 20. | 16. | 17. | 22. | 15. | 21. | 17. | 16. | 14. | 18. | 21. | 28. | 35. | N/A | 37. | 5. |
| 26 | 40. | 23. | 25. | 52. | 32. | 66. | 7. | 19. | 12. | 10. | 13. | 15. | 13. | 13. | 15. | 14. | 14. | 13. | 9. | 74. | 9. | 4. | 4. | 3. | N/A | 74. | 3. |
| 27 | 3. | 4. | 30. | 15. | 35. | 40. | 48. | 24. | 6. | 50. | 21. | 21. | 20. | 23. | 18. | 18. | 39. | 43. | 28. | 12. | 21. | 63. | 15. | 18. | N/A | 63. | 3. |
| 28 | 7. | 6. | 42. | 40. | 13. | 11. | 17. | 22. | 60. | 13. | 15. | 42. | 30. | 28. | 22. | 17. | 13. | 11. | 13. | 9. | 6. | 4. | 5. | 4. | N/A | 60. | 4. |
| 29 | 4. | 44. | 22. | 13. | 16. | 29. | 39. | 19. | 12. | 14. | 11. | 10. | 11. | 10. | 11. | 11. | 10. | 11. | 11. | 11. | 11. | 12. | 12. | 14. | N/A | 44. | 4. |
| 30 | 12. | 11. | 14. | 13. | 24. | 50. | 13. | 15. | 14. | 15. | 16. | 15. | 20. | 21. | 15. | 21. | 37. | 35. | 25. | 14. | 5. | 4. | 5. | 7. | N/A | 50. | 4. |
| 31 | 29. | 57. | 41. | 21. | 37. | 43. | 12. | 42. | 45. | 39. | 32. | 27. | 29. | 20. | 25. | 17. | 15. | 12. | 11. | 11. | 27. | 6. | 5. | 4. | N/A | 57. | 4. |
| Mean | N/A | N/A | N/A | N/A | N/A | N/A | N/A | N/A | N/A | N/A | N/A | N/A | N/A | N/A | N/A | N/A | N/A | N/A | N/A | N/A | N/A | N/A | N/A | N/A | Monthly mean = | | N/A |
| Max. | 99. | 57. | 53. | 69. | 46. | 75. | 55. | 61. | 60. | 65. | 55. | 57. | 61. | 60. | 48. | 62. | 42. | 48. | 60. | 74. | 42. | 78. | 50. | 51. | Monthly max. = | | 99. |
| Min. | 3. | 4. | 5. | 4. | 5. | 5. | 4. | 8. | 6. | 8. | 7. | 10. | 11. | 10. | 11. | 11. | 10. | 11. | 6. | 8. | 4. | 4. | 4. | 3. | Monthly min. = | | 3. |

TOTAL NUMBER OF DATA HOURS IN MONTH: 744
Number of hours of bad or missing data: 18
Current % recovery = 97.6
**** designates missing or lost data

N/A: A sigma theta mean is not physically meaningful.

table created at 11: 3, 4/12/1995

MONTHLY SUMMARY
REL. HUMID.
(Degrees)
INPUT FILE: allslmet.out

Bechtel Environmental, Inc.

Met Data for Site 1
AUGUST 1994

| Day \ Hour | 1 | 2 | 3 | 4 | 5 | 6 | 7 | 8 | 9 | 10 | 11 | 12 | 13 | 14 | 15 | 16 | 17 | 18 | 19 | 20 | 21 | 22 | 23 | 24 | Mean | Max. | Min. |
|---|---|---|---|---|---|---|---|---|---|---|---|---|---|---|---|---|---|---|---|---|---|---|---|---|---|---|---|
| 1 | 88.7 | 90.2 | 94.3 | 97.1 | 86.1 | 92.9 | 95.6 | 85.1 | 82.9 | 66.5 | 57.1 | 51.7 | 44.7 | 43.1 | 37.8 | 34.9 | 30.4 | 36.1 | 36.9 | 38.8 | 44.9 | 46.6 | 46.1 | 49.1 | 61.6 | 97.1 | 30.4 |
| 2 | 57.8 | 68.1 | 66.5 | 70.8 | 91.4 | 89.4 | 75.3 | 67.1 | 54.4 | ***** | 40.4 | 36.3 | 31.6 | 27.6 | 22.8 | 21.8 | 19.6 | 18.9 | 23.4 | 25.1 | 37.4 | 44.9 | 44.1 | 36.4 | 46.6 | 91.4 | 18.9 |
| 3 | 36.6 | 37.4 | 57.8 | 59.5 | 57.4 | 72.8 | 64.3 | 54.0 | 43.5 | 38.2 | 33.8 | 30.2 | 27.2 | 22.8 | 18.5 | 16.7 | 15.8 | 16.6 | 20.6 | 27.4 | 26.0 | 26.0 | 27.4 | 27.3 | 35.7 | 72.8 | 15.8 |
| 4 | 29.3 | 30.8 | 56.7 | 65.4 | 70.4 | 76.4 | 61.4 | 50.8 | 33.2 | 23.4 | 19.8 | 18.3 | 11.2 | 17.9 | 15.7 | 13.9 | 11.5 | 11.2 | 11.6 | 14.6 | 19.8 | 23.1 | 38.1 | 41.6 | 31.9 | 76.4 | 11.2 |
| 5 | 41.4 | 44.6 | 52.9 | 54.0 | 58.8 | 66.4 | 58.1 | 49.4 | 44.2 | 36.7 | 32.3 | 25.8 | 26.2 | 16.6 | 13.6 | ***** | 7.9 | 7.9 | 9.8 | 17.4 | 18.6 | 18.4 | 20.9 | 22.7 | 32.4 | 66.4 | 7.9 |
| 6 | 21.3 | 20.0 | 31.8 | 39.1 | 32.4 | 25.9 | 29.1 | 30.7 | 30.4 | 28.8 | 25.8 | 23.8 | 19.1 | 17.8 | 13.5 | 11.3 | 10.3 | 9.9 | 12.2 | 15.1 | 15.1 | 15.7 | 21.0 | 24.0 | 21.8 | 39.1 | 9.9 |
| 7 | 25.9 | 28.4 | 29.5 | 35.0 | 40.7 | 44.6 | 35.5 | 34.5 | 41.4 | 29.7 | 22.7 | 23.4 | 16.9 | 7.9 | 8.5 | 9.1 | 8.9 | 8.6 | 12.4 | 16.1 | 21.6 | 17.4 | 14.5 | 15.2 | 22.9 | 44.6 | 7.9 |
| 8 | 17.1 | 29.8 | 29.1 | 23.2 | 19.3 | 20.9 | 36.7 | 32.4 | 26.4 | 14.0 | 11.9 | 10.1 | 10.1 | 14.1 | 16.2 | 14.0 | 15.0 | 16.2 | 21.0 | 26.7 | 28.4 | 33.5 | 34.7 | 37.5 | 22.4 | 37.5 | 10.1 |
| 9 | 43.5 | 42.0 | 40.3 | 43.5 | 46.0 | 46.3 | 49.1 | 48.1 | 47.1 | 45.5 | 37.2 | 32.5 | 33.0 | 26.4 | 19.3 | 16.6 | 12.7 | 11.4 | 11.8 | 16.2 | 31.7 | 33.0 | 36.8 | 39.2 | 33.7 | 49.1 | 11.4 |
| 10 | 43.5 | 48.2 | 47.0 | 53.4 | 57.2 | 63.5 | 58.6 | 50.0 | 43.6 | 37.7 | 32.0 | 27.3 | 24.1 | 22.8 | 23.1 | 23.6 | 26.9 | 23.2 | 27.1 | 48.3 | 51.0 | 61.5 | 73.6 | 77.7 | 43.5 | 77.7 | 22.8 |
| 11 | 79.2 | 79.4 | 84.1 | 86.2 | 91.8 | 88.6 | 80.6 | ***** | 76.3 | 62.3 | 52.3 | 48.7 | 44.3 | 41.6 | 40.4 | 40.6 | 32.8 | 31.5 | 30.8 | 44.6 | 47.8 | 44.8 | 50.5 | 65.2 | 58.5 | 91.8 | 30.8 |
| 12 | 82.2 | 90.4 | 94.3 | 95.1 | 97.2 | 97.2 | 82.9 | 64.2 | 58.7 | 48.4 | 36.9 | 33.2 | 33.9 | 31.5 | 28.0 | 24.0 | 30.0 | 42.0 | 53.1 | 55.7 | 59.8 | 65.2 | 78.1 | 82.5 | 61.0 | 97.2 | 24.0 |
| 13 | 73.1 | 72.8 | 87.9 | 88.0 | 92.9 | 93.8 | 85.1 | 79.2 | 69.1 | 60.1 | 50.5 | 41.0 | 33.6 | 31.6 | 21.1 | 12.4 | 9.6 | 9.3 | 10.3 | 17.2 | 15.7 | 21.3 | 27.0 | 28.9 | 47.1 | 93.8 | 9.3 |
| 14 | 36.8 | 41.8 | 43.4 | 54.2 | 58.5 | 66.3 | 60.5 | 49.1 | 34.7 | 32.1 | 27.3 | 21.2 | 14.2 | 14.0 | 14.9 | 14.1 | 14.3 | 14.2 | 21.7 | 21.3 | 24.6 | 24.4 | 35.5 | 34.4 | 32.2 | 66.3 | 14.0 |
| 15 | 39.7 | 39.4 | 40.7 | 39.7 | 46.7 | 64.8 | 47.2 | 40.9 | 36.4 | 32.7 | 25.7 | 19.2 | 18.4 | ***** | ***** | 12.3 | 13.3 | 13.1 | 17.0 | ***** | 14.0 | 12.7 | 14.0 | 15.1 | 28.7 | 64.8 | 12.3 |
| 16 | 16.3 | 22.7 | 24.3 | 48.7 | 42.8 | 48.5 | 35.6 | 32.3 | ***** | ***** | ***** | ***** | ***** | ***** | ***** | ***** | 9.1 | 9.0 | 9.8 | 10.7 | 12.3 | 14.4 | 16.2 | 17.4 | ***** | 48.7 | 9.0 |
| 17 | 17.3 | 17.2 | 16.2 | 25.1 | 35.4 | 34.8 | 34.9 | 29.5 | ***** | ***** | ***** | 15.2 | 12.7 | 11.3 | 10.5 | 9.2 | 8.0 | 8.0 | 10.5 | 12.9 | 18.3 | 20.1 | 20.4 | 22.4 | 18.6 | 35.4 | 8.0 |
| 18 | 22.2 | 22.1 | 24.6 | 26.7 | 30.5 | 30.4 | 31.5 | 38.7 | ***** | ***** | 25.0 | 21.5 | 19.4 | 18.2 | 16.7 | 13.5 | 10.3 | 9.5 | 12.0 | 14.5 | 19.1 | 19.0 | 20.7 | 28.2 | 21.6 | 38.7 | 9.5 |
| 19 | 32.1 | 35.3 | 40.1 | 46.8 | 64.9 | 69.7 | 65.8 | 59.8 | 49.7 | 38.4 | 36.6 | 33.0 | 32.0 | 31.3 | 30.4 | 24.7 | 18.6 | 16.2 | 18.5 | 21.0 | 25.8 | 27.6 | 27.5 | 32.7 | 36.6 | 69.7 | 16.2 |
| 20 | 37.1 | 41.4 | 54.3 | 61.2 | 51.2 | 54.9 | 65.0 | 52.5 | 44.3 | 34.3 | 32.1 | 30.5 | 24.5 | 24.0 | 22.0 | 28.0 | 30.0 | 34.0 | 52.0 | 46.0 | 48.0 | 40.0 | 43.0 | 46.0 | 41.5 | 65.0 | 22.0 |
| 21 | 44.0 | 43.0 | 38.0 | 41.0 | 40.0 | 43.0 | 46.0 | 43.0 | 39.0 | 35.0 | 32.0 | 27.0 | 25.0 | 23.0 | 24.0 | 31.0 | 29.0 | 52.0 | 47.0 | 35.0 | 41.0 | 37.0 | 39.0 | 44.0 | 37.4 | 52.0 | 23.0 |
| 22 | 48.0 | 51.0 | 52.0 | 53.0 | 53.0 | 62.0 | 71.0 | 58.0 | 44.0 | 45.0 | 42.0 | 39.0 | 36.0 | 29.0 | 26.2 | 22.9 | 23.2 | 21.7 | 21.7 | 24.8 | 28.6 | 28.9 | 26.4 | 24.5 | 38.8 | 71.0 | 21.7 |
| 23 | 24.2 | 32.1 | 42.6 | 42.1 | 41.7 | 42.5 | 43.0 | 44.8 | 33.7 | 28.0 | 20.2 | 19.7 | 18.7 | 14.6 | 14.7 | 14.9 | 12.6 | 12.6 | 17.7 | 18.4 | 24.4 | 25.9 | 29.1 | 26.2 | 26.9 | 44.8 | 12.6 |
| 24 | 24.5 | 42.7 | 49.4 | 51.7 | 42.5 | 51.2 | 51.8 | 45.8 | 41.2 | 29.5 | 21.6 | 16.1 | 16.1 | 14.3 | 13.1 | 12.8 | 12.3 | 12.3 | 14.7 | 14.1 | 14.0 | 15.5 | 16.6 | 21.1 | 26.9 | 51.8 | 12.3 |
| 25 | 23.6 | 25.5 | 28.1 | 35.4 | 43.0 | 36.7 | 35.3 | 37.3 | 37.3 | 26.2 | 21.3 | 15.7 | 15.6 | 14.1 | 13.3 | 11.2 | 9.9 | 10.3 | 14.1 | 17.0 | 17.0 | 17.0 | 16.5 | 20.1 | 22.6 | 43.0 | 9.9 |
| 26 | 30.4 | 28.1 | 33.8 | 41.2 | 40.5 | 30.1 | 29.4 | 22.1 | 15.0 | 10.2 | 11.8 | 12.1 | 13.1 | 12.0 | 10.4 | 10.3 | 9.1 | 10.6 | 15.0 | 20.0 | 22.5 | 19.2 | 20.8 | 21.9 | 20.4 | 41.2 | 9.1 |
| 27 | 22.6 | 24.2 | 27.3 | 34.9 | 42.5 | 36.2 | 45.5 | 48.2 | 38.3 | 28.2 | 21.1 | 13.5 | 10.7 | 9.2 | 10.0 | 10.9 | 11.6 | 16.1 | 26.9 | 29.1 | 31.8 | 32.7 | 33.4 | 36.6 | 26.7 | 48.2 | 9.2 |
| 28 | 40.3 | 42.4 | 48.5 | 59.0 | 60.8 | 61.2 | 56.5 | 47.8 | 41.5 | 34.2 | 30.5 | 26.5 | 26.7 | 24.4 | 22.7 | 22.8 | 22.1 | 23.6 | 23.3 | 26.8 | 33.5 | 36.0 | 38.6 | 41.8 | 37.1 | 61.2 | 22.1 |
| 29 | 44.7 | 47.7 | 55.7 | 52.3 | 51.8 | 55.0 | 58.7 | 56.1 | 30.0 | 33.7 | 30.8 | 27.8 | 24.3 | 22.0 | 16.1 | 15.3 | 13.9 | 13.5 | 15.9 | 17.2 | 22.6 | 23.1 | 20.9 | 20.5 | 32.1 | 58.7 | 13.5 |
| 30 | 20.4 | 21.1 | 23.6 | 26.5 | 27.2 | 35.2 | 32.0 | 39.2 | 40.9 | 37.8 | 34.3 | 30.6 | 27.5 | 23.5 | 23.7 | 22.5 | 18.4 | 17.2 | 21.1 | 26.2 | 29.5 | 29.8 | 31.1 | 33.5 | 28.0 | 40.9 | 17.2 |
| 31 | 37.9 | 44.0 | 51.3 | 60.1 | 52.2 | 60.5 | 55.5 | 50.1 | 45.4 | 39.2 | 29.5 | 27.0 | 22.2 | 16.6 | 13.7 | 13.8 | 11.8 | 11.0 | 15.2 | 16.2 | 16.2 | 20.5 | 23.2 | 23.9 | 31.5 | 60.5 | 11.0 |
| Mean | 38.8 | 42.1 | 47.3 | 51.9 | 53.8 | 56.8 | 54.1 | 48.0 | 43.7 | 36.1 | 30.8 | 26.6 | 23.8 | 21.5 | 19.3 | 18.2 | 16.4 | 17.7 | 21.1 | 24.5 | 27.8 | 28.9 | 31.8 | 34.1 | Monthly mean = | | 34.1 |
| Max. | 88.7 | 90.4 | 94.3 | 97.1 | 97.2 | 97.2 | 95.6 | 85.1 | 82.9 | 66.5 | 57.1 | 51.7 | 44.7 | 43.1 | 40.4 | 40.6 | 32.8 | 52.0 | 53.1 | 55.7 | 59.8 | 65.2 | 78.1 | 82.5 | Monthly max. = | | 97.2 |
| Min. | 16.3 | 17.2 | 16.2 | 23.2 | 19.3 | 20.9 | 29.1 | 22.1 | 15.0 | 10.2 | 11.8 | 10.1 | 10.1 | 7.9 | 8.5 | 9.1 | 7.9 | 7.9 | 9.8 | 10.7 | 12.3 | 12.7 | 14.0 | 15.1 | Monthly min. = | | 7.9 |

TOTAL NUMBER OF DATA HOURS IN MONTH: 744
Number of hours of bad or missing data: 19
Current % recovery = 97.4
**** designates missing or lost data

N/A: insufficient data available for calculation (a minimum of 75% is required)

table created at 11: 3, 4/12/1995

MONTHLY SUMMARY
WIND SPEED
(Miles Per Hour)
INPUT FILE: alls1met.out

Bechtel Environmental, Inc.

Met Data for Site 1
SEPTEMBER 1994

| Day \ Hour | 1 | 2 | 3 | 4 | 5 | 6 | 7 | 8 | 9 | 10 | 11 | 12 | 13 | 14 | 15 | 16 | 17 | 18 | 19 | 20 | 21 | 22 | 23 | 24 | Mean | Max. | Min. |
|---|---|---|---|---|---|---|---|---|---|---|---|---|---|---|---|---|---|---|---|---|---|---|---|---|---|---|---|
| 1 | 6.2 | 3.8 | 5.7 | 6.9 | 1.4 | 2.9 | 3.1 | 6.9 | 4.5 | 3.8 | 3.1 | 4.8 | 5.3 | 11.5 | 9.9 | 11.2 | 10.8 | 6.5 | 3.3 | 4.0 | 9.7 | 9.5 | 7.7 | 8.7 | 6.3 | 11.5 | 1.4 |
| 2 | 10.3 | 4.3 | 2.7 | 1.6 | 3.3 | 2.4 | 4.2 | 4.2 | 4.2 | 3.7 | 15.5 | 17.9 | ***** | 19.8 | 19.4 | 19.0 | 15.5 | 11.9 | 8.3 | 8.9 | 10.4 | 10.4 | 8.3 | 5.7 | 9.2 | 19.8 | 1.6 |
| 3 | 9.6 | 17.9 | 18.6 | 19.1 | 20.7 | 18.9 | 8.8 | 9.0 | 15.2 | 17.8 | 17.1 | 17.5 | 18.7 | 19.8 | 18.6 | 17.3 | 16.7 | 14.7 | 9.1 | 7.7 | 9.4 | 10.2 | 10.5 | 10.7 | 14.7 | 20.7 | 7.7 |
| 4 | 11.8 | 11.4 | 11.7 | 12.1 | 12.7 | 13.3 | 14.2 | 16.2 | 18.9 | 20.3 | 20.7 | 19.7 | 19.8 | 17.0 | 16.0 | 15.8 | 13.8 | 11.7 | 8.6 | 7.9 | 9.1 | 6.6 | 7.1 | 9.6 | 13.6 | 20.7 | 6.6 |
| 5 | 11.4 | 8.5 | 10.4 | 9.0 | 7.7 | 8.8 | 4.8 | 1.1 | 1.6 | 2.5 | 4.0 | 5.6 | 5.7 | 6.2 | 6.8 | 8.3 | 9.1 | 6.6 | 3.4 | 4.6 | 7.4 | 9.2 | 8.3 | 9.4 | 6.7 | 11.4 | 1.1 |
| 6 | 7.7 | 8.2 | 7.3 | 8.7 | 2.5 | 1.8 | 1.7 | 2.5 | 1.4 | 4.6 | 5.4 | 3.1 | 2.8 | 5.6 | 7.8 | 8.5 | 12.9 | 14.6 | 12.0 | 10.5 | 14.3 | 11.0 | 15.1 | 14.7 | 7.7 | 15.1 | 1.4 |
| 7 | 9.0 | 9.3 | 5.2 | 2.8 | 1.4 | 2.3 | 3.9 | 2.1 | 1.2 | 4.9 | 3.9 | 6.2 | 7.6 | 9.5 | 11.3 | 9.4 | 8.5 | 4.7 | 2.7 | 8.5 | 10.7 | 13.1 | 14.7 | 17.2 | 7.1 | 17.2 | 1.2 |
| 8 | 16.1 | 7.8 | 6.0 | 7.3 | 3.0 | 3.0 | 7.9 | 2.7 | 3.4 | 5.5 | 10.0 | 8.7 | 7.7 | 9.5 | 15.2 | 13.0 | 12.2 | 13.1 | 12.0 | 13.9 | 13.8 | 9.2 | 7.0 | 10.0 | 9.1 | 16.1 | 2.7 |
| 9 | 11.2 | 10.5 | 11.8 | 3.3 | 6.5 | 8.4 | 15.6 | 15.3 | 17.7 | 17.2 | 16.5 | 16.4 | 13.7 | 13.1 | 11.4 | 11.0 | 11.8 | 11.5 | 4.5 | 6.7 | 8.6 | 10.3 | 12.6 | 13.8 | 11.6 | 17.7 | 3.3 |
| 10 | 14.0 | 15.4 | 15.9 | 14.6 | 5.7 | 2.1 | 8.2 | 4.5 | 9.8 | 11.2 | 8.0 | 7.4 | 7.6 | 8.4 | 8.8 | 7.4 | 9.1 | 10.6 | 12.3 | 8.6 | 8.4 | 8.5 | 10.7 | 9.7 | 9.5 | 15.9 | 2.1 |
| 11 | 12.2 | 11.5 | 11.4 | 10.5 | 10.0 | 5.1 | 4.8 | 3.6 | 9.8 | 9.7 | 8.0 | 6.5 | 6.0 | 6.6 | 7.5 | 8.5 | 8.0 | 6.4 | 3.3 | 4.2 | 3.9 | 7.4 | 14.6 | 14.1 | 8.1 | 14.6 | 3.3 |
| 12 | 15.8 | 17.8 | 16.1 | 16.2 | 15.6 | 11.5 | 10.5 | 10.0 | 10.5 | 8.0 | 7.5 | 5.8 | 5.6 | 7.7 | 6.8 | 7.0 | 5.0 | 3.3 | 1.4 | 2.2 | 3.1 | 7.5 | 5.2 | 1.4 | 8.4 | 17.8 | 1.4 |
| 13 | 2.9 | 7.2 | 9.3 | 4.9 | 5.1 | 9.5 | 9.1 | 5.4 | 10.4 | 10.0 | 8.6 | 8.6 | 8.1 | 8.4 | 7.0 | 11.6 | 14.8 | 16.1 | 18.0 | 16.4 | 16.5 | 15.2 | 16.5 | 14.4 | 10.6 | 18.0 | 2.9 |
| 14 | 15.4 | 13.9 | 14.1 | 17.1 | 16.9 | 13.6 | 13.6 | 10.7 | 8.4 | 11.9 | 10.9 | 12.7 | 10.3 | 7.3 | 11.0 | 12.5 | 16.4 | 12.3 | 12.3 | 11.0 | 11.5 | 14.8 | 12.4 | 9.9 | 12.5 | 17.1 | 7.3 |
| 15 | 8.3 | 7.7 | 6.7 | 8.2 | 4.6 | 6.4 | 8.0 | 6.6 | 4.4 | 8.3 | 7.4 | 5.7 | 5.4 | 4.4 | 5.2 | 5.1 | 5.1 | 4.1 | 2.2 | 2.9 | 8.1 | 9.7 | 10.6 | 5.8 | 6.3 | 10.6 | 2.2 |
| 16 | 8.2 | 9.0 | 9.1 | 8.5 | 5.9 | 1.4 | 5.0 | 4.3 | 2.2 | 3.7 | 13.2 | 5.2 | 3.6 | 4.3 | 5.7 | 8.6 | 8.4 | 6.4 | 3.8 | 5.5 | 11.0 | 13.1 | 8.7 | 11.0 | 6.9 | 13.2 | 1.4 |
| 17 | 10.2 | 5.7 | 4.6 | 9.7 | 8.4 | 4.5 | 2.8 | 4.3 | 7.5 | 8.8 | 6.2 | 5.7 | 6.7 | 5.9 | 5.8 | 16.1 | 11.5 | 8.1 | 12.0 | 15.6 | 11.9 | 13.7 | 14.7 | 11.1 | 8.8 | 16.1 | 2.8 |
| 18 | 3.7 | 7.0 | 2.1 | 3.8 | 7.3 | 9.5 | 4.7 | 3.1 | 2.2 | 4.4 | 3.3 | 5.8 | 6.3 | 6.0 | 6.0 | 6.1 | 4.5 | 6.2 | 5.7 | 6.8 | 6.1 | 7.8 | 7.0 | 8.6 | 5.6 | 9.5 | 2.1 |
| 19 | 7.5 | 3.1 | 3.6 | 2.6 | 3.8 | 4.4 | 2.4 | 2.4 | ***** | 3.6 | 3.4 | 4.8 | 7.3 | 7.0 | 6.7 | 7.8 | 7.7 | 4.0 | 2.0 | 5.1 | 6.4 | 9.5 | 4.7 | 2.6 | 4.9 | 9.5 | 2.0 |
| 20 | 4.9 | 3.0 | 3.8 | 1.8 | 2.0 | 3.3 | 2.4 | 2.0 | 3.7 | 5.4 | 7.9 | 11.2 | 9.8 | 7.2 | 5.8 | 4.6 | 4.0 | 2.1 | 3.0 | 8.1 | 11.4 | 11.9 | 10.9 | 15.4 | 6.1 | 15.4 | 1.8 |
| 21 | 9.9 | 10.0 | 7.6 | 2.3 | 7.3 | 2.6 | 3.4 | 3.2 | 6.7 | 11.3 | 15.4 | 14.2 | 13.8 | 12.1 | 10.4 | 11.1 | 9.5 | 7.1 | 4.0 | 2.6 | 3.3 | 3.0 | 7.0 | 6.1 | 7.7 | 15.4 | 2.3 |
| 22 | 7.0 | 6.7 | 4.0 | 9.2 | 9.4 | 4.2 | 9.6 | 11.4 | 4.8 | 4.4 | 5.0 | 5.3 | 4.4 | 4.1 | 4.8 | 4.2 | 5.9 | 4.4 | 2.3 | 6.2 | 10.6 | 11.7 | 5.9 | 2.0 | 6.1 | 11.7 | 2.0 |
| 23 | 7.6 | 3.6 | 8.8 | 7.9 | 4.1 | 1.6 | 1.9 | 2.0 | 2.6 | 2.7 | 3.3 | 5.0 | 7.6 | 7.5 | 6.1 | 4.8 | 3.6 | 1.7 | 2.2 | 7.9 | 10.9 | 11.1 | 5.7 | 7.7 | 5.3 | 11.1 | 1.6 |
| 24 | 8.1 | 3.3 | 2.3 | 4.1 | 6.3 | 3.0 | 4.8 | 6.9 | 3.0 | 2.2 | 2.7 | 5.0 | 4.7 | 6.2 | 10.3 | 8.6 | 8.8 | 4.9 | 2.1 | 7.4 | 9.2 | 13.5 | 11.4 | 4.1 | 6.0 | 13.5 | 2.1 |
| 25 | 6.8 | 5.1 | 5.9 | 5.5 | 1.6 | 1.7 | 2.3 | 3.6 | 2.2 | 3.2 | 3.6 | 4.9 | 5.9 | 7.4 | 7.4 | 8.3 | 8.2 | 4.4 | 1.9 | 8.4 | 10.8 | 8.1 | 6.5 | 9.5 | 5.6 | 10.8 | 1.6 |
| 26 | 9.1 | 8.1 | 3.4 | 4.3 | 7.0 | 7.7 | 4.5 | 9.5 | 3.8 | 5.0 | 15.2 | 13.0 | 11.0 | 13.2 | 12.8 | 13.1 | 12.7 | 10.9 | 11.3 | 12.3 | 8.2 | 10.0 | 10.3 | 11.4 | 9.5 | 15.2 | 3.4 |
| 27 | 12.6 | 10.1 | 6.2 | 4.9 | 7.5 | 8.5 | 2.6 | 5.5 | 7.1 | 5.2 | 5.9 | 5.3 | 6.7 | 8.4 | 9.2 | 7.0 | 6.8 | 5.0 | 1.9 | 7.5 | 9.9 | 9.5 | 12.4 | 8.8 | 7.3 | 12.6 | 1.9 |
| 28 | 2.3 | 2.1 | 5.1 | 6.5 | 4.6 | 1.8 | 7.0 | 3.5 | 4.0 | 3.0 | 5.9 | 5.6 | 6.6 | 7.2 | 6.7 | 3.8 | 10.3 | 15.5 | 13.4 | 13.3 | 14.7 | 13.9 | 13.2 | 12.0 | 7.6 | 15.5 | 1.8 |
| 29 | 21.3 | 14.9 | 11.3 | 12.3 | 6.5 | 9.9 | 10.4 | 3.8 | 4.6 | 8.2 | 9.6 | 11.0 | 15.0 | 16.7 | 18.4 | 18.0 | 14.2 | 13.4 | 8.1 | 5.6 | 5.4 | 4.3 | 6.4 | 5.3 | 10.6 | 21.3 | 3.8 |
| 30 | 5.2 | 3.0 | 3.0 | 5.2 | 4.1 | 4.0 | 2.3 | 3.8 | 3.1 | 2.4 | 1.9 | 2.7 | 3.2 | 2.7 | 4.0 | 4.6 | 3.9 | 3.6 | 4.0 | 3.5 | 2.3 | 3.6 | 1.9 | 4.1 | 3.4 | 5.2 | 1.9 |
| Mean | 9.5 | 8.3 | 7.8 | 7.7 | 6.8 | 5.9 | 6.2 | 5.7 | 6.2 | 7.1 | 8.3 | 8.4 | 8.2 | 9.0 | 9.4 | 9.7 | 9.7 | 8.2 | 6.4 | 7.8 | 9.2 | 9.9 | 9.6 | 9.2 | Monthly mean = | | 8.1 |
| Max. | 21.3 | 17.9 | 18.6 | 19.1 | 20.7 | 18.9 | 15.6 | 16.2 | 18.9 | 20.3 | 20.7 | 19.7 | 19.8 | 19.8 | 19.4 | 19.0 | 16.7 | 16.1 | 18.0 | 16.4 | 16.5 | 15.2 | 16.5 | 17.2 | Monthly max. = | | 21.3 |
| Min. | 2.3 | 2.1 | 2.1 | 1.6 | 1.4 | 1.4 | 1.7 | 1.1 | 1.2 | 2.2 | 1.9 | 2.7 | 2.8 | 2.7 | 4.0 | 3.8 | 3.6 | 1.7 | 1.4 | 2.2 | 2.3 | 3.0 | 1.9 | 1.4 | Monthly min. = | | 1.1 |

TOTAL NUMBER OF DATA HOURS IN MONTH: 720
Number of hours of bad or missing data: 2
**** designates missing or lost data

Current % recovery = 99.7

N/A: insufficient data available for calculation (a minimum of 75% is required)

table created at 11: 3, 4/12/1995

MONTHLY SUMMARY
WIND DIRECTION
(Degrees)
INPUT FILE: allsimet.out

Bechtel Environmental, Inc.

Met Data for Site 1
SEPTEMBER 1994

| Day | Hour 1 | 2 | 3 | 4 | 5 | 6 | 7 | 8 | 9 | 10 | 11 | 12 | 13 | 14 | 15 | 16 | 17 | 18 | 19 | 20 | 21 | 22 | 23 | 24 | Mean | Max. | Min. |
|---|---|---|---|---|---|---|---|---|---|---|---|---|---|---|---|---|---|---|---|---|---|---|---|---|---|---|---|
| 1 | 98.0 | 134.0 | 296.0 | 336.0 | 350.0 | 96.0 | 116.0 | 288.0 | 331.0 | 327.0 | 354.0 | 343.0 | 327.0 | 277.0 | 277.0 | 287.0 | 309.0 | 332.0 | 77.0 | 124.0 | 125.0 | 125.0 | 131.0 | 118.0 | 22.4 | 354.0 | 77.0 |
| 2 | 119.0 | 138.0 | 288.0 | 83.0 | 79.0 | 334.0 | 315.0 | 320.0 | 331.0 | 353.0 | 194.0 | 194.0 | ***** | 192.0 | 194.0 | 199.0 | 200.0 | 196.0 | 171.0 | 170.0 | 217.0 | 231.0 | 254.0 | 149.0 | 214.0 | 353.0 | 79.0 |
| 3 | 238.0 | 236.0 | 234.0 | 236.0 | 242.0 | 248.0 | 242.0 | 224.0 | 234.0 | 250.0 | 253.0 | 263.0 | 266.0 | 271.0 | 273.0 | 275.0 | 271.0 | 267.0 | 264.0 | 230.0 | 229.0 | 228.0 | 225.0 | 224.0 | 246.8 | 275.0 | 224.0 |
| 4 | 226.0 | 225.0 | 224.0 | 223.0 | 225.0 | 228.0 | 231.0 | 237.0 | 241.0 | 256.0 | 260.0 | 267.0 | 269.0 | 262.0 | 265.0 | 271.0 | 272.0 | 271.0 | 251.0 | 232.0 | 224.0 | 148.0 | 117.0 | 116.0 | 230.9 | 272.0 | 116.0 |
| 5 | 123.0 | 123.0 | 124.0 | 129.0 | 128.0 | 131.0 | 211.0 | 34.0 | 354.0 | 5.0 | 335.0 | 329.0 | 326.0 | 317.0 | 290.0 | 271.0 | 282.0 | 282.0 | 308.0 | 123.0 | 126.0 | 126.0 | 124.0 | 123.0 | 31.8 | 354.0 | 5.0 |
| 6 | 126.0 | 125.0 | 126.0 | 128.0 | 274.0 | 62.0 | 114.0 | 328.0 | 8.0 | 79.0 | 86.0 | 81.0 | 85.0 | 352.0 | 340.0 | 107.0 | 177.0 | 146.0 | 141.0 | 130.0 | 126.0 | 119.0 | 118.0 | 115.0 | 85.5 | 352.0 | 8.0 |
| 7 | 98.0 | 92.0 | 80.0 | 296.0 | 162.0 | 186.0 | 302.0 | 309.0 | 359.0 | 71.0 | 42.0 | 330.0 | 328.0 | 276.0 | 273.0 | 276.0 | 275.0 | 309.0 | 135.0 | 127.0 | 125.0 | 124.0 | 127.0 | 135.0 | 21.5 | 359.0 | 42.0 |
| 8 | 133.0 | 115.0 | 64.0 | 101.0 | 305.0 | 98.0 | 281.0 | 320.0 | 327.0 | 341.0 | 172.0 | 282.0 | 286.0 | 255.0 | 206.0 | 212.0 | 223.0 | 202.0 | 184.0 | 178.0 | 193.0 | 215.0 | 120.0 | 122.0 | 205.6 | 341.0 | 64.0 |
| 9 | 123.0 | 121.0 | 138.0 | 295.0 | 252.0 | 264.0 | 236.0 | 239.0 | 250.0 | 243.0 | 254.0 | 262.0 | 261.0 | 273.0 | 284.0 | 282.0 | 283.0 | 283.0 | 300.0 | 267.0 | 261.0 | 232.0 | 233.0 | 229.0 | 244.4 | 300.0 | 121.0 |
| 10 | 241.0 | 240.0 | 239.0 | 240.0 | 199.0 | 80.0 | 220.0 | 121.0 | 264.0 | 253.0 | 272.0 | 296.0 | 282.0 | 279.0 | 286.0 | 290.0 | 272.0 | 253.0 | 256.0 | 238.0 | 235.0 | 233.0 | 236.0 | 232.0 | 239.9 | 296.0 | 80.0 |
| 11 | 233.0 | 239.0 | 237.0 | 233.0 | 235.0 | 154.0 | 114.0 | 227.0 | 272.0 | 275.0 | 278.0 | 279.0 | 314.0 | 303.0 | 305.0 | 297.0 | 321.0 | 339.0 | 45.0 | 119.0 | 102.0 | 258.0 | 243.0 | 238.0 | 235.8 | 339.0 | 45.0 |
| 12 | 235.0 | 234.0 | 237.0 | 236.0 | 236.0 | 235.0 | 228.0 | 226.0 | 252.0 | 256.0 | 290.0 | 305.0 | 305.0 | 322.0 | 297.0 | 316.0 | 331.0 | 348.0 | 129.0 | 129.0 | 108.0 | 164.0 | 275.0 | 67.0 | 240.0 | 348.0 | 67.0 |
| 13 | 300.0 | 267.0 | 259.0 | 290.0 | 241.0 | 235.0 | 229.0 | 188.0 | 250.0 | 264.0 | 274.0 | 265.0 | 270.0 | 269.0 | 269.0 | 278.0 | 271.0 | 259.0 | 245.0 | 245.0 | 239.0 | 233.0 | 233.0 | 235.0 | 254.5 | 300.0 | 188.0 |
| 14 | 236.0 | 237.0 | 237.0 | 237.0 | 238.0 | 238.0 | 241.0 | 232.0 | 196.0 | 239.0 | 264.0 | 252.0 | 253.0 | 234.0 | 123.0 | 308.0 | 231.0 | 160.0 | 126.0 | 127.0 | 124.0 | 123.0 | 125.0 | 130.0 | 204.6 | 308.0 | 123.0 |
| 15 | 119.0 | 132.0 | 128.0 | 121.0 | 127.0 | 126.0 | 123.0 | 122.0 | 309.0 | 274.0 | 265.0 | 286.0 | 321.0 | 26.0 | 280.0 | 307.0 | 296.0 | 320.0 | 324.0 | 122.0 | 123.0 | 125.0 | 126.0 | 128.0 | 42.9 | 324.0 | 26.0 |
| 16 | 123.0 | 125.0 | 126.0 | 128.0 | 128.0 | 15.0 | 109.0 | 104.0 | 43.0 | 38.0 | 197.0 | 345.0 | 8.0 | 10.0 | 59.0 | 289.0 | 327.0 | 330.0 | 345.0 | 122.0 | 126.0 | 121.0 | 126.0 | 122.0 | 54.4 | 345.0 | 8.0 |
| 17 | 124.0 | 143.0 | 68.0 | 121.0 | 124.0 | 75.0 | 308.0 | 106.0 | 103.0 | 75.0 | 63.0 | 36.0 | 354.0 | 333.0 | 130.0 | 208.0 | 205.0 | 189.0 | 200.0 | 194.0 | 141.0 | 128.0 | 118.0 | 113.0 | 152.5 | 354.0 | 36.0 |
| 18 | 127.0 | 123.0 | 311.0 | 88.0 | 115.0 | 126.0 | 281.0 | 41.0 | 42.0 | 341.0 | 5.0 | 342.0 | 307.0 | 333.0 | 317.0 | 316.0 | 9.0 | 19.0 | 26.0 | 109.0 | 109.0 | 114.0 | 115.0 | 124.0 | 40.0 | 342.0 | 5.0 |
| 19 | 142.0 | 298.0 | 118.0 | 358.0 | 111.0 | 74.0 | 340.0 | 119.0 | ***** | 353.0 | 37.0 | 29.0 | 5.0 | .0 | 27.0 | 335.0 | 330.0 | 23.0 | 355.0 | 92.0 | 118.0 | 120.0 | 234.0 | 103.0 | 36.6 | 358.0 | .0 |
| 20 | 115.0 | 85.0 | 293.0 | 67.0 | 105.0 | 90.0 | 303.0 | 322.0 | 303.0 | 298.0 | 277.0 | 275.0 | 280.0 | 289.0 | 347.0 | 357.0 | 75.0 | 55.0 | 245.0 | 145.0 | 127.0 | 127.0 | 128.0 | 125.0 | 21.4 | 357.0 | 55.0 |
| 21 | 129.0 | 126.0 | 179.0 | 120.0 | 113.0 | 301.0 | 96.0 | 35.0 | 9.0 | 38.0 | 35.0 | 33.0 | 31.0 | 31.0 | 32.0 | 36.0 | 39.0 | 45.0 | 52.0 | 322.0 | 298.0 | 100.0 | 113.0 | 103.0 | 55.7 | 322.0 | 9.0 |
| 22 | 112.0 | 102.0 | 97.0 | 274.0 | 268.0 | 105.0 | 120.0 | 110.0 | 88.0 | 47.0 | 7.0 | 11.0 | 6.0 | 357.0 | 351.0 | 16.0 | 356.0 | 356.0 | 167.0 | 123.0 | 123.0 | 123.0 | 214.0 | 44.0 | 44.0 | 357.0 | 6.0 |
| 23 | 105.0 | 253.0 | 123.0 | 132.0 | 285.0 | 87.0 | 61.0 | 336.0 | 85.0 | 72.0 | 354.0 | 321.0 | 275.0 | 295.0 | 289.0 | 314.0 | 326.0 | 328.0 | 153.0 | 123.0 | 124.0 | 126.0 | 130.0 | 120.0 | 35.7 | 354.0 | 61.0 |
| 24 | 136.0 | 148.0 | 354.0 | 101.0 | 111.0 | 319.0 | 131.0 | 143.0 | 319.0 | 23.0 | 27.0 | 5.0 | 31.0 | 30.0 | 18.0 | 9.0 | 351.0 | 2.0 | 115.0 | 116.0 | 119.0 | 121.0 | 126.0 | 45.0 | 60.8 | 354.0 | 2.0 |
| 25 | 122.0 | 125.0 | 294.0 | 290.0 | 106.0 | 87.0 | 96.0 | 294.0 | 328.0 | 23.0 | 23.0 | 354.0 | 339.0 | 322.0 | 331.0 | 327.0 | 324.0 | 318.0 | 205.0 | 124.0 | 125.0 | 126.0 | 121.0 | 119.0 | 25.1 | 354.0 | 23.0 |
| 26 | 124.0 | 120.0 | 331.0 | 113.0 | 124.0 | 118.0 | 115.0 | 122.0 | 104.0 | 280.0 | 258.0 | 267.0 | 273.0 | 266.0 | 268.0 | 268.0 | 261.0 | 248.0 | 230.0 | 226.0 | 213.0 | 113.0 | 121.0 | 120.0 | 195.1 | 331.0 | 104.0 |
| 27 | 122.0 | 128.0 | 102.0 | 108.0 | 123.0 | 132.0 | 217.0 | 93.0 | 112.0 | 298.0 | 332.0 | 349.0 | 298.0 | 277.0 | 287.0 | 291.0 | 309.0 | 304.0 | 146.0 | 120.0 | 126.0 | 123.0 | 119.0 | 121.0 | 193.2 | 349.0 | 93.0 |
| 28 | 326.0 | 31.0 | 102.0 | 113.0 | 290.0 | 71.0 | 117.0 | 126.0 | 301.0 | 358.0 | 60.0 | 39.0 | 308.0 | 303.0 | 331.0 | 88.0 | 181.0 | 185.0 | 182.0 | 157.0 | 131.0 | 184.0 | 258.0 | 265.0 | 187.8 | 358.0 | 31.0 |
| 29 | 216.0 | 229.0 | 250.0 | 226.0 | 143.0 | 134.0 | 149.0 | 280.0 | 101.0 | 135.0 | 181.0 | 204.0 | 201.0 | 200.0 | 199.0 | 260.0 | 249.0 | 225.0 | 151.0 | 128.0 | 345.0 | 268.0 | 237.0 | 115.0 | 201.1 | 345.0 | 101.0 |
| 30 | 122.0 | 120.0 | 228.0 | 266.0 | 290.0 | 338.0 | 53.0 | 118.0 | 126.0 | 60.0 | 74.0 | 37.0 | 66.0 | 338.0 | 333.0 | 7.0 | 16.0 | 358.0 | 329.0 | 357.0 | 131.0 | 316.0 | 29.0 | 272.0 | 17.7 | 358.0 | 7.0 |
| Mean | 159.8 | 160.5 | 196.2 | 189.6 | 191.0 | 159.6 | 190.0 | 192.1 | 344.9 | 341.5 | 328.1 | 318.7 | 317.1 | 303.1 | 314.7 | 308.6 | 305.7 | 315.7 | 195.2 | 167.3 | 163.8 | 163.1 | 162.5 | 142.4 | Monthly mean = | | 194.8 |
| Max. | 326.0 | 298.0 | 354.0 | 358.0 | 350.0 | 338.0 | 340.0 | 336.0 | 359.0 | 358.0 | 354.0 | 354.0 | 354.0 | 357.0 | 351.0 | 357.0 | 356.0 | 358.0 | 355.0 | 357.0 | 345.0 | 316.0 | 275.0 | 272.0 | Monthly max. = | | 359.0 |
| Min. | 98.0 | 31.0 | 64.0 | 67.0 | 79.0 | 15.0 | 53.0 | 34.0 | 8.0 | 5.0 | 5.0 | 5.0 | 5.0 | .0 | 18.0 | 7.0 | 9.0 | 2.0 | 26.0 | 92.0 | 102.0 | 100.0 | 29.0 | 44.0 | Monthly min. = | | .0 |

TOTAL NUMBER OF DATA HOURS IN MONTH: 720
Number of hours of bad or missing data: 2
**** designates missing or lost data

Current % recovery = 99.7

N/A: insufficient data available for calculation (a minimum of 75% is required)

table created at 11: 3, 4/12/1995

MONTHLY SUMMARY
TEMPERATURE
(Degrees Celsius)
INPUT FILE: allslmet.out

Bechtel Environmental, Inc.

Met Data for Site 1
SEPTEMBER 1994

| Day | Hour 1 | 2 | 3 | 4 | 5 | 6 | 7 | 8 | 9 | 10 | 11 | 12 | 13 | 14 | 15 | 16 | 17 | 18 | 19 | 20 | 21 | 22 | 23 | 24 | Mean | Max. | Min. |
|---|---|---|---|---|---|---|---|---|---|---|---|---|---|---|---|---|---|---|---|---|---|---|---|---|---|---|---|
| 1 | 15.6 | 15.6 | 13.2 | 12.2 | 10.3 | 10.6 | 11.2 | 13.0 | 15.5 | 18.4 | 21.4 | 24.9 | 27.5 | 27.7 | 29.2 | 29.9 | 29.7 | 29.2 | 27.7 | 23.8 | 21.7 | 19.7 | 18.3 | 17.4 | 20.2 | 29.9 | 10.3 |
| 2 | 17.2 | 15.2 | 11.4 | 11.2 | 11.2 | 10.6 | 10.5 | 14.0 | 18.4 | 22.1 | 27.6 | 28.7 | ***** | 29.8 | 29.4 | 29.4 | 29.0 | 28.5 | 27.8 | 26.1 | 25.0 | 25.1 | 25.1 | 23.5 | 21.6 | 29.8 | 10.5 |
| 3 | 21.7 | 21.6 | 20.1 | 19.3 | 18.0 | 18.0 | 18.2 | 18.3 | 19.2 | 19.9 | 20.5 | 21.1 | 21.8 | 22.4 | 23.0 | 23.1 | 23.2 | 23.3 | 22.5 | 21.2 | 20.8 | 20.0 | 19.2 | 18.4 | 20.6 | 23.3 | 18.0 |
| 4 | 18.1 | 17.7 | 17.2 | 16.7 | 16.0 | 14.8 | 14.3 | 14.7 | 15.5 | 16.4 | 17.3 | 18.1 | 18.8 | 19.7 | 20.5 | 21.1 | 21.3 | 21.4 | 20.9 | 19.2 | 18.5 | 16.0 | 12.5 | 11.3 | 17.4 | 21.4 | 11.3 |
| 5 | 10.4 | 9.0 | 8.0 | 7.5 | 7.0 | 6.0 | 5.4 | 10.4 | 14.1 | 16.9 | 19.1 | 20.8 | 22.3 | 23.8 | 24.8 | 25.7 | 26.2 | 26.7 | 24.9 | 20.5 | 18.2 | 16.9 | 15.5 | 14.4 | 16.4 | 26.7 | 5.4 |
| 6 | 13.2 | 12.6 | 11.4 | 11.4 | 9.2 | 8.1 | 7.9 | 10.1 | 13.6 | 16.5 | 20.2 | 23.7 | 27.5 | 29.1 | 29.1 | 29.2 | 28.2 | 26.2 | 23.9 | 22.6 | 22.1 | 21.0 | 20.5 | 19.6 | 19.0 | 29.2 | 7.9 |
| 7 | 18.1 | 17.9 | 16.2 | 12.5 | 11.4 | 13.6 | 10.7 | 14.0 | 21.4 | 23.8 | 26.5 | 28.0 | 29.1 | 29.8 | 30.7 | 30.6 | 30.8 | 30.6 | 28.0 | 24.4 | 23.0 | 21.1 | 21.2 | 21.6 | 22.3 | 30.8 | 10.7 |
| 8 | 20.7 | 19.9 | 18.9 | 18.9 | 16.2 | 16.4 | 14.3 | 17.0 | 21.9 | 24.3 | 29.2 | 30.1 | 30.6 | 30.6 | 31.9 | 32.0 | 32.1 | 31.7 | 30.3 | 29.3 | 28.9 | 27.5 | 23.1 | 20.0 | 24.8 | 32.1 | 14.3 |
| 9 | 20.4 | 21.0 | 21.4 | 16.5 | 18.6 | 17.6 | 20.5 | 22.0 | 21.9 | 22.8 | 23.2 | 24.0 | 25.0 | 25.8 | 26.3 | 26.6 | 26.5 | 26.0 | 23.6 | 22.3 | 21.2 | 20.5 | 19.1 | 17.4 | 22.1 | 26.6 | 16.5 |
| 10 | 16.8 | 15.5 | 15.0 | 14.4 | 13.5 | 9.5 | 11.7 | 12.8 | 15.3 | 16.3 | 18.1 | 19.4 | 20.5 | 21.7 | 22.9 | 23.9 | 24.4 | 23.4 | 22.3 | 21.3 | 20.9 | 20.0 | 18.6 | 18.2 | 18.2 | 24.4 | 9.5 |
| 11 | 16.6 | 16.0 | 14.9 | 13.9 | 13.3 | 10.3 | 9.2 | 12.2 | 13.6 | 14.5 | 16.4 | 18.6 | 20.7 | 22.4 | 23.5 | 24.2 | 24.4 | 24.0 | 21.7 | 19.9 | 17.5 | 15.9 | 16.8 | 15.9 | 17.3 | 24.4 | 9.2 |
| 12 | 15.3 | 14.6 | 13.9 | 12.7 | 11.5 | 10.9 | 10.8 | 11.7 | 12.8 | 14.2 | 15.7 | 16.9 | 19.2 | 20.4 | 22.1 | 23.3 | 24.3 | 24.6 | 22.8 | 19.2 | 16.5 | 16.4 | 16.7 | 14.1 | 16.7 | 24.6 | 10.8 |
| 13 | 13.5 | 15.0 | 15.6 | 13.1 | 12.1 | 13.7 | 13.5 | 14.0 | 15.1 | 15.5 | 16.8 | 18.3 | 20.3 | 20.8 | 21.3 | 22.7 | 22.0 | 21.5 | 19.4 | 17.5 | 15.5 | 14.3 | 13.6 | 13.3 | 16.6 | 22.7 | 12.1 |
| 14 | 12.6 | 12.0 | 11.7 | 11.6 | 11.5 | 11.6 | 11.6 | 11.3 | 11.4 | 12.0 | 11.9 | 11.6 | 13.3 | 15.0 | 15.3 | 13.8 | 11.9 | 13.8 | 12.2 | 12.0 | 12.1 | 11.7 | 11.1 | 10.7 | 12.2 | 15.3 | 10.7 |
| 15 | 10.0 | 9.5 | 8.6 | 8.0 | 6.8 | 5.9 | 5.8 | 8.1 | 11.9 | 13.9 | 15.8 | 17.4 | 18.9 | 19.9 | 20.4 | 20.9 | 21.0 | 20.5 | 18.8 | 16.0 | 14.5 | 13.2 | 12.0 | 10.9 | 13.7 | 21.0 | 5.8 |
| 16 | 10.4 | 9.8 | 9.0 | 8.4 | 7.6 | 6.0 | 6.6 | 9.4 | 13.0 | 17.2 | 26.1 | 20.9 | 22.6 | 23.6 | 23.7 | 24.2 | 23.7 | 23.1 | 21.6 | 19.6 | 17.6 | 15.6 | 13.6 | 13.0 | 16.1 | 26.1 | 6.0 |
| 17 | 12.7 | 12.0 | 9.6 | 10.9 | 10.4 | 8.8 | 6.2 | 11.3 | 15.0 | 18.5 | 21.7 | 24.5 | 26.0 | 26.9 | 27.0 | 25.5 | 26.1 | 26.3 | 25.0 | 23.9 | 22.0 | 20.9 | 19.3 | 17.4 | 18.7 | 27.0 | 6.2 |
| 18 | 13.3 | 13.9 | 10.9 | 10.4 | 11.7 | 10.2 | 7.9 | 11.7 | 16.3 | 18.1 | 22.0 | 23.3 | 25.1 | 26.4 | 27.0 | 27.2 | 27.8 | 26.7 | 24.0 | 21.5 | 20.7 | 17.9 | 16.3 | 16.0 | 18.6 | 27.8 | 7.9 |
| 19 | 13.4 | 11.4 | 10.4 | 8.7 | 8.4 | 7.8 | 6.4 | 10.7 | ***** | 17.2 | 20.6 | 22.7 | 25.4 | 26.9 | 27.3 | 27.3 | 27.2 | 26.9 | 23.6 | 20.2 | 18.4 | 16.4 | 13.8 | 13.3 | 17.6 | 27.3 | 6.4 |
| 20 | 12.5 | 10.4 | 9.3 | 7.4 | 7.9 | 7.5 | 7.8 | 10.4 | 13.2 | 16.4 | 19.6 | 21.4 | 23.0 | 24.7 | 26.1 | 27.1 | 27.2 | 27.0 | 23.9 | 21.7 | 19.6 | 18.9 | 17.7 | 17.5 | 17.4 | 27.2 | 7.4 |
| 21 | 15.8 | 13.3 | 12.4 | 10.5 | 11.1 | 9.2 | 9.4 | 11.5 | 13.2 | 15.4 | 17.1 | 18.0 | 18.9 | 19.8 | 20.9 | 21.5 | 21.5 | 20.4 | 18.0 | 16.0 | 15.0 | 12.7 | 9.8 | 8.7 | 15.0 | 21.5 | 8.7 |
| 22 | 8.2 | 7.1 | 7.8 | 6.8 | 6.5 | 4.0 | 3.9 | 7.1 | 10.7 | 13.3 | 16.3 | 19.2 | 21.6 | 23.7 | 24.2 | 25.3 | 24.6 | 23.8 | 20.6 | 16.3 | 14.8 | 13.9 | 11.4 | 8.6 | 14.2 | 25.3 | 3.9 |
| 23 | 9.6 | 7.8 | 8.3 | 8.5 | 4.9 | 3.7 | 4.2 | 8.1 | 12.6 | 15.7 | 19.4 | 21.4 | 23.7 | 24.5 | 26.1 | 27.3 | 28.0 | 27.9 | 23.2 | 18.9 | 17.6 | 16.1 | 14.0 | 12.9 | 16.0 | 28.0 | 3.7 |
| 24 | 12.2 | 9.7 | 6.8 | 7.2 | 8.8 | 4.6 | 4.6 | 8.5 | 11.0 | 17.2 | 20.1 | 22.5 | 25.5 | 27.7 | 28.7 | 29.3 | 29.1 | 28.0 | 24.3 | 20.8 | 18.8 | 18.1 | 17.0 | 13.6 | 17.3 | 29.3 | 4.6 |
| 25 | 14.2 | 12.6 | 11.0 | 9.5 | 7.4 | 6.1 | 7.1 | 9.4 | 14.4 | 18.8 | 22.3 | 25.0 | 27.3 | 28.3 | 29.2 | 29.1 | 28.9 | 28.4 | 25.0 | 20.7 | 19.1 | 17.9 | 16.0 | 16.1 | 18.5 | 29.2 | 6.1 |
| 26 | 15.3 | 14.4 | 10.5 | 9.4 | 9.7 | 10.4 | 9.4 | 10.0 | 14.1 | 19.0 | 21.4 | 22.2 | 23.6 | 24.5 | 25.5 | 26.2 | 26.4 | 26.2 | 24.8 | 24.2 | 23.0 | 18.6 | 16.3 | 15.0 | 18.3 | 26.4 | 9.4 |
| 27 | 14.1 | 12.7 | 10.3 | 10.0 | 9.4 | 9.9 | 7.2 | 8.5 | 13.2 | 17.8 | 20.8 | 23.4 | 25.3 | 26.4 | 27.3 | 28.2 | 28.4 | 27.7 | 23.5 | 20.8 | 19.3 | 16.9 | 16.2 | 15.4 | 18.0 | 28.4 | 7.2 |
| 28 | 11.2 | 9.5 | 9.6 | 10.8 | 8.8 | 6.4 | 8.7 | 11.5 | 13.7 | 18.7 | 20.6 | 24.3 | 27.7 | 29.2 | 30.0 | 30.5 | 29.5 | 28.4 | 27.5 | 26.2 | 23.7 | 23.3 | 22.7 | 21.4 | 19.7 | 30.5 | 6.4 |
| 29 | 18.9 | 18.1 | 16.8 | 15.1 | 14.4 | 13.7 | 14.1 | 13.9 | 14.4 | 15.9 | 17.6 | 18.8 | 19.1 | 19.8 | 20.1 | 15.1 | 13.4 | 12.7 | 12.6 | 12.4 | 12.2 | 11.7 | 12.7 | 12.0 | 15.2 | 20.1 | 11.7 |
| 30 | 11.5 | 11.5 | 11.5 | 11.1 | 11.3 | 11.0 | 11.0 | 10.7 | 10.8 | 11.1 | 11.5 | 12.1 | 12.2 | 12.7 | 13.2 | 13.3 | 13.2 | 12.7 | 11.9 | 11.4 | 11.0 | 10.6 | 10.1 | 10.5 | 11.6 | 13.3 | 10.1 |
| Mean | 14.5 | 13.6 | 12.4 | 11.5 | 10.8 | 9.9 | 9.7 | 11.9 | 14.7 | 17.3 | 19.9 | 21.4 | 22.8 | 24.1 | 24.9 | 25.1 | 25.0 | 24.6 | 22.5 | 20.3 | 19.0 | 17.6 | 16.3 | 15.3 | Monthly mean = | | 17.7 |
| Max. | 21.7 | 21.6 | 21.4 | 19.3 | 18.6 | 18.0 | 20.5 | 22.0 | 21.9 | 24.3 | 29.2 | 30.1 | 30.6 | 30.6 | 31.9 | 32.0 | 32.1 | 31.7 | 30.3 | 29.3 | 28.9 | 27.5 | 25.1 | 23.5 | Monthly max. = | | 32.1 |
| Min. | 8.2 | 7.1 | 6.8 | 6.8 | 4.9 | 3.7 | 3.9 | 7.1 | 10.7 | 11.1 | 11.5 | 11.6 | 12.2 | 12.7 | 13.2 | 13.3 | 11.9 | 12.7 | 11.9 | 11.4 | 11.0 | 10.6 | 9.8 | 8.6 | Monthly min. = | | 3.7 |

TOTAL NUMBER OF DATA HOURS IN MONTH: 720
Number of hours of bad or missing data: 2
**** designates missing or lost data

Current % recovery = 99.7

N/A: insufficient data available for calculation (a minimum of 75% is required)

table created at 11: 3, 4/12/1995

MONTHLY SUMMARY
SIGMA THETA
(Degrees)
INPUT FILE: allslmet.out

Bechtel Environmental, Inc.

Met Data for Site 1
SEPTEMBER 1994

| Day | Hour 1 | 2 | 3 | 4 | 5 | 6 | 7 | 8 | 9 | 10 | 11 | 12 | 13 | 14 | 15 | 16 | 17 | 18 | 19 | 20 | 21 | 22 | 23 | 24 | Mean | Max. | Min. |
|---|---|---|---|---|---|---|---|---|---|---|---|---|---|---|---|---|---|---|---|---|---|---|---|---|---|---|---|
| 1 | 36. | 23. | 74. | 52. | 54. | 33. | 63. | 43. | 17. | 28. | 37. | 25. | 22. | 13. | 15. | 16. | 12. | 11. | 21. | 9. | 4. | 6. | 7. | 10. | N/A | 74. | 4. |
| 2 | 5. | 55. | 62. | 56. | 57. | 57. | 23. | 20. | 18. | 29. | 30. | 18. | ***** | 17. | 16. | 15. | 14. | 18. | 14. | 22. | 37. | 15. | 23. | 65. | N/A | 65. | 5. |
| 3 | 45. | 13. | 12. | 13. | 13. | 14. | 35. | 16. | 14. | 15. | 15. | 16. | 15. | 15. | 15. | 14. | 13. | 13. | 14. | 13. | 13. | 14. | 13. | 13. | N/A | 45. | 12. |
| 4 | 13. | 13. | 13. | 12. | 13. | 13. | 14. | 14. | 14. | 14. | 15. | 16. | 16. | 17. | 15. | 16. | 15. | 14. | 14. | 13. | 12. | 29. | 8. | 5. | N/A | 29. | 5. |
| 5 | 5. | 5. | 4. | 4. | 4. | 4. | 32. | 38. | 31. | 36. | 33. | 24. | 34. | 25. | 37. | 17. | 13. | 15. | 24. | 9. | 5. | 4. | 4. | 4. | N/A | 38. | 4. |
| 6 | 4. | 4. | 6. | 6. | 43. | 36. | 59. | 21. | 41. | 16. | 13. | 23. | 34. | 32. | 21. | 24. | 17. | 11. | 8. | 7. | 5. | 6. | 4. | 7. | N/A | 59. | 4. |
| 7 | 10. | 41. | 47. | 23. | 81. | 49. | 19. | 14. | 56. | 19. | 25. | 18. | 24. | 19. | 18. | 15. | 18. | 14. | 38. | 7. | 5. | 3. | 4. | 4. | N/A | 81. | 3. |
| 8 | 4. | 19. | 27. | 39. | 62. | 71. | 36. | 43. | 24. | 45. | 56. | 26. | 25. | 43. | 22. | 25. | 19. | 22. | 19. | 12. | 12. | 20. | 8. | 6. | N/A | 71. | 4. |
| 9 | 6. | 9. | 20. | 39. | 52. | 36. | 12. | 14. | 13. | 14. | 15. | 15. | 18. | 17. | 19. | 16. | 14. | 11. | 12. | 15. | 11. | 12. | 12. | 12. | N/A | 52. | 6. |
| 10 | 12. | 12. | 11. | 12. | 26. | 33. | 26. | 39. | 17. | 18. | 17. | 22. | 27. | 19. | 21. | 17. | 18. | 12. | 15. | 16. | 15. | 15. | 11. | 12. | N/A | 39. | 11. |
| 11 | 13. | 11. | 12. | 14. | 13. | 26. | 24. | 34. | 14. | 15. | 18. | 23. | 27. | 24. | 24. | 18. | 15. | 10. | 43. | 15. | 19. | 16. | 9. | 10. | N/A | 43. | 9. |
| 12 | 10. | 11. | 11. | 12. | 11. | 12. | 14. | 13. | 16. | 21. | 20. | 21. | 28. | 18. | 24. | 18. | 27. | 23. | 15. | 15. | 22. | 28. | 25. | 36. | N/A | 36. | 10. |
| 13 | 35. | 25. | 14. | 26. | 45. | 10. | 16. | 23. | 14. | 17. | 17. | 17. | 18. | 15. | 29. | 16. | 10. | 10. | 10. | 10. | 11. | 11. | 12. | 13. | N/A | 45. | 10. |
| 14 | 11. | 11. | 12. | 11. | 12. | 14. | 13. | 15. | 16. | 16. | 13. | 16. | 18. | 23. | 11. | 40. | 16. | 18. | 11. | 9. | 7. | 6. | 9. | 12. | N/A | 40. | 6. |
| 15 | 12. | 16. | 13. | 7. | 35. | 13. | 6. | 6. | 35. | 15. | 19. | 33. | 39. | 60. | 57. | 42. | 30. | 17. | 31. | 17. | 4. | 4. | 4. | 38. | N/A | 60. | 4. |
| 16 | 5. | 3. | 3. | 4. | 45. | 51. | 8. | 9. | 21. | 35. | 35. | 33. | 58. | 60. | 20. | 25. | 16. | 9. | 16. | 12. | 6. | 3. | 13. | 44. | N/A | 60. | 3. |
| 17 | 37. | 59. | 15. | 6. | 6. | 30. | 23. | 23. | 10. | 9. | 15. | 28. | 36. | 53. | 56. | 29. | 17. | 18. | 11. | 13. | 13. | 6. | 6. | 27. | N/A | 59. | 6. |
| 18 | 38. | 31. | 33. | 56. | 9. | 28. | 13. | 38. | 37. | 20. | 34. | 26. | 35. | 40. | 31. | 24. | 39. | 13. | 9. | 10. | 9. | 8. | 25. | 10. | N/A | 56. | 8. |
| 19 | 44. | 41. | 34. | 33. | 16. | 25. | 52. | 32. | ***** | 27. | 35. | 23. | 24. | 30. | 25. | 20. | 18. | 16. | 19. | 35. | 8. | 5. | 37. | 34. | N/A | 52. | 5. |
| 20 | 32. | 74. | 40. | 34. | 49. | 13. | 41. | 26. | 17. | 19. | 18. | 14. | 16. | 22. | 35. | 47. | 37. | 50. | 24. | 28. | 8. | 7. | 8. | 5. | N/A | 74. | 5. |
| 21 | 33. | 36. | 22. | 41. | 7. | 45. | 14. | 37. | 19. | 13. | 11. | 13. | 13. | 12. | 14. | 15. | 14. | 12. | 25. | 26. | 20. | 23. | 6. | 8. | N/A | 45. | 6. |
| 22 | 8. | 8. | 39. | 12. | 12. | 36. | 4. | 7. | 18. | 21. | 25. | 25. | 46. | 46. | 40. | 43. | 25. | 21. | 13. | 7. | 3. | 4. | 23. | 37. | N/A | 46. | 3. |
| 23 | 7. | 46. | 6. | 22. | 31. | 33. | 31. | 52. | 23. | 27. | 36. | 30. | 16. | 19. | 27. | 30. | 27. | 34. | 21. | 6. | 3. | 4. | 8. | 3. | N/A | 52. | 3. |
| 24 | 6. | 40. | 28. | 13. | 18. | 24. | 52. | 30. | 47. | 43. | 40. | 33. | 33. | 21. | 14. | 19. | 13. | 20. | 47. | 5. | 4. | 4. | 30. | 39. | N/A | 52. | 4. |
| 25 | 30. | 44. | 48. | 52. | 39. | 23. | 59. | 19. | 34. | 27. | 29. | 31. | 25. | 19. | 20. | 16. | 10. | 6. | 30. | 6. | 4. | 10. | 10. | 8. | N/A | 59. | 4. |
| 26 | 7. | 27. | 29. | 10. | 8. | 22. | 17. | 6. | 19. | 38. | 14. | 14. | 18. | 13. | 13. | 12. | 10. | 12. | 11. | 12. | 28. | 6. | 5. | 5. | N/A | 38. | 5. |
| 27 | 5. | 38. | 62. | 28. | 7. | 8. | 59. | 14. | 16. | 14. | 20. | 27. | 23. | 22. | 18. | 18. | 11. | 20. | 34. | 15. | 7. | 5. | 11. | 45. | N/A | 62. | 5. |
| 28 | 21. | 46. | 25. | 11. | 44. | 91. | 9. | 41. | 10. | 32. | 12. | 17. | 29. | 21. | 21. | 37. | 20. | 12. | 11. | 11. | 5. | 27. | 16. | 15. | N/A | 91. | 5. |
| 29 | 17. | 11. | 16. | 13. | 34. | 7. | 23. | 51. | 15. | 10. | 20. | 17. | 13. | 13. | 12. | 13. | 13. | 12. | 24. | 24. | 46. | 20. | 19. | 27. | N/A | 51. | 7. |
| 30 | 9. | 53. | 36. | 19. | 25. | 12. | 23. | 10. | 19. | 21. | 23. | 21. | 13. | 36. | 19. | 12. | 15. | 12. | 10. | 64. | 23. | 12. | 93. | 13. | N/A | 93. | 9. |
| Mean | N/A | N/A | N/A | N/A | N/A | N/A | N/A | N/A | N/A | N/A | N/A | N/A | N/A | N/A | N/A | N/A | N/A | N/A | N/A | N/A | N/A | N/A | N/A | N/A | Monthly mean = | | N/A |
| Max. | 45. | 74. | 74. | 56. | 81. | 91. | 63. | 52. | 56. | 45. | 56. | 33. | 58. | 60. | 57. | 47. | 39. | 50. | 47. | 64. | 46. | 29. | 93. | 65. | Monthly max. = | | 93. |
| Min. | 4. | 3. | 3. | 4. | 4. | 4. | 4. | 6. | 10. | 9. | 11. | 13. | 13. | 12. | 11. | 12. | 10. | 6. | 8. | 5. | 3. | 3. | 4. | 3. | Monthly min. = | | 3. |

TOTAL NUMBER OF DATA HOURS IN MONTH: 720
Number of hours of bad or missing data: 2
**** designates missing or lost data

Current % recovery = 99.7

N/A: A sigma theta mean is not physically meaningful.

table created at 11: 3, 4/12/1995

MONTHLY SUMMARY
REL. HUMID.
(Degrees)
INPUT FILE: alls1met.out

Bechtel Environmental, Inc.

Met Data for Site 1
SEPTEMBER 1994

| Day | Hour 1 | 2 | 3 | 4 | 5 | 6 | 7 | 8 | 9 | 10 | 11 | 12 | 13 | 14 | 15 | 16 | 17 | 18 | 19 | 20 | 21 | 22 | 23 | 24 | Mean | Max. | Min. |
|---|---|---|---|---|---|---|---|---|---|---|---|---|---|---|---|---|---|---|---|---|---|---|---|---|---|---|---|
| 1 | 30.1 | 29.0 | 42.9 | 49.7 | 62.1 | 57.8 | 52.2 | 51.1 | 46.7 | 40.2 | 34.2 | 29.9 | 24.7 | 20.6 | 16.9 | 13.5 | 12.7 | 14.0 | 16.7 | 19.6 | 20.5 | 23.4 | 25.4 | 26.9 | 31.7 | 62.1 | 12.7 |
| 2 | 27.5 | 33.0 | 51.8 | 53.0 | 53.1 | 57.2 | 60.4 | 52.6 | 42.8 | 35.7 | 19.4 | 16.4 | ***** | 12.3 | 13.2 | 13.2 | 12.5 | 12.9 | 13.4 | 15.4 | 17.3 | 14.5 | 14.0 | 15.9 | 28.6 | 60.4 | 12.3 |
| 3 | 19.5 | 21.1 | 25.9 | 29.5 | 36.3 | 35.1 | 34.5 | 33.6 | 32.1 | 30.3 | 28.0 | 27.3 | 24.7 | 20.3 | 20.1 | 21.3 | 21.4 | 21.6 | 23.7 | 24.5 | 24.8 | 26.9 | 29.2 | 31.0 | 26.8 | 36.3 | 19.5 |
| 4 | 32.1 | 32.7 | 34.0 | 34.6 | 33.6 | 36.2 | 38.2 | 40.9 | 41.6 | 37.4 | 35.1 | 33.2 | 30.5 | 29.5 | 25.6 | 21.0 | 16.9 | 16.6 | 18.0 | 20.3 | 20.7 | 24.6 | 29.9 | 30.6 | 29.7 | 41.6 | 16.6 |
| 5 | 31.2 | 33.8 | 34.8 | 36.4 | 38.1 | 42.2 | 50.0 | 40.4 | 32.5 | 28.2 | 20.9 | 20.3 | 17.0 | 14.3 | 14.4 | 14.0 | 13.1 | 12.4 | 15.3 | 20.8 | 23.8 | 25.2 | 27.3 | 28.9 | 26.5 | 50.0 | 12.4 |
| 6 | 31.4 | 32.6 | 35.7 | 35.5 | 46.2 | 54.9 | 57.4 | 50.5 | 42.4 | 35.3 | 26.5 | 23.2 | 18.7 | 16.2 | 16.1 | 15.7 | 18.4 | 22.8 | 26.0 | 25.7 | 25.9 | 28.0 | 28.6 | 31.3 | 31.0 | 57.4 | 15.7 |
| 7 | 35.3 | 35.5 | 40.0 | 53.3 | 56.4 | 49.0 | 62.0 | 55.8 | 36.3 | 32.0 | 27.5 | 25.4 | 23.8 | 21.2 | 13.8 | 12.0 | 9.5 | 9.2 | 11.7 | 16.7 | 23.2 | 26.7 | 26.8 | 26.4 | 30.4 | 62.0 | 9.2 |
| 8 | 28.0 | 29.7 | 32.3 | 31.7 | 38.5 | 38.2 | 47.3 | 42.9 | 36.0 | 32.7 | 19.6 | 19.9 | 18.1 | 17.7 | 12.3 | 11.6 | 9.9 | 8.6 | 8.9 | 9.5 | 10.5 | 13.5 | 17.0 | 21.7 | 23.2 | 47.3 | 8.6 |
| 9 | 20.9 | 21.7 | 23.4 | 33.6 | 30.1 | 32.5 | 18.3 | 14.5 | 13.8 | 12.8 | 12.0 | 10.9 | 10.6 | 9.2 | 9.3 | 9.4 | 9.5 | 9.4 | 13.5 | 12.6 | 14.0 | 15.8 | 18.9 | 26.8 | 16.8 | 33.6 | 9.2 |
| 10 | 29.0 | 32.3 | 32.9 | 32.5 | 34.2 | 47.2 | 35.0 | 36.7 | 24.9 | 23.3 | 22.1 | 21.7 | 20.1 | 19.4 | 18.4 | 17.5 | 16.6 | 17.4 | 20.5 | 20.1 | 16.8 | 16.8 | 18.5 | 18.2 | 24.7 | 47.2 | 16.6 |
| 11 | 19.8 | 21.7 | 23.7 | 26.3 | 27.9 | 34.2 | 37.8 | 34.5 | 34.6 | 35.3 | 30.8 | 22.6 | 18.3 | 18.6 | 18.4 | 16.8 | 16.7 | 18.8 | 23.0 | 23.7 | 28.2 | 30.6 | 24.9 | 25.2 | 25.5 | 37.8 | 16.7 |
| 12 | 25.5 | 27.4 | 32.9 | 37.3 | 42.5 | 45.7 | 47.5 | 47.0 | 45.5 | 42.4 | 38.7 | 35.2 | 31.4 | 28.6 | 24.7 | 22.7 | 20.7 | 17.9 | 19.7 | 26.1 | 34.7 | 32.3 | 29.1 | 37.6 | 33.0 | 47.5 | 17.9 |
| 13 | 38.2 | 33.1 | 33.7 | 40.4 | 43.8 | 39.2 | 41.1 | 41.6 | 39.2 | 38.8 | 37.2 | 32.8 | 27.5 | 24.3 | 22.3 | 21.5 | 22.1 | 23.5 | 28.8 | 33.8 | 40.0 | 42.2 | 45.6 | 47.8 | 34.9 | 47.8 | 21.5 |
| 14 | 49.9 | 52.1 | 53.3 | 55.7 | 59.1 | 59.4 | 60.5 | 64.5 | 63.5 | 61.0 | 62.9 | 69.4 | 61.6 | 54.1 | 52.8 | 57.3 | 60.6 | 57.0 | 65.0 | 63.9 | 60.2 | 62.1 | 65.8 | 68.5 | 60.0 | 69.4 | 49.9 |
| 15 | 74.3 | 76.1 | 80.3 | 81.2 | 87.2 | 92.0 | 91.3 | 80.5 | 66.3 | 58.5 | 51.1 | 43.2 | 36.6 | 31.7 | 31.1 | 30.3 | 29.0 | 31.0 | 35.0 | 39.8 | 40.2 | 42.2 | 45.4 | 49.3 | 55.1 | 92.0 | 29.0 |
| 16 | 50.5 | 53.0 | 56.8 | 59.7 | 64.0 | 74.9 | 70.6 | 61.0 | 54.7 | 46.1 | 38.6 | 33.7 | 29.3 | 27.0 | 26.8 | 26.1 | 27.5 | 28.7 | 33.1 | 35.6 | 38.9 | 41.6 | 44.0 | 41.0 | 44.3 | 74.9 | 26.1 |
| 17 | 39.5 | 42.1 | 51.6 | 42.9 | 44.1 | 53.5 | 66.4 | 49.2 | 38.7 | 35.2 | 29.8 | 23.8 | 20.9 | 19.1 | 17.7 | 18.3 | 17.3 | 16.4 | 17.9 | 19.2 | 21.4 | 22.7 | 25.0 | 29.6 | 31.8 | 66.4 | 16.4 |
| 18 | 41.6 | 39.0 | 50.3 | 50.4 | 44.0 | 47.7 | 61.2 | 51.4 | 38.9 | 35.7 | 27.9 | 25.3 | 19.9 | 18.0 | 15.6 | 14.6 | 14.9 | 17.2 | 21.9 | 24.8 | 25.1 | 29.6 | 32.7 | 31.4 | 32.5 | 61.2 | 14.6 |
| 19 | 40.0 | 49.3 | 52.4 | 61.5 | 59.7 | 60.2 | 72.1 | 54.0 | ***** | 40.5 | 30.9 | 29.1 | 22.7 | 17.1 | 16.4 | 14.8 | 14.0 | 14.9 | 21.8 | 26.7 | 28.9 | 30.3 | 37.3 | 36.5 | 36.1 | 72.1 | 14.0 |
| 20 | 40.3 | 48.2 | 52.1 | 63.3 | 57.3 | 57.1 | 58.5 | 53.8 | 45.3 | 35.7 | 30.9 | 25.4 | 22.6 | 19.7 | 17.5 | 16.4 | 14.3 | 14.6 | 18.6 | 21.5 | 30.4 | 34.8 | 38.5 | 39.6 | 35.7 | 63.3 | 14.3 |
| 21 | 45.2 | 49.8 | 56.4 | 65.3 | 57.2 | 68.8 | 65.1 | 60.7 | 55.9 | 43.6 | 40.0 | 38.5 | 35.5 | 32.7 | 30.0 | 24.5 | 21.9 | 22.8 | 23.6 | 23.8 | 24.2 | 30.4 | 38.6 | 39.1 | 41.4 | 68.8 | 21.9 |
| 22 | 38.4 | 41.2 | 30.4 | 35.2 | 37.1 | 52.5 | 44.6 | 35.8 | 29.8 | 27.2 | 20.3 | 14.5 | 9.8 | 8.8 | 5.3 | 6.0 | 8.3 | 9.6 | 12.3 | 16.7 | 16.6 | 16.2 | 21.2 | 34.3 | 23.8 | 52.5 | 5.3 |
| 23 | 26.4 | 33.4 | 28.3 | 26.9 | 41.8 | 54.9 | 52.4 | 41.6 | 27.6 | 24.8 | 21.3 | 17.7 | 16.8 | 16.7 | 14.8 | 13.6 | 13.8 | 14.8 | 18.4 | 21.9 | 21.0 | 23.4 | 27.4 | 28.9 | 26.2 | 54.9 | 13.6 |
| 24 | 29.5 | 40.1 | 55.8 | 52.5 | 39.9 | 67.0 | 63.1 | 47.4 | 44.7 | 33.6 | 29.6 | 24.2 | 19.7 | 14.5 | 10.5 | 9.6 | 9.7 | 13.2 | 16.8 | 20.9 | 20.5 | 19.4 | 21.6 | 31.2 | 30.6 | 67.0 | 9.6 |
| 25 | 26.6 | 30.3 | 37.1 | 40.7 | 49.1 | 64.0 | 53.5 | 49.7 | 37.9 | 30.5 | 24.7 | 19.4 | 14.4 | 12.9 | 11.7 | 11.1 | 11.6 | 12.0 | 15.4 | 19.5 | 18.6 | 20.5 | 24.1 | 22.3 | 27.4 | 64.0 | 11.1 |
| 26 | 23.5 | 25.9 | 37.8 | 41.8 | 34.5 | 32.7 | 36.7 | 36.2 | 32.4 | 26.9 | 19.6 | 18.8 | 17.6 | 15.8 | 15.1 | 14.3 | 11.8 | 13.9 | 15.8 | 16.0 | 18.8 | 22.9 | 26.0 | 27.4 | 24.3 | 41.8 | 11.8 |
| 27 | 28.2 | 31.3 | 38.5 | 38.3 | 36.4 | 34.6 | 50.2 | 47.5 | 33.3 | 27.5 | 25.8 | 20.6 | 13.7 | 12.5 | 12.3 | 11.6 | 11.4 | 11.5 | 17.0 | 20.7 | 21.4 | 23.5 | 23.5 | 24.4 | 25.7 | 50.2 | 11.4 |
| 28 | 38.6 | 44.6 | 42.5 | 35.2 | 44.3 | 59.3 | 42.7 | 37.8 | 39.6 | 31.1 | 28.1 | 22.0 | 16.4 | 13.3 | 12.3 | 11.7 | 9.6 | 9.4 | 10.2 | 11.7 | 14.4 | 15.7 | 23.7 | 32.4 | 26.9 | 59.3 | 9.4 |
| 29 | 48.9 | 56.1 | 69.8 | 85.0 | 89.7 | 96.9 | 94.0 | 97.0 | 96.2 | 84.1 | 70.9 | 63.6 | 61.3 | 54.4 | 49.8 | 80.0 | 94.6 | 92.9 | 85.4 | 91.2 | 92.1 | 96.3 | 87.2 | 95.0 | 80.5 | 97.0 | 48.9 |
| 30 | 97.1 | 97.1 | 97.1 | 97.0 | 96.2 | 97.1 | 97.1 | 97.1 | 97.1 | 97.1 | 97.1 | 97.1 | 97.1 | 96.6 | 95.6 | 92.8 | 95.0 | 97.1 | 97.1 | 97.1 | 97.1 | 97.1 | 97.1 | 97.1 | 96.7 | 97.1 | 92.8 |
| Mean | 36.9 | 39.8 | 44.5 | 47.5 | 49.5 | 54.7 | 55.4 | 50.2 | 43.8 | 38.8 | 33.4 | 30.2 | 26.9 | 23.9 | 22.0 | 22.1 | 22.2 | 22.7 | 25.5 | 28.0 | 29.7 | 31.6 | 33.8 | 36.5 | Monthly mean = | | 35.4 |
| Max. | 97.1 | 97.1 | 97.1 | 97.0 | 96.2 | 97.1 | 97.1 | 97.1 | 97.1 | 97.1 | 97.1 | 97.1 | 97.1 | 96.6 | 95.6 | 92.8 | 95.0 | 97.1 | 97.1 | 97.1 | 97.1 | 97.1 | 97.1 | 97.1 | Monthly max. = | | 97.1 |
| Min. | 19.5 | 21.1 | 23.4 | 26.3 | 27.9 | 32.5 | 18.3 | 14.5 | 13.8 | 12.8 | 12.0 | 10.9 | 9.8 | 8.8 | 5.3 | 6.0 | 8.3 | 8.6 | 8.9 | 9.5 | 10.5 | 13.5 | 14.0 | 15.9 | Monthly min. = | | 5.3 |

TOTAL NUMBER OF DATA HOURS IN MONTH: 720
Number of hours of bad or missing data: 2
**** designates missing or lost data

Current % recovery = 99.7

N/A: insufficient data available for calculation (a minimum of 75% is required)

table created at 11: 3, 4/12/1995

MONTHLY SUMMARY
WIND SPEED
(Miles Per Hour)
INPUT FILE: allslmet.out

Bechtel Environmental, Inc.

Met Data for Site 1
OCTOBER 1994

| Day \ Hour | 1 | 2 | 3 | 4 | 5 | 6 | 7 | 8 | 9 | 10 | 11 | 12 | 13 | 14 | 15 | 16 | 17 | 18 | 19 | 20 | 21 | 22 | 23 | 24 | Mean | Max. | Min. |
|---|---|---|---|---|---|---|---|---|---|---|---|---|---|---|---|---|---|---|---|---|---|---|---|---|---|---|---|
| 1 | 6.3 | 4.7 | 5.7 | 6.6 | 8.9 | 8.4 | 7.2 | 6.6 | 6.8 | 6.8 | 7.0 | 9.3 | 6.1 | 5.2 | 4.8 | 8.5 | 7.4 | 5.9 | 6.1 | 10.2 | 10.4 | 11.7 | 16.0 | 16.2 | 8.0 | 16.2 | 4.7 |
| 2 | 13.8 | 14.9 | 14.1 | 14.6 | 15.9 | 16.1 | 16.8 | 13.5 | 19.0 | 21.9 | 26.6 | 29.3 | 30.4 | 28.1 | 29.5 | 31.4 | 24.4 | 16.6 | 11.2 | 7.0 | 7.3 | 12.3 | 11.9 | 11.0 | 18.2 | 31.4 | 7.0 |
| 3 | 11.1 | 7.4 | 11.9 | 14.8 | 9.6 | 6.8 | 4.3 | 9.1 | 9.6 | 9.3 | 9.0 | 9.9 | 10.4 | 9.0 | 6.6 | 10.2 | 10.0 | 8.9 | 8.3 | 3.0 | 3.1 | 3.5 | 2.8 | 2.7 | 8.0 | 14.8 | 2.7 |
| 4 | 6.4 | 4.1 | 3.1 | 3.9 | 5.8 | 3.5 | 3.2 | 3.7 | 2.7 | 5.7 | 3.8 | ***** | 18.5 | 15.3 | 4.2 | 4.7 | 4.1 | 5.3 | 8.3 | 5.2 | 3.4 | 4.1 | 13.4 | 9.4 | 6.2 | 18.5 | 2.7 |
| 5 | 17.2 | 12.9 | 6.2 | 10.5 | 8.5 | 8.5 | 6.3 | 6.6 | 7.9 | 7.7 | 11.0 | 6.9 | 5.4 | 5.5 | 9.2 | 12.0 | 16.1 | 16.4 | 14.1 | 20.3 | 18.0 | 17.7 | 19.6 | 18.6 | 11.8 | 20.3 | 5.4 |
| 6 | 20.5 | 20.4 | 19.1 | 19.6 | 19.8 | 19.8 | 18.3 | 18.6 | 19.8 | 20.4 | ***** | 19.8 | 18.7 | 17.3 | 15.2 | 14.7 | 16.1 | 14.0 | 11.7 | 8.3 | 5.0 | 8.9 | 11.2 | 11.4 | 16.0 | 20.5 | 5.0 |
| 7 | 12.1 | 10.9 | 8.8 | 6.6 | 5.1 | 11.4 | 13.0 | 15.6 | 15.5 | 17.0 | 14.5 | 12.0 | 10.4 | 8.1 | 8.1 | 7.4 | 8.6 | 9.2 | 9.5 | 13.2 | 10.4 | 10.3 | 10.2 | 11.7 | 10.8 | 17.0 | 5.1 |
| 8 | 13.3 | 11.7 | 10.2 | 8.9 | 8.9 | 8.2 | 7.2 | 3.1 | 6.5 | 5.9 | 2.6 | 4.1 | 3.6 | 5.0 | 4.0 | 7.2 | 6.0 | 3.7 | 4.0 | 5.9 | 4.9 | 10.7 | 11.7 | 13.7 | 7.1 | 13.7 | 2.6 |
| 9 | 14.0 | 12.3 | 5.2 | 5.8 | 4.5 | 2.3 | 3.4 | 4.2 | 4.0 | 3.1 | 5.3 | 6.3 | 8.4 | 7.1 | 7.3 | 5.9 | 6.5 | 8.2 | 14.2 | 15.1 | 15.9 | 18.3 | 14.3 | 14.1 | 8.6 | 18.3 | 2.3 |
| 10 | 13.5 | 7.4 | 2.9 | 2.1 | 2.5 | 3.3 | 5.8 | 3.2 | 3.9 | 4.1 | 4.4 | 4.8 | 7.4 | 12.7 | 15.6 | 15.5 | 16.2 | 16.7 | 12.3 | 15.0 | 15.8 | 9.9 | 9.5 | 17.9 | 2.1 |
| 11 | 4.6 | 3.1 | 7.7 | 15.8 | 22.6 | 23.0 | 17.4 | 13.8 | 11.2 | 6.5 | 10.0 | 11.4 | 9.8 | 12.5 | 13.4 | 15.1 | 13.9 | 9.6 | 5.5 | 4.9 | 19.3 | 20.8 | 20.8 | 18.7 | 13.0 | 23.0 | 3.1 |
| 12 | 7.7 | 13.9 | 5.6 | 8.2 | 9.5 | 5.4 | 7.0 | 9.2 | 7.9 | 10.1 | 6.7 | 4.8 | 4.5 | 4.9 | 4.5 | 5.0 | 4.2 | 4.0 | 6.5 | 5.6 | 3.3 | 3.3 | 4.7 | 4.0 | 6.3 | 13.9 | 3.3 |
| 13 | 1.6 | 5.2 | 5.4 | 5.0 | 2.8 | 7.0 | 8.6 | 7.7 | 14.3 | 15.3 | 13.3 | 14.0 | 12.8 | 10.2 | 12.1 | 12.5 | 11.0 | 7.7 | 8.4 | 9.1 | 9.9 | 5.8 | 7.2 | 8.7 | 9.0 | 15.3 | 1.6 |
| 14 | 5.8 | 6.8 | 6.6 | 7.5 | 8.0 | 5.2 | 3.5 | 5.5 | 13.2 | 13.3 | 18.8 | 18.5 | 19.6 | 16.2 | 15.4 | 15.9 | 14.9 | 17.7 | 17.6 | 17.0 | 15.9 | 16.0 | 17.2 | 15.0 | 13.0 | 19.6 | 3.5 |
| 15 | 7.6 | 4.0 | 6.0 | 8.0 | 15.2 | 15.9 | 18.5 | 17.4 | 18.7 | 18.6 | 18.4 | 19.7 | 19.3 | 17.1 | 17.4 | 13.8 | 10.6 | 7.3 | 8.2 | 9.5 | 8.3 | 6.6 | 4.4 | 8.0 | 12.4 | 19.7 | 4.0 |
| 16 | 7.6 | 6.0 | 2.6 | 2.7 | 2.6 | 4.2 | 2.8 | 7.8 | 11.3 | 11.0 | 6.6 | 6.4 | 9.3 | 8.3 | 8.9 | 9.2 | 9.5 | 9.3 | 10.6 | 11.7 | 11.4 | 4.4 | 4.4 | 6.5 | 7.3 | 11.7 | 2.6 |
| 17 | 5.8 | 5.5 | 6.8 | 11.8 | 12.6 | 12.5 | 12.6 | 15.3 | 14.5 | 16.9 | 18.9 | 17.1 | 17.3 | 17.1 | 15.6 | 14.3 | 11.0 | 12.2 | 14.7 | 16.6 | 17.8 | 20.4 | 17.2 | 17.3 | 14.2 | 20.4 | 5.5 |
| 18 | 16.0 | 14.9 | 11.8 | 8.7 | 7.0 | 6.9 | 6.0 | 9.1 | 5.3 | 11.3 | 11.1 | 9.2 | 8.2 | 8.2 | 5.0 | 3.1 | 6.8 | 7.3 | 9.1 | 10.5 | 13.8 | 15.1 | 11.8 | 11.7 | 9.5 | 16.0 | 3.1 |
| 19 | 11.6 | 11.4 | 11.0 | 4.4 | 6.8 | 9.2 | 14.6 | 13.9 | 13.4 | 13.3 | 13.5 | 11.9 | 6.6 | 4.7 | 9.0 | 9.2 | 10.3 | 12.8 | 14.8 | 14.7 | 18.1 | 15.1 | 18.1 | 17.9 | 11.9 | 18.1 | 4.4 |
| 20 | 18.0 | 17.8 | 18.8 | 13.2 | 11.9 | 11.4 | 7.0 | 12.6 | 3.5 | 5.2 | 15.6 | 15.2 | 21.6 | 20.9 | 19.1 | 17.8 | 17.7 | 13.8 | 11.6 | 11.9 | 10.9 | 12.9 | 11.1 | 7.8 | 13.6 | 21.6 | 3.5 |
| 21 | 10.9 | 13.6 | 12.7 | 8.1 | 9.1 | 10.7 | 12.8 | 12.2 | 11.8 | 18.0 | 17.3 | 22.8 | 24.3 | 26.3 | 25.0 | 27.5 | 25.5 | 21.4 | 15.4 | 18.7 | 15.8 | 13.2 | 14.0 | 17.6 | 16.9 | 27.5 | 8.1 |
| 22 | 16.9 | 11.0 | 13.1 | 13.2 | 12.9 | 14.0 | 14.7 | 14.5 | 13.7 | 14.3 | 14.6 | 11.2 | 11.6 | 11.0 | 11.3 | 8.4 | 5.5 | 2.9 | 5.3 | 9.6 | 9.2 | 10.1 | 10.3 | 13.9 | 11.4 | 16.9 | 2.9 |
| 23 | 6.3 | 4.5 | 3.6 | 2.4 | 2.5 | 6.8 | 3.1 | 2.4 | 2.1 | 2.7 | 6.1 | 9.2 | 9.2 | 9.2 | 9.3 | 7.7 | 6.0 | 3.7 | 6.5 | 10.7 | 10.2 | 11.6 | 12.0 | 7.5 | 6.5 | 12.0 | 2.1 |
| 24 | 5.2 | 4.9 | 6.2 | 6.3 | 3.6 | 2.4 | 1.5 | 3.0 | 5.3 | 3.2 | 2.3 | 3.5 | 3.8 | 3.2 | 3.5 | 3.2 | 3.8 | 2.8 | 3.9 | 8.3 | 11.1 | 7.8 | 6.1 | 2.3 | 4.5 | 11.1 | 1.5 |
| 25 | 5.8 | 6.3 | 2.0 | 2.0 | 3.8 | 4.4 | 4.1 | 2.0 | 2.7 | 6.6 | 5.5 | 5.2 | 3.9 | 3.9 | 3.2 | 2.9 | 3.2 | 2.5 | 5.7 | 6.1 | 9.4 | 6.7 | 8.0 | 4.2 | 4.6 | 9.4 | 2.0 |
| 26 | 3.5 | 5.1 | 6.1 | 2.4 | 3.9 | 6.7 | 2.1 | 3.8 | 3.5 | 4.2 | 10.3 | 12.9 | 16.4 | 13.9 | 14.8 | 11.6 | 11.5 | 11.2 | 8.8 | 8.6 | 10.5 | 10.8 | 9.0 | 11.6 | 8.5 | 16.4 | 2.1 |
| 27 | 11.5 | 13.1 | 14.5 | 13.9 | 11.8 | 10.2 | 13.9 | 14.7 | 9.3 | 12.4 | 13.7 | 14.9 | 27.0 | 25.8 | 25.7 | 22.0 | 13.8 | 10.2 | 11.6 | 12.8 | 13.8 | 17.3 | 16.9 | 15.0 | 15.2 | 27.0 | 9.3 |
| 28 | 16.3 | 14.5 | 19.9 | 17.0 | 15.8 | 21.7 | 21.9 | 23.3 | 26.1 | 26.8 | 30.9 | 31.5 | 31.8 | 27.0 | 24.8 | 26.1 | 22.9 | 20.1 | 18.5 | 19.0 | 18.3 | 19.0 | 16.5 | 15.9 | 21.9 | 31.8 | 14.5 |
| 29 | 15.4 | 15.4 | 12.7 | 10.5 | 10.0 | 4.6 | 5.5 | 5.5 | 8.4 | 10.3 | 11.8 | 11.3 | 9.1 | 6.5 | 6.6 | 6.7 | 5.6 | 3.0 | 3.9 | 6.6 | 9.2 | 7.6 | 7.2 | 7.9 | 8.4 | 15.4 | 3.0 |
| 30 | 7.5 | 8.0 | 8.8 | 7.8 | 8.0 | 8.3 | 7.1 | 2.9 | 4.4 | 3.5 | 10.5 | 11.6 | 15.7 | 15.4 | 16.2 | 17.6 | 14.6 | 12.6 | 14.5 | 16.6 | 16.4 | 14.2 | 12.7 | 12.9 | 11.2 | 17.6 | 2.9 |
| 31 | 10.7 | 7.0 | 7.7 | 14.1 | 16.1 | 16.2 | 15.6 | 17.8 | 17.1 | 12.4 | 14.1 | 16.0 | 14.2 | 13.4 | 13.0 | 14.8 | 16.6 | 16.5 | 14.9 | 13.5 | 17.1 | 17.3 | 18.7 | 18.1 | 14.7 | 18.7 | 7.0 |
| Mean | 10.5 | 9.6 | 8.9 | 8.9 | 9.2 | 9.5 | 9.2 | 9.6 | 10.1 | 10.9 | 11.8 | 12.7 | 13.4 | 12.5 | 12.2 | 12.3 | 11.4 | 10.2 | 10.3 | 11.2 | 11.6 | 11.9 | 12.1 | 11.7 | Monthly mean = | | 10.9 |
| Max. | 20.5 | 20.4 | 19.9 | 19.6 | 22.6 | 23.0 | 21.9 | 23.3 | 26.1 | 26.8 | 30.9 | 31.5 | 31.8 | 28.1 | 29.5 | 31.4 | 25.5 | 21.4 | 18.5 | 20.3 | 19.3 | 20.8 | 20.8 | 18.7 | Monthly max. = | | 31.8 |
| Min. | 1.6 | 3.1 | 2.0 | 2.0 | 2.5 | 2.3 | 1.5 | 2.0 | 2.1 | 2.7 | 2.3 | 3.5 | 3.6 | 3.2 | 3.2 | 2.9 | 3.2 | 2.5 | 3.9 | 3.0 | 3.1 | 3.3 | 2.8 | 2.3 | Monthly min. = | | 1.5 |

TOTAL NUMBER OF DATA HOURS IN MONTH: 744
Number of hours of bad or missing data: 2
**** designates missing or lost data

Current % recovery = 99.7

N/A: insufficient data available for calculation (a minimum of 75% is required)

table created at 11: 3, 4/12/1995

MONTHLY SUMMARY
WIND DIRECTION
(Degrees)
INPUT FILE: allslmet.out

Bechtel Environmental, Inc.

Met Data for Site 1
OCTOBER 1994

| Day | Hour 1 | 2 | 3 | 4 | 5 | 6 | 7 | 8 | 9 | 10 | 11 | 12 | 13 | 14 | 15 | 16 | 17 | 18 | 19 | 20 | 21 | 22 | 23 | 24 | Mean | Max. | Min. |
|---|---|---|---|---|---|---|---|---|---|---|---|---|---|---|---|---|---|---|---|---|---|---|---|---|---|---|---|
| 1 | 291.0 | 320.0 | 298.0 | 268.0 | 266.0 | 229.0 | 223.0 | 224.0 | 275.0 | 218.0 | 245.0 | 279.0 | 247.0 | 122.0 | 93.0 | 285.0 | 274.0 | 252.0 | 176.0 | 137.0 | 146.0 | 177.0 | 207.0 | 233.0 | 228.5 | 320.0 | 93.0 |
| 2 | 255.0 | 242.0 | 235.0 | 229.0 | 227.0 | 235.0 | 241.0 | 244.0 | 244.0 | 255.0 | 264.0 | 263.0 | 264.0 | 258.0 | 256.0 | 266.0 | 285.0 | 29.0 | 15.0 | 40.0 | 17.0 | 7.0 | 11.0 | 21.0 | 288.5 | 285.0 | 7.0 |
| 3 | 12.0 | 21.0 | 20.0 | 15.0 | 10.0 | 14.0 | 29.0 | 16.0 | 16.0 | 18.0 | 21.0 | 21.0 | 15.0 | 15.0 | 327.0 | 16.0 | 39.0 | 29.0 | 20.0 | 44.0 | 32.0 | 20.0 | 77.0 | 44.0 | 22.1 | 327.0 | 10.0 |
| 4 | 55.0 | 99.0 | 92.0 | 119.0 | 97.0 | 48.0 | 270.0 | 354.0 | 103.0 | 284.0 | 295.0 | ***** | 132.0 | 165.0 | 353.0 | 79.0 | 74.0 | 53.0 | 53.0 | 59.0 | 75.0 | 93.0 | 253.0 | 230.0 | 39.8 | 354.0 | 48.0 |
| 5 | 118.0 | 122.0 | 259.0 | 251.0 | 202.0 | 109.0 | 92.0 | 274.0 | 117.0 | 94.0 | 154.0 | 140.0 | 289.0 | 263.0 | 245.0 | 230.0 | 237.0 | 230.0 | 230.0 | 239.0 | 247.0 | 248.0 | 249.0 | 252.0 | 203.8 | 289.0 | 92.0 |
| 6 | 248.0 | 247.0 | 246.0 | 247.0 | 251.0 | 248.0 | 246.0 | 245.0 | 244.0 | 251.0 | ***** | 248.0 | 244.0 | 256.0 | 263.0 | 263.0 | 264.0 | 253.0 | 231.0 | 209.0 | 98.0 | 215.0 | 222.0 | 226.0 | 237.6 | 264.0 | 98.0 |
| 7 | 230.0 | 232.0 | 218.0 | 218.0 | 220.0 | 233.0 | 235.0 | 245.0 | 251.0 | 244.0 | 248.0 | 270.0 | 281.0 | 297.0 | 289.0 | 287.0 | 267.0 | 272.0 | 233.0 | 221.0 | 213.0 | 120.0 | 122.0 | 124.0 | 232.1 | 297.0 | 120.0 |
| 8 | 121.0 | 127.0 | 128.0 | 129.0 | 118.0 | 131.0 | 126.0 | 290.0 | 100.0 | 111.0 | 57.0 | 33.0 | 52.0 | 326.0 | 339.0 | 300.0 | 298.0 | 309.0 | 139.0 | 116.0 | 92.0 | 116.0 | 119.0 | 124.0 | 68.4 | 339.0 | 33.0 |
| 9 | 128.0 | 121.0 | 118.0 | 102.0 | 286.0 | 330.0 | 317.0 | 314.0 | 309.0 | 24.0 | 49.0 | 78.0 | 129.0 | 196.0 | 201.0 | 196.0 | 192.0 | 141.0 | 134.0 | 132.0 | 124.0 | 127.0 | 122.0 | 126.0 | 166.5 | 330.0 | 24.0 |
| 10 | 128.0 | 279.0 | 303.0 | 312.0 | 316.0 | 257.0 | 300.0 | 305.0 | 306.0 | 317.0 | 15.0 | 318.0 | 275.0 | 190.0 | 179.0 | 182.0 | 192.0 | 180.0 | 187.0 | 189.0 | 181.0 | 135.0 | 130.0 | 111.0 | 220.3 | 318.0 | 15.0 |
| 11 | 284.0 | 84.0 | 94.0 | 255.0 | 235.0 | 230.0 | 229.0 | 230.0 | 228.0 | 184.0 | 281.0 | 282.0 | 275.0 | 266.0 | 269.0 | 269.0 | 277.0 | 273.0 | 244.0 | 143.0 | 226.0 | 196.0 | 139.0 | 132.0 | 221.9 | 284.0 | 84.0 |
| 12 | 139.0 | 129.0 | 130.0 | 105.0 | 115.0 | 113.0 | 117.0 | 109.0 | 114.0 | 102.0 | 58.0 | 64.0 | 50.0 | 42.0 | 62.0 | 35.0 | 35.0 | 56.0 | 46.0 | 46.0 | 92.0 | 53.0 | 106.0 | 338.0 | 79.0 | 338.0 | 35.0 |
| 13 | 54.0 | 278.0 | 273.0 | 276.0 | 39.0 | 111.0 | 90.0 | 264.0 | 247.0 | 248.0 | 252.0 | 247.0 | 253.0 | 260.0 | 266.0 | 266.0 | 263.0 | 258.0 | 259.0 | 239.0 | 226.0 | 118.0 | 232.0 | 231.0 | 218.7 | 278.0 | 39.0 |
| 14 | 120.0 | 117.0 | 120.0 | 122.0 | 171.0 | 322.0 | 341.0 | 101.0 | 138.0 | 149.0 | 182.0 | 191.0 | 197.0 | 241.0 | 266.0 | 262.0 | 245.0 | 238.0 | 238.0 | 241.0 | 235.0 | 243.0 | 248.0 | 275.0 | 208.5 | 341.0 | 101.0 |
| 15 | 285.0 | 140.0 | 128.0 | 275.0 | 253.0 | 243.0 | 242.0 | 243.0 | 249.0 | 260.0 | 250.0 | 244.0 | 247.0 | 257.0 | 264.0 | 261.0 | 344.0 | 345.0 | 355.0 | 351.0 | 356.0 | 316.0 | 295.0 | 32.0 | 304.8 | 356.0 | 32.0 |
| 16 | 44.0 | 30.0 | 44.0 | 18.0 | 277.0 | 273.0 | 332.0 | 261.0 | 258.0 | 263.0 | 284.0 | 304.0 | 267.0 | 289.0 | 274.0 | 270.0 | 266.0 | 266.0 | 240.0 | 227.0 | 224.0 | 264.0 | 118.0 | 230.0 | 296.8 | 332.0 | 18.0 |
| 17 | 155.0 | 117.0 | 211.0 | 224.0 | 238.0 | 234.0 | 237.0 | 240.0 | 236.0 | 243.0 | 255.0 | 249.0 | 256.0 | 260.0 | 246.0 | 231.0 | 224.0 | 232.0 | 242.0 | 240.0 | 237.0 | 248.0 | 250.0 | 240.0 | 231.0 | 260.0 | 117.0 |
| 18 | 239.0 | 238.0 | 225.0 | 235.0 | 239.0 | 170.0 | 189.0 | 211.0 | 169.0 | 198.0 | 207.0 | 200.0 | 224.0 | 225.0 | 158.0 | 55.0 | 130.0 | 138.0 | 122.0 | 121.0 | 122.0 | 122.0 | 129.0 | 127.0 | 174.7 | 239.0 | 55.0 |
| 19 | 121.0 | 121.0 | 119.0 | 152.0 | 116.0 | 120.0 | 119.0 | 119.0 | 120.0 | 122.0 | 140.0 | 146.0 | 198.0 | 211.0 | 199.0 | 192.0 | 175.0 | 182.0 | 187.0 | 141.0 | 139.0 | 142.0 | 131.0 | 132.0 | 147.7 | 211.0 | 116.0 |
| 20 | 130.0 | 118.0 | 128.0 | 132.0 | 104.0 | 115.0 | 119.0 | 123.0 | 303.0 | 299.0 | 259.0 | 254.0 | 256.0 | 258.0 | 260.0 | 257.0 | 263.0 | 246.0 | 227.0 | 215.0 | 216.0 | 221.0 | 219.0 | 124.0 | 201.9 | 303.0 | 104.0 |
| 21 | 117.0 | 117.0 | 112.0 | 170.0 | 196.0 | 209.0 | 224.0 | 221.0 | 233.0 | 249.0 | 246.0 | 252.0 | 259.0 | 260.0 | 259.0 | 260.0 | 264.0 | 258.0 | 246.0 | 243.0 | 237.0 | 230.0 | 234.0 | 236.0 | 222.2 | 264.0 | 112.0 |
| 22 | 241.0 | 282.0 | 239.0 | 235.0 | 236.0 | 232.0 | 223.0 | 224.0 | 230.0 | 251.0 | 265.0 | 256.0 | 268.0 | 262.0 | 274.0 | 275.0 | 304.0 | 63.0 | 133.0 | 123.0 | 125.0 | 126.0 | 125.0 | 125.0 | 213.2 | 304.0 | 63.0 |
| 23 | 234.0 | 288.0 | 314.0 | 59.0 | 110.0 | 120.0 | 63.0 | 322.0 | 99.0 | 93.0 | 305.0 | 286.0 | 293.0 | 289.0 | 285.0 | 287.0 | 297.0 | 138.0 | 127.0 | 121.0 | 124.0 | 126.0 | 124.0 | 121.0 | 27.7 | 322.0 | 59.0 |
| 24 | 107.0 | 114.0 | 109.0 | 281.0 | 292.0 | 86.0 | 79.0 | 311.0 | 306.0 | 322.0 | 30.0 | 358.0 | 19.0 | 36.0 | 313.0 | 319.0 | 306.0 | 300.0 | 131.0 | 119.0 | 122.0 | 126.0 | 128.0 | 111.0 | 34.4 | 358.0 | 19.0 |
| 25 | 120.0 | 111.0 | 282.0 | 96.0 | 112.0 | 119.0 | 297.0 | 22.0 | 92.0 | 102.0 | 92.0 | 33.0 | 28.0 | 16.0 | 11.0 | 37.0 | 81.0 | 143.0 | 125.0 | 133.0 | 121.0 | 129.0 | 117.0 | 129.0 | 76.2 | 297.0 | 11.0 |
| 26 | 253.0 | 121.0 | 112.0 | 16.0 | 291.0 | 287.0 | 10.0 | 312.0 | 346.0 | 311.0 | 256.0 | 255.0 | 247.0 | 251.0 | 264.0 | 255.0 | 239.0 | 221.0 | 211.0 | 190.0 | 171.0 | 219.0 | 216.0 | 222.0 | 219.8 | 346.0 | 10.0 |
| 27 | 217.0 | 217.0 | 221.0 | 220.0 | 220.0 | 193.0 | 135.0 | 124.0 | 162.0 | 214.0 | 202.0 | 223.0 | 255.0 | 263.0 | 264.0 | 254.0 | 238.0 | 199.0 | 196.0 | 187.0 | 198.0 | 205.0 | 212.0 | 213.0 | 209.7 | 264.0 | 124.0 |
| 28 | 220.0 | 226.0 | 265.0 | 259.0 | 247.0 | 256.0 | 261.0 | 249.0 | 249.0 | 243.0 | 250.0 | 256.0 | 257.0 | 261.0 | 260.0 | 261.0 | 250.0 | 245.0 | 231.0 | 234.0 | 234.0 | 233.0 | 233.0 | 231.0 | 246.3 | 265.0 | 220.0 |
| 29 | 236.0 | 236.0 | 231.0 | 230.0 | 231.0 | 97.0 | 119.0 | 109.0 | 244.0 | 272.0 | 260.0 | 265.0 | 281.0 | 293.0 | 288.0 | 287.0 | 301.0 | 266.0 | 122.0 | 115.0 | 119.0 | 121.0 | 114.0 | 120.0 | 206.5 | 301.0 | 97.0 |
| 30 | 120.0 | 121.0 | 124.0 | 121.0 | 124.0 | 128.0 | 136.0 | 323.0 | 117.0 | 320.0 | 267.0 | 259.0 | 263.0 | 256.0 | 251.0 | 250.0 | 246.0 | 230.0 | 228.0 | 235.0 | 232.0 | 223.0 | 212.0 | 215.0 | 208.4 | 323.0 | 117.0 |
| 31 | 209.0 | 196.0 | 140.0 | 120.0 | 128.0 | 129.0 | 128.0 | 130.0 | 142.0 | 175.0 | 184.0 | 194.0 | 163.0 | 161.0 | 165.0 | 180.0 | 156.0 | 173.0 | 162.0 | 156.0 | 176.0 | 174.0 | 161.0 | 161.0 | 161.0 | 209.0 | 120.0 |
| Mean | 168.7 | 168.1 | 178.6 | 177.1 | 192.5 | 181.3 | 186.1 | 218.0 | 201.5 | 207.6 | 303.8 | 299.6 | 302.1 | 217.6 | 240.1 | 279.6 | 226.6 | 200.6 | 177.1 | 167.9 | 166.4 | 164.3 | 169.5 | 168.9 | Monthly mean = | | 192.5 |
| Max. | 291.0 | 320.0 | 314.0 | 312.0 | 316.0 | 330.0 | 341.0 | 354.0 | 346.0 | 322.0 | 305.0 | 358.0 | 293.0 | 326.0 | 353.0 | 319.0 | 344.0 | 345.0 | 355.0 | 351.0 | 356.0 | 316.0 | 295.0 | 338.0 | Monthly max. = | | 358.0 |
| Min. | 12.0 | 21.0 | 20.0 | 15.0 | 10.0 | 14.0 | 10.0 | 16.0 | 16.0 | 18.0 | 15.0 | 21.0 | 15.0 | 15.0 | 11.0 | 16.0 | 35.0 | 29.0 | 15.0 | 40.0 | 17.0 | 7.0 | 11.0 | 21.0 | Monthly min. = | | 7.0 |

TOTAL NUMBER OF DATA HOURS IN MONTH: 744
Number of hours of bad or missing data: 2
**** designates missing or lost data

Current % recovery = 99.7

N/A: insufficient data available for calculation (a minimum of 75% is required)

table created at 11: 3, 4/12/1995

MONTHLY SUMMARY
TEMPERATURE
(Degrees Celsius)
INPUT FILE: allsimet.out

Bechtel Environmental, Inc.

Met Data for Site 1
OCTOBER 1994

| Day | Hour 1 | 2 | 3 | 4 | 5 | 6 | 7 | 8 | 9 | 10 | 11 | 12 | 13 | 14 | 15 | 16 | 17 | 18 | 19 | 20 | 21 | 22 | 23 | 24 | Mean | Max. | Min. |
|---|---|---|---|---|---|---|---|---|---|---|---|---|---|---|---|---|---|---|---|---|---|---|---|---|---|---|---|
| 1 | 10.2 | 9.5 | 10.0 | 10.5 | 9.8 | 10.3 | 10.6 | 11.0 | 10.9 | 11.9 | 13.1 | 13.8 | 14.4 | 15.4 | 16.3 | 17.7 | 17.7 | 17.7 | 15.8 | 14.5 | 14.4 | 15.7 | 16.4 | 15.9 | 13.5 | 17.7 | 9.5 |
| 2 | 14.7 | 13.7 | 13.0 | 12.5 | 12.1 | 11.7 | 11.7 | 11.7 | 12.6 | 13.4 | 13.9 | 14.4 | 14.6 | 14.8 | 15.3 | 15.0 | 14.1 | 7.8 | 5.4 | 4.7 | 4.6 | 4.2 | 3.3 | 2.8 | 10.9 | 15.3 | 2.8 |
| 3 | 2.7 | 3.0 | 2.4 | 1.9 | 1.8 | 1.7 | 1.8 | 2.1 | 2.3 | 3.1 | 3.9 | 4.7 | 4.8 | 5.2 | 5.4 | 6.3 | 6.2 | 5.8 | 4.4 | 3.0 | 2.4 | 2.0 | 1.3 | 1.9 | 3.3 | 6.3 | 1.3 |
| 4 | 2.5 | 2.0 | .8 | 1.3 | .9 | 1.5 | 2.2 | 2.8 | 4.0 | 5.3 | 6.5 | ***** | 9.6 | 9.9 | 9.6 | 9.9 | 9.8 | 9.6 | 9.4 | 9.3 | 9.1 | 8.3 | 8.5 | 8.5 | 6.1 | 9.9 | .8 |
| 5 | 9.1 | 10.2 | 11.1 | 9.9 | 9.5 | 8.8 | 8.1 | 7.9 | 8.7 | 8.6 | 9.5 | 10.5 | 10.5 | 10.6 | 11.3 | 11.6 | 10.4 | 9.3 | 9.6 | 9.6 | 9.1 | 8.8 | 8.6 | 8.4 | 9.6 | 11.6 | 7.9 |
| 6 | 8.3 | 8.2 | 8.0 | 8.0 | 8.0 | 7.9 | 7.6 | 7.3 | 7.4 | 7.9 | ***** | 8.7 | 10.2 | 11.6 | 12.2 | 13.0 | 13.5 | 13.4 | 12.4 | 11.8 | 10.2 | 11.0 | 11.4 | 11.0 | 10.0 | 13.5 | 7.3 |
| 7 | 10.7 | 10.7 | 10.4 | 9.0 | 8.6 | 8.8 | 8.7 | 8.9 | 8.7 | 9.6 | 10.7 | 12.0 | 13.0 | 14.0 | 14.6 | 15.4 | 15.4 | 14.9 | 13.7 | 13.3 | 12.7 | 9.1 | 7.5 | 6.5 | 11.1 | 15.4 | 6.5 |
| 8 | 5.9 | 5.5 | 5.4 | 4.8 | 4.1 | 3.9 | 3.7 | 4.4 | 7.7 | 10.6 | 15.2 | 16.3 | 17.2 | 17.7 | 19.2 | 18.4 | 18.4 | 17.3 | 13.9 | 12.7 | 12.3 | 12.5 | 12.3 | 11.5 | 11.3 | 19.2 | 3.7 |
| 9 | 11.4 | 10.6 | 8.2 | 7.1 | 5.4 | 3.6 | 2.7 | 3.0 | 6.6 | 12.4 | 14.6 | 17.4 | 19.5 | 21.2 | 21.6 | 22.4 | 21.9 | 19.2 | 16.7 | 15.5 | 14.3 | 13.6 | 12.6 | 12.7 | 13.1 | 22.4 | 2.7 |
| 10 | 12.1 | 8.0 | 5.4 | 4.2 | 4.0 | 4.3 | 3.3 | 3.6 | 6.8 | 11.7 | 15.6 | 19.4 | 21.1 | 22.6 | 22.4 | 22.4 | 21.5 | 19.8 | 19.4 | 19.5 | 19.1 | 15.9 | 14.9 | 13.2 | 13.8 | 22.6 | 3.3 |
| 11 | 9.5 | 9.0 | 11.7 | 11.8 | 11.7 | 10.8 | 10.2 | 10.3 | 10.6 | 12.3 | 13.3 | 14.4 | 14.7 | 16.0 | 16.4 | 16.3 | 16.5 | 15.6 | 14.1 | 12.5 | 10.1 | 10.4 | 9.1 | 7.3 | 12.3 | 16.5 | 7.3 |
| 12 | 6.3 | 6.0 | 5.5 | 4.4 | 4.0 | 3.4 | 3.3 | 4.7 | 6.9 | 9.0 | 10.4 | 13.3 | 15.8 | 17.1 | 17.7 | 17.4 | 17.5 | 15.9 | 14.2 | 13.0 | 11.8 | 11.1 | 9.5 | 8.4 | 10.3 | 17.7 | 3.3 |
| 13 | 7.1 | 7.4 | 7.9 | 8.0 | 7.8 | 7.7 | 8.1 | 8.6 | 8.8 | 9.2 | 10.3 | 11.3 | 12.2 | 13.4 | 13.8 | 13.9 | 13.7 | 12.5 | 11.7 | 11.8 | 11.5 | 10.2 | 9.4 | 9.6 | 10.2 | 13.9 | 7.1 |
| 14 | 7.2 | 6.1 | 5.2 | 5.3 | 5.8 | 5.3 | 5.5 | 6.3 | 9.7 | 12.1 | 14.0 | 14.8 | 14.2 | 11.4 | 7.4 | 7.0 | 6.4 | 5.3 | 4.4 | 4.4 | 3.8 | 3.4 | 3.0 | 2.6 | 7.1 | 14.8 | 2.6 |
| 15 | 1.3 | 1.9 | 2.4 | 2.6 | 2.2 | 1.7 | 1.3 | 1.4 | 1.4 | 1.3 | 1.8 | 1.7 | 1.7 | 3.3 | 3.6 | 4.2 | 4.9 | 3.9 | 3.5 | 3.4 | 3.6 | 3.6 | 3.7 | 4.4 | 2.7 | 4.9 | 1.3 |
| 16 | 4.2 | 4.0 | 3.7 | 3.6 | 3.6 | 3.5 | 3.0 | 3.4 | 3.6 | 4.3 | 5.8 | 7.1 | 7.2 | 9.0 | 10.3 | 10.5 | 10.6 | 9.8 | 8.7 | 8.6 | 7.9 | 6.8 | 4.9 | 5.3 | 6.2 | 10.6 | 3.0 |
| 17 | 4.6 | 4.3 | 5.4 | 6.5 | 6.3 | 6.1 | 5.9 | 6.0 | 6.6 | 6.6 | 7.2 | 7.7 | 8.6 | 9.3 | 9.8 | 10.1 | 10.3 | 10.5 | 10.3 | 9.7 | 9.5 | 9.3 | 8.8 | 8.3 | 7.8 | 10.5 | 4.3 |
| 18 | 7.9 | 7.4 | 7.6 | 7.5 | 6.8 | 6.3 | 6.2 | 6.2 | 5.9 | 6.3 | 7.0 | 7.6 | 8.6 | 10.1 | 11.7 | 11.1 | 11.3 | 9.9 | 8.0 | 6.2 | 6.2 | 6.6 | 6.0 | 6.0 | 7.7 | 11.7 | 5.9 |
| 19 | 6.2 | 6.2 | 6.0 | 4.2 | 3.8 | 4.1 | 5.2 | 6.2 | 7.5 | 9.4 | 11.0 | 13.0 | 13.8 | 14.1 | 14.5 | 14.8 | 14.3 | 13.2 | 12.6 | 11.4 | 10.4 | 10.1 | 9.4 | 9.5 | 9.6 | 14.8 | 3.8 |
| 20 | 9.5 | 8.8 | 9.6 | 9.2 | 8.7 | 8.0 | 6.1 | 8.4 | 7.0 | 11.1 | 13.0 | 13.8 | 14.5 | 14.5 | 14.5 | 14.8 | 14.5 | 13.4 | 12.2 | 11.6 | 11.6 | 11.4 | 11.3 | 8.2 | 11.1 | 14.8 | 6.1 |
| 21 | 5.8 | 5.4 | 6.5 | 9.3 | 10.9 | 11.8 | 11.7 | 11.0 | 11.8 | 12.2 | 12.0 | 13.2 | 13.4 | 13.2 | 13.2 | 13.5 | 13.4 | 12.4 | 11.0 | 10.7 | 10.1 | 9.9 | 9.4 | 8.2 | 10.8 | 13.5 | 5.4 |
| 22 | 7.3 | 4.9 | 5.0 | 4.7 | 4.3 | 4.1 | 4.1 | 4.4 | 5.1 | 6.5 | 7.2 | 8.5 | 8.9 | 9.5 | 10.2 | 10.7 | 10.8 | 9.3 | 6.7 | 5.5 | 4.4 | 3.7 | 2.9 | 3.1 | 6.3 | 10.8 | 2.9 |
| 23 | 2.2 | .7 | -.5 | -1.4 | -1.2 | .5 | -.3 | .4 | 4.4 | 7.6 | 10.2 | 10.7 | 12.1 | 13.1 | 14.3 | 14.9 | 15.1 | 12.5 | 9.8 | 8.1 | 6.9 | 6.1 | 5.3 | 4.2 | 6.5 | 15.1 | -1.4 |
| 24 | 3.2 | 2.7 | 2.5 | .3 | -.2 | -2.1 | -2.2 | -1.4 | 1.1 | 5.4 | 9.8 | 12.1 | 14.1 | 16.0 | 17.1 | 17.3 | 16.5 | 13.5 | 9.7 | 7.8 | 7.3 | 5.9 | 4.7 | 2.7 | 6.8 | 17.3 | -2.2 |
| 25 | 2.6 | 2.2 | .2 | -.8 | -1.2 | -.9 | -1.9 | -1.1 | 2.1 | 5.4 | 9.7 | 11.5 | 14.2 | 16.4 | 18.4 | 18.9 | 17.9 | 14.7 | 11.0 | 9.7 | 9.7 | 8.4 | 7.9 | 7.5 | 7.6 | 18.9 | -1.9 |
| 26 | 5.6 | 4.0 | 4.9 | 3.6 | 2.0 | 1.4 | -.4 | 1.9 | 7.1 | 8.1 | 14.9 | 15.3 | 15.8 | 15.4 | 15.4 | 15.4 | 14.8 | 14.3 | 13.9 | 13.7 | 13.0 | 14.3 | 14.4 | 14.3 | 10.1 | 15.8 | -.4 |
| 27 | 14.0 | 14.2 | 14.4 | 14.2 | 14.2 | 13.8 | 10.7 | 10.4 | 13.1 | 16.5 | 16.9 | 18.2 | 18.9 | 19.0 | 19.5 | 19.7 | 18.4 | 17.5 | 17.9 | 18.0 | 18.2 | 18.6 | 18.4 | 17.6 | 16.3 | 19.7 | 10.4 |
| 28 | 17.6 | 17.2 | 16.7 | 14.8 | 14.3 | 12.9 | 11.2 | 9.8 | 8.0 | 6.8 | 7.5 | 8.7 | 8.8 | 9.4 | 9.6 | 9.3 | 8.9 | 7.4 | 6.2 | 5.5 | 5.2 | 4.8 | 4.2 | 3.9 | 9.5 | 17.6 | 3.9 |
| 29 | 3.5 | 2.9 | 2.7 | 2.3 | 1.6 | -1.9 | -2.4 | -2.2 | .9 | 2.4 | 3.7 | 4.7 | 5.8 | 7.1 | 7.4 | 7.5 | 7.2 | 5.2 | 2.6 | 1.7 | 1.1 | .3 | -.6 | -1.2 | 2.6 | 7.5 | -2.4 |
| 30 | -2.3 | -2.8 | -3.1 | -3.4 | -3.7 | -4.3 | -4.6 | -5.5 | -1.5 | 3.4 | 3.7 | 5.1 | 5.8 | 6.7 | 7.5 | 8.1 | 8.1 | 7.1 | 6.5 | 6.6 | 6.4 | 6.3 | 6.2 | 6.1 | 2.6 | 8.1 | -5.5 |
| 31 | 5.9 | 5.2 | 3.4 | 1.9 | 2.4 | 2.9 | 3.0 | 3.2 | 4.6 | 7.8 | 10.0 | 10.4 | 9.7 | 9.9 | 10.9 | 11.5 | 11.0 | 11.3 | 11.2 | 10.8 | 12.7 | 13.0 | 12.3 | 12.1 | 8.2 | 13.0 | 1.9 |
| Mean | 7.0 | 6.4 | 6.2 | 5.7 | 5.4 | 5.1 | 4.6 | 5.0 | 6.5 | 8.3 | 10.1 | 11.3 | 12.1 | 12.8 | 13.3 | 13.5 | 13.3 | 11.9 | 10.5 | 9.8 | 9.3 | 8.9 | 8.3 | 7.8 | Monthly mean = | | 8.9 |
| Max. | 17.6 | 17.2 | 16.7 | 14.8 | 14.3 | 13.8 | 11.7 | 11.7 | 13.1 | 16.5 | 16.9 | 19.4 | 21.1 | 22.6 | 22.4 | 22.4 | 21.9 | 19.8 | 19.4 | 19.5 | 19.1 | 18.6 | 18.4 | 17.6 | Monthly max. = | | 22.6 |
| Min. | -2.3 | -2.8 | -3.1 | -3.4 | -3.7 | -4.3 | -4.6 | -5.5 | -1.5 | 1.3 | 1.8 | 1.7 | 1.7 | 3.3 | 3.6 | 4.2 | 4.9 | 3.9 | 2.6 | 1.7 | 1.1 | .3 | -.6 | -1.2 | Monthly min. = | | -5.5 |

TOTAL NUMBER OF DATA HOURS IN MONTH: 744
Number of hours of bad or missing data: 2
**** designates missing or lost data

Current % recovery = 99.7

N/A: insufficient data available for calculation (a minimum of 75% is required)

table created at 11: 3, 4/12/1995

MONTHLY SUMMARY
SIGMA THETA
(Degrees)
INPUT FILE: allslmet.out

Bechtel Environmental, Inc.

Met Data for Site 1
OCTOBER 1994

| Day | Hour 1 | 2 | 3 | 4 | 5 | 6 | 7 | 8 | 9 | 10 | 11 | 12 | 13 | 14 | 15 | 16 | 17 | 18 | 19 | 20 | 21 | 22 | 23 | 24 | Mean | Max. | Min. |
|---|---|---|---|---|---|---|---|---|---|---|---|---|---|---|---|---|---|---|---|---|---|---|---|---|---|---|---|
| 1 | 16. | 15. | 10. | 12. | 11. | 15. | 14. | 19. | 17. | 21. | 22. | 15. | 29. | 27. | 38. | 27. | 21. | 23. | 21. | 7. | 11. | 17. | 14. | 14. | N/A | 38. | 7. |
| 2 | 17. | 11. | 10. | 12. | 13. | 12. | 13. | 14. | 14. | 14. | 12. | 12. | 13. | 13. | 15. | 13. | 22. | 11. | 18. | 15. | 13. | 11. | 11. | 12. | N/A | 22. | 10. |
| 3 | 12. | 16. | 12. | 11. | 12. | 13. | 19. | 11. | 11. | 13. | 15. | 14. | 12. | 13. | 54. | 15. | 11. | 11. | 10. | 41. | 37. | 25. | 46. | 22. | N/A | 54. | 10. |
| 4 | 16. | 22. | 49. | 53. | 10. | 35. | 64. | 47. | 35. | 35. | 59. | ***** | 8. | 24. | 40. | 27. | 26. | 35. | 9. | 11. | 13. | 31. | 12. | 35. | N/A | 64. | 8. |
| 5 | 14. | 11. | 65. | 27. | 37. | 10. | 29. | 30. | 42. | 22. | 25. | 54. | 16. | 24. | 18. | 16. | 13. | 13. | 13. | 12. | 12. | 12. | 11. | 12. | N/A | 65. | 10. |
| 6 | 11. | 12. | 12. | 11. | 11. | 10. | 11. | 12. | 12. | 13. | ***** | 11. | 13. | 13. | 12. | 12. | 11. | 13. | 13. | 23. | 27. | 23. | 12. | 13. | N/A | 27. | 10. |
| 7 | 13. | 13. | 22. | 25. | 58. | 30. | 12. | 13. | 12. | 15. | 14. | 17. | 14. | 17. | 18. | 24. | 18. | 10. | 12. | 11. | 17. | 5. | 4. | 4. | N/A | 58. | 4. |
| 8 | 4. | 4. | 5. | 12. | 7. | 7. | 5. | 39. | 12. | 24. | 41. | 38. | 32. | 27. | 35. | 19. | 15. | 22. | 15. | 25. | 34. | 7. | 6. | 5. | N/A | 41. | 4. |
| 9 | 6. | 9. | 17. | 19. | 29. | 15. | 14. | 9. | 11. | 35. | 14. | 20. | 20. | 44. | 30. | 38. | 16. | 12. | 7. | 8. | 5. | 4. | 6. | 7. | N/A | 44. | 4. |
| 10 | 5. | 30. | 38. | 37. | 33. | 45. | 12. | 16. | 18. | 19. | 20. | 31. | 36. | 19. | 17. | 15. | 14. | 12. | 12. | 11. | 13. | 6. | 5. | 20. | N/A | 45. | 5. |
| 11 | 72. | 35. | 15. | 28. | 11. | 12. | 14. | 15. | 14. | 34. | 16. | 13. | 15. | 14. | 12. | 11. | 11. | 8. | 18. | 42. | 47. | 16. | 9. | 5. | N/A | 72. | 5. |
| 12 | 24. | 35. | 42. | 19. | 12. | 12. | 20. | 7. | 11. | 10. | 15. | 24. | 34. | 30. | 34. | 11. | 13. | 22. | 12. | 35. | 55. | 18. | 26. | 61. | N/A | 61. | 7. |
| 13 | 45. | 25. | 11. | 38. | 82. | 21. | 12. | 22. | 11. | 11. | 13. | 13. | 14. | 17. | 13. | 12. | 14. | 17. | 14. | 16. | 12. | 36. | 47. | 20. | N/A | 82. | 11. |
| 14 | 10. | 8. | 5. | 6. | 23. | 23. | 18. | 9. | 6. | 12. | 15. | 16. | 11. | 25. | 10. | 11. | 12. | 13. | 11. | 12. | 11. | 13. | 12. | 13. | N/A | 25. | 5. |
| 15 | 14. | 41. | 10. | 48. | 10. | 11. | 10. | 10. | 9. | 9. | 11. | 10. | 11. | 10. | 7. | 8. | 15. | 14. | 12. | 14. | 13. | 16. | 25. | 13. | N/A | 48. | 7. |
| 16 | 13. | 21. | 67. | 55. | 45. | 14. | 48. | 14. | 11. | 13. | 29. | 20. | 15. | 21. | 18. | 14. | 13. | 11. | 10. | 13. | 11. | 41. | 39. | 46. | N/A | 67. | 10. |
| 17 | 32. | 13. | 35. | 13. | 11. | 11. | 12. | 10. | 13. | 14. | 14. | 14. | 15. | 11. | 11. | 14. | 14. | 13. | 12. | 13. | 13. | 12. | 12. | 11. | N/A | 35. | 10. |
| 18 | 12. | 12. | 13. | 12. | 17. | 15. | 19. | 13. | 36. | 13. | 12. | 15. | 17. | 21. | 39. | 21. | 9. | 5. | 4. | 5. | 5. | 4. | 7. | 8. | N/A | 39. | 4. |
| 19 | 7. | 11. | 17. | 55. | 43. | 11. | 5. | 5. | 6. | 8. | 10. | 21. | 26. | 29. | 15. | 15. | 12. | 11. | 11. | 11. | 7. | 7. | 5. | 6. | N/A | 55. | 5. |
| 20 | 6. | 7. | 8. | 9. | 7. | 19. | 47. | 22. | 22. | 32. | 11. | 15. | 11. | 11. | 10. | 12. | 9. | 11. | 14. | 13. | 14. | 11. | 12. | 16. | N/A | 47. | 6. |
| 21 | 6. | 5. | 7. | 33. | 24. | 16. | 14. | 14. | 14. | 14. | 15. | 13. | 12. | 11. | 12. | 11. | 11. | 11. | 12. | 12. | 13. | 14. | 14. | 12. | N/A | 33. | 5. |
| 22 | 13. | 15. | 9. | 10. | 10. | 12. | 13. | 13. | 13. | 15. | 13. | 19. | 15. | 18. | 14. | 19. | 17. | 36. | 10. | 6. | 7. | 3. | 3. | 5. | N/A | 36. | 3. |
| 23 | 22. | 15. | 16. | 32. | 26. | 13. | 35. | 43. | 58. | 27. | 28. | 14. | 16. | 15. | 17. | 15. | 11. | 26. | 7. | 4. | 4. | 3. | 4. | 45. | N/A | 58. | 3. |
| 24 | 11. | 14. | 12. | 22. | 21. | 22. | 82. | 24. | 11. | 33. | 48. | 45. | 40. | 37. | 33. | 30. | 11. | 12. | 16. | 3. | 3. | 7. | 11. | 47. | N/A | 82. | 3. |
| 25 | 6. | 16. | 36. | 59. | 31. | 35. | 8. | 49. | 31. | 10. | 17. | 16. | 32. | 25. | 34. | 20. | 13. | 9. | 13. | 36. | 3. | 34. | 11. | 29. | N/A | 59. | 3. |
| 26 | 58. | 32. | 9. | 53. | 28. | 44. | 41. | 35. | 62. | 45. | 52. | 14. | 13. | 15. | 12. | 14. | 13. | 14. | 14. | 21. | 13. | 12. | 14. | 14. | N/A | 62. | 9. |
| 27 | 14. | 13. | 14. | 13. | 13. | 18. | 7. | 11. | 30. | 15. | 13. | 16. | 12. | 12. | 12. | 13. | 13. | 13. | 15. | 16. | 15. | 12. | 13. | 13. | N/A | 30. | 7. |
| 28 | 14. | 15. | 13. | 12. | 13. | 12. | 11. | 12. | 12. | 14. | 12. | 12. | 13. | 13. | 12. | 11. | 12. | 12. | 13. | 11. | 11. | 11. | 12. | 12. | N/A | 15. | 11. |
| 29 | 10. | 11. | 17. | 17. | 19. | 42. | 24. | 10. | 29. | 14. | 16. | 17. | 17. | 36. | 22. | 19. | 16. | 27. | 15. | 7. | 6. | 9. | 13. | 6. | N/A | 42. | 6. |
| 30 | 3. | 4. | 4. | 4. | 3. | 7. | 14. | 43. | 25. | 34. | 15. | 16. | 13. | 16. | 15. | 15. | 12. | 13. | 12. | 12. | 12. | 14. | 13. | 13. | N/A | 43. | 3. |
| 31 | 13. | 24. | 26. | 8. | 5. | 6. | 6. | 5. | 8. | 17. | 15. | 12. | 12. | 12. | 15. | 14. | 10. | 14. | 13. | 14. | 13. | 15. | 11. | 12. | N/A | 26. | 5. |
| Mean | N/A | N/A | N/A | N/A | N/A | N/A | N/A | N/A | N/A | N/A | N/A | N/A | N/A | N/A | N/A | N/A | N/A | N/A | N/A | N/A | N/A | N/A | N/A | N/A | Monthly mean = | | N/A |
| Max. | 72. | 41. | 67. | 59. | 82. | 45. | 82. | 49. | 62. | 45. | 59. | 54. | 40. | 44. | 54. | 38. | 26. | 36. | 21. | 42. | 55. | 41. | 47. | 61. | Monthly max. = | | 82. |
| Min. | 3. | 4. | 4. | 4. | 3. | 6. | 5. | 5. | 6. | 8. | 10. | 10. | 8. | 10. | 7. | 8. | 9. | 5. | 4. | 3. | 3. | 3. | 3. | 4. | Monthly min. = | | 3. |

TOTAL NUMBER OF DATA HOURS IN MONTH: 744
Number of hours of bad or missing data: 2
**** designates missing or lost data

Current % recovery = 99.7

N/A: A sigma theta mean is not physically meaningful.

table created at 11: 3, 4/12/1995

MONTHLY SUMMARY
REL. HUMID.
(Degrees)
INPUT FILE: allsimet.out

Bechtel Environmental, Inc.

Met Data for Site 1
OCTOBER 1994

| Day | Hour 1 | 2 | 3 | 4 | 5 | 6 | 7 | 8 | 9 | 10 | 11 | 12 | 13 | 14 | 15 | 16 | 17 | 18 | 19 | 20 | 21 | 22 | 23 | 24 | Mean | Max. | Min. |
|---|---|---|---|---|---|---|---|---|---|---|---|---|---|---|---|---|---|---|---|---|---|---|---|---|---|---|---|
| 1 | 97.1 | 97.1 | 97.1 | 97.2 | 97.2 | 97.2 | 97.2 | 96.8 | 96.7 | 92.7 | 86.7 | 83.3 | 80.8 | 75.7 | 72.5 | 66.3 | 63.3 | 63.0 | 67.7 | 74.7 | 78.2 | 69.6 | 61.7 | 59.6 | 82.1 | 97.2 | 59.6 |
| 2 | 65.2 | 74.9 | 79.7 | 82.1 | 84.4 | 87.9 | 75.6 | 70.8 | 64.8 | 58.7 | 51.1 | 43.7 | 40.9 | 39.9 | 33.2 | 25.4 | 24.9 | 72.5 | 87.9 | 91.6 | 92.8 | 95.1 | 97.2 | 97.2 | 68.2 | 97.2 | 24.9 |
| 3 | 93.9 | 88.7 | 88.4 | 89.3 | 89.6 | 87.8 | 86.6 | 83.2 | 83.1 | 75.7 | 73.1 | 74.5 | 79.4 | 78.8 | 83.7 | 83.5 | 82.1 | 84.2 | 92.7 | 97.1 | 97.2 | 97.2 | 97.2 | 97.2 | 86.8 | 97.2 | 73.1 |
| 4 | 97.2 | 97.2 | 97.2 | 97.2 | 97.2 | 97.2 | 97.2 | 97.2 | 77.1 | 97.2 | 97.2 | ***** | 96.3 | 93.0 | 97.2 | 97.1 | 97.1 | 97.1 | 97.1 | 97.1 | 97.1 | 97.1 | 97.1 | 97.1 | 96.1 | 97.2 | 77.1 |
| 5 | 97.1 | 96.2 | 90.3 | 97.1 | 97.1 | 97.1 | 97.1 | 97.1 | 96.6 | 97.0 | 94.2 | 90.9 | 95.3 | 95.4 | 91.0 | 84.2 | 90.6 | 96.1 | 97.0 | 96.4 | 96.9 | 96.8 | 96.9 | 96.3 | 95.0 | 97.1 | 84.2 |
| 6 | 96.9 | 93.9 | 93.7 | 95.4 | 96.2 | 96.8 | 97.1 | 97.1 | 96.0 | 87.0 | ***** | 75.7 | 71.1 | 67.9 | 66.2 | 62.3 | 60.7 | 61.2 | 66.5 | 69.5 | 84.6 | 72.7 | 67.8 | 67.4 | 80.2 | 97.1 | 60.7 |
| 7 | 62.0 | 61.1 | 62.6 | 68.3 | 72.1 | 68.1 | 65.4 | 63.3 | 63.1 | 60.9 | 59.7 | 58.2 | 55.3 | 49.0 | 46.8 | 43.0 | 45.3 | 48.4 | 50.8 | 46.9 | 49.0 | 65.9 | 72.6 | 74.7 | 58.9 | 74.7 | 43.0 |
| 8 | 76.2 | 80.0 | 77.0 | 79.0 | 83.9 | 82.5 | 83.9 | 84.2 | 72.8 | 62.0 | 46.2 | 44.3 | 41.9 | 42.6 | 34.3 | 33.6 | 33.3 | 37.1 | 45.8 | 53.6 | 52.1 | 50.3 | 50.5 | 52.3 | 58.3 | 84.2 | 33.3 |
| 9 | 51.8 | 55.4 | 69.3 | 75.2 | 84.5 | 94.0 | 97.0 | 97.0 | 86.8 | 65.5 | 54.1 | 42.7 | 35.2 | 30.6 | 27.3 | 24.7 | 24.4 | 32.3 | 39.1 | 40.6 | 45.6 | 46.8 | 46.7 | 41.4 | 54.5 | 97.0 | 24.4 |
| 10 | 39.3 | 63.9 | 81.8 | 90.9 | 89.1 | 85.3 | 91.2 | 93.9 | 83.4 | 66.1 | 53.4 | 41.1 | 32.2 | 21.9 | 19.7 | 18.8 | 19.0 | 19.1 | 19.3 | 20.3 | 19.8 | 26.9 | 28.9 | 36.4 | 48.4 | 93.9 | 18.8 |
| 11 | 55.2 | 60.7 | 42.3 | 45.7 | 56.1 | 67.1 | 72.3 | 71.9 | 69.2 | 60.0 | 53.7 | 50.1 | 48.8 | 41.2 | 38.5 | 36.6 | 35.2 | 40.1 | 43.8 | 48.8 | 70.0 | 61.1 | 64.4 | 77.9 | 54.6 | 77.9 | 35.2 |
| 12 | 82.1 | 82.3 | 83.1 | 92.5 | 95.1 | 96.5 | 96.6 | 91.2 | 82.3 | 71.3 | 70.1 | 61.0 | 49.4 | 41.5 | 35.2 | 34.0 | 33.2 | 44.0 | 44.5 | 46.1 | 51.2 | 55.0 | 64.3 | 69.5 | 65.5 | 96.6 | 33.2 |
| 13 | 76.3 | 73.9 | 68.0 | 67.3 | 72.6 | 75.4 | 72.3 | 72.1 | 73.4 | 77.7 | 72.4 | 66.2 | 62.3 | 57.0 | 56.3 | 54.4 | 55.4 | 62.5 | 66.0 | 65.1 | 65.3 | 69.3 | 74.0 | 73.2 | 67.9 | 77.7 | 54.4 |
| 14 | 82.6 | 88.5 | 92.6 | 91.8 | 89.8 | 93.6 | 94.6 | 91.7 | 75.3 | 61.6 | 57.3 | 54.9 | 57.3 | 77.2 | 96.3 | 95.7 | 97.2 | 97.1 | 97.2 | 97.2 | 97.2 | 97.1 | 97.1 | 97.1 | 86.6 | 97.2 | 54.9 |
| 15 | 97.1 | 97.1 | 97.2 | 97.2 | 97.2 | 97.1 | 97.1 | 97.1 | 97.1 | 97.1 | 96.9 | 95.9 | 96.7 | 89.5 | 88.3 | 87.9 | 86.8 | 96.5 | 97.1 | 97.1 | 97.1 | 97.1 | 96.4 | 76.9 | 94.6 | 97.2 | 76.9 |
| 16 | 74.8 | 73.0 | 75.5 | 75.9 | 75.0 | 75.2 | 78.9 | 96.4 | 97.2 | 90.6 | 81.4 | 76.0 | 77.3 | 68.8 | 65.1 | 65.3 | 64.1 | 69.2 | 73.3 | 71.1 | 73.4 | 75.0 | 85.1 | 81.6 | 76.6 | 97.2 | 64.1 |
| 17 | 85.7 | 88.6 | 84.7 | 79.8 | 80.6 | 79.9 | 81.4 | 81.4 | 80.3 | 83.7 | 79.8 | 78.8 | 75.8 | 72.2 | 70.2 | 70.2 | 70.8 | 70.1 | 68.9 | 71.2 | 69.7 | 68.6 | 70.4 | 76.2 | 76.6 | 88.6 | 68.6 |
| 18 | 81.4 | 87.5 | 83.4 | 82.9 | 90.1 | 91.3 | 90.0 | 88.3 | 91.2 | 86.2 | 82.0 | 80.6 | 77.5 | 71.2 | 64.8 | 66.5 | 64.8 | 66.4 | 74.2 | 86.9 | 83.7 | 81.1 | 84.3 | 85.8 | 80.9 | 91.3 | 64.8 |
| 19 | 84.9 | 83.5 | 83.7 | 91.8 | 95.4 | 93.9 | 87.2 | 81.9 | 78.0 | 72.3 | 67.1 | 58.0 | 48.8 | 48.5 | 43.2 | 40.8 | 43.0 | 44.7 | 48.3 | 53.4 | 58.4 | 59.4 | 62.6 | 61.8 | 66.3 | 95.4 | 40.8 |
| 20 | 60.9 | 62.8 | 57.6 | 59.6 | 62.5 | 66.4 | 76.7 | 66.8 | 77.6 | 64.6 | 51.1 | 46.5 | 42.2 | 42.3 | 42.9 | 41.2 | 40.5 | 44.6 | 48.2 | 50.7 | 51.3 | 50.8 | 52.0 | 63.6 | 55.1 | 77.6 | 40.5 |
| 21 | 74.9 | 77.2 | 71.8 | 59.8 | 51.3 | 45.9 | 44.0 | 46.5 | 43.5 | 42.2 | 44.7 | 40.0 | 39.5 | 42.3 | 43.1 | 43.0 | 43.7 | 47.0 | 51.7 | 54.7 | 58.0 | 57.9 | 59.6 | 64.2 | 51.9 | 77.2 | 39.5 |
| 22 | 69.6 | 80.2 | 81.7 | 84.3 | 86.2 | 86.4 | 81.1 | 74.0 | 65.6 | 55.3 | 49.7 | 43.7 | 41.7 | 37.9 | 37.2 | 36.2 | 36.0 | 40.1 | 48.1 | 55.0 | 59.8 | 63.0 | 67.1 | 66.5 | 60.3 | 86.4 | 36.0 |
| 23 | 73.4 | 81.1 | 88.8 | 95.9 | 95.0 | 85.9 | 90.3 | 92.2 | 74.3 | 65.5 | 57.2 | 54.1 | 48.6 | 44.3 | 36.3 | 30.7 | 29.1 | 36.6 | 43.2 | 49.8 | 54.3 | 57.6 | 59.9 | 64.3 | 62.9 | 95.9 | 29.1 |
| 24 | 68.8 | 70.7 | 72.1 | 85.1 | 88.5 | 97.1 | 97.2 | 97.1 | 88.3 | 71.8 | 57.2 | 50.7 | 45.1 | 41.2 | 34.6 | 34.2 | 36.1 | 44.8 | 54.8 | 61.7 | 56.0 | 58.8 | 62.6 | 73.8 | 64.5 | 97.2 | 34.2 |
| 25 | 70.9 | 69.3 | 83.6 | 91.3 | 90.7 | 83.1 | 93.9 | 93.2 | 78.7 | 60.4 | 44.8 | 43.5 | 38.8 | 34.1 | 28.4 | 26.2 | 28.1 | 34.2 | 43.8 | 45.8 | 45.1 | 50.2 | 55.2 | 56.4 | 57.9 | 93.9 | 26.2 |
| 26 | 64.2 | 71.6 | 66.8 | 72.9 | 81.3 | 80.8 | 93.7 | 82.3 | 64.5 | 70.3 | 40.0 | 37.3 | 31.5 | 33.3 | 34.0 | 35.0 | 36.9 | 38.7 | 41.1 | 40.6 | 42.8 | 40.1 | 40.3 | 41.5 | 53.4 | 93.7 | 31.5 |
| 27 | 42.7 | 41.6 | 41.7 | 42.9 | 43.4 | 43.0 | 52.0 | 52.5 | 43.4 | 34.0 | 34.1 | 29.7 | 22.0 | 21.6 | 20.2 | 20.1 | 24.2 | 25.5 | 23.5 | 22.3 | 22.0 | 20.3 | 19.9 | 20.9 | 31.8 | 52.5 | 19.9 |
| 28 | 20.5 | 21.8 | 21.8 | 23.2 | 30.8 | 49.8 | 69.2 | 75.2 | 86.0 | 86.7 | 74.8 | 57.3 | 50.0 | 43.0 | 38.4 | 38.8 | 40.6 | 45.2 | 45.8 | 47.0 | 50.0 | 51.0 | 52.8 | 52.4 | 48.8 | 86.7 | 20.5 |
| 29 | 53.9 | 56.7 | 57.2 | 60.3 | 63.0 | 75.7 | 77.9 | 76.2 | 70.3 | 67.2 | 61.7 | 55.6 | 49.2 | 39.8 | 35.8 | 32.5 | 31.6 | 39.3 | 47.6 | 52.9 | 55.5 | 57.8 | 60.3 | 62.4 | 55.9 | 77.9 | 31.6 |
| 30 | 66.7 | 69.4 | 70.7 | 72.3 | 74.6 | 78.9 | 80.8 | 85.5 | 72.6 | 57.8 | 53.9 | 44.9 | 40.7 | 36.3 | 35.3 | 31.4 | 33.7 | 38.7 | 39.8 | 38.7 | 39.5 | 39.5 | 42.4 | 43.5 | 53.7 | 85.5 | 31.4 |
| 31 | 45.2 | 44.8 | 48.0 | 51.1 | 48.9 | 47.0 | 47.3 | 47.4 | 43.3 | 29.5 | 21.3 | 21.1 | 24.9 | 24.9 | 21.6 | 21.2 | 23.9 | 26.2 | 23.9 | 24.8 | 23.4 | 25.7 | 25.7 | 27.0 | 32.8 | 51.1 | 21.1 |
| Mean | 71.2 | 73.9 | 74.5 | 77.3 | 79.3 | 80.8 | 82.7 | 82.0 | 76.5 | 70.0 | 62.2 | 56.7 | 54.7 | 51.7 | 49.6 | 47.8 | 48.2 | 53.6 | 57.7 | 60.3 | 62.5 | 63.1 | 64.9 | 66.3 | Monthly mean = | | 65.3 |
| Max. | 97.2 | 97.2 | 97.2 | 97.2 | 97.2 | 97.2 | 97.2 | 97.2 | 97.2 | 97.2 | 97.2 | 95.9 | 96.7 | 95.4 | 97.2 | 97.1 | 97.2 | 97.1 | 97.2 | 97.2 | 97.2 | 97.2 | 97.2 | 97.2 | Monthly max. = | | 97.2 |
| Min. | 20.5 | 21.8 | 21.8 | 23.2 | 30.8 | 43.0 | 44.0 | 46.5 | 43.3 | 29.5 | 21.3 | 21.1 | 22.0 | 21.6 | 19.7 | 18.8 | 19.0 | 19.1 | 19.3 | 20.3 | 19.8 | 20.3 | 19.9 | 20.9 | Monthly min. = | | 18.8 |

TOTAL NUMBER OF DATA HOURS IN MONTH: 744
Number of hours of bad or missing data: 2
Current % recovery = 99.7
**** designates missing or lost data

N/A: insufficient data available for calculation (a minimum of 75% is required)

table created at 11: 3, 4/12/1995

MONTHLY SUMMARY
WIND SPEED
(Miles Per Hour)
INPUT FILE: od7met.met

Bechtel Environmental, Inc.

Met Data for Site 7
OCTOBER 1993

| Day \ Hour | 1 | 2 | 3 | 4 | 5 | 6 | 7 | 8 | 9 | 10 | 11 | 12 | 13 | 14 | 15 | 16 | 17 | 18 | 19 | 20 | 21 | 22 | 23 | 24 | Mean | Max. | Min. |
|---|---|---|---|---|---|---|---|---|---|---|---|---|---|---|---|---|---|---|---|---|---|---|---|---|---|---|---|
| 1 | 23.4 | 24.5 | 24.8 | 23.4 | 24.2 | 23.3 | 24.9 | 26.7 | 23.4 | 22.4 | 25.0 | 27.0 | 27.6 | 25.3 | 27.6 | 24.9 | 19.2 | 18.9 | 23.9 | 24.7 | 24.5 | 24.3 | 23.1 | 21.1 | 24.1 | 27.6 | 18.9 |
| 2 | 16.7 | 9.1 | 2.4 | 2.0 | 2.7 | 2.1 | 1.6 | 3.3 | 2.9 | 3.7 | 4.9 | 5.6 | 5.6 | 6.6 | 7.2 | 7.3 | 6.1 | 3.8 | 1.3 | 5.1 | 7.5 | 8.6 | 3.1 | 2.1 | 5.1 | 16.7 | 1.3 |
| 3 | 2.3 | 3.4 | 5.3 | 3.1 | 1.9 | 1.9 | 2.7 | 2.0 | 4.5 | 2.3 | 3.9 | 4.3 | 4.7 | 5.2 | 8.3 | 10.5 | 6.6 | 5.1 | 4.2 | 8.8 | 9.8 | 11.0 | 7.4 | 12.4 | 5.5 | 12.4 | 1.9 |
| 4 | 7.2 | 4.3 | 11.5 | 11.3 | 11.8 | 2.8 | 1.8 | 2.0 | 2.0 | 3.0 | 3.5 | 5.1 | 4.4 | 4.4 | 7.3 | 5.5 | 4.2 | 1.8 | 5.6 | 11.7 | 14.0 | 14.6 | 9.7 | 8.9 | 6.6 | 14.6 | 1.8 |
| 5 | 9.0 | 9.0 | 10.9 | 11.4 | 7.3 | 4.7 | 3.3 | 7.6 | 4.4 | 5.0 | 4.6 | 6.1 | 6.2 | 5.5 | 14.9 | 14.1 | 11.7 | 11.1 | 19.0 | 24.5 | 13.2 | 17.7 | 8.8 | 5.9 | 9.8 | 24.5 | 3.3 |
| 6 | 4.9 | 16.3 | 15.1 | 17.1 | 18.2 | 4.9 | 11.8 | 10.4 | 4.7 | 5.6 | 7.8 | 11.9 | 10.1 | 7.4 | 4.4 | 7.6 | 7.1 | 6.8 | 8.0 | 12.7 | 8.9 | 8.9 | 3.6 | 2.9 | 9.0 | 18.2 | 2.9 |
| 7 | 3.9 | 5.1 | 5.7 | 13.7 | 17.5 | 22.7 | 28.6 | 22.6 | 20.0 | 18.4 | 19.0 | 21.9 | 24.4 | 23.0 | 25.4 | 22.5 | 24.4 | 20.0 | 18.2 | 18.8 | 21.8 | 23.2 | 22.5 | 23.9 | 19.5 | 28.6 | 3.9 |
| 8 | 17.1 | 15.5 | 14.3 | 13.3 | 12.2 | 3.5 | 3.3 | 6.8 | 5.3 | 5.7 | 6.0 | 4.6 | 6.4 | 7.2 | 8.4 | 9.8 | 8.4 | 9.8 | 8.9 | 6.8 | 6.5 | 7.4 | 10.0 | 4.5 | 8.4 | 17.1 | 3.3 |
| 9 | 3.8 | 6.9 | 3.0 | 4.0 | 4.8 | 3.6 | 2.1 | 3.0 | 3.0 | 3.5 | 5.5 | 5.4 | 6.8 | 7.9 | 8.8 | 6.8 | 7.5 | 6.3 | 6.1 | 6.6 | 10.7 | 7.3 | 7.8 | 7.1 | 5.8 | 10.7 | 2.1 |
| 10 | 7.3 | 6.7 | 5.8 | 11.1 | 11.9 | 11.9 | 13.2 | 12.8 | 4.1 | 6.3 | 7.6 | 4.8 | 4.6 | 5.2 | 5.5 | 4.2 | 3.1 | 2.5 | 4.0 | 7.9 | 9.4 | 12.0 | 12.5 | 10.4 | 7.7 | 13.2 | 2.5 |
| 11 | 10.9 | 6.2 | 8.0 | 10.5 | 11.0 | 14.7 | 13.0 | 8.4 | 4.4 | 7.2 | 6.4 | 6.3 | 6.1 | 4.7 | 3.2 | 5.9 | 7.8 | 6.0 | 4.1 | 6.0 | 3.2 | 2.1 | 2.4 | 1.6 | 6.7 | 14.7 | 1.6 |
| 12 | 2.0 | 8.0 | 1.0 | .9 | .9 | 1.2 | 22.1 | 19.6 | 15.8 | 16.8 | 16.7 | 16.7 | 10.8 | 15.0 | 14.0 | 10.0 | 8.0 | 5.0 | 6.0 | 11.0 | 9.0 | 13.0 | 12.0 | 14.0 | 10.4 | 22.1 | .9 |
| 13 | 14.0 | 15.0 | 15.0 | 12.0 | 10.0 | 13.0 | 3.0 | 12.0 | 14.0 | 14.0 | 13.0 | 6.0 | 10.0 | 9.2 | 11.6 | 11.2 | 8.3 | 13.0 | 12.9 | 19.1 | 9.8 | 11.0 | 8.9 | 10.0 | 11.5 | 19.1 | 3.0 |
| 14 | 7.0 | 13.0 | 8.0 | 5.0 | 10.0 | 9.0 | 4.0 | 10.0 | 9.0 | 15.0 | 13.0 | 15.0 | 14.0 | 17.4 | 18.4 | 15.1 | 14.4 | 10.7 | 5.8 | 18.0 | 16.0 | 14.0 | 12.0 | 7.0 | 11.7 | 18.4 | 4.0 |
| 15 | 10.0 | 8.0 | 14.0 | 6.0 | 14.0 | 11.0 | 11.0 | 12.0 | 10.6 | 17.5 | 13.4 | 12.2 | 14.7 | 13.7 | 12.7 | 10.5 | 6.4 | 8.4 | 8.7 | 9.4 | 8.1 | 7.3 | 8.4 | 9.6 | 10.7 | 17.5 | 6.0 |
| 16 | 9.4 | 10.8 | 8.3 | 7.8 | 7.3 | 6.8 | 4.2 | 3.0 | 4.2 | 5.3 | 2.5 | 3.5 | 3.9 | 4.7 | 10.4 | 12.4 | 10.5 | 6.1 | 5.4 | 9.8 | 10.2 | 8.5 | 4.7 | 2.1 | 6.7 | 12.4 | 2.1 |
| 17 | 3.2 | 3.1 | 3.6 | 3.8 | 3.7 | 5.4 | 7.4 | 8.9 | 7.0 | 12.4 | 9.0 | 6.0 | 7.5 | 8.3 | 8.4 | 8.8 | 5.8 | 8.0 | 18.0 | 22.8 | 23.7 | 21.3 | 17.1 | 17.7 | 10.0 | 23.7 | 3.1 |
| 18 | 15.6 | 13.8 | 15.4 | 14.7 | 16.0 | 19.9 | 19.8 | 17.6 | 16.8 | 17.8 | 15.9 | 15.2 | 15.2 | 17.5 | 15.9 | 14.8 | 14.3 | 11.0 | 14.4 | 16.4 | 16.6 | 14.2 | 14.1 | 13.4 | 15.7 | 19.9 | 11.0 |
| 19 | 14.9 | 12.4 | 12.8 | 14.1 | 11.8 | 6.9 | 9.2 | 8.6 | 8.6 | ***** | ***** | ***** | ***** | ***** | 24.8 | 23.0 | 19.9 | 20.1 | 23.5 | 24.5 | 24.7 | 27.4 | 25.0 | 22.8 | 17.6 | 27.4 | 6.9 |
| 20 | 21.2 | 18.2 | 18.9 | 14.3 | 6.9 | 3.5 | 2.5 | 2.6 | 2.2 | 3.0 | 5.7 | 12.4 | 11.0 | 8.5 | 10.2 | 8.2 | 5.7 | 4.4 | 4.0 | 7.3 | 5.1 | 7.2 | 8.8 | 9.3 | 8.4 | 21.2 | 2.2 |
| 21 | 11.1 | 7.4 | 5.0 | 5.8 | 9.1 | 13.5 | 5.4 | 4.8 | 3.3 | 8.3 | 4.4 | 7.9 | 10.2 | 7.0 | 7.4 | 7.6 | 9.7 | 14.1 | 11.0 | 10.9 | 11.1 | 13.5 | 7.7 | 11.6 | 8.7 | 14.1 | 3.3 |
| 22 | 5.2 | 10.5 | 9.4 | 3.5 | 8.0 | 7.5 | 2.0 | 3.4 | 6.5 | 3.4 | 5.3 | 3.7 | 5.4 | 5.1 | 6.2 | 7.2 | 7.1 | 6.5 | 5.2 | 9.3 | 9.5 | 9.4 | 8.5 | 5.8 | 6.4 | 10.5 | 2.0 |
| 23 | 7.8 | 2.2 | 6.1 | 6.3 | 2.9 | 6.8 | 7.6 | 3.7 | 2.4 | 2.2 | 6.5 | 6.0 | 4.8 | 4.2 | 3.2 | 4.0 | 6.0 | 5.0 | 9.0 | 15.0 | 16.0 | 17.0 | 18.0 | 18.0 | 7.5 | 18.0 | 2.2 |
| 24 | 3.0 | 11.0 | 14.0 | 15.0 | 14.0 | 13.0 | 12.0 | 3.0 | 7.0 | 5.0 | 8.0 | 14.0 | 19.0 | 21.0 | 23.0 | 25.0 | 16.0 | 18.0 | 26.0 | 25.0 | 26.0 | 32.0 | 34.0 | 35.0 | 17.5 | 35.0 | 3.0 |
| 25 | 33.0 | 30.0 | 27.0 | 25.0 | 22.0 | 18.0 | 12.0 | 16.0 | 13.0 | 16.0 | 13.0 | 11.0 | 5.0 | 7.0 | 8.0 | 8.0 | 3.0 | 2.0 | 5.0 | 8.0 | 14.0 | 4.0 | 3.0 | 7.0 | 12.9 | 33.0 | 2.0 |
| 26 | 5.0 | 5.0 | 6.0 | 7.0 | 5.0 | 8.0 | 6.0 | 7.0 | 8.0 | 15.0 | 16.5 | 16.1 | 11.8 | 9.5 | 8.9 | 6.2 | 3.9 | 1.8 | 2.3 | 5.1 | 6.5 | 11.6 | 16.0 | 16.7 | 8.5 | 16.7 | 1.8 |
| 27 | 16.0 | 13.1 | 11.7 | 10.8 | 10.2 | 7.6 | 6.7 | 7.0 | 7.4 | 6.4 | 6.4 | 9.8 | 8.2 | 6.9 | 9.8 | 12.5 | 10.0 | 10.3 | 14.4 | 14.8 | 16.3 | 19.4 | 18.6 | 18.6 | 11.4 | 19.4 | 6.4 |
| 28 | 25.0 | 25.4 | 23.9 | 24.7 | 24.7 | 21.9 | 27.6 | 27.4 | 27.3 | 22.4 | 21.1 | 10.4 | 8.2 | 8.6 | 16.9 | 13.5 | 7.2 | 22.0 | 20.0 | 20.3 | 12.4 | 11.4 | 15.0 | 17.2 | 18.9 | 27.6 | 7.2 |
| 29 | 17.5 | 11.8 | 13.9 | 16.3 | 13.6 | 12.7 | 10.8 | 8.1 | 7.5 | 16.1 | 18.9 | 18.2 | 15.6 | 13.7 | 12.2 | 9.8 | 8.1 | 5.2 | 6.9 | 7.2 | 7.8 | 10.7 | 8.1 | 5.1 | 11.5 | 18.9 | 5.1 |
| 30 | 6.8 | 10.1 | 3.7 | 2.7 | 8.6 | 7.6 | 9.8 | 7.1 | 2.8 | 4.5 | 7.0 | 6.9 | 6.3 | 7.2 | 4.8 | 6.5 | 6.7 | 7.5 | 7.2 | 7.1 | 14.5 | 13.3 | 6.5 | 2.8 | 7.0 | 14.5 | 2.7 |
| 31 | 9.0 | 5.7 | 4.3 | 4.1 | 5.9 | 3.0 | 2.6 | 4.1 | 4.4 | 2.9 | 4.1 | 6.6 | 3.3 | 4.2 | 11.4 | 14.5 | 14.2 | 19.6 | 25.6 | 24.2 | 23.5 | 26.9 | 24.4 | 26.6 | 11.5 | 26.9 | 2.6 |
| Mean | 11.1 | 11.0 | 10.6 | 10.3 | 10.6 | 9.4 | 9.4 | 9.4 | 8.3 | 9.6 | 9.8 | 10.0 | 9.7 | 9.7 | 11.6 | 11.2 | 9.4 | 9.4 | 10.8 | 13.5 | 13.2 | 13.9 | 12.3 | 12.0 | Monthly mean = | | 10.7 |
| Max. | 33.0 | 30.0 | 27.0 | 25.0 | 24.7 | 23.3 | 28.6 | 27.4 | 27.3 | 22.4 | 25.0 | 27.0 | 27.6 | 25.3 | 27.6 | 25.0 | 24.4 | 22.0 | 26.0 | 25.0 | 26.0 | 32.0 | 34.0 | 35.0 | Monthly max. = | | 35.0 |
| Min. | 2.0 | 2.2 | 1.0 | .9 | .9 | 1.2 | 1.6 | 2.0 | 2.0 | 2.2 | 2.5 | 3.5 | 3.3 | 4.2 | 3.2 | 4.0 | 3.0 | 1.8 | 1.3 | 5.1 | 3.2 | 2.1 | 2.4 | 1.6 | Monthly min. = | | .9 |

TOTAL NUMBER OF DATA HOURS IN MONTH: 744
Number of hours of bad or missing data: 5
**** designates missing or lost data

Current % recovery = 99.3

N/A: insufficient data available for calculation (a minimum of 75% is required)

table created at 14:26,10/11/1994

MONTHLY SUMMARY
WIND DIRECTION
(Degrees)
INPUT FILE: od7met.met

Bechtel Environmental, Inc.

Met Data for Site 7
OCTOBER 1993

| Day | Hour 1 | 2 | 3 | 4 | 5 | 6 | 7 | 8 | 9 | 10 | 11 | 12 | 13 | 14 | 15 | 16 | 17 | 18 | 19 | 20 | 21 | 22 | 23 | 24 | Mean | Max. | Min. |
|---|---|---|---|---|---|---|---|---|---|---|---|---|---|---|---|---|---|---|---|---|---|---|---|---|---|---|---|
| 1 | 224.0 | 224.0 | 228.0 | 225.0 | 227.0 | 228.0 | 224.0 | 224.0 | 233.0 | 236.0 | 234.0 | 250.0 | 254.0 | 251.0 | 256.0 | 255.0 | 243.0 | 234.0 | 223.0 | 223.0 | 225.0 | 226.0 | 226.0 | 228.0 | 233.4 | 256.0 | 223.0 |
| 2 | 227.0 | 230.0 | 246.0 | 214.0 | 302.0 | 178.0 | 138.0 | 269.0 | 272.0 | 360.0 | 341.0 | 359.0 | 352.0 | 335.0 | 333.0 | 340.0 | 359.0 | 337.0 | 300.0 | 115.0 | 130.0 | 146.0 | 203.0 | 275.0 | 265.0 | 360.0 | 115.0 |
| 3 | 257.0 | 129.0 | 129.0 | 198.0 | 301.0 | 110.0 | 161.0 | 121.0 | 99.0 | 313.0 | 24.0 | 24.0 | 27.0 | 329.0 | 325.0 | 275.0 | 262.0 | 265.0 | 184.0 | 157.0 | 170.0 | 138.0 | 177.0 | 144.0 | 180.0 | 329.0 | 24.0 |
| 4 | 157.0 | 104.0 | 112.0 | 122.0 | 122.0 | 257.0 | 162.0 | 232.0 | 20.0 | 10.0 | 358.0 | 38.0 | 27.0 | 327.0 | 355.0 | 360.0 | 358.0 | 39.0 | 139.0 | 144.0 | 144.0 | 141.0 | 147.0 | 143.0 | 62.4 | 360.0 | 10.0 |
| 5 | 128.0 | 112.0 | 115.0 | 120.0 | 151.0 | 141.0 | 240.0 | 133.0 | 152.0 | 81.0 | 45.0 | 55.0 | 356.0 | 294.0 | 188.0 | 185.0 | 183.0 | 169.0 | 224.0 | 225.0 | 221.0 | 234.0 | 178.0 | 118.0 | 168.7 | 356.0 | 45.0 |
| 6 | 211.0 | 237.0 | 219.0 | 136.0 | 150.0 | 116.0 | 143.0 | 134.0 | 211.0 | 269.0 | 276.0 | 265.0 | 260.0 | 245.0 | 251.0 | 201.0 | 106.0 | 180.0 | 184.0 | 144.0 | 150.0 | 160.0 | 249.0 | 211.0 | 196.2 | 276.0 | 106.0 |
| 7 | 213.0 | 222.0 | 231.0 | 227.0 | 227.0 | 227.0 | 226.0 | 230.0 | 234.0 | 236.0 | 234.0 | 247.0 | 251.0 | 253.0 | 253.0 | 249.0 | 253.0 | 249.0 | 239.0 | 234.0 | 233.0 | 232.0 | 229.0 | 226.0 | 235.6 | 253.0 | 213.0 |
| 8 | 229.0 | 238.0 | 241.0 | 246.0 | 254.0 | 339.0 | 354.0 | 12.0 | 22.0 | 10.0 | 347.0 | 340.0 | 300.0 | 330.0 | 9.0 | 20.0 | 32.0 | 23.0 | 22.0 | 18.0 | 14.0 | 26.0 | 15.0 | 22.0 | 339.3 | 354.0 | 9.0 |
| 9 | 248.0 | 228.0 | 96.0 | 109.0 | 106.0 | 78.0 | 45.0 | 336.0 | 22.0 | 67.0 | 109.0 | 255.0 | 257.0 | 254.0 | 274.0 | 133.0 | 123.0 | 172.0 | 150.0 | 160.0 | 150.0 | 145.0 | 137.0 | 161.0 | 159.0 | 336.0 | 22.0 |
| 10 | 189.0 | 176.0 | 154.0 | 140.0 | 136.0 | 135.0 | 139.0 | 138.0 | 188.0 | 76.0 | 95.0 | 359.0 | 37.0 | 60.0 | 330.0 | 339.0 | 12.0 | 345.0 | 132.0 | 133.0 | 144.0 | 133.0 | 142.0 | 138.0 | 161.2 | 359.0 | 12.0 |
| 11 | 139.0 | 144.0 | 132.0 | 131.0 | 124.0 | 132.0 | 115.0 | 113.0 | 91.0 | 78.0 | 53.0 | 36.0 | 291.0 | 324.0 | 41.0 | 247.0 | 218.0 | 114.0 | 84.0 | 109.0 | 98.0 | 249.0 | 348.0 | 104.0 | 146.5 | 348.0 | 36.0 |
| 12 | 198.0 | 225.0 | 249.0 | 236.0 | 231.0 | 227.0 | 224.0 | 224.0 | 231.0 | 237.0 | 240.0 | 233.0 | 249.0 | 260.0 | 250.0 | 260.0 | 250.0 | 220.0 | 160.0 | 150.0 | 140.0 | 130.0 | 140.0 | 140.0 | 212.7 | 260.0 | 130.0 |
| 13 | 135.0 | 134.0 | 133.0 | 205.0 | 225.0 | 225.0 | 200.0 | 130.0 | 140.0 | 140.0 | 110.0 | 110.0 | 270.0 | 280.0 | 200.0 | 196.0 | 194.0 | 171.0 | 165.0 | 250.0 | 225.0 | 216.0 | 194.0 | 150.0 | 183.2 | 280.0 | 110.0 |
| 14 | 170.0 | 140.0 | 250.0 | 140.0 | 120.0 | 140.0 | 240.0 | 230.0 | 300.0 | 240.0 | 250.0 | 260.0 | 260.0 | 259.0 | 256.0 | 247.0 | 242.0 | 243.0 | 104.0 | 210.0 | 200.0 | 160.0 | 150.0 | 140.0 | 206.3 | 300.0 | 104.0 |
| 15 | 160.0 | 200.0 | 190.0 | 140.0 | 150.0 | 140.0 | 135.0 | 130.0 | 208.0 | 230.0 | 248.0 | 243.0 | 234.0 | 233.0 | 234.0 | 214.0 | 181.0 | 197.0 | 205.0 | 202.0 | 193.0 | 175.0 | 206.0 | 207.0 | 194.0 | 248.0 | 130.0 |
| 16 | 207.0 | 224.0 | 235.0 | 238.0 | 223.0 | 220.0 | 223.0 | 219.0 | 52.0 | 284.0 | 2.0 | 56.0 | 39.0 | 85.0 | 115.0 | 130.0 | 127.0 | 132.0 | 135.0 | 134.0 | 134.0 | 115.0 | 274.0 | 328.0 | 163.8 | 328.0 | 2.0 |
| 17 | 86.0 | 110.0 | 139.0 | 261.0 | 249.0 | 260.0 | 267.0 | 248.0 | 267.0 | 264.0 | 268.0 | 354.0 | 358.0 | 334.0 | 344.0 | 10.0 | 357.0 | 262.0 | 231.0 | 230.0 | 229.0 | 229.0 | 227.0 | 231.0 | 302.3 | 358.0 | 10.0 |
| 18 | 229.0 | 231.0 | 230.0 | 230.0 | 225.0 | 225.0 | 229.0 | 228.0 | 236.0 | 243.0 | 235.0 | 256.0 | 264.0 | 250.0 | 233.0 | 240.0 | 252.0 | 250.0 | 235.0 | 233.0 | 232.0 | 215.0 | 227.0 | 218.0 | 235.2 | 264.0 | 215.0 |
| 19 | 229.0 | 230.0 | 231.0 | 223.0 | 231.0 | 260.0 | 231.0 | 235.0 | 235.0 | ***** | ***** | ***** | ***** | ***** | 253.0 | 262.0 | 253.0 | 236.0 | 230.0 | 226.0 | 227.0 | 227.0 | 229.0 | 228.0 | 235.6 | 262.0 | 223.0 |
| 20 | 227.0 | 223.0 | 222.0 | 223.0 | 166.0 | 129.0 | 124.0 | 356.0 | 52.0 | 325.0 | 269.0 | 271.0 | 284.0 | 288.0 | 277.0 | 268.0 | 261.0 | 239.0 | 178.0 | 145.0 | 174.0 | 129.0 | 134.0 | 136.0 | 212.5 | 356.0 | 52.0 |
| 21 | 135.0 | 151.0 | 181.0 | 131.0 | 132.0 | 145.0 | 153.0 | 152.0 | 217.0 | 128.0 | 275.0 | 105.0 | 114.0 | 102.0 | 151.0 | 138.0 | 134.0 | 138.0 | 137.0 | 139.0 | 133.0 | 132.0 | 142.0 | 134.0 | 145.8 | 275.0 | 102.0 |
| 22 | 155.0 | 132.0 | 141.0 | 228.0 | 124.0 | 147.0 | 111.0 | 108.0 | 127.0 | 2.0 | 51.0 | 346.0 | 288.0 | 299.0 | 286.0 | 274.0 | 262.0 | 215.0 | 216.0 | 198.0 | 204.0 | 181.0 | 171.0 | 154.0 | 184.2 | 346.0 | 2.0 |
| 23 | 149.0 | 239.0 | 145.0 | 155.0 | 246.0 | 141.0 | 149.0 | 226.0 | 144.0 | 16.0 | 90.0 | 70.0 | 51.0 | 7.0 | 351.0 | 10.0 | 270.0 | 180.0 | 140.0 | 130.0 | 135.0 | 130.0 | 140.0 | 140.0 | 143.9 | 351.0 | 7.0 |
| 24 | 160.0 | 155.0 | 140.0 | 145.0 | 140.0 | 145.0 | 135.0 | 180.0 | 200.0 | 80.0 | 170.0 | 240.0 | 230.0 | 230.0 | 225.0 | 230.0 | 235.0 | 235.0 | 230.0 | 225.0 | 230.0 | 225.0 | 230.0 | 220.0 | 193.1 | 240.0 | 80.0 |
| 25 | 235.0 | 240.0 | 245.0 | 245.0 | 250.0 | 230.0 | 220.0 | 240.0 | 230.0 | 235.0 | 230.0 | 260.0 | 50.0 | 340.0 | 20.0 | 10.0 | 5.0 | 230.0 | 235.0 | 220.0 | 225.0 | 350.0 | 200.0 | 10.0 | 273.1 | 350.0 | 5.0 |
| 26 | 270.0 | 90.0 | 50.0 | 40.0 | 50.0 | 80.0 | 75.0 | 90.0 | 70.0 | 35.0 | 33.0 | 27.0 | 19.0 | 30.0 | 354.0 | 8.0 | 8.0 | 344.0 | 213.0 | 229.0 | 243.0 | 227.0 | 228.0 | 228.0 | 351.7 | 354.0 | 8.0 |
| 27 | 224.0 | 227.0 | 229.0 | 226.0 | 222.0 | 225.0 | 220.0 | 228.0 | 222.0 | 273.0 | 248.0 | 261.0 | 255.0 | 247.0 | 251.0 | 237.0 | 223.0 | 201.0 | 210.0 | 214.0 | 212.0 | 220.0 | 217.0 | 221.0 | 229.7 | 273.0 | 201.0 |
| 28 | 223.0 | 225.0 | 226.0 | 229.0 | 226.0 | 229.0 | 227.0 | 227.0 | 227.0 | 236.0 | 261.0 | 250.0 | 213.0 | 231.0 | 243.0 | 268.0 | 350.0 | 38.0 | 41.0 | 50.0 | 60.0 | 50.0 | 31.0 | 37.0 | 288.2 | 350.0 | 31.0 |
| 29 | 54.0 | 61.0 | 66.0 | 55.0 | 65.0 | 68.0 | 62.0 | 55.0 | 13.0 | 30.0 | 30.0 | 32.0 | 30.0 | 36.0 | 29.0 | 40.0 | 47.0 | 107.0 | 136.0 | 125.0 | 120.0 | 131.0 | 209.0 | 187.0 | 74.5 | 209.0 | 13.0 |
| 30 | 165.0 | 137.0 | 147.0 | 101.0 | 136.0 | 133.0 | 135.0 | 131.0 | 206.0 | 65.0 | 70.0 | 58.0 | 60.0 | 94.0 | 100.0 | 122.0 | 132.0 | 142.0 | 163.0 | 143.0 | 146.0 | 146.0 | 166.0 | 135.0 | 126.4 | 206.0 | 58.0 |
| 31 | 134.0 | 143.0 | 173.0 | 128.0 | 218.0 | 245.0 | 134.0 | 236.0 | 257.0 | 23.0 | 303.0 | 288.0 | 330.0 | 303.0 | 243.0 | 224.0 | 232.0 | 222.0 | 224.0 | 234.0 | 232.0 | 229.0 | 233.0 | 227.0 | 217.3 | 330.0 | 23.0 |
| Mean | 186.0 | 179.4 | 178.2 | 175.7 | 184.8 | 179.2 | 175.5 | 187.6 | 167.0 | 340.7 | 339.3 | 330.3 | 320.3 | 314.3 | 308.1 | 309.4 | 315.0 | 197.7 | 176.4 | 172.5 | 173.3 | 175.7 | 187.1 | 169.1 | Monthly mean = | | 185.7 |
| Max. | 270.0 | 240.0 | 250.0 | 261.0 | 302.0 | 339.0 | 354.0 | 356.0 | 300.0 | 360.0 | 358.0 | 359.0 | 358.0 | 340.0 | 355.0 | 360.0 | 359.0 | 345.0 | 300.0 | 250.0 | 243.0 | 350.0 | 348.0 | 328.0 | Monthly max. = | | 360.0 |
| Min. | 54.0 | 61.0 | 50.0 | 40.0 | 50.0 | 68.0 | 45.0 | 12.0 | 13.0 | 2.0 | 2.0 | 24.0 | 19.0 | 7.0 | 9.0 | 8.0 | 5.0 | 23.0 | 22.0 | 18.0 | 14.0 | 26.0 | 15.0 | 10.0 | Monthly min. = | | 2.0 |

TOTAL NUMBER OF DATA HOURS IN MONTH: 744
Number of hours of bad or missing data: 5
**** designates missing or lost data

Current % recovery = 99.3

N/A: insufficient data available for calculation (a minimum of 75% is required)

table created at 14:26,10/11/1994

MONTHLY SUMMARY
TEMPERATURE
(Degrees Celsius)
INPUT FILE: od7met.met

Bechtel Environmental, Inc.

Met Data for Site 7
OCTOBER 1993

| Day \ Hour | 1 | 2 | 3 | 4 | 5 | 6 | 7 | 8 | 9 | 10 | 11 | 12 | 13 | 14 | 15 | 16 | 17 | 18 | 19 | 20 | 21 | 22 | 23 | 24 | Mean | Max. | Min. |
|---|---|---|---|---|---|---|---|---|---|---|---|---|---|---|---|---|---|---|---|---|---|---|---|---|---|---|---|
| 1 | 18.0 | 17.0 | 17.0 | 16.0 | 16.0 | 15.0 | 15.0 | 14.0 | 11.0 | 13.0 | 14.0 | 17.0 | 19.0 | 20.0 | 21.0 | 21.0 | 21.0 | 21.0 | 20.0 | 19.0 | 19.0 | 18.0 | 18.0 | 17.0 | 17.4 | 21.0 | 11.0 |
| 2 | 16.0 | 15.0 | 13.0 | 12.0 | 10.0 | 9.0 | 8.0 | 9.0 | 11.0 | 14.0 | 15.0 | 17.0 | 20.0 | 21.0 | 22.0 | 22.0 | 22.0 | 22.0 | 18.0 | 18.0 | 19.0 | 20.0 | 18.0 | 15.0 | 16.1 | 22.0 | 8.0 |
| 3 | 13.0 | 12.0 | 12.0 | 14.0 | 10.0 | 9.0 | 10.0 | 10.0 | 11.0 | 15.0 | 17.0 | 19.0 | 22.0 | 24.0 | 24.0 | 24.0 | 24.0 | 24.0 | 22.0 | 23.0 | 23.0 | 20.0 | 20.0 | 20.0 | 17.6 | 24.0 | 9.0 |
| 4 | 17.0 | 12.0 | 12.0 | 15.0 | 15.0 | 12.0 | 10.0 | 13.0 | 16.0 | 16.0 | 16.5 | 20.1 | 22.9 | 25.1 | 25.1 | 25.8 | 25.5 | 24.3 | 23.0 | 22.9 | 22.2 | 22.2 | 20.2 | 18.6 | 18.8 | 25.8 | 10.0 |
| 5 | 18.3 | 14.6 | 15.0 | 16.0 | 16.8 | 14.5 | 13.3 | 15.5 | 12.8 | 13.7 | 16.8 | 19.6 | 23.4 | 25.1 | 25.8 | 25.2 | 24.6 | 23.5 | 21.7 | 16.7 | 17.2 | 15.2 | 13.7 | 13.6 | 18.0 | 25.8 | 12.8 |
| 6 | 14.1 | 13.4 | 11.6 | 11.7 | 12.0 | 11.3 | 12.5 | 12.6 | 12.7 | 13.6 | 15.1 | 15.5 | 15.6 | 16.5 | 17.2 | 14.6 | 14.2 | 15.2 | 15.1 | 14.5 | 15.4 | 15.3 | 14.0 | 13.0 | 14.0 | 17.2 | 11.3 |
| 7 | 11.8 | 13.7 | 13.5 | 14.4 | 13.6 | 11.7 | 9.9 | 9.5 | 9.0 | 8.4 | 8.9 | 8.9 | 9.0 | 9.7 | 10.5 | 10.7 | 11.1 | 10.2 | 9.0 | 8.2 | 7.4 | 6.4 | 6.0 | 5.8 | 9.9 | 14.4 | 5.8 |
| 8 | 5.5 | 5.2 | 4.9 | 4.4 | 3.9 | 2.8 | 2.5 | 2.2 | 2.3 | 3.0 | 3.5 | 4.3 | 4.8 | 5.0 | 5.8 | 5.9 | 5.6 | 5.8 | 5.3 | 4.6 | 4.1 | 3.6 | 2.8 | 2.0 | 4.2 | 5.9 | 2.0 |
| 9 | 2.1 | 1.7 | 2.0 | 2.0 | 2.3 | 2.4 | 2.5 | 2.6 | 2.7 | 3.6 | 4.6 | 5.8 | 6.3 | 6.6 | 6.6 | 6.6 | 6.4 | 7.2 | 6.8 | 7.0 | 6.7 | 7.0 | 6.7 | 7.0 | 4.8 | 7.2 | 1.7 |
| 10 | 7.6 | 7.4 | 6.8 | 6.1 | 5.8 | 5.6 | 5.3 | 5.7 | 5.5 | 8.2 | 9.9 | 11.7 | 13.0 | 14.3 | 13.8 | 14.4 | 14.0 | 13.0 | 11.8 | 11.4 | 11.0 | 10.5 | 10.2 | 10.3 | 9.7 | 14.4 | 5.3 |
| 11 | 9.6 | 8.8 | 8.3 | 8.4 | 7.5 | 8.3 | 6.7 | 6.5 | 6.1 | 6.7 | 7.5 | 8.9 | 10.2 | 11.0 | 11.3 | 10.8 | 9.6 | 8.6 | 8.3 | 8.4 | 8.4 | 8.2 | 7.8 | 7.7 | 8.5 | 11.3 | 6.1 |
| 12 | 7.8 | 8.3 | 8.2 | 7.8 | 7.4 | 7.5 | 8.4 | 8.7 | 8.8 | 9.0 | 9.3 | 10.0 | 11.2 | 12.0 | 11.0 | 13.0 | 13.0 | 12.0 | 11.0 | 11.0 | 10.0 | 10.0 | 10.0 | 10.0 | 9.8 | 13.0 | 7.4 |
| 13 | 10.0 | 10.0 | 10.0 | 10.0 | 9.0 | 9.0 | 8.0 | 8.0 | 10.0 | 11.0 | 12.0 | 12.0 | 13.0 | 14.0 | 13.4 | 14.4 | 14.7 | 13.2 | 12.3 | 11.0 | 10.5 | 10.1 | 9.7 | 9.0 | 11.0 | 14.7 | 8.0 |
| 14 | 8.0 | 7.0 | 7.0 | 8.0 | 8.0 | 8.0 | 8.0 | 9.0 | 9.0 | 10.0 | 10.0 | 11.0 | 12.0 | 12.6 | 12.8 | 13.3 | 13.2 | 12.5 | 10.2 | 11.0 | 10.0 | 9.0 | 9.0 | 8.0 | 9.9 | 13.3 | 7.0 |
| 15 | 9.0 | 10.0 | 8.0 | 7.0 | 7.0 | 7.0 | 6.0 | 7.0 | 8.7 | 6.4 | 6.3 | 6.1 | 6.3 | 7.2 | 8.1 | 8.4 | 8.1 | 8.1 | 8.3 | 8.1 | 7.8 | 7.5 | 7.7 | 7.8 | 7.6 | 10.0 | 6.0 |
| 16 | 8.0 | 7.9 | 7.2 | 6.9 | 6.8 | 6.6 | 6.0 | 4.4 | 5.7 | 4.3 | 5.8 | 7.3 | 3.9 | 4.1 | 5.3 | 5.5 | 5.8 | 5.5 | 5.3 | 5.0 | 4.9 | 5.9 | 5.4 | 5.0 | 5.8 | 8.0 | 3.9 |
| 17 | 6.3 | 5.4 | 5.1 | 3.8 | 3.2 | 2.0 | 1.0 | 1.5 | 2.3 | 2.2 | 3.8 | 7.1 | 8.8 | 10.5 | 11.9 | 11.7 | 11.8 | 11.1 | 9.8 | 8.6 | 7.8 | 7.1 | 6.8 | 6.4 | 6.5 | 11.9 | 1.0 |
| 18 | 6.1 | 5.8 | 5.4 | 5.1 | 4.9 | 4.6 | 4.2 | 4.2 | 4.4 | 4.6 | 5.4 | 6.6 | 7.6 | 7.5 | 7.3 | 8.0 | 8.8 | 8.2 | 7.9 | 7.5 | 7.4 | 7.0 | 7.1 | 6.9 | 6.4 | 8.8 | 4.2 |
| 19 | 6.8 | 6.6 | 6.4 | 6.5 | 6.4 | 5.0 | 5.7 | 5.8 | 5.8 | ***** | ***** | ***** | ***** | ***** | 11.4 | 11.4 | 11.5 | 10.5 | 9.6 | 9.0 | 8.6 | 7.8 | 6.9 | 6.1 | 7.8 | 11.5 | 5.0 |
| 20 | 5.6 | 5.5 | 5.2 | 4.4 | 3.7 | 3.4 | 3.1 | 2.9 | 4.7 | 4.6 | 6.5 | 7.9 | 8.9 | 9.7 | 10.6 | 11.3 | 11.5 | 10.4 | 10.0 | 9.7 | 9.5 | 8.5 | 8.1 | 7.2 | 7.2 | 11.5 | 2.9 |
| 21 | 7.1 | 6.1 | 4.9 | 4.4 | 4.6 | 6.0 | 4.5 | 3.8 | 3.9 | 8.0 | 9.4 | 12.2 | 13.7 | 14.8 | 15.4 | 15.1 | 14.2 | 13.0 | 12.6 | 12.4 | 11.8 | 10.8 | 10.2 | 9.8 | 9.5 | 15.4 | 3.8 |
| 22 | 9.3 | 9.1 | 9.5 | 7.5 | 7.3 | 7.7 | 6.8 | 6.7 | 9.4 | 10.3 | 11.9 | 14.2 | 15.5 | 16.7 | 17.2 | 17.1 | 16.8 | 16.1 | 15.7 | 15.7 | 15.5 | 14.3 | 13.9 | 13.0 | 12.4 | 17.2 | 6.7 |
| 23 | 12.9 | 9.8 | 9.9 | 10.1 | 7.9 | 9.4 | 9.3 | 7.9 | 9.2 | 11.7 | 13.0 | 15.0 | 16.6 | 18.2 | 19.5 | 18.0 | 17.0 | 16.0 | 15.0 | 15.0 | 14.0 | 13.0 | 13.0 | 13.0 | 13.1 | 19.5 | 7.9 |
| 24 | 12.0 | 11.0 | 11.0 | 11.0 | 11.0 | 11.0 | 11.0 | 11.0 | 10.0 | 14.0 | 15.0 | 15.0 | 16.0 | 17.0 | 15.0 | 15.0 | 14.0 | 13.0 | 12.0 | 11.0 | 11.0 | 10.0 | 10.0 | 9.0 | 12.3 | 17.0 | 9.0 |
| 25 | 9.0 | 9.0 | 8.0 | 8.0 | 7.0 | 7.0 | 7.0 | 7.0 | 7.0 | 8.0 | 9.0 | 10.0 | 11.0 | 11.0 | 11.0 | 11.0 | 10.0 | 7.0 | 9.0 | 8.0 | 8.0 | 6.0 | 5.0 | 4.0 | 8.2 | 11.0 | 4.0 |
| 26 | 3.0 | 2.0 | 2.0 | 2.0 | 2.0 | 1.0 | 1.0 | 2.0 | 3.0 | 4.0 | 5.9 | 7.1 | 8.3 | 9.2 | 10.0 | 10.2 | 10.2 | 8.3 | 7.5 | 8.4 | 8.0 | 7.8 | 7.1 | 6.4 | 5.7 | 10.2 | 1.0 |
| 27 | 6.5 | 6.6 | 6.5 | 6.3 | 6.4 | 6.2 | 6.0 | 5.8 | 7.1 | 7.6 | 8.5 | 8.5 | 8.5 | 9.6 | 11.0 | 11.9 | 11.4 | 11.3 | 11.5 | 11.5 | 11.5 | 11.1 | 10.9 | 10.9 | 8.9 | 11.9 | 5.8 |
| 28 | 10.9 | 10.5 | 10.1 | 9.9 | 9.5 | 9.0 | 8.6 | 8.6 | 8.4 | 8.5 | 7.9 | 6.0 | 7.3 | 9.4 | 9.7 | 10.1 | 9.5 | 5.6 | 4.7 | 3.5 | 2.1 | .7 | -1.0 | -2.0 | 7.0 | 10.9 | -2.0 |
| 29 | -2.7 | -3.6 | -4.0 | -3.4 | -3.4 | -3.8 | -5.4 | -5.3 | -5.4 | -3.2 | -1.6 | -1.6 | 1.0 | 1.3 | 1.8 | 2.7 | 2.6 | 1.9 | 2.1 | 2.2 | 2.2 | 2.3 | .5 | -1.0 | -1.0 | 2.7 | -5.4 |
| 30 | -.7 | -.3 | -.4 | -.9 | .5 | -1.7 | -2.7 | -3.3 | -.7 | .5 | 2.1 | 4.3 | 6.8 | 8.9 | 11.0 | 10.8 | 9.8 | 8.2 | 6.7 | 5.4 | 4.9 | 4.5 | 3.5 | 2.4 | 3.3 | 11.0 | -3.3 |
| 31 | 3.0 | 2.3 | 1.0 | .8 | .3 | -.9 | -.2 | -.3 | -2.3 | 1.3 | 3.7 | 5.2 | 8.3 | 10.7 | 11.2 | 11.7 | 11.0 | 10.4 | 9.3 | 7.6 | 6.3 | 5.9 | 4.9 | 4.1 | 4.8 | 11.7 | -2.3 |
| Mean | 8.7 | 8.1 | 7.6 | 7.6 | 7.2 | 6.6 | 6.2 | 6.3 | 6.7 | 7.9 | 9.1 | 10.4 | 11.7 | 12.8 | 13.2 | 13.3 | 13.0 | 12.2 | 11.3 | 10.8 | 10.5 | 9.9 | 9.2 | 8.6 | Monthly mean = | | 9.5 |
| Max. | 18.3 | 17.0 | 17.0 | 16.0 | 16.8 | 15.0 | 15.0 | 15.5 | 16.0 | 16.0 | 17.0 | 20.1 | 23.4 | 25.1 | 25.8 | 25.8 | 25.5 | 24.3 | 23.0 | 23.0 | 23.0 | 22.2 | 20.2 | 20.0 | Monthly max. = | | 25.8 |
| Min. | -2.7 | -3.6 | -4.0 | -3.4 | -3.4 | -3.8 | -5.4 | -5.3 | -5.4 | -3.2 | -1.6 | -1.6 | 1.0 | 1.3 | 1.8 | 2.7 | 2.6 | 1.9 | 2.1 | 2.2 | 2.1 | .7 | -1.0 | -2.0 | Monthly min. = | | -5.4 |

TOTAL NUMBER OF DATA HOURS IN MONTH: 744
Number of hours of bad or missing data: 5
**** designates missing or lost data

Current % recovery = 99.3

N/A: insufficient data available for calculation (a minimum of 75% is required)

table created at 14:26,10/11/1994

MONTHLY SUMMARY
SIGMA THETA
(Degrees)
INPUT FILE: od7met.met

Bechtel Environmental, Inc.

Met Data for Site 7
OCTOBER 1993

| Day | Hour 1 | 2 | 3 | 4 | 5 | 6 | 7 | 8 | 9 | 10 | 11 | 12 | 13 | 14 | 15 | 16 | 17 | 18 | 19 | 20 | 21 | 22 | 23 | 24 | Mean | Max. | Min. |
|---|---|---|---|---|---|---|---|---|---|---|---|---|---|---|---|---|---|---|---|---|---|---|---|---|---|---|---|
| 1 | ***** | ***** | ***** | ***** | ***** | ***** | ***** | ***** | ***** | ***** | ***** | ***** | ***** | ***** | ***** | ***** | ***** | ***** | ***** | ***** | ***** | ***** | ***** | ***** | N/A | ***** | ***** |
| 2 | ***** | ***** | ***** | ***** | ***** | ***** | ***** | ***** | ***** | ***** | ***** | ***** | ***** | ***** | ***** | ***** | ***** | ***** | ***** | ***** | ***** | ***** | ***** | ***** | N/A | ***** | ***** |
| 3 | ***** | ***** | ***** | ***** | ***** | ***** | ***** | ***** | ***** | ***** | ***** | ***** | ***** | ***** | ***** | ***** | ***** | ***** | ***** | ***** | ***** | ***** | ***** | ***** | N/A | ***** | ***** |
| 4 | ***** | ***** | ***** | ***** | ***** | ***** | ***** | ***** | ***** | ***** | 29. | 17. | 32. | 57. | 22. | 23. | 24. | 14. | 9. | 6. | 7. | 4. | 15. | 14. | N/A | 57. | 4. |
| 5 | 7. | 7. | 6. | 5. | 44. | 82. | 73. | 46. | 40. | 52. | 29. | 20. | 21. | 70. | 22. | 13. | 12. | 6. | 14. | 9. | 57. | 13. | 23. | 62. | N/A | 82. | 5. |
| 6 | 57. | 15. | 25. | 13. | 22. | 31. | 8. | 9. | 45. | 14. | 18. | 11. | 12. | 17. | 23. | 24. | 17. | 19. | 19. | 7. | 7. | 9. | 65. | 55. | N/A | 65. | 7. |
| 7 | 29. | 39. | 45. | 10. | 10. | 10. | 9. | 10. | 13. | 15. | 13. | 15. | 13. | 14. | 12. | 15. | 11. | 14. | 15. | 13. | 11. | 10. | 9. | 8. | N/A | 45. | 8. |
| 8 | 10. | 14. | 16. | 15. | 12. | 16. | 14. | 9. | 11. | 11. | 11. | 22. | 19. | 28. | 10. | 9. | 10. | 11. | 10. | 13. | 14. | 15. | 11. | 56. | N/A | 56. | 9. |
| 9 | 61. | 10. | 17. | 14. | 7. | 15. | 22. | 20. | 14. | 18. | 20. | 27. | 16. | 18. | 15. | 28. | 11. | 23. | 25. | 18. | 7. | 5. | 9. | 12. | N/A | 61. | 5. |
| 10 | 19. | 15. | 23. | 7. | 6. | 5. | 5. | 27. | 43. | 34. | 18. | 48. | 47. | 74. | 49. | 38. | 16. | 16. | 22. | 9. | 7. | 6. | 5. | 6. | N/A | 74. | 5. |
| 11 | 5. | 56. | 29. | 6. | 7. | 8. | 7. | 9. | 65. | 12. | 14. | 16. | 36. | 37. | 28. | 22. | 12. | 7. | 10. | 8. | 40. | 33. | 27. | 27. | N/A | 65. | 5. |
| 12 | 20. | 10. | 13. | 13. | 8. | 7. | 7. | 9. | 10. | 13. | 16. | 13. | 16. | ***** | ***** | ***** | ***** | ***** | ***** | ***** | ***** | ***** | ***** | ***** | N/A | 20. | 7. |
| 13 | ***** | ***** | ***** | ***** | ***** | ***** | ***** | ***** | ***** | ***** | ***** | ***** | ***** | 14. | 20. | 31. | 16. | 8. | 8. | 26. | 14. | 12. | 16. | ***** | N/A | 31. | 8. |
| 14 | ***** | ***** | ***** | ***** | ***** | ***** | ***** | ***** | ***** | ***** | ***** | ***** | ***** | 9. | 12. | 16. | 16. | 20. | 23. | ***** | ***** | ***** | ***** | ***** | N/A | 23. | 9. |
| 15 | ***** | ***** | ***** | ***** | ***** | ***** | ***** | ***** | 50. | 8. | 13. | 15. | 11. | 14. | 13. | 13. | 11. | 17. | 10. | 8. | 10. | 15. | 10. | 10. | N/A | 50. | 8. |
| 16 | 10. | 10. | 13. | 14. | 9. | 10. | 27. | 18. | 54. | 12. | 32. | 22. | 19. | 19. | 15. | 10. | 9. | 12. | 19. | 7. | 5. | 13. | 29. | 64. | N/A | 64. | 5. |
| 17 | 20. | 50. | 41. | 54. | 20. | 15. | 19. | 40. | 45. | 9. | 17. | 28. | 18. | 30. | 18. | 14. | 12. | 15. | 9. | 8. | 7. | 7. | 9. | 8. | N/A | 54. | 7. |
| 18 | 7. | 8. | 9. | 8. | 8. | 6. | 7. | 8. | 10. | 11. | 14. | 12. | 13. | 13. | 11. | 15. | 13. | 13. | 12. | 10. | 11. | 8. | 10. | 9. | N/A | 15. | 6. |
| 19 | 10. | 11. | 12. | 11. | 13. | 47. | 15. | 15. | 15. | ***** | ***** | ***** | ***** | ***** | 14. | 10. | 14. | 12. | 9. | 8. | 7. | 7. | 7. | 8. | N/A | 47. | 7. |
| 20 | 7. | 8. | 8. | 10. | 22. | 63. | 41. | 40. | 57. | 31. | 20. | 11. | 15. | 17. | 17. | 17. | 13. | 10. | 9. | 5. | 17. | 27. | 5. | 5. | N/A | 63. | 5. |
| 21 | 4. | 20. | 43. | 36. | 29. | 12. | 40. | 32. | 44. | 17. | 30. | 57. | 16. | 37. | 30. | 25. | 7. | 6. | 5. | 6. | 6. | 5. | 29. | 11. | N/A | 57. | 4. |
| 22 | 44. | 5. | 17. | 42. | 16. | 38. | 41. | 49. | 38. | 44. | 18. | 30. | 39. | 30. | 25. | 13. | 12. | 7. | 10. | 7. | 8. | 13. | 15. | 36. | N/A | 49. | 5. |
| 23 | 17. | 52. | 27. | 27. | 36. | 38. | 16. | 56. | 48. | 72. | 16. | 22. | 29. | 29. | ***** | ***** | ***** | ***** | ***** | ***** | ***** | ***** | ***** | ***** | N/A | 72. | 16. |
| 24 | ***** | ***** | ***** | ***** | ***** | ***** | ***** | ***** | ***** | ***** | ***** | ***** | ***** | ***** | ***** | ***** | ***** | ***** | ***** | ***** | ***** | ***** | ***** | ***** | N/A | ***** | ***** |
| 25 | ***** | ***** | ***** | ***** | ***** | ***** | ***** | ***** | ***** | ***** | ***** | ***** | ***** | ***** | ***** | ***** | ***** | ***** | ***** | ***** | ***** | ***** | ***** | ***** | N/A | ***** | ***** |
| 26 | ***** | ***** | ***** | ***** | ***** | ***** | ***** | ***** | ***** | ***** | 7. | 11. | 12. | 9. | 14. | 24. | 19. | 34. | 21. | 9. | 12. | 10. | 9. | 9. | N/A | 34. | 7. |
| 27 | 10. | 11. | 10. | 11. | 11. | 12. | 13. | 13. | 23. | 28. | 58. | 13. | 16. | 18. | 14. | 17. | 19. | 16. | 14. | 14. | 14. | 12. | 13. | 13. | N/A | 58. | 10. |
| 28 | 10. | 10. | 10. | 10. | 9. | 10. | 9. | 8. | 8. | 12. | 10. | 19. | 22. | 24. | 14. | 8. | 24. | 9. | 9. | 9. | 19. | 21. | 10. | 8. | N/A | 24. | 8. |
| 29 | 9. | 11. | 12. | 8. | 11. | 14. | 13. | 16. | 11. | 10. | 9. | 24. | 11. | 15. | 13. | 14. | 13. | 9. | 7. | 7. | 10. | 6. | 37. | 35. | N/A | 37. | 6. |
| 30 | 29. | 5. | 33. | 18. | 11. | 26. | 36. | 17. | 40. | 48. | 15. | 15. | 23. | 18. | 53. | 15. | 22. | 26. | 17. | 35. | 5. | 9. | 19. | 52. | N/A | 53. | 5. |
| 31 | 6. | 40. | 26. | 30. | 21. | 55. | 48. | 38. | 13. | 45. | 19. | 18. | 37. | 45. | 21. | 14. | 15. | 10. | 9. | 13. | 12. | 10. | 11. | 9. | N/A | 55. | 6. |
| Mean | N/A | N/A | N/A | N/A | N/A | N/A | N/A | N/A | N/A | N/A | N/A | N/A | N/A | N/A | N/A | N/A | N/A | N/A | N/A | N/A | N/A | N/A | N/A | N/A | Monthly mean = | | N/A |
| Max. | 61. | 56. | 45. | 54. | 44. | 82. | 73. | 56. | 65. | 72. | 58. | 57. | 47. | 74. | 53. | 38. | 24. | 34. | 25. | 35. | 57. | 33. | 65. | 64. | Monthly max. = | | 82. |
| Min. | 4. | 5. | 6. | 5. | 6. | 5. | 5. | 8. | 8. | 8. | 7. | 11. | 11. | 9. | 10. | 8. | 7. | 6. | 5. | 5. | 5. | 4. | 5. | 5. | Monthly min. = | | 4. |

TOTAL NUMBER OF DATA HOURS IN MONTH: 744
Number of hours of bad or missing data: 206
**** designates missing or lost data

Current % recovery = 72.3

N/A: A sigma theta mean is not physically meaningful.

table created at 14:26,10/11/1994

MONTHLY SUMMARY
WIND SPEED
(Miles Per Hour)
INPUT FILE: od7met.met

Bechtel Environmental, Inc.

Met Data for Site 7
NOVEMBER 1993

| Day \ Hour | 1 | 2 | 3 | 4 | 5 | 6 | 7 | 8 | 9 | 10 | 11 | 12 | 13 | 14 | 15 | 16 | 17 | 18 | 19 | 20 | 21 | 22 | 23 | 24 | Mean | Max. | Min. |
|---|---|---|---|---|---|---|---|---|---|---|---|---|---|---|---|---|---|---|---|---|---|---|---|---|---|---|---|
| 1 | 28.4 | 28.3 | 26.3 | 27.3 | 27.2 | 23.6 | 24.1 | 30.0 | 23.1 | 20.4 | 17.2 | 11.8 | 11.3 | 13.1 | 14.9 | 13.5 | 11.9 | 11.5 | 13.9 | 11.2 | 12.4 | 14.9 | 22.2 | 24.5 | 19.3 | 30.0 | 11.2 |
| 2 | 24.3 | 22.5 | 18.9 | 15.4 | 16.3 | 15.4 | 14.0 | 15.2 | 15.4 | 13.6 | 14.4 | 18.1 | 19.1 | 19.4 | 19.7 | 17.6 | 11.3 | 14.1 | 11.4 | 11.2 | 12.3 | 13.0 | 12.1 | 12.9 | 15.7 | 24.3 | 11.2 |
| 3 | 15.7 | 17.3 | 14.6 | 15.4 | 14.8 | 17.5 | 18.9 | 17.9 | 20.1 | 23.7 | 30.4 | 34.0 | 31.5 | 32.6 | 34.4 | 36.3 | 42.3 | 35.1 | 29.4 | 25.1 | 23.7 | 23.4 | 6.8 | 6.8 | 23.7 | 42.3 | 6.8 |
| 4 | 9.8 | 9.6 | 6.3 | 19.1 | 19.5 | 25.3 | 24.6 | 26.9 | 28.2 | 25.7 | 20.1 | 19.9 | 19.5 | 18.6 | 19.1 | 17.7 | 16.1 | 11.1 | 9.7 | 6.3 | 9.2 | 5.0 | 5.0 | 2.4 | 15.6 | 28.2 | 2.4 |
| 5 | 9.1 | 13.7 | 12.7 | 9.1 | 5.2 | 8.7 | 11.9 | 16.1 | 14.0 | 13.2 | 11.5 | 11.8 | 11.7 | 8.2 | 8.8 | ***** | ***** | 18.1 | 19.3 | 20.5 | 20.1 | 12.4 | 16.0 | 13.7 | 13.0 | 20.5 | 5.2 |
| 6 | 12.7 | 10.9 | 10.8 | 8.5 | 9.3 | 9.2 | 2.9 | 5.5 | 5.7 | 4.2 | 3.4 | 7.8 | 15.5 | 19.4 | 20.1 | 19.2 | 18.1 | 15.6 | 16.0 | 9.9 | 11.5 | 15.2 | 14.0 | 11.2 | 11.5 | 20.1 | 2.9 |
| 7 | 4.3 | 7.9 | 6.2 | 7.9 | 4.7 | 4.0 | 4.3 | 7.4 | 4.5 | 2.9 | 6.7 | 13.8 | 13.9 | 15.0 | 17.9 | 17.6 | 12.0 | 13.2 | 14.0 | 13.8 | 14.5 | 13.8 | 12.4 | 10.1 | 10.1 | 17.9 | 2.9 |
| 8 | 10.4 | 11.0 | 10.7 | 10.2 | 7.9 | 3.6 | 2.8 | 3.2 | 2.1 | 2.7 | 2.5 | 4.8 | 9.3 | 9.8 | 13.9 | 15.7 | 13.1 | 11.5 | 11.6 | 11.7 | 12.2 | 10.4 | 5.3 | 8.6 | 8.5 | 15.7 | 2.1 |
| 9 | 5.6 | 2.2 | 7.1 | 6.1 | 2.5 | 3.0 | 4.3 | 4.3 | 7.3 | 9.9 | 4.9 | 5.6 | 7.6 | 6.0 | 4.8 | 4.8 | 3.9 | 10.1 | 13.4 | 18.0 | 16.7 | 11.7 | 11.4 | 10.0 | 7.5 | 18.0 | 2.2 |
| 10 | 7.1 | 2.7 | 5.2 | 4.2 | 3.4 | 2.5 | 3.1 | 4.6 | 5.1 | 4.1 | 3.7 | 5.2 | 3.1 | 3.6 | 7.8 | 4.5 | 3.5 | 2.8 | 2.3 | 3.1 | 4.3 | 2.5 | 6.3 | 5.4 | 4.2 | 7.8 | 2.3 |
| 11 | 2.6 | 2.7 | 3.1 | 1.7 | 2.8 | 2.5 | 2.4 | 1.6 | 3.5 | 2.7 | 2.9 | 3.1 | 4.3 | 4.7 | 7.2 | 7.0 | 4.4 | 3.5 | 8.5 | 18.7 | 20.3 | 23.2 | 23.3 | 17.0 | 7.2 | 23.3 | 1.6 |
| 12 | 19.9 | 22.1 | 26.1 | 27.7 | 25.1 | 22.4 | 20.3 | 17.5 | 15.7 | 18.7 | 17.8 | 17.1 | 16.0 | 16.4 | 17.7 | 18.8 | 21.5 | 24.0 | 26.5 | 28.9 | 24.4 | 22.1 | 20.7 | 23.7 | 21.3 | 28.9 | 15.7 |
| 13 | 27.0 | 27.7 | 28.2 | 28.3 | 26.4 | 25.3 | 23.9 | 21.2 | 20.1 | 17.0 | 14.7 | 14.7 | 9.9 | 8.7 | 12.2 | 13.1 | 9.4 | 4.0 | 4.5 | 5.3 | 6.9 | 7.9 | 6.6 | 5.2 | 15.3 | 28.3 | 4.0 |
| 14 | 8.7 | 6.7 | 2.7 | 5.3 | 5.8 | 6.5 | 10.2 | 9.4 | 7.7 | 8.1 | 9.3 | 10.0 | 9.3 | 8.9 | 7.9 | 7.2 | 13.2 | 20.0 | 23.0 | 22.4 | 21.7 | 19.6 | 19.2 | 16.4 | 11.6 | 23.0 | 2.7 |
| 15 | 16.1 | 14.1 | 13.5 | 10.7 | 6.8 | 6.5 | 5.4 | 4.8 | 2.7 | 2.7 | 2.7 | 3.1 | 8.3 | 10.4 | 11.3 | 10.9 | 11.0 | 9.2 | 8.8 | 8.7 | 7.1 | 8.4 | 13.1 | 13.9 | 8.8 | 16.1 | 2.7 |
| 16 | 13.5 | 15.7 | 17.9 | 16.5 | 12.7 | 15.6 | 19.3 | 16.9 | 15.3 | 12.6 | 15.1 | 13.6 | 9.4 | 10.0 | 10.2 | 9.1 | 11.1 | 13.1 | 15.0 | 18.1 | 21.3 | 23.6 | 21.7 | 20.0 | 15.3 | 23.6 | 9.1 |
| 17 | 17.9 | 7.8 | 5.5 | 13.0 | 12.3 | 14.2 | 12.2 | 12.3 | 13.4 | 10.5 | 5.3 | 3.8 | 6.8 | 11.7 | 16.7 | 14.7 | 17.1 | 17.4 | 18.1 | 18.2 | 16.4 | 15.8 | 14.4 | 21.3 | 13.2 | 21.3 | 3.8 |
| 18 | 18.3 | 21.8 | 23.9 | 24.3 | 23.6 | 23.3 | 21.4 | 23.4 | 27.8 | 28.9 | 31.1 | 36.5 | 35.6 | 35.0 | 35.4 | 18.6 | 12.7 | 9.6 | 7.1 | 8.3 | 11.9 | 14.4 | 15.6 | 19.8 | 22.0 | 36.5 | 7.1 |
| 19 | 20.9 | 21.3 | 17.0 | 10.5 | 11.4 | 6.3 | 3.4 | 4.0 | 7.2 | 8.8 | 9.1 | 12.9 | 15.1 | 16.5 | 17.9 | 16.1 | 10.2 | 7.1 | 7.1 | 6.7 | 6.6 | 7.4 | 6.5 | 8.8 | 10.8 | 21.3 | 3.4 |
| 20 | 6.3 | 9.6 | 6.0 | 6.6 | 7.4 | 12.2 | 2.4 | 3.0 | 5.0 | 6.8 | 4.8 | 5.9 | 4.6 | 4.1 | 3.1 | 3.1 | 6.6 | 8.5 | 9.3 | 10.7 | 13.1 | 15.8 | 17.4 | 18.9 | 8.0 | 18.9 | 2.4 |
| 21 | 19.9 | 17.4 | 15.6 | 15.5 | 17.8 | 17.7 | 18.2 | 9.5 | 8.0 | 6.9 | 11.0 | 11.4 | 18.6 | 14.3 | 13.1 | 17.9 | 16.7 | 15.5 | 17.8 | 15.1 | 20.3 | 23.8 | 24.4 | 27.5 | 16.4 | 27.5 | 6.9 |
| 22 | 24.9 | 24.0 | 13.1 | 10.1 | 18.9 | 21.5 | 19.8 | 20.7 | 23.2 | 23.4 | 21.0 | 19.8 | 20.2 | 22.8 | 28.3 | 27.9 | 21.8 | 16.2 | 23.2 | 34.4 | 28.5 | 22.5 | 24.1 | 18.4 | 22.0 | 34.4 | 10.1 |
| 23 | 25.0 | 32.7 | 31.7 | 25.9 | 26.5 | 23.0 | 20.9 | 22.2 | 28.4 | 22.1 | 17.0 | 23.7 | 23.0 | 23.8 | 25.2 | 22.3 | 15.9 | 18.5 | 22.8 | 17.6 | 23.2 | 19.4 | 16.6 | 19.1 | 22.8 | 32.7 | 15.9 |
| 24 | 19.3 | 18.2 | 18.4 | 21.1 | 22.3 | 25.1 | 29.0 | 26.7 | 26.2 | 29.4 | 27.0 | 24.4 | 19.1 | 19.4 | 17.9 | 14.7 | 13.2 | 8.3 | 4.2 | 1.8 | 4.0 | 2.6 | 2.5 | 2.2 | 16.5 | 29.4 | 1.8 |
| 25 | 3.2 | 2.2 | 2.6 | 1.4 | 5.1 | 4.1 | 3.9 | 2.6 | 4.2 | 2.9 | 4.2 | 4.9 | 4.2 | 4.0 | 4.2 | 6.9 | 7.7 | 3.2 | 4.4 | 5.7 | 4.1 | 1.9 | 1.6 | 2.3 | 3.8 | 7.7 | 1.4 |
| 26 | 1.5 | 2.7 | 1.6 | 5.3 | 4.0 | 6.8 | 6.6 | 9.7 | 9.3 | 9.8 | 3.7 | 2.3 | 3.0 | 3.0 | 3.0 | 4.4 | 5.6 | 3.0 | 5.1 | 3.3 | 2.8 | 1.6 | 1.6 | 5.4 | 4.4 | 9.8 | 1.5 |
| 27 | 3.1 | 3.5 | 6.8 | 4.7 | 4.5 | 4.4 | 10.9 | 4.1 | 8.7 | 6.1 | 3.1 | 5.9 | 6.3 | 5.0 | 3.7 | 4.3 | 6.2 | 3.5 | 4.4 | 5.7 | 4.2 | 3.0 | 6.5 | 8.1 | 5.3 | 10.9 | 3.0 |
| 28 | 7.0 | 3.9 | 7.1 | 4.5 | 9.4 | 9.7 | 9.5 | 7.7 | 9.6 | 5.3 | 3.4 | 4.0 | 3.9 | 3.8 | 6.4 | 2.8 | 3.4 | 5.6 | 9.0 | 21.9 | 3.8 | 4.4 | 3.3 | 5.5 | 6.5 | 21.9 | 2.8 |
| 29 | 7.3 | 7.7 | 6.1 | 6.2 | 9.6 | 9.6 | 10.0 | 8.2 | 13.3 | 14.8 | 14.0 | 12.4 | 9.6 | 15.5 | 8.0 | 2.0 | 5.5 | 14.7 | 13.8 | 13.0 | 8.5 | 8.4 | 3.9 | 6.9 | 9.5 | 15.5 | 2.0 |
| 30 | 7.3 | 11.0 | 7.9 | 6.6 | 7.6 | 14.1 | 7.1 | 3.3 | 7.4 | 17.9 | 27.0 | 20.8 | 21.3 | 19.9 | 19.8 | 24.0 | 25.4 | 25.8 | 32.3 | 34.5 | 35.5 | 34.0 | 33.8 | 32.9 | 19.9 | 35.5 | 3.3 |
| Mean | 13.2 | 13.3 | 12.5 | 12.3 | 12.4 | 12.8 | 12.3 | 12.0 | 12.7 | 12.5 | 12.0 | 12.8 | 13.0 | 13.5 | 14.4 | 13.5 | 12.8 | 12.5 | 13.5 | 14.3 | 14.0 | 13.4 | 12.9 | 13.3 | Monthly mean = | | 13.0 |
| Max. | 28.4 | 32.7 | 31.7 | 28.3 | 27.2 | 25.3 | 29.0 | 30.0 | 28.4 | 29.4 | 31.1 | 36.5 | 35.6 | 35.0 | 35.4 | 36.3 | 42.3 | 35.1 | 32.3 | 34.5 | 35.5 | 34.0 | 33.8 | 32.9 | Monthly max. = | | 42.3 |
| Min. | 1.5 | 2.2 | 1.6 | 1.4 | 2.5 | 2.5 | 2.4 | 1.6 | 2.1 | 2.7 | 2.5 | 2.3 | 3.0 | 3.0 | 3.0 | 2.0 | 3.4 | 2.8 | 2.3 | 1.8 | 2.8 | 1.6 | 1.6 | 2.2 | Monthly min. = | | 1.4 |

TOTAL NUMBER OF DATA HOURS IN MONTH: 720
Number of hours of bad or missing data: 2
**** designates missing or lost data

Current % recovery = 99.7

N/A: insufficient data available for calculation (a minimum of 75% is required)

table created at 14:26,10/11/1994

MONTHLY SUMMARY
WIND DIRECTION
(Degrees)
INPUT FILE: od7met.met

Bechtel Environmental, Inc.

Met Data for Site 7
NOVEMBER 1993

| Day | Hour 1 | 2 | 3 | 4 | 5 | 6 | 7 | 8 | 9 | 10 | 11 | 12 | 13 | 14 | 15 | 16 | 17 | 18 | 19 | 20 | 21 | 22 | 23 | 24 | Mean | Max. | Min. |
|---|---|---|---|---|---|---|---|---|---|---|---|---|---|---|---|---|---|---|---|---|---|---|---|---|---|---|---|
| 1 | 231.0 | 229.0 | 232.0 | 230.0 | 227.0 | 233.0 | 229.0 | 230.0 | 231.0 | 239.0 | 247.0 | 262.0 | 269.0 | 259.0 | 257.0 | 254.0 | 244.0 | 236.0 | 251.0 | 246.0 | 237.0 | 228.0 | 228.0 | 225.0 | 239.8 | 269.0 | 225.0 |
| 2 | 226.0 | 230.0 | 226.0 | 221.0 | 224.0 | 225.0 | 228.0 | 221.0 | 220.0 | 225.0 | 239.0 | 244.0 | 239.0 | 239.0 | 246.0 | 250.0 | 233.0 | 227.0 | 204.0 | 196.0 | 196.0 | 161.0 | 194.0 | 186.0 | 220.8 | 250.0 | 161.0 |
| 3 | 159.0 | 193.0 | 181.0 | 181.0 | 157.0 | 199.0 | 202.0 | 204.0 | 209.0 | 217.0 | 226.0 | 220.0 | 242.0 | 240.0 | 256.0 | 250.0 | 253.0 | 253.0 | 237.0 | 243.0 | 241.0 | 260.0 | 350.0 | 40.0 | 217.2 | 350.0 | 40.0 |
| 4 | 42.0 | 100.0 | 232.0 | 222.0 | 225.0 | 226.0 | 227.0 | 230.0 | 228.0 | 231.0 | 238.0 | 236.0 | 243.0 | 245.0 | 252.0 | 253.0 | 250.0 | 237.0 | 338.0 | 191.0 | 111.0 | 255.0 | 263.0 | 101.0 | 215.7 | 338.0 | 42.0 |
| 5 | 237.0 | 235.0 | 233.0 | 227.0 | 219.0 | 226.0 | 237.0 | 230.0 | 231.0 | 231.0 | 245.0 | 243.0 | 260.0 | 259.0 | 264.0 | ***** | ***** | 231.0 | 232.0 | 236.0 | 234.0 | 223.0 | 224.0 | 223.0 | 235.5 | 264.0 | 219.0 |
| 6 | 224.0 | 208.0 | 220.0 | 209.0 | 168.0 | 153.0 | 129.0 | 151.0 | 137.0 | 104.0 | 84.0 | 242.0 | 256.0 | 258.0 | 255.0 | 246.0 | 245.0 | 239.0 | 223.0 | 204.0 | 193.0 | 206.0 | 202.0 | 219.0 | 199.0 | 258.0 | 84.0 |
| 7 | 224.0 | 141.0 | 143.0 | 234.0 | 232.0 | 264.0 | 198.0 | 248.0 | 67.0 | 76.0 | 269.0 | 249.0 | 254.0 | 256.0 | 246.0 | 255.0 | 249.0 | 241.0 | 239.0 | 235.0 | 229.0 | 229.0 | 227.0 | 229.0 | 218.1 | 269.0 | 67.0 |
| 8 | 229.0 | 241.0 | 242.0 | 241.0 | 262.0 | 347.0 | 117.0 | 75.0 | 313.0 | 54.0 | 354.0 | 287.0 | 273.0 | 271.0 | 264.0 | 265.0 | 267.0 | 248.0 | 239.0 | 238.0 | 225.0 | 224.0 | 209.0 | 227.0 | 238.0 | 354.0 | 54.0 |
| 9 | 217.0 | 344.0 | 138.0 | 144.0 | 277.0 | 278.0 | 143.0 | 142.0 | 122.0 | 114.0 | 45.0 | 43.0 | 60.0 | 50.0 | 47.0 | 50.0 | 115.0 | 148.0 | 138.0 | 141.0 | 149.0 | 144.0 | 145.0 | 141.0 | 139.0 | 344.0 | 43.0 |
| 10 | 149.0 | 329.0 | 102.0 | 125.0 | 260.0 | 223.0 | 196.0 | 234.0 | 263.0 | 266.0 | 294.0 | 277.0 | 293.0 | 60.0 | 132.0 | 237.0 | 10.0 | 80.0 | 56.0 | 110.0 | 170.0 | 292.0 | 132.0 | 138.0 | 184.5 | 329.0 | 10.0 |
| 11 | 271.0 | 232.0 | 254.0 | 248.0 | 262.0 | 122.0 | 266.0 | 345.0 | 131.0 | 282.0 | 330.0 | 8.0 | 297.0 | 295.0 | 262.0 | 250.0 | 234.0 | 235.0 | 236.0 | 227.0 | 228.0 | 228.0 | 226.0 | 239.0 | 237.8 | 345.0 | 8.0 |
| 12 | 238.0 | 232.0 | 235.0 | 235.0 | 233.0 | 233.0 | 232.0 | 230.0 | 232.0 | 235.0 | 239.0 | 245.0 | 254.0 | 257.0 | 268.0 | 258.0 | 239.0 | 236.0 | 235.0 | 234.0 | 232.0 | 229.0 | 234.0 | 235.0 | 238.8 | 268.0 | 229.0 |
| 13 | 234.0 | 236.0 | 235.0 | 233.0 | 235.0 | 237.0 | 237.0 | 239.0 | 243.0 | 247.0 | 261.0 | 263.0 | 261.0 | 254.0 | 244.0 | 229.0 | 298.0 | 342.0 | 356.0 | 24.0 | 57.0 | 67.0 | 82.0 | 66.0 | 290.8 | 356.0 | 24.0 |
| 14 | 71.0 | 68.0 | 87.0 | 91.0 | 55.0 | 26.0 | 37.0 | 49.0 | 57.0 | 50.0 | 33.0 | 16.0 | 9.0 | 22.0 | 7.0 | 326.0 | 241.0 | 234.0 | 233.0 | 234.0 | 234.0 | 232.0 | 231.0 | 231.0 | 344.7 | 326.0 | 7.0 |
| 15 | 235.0 | 228.0 | 228.0 | 226.0 | 215.0 | 192.0 | 189.0 | 161.0 | 109.0 | 310.0 | 344.0 | 66.0 | 287.0 | 263.0 | 249.0 | 251.0 | 246.0 | 225.0 | 202.0 | 211.0 | 191.0 | 176.0 | 181.0 | 177.0 | 215.1 | 344.0 | 66.0 |
| 16 | 182.0 | 161.0 | 152.0 | 150.0 | 165.0 | 146.0 | 148.0 | 149.0 | 150.0 | 142.0 | 134.0 | 128.0 | 189.0 | 213.0 | 204.0 | 191.0 | 178.0 | 143.0 | 146.0 | 144.0 | 142.0 | 152.0 | 146.0 | 151.0 | 158.6 | 213.0 | 128.0 |
| 17 | 151.0 | 158.0 | 142.0 | 133.0 | 143.0 | 140.0 | 142.0 | 140.0 | 148.0 | 136.0 | 97.0 | 326.0 | 221.0 | 197.0 | 195.0 | 171.0 | 189.0 | 194.0 | 208.0 | 216.0 | 203.0 | 209.0 | 208.0 | 225.0 | 178.8 | 326.0 | 97.0 |
| 18 | 227.0 | 230.0 | 228.0 | 228.0 | 226.0 | 234.0 | 246.0 | 240.0 | 254.0 | 240.0 | 239.0 | 240.0 | 250.0 | 261.0 | 262.0 | 284.0 | 304.0 | 339.0 | 339.0 | 286.0 | 239.0 | 224.0 | 228.0 | 227.0 | 253.1 | 339.0 | 224.0 |
| 19 | 229.0 | 225.0 | 230.0 | 233.0 | 230.0 | 245.0 | 264.0 | 239.0 | 228.0 | 254.0 | 244.0 | 241.0 | 260.0 | 264.0 | 259.0 | 263.0 | 269.0 | 232.0 | 224.0 | 214.0 | 217.0 | 201.0 | 200.0 | 142.0 | 233.6 | 269.0 | 142.0 |
| 20 | 143.0 | 150.0 | 139.0 | 147.0 | 123.0 | 132.0 | 221.0 | 262.0 | 146.0 | 122.0 | 52.0 | 72.0 | 46.0 | 340.0 | 327.0 | 283.0 | 214.0 | 198.0 | 202.0 | 162.0 | 146.0 | 146.0 | 149.0 | 145.0 | 169.5 | 340.0 | 46.0 |
| 21 | 143.0 | 148.0 | 150.0 | 153.0 | 150.0 | 150.0 | 148.0 | 138.0 | 140.0 | 133.0 | 122.0 | 135.0 | 121.0 | 144.0 | 169.0 | 160.0 | 155.0 | 144.0 | 140.0 | 173.0 | 201.0 | 212.0 | 214.0 | 193.0 | 155.7 | 214.0 | 121.0 |
| 22 | 207.0 | 206.0 | 210.0 | 203.0 | 203.0 | 213.0 | 185.0 | 212.0 | 197.0 | 191.0 | 195.0 | 188.0 | 180.0 | 177.0 | 184.0 | 189.0 | 207.0 | 244.0 | 238.0 | 232.0 | 232.0 | 241.0 | 244.0 | 241.0 | 209.1 | 244.0 | 177.0 |
| 23 | 238.0 | 234.0 | 229.0 | 230.0 | 234.0 | 230.0 | 234.0 | 233.0 | 243.0 | 244.0 | 230.0 | 233.0 | 245.0 | 257.0 | 264.0 | 262.0 | 248.0 | 240.0 | 235.0 | 245.0 | 231.0 | 237.0 | 250.0 | 262.0 | 241.2 | 264.0 | 229.0 |
| 24 | 251.0 | 239.0 | 239.0 | 235.0 | 234.0 | 241.0 | 238.0 | 240.0 | 241.0 | 239.0 | 241.0 | 239.0 | 237.0 | 235.0 | 236.0 | 249.0 | 240.0 | 248.0 | 237.0 | 142.0 | 131.0 | 285.0 | 261.0 | 272.0 | 235.4 | 285.0 | 131.0 |
| 25 | 253.0 | 288.0 | 157.0 | 98.0 | 132.0 | 252.0 | 241.0 | 122.0 | 158.0 | 126.0 | 140.0 | 80.0 | 63.0 | 63.0 | 66.0 | 97.0 | 107.0 | 269.0 | 78.0 | 93.0 | 115.0 | 102.0 | 95.0 | 258.0 | 143.9 | 288.0 | 63.0 |
| 26 | 232.0 | 136.0 | 318.0 | 119.0 | 141.0 | 128.0 | 131.0 | 128.0 | 128.0 | 118.0 | 221.0 | 255.0 | 93.0 | 79.0 | 69.0 | 87.0 | 105.0 | 89.0 | 118.0 | 136.0 | 134.0 | 240.0 | 226.0 | 126.0 | 148.2 | 318.0 | 69.0 |
| 27 | 85.0 | 85.0 | 142.0 | 121.0 | 124.0 | 113.0 | 122.0 | 223.0 | 128.0 | 137.0 | 218.0 | 99.0 | 78.0 | 85.0 | 287.0 | 264.0 | 251.0 | 253.0 | 147.0 | 114.0 | 97.0 | 320.0 | 107.0 | 138.0 | 155.7 | 320.0 | 78.0 |
| 28 | 117.0 | 71.0 | 129.0 | 113.0 | 118.0 | 117.0 | 123.0 | 101.0 | 129.0 | 89.0 | 52.0 | 80.0 | 55.0 | 66.0 | 108.0 | 92.0 | 273.0 | 253.0 | 172.0 | 146.0 | 291.0 | 270.0 | 103.0 | 95.0 | 131.8 | 291.0 | 52.0 |
| 29 | 119.0 | 131.0 | 171.0 | 198.0 | 135.0 | 166.0 | 147.0 | 140.0 | 141.0 | 141.0 | 145.0 | 145.0 | 119.0 | 140.0 | 156.0 | 14.0 | 113.0 | 151.0 | 156.0 | 140.0 | 128.0 | 135.0 | 195.0 | 109.0 | 139.0 | 198.0 | 14.0 |
| 30 | 129.0 | 142.0 | 150.0 | 158.0 | 145.0 | 139.0 | 181.0 | 252.0 | 231.0 | 234.0 | 236.0 | 227.0 | 229.0 | 242.0 | 242.0 | 240.0 | 235.0 | 239.0 | 233.0 | 233.0 | 233.0 | 233.0 | 231.0 | 230.0 | 210.2 | 252.0 | 129.0 |
| Mean | 189.8 | 195.0 | 192.5 | 186.2 | 191.8 | 194.3 | 187.9 | 193.6 | 181.8 | 180.9 | 200.5 | 186.3 | 196.1 | 199.7 | 209.2 | 214.5 | 214.2 | 221.6 | 209.7 | 188.2 | 188.9 | 212.0 | 199.5 | 183.0 | Monthly mean = | | 196.5 |
| Max. | 271.0 | 344.0 | 318.0 | 248.0 | 277.0 | 347.0 | 266.0 | 345.0 | 313.0 | 310.0 | 354.0 | 326.0 | 297.0 | 340.0 | 327.0 | 326.0 | 304.0 | 342.0 | 356.0 | 286.0 | 291.0 | 320.0 | 350.0 | 272.0 | Monthly max. = | | 356.0 |
| Min. | 42.0 | 68.0 | 87.0 | 91.0 | 55.0 | 26.0 | 37.0 | 49.0 | 57.0 | 50.0 | 33.0 | 8.0 | 9.0 | 22.0 | 7.0 | 14.0 | 10.0 | 80.0 | 56.0 | 24.0 | 57.0 | 67.0 | 82.0 | 40.0 | Monthly min. = | | 7.0 |

TOTAL NUMBER OF DATA HOURS IN MONTH: 720
Number of hours of bad or missing data: 2
**** designates missing or lost data

Current % recovery = 99.7

N/A: insufficient data available for calculation (a minimum of 75% is required)

table created at 14:26,10/11/1994

MONTHLY SUMMARY
TEMPERATURE
(Degrees Celsius)
INPUT FILE: od7met.met

Bechtel Environmental, Inc.

Met Data for Site 7
NOVEMBER 1993

| Day \ Hour | 1 | 2 | 3 | 4 | 5 | 6 | 7 | 8 | 9 | 10 | 11 | 12 | 13 | 14 | 15 | 16 | 17 | 18 | 19 | 20 | 21 | 22 | 23 | 24 | Mean | Max. | Min. |
|---|---|---|---|---|---|---|---|---|---|---|---|---|---|---|---|---|---|---|---|---|---|---|---|---|---|---|---|
| 1 | 3.6 | 3.1 | 2.8 | 2.4 | 2.0 | 1.4 | .7 | .1 | -.3 | .7 | 2.0 | 3.3 | 4.4 | 5.2 | 5.9 | 6.4 | 6.6 | 6.2 | 4.9 | 4.3 | 3.7 | 2.9 | 2.5 | 2.2 | 3.2 | 6.6 | -.3 |
| 2 | 2.3 | 2.2 | 2.2 | 2.5 | 2.6 | 2.6 | 2.6 | 2.9 | 3.4 | 3.8 | 4.4 | 5.1 | 5.9 | 6.5 | 7.0 | 7.3 | 7.7 | 7.6 | 7.2 | 7.4 | 7.8 | 6.4 | 8.8 | 8.3 | 5.2 | 8.8 | 2.2 |
| 3 | 6.8 | 9.3 | 8.7 | 9.6 | 7.1 | 10.4 | 9.9 | 9.6 | 9.6 | 9.6 | 9.1 | 9.2 | 10.9 | 11.4 | 12.1 | 12.1 | 11.4 | 10.2 | 9.8 | 9.4 | 9.0 | 7.6 | 4.3 | 3.6 | 9.2 | 12.1 | 3.6 |
| 4 | 3.2 | 2.6 | 3.6 | 2.0 | 1.3 | -.1 | -.5 | -.8 | -.8 | -.2 | 1.0 | 2.1 | 3.2 | 3.9 | 4.4 | 4.7 | 4.5 | 3.9 | 2.1 | 1.3 | 1.1 | -.7 | .5 | -.6 | 1.7 | 4.7 | -.8 |
| 5 | -.5 | -.7 | -.7 | -.8 | -1.5 | -1.8 | -1.8 | -1.9 | -2.0 | -1.8 | -1.1 | .1 | 1.2 | 2.4 | 3.0 | ***** | ***** | 2.1 | 2.0 | 1.5 | .8 | .9 | .6 | .5 | .0 | 3.0 | -2.0 |
| 6 | .4 | .3 | .7 | .1 | -.7 | -2.2 | -3.6 | -2.4 | -1.6 | -.2 | 2.1 | 3.4 | 4.1 | 4.5 | 4.7 | 5.1 | 4.8 | 3.9 | 3.4 | 3.1 | 3.3 | 3.8 | 3.7 | 3.0 | 1.8 | 5.1 | -3.6 |
| 7 | -1.1 | .0 | .5 | 1.4 | .0 | -.6 | -.1 | -.7 | -3.9 | -.2 | 2.1 | 2.8 | 3.6 | 4.5 | 4.8 | 4.8 | 4.7 | 4.3 | 3.8 | 3.5 | 3.3 | 3.3 | 3.4 | 3.1 | 2.0 | 4.8 | -3.9 |
| 8 | 2.8 | 2.1 | 1.6 | 1.1 | -.2 | -3.1 | -3.7 | -2.0 | -.9 | .4 | 1.9 | 2.8 | 3.2 | 4.5 | 6.2 | 6.5 | 6.1 | 5.0 | 4.9 | 4.4 | 3.7 | 3.6 | 3.2 | 3.5 | 2.4 | 6.5 | -3.7 |
| 9 | 3.2 | .8 | -3.2 | -1.9 | -2.4 | -2.0 | -2.9 | -3.4 | -3.3 | -1.6 | 1.1 | 2.7 | 4.9 | 6.5 | 7.1 | 7.7 | 7.0 | 7.6 | 6.9 | 6.6 | 6.7 | 7.0 | 6.6 | 5.9 | 2.8 | 7.7 | -3.4 |
| 10 | 3.5 | -1.1 | .6 | 1.1 | -1.0 | -.8 | .6 | -1.8 | -1.7 | -.5 | .7 | 1.8 | 4.7 | 7.6 | 8.7 | 10.6 | 8.0 | 6.5 | 5.5 | 5.9 | 6.2 | 3.0 | 2.9 | 3.4 | 3.1 | 10.6 | -1.8 |
| 11 | -1.1 | -.7 | -2.1 | -3.3 | -2.3 | -3.6 | -4.2 | -4.6 | -2.6 | -.9 | 1.5 | 3.4 | 4.6 | 6.8 | 7.3 | 7.0 | 6.3 | 5.4 | 5.7 | 5.6 | 5.4 | 5.0 | 4.6 | 4.2 | 2.0 | 7.3 | -4.6 |
| 12 | 3.1 | 2.7 | 2.1 | 1.3 | 1.5 | 1.0 | .3 | .6 | .6 | .6 | 1.2 | 2.2 | 3.3 | 4.1 | 4.6 | 4.9 | 4.4 | 3.8 | 3.3 | 2.3 | 2.1 | 2.3 | 2.3 | 1.9 | 2.4 | 4.9 | .3 |
| 13 | .8 | -.4 | -.9 | -1.3 | -1.6 | -1.9 | -2.1 | -2.3 | -2.5 | -2.4 | -2.4 | -2.4 | -2.4 | -2.0 | -1.3 | -.5 | -.6 | -1.6 | -2.0 | -2.6 | -2.5 | -2.3 | -2.6 | -3.0 | -1.8 | .8 | -3.0 |
| 14 | -3.1 | -3.3 | -3.9 | -3.4 | -3.5 | -3.4 | -3.2 | -3.7 | -3.8 | -2.7 | -1.4 | -.1 | 1.3 | 2.6 | 3.7 | 4.1 | 3.1 | 1.7 | .7 | .1 | -.4 | -.4 | -.5 | -.5 | -.8 | 4.1 | -3.9 |
| 15 | -.6 | -.7 | -.5 | -.5 | -.7 | -.7 | -.7 | -.6 | -1.2 | -.7 | .6 | 3.1 | 3.2 | 3.6 | 4.5 | 4.9 | 4.7 | 3.9 | 4.2 | 3.7 | 3.4 | 3.1 | 3.1 | 3.0 | 1.8 | 4.9 | -1.2 |
| 16 | 3.6 | 1.5 | .5 | .4 | 2.0 | .2 | .2 | .3 | .6 | 2.4 | 4.0 | 5.4 | 7.1 | 7.8 | 8.1 | 8.2 | 6.9 | 5.8 | 4.9 | 4.6 | 4.5 | 4.9 | 4.2 | 4.6 | 3.9 | 8.2 | .2 |
| 17 | 4.2 | 3.6 | 2.5 | 3.3 | 2.9 | 2.8 | 3.1 | 2.6 | 2.9 | 3.8 | 4.7 | 6.3 | 8.6 | 10.3 | 9.8 | 8.7 | 8.0 | 7.5 | 7.5 | 7.0 | 6.2 | 6.3 | 6.3 | 6.1 | 5.6 | 10.3 | 2.5 |
| 18 | 5.8 | 5.4 | 5.1 | 5.0 | 5.0 | 4.9 | 4.1 | 2.6 | 1.1 | -.2 | -.6 | -1.2 | -.7 | .4 | 1.1 | 1.6 | 1.6 | -.2 | -1.8 | -2.0 | -2.4 | -2.9 | -3.1 | -3.4 | 1.0 | 5.8 | -3.4 |
| 19 | -3.6 | -3.8 | -3.8 | -3.8 | -3.6 | -3.9 | -5.4 | -5.3 | -3.6 | -2.9 | -2.4 | -1.5 | -.6 | -.1 | .5 | .8 | .5 | -.4 | -.3 | -.5 | -.4 | .0 | -.7 | -1.7 | -1.9 | .8 | -5.4 |
| 20 | -2.5 | -3.0 | -4.8 | -5.1 | -7.1 | -6.0 | -5.8 | -6.5 | -5.1 | -2.9 | -2.8 | -.4 | 2.3 | 4.3 | 6.2 | 6.8 | 5.2 | 4.2 | 4.1 | 2.4 | .9 | .5 | .2 | .2 | -.6 | 6.8 | -7.1 |
| 21 | .2 | .2 | .2 | -.1 | -.1 | -.1 | -.2 | -1.7 | -1.4 | 1.8 | 4.3 | 7.0 | 8.1 | 9.8 | 10.5 | 9.3 | 8.7 | 7.3 | 7.3 | 8.8 | 10.4 | 10.7 | 10.2 | 8.4 | 5.0 | 10.7 | -1.7 |
| 22 | 8.2 | 6.6 | 4.6 | 4.2 | 4.4 | 4.9 | 5.5 | 5.6 | 5.4 | 5.3 | 5.7 | 5.8 | 5.7 | 5.4 | 5.1 | 4.3 | 3.1 | -.1 | -1.0 | -3.3 | -3.4 | -3.3 | -3.6 | -3.8 | 3.0 | 8.2 | -3.8 |
| 23 | -4.1 | -4.3 | -4.4 | -4.6 | -4.0 | -3.9 | -4.6 | -5.5 | -5.8 | -6.6 | -6.4 | -6.6 | -6.7 | -6.8 | -6.9 | -7.1 | -7.2 | -7.3 | -7.0 | -7.2 | -7.1 | -7.4 | -7.8 | -8.4 | -6.2 | -3.9 | -8.4 |
| 24 | -9.3 | -9.5 | -9.5 | -9.9 | -10.7 | -11.7 | -12.6 | -12.6 | -12.9 | -13.4 | -13.6 | -13.5 | -13.1 | -12.7 | -12.4 | -12.2 | -12.3 | -12.4 | -12.6 | -13.9 | -13.7 | -14.5 | -15.2 | -15.7 | -12.5 | -9.3 | -15.7 |
| 25 | -16.8 | -17.5 | -18.3 | -18.8 | -18.3 | -18.1 | -19.4 | -20.5 | -19.2 | -17.1 | -16.0 | -14.6 | -15.3 | -14.1 | -14.2 | -15.8 | -16.2 | -17.6 | -17.5 | -15.6 | -15.0 | -15.6 | -16.7 | -17.8 | -16.9 | -14.1 | -20.5 |
| 26 | -18.1 | -17.4 | -18.8 | -18.3 | -18.7 | -18.4 | -18.4 | -18.5 | -17.4 | -16.8 | -15.2 | -11.8 | -10.3 | -9.9 | -10.3 | -11.8 | -12.2 | -13.2 | -11.6 | -11.4 | -13.0 | -14.6 | -14.9 | -13.8 | -14.8 | -9.9 | -18.8 |
| 27 | -14.2 | -16.5 | -14.5 | -14.7 | -14.9 | -15.8 | -14.4 | -16.0 | -15.4 | -13.7 | -12.8 | -13.0 | -12.3 | -8.7 | -8.2 | -9.4 | -9.3 | -9.4 | -8.6 | -6.3 | -7.8 | -9.6 | -9.1 | -5.8 | -11.7 | -5.8 | -16.5 |
| 28 | -6.7 | -9.7 | -6.9 | -7.5 | -6.9 | -6.9 | -6.5 | -8.1 | -6.4 | -6.6 | -6.2 | -3.6 | -4.4 | -3.6 | -3.0 | -2.2 | -2.8 | -3.0 | -2.5 | .6 | .0 | -1.5 | -2.9 | -2.6 | -4.6 | .6 | -9.7 |
| 29 | -1.3 | -.3 | -.2 | -1.8 | -1.6 | -.1 | 1.4 | .8 | 1.4 | 2.5 | 3.2 | 3.8 | 4.4 | 5.1 | 4.7 | 3.2 | 2.9 | 4.7 | 4.8 | 4.5 | 3.9 | 3.9 | 1.8 | 1.9 | 2.2 | 5.1 | -1.8 |
| 30 | 1.9 | 3.5 | 3.2 | 3.3 | 2.4 | 2.3 | 2.1 | -.1 | 2.1 | 4.5 | .8 | -.3 | -.6 | -1.1 | -1.1 | -.6 | .4 | .7 | .2 | -.4 | -.9 | -1.1 | -.9 | -.6 | .8 | 4.5 | -1.1 |
| Mean | -1.0 | -1.5 | -1.8 | -1.9 | -2.3 | -2.5 | -2.7 | -3.1 | -2.8 | -1.9 | -1.0 | .0 | .9 | 1.9 | 2.4 | 2.4 | 1.9 | 1.2 | .9 | .8 | .5 | .0 | -.3 | -.5 | Monthly mean = | | -.4 |
| Max. | 8.2 | 9.3 | 8.7 | 9.6 | 7.1 | 10.4 | 9.9 | 9.6 | 9.6 | 9.6 | 9.1 | 9.2 | 10.9 | 11.4 | 12.1 | 12.1 | 11.4 | 10.2 | 9.8 | 9.4 | 10.4 | 10.7 | 10.2 | 8.4 | Monthly max. = | | 12.1 |
| Min. | -18.1 | -17.5 | -18.8 | -18.8 | -18.7 | -18.4 | -19.4 | -20.5 | -19.2 | -17.1 | -16.0 | -14.6 | -15.3 | -14.1 | -14.2 | -15.8 | -16.2 | -17.6 | -17.5 | -15.6 | -15.0 | -15.6 | -16.7 | -17.8 | Monthly min. = | | -20.5 |

TOTAL NUMBER OF DATA HOURS IN MONTH: 720
Number of hours of bad or missing data: 2
**** designates missing or lost data

Current % recovery = 99.7

N/A: insufficient data available for calculation (a minimum of 75% is required)

table created at 14:26,10/11/1994

MONTHLY SUMMARY
SIGMA THETA
(Degrees)
INPUT FILE: od7met.met

Bechtel Environmental, Inc.

Met Data for Site 7
NOVEMBER 1993

| Day | Hour 1 | 2 | 3 | 4 | 5 | 6 | 7 | 8 | 9 | 10 | 11 | 12 | 13 | 14 | 15 | 16 | 17 | 18 | 19 | 20 | 21 | 22 | 23 | 24 | Mean | Max. | Min. |
|---|---|---|---|---|---|---|---|---|---|---|---|---|---|---|---|---|---|---|---|---|---|---|---|---|---|---|---|
| 1 | 8. | 8. | 8. | 7. | 7. | 9. | 8. | 7. | 9. | 15. | 14. | 15. | 16. | 14. | 12. | 12. | 12. | 9. | 11. | 12. | 13. | 8. | 7. | 9. | N/A | 16. | 7. |
| 2 | 8. | 9. | 11. | 11. | 10. | 11. | 11. | 10. | 12. | 14. | 17. | 14. | 16. | 15. | 15. | 12. | 14. | 13. | 12. | 11. | 12. | 17. | 16. | 18. | N/A | 18. | 8. |
| 3 | 16. | 15. | 17. | 15. | 12. | 12. | 12. | 13. | 12. | 12. | 12. | 10. | 15. | 15. | 10. | 14. | 8. | 12. | 14. | 16. | 16. | 17. | 45. | 16. | N/A | 45. | 8. |
| 4 | 18. | 16. | 39. | 8. | 8. | 9. | 9. | 7. | 7. | 9. | 14. | 14. | 16. | 15. | 14. | 11. | 15. | 14. | 22. | 62. | 20. | 26. | 21. | 56. | N/A | 62. | 7. |
| 5 | 11. | 10. | 9. | 47. | 49. | 33. | 13. | 7. | 8. | 9. | 15. | 13. | 18. | 28. | 22. | ***** | ***** | 7. | 9. | 10. | 8. | 9. | 9. | 10. | N/A | 49. | 7. |
| 6 | 10. | 9. | 11. | 10. | 15. | 23. | 41. | 43. | 47. | 34. | 50. | 35. | 15. | 14. | 15. | 16. | 15. | 13. | 11. | 11. | 11. | 11. | 13. | 34. | N/A | 50. | 9. |
| 7 | 62. | 8. | 13. | 11. | 35. | 48. | 63. | 40. | 79. | 78. | 48. | 17. | 16. | 16. | 16. | 12. | 15. | 12. | 11. | 10. | 9. | 8. | 9. | 11. | N/A | 79. | 8. |
| 8 | 11. | 13. | 13. | 15. | 29. | 47. | 42. | 32. | 43. | 24. | 40. | 25. | 11. | 12. | 15. | 12. | 11. | 14. | 12. | 12. | 9. | 9. | 26. | 11. | N/A | 47. | 9. |
| 9 | 33. | 39. | 27. | 30. | 19. | 20. | 38. | 44. | 15. | 9. | 18. | 19. | 14. | 16. | 17. | 17. | 18. | 7. | 6. | 6. | 6. | 8. | 6. | 30. | N/A | 44. | 6. |
| 10 | 38. | 53. | 11. | 35. | 46. | 72. | 46. | 34. | 29. | 57. | 47. | 16. | 38. | 33. | 28. | 48. | 25. | 24. | 34. | 28. | 37. | 51. | 21. | 53. | N/A | 72. | 11. |
| 11 | 19. | 38. | 37. | 41. | 13. | 46. | 9. | 30. | 27. | 45. | 18. | 29. | 21. | 22. | 13. | 17. | 15. | 31. | 43. | 7. | 7. | 7. | 7. | 11. | N/A | 46. | 7. |
| 12 | 10. | 7. | 8. | 7. | 7. | 7. | 8. | 8. | 8. | 8. | 11. | 15. | 15. | 13. | 8. | 12. | 9. | 8. | 8. | 7. | 8. | 7. | 8. | 8. | N/A | 15. | 7. |
| 13 | 7. | 8. | 8. | 7. | 8. | 8. | 9. | 10. | 15. | 19. | 12. | 15. | 17. | 17. | 14. | 14. | 12. | 19. | 14. | 11. | 11. | 15. | 15. | 34. | N/A | 34. | 7. |
| 14 | 19. | 18. | 46. | 35. | 17. | 16. | 12. | 19. | 19. | 16. | 14. | 18. | 14. | 15. | 17. | 34. | 10. | 10. | 7. | 8. | 8. | 9. | 9. | 10. | N/A | 46. | 7. |
| 15 | 10. | 11. | 9. | 11. | 17. | 13. | 13. | 49. | 74. | 36. | 37. | 61. | 62. | 14. | 14. | 17. | 14. | 13. | 11. | 15. | 35. | 24. | 13. | 11. | N/A | 74. | 9. |
| 16 | 12. | 9. | 4. | 5. | 15. | 6. | 5. | 5. | 6. | 8. | 10. | 11. | 34. | 17. | 16. | 16. | 8. | 9. | 6. | 5. | 6. | 7. | 6. | 8. | N/A | 34. | 4. |
| 17 | 6. | 62. | 68. | 7. | 6. | 6. | 6. | 8. | 13. | 13. | 47. | 36. | 38. | 18. | 11. | 9. | 9. | 10. | 9. | 9. | 9. | 9. | 10. | 11. | N/A | 68. | 6. |
| 18 | 10. | 10. | 10. | 10. | 10. | 13. | 14. | 14. | 15. | 13. | 12. | 12. | 13. | 11. | 10. | 26. | 18. | 10. | 27. | 28. | 11. | 8. | 8. | 8. | N/A | 28. | 8. |
| 19 | 8. | 7. | 9. | 13. | 11. | 22. | 23. | 19. | 19. | 18. | 16. | 17. | 13. | 11. | 12. | 10. | 12. | 26. | 14. | 15. | 12. | 10. | 21. | 5. | N/A | 26. | 5. |
| 20 | 42. | 21. | 53. | 31. | 12. | 6. | 32. | 17. | 58. | 47. | 22. | 17. | 28. | 32. | 51. | 59. | 17. | 13. | 10. | 14. | 6. | 5. | 6. | 5. | N/A | 59. | 5. |
| 21 | 5. | 5. | 5. | 5. | 6. | 5. | 6. | 44. | 49. | 51. | 18. | 48. | 17. | 12. | 15. | 8. | 8. | 8. | 8. | 15. | 11. | 11. | 13. | 10. | N/A | 51. | 5. |
| 22 | 11. | 12. | 14. | 10. | 11. | 12. | 10. | 13. | 10. | 10. | 11. | 11. | 10. | 10. | 9. | 14. | 19. | 14. | 11. | 8. | 8. | 15. | 15. | 15. | N/A | 19. | 8. |
| 23 | 11. | 9. | 9. | 9. | 10. | 10. | 12. | 10. | 13. | 17. | 12. | 10. | 14. | 11. | 8. | 10. | 16. | 14. | 10. | 15. | 9. | 11. | 14. | 9. | N/A | 17. | 8. |
| 24 | 11. | 10. | 10. | 10. | 9. | 11. | 8. | 10. | 12. | 10. | 12. | 11. | 10. | 8. | 10. | 14. | 9. | 15. | 13. | 11. | 12. | 35. | 15. | 24. | N/A | 35. | 8. |
| 25 | 34. | 41. | 36. | 58. | 10. | 26. | 40. | 20. | 32. | 31. | 38. | 16. | 15. | 15. | 14. | 9. | 17. | 33. | 28. | 19. | 15. | 45. | 36. | 60. | N/A | 60. | 9. |
| 26 | 49. | 40. | 32. | 53. | 68. | 12. | 24. | 7. | 20. | 19. | 39. | 54. | 45. | 51. | 16. | 19. | 14. | 19. | 15. | 22. | 62. | 46. | 59. | 11. | N/A | 68. | 7. |
| 27 | 62. | 34. | 27. | 33. | 64. | 41. | 6. | 49. | 25. | 58. | 38. | 28. | 18. | 62. | 32. | 22. | 9. | 51. | 27. | 30. | 32. | 26. | 9. | 46. | N/A | 64. | 6. |
| 28 | 8. | 30. | 24. | 28. | 9. | 19. | 7. | 18. | 44. | 19. | 33. | 28. | 38. | 44. | 28. | 75. | 37. | 25. | 31. | 6. | 43. | 52. | 51. | 11. | N/A | 75. | 6. |
| 29 | 9. | 6. | 23. | 30. | 6. | 29. | 47. | 72. | 7. | 6. | 20. | 7. | 11. | 7. | 45. | 45. | 34. | 6. | 7. | 8. | 18. | 15. | 55. | 9. | N/A | 72. | 6. |
| 30 | 54. | 9. | 27. | 21. | 40. | 8. | 27. | 60. | 57. | 11. | 11. | 11. | 12. | 16. | 15. | 12. | 10. | 12. | 8. | 8. | 7. | 9. | 9. | 9. | N/A | 60. | 7. |
| Mean | N/A | N/A | N/A | N/A | N/A | N/A | N/A | N/A | N/A | N/A | N/A | N/A | N/A | N/A | N/A | N/A | N/A | N/A | N/A | N/A | N/A | N/A | N/A | N/A | Monthly mean = | | N/A |
| Max. | 62. | 62. | 68. | 58. | 68. | 72. | 63. | 72. | 79. | 78. | 50. | 61. | 62. | 62. | 51. | 75. | 37. | 51. | 43. | 62. | 62. | 52. | 59. | 60. | Monthly max. = | | 79. |
| Min. | 5. | 5. | 4. | 5. | 6. | 5. | 5. | 5. | 6. | 6. | 10. | 7. | 10. | 7. | 8. | 8. | 8. | 6. | 6. | 5. | 6. | 5. | 6. | 5. | Monthly min. = | | 4. |

TOTAL NUMBER OF DATA HOURS IN MONTH: 720
Number of hours of bad or missing data: 2
**** designates missing or lost data

Current % recovery = 99.7

N/A: A sigma theta mean is not physically meaningful.

table created at 14:26,10/11/1994

MONTHLY SUMMARY
WIND SPEED
(Miles Per Hour)
INPUT FILE: od7met.met

Bechtel Environmental, Inc.

Met Data for Site 7
DECEMBER 1993

| Day | Hour 1 | 2 | 3 | 4 | 5 | 6 | 7 | 8 | 9 | 10 | 11 | 12 | 13 | 14 | 15 | 16 | 17 | 18 | 19 | 20 | 21 | 22 | 23 | 24 | Mean | Max. | Min. |
|---|---|---|---|---|---|---|---|---|---|---|---|---|---|---|---|---|---|---|---|---|---|---|---|---|---|---|---|
| 1 | 28.7 | 22.5 | 16.5 | 13.5 | 15.6 | 16.6 | 14.1 | 14.3 | 12.6 | 10.7 | 12.8 | 14.6 | 12.1 | 10.8 | 10.0 | 9.3 | 10.3 | 12.2 | 12.9 | 12.5 | 14.3 | 13.3 | 15.1 | 18.2 | 14.3 | 28.7 | 9.3 |
| 2 | 21.1 | 26.8 | 34.7 | 36.8 | 31.6 | 30.2 | 27.3 | 32.8 | 31.6 | 32.8 | 31.8 | 30.1 | 29.1 | 26.7 | 25.2 | 22.3 | 24.0 | 26.9 | 29.6 | 29.3 | 28.3 | 25.0 | 23.1 | 20.7 | 28.2 | 36.8 | 20.7 |
| 3 | 18.0 | 14.2 | 14.0 | 16.1 | 15.5 | 16.2 | 14.4 | 10.7 | 8.5 | 5.2 | 5.3 | 4.3 | 6.3 | 5.3 | 9.0 | 7.6 | 6.0 | 9.3 | 15.8 | 18.1 | 20.5 | 22.0 | 21.6 | 20.8 | 12.7 | 22.0 | 4.3 |
| 4 | 20.8 | 16.2 | 18.0 | 16.2 | 18.4 | 14.4 | 8.6 | 21.1 | 27.6 | 18.6 | 17.0 | 29.3 | 29.9 | 31.4 | 36.9 | 35.4 | 34.2 | 36.2 | 34.1 | 28.8 | 26.3 | 21.7 | 22.2 | 26.4 | 24.6 | 36.9 | 8.6 |
| 5 | 26.2 | 25.3 | 26.3 | 24.9 | 21.9 | 9.7 | 8.0 | 8.2 | 8.0 | 6.0 | 6.5 | 3.5 | 4.1 | 4.2 | 4.1 | 4.2 | 3.1 | 4.6 | 7.8 | 10.5 | 5.2 | 8.4 | 6.4 | 4.2 | 10.1 | 26.3 | 3.1 |
| 6 | 6.2 | 6.6 | 6.0 | 2.2 | 3.9 | 5.6 | 3.7 | 4.8 | 9.2 | 5.9 | 7.2 | 9.9 | 7.6 | 13.3 | 17.2 | 20.3 | 21.9 | 22.8 | 22.0 | 18.9 | 20.3 | 19.0 | 17.2 | 19.4 | 12.1 | 22.8 | 2.2 |
| 7 | 18.1 | 7.5 | 5.4 | 3.3 | 5.4 | 4.0 | 8.0 | 5.7 | 3.8 | 2.6 | 3.0 | 7.4 | 4.4 | 11.4 | 5.3 | 4.5 | 5.2 | 10.7 | 8.3 | 9.0 | 12.0 | 8.4 | 6.6 | 11.6 | 7.2 | 18.1 | 2.6 |
| 8 | 10.8 | 7.8 | 6.4 | 16.3 | 11.6 | 10.1 | 14.5 | 17.7 | 15.8 | 15.6 | 18.0 | 16.1 | 18.5 | 20.1 | 21.0 | 21.5 | 21.7 | 21.8 | 25.6 | 25.2 | 28.3 | 32.1 | 26.8 | 26.8 | 18.8 | 32.1 | 6.4 |
| 9 | 27.4 | 26.8 | 22.7 | 25.6 | 27.5 | 21.7 | 20.7 | 20.5 | 15.2 | 12.6 | 10.1 | 12.5 | 6.6 | 4.3 | 5.6 | 3.6 | 2.7 | 4.0 | 13.0 | 13.0 | 14.2 | 14.9 | 12.6 | 13.7 | 14.6 | 27.5 | 2.7 |
| 10 | 12.9 | 14.0 | 11.4 | 11.4 | 16.0 | 15.7 | 12.6 | 6.9 | 6.1 | 4.4 | 4.2 | 2.8 | 3.5 | 14.6 | 19.2 | 19.2 | 13.6 | 17.1 | 20.8 | 21.7 | 10.5 | 7.5 | 10.4 | 17.2 | 12.2 | 21.7 | 2.8 |
| 11 | 14.5 | 7.4 | 7.7 | 5.0 | 11.7 | 6.5 | 3.4 | 5.9 | 5.3 | 4.9 | 6.4 | 7.2 | 10.8 | 7.6 | 11.6 | 9.9 | 9.2 | 13.3 | 12.6 | 5.5 | 8.9 | 19.2 | 20.0 | 20.0 | 9.8 | 20.0 | 3.4 |
| 12 | 18.3 | 13.5 | 14.7 | 25.1 | 33.8 | 36.6 | 35.4 | 31.9 | 34.7 | 33.3 | 32.8 | 32.5 | 33.6 | 32.3 | 31.6 | 28.1 | 26.6 | 28.6 | 27.4 | 28.9 | 30.4 | 29.3 | 27.9 | 26.2 | 28.9 | 36.6 | 13.5 |
| 13 | 24.3 | 19.5 | 11.5 | 8.8 | 7.7 | 7.2 | 11.4 | 12.4 | 4.4 | 4.1 | 3.5 | 6.5 | 6.2 | 4.2 | 3.3 | 5.9 | 7.8 | 14.8 | 16.6 | 13.8 | 14.4 | 7.5 | 16.3 | 8.7 | 10.0 | 24.3 | 3.3 |
| 14 | 4.3 | 4.8 | 7.2 | 8.9 | 4.6 | 5.0 | 4.3 | 4.1 | 2.9 | 2.6 | 4.0 | 3.6 | 1.9 | 2.8 | 4.9 | 6.9 | 4.8 | 5.3 | 9.9 | 3.3 | 9.3 | 11.9 | 6.0 | 2.1 | 5.2 | 11.9 | 1.9 |
| 15 | 3.3 | 3.5 | 2.8 | 5.5 | 7.7 | 13.4 | 17.6 | 21.3 | 21.8 | 22.6 | 26.6 | 29.2 | 29.2 | 28.7 | 27.0 | 24.9 | 25.5 | 26.4 | 27.0 | 27.1 | 27.9 | 25.5 | 24.3 | 24.5 | 20.6 | 29.2 | 2.8 |
| 16 | 25.8 | 24.5 | 22.2 | 22.4 | 22.1 | 21.9 | 25.4 | 22.4 | 20.6 | 18.2 | 18.1 | 21.3 | 22.4 | 21.6 | 17.0 | 17.2 | 14.2 | 12.9 | 17.4 | 14.7 | 13.4 | 8.8 | 8.1 | 9.4 | 18.4 | 25.8 | 8.1 |
| 17 | 6.9 | 6.6 | 6.1 | 4.9 | 6.1 | 7.6 | 5.7 | 4.4 | 2.8 | 1.9 | 2.7 | 2.6 | 3.5 | 4.1 | 5.0 | 6.4 | 5.6 | 4.5 | 6.1 | 5.8 | 3.5 | 7.8 | 6.9 | 8.3 | 5.2 | 8.3 | 1.9 |
| 18 | 5.3 | 1.4 | 4.5 | 4.2 | 3.1 | 3.8 | 6.1 | 2.8 | 2.4 | 3.5 | 3.8 | 2.2 | 2.4 | 4.6 | 3.1 | 3.4 | 3.2 | 4.4 | 5.2 | 6.3 | 5.7 | 5.0 | 2.9 | 5.6 | 4.0 | 6.3 | 1.4 |
| 19 | 6.0 | 5.6 | 8.2 | 5.0 | 5.5 | 11.5 | 9.4 | 9.0 | 12.9 | 12.9 | 9.5 | 7.1 | 8.2 | 8.7 | 7.6 | 12.7 | 13.9 | 14.7 | 11.3 | 6.9 | 10.3 | 10.8 | 10.0 | 10.7 | 9.5 | 14.7 | 5.0 |
| 20 | 8.4 | 3.9 | 4.6 | 4.5 | 3.4 | 5.7 | 7.8 | 4.0 | 6.0 | 5.2 | 3.4 | 5.0 | 4.5 | 11.5 | 10.1 | 7.0 | 2.7 | 3.5 | 4.3 | 5.3 | 2.8 | 1.7 | 2.1 | 3.3 | 5.0 | 11.5 | 1.7 |
| 21 | 2.5 | 3.7 | 5.7 | 4.0 | 3.0 | 6.2 | 7.4 | 6.3 | 6.7 | 7.4 | 6.4 | 6.1 | 6.4 | 5.6 | 5.0 | 3.7 | 6.6 | 10.3 | 15.2 | 16.7 | 11.9 | 11.4 | 12.2 | 10.6 | 7.5 | 16.7 | 2.5 |
| 22 | 11.6 | 14.3 | 11.0 | 8.8 | 7.4 | 7.1 | 5.2 | 5.0 | 2.5 | 2.5 | 3.4 | 4.5 | 3.5 | 3.8 | 5.8 | 3.2 | 2.8 | 6.4 | 11.2 | 12.1 | 8.9 | 13.4 | 12.2 | 12.1 | 7.4 | 14.3 | 2.5 |
| 23 | 10.8 | 7.4 | 3.4 | 3.5 | 6.1 | 3.2 | 2.8 | 3.0 | 6.9 | 4.7 | 5.7 | 12.4 | 12.9 | 17.6 | 16.7 | 11.5 | 9.2 | 10.1 | 12.4 | 14.5 | 14.3 | 11.3 | 8.6 | 7.9 | 9.0 | 17.6 | 2.8 |
| 24 | 3.1 | 3.4 | 6.5 | 2.9 | 5.6 | 8.6 | 2.9 | 6.7 | 3.4 | 6.3 | 3.7 | 3.2 | 4.3 | 5.9 | 5.7 | 5.2 | 4.8 | 4.2 | 2.5 | 3.2 | 2.8 | 2.2 | 4.4 | 6.2 | 4.5 | 8.6 | 2.2 |
| 25 | 4.9 | 4.9 | 2.1 | 2.4 | 2.1 | 2.1 | 2.3 | 1.4 | 2.7 | 1.9 | 2.5 | 3.6 | 4.1 | 3.8 | 3.2 | 3.7 | 3.1 | 2.5 | 1.6 | 2.4 | 1.7 | 3.4 | 3.3 | 2.5 | 2.8 | 4.9 | 1.4 |
| 26 | 2.9 | 3.4 | 2.9 | 2.5 | 2.2 | 3.2 | 3.4 | 3.0 | 6.5 | 4.0 | 7.7 | 8.2 | 2.9 | 2.7 | 2.3 | 3.1 | 5.5 | 5.6 | 2.9 | 6.4 | 2.4 | 4.0 | 4.4 | 5.1 | 4.1 | 8.2 | 2.2 |
| 27 | 2.7 | 2.0 | 4.5 | 3.5 | 3.2 | 5.3 | 5.1 | 4.4 | 3.6 | 5.4 | 7.8 | 10.9 | 12.5 | 11.0 | 13.9 | 14.5 | 10.1 | 9.9 | 7.1 | 6.0 | 7.5 | 4.7 | 2.4 | 2.7 | 6.7 | 14.5 | 2.0 |
| 28 | 4.5 | 6.6 | 3.0 | 2.8 | 3.1 | 2.4 | 2.8 | 2.4 | 3.4 | 1.8 | 2.5 | 2.6 | 3.7 | 3.9 | 4.4 | 4.0 | 4.5 | 4.5 | 3.9 | 3.4 | 5.3 | 4.2 | 5.7 | 4.1 | 3.7 | 6.6 | 1.8 |
| 29 | 5.0 | 4.2 | 5.3 | 6.3 | 5.0 | 3.8 | 5.3 | 4.3 | 2.5 | 4.1 | 3.9 | 7.0 | 10.3 | 5.7 | 3.5 | 4.6 | 8.5 | 13.2 | 8.4 | 5.4 | 8.3 | 10.5 | 19.6 | 10.0 | 6.9 | 19.6 | 2.5 |
| 30 | 11.6 | 7.4 | 10.8 | 6.8 | 7.6 | 6.6 | 8.7 | 7.5 | 10.2 | 8.1 | 5.4 | 4.0 | 2.7 | 3.3 | 3.1 | 2.6 | 7.7 | 2.5 | 7.6 | 6.8 | 3.0 | 3.8 | 16.3 | 12.3 | 6.9 | 16.3 | 2.5 |
| 31 | 19.9 | 12.4 | 16.5 | 28.0 | 26.6 | 29.1 | 26.4 | 27.6 | 25.7 | 24.0 | 21.3 | 20.9 | 22.3 | 15.4 | 11.0 | 14.7 | 12.8 | 13.3 | 12.4 | 12.5 | 13.1 | 11.5 | 9.7 | 14.4 | 18.4 | 29.1 | 9.7 |
| Mean | 12.5 | 10.6 | 10.4 | 10.7 | 11.1 | 11.0 | 10.7 | 10.7 | 10.5 | 9.5 | 9.6 | 10.7 | 10.7 | 11.2 | 11.3 | 11.0 | 10.7 | 12.1 | 13.3 | 12.7 | 12.4 | 12.3 | 12.4 | 12.4 | Monthly mean = | | 11.3 |
| Max. | 28.7 | 26.8 | 34.7 | 36.8 | 33.8 | 36.6 | 35.4 | 32.8 | 34.7 | 33.3 | 32.8 | 32.5 | 33.6 | 32.3 | 36.9 | 35.4 | 34.2 | 36.2 | 34.1 | 29.3 | 30.4 | 32.1 | 27.9 | 26.8 | Monthly max. = | | 36.9 |
| Min. | 2.5 | 1.4 | 2.1 | 2.2 | 2.1 | 2.1 | 2.3 | 1.4 | 2.4 | 1.8 | 2.5 | 2.2 | 1.9 | 2.7 | 2.3 | 2.6 | 2.7 | 2.5 | 1.6 | 2.4 | 1.7 | 1.7 | 2.1 | 2.1 | Monthly min. = | | 1.4 |

TOTAL NUMBER OF DATA HOURS IN MONTH: 744
Number of hours of bad or missing data: 0
**** designates missing or lost data

Current % recovery = 100.0

N/A: insufficient data available for calculation (a minimum of 75% is required)

table created at 14:26,10/11/1994

MONTHLY SUMMARY
WIND DIRECTION
(Degrees)
INPUT FILE: od7met.met

Bechtel Environmental, Inc.

Met Data for Site 7
DECEMBER 1993

| Day | Hour 1 | 2 | 3 | 4 | 5 | 6 | 7 | 8 | 9 | 10 | 11 | 12 | 13 | 14 | 15 | 16 | 17 | 18 | 19 | 20 | 21 | 22 | 23 | 24 | Mean | Max. | Min. |
|---|---|---|---|---|---|---|---|---|---|---|---|---|---|---|---|---|---|---|---|---|---|---|---|---|---|---|---|
| 1 | 232.0 | 237.0 | 232.0 | 228.0 | 220.0 | 223.0 | 214.0 | 218.0 | 211.0 | 210.0 | 224.0 | 218.0 | 211.0 | 168.0 | 162.0 | 169.0 | 178.0 | 149.0 | 178.0 | 197.0 | 191.0 | 144.0 | 193.0 | 205.0 | 200.5 | 237.0 | 144.0 |
| 2 | 215.0 | 230.0 | 238.0 | 240.0 | 240.0 | 241.0 | 240.0 | 234.0 | 235.0 | 232.0 | 232.0 | 240.0 | 241.0 | 243.0 | 240.0 | 243.0 | 238.0 | 237.0 | 231.0 | 232.0 | 231.0 | 232.0 | 233.0 | 238.0 | 235.7 | 243.0 | 215.0 |
| 3 | 241.0 | 241.0 | 241.0 | 235.0 | 229.0 | 229.0 | 229.0 | 227.0 | 242.0 | 276.0 | 126.0 | 83.0 | 112.0 | 109.0 | 138.0 | 137.0 | 144.0 | 187.0 | 145.0 | 146.0 | 145.0 | 148.0 | 144.0 | 143.0 | 179.0 | 276.0 | 83.0 |
| 4 | 140.0 | 140.0 | 138.0 | 137.0 | 146.0 | 155.0 | 147.0 | 164.0 | 138.0 | 180.0 | 200.0 | 225.0 | 236.0 | 230.0 | 239.0 | 242.0 | 249.0 | 242.0 | 242.0 | 248.0 | 252.0 | 251.0 | 243.0 | 239.0 | 201.0 | 252.0 | 137.0 |
| 5 | 238.0 | 236.0 | 232.0 | 222.0 | 223.0 | 204.0 | 171.0 | 188.0 | 222.0 | 178.0 | 142.0 | 111.0 | 54.0 | 42.0 | 53.0 | 53.0 | 80.0 | 119.0 | 138.0 | 141.0 | 138.0 | 111.0 | 104.0 | 126.0 | 146.9 | 238.0 | 42.0 |
| 6 | 104.0 | 121.0 | 272.0 | 308.0 | 267.0 | 270.0 | 258.0 | 137.0 | 267.0 | 239.0 | 248.0 | 186.0 | 202.0 | 249.0 | 239.0 | 238.0 | 233.0 | 233.0 | 237.0 | 240.0 | 239.0 | 235.0 | 234.0 | 223.0 | 228.3 | 308.0 | 104.0 |
| 7 | 228.0 | 221.0 | 88.0 | 12.0 | 70.0 | 289.0 | 106.0 | 151.0 | 255.0 | 87.0 | 264.0 | 135.0 | 200.0 | 171.0 | 359.0 | 9.0 | 105.0 | 145.0 | 145.0 | 222.0 | 207.0 | 221.0 | 195.0 | 147.0 | 168.0 | 359.0 | 9.0 |
| 8 | 162.0 | 149.0 | 132.0 | 185.0 | 161.0 | 159.0 | 162.0 | 140.0 | 146.0 | 154.0 | 129.0 | 162.0 | 155.0 | 144.0 | 164.0 | 150.0 | 134.0 | 182.0 | 189.0 | 189.0 | 216.0 | 256.0 | 254.0 | 236.0 | 171.2 | 256.0 | 129.0 |
| 9 | 216.0 | 218.0 | 227.0 | 238.0 | 239.0 | 233.0 | 225.0 | 234.0 | 228.0 | 225.0 | 222.0 | 224.0 | 255.0 | 266.0 | 250.0 | 257.0 | 59.0 | 99.0 | 183.0 | 197.0 | 198.0 | 201.0 | 201.0 | 161.0 | 210.7 | 266.0 | 59.0 |
| 10 | 183.0 | 174.0 | 150.0 | 154.0 | 148.0 | 151.0 | 148.0 | 135.0 | 138.0 | 257.0 | 301.0 | 303.0 | 30.0 | 179.0 | 186.0 | 184.0 | 133.0 | 136.0 | 144.0 | 139.0 | 146.0 | 164.0 | 127.0 | 146.0 | 164.8 | 303.0 | 30.0 |
| 11 | 145.0 | 181.0 | 191.0 | 313.0 | 146.0 | 140.0 | 221.0 | 149.0 | 196.0 | 124.0 | 101.0 | 108.0 | 146.0 | 144.0 | 75.0 | 101.0 | 141.0 | 141.0 | 139.0 | 130.0 | 137.0 | 194.0 | 199.0 | 217.0 | 157.5 | 313.0 | 75.0 |
| 12 | 243.0 | 228.0 | 231.0 | 235.0 | 234.0 | 231.0 | 239.0 | 245.0 | 239.0 | 242.0 | 239.0 | 241.0 | 241.0 | 239.0 | 240.0 | 241.0 | 242.0 | 239.0 | 240.0 | 235.0 | 233.0 | 236.0 | 235.0 | 234.0 | 237.6 | 245.0 | 228.0 |
| 13 | 231.0 | 231.0 | 216.0 | 207.0 | 208.0 | 149.0 | 138.0 | 141.0 | 147.0 | 87.0 | 54.0 | 80.0 | 71.0 | 45.0 | 34.0 | 153.0 | 136.0 | 140.0 | 149.0 | 157.0 | 146.0 | 99.0 | 142.0 | 151.0 | 138.0 | 231.0 | 34.0 |
| 14 | 62.0 | 87.0 | 108.0 | 134.0 | 106.0 | 69.0 | 41.0 | 264.0 | 121.0 | 258.0 | 93.0 | 88.0 | 3.0 | 77.0 | 82.0 | 99.0 | 103.0 | 105.0 | 135.0 | 156.0 | 129.0 | 133.0 | 158.0 | 293.0 | 121.0 | 293.0 | 3.0 |
| 15 | 117.0 | 271.0 | 85.0 | 134.0 | 241.0 | 233.0 | 224.0 | 224.0 | 234.0 | 231.0 | 237.0 | 236.0 | 235.0 | 235.0 | 236.0 | 240.0 | 244.0 | 240.0 | 238.0 | 233.0 | 233.0 | 233.0 | 235.0 | 237.0 | 221.1 | 271.0 | 85.0 |
| 16 | 234.0 | 238.0 | 242.0 | 239.0 | 243.0 | 242.0 | 240.0 | 241.0 | 235.0 | 241.0 | 243.0 | 240.0 | 241.0 | 237.0 | 243.0 | 240.0 | 240.0 | 242.0 | 236.0 | 236.0 | 239.0 | 240.0 | 231.0 | 235.0 | 239.1 | 243.0 | 231.0 |
| 17 | 243.0 | 255.0 | 245.0 | 241.0 | 230.0 | 225.0 | 157.0 | 161.0 | 114.0 | 288.0 | 355.0 | 6.0 | 39.0 | 66.0 | 78.0 | 109.0 | 118.0 | 122.0 | 133.0 | 138.0 | 170.0 | 129.0 | 124.0 | 124.0 | 161.2 | 355.0 | 6.0 |
| 18 | 159.0 | 266.0 | 140.0 | 165.0 | 262.0 | 142.0 | 137.0 | 225.0 | 60.0 | 122.0 | 111.0 | 252.0 | 354.0 | 119.0 | 133.0 | 116.0 | 126.0 | 141.0 | 193.0 | 147.0 | 201.0 | 252.0 | 242.0 | 229.0 | 178.9 | 354.0 | 60.0 |
| 19 | 267.0 | 245.0 | 254.0 | 294.0 | 242.0 | 235.0 | 235.0 | 245.0 | 259.0 | 271.0 | 273.0 | 260.0 | 249.0 | 248.0 | 244.0 | 239.0 | 235.0 | 234.0 | 241.0 | 251.0 | 241.0 | 232.0 | 229.0 | 241.0 | 248.5 | 294.0 | 229.0 |
| 20 | 250.0 | 256.0 | 247.0 | 239.0 | 335.0 | 262.0 | 253.0 | 243.0 | 248.0 | 250.0 | 167.0 | 115.0 | 295.0 | 25.0 | 137.0 | 155.0 | 355.0 | 79.0 | 155.0 | 152.0 | 295.0 | 325.0 | 160.0 | 331.0 | 222.0 | 355.0 | 25.0 |
| 21 | 334.0 | 205.0 | 230.0 | 197.0 | 108.0 | 238.0 | 256.0 | 246.0 | 257.0 | 357.0 | 14.0 | 360.0 | 14.0 | 5.0 | 6.0 | 332.0 | 252.0 | 233.0 | 233.0 | 237.0 | 246.0 | 242.0 | 240.0 | 247.0 | 287.0 | 360.0 | 5.0 |
| 22 | 251.0 | 259.0 | 240.0 | 233.0 | 225.0 | 176.0 | 192.0 | 152.0 | 163.0 | 79.0 | 125.0 | 265.0 | 315.0 | 76.0 | 272.0 | 233.0 | 349.0 | 270.0 | 275.0 | 281.0 | 280.0 | 269.0 | 271.0 | 260.0 | 229.6 | 349.0 | 76.0 |
| 23 | 259.0 | 286.0 | 13.0 | 290.0 | 274.0 | 268.0 | 109.0 | 292.0 | 266.0 | 278.0 | 270.0 | 238.0 | 246.0 | 243.0 | 237.0 | 227.0 | 203.0 | 221.0 | 231.0 | 230.0 | 236.0 | 240.0 | 238.0 | 240.0 | 264.8 | 292.0 | 13.0 |
| 24 | 161.0 | 147.0 | 120.0 | 156.0 | 129.0 | 127.0 | 106.0 | 117.0 | 212.0 | 116.0 | 214.0 | 75.0 | 53.0 | 68.0 | 58.0 | 65.0 | 66.0 | 85.0 | 300.0 | 122.0 | 41.0 | 310.0 | 255.0 | 260.0 | 140.1 | 310.0 | 41.0 |
| 25 | 267.0 | 256.0 | 248.0 | 121.0 | 113.0 | 217.0 | 287.0 | 346.0 | 86.0 | 256.0 | 60.0 | 59.0 | 77.0 | 297.0 | 306.0 | 115.0 | 28.0 | 254.0 | 258.0 | 154.0 | 95.0 | 259.0 | 250.0 | 259.0 | 194.5 | 346.0 | 28.0 |
| 26 | 261.0 | 119.0 | 253.0 | 132.0 | 272.0 | 105.0 | 95.0 | 107.0 | 131.0 | 113.0 | 103.0 | 132.0 | 306.0 | 282.0 | 169.0 | 137.0 | 117.0 | 132.0 | 246.0 | 261.0 | 26.0 | 115.0 | 107.0 | 190.0 | 163.0 | 306.0 | 26.0 |
| 27 | 252.0 | 123.0 | 159.0 | 268.0 | 256.0 | 251.0 | 249.0 | 283.0 | 125.0 | 281.0 | 200.0 | 257.0 | 263.0 | 264.0 | 236.0 | 236.0 | 249.0 | 241.0 | 243.0 | 248.0 | 239.0 | 249.0 | 279.0 | 273.0 | 238.5 | 283.0 | 123.0 |
| 28 | 292.0 | 267.0 | 298.0 | 96.0 | 221.0 | 3.0 | 60.0 | 206.0 | 247.0 | 70.0 | 13.0 | 35.0 | 93.0 | 94.0 | 4.0 | 56.0 | 65.0 | 72.0 | 138.0 | 41.0 | 72.0 | 96.0 | 119.0 | 104.0 | 25.1 | 298.0 | 3.0 |
| 29 | 107.0 | 124.0 | 118.0 | 139.0 | 164.0 | 94.0 | 107.0 | 122.0 | 252.0 | 90.0 | 105.0 | 132.0 | 136.0 | 42.0 | 29.0 | 83.0 | 132.0 | 145.0 | 143.0 | 131.0 | 153.0 | 140.0 | 147.0 | 203.0 | 126.6 | 252.0 | 29.0 |
| 30 | 122.0 | 102.0 | 135.0 | 128.0 | 133.0 | 109.0 | 139.0 | 127.0 | 141.0 | 128.0 | 139.0 | 55.0 | 354.0 | 21.0 | 24.0 | 302.0 | 273.0 | 271.0 | 194.0 | 250.0 | 35.0 | 81.0 | 153.0 | 188.0 | 150.2 | 354.0 | 21.0 |
| 31 | 215.0 | 230.0 | 230.0 | 232.0 | 232.0 | 232.0 | 232.0 | 233.0 | 242.0 | 243.0 | 242.0 | 245.0 | 230.0 | 216.0 | 186.0 | 214.0 | 206.0 | 211.0 | 208.0 | 219.0 | 208.0 | 201.0 | 194.0 | 147.0 | 218.7 | 245.0 | 147.0 |
| Mean | 207.5 | 204.6 | 192.0 | 198.5 | 203.8 | 190.4 | 181.2 | 199.9 | 195.4 | 198.8 | 175.7 | 173.1 | 333.5 | 156.3 | 163.2 | 173.4 | 175.3 | 178.9 | 198.7 | 192.3 | 181.2 | 201.2 | 197.9 | 210.5 | Monthly mean = | | 188.8 |
| Max. | 334.0 | 286.0 | 298.0 | 313.0 | 335.0 | 289.0 | 287.0 | 346.0 | 267.0 | 357.0 | 355.0 | 360.0 | 354.0 | 297.0 | 359.0 | 332.0 | 355.0 | 271.0 | 300.0 | 281.0 | 295.0 | 325.0 | 279.0 | 331.0 | Monthly max. = | | 360.0 |
| Min. | 62.0 | 87.0 | 13.0 | 12.0 | 70.0 | 3.0 | 41.0 | 107.0 | 60.0 | 70.0 | 13.0 | 6.0 | 3.0 | 5.0 | 4.0 | 9.0 | 28.0 | 72.0 | 133.0 | 41.0 | 26.0 | 81.0 | 104.0 | 104.0 | Monthly min. = | | 3.0 |

TOTAL NUMBER OF DATA HOURS IN MONTH: 744
Number of hours of bad or missing data: 0
**** designates missing or lost data

Current % recovery = 100.0

N/A: insufficient data available for calculation (a minimum of 75% is required)

table created at 14:26,10/11/1994

MONTHLY SUMMARY
TEMPERATURE
(Degrees Celsius)
INPUT FILE: od7met.met

Bechtel Environmental, Inc.

Met Data for Site 7
DECEMBER 1993

| Day | Hour 1 | 2 | 3 | 4 | 5 | 6 | 7 | 8 | 9 | 10 | 11 | 12 | 13 | 14 | 15 | 16 | 17 | 18 | 19 | 20 | 21 | 22 | 23 | 24 | Mean | Max. | Min. |
|---|---|---|---|---|---|---|---|---|---|---|---|---|---|---|---|---|---|---|---|---|---|---|---|---|---|---|---|
| 1 | -.5 | -.4 | .2 | .0 | .6 | .5 | 1.1 | 1.6 | 2.1 | 2.7 | 3.4 | 3.5 | 3.3 | 3.0 | 2.7 | 3.0 | 3.4 | 2.1 | 3.0 | 3.6 | 2.2 | .1 | 2.2 | 3.0 | 1.9 | 3.6 | -.5 |
| 2 | 3.8 | 2.5 | 1.9 | .9 | .2 | -.4 | -.8 | -1.2 | -1.3 | -1.3 | -.9 | -.3 | .0 | .3 | .5 | .5 | .5 | .3 | -.1 | -.4 | -.5 | -.4 | -.5 | -.4 | .1 | 3.8 | -1.3 |
| 3 | -.5 | -.5 | -.4 | -.2 | -.1 | .1 | .0 | .2 | .2 | -1.0 | -1.1 | -1.2 | -1.9 | -1.4 | .4 | 1.1 | 1.5 | 2.5 | 1.0 | .8 | 1.0 | 1.1 | 1.4 | 1.6 | .2 | 2.5 | -1.9 |
| 4 | 1.3 | 1.3 | 1.3 | 1.4 | 1.7 | 1.8 | 1.0 | 2.4 | -.2 | 1.9 | 2.0 | .5 | .6 | .4 | .1 | .6 | -.1 | -1.2 | -1.7 | -2.4 | -2.8 | -3.3 | -3.7 | -3.8 | .0 | 2.4 | -3.8 |
| 5 | -4.1 | -4.3 | -4.3 | -4.3 | -4.2 | -4.5 | -4.5 | -4.2 | -3.4 | -3.2 | -2.7 | -.6 | -.9 | -3.0 | -2.8 | -2.9 | -3.7 | -3.5 | -2.6 | -2.9 | -4.8 | -5.4 | -6.6 | -7.1 | -3.8 | -.6 | -7.1 |
| 6 | -7.3 | -7.8 | -10.2 | -10.6 | -10.2 | -10.0 | -9.7 | -9.0 | -9.3 | -8.4 | -6.8 | -4.4 | -.8 | -1.7 | -.6 | -.4 | -1.5 | -1.6 | -1.5 | -1.4 | -1.4 | -1.0 | -.7 | -.3 | -4.9 | -.3 | -10.6 |
| 7 | -.1 | -2.2 | -4.2 | -6.9 | -8.4 | -8.2 | -8.7 | -6.6 | -8.4 | -6.1 | -3.4 | -.8 | .3 | 3.3 | .0 | -1.8 | -1.4 | 2.0 | 2.6 | 3.7 | 5.0 | 3.8 | 2.8 | 2.9 | -1.7 | 5.0 | -8.7 |
| 8 | 3.2 | 2.9 | 3.2 | 5.3 | 4.1 | 4.0 | 3.1 | 1.2 | 1.0 | 3.6 | 3.9 | 6.2 | 6.3 | 6.6 | 7.1 | 7.0 | 6.3 | 8.6 | 9.3 | 9.5 | 10.2 | 7.8 | 3.4 | 3.1 | 5.3 | 10.2 | 1.0 |
| 9 | 1.9 | 5.0 | 5.3 | 4.6 | 3.8 | 3.6 | 3.6 | 3.8 | 3.8 | 4.1 | 4.9 | 5.0 | 4.9 | 5.4 | 5.8 | 6.3 | 4.2 | 4.0 | 6.4 | 7.3 | 7.7 | 7.9 | 8.1 | 6.6 | 5.2 | 8.1 | 1.9 |
| 10 | 7.7 | 7.5 | 6.3 | 5.9 | 5.8 | 5.6 | 5.2 | 4.4 | 4.0 | 3.4 | 4.5 | 7.4 | 9.4 | 11.9 | 11.9 | 11.5 | 10.1 | 9.3 | 8.9 | 8.6 | 8.1 | 7.5 | 7.3 | 7.9 | 7.5 | 11.9 | 3.4 |
| 11 | 7.2 | 6.9 | 7.8 | 5.5 | 7.3 | 4.7 | 5.9 | 6.5 | 5.4 | 8.9 | 9.6 | 11.1 | 12.3 | 11.7 | 11.1 | 10.9 | 10.9 | 10.3 | 10.3 | 9.7 | 9.7 | 11.4 | 10.5 | 9.1 | 8.9 | 12.3 | 4.7 |
| 12 | 4.5 | 2.4 | 2.1 | .6 | -.7 | -1.0 | -1.6 | -2.3 | -3.0 | -3.4 | -3.5 | -3.2 | -2.8 | -2.3 | -2.0 | -1.8 | -1.9 | -2.6 | -3.0 | -3.2 | -3.2 | -3.3 | -3.2 | -3.1 | -1.7 | 4.5 | -3.5 |
| 13 | -3.0 | -2.9 | -3.0 | -3.0 | -3.0 | -4.4 | -5.4 | -6.0 | -6.0 | -5.1 | -6.0 | -6.0 | -4.6 | -3.0 | -1.8 | -.2 | -1.6 | -2.2 | -2.0 | -1.8 | -2.0 | -4.1 | -2.6 | -3.3 | -3.5 | -.2 | -6.0 |
| 14 | -6.3 | -6.1 | -4.3 | -2.9 | -5.5 | -6.0 | -5.2 | -6.2 | -5.5 | -4.7 | -2.7 | -1.1 | .4 | 2.1 | 1.2 | 1.0 | .3 | -.7 | .9 | -1.4 | -1.0 | .0 | -.9 | -1.0 | -2.3 | 2.1 | -6.3 |
| 15 | -1.7 | -2.2 | -3.1 | -2.9 | -3.3 | -3.7 | -4.3 | -4.7 | -4.8 | -5.0 | -5.0 | -5.2 | -4.6 | -4.2 | -3.4 | -2.9 | -3.2 | -2.9 | -2.8 | -2.4 | -2.0 | -1.9 | -1.9 | -2.4 | -3.4 | -1.7 | -5.2 |
| 16 | -2.7 | -2.9 | -3.0 | -3.2 | -3.4 | -3.7 | -4.0 | -4.2 | -4.3 | -4.2 | -4.0 | -4.0 | -3.8 | -3.5 | -3.1 | -2.9 | -2.8 | -2.8 | -2.8 | -2.7 | -2.9 | -2.9 | -2.8 | -2.7 | -3.3 | -2.7 | -4.3 |
| 17 | -2.9 | -3.2 | -3.2 | -3.3 | -3.0 | -2.8 | -3.3 | -3.2 | -4.0 | -3.8 | -3.4 | -3.3 | -3.1 | -3.6 | -3.6 | -3.7 | -3.6 | -3.6 | -3.6 | -3.2 | -5.3 | -4.8 | -5.2 | -4.9 | -3.6 | -2.8 | -5.3 |
| 18 | -5.8 | -8.2 | -7.9 | -6.9 | -9.2 | -9.7 | -8.9 | -9.3 | -9.8 | -8.2 | -8.0 | -4.9 | -5.9 | -6.4 | -4.7 | -4.3 | -4.6 | -4.4 | -3.4 | -3.8 | -3.1 | -4.5 | -4.0 | -3.3 | -6.2 | -3.1 | -9.8 |
| 19 | -3.9 | -4.4 | -3.8 | -4.4 | -4.6 | -4.6 | -4.2 | -4.4 | -5.3 | -5.9 | -5.8 | -5.2 | -4.7 | -4.5 | -4.0 | -4.3 | -5.1 | -4.7 | -4.7 | -5.1 | -4.9 | -4.8 | -4.2 | -4.1 | -4.7 | -3.8 | -5.9 |
| 20 | -4.4 | -5.4 | -5.2 | -5.1 | -6.4 | -7.2 | -7.7 | -7.7 | -7.6 | -7.4 | -6.7 | -5.3 | -4.2 | -6.2 | -5.8 | -5.2 | -5.5 | -7.9 | -6.6 | -5.7 | -6.9 | -7.1 | -6.5 | -6.5 | -6.3 | -4.2 | -7.9 |
| 21 | -6.8 | -6.5 | -6.2 | -6.4 | -6.5 | -6.1 | -6.2 | -6.3 | -6.3 | -6.7 | -7.1 | -7.1 | -6.6 | -5.8 | -5.9 | -5.5 | -5.7 | -6.3 | -6.4 | -6.8 | -7.0 | -7.0 | -7.0 | -7.0 | -6.5 | -5.5 | -7.1 |
| 22 | -7.1 | -7.1 | -7.4 | -7.7 | -7.8 | -7.9 | -7.8 | -8.1 | -8.0 | -6.6 | -6.9 | -6.6 | -6.2 | -6.1 | -6.4 | -5.7 | -5.6 | -6.1 | -5.7 | -6.5 | -6.7 | -6.6 | -6.5 | -6.7 | -6.8 | -5.6 | -8.1 |
| 23 | -6.6 | -6.8 | -8.1 | -9.0 | -9.5 | -10.3 | -9.8 | -9.4 | -8.6 | -8.7 | -8.7 | -8.1 | -7.3 | -6.9 | -6.4 | -5.5 | -4.8 | -4.1 | -3.9 | -3.8 | -4.1 | -4.2 | -4.4 | -4.9 | -6.8 | -3.8 | -10.3 |
| 24 | -6.4 | -7.3 | -10.4 | -8.1 | -9.5 | -9.9 | -10.1 | -11.3 | -9.5 | -10.2 | -7.5 | -6.9 | -7.0 | -6.2 | -5.8 | -5.5 | -5.8 | -5.7 | -6.9 | -6.9 | -8.0 | -9.4 | -9.2 | -10.7 | -8.1 | -5.5 | -11.3 |
| 25 | -10.6 | -10.7 | -10.8 | -11.1 | -12.1 | -13.0 | -14.9 | -15.2 | -13.2 | -10.9 | -9.9 | -9.2 | -7.3 | -6.6 | -5.3 | -2.7 | -5.5 | -7.1 | -5.8 | -4.7 | -5.3 | -6.0 | -6.7 | -6.7 | -8.8 | -2.7 | -15.2 |
| 26 | -7.4 | -6.8 | -7.3 | -7.2 | -7.3 | -7.7 | -7.8 | -7.9 | -6.0 | -6.7 | -6.7 | -3.5 | -3.1 | -2.4 | -1.7 | -2.1 | -2.4 | -1.1 | -1.6 | -1.4 | -3.5 | -2.9 | -2.1 | -1.5 | -4.5 | -1.1 | -7.9 |
| 27 | -1.0 | -1.8 | -1.4 | -2.5 | -2.6 | -1.6 | -1.5 | -2.9 | -3.2 | -1.8 | .1 | -.1 | -1.0 | -1.6 | -1.5 | -.8 | -.8 | -.9 | -.6 | -.3 | -.3 | -.3 | -.7 | -.9 | -1.2 | .1 | -3.2 |
| 28 | -1.8 | -3.3 | -3.6 | -3.6 | -2.9 | -3.8 | -5.0 | -4.4 | -4.9 | -4.9 | -4.7 | -4.2 | -3.8 | -3.6 | -3.7 | -4.2 | -4.6 | -4.8 | -4.9 | -4.9 | -5.3 | -5.6 | -5.9 | -6.3 | -4.4 | -1.8 | -6.3 |
| 29 | -6.7 | -6.4 | -7.1 | -7.6 | -7.1 | -7.5 | -7.4 | -7.2 | -6.7 | -6.5 | -5.3 | -4.2 | -3.9 | -4.4 | -4.1 | -3.7 | -3.7 | -3.6 | -3.9 | -5.1 | -4.3 | -4.6 | -4.8 | -5.7 | -5.5 | -3.6 | -7.6 |
| 30 | -5.2 | -5.7 | -5.3 | -6.0 | -5.5 | -6.7 | -5.7 | -6.2 | -5.6 | -5.2 | -4.0 | -4.2 | -2.7 | -2.6 | -2.8 | -2.8 | -4.4 | -5.6 | -5.0 | -5.2 | -6.9 | -7.0 | -5.0 | -.2 | -4.8 | -.2 | -7.0 |
| 31 | 3.5 | .4 | .1 | .8 | .1 | -.5 | -.1 | .2 | .4 | .3 | .6 | 1.1 | 1.5 | 1.6 | 1.6 | 2.1 | 1.9 | 1.9 | 2.2 | 2.5 | 2.2 | 2.4 | 2.3 | -.2 | 1.2 | 3.5 | -.5 |
| Mean | -2.2 | -2.7 | -3.0 | -3.2 | -3.5 | -3.9 | -4.0 | -4.1 | -4.1 | -3.6 | -3.0 | -2.1 | -1.5 | -1.3 | -1.1 | -.8 | -1.3 | -1.4 | -1.1 | -1.2 | -1.5 | -1.8 | -1.8 | -1.9 | Monthly mean = | | -2.3 |
| Max. | 7.7 | 7.5 | 7.8 | 5.9 | 7.3 | 5.6 | 5.9 | 6.5 | 5.4 | 8.9 | 9.6 | 11.1 | 12.3 | 11.9 | 11.9 | 11.5 | 10.9 | 10.3 | 10.3 | 9.7 | 10.2 | 11.4 | 10.5 | 9.1 | Monthly max. = | | 12.3 |
| Min. | -10.6 | -10.7 | -10.8 | -11.1 | -12.1 | -13.0 | -14.9 | -15.2 | -13.2 | -10.9 | -9.9 | -9.2 | -7.3 | -6.9 | -6.4 | -5.7 | -5.8 | -7.9 | -6.9 | -6.9 | -8.0 | -9.4 | -9.2 | -10.7 | Monthly min. = | | -15.2 |

TOTAL NUMBER OF DATA HOURS IN MONTH: 744
Number of hours of bad or missing data: 0
**** designates missing or lost data

Current % recovery = 100.0

N/A: insufficient data available for calculation (a minimum of 75% is required)

table created at 14:26,10/11/1994

MONTHLY SUMMARY
SIGMA THETA
(Degrees)
INPUT FILE: od7met.met

Bechtel Environmental, Inc.

Met Data for Site 7
DECEMBER 1993

| Day \ Hour | 1 | 2 | 3 | 4 | 5 | 6 | 7 | 8 | 9 | 10 | 11 | 12 | 13 | 14 | 15 | 16 | 17 | 18 | 19 | 20 | 21 | 22 | 23 | 24 | Mean | Max. | Min. |
|---|---|---|---|---|---|---|---|---|---|---|---|---|---|---|---|---|---|---|---|---|---|---|---|---|---|---|---|
| 1 | 10. | 11. | 12. | 14. | 15. | 12. | 15. | 13. | 14. | 22. | 16. | 14. | 16. | 20. | 22. | 17. | 17. | 8. | 12. | 13. | 15. | 7. | 20. | 13. | N/A | 22. | 7. |
| 2 | 12. | 13. | 13. | 13. | 14. | 12. | 12. | 9. | 9. | 8. | 9. | 12. | 14. | 15. | 13. | 15. | 11. | 9. | 8. | 8. | 8. | 8. | 8. | 10. | N/A | 15. | 8. |
| 3 | 12. | 14. | 14. | 12. | 10. | 10. | 11. | 13. | 19. | 38. | 41. | 29. | 22. | 24. | 8. | 9. | 36. | 17. | 7. | 7. | 8. | 6. | 6. | 7. | N/A | 41. | 6. |
| 4 | 7. | 9. | 10. | 12. | 10. | 26. | 53. | 14. | 10. | 15. | 19. | 12. | 11. | 11. | 13. | 15. | 16. | 15. | 15. | 15. | 14. | 14. | 13. | 10. | N/A | 53. | 7. |
| 5 | 9. | 10. | 8. | 8. | 7. | 18. | 13. | 13. | 14. | 20. | 13. | 41. | 21. | 13. | 11. | 10. | 17. | 12. | 6. | 7. | 33. | 6. | 14. | 19. | N/A | 41. | 6. |
| 6 | 22. | 47. | 13. | 56. | 68. | 15. | 35. | 70. | 14. | 41. | 27. | 34. | 28. | 20. | 15. | 14. | 11. | 10. | 11. | 12. | 11. | 11. | 11. | 9. | N/A | 70. | 9. |
| 7 | 10. | 46. | 22. | 25. | 11. | 34. | 15. | 27. | 18. | 54. | 57. | 15. | 48. | 16. | 43. | 8. | 56. | 9. | 22. | 31. | 11. | 43. | 41. | 9. | N/A | 57. | 8. |
| 8 | 34. | 42. | 21. | 13. | 14. | 10. | 12. | 8. | 8. | 16. | 8. | 16. | 9. | 9. | 8. | 8. | 8. | 10. | 9. | 10. | 14. | 14. | 12. | 11. | N/A | 42. | 8. |
| 9 | 11. | 10. | 11. | 12. | 13. | 11. | 10. | 10. | 10. | 9. | 13. | 12. | 21. | 37. | 22. | 44. | 48. | 26. | 7. | 9. | 9. | 9. | 10. | 10. | N/A | 48. | 7. |
| 10 | 11. | 11. | 45. | 9. | 5. | 5. | 8. | 24. | 45. | 29. | 33. | 64. | 57. | 25. | 9. | 13. | 11. | 9. | 10. | 8. | 47. | 57. | 36. | 9. | N/A | 64. | 5. |
| 11 | 25. | 38. | 30. | 66. | 28. | 48. | 59. | 64. | 68. | 39. | 36. | 52. | 55. | 71. | 29. | 18. | 18. | 7. | 8. | 13. | 24. | 12. | 11. | 14. | N/A | 71. | 7. |
| 12 | 15. | 8. | 8. | 10. | 9. | 9. | 12. | 16. | 12. | 12. | 11. | 14. | 13. | 13. | 13. | 14. | 14. | 11. | 10. | 9. | 9. | 10. | 9. | 8. | N/A | 16. | 8. |
| 13 | 8. | 8. | 10. | 9. | 10. | 43. | 4. | 14. | 28. | 48. | 19. | 13. | 10. | 10. | 19. | 42. | 10. | 6. | 6. | 7. | 7. | 30. | 6. | 49. | N/A | 49. | 4. |
| 14 | 55. | 33. | 19. | 40. | 64. | 21. | 53. | 33. | 64. | 88. | 57. | 39. | 91. | 42. | 8. | 7. | 76. | 35. | 22. | 59. | 9. | 5. | 18. | 47. | N/A | 91. | 5. |
| 15 | 21. | 23. | 67. | 22. | 18. | 12. | 8. | 7. | 9. | 9. | 8. | 7. | 7. | 7. | 7. | 10. | 12. | 10. | 9. | 7. | 7. | 6. | 7. | 7. | N/A | 67. | 6. |
| 16 | 7. | 8. | 11. | 9. | 11. | 12. | 8. | 10. | 9. | 12. | 12. | 11. | 11. | 8. | 13. | 9. | 10. | 13. | 9. | 9. | 11. | 13. | 11. | 10. | N/A | 13. | 7. |
| 17 | 16. | 14. | 15. | 21. | 13. | 10. | 14. | 6. | 18. | 30. | 25. | 18. | 20. | 22. | 15. | 7. | 10. | 7. | 6. | 5. | 52. | 4. | 6. | 4. | N/A | 52. | 4. |
| 18 | 22. | 44. | 17. | 30. | 19. | 58. | 38. | 44. | 41. | 26. | 45. | 44. | 72. | 26. | 33. | 13. | 36. | 12. | 20. | 9. | 17. | 31. | 34. | 13. | N/A | 72. | 9. |
| 19 | 21. | 25. | 16. | 40. | 38. | 10. | 12. | 14. | 10. | 8. | 7. | 12. | 15. | 15. | 15. | 7. | 8. | 8. | 11. | 14. | 15. | 11. | 11. | 15. | N/A | 40. | 7. |
| 20 | 17. | 47. | 35. | 31. | 58. | 61. | 11. | 16. | 11. | 13. | 31. | 23. | 52. | 9. | 20. | 9. | 20. | 30. | 28. | 15. | 23. | 46. | 42. | 49. | N/A | 61. | 9. |
| 21 | 36. | 30. | 14. | 39. | 26. | 12. | 13. | 13. | 13. | 10. | 11. | 12. | 12. | 11. | 10. | 20. | 15. | 8. | 8. | 10. | 14. | 12. | 11. | 16. | N/A | 39. | 8. |
| 22 | 16. | 15. | 17. | 13. | 13. | 11. | 21. | 13. | 30. | 64. | 38. | 14. | 34. | 35. | 16. | 43. | 44. | 21. | 15. | 15. | 9. | 8. | 9. | 6. | N/A | 64. | 6. |
| 23 | 9. | 16. | 52. | 30. | 15. | 68. | 30. | 41. | 12. | 33. | 28. | 12. | 13. | 11. | 10. | 12. | 14. | 10. | 11. | 11. | 11. | 15. | 15. | 17. | N/A | 68. | 9. |
| 24 | 47. | 69. | 36. | 48. | 32. | 43. | 46. | 21. | 41. | 41. | 50. | 23. | 15. | 14. | 10. | 10. | 16. | 18. | 67. | 12. | 41. | 47. | 14. | 22. | N/A | 69. | 10. |
| 25 | 15. | 14. | 48. | 37. | 51. | 38. | 34. | 54. | 44. | 32. | 37. | 43. | 30. | 21. | 41. | 23. | 35. | 66. | 78. | 20. | 43. | 20. | 31. | 46. | N/A | 78. | 14. |
| 26 | 18. | 25. | 35. | 67. | 58. | 29. | 29. | 38. | 33. | 67. | 21. | 48. | 25. | 22. | 48. | 42. | 18. | 44. | 40. | 9. | 26. | 14. | 10. | 15. | N/A | 67. | 9. |
| 27 | 44. | 31. | 26. | 30. | 50. | 47. | 60. | 48. | 58. | 37. | 22. | 15. | 11. | 12. | 12. | 11. | 15. | 13. | 14. | 15. | 12. | 24. | 48. | 33. | N/A | 60. | 11. |
| 28 | 20. | 11. | 35. | 32. | 28. | 31. | 12. | 32. | 25. | 66. | 14. | 17. | 17. | 18. | 12. | 15. | 10. | 12. | 23. | 28. | 17. | 23. | 15. | 15. | N/A | 66. | 10. |
| 29 | 17. | 13. | 13. | 9. | 16. | 18. | 9. | 32. | 24. | 9. | 9. | 10. | 10. | 17. | 18. | 12. | 11. | 7. | 18. | 35. | 9. | 7. | 18. | 20. | N/A | 35. | 7. |
| 30 | 8. | 19. | 10. | 10. | 11. | 7. | 10. | 10. | 10. | 16. | 32. | 14. | 34. | 15. | 21. | 21. | 12. | 37. | 16. | 22. | 83. | 35. | 13. | 17. | N/A | 83. | 7. |
| 31 | 11. | 53. | 38. | 10. | 11. | 10. | 11. | 10. | 13. | 15. | 13. | 15. | 9. | 11. | 14. | 11. | 10. | 11. | 10. | 10. | 9. | 8. | 9. | 7. | N/A | 53. | 7. |
| Mean | N/A | N/A | N/A | N/A | N/A | N/A | N/A | N/A | N/A | N/A | N/A | N/A | N/A | N/A | N/A | N/A | N/A | N/A | N/A | N/A | N/A | N/A | N/A | N/A | Monthly mean = | | N/A |
| Max. | 55. | 69. | 67. | 67. | 68. | 68. | 60. | 70. | 68. | 88. | 57. | 64. | 91. | 71. | 48. | 44. | 76. | 66. | 78. | 59. | 83. | 57. | 48. | 49. | Monthly max. = | | 91. |
| Min. | 7. | 8. | 8. | 8. | 5. | 5. | 4. | 6. | 8. | 8. | 7. | 7. | 7. | 7. | 7. | 7. | 8. | 6. | 6. | 5. | 7. | 4. | 6. | 4. | Monthly min. = | | 4. |

TOTAL NUMBER OF DATA HOURS IN MONTH: 744
Number of hours of bad or missing data: 0
**** designates missing or lost data

Current % recovery = 100.0

N/A: A sigma theta mean is not physically meaningful.

table created at 14:26,10/11/1994

MONTHLY SUMMARY
WIND SPEED
(Miles Per Hour)
INPUT FILE: s7metjj4.met

Bechtel Environmental, Inc.

Met Data for Site 7
JANUARY 1994

| Day \ Hour | 1 | 2 | 3 | 4 | 5 | 6 | 7 | 8 | 9 | 10 | 11 | 12 | 13 | 14 | 15 | 16 | 17 | 18 | 19 | 20 | 21 | 22 | 23 | 24 | Mean | Max. | Min. |
|---|---|---|---|---|---|---|---|---|---|---|---|---|---|---|---|---|---|---|---|---|---|---|---|---|---|---|---|
| 1 | 15.7 | 17.8 | 13.0 | 18.9 | 14.9 | 14.7 | 16.0 | 14.1 | 13.8 | 14.2 | 11.5 | 10.3 | 16.6 | 12.2 | 22.0 | 23.5 | 26.4 | 32.4 | 35.9 | 33.5 | 30.7 | 26.8 | 29.6 | 23.1 | 20.3 | 35.9 | 10.3 |
| 2 | 26.8 | 26.6 | 29.0 | 27.3 | 29.2 | 25.4 | 24.1 | 23.2 | 22.3 | 18.0 | 14.1 | 14.4 | 10.9 | 8.3 | 9.7 | 8.9 | 11.4 | 15.6 | 14.3 | 15.4 | 15.6 | 15.4 | 12.3 | 12.8 | 18.0 | 29.2 | 8.3 |
| 3 | 13.4 | 11.3 | 14.3 | 29.3 | 38.4 | 29.3 | 26.0 | 24.3 | 13.1 | 14.8 | 23.8 | 24.1 | 23.6 | 19.6 | 16.6 | 16.1 | 9.0 | 9.1 | 10.8 | 8.8 | 9.1 | 7.2 | 11.2 | 14.8 | 17.4 | 38.4 | 7.2 |
| 4 | 12.3 | 7.8 | 6.9 | 6.1 | 5.5 | 5.6 | 8.3 | 5.9 | 6.5 | 9.1 | 9.9 | 17.9 | 9.9 | 9.8 | 12.6 | 13.7 | 16.2 | 17.4 | 15.7 | 14.0 | 11.3 | 13.2 | 19.5 | 24.3 | 11.6 | 24.3 | 5.5 |
| 5 | 26.5 | 23.8 | 25.4 | 29.0 | 29.5 | 28.9 | 34.7 | 29.7 | 31.1 | 29.2 | 35.3 | 32.6 | 33.9 | 34.3 | 33.9 | 31.5 | 25.7 | 26.2 | 27.5 | 26.8 | 28.4 | 26.2 | 25.2 | 24.1 | 29.1 | 35.3 | 23.8 |
| 6 | 26.1 | 25.5 | 24.0 | 23.9 | 24.3 | 23.1 | 23.7 | 23.1 | 21.8 | 20.6 | 21.4 | 22.1 | 20.6 | 23.4 | 31.8 | 30.3 | 33.5 | 25.8 | 26.0 | 28.0 | 29.4 | 31.4 | 27.9 | 28.4 | 25.7 | 33.5 | 20.6 |
| 7 | 27.4 | 23.4 | 23.5 | 19.4 | 19.6 | 14.4 | 11.0 | 11.2 | 10.8 | 10.2 | 10.8 | 10.2 | 11.8 | 12.3 | 10.5 | 10.1 | 7.9 | 8.2 | 7.5 | 12.5 | 12.1 | 14.1 | 16.5 | 18.2 | 13.9 | 27.4 | 7.5 |
| 8 | 17.6 | 17.8 | 12.4 | 11.0 | 11.7 | 4.2 | 4.5 | 6.2 | 9.3 | 3.9 | 5.3 | 7.4 | 10.3 | 7.7 | 7.8 | 9.0 | 12.6 | 7.6 | 10.8 | 12.1 | 12.9 | 4.1 | 7.0 | 5.4 | 9.1 | 17.8 | 3.9 |
| 9 | 6.1 | 10.8 | 17.9 | 15.9 | 18.3 | 16.5 | 19.3 | 20.4 | 24.0 | 20.1 | 17.7 | 21.1 | 22.6 | 18.4 | 17.1 | 19.0 | 18.2 | 16.8 | 15.9 | 16.7 | 17.9 | 14.4 | 14.2 | 13.0 | 17.2 | 24.0 | 6.1 |
| 10 | 16.8 | 17.4 | 16.9 | 18.4 | 21.6 | 23.7 | 19.1 | 18.4 | 15.8 | 12.0 | 5.2 | 12.0 | 12.1 | 15.3 | 14.8 | 12.4 | 8.6 | 9.7 | 8.6 | 10.7 | 15.4 | 17.5 | 15.9 | 17.4 | 14.8 | 23.7 | 5.2 |
| 11 | 17.1 | 15.3 | 18.4 | 18.4 | 19.4 | 17.9 | 14.7 | 12.6 | 15.6 | 10.5 | 14.3 | 12.2 | 9.8 | 11.4 | 10.5 | 13.9 | 13.4 | 14.4 | 13.2 | 11.9 | 14.5 | 10.7 | 11.4 | 14.0 | 14.0 | 19.4 | 9.8 |
| 12 | 16.1 | 12.3 | 14.1 | 15.6 | 18.1 | 13.9 | 9.4 | 10.9 | 15.7 | 20.3 | 17.9 | 18.1 | 18.1 | 18.8 | 14.8 | 14.8 | 15.4 | 18.0 | 19.4 | 17.9 | 17.5 | 17.2 | 19.2 | 17.6 | 16.3 | 20.3 | 9.4 |
| 13 | 18.9 | 21.7 | 27.1 | 25.1 | 21.2 | 18.8 | 24.0 | 25.2 | 17.4 | 18.9 | 19.4 | 19.2 | 17.4 | 17.2 | 18.3 | 16.1 | 14.1 | 14.5 | 15.6 | 14.6 | 21.7 | 18.8 | 17.9 | 12.2 | 19.0 | 27.1 | 12.2 |
| 14 | 10.0 | 15.3 | 19.7 | 13.3 | 12.5 | 4.0 | 6.2 | 2.9 | 7.7 | 4.9 | 5.1 | 9.3 | 5.8 | 6.4 | 4.4 | 5.6 | 4.8 | 2.4 | 2.5 | 2.7 | 2.6 | 2.2 | 2.1 | 2.3 | 6.4 | 19.7 | 2.1 |
| 15 | 2.2 | 3.1 | 1.3 | 3.1 | 2.2 | 3.6 | 3.9 | 4.2 | 3.7 | 2.1 | 4.1 | 4.6 | 5.5 | 7.8 | 20.2 | 29.2 | 30.0 | 30.0 | 29.5 | 26.7 | 31.5 | 29.8 | 23.0 | 33.7 | 14.0 | 33.7 | 1.3 |
| 16 | 30.6 | 24.9 | 26.4 | 28.2 | 28.7 | 24.6 | 25.9 | 30.2 | 26.5 | 23.7 | 24.1 | 17.3 | 14.3 | 16.1 | 20.5 | 20.2 | 17.2 | 14.0 | 13.9 | 17.1 | 23.5 | 29.4 | 28.0 | 23.4 | 22.9 | 30.6 | 13.9 |
| 17 | 29.2 | 27.0 | 24.3 | 24.9 | 19.6 | 19.7 | ***** | ***** | 30.2 | 25.6 | 22.6 | 23.3 | 23.3 | 21.7 | 27.5 | 26.5 | 23.4 | 21.3 | 25.9 | 24.3 | 24.5 | 20.3 | 19.3 | 19.5 | 23.8 | 30.2 | 19.3 |
| 18 | 20.6 | 18.1 | 20.5 | 17.1 | 12.1 | 3.5 | 2.7 | 4.7 | 4.7 | 2.4 | 2.7 | 3.1 | 3.5 | 4.0 | 3.6 | 4.0 | 3.4 | 3.6 | 2.9 | 2.9 | 5.4 | 4.0 | 4.5 | 3.4 | 6.6 | 20.6 | 2.4 |
| 19 | 3.1 | 2.7 | 2.6 | 2.9 | 3.5 | 5.3 | 6.2 | 3.1 | 4.1 | 3.1 | 2.7 | 2.8 | 3.5 | 8.1 | 12.0 | 9.7 | 8.4 | 4.8 | 4.4 | 6.1 | 7.3 | 3.2 | 5.3 | 2.7 | 4.9 | 12.0 | 2.6 |
| 20 | 3.4 | 3.9 | 5.0 | 3.5 | 2.2 | 2.8 | 5.1 | 3.1 | 5.2 | 6.1 | 2.5 | 3.1 | 3.4 | 5.3 | 6.0 | 5.9 | 5.9 | 4.6 | 4.1 | 2.5 | 2.0 | 1.5 | 2.8 | 1.7 | 3.8 | 6.1 | 1.5 |
| 21 | 2.9 | 5.9 | 5.2 | 3.8 | 10.1 | 4.7 | 8.9 | 3.4 | 4.4 | 5.3 | 5.3 | 8.1 | 5.5 | 5.7 | 4.9 | 4.8 | 4.0 | 3.3 | 3.6 | 4.6 | 5.2 | 4.3 | 1.8 | 3.6 | 5.0 | 10.1 | 1.8 |
| 22 | 4.7 | 2.0 | 7.4 | 6.4 | 6.6 | 7.4 | 5.2 | 3.4 | 6.2 | 5.0 | 5.9 | 8.1 | 7.5 | 7.8 | 6.1 | 5.1 | 4.3 | 3.3 | 4.5 | 5.2 | 9.2 | 4.3 | 2.8 | 9.5 | 5.7 | 9.5 | 2.0 |
| 23 | 3.5 | 4.9 | 8.1 | 5.9 | 10.6 | 6.7 | 6.0 | 4.6 | 9.5 | 3.3 | 3.9 | 6.7 | 3.8 | 6.7 | 14.7 | 14.0 | 22.5 | 26.5 | 18.2 | 15.2 | 18.0 | 17.5 | 14.3 | 9.3 | 10.6 | 26.5 | 3.3 |
| 24 | 13.7 | 7.8 | 10.6 | 12.9 | 12.3 | 9.6 | 8.6 | 5.8 | 17.6 | 14.4 | 11.5 | 10.0 | 7.7 | 8.6 | 8.6 | 10.2 | 6.5 | 6.1 | 10.0 | 9.8 | 7.5 | 10.7 | 7.9 | 11.9 | 10.0 | 17.6 | 5.8 |
| 25 | 11.8 | 11.3 | 9.8 | 11.9 | 9.4 | 10.7 | 5.1 | 3.0 | 1.7 | 2.4 | 4.2 | 7.2 | 7.4 | 4.6 | 4.8 | 8.1 | 3.8 | 3.6 | 2.9 | 16.9 | 24.9 | 27.4 | 27.1 | 26.8 | 10.3 | 27.4 | 1.7 |
| 26 | 26.4 | 26.7 | 21.4 | 20.4 | 19.0 | 18.0 | 16.5 | 16.1 | 17.7 | 18.4 | 19.2 | 20.3 | 20.5 | 21.5 | 20.9 | 19.4 | 18.2 | 18.1 | 15.6 | 16.1 | 16.4 | 14.9 | 14.8 | 15.3 | 18.8 | 26.7 | 14.8 |
| 27 | 15.8 | 14.3 | 14.3 | 11.0 | 10.9 | 11.2 | 11.0 | 11.4 | 10.1 | 11.7 | 11.9 | 11.3 | 7.9 | 5.5 | 2.9 | 2.5 | 3.7 | 6.8 | 6.4 | 2.4 | 2.2 | 3.0 | 4.9 | 3.8 | 8.2 | 15.8 | 2.2 |
| 28 | 5.0 | 7.0 | 6.9 | 3.4 | 4.0 | 8.6 | 8.2 | 7.8 | 5.1 | 3.8 | 3.9 | 6.4 | 11.2 | 9.5 | 7.2 | 5.6 | 2.1 | 4.4 | 9.9 | 17.5 | 18.8 | 16.4 | 15.6 | 18.6 | 8.6 | 18.8 | 2.1 |
| 29 | 23.2 | 25.7 | 22.2 | 21.3 | 16.5 | 14.8 | 15.9 | 14.6 | 18.1 | 19.5 | 18.2 | 17.6 | 16.8 | 15.5 | 18.7 | 15.2 | 14.9 | 14.7 | 13.2 | 13.2 | 10.4 | 8.0 | 7.9 | 5.0 | 15.9 | 25.7 | 5.0 |
| 30 | 3.1 | 6.2 | 10.1 | 8.1 | 10.5 | 12.2 | 14.1 | 13.1 | 12.0 | 12.5 | 12.1 | 14.8 | 12.2 | 16.3 | 17.9 | 17.8 | 15.6 | 11.0 | 8.7 | 8.9 | 9.1 | 7.9 | 5.7 | 2.6 | 10.9 | 17.9 | 2.6 |
| 31 | 3.3 | 4.4 | 2.4 | 3.8 | 5.5 | 2.4 | 4.5 | 4.3 | 3.4 | 2.9 | 3.5 | 6.4 | 11.1 | 12.4 | 13.4 | 12.0 | 11.9 | 13.7 | 13.5 | 9.8 | 7.3 | 7.1 | 6.2 | 3.3 | 7.0 | 13.7 | 2.4 |
| Mean | 14.6 | 14.3 | 14.9 | 14.8 | 15.1 | 13.1 | 13.0 | 12.0 | 13.1 | 11.9 | 11.9 | 13.0 | 12.5 | 12.7 | 14.0 | 14.0 | 13.3 | 13.2 | 13.3 | 13.7 | 14.9 | 13.8 | 13.6 | 13.6 | Monthly mean = | | 13.5 |
| Max. | 30.6 | 27.0 | 29.0 | 29.3 | 38.4 | 29.3 | 34.7 | 30.2 | 31.1 | 29.2 | 35.3 | 32.6 | 33.9 | 34.3 | 33.9 | 31.5 | 33.5 | 32.4 | 35.9 | 33.5 | 31.5 | 31.4 | 29.6 | 33.7 | Monthly max. = | | 38.4 |
| Min. | 2.2 | 2.0 | 1.3 | 2.9 | 2.2 | 2.4 | 2.7 | 2.9 | 1.7 | 2.1 | 2.5 | 2.8 | 3.4 | 4.0 | 2.9 | 2.5 | 2.1 | 2.4 | 2.5 | 2.4 | 2.0 | 1.5 | 1.8 | 1.7 | Monthly min. = | | 1.3 |

TOTAL NUMBER OF DATA HOURS IN MONTH: 744
Number of hours of bad or missing data: 2
***** designates missing or lost data

Current % recovery = 99.7

N/A: insufficient data available for calculation (a minimum of 75% is required)

table created at 18:25, 7/14/1994

MONTHLY SUMMARY
WIND DIRECTION
(Degrees)
INPUT FILE: s7metjj4.met

Bechtel Environmental, Inc.

Met Data for Site 7
JANUARY 1994

| Day | Hour 1 | 2 | 3 | 4 | 5 | 6 | 7 | 8 | 9 | 10 | 11 | 12 | 13 | 14 | 15 | 16 | 17 | 18 | 19 | 20 | 21 | 22 | 23 | 24 | Mean | Max. | Min. |
|---|---|---|---|---|---|---|---|---|---|---|---|---|---|---|---|---|---|---|---|---|---|---|---|---|---|---|---|
| 1 | 146.0 | 145.0 | 148.0 | 149.0 | 144.0 | 153.0 | 161.0 | 154.0 | 195.0 | 201.0 | 189.0 | 197.0 | 160.0 | 211.0 | 246.0 | 263.0 | 236.0 | 233.0 | 238.0 | 251.0 | 249.0 | 247.0 | 259.0 | 240.0 | 200.6 | 263.0 | 144.0 |
| 2 | 233.0 | 232.0 | 233.0 | 231.0 | 232.0 | 232.0 | 230.0 | 230.0 | 226.0 | 228.0 | 218.0 | 217.0 | 196.0 | 178.0 | 162.0 | 148.0 | 138.0 | 164.0 | 175.0 | 187.0 | 199.0 | 209.0 | 196.0 | 201.0 | 204.0 | 233.0 | 138.0 |
| 3 | 215.0 | 200.0 | 213.0 | 230.0 | 230.0 | 231.0 | 243.0 | 259.0 | 272.0 | 253.0 | 233.0 | 232.0 | 234.0 | 238.0 | 240.0 | 241.0 | 210.0 | 200.0 | 210.0 | 173.0 | 158.0 | 141.0 | 154.0 | 152.0 | 215.1 | 272.0 | 141.0 |
| 4 | 148.0 | 151.0 | 145.0 | 136.0 | 136.0 | 169.0 | 130.0 | 161.0 | 141.0 | 139.0 | 242.0 | 221.0 | 177.0 | 140.0 | 155.0 | 169.0 | 205.0 | 229.0 | 235.0 | 212.0 | 156.0 | 181.0 | 221.0 | 216.0 | 175.6 | 242.0 | 130.0 |
| 5 | 233.0 | 236.0 | 235.0 | 235.0 | 238.0 | 237.0 | 240.0 | 241.0 | 242.0 | 244.0 | 240.0 | 240.0 | 249.0 | 250.0 | 257.0 | 261.0 | 251.0 | 247.0 | 241.0 | 241.0 | 240.0 | 241.0 | 242.0 | 247.0 | 242.8 | 261.0 | 233.0 |
| 6 | 258.0 | 258.0 | 242.0 | 242.0 | 239.0 | 240.0 | 241.0 | 255.0 | 246.0 | 241.0 | 237.0 | 237.0 | 240.0 | 254.0 | 264.0 | 266.0 | 262.0 | 254.0 | 242.0 | 237.0 | 235.0 | 232.0 | 235.0 | 234.0 | 245.5 | 266.0 | 232.0 |
| 7 | 238.0 | 240.0 | 243.0 | 239.0 | 232.0 | 221.0 | 197.0 | 202.0 | 204.0 | 178.0 | 176.0 | 185.0 | 191.0 | 205.0 | 204.0 | 191.0 | 204.0 | 209.0 | 199.0 | 156.0 | 167.0 | 156.0 | 153.0 | 150.0 | 197.5 | 243.0 | 150.0 |
| 8 | 148.0 | 150.0 | 150.0 | 149.0 | 158.0 | 207.0 | 268.0 | 169.0 | 157.0 | 262.0 | 103.0 | 201.0 | 141.0 | 136.0 | 132.0 | 137.0 | 150.0 | 192.0 | 177.0 | 146.0 | 155.0 | 277.0 | 155.0 | 157.0 | 169.9 | 277.0 | 103.0 |
| 9 | 246.0 | 243.0 | 234.0 | 244.0 | 266.0 | 258.0 | 256.0 | 245.0 | 238.0 | 239.0 | 241.0 | 244.0 | 241.0 | 250.0 | 251.0 | 253.0 | 245.0 | 247.0 | 250.0 | 242.0 | 251.0 | 255.0 | 245.0 | 250.0 | 247.3 | 266.0 | 234.0 |
| 10 | 245.0 | 259.0 | 254.0 | 248.0 | 237.0 | 237.0 | 240.0 | 239.0 | 240.0 | 262.0 | 278.0 | 257.0 | 249.0 | 252.0 | 262.0 | 262.0 | 238.0 | 226.0 | 192.0 | 175.0 | 180.0 | 190.0 | 184.0 | 187.0 | 233.0 | 278.0 | 175.0 |
| 11 | 181.0 | 152.0 | 139.0 | 134.0 | 143.0 | 144.0 | 183.0 | 182.0 | 150.0 | 173.0 | 235.0 | 244.0 | 251.0 | 266.0 | 241.0 | 234.0 | 250.0 | 256.0 | 254.0 | 241.0 | 248.0 | 238.0 | 241.0 | 245.0 | 209.4 | 266.0 | 134.0 |
| 12 | 241.0 | 237.0 | 239.0 | 237.0 | 250.0 | 259.0 | 266.0 | 241.0 | 237.0 | 236.0 | 236.0 | 242.0 | 246.0 | 250.0 | 256.0 | 248.0 | 238.0 | 231.0 | 228.0 | 229.0 | 227.0 | 227.0 | 229.0 | 233.0 | 240.1 | 266.0 | 227.0 |
| 13 | 232.0 | 236.0 | 236.0 | 239.0 | 241.0 | 238.0 | 239.0 | 236.0 | 242.0 | 242.0 | 242.0 | 244.0 | 240.0 | 241.0 | 242.0 | 239.0 | 236.0 | 232.0 | 233.0 | 233.0 | 238.0 | 228.0 | 228.0 | 239.0 | 237.3 | 244.0 | 228.0 |
| D 14 | 231.0 | 225.0 | 229.0 | 223.0 | 224.0 | 299.0 | 272.0 | 241.0 | 138.0 | 150.0 | 226.0 | 224.0 | 225.0 | 274.0 | 28.0 | 109.0 | 87.0 | 310.0 | 289.0 | 331.0 | 4.0 | 24.0 | 356.0 | 288.0 | 313.6 | 356.0 | 4.0 |
| a 15 | 198.0 | 281.0 | 335.0 | 57.0 | 354.0 | 50.0 | 23.0 | 64.0 | 45.0 | 75.0 | 193.0 | 269.0 | 275.0 | 237.0 | 234.0 | 239.0 | 241.0 | 241.0 | 263.0 | 243.0 | 241.0 | 239.0 | 246.0 | 235.0 | 293.2 | 354.0 | 23.0 |
| y 16 | 237.0 | 239.0 | 240.0 | 237.0 | 235.0 | 236.0 | 234.0 | 235.0 | 237.0 | 241.0 | 238.0 | 240.0 | 245.0 | 243.0 | 245.0 | 243.0 | 261.0 | 245.0 | 233.0 | 231.0 | 231.0 | 232.0 | 238.0 | 239.0 | 239.0 | 261.0 | 231.0 |
| 17 | 234.0 | 234.0 | 232.0 | 234.0 | 238.0 | 234.0 | ***** | ***** | 231.0 | 234.0 | 238.0 | 243.0 | 244.0 | 245.0 | 240.0 | 245.0 | 244.0 | 238.0 | 234.0 | 233.0 | 230.0 | 229.0 | 233.0 | 231.0 | 236.3 | 245.0 | 229.0 |
| 18 | 235.0 | 235.0 | 234.0 | 232.0 | 242.0 | 330.0 | 79.0 | 133.0 | 175.0 | 353.0 | 257.0 | 289.0 | 321.0 | 326.0 | 311.0 | 21.0 | 19.0 | 43.0 | 8.0 | 131.0 | 170.0 | 270.0 | 171.0 | 336.0 | 355.0 | 353.0 | 8.0 |
| 19 | 274.0 | 264.0 | 320.0 | 116.0 | 95.0 | 61.0 | 102.0 | 119.0 | 116.0 | 273.0 | 191.0 | 287.0 | 283.0 | 263.0 | 254.0 | 260.0 | 250.0 | 244.0 | 245.0 | 233.0 | 257.0 | 277.0 | 276.0 | 284.0 | 222.7 | 320.0 | 61.0 |
| 20 | 145.0 | 200.0 | 155.0 | 239.0 | 257.0 | 123.0 | 117.0 | 243.0 | 124.0 | 103.0 | 3.0 | 19.0 | 13.0 | 60.0 | 72.0 | 53.0 | 65.0 | 65.0 | 100.0 | 153.0 | 249.0 | 10.0 | 82.0 | 77.0 | 113.6 | 257.0 | 3.0 |
| 21 | 107.0 | 134.0 | 138.0 | 123.0 | 131.0 | 152.0 | 122.0 | 145.0 | 129.0 | 122.0 | 81.0 | 93.0 | 46.0 | 50.0 | 45.0 | 67.0 | 8.0 | 91.0 | 132.0 | 143.0 | 230.0 | 249.0 | 301.0 | 249.0 | 128.7 | 301.0 | 8.0 |
| 22 | 130.0 | 255.0 | 135.0 | 133.0 | 114.0 | 137.0 | 145.0 | 116.0 | 126.0 | 141.0 | 92.0 | 79.0 | 67.0 | 78.0 | 53.0 | 68.0 | 45.0 | 24.0 | 126.0 | 151.0 | 146.0 | 238.0 | 102.0 | 131.0 | 118.0 | 255.0 | 24.0 |
| 23 | 184.0 | 125.0 | 116.0 | 123.0 | 130.0 | 134.0 | 109.0 | 86.0 | 144.0 | 90.0 | 38.0 | 110.0 | 49.0 | 138.0 | 184.0 | 159.0 | 187.0 | 194.0 | 197.0 | 183.0 | 201.0 | 211.0 | 187.0 | 166.0 | 143.5 | 211.0 | 38.0 |
| 24 | 141.0 | 150.0 | 212.0 | 219.0 | 216.0 | 180.0 | 188.0 | 147.0 | 151.0 | 143.0 | 138.0 | 133.0 | 118.0 | 112.0 | 151.0 | ***** | 154.0 | 129.0 | 130.0 | 144.0 | 159.0 | 152.0 | 149.0 | 146.0 | 154.9 | 219.0 | 112.0 |
| 25 | 146.0 | 150.0 | 155.0 | 159.0 | 149.0 | 132.0 | 151.0 | 324.0 | 47.0 | 83.0 | 94.0 | 100.0 | 63.0 | 350.0 | 348.0 | ***** | 4.0 | 58.0 | 257.0 | 239.0 | 236.0 | 236.0 | 237.0 | 239.0 | 172.0 | 350.0 | 4.0 |
| 26 | 240.0 | 240.0 | 250.0 | 252.0 | 254.0 | 256.0 | 255.0 | 256.0 | 261.0 | 263.0 | 264.0 | 265.0 | 264.0 | 263.0 | 266.0 | 266.0 | 264.0 | 262.0 | 255.0 | 250.0 | 250.0 | 254.0 | 251.0 | 248.0 | 256.2 | 266.0 | 240.0 |
| 27 | 243.0 | 244.0 | 242.0 | 247.0 | 254.0 | 254.0 | 253.0 | 253.0 | 255.0 | 241.0 | 243.0 | 258.0 | 268.0 | 270.0 | 288.0 | 285.0 | 277.0 | 254.0 | 244.0 | 229.0 | 103.0 | 116.0 | 133.0 | 96.0 | 231.2 | 288.0 | 96.0 |
| 28 | 67.0 | 59.0 | 60.0 | 52.0 | 82.0 | 63.0 | 72.0 | 71.0 | 45.0 | 40.0 | 345.0 | 33.0 | 40.0 | 35.0 | 15.0 | 360.0 | 55.0 | 121.0 | 238.0 | 233.0 | 238.0 | 240.0 | 240.0 | 238.0 | 6.8 | 360.0 | 15.0 |
| 29 | 237.0 | 238.0 | 241.0 | 240.0 | 244.0 | 247.0 | 257.0 | 239.0 | 234.0 | 237.0 | 238.0 | 242.0 | 248.0 | 246.0 | 242.0 | 246.0 | 237.0 | 235.0 | 241.0 | 234.0 | 250.0 | 258.0 | 252.0 | 305.0 | 245.3 | 305.0 | 234.0 |
| 30 | 339.0 | 62.0 | 71.0 | 73.0 | 65.0 | 79.0 | 71.0 | 75.0 | 70.0 | 51.0 | 42.0 | 40.0 | 42.0 | 46.0 | 42.0 | 48.0 | 47.0 | 48.0 | 60.0 | 85.0 | 99.0 | 83.0 | 65.0 | 71.0 | 58.9 | 339.0 | 40.0 |
| 31 | 255.0 | 270.0 | 276.0 | 273.0 | 261.0 | 115.0 | 209.0 | 166.0 | 97.0 | 145.0 | 271.0 | 261.0 | 244.0 | 262.0 | 270.0 | 264.0 | 251.0 | 240.0 | 235.0 | 237.0 | 231.0 | 237.0 | 252.0 | 84.0 | 225.3 | 276.0 | 84.0 |
| Mean | 206.7 | 204.6 | 204.9 | 191.8 | 202.9 | 190.6 | 185.1 | 190.9 | 174.7 | 189.8 | 195.5 | 198.3 | 189.4 | 205.5 | 200.0 | 201.6 | 179.3 | 192.3 | 205.2 | 206.6 | 200.9 | 205.7 | 210.1 | 206.9 | Monthly mean = | | 197.5 |
| Max. | 339.0 | 281.0 | 335.0 | 273.0 | 354.0 | 330.0 | 272.0 | 324.0 | 272.0 | 353.0 | 345.0 | 289.0 | 321.0 | 350.0 | 348.0 | 360.0 | 277.0 | 310.0 | 289.0 | 331.0 | 257.0 | 277.0 | 356.0 | 336.0 | Monthly max. = | | 360.0 |
| Min. | 67.0 | 59.0 | 60.0 | 52.0 | 65.0 | 50.0 | 23.0 | 64.0 | 45.0 | 40.0 | 3.0 | 19.0 | 13.0 | 35.0 | 15.0 | 21.0 | 4.0 | 24.0 | 8.0 | 85.0 | 4.0 | 10.0 | 65.0 | 71.0 | Monthly min. = | | 3.0 |

TOTAL NUMBER OF DATA HOURS IN MONTH: 744
Number of hours of bad or missing data: 4
***** designates missing or lost data

Current % recovery = 99.5

N/A: insufficient data available for calculation (a minimum of 75% is required)

table created at 18:25, 7/14/1994

MONTHLY SUMMARY
SIGMA THETA
(Degrees)
INPUT FILE: s7metjj4.met

Bechtel Environmental, Inc.

Met Data for Site 7
JANUARY 1994

| Day \ Hour | 1 | 2 | 3 | 4 | 5 | 6 | 7 | 8 | 9 | 10 | 11 | 12 | 13 | 14 | 15 | 16 | 17 | 18 | 19 | 20 | 21 | 22 | 23 | 24 | Mean | Max. | Min. |
|---|---|---|---|---|---|---|---|---|---|---|---|---|---|---|---|---|---|---|---|---|---|---|---|---|---|---|---|
| 1 | 5. | 5. | 5. | 5. | 6. | 7. | 7. | 10. | 14. | 12. | 15. | 27. | 7. | 15. | 15. | 11. | 13. | 11. | 12. | 15. | 16. | 16. | 11. | 12. | N/A | 27. | 5. |
| 2 | 8. | 8. | 8. | 8. | 8. | 9. | 10. | 9. | 9. | 10. | 11. | 10. | 11. | 14. | 12. | 9. | 6. | 6. | 10. | 10. | 11. | 12. | 20. | 19. | N/A | 20. | 6. |
| 3 | 15. | 25. | 12. | 11. | 9. | 10. | 15. | 11. | 7. | 10. | 8. | 8. | 8. | 11. | 9. | 13. | 15. | 12. | 10. | 15. | 29. | 43. | 14. | 6. | N/A | 43. | 6. |
| 4 | 6. | 14. | 26. | 38. | 38. | 32. | 15. | 43. | 56. | 34. | 29. | 12. | 12. | 9. | 11. | 9. | 16. | 11. | 14. | 11. | 10. | 15. | 12. | 10. | N/A | 56. | 6. |
| 5 | 13. | 13. | 12. | 12. | 13. | 12. | 12. | 13. | 14. | 15. | 14. | 14. | 15. | 16. | 13. | 13. | 15. | 15. | 13. | 13. | 12. | 14. | 14. | 16. | N/A | 16. | 12. |
| 6 | 13. | 15. | 14. | 13. | 11. | 11. | 12. | 12. | 12. | 12. | 10. | 9. | 13. | 14. | 9. | 8. | 8. | 12. | 14. | 10. | 10. | 8. | 10. | 10. | N/A | 15. | 8. |
| 7 | 10. | 12. | 14. | 13. | 10. | 11. | 12. | 13. | 14. | 16. | 18. | 24. | 16. | 15. | 14. | 18. | 18. | 13. | 10. | 8. | 10. | 9. | 5. | 5. | N/A | 24. | 5. |
| 8 | 5. | 5. | 6. | 8. | 17. | 52. | 20. | 26. | 18. | 37. | 36. | 27. | 9. | 10. | 14. | 8. | 7. | 22. | 9. | 7. | 11. | 64. | 20. | 53. | N/A | 64. | 5. |
| 9 | 28. | 15. | 9. | 14. | 7. | 13. | 13. | 14. | 9. | 10. | 13. | 13. | 11. | 15. | 15. | 14. | 15. | 16. | 15. | 13. | 13. | 17. | 15. | 16. | N/A | 28. | 7. |
| 10 | 15. | 12. | 15. | 13. | 10. | 8. | 10. | 11. | 13. | 11. | 44. | 19. | 16. | 16. | 10. | 10. | 15. | 11. | 9. | 6. | 7. | 7. | 11. | 9. | N/A | 44. | 6. |
| 11 | 11. | 8. | 7. | 9. | 8. | 8. | 10. | 12. | 6. | 13. | 16. | 14. | 16. | 8. | 15. | 10. | 14. | 16. | 16. | 16. | 16. | 17. | 14. | 15. | N/A | 17. | 6. |
| 12 | 11. | 13. | 13. | 12. | 15. | 13. | 14. | 16. | 12. | 10. | 11. | 13. | 15. | 15. | 16. | 16. | 13. | 11. | 10. | 12. | 10. | 10. | 10. | 11. | N/A | 16. | 10. |
| 13 | 10. | 10. | 10. | 12. | 14. | 13. | 10. | 10. | 13. | 14. | 12. | 15. | 15. | 15. | 15. | 13. | 12. | 13. | 11. | 12. | 11. | 11. | 11. | 15. | N/A | 15. | 10. |
| 14 | 17. | 12. | 10. | 12. | 15. | 64. | 33. | 55. | 11. | 17. | 36. | 16. | 22. | 25. | 18. | 16. | 33. | 19. | 24. | 43. | 22. | 28. | 27. | 28. | N/A | 64. | 10. |
| 15 | 52. | 19. | 81. | 20. | 32. | 17. | 13. | 16. | 24. | 53. | 52. | 23. | 48. | 63. | 26. | 12. | 14. | 14. | 10. | 11. | 12. | 12. | 14. | 7. | N/A | 81. | 7. |
| 16 | 9. | 15. | 10. | 9. | 7. | 8. | 8. | 8. | 9. | 12. | 10. | 14. | 17. | 16. | 16. | 14. | 14. | 15. | 12. | 11. | 10. | 10. | 10. | 12. | N/A | 17. | 7. |
| 17 | 10. | 10. | 10. | 11. | 12. | 12. | ***** | ***** | 9. | 11. | 14. | 15. | 16. | 17. | 14. | 15. | 15. | 11. | 9. | 9. | 9. | 9. | 11. | 11. | N/A | 17. | 9. |
| 18 | 10. | 10. | 10. | 11. | 18. | 32. | 55. | 57. | 35. | 79. | 71. | 38. | 34. | 30. | 30. | 26. | 38. | 23. | 34. | 67. | 59. | 53. | 70. | 57. | N/A | 79. | 10. |
| 19 | 39. | 76. | 66. | 61. | 73. | 33. | 16. | 71. | 39. | 62. | 63. | 85. | 31. | 20. | 12. | 11. | 13. | 17. | 18. | 28. | 30. | 53. | 19. | 57. | N/A | 85. | 11. |
| 20 | 74. | 28. | 45. | 34. | 46. | 45. | 33. | 15. | 38. | 19. | 29. | 19. | 18. | 13. | 11. | 9. | 8. | 6. | 10. | 26. | 32. | 37. | 18. | 47. | N/A | 74. | 6. |
| 21 | 16. | 5. | 42. | 32. | 18. | 41. | 10. | 48. | 35. | 33. | 16. | 12. | 10. | 13. | 15. | 13. | 25. | 22. | 11. | 12. | 48. | 27. | 28. | 19. | N/A | 48. | 5. |
| 22 | 31. | 54. | 7. | 37. | 14. | 33. | 21. | 60. | 37. | 29. | 22. | 9. | 12. | 12. | 12. | 11. | 15. | 32. | 46. | 30. | 17. | 31. | 50. | 7. | N/A | 60. | 7. |
| 23 | 60. | 31. | 10. | 34. | 31. | 54. | 31. | 54. | 49. | 100. | 46. | 36. | 50. | 27. | 19. | 9. | 10. | 9. | 19. | 17. | 11. | 12. | 12. | 16. | N/A | 100. | 9. |
| 24 | 8. | 44. | 17. | 10. | 10. | 9. | 17. | 47. | 5. | 7. | 9. | 13. | 17. | 20. | 37. | ***** | 22. | 13. | 8. | 7. | 21. | 6. | 6. | 6. | N/A | 47. | 5. |
| 25 | 7. | 7. | 17. | 7. | 21. | 8. | 50. | 58. | 66. | 55. | 47. | 18. | 16. | 20. | 22. | ***** | 22. | 28. | 46. | 11. | 7. | 8. | 8. | 8. | N/A | 66. | 7. |
| 26 | 9. | 9. | 15. | 16. | 15. | 15. | 16. | 16. | 12. | 12. | 7. | 8. | 7. | 8. | 7. | 7. | 7. | 10. | 15. | 15. | 15. | 15. | 15. | 14. | N/A | 16. | 7. |
| 27 | 11. | 10. | 8. | 12. | 13. | 12. | 12. | 11. | 13. | 9. | 11. | 12. | 23. | 16. | 39. | 35. | 28. | 17. | 12. | 42. | 64. | 13. | 17. | 16. | N/A | 64. | 8. |
| 28 | 17. | 15. | 16. | 30. | 42. | 23. | 13. | 19. | 17. | 22. | 29. | 16. | 9. | 11. | 12. | 12. | 48. | 14. | 20. | 8. | 8. | 10. | 11. | 9. | N/A | 48. | 8. |
| 29 | 8. | 8. | 11. | 10. | 13. | 15. | 14. | 12. | 9. | 9. | 9. | 13. | 13. | 14. | 10. | 14. | 8. | 10. | 12. | 9. | 12. | 9. | 12. | 32. | N/A | 32. | 8. |
| 30 | 28. | 47. | 12. | 16. | 9. | 9. | 10. | 12. | 11. | 10. | 10. | 11. | 10. | 10. | 9. | 8. | 8. | 8. | 13. | 11. | 11. | 14. | 14. | 39. | N/A | 47. | 8. |
| 31 | 38. | 17. | 23. | 20. | 18. | 22. | 22. | 18. | 63. | 50. | 30. | 21. | 16. | 12. | 11. | 10. | 15. | 9. | 8. | 9. | 9. | 9. | 11. | 43. | N/A | 63. | 8. |
| Mean | N/A | N/A | N/A | N/A | N/A | N/A | N/A | N/A | N/A | N/A | N/A | N/A | N/A | N/A | N/A | N/A | N/A | N/A | N/A | N/A | N/A | N/A | N/A | N/A | Monthly mean = | | N/A |
| Max. | 74. | 76. | 81. | 61. | 73. | 64. | 55. | 71. | 66. | 100. | 71. | 85. | 50. | 63. | 39. | 35. | 48. | 32. | 46. | 67. | 64. | 64. | 70. | 57. | Monthly max. = | | 100. |
| Min. | 5. | 5. | 5. | 5. | 6. | 7. | 7. | 8. | 5. | 7. | 7. | 8. | 7. | 8. | 7. | 7. | 6. | 6. | 8. | 6. | 7. | 6. | 5. | 5. | Monthly min. = | | 5. |

TOTAL NUMBER OF DATA HOURS IN MONTH: 744
Number of hours of bad or missing data: 4
***** designates missing or lost data

Current % recovery = 99.5

N/A: A sigma theta mean is not physically meaningful.

table created at 18:25, 7/14/1994

MONTHLY SUMMARY
TEMPERATURE
(Degrees Celsius)
INPUT FILE: s7metjj4.met

Bechtel Environmental, Inc.

Met Data for Site 7
JANUARY 1994

| Day | Hour 1 | 2 | 3 | 4 | 5 | 6 | 7 | 8 | 9 | 10 | 11 | 12 | 13 | 14 | 15 | 16 | 17 | 18 | 19 | 20 | 21 | 22 | 23 | 24 | Mean | Max. | Min. |
|---|---|---|---|---|---|---|---|---|---|---|---|---|---|---|---|---|---|---|---|---|---|---|---|---|---|---|---|
| 1 | -.5 | -.6 | -.2 | .3 | .0 | 1.0 | 2.1 | 1.5 | 4.1 | 4.3 | 3.9 | 4.6 | 4.3 | 6.0 | 4.4 | .6 | .3 | .8 | .9 | 1.3 | .8 | .7 | .4 | .2 | 1.7 | 6.0 | -.6 |
| 2 | .3 | .4 | .1 | -.1 | -.1 | -.2 | -.1 | .0 | .5 | 1.3 | 2.5 | 3.2 | 3.6 | 3.9 | 4.1 | 4.1 | 3.5 | 3.8 | 4.3 | 4.8 | 5.6 | 5.1 | 4.7 | 4.6 | 2.5 | 5.6 | -.2 |
| 3 | 3.6 | 2.0 | 1.7 | 3.1 | 3.5 | 2.9 | 3.5 | 3.5 | 2.3 | 2.5 | 3.0 | 3.1 | 3.2 | 3.6 | 3.8 | 4.2 | 4.5 | 4.4 | 5.4 | 4.9 | 4.7 | 3.9 | 4.4 | 4.2 | 3.6 | 5.4 | 1.7 |
| 4 | 4.2 | 3.9 | 3.3 | 2.2 | 1.3 | 2.7 | 3.8 | 3.0 | 3.7 | 4.9 | 3.6 | 6.9 | 7.4 | 7.5 | 8.0 | 9.3 | 9.1 | 7.5 | 4.8 | 3.4 | 3.0 | 4.7 | 5.9 | 4.8 | 5.0 | 9.3 | 1.3 |
| 5 | 4.9 | 3.3 | 1.9 | .8 | .1 | .2 | -.1 | -.5 | -.9 | -.9 | -.5 | -.2 | -.2 | -.1 | .0 | .0 | .1 | -.3 | -1.0 | -1.3 | -1.3 | -1.4 | -1.6 | -1.7 | .0 | 4.9 | -1.7 |
| 6 | -1.9 | -2.4 | -2.6 | -2.8 | -3.0 | -3.1 | -3.0 | -3.2 | -3.4 | -3.5 | -3.5 | -2.9 | -2.0 | -1.0 | -.6 | -.1 | -.5 | -1.5 | -2.3 | -3.1 | -3.5 | -3.7 | -3.9 | -3.8 | -2.6 | -.1 | -3.9 |
| 7 | -3.6 | -3.4 | -3.3 | -3.0 | -3.1 | -3.0 | -3.1 | -2.9 | -2.6 | -2.4 | -1.5 | -.3 | .1 | .0 | .2 | .3 | .5 | .3 | .1 | -1.9 | -1.3 | -2.0 | -2.7 | -2.7 | -1.7 | .5 | -3.6 |
| 8 | -2.5 | -2.2 | -2.1 | -1.7 | -1.3 | -2.4 | -3.9 | -3.1 | -1.2 | -2.8 | -2.8 | -2.0 | -1.3 | -.7 | -.5 | -1.7 | -1.1 | .3 | -.5 | -.2 | .2 | .1 | -.8 | -.6 | -1.4 | .3 | -3.9 |
| 9 | .2 | -.4 | -.4 | -.8 | -1.0 | -1.2 | -1.7 | -1.9 | -1.9 | -1.8 | -1.5 | -1.4 | -1.1 | -.9 | -.8 | -.8 | -.7 | -.6 | -.6 | -.6 | -.8 | -1.2 | -1.3 | -1.2 | -1.0 | .2 | -1.9 |
| 10 | -1.0 | -1.2 | -1.3 | -1.2 | -1.1 | -1.3 | -1.7 | -1.6 | -1.5 | -1.5 | -1.3 | .1 | .6 | .9 | 1.0 | 1.1 | 1.0 | 1.2 | 1.1 | .9 | .6 | .8 | .5 | .9 | -.2 | 1.2 | -1.7 |
| 11 | .5 | -.8 | -1.2 | -1.4 | -.8 | -.3 | .9 | 1.1 | -.5 | .7 | .9 | -.9 | -1.2 | -1.3 | -1.0 | -.7 | -1.0 | -1.2 | -1.4 | -1.1 | -1.0 | -.9 | -.6 | -1.0 | -.6 | 1.1 | -1.4 |
| 12 | -1.1 | -1.0 | -1.0 | -1.0 | -.8 | -.7 | -.9 | -.6 | .0 | .2 | .8 | 1.3 | 1.7 | 2.1 | 2.3 | 2.7 | 3.0 | 3.0 | 3.2 | 3.3 | 3.2 | 3.2 | 3.1 | 3.1 | 1.2 | 3.3 | -1.1 |
| 13 | 2.8 | 2.6 | 2.2 | 1.9 | 1.6 | 1.2 | 1.2 | 1.6 | 1.8 | 2.0 | 1.9 | 2.0 | 2.6 | 3.2 | 3.4 | 3.4 | 3.8 | 4.4 | 4.7 | 4.3 | 3.8 | 4.0 | 4.2 | 3.8 | 2.9 | 4.7 | 1.2 |
| 14 | 3.8 | 4.2 | 4.7 | 4.8 | 5.1 | 3.0 | 2.0 | 1.9 | 2.4 | 3.3 | 4.2 | 5.2 | 5.8 | 5.6 | 3.4 | 3.8 | 4.0 | 1.3 | .4 | -.8 | -2.0 | -2.4 | -2.5 | -2.7 | 2.4 | 5.8 | -2.7 |
| 15 | -2.9 | -3.1 | -3.5 | -3.9 | -3.6 | -3.3 | -3.3 | -3.1 | -3.1 | -2.8 | -1.6 | -.8 | .0 | 2.2 | 4.7 | 6.0 | 5.2 | 3.8 | 1.3 | .6 | -.2 | -.8 | -1.0 | -1.4 | -.6 | 6.0 | -3.9 |
| 16 | -1.8 | -2.2 | -2.9 | -3.5 | -3.6 | -3.4 | -3.1 | -2.8 | -2.5 | -2.7 | -3.2 | -2.8 | -2.5 | -1.6 | -.8 | -.3 | -.4 | -.5 | .0 | .1 | .1 | .3 | .5 | .4 | -1.6 | .5 | -3.6 |
| 17 | .5 | .4 | .3 | .4 | .6 | .6 | ***** | ***** | 1.4 | 2.3 | 2.8 | 3.3 | 4.0 | 4.4 | 5.2 | 5.8 | 5.8 | 5.5 | 5.3 | 5.0 | 4.4 | 4.0 | 3.6 | 3.8 | 3.2 | 5.8 | .3 |
| 18 | 4.0 | 3.9 | 4.2 | 4.1 | 4.2 | 1.3 | -1.8 | -1.6 | -.1 | -1.4 | .0 | 1.0 | 2.5 | 2.7 | 4.5 | 4.0 | 3.0 | 1.2 | .4 | -.2 | 1.7 | -1.2 | -1.0 | -3.2 | 1.3 | 4.5 | -3.2 |
| 19 | -2.8 | -3.6 | -3.7 | -3.3 | -2.6 | -6.3 | -3.6 | -2.1 | .5 | .0 | .9 | 2.2 | 4.5 | 5.8 | 6.3 | 6.3 | 6.7 | 6.1 | 5.9 | 6.0 | 2.8 | -.8 | -2.0 | -3.5 | .8 | 6.7 | -6.3 |
| 20 | -2.2 | -3.7 | -3.8 | -4.5 | -5.1 | -5.3 | -4.8 | -5.5 | -4.0 | -4.5 | -3.8 | -1.4 | 1.3 | 2.9 | 4.4 | 4.8 | 4.1 | 2.5 | 2.1 | 1.9 | 1.3 | -.3 | .0 | -1.0 | -1.0 | 4.8 | -5.5 |
| 21 | -1.3 | -.5 | -1.3 | -2.7 | -3.0 | -3.7 | -3.5 | -4.4 | -4.5 | -2.3 | -2.5 | 1.0 | 2.9 | 4.6 | 5.9 | 6.7 | 5.3 | 3.6 | 3.6 | 4.4 | 2.5 | .7 | .7 | 1.1 | .6 | 6.7 | -4.5 |
| 22 | 1.2 | -.9 | -.3 | -.1 | -2.5 | .2 | -1.0 | -5.0 | -2.4 | -2.1 | -1.0 | .4 | 3.4 | 4.8 | 6.2 | 6.9 | 6.0 | 3.0 | 4.2 | 5.3 | 5.9 | 3.0 | 1.3 | 2.2 | 1.6 | 6.9 | -5.0 |
| 23 | -.5 | -.2 | -1.1 | -2.2 | -1.1 | -1.3 | -2.0 | -3.8 | 1.4 | .8 | -.2 | 3.0 | 5.4 | 10.1 | 11.6 | 10.4 | 10.6 | 10.4 | 9.5 | 9.2 | 8.3 | 7.2 | 6.1 | 4.2 | 4.0 | 11.6 | -3.8 |
| 24 | 2.6 | 2.8 | 4.4 | 4.3 | 3.7 | 3.3 | 3.6 | 2.0 | 2.2 | 3.0 | 4.7 | 6.3 | 7.4 | 7.6 | 8.1 | 7.6 | 7.3 | 6.4 | 6.0 | 5.6 | 5.1 | 5.2 | 5.3 | 4.9 | 5.0 | 8.1 | 2.0 |
| 25 | 4.6 | 4.7 | 4.5 | 4.9 | 4.4 | 3.3 | 2.3 | .2 | -.4 | .3 | 1.6 | 4.7 | 6.6 | 6.7 | 7.7 | 7.0 | 6.3 | 4.6 | 3.5 | 3.1 | 1.8 | -.3 | -.7 | -1.2 | 3.3 | 7.7 | -1.2 |
| 26 | -1.4 | -1.3 | -1.2 | -1.1 | -1.1 | -1.1 | -1.0 | -1.1 | -1.1 | -1.1 | -1.1 | -1.2 | -1.4 | -1.5 | -1.5 | -1.5 | -1.4 | -1.5 | -1.6 | -1.7 | -1.7 | -1.8 | -1.9 | -2.1 | -1.4 | -1.0 | -2.1 |
| 27 | -2.1 | -2.1 | -2.2 | -2.3 | -2.2 | -2.4 | -2.3 | -2.3 | -2.3 | -2.2 | -2.1 | -2.1 | -2.1 | -1.9 | -1.4 | -1.2 | -1.4 | -1.9 | -2.1 | -2.3 | -2.3 | -2.0 | -2.1 | -2.2 | -2.1 | -1.2 | -2.4 |
| 28 | -2.8 | -3.4 | -4.1 | -5.2 | -5.8 | -5.1 | -5.1 | -5.7 | -5.0 | -4.4 | -4.2 | -2.7 | -2.1 | -1.2 | -.4 | .3 | 1.2 | -.9 | -2.0 | -2.5 | -2.6 | -2.7 | -2.5 | -2.4 | -3.0 | 1.2 | -5.8 |
| 29 | -2.6 | -2.7 | -3.0 | -3.4 | -3.3 | -3.4 | -4.1 | -4.4 | -4.2 | -4.3 | -4.1 | -3.9 | -3.8 | -3.3 | -3.0 | -2.7 | -2.6 | -2.4 | -2.7 | -3.4 | -3.7 | -3.9 | -4.1 | -4.0 | -3.5 | -2.4 | -4.4 |
| 30 | -4.6 | -5.0 | -5.7 | -6.7 | -8.1 | -8.2 | -9.0 | -9.7 | -9.8 | -9.7 | -8.4 | -7.3 | -6.5 | -5.9 | -5.5 | -5.3 | -5.3 | -5.8 | -6.4 | -6.9 | -7.5 | -8.1 | -8.6 | -9.8 | -7.2 | -4.6 | -9.8 |
| 31 | -10.0 | -10.5 | -11.3 | -11.7 | -11.3 | -12.6 | -12.4 | -11.6 | -10.6 | -9.1 | -7.1 | -6.7 | -6.5 | -5.9 | -5.8 | -5.5 | -5.7 | -6.0 | -6.0 | -6.1 | -6.4 | -6.6 | -7.1 | -8.4 | -8.4 | -5.5 | -12.6 |
| Mean | -.4 | -.7 | -.9 | -1.2 | -1.3 | -1.6 | -1.7 | -2.1 | -1.3 | -1.1 | -.6 | .4 | 1.2 | 1.9 | 2.4 | 2.4 | 2.3 | 1.7 | 1.3 | 1.0 | .7 | .1 | -.1 | -.5 | Monthly mean = | | .1 |
| Max. | 4.9 | 4.7 | 4.7 | 4.9 | 5.1 | 3.3 | 3.8 | 3.5 | 4.1 | 4.9 | 4.7 | 6.9 | 7.4 | 10.1 | 11.6 | 10.4 | 10.6 | 10.4 | 9.5 | 9.2 | 8.3 | 7.2 | 6.1 | 4.9 | Monthly max. = | | 11.6 |
| Min. | -10.0 | -10.5 | -11.3 | -11.7 | -11.3 | -12.6 | -12.4 | -11.6 | -10.6 | -9.7 | -8.4 | -7.3 | -6.5 | -5.9 | -5.8 | -5.5 | -5.7 | -6.0 | -6.4 | -6.9 | -7.5 | -8.1 | -8.6 | -9.8 | Monthly min. = | | -12.6 |

TOTAL NUMBER OF DATA HOURS IN MONTH: 744
Number of hours of bad or missing data: 2
Current % recovery = 99.7
***** designates missing or lost data

N/A: insufficient data available for calculation (a minimum of 75% is required)

table created at 18:25, 7/14/1994

MONTHLY SUMMARY
WIND SPEED
(Miles Per Hour)
INPUT FILE: s7metjj4.met

Bechtel Environmental, Inc.

Met Data for Site 7
FEBRUARY 1994

| Day \ Hour | 1 | 2 | 3 | 4 | 5 | 6 | 7 | 8 | 9 | 10 | 11 | 12 | 13 | 14 | 15 | 16 | 17 | 18 | 19 | 20 | 21 | 22 | 23 | 24 | Mean | Max. | Min. |
|---|---|---|---|---|---|---|---|---|---|---|---|---|---|---|---|---|---|---|---|---|---|---|---|---|---|---|---|
| 1 | 6.0 | 3.8 | 2.1 | 3.1 | 7.0 | 4.3 | 7.1 | 10.7 | 4.6 | 3.8 | 2.3 | 3.4 | 4.5 | 6.7 | 8.0 | 7.2 | 4.1 | 5.2 | 10.5 | 8.5 | 10.3 | 12.2 | 13.3 | 12.7 | 6.7 | 13.3 | 2.1 |
| 2 | 8.4 | 7.5 | 4.8 | 6.0 | 3.8 | 2.7 | 10.9 | 9.0 | 4.1 | 2.4 | 2.4 | 3.8 | 3.4 | 3.2 | 4.2 | 4.1 | 3.8 | 1.9 | 3.7 | 5.5 | 7.2 | 5.6 | 2.8 | 1.7 | 4.7 | 10.9 | 1.7 |
| 3 | 2.1 | 1.7 | 1.9 | 2.9 | 2.6 | 1.7 | 1.6 | 1.9 | 3.0 | 3.4 | 2.6 | 4.0 | 2.8 | 3.7 | 6.7 | 10.1 | 9.6 | 9.1 | 10.1 | 9.9 | 13.3 | 12.4 | 8.6 | 4.0 | 5.4 | 13.3 | 1.6 |
| 4 | 5.5 | 9.3 | 5.4 | 2.7 | 2.7 | 5.5 | 2.2 | 2.4 | 2.7 | 4.8 | 4.7 | 3.2 | 5.2 | 6.4 | 7.9 | 8.4 | 8.6 | 3.7 | 4.3 | 6.4 | 6.7 | 8.2 | 2.1 | 2.1 | 5.0 | 9.3 | 2.1 |
| 5 | 2.5 | 2.6 | 3.7 | 4.7 | 2.1 | 1.7 | 2.0 | 2.5 | 3.0 | 3.7 | 2.1 | 2.3 | 2.8 | 5.9 | 9.1 | 14.8 | 12.0 | 11.1 | 9.2 | 9.3 | 14.0 | 14.9 | 15.1 | 14.0 | 6.9 | 15.1 | 1.7 |
| 6 | 13.5 | 13.4 | 11.1 | 5.8 | 9.7 | 9.1 | 7.7 | 3.9 | 4.8 | 2.9 | 3.0 | 2.8 | 6.4 | 10.6 | 8.9 | 9.3 | 9.2 | 12.0 | 16.4 | 17.9 | 18.6 | 16.4 | 17.9 | 12.6 | 10.2 | 18.6 | 2.8 |
| 7 | 15.3 | 15.1 | 10.7 | 16.3 | 17.7 | 18.2 | 17.9 | 13.4 | 11.0 | 8.2 | 12.4 | 10.6 | 13.6 | 15.8 | 16.0 | 12.0 | 9.6 | 10.4 | 14.2 | 14.3 | 21.9 | 18.9 | 17.7 | 16.4 | 14.5 | 21.9 | 8.2 |
| 8 | 20.9 | 20.9 | 21.4 | 18.1 | 20.6 | 21.7 | 21.3 | 10.9 | 5.0 | 7.6 | 10.9 | 13.8 | 21.6 | 21.5 | 23.2 | 23.5 | 21.7 | 21.9 | 26.5 | 26.2 | 26.5 | 25.3 | 17.4 | 13.8 | 19.3 | 26.5 | 5.0 |
| 9 | 15.9 | 14.9 | 18.4 | 16.7 | 15.6 | 5.4 | 8.7 | 13.2 | 13.1 | 12.4 | 13.6 | 14.0 | 13.5 | 16.4 | 20.3 | 15.8 | 16.5 | 23.9 | 24.1 | 25.0 | 29.5 | 29.1 | 21.0 | 21.5 | 17.4 | 29.5 | 5.4 |
| 10 | 20.8 | 21.8 | 23.0 | 24.3 | 16.7 | 11.7 | 6.5 | 2.0 | 1.5 | 3.4 | 3.7 | 3.9 | 4.2 | 3.5 | 2.6 | 4.3 | 7.7 | 4.2 | 4.9 | 5.6 | 7.7 | 11.4 | 4.5 | 6.7 | 8.6 | 24.3 | 1.5 |
| 11 | 3.8 | 5.6 | 6.6 | 8.9 | 10.1 | 12.2 | 8.0 | 10.4 | 12.6 | 11.6 | ***** | ***** | 19.6 | 22.9 | 23.0 | 25.0 | 29.3 | 26.6 | 27.2 | 24.8 | 23.2 | 20.7 | 20.1 | 11.9 | 16.6 | 29.3 | 3.8 |
| 12 | 4.8 | 6.5 | 7.2 | 5.3 | 8.1 | 6.8 | 10.7 | 13.5 | 11.7 | 7.3 | 3.1 | 3.5 | 3.6 | 3.8 | 4.3 | 3.2 | 2.0 | 2.9 | 3.5 | 10.4 | 17.8 | 18.6 | 18.4 | 18.3 | 8.1 | 18.6 | 2.0 |
| 13 | 22.2 | 19.7 | 17.8 | 19.5 | 20.1 | 17.6 | 16.7 | 17.0 | 9.0 | 15.6 | 18.3 | 14.0 | 6.8 | 14.8 | 23.9 | 23.4 | 24.6 | 19.9 | 21.0 | 19.0 | 19.9 | 21.3 | 20.2 | 20.8 | 18.5 | 24.6 | 6.8 |
| 14 | 20.9 | 18.4 | 4.6 | 11.4 | 19.9 | 16.7 | 18.4 | 17.5 | 17.5 | 16.6 | 14.8 | 8.7 | 9.3 | 11.5 | 9.7 | 9.5 | 7.8 | 5.2 | 6.6 | 9.9 | 8.3 | 11.3 | 8.8 | 10.0 | 12.2 | 20.9 | 4.6 |
| 15 | 9.2 | 9.6 | 10.0 | 4.9 | 2.8 | 2.8 | 2.9 | 3.1 | 3.9 | 2.6 | 3.3 | 3.5 | 3.3 | 3.7 | 4.4 | 3.5 | 7.0 | 11.6 | 17.7 | 18.1 | 18.2 | 14.6 | 18.2 | 14.2 | 8.0 | 18.2 | 2.6 |
| 16 | 11.1 | 2.8 | 10.2 | 9.9 | 4.2 | 10.7 | 8.7 | 5.7 | 14.9 | 13.8 | 6.3 | 7.5 | 13.1 | 12.4 | 14.8 | 16.5 | 14.4 | 15.5 | 13.4 | 15.1 | 15.9 | 10.1 | 9.8 | 19.1 | 11.5 | 19.1 | 2.8 |
| 17 | 15.2 | 24.1 | 27.7 | 26.3 | 22.7 | 14.3 | 17.0 | 23.8 | 26.9 | 27.3 | 25.0 | 22.9 | 27.9 | 14.8 | 9.3 | 27.5 | 28.8 | 26.6 | 26.8 | 21.1 | 29.3 | 28.1 | 26.7 | 20.9 | 23.4 | 29.3 | 9.3 |
| 18 | 18.7 | 19.5 | 15.0 | 17.9 | 23.9 | 20.4 | 21.6 | 26.1 | 27.8 | 19.0 | 19.4 | 17.5 | 15.0 | 17.7 | 27.1 | 22.7 | 16.7 | 19.3 | 15.3 | 13.4 | 20.4 | 20.1 | 15.2 | 15.5 | 19.4 | 27.8 | 13.4 |
| 19 | 11.9 | 12.2 | 17.3 | 17.2 | 16.9 | 14.8 | 15.5 | 16.5 | 16.9 | 13.7 | 14.3 | 13.0 | 13.9 | 13.9 | 13.3 | 11.9 | 8.3 | 7.3 | 7.6 | 6.6 | 9.4 | 10.0 | 13.4 | 15.9 | 13.0 | 17.3 | 6.6 |
| 20 | 15.8 | 15.2 | 15.7 | 20.8 | 22.4 | 20.3 | 21.4 | 20.4 | 22.1 | 22.1 | 23.3 | 16.3 | 12.2 | 10.3 | 13.7 | 11.4 | 14.5 | 16.9 | 19.3 | 19.4 | 17.4 | 15.5 | 13.4 | 11.9 | 17.2 | 23.3 | 10.3 |
| 21 | 9.7 | 18.8 | 19.9 | 16.1 | 14.6 | 10.7 | 11.8 | 12.5 | 9.9 | 8.5 | 7.9 | 7.4 | 8.2 | 6.8 | 5.2 | 7.4 | 4.5 | 8.1 | 9.5 | 11.1 | 14.0 | 12.4 | 12.7 | 15.0 | 10.9 | 19.9 | 4.5 |
| 22 | 13.4 | 14.0 | 11.7 | 20.6 | 22.8 | 24.6 | 23.7 | 25.2 | 24.4 | 24.9 | 26.1 | 26.8 | 24.8 | 18.6 | 18.1 | 18.2 | 19.7 | 17.6 | 19.8 | 23.4 | 26.9 | 27.4 | 26.3 | 25.9 | 21.9 | 27.4 | 11.7 |
| 23 | 21.4 | 21.0 | 22.5 | 19.6 | 16.1 | 12.9 | 13.2 | 13.1 | 15.5 | 15.1 | 15.8 | 17.3 | 17.4 | 19.7 | 19.2 | 19.5 | 20.4 | 17.5 | 18.5 | 17.9 | 24.5 | 24.0 | 20.6 | 22.1 | 18.5 | 24.5 | 12.9 |
| 24 | 29.4 | 32.2 | 31.2 | 29.6 | 26.7 | 24.8 | 25.9 | 25.8 | 27.8 | 25.1 | 33.0 | 39.8 | 41.2 | 42.3 | 45.0 | 41.5 | 34.0 | 30.9 | 34.0 | 32.8 | 27.0 | 26.8 | 25.2 | 26.3 | 31.6 | 45.0 | 24.8 |
| 25 | 24.8 | 21.5 | 18.1 | 18.8 | 16.0 | 14.7 | 16.5 | 20.8 | 18.5 | 15.5 | 3.2 | 3.6 | 4.7 | 4.5 | 4.1 | 5.1 | 7.0 | 5.8 | 4.8 | 4.2 | 4.6 | 7.8 | 7.3 | 6.1 | 10.8 | 24.8 | 3.2 |
| 26 | 7.5 | 7.5 | 5.7 | 2.4 | 7.5 | 10.0 | 11.2 | 3.1 | 6.6 | 7.9 | 3.2 | 4.8 | 7.6 | 5.6 | 5.4 | 11.7 | 9.6 | 8.3 | 9.9 | 9.2 | 8.7 | 9.6 | 6.6 | 7.2 | 7.4 | 11.7 | 2.4 |
| 27 | 8.2 | 8.0 | 9.7 | 8.0 | 12.5 | 11.9 | 10.1 | 13.4 | 20.6 | 19.7 | 17.8 | 19.5 | 16.4 | 14.7 | 18.0 | 16.2 | 13.3 | 13.6 | 14.4 | 19.1 | 20.8 | 22.2 | 27.2 | 27.7 | 16.0 | 27.7 | 8.0 |
| 28 | 27.5 | 27.3 | 26.2 | 25.7 | 25.8 | 23.0 | 21.3 | 21.3 | 24.9 | 27.1 | 22.8 | 19.2 | 15.3 | 20.0 | 21.1 | 18.9 | 20.0 | 12.8 | 8.5 | 16.1 | 18.0 | 19.4 | 18.0 | 20.8 | 20.9 | 27.5 | 8.5 |
| Mean | 13.8 | 14.1 | 13.6 | 13.7 | 14.0 | 12.5 | 12.9 | 12.8 | 13.0 | 12.4 | 11.7 | 11.4 | 12.1 | 12.6 | 13.8 | 14.4 | 13.7 | 13.2 | 14.3 | 15.0 | 17.1 | 16.9 | 15.3 | 14.8 | Monthly mean = | | 13.7 |
| Max. | 29.4 | 32.2 | 31.2 | 29.6 | 26.7 | 24.8 | 25.9 | 26.1 | 27.8 | 27.3 | 33.0 | 39.8 | 41.2 | 42.3 | 45.0 | 41.5 | 34.0 | 30.9 | 34.0 | 32.8 | 29.5 | 29.1 | 27.2 | 27.7 | Monthly max. = | | 45.0 |
| Min. | 2.1 | 1.7 | 1.9 | 2.4 | 2.1 | 1.7 | 1.6 | 1.9 | 1.5 | 2.4 | 2.1 | 2.3 | 2.8 | 3.2 | 2.6 | 3.2 | 2.0 | 1.9 | 3.5 | 4.2 | 4.6 | 5.6 | 2.1 | 1.7 | Monthly min. = | | 1.5 |

TOTAL NUMBER OF DATA HOURS IN MONTH: 672
Number of hours of bad or missing data: 2
**** designates missing or lost data

Current % recovery = 99.7

N/A: insufficient data available for calculation (a minimum of 75% is required)

table created at 18:25, 7/14/1994

MONTHLY SUMMARY
WIND DIRECTION
(Degrees)
INPUT FILE: s7metjj4.met

Bechtel Environmental, Inc.

Met Data for Site 7
FEBRUARY 1994

| Day \ Hour | 1 | 2 | 3 | 4 | 5 | 6 | 7 | 8 | 9 | 10 | 11 | 12 | 13 | 14 | 15 | 16 | 17 | 18 | 19 | 20 | 21 | 22 | 23 | 24 | Mean | Max. | Min. |
|---|---|---|---|---|---|---|---|---|---|---|---|---|---|---|---|---|---|---|---|---|---|---|---|---|---|---|---|
| 1 | 156.0 | 276.0 | 102.0 | 91.0 | 188.0 | 233.0 | 141.0 | 147.0 | 153.0 | 104.0 | 334.0 | 23.0 | 294.0 | 268.0 | 268.0 | 253.0 | 216.0 | 186.0 | 201.0 | 173.0 | 149.0 | 148.0 | 151.0 | 157.0 | 183.8 | 334.0 | 23.0 |
| 2 | 156.0 | 91.0 | 76.0 | 155.0 | 281.0 | 105.0 | 128.0 | 115.0 | 135.0 | 90.0 | 6.0 | 15.0 | 43.0 | 287.0 | 275.0 | 280.0 | 294.0 | 33.0 | 115.0 | 125.0 | 145.0 | 258.0 | 252.0 | 270.0 | 155.4 | 294.0 | 6.0 |
| 3 | 269.0 | 94.0 | 267.0 | 252.0 | 253.0 | 142.0 | 150.0 | 255.0 | 249.0 | 169.0 | 271.0 | 283.0 | 286.0 | 293.0 | 251.0 | 239.0 | 242.0 | 232.0 | 209.0 | 186.0 | 196.0 | 195.0 | 204.0 | 236.0 | 226.0 | 293.0 | 94.0 |
| 4 | 123.0 | 138.0 | 207.0 | 83.0 | 93.0 | 138.0 | 257.0 | 300.0 | 90.0 | 137.0 | 309.0 | 284.0 | 297.0 | 300.0 | 280.0 | 250.0 | 246.0 | 255.0 | 222.0 | 230.0 | 240.0 | 235.0 | 22.0 | 256.0 | 208.0 | 309.0 | 22.0 |
| 5 | 283.0 | 266.0 | 244.0 | 231.0 | 230.0 | 33.0 | 159.0 | 227.0 | 126.0 | 242.0 | 333.0 | 317.0 | 307.0 | 267.0 | 256.0 | 249.0 | 253.0 | 226.0 | 188.0 | 225.0 | 222.0 | 213.0 | 217.0 | 211.0 | 230.2 | 333.0 | 33.0 |
| 6 | 209.0 | 209.0 | 222.0 | 103.0 | 126.0 | 148.0 | 145.0 | 161.0 | 168.0 | 300.0 | 280.0 | 267.0 | 214.0 | 204.0 | 205.0 | 218.0 | 184.0 | 162.0 | 170.0 | 179.0 | 194.0 | 197.0 | 196.0 | 179.0 | 193.3 | 300.0 | 103.0 |
| 7 | 196.0 | 194.0 | 152.0 | 202.0 | 205.0 | 209.0 | 216.0 | 208.0 | 199.0 | 174.0 | 192.0 | 143.0 | 169.0 | 181.0 | 199.0 | 177.0 | 166.0 | 145.0 | 205.0 | 198.0 | 227.0 | 243.0 | 246.0 | 235.0 | 195.0 | 246.0 | 143.0 |
| 8 | 235.0 | 241.0 | 239.0 | 251.0 | 270.0 | 263.0 | 261.0 | 297.0 | 320.0 | 305.0 | 285.0 | 273.0 | 239.0 | 244.0 | 242.0 | 237.0 | 239.0 | 239.0 | 233.0 | 237.0 | 237.0 | 237.0 | 238.0 | 235.0 | 254.0 | 320.0 | 233.0 |
| 9 | 245.0 | 233.0 | 231.0 | 229.0 | 233.0 | 174.0 | 210.0 | 219.0 | 204.0 | 211.0 | 182.0 | 198.0 | 217.0 | 228.0 | 240.0 | 235.0 | 215.0 | 217.0 | 213.0 | 217.0 | 228.0 | 231.0 | 235.0 | 232.0 | 219.9 | 245.0 | 174.0 |
| 10 | 234.0 | 239.0 | 234.0 | 225.0 | 237.0 | 250.0 | 260.0 | 214.0 | 281.0 | 33.0 | 27.0 | 40.0 | 44.0 | 37.0 | 99.0 | 113.0 | 135.0 | 119.0 | 104.0 | 121.0 | 138.0 | 135.0 | 85.0 | 281.0 | 153.5 | 281.0 | 27.0 |
| 11 | 317.0 | 341.0 | 328.0 | 351.0 | 312.0 | 319.0 | 335.0 | 289.0 | 264.0 | 260.0 | ***** | ***** | 248.0 | 242.0 | 239.0 | 236.0 | 236.0 | 235.0 | 235.0 | 233.0 | 235.0 | 234.0 | 239.0 | 232.0 | 270.9 | 351.0 | 232.0 |
| 12 | 255.0 | 216.0 | 206.0 | 201.0 | 222.0 | 175.0 | 230.0 | 233.0 | 244.0 | 282.0 | 341.0 | 3.0 | 302.0 | 28.0 | 114.0 | 95.0 | 352.0 | 99.0 | 82.0 | 145.0 | 148.0 | 148.0 | 149.0 | 150.0 | 184.2 | 352.0 | 3.0 |
| 13 | 150.0 | 150.0 | 153.0 | 155.0 | 152.0 | 143.0 | 136.0 | 137.0 | 123.0 | 135.0 | 154.0 | 157.0 | 194.0 | 134.0 | 123.0 | 130.0 | 132.0 | 161.0 | 197.0 | 204.0 | 205.0 | 208.0 | 202.0 | 207.0 | 160.1 | 208.0 | 123.0 |
| 14 | 208.0 | 214.0 | 92.0 | 229.0 | 231.0 | 224.0 | 230.0 | 226.0 | 218.0 | 223.0 | 229.0 | 245.0 | 246.0 | 244.0 | 243.0 | 264.0 | 258.0 | 236.0 | 160.0 | 142.0 | 156.0 | 148.0 | 153.0 | 146.0 | 206.9 | 264.0 | 92.0 |
| 15 | 145.0 | 111.0 | 143.0 | 139.0 | 193.0 | 131.0 | 160.0 | 249.0 | 110.0 | 180.0 | 93.0 | 327.0 | 344.0 | 15.0 | 358.0 | 300.0 | 135.0 | 147.0 | 161.0 | 163.0 | 159.0 | 177.0 | 154.0 | 171.0 | 177.7 | 358.0 | 15.0 |
| 16 | 177.0 | 140.0 | 145.0 | 157.0 | 158.0 | 140.0 | 157.0 | 141.0 | 141.0 | 143.0 | 144.0 | 141.0 | 135.0 | 105.0 | 98.0 | 109.0 | 103.0 | 119.0 | 131.0 | 125.0 | 129.0 | 165.0 | 183.0 | 194.0 | 140.8 | 194.0 | 98.0 |
| 17 | 185.0 | 190.0 | 187.0 | 172.0 | 168.0 | 145.0 | 138.0 | 165.0 | 167.0 | 164.0 | 165.0 | 173.0 | 202.0 | 191.0 | 126.0 | 186.0 | 183.0 | 178.0 | 173.0 | 174.0 | 231.0 | 236.0 | 231.0 | 227.0 | 181.5 | 236.0 | 126.0 |
| 18 | 214.0 | 226.0 | 208.0 | 227.0 | 234.0 | 241.0 | 241.0 | 242.0 | 238.0 | 236.0 | 238.0 | 254.0 | 258.0 | 250.0 | 263.0 | 255.0 | 242.0 | 239.0 | 238.0 | 229.0 | 230.0 | 231.0 | 237.0 | 233.0 | 237.7 | 263.0 | 208.0 |
| 19 | 237.0 | 234.0 | 236.0 | 231.0 | 231.0 | 236.0 | 248.0 | 241.0 | 244.0 | 255.0 | 257.0 | 265.0 | 264.0 | 266.0 | 261.0 | 254.0 | 241.0 | 239.0 | 201.0 | 191.0 | 168.0 | 161.0 | 144.0 | 144.0 | 227.0 | 266.0 | 144.0 |
| 20 | 143.0 | 166.0 | 157.0 | 145.0 | 142.0 | 140.0 | 139.0 | 142.0 | 134.0 | 135.0 | 140.0 | 136.0 | 131.0 | 118.0 | 135.0 | 138.0 | 138.0 | 138.0 | 138.0 | 141.0 | 148.0 | 150.0 | 156.0 | 152.0 | 141.7 | 166.0 | 118.0 |
| 21 | 206.0 | 233.0 | 233.0 | 237.0 | 229.0 | 219.0 | 226.0 | 218.0 | 214.0 | 209.0 | 220.0 | 233.0 | 236.0 | 240.0 | 226.0 | 222.0 | 222.0 | 185.0 | 186.0 | 161.0 | 156.0 | 162.0 | 179.0 | 154.0 | 208.6 | 240.0 | 154.0 |
| 22 | 149.0 | 149.0 | 160.0 | 235.0 | 240.0 | 243.0 | 244.0 | 247.0 | 243.0 | 243.0 | 250.0 | 250.0 | 257.0 | 253.0 | 244.0 | 246.0 | 245.0 | 248.0 | 242.0 | 237.0 | 234.0 | 234.0 | 232.0 | 232.0 | 231.5 | 257.0 | 149.0 |
| 23 | 234.0 | 234.0 | 230.0 | 228.0 | 226.0 | 215.0 | 209.0 | 202.0 | 201.0 | 188.0 | 177.0 | 163.0 | 178.0 | 192.0 | 182.0 | 187.0 | 198.0 | 197.0 | 202.0 | 209.0 | 218.0 | 209.0 | 204.0 | 213.0 | 204.0 | 234.0 | 163.0 |
| 24 | 229.0 | 232.0 | 243.0 | 243.0 | 247.0 | 249.0 | 248.0 | 247.0 | 248.0 | 253.0 | 259.0 | 263.0 | 263.0 | 262.0 | 262.0 | 261.0 | 249.0 | 249.0 | 245.0 | 259.0 | 251.0 | 248.0 | 245.0 | 246.0 | 250.0 | 263.0 | 229.0 |
| 25 | 244.0 | 249.0 | 248.0 | 242.0 | 253.0 | 256.0 | 246.0 | 232.0 | 230.0 | 229.0 | 11.0 | 314.0 | 342.0 | 17.0 | 62.0 | 104.0 | 179.0 | 172.0 | 247.0 | 278.0 | 74.0 | 211.0 | 271.0 | 313.0 | 209.3 | 342.0 | 11.0 |
| 26 | 131.0 | 254.0 | 150.0 | 269.0 | 265.0 | 137.0 | 155.0 | 167.0 | 144.0 | 171.0 | 126.0 | 271.0 | 260.0 | 250.0 | 227.0 | 230.0 | 217.0 | 199.0 | 202.0 | 169.0 | 154.0 | 144.0 | 153.0 | 142.0 | 191.1 | 271.0 | 126.0 |
| 27 | 140.0 | 209.0 | 160.0 | 159.0 | 151.0 | 158.0 | 154.0 | 175.0 | 237.0 | 241.0 | 241.0 | 240.0 | 241.0 | 250.0 | 268.0 | 270.0 | 261.0 | 252.0 | 255.0 | 244.0 | 242.0 | 242.0 | 235.0 | 235.0 | 219.2 | 270.0 | 140.0 |
| 28 | 235.0 | 237.0 | 238.0 | 236.0 | 238.0 | 239.0 | 239.0 | 239.0 | 239.0 | 237.0 | 239.0 | 241.0 | 240.0 | 268.0 | 267.0 | 262.0 | 275.0 | 277.0 | 265.0 | 244.0 | 237.0 | 234.0 | 230.0 | 230.0 | 245.3 | 277.0 | 230.0 |
| Mean | 203.7 | 205.9 | 196.1 | 202.8 | 214.6 | 189.5 | 202.2 | 212.0 | 198.7 | 198.2 | 203.8 | 204.4 | 230.4 | 291.2 | 214.8 | 214.3 | 216.3 | 192.3 | 193.6 | 194.2 | 191.1 | 201.2 | 194.4 | 211.2 | Monthly mean = | | 203.6 |
| Max. | 317.0 | 341.0 | 328.0 | 351.0 | 312.0 | 319.0 | 335.0 | 300.0 | 320.0 | 305.0 | 341.0 | 327.0 | 344.0 | 300.0 | 358.0 | 300.0 | 352.0 | 277.0 | 265.0 | 278.0 | 251.0 | 258.0 | 271.0 | 313.0 | Monthly max. = | | 358.0 |
| Min. | 123.0 | 91.0 | 76.0 | 83.0 | 93.0 | 33.0 | 128.0 | 115.0 | 90.0 | 33.0 | 6.0 | 3.0 | 43.0 | 15.0 | 62.0 | 95.0 | 103.0 | 33.0 | 82.0 | 121.0 | 74.0 | 135.0 | 22.0 | 142.0 | Monthly min. = | | 3.0 |

TOTAL NUMBER OF DATA HOURS IN MONTH: 672
Number of hours of bad or missing data: 2
**** designates missing or lost data

Current % recovery = 99.7

N/A: insufficient data available for calculation (a minimum of 75% is required)

table created at 18:25, 7/14/1994

MONTHLY SUMMARY
TEMPERATURE
(Degrees Celsius)
INPUT FILE: s7metjj4.met

Bechtel Environmental, Inc.

Met Data for Site 7
FEBRUARY 1994

| Day \ Hour | 1 | 2 | 3 | 4 | 5 | 6 | 7 | 8 | 9 | 10 | 11 | 12 | 13 | 14 | 15 | 16 | 17 | 18 | 19 | 20 | 21 | 22 | 23 | 24 | Mean | Max. | Min. |
|---|---|---|---|---|---|---|---|---|---|---|---|---|---|---|---|---|---|---|---|---|---|---|---|---|---|---|---|
| 1 | -7.3 | -8.8 | -10.5 | -10.1 | -7.8 | -8.7 | -9.3 | -8.4 | -9.6 | -8.1 | -5.8 | -3.9 | -2.5 | -2.8 | -2.2 | -1.9 | -1.3 | -2.3 | -2.9 | -3.6 | -4.6 | -5.2 | -5.6 | -5.5 | -5.8 | -1.3 | -10.5 |
| 2 | -5.2 | -8.3 | -9.3 | -8.3 | -11.4 | -12.1 | -9.9 | -9.8 | -8.7 | -6.7 | -6.3 | -5.8 | -3.7 | -1.5 | -1.0 | -.4 | -.9 | -1.8 | -3.2 | -3.2 | -2.9 | -5.5 | -6.5 | -7.1 | -5.8 | -.4 | -12.1 |
| 3 | -8.2 | -9.6 | -10.1 | -10.0 | -11.2 | -12.4 | -11.6 | -10.9 | -9.6 | -9.7 | -9.2 | -7.6 | -4.4 | -1.6 | -.2 | .1 | -.2 | -.4 | -.6 | -.4 | -.7 | -.8 | -1.6 | -5.8 | -5.7 | .1 | -12.4 |
| 4 | -5.8 | -5.1 | -6.7 | -7.7 | -8.7 | -8.6 | -9.3 | -10.9 | -10.0 | -7.8 | -6.6 | -4.3 | -3.0 | -1.5 | -1.3 | -.8 | -.5 | -1.0 | -1.8 | -1.3 | -1.5 | -1.5 | -4.1 | -5.2 | -4.8 | -.5 | -10.9 |
| 5 | -4.7 | -5.2 | -4.6 | -4.1 | -5.5 | -6.5 | -7.4 | -8.5 | -7.3 | -6.9 | -6.5 | -3.2 | -1.0 | .1 | 1.2 | 2.0 | 1.9 | 1.2 | .8 | 1.3 | 1.8 | 1.8 | 1.9 | 1.7 | -2.3 | 2.0 | -8.5 |
| 6 | 1.5 | 1.7 | 1.4 | -2.5 | -3.4 | -2.6 | -3.1 | -4.8 | -4.8 | -3.5 | -3.2 | 1.7 | 4.1 | 4.2 | 4.6 | 4.3 | 3.9 | 3.2 | 2.8 | 3.0 | 3.6 | 3.5 | 2.1 | 2.2 | .8 | 4.6 | -4.8 |
| 7 | 2.8 | 1.3 | .4 | 2.3 | 2.3 | 1.5 | 1.6 | 1.4 | 1.5 | .9 | 1.8 | 2.2 | 4.0 | 4.3 | 4.1 | 3.4 | 3.2 | 2.2 | 3.2 | 2.8 | 2.7 | 2.8 | 2.6 | 2.9 | 2.4 | 4.3 | .4 |
| 8 | 2.1 | 1.2 | 1.2 | 1.1 | .0 | -1.3 | -2.4 | -3.8 | -5.0 | -5.2 | -5.2 | -5.5 | -6.8 | -7.1 | -7.2 | -7.0 | -6.9 | -7.2 | -7.0 | -6.8 | -7.1 | -7.3 | -7.5 | -7.7 | -4.5 | 2.1 | -7.7 |
| 9 | -7.8 | -7.9 | -7.6 | -6.7 | -6.4 | -7.0 | -5.7 | -3.8 | -2.8 | -2.1 | -2.2 | -.7 | .2 | -.1 | -1.1 | -2.3 | -1.8 | -1.4 | -1.2 | -1.3 | -.9 | -1.0 | -1.4 | -.9 | -3.1 | .2 | -7.9 |
| 10 | -1.2 | -1.1 | -1.2 | -.9 | -.8 | -1.0 | -2.4 | -2.5 | -2.3 | -2.5 | -2.5 | -2.4 | -2.5 | -2.4 | -1.0 | -1.3 | -1.1 | -1.7 | -2.7 | -2.5 | -2.1 | -1.6 | -2.0 | -3.1 | -1.9 | -.8 | -3.1 |
| 11 | -3.4 | -4.0 | -4.2 | -4.5 | -4.7 | -5.1 | -5.4 | -5.3 | -5.1 | -5.1 | ***** | ***** | -4.5 | -5.0 | -5.1 | -5.2 | -5.7 | -5.5 | -5.7 | -6.0 | -5.9 | -6.0 | -6.2 | -6.6 | -5.2 | -3.4 | -6.6 |
| 12 | -8.2 | -8.3 | -8.3 | -8.3 | -7.7 | -8.1 | -7.2 | -7.0 | -6.6 | -6.8 | -5.7 | -5.6 | -4.9 | -4.7 | -2.9 | -2.8 | -2.3 | -3.3 | -6.0 | -5.3 | -5.3 | -5.4 | -5.6 | -5.8 | -5.9 | -2.3 | -8.3 |
| 13 | -5.8 | -5.5 | -5.3 | -5.1 | -4.9 | -4.5 | -4.6 | -4.9 | -5.2 | -3.3 | -1.6 | -.5 | 1.3 | 2.3 | 1.6 | 1.4 | 1.1 | 2.4 | 4.5 | 5.2 | 5.3 | 5.2 | 4.9 | 4.5 | -.5 | 5.3 | -5.8 |
| 14 | 4.5 | 4.4 | .2 | 2.1 | 3.4 | 2.7 | 2.4 | 1.6 | 1.7 | 2.5 | 3.2 | 3.7 | 4.2 | 4.2 | 4.7 | 4.6 | 4.2 | 3.2 | 2.6 | 2.2 | 1.6 | 1.5 | .9 | .5 | 2.8 | 4.7 | .2 |
| 15 | -.2 | -3.0 | .0 | -1.4 | -3.6 | -4.8 | -5.0 | -5.3 | -5.0 | -1.8 | -.3 | -1.5 | .9 | 2.8 | 3.9 | 4.0 | 5.8 | 6.4 | 6.3 | 6.0 | 5.1 | 6.8 | 4.4 | 5.9 | 1.1 | 6.8 | -5.3 |
| 16 | 6.5 | 4.4 | 4.4 | 4.9 | 3.6 | 4.0 | 3.9 | 2.4 | 3.1 | 4.8 | 5.4 | 8.5 | 9.3 | 9.9 | 10.4 | 10.5 | 10.4 | 9.7 | 8.9 | 8.3 | 7.3 | 8.1 | 7.2 | 9.7 | 6.9 | 10.5 | 2.4 |
| 17 | 9.0 | 9.2 | 9.0 | 8.2 | 8.0 | 6.9 | 6.2 | 8.6 | 8.8 | 8.8 | 9.3 | 9.5 | 8.6 | 5.9 | 6.7 | 8.2 | 8.0 | 7.7 | 6.7 | 6.0 | 1.3 | -.4 | -.5 | -.4 | 6.6 | 9.5 | -.5 |
| 18 | .0 | .4 | .7 | 1.7 | 1.3 | .5 | .4 | -.4 | -1.4 | -1.3 | -.3 | -.5 | -.4 | -.5 | -.4 | -.9 | -.5 | -.9 | -1.4 | -1.4 | -1.6 | -1.9 | -2.0 | -2.3 | -.5 | 1.7 | -2.3 |
| 19 | -2.3 | -2.6 | -2.8 | -3.2 | -3.1 | -3.3 | -4.0 | -4.3 | -4.0 | -3.6 | -3.4 | -2.7 | -1.6 | -1.5 | -1.4 | -.9 | -.7 | -.9 | -1.4 | -1.3 | -2.2 | -2.7 | -3.8 | -4.1 | -2.6 | -.7 | -4.3 |
| 20 | -4.3 | -3.0 | -3.4 | -4.6 | -4.8 | -5.1 | -5.0 | -4.8 | -4.3 | -3.5 | -2.8 | -1.4 | -1.3 | -1.3 | -.9 | -.7 | -.7 | -1.3 | -2.2 | -2.3 | -2.2 | -2.4 | -2.6 | -2.9 | -2.8 | -.7 | -5.1 |
| 21 | -2.4 | -2.0 | -1.7 | -1.7 | -1.6 | -1.7 | -1.4 | -1.6 | -1.7 | -.7 | -.2 | -.4 | -1.4 | -.6 | 1.5 | .7 | 1.4 | .1 | -.6 | -1.9 | -2.3 | -2.0 | -1.4 | -2.5 | -1.1 | 1.5 | -2.5 |
| 22 | -2.8 | -2.7 | -2.6 | -3.2 | -3.9 | -4.1 | -4.9 | -5.5 | -5.8 | -5.6 | -5.1 | -4.9 | -4.5 | -4.4 | -4.1 | -3.4 | -2.7 | -2.8 | -3.4 | -3.5 | -3.7 | -3.9 | -3.9 | -3.7 | -4.0 | -2.6 | -5.8 |
| 23 | -3.4 | -3.2 | -3.0 | -3.0 | -2.9 | -2.9 | -3.0 | -2.9 | -2.5 | -2.1 | -2.0 | -2.2 | -1.7 | -1.6 | -.6 | -.6 | -.6 | -1.2 | -1.5 | -1.1 | -.2 | -.6 | -.4 | -.2 | -1.8 | -.2 | -3.4 |
| 24 | .7 | 1.7 | 2.3 | 2.3 | 2.2 | 2.2 | 2.3 | 2.5 | 3.1 | 3.0 | 3.2 | 3.3 | 3.8 | 3.9 | 4.3 | 4.5 | 4.3 | 4.6 | 4.1 | 4.1 | 4.0 | 3.6 | 3.2 | 3.2 | 3.2 | 4.6 | .7 |
| 25 | 3.3 | 3.2 | 2.9 | 3.1 | 2.9 | 2.5 | 2.3 | 2.3 | 2.7 | 3.5 | 3.1 | 4.2 | 6.1 | 7.4 | 7.9 | 9.6 | 10.2 | 8.5 | 5.9 | 3.6 | 2.8 | 3.6 | .7 | .2 | 4.3 | 10.2 | .2 |
| 26 | 1.5 | -.3 | 1.2 | .9 | .3 | 1.7 | 5.2 | 4.2 | 4.7 | 3.8 | 3.9 | 2.7 | 2.5 | 3.6 | 4.2 | 4.1 | 4.2 | 4.3 | 3.8 | 3.8 | 3.6 | 3.1 | 2.8 | 2.9 | 3.0 | 5.2 | -.3 |
| 27 | 2.9 | 4.4 | 3.8 | 3.9 | 3.6 | 3.8 | 3.9 | 3.7 | 1.9 | 1.5 | .9 | .5 | 1.0 | 1.9 | 2.3 | 3.2 | 3.3 | 3.5 | 3.5 | 3.1 | 2.9 | 2.6 | 2.2 | 1.9 | 2.8 | 4.4 | .5 |
| 28 | 1.5 | 1.4 | 1.1 | .9 | .7 | .7 | .4 | .4 | .3 | .6 | 1.2 | 2.4 | 4.1 | 4.7 | 4.8 | 5.4 | 5.5 | 5.4 | 5.0 | 4.9 | 5.0 | 5.3 | 5.2 | 5.3 | 3.0 | 5.5 | .3 |
| Mean | -1.3 | -1.7 | -1.9 | -1.9 | -2.3 | -2.6 | -2.6 | -2.8 | -2.6 | -2.0 | -1.4 | -.5 | .2 | .7 | 1.2 | 1.4 | 1.5 | 1.1 | .6 | .4 | .1 | .0 | -.6 | -.8 | Monthly mean = | | -.7 |
| Max. | 9.0 | 9.2 | 9.0 | 8.2 | 8.0 | 6.9 | 6.2 | 8.6 | 8.8 | 8.8 | 9.3 | 9.5 | 9.3 | 9.9 | 10.4 | 10.5 | 10.4 | 9.7 | 8.9 | 8.3 | 7.3 | 8.1 | 7.2 | 9.7 | Monthly max. = | | 10.5 |
| Min. | -8.2 | -9.6 | -10.5 | -10.1 | -11.4 | -12.4 | -11.6 | -10.9 | -10.0 | -9.7 | -9.2 | -7.6 | -6.8 | -7.1 | -7.2 | -7.0 | -6.9 | -7.2 | -7.0 | -6.8 | -7.1 | -7.3 | -7.5 | -7.7 | Monthly min. = | | -12.4 |

TOTAL NUMBER OF DATA HOURS IN MONTH: 672
Number of hours of bad or missing data: 2
**** designates missing or lost data

Current % recovery = 99.7

N/A: insufficient data available for calculation (a minimum of 75% is required)

table created at 18:25, 7/14/1994

MONTHLY SUMMARY
SIGMA THETA
(Degrees)
INPUT FILE: s7metjj4.met

Bechtel Environmental, Inc.

Met Data for Site 7
FEBRUARY 1994

| Day \ Hour | 1 | 2 | 3 | 4 | 5 | 6 | 7 | 8 | 9 | 10 | 11 | 12 | 13 | 14 | 15 | 16 | 17 | 18 | 19 | 20 | 21 | 22 | 23 | 24 | Mean | Max. | Min. |
|---|---|---|---|---|---|---|---|---|---|---|---|---|---|---|---|---|---|---|---|---|---|---|---|---|---|---|---|
| 1 | 10. | 19. | 27. | 43. | 13. | 31. | 30. | 7. | 71. | 46. | 45. | 44. | 41. | 15. | 15. | 15. | 22. | 17. | 8. | 10. | 11. | 6. | 5. | 7. | N/A | 71. | 5. |
| 2 | 23. | 13. | 18. | 36. | 23. | 31. | 5. | 7. | 45. | 47. | 50. | 19. | 25. | 43. | 17. | 17. | 16. | 53. | 13. | 5. | 7. | 26. | 28. | 23. | N/A | 53. | 5. |
| 3 | 15. | 40. | 20. | 17. | 32. | 54. | 27. | 27. | 16. | 40. | 51. | 17. | 34. | 19. | 15. | 13. | 14. | 14. | 11. | 9. | 7. | 7. | 37. | 27. | N/A | 54. | 7. |
| 4 | 32. | 8. | 39. | 46. | 32. | 27. | 35. | 46. | 43. | 26. | 24. | 28. | 18. | 13. | 13. | 12. | 12. | 22. | 11. | 6. | 9. | 8. | 49. | 36. | N/A | 49. | 6. |
| 5 | 55. | 22. | 25. | 11. | 47. | 15. | 40. | 27. | 53. | 48. | 39. | 33. | 28. | 17. | 18. | 13. | 14. | 11. | 13. | 17. | 10. | 10. | 10. | 10. | N/A | 55. | 10. |
| 6 | 9. | 9. | 37. | 26. | 7. | 17. | 26. | 52. | 32. | 72. | 59. | 89. | 39. | 20. | 18. | 17. | 12. | 5. | 5. | 7. | 9. | 10. | 9. | 13. | N/A | 89. | 5. |
| 7 | 11. | 12. | 9. | 16. | 12. | 11. | 11. | 12. | 12. | 12. | 14. | 14. | 14. | 12. | 12. | 19. | 17. | 10. | 14. | 14. | 10. | 14. | 15. | 12. | N/A | 19. | 9. |
| 8 | 11. | 11. | 10. | 11. | 7. | 8. | 11. | 18. | 24. | 23. | 9. | 9. | 9. | 12. | 11. | 9. | 10. | 10. | 7. | 8. | 9. | 9. | 13. | 12. | N/A | 24. | 7. |
| 9 | 15. | 11. | 10. | 11. | 12. | 47. | 37. | 13. | 20. | 18. | 20. | 15. | 16. | 14. | 15. | 14. | 13. | 11. | 10. | 10. | 11. | 9. | 11. | 11. | N/A | 47. | 9. |
| 10 | 10. | 11. | 11. | 9. | 14. | 18. | 11. | 42. | 21. | 11. | 10. | 10. | 14. | 24. | 54. | 24. | 8. | 27. | 13. | 19. | 13. | 12. | 56. | 30. | N/A | 56. | 8. |
| 11 | 19. | 20. | 28. | 22. | 14. | 11. | 20. | 18. | 12. | 12. | ***** | ***** | 10. | 10. | 9. | 7. | 7. | 7. | 7. | 8. | 9. | 9. | 11. | 23. | N/A | 28. | 7. |
| 12 | 58. | 61. | 46. | 41. | 32. | 33. | 21. | 12. | 16. | 21. | 50. | 23. | 19. | 33. | 23. | 21. | 22. | 42. | 20. | 8. | 5. | 5. | 6. | 7. | N/A | 61. | 5. |
| 13 | 6. | 6. | 7. | 7. | 7. | 7. | 9. | 9. | 56. | 10. | 11. | 23. | 49. | 36. | 8. | 10. | 10. | 9. | 9. | 11. | 11. | 10. | 10. | 9. | N/A | 56. | 6. |
| 14 | 10. | 31. | 76. | 64. | 9. | 10. | 9. | 10. | 8. | 9. | 13. | 16. | 15. | 14. | 16. | 11. | 10. | 29. | 9. | 8. | 54. | 8. | 12. | 7. | N/A | 76. | 7. |
| 15 | 52. | 9. | 25. | 34. | 40. | 71. | 56. | 22. | 37. | 50. | 61. | 38. | 40. | 23. | 26. | 53. | 44. | 11. | 7. | 6. | 5. | 10. | 4. | 14. | N/A | 71. | 4. |
| 16 | 22. | 73. | 15. | 30. | 55. | 9. | 25. | 68. | 8. | 27. | 38. | 51. | 15. | 16. | 12. | 10. | 12. | 10. | 11. | 9. | 13. | 28. | 47. | 11. | N/A | 73. | 8. |
| 17 | 22. | 10. | 10. | 8. | 8. | 12. | 10. | 10. | 10. | 10. | 12. | 15. | 14. | 33. | 55. | 12. | 10. | 11. | 10. | 11. | 15. | 10. | 9. | 10. | N/A | 55. | 8. |
| 18 | 11. | 10. | 10. | 11. | 10. | 13. | 14. | 12. | 12. | 14. | 12. | 15. | 15. | 14. | 9. | 15. | 16. | 13. | 13. | 12. | 9. | 10. | 15. | 16. | N/A | 16. | 9. |
| 19 | 15. | 16. | 12. | 11. | 10. | 12. | 16. | 11. | 13. | 16. | 14. | 10. | 13. | 12. | 13. | 15. | 14. | 12. | 7. | 6. | 10. | 6. | 7. | 4. | N/A | 16. | 4. |
| 20 | 4. | 8. | 8. | 7. | 6. | 6. | 7. | 9. | 7. | 7. | 7. | 10. | 12. | 14. | 11. | 12. | 10. | 8. | 7. | 7. | 7. | 6. | 7. | 7. | N/A | 14. | 4. |
| 21 | 28. | 11. | 10. | 10. | 10. | 11. | 11. | 11. | 12. | 15. | 15. | 19. | 16. | 21. | 51. | 20. | 30. | 23. | 7. | 9. | 6. | 9. | 9. | 7. | N/A | 51. | 6. |
| 22 | 5. | 5. | 9. | 11. | 12. | 12. | 13. | 15. | 14. | 13. | 15. | 16. | 13. | 16. | 13. | 15. | 14. | 15. | 12. | 9. | 7. | 8. | 8. | 8. | N/A | 16. | 5. |
| 23 | 10. | 10. | 9. | 10. | 12. | 11. | 12. | 10. | 10. | 11. | 11. | 8. | 11. | 11. | 11. | 10. | 10. | 11. | 12. | 16. | 11. | 10. | 12. | 11. | N/A | 16. | 8. |
| 24 | 11. | 11. | 13. | 14. | 16. | 17. | 17. | 17. | 17. | 16. | 13. | 8. | 8. | 8. | 8. | 11. | 16. | 17. | 15. | 15. | 17. | 16. | 14. | 15. | N/A | 17. | 8. |
| 25 | 15. | 16. | 17. | 12. | 15. | 16. | 16. | 9. | 10. | 21. | 51. | 42. | 24. | 28. | 27. | 45. | 19. | 40. | 32. | 46. | 45. | 30. | 8. | 20. | N/A | 51. | 8. |
| 26 | 60. | 26. | 62. | 38. | 57. | 28. | 7. | 74. | 14. | 18. | 32. | 23. | 9. | 14. | 42. | 9. | 11. | 12. | 8. | 5. | 3. | 5. | 16. | 27. | N/A | 74. | 3. |
| 27 | 8. | 20. | 11. | 42. | 6. | 8. | 27. | 12. | 8. | 10. | 11. | 9. | 10. | 14. | 7. | 7. | 13. | 14. | 11. | 12. | 10. | 11. | 7. | 7. | N/A | 42. | 6. |
| 28 | 6. | 7. | 8. | 7. | 8. | 8. | 8. | 9. | 8. | 7. | 9. | 11. | 12. | 12. | 12. | 13. | 8. | 7. | 13. | 12. | 9. | 9. | 10. | 9. | N/A | 13. | 6. |
| Mean | N/A | N/A | N/A | N/A | N/A | N/A | N/A | N/A | N/A | N/A | N/A | N/A | N/A | N/A | N/A | N/A | N/A | N/A | N/A | N/A | N/A | N/A | N/A | N/A | Monthly mean = | | N/A |
| Max. | 60. | 73. | 76. | 64. | 57. | 71. | 56. | 74. | 71. | 72. | 61. | 89. | 49. | 43. | 55. | 53. | 44. | 53. | 32. | 46. | 54. | 30. | 56. | 36. | Monthly max. = | | 89. |
| Min. | 4. | 5. | 7. | 7. | 6. | 6. | 5. | 7. | 7. | 7. | 7. | 8. | 8. | 8. | 7. | 7. | 7. | 5. | 5. | 5. | 3. | 5. | 4. | 4. | Monthly min. = | | 3. |

TOTAL NUMBER OF DATA HOURS IN MONTH: 672
Number of hours of bad or missing data: 2
**** designates missing or lost data

Current % recovery = 99.7

N/A: A sigma theta mean is not physically meaningful.

table created at 18:25, 7/14/1994

MONTHLY SUMMARY
WIND SPEED
(Miles Per Hour)
INPUT FILE: s7metjj4.met

Bechtel Environmental, Inc.

Met Data for Site 7
MARCH 1994

| Day | Hour 1 | 2 | 3 | 4 | 5 | 6 | 7 | 8 | 9 | 10 | 11 | 12 | 13 | 14 | 15 | 16 | 17 | 18 | 19 | 20 | 21 | 22 | 23 | 24 | Mean | Max. | Min. |
|---|---|---|---|---|---|---|---|---|---|---|---|---|---|---|---|---|---|---|---|---|---|---|---|---|---|---|---|
| 1 | 19.9 | 16.1 | 14.1 | 10.6 | 9.5 | 3.8 | 2.2 | 6.6 | 8.2 | 6.7 | 6.8 | 7.8 | 8.8 | 6.4 | ***** | 7.0 | 5.7 | 5.1 | 4.3 | 5.5 | 6.7 | 9.8 | 11.9 | 11.6 | 8.5 | 19.9 | 2.2 |
| 2 | 4.8 | 9.1 | 8.9 | 5.4 | 10.5 | 10.4 | 10.2 | 3.9 | 3.5 | 2.5 | 4.1 | 6.0 | 6.7 | 8.5 | 8.1 | 9.1 | 10.1 | 13.6 | 14.9 | 14.0 | 19.9 | 18.0 | 18.4 | 18.7 | 10.0 | 19.9 | 2.5 |
| 3 | 18.2 | 13.6 | 10.6 | 11.8 | 13.6 | 7.9 | 10.4 | 10.3 | 10.8 | 3.3 | 7.5 | 11.6 | 9.5 | 8.0 | 7.9 | 10.6 | 11.0 | 9.0 | 6.5 | 7.8 | 9.0 | 9.2 | 10.1 | 11.6 | 10.0 | 18.2 | 3.3 |
| 4 | 5.5 | 5.4 | 4.6 | 4.1 | 2.2 | 4.0 | 5.5 | 5.4 | 12.3 | 11.2 | 16.7 | 19.5 | 20.6 | 23.5 | 21.9 | 20.2 | 23.0 | 20.5 | 17.4 | 18.1 | 21.4 | 22.4 | 20.1 | 20.5 | 14.4 | 23.5 | 2.2 |
| 5 | 15.3 | 13.7 | 9.6 | 3.1 | 3.5 | 3.6 | 9.1 | 5.9 | 5.5 | 8.5 | 8.6 | 12.4 | 11.3 | 4.7 | 8.0 | 11.7 | 10.4 | 7.2 | 4.7 | 3.5 | 7.8 | 13.6 | 13.7 | 15.7 | 8.8 | 15.7 | 3.1 |
| 6 | 13.3 | 8.7 | 12.2 | 16.6 | 19.7 | 18.9 | 20.7 | 14.8 | 14.1 | 12.2 | 12.7 | 15.0 | 13.4 | 10.5 | 9.6 | 7.5 | 6.8 | 7.0 | 9.0 | 11.1 | 12.9 | 14.4 | 14.9 | 15.6 | 13.0 | 20.7 | 6.8 |
| 7 | 17.0 | 15.9 | 14.1 | 15.6 | 13.7 | 10.8 | 8.4 | 7.6 | 6.3 | 9.6 | ***** | 16.8 | 15.9 | 12.4 | 9.3 | 9.7 | 8.6 | 5.3 | 2.6 | 4.6 | 5.4 | 7.8 | 9.3 | 11.6 | 10.4 | 17.0 | 2.6 |
| 8 | 10.2 | 10.4 | 13.3 | 15.4 | 16.7 | 14.1 | 13.9 | 8.0 | 4.9 | 13.1 | 18.2 | 18.1 | 15.8 | 12.9 | 8.0 | 7.5 | 9.3 | 7.9 | 7.6 | 16.0 | 20.1 | 19.1 | 18.9 | 18.3 | 13.2 | 20.1 | 4.9 |
| 9 | 18.0 | 12.9 | 11.5 | 11.4 | 6.3 | 2.9 | 4.7 | 8.7 | 10.5 | 10.8 | 12.7 | 11.9 | 12.6 | 11.4 | 10.2 | 9.1 | 7.1 | 4.6 | 2.7 | 1.8 | 7.8 | 11.4 | 13.8 | 12.0 | 9.5 | 18.0 | 1.8 |
| 10 | 15.5 | 16.8 | 15.7 | 15.6 | 11.2 | 13.5 | 13.1 | 10.3 | 8.7 | 5.7 | 3.7 | 5.2 | 8.1 | 13.7 | 15.8 | 15.7 | 16.6 | 14.1 | 20.7 | 14.2 | 12.5 | 11.8 | 5.2 | 10.5 | 12.2 | 20.7 | 3.7 |
| 11 | 11.6 | 11.1 | 5.8 | 4.7 | 6.2 | 10.0 | 11.5 | 13.9 | 13.1 | 8.1 | 5.4 | 10.7 | 12.1 | 13.8 | 17.1 | 18.7 | 19.4 | 18.3 | 16.9 | 12.4 | 7.6 | 7.5 | 6.7 | 6.6 | 11.2 | 19.4 | 4.7 |
| 12 | 8.0 | 8.8 | 8.6 | 6.9 | 8.1 | 4.9 | 4.8 | 4.0 | 4.0 | 4.5 | 5.3 | 9.2 | 8.2 | 7.9 | 9.1 | 8.3 | 7.6 | 9.9 | 17.3 | 23.2 | 24.0 | 23.0 | 20.6 | 18.1 | 10.6 | 24.0 | 4.0 |
| 13 | 14.0 | 11.6 | 10.7 | 8.1 | 8.2 | 8.1 | 5.8 | 2.4 | 2.4 | 3.0 | 5.9 | 8.6 | 10.2 | 9.4 | 10.3 | 13.3 | 12.6 | 16.0 | 12.8 | 13.5 | 10.0 | 9.4 | 11.0 | 11.2 | 9.5 | 16.0 | 2.4 |
| 14 | 14.3 | 12.3 | 10.5 | 7.3 | 10.2 | 12.4 | 9.5 | 6.1 | 10.0 | 8.2 | 12.7 | 15.7 | 18.1 | 19.0 | 22.7 | 24.2 | 25.1 | 21.1 | 18.0 | 17.7 | 17.1 | 11.9 | 10.9 | 10.6 | 14.4 | 25.1 | 6.1 |
| 15 | 11.1 | 11.2 | 13.5 | 14.4 | 15.5 | 11.0 | 15.4 | 12.5 | 9.5 | 10.8 | 12.0 | 12.0 | 11.8 | 11.1 | 15.9 | 15.3 | 14.4 | 18.8 | 22.2 | 24.2 | 23.1 | 21.5 | 16.0 | 14.2 | 14.9 | 24.2 | 9.5 |
| 16 | 16.7 | 18.5 | 17.9 | 16.8 | 15.7 | 8.8 | 4.1 | 16.1 | 16.5 | 16.4 | 11.7 | 11.9 | 11.3 | 11.2 | 18.5 | 19.6 | 13.7 | 9.4 | 14.1 | 14.1 | 19.5 | 23.1 | 25.5 | 33.5 | 16.0 | 33.5 | 4.1 |
| 17 | 30.3 | 32.5 | 31.5 | 35.0 | 28.7 | 26.9 | 27.1 | 27.9 | 27.0 | 24.0 | 25.5 | 23.1 | 26.6 | 23.6 | 26.3 | 27.7 | 27.6 | 20.1 | 14.7 | 8.9 | 10.4 | 7.7 | 6.2 | 3.8 | 22.6 | 35.0 | 3.8 |
| 18 | 9.8 | 15.3 | 22.1 | 20.7 | 11.8 | 7.2 | 8.1 | 6.9 | 3.9 | 6.1 | 8.5 | 20.1 | 19.0 | 21.7 | 20.8 | 16.9 | 19.6 | 23.9 | 23.1 | 21.8 | 24.7 | 21.5 | 22.9 | 23.6 | 16.7 | 24.7 | 3.9 |
| 19 | 21.8 | 23.9 | 22.5 | 20.7 | 23.2 | 28.8 | 29.1 | 28.0 | 26.3 | 20.6 | 21.3 | 23.7 | 20.8 | 23.2 | 24.3 | 26.9 | 24.6 | 26.5 | 22.8 | 25.5 | 28.9 | 29.4 | 26.1 | 24.5 | 24.7 | 29.4 | 20.6 |
| 20 | 21.2 | 16.0 | 12.8 | 8.4 | 6.7 | 5.1 | 3.5 | 7.7 | 7.2 | 12.1 | 12.7 | 13.4 | 12.9 | 13.7 | 13.0 | 12.8 | 9.8 | 13.3 | 19.1 | 23.4 | 22.7 | 21.2 | 18.9 | 17.1 | 13.5 | 23.4 | 3.5 |
| 21 | 17.7 | 17.0 | 17.6 | 15.0 | 14.5 | 23.0 | 24.6 | 20.6 | 20.2 | 18.7 | 24.0 | 32.3 | 30.8 | 27.7 | 22.0 | 16.1 | 21.1 | 13.6 | 9.8 | 9.4 | 7.6 | 6.8 | 8.7 | 9.1 | 17.8 | 32.3 | 6.8 |
| 22 | 12.2 | 12.0 | 21.1 | 9.8 | 20.3 | 23.9 | 19.5 | 7.4 | 4.4 | 6.9 | 4.4 | 9.9 | 8.8 | 4.8 | 3.3 | 16.1 | 23.9 | 27.6 | 27.7 | 28.1 | 33.3 | 33.5 | 32.5 | 33.0 | 17.7 | 33.5 | 3.3 |
| 23 | 33.3 | 32.7 | 29.6 | 37.2 | 36.6 | 32.6 | 30.2 | 26.5 | 21.0 | 18.6 | 17.3 | 19.8 | 17.6 | 15.0 | 18.4 | 14.6 | 10.0 | 12.6 | 14.6 | 18.6 | 18.2 | 19.1 | 17.6 | 17.0 | 22.0 | 37.2 | 10.0 |
| 24 | 16.0 | 14.5 | 10.8 | 9.9 | 9.4 | 7.7 | 11.4 | 2.7 | 9.6 | 9.3 | 7.2 | 6.6 | 7.2 | 7.7 | 5.8 | 6.0 | 8.4 | 9.6 | 9.2 | 10.5 | 12.8 | 14.4 | 14.1 | 12.1 | 9.7 | 16.0 | 2.7 |
| 25 | 5.5 | 5.2 | 8.6 | 3.0 | 8.1 | 4.6 | 1.9 | 3.6 | 3.8 | 4.6 | 4.6 | 5.0 | 5.0 | 7.9 | 9.6 | 8.8 | 7.4 | 4.7 | 3.2 | 5.5 | 7.1 | 4.9 | 3.4 | 3.5 | 5.4 | 9.6 | 1.9 |
| 26 | 5.3 | 3.8 | 10.2 | 17.2 | 18.1 | 14.9 | 7.5 | 6.7 | 8.7 | 7.4 | 10.5 | 17.8 | 17.4 | 18.2 | 19.0 | 21.3 | 18.6 | 19.1 | 20.0 | 11.1 | 13.2 | 14.8 | 18.4 | 20.3 | 14.1 | 21.3 | 3.8 |
| 27 | 18.9 | 14.1 | 10.0 | 4.9 | 8.2 | 4.3 | 5.7 | 5.8 | 7.5 | 7.7 | 11.2 | 10.7 | 7.4 | 8.2 | 8.5 | 11.5 | 12.0 | 15.3 | 14.0 | 17.1 | 17.5 | 19.4 | 22.0 | 24.7 | 11.9 | 24.7 | 4.3 |
| 28 | 22.9 | 19.4 | 13.9 | 13.5 | 12.6 | 12.2 | 10.6 | 10.3 | 8.3 | 12.3 | 17.1 | 24.9 | 27.6 | 27.3 | 27.8 | 24.2 | 30.2 | 32.5 | 23.1 | 13.5 | 12.4 | 11.9 | 10.2 | 10.8 | 17.9 | 32.5 | 8.3 |
| 29 | 12.6 | 13.4 | 11.3 | 14.5 | 15.5 | 14.3 | 8.5 | 6.2 | 16.1 | 19.6 | 17.2 | 13.7 | 10.4 | 9.4 | 10.2 | 11.2 | 12.4 | 10.2 | 5.6 | 7.1 | 10.1 | 11.6 | 12.6 | 9.0 | 11.8 | 19.6 | 5.6 |
| 30 | 8.8 | 4.4 | 3.5 | 9.1 | 13.8 | 4.6 | 3.5 | 5.0 | 6.5 | 6.9 | 7.0 | 7.0 | 8.7 | 6.7 | 5.1 | 5.7 | 7.0 | 7.6 | 4.3 | 7.6 | 10.7 | 12.9 | 13.7 | 18.0 | 7.8 | 18.0 | 3.5 |
| 31 | 15.0 | 10.1 | 13.4 | 8.7 | 3.0 | 2.1 | 11.7 | 3.7 | 6.9 | 7.5 | 6.0 | 8.3 | 17.1 | 24.8 | 20.1 | 23.4 | 24.4 | 23.9 | 24.2 | 26.3 | 27.0 | 22.0 | 8.4 | 7.6 | 14.4 | 27.0 | 2.1 |
| Mean | 15.0 | 13.9 | 13.6 | 12.8 | 12.9 | 11.5 | 11.4 | 9.9 | 10.2 | 10.2 | 11.3 | 13.8 | 13.9 | 13.7 | 14.2 | 14.5 | 14.8 | 14.5 | 13.8 | 14.1 | 15.5 | 15.6 | 14.9 | 15.3 | Monthly mean = | | 13.4 |
| Max. | 33.3 | 32.7 | 31.5 | 37.2 | 36.6 | 32.6 | 30.2 | 28.0 | 27.0 | 24.0 | 25.5 | 32.3 | 30.8 | 27.7 | 27.8 | 27.7 | 30.2 | 32.5 | 27.7 | 28.1 | 33.3 | 33.5 | 32.5 | 33.5 | Monthly max. = | | 37.2 |
| Min. | 4.8 | 3.8 | 3.5 | 3.0 | 2.2 | 2.1 | 1.9 | 2.4 | 2.4 | 2.5 | 3.7 | 5.0 | 5.0 | 4.7 | 3.3 | 5.7 | 5.7 | 4.6 | 2.6 | 1.8 | 5.4 | 4.9 | 3.4 | 3.5 | Monthly min. = | | 1.8 |

TOTAL NUMBER OF DATA HOURS IN MONTH: 744
Number of hours of bad or missing data: 2
Current % recovery = 99.7
**** designates missing or lost data

N/A: insufficient data available for calculation (a minimum of 75% is required)

table created at 18:25, 7/14/1994

MONTHLY SUMMARY
WIND DIRECTION
(Degrees)
INPUT FILE: s7metjj4.met

Bechtel Environmental, Inc.

Met Data for Site 7
MARCH 1994

| Day | Hour 1 | 2 | 3 | 4 | 5 | 6 | 7 | 8 | 9 | 10 | 11 | 12 | 13 | 14 | 15 | 16 | 17 | 18 | 19 | 20 | 21 | 22 | 23 | 24 | Mean | Max. | Min. |
|---|---|---|---|---|---|---|---|---|---|---|---|---|---|---|---|---|---|---|---|---|---|---|---|---|---|---|---|
| 1 | 234.0 | 240.0 | 250.0 | 251.0 | 272.0 | 333.0 | 80.0 | 131.0 | 158.0 | 140.0 | 132.0 | 250.0 | 244.0 | 247.0 | ***** | 252.0 | 241.0 | 220.0 | 216.0 | 225.0 | 200.0 | 192.0 | 143.0 | 150.0 | 208.7 | 333.0 | 80.0 |
| 2 | 141.0 | 129.0 | 135.0 | 142.0 | 124.0 | 136.0 | 141.0 | 165.0 | 126.0 | 301.0 | 23.0 | 45.0 | 82.0 | 130.0 | 230.0 | 168.0 | 172.0 | 182.0 | 192.0 | 151.0 | 151.0 | 149.0 | 148.0 | 148.0 | 146.3 | 301.0 | 23.0 |
| 3 | 145.0 | 146.0 | 145.0 | 136.0 | 147.0 | 149.0 | 147.0 | 147.0 | 145.0 | 129.0 | 109.0 | 133.0 | 126.0 | 292.0 | 287.0 | 284.0 | 280.0 | 272.0 | 224.0 | 242.0 | 203.0 | 205.0 | 189.0 | 146.0 | 184.5 | 292.0 | 109.0 |
| 4 | 152.0 | 138.0 | 139.0 | 165.0 | 243.0 | 128.0 | 139.0 | 238.0 | 230.0 | 264.0 | 264.0 | 256.0 | 253.0 | 264.0 | 264.0 | 258.0 | 262.0 | 256.0 | 239.0 | 232.0 | 233.0 | 234.0 | 232.0 | 231.0 | 221.4 | 264.0 | 128.0 |
| 5 | 222.0 | 223.0 | 220.0 | 278.0 | 210.0 | 153.0 | 235.0 | 196.0 | 174.0 | 284.0 | 301.0 | 286.0 | 268.0 | 269.0 | 273.0 | 283.0 | 267.0 | 260.0 | 259.0 | 236.0 | 241.0 | 243.0 | 241.0 | 234.0 | 244.0 | 301.0 | 153.0 |
| 6 | 241.0 | 244.0 | 255.0 | 236.0 | 235.0 | 239.0 | 234.0 | 229.0 | 238.0 | 238.0 | 260.0 | 265.0 | 268.0 | 266.0 | 283.0 | 296.0 | 286.0 | 258.0 | 248.0 | 232.0 | 236.0 | 236.0 | 233.0 | 229.0 | 249.4 | 296.0 | 229.0 |
| 7 | 233.0 | 231.0 | 231.0 | 232.0 | 230.0 | 244.0 | 246.0 | 248.0 | 262.0 | 252.0 | ***** | 262.0 | 270.0 | 265.0 | 273.0 | 289.0 | 291.0 | 301.0 | 236.0 | 232.0 | 241.0 | 243.0 | 242.0 | 238.0 | 251.8 | 301.0 | 230.0 |
| 8 | 234.0 | 222.0 | 235.0 | 241.0 | 239.0 | 240.0 | 231.0 | 222.0 | 252.0 | 267.0 | 261.0 | 263.0 | 261.0 | 273.0 | 272.0 | 285.0 | 259.0 | 237.0 | 238.0 | 233.0 | 231.0 | 233.0 | 233.0 | 233.0 | 245.6 | 285.0 | 222.0 |
| 9 | 234.0 | 237.0 | 236.0 | 249.0 | 256.0 | 239.0 | 241.0 | 235.0 | 238.0 | 240.0 | 258.0 | 260.0 | 271.0 | 276.0 | 273.0 | 282.0 | 292.0 | 324.0 | 98.0 | 94.0 | 168.0 | 162.0 | 143.0 | 145.0 | 227.1 | 324.0 | 94.0 |
| 10 | 148.0 | 149.0 | 152.0 | 151.0 | 150.0 | 149.0 | 145.0 | 144.0 | 131.0 | 105.0 | 326.0 | 328.0 | 281.0 | 275.0 | 272.0 | 268.0 | 241.0 | 230.0 | 236.0 | 226.0 | 226.0 | 229.0 | 151.0 | 253.0 | 206.9 | 328.0 | 105.0 |
| 11 | 244.0 | 255.0 | 251.0 | 261.0 | 285.0 | 262.0 | 253.0 | 247.0 | 262.0 | 259.0 | 340.0 | 11.0 | 23.0 | 19.0 | 13.0 | 12.0 | 19.0 | 15.0 | 25.0 | 23.0 | 61.0 | 64.0 | 47.0 | 70.0 | 333.4 | 340.0 | 11.0 |
| 12 | 89.0 | 69.0 | 63.0 | 75.0 | 99.0 | 51.0 | 358.0 | 336.0 | 306.0 | 303.0 | 22.0 | 38.0 | 22.0 | 300.0 | 293.0 | 307.0 | 272.0 | 260.0 | 245.0 | 242.0 | 237.0 | 240.0 | 240.0 | 236.0 | 331.0 | 358.0 | 22.0 |
| 13 | 233.0 | 237.0 | 240.0 | 242.0 | 245.0 | 220.0 | 233.0 | 242.0 | 57.0 | 161.0 | 274.0 | 264.0 | 285.0 | 300.0 | 275.0 | 264.0 | 273.0 | 271.0 | 238.0 | 225.0 | 221.0 | 218.0 | 198.0 | 203.0 | 234.1 | 300.0 | 57.0 |
| 14 | 204.0 | 204.0 | 167.0 | 148.0 | 221.0 | 223.0 | 152.0 | 145.0 | 144.0 | 233.0 | 230.0 | 248.0 | 256.0 | 259.0 | 261.0 | 266.0 | 268.0 | 267.0 | 237.0 | 227.0 | 221.0 | 209.0 | 212.0 | 214.0 | 217.3 | 268.0 | 144.0 |
| 15 | 210.0 | 186.0 | 146.0 | 149.0 | 141.0 | 147.0 | 136.0 | 140.0 | 119.0 | 115.0 | 134.0 | 139.0 | 136.0 | 195.0 | 177.0 | 195.0 | 178.0 | 186.0 | 189.0 | 192.0 | 191.0 | 187.0 | 191.0 | 181.0 | 165.0 | 210.0 | 115.0 |
| 16 | 163.0 | 154.0 | 150.0 | 151.0 | 148.0 | 153.0 | 178.0 | 150.0 | 152.0 | 147.0 | 164.0 | 211.0 | 228.0 | 218.0 | 278.0 | 271.0 | 265.0 | 242.0 | 216.0 | 204.0 | 235.0 | 254.0 | 248.0 | 239.0 | 200.8 | 278.0 | 147.0 |
| 17 | 247.0 | 261.0 | 253.0 | 240.0 | 237.0 | 240.0 | 233.0 | 242.0 | 241.0 | 244.0 | 248.0 | 246.0 | 251.0 | 253.0 | 251.0 | 264.0 | 270.0 | 271.0 | 266.0 | 251.0 | 213.0 | 211.0 | 211.0 | 135.0 | 240.8 | 271.0 | 135.0 |
| 18 | 149.0 | 151.0 | 149.0 | 150.0 | 148.0 | 141.0 | 139.0 | 139.0 | 229.0 | 112.0 | 209.0 | 210.0 | 208.0 | 207.0 | 223.0 | 217.0 | 166.0 | 197.0 | 230.0 | 185.0 | 198.0 | 189.0 | 184.0 | 199.0 | 180.4 | 230.0 | 112.0 |
| 19 | 208.0 | 228.0 | 233.0 | 232.0 | 229.0 | 231.0 | 233.0 | 233.0 | 241.0 | 242.0 | 239.0 | 248.0 | 241.0 | 241.0 | 241.0 | 252.0 | 242.0 | 252.0 | 256.0 | 236.0 | 233.0 | 231.0 | 231.0 | 234.0 | 237.0 | 256.0 | 208.0 |
| 20 | 231.0 | 228.0 | 231.0 | 233.0 | 247.0 | 160.0 | 164.0 | 235.0 | 250.0 | 241.0 | 245.0 | 250.0 | 258.0 | 258.0 | 261.0 | 260.0 | 217.0 | 199.0 | 174.0 | 166.0 | 164.0 | 170.0 | 163.0 | 157.0 | 215.1 | 261.0 | 157.0 |
| 21 | 180.0 | 187.0 | 194.0 | 173.0 | 170.0 | 196.0 | 210.0 | 202.0 | 207.0 | 222.0 | 246.0 | 263.0 | 267.0 | 267.0 | 256.0 | 261.0 | 274.0 | 269.0 | 259.0 | 258.0 | 247.0 | 233.0 | 234.0 | 241.0 | 229.8 | 274.0 | 170.0 |
| 22 | 241.0 | 242.0 | 238.0 | 234.0 | 236.0 | 237.0 | 226.0 | 203.0 | 212.0 | 216.0 | 58.0 | 127.0 | 138.0 | 251.0 | 316.0 | 274.0 | 246.0 | 262.0 | 253.0 | 242.0 | 243.0 | 242.0 | 242.0 | 238.0 | 225.7 | 316.0 | 58.0 |
| 23 | 231.0 | 235.0 | 233.0 | 233.0 | 232.0 | 230.0 | 230.0 | 230.0 | 234.0 | 243.0 | 250.0 | 240.0 | 236.0 | 265.0 | 268.0 | 268.0 | 251.0 | 145.0 | 146.0 | 146.0 | 149.0 | 145.0 | 140.0 | 147.0 | 213.6 | 268.0 | 140.0 |
| 24 | 146.0 | 149.0 | 135.0 | 138.0 | 135.0 | 139.0 | 131.0 | 144.0 | 124.0 | 77.0 | 85.0 | 55.0 | 56.0 | 79.0 | 73.0 | 112.0 | 113.0 | 123.0 | 153.0 | 140.0 | 146.0 | 150.0 | 149.0 | 156.0 | 121.2 | 156.0 | 55.0 |
| 25 | 237.0 | 120.0 | 131.0 | 174.0 | 130.0 | 151.0 | 29.0 | 83.0 | 72.0 | 15.0 | 358.0 | 4.0 | 12.0 | 9.0 | 30.0 | 30.0 | 21.0 | 43.0 | 91.0 | 140.0 | 144.0 | 197.0 | 253.0 | 131.0 | 48.5 | 358.0 | 4.0 |
| 26 | 184.0 | 293.0 | 249.0 | 238.0 | 236.0 | 226.0 | 234.0 | 229.0 | 260.0 | 283.0 | 27.0 | 28.0 | 24.0 | 25.0 | 28.0 | 34.0 | 47.0 | 48.0 | 51.0 | 65.0 | 76.0 | 74.0 | 58.0 | 66.0 | 338.5 | 293.0 | 24.0 |
| 27 | 73.0 | 87.0 | 76.0 | 290.0 | 254.0 | 318.0 | 122.0 | 104.0 | 79.0 | 39.0 | 31.0 | 13.0 | 342.0 | 242.0 | 318.0 | 286.0 | 269.0 | 257.0 | 257.0 | 236.0 | 237.0 | 236.0 | 226.0 | 227.0 | 327.5 | 342.0 | 13.0 |
| 28 | 228.0 | 227.0 | 213.0 | 209.0 | 224.0 | 215.0 | 183.0 | 188.0 | 190.0 | 228.0 | 239.0 | 254.0 | 261.0 | 265.0 | 269.0 | 273.0 | 29.0 | 44.0 | 55.0 | 56.0 | 63.0 | 52.0 | 54.0 | 64.0 | 170.1 | 273.0 | 29.0 |
| 29 | 92.0 | 93.0 | 88.0 | 85.0 | 87.0 | 94.0 | 93.0 | 80.0 | 75.0 | 61.0 | 53.0 | 45.0 | 33.0 | 23.0 | 17.0 | 16.0 | 20.0 | 25.0 | 39.0 | 101.0 | 144.0 | 154.0 | 150.0 | 150.0 | 75.7 | 154.0 | 16.0 |
| 30 | 151.0 | 171.0 | 224.0 | 125.0 | 130.0 | 168.0 | 171.0 | 122.0 | 121.0 | 72.0 | 77.0 | 50.0 | 52.0 | 92.0 | 58.0 | 64.0 | 29.0 | 23.0 | 76.0 | 187.0 | 144.0 | 148.0 | 146.0 | 149.0 | 114.6 | 224.0 | 23.0 |
| 31 | 150.0 | 151.0 | 153.0 | 160.0 | 223.0 | 288.0 | 140.0 | 111.0 | 100.0 | 92.0 | 57.0 | 302.0 | 276.0 | 271.0 | 272.0 | 278.0 | 279.0 | 277.0 | 268.0 | 237.0 | 232.0 | 234.0 | 150.0 | 154.0 | 202.3 | 302.0 | 57.0 |
| Mean | 189.5 | 189.9 | 187.6 | 194.2 | 198.8 | 196.8 | 183.5 | 185.8 | 181.6 | 187.9 | 340.0 | 319.8 | 319.0 | 294.1 | 304.2 | 302.9 | 320.6 | 293.4 | 190.6 | 189.1 | 191.3 | 192.4 | 183.3 | 180.6 | Monthly mean = | | 193.2 |
| Max. | 247.0 | 293.0 | 255.0 | 290.0 | 285.0 | 333.0 | 358.0 | 336.0 | 306.0 | 303.0 | 358.0 | 328.0 | 342.0 | 300.0 | 318.0 | 307.0 | 292.0 | 324.0 | 268.0 | 258.0 | 247.0 | 254.0 | 253.0 | 253.0 | Monthly max. = | | 358.0 |
| Min. | 73.0 | 69.0 | 63.0 | 75.0 | 87.0 | 51.0 | 29.0 | 80.0 | 57.0 | 15.0 | 22.0 | 4.0 | 12.0 | 9.0 | 13.0 | 12.0 | 19.0 | 15.0 | 25.0 | 23.0 | 61.0 | 52.0 | 47.0 | 64.0 | Monthly min. = | | 4.0 |

TOTAL NUMBER OF DATA HOURS IN MONTH: 744
Number of hours of bad or missing data: 2
***** designates missing or lost data

Current % recovery = 99.7

N/A: Insufficient data available for calculation (a minimum of 75% is required)

table created at 18:25, 7/14/1994

MONTHLY SUMMARY
TEMPERATURE
(Degrees Celsius)
INPUT FILE: s7metjj4.met

Bechtel Environmental, Inc.

Met Data for Site 7
MARCH 1994

| Day \ Hour | 1 | 2 | 3 | 4 | 5 | 6 | 7 | 8 | 9 | 10 | 11 | 12 | 13 | 14 | 15 | 16 | 17 | 18 | 19 | 20 | 21 | 22 | 23 | 24 | Mean | Max. | Min. |
|---|---|---|---|---|---|---|---|---|---|---|---|---|---|---|---|---|---|---|---|---|---|---|---|---|---|---|---|
| 1 | 5.4 | 5.2 | 5.0 | 5.0 | 3.6 | .9 | .6 | 1.4 | 4.5 | 5.5 | 7.4 | 8.4 | 9.5 | 10.6 | ***** | 11.6 | 11.5 | 11.6 | 10.1 | 9.7 | 9.3 | 9.1 | 7.2 | 6.6 | 6.9 | 11.6 | .6 |
| 2 | 4.6 | 4.7 | 4.8 | 3.9 | 2.6 | 3.3 | 3.9 | 3.6 | 4.8 | 5.7 | 7.0 | 8.6 | 11.9 | 13.2 | 13.9 | 14.0 | 13.9 | 12.6 | 12.0 | 10.4 | 9.6 | 9.2 | 9.0 | 8.6 | 8.2 | 14.0 | 2.6 |
| 3 | 8.2 | 8.0 | 7.7 | 7.4 | 7.5 | 7.4 | 6.7 | 6.6 | 8.0 | 9.1 | 11.8 | 12.8 | 14.4 | 14.8 | 15.2 | 15.7 | 15.4 | 14.5 | 14.1 | 13.5 | 12.8 | 12.7 | 12.0 | 10.6 | 11.1 | 15.7 | 6.6 |
| 4 | 10.5 | 10.0 | 9.2 | 8.5 | 6.1 | 7.7 | 7.9 | 6.3 | 9.9 | 9.4 | 9.8 | 10.4 | 10.6 | 10.7 | 10.6 | 10.9 | 10.8 | 10.0 | 9.5 | 9.1 | 8.8 | 8.3 | 8.1 | 7.9 | 9.2 | 10.9 | 6.1 |
| 5 | 7.7 | 7.6 | 7.6 | 5.0 | 4.2 | 4.0 | 4.7 | 3.8 | 4.8 | 5.0 | 4.6 | 4.5 | 4.4 | 6.1 | 5.7 | 4.6 | 3.9 | 3.6 | 3.4 | 3.1 | 3.7 | 3.1 | 2.8 | 2.7 | 4.6 | 7.7 | 2.7 |
| 6 | 2.6 | 2.6 | 2.3 | 1.5 | 1.0 | .4 | -.2 | -.5 | -.4 | .3 | 1.5 | 2.3 | 3.6 | 4.9 | 5.8 | 6.8 | 7.3 | 7.1 | 5.6 | 5.3 | 5.0 | 4.3 | 3.7 | 2.8 | 3.1 | 7.3 | -.5 |
| 7 | 2.4 | 1.9 | 1.7 | 1.4 | 1.3 | .8 | .4 | .5 | 1.2 | 1.6 | ***** | 2.4 | 3.3 | 4.4 | 5.6 | 6.1 | 6.3 | 6.2 | 4.7 | 4.6 | 4.9 | 4.7 | 4.3 | 4.0 | 3.2 | 6.3 | .4 |
| 8 | 3.7 | 3.3 | 3.1 | 2.6 | 2.2 | 2.0 | 1.7 | 1.7 | 2.6 | 1.9 | 2.4 | 3.3 | 4.3 | 5.4 | 6.2 | 7.0 | 6.8 | 6.3 | 6.3 | 5.8 | 5.4 | 5.1 | 4.7 | 4.7 | 4.1 | 7.0 | 1.7 |
| 9 | 4.2 | 3.7 | 3.5 | 2.8 | 2.0 | 1.3 | 1.9 | 2.3 | 3.1 | 3.9 | 4.5 | 5.6 | 6.5 | 7.5 | 8.6 | 9.3 | 10.0 | 9.9 | 8.1 | 5.5 | 7.6 | 6.9 | 5.9 | 5.4 | 5.4 | 10.0 | 1.3 |
| 10 | 5.2 | 4.9 | 4.8 | 4.8 | 4.7 | 4.6 | 4.5 | 4.6 | 5.2 | 6.2 | 7.8 | 10.7 | 10.5 | 10.5 | 10.4 | 10.6 | 10.0 | 9.2 | 6.9 | 5.3 | 5.8 | 5.9 | 5.3 | 4.0 | 6.8 | 10.7 | 4.0 |
| 11 | 3.7 | 3.6 | 3.3 | 3.1 | 2.3 | 1.5 | 2.3 | 1.8 | 1.4 | 2.2 | 3.9 | 4.6 | 5.8 | 7.2 | 8.6 | 9.0 | 8.8 | 7.9 | 7.0 | 5.3 | 4.2 | 3.6 | 2.8 | 2.1 | 4.4 | 9.0 | 1.4 |
| 12 | 1.6 | 1.3 | 1.2 | .7 | .5 | .0 | -.6 | -.2 | 1.3 | 2.7 | 4.8 | 6.0 | 7.6 | 8.4 | 8.9 | 9.9 | 10.3 | 10.6 | 9.3 | 8.3 | 7.6 | 7.2 | 6.9 | 6.6 | 5.0 | 10.6 | -.6 |
| 13 | 6.5 | 6.2 | 6.0 | 5.7 | 5.4 | 5.3 | 5.1 | 4.3 | 6.4 | 8.5 | 8.7 | 9.9 | 10.4 | 12.0 | 13.2 | 13.8 | 14.4 | 13.8 | 13.0 | 13.1 | 12.8 | 12.7 | 12.4 | 12.8 | 9.7 | 14.4 | 4.3 |
| 14 | 12.9 | 12.6 | 10.5 | 8.6 | 10.2 | 11.5 | 8.3 | 7.6 | 9.0 | 11.9 | 12.6 | 14.0 | 14.6 | 15.6 | 16.2 | 16.5 | 16.7 | 16.4 | 15.4 | 14.9 | 14.7 | 14.5 | 14.5 | 14.6 | 13.1 | 16.7 | 7.6 |
| 15 | 14.8 | 13.4 | 10.6 | 10.6 | 9.9 | 9.7 | 8.9 | 8.9 | 9.7 | 11.6 | 14.5 | 17.0 | 18.6 | 19.4 | 19.9 | 20.2 | 19.4 | 18.1 | 17.0 | 16.7 | 16.6 | 16.3 | 16.8 | 16.2 | 14.8 | 20.2 | 8.9 |
| 16 | 14.3 | 12.6 | 12.6 | 12.4 | 12.3 | 11.7 | 10.0 | 12.4 | 12.8 | 13.4 | 14.9 | 15.8 | 15.8 | 16.1 | 15.5 | 14.8 | 14.3 | 13.8 | 14.0 | 14.1 | 14.4 | 12.3 | 10.2 | 6.9 | 13.2 | 16.1 | 6.9 |
| 17 | 5.3 | 4.1 | 3.5 | 3.1 | 2.6 | 2.1 | 1.9 | 2.4 | 2.6 | 3.2 | 4.2 | 5.1 | 6.0 | 6.9 | 7.8 | 8.6 | 8.7 | 8.8 | 7.7 | 7.0 | 6.9 | 6.9 | 6.7 | 5.4 | 5.3 | 8.8 | 1.9 |
| 18 | 6.2 | 5.2 | 5.3 | 5.7 | 5.7 | 5.7 | 4.8 | 5.9 | 7.0 | 9.7 | 12.1 | 12.5 | 12.0 | 11.5 | 10.4 | 9.6 | 9.4 | 10.1 | 6.0 | 7.1 | 9.2 | 9.9 | 9.3 | 10.3 | 8.4 | 12.5 | 4.8 |
| 19 | 10.0 | 9.4 | 6.6 | 5.3 | 3.5 | 1.8 | .6 | -.1 | -.2 | -.3 | -.3 | .1 | .2 | .6 | 1.1 | 1.6 | 1.8 | 2.2 | 1.3 | .6 | .3 | -.3 | -.8 | -1.4 | 1.8 | 10.0 | -1.4 |
| 20 | -2.1 | -2.5 | -2.8 | -3.0 | -3.2 | -3.7 | -3.6 | -1.9 | -.8 | -.2 | .9 | 1.8 | 2.9 | 4.2 | 5.8 | 6.9 | 7.3 | 7.3 | 5.4 | 4.4 | 4.2 | 4.6 | 4.6 | 4.7 | 1.7 | 7.3 | -3.7 |
| 21 | 6.0 | 7.0 | 7.3 | 6.3 | 6.5 | 8.0 | 8.0 | 7.8 | 8.1 | 8.9 | 9.7 | 10.1 | 10.6 | 10.6 | 11.1 | 11.6 | 11.5 | 10.7 | 9.8 | 9.0 | 8.8 | 8.6 | 8.5 | 7.6 | 8.8 | 11.6 | 6.0 |
| 22 | 6.5 | 6.2 | 4.8 | 3.9 | 3.3 | 2.1 | 1.6 | 1.7 | 1.3 | .9 | .9 | .4 | 1.3 | 2.4 | 3.1 | 1.3 | -.5 | -1.1 | -1.7 | -1.6 | -2.4 | -2.8 | -2.7 | -2.9 | 1.1 | 6.5 | -2.9 |
| 23 | -3.2 | -3.6 | -4.1 | -4.2 | -4.2 | -4.5 | -4.5 | -4.3 | -3.7 | -3.0 | -2.3 | -1.7 | -1.3 | -.6 | .3 | .6 | 1.0 | .0 | -.8 | -1.5 | -1.7 | -2.1 | -2.3 | -2.6 | -2.3 | 1.0 | -4.5 |
| 24 | -2.9 | -2.6 | -2.7 | -2.5 | -2.8 | -4.9 | -4.7 | -5.3 | -3.3 | -1.7 | .1 | 2.6 | 4.2 | 6.0 | 7.6 | 8.4 | 7.2 | 6.8 | 5.7 | 4.5 | 3.4 | 3.0 | 2.5 | 2.5 | 1.3 | 8.4 | -5.3 |
| 25 | .5 | -.7 | -.2 | -.6 | .6 | -.3 | -2.8 | -3.1 | -.9 | 1.8 | 4.0 | 6.1 | 7.7 | 8.1 | 8.3 | 8.8 | 9.1 | 9.2 | 8.0 | 7.1 | 6.7 | 5.7 | 4.9 | 2.2 | 3.8 | 9.2 | -3.1 |
| 26 | 3.9 | 2.8 | 2.6 | 2.4 | 2.1 | 1.4 | .4 | -.2 | 1.3 | 2.7 | 4.3 | 5.6 | 6.7 | 7.5 | 7.8 | 7.6 | 7.0 | 6.7 | 5.4 | 3.5 | 2.2 | 1.2 | .3 | .4 | 3.6 | 7.8 | -.2 |
| 27 | .3 | .1 | -.1 | -1.4 | -2.1 | -3.1 | -3.1 | -1.6 | .0 | 1.3 | 2.8 | 4.0 | 4.6 | 4.9 | 6.5 | 6.9 | 7.4 | 7.9 | 7.7 | 7.6 | 7.4 | 7.1 | 6.9 | 7.4 | 3.3 | 7.9 | -3.1 |
| 28 | 7.4 | 7.2 | 6.8 | 6.6 | 6.6 | 6.3 | 4.8 | 5.7 | 7.0 | 8.3 | 9.5 | 10.7 | 12.4 | 13.5 | 14.5 | 15.7 | 12.6 | 8.9 | 8.5 | 8.1 | 7.2 | 6.2 | 5.3 | 5.1 | 8.5 | 15.7 | 4.8 |
| 29 | 5.2 | 4.7 | 3.5 | 2.6 | 2.7 | 2.7 | 1.4 | 1.3 | 4.1 | 5.1 | 6.0 | 7.0 | 8.0 | 9.0 | 9.6 | 10.0 | 10.0 | 9.6 | 8.9 | 7.8 | 7.7 | 7.8 | 7.4 | 6.5 | 6.2 | 10.0 | 1.3 |
| 30 | 5.5 | 4.0 | 2.1 | .3 | 2.1 | 1.9 | 1.8 | 2.0 | 5.2 | 6.3 | 8.5 | 10.7 | 12.7 | 14.7 | 16.2 | 16.8 | 16.6 | 15.7 | 13.9 | 13.3 | 11.7 | 10.5 | 9.8 | 8.9 | 8.8 | 16.8 | .3 |
| 31 | 8.3 | 7.2 | 7.9 | 6.4 | 4.4 | 3.5 | 5.5 | 6.1 | 8.2 | 11.3 | 13.3 | 15.0 | 13.9 | 14.3 | 14.2 | 13.5 | 12.0 | 10.4 | 9.1 | 6.4 | 6.0 | 6.5 | 6.6 | 7.0 | 9.0 | 15.0 | 3.5 |
| Mean | 5.3 | 4.8 | 4.3 | 3.7 | 3.3 | 2.9 | 2.5 | 2.6 | 3.9 | 4.9 | 6.3 | 7.3 | 8.2 | 9.0 | 9.6 | 10.0 | 9.7 | 9.2 | 8.1 | 7.4 | 7.1 | 6.7 | 6.2 | 5.7 | Monthly mean = | | 6.2 |
| Max. | 14.8 | 13.4 | 12.6 | 12.4 | 12.3 | 11.7 | 10.0 | 12.4 | 12.8 | 13.4 | 14.9 | 17.0 | 18.6 | 19.4 | 19.9 | 20.2 | 19.4 | 18.1 | 17.0 | 16.7 | 16.6 | 16.3 | 16.8 | 16.2 | Monthly max. = | | 20.2 |
| Min. | -3.2 | -3.6 | -4.1 | -4.2 | -4.2 | -4.9 | -4.7 | -5.3 | -3.7 | -3.0 | -2.3 | -1.7 | -1.3 | -.6 | .3 | .6 | -.5 | -1.1 | -1.7 | -1.6 | -2.4 | -2.8 | -2.7 | -2.9 | Monthly min. = | | -5.3 |

TOTAL NUMBER OF DATA HOURS IN MONTH: 744
Number of hours of bad or missing data: 2
Current % recovery = 99.7
**** designates missing or lost data

N/A: insufficient data available for calculation (a minimum of 75% is required)

table created at 18:25, 7/14/1994

MONTHLY SUMMARY
SIGMA THETA
(Degrees)
INPUT FILE: s7metjj4.met

Bechtel Environmental, Inc.

Met Data for Site 7
MARCH 1994

| Day \ Hour | 1 | 2 | 3 | 4 | 5 | 6 | 7 | 8 | 9 | 10 | 11 | 12 | 13 | 14 | 15 | 16 | 17 | 18 | 19 | 20 | 21 | 22 | 23 | 24 | Mean | Max. | Min. |
|---|---|---|---|---|---|---|---|---|---|---|---|---|---|---|---|---|---|---|---|---|---|---|---|---|---|---|---|
| 1 | 10. | 12. | 16. | 15. | 19. | 38. | 45. | 19. | 22. | 30. | 39. | 22. | 23. | 40. | ***** | 26. | 25. | 20. | 11. | 13. | 13. | 10. | 5. | 8. | N/A | 45. | 5. |
| 2 | 31. | 14. | 5. | 26. | 8. | 4. | 16. | 34. | 50. | 35. | 29. | 19. | 25. | 38. | 38. | 20. | 15. | 8. | 7. | 10. | 5. | 5. | 4. | 5. | N/A | 50. | 4. |
| 3 | 5. | 8. | 7. | 4. | 5. | 29. | 11. | 11. | 36. | 65. | 29. | 12. | 26. | 23. | 22. | 16. | 12. | 10. | 8. | 10. | 80. | 8. | 12. | 6. | N/A | 80. | 4. |
| 4 | 30. | 52. | 37. | 30. | 42. | 39. | 42. | 38. | 14. | 15. | 14. | 14. | 12. | 9. | 10. | 15. | 11. | 13. | 13. | 10. | 9. | 9. | 9. | 9. | N/A | 52. | 9. |
| 5 | 9. | 9. | 12. | 51. | 37. | 55. | 33. | 36. | 23. | 11. | 14. | 10. | 8. | 19. | 16. | 9. | 10. | 14. | 17. | 51. | 12. | 11. | 11. | 8. | N/A | 55. | 8. |
| 6 | 10. | 23. | 9. | 12. | 8. | 8. | 7. | 8. | 10. | 12. | 16. | 13. | 15. | 16. | 14. | 21. | 20. | 12. | 10. | 7. | 8. | 8. | 8. | 8. | N/A | 23. | 7. |
| 7 | 8. | 9. | 9. | 8. | 9. | 14. | 15. | 15. | 16. | 18. | ***** | 12. | 12. | 17. | 23. | 16. | 15. | 13. | 19. | 20. | 7. | 10. | 10. | 8. | N/A | 23. | 7. |
| 8 | 7. | 9. | 8. | 10. | 9. | 10. | 8. | 56. | 75. | 15. | 10. | 11. | 15. | 15. | 30. | 21. | 15. | 9. | 11. | 10. | 7. | 8. | 8. | 7. | N/A | 75. | 7. |
| 9 | 8. | 11. | 12. | 15. | 12. | 26. | 17. | 12. | 17. | 17. | 14. | 17. | 13. | 16. | 17. | 16. | 17. | 20. | 12. | 22. | 14. | 12. | 4. | 16. | N/A | 26. | 4. |
| 10 | 6. | 5. | 5. | 6. | 8. | 7. | 6. | 7. | 11. | 25. | 22. | 32. | 17. | 11. | 12. | 12. | 13. | 11. | 11. | 8. | 8. | 16. | 36. | 11. | N/A | 36. | 5. |
| 11 | 10. | 13. | 16. | 89. | 29. | 9. | 11. | 12. | 10. | 17. | 32. | 12. | 12. | 11. | 12. | 11. | 9. | 7. | 7. | 8. | 20. | 19. | 15. | 18. | N/A | 89. | 7. |
| 12 | 15. | 17. | 17. | 23. | 19. | 33. | 25. | 32. | 40. | 31. | 36. | 18. | 21. | 32. | 21. | 22. | 17. | 14. | 13. | 10. | 8. | 9. | 9. | 9. | N/A | 40. | 8. |
| 13 | 11. | 11. | 12. | 12. | 13. | 14. | 16. | 72. | 41. | 57. | 24. | 21. | 17. | 21. | 16. | 15. | 14. | 8. | 12. | 9. | 13. | 11. | 10. | 10. | N/A | 72. | 8. |
| 14 | 10. | 13. | 23. | 31. | 55. | 15. | 13. | 51. | 12. | 29. | 15. | 17. | 13. | 15. | 12. | 10. | 9. | 8. | 12. | 9. | 8. | 8. | 9. | 10. | N/A | 55. | 8. |
| 15 | 12. | 12. | 9. | 5. | 5. | 7. | 5. | 5. | 11. | 43. | 17. | 30. | 34. | 25. | 17. | 14. | 10. | 7. | 6. | 7. | 7. | 7. | 9. | 9. | N/A | 43. | 5. |
| 16 | 6. | 4. | 4. | 5. | 5. | 44. | 45. | 7. | 7. | 8. | 22. | 15. | 18. | 19. | 12. | 8. | 15. | 19. | 14. | 12. | 13. | 15. | 16. | 12. | N/A | 45. | 4. |
| 17 | 15. | 12. | 15. | 12. | 11. | 11. | 10. | 12. | 14. | 14. | 17. | 16. | 14. | 16. | 16. | 13. | 9. | 11. | 7. | 13. | 13. | 7. | 51. | 24. | N/A | 51. | 7. |
| 18 | 7. | 7. | 5. | 7. | 10. | 20. | 44. | 46. | 50. | 63. | 31. | 13. | 13. | 13. | 12. | 16. | 12. | 12. | 16. | 12. | 10. | 12. | 9. | 10. | N/A | 63. | 5. |
| 19 | 10. | 10. | 9. | 9. | 10. | 8. | 9. | 10. | 13. | 13. | 12. | 16. | 15. | 13. | 13. | 13. | 14. | 14. | 12. | 10. | 8. | 8. | 8. | 7. | N/A | 16. | 7. |
| 20 | 7. | 9. | 10. | 12. | 21. | 47. | 41. | 17. | 21. | 15. | 18. | 18. | 19. | 18. | 20. | 20. | 24. | 15. | 7. | 7. | 9. | 8. | 9. | 8. | N/A | 47. | 7. |
| 21 | 11. | 12. | 11. | 12. | 13. | 10. | 11. | 10. | 12. | 14. | 16. | 12. | 11. | 11. | 13. | 12. | 9. | 10. | 13. | 9. | 10. | 9. | 9. | 12. | N/A | 16. | 9. |
| 22 | 11. | 11. | 10. | 30. | 8. | 7. | 8. | 36. | 38. | 22. | 33. | 10. | 11. | 46. | 23. | 8. | 12. | 10. | 12. | 12. | 14. | 12. | 12. | 11. | N/A | 46. | 7. |
| 23 | 9. | 11. | 12. | 10. | 9. | 9. | 9. | 10. | 12. | 15. | 17. | 13. | 13. | 14. | 14. | 15. | 34. | 11. | 7. | 6. | 6. | 6. | 6. | 6. | N/A | 34. | 6. |
| 24 | 5. | 6. | 5. | 5. | 8. | 45. | 10. | 29. | 13. | 13. | 17. | 29. | 27. | 24. | 42. | 47. | 16. | 12. | 7. | 7. | 6. | 5. | 4. | 8. | N/A | 47. | 4. |
| 25 | 24. | 33. | 7. | 46. | 4. | 25. | 39. | 32. | 23. | 20. | 34. | 48. | 53. | 39. | 21. | 26. | 25. | 27. | 16. | 8. | 7. | 29. | 50. | 43. | N/A | 53. | 4. |
| 26 | 14. | 26. | 21. | 10. | 8. | 12. | 86. | 45. | 18. | 29. | 18. | 12. | 16. | 13. | 14. | 10. | 10. | 8. | 10. | 20. | 13. | 13. | 8. | 8. | N/A | 86. | 8. |
| 27 | 8. | 14. | 15. | 34. | 14. | 31. | 16. | 14. | 16. | 21. | 16. | 18. | 36. | 26. | 44. | 24. | 17. | 16. | 11. | 9. | 10. | 10. | 9. | 8. | N/A | 44. | 8. |
| 28 | 9. | 11. | 14. | 16. | 13. | 13. | 19. | 19. | 30. | 15. | 16. | 15. | 12. | 13. | 10. | 11. | 16. | 8. | 9. | 11. | 13. | 8. | 9. | 10. | N/A | 30. | 8. |
| 29 | 10. | 9. | 11. | 8. | 6. | 8. | 31. | 51. | 11. | 11. | 15. | 18. | 18. | 26. | 33. | 15. | 12. | 9. | 12. | 11. | 6. | 4. | 4. | 35. | N/A | 51. | 4. |
| 30 | 27. | 40. | 37. | 30. | 4. | 35. | 44. | 21. | 54. | 18. | 21. | 20. | 22. | 41. | 43. | 38. | 18. | 10. | 31. | 19. | 5. | 5. | 5. | 5. | N/A | 54. | 4. |
| 31 | 5. | 28. | 5. | 16. | 43. | 73. | 29. | 64. | 17. | 24. | 53. | 30. | 11. | 11. | 12. | 9. | 9. | 8. | 11. | 9. | 9. | 10. | 15. | 22. | N/A | 73. | 5. |
| Mean | N/A | N/A | N/A | N/A | N/A | N/A | N/A | N/A | N/A | N/A | N/A | N/A | N/A | N/A | N/A | N/A | N/A | N/A | N/A | N/A | N/A | N/A | N/A | N/A | Monthly mean = | | N/A |
| Max. | 31. | 52. | 37. | 89. | 55. | 73. | 86. | 72. | 75. | 65. | 53. | 48. | 53. | 46. | 44. | 47. | 34. | 27. | 31. | 51. | 80. | 29. | 51. | 43. | Monthly max. = | | 89. |
| Min. | 5. | 4. | 4. | 4. | 4. | 4. | 5. | 5. | 7. | 8. | 10. | 10. | 8. | 9. | 10. | 8. | 9. | 7. | 6. | 6. | 5. | 4. | 4. | 5. | Monthly min. = | | 4. |

TOTAL NUMBER OF DATA HOURS IN MONTH: 744
Number of hours of bad or missing data: 2
Current % recovery = 99.7
***** designates missing or lost data

N/A: A sigma theta mean is not physically meaningful.

table created at 18:25, 7/14/1994

MONTHLY SUMMARY
WIND SPEED
(Miles Per Hour)
INPUT FILE: s7metjj4.met

Bechtel Environmental, Inc.

Met Data for Site 7
APRIL 1994

| Day \ Hour | 1 | 2 | 3 | 4 | 5 | 6 | 7 | 8 | 9 | 10 | 11 | 12 | 13 | 14 | 15 | 16 | 17 | 18 | 19 | 20 | 21 | 22 | 23 | 24 | Mean | Max. | Min. |
|---|---|---|---|---|---|---|---|---|---|---|---|---|---|---|---|---|---|---|---|---|---|---|---|---|---|---|---|
| 1 | 9.4 | 23.1 | 28.0 | 22.5 | 16.5 | 9.1 | 10.8 | 18.5 | 20.3 | 22.4 | 20.6 | 17.3 | 15.2 | 13.1 | 11.1 | 6.8 | 6.9 | 6.4 | 12.1 | 9.3 | 12.4 | 16.3 | 17.9 | 20.5 | 15.3 | 28.0 | 6.4 |
| 2 | 17.2 | 15.4 | 11.5 | 4.2 | 3.8 | 2.8 | 2.9 | 2.9 | 3.7 | 7.6 | 5.6 | 7.5 | 6.4 | 5.2 | 4.9 | 9.4 | 15.2 | 14.6 | 12.6 | 13.7 | 15.0 | 17.7 | 18.5 | 18.8 | 9.9 | 18.8 | 2.8 |
| 3 | 21.5 | 24.6 | 20.9 | 16.7 | 16.6 | 17.8 | 14.5 | 17.5 | 18.2 | 18.0 | 19.0 | 14.6 | 13.5 | 17.1 | 19.0 | 23.0 | 23.4 | 24.1 | 27.5 | 24.4 | 28.3 | 24.8 | 27.0 | 27.9 | 20.8 | 28.3 | 13.5 |
| 4 | 30.8 | 26.7 | 26.3 | 26.9 | 24.6 | 24.9 | 26.1 | 25.0 | 22.8 | 23.9 | 24.7 | 22.9 | 22.6 | 18.6 | 11.6 | 15.1 | 10.6 | 8.0 | 9.0 | 7.1 | 4.6 | 6.4 | 6.3 | 3.7 | 17.9 | 30.8 | 3.7 |
| 5 | 4.7 | 6.1 | 9.3 | 6.3 | 3.9 | 4.6 | 3.5 | 3.6 | 6.0 | 8.3 | 10.9 | 11.4 | 13.5 | 14.5 | 17.3 | 14.8 | 12.0 | 13.3 | 9.4 | 11.5 | 11.7 | 14.7 | 18.4 | 16.1 | 10.2 | 18:4 | 3.5 |
| 6 | 15.2 | 14.2 | 12.9 | 12.1 | 9.0 | 11.0 | 11.8 | 13.3 | 15.9 | 17.4 | 19.7 | 22.2 | 21.2 | 21.3 | 20.1 | 16.3 | 18.6 | 13.0 | 16.9 | 20.9 | 20.8 | 20.7 | 19.4 | 22.1 | 16.9 | 22.2 | 9.0 |
| 7 | 26.1 | 27.0 | 18.1 | 15.9 | 20.6 | 21.0 | 22.0 | 19.8 | 28.0 | 32.6 | 28.5 | 29.0 | 31.1 | 32.8 | 30.3 | 33.4 | 34.4 | 33.8 | 29.4 | 21.2 | 23.4 | 26.1 | 26.4 | 24.3 | 26.5 | 34.4 | 15.9 |
| 8 | 21.7 | 17.5 | 16.9 | 12.6 | 3.4 | 2.3 | 5.9 | 7.6 | 7.6 | 6.4 | 3.9 | 5.5 | 5.3 | 8.5 | 9.8 | 7.7 | 8.8 | 12.2 | 11.2 | 9.5 | 6.7 | 8.7 | 8.2 | 9.6 | 9.1 | 21.7 | 2.3 |
| 9 | 5.3 | 9.0 | 7.2 | 12.1 | 14.1 | 11.7 | 8.0 | 3.7 | 5.6 | 4.8 | 5.2 | 5.8 | 8.9 | 10.4 | 6.6 | 13.0 | 21.0 | 20.8 | 22.5 | 22.7 | 24.1 | 25.1 | 26.8 | 25.7 | 13.3 | 26.8 | 3.7 |
| 10 | 24.2 | 25.8 | 28.2 | 27.7 | 25.9 | 22.3 | 18.1 | 16.8 | 16.4 | 14.2 | 11.5 | 7.5 | 5.6 | 11.8 | 20.7 | 21.0 | 22.1 | 23.3 | 24.8 | 21.2 | 23.9 | 25.2 | 26.1 | 30.9 | 20.6 | 30.9 | 5.6 |
| 11 | 29.5 | 29.8 | 29.4 | 27.5 | 24.7 | 23.5 | 24.9 | 24.0 | 20.8 | 19.8 | 19.6 | 18.0 | 17.4 | 14.1 | 14.4 | 11.8 | 16.3 | 16.5 | 17.9 | 19.4 | 18.8 | 16.9 | 14.3 | 13.3 | 20.1 | 29.8 | 11.8 |
| 12 | 13.2 | 11.0 | 13.9 | 14.2 | 14.3 | 14.9 | 15.8 | 17.1 | 17.8 | 13.4 | 16.0 | 15.1 | 14.7 | 15.4 | 15.4 | 15.8 | 18.8 | 16.6 | 17.6 | 23.5 | 17.9 | 20.0 | 19.5 | 24.1 | 16.5 | 24.1 | 11.0 |
| 13 | 25.6 | 27.0 | 30.0 | 29.9 | 30.2 | 26.7 | 31.1 | 28.0 | 28.2 | 27.7 | 25.9 | 33.0 | 29.8 | 28.1 | 27.5 | 27.6 | 24.7 | 22.0 | 21.5 | 23.4 | 25.3 | 26.2 | 25.0 | 22.9 | 27.0 | 33.0 | 21.5 |
| 14 | 24.4 | 21.1 | 25.4 | 26.7 | 24.8 | 31.7 | 27.3 | 27.4 | 30.0 | 31.8 | 34.2 | 27.5 | 25.5 | 27.4 | 26.1 | 25.7 | 25.8 | 27.4 | 25.4 | 27.7 | 29.7 | 30.4 | 31.5 | 25.0 | 27.5 | 34.2 | 21.1 |
| 15 | 26.1 | 27.5 | 27.8 | 21.3 | 15.9 | 16.8 | 11.6 | 14.4 | 13.1 | 14.0 | 11.7 | 9.2 | 8.1 | 5.9 | 8.1 | 10.0 | 10.9 | 7.6 | 3.5 | 5.2 | 11.8 | 15.3 | 19.0 | 19.5 | 13.9 | 27.8 | 3.5 |
| 16 | 17.0 | 15.2 | 13.3 | 12.1 | 12.7 | 3.7 | 6.9 | 4.8 | 5.2 | 8.4 | 11.8 | 11.6 | 9.8 | 9.8 | 10.4 | 16.1 | 16.3 | 17.9 | 19.8 | 19.3 | 16.1 | 15.9 | 19.0 | 18.8 | 13.0 | 19.8 | 3.7 |
| 17 | 16.2 | 15.5 | 17.7 | 14.2 | 10.4 | 3.0 | 2.1 | 6.6 | 6.9 | 8.2 | 6.1 | 6.8 | 8.0 | 9.4 | 11.2 | 12.5 | 14.3 | 9.6 | 13.5 | 16.3 | 16.3 | 13.3 | 13.5 | 10.6 | 10.9 | 17.7 | 2.1 |
| 18 | 9.6 | 13.1 | 8.0 | 3.5 | 8.0 | 9.0 | 10.7 | 8.8 | 6.0 | 4.7 | 5.4 | 6.2 | 5.8 | 5.3 | 9.5 | 7.5 | 8.8 | 6.4 | 16.0 | 11.8 | 4.2 | 6.3 | 10.6 | 10.6 | 8.2 | 16.0 | 3.5 |
| 19 | 8.8 | 7.6 | 7.8 | 11.5 | 13.4 | 7.2 | 4.0 | 8.5 | 9.5 | 5.4 | 4.2 | 4.0 | 5.4 | 9.8 | 10.6 | 10.6 | 18.1 | 13.9 | 10.6 | 15.4 | 14.4 | 8.9 | 7.0 | 9.9 | 9.4 | 18.1 | 4.0 |
| 20 | 13.2 | 5.6 | 9.8 | 8.1 | 9.7 | 7.3 | 3.5 | 3.1 | 3.5 | 8.0 | 6.3 | 6.0 | 6.5 | 9.7 | 15.0 | 14.5 | 13.4 | 11.5 | 5.8 | 8.7 | 11.7 | 12.6 | 15.1 | 15.5 | 9.3 | 15.5 | 3.1 |
| 21 | 16.5 | 16.8 | 16.5 | 14.8 | 12.5 | 7.5 | 8.9 | 14.1 | 14.0 | 7.9 | 6.9 | 13.8 | 10.6 | 16.6 | 17.1 | 19.0 | 16.2 | 16.5 | 15.4 | 10.5 | 8.8 | 15.6 | 15.9 | 16.9 | 13.7 | 19.0 | 6.9 |
| 22 | 11.0 | 25.4 | 27.3 | 31.3 | 31.7 | 28.9 | 27.4 | 26.4 | 26.6 | 26.7 | 22.3 | 18.5 | 25.6 | 30.4 | 26.2 | 20.7 | 17.9 | 14.4 | 17.4 | 23.8 | 23.0 | 19.9 | 11.3 | 10.3 | 22.7 | 31.7 | 10.3 |
| 23 | 13.6 | 10.2 | 6.6 | 3.3 | 3.0 | 5.1 | 7.5 | 4.8 | 4.6 | 6.0 | 7.0 | 8.1 | 7.0 | 23.6 | 21.0 | 19.0 | 21.9 | 28.1 | 19.3 | 12.5 | 7.3 | 6.3 | 3.4 | 12.2 | 10.9 | 28.1 | 3.0 |
| 24 | 7.8 | 6.5 | 4.5 | 12.2 | 5.8 | 4.1 | 12.2 | 16.8 | 9.3 | 5.9 | 8.8 | 13.3 | 15.2 | 15.7 | 25.5 | 29.6 | 14.7 | 6.2 | 4.8 | 4.9 | 7.5 | 11.4 | 7.9 | 10.9 | 10.9 | 29.6 | 4.1 |
| 25 | 6.8 | 7.0 | 9.4 | 2.9 | 4.1 | 2.4 | 2.6 | 4.2 | 4.5 | 8.4 | 7.6 | 13.9 | 16.3 | 22.8 | 16.4 | 19.3 | 15.8 | 8.8 | 7.8 | 10.2 | 11.5 | 11.6 | 15.9 | 20.0 | 10.4 | 22.8 | 2.4 |
| 26 | 15.1 | 8.8 | 5.3 | 4.2 | 4.8 | 5.4 | 6.8 | 10.5 | 16.3 | 16.8 | 13.7 | 12.3 | 14.6 | 14.3 | 14.3 | 14.3 | 14.0 | 15.8 | 16.9 | 15.5 | 13.1 | 14.9 | 10.3 | 7.7 | 11.9 | 16.9 | 4.2 |
| 27 | 8.8 | 4.0 | 2.4 | 4.9 | 2.2 | 3.1 | 3.0 | 4.3 | 8.2 | 12.6 | 14.2 | 16.0 | 15.7 | 12.5 | 10.5 | 7.4 | 5.5 | 5.6 | 6.6 | 4.5 | 5.8 | 6.1 | 10.5 | 9.4 | 7.7 | 16.0 | 2.2 |
| 28 | 6.3 | 5.4 | 5.5 | 5.5 | 5.3 | 3.5 | 3.4 | 9.8 | 12.9 | 12.5 | 11.7 | 10.9 | 9.6 | 8.6 | 9.1 | 10.3 | 12.1 | 12.0 | 11.7 | 11.8 | 10.4 | 12.1 | 10.9 | 9.8 | 9.2 | 12.9 | 3.4 |
| 29 | 9.2 | 8.0 | 6.0 | 5.8 | 5.4 | 3.6 | 2.7 | 3.0 | 3.9 | 5.9 | 5.5 | 6.0 | 8.3 | 9.7 | 13.1 | 14.2 | 10.4 | 8.2 | 6.8 | 5.7 | 8.3 | 10.3 | 8.8 | 10.1 | 7.5 | 14.2 | 2.7 |
| 30 | 9.1 | 12.6 | 13.8 | 15.3 | 11.9 | 5.5 | 11.0 | 12.9 | 11.4 | 9.2 | 8.3 | 9.9 | 8.5 | 9.5 | 11.3 | 10.5 | 18.9 | 21.7 | 26.2 | 24.1 | 14.1 | 9.3 | 13.8 | 23.3 | 13.4 | 26.2 | 5.5 |
| Mean | 15.5 | 15.6 | 15.3 | 14.2 | 13.0 | 11.3 | 11.6 | 12.6 | 13.2 | 13.6 | 13.2 | 13.5 | 13.5 | 15.1 | 15.5 | 15.9 | 16.3 | 15.2 | 15.3 | 15.2 | 14.9 | 15.6 | 15.9 | 16.7 | Monthly mean = | | 14.5 |
| Max. | 30.8 | 29.8 | 30.0 | 31.3 | 31.7 | 31.7 | 31.1 | 28.0 | 30.0 | 32.6 | 34.2 | 33.0 | 31.1 | 32.8 | 30.3 | 33.4 | 34.4 | 33.8 | 29.4 | 27.7 | 29.7 | 30.4 | 31.5 | 30.9 | Monthly max. = | | 34.4 |
| Min. | 4.7 | 4.0 | 2.4 | 2.9 | 2.2 | 2.3 | 2.1 | 2.9 | 3.5 | 4.7 | 3.9 | 4.0 | 5.3 | 5.2 | 4.9 | 6.8 | 5.5 | 5.6 | 3.5 | 4.5 | 4.2 | 6.1 | 3.4 | 3.7 | Monthly min. = | | 2.1 |

TOTAL NUMBER OF DATA HOURS IN MONTH: 720
Number of hours of bad or missing data: 0
Current % recovery = 100.0
**** designates missing or lost data

N/A: insufficient data available for calculation (a minimum of 75% is required)

table created at 18:25, 7/14/1994

MONTHLY SUMMARY
WIND DIRECTION
(Degrees)
INPUT FILE: s7metjj4.met

Bechtel Environmental, Inc.

Met Data for Site 7
APRIL 1994

| Day \ Hour | 1 | 2 | 3 | 4 | 5 | 6 | 7 | 8 | 9 | 10 | 11 | 12 | 13 | 14 | 15 | 16 | 17 | 18 | 19 | 20 | 21 | 22 | 23 | 24 | Mean | Max. | Min. |
|---|---|---|---|---|---|---|---|---|---|---|---|---|---|---|---|---|---|---|---|---|---|---|---|---|---|---|---|
| 1 | 251.0 | 236.0 | 236.0 | 241.0 | 235.0 | 223.0 | 246.0 | 241.0 | 246.0 | 238.0 | 237.0 | 248.0 | 248.0 | 251.0 | 237.0 | 244.0 | 242.0 | 160.0 | 147.0 | 187.0 | 219.0 | 232.0 | 231.0 | 235.0 | 229.6 | 251.0 | 147.0 |
| 2 | 238.0 | 242.0 | 236.0 | 80.0 | 190.0 | 88.0 | 149.0 | 281.0 | 85.0 | 101.0 | 254.0 | 275.0 | 314.0 | 53.0 | 50.0 | 141.0 | 139.0 | 148.0 | 150.0 | 141.0 | 139.0 | 174.0 | 175.0 | 140.0 | 166.0 | 314.0 | 50.0 |
| 3 | 144.0 | 137.0 | 141.0 | 192.0 | 210.0 | 199.0 | 170.0 | 181.0 | 205.0 | 242.0 | 248.0 | 246.0 | 275.0 | 272.0 | 262.0 | 253.0 | 244.0 | 233.0 | 235.0 | 240.0 | 241.0 | 239.0 | 237.0 | 243.0 | 220.4 | 275.0 | 137.0 |
| 4 | 233.0 | 235.0 | 236.0 | 235.0 | 234.0 | 240.0 | 238.0 | 241.0 | 242.0 | 241.0 | 248.0 | 248.0 | 257.0 | 265.0 | 250.0 | 268.0 | 253.0 | 261.0 | 285.0 | 257.0 | 277.0 | 269.0 | 263.0 | 28.0 | 256.8 | 285.0 | 28.0 |
| 5 | 258.0 | 246.0 | 246.0 | 245.0 | 152.0 | 136.0 | 201.0 | 135.0 | 129.0 | 250.0 | 244.0 | 252.0 | 242.0 | 246.0 | 255.0 | 243.0 | 238.0 | 237.0 | 208.0 | 203.0 | 197.0 | 185.0 | 190.0 | 204.0 | 214.2 | 258.0 | 129.0 |
| 6 | 216.0 | 221.0 | 227.0 | 206.0 | 169.0 | 171.0 | 164.0 | 189.0 | 237.0 | 234.0 | 253.0 | 252.0 | 253.0 | 258.0 | 246.0 | 239.0 | 247.0 | 248.0 | 195.0 | 228.0 | 213.0 | 244.0 | 226.0 | 222.0 | 223.3 | 258.0 | 164.0 |
| 7 | 229.0 | 234.0 | 248.0 | 253.0 | 261.0 | 253.0 | 244.0 | 243.0 | 243.0 | 253.0 | 243.0 | 249.0 | 258.0 | 260.0 | 262.0 | 267.0 | 266.0 | 265.0 | 264.0 | 252.0 | 236.0 | 231.0 | 231.0 | 232.0 | 249.0 | 267.0 | 229.0 |
| 8 | 234.0 | 229.0 | 228.0 | 226.0 | 258.0 | 164.0 | 138.0 | 130.0 | 103.0 | 59.0 | 313.0 | 3.0 | 279.0 | 185.0 | 155.0 | 162.0 | 133.0 | 126.0 | 135.0 | 154.0 | 147.0 | 143.0 | 148.0 | 150.0 | 166.7 | 313.0 | 3.0 |
| 9 | 221.0 | 170.0 | 144.0 | 132.0 | 140.0 | 139.0 | 148.0 | 80.0 | 26.0 | 29.0 | 24.0 | 12.0 | 309.0 | 297.0 | 269.0 | 248.0 | 256.0 | 248.0 | 237.0 | 233.0 | 236.0 | 233.0 | 227.0 | 229.0 | 178.6 | 309.0 | 12.0 |
| 10 | 234.0 | 235.0 | 235.0 | 234.0 | 235.0 | 235.0 | 234.0 | 231.0 | 234.0 | 237.0 | 240.0 | 262.0 | 276.0 | 247.0 | 244.0 | 239.0 | 239.0 | 234.0 | 230.0 | 226.0 | 229.0 | 236.0 | 234.0 | 234.0 | 238.1 | 276.0 | 226.0 |
| 11 | 235.0 | 234.0 | 234.0 | 235.0 | 237.0 | 237.0 | 236.0 | 236.0 | 238.0 | 244.0 | 255.0 | 255.0 | 262.0 | 278.0 | 260.0 | 259.0 | 262.0 | 241.0 | 233.0 | 226.0 | 223.0 | 219.0 | 218.0 | 216.0 | 240.5 | 278.0 | 216.0 |
| 12 | 213.0 | 190.0 | 144.0 | 148.0 | 156.0 | 155.0 | 149.0 | 149.0 | 137.0 | 188.0 | 203.0 | 205.0 | 225.0 | 222.0 | 222.0 | 216.0 | 206.0 | 205.0 | 194.0 | 214.0 | 243.0 | 249.0 | 241.0 | 232.0 | 196.1 | 249.0 | 137.0 |
| 13 | 231.0 | 231.0 | 233.0 | 230.0 | 234.0 | 241.0 | 237.0 | 244.0 | 245.0 | 244.0 | 251.0 | 262.0 | 252.0 | 250.0 | 253.0 | 245.0 | 249.0 | 254.0 | 242.0 | 233.0 | 225.0 | 230.0 | 231.0 | 232.0 | 240.8 | 262.0 | 225.0 |
| 14 | 231.0 | 233.0 | 242.0 | 243.0 | 247.0 | 246.0 | 245.0 | 260.0 | 268.0 | 269.0 | 268.0 | 272.0 | 266.0 | 268.0 | 258.0 | 252.0 | 251.0 | 248.0 | 240.0 | 234.0 | 232.0 | 232.0 | 232.0 | 235.0 | 248.8 | 272.0 | 231.0 |
| 15 | 235.0 | 236.0 | 234.0 | 235.0 | 232.0 | 233.0 | 226.0 | 231.0 | 240.0 | 247.0 | 249.0 | 258.0 | 251.0 | 295.0 | 298.0 | 285.0 | 277.0 | 288.0 | 5.0 | 228.0 | 169.0 | 146.0 | 144.0 | 145.0 | 224.5 | 298.0 | 5.0 |
| 16 | 146.0 | 141.0 | 129.0 | 141.0 | 141.0 | 116.0 | 144.0 | 210.0 | 67.0 | 97.0 | 114.0 | 121.0 | 241.0 | 233.0 | 203.0 | 169.0 | 174.0 | 196.0 | 199.0 | 179.0 | 149.0 | 148.0 | 146.0 | 146.0 | 156.2 | 241.0 | 67.0 |
| 17 | 146.0 | 145.0 | 146.0 | 151.0 | 147.0 | 251.0 | 232.0 | 145.0 | 119.0 | 88.0 | 91.0 | 86.0 | 338.0 | 300.0 | 281.0 | 255.0 | 264.0 | 225.0 | 211.0 | 212.0 | 214.0 | 208.0 | 209.0 | 206.0 | 194.6 | 338.0 | 86.0 |
| 18 | 181.0 | 150.0 | 151.0 | 191.0 | 136.0 | 114.0 | 137.0 | 142.0 | 100.0 | 46.0 | 33.0 | 29.0 | 49.0 | 330.0 | 187.0 | 76.0 | 96.0 | 119.0 | 219.0 | 211.0 | 125.0 | 153.0 | 133.0 | 149.0 | 135.7 | 330.0 | 29.0 |
| 19 | 165.0 | 144.0 | 180.0 | 143.0 | 147.0 | 165.0 | 263.0 | 231.0 | 127.0 | 99.0 | 38.0 | 284.0 | 357.0 | 299.0 | 277.0 | 167.0 | 194.0 | 28.0 | 37.0 | 208.0 | 162.0 | 156.0 | 160.0 | 141.0 | 173.8 | 357.0 | 28.0 |
| 20 | 144.0 | 185.0 | 134.0 | 147.0 | 135.0 | 150.0 | 265.0 | 50.0 | 56.0 | 81.0 | 38.0 | 18.0 | 320.0 | 286.0 | 293.0 | 293.0 | 281.0 | 287.0 | 264.0 | 157.0 | 154.0 | 151.0 | 153.0 | 156.0 | 174.9 | 320.0 | 18.0 |
| 21 | 153.0 | 158.0 | 154.0 | 152.0 | 147.0 | 170.0 | 128.0 | 141.0 | 139.0 | 102.0 | 6.0 | 194.0 | 241.0 | 224.0 | 218.0 | 206.0 | 207.0 | 197.0 | 223.0 | 247.0 | 149.0 | 142.0 | 143.0 | 166.0 | 167.0 | 247.0 | 6.0 |
| 22 | 213.0 | 229.0 | 234.0 | 237.0 | 236.0 | 238.0 | 239.0 | 240.0 | 249.0 | 253.0 | 253.0 | 255.0 | 263.0 | 270.0 | 275.0 | 284.0 | 284.0 | 279.0 | 280.0 | 273.0 | 266.0 | 253.0 | 253.0 | 149.0 | 250.2 | 284.0 | 149.0 |
| 23 | 151.0 | 221.0 | 235.0 | 243.0 | 266.0 | 244.0 | 143.0 | 103.0 | 37.0 | 7.0 | 25.0 | 21.0 | 26.0 | 203.0 | 224.0 | 215.0 | 189.0 | 216.0 | 246.0 | 218.0 | 237.0 | 283.0 | 169.0 | 254.0 | 174.0 | 283.0 | 7.0 |
| 24 | 240.0 | 142.0 | 181.0 | 132.0 | 152.0 | 273.0 | 219.0 | 232.0 | 259.0 | 47.0 | 329.0 | 247.0 | 250.0 | 276.0 | 271.0 | 267.0 | 263.0 | 290.0 | 36.0 | 156.0 | 127.0 | 225.0 | 248.0 | 224.0 | 211.9 | 329.0 | 36.0 |
| 25 | 233.0 | 233.0 | 228.0 | 187.0 | 139.0 | 269.0 | 106.0 | 106.0 | 26.0 | 289.0 | 289.0 | 276.0 | 277.0 | 238.0 | 245.0 | 242.0 | 243.0 | 257.0 | 252.0 | 238.0 | 231.0 | 236.0 | 232.0 | 235.0 | 221.1 | 289.0 | 26.0 |
| 26 | 255.0 | 27.0 | 70.0 | 64.0 | 52.0 | 65.0 | 54.0 | 47.0 | 33.0 | 37.0 | 27.0 | 30.0 | 17.0 | 23.0 | 20.0 | 23.0 | 16.0 | 11.0 | 16.0 | 42.0 | 59.0 | 53.0 | 57.0 | 56.0 | 33.1 | 255.0 | 11.0 |
| 27 | 9.0 | 10.0 | 229.0 | 259.0 | 127.0 | 80.0 | 14.0 | 6.0 | 11.0 | 11.0 | 21.0 | 22.0 | 25.0 | 22.0 | 18.0 | 28.0 | 21.0 | 336.0 | 114.0 | 126.0 | 144.0 | 138.0 | 29.0 | 58.0 | 32.4 | 336.0 | 6.0 |
| 28 | 40.0 | 66.0 | 44.0 | 4.0 | 30.0 | 17.0 | 357.0 | 35.0 | 31.0 | 39.0 | 40.0 | 36.0 | 42.0 | 45.0 | 30.0 | 32.0 | 41.0 | 29.0 | 26.0 | 26.0 | 44.0 | 63.0 | 89.0 | 82.0 | 38.7 | 357.0 | 4.0 |
| 29 | 75.0 | 87.0 | 74.0 | 23.0 | 5.0 | 287.0 | 357.0 | 355.0 | 14.0 | 15.0 | 6.0 | 1.0 | 294.0 | 306.0 | 267.0 | 295.0 | 298.0 | 278.0 | 239.0 | 210.0 | 199.0 | 208.0 | 211.0 | 212.0 | 314.8 | 357.0 | 1.0 |
| 30 | 203.0 | 157.0 | 149.0 | 148.0 | 154.0 | 151.0 | 137.0 | 141.0 | 138.0 | 113.0 | 252.0 | 272.0 | 257.0 | 254.0 | 248.0 | 259.0 | 253.0 | 257.0 | 250.0 | 233.0 | 218.0 | 183.0 | 252.0 | 239.0 | 204.9 | 272.0 | 113.0 |
| Mean | 191.9 | 180.1 | 186.7 | 178.6 | 173.5 | 185.0 | 194.0 | 175.2 | 142.8 | 338.7 | 313.7 | 305.0 | 292.1 | 279.9 | 279.3 | 212.4 | 210.9 | 213.4 | 187.1 | 199.7 | 190.1 | 195.4 | 190.4 | 181.7 | Monthly mean = | | 190.1 |
| Max. | 258.0 | 246.0 | 248.0 | 259.0 | 266.0 | 287.0 | 357.0 | 355.0 | 268.0 | 289.0 | 329.0 | 284.0 | 357.0 | 330.0 | 298.0 | 295.0 | 298.0 | 336.0 | 285.0 | 273.0 | 277.0 | 283.0 | 263.0 | 254.0 | Monthly max. = | | 357.0 |
| Min. | 9.0 | 10.0 | 44.0 | 4.0 | 5.0 | 17.0 | 14.0 | 6.0 | 11.0 | 7.0 | 6.0 | 1.0 | 17.0 | 22.0 | 18.0 | 23.0 | 16.0 | 11.0 | 5.0 | 26.0 | 44.0 | 53.0 | 29.0 | 28.0 | Monthly min. = | | 1.0 |

TOTAL NUMBER OF DATA HOURS IN MONTH: 720
Number of hours of bad or missing data: 0
**** designates missing or lost data

Current % recovery = 100.0

N/A: Insufficient data available for calculation (a minimum of 75% is required)

table created at 18:25, 7/14/1994

MONTHLY SUMMARY
TEMPERATURE
(Degrees Celsius)
INPUT FILE: s7metjj4.met

Bechtel Environmental, Inc.

Met Data for Site 7
APRIL 1994

| Day \ Hour | 1 | 2 | 3 | 4 | 5 | 6 | 7 | 8 | 9 | 10 | 11 | 12 | 13 | 14 | 15 | 16 | 17 | 18 | 19 | 20 | 21 | 22 | 23 | 24 | Mean | Max. | Min. |
|---|---|---|---|---|---|---|---|---|---|---|---|---|---|---|---|---|---|---|---|---|---|---|---|---|---|---|---|
| 1 | 6.7 | 5.6 | 4.6 | 4.4 | 4.4 | 4.4 | 4.1 | 3.8 | 3.3 | 2.9 | 2.3 | 2.7 | 2.7 | 3.4 | 5.3 | 7.5 | 8.6 | 9.2 | 7.8 | 8.9 | 9.9 | 10.2 | 9.8 | 9.0 | 5.9 | 10.2 | 2.3 |
| 2 | 8.1 | 7.4 | 6.4 | 4.3 | 3.9 | 3.7 | 4.7 | 6.0 | 7.5 | 8.8 | 11.0 | 11.7 | 13.3 | 14.1 | 15.1 | 14.5 | 13.6 | 13.3 | 12.6 | 11.5 | 10.7 | 11.9 | 11.9 | 9.1 | 9.8 | 15.1 | 3.7 |
| 3 | 8.7 | 9.6 | 9.2 | 11.8 | 12.5 | 12.0 | 10.9 | 11.9 | 12.2 | 10.6 | 8.6 | 7.5 | 8.0 | 8.2 | 6.7 | 5.0 | 4.1 | 4.4 | 5.5 | 5.4 | 4.9 | 4.2 | 3.4 | 2.6 | 7.8 | 12.5 | 2.6 |
| 4 | 2.1 | 1.5 | 1.0 | .8 | .4 | .1 | -.4 | -.9 | -.6 | -.5 | .5 | 1.0 | 1.4 | .4 | .2 | .6 | .0 | 1.7 | 1.3 | 1.0 | .6 | .5 | .0 | -.7 | .5 | 2.1 | -.9 |
| 5 | -1.4 | -1.4 | -1.9 | -2.4 | -3.5 | -3.2 | -2.9 | -1.6 | -1.2 | 1.0 | 1.9 | 3.2 | 3.8 | 4.9 | 5.9 | 6.2 | 6.8 | 7.2 | 6.8 | 6.4 | 6.4 | 6.0 | 6.0 | 6.1 | 2.5 | 7.2 | -3.5 |
| 6 | 6.3 | 6.0 | 4.5 | 3.1 | 2.5 | 2.5 | 2.3 | 3.0 | 3.4 | 3.0 | 4.1 | 5.2 | 6.3 | 7.6 | 8.5 | 8.7 | 8.7 | 8.0 | 7.2 | 6.7 | 5.2 | 1.7 | 2.0 | 2.3 | 4.9 | 8.7 | 1.7 |
| 7 | 3.0 | 2.0 | 1.4 | 1.1 | .7 | .2 | -.1 | .0 | .5 | 1.0 | 1.8 | 2.8 | 3.6 | 4.1 | 4.2 | 4.6 | 4.8 | 4.9 | 4.5 | 3.4 | 2.9 | 2.5 | 2.2 | 2.2 | 2.4 | 4.9 | -.1 |
| 8 | 2.2 | 2.1 | 2.1 | 1.9 | -.6 | -2.1 | -.5 | .8 | 2.6 | 4.2 | 4.6 | 6.2 | 7.3 | 7.8 | 8.8 | 9.1 | 9.3 | 8.7 | 7.8 | 7.0 | 6.4 | 5.8 | 5.9 | 5.7 | 4.7 | 9.3 | -2.1 |
| 9 | 5.3 | 4.3 | 4.0 | 3.4 | 2.4 | 1.9 | 2.3 | 3.2 | 3.5 | 4.9 | 6.5 | 7.5 | 8.0 | 8.2 | 7.5 | 7.4 | 5.9 | 4.5 | 3.5 | 3.2 | 3.2 | 2.4 | 1.7 | 1.9 | 4.4 | 8.2 | 1.7 |
| 10 | 2.1 | 1.8 | 1.6 | 1.0 | .7 | .6 | .8 | .7 | .8 | 1.2 | 2.1 | 4.3 | 6.7 | 6.8 | 6.5 | 7.7 | 8.5 | 9.0 | 9.2 | 9.5 | 9.2 | 8.8 | 7.8 | 6.7 | 4.8 | 9.5 | .6 |
| 11 | 5.8 | 5.1 | 4.4 | 3.8 | 3.4 | 3.1 | 2.8 | 2.9 | 3.7 | 4.9 | 6.5 | 8.0 | 9.6 | 10.9 | 11.8 | 12.3 | 12.6 | 12.5 | 12.0 | 11.4 | 10.9 | 10.6 | 10.5 | 10.4 | 7.9 | 12.6 | 2.8 |
| 12 | 10.4 | 10.0 | 7.5 | 7.1 | 7.4 | 7.0 | 7.0 | 8.0 | 9.5 | 12.9 | 13.4 | 13.8 | 14.5 | 15.0 | 15.5 | 15.9 | 15.8 | 15.4 | 14.6 | 14.2 | 14.0 | 13.0 | 11.9 | 11.2 | 11.9 | 15.9 | 7.0 |
| 13 | 10.8 | 9.7 | 8.8 | 8.1 | 7.1 | 6.3 | 5.9 | 6.0 | 6.3 | 7.0 | 7.7 | 9.0 | 9.9 | 10.7 | 11.2 | 10.9 | 11.2 | 11.3 | 10.6 | 9.9 | 9.5 | 9.4 | 9.0 | 8.9 | 9.0 | 11.3 | 5.9 |
| 14 | 8.6 | 8.2 | 7.6 | 6.9 | 6.2 | 5.2 | 4.1 | 3.6 | 4.0 | 4.8 | 5.4 | 6.6 | 7.7 | 8.8 | 9.2 | 9.6 | 9.8 | 9.5 | 8.8 | 7.9 | 7.2 | 6.7 | 6.2 | 5.8 | 7.0 | 9.8 | 3.6 |
| 15 | 5.7 | 5.4 | 5.1 | 4.7 | 4.5 | 4.6 | 4.7 | 5.4 | 6.8 | 8.0 | 9.5 | 11.4 | 13.3 | 15.6 | 16.4 | 17.0 | 17.3 | 17.9 | 17.4 | 15.7 | 15.1 | 13.8 | 12.8 | 12.4 | 10.9 | 17.9 | 4.5 |
| 16 | 12.2 | 11.4 | 9.8 | 9.5 | 9.8 | 6.8 | 8.5 | 9.5 | 10.9 | 13.9 | 17.1 | 19.5 | 21.2 | 21.9 | 22.8 | 22.3 | 21.7 | 21.0 | 20.1 | 19.1 | 18.1 | 17.6 | 16.5 | 16.1 | 15.7 | 22.8 | 6.8 |
| 17 | 15.8 | 15.5 | 15.5 | 15.3 | 14.4 | 11.3 | 11.5 | 13.8 | 15.4 | 16.9 | 20.1 | 22.6 | 23.8 | 24.1 | 24.6 | 23.9 | 24.2 | 24.0 | 23.1 | 22.2 | 21.7 | 21.3 | 21.1 | 20.8 | 19.3 | 24.6 | 11.3 |
| 18 | 19.8 | 18.5 | 18.6 | 16.2 | 14.6 | 12.4 | 14.5 | 14.3 | 16.1 | 18.1 | 20.5 | 22.5 | 24.3 | 24.4 | 24.2 | 24.6 | 24.4 | 24.2 | 22.1 | 22.0 | 20.4 | 19.2 | 18.8 | 18.9 | 19.7 | 24.6 | 12.4 |
| 19 | 18.4 | 17.8 | 16.1 | 15.2 | 17.1 | 15.0 | 12.9 | 11.8 | 13.8 | 18.2 | 20.6 | 23.5 | 24.0 | 24.1 | 24.5 | 24.4 | 23.4 | 21.0 | 18.6 | 19.3 | 19.3 | 19.1 | 18.7 | 17.4 | 18.9 | 24.5 | 11.8 |
| 20 | 16.3 | 14.2 | 13.8 | 13.8 | 14.2 | 14.3 | 11.5 | 13.1 | 15.7 | 17.8 | 19.3 | 21.6 | 23.3 | 23.8 | 24.3 | 24.5 | 24.7 | 25.0 | 24.7 | 23.2 | 21.8 | 20.7 | 19.5 | 18.9 | 19.2 | 25.0 | 11.5 |
| 21 | 18.3 | 17.9 | 17.5 | 17.3 | 17.0 | 15.6 | 14.6 | 16.8 | 18.0 | 20.8 | 22.8 | 25.0 | 25.0 | 25.5 | 26.0 | 26.0 | 26.0 | 25.6 | 23.7 | 21.6 | 21.0 | 21.4 | 20.2 | 22.0 | 21.1 | 26.0 | 14.6 |
| 22 | 19.3 | 15.4 | 14.3 | 12.3 | 9.5 | 8.9 | 8.8 | 9.1 | 9.9 | 11.4 | 12.1 | 13.5 | 14.6 | 15.2 | 15.9 | 16.5 | 16.7 | 16.6 | 15.6 | 13.3 | 10.9 | 10.0 | 9.7 | 9.3 | 12.9 | 19.3 | 8.8 |
| 23 | 9.3 | 10.0 | 9.0 | 8.3 | 7.9 | 8.5 | 8.1 | 9.1 | 9.3 | 9.9 | 11.2 | 13.3 | 16.1 | 18.6 | 18.6 | 18.7 | 18.3 | 17.2 | 10.4 | 12.9 | 11.3 | 7.9 | 8.3 | 7.5 | 11.7 | 18.7 | 7.5 |
| 24 | 7.5 | 7.4 | 7.6 | 7.3 | 7.2 | 5.7 | 5.7 | 5.6 | 6.7 | 9.3 | 11.5 | 11.3 | 11.3 | 11.5 | 11.4 | 8.5 | 8.8 | 9.6 | 8.8 | 8.4 | 8.4 | 7.8 | 4.9 | 5.2 | 8.2 | 11.5 | 4.9 |
| 25 | 5.0 | 4.0 | 3.3 | 3.1 | 2.9 | 2.5 | 2.8 | 3.2 | 5.1 | 5.2 | 6.2 | 5.9 | 6.4 | 2.9 | 3.4 | 4.4 | 5.1 | 6.6 | 6.2 | 5.5 | 5.8 | 6.2 | 5.9 | 5.4 | 4.7 | 6.6 | 2.5 |
| 26 | 4.6 | .8 | .8 | 1.8 | 1.9 | 1.6 | 1.3 | 1.5 | 1.9 | 2.6 | 3.4 | 5.2 | 6.5 | 7.3 | 7.7 | 8.0 | 7.9 | 7.6 | 6.8 | 5.3 | 4.2 | 2.5 | 1.9 | 1.8 | 4.0 | 8.0 | .8 |
| 27 | 1.1 | .8 | .8 | .7 | .7 | .8 | .7 | 1.0 | 1.1 | 2.3 | 2.9 | 3.6 | 4.4 | 5.1 | 6.2 | 6.2 | 6.9 | 7.2 | 6.1 | 5.9 | 5.7 | 5.5 | 4.9 | 4.2 | 3.5 | 7.2 | .7 |
| 28 | 3.5 | 2.6 | 1.9 | .6 | .0 | -.5 | -.1 | .7 | 1.5 | .7 | .5 | 1.2 | 2.8 | 4.8 | 6.0 | 6.7 | 7.5 | 7.6 | 7.2 | 5.8 | 4.0 | 2.7 | 1.9 | 1.5 | 3.0 | 7.6 | -.5 |
| 29 | .6 | -.1 | -.7 | -1.4 | -2.1 | -2.5 | -.9 | .5 | 1.8 | 3.9 | 6.0 | 7.3 | 8.0 | 8.6 | 8.6 | 9.2 | 10.0 | 10.4 | 10.3 | 9.3 | 8.8 | 8.9 | 8.8 | 8.6 | 5.1 | 10.4 | -2.5 |
| 30 | 8.3 | 6.6 | 5.9 | 5.3 | 5.1 | 3.9 | 5.2 | 7.0 | 8.4 | 10.3 | 12.1 | 12.5 | 13.6 | 14.1 | 14.4 | 14.0 | 12.9 | 12.1 | 10.3 | 8.7 | 9.3 | 9.5 | 8.9 | 6.9 | 9.4 | 14.4 | 3.9 |
| Mean | 8.1 | 7.3 | 6.7 | 6.2 | 5.7 | 5.0 | 5.0 | 5.7 | 6.6 | 7.9 | 9.1 | 10.3 | 11.4 | 11.9 | 12.4 | 12.5 | 12.5 | 12.4 | 11.5 | 10.8 | 10.2 | 9.6 | 9.0 | 8.6 | Monthly mean = | | 9.0 |
| Max. | 19.8 | 18.5 | 18.6 | 17.3 | 17.1 | 15.6 | 14.6 | 16.8 | 18.0 | 20.8 | 22.8 | 25.0 | 25.0 | 25.5 | 26.0 | 26.0 | 26.0 | 25.6 | 24.7 | 23.2 | 21.8 | 21.4 | 21.1 | 22.0 | Monthly max. = | | 26.0 |
| Min. | -1.4 | -1.4 | -1.9 | -2.4 | -3.5 | -3.2 | -2.9 | -1.6 | -1.2 | -.5 | .5 | 1.0 | 1.4 | .4 | .2 | .6 | .0 | 1.7 | 1.3 | 1.0 | .6 | .5 | .0 | -.7 | Monthly min. = | | -3.5 |

TOTAL NUMBER OF DATA HOURS IN MONTH: 720
Number of hours of bad or missing data: 0
**** designates missing or lost data

Current % recovery = 100.0

N/A: insufficient data available for calculation (a minimum of 75% is required)

table created at 18:25, 7/14/1994

MONTHLY SUMMARY
SIGMA THETA
(Degrees)
INPUT FILE: s7metjj4.met

Bechtel Environmental, Inc.

Met Data for Site 7
APRIL 1994

| Day \ Hour | 1 | 2 | 3 | 4 | 5 | 6 | 7 | 8 | 9 | 10 | 11 | 12 | 13 | 14 | 15 | 16 | 17 | 18 | 19 | 20 | 21 | 22 | 23 | 24 | Mean | Max. | Min. |
|---|---|---|---|---|---|---|---|---|---|---|---|---|---|---|---|---|---|---|---|---|---|---|---|---|---|---|---|
| 1 | 12. | 9. | 8. | 9. | 11. | 19. | 15. | 12. | 13. | 8. | 7. | 13. | 15. | 17. | 16. | 33. | 20. | 22. | 4. | 11. | 10. | 8. | 9. | 8. | N/A | 33. | 4. |
| 2 | 10. | 14. | 38. | 32. | 52. | 35. | 47. | 57. | 44. | 15. | 61. | 25. | 37. | 36. | 45. | 36. | 10. | 7. | 6. | 7. | 8. | 9. | 10. | 7. | N/A | 61. | 6. |
| 3 | 7. | 7. | 8. | 11. | 12. | 9. | 13. | 12. | 12. | 13. | 14. | 12. | 10. | 12. | 13. | 13. | 14. | 10. | 10. | 12. | 13. | 13. | 12. | 12. | N/A | 14. | 7. |
| 4 | 9. | 11. | 10. | 9. | 9. | 12. | 11. | 12. | 14. | 13. | 15. | 16. | 14. | 10. | 14. | 15. | 14. | 20. | 23. | 17. | 43. | 29. | 30. | 33. | N/A | 43. | 9. |
| 5 | 35. | 9. | 11. | 44. | 43. | 8. | 31. | 41. | 9. | 30. | 19. | 16. | 16. | 17. | 15. | 18. | 16. | 16. | 11. | 8. | 6. | 7. | 8. | 10. | N/A | 44. | 6. |
| 6 | 11. | 12. | 12. | 12. | 15. | 11. | 12. | 11. | 13. | 12. | 16. | 13. | 13. | 15. | 16. | 15. | 13. | 14. | 11. | 13. | 13. | 12. | 10. | 9. | N/A | 16. | 9. |
| 7 | 9. | 10. | 16. | 15. | 13. | 16. | 16. | 16. | 12. | 14. | 14. | 15. | 14. | 13. | 13. | 11. | 9. | 9. | 10. | 15. | 11. | 8. | 8. | 9. | N/A | 16. | 8. |
| 8 | 9. | 9. | 9. | 10. | 50. | 60. | 33. | 11. | 24. | 22. | 24. | 33. | 51. | 27. | 36. | 38. | 23. | 12. | 9. | 6. | 6. | 7. | 6. | 14. | N/A | 60. | 6. |
| 9 | 38. | 18. | 9. | 10. | 6. | 6. | 35. | 46. | 19. | 27. | 26. | 29. | 23. | 22. | 26. | 15. | 15. | 13. | 8. | 8. | 7. | 7. | 6. | 7. | N/A | 46. | 6. |
| 10 | 8. | 8. | 7. | 7. | 7. | 7. | 8. | 7. | 7. | 8. | 10. | 48. | 47. | 15. | 14. | 11. | 10. | 8. | 7. | 6. | 6. | 8. | 8. | 7. | N/A | 48. | 6. |
| 11 | 7. | 7. | 7. | 7. | 7. | 8. | 7. | 7. | 9. | 13. | 14. | 14. | 14. | 13. | 14. | 23. | 15. | 13. | 9. | 7. | 8. | 7. | 7. | 7. | N/A | 23. | 7. |
| 12 | 7. | 12. | 4. | 4. | 6. | 4. | 4. | 6. | 10. | 16. | 16. | 18. | 18. | 20. | 18. | 20. | 14. | 13. | 12. | 11. | 13. | 15. | 12. | 10. | N/A | 20. | 4. |
| 13 | 9. | 9. | 10. | 8. | 10. | 11. | 10. | 14. | 15. | 15. | 17. | 11. | 15. | 15. | 17. | 15. | 17. | 16. | 15. | 12. | 11. | 9. | 9. | 9. | N/A | 17. | 8. |
| 14 | 8. | 11. | 13. | 14. | 16. | 16. | 15. | 11. | 8. | 9. | 9. | 10. | 12. | 11. | 16. | 15. | 16. | 14. | 12. | 9. | 9. | 8. | 8. | 9. | N/A | 16. | 8. |
| 15 | 8. | 7. | 7. | 9. | 10. | 10. | 17. | 15. | 17. | 19. | 20. | 30. | 28. | 56. | 31. | 21. | 19. | 19. | 22. | 12. | 10. | 7. | 4. | 5. | N/A | 56. | 4. |
| 16 | 6. | 5. | 8. | 7. | 4. | 75. | 75. | 44. | 33. | 17. | 18. | 23. | 30. | 33. | 56. | 13. | 11. | 8. | 7. | 14. | 7. | 5. | 4. | 5. | N/A | 75. | 4. |
| 17 | 4. | 4. | 4. | 6. | 26. | 24. | 49. | 47. | 48. | 15. | 23. | 34. | 33. | 35. | 26. | 34. | 20. | 15. | 12. | 9. | 7. | 7. | 7. | 8. | N/A | 49. | 4. |
| 18 | 11. | 5. | 19. | 59. | 43. | 8. | 8. | 62. | 50. | 41. | 34. | 26. | 61. | 52. | 21. | 28. | 13. | 17. | 12. | 9. | 25. | 36. | 7. | 10. | N/A | 62. | 5. |
| 19 | 13. | 51. | 60. | 15. | 4. | 34. | 47. | 35. | 14. | 21. | 30. | 91. | 46. | 24. | 30. | 35. | 18. | 30. | 24. | 18. | 17. | 15. | 57. | 5. | N/A | 91. | 4. |
| 20 | 5. | 54. | 36. | 31. | 16. | 27. | 18. | 31. | 37. | 15. | 19. | 33. | 34. | 28. | 19. | 15. | 16. | 18. | 17. | 6. | 5. | 4. | 5. | 4. | N/A | 54. | 4. |
| 21 | 5. | 5. | 5. | 9. | 8. | 53. | 34. | 8. | 10. | 51. | 37. | 78. | 44. | 18. | 23. | 17. | 17. | 13. | 19. | 38. | 22. | 15. | 9. | 17. | N/A | 78. | 5. |
| 22 | 36. | 7. | 6. | 7. | 7. | 8. | 9. | 10. | 15. | 15. | 14. | 16. | 14. | 8. | 11. | 12. | 13. | 12. | 7. | 7. | 8. | 15. | 18. | 6. | N/A | 36. | 6. |
| 23 | 5. | 22. | 81. | 48. | 27. | 27. | 11. | 19. | 27. | 17. | 19. | 22. | 45. | 25. | 17. | 17. | 14. | 16. | 12. | 8. | 30. | 21. | 30. | 12. | N/A | 81. | 5. |
| 24 | 33. | 15. | 29. | 7. | 49. | 34. | 38. | 14. | 31. | 22. | 32. | 38. | 27. | 15. | 12. | 8. | 24. | 26. | 11. | 25. | 28. | 53. | 25. | 8. | N/A | 53. | 7. |
| 25 | 34. | 29. | 10. | 46. | 30. | 22. | 71. | 17. | 26. | 24. | 22. | 12. | 11. | 11. | 15. | 12. | 14. | 17. | 15. | 9. | 7. | 10. | 8. | 8. | N/A | 71. | 7. |
| 26 | 30. | 14. | 26. | 18. | 17. | 13. | 12. | 12. | 9. | 11. | 13. | 18. | 17. | 14. | 11. | 11. | 11. | 9. | 8. | 9. | 10. | 9. | 10. | 17. | N/A | 30. | 8. |
| 27 | 9. | 10. | 20. | 13. | 53. | 14. | 17. | 27. | 9. | 11. | 10. | 9. | 9. | 13. | 15. | 17. | 22. | 21. | 25. | 24. | 12. | 22. | 17. | 13. | N/A | 53. | 9. |
| 28 | 13. | 19. | 16. | 13. | 15. | 33. | 33. | 10. | 12. | 9. | 10. | 11. | 19. | 25. | 17. | 19. | 17. | 12. | 9. | 6. | 10. | 10. | 13. | 15. | N/A | 33. | 6. |
| 29 | 15. | 11. | 17. | 13. | 27. | 20. | 48. | 45. | 29. | 33. | 46. | 52. | 32. | 36. | 26. | 13. | 20. | 24. | 30. | 9. | 6. | 7. | 9. | 7. | N/A | 52. | 6. |
| 30 | 10. | 5. | 4. | 4. | 11. | 50. | 7. | 8. | 11. | 17. | 49. | 36. | 28. | 36. | 21. | 32. | 25. | 13. | 9. | 8. | 11. | 21. | 24. | 8. | N/A | 50. | 4. |
| Mean | N/A | N/A | N/A | N/A | N/A | N/A | N/A | N/A | N/A | N/A | N/A | N/A | N/A | N/A | N/A | N/A | N/A | N/A | N/A | N/A | N/A | N/A | N/A | N/A | Monthly mean = | | N/A |
| Max. | 38. | 54. | 81. | 59. | 53. | 75. | 75. | 62. | 50. | 51. | 61. | 91. | 61. | 56. | 56. | 38. | 25. | 30. | 30. | 38. | 43. | 53. | 57. | 33. | Monthly max. = | | 91. |
| Min. | 4. | 4. | 4. | 4. | 4. | 4. | 4. | 6. | 7. | 8. | 7. | 9. | 9. | 8. | 11. | 8. | 9. | 7. | 4. | 6. | 5. | 4. | 4. | 4. | Monthly min. = | | 4. |

TOTAL NUMBER OF DATA HOURS IN MONTH: 720
Number of hours of bad or missing data: 0
**** designates missing or lost data

Current % recovery = 100.0

N/A: A sigma theta mean is not physically meaningful.

table created at 18:25, 7/14/1994

MONTHLY SUMMARY
WIND SPEED
(Miles Per Hour)
INPUT FILE: s7metjj4.met

Bechtel Environmental, Inc.

Met Data for Site 7
MAY 1994

| Day \ Hour | 1 | 2 | 3 | 4 | 5 | 6 | 7 | 8 | 9 | 10 | 11 | 12 | 13 | 14 | 15 | 16 | 17 | 18 | 19 | 20 | 21 | 22 | 23 | 24 | Mean | Max. | Min. |
|---|---|---|---|---|---|---|---|---|---|---|---|---|---|---|---|---|---|---|---|---|---|---|---|---|---|---|---|
| 1 | 22.4 | 20.6 | 17.8 | 16.8 | 18.7 | 17.4 | 19.6 | 17.9 | 16.8 | 19.5 | 22.9 | 22.0 | 21.2 | 25.2 | 23.3 | 22.2 | 19.6 | 20.1 | 17.7 | 13.2 | 14.0 | 14.7 | 12.0 | 11.4 | 18.6 | 25.2 | 11.4 |
| 2 | 10.3 | 7.9 | 9.2 | 9.4 | 11.4 | 11.4 | 10.1 | 8.4 | 9.4 | 14.2 | 12.7 | 15.6 | 16.9 | 17.2 | 17.9 | 19.7 | 15.7 | 16.5 | 17.0 | 15.3 | 14.9 | 10.0 | 12.3 | 15.5 | 13.3 | 19.7 | 7.9 |
| 3 | 16.1 | 12.0 | 8.8 | 10.8 | 8.7 | 4.8 | 4.0 | 3.4 | 11.5 | 14.4 | 11.9 | 16.9 | 17.8 | 21.1 | 18.9 | 17.6 | 17.4 | 18.4 | 15.3 | 10.4 | 11.6 | 13.5 | 14.0 | 14.0 | 13.1 | 21.1 | 3.4 |
| 4 | 15.1 | 15.0 | 16.5 | 17.6 | 16.1 | 17.4 | 17.4 | 16.4 | 17.9 | 15.7 | 12.9 | 10.9 | 9.7 | 11.2 | 10.1 | 9.1 | 8.0 | 15.7 | 7.0 | 8.9 | 9.9 | 7.1 | 6.9 | 14.7 | 12.8 | 17.9 | 6.9 |
| 5 | 15.9 | 17.1 | 16.9 | 10.3 | 9.5 | 9.2 | 10.3 | 6.9 | 4.3 | 7.4 | 5.7 | 6.2 | 6.9 | 8.1 | 6.2 | 5.9 | 6.2 | 6.4 | 5.9 | 5.6 | 7.8 | 8.3 | 5.8 | 6.4 | 8.3 | 17.1 | 4.3 |
| 6 | 9.2 | 8.8 | 5.5 | 5.5 | 11.1 | 5.5 | 7.5 | 6.6 | 10.0 | 17.3 | 22.8 | 22.7 | 22.2 | 21.9 | 20.9 | 19.5 | 13.4 | 10.0 | 25.9 | 23.6 | 17.9 | 8.5 | 10.2 | 13.8 | 14.2 | 25.9 | 5.5 |
| 7 | 15.3 | 10.9 | 9.6 | 8.6 | 9.5 | 4.6 | 2.9 | 4.1 | 8.4 | 9.1 | 9.6 | 9.3 | 9.5 | 10.9 | 12.3 | 12.9 | 13.3 | 14.5 | 6.7 | 21.1 | 22.9 | 15.7 | 11.9 | 9.1 | 10.9 | 22.9 | 2.9 |
| 8 | 8.4 | 9.6 | 11.7 | 9.7 | 13.0 | 10.6 | 9.6 | 7.9 | 6.2 | 5.4 | 6.8 | 8.1 | 5.3 | 6.0 | 3.9 | 3.4 | 5.0 | 5.1 | 6.3 | 3.9 | 7.1 | 10.3 | 13.4 | 5.7 | 7.6 | 13.4 | 3.4 |
| 9 | 4.8 | 5.6 | 8.3 | 2.2 | 4.1 | 3.1 | 2.5 | 3.0 | 5.3 | 9.0 | 6.8 | 8.7 | 7.6 | 7.1 | 6.4 | 10.6 | 10.7 | 9.8 | 5.0 | 4.1 | 10.9 | 6.1 | 5.5 | 7.6 | 6.5 | 10.9 | 2.2 |
| 10 | 8.0 | 7.2 | 8.9 | 5.7 | 4.4 | 5.0 | 9.4 | 10.9 | 10.7 | 14.2 | 16.2 | 12.9 | 11.2 | 9.1 | 11.3 | 13.9 | 11.7 | 10.2 | 11.4 | 13.2 | 22.1 | 23.4 | 23.8 | 22.2 | 12.4 | 23.8 | 4.4 |
| 11 | 15.4 | 14.4 | 13.6 | 14.5 | 11.5 | 8.2 | 3.3 | 4.2 | 5.6 | 5.0 | 5.6 | 5.5 | 10.2 | 10.6 | 10.9 | 8.7 | 9.5 | 8.6 | 6.0 | 2.1 | 4.5 | 7.8 | 10.5 | 10.4 | 8.6 | 15.4 | 2.1 |
| 12 | 9.9 | 5.5 | 5.3 | 7.1 | 18.9 | 10.0 | 14.1 | 21.7 | 22.3 | 16.6 | 14.9 | 16.2 | 15.0 | 6.4 | 9.8 | 13.2 | 13.0 | 16.7 | 31.5 | 27.3 | 29.6 | 17.3 | 7.7 | 11.2 | 15.0 | 31.5 | 5.3 |
| 13 | 19.8 | 22.4 | 24.2 | 24.2 | 27.7 | 29.2 | 30.5 | 31.5 | 30.1 | 28.8 | 27.3 | 25.4 | 25.9 | 20.7 | 18.2 | 22.1 | 23.6 | 23.3 | 21.0 | 24.7 | 26.5 | 21.6 | 22.5 | 24.4 | 24.8 | 31.5 | 18.2 |
| 14 | 23.5 | 25.3 | 23.9 | 12.2 | 4.3 | 2.2 | 2.7 | 6.4 | 6.6 | 4.4 | 4.4 | 8.8 | 7.9 | 9.7 | 9.7 | 7.6 | 11.2 | 10.3 | 14.5 | 16.6 | 19.5 | 16.5 | 19.3 | 19.1 | 11.9 | 25.3 | 2.2 |
| 15 | 19.1 | 19.0 | 17.0 | 14.1 | 13.4 | 20.7 | 23.4 | 27.1 | 27.0 | 26.0 | 26.0 | 27.4 | 25.1 | 18.5 | 19.2 | 30.4 | 33.3 | 27.4 | 22.5 | 18.9 | 13.2 | 12.6 | 13.8 | 14.4 | 21.2 | 33.3 | 12.6 |
| 16 | 14.5 | 13.7 | 13.0 | 12.0 | 12.3 | 4.9 | 3.0 | 3.8 | 5.6 | 8.1 | 7.2 | 14.8 | 18.7 | 17.1 | 12.3 | 6.0 | 8.8 | 6.3 | 6.4 | 11.9 | 21.5 | 20.8 | 19.9 | 10.9 | 11.4 | 21.5 | 3.0 |
| 17 | 8.5 | 6.3 | 2.3 | 5.4 | 11.7 | 16.1 | 24.7 | 19.7 | 17.8 | 18.8 | 19.6 | 16.5 | 9.3 | 7.3 | 10.3 | 9.0 | 9.2 | 9.5 | 5.2 | 4.1 | 7.4 | 8.8 | 7.8 | 6.7 | 10.9 | 24.7 | 2.3 |
| 18 | 6.0 | 6.9 | 8.0 | 9.9 | 5.6 | 6.1 | 3.8 | 8.4 | 5.9 | 5.6 | 8.0 | 8.1 | 8.4 | 12.7 | 15.6 | 12.2 | 14.2 | 19.3 | 20.0 | 17.7 | 15.1 | 16.7 | 14.4 | 17.2 | 11.1 | 20.0 | 3.8 |
| 19 | 17.0 | 16.6 | 9.2 | 4.3 | 3.5 | 2.5 | 3.0 | 3.0 | 6.3 | 8.2 | 10.4 | 12.9 | 16.0 | 17.0 | 21.6 | 24.6 | 18.1 | 18.8 | 14.2 | 16.0 | 9.8 | 15.4 | 13.8 | 19.2 | 12.6 | 24.6 | 2.5 |
| 20 | 15.4 | 15.1 | 14.9 | 10.5 | 9.2 | 8.7 | 9.4 | 9.3 | 13.6 | 20.1 | 21.6 | 20.7 | 17.8 | 21.0 | 20.7 | 17.2 | 10.6 | 20.7 | 14.2 | 14.4 | 14.2 | 13.6 | 13.3 | 10.2 | 14.9 | 21.6 | 8.7 |
| 21 | 8.8 | 8.2 | 5.9 | 7.6 | 9.5 | 5.4 | 1.1 | 2.3 | 6.4 | 6.7 | 6.4 | 7.0 | 7.6 | 6.0 | 10.2 | 8.8 | 8.6 | 6.4 | 6.8 | 11.8 | 12.3 | 12.1 | 13.7 | 13.3 | 8.0 | 13.7 | 1.1 |
| 22 | 14.0 | 14.1 | 15.9 | 8.2 | 3.0 | 3.8 | 17.1 | 19.7 | 17.3 | 17.7 | 16.6 | 14.5 | 15.2 | 18.2 | 18.4 | 18.2 | 17.2 | 16.2 | 14.4 | 12.2 | 9.8 | 11.5 | 11.9 | 11.6 | 14.0 | 19.7 | 3.0 |
| 23 | 11.0 | 8.2 | 4.5 | 5.3 | 6.2 | 3.8 | 2.7 | 3.5 | 3.9 | 5.4 | 6.5 | 9.1 | 10.5 | 10.9 | 11.4 | 11.8 | 11.5 | 12.6 | 16.9 | 15.6 | 20.1 | 21.2 | 15.9 | 15.2 | 10.2 | 21.2 | 2.7 |
| 24 | 16.8 | 6.6 | 8.5 | 11.7 | 7.1 | 2.5 | 2.6 | 4.2 | 10.8 | 12.0 | 10.2 | 12.5 | 12.6 | 12.3 | 12.3 | 12.7 | 9.2 | 6.5 | 6.1 | 5.7 | 5.6 | 3.9 | 6.5 | 9.1 | 8.7 | 16.8 | 2.5 |
| 25 | 7.7 | 2.9 | 5.4 | 2.2 | 2.7 | 4.0 | 2.8 | 5.7 | 3.9 | 4.7 | 5.9 | 7.8 | 8.3 | 8.9 | 10.6 | 12.3 | 13.0 | 11.2 | 8.0 | 7.0 | 7.2 | 9.1 | 8.2 | 3.1 | 6.8 | 13.0 | 2.2 |
| 26 | 10.3 | 9.3 | 3.6 | 8.1 | 2.9 | 2.8 | 3.5 | 2.7 | 4.1 | 5.0 | .0 | 10.9 | 10.8 | 13.3 | 19.2 | 22.9 | 17.8 | 12.0 | 18.5 | 21.5 | 19.9 | 21.7 | 18.5 | 16.5 | 11.5 | 22.9 | .0 |
| 27 | 12.0 | 12.7 | 16.0 | 9.0 | 12.2 | 14.9 | 22.1 | 16.7 | 14.6 | 15.0 | 16.2 | 18.4 | 12.2 | 12.9 | 8.0 | 13.2 | 30.2 | 22.4 | 18.6 | 14.5 | 11.2 | 17.2 | 17.4 | 15.4 | 15.5 | 30.2 | 8.0 |
| 28 | 17.0 | 16.8 | 13.4 | 9.1 | 8.1 | 9.0 | 6.9 | 7.5 | 8.9 | 6.1 | 5.4 | 7.0 | 6.9 | 11.8 | 17.1 | 15.2 | 7.4 | 15.9 | 11.4 | 18.1 | 12.5 | 12.2 | 10.2 | 11.5 | 11.1 | 18.1 | 5.4 |
| 29 | 11.6 | 11.6 | 11.6 | 9.7 | 8.0 | 7.7 | 2.2 | 3.8 | 4.2 | 8.6 | 11.2 | 16.1 | 22.8 | 25.9 | 20.0 | 22.6 | 22.5 | 18.9 | 13.7 | 8.5 | 11.2 | 13.1 | 14.1 | 13.6 | 13.1 | 25.9 | 2.2 |
| 30 | 14.8 | 16.2 | 17.4 | 19.0 | 22.3 | 23.3 | 20.5 | 20.0 | 17.3 | 17.7 | 14.3 | 12.9 | 11.9 | 13.9 | 11.5 | 6.8 | 7.5 | 7.3 | 5.7 | 4.1 | 6.2 | 9.7 | 9.0 | 10.6 | 13.3 | 23.3 | 4.1 |
| 31 | 12.1 | 8.3 | 5.5 | 2.0 | 3.7 | 9.9 | 17.4 | 10.6 | 8.4 | 10.3 | 13.2 | 22.1 | 11.8 | 5.8 | 7.4 | 15.3 | 15.1 | 5.5 | 14.9 | 17.8 | 12.8 | 10.5 | 12.2 | 17.2 | 11.2 | 22.1 | 2.0 |
| Mean | 13.2 | 12.1 | 11.4 | 9.8 | 10.0 | 9.2 | 10.0 | 10.2 | 11.0 | 12.2 | 12.2 | 13.8 | 13.3 | 13.5 | 13.7 | 14.4 | 14.0 | 13.6 | 13.2 | 13.2 | 13.8 | 13.3 | 12.8 | 12.9 | Monthly mean = | | 12.4 |
| Max. | 23.5 | 25.3 | 24.2 | 24.2 | 27.7 | 29.2 | 30.5 | 31.5 | 30.1 | 28.8 | 27.3 | 27.4 | 25.9 | 25.9 | 23.3 | 30.4 | 33.3 | 27.4 | 31.5 | 27.3 | 29.6 | 23.4 | 23.8 | 24.4 | Monthly max. = | | 33.3 |
| Min. | 4.8 | 2.9 | 2.3 | 2.0 | 2.7 | 2.2 | 1.1 | 2.3 | 3.9 | 4.4 | .0 | 5.5 | 5.3 | 5.8 | 3.9 | 3.4 | 5.0 | 5.1 | 5.0 | 2.1 | 4.5 | 3.9 | 5.5 | 3.1 | Monthly min. = | | .0 |

TOTAL NUMBER OF DATA HOURS IN MONTH: 744
Number of hours of bad or missing data: 0
**** designates missing or lost data

Current % recovery = 100.0

N/A: insufficient data available for calculation (a minimum of 75% is required)

table created at 18:25, 7/14/1994

MONTHLY SUMMARY
WIND DIRECTION
(Degrees)
INPUT FILE: s7metjj4.met

Bechtel Environmental, Inc.

Met Data for Site 7
MAY 1994

| Day \ Hour | 1 | 2 | 3 | 4 | 5 | 6 | 7 | 8 | 9 | 10 | 11 | 12 | 13 | 14 | 15 | 16 | 17 | 18 | 19 | 20 | 21 | 22 | 23 | 24 | Mean | Max. | Min. |
|---|---|---|---|---|---|---|---|---|---|---|---|---|---|---|---|---|---|---|---|---|---|---|---|---|---|---|---|
| 1 | 237.0 | 238.0 | 233.0 | 239.0 | 241.0 | 243.0 | 241.0 | 248.0 | 263.0 | 263.0 | 261.0 | 265.0 | 269.0 | 271.0 | 263.0 | 271.0 | 269.0 | 269.0 | 263.0 | 232.0 | 221.0 | 225.0 | 216.0 | 210.0 | 248.0 | 271.0 | 210.0 |
| 2 | 206.0 | 185.0 | 170.0 | 193.0 | 203.0 | 189.0 | 204.0 | 146.0 | 208.0 | 268.0 | 248.0 | 261.0 | 258.0 | 268.0 | 258.0 | 257.0 | 236.0 | 263.0 | 269.0 | 213.0 | 205.0 | 195.0 | 202.0 | 222.0 | 222.0 | 269.0 | 146.0 |
| 3 | 221.0 | 210.0 | 186.0 | 216.0 | 215.0 | 136.0 | 251.0 | 283.0 | 242.0 | 259.0 | 261.0 | 273.0 | 264.0 | 274.0 | 274.0 | 272.0 | 266.0 | 267.0 | 270.0 | 250.0 | 212.0 | 200.0 | 192.0 | 170.0 | 236.0 | 283.0 | 136.0 |
| 4 | 153.0 | 153.0 | 146.0 | 147.0 | 146.0 | 146.0 | 143.0 | 145.0 | 137.0 | 134.0 | 203.0 | 213.0 | 233.0 | 222.0 | 158.0 | 206.0 | 146.0 | 305.0 | 29.0 | 110.0 | 131.0 | 138.0 | 126.0 | 133.0 | 158.5 | 305.0 | 29.0 |
| 5 | 144.0 | 150.0 | 210.0 | 158.0 | 171.0 | 207.0 | 185.0 | 275.0 | 114.0 | 111.0 | 10.0 | 13.0 | 11.0 | 11.0 | 12.0 | 14.0 | 12.0 | 9.0 | 21.0 | 55.0 | 128.0 | 139.0 | 108.0 | 55.0 | 96.8 | 275.0 | 9.0 |
| 6 | 99.0 | 87.0 | 68.0 | 52.0 | 51.0 | 44.0 | 39.0 | 12.0 | 28.0 | 33.0 | 33.0 | 34.0 | 34.0 | 29.0 | 27.0 | 21.0 | 133.0 | 42.0 | 192.0 | 180.0 | 77.0 | 105.0 | 132.0 | 113.0 | 69.4 | 192.0 | 12.0 |
| 7 | 105.0 | 131.0 | 136.0 | 133.0 | 139.0 | 205.0 | 27.0 | 264.0 | 271.0 | 275.0 | 279.0 | 309.0 | 307.0 | 297.0 | 262.0 | 270.0 | 273.0 | 285.0 | 349.0 | 193.0 | 207.0 | 215.0 | 141.0 | 147.0 | 217.5 | 349.0 | 27.0 |
| 8 | 206.0 | 197.0 | 169.0 | 180.0 | 173.0 | 158.0 | 163.0 | 144.0 | 141.0 | 100.0 | 341.0 | 4.0 | 12.0 | 14.0 | 11.0 | 10.0 | 2.0 | 344.0 | 276.0 | 149.0 | 138.0 | 147.0 | 150.0 | 93.0 | 138.4 | 344.0 | 2.0 |
| 9 | 222.0 | 133.0 | 147.0 | 333.0 | 140.0 | 248.0 | 343.0 | 58.0 | 289.0 | 269.0 | 335.0 | 7.0 | 356.0 | 341.0 | 353.0 | 310.0 | 315.0 | 316.0 | 338.0 | 241.0 | 243.0 | 246.0 | 269.0 | 246.0 | 329.1 | 356.0 | 7.0 |
| 10 | 232.0 | 247.0 | 234.0 | 228.0 | 256.0 | 256.0 | 261.0 | 248.0 | 247.0 | 248.0 | 251.0 | 256.0 | 279.0 | 265.0 | 265.0 | 283.0 | 265.0 | 252.0 | 241.0 | 235.0 | 230.0 | 228.0 | 228.0 | 230.0 | 248.5 | 283.0 | 228.0 |
| 11 | 236.0 | 241.0 | 244.0 | 235.0 | 238.0 | 211.0 | 105.0 | 82.0 | 76.0 | 39.0 | 19.0 | 353.0 | 297.0 | 288.0 | 300.0 | 327.0 | 319.0 | 335.0 | 353.0 | 99.0 | 138.0 | 146.0 | 208.0 | 223.0 | 333.0 | 353.0 | 19.0 |
| 12 | 224.0 | 196.0 | 143.0 | 209.0 | 234.0 | 230.0 | 236.0 | 254.0 | 234.0 | 228.0 | 259.0 | 259.0 | 276.0 | 277.0 | 284.0 | 276.0 | 283.0 | 275.0 | 263.0 | 240.0 | 223.0 | 176.0 | 168.0 | 210.0 | 235.7 | 284.0 | 143.0 |
| 13 | 228.0 | 239.0 | 240.0 | 240.0 | 236.0 | 235.0 | 235.0 | 235.0 | 235.0 | 241.0 | 249.0 | 250.0 | 253.0 | 250.0 | 259.0 | 255.0 | 248.0 | 252.0 | 241.0 | 233.0 | 233.0 | 224.0 | 225.0 | 230.0 | 240.2 | 259.0 | 224.0 |
| 14 | 228.0 | 231.0 | 232.0 | 242.0 | 109.0 | 268.0 | 140.0 | 125.0 | 96.0 | 82.0 | 31.0 | 287.0 | 325.0 | 287.0 | 293.0 | 299.0 | 239.0 | 204.0 | 173.0 | 183.0 | 180.0 | 135.0 | 138.0 | 137.0 | 194.3 | 325.0 | 31.0 |
| 15 | 128.0 | 138.0 | 169.0 | 145.0 | 167.0 | 138.0 | 150.0 | 159.0 | 163.0 | 181.0 | 189.0 | 206.0 | 228.0 | 249.0 | 257.0 | 266.0 | 272.0 | 275.0 | 272.0 | 269.0 | 265.0 | 256.0 | 251.0 | 254.0 | 210.3 | 275.0 | 128.0 |
| 16 | 240.0 | 242.0 | 240.0 | 237.0 | 238.0 | 185.0 | 119.0 | 122.0 | 23.0 | 352.0 | 355.0 | 309.0 | 300.0 | 284.0 | 288.0 | 16.0 | 89.0 | 93.0 | 72.0 | 260.0 | 239.0 | 239.0 | 242.0 | 234.0 | 314.1 | 355.0 | 16.0 |
| 17 | 173.0 | 242.0 | 245.0 | 239.0 | 239.0 | 240.0 | 234.0 | 232.0 | 232.0 | 234.0 | 237.0 | 240.0 | 218.0 | 123.0 | 289.0 | 282.0 | 300.0 | 307.0 | 1.0 | 100.0 | 132.0 | 132.0 | 129.0 | 137.0 | 205.7 | 307.0 | 1.0 |
| 18 | 187.0 | 224.0 | 225.0 | 209.0 | 214.0 | 167.0 | 141.0 | 119.0 | 58.0 | 14.0 | 23.0 | 2.0 | 350.0 | 304.0 | 287.0 | 316.0 | 299.0 | 275.0 | 269.0 | 257.0 | 255.0 | 273.0 | 273.0 | 266.0 | 313.6 | 350.0 | 2.0 |
| 19 | 267.0 | 262.0 | 255.0 | 258.0 | 98.0 | 77.0 | 33.0 | 49.0 | 80.0 | 79.0 | 117.0 | 157.0 | 188.0 | 199.0 | 225.0 | 273.0 | 265.0 | 274.0 | 273.0 | 272.0 | 256.0 | 246.0 | 250.0 | 238.0 | 195.5 | 274.0 | 33.0 |
| 20 | 230.0 | 240.0 | 237.0 | 242.0 | 244.0 | 234.0 | 247.0 | 245.0 | 255.0 | 263.0 | 274.0 | 274.0 | 268.0 | 271.0 | 267.0 | 246.0 | 236.0 | 261.0 | 237.0 | 234.0 | 240.0 | 217.0 | 218.0 | 218.0 | 245.7 | 274.0 | 217.0 |
| 21 | 222.0 | 225.0 | 177.0 | 141.0 | 152.0 | 162.0 | 277.0 | 43.0 | 89.0 | 31.0 | 11.0 | 353.0 | 328.0 | 335.0 | 331.0 | 322.0 | 332.0 | 299.0 | 220.0 | 187.0 | 184.0 | 182.0 | 160.0 | 163.0 | 205.2 | 353.0 | 11.0 |
| 22 | 143.0 | 150.0 | 149.0 | 161.0 | 260.0 | 265.0 | 242.0 | 236.0 | 241.0 | 246.0 | 252.0 | 264.0 | 277.0 | 272.0 | 276.0 | 274.0 | 273.0 | 265.0 | 271.0 | 265.0 | 255.0 | 257.0 | 252.0 | 249.0 | 241.5 | 277.0 | 143.0 |
| 23 | 250.0 | 275.0 | 233.0 | 282.0 | 260.0 | 266.0 | 273.0 | 28.0 | 296.0 | 346.0 | 286.0 | 313.0 | 309.0 | 302.0 | 296.0 | 271.0 | 269.0 | 267.0 | 266.0 | 253.0 | 239.0 | 233.0 | 237.0 | 230.0 | 276.7 | 346.0 | 28.0 |
| 24 | 229.0 | 247.0 | 256.0 | 244.0 | 246.0 | 333.0 | 303.0 | 301.0 | 271.0 | 283.0 | 264.0 | 271.0 | 278.0 | 292.0 | 273.0 | 272.0 | 287.0 | 313.0 | 263.0 | 233.0 | 197.0 | 142.0 | 232.0 | 237.0 | 261.1 | 333.0 | 142.0 |
| 25 | 244.0 | 118.0 | 135.0 | 146.0 | 308.0 | 275.0 | 164.0 | 275.0 | 314.0 | 345.0 | 359.0 | 7.0 | 4.0 | 355.0 | 348.0 | 2.0 | 8.0 | 8.0 | 15.0 | 44.0 | 135.0 | 144.0 | 142.0 | 245.0 | 22.5 | 359.0 | 2.0 |
| 26 | 227.0 | 148.0 | 165.0 | 151.0 | 291.0 | 72.0 | 73.0 | 354.0 | 322.0 | 316.0 | .0 | 283.0 | 274.0 | 249.0 | 181.0 | 153.0 | 154.0 | 144.0 | 136.0 | 142.0 | 137.0 | 152.0 | 164.0 | 168.0 | 185.7 | 354.0 | .0 |
| 27 | 228.0 | 138.0 | 163.0 | 161.0 | 183.0 | 230.0 | 232.0 | 233.0 | 243.0 | 254.0 | 262.0 | 244.0 | 204.0 | 128.0 | 99.0 | 142.0 | 226.0 | 235.0 | 238.0 | 191.0 | 193.0 | 231.0 | 236.0 | 235.0 | 205.4 | 262.0 | 99.0 |
| 28 | 231.0 | 227.0 | 220.0 | 193.0 | 201.0 | 197.0 | 167.0 | 122.0 | 102.0 | 56.0 | 18.0 | 77.0 | 341.0 | 227.0 | 199.0 | 208.0 | 128.0 | 139.0 | 213.0 | 237.0 | 249.0 | 242.0 | 231.0 | 234.0 | 185.8 | 341.0 | 18.0 |
| 29 | 214.0 | 220.0 | 225.0 | 208.0 | 196.0 | 146.0 | 272.0 | 300.0 | 283.0 | 274.0 | 249.0 | 259.0 | 256.0 | 266.0 | 247.0 | 249.0 | 265.0 | 272.0 | 266.0 | 216.0 | 188.0 | 209.0 | 224.0 | 239.0 | 239.3 | 300.0 | 146.0 |
| 30 | 247.0 | 244.0 | 235.0 | 233.0 | 231.0 | 230.0 | 224.0 | 224.0 | 235.0 | 251.0 | 255.0 | 249.0 | 253.0 | 266.0 | 274.0 | 270.0 | 271.0 | 313.0 | 37.0 | 111.0 | 127.0 | 134.0 | 121.0 | 130.0 | 215.2 | 313.0 | 37.0 |
| 31 | 133.0 | 144.0 | 156.0 | 20.0 | 262.0 | 242.0 | 233.0 | 234.0 | 251.0 | 247.0 | 232.0 | 212.0 | 129.0 | 282.0 | 287.0 | 274.0 | 232.0 | 196.0 | 199.0 | 216.0 | 217.0 | 194.0 | 213.0 | 225.0 | 209.6 | 287.0 | 20.0 |
| Mean | 204.3 | 197.5 | 194.9 | 196.0 | 204.6 | 201.1 | 192.2 | 186.9 | 194.8 | 320.1 | 303.3 | 302.7 | 296.1 | 299.9 | 298.2 | 304.1 | 315.9 | 306.9 | 303.4 | 196.8 | 195.9 | 193.6 | 196.1 | 197.5 | Monthly mean = | | 207.4 |
| Max. | 267.0 | 275.0 | 256.0 | 333.0 | 308.0 | 333.0 | 343.0 | 354.0 | 322.0 | 352.0 | 359.0 | 353.0 | 356.0 | 355.0 | 353.0 | 327.0 | 332.0 | 344.0 | 353.0 | 272.0 | 265.0 | 273.0 | 273.0 | 266.0 | Monthly max. = | | 359.0 |
| Min. | 99.0 | 87.0 | 68.0 | 20.0 | 51.0 | 44.0 | 27.0 | 12.0 | 23.0 | 14.0 | .0 | 2.0 | 4.0 | 11.0 | 11.0 | 2.0 | 2.0 | 8.0 | 1.0 | 44.0 | 77.0 | 105.0 | 108.0 | 55.0 | Monthly min. = | | .0 |

TOTAL NUMBER OF DATA HOURS IN MONTH: 744
Number of hours of bad or missing data: 0
Current % recovery = 100.0
**** designates missing or lost data

N/A: insufficient data available for calculation (a minimum of 75% is required)

table created at 18:25, 7/14/1994

MONTHLY SUMMARY
TEMPERATURE
(Degrees Celsius)
INPUT FILE: s7metjj4.met

Bechtel Environmental, Inc.

Met Data for Site 7
MAY 1994

| Day \ Hour | 1 | 2 | 3 | 4 | 5 | 6 | 7 | 8 | 9 | 10 | 11 | 12 | 13 | 14 | 15 | 16 | 17 | 18 | 19 | 20 | 21 | 22 | 23 | 24 | Mean | Max. | Min. |
|---|---|---|---|---|---|---|---|---|---|---|---|---|---|---|---|---|---|---|---|---|---|---|---|---|---|---|---|
| 1 | 6.1 | 5.6 | 5.0 | 5.2 | 4.9 | 5.3 | 5.4 | 5.2 | 5.2 | 5.8 | 6.9 | 8.1 | 9.3 | 9.9 | 10.5 | 11.0 | 11.5 | 11.5 | 11.3 | 10.5 | 9.9 | 9.6 | 9.4 | 9.4 | 8.0 | 11.5 | 4.9 |
| 2 | 9.4 | 9.4 | 8.9 | 9.5 | 9.7 | 8.9 | 9.4 | 9.4 | 11.1 | 12.1 | 12.3 | 13.5 | 14.1 | 14.6 | 15.2 | 15.6 | 14.7 | 14.8 | 14.3 | 12.5 | 11.9 | 12.1 | 11.9 | 12.0 | 12.0 | 15.6 | 8.9 |
| 3 | 11.7 | 11.3 | 10.7 | 11.0 | 10.7 | 8.7 | 7.7 | 8.3 | 10.0 | 11.0 | 12.5 | 13.4 | 14.2 | 15.0 | 15.4 | 16.1 | 16.5 | 16.4 | 16.1 | 15.0 | 14.4 | 14.0 | 13.8 | 12.8 | 12.8 | 16.5 | 7.7 |
| 4 | 11.8 | 11.4 | 11.1 | 11.3 | 11.6 | 11.7 | 11.8 | 12.6 | 12.7 | 14.1 | 17.5 | 18.2 | 18.6 | 18.2 | 18.6 | 19.3 | 19.0 | 14.5 | 13.1 | 12.6 | 12.6 | 12.0 | 10.2 | 10.1 | 13.9 | 19.3 | 10.1 |
| 5 | 10.5 | 10.9 | 10.6 | 10.0 | 10.0 | 9.8 | 9.5 | 9.6 | 11.7 | 12.7 | 14.6 | 15.3 | 16.2 | 17.0 | 17.5 | 17.7 | 18.1 | 18.1 | 17.7 | 16.7 | 16.6 | 17.0 | 15.7 | 14.0 | 14.1 | 18.1 | 9.5 |
| 6 | 14.3 | 13.1 | 11.2 | 10.6 | 9.8 | 8.2 | 8.5 | 10.2 | 11.9 | 14.4 | 17.2 | 18.5 | 19.7 | 21.0 | 21.9 | 22.1 | 21.0 | 19.8 | 18.1 | 16.9 | 16.6 | 16.8 | 16.4 | 16.2 | 15.6 | 22.1 | 8.2 |
| 7 | 16.6 | 16.3 | 15.8 | 15.1 | 14.6 | 13.2 | 13.6 | 13.2 | 13.8 | 15.4 | 15.6 | 16.7 | 18.0 | 19.0 | 19.3 | 19.4 | 19.7 | 19.3 | 18.2 | 15.3 | 12.9 | 13.0 | 11.2 | 11.6 | 15.7 | 19.7 | 11.2 |
| 8 | 13.5 | 13.0 | 11.3 | 11.2 | 10.8 | 10.2 | 9.9 | 11.3 | 13.0 | 14.8 | 15.3 | 15.4 | 15.4 | 16.2 | 17.0 | 17.9 | 19.0 | 18.5 | 17.3 | 17.3 | 17.1 | 17.4 | 17.6 | 15.9 | 14.8 | 19.0 | 9.9 |
| 9 | 14.0 | 14.6 | 14.9 | 13.2 | 11.1 | 11.2 | 11.7 | 13.0 | 14.6 | 15.7 | 18.3 | 19.8 | 21.7 | 23.2 | 24.2 | 24.2 | 24.3 | 24.5 | 24.2 | 22.4 | 22.0 | 20.8 | 19.2 | 18.9 | 18.4 | 24.5 | 11.1 |
| 10 | 18.6 | 18.1 | 17.8 | 16.9 | 15.9 | 15.2 | 16.0 | 16.9 | 17.7 | 17.2 | 18.2 | 19.8 | 21.3 | 22.7 | 23.5 | 24.0 | 24.5 | 25.0 | 24.7 | 23.9 | 22.6 | 21.6 | 21.1 | 20.8 | 20.2 | 25.0 | 15.2 |
| 11 | 20.6 | 20.1 | 19.0 | 18.5 | 17.5 | 16.8 | 15.9 | 15.1 | 17.0 | 19.3 | 20.8 | 22.7 | 22.7 | 24.0 | 25.0 | 26.1 | 26.5 | 26.8 | 26.0 | 25.2 | 24.2 | 23.6 | 23.4 | 22.9 | 21.7 | 26.8 | 15.1 |
| 12 | 22.7 | 21.4 | 20.7 | 20.0 | 16.5 | 16.1 | 15.5 | 15.5 | 15.6 | 16.7 | 18.8 | 19.7 | 20.7 | 22.3 | 22.9 | 22.6 | 22.9 | 22.4 | 19.6 | 16.9 | 16.0 | 14.4 | 14.5 | 15.5 | 18.7 | 22.9 | 14.4 |
| 13 | 15.9 | 15.1 | 13.4 | 12.3 | 12.0 | 10.8 | 10.0 | 9.1 | 9.7 | 10.7 | 11.9 | 13.4 | 14.3 | 15.3 | 16.2 | 16.6 | 16.8 | 17.0 | 16.5 | 15.4 | 14.7 | 14.1 | 13.6 | 13.6 | 13.7 | 17.0 | 9.1 |
| 14 | 13.4 | 13.3 | 13.0 | 12.0 | 9.0 | 8.7 | 11.2 | 11.9 | 13.6 | 16.3 | 18.6 | 18.7 | 19.8 | 20.6 | 21.1 | 21.7 | 22.2 | 21.8 | 20.8 | 19.9 | 19.6 | 17.9 | 17.9 | 17.0 | 16.7 | 22.2 | 8.7 |
| 15 | 16.8 | 17.4 | 19.2 | 18.1 | 18.9 | 17.5 | 19.1 | 19.5 | 20.2 | 21.1 | 22.1 | 22.9 | 22.2 | 17.2 | 16.7 | 18.2 | 17.2 | 16.0 | 15.0 | 13.5 | 12.5 | 11.5 | 11.2 | 10.5 | 17.3 | 22.9 | 10.5 |
| 16 | 10.6 | 10.1 | 9.5 | 8.9 | 8.6 | 8.0 | 8.3 | 9.0 | 9.9 | 10.3 | 11.4 | 10.8 | 10.1 | 9.0 | 9.0 | 9.8 | 10.1 | 11.4 | 11.4 | 9.9 | 7.9 | 6.8 | 6.4 | 6.0 | 9.3 | 11.4 | 6.0 |
| 17 | 6.3 | 5.3 | 5.2 | 5.2 | 5.1 | 4.0 | 1.9 | 2.8 | 4.0 | 4.8 | 6.0 | 7.0 | 7.6 | 7.4 | 8.4 | 9.6 | 10.9 | 10.6 | 11.4 | 9.7 | 9.4 | 9.0 | 9.1 | 8.7 | 7.1 | 11.4 | 1.9 |
| 18 | 7.5 | 7.3 | 6.8 | 6.7 | 5.9 | 5.2 | 5.7 | 6.3 | 9.0 | 11.2 | 13.4 | 14.5 | 15.6 | 15.8 | 15.2 | 16.2 | 16.1 | 15.5 | 14.2 | 12.5 | 11.8 | 10.8 | 9.4 | 8.8 | 10.9 | 16.2 | 5.2 |
| 19 | 8.0 | 7.3 | 7.2 | 7.0 | 6.8 | 6.7 | 6.4 | 6.5 | 7.8 | 9.3 | 10.9 | 10.8 | 13.4 | 15.3 | 15.3 | 12.5 | 12.5 | 13.3 | 13.2 | 12.2 | 11.2 | 10.2 | 7.8 | 7.7 | 10.0 | 15.3 | 6.4 |
| 20 | 7.6 | 7.5 | 7.3 | 7.2 | 6.8 | 6.8 | 7.2 | 7.9 | 8.4 | 8.9 | 9.7 | 10.4 | 11.4 | 12.6 | 13.1 | 12.6 | 13.6 | 12.8 | 12.8 | 12.1 | 10.9 | 9.8 | 9.8 | 9.9 | 9.9 | 13.6 | 6.8 |
| 21 | 9.7 | 9.6 | 9.0 | 8.9 | 9.2 | 8.1 | 8.2 | 9.8 | 11.9 | 13.8 | 15.0 | 15.7 | 16.0 | 18.0 | 17.3 | 18.3 | 19.3 | 19.8 | 19.4 | 18.2 | 17.6 | 17.5 | 16.0 | 16.3 | 14.3 | 19.8 | 8.1 |
| 22 | 15.1 | 14.8 | 14.4 | 13.0 | 9.7 | 9.3 | 9.1 | 9.6 | 10.5 | 11.5 | 13.3 | 15.2 | 16.4 | 17.7 | 18.7 | 20.0 | 20.4 | 20.8 | 20.7 | 19.8 | 18.3 | 17.6 | 16.9 | 16.9 | 15.4 | 20.8 | 9.1 |
| 23 | 16.7 | 15.9 | 12.8 | 11.6 | 11.2 | 10.7 | 12.2 | 13.2 | 14.1 | 15.5 | 16.9 | 18.4 | 19.4 | 20.3 | 21.4 | 22.1 | 22.7 | 23.0 | 22.7 | 21.1 | 19.9 | 19.4 | 18.8 | 18.8 | 17.4 | 23.0 | 10.7 |
| 24 | 18.7 | 14.4 | 13.5 | 13.8 | 13.4 | 10.6 | 11.3 | 14.1 | 14.8 | 15.4 | 17.9 | 19.5 | 20.7 | 21.5 | 22.3 | 22.4 | 23.2 | 23.9 | 23.6 | 22.5 | 21.0 | 20.0 | 20.2 | 19.8 | 18.3 | 23.9 | 10.6 |
| 25 | 18.8 | 17.0 | 17.2 | 15.3 | 12.7 | 9.8 | 13.3 | 13.9 | 15.6 | 18.2 | 19.7 | 22.2 | 23.9 | 24.5 | 25.1 | 25.3 | 25.2 | 25.1 | 24.6 | 23.6 | 22.6 | 22.5 | 22.2 | 19.0 | 19.9 | 25.3 | 9.8 |
| 26 | 19.5 | 19.1 | 18.3 | 17.8 | 15.0 | 15.0 | 15.1 | 17.1 | 18.4 | 21.1 | .0 | 23.2 | 25.1 | 23.9 | 23.6 | 20.9 | 21.1 | 22.5 | 20.8 | 19.9 | 19.6 | 20.1 | 20.3 | 19.9 | 19.1 | 25.1 | .0 |
| 27 | 18.0 | 16.6 | 17.0 | 16.7 | 17.5 | 15.6 | 14.3 | 15.2 | 16.7 | 17.6 | 17.9 | 13.3 | 14.4 | 17.8 | 20.8 | 19.0 | 10.9 | 10.1 | 10.7 | 11.8 | 12.1 | 12.4 | 11.7 | 11.5 | 15.0 | 20.8 | 10.1 |
| 28 | 11.3 | 11.3 | 11.4 | 11.0 | 10.9 | 11.6 | 12.5 | 13.1 | 14.5 | 17.3 | 18.9 | 19.2 | 21.3 | 20.8 | 18.1 | 14.7 | 12.8 | 13.4 | 16.0 | 16.4 | 15.4 | 15.0 | 14.7 | 14.7 | 14.8 | 21.3 | 10.9 |
| 29 | 14.3 | 14.3 | 14.3 | 13.7 | 13.5 | 12.8 | 11.8 | 16.2 | 17.7 | 17.0 | 18.6 | 19.3 | 20.3 | 21.1 | 21.8 | 22.6 | 23.0 | 22.3 | 22.6 | 22.4 | 20.8 | 20.8 | 20.9 | 20.3 | 18.4 | 23.0 | 11.8 |
| 30 | 18.1 | 18.2 | 17.6 | 16.6 | 15.2 | 14.3 | 14.1 | 15.1 | 16.3 | 16.9 | 18.5 | 19.7 | 21.0 | 21.7 | 22.8 | 24.5 | 25.1 | 25.4 | 24.7 | 23.4 | 20.9 | 20.0 | 20.6 | 19.6 | 19.6 | 25.4 | 14.1 |
| 31 | 20.1 | 19.6 | 18.7 | 15.0 | 13.6 | 13.9 | 17.2 | 17.2 | 16.9 | 16.8 | 16.7 | 13.7 | 15.7 | 17.6 | 18.7 | 16.4 | 12.7 | 14.1 | 12.0 | 12.9 | 13.1 | 12.9 | 13.7 | 13.6 | 15.5 | 20.1 | 12.0 |
| Mean | 14.1 | 13.5 | 13.0 | 12.4 | 11.6 | 10.8 | 11.1 | 11.9 | 13.0 | 14.3 | 15.0 | 16.4 | 17.4 | 18.1 | 18.6 | 18.7 | 18.5 | 18.4 | 17.9 | 16.9 | 16.0 | 15.5 | 15.0 | 14.6 | Monthly mean = | | 15.1 |
| Max. | 22.7 | 21.4 | 20.7 | 20.0 | 18.9 | 17.5 | 19.1 | 19.5 | 20.2 | 21.1 | 22.1 | 23.2 | 25.1 | 24.5 | 25.1 | 26.1 | 26.5 | 26.8 | 26.0 | 25.2 | 24.2 | 23.6 | 23.4 | 22.9 | Monthly max. = | | 26.8 |
| Min. | 6.1 | 5.3 | 5.0 | 5.2 | 4.9 | 4.0 | 1.9 | 2.8 | 4.0 | 4.8 | .0 | 7.0 | 7.6 | 7.4 | 8.4 | 9.6 | 10.1 | 10.1 | 10.7 | 9.7 | 7.9 | 6.8 | 6.4 | 6.0 | Monthly min. = | | .0 |

TOTAL NUMBER OF DATA HOURS IN MONTH: 744
Number of hours of bad or missing data: 0
Current % recovery = 100.0
**** designates missing or lost data

N/A: insufficient data available for calculation (a minimum of 75% is required)

table created at 18:25, 7/14/1994

MONTHLY SUMMARY
SIGMA THETA
(Degrees)
INPUT FILE: s7metjj4.met

Bechtel Environmental, Inc.

Met Data for Site 7
MAY 1994

| Day \ Hour | 1 | 2 | 3 | 4 | 5 | 6 | 7 | 8 | 9 | 10 | 11 | 12 | 13 | 14 | 15 | 16 | 17 | 18 | 19 | 20 | 21 | 22 | 23 | 24 | Mean | Max. | Min. |
|---|---|---|---|---|---|---|---|---|---|---|---|---|---|---|---|---|---|---|---|---|---|---|---|---|---|---|---|
| 1 | 9. | 9. | 9. | 10. | 10. | 12. | 12. | 16. | 13. | 14. | 11. | 13. | 13. | 11. | 15. | 10. | 12. | 10. | 11. | 11. | 8. | 8. | 8. | 8. | N/A | 16. | 8. |
| 2 | 10. | 11. | 13. | 11. | 10. | 12. | 25. | 39. | 32. | 16. | 19. | 19. | 18. | 20. | 19. | 16. | 17. | 17. | 8. | 14. | 9. | 12. | 13. | 10. | N/A | 39. | 8. |
| 3 | 9. | 10. | 15. | 12. | 15. | 33. | 42. | 29. | 15. | 16. | 20. | 17. | 16. | 15. | 15. | 16. | 17. | 11. | 9. | 14. | 10. | 7. | 6. | 9. | N/A | 42. | 6. |
| 4 | 7. | 5. | 6. | 6. | 6. | 6. | 8. | 12. | 6. | 18. | 14. | 19. | 27. | 20. | 25. | 31. | 25. | 32. | 24. | 15. | 13. | 19. | 54. | 9. | N/A | 54. | 5. |
| 5 | 10. | 8. | 33. | 14. | 12. | 24. | 28. | 17. | 46. | 22. | 30. | 24. | 21. | 16. | 23. | 19. | 15. | 12. | 10. | 11. | 10. | 7. | 27. | 28. | N/A | 46. | 7. |
| 6 | 13. | 28. | 35. | 20. | 13. | 33. | 18. | 13. | 13. | 9. | 8. | 9. | 9. | 9. | 9. | 8. | 25. | 43. | 21. | 44. | 14. | 20. | 21. | 9. | N/A | 44. | 8. |
| 7 | 9. | 6. | 9. | 8. | 11. | 49. | 60. | 27. | 8. | 13. | 15. | 15. | 19. | 17. | 15. | 15. | 16. | 10. | 27. | 37. | 10. | 17. | 10. | 16. | N/A | 60. | 6. |
| 8 | 22. | 18. | 23. | 23. | 14. | 60. | 34. | 21. | 30. | 50. | 49. | 23. | 27. | 22. | 41. | 41. | 23. | 27. | 16. | 15. | 5. | 8. | 10. | 47. | N/A | 60. | 5. |
| 9 | 53. | 25. | 13. | 34. | 38. | 18. | 35. | 45. | 27. | 12. | 28. | 17. | 30. | 34. | 55. | 27. | 20. | 14. | 25. | 18. | 13. | 14. | 22. | 36. | N/A | 55. | 12. |
| 10 | 13. | 22. | 14. | 26. | 33. | 37. | 26. | 21. | 17. | 15. | 15. | 16. | 23. | 23. | 22. | 15. | 18. | 17. | 12. | 9. | 7. | 8. | 8. | 8. | N/A | 37. | 7. |
| 11 | 11. | 12. | 14. | 11. | 18. | 31. | 99. | 74. | 20. | 25. | 30. | 30. | 23. | 19. | 18. | 21. | 20. | 17. | 15. | 19. | 6. | 4. | 32. | 9. | N/A | 99. | 4. |
| 12 | 12. | 28. | 45. | 39. | 15. | 31. | 25. | 13. | 10. | 11. | 18. | 18. | 13. | 31. | 25. | 18. | 16. | 10. | 9. | 12. | 10. | 38. | 30. | 18. | N/A | 45. | 9. |
| 13 | 10. | 12. | 11. | 9. | 7. | 7. | 7. | 7. | 8. | 11. | 16. | 16. | 16. | 17. | 16. | 16. | 15. | 14. | 13. | 9. | 8. | 9. | 10. | 10. | N/A | 17. | 7. |
| 14 | 10. | 9. | 10. | 41. | 28. | 34. | 35. | 10. | 21. | 72. | 78. | 30. | 61. | 27. | 32. | 42. | 22. | 22. | 9. | 8. | 9. | 7. | 5. | 6. | N/A | 78. | 5. |
| 15 | 6. | 9. | 20. | 18. | 27. | 12. | 10. | 10. | 9. | 11. | 14. | 12. | 24. | 14. | 15. | 11. | 8. | 8. | 8. | 8. | 12. | 15. | 14. | 14. | N/A | 27. | 6. |
| 16 | 10. | 11. | 9. | 8. | 9. | 30. | 19. | 32. | 22. | 15. | 28. | 18. | 11. | 14. | 15. | 31. | 17. | 16. | 14. | 32. | 9. | 11. | 11. | 36. | N/A | 36. | 8. |
| 17 | 17. | 12. | 12. | 10. | 10. | 11. | 9. | 12. | 12. | 11. | 13. | 14. | 30. | 31. | 25. | 17. | 18. | 22. | 27. | 13. | 7. | 8. | 9. | 11. | N/A | 31. | 7. |
| 18 | 35. | 16. | 29. | 28. | 48. | 22. | 21. | 10. | 26. | 25. | 17. | 16. | 21. | 22. | 11. | 19. | 11. | 9. | 8. | 12. | 12. | 7. | 7. | 8. | N/A | 48. | 7. |
| 19 | 7. | 10. | 15. | 22. | 11. | 25. | 49. | 55. | 13. | 17. | 21. | 13. | 20. | 19. | 21. | 10. | 14. | 10. | 11. | 8. | 12. | 14. | 14. | 7. | N/A | 55. | 7. |
| 20 | 9. | 9. | 9. | 11. | 15. | 12. | 14. | 19. | 18. | 13. | 7. | 13. | 15. | 12. | 13. | 13. | 26. | 12. | 13. | 11. | 12. | 8. | 8. | 8. | N/A | 26. | 7. |
| 21 | 9. | 7. | 19. | 5. | 4. | 31. | 32. | 34. | 20. | 23. | 31. | 69. | 30. | 40. | 22. | 22. | 25. | 41. | 46. | 8. | 5. | 4. | 5. | 8. | N/A | 69. | 4. |
| 22 | 5. | 5. | 4. | 43. | 45. | 32. | 11. | 10. | 15. | 15. | 15. | 19. | 14. | 12. | 11. | 15. | 12. | 11. | 9. | 8. | 11. | 10. | 12. | 14. | N/A | 45. | 4. |
| 23 | 16. | 37. | 27. | 26. | 14. | 40. | 24. | 21. | 36. | 35. | 25. | 17. | 15. | 17. | 17. | 18. | 16. | 13. | 11. | 12. | 12. | 9. | 10. | 9. | N/A | 40. | 9. |
| 24 | 8. | 85. | 44. | 11. | 44. | 37. | 35. | 40. | 16. | 15. | 16. | 13. | 16. | 22. | 22. | 20. | 36. | 41. | 26. | 11. | 21. | 8. | 17. | 8. | N/A | 85. | 8. |
| 25 | 53. | 21. | 7. | 46. | 26. | 15. | 66. | 47. | 27. | 23. | 19. | 20. | 32. | 26. | 20. | 13. | 10. | 8. | 7. | 13. | 10. | 6. | 4. | 54. | N/A | 66. | 4. |
| 26 | 36. | 33. | 86. | 19. | 29. | 49. | 57. | 36. | 17. | 20. | 0. | 18. | 17. | 18. | 17. | 11. | 14. | 15. | 10. | 7. | 7. | 8. | 13. | 16. | N/A | 86. | 0. |
| 27 | 29. | 16. | 7. | 46. | 19. | 10. | 9. | 13. | 19. | 16. | 16. | 12. | 12. | 15. | 44. | 31. | 15. | 10. | 14. | 10. | 15. | 10. | 11. | 10. | N/A | 46. | 7. |
| 28 | 9. | 9. | 9. | 13. | 9. | 7. | 17. | 10. | 16. | 25. | 55. | 26. | 47. | 44. | 12. | 24. | 45. | 7. | 21. | 14. | 16. | 13. | 12. | 12. | N/A | 55. | 7. |
| 29 | 8. | 9. | 9. | 6. | 13. | 29. | 73. | 62. | 62. | 14. | 19. | 16. | 15. | 14. | 17. | 16. | 14. | 8. | 9. | 15. | 7. | 7. | 9. | 12. | N/A | 73. | 6. |
| 30 | 11. | 11. | 10. | 10. | 9. | 8. | 9. | 10. | 14. | 14. | 16. | 20. | 23. | 20. | 21. | 44. | 39. | 23. | 19. | 24. | 7. | 7. | 8. | 7. | N/A | 44. | 7. |
| 31 | 8. | 53. | 51. | 64. | 77. | 19. | 12. | 17. | 41. | 36. | 14. | 14. | 24. | 35. | 28. | 12. | 20. | 53. | 10. | 8. | 10. | 11. | 12. | 12. | N/A | 77. | 8. |
| Mean | N/A | N/A | N/A | N/A | N/A | N/A | N/A | N/A | N/A | N/A | N/A | N/A | N/A | N/A | N/A | N/A | N/A | N/A | N/A | N/A | N/A | N/A | N/A | N/A | Monthly mean = | | N/A |
| Max. | 53. | 85. | 86. | 64. | 77. | 60. | 99. | 74. | 62. | 72. | 78. | 69. | 61. | 44. | 55. | 44. | 45. | 53. | 46. | 44. | 21. | 38. | 54. | 54. | Monthly max. = | | 99. |
| Min. | 5. | 5. | 4. | 5. | 4. | 6. | 7. | 7. | 6. | 9. | 0. | 9. | 9. | 9. | 9. | 8. | 8. | 7. | 7. | 7. | 5. | 4. | 4. | 6. | Monthly min. = | | 0. |

TOTAL NUMBER OF DATA HOURS IN MONTH: 744
Number of hours of bad or missing data: 0
**** designates missing or lost data

Current % recovery = 100.0

N/A: A sigma theta mean is not physically meaningful.

table created at 18:25, 7/14/1994

MONTHLY SUMMARY
WIND SPEED
(Miles Per Hour)
INPUT FILE: s7metjj4.met

Bechtel Environmental, Inc.

Met Data for Site 7
JUNE 1994

| Day \ Hour | 1 | 2 | 3 | 4 | 5 | 6 | 7 | 8 | 9 | 10 | 11 | 12 | 13 | 14 | 15 | 16 | 17 | 18 | 19 | 20 | 21 | 22 | 23 | 24 | Mean | Max. | Min. |
|---|---|---|---|---|---|---|---|---|---|---|---|---|---|---|---|---|---|---|---|---|---|---|---|---|---|---|---|
| 1 | 21.6 | 26.0 | 26.7 | 19.9 | 16.1 | 10.1 | 15.4 | 17.1 | 19.5 | 19.5 | 16.7 | 21.0 | 31.8 | 26.7 | 27.5 | 18.5 | 19.6 | 20.9 | 17.6 | 15.9 | 19.0 | 22.9 | 20.3 | 17.0 | 20.3 | 31.8 | 10.1 |
| 2 | 13.9 | 10.0 | 6.0 | 1.3 | 1.5 | 2.2 | 2.8 | 3.3 | 3.8 | 5.4 | 5.9 | 5.8 | 6.5 | 8.8 | 8.5 | 8.6 | 8.3 | 7.4 | 5.9 | 4.1 | 9.2 | 11.2 | 11.5 | 10.8 | 6.8 | 13.9 | 1.3 |
| 3 | 5.2 | 8.5 | 7.6 | 15.3 | 13.8 | 8.7 | 13.8 | 13.1 | 16.5 | 8.4 | 10.1 | 12.2 | 12.7 | 13.5 | 12.1 | 17.2 | 11.9 | 24.6 | 9.2 | 6.3 | 5.8 | 8.6 | 8.4 | 8.9 | 11.3 | 24.6 | 5.2 |
| 4 | 13.3 | 5.0 | 7.3 | 20.7 | 25.4 | 27.4 | 29.8 | 29.1 | 32.2 | 30.5 | 33.9 | 27.7 | 19.3 | 16.0 | 17.6 | 19.6 | 22.3 | 21.9 | 19.9 | 11.5 | 10.7 | 6.7 | 8.2 | 4.6 | 19.2 | 33.9 | 4.6 |
| 5 | 3.6 | 3.4 | 3.1 | 2.6 | 4.1 | 4.5 | 1.5 | 4.1 | 6.8 | 6.6 | 7.1 | 8.2 | 9.7 | 9.7 | 9.7 | 9.8 | 13.5 | 15.5 | 14.0 | 14.4 | 19.6 | 19.8 | 16.1 | 15.6 | 9.3 | 19.8 | 1.5 |
| 6 | 19.4 | 17.6 | 14.2 | 23.6 | 23.1 | 21.6 | 22.2 | 25.5 | 25.2 | 29.4 | 31.4 | 31.7 | 32.6 | 30.9 | 28.9 | 30.0 | 33.1 | 27.2 | 31.4 | 31.4 | 22.4 | 16.7 | 17.7 | 16.4 | 25.2 | 33.1 | 14.2 |
| 7 | 15.4 | 16.8 | 21.3 | 20.4 | 21.6 | 16.6 | 16.7 | 19.5 | 17.6 | 14.4 | 16.2 | 18.1 | 17.0 | 17.1 | 18.4 | 18.9 | 20.9 | 13.2 | 16.2 | 21.7 | 14.3 | 14.6 | 22.1 | 24.0 | 18.0 | 24.0 | 13.2 |
| 8 | 24.3 | 22.4 | 22.5 | 19.9 | 23.6 | 28.6 | 25.4 | 21.0 | 20.4 | 18.3 | 17.6 | 17.0 | 16.0 | 17.2 | 22.1 | 22.0 | 21.1 | 19.8 | 17.4 | 14.3 | 16.7 | 13.5 | 15.7 | 17.2 | 19.8 | 28.6 | 13.5 |
| 9 | 20.0 | 18.4 | 16.7 | 5.8 | 5.2 | 7.8 | 4.5 | 3.2 | 9.5 | 10.4 | 12.9 | 11.6 | 12.3 | 15.4 | 18.5 | 19.0 | 19.7 | 20.4 | 18.3 | 15.5 | 19.2 | 18.4 | 19.0 | 18.6 | 14.2 | 20.4 | 3.2 |
| 10 | 18.0 | 15.1 | 8.7 | 3.8 | 2.6 | 1.5 | 4.4 | 7.7 | 9.1 | 10.7 | 11.7 | 14.9 | 15.7 | 14.2 | 14.0 | 16.4 | 16.9 | 16.3 | 14.6 | 12.2 | 12.7 | 13.1 | 15.3 | 15.1 | 11.9 | 18.0 | 1.5 |
| 11 | 17.9 | 15.5 | 12.5 | 4.0 | 2.5 | 5.2 | 9.4 | 6.1 | 3.9 | 6.6 | 10.5 | 15.2 | 14.7 | 13.1 | 14.9 | 16.3 | 18.3 | 10.3 | 7.7 | 8.0 | 13.0 | 18.6 | 13.1 | 8.6 | 11.1 | 18.6 | 2.5 |
| 12 | 8.6 | 13.7 | 8.4 | 3.3 | 2.6 | 4.6 | 6.1 | 10.6 | 15.6 | 19.4 | 16.3 | 12.9 | 13.9 | 11.0 | 12.9 | 16.4 | 14.1 | 11.3 | 8.5 | 10.8 | 8.5 | 13.1 | 16.3 | 14.9 | 11.4 | 19.4 | 2.6 |
| 13 | 18.2 | 19.5 | 23.6 | 22.3 | 23.3 | 23.7 | 24.0 | 19.6 | 19.6 | 14.7 | 14.1 | 16.1 | 17.2 | 23.2 | 27.5 | 28.2 | 18.1 | 16.1 | 14.3 | 20.3 | 20.6 | 19.3 | 13.3 | 11.2 | 19.5 | 28.2 | 11.2 |
| 14 | 13.3 | 18.3 | 20.3 | 27.5 | 20.8 | 18.3 | 23.0 | 25.6 | 30.6 | 31.3 | 39.8 | 39.5 | 33.3 | 31.1 | 30.4 | 29.1 | 29.1 | 28.4 | 25.7 | 11.1 | 9.5 | 11.3 | 10.7 | 4.8 | 23.4 | 39.8 | 4.8 |
| 15 | 4.0 | 5.5 | 7.7 | 6.1 | 6.3 | 3.4 | 4.3 | 5.3 | 5.9 | 6.5 | 6.3 | 9.4 | 12.9 | 17.7 | 24.3 | 24.7 | 25.1 | 21.8 | 18.8 | 15.4 | 12.3 | 13.9 | 18.1 | 21.0 | 12.4 | 25.1 | 3.4 |
| 16 | 20.3 | 18.5 | 13.1 | 8.4 | 8.3 | 16.2 | 21.3 | 17.8 | 19.5 | 18.0 | 20.7 | 18.1 | 16.5 | 18.7 | 20.9 | 22.6 | 22.0 | 21.1 | 20.3 | 16.6 | 14.0 | 14.9 | 15.0 | 14.9 | 17.4 | 22.6 | 8.3 |
| 17 | 11.3 | 9.0 | 8.9 | 8.9 | 6.7 | 5.3 | 6.4 | 5.3 | 6.0 | 7.2 | 8.8 | 10.1 | 10.3 | 10.0 | 11.1 | 11.0 | 10.0 | 7.9 | 6.5 | 8.6 | 14.0 | 13.1 | 13.0 | 8.5 | 9.1 | 14.0 | 5.3 |
| 18 | 2.8 | 2.8 | 4.5 | 22.6 | 17.4 | 21.8 | 13.6 | 9.3 | 16.1 | 18.9 | 16.5 | 14.6 | 11.5 | 11.0 | 9.5 | 10.2 | 11.2 | 9.1 | 6.8 | 3.4 | 1.0 | 2.7 | 10.9 | 11.3 | 10.8 | 22.6 | 1.0 |
| 19 | 13.4 | 16.6 | 17.2 | 7.7 | 22.7 | 23.4 | 15.7 | 18.4 | 17.5 | 14.3 | 12.6 | 11.5 | 9.9 | 10.0 | 9.9 | 12.5 | 13.0 | 7.8 | 5.4 | 4.5 | 8.4 | 10.8 | 10.8 | 10.8 | 12.7 | 23.4 | 4.5 |
| 20 | 6.1 | 1.8 | 2.6 | 5.0 | 10.7 | 9.2 | 3.1 | 2.7 | 5.7 | 9.4 | 8.5 | 9.1 | 10.8 | 11.2 | 12.1 | 12.8 | 9.5 | 7.8 | 5.2 | 7.9 | 15.0 | 13.1 | 14.5 | 15.1 | 8.7 | 15.1 | 1.8 |
| 21 | 21.1 | 21.8 | 18.6 | 14.2 | 4.9 | 8.1 | 10.2 | 7.0 | 15.2 | 20.0 | 17.3 | 10.6 | 11.0 | 14.8 | 13.0 | 10.4 | 7.7 | 18.8 | 29.7 | 19.2 | 26.3 | 22.1 | 10.9 | 11.0 | 15.2 | 29.7 | 4.9 |
| 22 | 13.6 | 17.4 | 13.2 | 6.0 | 11.7 | 12.7 | 3.2 | 5.2 | 6.9 | 7.0 | 7.7 | 6.0 | 10.1 | 10.1 | 8.7 | 8.1 | 12.9 | 22.6 | 11.8 | 9.1 | 14.8 | 14.1 | 12.3 | 12.3 | 10.7 | 22.6 | 3.2 |
| 23 | 14.0 | 8.5 | 3.2 | 6.5 | 3.9 | 7.6 | 3.5 | 4.8 | 9.2 | 14.8 | 16.6 | 19.3 | 20.1 | 22.2 | 23.6 | 23.1 | 27.6 | 20.5 | 15.9 | 12.8 | 12.6 | 14.2 | 15.9 | 12.9 | 13.9 | 27.6 | 3.2 |
| 24 | 9.1 | 7.1 | 5.3 | 2.7 | 3.5 | 9.0 | 24.5 | 23.8 | 20.3 | 21.3 | 23.6 | 17.9 | 21.8 | 18.5 | 22.0 | 22.1 | 18.1 | 15.4 | 16.5 | 15.5 | 13.8 | 13.2 | 8.8 | 3.3 | 14.9 | 24.5 | 2.7 |
| 25 | 3.6 | 4.0 | 2.2 | 8.9 | 8.7 | 4.8 | 1.8 | 7.0 | 5.6 | 4.2 | 5.5 | 6.7 | 7.6 | 9.9 | 11.2 | 11.5 | 9.8 | 7.6 | 5.6 | 6.2 | 13.6 | 15.8 | 12.0 | 6.8 | 7.5 | 15.8 | 1.8 |
| 26 | 13.7 | 26.6 | 25.7 | 30.1 | 26.1 | 25.1 | 24.9 | 23.3 | 25.4 | 27.5 | 28.3 | 32.6 | 26.3 | 27.3 | 26.2 | 30.0 | 28.8 | 30.3 | 30.1 | 25.1 | 23.0 | 23.1 | 25.5 | 23.2 | 26.2 | 32.6 | 13.7 |
| 27 | 21.1 | 20.0 | 11.1 | 8.7 | 12.9 | 12.0 | 12.9 | 4.9 | 10.2 | 10.0 | 9.8 | 9.9 | 10.0 | 10.9 | 13.1 | 14.4 | 12.2 | 11.3 | 8.8 | 11.3 | 7.4 | 9.6 | 8.6 | 5.7 | 11.1 | 21.1 | 4.9 |
| 28 | 7.4 | 3.6 | 8.0 | 6.7 | 4.8 | 6.0 | 3.5 | 5.0 | 9.4 | 7.3 | 6.7 | 7.3 | 10.0 | 10.7 | 13.3 | 11.2 | 11.4 | 13.7 | 12.0 | 7.1 | 7.2 | 10.4 | 12.5 | 12.1 | 8.6 | 13.7 | 3.5 |
| 29 | 5.6 | 4.4 | 6.9 | 4.1 | 9.6 | 6.2 | 4.0 | 2.1 | 13.4 | 19.1 | 26.4 | 26.2 | 33.1 | 33.2 | 31.4 | 29.2 | 26.1 | 20.3 | 19.0 | 18.4 | 21.3 | 19.4 | 16.7 | 16.3 | 17.2 | 33.2 | 2.1 |
| 30 | 17.6 | 15.9 | 2.9 | 3.5 | 2.5 | 5.9 | 6.3 | 1.5 | 3.2 | 4.8 | 6.5 | 8.0 | 9.3 | 17.0 | 17.8 | 17.1 | 16.9 | 15.1 | 12.4 | 11.6 | 15.1 | 19.0 | 11.5 | 8.3 | 10.4 | 19.0 | 1.5 |
| Mean | 13.2 | 13.1 | 11.7 | 11.4 | 11.6 | 11.9 | 11.9 | 11.6 | 14.0 | 14.5 | 15.5 | 15.6 | 16.1 | 16.7 | 17.7 | 18.0 | 17.6 | 16.8 | 14.8 | 13.0 | 14.0 | 14.6 | 14.2 | 12.7 | Monthly mean = | | 14.3 |
| Max. | 24.3 | 26.6 | 26.7 | 30.1 | 26.1 | 28.6 | 29.8 | 29.1 | 32.2 | 31.3 | 39.8 | 39.5 | 33.3 | 33.2 | 31.4 | 30.0 | 33.1 | 30.3 | 31.4 | 31.4 | 26.3 | 23.1 | 25.5 | 24.0 | Monthly max. = | | 39.8 |
| Min. | 2.8 | 1.8 | 2.2 | 1.3 | 1.5 | 1.5 | 1.5 | 1.5 | 3.2 | 4.2 | 5.5 | 5.8 | 6.5 | 8.8 | 8.5 | 8.1 | 7.7 | 7.4 | 5.2 | 3.4 | 1.0 | 2.7 | 8.2 | 3.3 | Monthly min. = | | 1.0 |

TOTAL NUMBER OF DATA HOURS IN MONTH: 720
Number of hours of bad or missing data: 0
**** designates missing or lost data

Current % recovery = 100.0

N/A: insufficient data available for calculation (a minimum of 75% is required)

table created at 18:25, 7/14/1994

MONTHLY SUMMARY
WIND DIRECTION
(Degrees)
INPUT FILE: s7metjj4.met

Bechtel Environmental, Inc.

Met Data for Site 7
JUNE 1994

| Day | Hour 1 | 2 | 3 | 4 | 5 | 6 | 7 | 8 | 9 | 10 | 11 | 12 | 13 | 14 | 15 | 16 | 17 | 18 | 19 | 20 | 21 | 22 | 23 | 24 | Mean | Max. | Min. |
|---|---|---|---|---|---|---|---|---|---|---|---|---|---|---|---|---|---|---|---|---|---|---|---|---|---|---|---|
| 1 | 233.0 | 231.0 | 231.0 | 235.0 | 232.0 | 244.0 | 239.0 | 236.0 | 233.0 | 239.0 | 252.0 | 263.0 | 271.0 | 270.0 | 260.0 | 241.0 | 245.0 | 250.0 | 249.0 | 236.0 | 232.0 | 232.0 | 229.0 | 227.0 | 242.1 | 271.0 | 227.0 |
| 2 | 229.0 | 240.0 | 238.0 | 288.0 | 286.0 | 159.0 | 238.0 | 331.0 | 326.0 | 9.0 | 19.0 | 20.0 | 3.0 | 356.0 | 2.0 | 6.0 | 13.0 | 15.0 | 18.0 | 81.0 | 144.0 | 143.0 | 156.0 | 151.0 | 9.6 | 356.0 | 2.0 |
| 3 | 155.0 | 164.0 | 151.0 | 134.0 | 155.0 | 227.0 | 144.0 | 167.0 | 155.0 | 289.0 | 7.0 | 35.0 | 19.0 | 4.0 | 152.0 | 198.0 | 201.0 | 268.0 | 252.0 | 211.0 | 185.0 | 176.0 | 152.0 | 249.0 | 160.4 | 289.0 | 4.0 |
| 4 | 220.0 | 241.0 | 205.0 | 229.0 | 230.0 | 229.0 | 230.0 | 241.0 | 240.0 | 245.0 | 256.0 | 265.0 | 262.0 | 265.0 | 267.0 | 268.0 | 277.0 | 269.0 | 272.0 | 249.0 | 243.0 | 219.0 | 241.0 | 148.0 | 242.1 | 277.0 | 148.0 |
| 5 | 242.0 | 191.0 | 131.0 | 168.0 | 132.0 | 138.0 | 241.0 | 68.0 | 77.0 | 40.0 | 11.0 | 28.0 | 29.0 | 31.0 | 104.0 | 235.0 | 198.0 | 178.0 | 187.0 | 187.0 | 187.0 | 175.0 | 149.0 | 133.0 | 135.8 | 242.0 | 11.0 |
| 6 | 136.0 | 151.0 | 161.0 | 233.0 | 232.0 | 233.0 | 233.0 | 243.0 | 237.0 | 241.0 | 254.0 | 260.0 | 266.0 | 266.0 | 266.0 | 268.0 | 273.0 | 268.0 | 267.0 | 267.0 | 253.0 | 219.0 | 150.0 | 158.0 | 230.6 | 273.0 | 136.0 |
| 7 | 210.0 | 225.0 | 226.0 | 224.0 | 226.0 | 252.0 | 244.0 | 225.0 | 236.0 | 242.0 | 250.0 | 259.0 | 253.0 | 260.0 | 263.0 | 248.0 | 256.0 | 240.0 | 269.0 | 268.0 | 224.0 | 201.0 | 223.0 | 230.0 | 239.8 | 269.0 | 201.0 |
| 8 | 231.0 | 223.0 | 234.0 | 241.0 | 235.0 | 229.0 | 234.0 | 241.0 | 247.0 | 254.0 | 257.0 | 262.0 | 260.0 | 252.0 | 263.0 | 266.0 | 270.0 | 259.0 | 244.0 | 237.0 | 230.0 | 225.0 | 213.0 | 216.0 | 242.6 | 270.0 | 213.0 |
| 9 | 220.0 | 221.0 | 228.0 | 90.0 | 114.0 | 132.0 | 136.0 | 283.0 | 261.0 | 270.0 | 282.0 | 285.0 | 266.0 | 256.0 | 252.0 | 255.0 | 252.0 | 254.0 | 239.0 | 237.0 | 232.0 | 227.0 | 228.0 | 228.0 | 227.0 | 285.0 | 90.0 |
| 10 | 226.0 | 223.0 | 244.0 | 263.0 | 287.0 | 340.0 | 277.0 | 253.0 | 250.0 | 263.0 | 274.0 | 274.0 | 283.0 | 283.0 | 275.0 | 274.0 | 265.0 | 256.0 | 254.0 | 250.0 | 224.0 | 218.0 | 216.0 | 217.0 | 257.9 | 340.0 | 216.0 |
| 11 | 217.0 | 217.0 | 225.0 | 288.0 | 185.0 | 208.0 | 247.0 | 277.0 | 39.0 | 348.0 | 263.0 | 270.0 | 277.0 | 282.0 | 282.0 | 276.0 | 273.0 | 237.0 | 227.0 | 189.0 | 185.0 | 207.0 | 283.0 | 111.0 | 233.9 | 348.0 | 39.0 |
| 12 | 87.0 | 152.0 | 249.0 | 179.0 | 254.0 | 106.0 | 246.0 | 234.0 | 229.0 | 246.0 | 252.0 | 248.0 | 251.0 | 232.0 | 244.0 | 256.0 | 259.0 | 252.0 | 216.0 | 159.0 | 174.0 | 152.0 | 150.0 | 178.0 | 208.5 | 259.0 | 87.0 |
| 13 | 201.0 | 206.0 | 232.0 | 234.0 | 224.0 | 226.0 | 229.0 | 240.0 | 240.0 | 234.0 | 234.0 | 265.0 | 283.0 | 279.0 | 277.0 | 273.0 | 265.0 | 261.0 | 247.0 | 260.0 | 270.0 | 272.0 | 249.0 | 233.0 | 247.3 | 283.0 | 201.0 |
| 14 | 201.0 | 191.0 | 235.0 | 252.0 | 242.0 | 236.0 | 254.0 | 255.0 | 256.0 | 255.0 | 262.0 | 265.0 | 257.0 | 261.0 | 264.0 | 262.0 | 265.0 | 268.0 | 269.0 | 235.0 | 237.0 | 248.0 | 241.0 | 256.0 | 248.6 | 269.0 | 191.0 |
| 15 | 163.0 | 154.0 | 141.0 | 95.0 | 112.0 | 75.0 | 275.0 | 306.0 | 322.0 | 333.0 | 9.0 | 316.0 | 294.0 | 279.0 | 275.0 | 274.0 | 275.0 | 271.0 | 263.0 | 262.0 | 252.0 | 231.0 | 242.0 | 234.0 | 227.2 | 333.0 | 9.0 |
| 16 | 231.0 | 229.0 | 239.0 | 245.0 | 231.0 | 237.0 | 235.0 | 236.0 | 254.0 | 256.0 | 261.0 | 247.0 | 260.0 | 273.0 | 270.0 | 270.0 | 272.0 | 269.0 | 268.0 | 257.0 | 246.0 | 240.0 | 241.0 | 238.0 | 250.2 | 273.0 | 229.0 |
| 17 | 214.0 | 221.0 | 159.0 | 129.0 | 136.0 | 130.0 | 111.0 | 51.0 | 28.0 | 6.0 | 5.0 | 8.0 | 10.0 | 9.0 | 6.0 | 8.0 | 357.0 | 2.0 | 31.0 | 160.0 | 170.0 | 154.0 | 149.0 | 158.0 | 55.5 | 357.0 | 2.0 |
| 18 | 281.0 | 253.0 | 276.0 | 239.0 | 226.0 | 231.0 | 235.0 | 240.0 | 255.0 | 260.0 | 263.0 | 266.0 | 277.0 | 307.0 | 329.0 | 313.0 | 305.0 | 311.0 | 323.0 | 47.0 | 170.0 | 227.0 | 229.0 | 232.0 | 254.0 | 329.0 | 47.0 |
| 19 | 235.0 | 232.0 | 228.0 | 235.0 | 234.0 | 234.0 | 233.0 | 237.0 | 252.0 | 256.0 | 264.0 | 288.0 | 319.0 | 315.0 | 308.0 | 296.0 | 306.0 | 347.0 | 38.0 | 138.0 | 145.0 | 149.0 | 153.0 | 150.0 | 233.0 | 347.0 | 38.0 |
| 20 | 200.0 | 245.0 | 160.0 | 201.0 | 129.0 | 131.0 | 240.0 | 8.0 | 68.0 | 74.0 | 33.0 | 9.0 | 355.0 | 346.0 | 6.0 | 341.0 | 354.0 | 23.0 | 33.0 | 125.0 | 198.0 | 185.0 | 178.0 | 141.0 | 7.6 | 355.0 | 6.0 |
| 21 | 137.0 | 141.0 | 138.0 | 152.0 | 179.0 | 162.0 | 141.0 | 255.0 | 261.0 | 270.0 | 266.0 | 259.0 | 270.0 | 259.0 | 263.0 | 292.0 | 354.0 | 185.0 | 71.0 | 139.0 | 132.0 | 148.0 | 147.0 | 109.0 | 197.1 | 354.0 | 71.0 |
| 22 | 117.0 | 150.0 | 142.0 | 135.0 | 137.0 | 137.0 | 125.0 | 67.0 | 70.0 | 76.0 | 87.0 | 359.0 | 317.0 | 334.0 | 46.0 | 24.0 | 238.0 | 218.0 | 210.0 | 99.0 | 152.0 | 143.0 | 146.0 | 152.0 | 153.4 | 359.0 | 24.0 |
| 23 | 142.0 | 155.0 | 266.0 | 127.0 | 142.0 | 161.0 | 124.0 | 266.0 | 272.0 | 252.0 | 250.0 | 263.0 | 258.0 | 267.0 | 266.0 | 267.0 | 271.0 | 261.0 | 254.0 | 256.0 | 231.0 | 229.0 | 234.0 | 231.0 | 226.9 | 272.0 | 124.0 |
| 24 | 224.0 | 213.0 | 224.0 | 301.0 | 258.0 | 238.0 | 238.0 | 238.0 | 244.0 | 251.0 | 260.0 | 254.0 | 265.0 | 269.0 | 270.0 | 271.0 | 269.0 | 250.0 | 251.0 | 254.0 | 239.0 | 227.0 | 231.0 | 228.0 | 248.6 | 301.0 | 213.0 |
| 25 | 222.0 | 170.0 | 222.0 | 126.0 | 142.0 | 189.0 | 307.0 | 112.0 | 53.0 | 356.0 | 34.0 | 20.0 | 12.0 | 358.0 | 350.0 | 10.0 | 336.0 | 5.0 | 56.0 | 126.0 | 173.0 | 207.0 | 220.0 | 213.0 | 2.5 | 358.0 | 5.0 |
| 26 | 230.0 | 235.0 | 234.0 | 240.0 | 241.0 | 240.0 | 241.0 | 245.0 | 242.0 | 250.0 | 248.0 | 253.0 | 256.0 | 255.0 | 250.0 | 262.0 | 257.0 | 256.0 | 243.0 | 241.0 | 243.0 | 238.0 | 231.0 | 234.0 | 244.4 | 262.0 | 230.0 |
| 27 | 231.0 | 224.0 | 230.0 | 245.0 | 235.0 | 220.0 | 239.0 | 302.0 | 294.0 | 283.0 | 320.0 | 313.0 | 307.0 | 300.0 | 299.0 | 292.0 | 278.0 | 267.0 | 252.0 | 250.0 | 219.0 | 223.0 | 219.0 | 213.0 | 260.6 | 320.0 | 213.0 |
| 28 | 199.0 | 244.0 | 184.0 | 152.0 | 142.0 | 124.0 | 126.0 | 101.0 | 87.0 | 46.0 | 13.0 | 6.0 | 8.0 | 292.0 | 270.0 | 265.0 | 270.0 | 267.0 | 279.0 | 254.0 | 200.0 | 164.0 | 153.0 | 161.0 | 167.0 | 292.0 | 6.0 |
| 29 | 168.0 | 157.0 | 154.0 | 261.0 | 136.0 | 159.0 | 264.0 | 293.0 | 256.0 | 257.0 | 268.0 | 264.0 | 262.0 | 260.0 | 263.0 | 265.0 | 258.0 | 260.0 | 255.0 | 245.0 | 240.0 | 240.0 | 235.0 | 230.0 | 235.4 | 293.0 | 136.0 |
| 30 | 231.0 | 228.0 | 80.0 | 249.0 | 181.0 | 137.0 | 140.0 | 1.0 | 316.0 | 342.0 | 5.0 | 2.0 | 326.0 | 291.0 | 284.0 | 273.0 | 275.0 | 270.0 | 250.0 | 233.0 | 240.0 | 236.0 | 236.0 | 141.0 | 312.0 | 342.0 | 1.0 |
| Mean | 201.1 | 204.2 | 202.2 | 206.3 | 196.5 | 192.1 | 215.5 | 304.4 | 306.0 | 296.8 | 302.0 | 300.2 | 297.9 | 293.0 | 302.9 | 283.0 | 278.2 | 284.6 | 281.6 | 205.1 | 209.0 | 205.2 | 204.1 | 193.3 | Monthly mean = | | 213.1 |
| Max. | 281.0 | 253.0 | 276.0 | 301.0 | 287.0 | 340.0 | 307.0 | 331.0 | 326.0 | 356.0 | 320.0 | 359.0 | 355.0 | 358.0 | 350.0 | 341.0 | 357.0 | 347.0 | 323.0 | 268.0 | 270.0 | 272.0 | 283.0 | 256.0 | Monthly max. = | | 359.0 |
| Min. | 87.0 | 141.0 | 80.0 | 90.0 | 112.0 | 75.0 | 111.0 | 1.0 | 28.0 | 6.0 | 5.0 | 2.0 | 3.0 | 4.0 | 2.0 | 6.0 | 13.0 | 2.0 | 18.0 | 47.0 | 132.0 | 143.0 | 146.0 | 109.0 | Monthly min. = | | 1.0 |

TOTAL NUMBER OF DATA HOURS IN MONTH: 720
Number of hours of bad or missing data: 0
**** designates missing or lost data

Current % recovery = 100.0

N/A: insufficient data available for calculation (a minimum of 75% is required)

table created at 18:25, 7/14/1994

MONTHLY SUMMARY
TEMPERATURE
(Degrees Celsius)
INPUT FILE: s7metjj4.met

Bechtel Environmental, Inc.

Met Data for Site 7
JUNE 1994

| Day | Hour 1 | 2 | 3 | 4 | 5 | 6 | 7 | 8 | 9 | 10 | 11 | 12 | 13 | 14 | 15 | 16 | 17 | 18 | 19 | 20 | 21 | 22 | 23 | 24 | Mean | Max. | Min. |
|---|---|---|---|---|---|---|---|---|---|---|---|---|---|---|---|---|---|---|---|---|---|---|---|---|---|---|---|
| 1 | 13.1 | 13.0 | 13.2 | 13.1 | 13.2 | 12.8 | 12.8 | 13.8 | 14.6 | 15.8 | 16.8 | 17.1 | 14.8 | 15.6 | 16.5 | 17.0 | 17.5 | 17.8 | 17.5 | 16.5 | 15.1 | 14.6 | 14.4 | 13.9 | 15.0 | 17.8 | 12.8 |
| 2 | 13.7 | 12.9 | 11.3 | 8.9 | 7.8 | 9.4 | 12.3 | 13.8 | 15.4 | 16.9 | 18.3 | 20.3 | 21.3 | 22.6 | 23.2 | 24.0 | 24.6 | 24.4 | 24.0 | 21.1 | 20.6 | 20.3 | 20.4 | 19.9 | 17.8 | 24.6 | 7.8 |
| 3 | 18.0 | 17.4 | 14.3 | 17.1 | 18.7 | 15.3 | 17.2 | 15.0 | 19.3 | 20.2 | 22.4 | 23.2 | 25.1 | 26.4 | 27.5 | 26.1 | 25.4 | 22.6 | 20.9 | 22.0 | 21.0 | 21.4 | 20.8 | 21.9 | 20.8 | 27.5 | 14.3 |
| 4 | 22.1 | 20.2 | 17.9 | 19.2 | 17.8 | 16.7 | 16.2 | 16.6 | 16.4 | 17.0 | 17.5 | 18.7 | 19.9 | 20.8 | 21.4 | 21.6 | 22.0 | 21.9 | 21.4 | 20.4 | 19.0 | 17.8 | 17.9 | 16.4 | 19.0 | 22.1 | 16.2 |
| 5 | 16.6 | 16.0 | 15.9 | 15.6 | 12.5 | 14.0 | 15.8 | 17.4 | 17.5 | 20.4 | 22.5 | 24.2 | 25.4 | 26.7 | 27.3 | 28.5 | 28.7 | 28.6 | 27.8 | 26.0 | 24.7 | 24.4 | 23.0 | 21.6 | 21.7 | 28.7 | 12.5 |
| 6 | 21.7 | 23.2 | 23.6 | 17.4 | 15.8 | 15.8 | 16.5 | 16.2 | 16.0 | 16.4 | 17.2 | 17.6 | 17.7 | 17.8 | 17.8 | 17.3 | 16.0 | 14.9 | 13.7 | 11.1 | 8.5 | 6.3 | 6.2 | 7.5 | 15.5 | 23.6 | 6.2 |
| 7 | 9.8 | 10.0 | 9.8 | 9.3 | 8.9 | 7.7 | 6.8 | 7.4 | 8.8 | 10.7 | 11.5 | 12.8 | 13.8 | 14.8 | 14.6 | 13.7 | 12.3 | 12.0 | 11.7 | 7.7 | 5.5 | 5.8 | 8.2 | 8.6 | 10.1 | 14.8 | 5.5 |
| 8 | 7.8 | 7.1 | 5.9 | 4.5 | 4.0 | 4.1 | 4.8 | 5.7 | 6.3 | 8.4 | 9.8 | 11.1 | 12.8 | 13.6 | 14.5 | 15.3 | 16.1 | 16.1 | 16.0 | 14.6 | 14.3 | 14.3 | 14.6 | 14.6 | 10.7 | 16.1 | 4.0 |
| 9 | 14.3 | 14.1 | 14.0 | 9.0 | 8.8 | 10.6 | 12.6 | 16.1 | 15.4 | 16.5 | 16.7 | 18.1 | 19.0 | 19.5 | 20.0 | 20.4 | 20.7 | 20.7 | 20.4 | 19.8 | 18.7 | 18.3 | 18.2 | 17.7 | 16.6 | 20.7 | 8.8 |
| 10 | 17.1 | 16.4 | 14.3 | 11.3 | 10.6 | 10.7 | 12.6 | 14.3 | 16.3 | 18.0 | 19.6 | 20.4 | 21.4 | 22.6 | 23.8 | 24.2 | 24.5 | 25.0 | 24.8 | 23.6 | 22.3 | 22.1 | 22.0 | 21.8 | 19.2 | 25.0 | 10.6 |
| 11 | 21.6 | 21.1 | 20.4 | 13.9 | 13.1 | 16.3 | 19.8 | 21.3 | 23.7 | 24.5 | 24.6 | 25.3 | 26.4 | 27.6 | 28.5 | 28.8 | 28.3 | 28.0 | 28.4 | 26.4 | 25.7 | 26.0 | 22.3 | 20.0 | 23.4 | 28.8 | 13.1 |
| 12 | 20.1 | 20.3 | 18.0 | 15.7 | 16.1 | 14.9 | 16.5 | 17.8 | 18.4 | 18.5 | 20.2 | 21.9 | 22.3 | 23.3 | 24.5 | 24.9 | 24.6 | 24.8 | 24.6 | 23.4 | 23.6 | 23.1 | 22.3 | 24.4 | 21.0 | 24.9 | 14.9 |
| 13 | 25.3 | 25.1 | 24.0 | 21.0 | 19.6 | 19.1 | 19.2 | 19.0 | 19.1 | 19.8 | 21.0 | 22.1 | 23.6 | 23.8 | 24.5 | 24.4 | 23.3 | 22.8 | 22.8 | 21.1 | 18.4 | 16.7 | 15.3 | 13.3 | 21.0 | 25.3 | 13.3 |
| 14 | 12.2 | 11.2 | 9.9 | 8.8 | 8.6 | 8.3 | 7.9 | 8.4 | 8.4 | 8.8 | 9.4 | 10.1 | 10.3 | 11.0 | 11.6 | 12.1 | 12.6 | 12.8 | 12.8 | 12.4 | 10.8 | 10.7 | 11.1 | 10.3 | 10.4 | 12.8 | 7.9 |
| 15 | 9.6 | 9.8 | 9.0 | 6.0 | 5.9 | 6.9 | 7.6 | 10.2 | 13.3 | 15.5 | 17.5 | 17.8 | 17.8 | 18.4 | 18.0 | 17.8 | 17.4 | 17.1 | 17.1 | 16.0 | 14.2 | 13.6 | 12.9 | 12.1 | 13.4 | 18.4 | 5.9 |
| 16 | 11.3 | 11.1 | 10.7 | 9.9 | 9.6 | 9.1 | 8.8 | 9.2 | 10.4 | 10.7 | 11.7 | 11.8 | 15.0 | 16.1 | 16.4 | 17.0 | 17.4 | 17.3 | 17.2 | 16.2 | 14.7 | 14.1 | 13.6 | 13.3 | 13.0 | 17.4 | 8.8 |
| 17 | 12.9 | 13.1 | 10.2 | 8.3 | 9.2 | 10.7 | 11.7 | 13.1 | 14.6 | 16.5 | 17.9 | 19.6 | 20.4 | 22.4 | 24.1 | 25.2 | 25.9 | 25.9 | 24.7 | 24.2 | 23.5 | 22.4 | 22.3 | 21.4 | 18.3 | 25.9 | 8.3 |
| 18 | 17.8 | 16.7 | 17.0 | 16.8 | 17.2 | 17.2 | 18.5 | 19.3 | 19.4 | 19.9 | 21.3 | 22.7 | 24.0 | 25.1 | 26.4 | 26.7 | 27.1 | 28.0 | 28.1 | 26.7 | 23.0 | 21.5 | 22.4 | 21.5 | 21.8 | 28.1 | 16.7 |
| 19 | 20.8 | 19.7 | 18.3 | 16.6 | 16.2 | 15.9 | 16.5 | 17.3 | 18.1 | 19.9 | 22.1 | 24.2 | 26.1 | 27.6 | 29.3 | 30.0 | 30.2 | 31.2 | 30.3 | 28.6 | 27.4 | 27.0 | 26.8 | 26.3 | 23.6 | 31.2 | 15.9 |
| 20 | 23.1 | 20.2 | 20.9 | 19.9 | 16.9 | 20.1 | 21.2 | 22.5 | 23.3 | 25.7 | 28.2 | 30.1 | 31.6 | 33.2 | 33.1 | 34.0 | 32.9 | 33.7 | 34.4 | 31.3 | 30.5 | 29.3 | 28.9 | 27.0 | 27.2 | 34.4 | 16.9 |
| 21 | 26.4 | 25.8 | 24.9 | 23.4 | 22.8 | 23.7 | 24.5 | 25.8 | 24.5 | 23.5 | 23.4 | 25.6 | 26.5 | 27.4 | 29.0 | 29.4 | 28.5 | 24.5 | 18.2 | 16.9 | 15.6 | 17.4 | 18.0 | 16.3 | 23.4 | 29.4 | 15.6 |
| 22 | 16.1 | 16.6 | 16.9 | 14.5 | 14.6 | 15.9 | 18.8 | 19.1 | 20.1 | 22.9 | 25.0 | 27.7 | 28.7 | 29.8 | 30.2 | 31.4 | 31.0 | 27.5 | 26.1 | 24.6 | 24.5 | 24.0 | 22.9 | 22.1 | 23.0 | 31.4 | 14.5 |
| 23 | 21.4 | 20.2 | 18.0 | 15.6 | 16.3 | 18.0 | 18.1 | 19.2 | 20.0 | 22.6 | 24.2 | 25.6 | 27.2 | 28.6 | 28.7 | 29.0 | 29.1 | 29.4 | 29.5 | 28.5 | 27.1 | 26.8 | 26.4 | 25.6 | 24.0 | 29.5 | 15.6 |
| 24 | 24.9 | 24.2 | 22.9 | 20.9 | 17.7 | 20.1 | 21.2 | 20.0 | 20.0 | 21.3 | 22.6 | 24.2 | 25.2 | 26.2 | 27.6 | 28.1 | 28.6 | 28.2 | 28.3 | 27.0 | 26.0 | 25.6 | 25.3 | 22.9 | 24.1 | 28.6 | 17.7 |
| 25 | 23.5 | 23.2 | 21.6 | 16.5 | 19.9 | 20.1 | 18.7 | 20.3 | 23.1 | 25.7 | 26.5 | 28.0 | 29.9 | 32.1 | 33.2 | 33.3 | 34.0 | 33.8 | 33.2 | 31.2 | 30.3 | 30.3 | 28.6 | 26.6 | 26.8 | 34.0 | 16.5 |
| 26 | 28.2 | 24.3 | 22.7 | 21.5 | 20.6 | 19.4 | 19.2 | 18.2 | 19.0 | 18.4 | 18.5 | 18.9 | 19.2 | 19.1 | 19.3 | 19.9 | 20.2 | 20.1 | 19.0 | 18.5 | 16.9 | 16.2 | 15.6 | 15.1 | 19.5 | 28.2 | 15.1 |
| 27 | 15.1 | 14.8 | 14.1 | 13.1 | 12.9 | 13.1 | 14.4 | 14.2 | 16.0 | 17.4 | 18.8 | 20.2 | 21.7 | 23.2 | 24.3 | 25.2 | 24.8 | 24.8 | 24.2 | 23.8 | 21.9 | 22.0 | 21.7 | 20.9 | 19.3 | 25.2 | 12.9 |
| 28 | 21.7 | 20.5 | 21.3 | 19.7 | 16.6 | 14.2 | 17.4 | 20.1 | 21.2 | 23.9 | 25.5 | 27.9 | 28.9 | 29.9 | 30.5 | 31.5 | 31.8 | 31.7 | 31.2 | 31.0 | 28.8 | 28.4 | 27.3 | 26.5 | 25.3 | 31.8 | 14.2 |
| 29 | 24.5 | 22.6 | 23.5 | 19.8 | 18.1 | 21.5 | 22.2 | 24.7 | 26.7 | 26.6 | 26.2 | 27.2 | 28.2 | 28.8 | 29.3 | 29.8 | 30.0 | 30.4 | 30.2 | 29.1 | 28.0 | 27.4 | 26.2 | 25.9 | 26.1 | 30.4 | 18.1 |
| 30 | 25.9 | 25.3 | 22.0 | 21.5 | 20.0 | 17.7 | 22.1 | 25.7 | 26.5 | 27.4 | 28.7 | 29.6 | 30.6 | 30.8 | 31.2 | 31.6 | 31.9 | 32.1 | 31.5 | 30.1 | 28.6 | 26.7 | 26.3 | 24.9 | 27.0 | 32.1 | 17.7 |
| Mean | 18.6 | 17.9 | 16.9 | 15.0 | 14.3 | 14.6 | 15.7 | 16.7 | 17.7 | 19.0 | 20.2 | 21.5 | 22.5 | 23.5 | 24.2 | 24.6 | 24.6 | 24.3 | 23.7 | 22.3 | 21.0 | 20.5 | 20.1 | 19.3 | Monthly mean = | | 19.9 |
| Max. | 28.2 | 25.8 | 24.9 | 23.4 | 22.8 | 23.7 | 24.5 | 25.8 | 26.7 | 27.4 | 28.7 | 30.1 | 31.6 | 33.2 | 33.2 | 34.0 | 34.0 | 33.8 | 34.4 | 31.3 | 30.5 | 30.3 | 28.9 | 27.0 | Monthly max. = | | 34.4 |
| Min. | 7.8 | 7.1 | 5.9 | 4.5 | 4.0 | 4.1 | 4.8 | 5.7 | 6.3 | 8.4 | 9.4 | 10.1 | 10.3 | 11.0 | 11.6 | 12.1 | 12.3 | 12.0 | 11.7 | 7.7 | 5.5 | 5.8 | 6.2 | 7.5 | Monthly min. = | | 4.0 |

TOTAL NUMBER OF DATA HOURS IN MONTH: 720
Number of hours of bad or missing data: 0
**** designates missing or lost data

Current % recovery = 100.0

N/A: insufficient data available for calculation (a minimum of 75% is required)

table created at 18:25, 7/14/1994

MONTHLY SUMMARY
SIGMA THETA
(Degrees)
INPUT FILE: s7metjj4.met

Bechtel Environmental, Inc.

Met Data for Site 7
JUNE 1994

| Day | Hour 1 | 2 | 3 | 4 | 5 | 6 | 7 | 8 | 9 | 10 | 11 | 12 | 13 | 14 | 15 | 16 | 17 | 18 | 19 | 20 | 21 | 22 | 23 | 24 | Mean | Max. | Min. |
|---|---|---|---|---|---|---|---|---|---|---|---|---|---|---|---|---|---|---|---|---|---|---|---|---|---|---|---|
| 1 | 10. | 9. | 9. | 11. | 10. | 15. | 13. | 13. | 11. | 13. | 16. | 13. | 8. | 11. | 12. | 19. | 15. | 16. | 16. | 12. | 10. | 9. | 9. | 10. | N/A | 19. | 8. |
| 2 | 10. | 16. | 49. | 15. | 16. | 46. | 39. | 24. | 27. | 27. | 32. | 35. | 39. | 25. | 20. | 18. | 13. | 11. | 11. | 23. | 7. | 5. | 5. | 6. | N/A | 49. | 5. |
| 3 | 31. | 23. | 19. | 8. | 25. | 61. | 29. | 19. | 19. | 16. | 14. | 12. | 13. | 10. | 36. | 16. | 11. | 12. | 26. | 28. | 52. | 15. | 18. | 13. | N/A | 61. | 8. |
| 4 | 16. | 46. | 51. | 10. | 9. | 10. | 9. | 12. | 11. | 15. | 12. | 10. | 17. | 17. | 16. | 12. | 13. | 11. | 8. | 12. | 12. | 11. | 45. | 31. | N/A | 51. | 8. |
| 5 | 35. | 31. | 56. | 26. | 50. | 44. | 48. | 55. | 15. | 20. | 19. | 23. | 19. | 19. | 46. | 61. | 30. | 17. | 12. | 11. | 9. | 7. | 8. | 5. | N/A | 61. | 5. |
| 6 | 6. | 9. | 39. | 8. | 7. | 8. | 10. | 13. | 11. | 13. | 14. | 13. | 10. | 11. | 9. | 10. | 8. | 11. | 8. | 9. | 15. | 20. | 8. | 8. | N/A | 39. | 6. |
| 7 | 8. | 9. | 9. | 10. | 10. | 13. | 12. | 10. | 13. | 16. | 17. | 17. | 20. | 19. | 12. | 20. | 13. | 14. | 13. | 11. | 15. | 10. | 10. | 9. | N/A | 20. | 8. |
| 8 | 9. | 10. | 12. | 14. | 11. | 8. | 10. | 12. | 12. | 15. | 16. | 20. | 21. | 20. | 13. | 13. | 11. | 13. | 14. | 12. | 8. | 12. | 11. | 10. | N/A | 21. | 8. |
| 9 | 8. | 8. | 56. | 27. | 14. | 7. | 31. | 44. | 15. | 23. | 14. | 20. | 27. | 19. | 18. | 15. | 16. | 15. | 13. | 11. | 9. | 8. | 8. | 8. | N/A | 56. | 7. |
| 10 | 8. | 8. | 20. | 29. | 41. | 30. | 45. | 15. | 16. | 15. | 18. | 14. | 14. | 18. | 23. | 16. | 13. | 15. | 16. | 15. | 10. | 7. | 6. | 7. | N/A | 45. | 6. |
| 11 | 9. | 11. | 22. | 41. | 35. | 27. | 14. | 26. | 46. | 22. | 21. | 15. | 15. | 22. | 16. | 12. | 12. | 13. | 16. | 9. | 11. | 19. | 26. | 21. | N/A | 46. | 9. |
| 12 | 19. | 7. | 24. | 33. | 52. | 42. | 24. | 13. | 12. | 13. | 13. | 19. | 17. | 23. | 21. | 18. | 13. | 15. | 15. | 3. | 8. | 6. | 5. | 9. | N/A | 52. | 3. |
| 13 | 10. | 10. | 12. | 11. | 10. | 9. | 9. | 13. | 14. | 15. | 17. | 14. | 16. | 12. | 12. | 10. | 10. | 10. | 15. | 11. | 8. | 10. | 19. | 16. | N/A | 19. | 8. |
| 14 | 17. | 16. | 16. | 11. | 14. | 15. | 14. | 16. | 14. | 15. | 10. | 11. | 14. | 15. | 12. | 13. | 10. | 9. | 8. | 15. | 13. | 15. | 13. | 73. | N/A | 73. | 8. |
| 15 | 21. | 11. | 32. | 18. | 9. | 57. | 36. | 14. | 22. | 32. | 31. | 49. | 18. | 17. | 12. | 14. | 11. | 13. | 12. | 11. | 15. | 10. | 13. | 10. | N/A | 57. | 9. |
| 16 | 9. | 9. | 14. | 27. | 11. | 11. | 9. | 9. | 13. | 15. | 13. | 11. | 17. | 18. | 14. | 14. | 12. | 10. | 9. | 11. | 14. | 9. | 10. | 9. | N/A | 27. | 9. |
| 17 | 10. | 9. | 36. | 7. | 6. | 10. | 15. | 16. | 22. | 20. | 16. | 16. | 14. | 14. | 13. | 13. | 19. | 18. | 16. | 28. | 4. | 11. | 5. | 18. | N/A | 36. | 4. |
| 18 | 29. | 33. | 66. | 11. | 12. | 10. | 16. | 17. | 17. | 11. | 12. | 14. | 21. | 22. | 27. | 20. | 13. | 15. | 16. | 19. | 23. | 29. | 8. | 10. | N/A | 66. | 8. |
| 19 | 10. | 10. | 8. | 31. | 9. | 8. | 12. | 11. | 15. | 13. | 12. | 15. | 19. | 19. | 21. | 14. | 12. | 18. | 9. | 11. | 4. | 3. | 4. | 4. | N/A | 31. | 3. |
| 20 | 28. | 25. | 45. | 36. | 23. | 36. | 87. | 54. | 23. | 12. | 14. | 11. | 13. | 20. | 9. | 14. | 14. | 9. | 8. | 23. | 8. | 14. | 17. | 12. | N/A | 87. | 8. |
| 21 | 9. | 6. | 8. | 26. | 60. | 32. | 14. | 41. | 14. | 8. | 8. | 11. | 16. | 13. | 18. | 21. | 18. | 49. | 42. | 13. | 10. | 14. | 51. | 9. | N/A | 60. | 6. |
| 22 | 9. | 6. | 10. | 33. | 5. | 7. | 71. | 30. | 19. | 20. | 24. | 48. | 35. | 23. | 27. | 44. | 39. | 12. | 28. | 17. | 5. | 7. | 8. | 6. | N/A | 71. | 5. |
| 23 | 4. | 32. | 32. | 43. | 47. | 31. | 44. | 27. | 18. | 15. | 16. | 12. | 14. | 11. | 11. | 12. | 8. | 13. | 16. | 11. | 9. | 9. | 9. | 9. | N/A | 47. | 4. |
| 24 | 8. | 13. | 37. | 73. | 75. | 42. | 9. | 10. | 15. | 14. | 9. | 15. | 11. | 11. | 11. | 11. | 15. | 14. | 12. | 12. | 10. | 8. | 33. | 41. | N/A | 75. | 8. |
| 25 | 39. | 14. | 27. | 44. | 7. | 26. | 37. | 12. | 20. | 26. | 26. | 22. | 20. | 19. | 19. | 11. | 19. | 16. | 14. | 7. | 6. | 8. | 30. | 37. | N/A | 44. | 6. |
| 26 | 11. | 11. | 10. | 11. | 14. | 13. | 13. | 16. | 15. | 15. | 16. | 14. | 16. | 17. | 18. | 13. | 15. | 14. | 14. | 14. | 14. | 10. | 8. | 9. | N/A | 18. | 8. |
| 27 | 9. | 6. | 11. | 18. | 9. | 9. | 25. | 24. | 15. | 18. | 19. | 20. | 16. | 21. | 19. | 15. | 13. | 13. | 15. | 12. | 14. | 10. | 19. | 31. | N/A | 31. | 6. |
| 28 | 27. | 38. | 8. | 18. | 42. | 12. | 46. | 23. | 14. | 17. | 18. | 20. | 20. | 20. | 17. | 26. | 31. | 15. | 12. | 12. | 8. | 8. | 7. | 11. | N/A | 46. | 7. |
| 29 | 60. | 33. | 48. | 57. | 31. | 18. | 15. | 58. | 18. | 14. | 8. | 10. | 10. | 9. | 9. | 10. | 11. | 12. | 15. | 15. | 11. | 10. | 10. | 8. | N/A | 60. | 8. |
| 30 | 7. | 6. | 57. | 77. | 47. | 44. | 63. | 32. | 20. | 22. | 22. | 23. | 24. | 16. | 13. | 14. | 12. | 12. | 13. | 12. | 13. | 12. | 14. | 47. | N/A | 77. | 6. |
| Mean | N/A | N/A | N/A | N/A | N/A | N/A | N/A | N/A | N/A | N/A | N/A | N/A | N/A | N/A | N/A | N/A | N/A | N/A | N/A | N/A | N/A | N/A | N/A | N/A | Monthly mean = | | N/A |
| Max. | 60. | 46. | 66. | 77. | 75. | 61. | 87. | 58. | 46. | 32. | 32. | 49. | 39. | 25. | 46. | 61. | 39. | 49. | 42. | 28. | 52. | 29. | 51. | 73. | Monthly max. = | | 87. |
| Min. | 4. | 6. | 8. | 7. | 5. | 7. | 9. | 9. | 11. | 8. | 8. | 10. | 8. | 9. | 9. | 10. | 8. | 9. | 8. | 3. | 4. | 3. | 4. | 4. | Monthly min. = | | 3. |

TOTAL NUMBER OF DATA HOURS IN MONTH: 720
Number of hours of bad or missing data: 0
**** designates missing or lost data

Current % recovery = 100.0

N/A: A sigma theta mean is not physically meaningful.

table created at 18:25, 7/14/1994

MONTHLY SUMMARY
WIND SPEED
(Miles Per Hour)
INPUT FILE: s7metJ04.met

Bechtel Environmental, Inc.

Met Data for Site 7
JULY 1994

| Day \ Hour | 1 | 2 | 3 | 4 | 5 | 6 | 7 | 8 | 9 | 10 | 11 | 12 | 13 | 14 | 15 | 16 | 17 | 18 | 19 | 20 | 21 | 22 | 23 | 24 | Mean | Max. | Min. |
|---|---|---|---|---|---|---|---|---|---|---|---|---|---|---|---|---|---|---|---|---|---|---|---|---|---|---|---|
| 1 | 10.7 | 10.4 | 12.1 | 15.1 | 19.5 | 24.0 | 20.2 | 17.8 | 17.1 | 19.2 | 18.9 | 20.5 | 19.7 | 22.4 | 22.2 | 22.9 | 18.3 | 19.2 | 17.9 | 13.6 | 12.1 | 11.5 | 11.3 | 8.0 | 16.9 | 24.0 | 8.0 |
| 2 | 3.1 | 9.6 | 10.0 | 12.2 | 17.5 | 27.8 | 30.0 | 26.9 | 26.1 | 24.8 | 25.8 | 24.3 | 30.2 | 27.3 | 22.8 | 25.9 | 22.0 | 23.6 | 20.1 | 16.3 | 16.1 | 20.9 | 24.2 | 23.0 | 21.3 | 30.2 | 3.1 |
| 3 | 21.1 | 20.9 | 19.9 | 20.7 | 24.7 | 27.9 | 27.3 | 22.3 | 18.9 | 18.1 | 22.8 | 24.9 | 24.8 | 22.9 | 27.0 | 27.1 | 26.1 | 21.0 | 19.5 | 20.4 | 20.4 | 24.8 | 25.4 | 25.6 | 23.1 | 27.9 | 18.1 |
| 4 | 22.4 | 19.3 | 10.9 | 17.4 | 17.4 | 17.4 | 13.8 | 12.1 | 16.9 | 19.3 | 16.6 | 17.9 | 19.3 | 21.9 | 25.1 | 19.6 | 21.2 | 20.2 | 14.3 | 10.4 | 10.4 | 9.5 | 9.4 | 8.8 | 16.3 | 25.1 | 8.8 |
| 5 | 5.9 | 9.9 | 11.9 | 11.9 | 12.4 | 14.1 | 9.9 | 16.5 | 9.2 | 11.2 | 14.1 | 12.5 | 9.5 | 10.6 | 27.6 | 36.1 | 40.9 | 33.6 | 32.0 | 18.7 | 18.1 | 15.9 | 12.4 | 12.4 | 17.0 | 40.9 | 5.9 |
| 6 | 13.0 | 18.6 | 21.2 | 23.2 | 16.7 | 19.6 | 20.7 | 19.1 | 16.0 | 19.2 | 19.6 | 15.6 | 11.6 | 9.8 | 7.5 | 7.3 | 9.8 | 9.9 | 7.1 | 4.7 | 8.1 | 7.7 | 8.6 | 7.5 | 13.4 | 23.2 | 4.7 |
| 7 | 7.6 | 4.9 | 3.9 | 6.7 | 3.7 | 5.0 | 2.5 | 2.7 | 4.6 | 5.7 | 7.5 | 7.3 | 7.8 | 8.6 | 8.2 | 6.2 | 5.6 | 4.5 | 4.2 | 6.9 | 7.3 | 6.9 | 4.1 | 4.6 | 5.7 | 8.6 | 2.5 |
| 8 | 1.9 | 1.8 | 2.6 | 3.6 | 2.0 | 1.4 | 2.4 | 2.9 | 3.6 | 5.5 | 6.3 | 8.3 | 9.7 | 11.4 | 10.2 | 10.1 | 7.6 | 7.2 | 9.3 | 5.1 | 4.5 | 6.7 | 10.2 | 6.6 | 5.9 | 11.4 | 1.4 |
| 9 | 9.2 | 10.9 | 11.3 | 2.4 | 9.5 | 6.8 | 2.4 | 5.2 | 8.3 | 7.4 | 6.6 | 6.6 | 7.8 | 8.0 | 9.7 | 14.4 | 12.3 | 10.0 | 17.2 | 12.8 | 13.9 | 12.9 | 12.7 | 14.4 | 9.7 | 17.2 | 2.4 |
| 10 | 12.3 | 4.6 | 8.7 | 9.0 | 23.5 | 26.7 | 30.4 | 29.7 | 25.7 | 22.9 | 21.3 | 25.6 | 26.9 | 20.3 | 25.2 | 30.2 | 29.7 | 25.7 | 22.9 | 22.7 | 24.4 | 26.5 | 25.6 | 23.7 | 22.7 | 30.4 | 4.6 |
| 11 | 20.9 | 21.2 | 15.9 | 17.0 | 15.9 | 11.7 | 10.7 | 14.6 | 10.3 | 8.2 | 14.9 | 17.6 | 21.5 | 23.4 | 24.6 | 26.2 | 26.1 | 23.8 | 20.2 | 23.0 | 22.2 | 24.0 | 23.1 | 21.5 | 19.1 | 26.2 | 8.2 |
| 12 | 19.3 | 17.3 | 18.8 | 18.7 | 13.0 | 6.2 | 7.8 | 7.0 | 13.3 | 12.5 | 11.6 | 13.0 | 9.7 | 12.6 | 17.5 | 19.8 | 22.7 | 25.6 | 22.8 | 18.4 | 20.5 | 26.5 | 25.3 | 28.8 | 17.0 | 28.8 | 6.2 |
| 13 | 23.5 | 24.5 | 14.7 | 5.5 | 4.9 | 4.1 | 4.2 | 3.4 | 4.9 | 7.0 | 8.7 | 8.1 | 6.6 | 8.4 | 9.6 | 11.9 | 11.5 | 10.5 | 14.0 | 10.5 | 3.0 | 2.9 | 6.1 | 6.3 | 9.0 | 24.5 | 2.9 |
| 14 | 8.4 | 9.3 | 3.3 | .9 | 1.1 | 3.6 | 1.4 | 1.9 | 4.5 | 13.4 | 17.7 | 16.6 | 16.9 | 18.2 | 20.8 | 23.8 | 22.6 | 22.1 | 18.8 | 16.6 | 17.5 | 11.9 | 5.6 | 2.9 | 11.7 | 23.8 | .9 |
| 15 | 8.4 | 4.2 | 4.7 | 3.1 | 3.7 | 2.8 | 2.8 | 3.4 | 4.8 | 5.3 | 5.3 | 6.8 | 9.3 | 9.2 | 8.2 | 8.6 | 8.3 | 11.0 | 9.7 | 10.6 | 17.3 | 19.9 | 19.7 | 10.6 | 8.2 | 19.9 | 2.8 |
| 16 | 4.1 | 10.1 | 10.6 | 4.2 | 3.6 | 4.6 | 3.6 | 7.4 | 9.2 | 8.5 | 8.1 | 10.2 | 9.8 | 9.4 | 11.8 | 16.4 | 19.6 | 18.8 | 13.8 | 15.4 | 17.9 | 16.9 | 11.9 | 12.1 | 10.7 | 19.6 | 3.6 |
| 17 | 13.7 | 12.0 | 5.4 | 4.7 | 2.8 | 9.4 | 9.2 | 5.6 | 2.7 | 8.9 | 10.8 | 16.8 | 15.6 | 16.3 | 15.7 | 19.6 | 21.1 | 20.3 | 15.6 | 17.3 | 20.4 | 18.8 | 18.9 | 15.1 | 13.2 | 21.1 | 2.7 |
| 18 | 6.5 | 14.3 | 16.5 | 15.0 | 6.4 | 4.2 | 11.3 | 21.6 | 17.7 | 21.5 | 21.8 | 23.5 | 26.9 | 27.5 | 31.5 | 34.5 | 32.6 | 34.5 | 26.6 | 30.5 | 30.1 | 25.5 | 24.8 | 25.5 | 22.1 | 34.5 | 4.2 |
| 19 | 26.5 | 24.8 | 22.9 | 17.4 | 17.7 | 18.7 | 19.8 | 21.1 | 20.6 | 15.7 | 9.4 | 7.8 | 7.1 | 10.6 | 9.5 | 12.2 | 9.1 | 8.1 | 9.5 | 9.0 | 1.9 | 4.9 | 6.5 | 10.4 | 13.4 | 26.5 | 1.9 |
| 20 | 13.4 | 15.7 | 5.7 | 1.3 | 1.6 | 3.1 | 5.5 | 3.6 | 3.6 | 5.7 | 13.8 | 18.1 | 16.9 | 16.0 | 12.7 | 13.9 | 14.1 | 12.0 | 9.4 | 8.3 | 6.2 | 6.2 | 3.9 | 6.6 | 9.1 | 18.1 | 1.3 |
| 21 | 3.9 | 1.4 | 2.0 | 3.2 | 1.9 | 4.2 | 8.1 | 2.9 | 4.4 | 4.8 | 6.2 | 7.0 | 7.7 | 8.9 | 11.0 | 9.9 | 9.4 | 9.1 | 6.0 | 4.3 | 7.1 | 11.2 | 12.7 | 7.1 | 6.4 | 12.7 | 1.4 |
| 22 | 1.8 | 3.5 | 3.5 | 5.9 | 3.0 | 3.4 | 2.0 | 2.4 | 4.7 | 6.8 | 6.6 | 6.5 | 8.7 | 11.1 | 13.6 | 13.1 | 9.9 | 8.9 | 5.7 | 11.1 | 22.8 | 30.9 | 30.0 | 24.4 | 10.0 | 30.9 | 1.8 |
| 23 | 15.0 | 13.8 | 7.0 | 6.6 | 22.8 | 15.0 | 9.9 | 6.7 | 6.3 | 8.2 | 8.0 | 9.6 | 11.0 | 10.5 | 10.8 | 18.3 | 27.1 | 20.4 | 17.3 | 11.4 | 8.1 | 6.5 | 10.0 | 9.6 | 12.1 | 27.1 | 6.3 |
| 24 | 7.9 | 11.6 | 5.5 | 6.2 | 4.0 | 4.1 | 6.6 | 10.2 | 6.1 | 5.4 | 5.1 | 6.3 | 6.4 | 10.3 | 9.7 | 12.1 | 11.6 | 13.4 | 11.9 | 10.2 | 11.4 | 13.1 | 16.2 | 13.1 | 9.1 | 16.2 | 4.0 |
| 25 | 4.5 | 5.2 | 6.7 | 7.7 | 5.4 | 2.2 | 6.8 | 6.7 | 4.9 | 5.3 | 6.6 | 7.2 | 7.1 | 9.2 | 8.6 | 9.0 | 17.1 | 17.8 | 12.8 | 15.5 | 16.8 | 13.0 | 13.0 | 12.1 | 9.2 | 17.8 | 2.2 |
| 26 | 11.9 | 6.8 | 9.7 | 6.1 | 1.5 | 2.7 | 2.2 | 1.6 | 5.5 | 7.2 | 6.5 | 7.4 | 8.5 | 8.5 | 10.2 | 11.4 | 14.7 | 24.5 | 22.8 | 15.0 | 12.4 | 12.6 | 10.4 | 7.7 | 9.5 | 24.5 | 1.5 |
| 27 | 7.0 | 4.1 | 2.5 | 2.4 | 3.6 | 5.8 | 3.8 | 4.4 | 2.9 | 6.3 | 6.4 | 5.5 | 7.4 | 7.2 | 27.1 | 19.4 | 15.1 | 12.4 | 9.6 | 10.4 | 13.1 | 6.3 | 12.0 | 16.6 | 8.8 | 27.1 | 2.4 |
| 28 | 8.1 | 3.8 | 3.6 | 6.0 | 8.1 | 4.4 | 2.2 | 2.3 | 2.8 | 5.4 | 6.8 | 8.1 | 6.0 | 10.1 | 13.3 | 14.7 | 16.3 | 16.7 | 18.9 | 9.4 | 11.7 | 12.1 | 9.8 | 7.4 | 8.7 | 18.9 | 2.2 |
| 29 | 10.1 | 6.7 | 4.5 | 1.5 | 1.6 | 1.4 | 1.4 | 3.4 | 6.3 | 5.9 | 5.4 | 6.7 | 7.3 | 6.5 | 7.8 | 9.0 | 9.8 | 7.4 | 21.1 | 14.5 | 9.2 | 12.0 | 9.3 | 5.1 | 7.2 | 21.1 | 1.4 |
| 30 | 6.1 | 4.5 | 5.6 | 8.0 | 1.6 | 3.4 | 1.7 | 1.6 | 3.8 | 4.9 | 4.7 | 9.1 | 9.8 | 15.3 | 15.2 | 13.5 | 14.1 | 19.9 | 15.3 | 9.2 | 7.5 | 7.1 | 6.7 | 7.3 | 8.2 | 19.9 | 1.6 |
| 31 | 12.7 | 12.8 | 7.0 | 2.8 | 1.1 | 7.4 | 5.3 | 2.2 | 8.1 | 8.2 | 8.4 | 9.3 | 8.1 | 10.4 | 11.4 | 14.8 | 13.0 | 9.2 | 11.3 | 37.9 | 5.6 | .9 | 10.3 | 7.9 | 9.4 | 37.9 | .9 |
| Mean | 11.0 | 10.9 | 9.3 | 8.6 | 8.8 | 9.5 | 9.2 | 9.3 | 9.5 | 10.6 | 11.4 | 12.4 | 12.8 | 13.6 | 15.7 | 17.2 | 17.4 | 16.8 | 15.4 | 14.2 | 13.5 | 13.8 | 13.9 | 12.7 | Monthly mean = | | 12.4 |
| Max. | 26.5 | 24.8 | 22.9 | 23.2 | 24.7 | 27.9 | 30.4 | 29.7 | 26.1 | 24.8 | 25.8 | 25.6 | 30.2 | 27.5 | 31.5 | 36.1 | 40.9 | 34.5 | 32.0 | 37.9 | 30.1 | 30.9 | 30.0 | 28.8 | Monthly max. = | | 40.9 |
| Min. | 1.8 | 1.4 | 2.0 | .9 | 1.1 | 1.4 | 1.4 | 1.6 | 2.7 | 4.8 | 4.7 | 5.5 | 6.0 | 6.5 | 7.5 | 6.2 | 5.6 | 4.5 | 4.2 | 4.3 | 1.9 | .9 | 3.9 | 2.9 | Monthly min. = | | .9 |

TOTAL NUMBER OF DATA HOURS IN MONTH: 744
Number of hours of bad or missing data: 0
**** designates missing or lost data

Current % recovery = 100.0

N/A: insufficient data available for calculation (a minimum of 75% is required)

table created at 11:34,12/14/1994

MONTHLY SUMMARY
WIND DIRECTION
(Degrees)
INPUT FILE: s7metJ04.met

Bechtel Environmental, Inc.

Met Data for Site 7
JULY 1994

| Day | Hour 1 | 2 | 3 | 4 | 5 | 6 | 7 | 8 | 9 | 10 | 11 | 12 | 13 | 14 | 15 | 16 | 17 | 18 | 19 | 20 | 21 | 22 | 23 | 24 | Mean | Max. | Min. |
|---|---|---|---|---|---|---|---|---|---|---|---|---|---|---|---|---|---|---|---|---|---|---|---|---|---|---|---|
| 1 | 151.0 | 197.0 | 223.0 | 228.0 | 228.0 | 229.0 | 234.0 | 239.0 | 243.0 | 253.0 | 259.0 | 269.0 | 284.0 | 279.0 | 274.0 | 275.0 | 272.0 | 274.0 | 260.0 | 235.0 | 227.0 | 230.0 | 214.0 | 211.0 | 241.2 | 284.0 | 151.0 |
| 2 | 176.0 | 198.0 | 202.0 | 222.0 | 233.0 | 234.0 | 232.0 | 232.0 | 237.0 | 236.0 | 247.0 | 255.0 | 264.0 | 263.0 | 253.0 | 264.0 | 258.0 | 260.0 | 259.0 | 261.0 | 242.0 | 229.0 | 230.0 | 234.0 | 238.4 | 264.0 | 176.0 |
| 3 | 231.0 | 227.0 | 230.0 | 230.0 | 233.0 | 232.0 | 233.0 | 230.0 | 239.0 | 248.0 | 260.0 | 265.0 | 267.0 | 267.0 | 269.0 | 268.0 | 258.0 | 247.0 | 239.0 | 228.0 | 228.0 | 222.0 | 225.0 | 228.0 | 241.8 | 269.0 | 222.0 |
| 4 | 228.0 | 233.0 | 259.0 | 244.0 | 240.0 | 234.0 | 239.0 | 243.0 | 258.0 | 257.0 | 258.0 | 271.0 | 278.0 | 270.0 | 266.0 | 266.0 | 265.0 | 266.0 | 255.0 | 232.0 | 209.0 | 222.0 | 208.0 | 208.0 | 246.2 | 278.0 | 208.0 |
| 5 | 190.0 | 145.0 | 140.0 | 144.0 | 148.0 | 138.0 | 131.0 | 128.0 | 177.0 | 272.0 | 285.0 | 294.0 | 301.0 | 314.0 | 269.0 | 246.0 | 251.0 | 262.0 | 265.0 | 251.0 | 244.0 | 243.0 | 206.0 | 207.0 | 218.8 | 314.0 | 128.0 |
| 6 | 217.0 | 235.0 | 229.0 | 222.0 | 231.0 | 238.0 | 220.0 | 227.0 | 237.0 | 242.0 | 240.0 | 251.0 | 247.0 | 257.0 | 268.0 | 268.0 | 279.0 | 327.0 | 47.0 | 92.0 | 102.0 | 115.0 | 124.0 | 131.0 | 210.2 | 327.0 | 47.0 |
| 7 | 123.0 | 98.0 | 138.0 | 129.0 | 137.0 | 161.0 | 268.0 | 21.0 | 337.0 | 4.0 | 17.0 | 12.0 | 7.0 | 9.0 | 24.0 | 13.0 | 33.0 | 26.0 | 33.0 | 65.0 | 119.0 | 135.0 | 129.0 | 264.0 | 50.9 | 337.0 | 4.0 |
| 8 | 248.0 | 119.0 | 235.0 | 279.0 | 146.0 | 224.0 | 280.0 | 12.0 | 340.0 | 19.0 | 2.0 | 337.0 | 317.0 | 313.0 | 322.0 | 319.0 | 18.0 | 18.0 | 325.0 | 272.0 | 210.0 | 203.0 | 173.0 | 167.0 | 339.1 | 340.0 | 2.0 |
| 9 | 140.0 | 147.0 | 141.0 | 279.0 | 139.0 | 151.0 | 76.0 | 96.0 | 93.0 | 44.0 | 33.0 | 15.0 | 20.0 | 354.0 | 305.0 | 238.0 | 207.0 | 243.0 | 230.0 | 219.0 | 208.0 | 201.0 | 174.0 | 188.0 | 164.2 | 354.0 | 15.0 |
| 10 | 198.0 | 136.0 | 251.0 | 239.0 | 235.0 | 239.0 | 236.0 | 239.0 | 243.0 | 246.0 | 241.0 | 256.0 | 261.0 | 247.0 | 245.0 | 258.0 | 258.0 | 255.0 | 258.0 | 233.0 | 228.0 | 228.0 | 235.0 | 231.0 | 237.3 | 261.0 | 136.0 |
| 11 | 233.0 | 233.0 | 230.0 | 234.0 | 217.0 | 238.0 | 248.0 | 269.0 | 274.0 | 302.0 | 260.0 | 264.0 | 267.0 | 264.0 | 264.0 | 263.0 | 261.0 | 255.0 | 240.0 | 239.0 | 234.0 | 228.0 | 230.0 | 229.0 | 249.0 | 302.0 | 217.0 |
| 12 | 235.0 | 236.0 | 235.0 | 234.0 | 243.0 | 294.0 | 265.0 | 294.0 | 247.0 | 262.0 | 260.0 | 283.0 | 294.0 | 279.0 | 277.0 | 259.0 | 255.0 | 258.0 | 259.0 | 239.0 | 233.0 | 228.0 | 236.0 | 231.0 | 255.7 | 294.0 | 228.0 |
| 13 | 237.0 | 238.0 | 249.0 | 297.0 | 49.0 | 29.0 | 356.0 | 352.0 | 29.0 | 36.0 | 16.0 | 15.0 | 8.0 | 344.0 | 294.0 | 296.0 | 279.0 | 266.0 | 267.0 | 260.0 | 109.0 | 225.0 | 217.0 | 206.0 | 314.8 | 356.0 | 8.0 |
| 14 | 142.0 | 215.0 | 149.0 | 284.0 | 275.0 | 129.0 | 197.0 | 303.0 | 304.0 | 262.0 | 263.0 | 279.0 | 287.0 | 283.0 | 270.0 | 279.0 | 259.0 | 259.0 | 255.0 | 253.0 | 237.0 | 269.0 | 12.0 | 285.0 | 239.6 | 304.0 | 12.0 |
| 15 | 263.0 | 318.0 | 210.0 | 55.0 | 294.0 | 360.0 | 50.0 | 338.0 | 330.0 | 337.0 | 354.0 | 9.0 | 358.0 | 11.0 | 333.0 | 340.0 | 353.0 | 263.0 | 249.0 | 242.0 | 228.0 | 227.0 | 228.0 | 242.0 | 309.7 | 360.0 | 9.0 |
| 16 | 201.0 | 222.0 | 248.0 | 139.0 | 16.0 | 267.0 | 317.0 | 287.0 | 281.0 | 299.0 | 328.0 | 287.0 | 297.0 | 280.0 | 287.0 | 264.0 | 260.0 | 260.0 | 249.0 | 231.0 | 227.0 | 221.0 | 220.0 | 222.0 | 276.3 | 328.0 | 16.0 |
| 17 | 225.0 | 226.0 | 255.0 | 258.0 | 273.0 | 233.0 | 239.0 | 255.0 | 348.0 | 265.0 | 276.0 | 283.0 | 277.0 | 268.0 | 259.0 | 258.0 | 252.0 | 255.0 | 247.0 | 235.0 | 227.0 | 236.0 | 229.0 | 236.0 | 254.8 | 348.0 | 225.0 |
| 18 | 247.0 | 228.0 | 230.0 | 233.0 | 242.0 | 253.0 | 243.0 | 236.0 | 245.0 | 241.0 | 248.0 | 252.0 | 262.0 | 259.0 | 255.0 | 258.0 | 258.0 | 260.0 | 248.0 | 239.0 | 237.0 | 237.0 | 241.0 | 240.0 | 245.5 | 262.0 | 228.0 |
| 19 | 240.0 | 239.0 | 236.0 | 236.0 | 233.0 | 236.0 | 238.0 | 252.0 | 260.0 | 256.0 | 290.0 | 360.0 | 335.0 | 291.0 | 291.0 | 268.0 | 255.0 | 257.0 | 268.0 | 273.0 | 350.0 | 208.0 | 227.0 | 226.0 | 263.5 | 360.0 | 208.0 |
| 20 | 238.0 | 234.0 | 261.0 | 258.0 | 247.0 | 150.0 | 256.0 | 312.0 | 324.0 | .0 | 13.0 | 11.0 | 13.0 | 10.0 | 12.0 | 20.0 | 17.0 | 31.0 | 37.0 | 45.0 | 79.0 | 109.0 | 59.0 | 87.0 | 357.6 | 324.0 | .0 |
| 21 | 76.0 | 285.0 | 268.0 | 257.0 | 250.0 | 124.0 | 122.0 | 21.0 | 32.0 | 10.0 | 21.0 | 6.0 | 2.0 | 1.0 | 11.0 | 353.0 | 337.0 | 357.0 | 24.0 | 101.0 | 133.0 | 150.0 | 156.0 | 203.0 | 17.5 | 357.0 | 1.0 |
| 22 | 134.0 | 177.0 | 235.0 | 125.0 | 130.0 | 148.0 | 246.0 | 58.0 | 70.0 | 59.0 | 32.0 | 360.0 | 1.0 | 348.0 | 318.0 | 304.0 | 329.0 | 11.0 | 20.0 | 163.0 | 162.0 | 152.0 | 155.0 | 162.0 | 57.5 | 360.0 | 1.0 |
| 23 | 210.0 | 139.0 | 191.0 | 192.0 | 233.0 | 208.0 | 152.0 | 174.0 | 119.0 | 74.0 | 46.0 | 45.0 | 8.0 | 9.0 | 348.0 | 266.0 | 204.0 | 192.0 | 140.0 | 200.0 | 66.0 | 82.0 | 127.0 | 141.0 | 148.6 | 348.0 | 8.0 |
| 24 | 139.0 | 115.0 | 98.0 | 141.0 | 196.0 | 104.0 | 115.0 | 113.0 | 66.0 | 20.0 | 17.0 | 27.0 | 354.0 | 316.0 | 315.0 | 281.0 | 295.0 | 231.0 | 200.0 | 146.0 | 165.0 | 156.0 | 154.0 | 155.0 | 163.3 | 354.0 | 17.0 |
| 25 | 172.0 | 109.0 | 124.0 | 134.0 | 143.0 | 108.0 | 106.0 | 100.0 | 38.0 | 16.0 | 17.0 | 356.0 | 5.0 | 9.0 | 4.0 | 5.0 | 2.0 | 53.0 | 81.0 | 142.0 | 152.0 | 139.0 | 138.0 | 122.0 | 79.8 | 356.0 | 2.0 |
| 26 | 140.0 | 138.0 | 135.0 | 118.0 | 318.0 | 248.0 | 100.0 | 301.0 | 46.0 | 54.0 | 38.0 | 26.0 | 27.0 | 19.0 | 18.0 | 3.0 | 1.0 | 40.0 | 53.0 | 45.0 | 92.0 | 121.0 | 130.0 | 115.0 | 51.9 | 318.0 | 1.0 |
| 27 | 133.0 | 281.0 | 359.0 | 246.0 | 132.0 | 140.0 | 201.0 | 293.0 | 354.0 | 52.0 | 23.0 | 9.0 | 5.0 | 349.0 | 209.0 | 178.0 | 125.0 | 39.0 | 103.0 | 79.0 | 81.0 | 97.0 | 150.0 | 144.0 | 37.6 | 359.0 | 5.0 |
| 28 | 202.0 | 125.0 | 162.0 | 126.0 | 122.0 | 131.0 | 335.0 | 330.0 | 352.0 | 36.0 | 347.0 | 32.0 | 18.0 | 9.0 | 19.0 | 19.0 | 18.0 | 356.0 | 244.0 | 243.0 | 50.0 | 50.0 | 103.0 | 113.0 | 27.6 | 356.0 | 9.0 |
| 29 | 153.0 | 122.0 | 105.0 | 122.0 | 78.0 | 25.0 | 65.0 | 79.0 | 58.0 | 38.0 | 356.0 | 16.0 | 21.0 | 7.0 | 20.0 | 10.0 | 10.0 | 327.0 | 270.0 | 270.0 | 50.0 | 63.0 | 63.0 | 351.0 | 36.6 | 356.0 | 7.0 |
| 30 | 266.0 | 266.0 | 120.0 | 125.0 | 296.0 | 170.0 | 7.0 | 312.0 | 314.0 | 16.0 | 19.0 | 344.0 | 297.0 | 294.0 | 277.0 | 292.0 | 283.0 | 276.0 | 338.0 | 350.0 | 80.0 | 306.0 | 289.0 | 114.0 | 347.1 | 350.0 | 7.0 |
| 31 | 140.0 | 148.0 | 193.0 | 249.0 | 112.0 | 133.0 | 145.0 | 56.0 | 113.0 | 103.0 | 88.0 | 55.0 | 15.0 | 111.0 | 120.0 | 122.0 | 120.0 | 126.0 | 170.0 | 261.0 | 297.0 | 106.0 | 135.0 | 216.0 | 138.9 | 297.0 | 15.0 |
| Mean | 191.2 | 194.5 | 204.5 | 202.5 | 195.8 | 187.4 | 198.5 | 334.3 | 340.9 | 332.9 | 328.8 | 329.8 | 325.1 | 320.5 | 308.9 | 310.7 | 306.8 | 304.2 | 314.0 | 204.6 | 177.6 | 181.9 | 174.7 | 197.1 | Monthly mean = 193.6 | | |
| Max. | 266.0 | 318.0 | 359.0 | 297.0 | 318.0 | 360.0 | 356.0 | 352.0 | 354.0 | 337.0 | 356.0 | 360.0 | 358.0 | 354.0 | 348.0 | 353.0 | 353.0 | 357.0 | 338.0 | 350.0 | 350.0 | 306.0 | 289.0 | 351.0 | Monthly max. = 360.0 | | |
| Min. | 76.0 | 98.0 | 98.0 | 55.0 | 16.0 | 25.0 | 7.0 | 12.0 | 29.0 | .0 | 2.0 | 6.0 | 1.0 | 1.0 | 4.0 | 3.0 | 1.0 | 11.0 | 20.0 | 45.0 | 50.0 | 50.0 | 12.0 | 87.0 | Monthly min. = .0 | | |

TOTAL NUMBER OF DATA HOURS IN MONTH: 744
Number of hours of bad or missing data: 0
**** designates missing or lost data

Current % recovery = 100.0

N/A: insufficient data available for calculation (a minimum of 75% is required)

table created at 11:34,12/14/1994

MONTHLY SUMMARY
TEMPERATURE
(Degrees Celsius)
INPUT FILE: s7metJ04.met

Bechtel Environmental, Inc.

Met Data for Site 7
JULY 1994

| Day | Hour 1 | 2 | 3 | 4 | 5 | 6 | 7 | 8 | 9 | 10 | 11 | 12 | 13 | 14 | 15 | 16 | 17 | 18 | 19 | 20 | 21 | 22 | 23 | 24 | Mean | Max. | Min. |
|---|---|---|---|---|---|---|---|---|---|---|---|---|---|---|---|---|---|---|---|---|---|---|---|---|---|---|---|
| 1 | 25.7 | 26.3 | 25.8 | 23.3 | 23.1 | 22.4 | 22.8 | 23.0 | 23.7 | 24.9 | 25.9 | 26.8 | 28.2 | 28.5 | 29.0 | 29.3 | 29.6 | 29.5 | 28.9 | 28.1 | 27.0 | 26.6 | 26.0 | 25.0 | 26.2 | 29.6 | 22.4 |
| 2 | 21.1 | 24.5 | 24.6 | 24.5 | 24.1 | 19.0 | 19.0 | 19.4 | 20.0 | 20.8 | 21.6 | 21.7 | 22.7 | 22.2 | 22.9 | 23.6 | 24.5 | 24.9 | 23.8 | 22.9 | 21.0 | 20.6 | 20.0 | 19.8 | 22.1 | 24.9 | 19.0 |
| 3 | 19.5 | 19.2 | 18.5 | 17.6 | 15.5 | 14.3 | 14.0 | 14.2 | 15.7 | 17.5 | 18.3 | 18.9 | 20.3 | 21.3 | 21.9 | 22.0 | 21.8 | 22.2 | 21.5 | 20.5 | 19.3 | 18.5 | 18.3 | 18.2 | 18.7 | 22.2 | 14.0 |
| 4 | 17.7 | 17.3 | 15.5 | 15.3 | 14.8 | 14.7 | 15.2 | 16.4 | 17.3 | 18.6 | 19.7 | 20.6 | 21.6 | 22.6 | 21.8 | 21.7 | 22.9 | 23.9 | 24.1 | 23.7 | 22.2 | 22.1 | 21.6 | 21.5 | 19.7 | 24.1 | 14.7 |
| 5 | 20.9 | 20.1 | 18.7 | 18.2 | 17.4 | 17.4 | 18.5 | 19.8 | 23.4 | 22.7 | 22.0 | 24.4 | 25.7 | 27.1 | 24.3 | 17.9 | 17.7 | 17.1 | 15.5 | 14.5 | 13.3 | 12.1 | 11.9 | 12.0 | 18.9 | 27.1 | 11.9 |
| 6 | 11.6 | 10.7 | 9.2 | 8.1 | 7.7 | 6.0 | 5.6 | 6.5 | 7.3 | 8.1 | 8.5 | 10.6 | 12.4 | 14.6 | 16.1 | 17.3 | 17.9 | 16.4 | 14.6 | 14.2 | 14.2 | 14.2 | 14.0 | 14.1 | 11.7 | 17.9 | 5.6 |
| 7 | 12.8 | 11.2 | 9.7 | 9.0 | 7.3 | 9.0 | 10.0 | 13.8 | 15.3 | 16.8 | 18.2 | 19.8 | 21.2 | 22.1 | 23.0 | 24.6 | 25.7 | 26.2 | 25.4 | 22.2 | 20.7 | 20.3 | 18.9 | 17.3 | 17.5 | 26.2 | 7.3 |
| 8 | 16.2 | 15.5 | 15.2 | 13.4 | 12.2 | 14.7 | 17.2 | 19.6 | 21.7 | 23.9 | 25.2 | 26.2 | 26.8 | 27.7 | 29.0 | 29.6 | 30.5 | 30.5 | 29.8 | 28.6 | 26.1 | 26.1 | 25.6 | 24.7 | 23.2 | 30.5 | 12.2 |
| 9 | 22.9 | 23.0 | 21.6 | 17.7 | 19.0 | 21.1 | 22.2 | 23.4 | 25.0 | 26.7 | 27.9 | 31.0 | 32.8 | 33.1 | 34.4 | 34.7 | 34.5 | 34.9 | 33.3 | 32.3 | 30.8 | 30.4 | 29.3 | 30.1 | 28.0 | 34.9 | 17.7 |
| 10 | 29.5 | 24.8 | 20.6 | 21.5 | 22.9 | 21.1 | 21.1 | 20.9 | 21.2 | 22.3 | 24.1 | 25.7 | 26.6 | 28.1 | 28.6 | 29.1 | 28.8 | 29.0 | 28.5 | 27.5 | 25.9 | 24.8 | 24.0 | 22.7 | 25.0 | 29.5 | 20.6 |
| 11 | 21.7 | 20.5 | 19.4 | 18.1 | 17.0 | 15.5 | 15.8 | 16.5 | 19.0 | 21.7 | 22.1 | 23.4 | 24.9 | 25.4 | 25.9 | 26.7 | 27.0 | 27.1 | 27.0 | 25.9 | 24.9 | 24.3 | 23.9 | 23.4 | 22.4 | 27.1 | 15.5 |
| 12 | 22.9 | 21.9 | 20.6 | 19.4 | 18.6 | 16.3 | 16.8 | 18.7 | 18.7 | 20.5 | 22.6 | 24.2 | 26.2 | 26.8 | 27.2 | 27.5 | 27.8 | 27.9 | 27.5 | 26.7 | 25.5 | 24.9 | 23.9 | 22.9 | 23.2 | 27.9 | 16.3 |
| 13 | 21.2 | 18.7 | 17.4 | 15.6 | 14.8 | 14.6 | 15.8 | 18.1 | 19.1 | 20.1 | 21.5 | 23.0 | 24.9 | 26.5 | 27.6 | 27.5 | 27.6 | 28.1 | 27.5 | 25.7 | 21.1 | 21.8 | 22.4 | 22.2 | 21.8 | 28.1 | 14.6 |
| D 14 | 21.0 | 18.6 | 15.8 | 14.7 | 13.4 | 15.2 | 18.2 | 20.5 | 22.1 | 23.3 | 23.6 | 24.3 | 25.8 | 26.6 | 27.2 | 27.8 | 28.1 | 28.2 | 28.0 | 26.5 | 26.0 | 23.3 | 20.5 | 17.5 | 22.3 | 28.2 | 13.4 |
| a 15 | 16.5 | 15.7 | 15.0 | 15.5 | 14.1 | 14.1 | 17.8 | 19.3 | 20.6 | 22.8 | 25.4 | 27.4 | 28.5 | 29.3 | 30.6 | 30.6 | 31.0 | 30.7 | 30.4 | 29.2 | 27.3 | 26.8 | 26.5 | 22.7 | 23.7 | 31.0 | 14.1 |
| y 16 | 18.7 | 22.0 | 17.9 | 16.4 | 14.6 | 14.5 | 17.5 | 18.7 | 19.9 | 22.7 | 24.8 | 26.7 | 28.1 | 29.6 | 30.2 | 30.2 | 30.0 | 30.2 | 29.9 | 28.6 | 27.7 | 27.0 | 26.7 | 26.7 | 24.1 | 30.2 | 14.5 |
| 17 | 26.3 | 25.8 | 23.3 | 22.4 | 19.8 | 22.7 | 23.7 | 25.1 | 26.4 | 26.3 | 27.6 | 28.9 | 30.1 | 31.1 | 32.0 | 32.2 | 32.5 | 32.3 | 31.3 | 30.1 | 29.6 | 29.1 | 28.8 | 28.3 | 27.7 | 32.5 | 19.8 |
| 18 | 26.0 | 27.4 | 27.3 | 26.9 | 24.5 | 22.7 | 25.2 | 25.1 | 25.0 | 25.1 | 27.0 | 28.5 | 29.2 | 29.5 | 30.3 | 30.2 | 30.4 | 30.0 | 29.3 | 28.0 | 26.9 | 25.9 | 25.1 | 24.5 | 27.1 | 30.4 | 22.7 |
| 19 | 23.9 | 21.8 | 20.7 | 20.1 | 18.9 | 18.1 | 18.1 | 18.1 | 18.8 | 20.3 | 22.9 | 24.6 | 25.8 | 26.2 | 27.3 | 27.1 | 28.2 | 29.0 | 28.6 | 26.4 | 23.1 | 23.0 | 23.5 | 23.5 | 23.3 | 29.0 | 18.1 |
| 20 | 23.0 | 22.1 | 20.4 | 17.3 | 15.2 | 16.1 | 14.8 | 18.9 | 21.1 | 23.5 | 24.9 | 26.3 | 27.1 | 27.4 | 28.0 | 28.3 | 28.8 | 29.0 | 28.7 | 26.6 | 24.7 | 23.9 | 21.9 | 21.7 | 23.3 | 29.0 | 14.8 |
| 21 | 19.9 | 17.8 | 17.1 | 14.8 | 14.2 | 15.1 | 17.1 | 19.0 | 21.7 | 24.2 | 26.8 | 28.9 | 30.4 | 31.7 | 32.2 | 33.3 | 33.9 | 33.6 | 33.0 | 30.7 | 28.8 | 29.1 | 29.3 | 25.2 | 25.3 | 33.9 | 14.2 |
| 22 | 22.0 | 23.0 | 20.9 | 21.0 | 23.1 | 22.1 | 21.6 | 23.5 | 23.8 | 27.4 | 30.1 | 32.8 | 33.0 | 34.3 | 34.8 | 34.1 | 35.9 | 34.8 | 34.1 | 31.4 | 28.2 | 25.2 | 26.0 | 28.0 | 28.0 | 35.9 | 20.9 |
| 23 | 27.0 | 24.0 | 23.4 | 24.1 | 22.5 | 21.8 | 21.3 | 22.1 | 21.7 | 25.3 | 26.7 | 29.2 | 30.4 | 31.7 | 30.6 | 27.8 | 18.1 | 23.2 | 22.8 | 21.8 | 20.3 | 19.9 | 19.5 | 19.6 | 24.0 | 31.7 | 18.1 |
| 24 | 18.9 | 17.5 | 15.0 | 17.0 | 15.8 | 15.3 | 15.6 | 18.6 | 21.7 | 24.5 | 26.6 | 28.7 | 30.4 | 31.4 | 32.3 | 31.9 | 31.0 | 29.9 | 31.6 | 29.0 | 28.5 | 28.1 | 26.3 | 25.3 | 24.6 | 32.3 | 15.0 |
| 25 | 22.0 | 20.2 | 21.7 | 22.1 | 20.7 | 17.3 | 18.0 | 21.0 | 25.1 | 27.7 | 29.1 | 30.6 | 32.4 | 33.2 | 34.4 | 35.1 | 31.4 | 30.0 | 30.4 | 27.9 | 27.0 | 26.1 | 24.9 | 22.2 | 26.3 | 35.1 | 17.3 |
| 26 | 24.7 | 22.8 | 23.9 | 22.5 | 18.1 | 17.3 | 19.7 | 22.8 | 24.1 | 26.5 | 29.3 | 32.2 | 33.7 | 35.0 | 35.4 | 35.8 | 35.4 | 29.2 | 29.3 | 27.0 | 26.7 | 27.2 | 26.5 | 23.3 | 27.0 | 35.8 | 17.3 |
| 27 | 23.5 | 20.7 | 16.8 | 17.3 | 17.1 | 19.0 | 19.5 | 20.2 | 23.6 | 26.2 | 28.7 | 31.4 | 33.8 | 33.6 | 31.6 | 32.0 | 31.0 | 29.1 | 29.0 | 27.8 | 26.1 | 26.7 | 27.2 | 27.5 | 25.8 | 33.8 | 16.8 |
| 28 | 24.0 | 21.6 | 21.6 | 21.7 | 18.8 | 18.4 | 20.9 | 22.2 | 22.8 | 25.6 | 28.1 | 29.9 | 32.5 | 33.9 | 33.9 | 34.3 | 32.5 | 29.0 | 27.5 | 27.3 | 26.3 | 25.4 | 25.3 | 24.1 | 26.2 | 34.3 | 18.4 |
| 29 | 24.6 | 23.3 | 19.1 | 19.9 | 18.2 | 16.9 | 18.8 | 21.3 | 23.2 | 26.7 | 30.1 | 32.0 | 33.0 | 34.6 | 35.4 | 36.0 | 35.8 | 33.6 | 30.2 | 28.6 | 27.1 | 25.5 | 24.6 | 22.8 | 26.7 | 36.0 | 16.9 |
| 30 | 21.1 | 20.0 | 20.4 | 21.9 | 21.3 | 20.2 | 21.3 | 23.3 | 24.8 | 27.7 | 31.6 | 31.4 | 31.9 | 32.7 | 32.7 | 33.1 | 33.7 | 30.4 | 25.7 | 24.1 | 23.3 | 22.8 | 21.9 | 20.5 | 25.7 | 33.7 | 20.0 |
| 31 | 21.7 | 21.6 | 20.3 | 19.1 | 19.4 | 20.2 | 21.1 | 22.9 | 24.0 | 24.9 | 27.6 | 29.1 | 30.7 | 31.4 | 30.8 | 30.4 | 30.7 | 30.8 | 28.2 | 18.1 | 17.0 | 17.3 | 18.4 | 17.3 | 23.9 | 31.4 | 17.0 |
| Mean | 21.6 | 20.6 | 19.3 | 18.6 | 17.6 | 17.2 | 18.2 | 19.8 | 21.2 | 23.1 | 24.8 | 26.4 | 27.8 | 28.7 | 29.1 | 29.1 | 28.9 | 28.4 | 27.6 | 25.9 | 24.4 | 23.8 | 23.3 | 22.4 | Monthly mean = | | 23.7 |
| Max. | 29.5 | 27.4 | 27.3 | 26.9 | 24.5 | 22.7 | 25.2 | 25.1 | 26.4 | 27.7 | 31.6 | 32.8 | 33.8 | 35.0 | 35.4 | 36.0 | 35.9 | 34.9 | 34.1 | 32.3 | 30.8 | 30.4 | 29.3 | 30.1 | Monthly max. = | | 36.0 |
| Min. | 11.6 | 10.7 | 9.2 | 8.1 | 7.3 | 6.0 | 5.6 | 6.5 | 7.3 | 8.1 | 8.5 | 10.6 | 12.4 | 14.6 | 16.1 | 17.3 | 17.7 | 16.4 | 14.6 | 14.2 | 13.3 | 12.1 | 11.9 | 12.0 | Monthly min. = | | 5.6 |

TOTAL NUMBER OF DATA HOURS IN MONTH: 744
Number of hours of bad or missing data: 0
**** designates missing or lost data

Current % recovery = 100.0

N/A: insufficient data available for calculation (a minimum of 75% is required)

table created at 11:34,12/14/1994

MONTHLY SUMMARY
SIGMA THETA
(Degrees)
INPUT FILE: s7metJ04.met

Bechtel Environmental, Inc.

Met Data for Site 7
JULY 1994

| Day \ Hour | 1 | 2 | 3 | 4 | 5 | 6 | 7 | 8 | 9 | 10 | 11 | 12 | 13 | 14 | 15 | 16 | 17 | 18 | 19 | 20 | 21 | 22 | 23 | 24 | Mean | Max. | Min. |
|---|---|---|---|---|---|---|---|---|---|---|---|---|---|---|---|---|---|---|---|---|---|---|---|---|---|---|---|
| 1 | 5. | 7. | 18. | 16. | 10. | 9. | 10. | 14. | 15. | 16. | 15. | 9. | 11. | 11. | 13. | 11. | 10. | 9. | 11. | 11. | 9. | 9. | 8. | 27. | N/A | 27. | 5. |
| 2 | 56. | 15. | 23. | 24. | 13. | 12. | 10. | 9. | 12. | 13. | 16. | 14. | 9. | 11. | 16. | 10. | 15. | 13. | 14. | 11. | 13. | 10. | 9. | 10. | N/A | 56. | 9. |
| 3 | 9. | 8. | 8. | 9. | 9. | 10. | 9. | 9. | 15. | 16. | 14. | 10. | 12. | 12. | 11. | 9. | 12. | 17. | 13. | 9. | 11. | 9. | 10. | 9. | N/A | 17. | 8. |
| 4 | 9. | 10. | 15. | 13. | 12. | 10. | 15. | 17. | 13. | 14. | 16. | 12. | 12. | 14. | 9. | 9. | 11. | 10. | 15. | 12. | 8. | 7. | 7. | 9. | N/A | 17. | 7. |
| 5 | 15. | 5. | 5. | 8. | 8. | 7. | 58. | 18. | 35. | 44. | 15. | 21. | 21. | 24. | 10. | 15. | 12. | 10. | 10. | 17. | 13. | 13. | 10. | 9. | N/A | 58. | 5. |
| 6 | 9. | 11. | 11. | 10. | 12. | 13. | 9. | 9. | 12. | 15. | 13. | 17. | 24. | 29. | 43. | 41. | 47. | 27. | 13. | 14. | 8. | 5. | 7. | 8. | N/A | 47. | 5. |
| 7 | 9. | 24. | 40. | 19. | 21. | 55. | 50. | 29. | 20. | 19. | 23. | 23. | 21. | 23. | 21. | 31. | 25. | 34. | 15. | 11. | 8. | 6. | 35. | 11. | N/A | 55. | 6. |
| 8 | 47. | 8. | 26. | 12. | 42. | 27. | 13. | 25. | 23. | 23. | 24. | 24. | 27. | 19. | 20. | 20. | 22. | 24. | 17. | 13. | 10. | 6. | 10. | 37. | N/A | 47. | 6. |
| 9 | 9. | 5. | 23. | 69. | 11. | 33. | 62. | 56. | 14. | 13. | 15. | 24. | 27. | 30. | 39. | 35. | 24. | 37. | 12. | 11. | 9. | 7. | 12. | 7. | N/A | 69. | 5. |
| 10 | 18. | 31. | 37. | 49. | 9. | 11. | 9. | 11. | 13. | 16. | 17. | 14. | 10. | 17. | 16. | 13. | 11. | 14. | 14. | 11. | 10. | 8. | 9. | 7. | N/A | 49. | 7. |
| 11 | 7. | 7. | 11. | 9. | 11. | 14. | 57. | 10. | 13. | 21. | 16. | 15. | 12. | 12. | 8. | 10. | 11. | 12. | 15. | 11. | 10. | 9. | 9. | 9. | N/A | 57. | 7. |
| 12 | 10. | 9. | 8. | 9. | 14. | 44. | 24. | 38. | 16. | 12. | 16. | 15. | 23. | 17. | 13. | 16. | 15. | 12. | 11. | 12. | 11. | 9. | 11. | 10. | N/A | 44. | 8. |
| 13 | 11. | 8. | 20. | 31. | 59. | 35. | 24. | 29. | 37. | 28. | 18. | 23. | 38. | 34. | 29. | 22. | 19. | 17. | 12. | 23. | 38. | 17. | 11. | 38. | N/A | 59. | 8. |
| 14 | 30. | 27. | 27. | 26. | 43. | 30. | 19. | 27. | 36. | 29. | 12. | 12. | 15. | 13. | 15. | 10. | 14. | 11. | 15. | 13. | 11. | 58. | 20. | 46. | N/A | 58. | 10. |
| 15 | 16. | 41. | 33. | 17. | 18. | 68. | 41. | 14. | 21. | 22. | 23. | 24. | 23. | 24. | 28. | 28. | 28. | 17. | 21. | 13. | 10. | 8. | 8. | 44. | N/A | 68. | 8. |
| 16 | 34. | 9. | 30. | 56. | 54. | 66. | 40. | 22. | 13. | 21. | 22. | 20. | 21. | 28. | 20. | 15. | 15. | 13. | 14. | 11. | 8. | 7. | 9. | 9. | N/A | 66. | 7. |
| 17 | 8. | 9. | 43. | 32. | 65. | 10. | 13. | 30. | 26. | 16. | 15. | 11. | 15. | 13. | 15. | 15. | 14. | 14. | 15. | 11. | 8. | 10. | 8. | 12. | N/A | 65. | 8. |
| 18 | 61. | 10. | 9. | 11. | 64. | 26. | 16. | 10. | 15. | 14. | 16. | 16. | 12. | 13. | 15. | 12. | 13. | 9. | 16. | 12. | 11. | 11. | 12. | 12. | N/A | 64. | 9. |
| 19 | 10. | 9. | 8. | 11. | 9. | 8. | 8. | 12. | 10. | 15. | 25. | 35. | 54. | 27. | 30. | 23. | 29. | 25. | 35. | 33. | 40. | 26. | 12. | 6. | N/A | 54. | 6. |
| 20 | 9. | 8. | 46. | 33. | 28. | 32. | 9. | 15. | 21. | 24. | 12. | 9. | 10. | 11. | 16. | 11. | 10. | 10. | 9. | 7. | 10. | 13. | 49. | 12. | N/A | 49. | 7. |
| 21 | 16. | 49. | 47. | 48. | 69. | 38. | 52. | 44. | 27. | 19. | 22. | 24. | 21. | 19. | 13. | 17. | 16. | 14. | 11. | 17. | 10. | 5. | 4. | 23. | N/A | 69. | 4. |
| 22 | 54. | 44. | 48. | 8. | 54. | 27. | 25. | 28. | 15. | 20. | 17. | 22. | 16. | 21. | 16. | 19. | 25. | 12. | 22. | 13. | 9. | 11. | 9. | 16. | N/A | 54. | 8. |
| 23 | 15. | 8. | 31. | 45. | 15. | 33. | 17. | 22. | 41. | 30. | 22. | 24. | 18. | 22. | 17. | 16. | 12. | 13. | 10. | 25. | 27. | 17. | 8. | 6. | N/A | 45. | 6. |
| 24 | 40. | 13. | 15. | 10. | 19. | 38. | 38. | 9. | 15. | 23. | 31. | 23. | 30. | 33. | 34. | 15. | 10. | 15. | 13. | 10. | 8. | 5. | 6. | 6. | N/A | 40. | 5. |
| 25 | 50. | 25. | 15. | 7. | 55. | 36. | 19. | 14. | 25. | 22. | 24. | 20. | 22. | 23. | 21. | 24. | 16. | 10. | 12. | 7. | 5. | 8. | 15. | 8. | N/A | 55. | 5. |
| 26 | 5. | 47. | 8. | 34. | 54. | 26. | 49. | 32. | 19. | 16. | 22. | 20. | 20. | 22. | 19. | 16. | 13. | 9. | 9. | 10. | 15. | 10. | 9. | 61. | N/A | 61. | 5. |
| 27 | 27. | 39. | 41. | 61. | 39. | 50. | 37. | 16. | 31. | 19. | 19. | 28. | 20. | 15. | 18. | 22. | 20. | 12. | 13. | 12. | 12. | 35. | 7. | 8. | N/A | 61. | 7. |
| 28 | 29. | 27. | 21. | 23. | 19. | 51. | 71. | 43. | 23. | 20. | 23. | 21. | 34. | 20. | 13. | 11. | 7. | 10. | 21. | 39. | 19. | 10. | 14. | 19. | N/A | 71. | 7. |
| 29 | 22. | 55. | 31. | 41. | 52. | 82. | 48. | 31. | 16. | 20. | 27. | 28. | 25. | 27. | 27. | 26. | 12. | 46. | 9. | 11. | 62. | 15. | 11. | 21. | N/A | 82. | 9. |
| 30 | 12. | 14. | 27. | 17. | 28. | 55. | 61. | 32. | 24. | 22. | 34. | 14. | 19. | 16. | 14. | 15. | 17. | 11. | 13. | 31. | 34. | 20. | 27. | 10. | N/A | 61. | 10. |
| 31 | 6. | 7. | 22. | 13. | 55. | 5. | 21. | 35. | 15. | 17. | 25. | 22. | 24. | 33. | 21. | 12. | 13. | 13. | 19. | 11. | 25. | 16. | 9. | 23. | N/A | 55. | 5. |
| Mean | N/A | N/A | N/A | N/A | N/A | N/A | N/A | N/A | N/A | N/A | N/A | N/A | N/A | N/A | N/A | N/A | N/A | N/A | N/A | N/A | N/A | N/A | N/A | N/A | Monthly mean = | | N/A |
| Max. | 61. | 55. | 48. | 69. | 69. | 82. | 71. | 56. | 41. | 44. | 34. | 35. | 54. | 34. | 43. | 41. | 47. | 46. | 35. | 39. | 62. | 58. | 49. | 61. | Monthly max. = | | 82. |
| Min. | 5. | 5. | 5. | 7. | 8. | 5. | 8. | 9. | 10. | 12. | 12. | 9. | 9. | 11. | 8. | 9. | 7. | 9. | 9. | 7. | 5. | 5. | 4. | 6. | Monthly min. = | | 4. |

TOTAL NUMBER OF DATA HOURS IN MONTH: 744
Number of hours of bad or missing data: 0
**** designates missing or lost data

Current % recovery = 100.0

N/A: A sigma theta mean is not physically meaningful.

table created at 11:34,12/14/1994

| Sample Date | Chemical Name | Site # | Typ | Run Time (min.) | Chem Conc. (ug/m3) | EPA Scr. L(ug/m3) | Part.C. (ug/m3) | Grav. Val | Qual. Lab | Qual. Val |
|---|---|---|---|---|---|---|---|---|---|---|
| 03/09/1994 | Phosphorus | 4 | TS | 1428.4 | .48431 | .30000 | 52.70 | | | U |
| 03/09/1994 | Vanadium | 4 | TS | 1428.4 | .00709 | .17000 | 52.70 | | | |
| 03/09/1994 | Zinc | 4 | TS | 1428.4 | .02925 | .00000 | 52.70 | | B | |
| 03/09/1994 | Arsenic | 5 | TS | 1438.8 | .00020 | .00057 | 22.21 | | B | |
| 03/09/1994 | Cadmium | 5 | TS | 1438.8 | .00140 | .00140 | 22.21 | | U | U |
| 03/09/1994 | Chromium | 5 | TS | 1438.8 | .00454 | .00020 | 22.21 | | | |
| 03/09/1994 | Particulate Fluoride | 5 | TS | 1438.8 | 1.77014 | 8.30000 | 22.21 | | B | U |
| 03/09/1994 | Phosphorus | 5 | TS | 1438.8 | .39758 | .30000 | 22.21 | | | U |
| 03/09/1994 | Vanadium | 5 | TS | 1438.8 | .00334 | .17000 | 22.21 | | B | |
| 03/09/1994 | Zinc | 5 | TS | 1438.8 | .01307 | .00000 | 22.21 | | B | |
| 03/09/1994 | Arsenic | 6 | TS | 1438.9 | .00018 | .00057 | 26.21 | | U | U |
| 03/09/1994 | Cadmium | 6 | TS | 1438.9 | .00142 | .00140 | 26.21 | | U | U |
| 03/09/1994 | Chromium | 6 | TS | 1438.9 | .00186 | .00020 | 26.21 | | | |
| 03/09/1994 | Particulate Fluoride | 6 | TS | 1438.9 | 1.92154 | 8.30000 | 26.21 | | B | U |
| 03/09/1994 | Phosphorus | 6 | TS | 1438.9 | .21066 | .30000 | 26.21 | | B | U |
| 03/09/1994 | Vanadium | 6 | TS | 1438.9 | .00179 | .17000 | 26.21 | | U | U |
| 03/09/1994 | Zinc | 6 | TS | 1438.9 | .00648 | .00000 | 26.21 | | B | |
| 03/09/1994 | Arsenic | 7 | TS | 1451.6 | .00017 | .00057 | 16.67 | | U | U |
| 03/09/1994 | Cadmium | 7 | TS | 1451.6 | .00137 | .00140 | 16.67 | | U | U |
| 03/09/1994 | Chromium | 7 | TS | 1451.6 | .00423 | .00020 | 16.67 | | | |
| 03/09/1994 | Particulate Fluoride | 7 | TS | 1451.6 | 2.79686 | 8.30000 | 16.67 | | B | U |
| 03/09/1994 | Phosphorus | 7 | TS | 1451.6 | .32287 | .30000 | 16.67 | | B | U |
| 03/09/1994 | Vanadium | 7 | TS | 1451.6 | .00306 | .17000 | 16.67 | | B | |
| 03/09/1994 | Zinc | 7 | TS | 1451.6 | .00754 | .00000 | 16.67 | | B | |
| 03/09/1994 | Arsenic | 8 | TS | 1454.6 | .00040 | .00057 | 51.91 | | B | |
| 03/09/1994 | Cadmium | 8 | TS | 1454.6 | .00232 | .00140 | 51.91 | | | |
| 03/09/1994 | Chromium | 8 | TS | 1454.6 | .01280 | .00020 | 51.91 | | | |
| 03/09/1994 | Particulate Fluoride | 8 | TS | 1454.6 | 3.36494 | 8.30000 | 51.91 | | | U |
| 03/09/1994 | Phosphorus | 8 | TS | 1454.6 | .94513 | .30000 | 51.91 | | | U |
| 03/09/1994 | Vanadium | 8 | TS | 1454.6 | .01401 | .17000 | 51.91 | | | |
| 03/09/1994 | Zinc | 8 | TS | 1454.6 | .03559 | .00000 | 51.91 | | B | |
| 03/13/1994 | Arsenic | 1 | TS | 1441.9 | .00023 | .00057 | 32.48 | | B | |
| 03/13/1994 | Cadmium | 1 | TS | 1441.9 | .00241 | .00140 | 32.48 | | | |
| 03/13/1994 | Chromium | 1 | TS | 1441.9 | .00607 | .00020 | 32.48 | | | |
| 03/13/1994 | Particulate Fluoride | 1 | TS | 1441.9 | 3.52076 | 8.30000 | 32.48 | | B | U |
| 03/13/1994 | Phosphorus | 1 | TS | 1441.9 | .91723 | .30000 | 32.48 | | | U |
| 03/13/1994 | Vanadium | 1 | TS | 1441.9 | .00437 | .17000 | 32.48 | | B | |
| 03/13/1994 | Zinc | 1 | TS | 1441.9 | .01891 | .00000 | 32.48 | | B | |
| 03/13/1994 | Arsenic | 2 | TS | 1432.5 | .00106 | .00057 | 101.27 | | | |
| 03/13/1994 | Cadmium | 2 | TS | 1432.5 | .01165 | .00140 | 101.27 | | | |
| 03/13/1994 | Chromium | 2 | TS | 1432.5 | .03460 | .00020 | 101.27 | | | |
| 03/13/1994 | Particulate Fluoride | 2 | TS | 1432.5 | 4.36641 | 8.30000 | 101.27 | | | U |

| Sample Date | Chemical Name | Site # | Typ | Run Time (min.) | Chem Conc. (ug/m3) | EPA Scr. L(ug/m3) | Part.C. (ug/m3) | Grav. Val | Qual. Lab | Qual. Val |
|---|---|---|---|---|---|---|---|---|---|---|
| 03/13/1994 | Phosphorus | 2 | TS | 1432.5 | 4.52684 | .30000 | 101.27 | | | |
| 03/13/1994 | Vanadium | 2 | TS | 1432.5 | .04352 | .17000 | 101.27 | | | |
| 03/13/1994 | Zinc | 2 | TS | 1432.5 | .07603 | .00000 | 101.27 | | | |
| 03/13/1994 | Arsenic | 3 | TS | 1448.4 | .00017 | .00057 | 49.54 | | B | |
| 03/13/1994 | Cadmium | 3 | TS | 1448.4 | .00171 | .00140 | 49.54 | | | |
| 03/13/1994 | Chromium | 3 | TS | 1448.4 | .00369 | .00020 | 49.54 | | | |
| 03/13/1994 | Particulate Fluoride | 3 | TS | 1448.4 | 2.34912 | 8.30000 | 49.54 | | B | U |
| 03/13/1994 | Phosphorus | 3 | TS | 1448.4 | .55450 | .30000 | 49.54 | | | U |
| 03/13/1994 | Vanadium | 3 | TS | 1448.4 | .00258 | .17000 | 49.54 | | B | |
| 03/13/1994 | Zinc | 3 | TS | 1448.4 | .01414 | .00000 | 49.54 | | B | |
| 03/13/1994 | Arsenic | 4 | TS | 1428.7 | .00018 | .00057 | 45.51 | | U | U |
| 03/13/1994 | Cadmium | 4 | TS | 1428.7 | .00198 | .00140 | 45.51 | | | |
| 03/13/1994 | Chromium | 4 | TS | 1428.7 | .00426 | .00020 | 45.51 | | | |
| 03/13/1994 | Particulate Fluoride | 4 | TS | 1428.7 | 2.65013 | 8.30000 | 45.51 | | B | U |
| 03/13/1994 | Phosphorus | 4 | TS | 1428.7 | .74513 | .30000 | 45.51 | | | U |
| 03/13/1994 | Vanadium | 4 | TS | 1428.7 | .00407 | .17000 | 45.51 | | B | |
| 03/13/1994 | Zinc | 4 | TS | 1428.7 | .01743 | .00000 | 45.51 | | B | |
| 03/13/1994 | Arsenic | 5 | TS | 1437.2 | .00018 | .00057 | 14.74 | QR | U | U |
| 03/13/1994 | Cadmium | 5 | TS | 1437.2 | .00142 | .00140 | 14.74 | QR | U | U |
| 03/13/1994 | Chromium | 5 | TS | 1437.2 | .00268 | .00020 | 14.74 | QR | | |
| 03/13/1994 | Particulate Fluoride | 5 | TS | 1437.2 | 2.10624 | 8.30000 | 14.74 | QR | B | U |
| 03/13/1994 | Phosphorus | 5 | TS | 1437.2 | .21205 | .30000 | 14.74 | QR | B | U |
| 03/13/1994 | Vanadium | 5 | TS | 1437.2 | .00179 | .17000 | 14.74 | QR | U | U |
| 03/13/1994 | Zinc | 5 | TS | 1437.2 | .00539 | .00000 | 14.74 | QR | B | |
| 03/13/1994 | Arsenic | 6 | TS | 1439.3 | .00018 | .00057 | 22.48 | | U | U |
| 03/13/1994 | Cadmium | 6 | TS | 1439.3 | .00144 | .00140 | 22.48 | | U | U |
| 03/13/1994 | Chromium | 6 | TS | 1439.3 | .00189 | .00020 | 22.48 | | | |
| 03/13/1994 | Particulate Fluoride | 6 | TS | 1439.3 | 2.04459 | 8.30000 | 22.48 | | B | U |
| 03/13/1994 | Phosphorus | 6 | TS | 1439.3 | .17926 | .30000 | 22.48 | | B | U |
| 03/13/1994 | Vanadium | 6 | TS | 1439.3 | .00181 | .17000 | 22.48 | | U | U |
| 03/13/1994 | Zinc | 6 | TS | 1439.3 | .00485 | .00000 | 22.48 | | B | |
| 03/13/1994 | Arsenic | 7 | TS | 1453.7 | .00017 | .00057 | 21.48 | | U | U |
| 03/13/1994 | Cadmium | 7 | TS | 1453.7 | .00139 | .00140 | 21.48 | | U | U |
| 03/13/1994 | Chromium | 7 | TS | 1453.7 | .00346 | .00020 | 21.48 | | | |
| 03/13/1994 | Particulate Fluoride | 7 | TS | 1453.7 | 5.00778 | 8.30000 | 21.48 | | | U |
| 03/13/1994 | Phosphorus | 7 | TS | 1453.7 | .55896 | .30000 | 21.48 | | | U |
| 03/13/1994 | Vanadium | 7 | TS | 1453.7 | .00279 | .17000 | 21.48 | | B | |
| 03/13/1994 | Zinc | 7 | TS | 1453.7 | .00921 | .00000 | 21.48 | | B | |
| 03/15/1994 | Arsenic | 1 | TS | 1438.4 | .00118 | .00057 | 59.52 | | | |
| 03/15/1994 | Cadmium | 1 | TS | 1438.4 | .00144 | .00140 | 59.52 | | U | U |
| 03/15/1994 | Chromium | 1 | TS | 1438.4 | .01169 | .00020 | 59.52 | | | |
| 03/15/1994 | Particulate Fluoride | 1 | TS | 1438.4 | 2.35326 | 8.30000 | 59.52 | | B | U |
| 03/15/1994 | Phosphorus | 1 | TS | 1438.4 | .81570 | .30000 | 59.52 | | | U |

# Appendix AC-2

# Quarterly Wind Roses for Sites 1 and 7

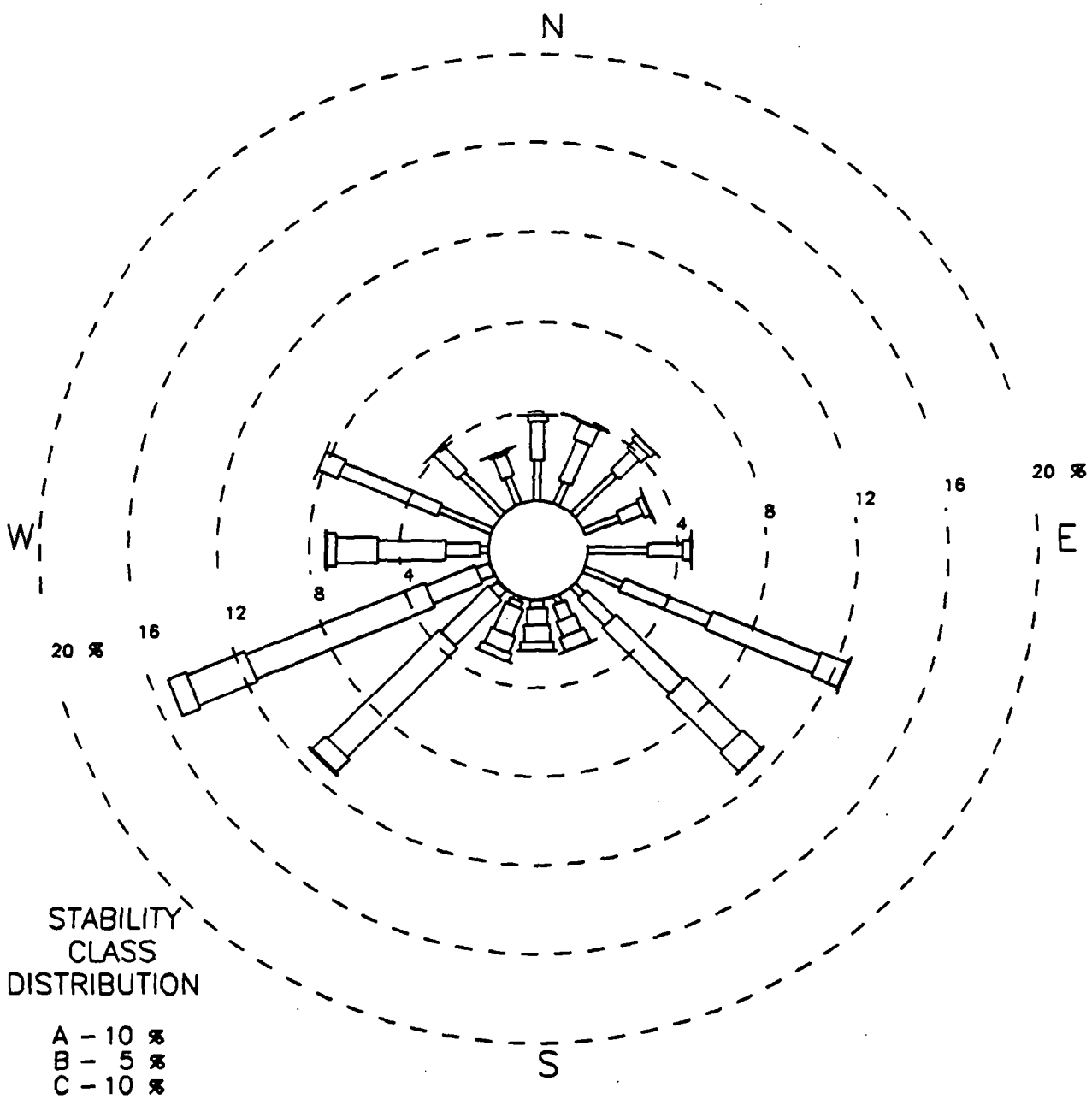


STABILITY CLASS DISTRIBUTION

A – 10 %
B – 5 %
C – 10 %
D – 51 %
E – 10 %
F – 14 %

0–3 (20 %) 4–6 (25 %) 7–10 (24 %) 11–16 (25 %) 17–21 (6 %) 22–99 (1 %)

WIND SPEED SCALE (KNOTS)

NOTE – WIND DIRECTION IS THE DIRECTION WIND IS BLOWING FROM

Site 1 Wind Direction

Fall 1993

Calms 5.7%

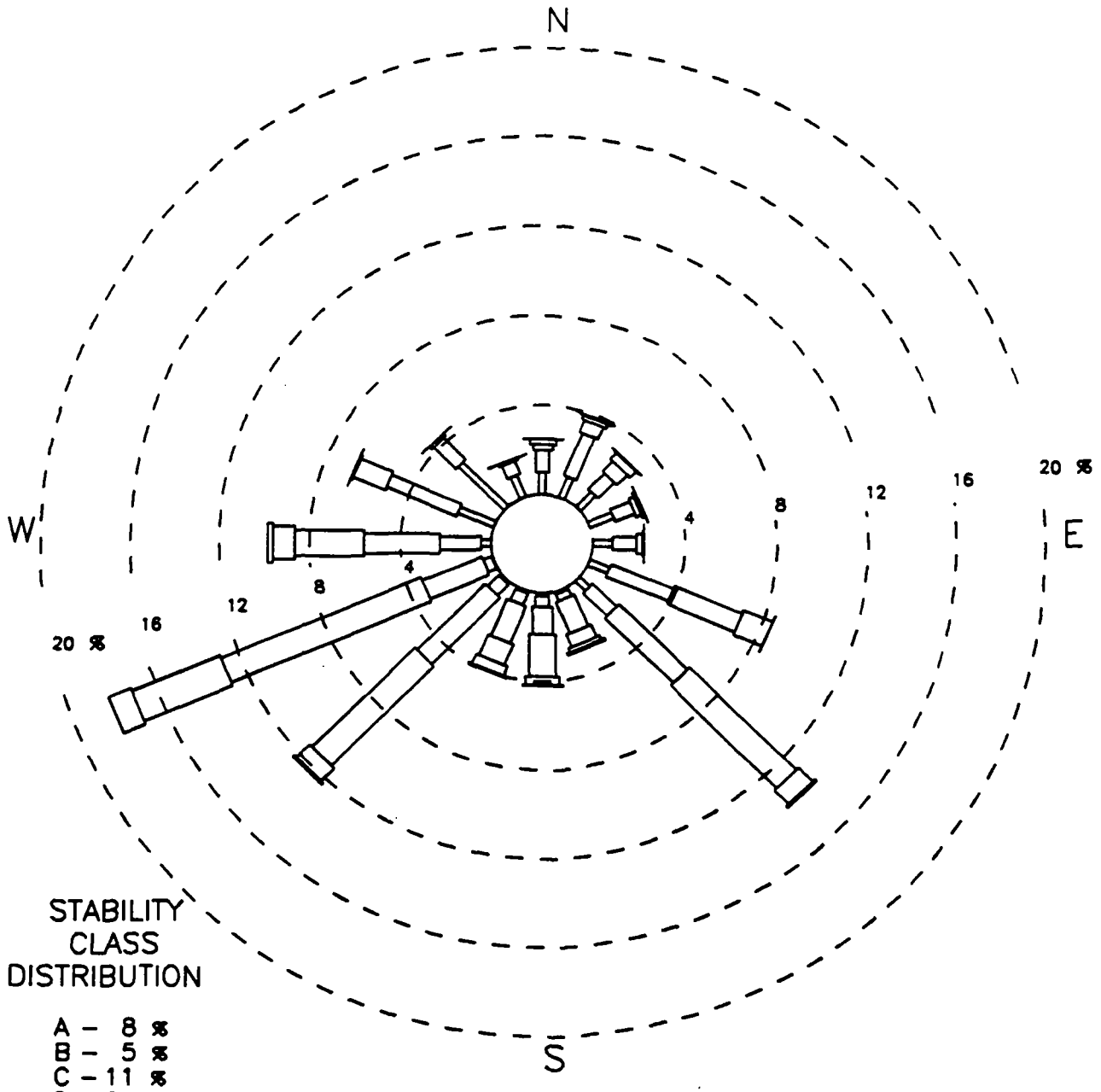


STABILITY CLASS DISTRIBUTION

A – 8 %
B – 5 %
C – 11 %
D – 61 %
E – 6 %
F – 10 %

0–3 (13 %) 4–6 (20 %) 7–10 (26 %) 11–16 (31 %) 17–21 (8 %) 22–99 (2 %)

WIND SPEED SCALE (KNOTS)

NOTE – WIND DIRECTION IS THE DIRECTION WIND IS BLOWING FROM

## Site 1 Wind Direction

Winter 1994

Calms 2.8%

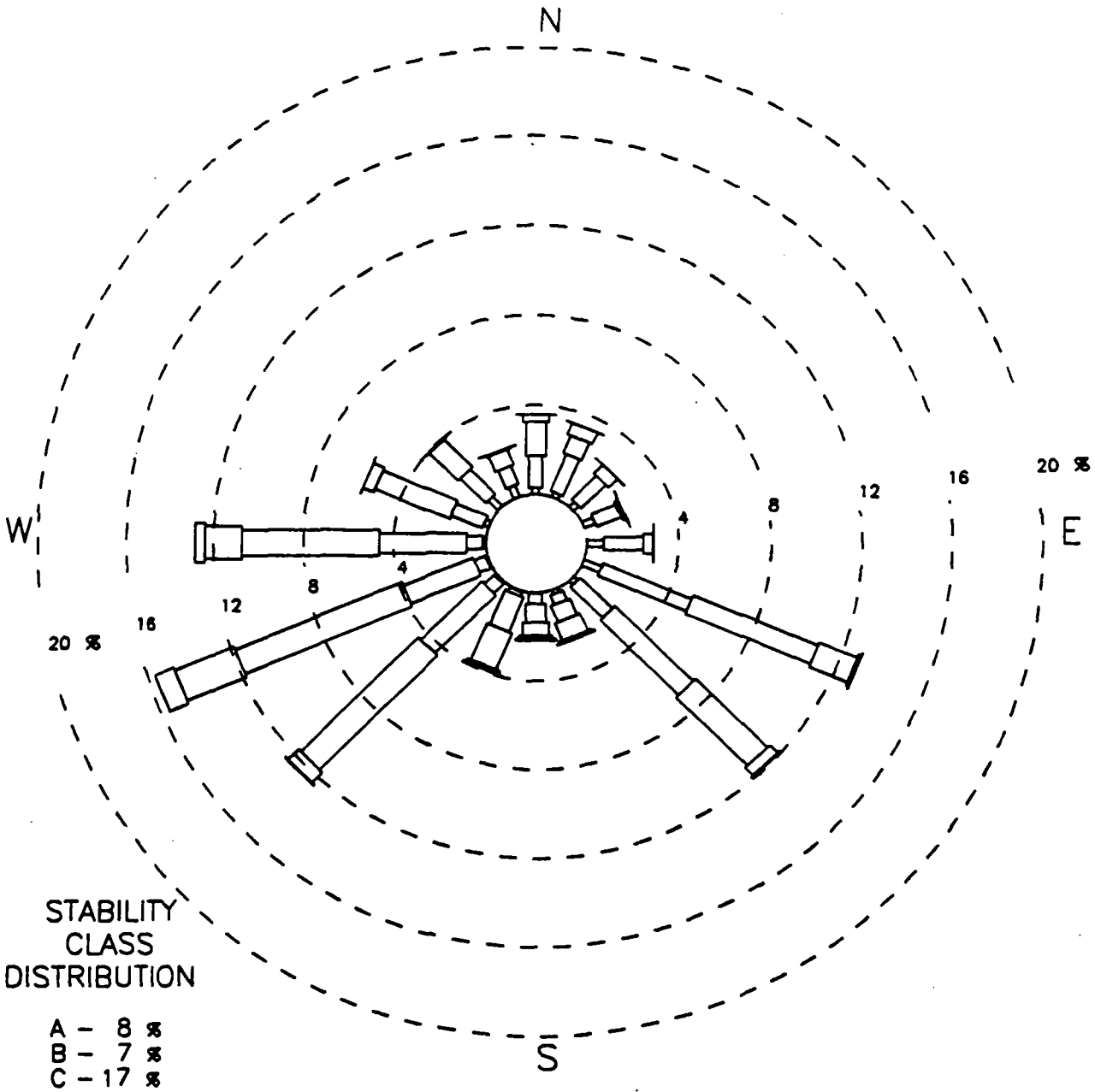


STABILITY CLASS DISTRIBUTION

A - 8 %
B - 7 %
C - 17 %
D - 57 %
E - 5 %
F - 6 %

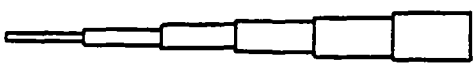

0-3 (5 %) 4-6 (21 %) 7-10 (34 %) 11-16 (32 %) 17-21 (6 %) 22-99 (2 %)

WIND SPEED SCALE (KNOTS)

NOTE - WIND DIRECTION IS THE DIRECTION WIND IS BLOWING FROM

# Site 1 Wind Direction

## Spring 1994

Calms 0.9%

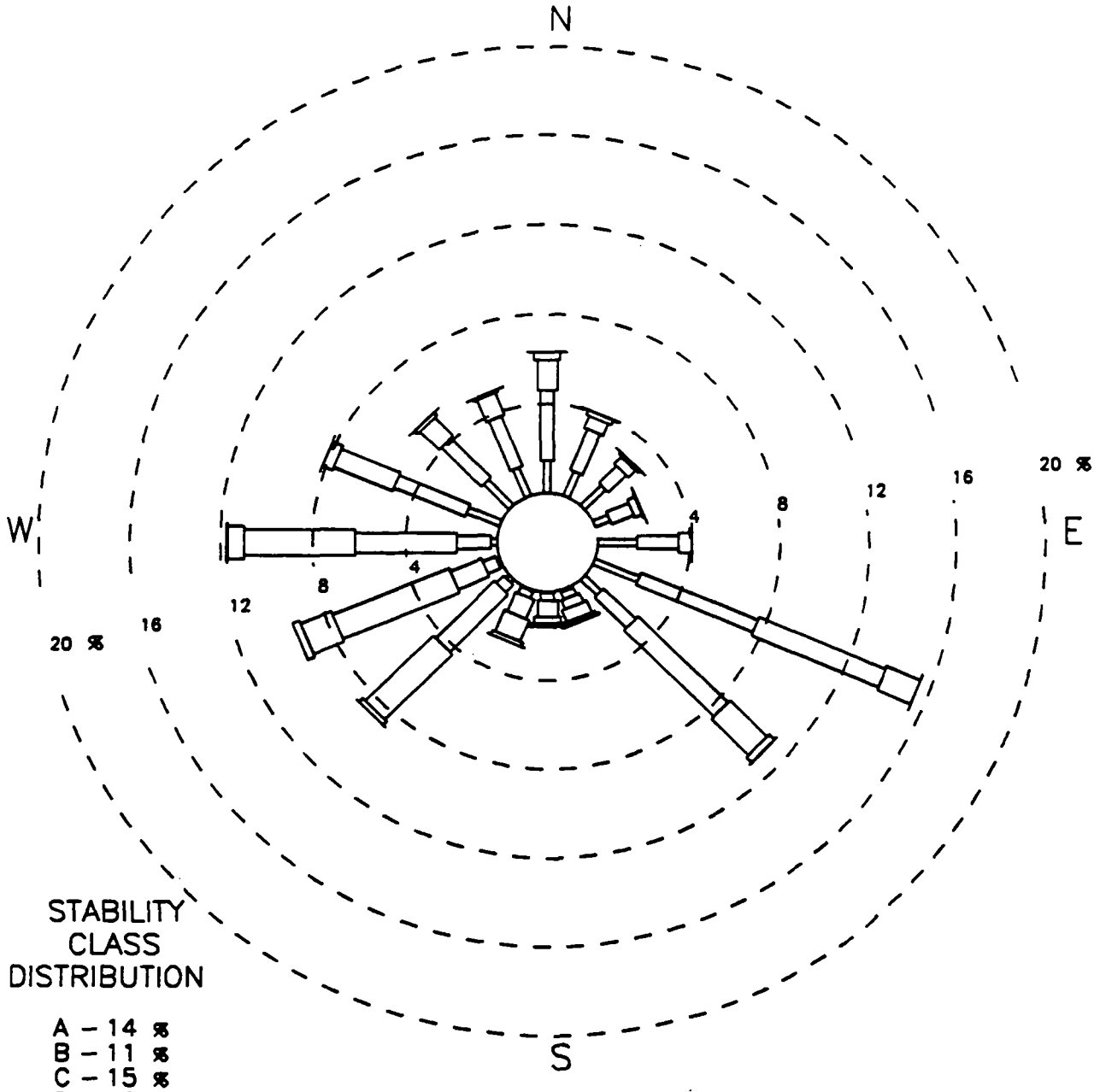


STABILITY CLASS DISTRIBUTION

A – 14 %
B – 11 %
C – 15 %
D – 42 %
E – 8 %
F – 10 %

0–3 (15 %) 4–6 (28 %) 7–10 (31 %) 11–16 (22 %) 17–21 (3 %) 22–99 (0 %)

WIND SPEED SCALE (KNOTS)

NOTE – WIND DIRECTION IS THE DIRECTION WIND IS BLOWING FROM

## Site 1 Wind Direction

Summer 1994

Calms 4.5%

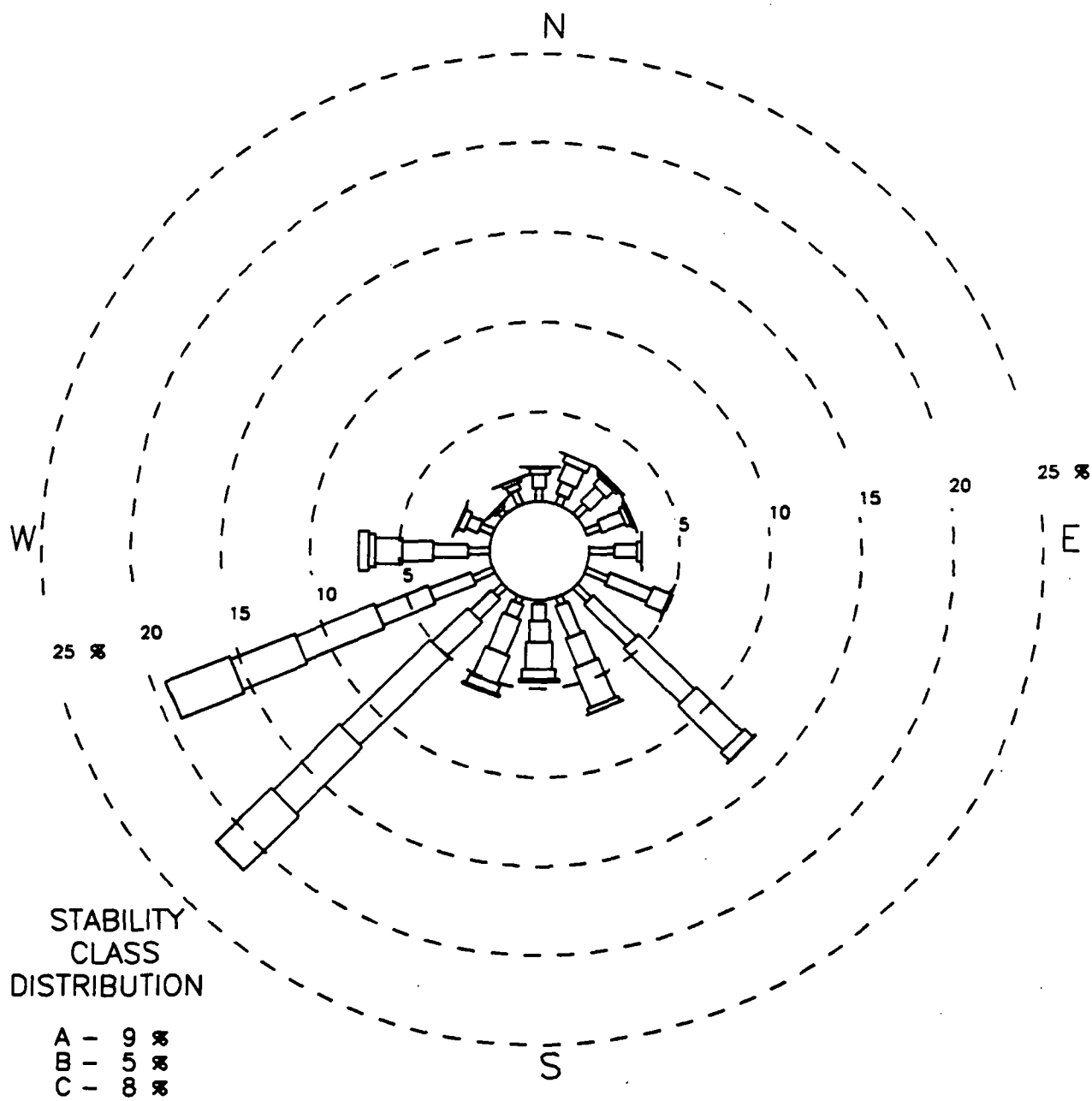


STABILITY CLASS DISTRIBUTION

A - 9 %
B - 5 %
C - 8 %
D - 61 %
E - 7 %
F - 11 %

0-3 (13 %) 4-6 (22 %) 7-10 (21 %) 11-16 (23 %) 17-21 (12 %) 22-99 (9 %)

WIND SPEED SCALE (KNOTS)

NOTE - WIND DIRECTION IS THE DIRECTION WIND IS BLOWING FROM

## Site 7 Wind Direction

Fall 1993

Calms 2.5%

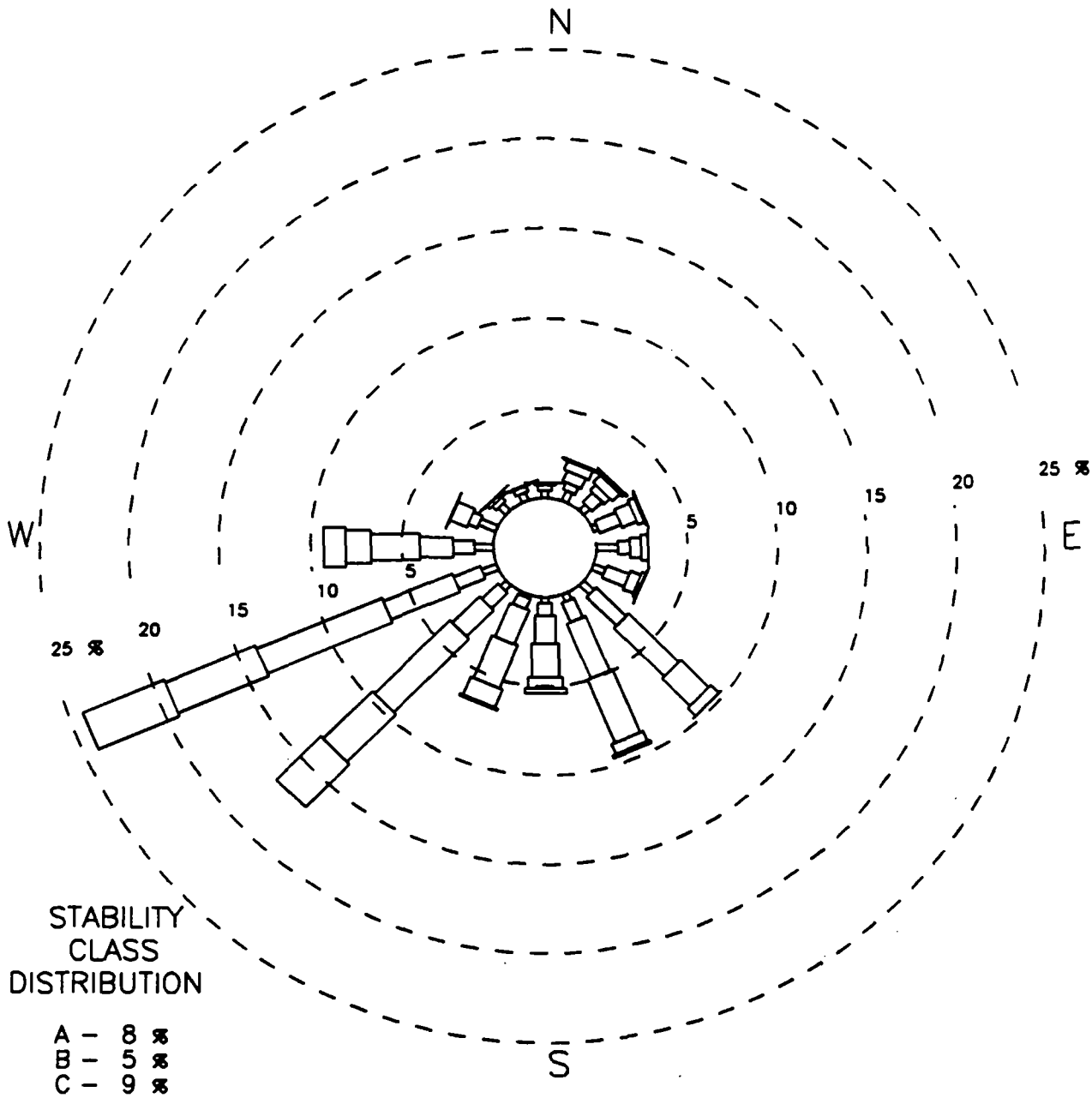


STABILITY CLASS DISTRIBUTION

A – 8 %
B – 5 %
C – 9 %
D – 67 %
E – 4 %
F – 8 %

0–3 (10 %) 4–6 (15 %) 7–10 (23 %) 11–16 (29 %) 17–21 (14 %) 22–99 (10 %)

WIND SPEED SCALE (KNOTS)

NOTE – WIND DIRECTION IS THE DIRECTION WIND IS BLOWING FROM

## Site 7 Wind Direction

Winter 1994

Calms 2.0%

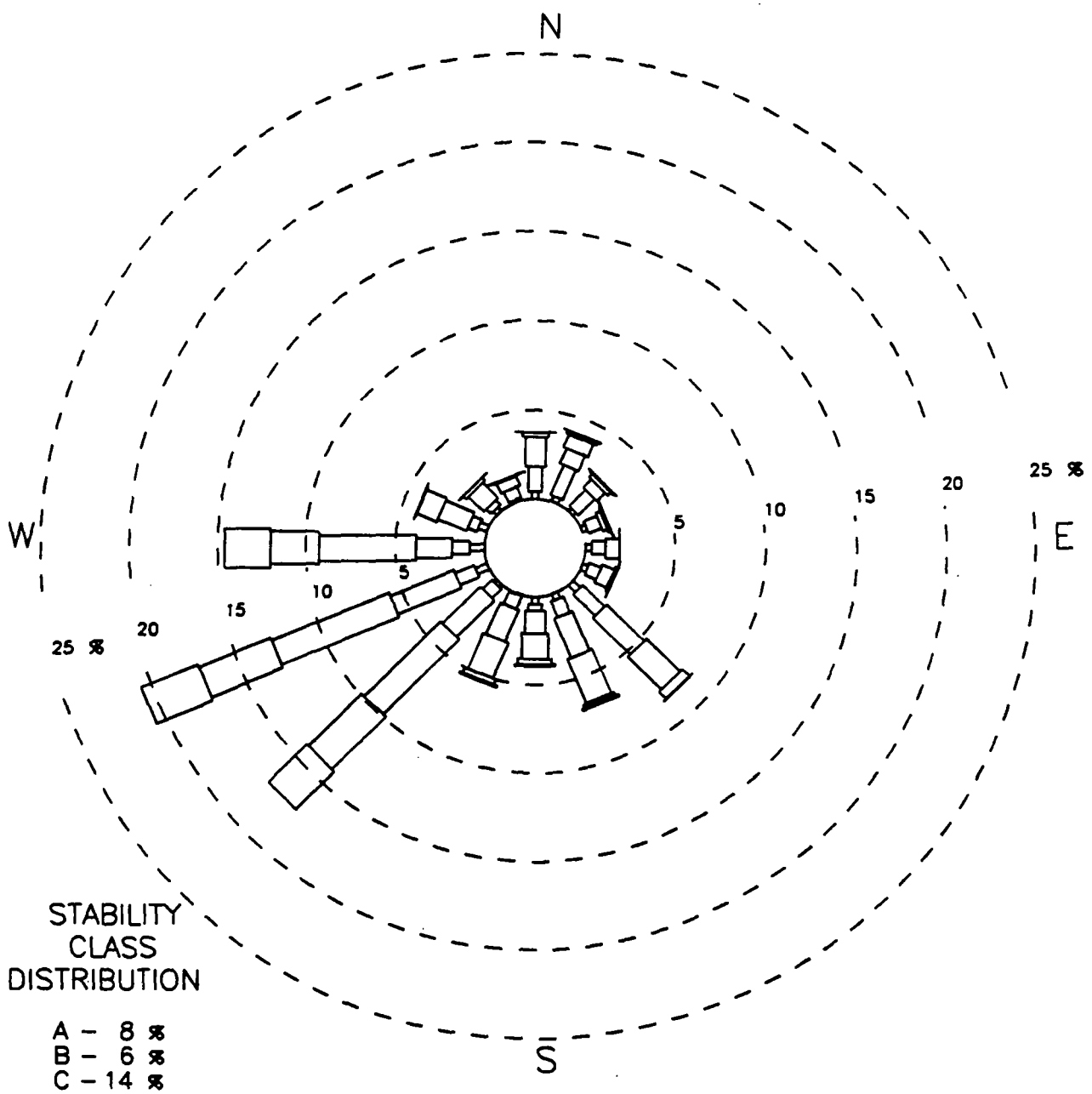


STABILITY CLASS DISTRIBUTION

A – 8 %
B – 6 %
C – 14 %
D – 64 %
E – 3 %
F – 4 %

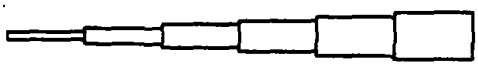

0–3 (6 %) 4–6 (15 %) 7–10 (26 %) 11–16 (30 %) 17–21 (13 %) 22–99 (9 %)

WIND SPEED SCALE (KNOTS)

NOTE – WIND DIRECTION IS THE DIRECTION WIND IS BLOWING FROM

Site 7 Wind Direction

Spring 1994

Calms 1.1%

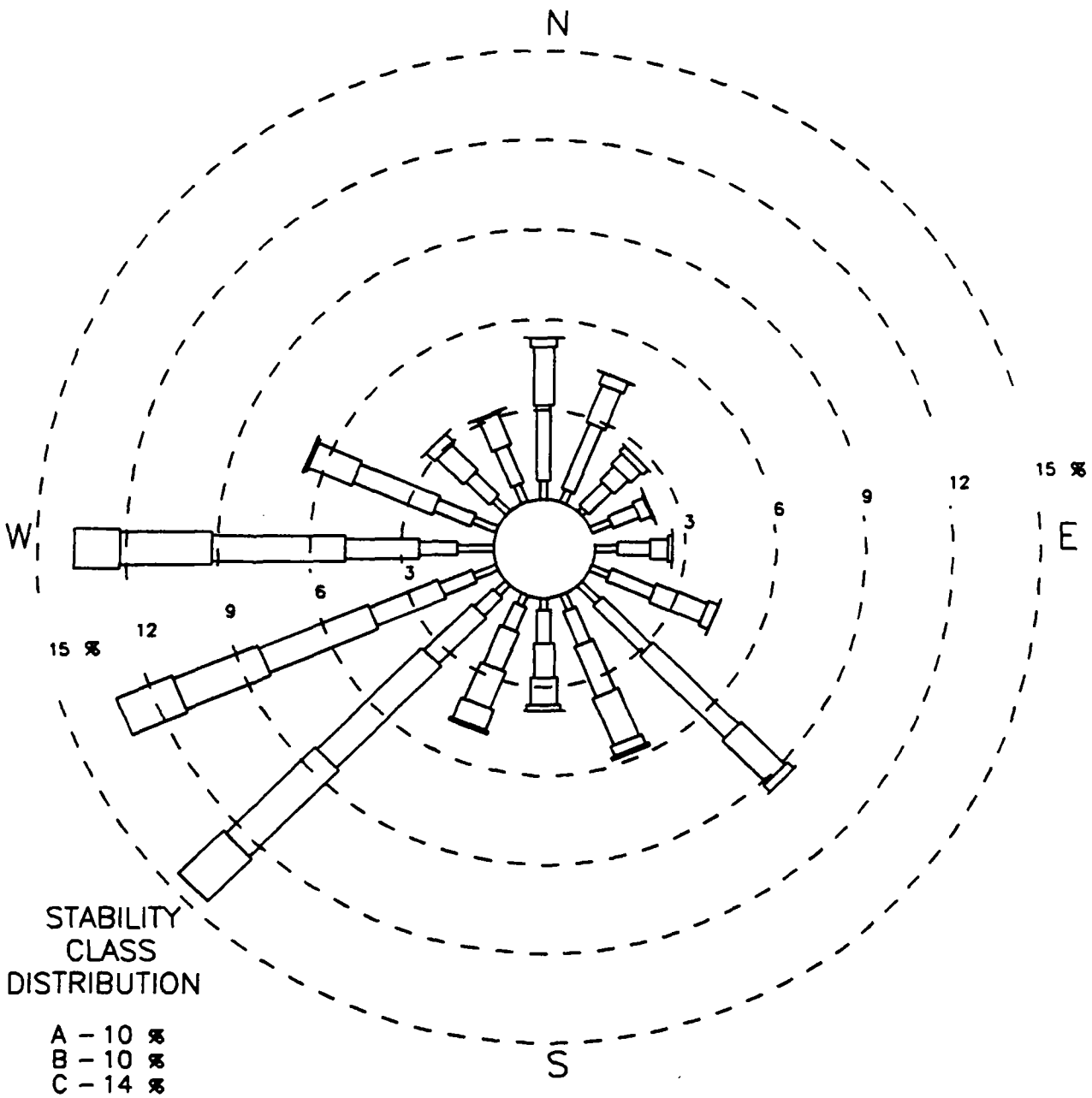


STABILITY CLASS DISTRIBUTION

A – 10 %
B – 10 %
C – 14 %
D – 52 %
E – 5 %
F – 9 %

0–3 (10 %) 4–6 (22 %) 7–10 (27 %) 11–16 (23 %) 17–21 (12 %) 22–99 (6 %)

WIND SPEED SCALE (KNOTS)

NOTE – WIND DIRECTION IS THE DIRECTION WIND IS BLOWING FROM

## Site 7 Wind Direction

Summer 1994

Calms 4.3%

# Appendix AC-3

# Mixing Height Data (Site 1)

**Table AC-3-1 Site 1 Mixing Heights (meters)**
**for Fall 1993**

Hour Beginning

| Date | 1 | 2 | 3 | 4 | 5 | 6 | 7 | 8 | 9 | 10 | 11 | 12 | 13 | 14 | 15 | 16 | 17 | 18 | 19 | 20 | 21 | 22 | 23 | 24 |
|---|---|---|---|---|---|---|---|---|---|---|---|---|---|---|---|---|---|---|---|---|---|---|---|---|
| 10/1/93 | 838 | 938 | 1000 | 875 | 888 | 763 | 838 | 1500 | 1500 | 1500 | 1500 | 1500 | 1500 | 1500 | 1500 | 1500 | 1500 | 1500 | 1500 | 900 | 875 | 838 | 750 | 738 |
| 10/2/93 | 525 | 43 | 275 | 79 | 43 | 43 | 200 | 1500 | 1500 | 1500 | 1500 | 1500 | 1500 | 1500 | 1500 | 1500 | 1500 | 1500 | 1500 | 47 | 43 | 65 | 400 | 43 |
| 10/3/93 | 43 | 43 | 54 | 43 | 56 | 43 | 213 | 1500 | 1500 | 1500 | 1500 | 1500 | 1500 | 1500 | 1500 | 1500 | 1500 | 1500 | 1500 | 52 | 638 | 700 | 738 | 800 |
| 10/4/93 | 43 | 47 | 288 | 43 | 43 | 47 | 125 | 1500 | 1500 | 1500 | 1500 | 1500 | 1500 | 1500 | 1500 | 1500 | 1500 | 1500 | 1500 | 43 | 713 | 43 | 43 | 69 |
| 10/5/93 | 43 | 43 | 43 | 43 | 525 | 116 | 238 | 138 | 1500 | 1500 | 1500 | 1500 | 1500 | 1500 | 1500 | 1500 | 1500 | 1500 | 925 | 1000 | 488 | 688 | 43 | 43 |
| 10/6/93 | 43 | 700 | 563 | 738 | 888 | 43 | 163 | 125 | 1500 | 1500 | 1500 | 1500 | 1500 | 1500 | 1500 | 1500 | 1500 | 1500 | 43 | 575 | 313 | 438 | 43 | 1500 |
| 10/7/93 | 69 | 50 | 67 | 52 | 575 | 988 | 100 | 1500 | 1500 | 1500 | 1500 | 1500 | 1500 | 1500 | 1500 | 1500 | 1500 | 1500 | 1500 | 788 | 875 | 938 | 875 | 775 |
| 10/8/93 | 700 | 775 | 738 | 125 | 463 | 288 | 300 | 1500 | 1500 | 1500 | 1500 | 1500 | 1500 | 1500 | 1500 | 1500 | 1500 | 1500 | 1500 | 1500 | 43 | 43 | 438 | 413 |
| 10/9/93 | 43 | 43 | 62 | 79 | 113 | 225 | 200 | 1500 | 1500 | 1500 | 1500 | 1500 | 1500 | 1500 | 1500 | 1500 | 1500 | 1500 | 1500 | 43 | 1500 | 43 | 700 | 675 |
| 10/10/93 | 43 | 60 | 638 | 763 | 700 | 638 | 663 | 1500 | 1500 | 1500 | 1500 | 1500 | 1500 | 1500 | 1500 | 1500 | 1500 | 1500 | 1500 | 388 | 52 | 688 | 47 | 43 |
| 10/11/93 | 43 | 43 | 43 | 43 | 43 | 425 | 425 | 1500 | 1500 | 1500 | 1500 | 1500 | 1500 | 1500 | 1500 | 1500 | 1500 | 1500 | 1500 | 213 | 69 | 43 | 52 | 125 |
| 10/12/93 | 43 | 638 | 600 | 688 | 838 | 838 | 763 | 1500 | 1500 | 1500 | 1500 | 1500 | 1500 | 1500 | 1500 | 1500 | 1500 | 1500 | 1500 | 43 | 43 | 57 | 625 | 775 |
| 10/13/93 | 688 | 700 | 763 | 500 | 50 | 43 | 213 | 1500 | 1500 | 1500 | 1500 | 1500 | 1500 | 1500 | 1500 | 1500 | 1500 | 1500 | 1500 | 813 | 43 | 425 | 413 | 675 |
| 10/14/93 | 650 | 500 | 488 | 43 | 132 | 106 | 134 | 139 | 1500 | 1500 | 1500 | 1500 | 1500 | 1500 | 1500 | 1500 | 1500 | 1500 | 1500 | 513 | 638 | 638 | 788 | 700 |
| 10/15/93 | 96 | 525 | 106 | 58 | 99 | 638 | 575 | 1500 | 1500 | 1500 | 1500 | 1500 | 1500 | 1500 | 1500 | 1500 | 1500 | 1500 | 1500 | 500 | 575 | 675 | 538 | 513 |
| 10/16/93 | 538 | 43 | 68 | 338 | 121 | 43 | 135 | 1500 | 1500 | 1500 | 1500 | 1500 | 1500 | 1500 | 1500 | 1500 | 1500 | 1500 | 1500 | 47 | 43 | 43 | 43 | 43 |
| 10/17/93 | 43 | 43 | 96 | 43 | 43 | 313 | 363 | 1500 | 1500 | 1500 | 1500 | 1500 | 1500 | 1500 | 1500 | 1500 | 1500 | 1500 | 1500 | 838 | 900 | 838 | 763 | 850 |
| 10/18/93 | 713 | 738 | 650 | 725 | 638 | 638 | 750 | 1500 | 1500 | 1500 | 1500 | 1500 | 1500 | 1500 | 1500 | 1500 | 1500 | 1500 | 1500 | 43 | 52 | 47 | 43 | 43 |
| 10/19/93 | 47 | 43 | 69 | 47 | 43 | 43 | 43 | 1500 | 1500 | 1500 | 1500 | 1500 | 1500 | 1500 | 1500 | 1500 | 1500 | 1500 | 1500 | 938 | 950 | 1037 | 963 | 875 |
| 10/20/93 | 875 | 613 | 725 | 613 | 66 | 450 | 133 | 1500 | 1500 | 1500 | 1500 | 1500 | 1500 | 1500 | 1500 | 1500 | 1500 | 1500 | 1500 | 43 | 43 | 75 | 56 | 43 |
| 10/21/93 | 100 | 159 | 106 | 125 | 118 | 78 | 125 | 1500 | 161 | 216 | 1500 | 1500 | 1500 | 1500 | 1500 | 1500 | 1500 | 1500 | 1500 | 43 | 538 | 750 | 388 | 413 |
| 10/22/93 | 52 | 413 | 59 | 106 | 55 | 43 | 125 | 1500 | 157 | 172 | 1500 | 1500 | 1500 | 1500 | 1500 | 1500 | 1500 | 1500 | 1500 | 43 | 43 | 47 | 713 | 663 |
| 10/23/93 | 525 | 118 | 54 | 43 | 47 | 47 | 375 | 163 | 1500 | 1500 | 1500 | 1500 | 1500 | 1500 | 1500 | 1500 | 250 | 50 | 1500 | 100 | 688 | 575 | 60 | 725 |
| 10/24/93 | 650 | 72 | 111 | 363 | 43 | 75 | 175 | 1500 | 1500 | 1500 | 1500 | 1500 | 1500 | 1500 | 1500 | 1500 | 1500 | 1500 | 1500 | 775 | 775 | 925 | 975 | 1062 |
| 10/25/93 | 1087 | 1075 | 1013 | 850 | 913 | 600 | 463 | 135 | 1500 | 1500 | 1500 | 1500 | 1500 | 1500 | 1500 | 1500 | 1500 | 1500 | 1500 | 43 | 43 | 43 | 63 | 43 |
| 10/26/93 | 43 | 43 | 64 | 69 | 70 | 55 | 108 | 114 | 1500 | 1500 | 1500 | 1500 | 1500 | 1500 | 1500 | 1500 | 1500 | 1500 | 43 | 43 | 43 | 43 | 350 | 89 |
| 10/27/93 | 43 | 104 | 94 | 78 | 76 | 59 | 91 | 1500 | 1500 | 172 | 1500 | 1500 | 1500 | 1500 | 1500 | 1500 | 1500 | 1500 | 625 | 463 | 575 | 663 | 638 | 600 |
| 10/28/93 | 838 | 888 | 850 | 888 | 128 | 838 | 124 | 129 | 1500 | 1500 | 1500 | 1500 | 1500 | 1500 | 1500 | 1500 | 1500 | 1500 | 825 | 738 | 838 | 525 | 613 | 600 |
| 10/29/93 | 650 | 463 | 650 | 513 | 638 | 475 | 159 | 1500 | 1500 | 1500 | 1500 | 1500 | 1500 | 1500 | 1500 | 1500 | 1500 | 1500 | 188 | 43 | 625 | 688 | 388 | 43 |
| 10/30/93 | 86 | 105 | 100 | 86 | 688 | 54 | 86 | 1500 | 119 | 1500 | 1500 | 1500 | 1500 | 1500 | 1500 | 1500 | 1500 | 1500 | 350 | 1500 | 550 | 788 | 788 | 375 |
| 10/31/93 | 125 | 300 | 250 | 200 | 263 | 163 | 1500 | 1500 | 1500 | 1500 | 1500 | 1500 | 1500 | 1500 | 1500 | 1500 | 1500 | 1500 | 1500 | 875 | 788 | 950 | 130 | 963 | 102 |
| 11/1/93 | 1000 | 163 | 1100 | 1050 | 102 | 174 | 963 | 1125 | 1500 | 1500 | 1500 | 1500 | 1500 | 1500 | 1500 | 1500 | 1500 | 1500 | 1500 | 638 | 475 | 613 | 575 | 875 | 788 |
| 11/2/93 | 763 | 800 | 108 | 43 | 104 | 110 | 121 | 1500 | 1500 | 1500 | 1500 | 1500 | 1500 | 1500 | 1500 | 1500 | 1500 | 1500 | 1500 | 550 | 788 | 800 | 925 | 975 | 725 |
| 11/3/93 | 913 | 713 | 900 | 121 | 1175 | 775 | 111 | 1500 | 1500 | 1500 | 1500 | 1500 | 1500 | 1500 | 1500 | 1500 | 1500 | 1500 | 1500 | 1050 | 1062 | 925 | 43 | 43 |
| 11/4/93 | 563 | 475 | 43 | 130 | 102 | 105 | 938 | 1500 | 1500 | 1500 | 1500 | 1500 | 1500 | 1500 | 1500 | 1500 | 1500 | 1500 | 1500 | 388 | 588 | 43 | 43 | 250 |
| 11/5/93 | 43 | 500 | 43 | 115 | 91 | 463 | 425 | 1500 | 1500 | 1500 | 1500 | 1500 | 1500 | 1500 | 1500 | 1500 | 1500 | 1500 | 1500 | 663 | 688 | 763 | 475 | 638 | 550 |
| 11/6/93 | 54 | 650 | 638 | 813 | 725 | 43 | 47 | 1500 | 1500 | 1500 | 1500 | 1500 | 1500 | 1500 | 1500 | 1500 | 1500 | 1500 | 1500 | 625 | 450 | 500 | 638 | 663 | 625 |
| 11/7/93 | 43 | 43 | 43 | 43 | 43 | 463 | 525 | 1500 | 1500 | 1500 | 1500 | 1500 | 1500 | 1500 | 1500 | 1500 | 1500 | 1500 | 1500 | 550 | 488 | 463 | 43 | 43 |
| 11/8/93 | 43 | 43 | 63 | 43 | 43 | 43 | 375 | 105 | 1500 | 1500 | 1500 | 1500 | 1500 | 1500 | 688 | 1500 | 1500 | 1500 | 475 | 43 | 463 | 43 | 43 | 43 |
| 11/9/93 | 43 | 43 | 43 | 43 | 43 | 43 | 78 | 150 | 1500 | 1500 | 1500 | 1500 | 1500 | 1500 | 1500 | 1500 | 1500 | 1500 | 513 | 1500 | 725 | 43 | 250 | 43 |
| 11/10/93 | 275 | 54 | 80 | 81 | 43 | 77 | 350 | 1500 | 1500 | 1500 | 1500 | 1500 | 1500 | 1500 | 1500 | 1500 | 1500 | 1500 | 1500 | 43 | 43 | 43 | 43 | 73 |
| 11/11/93 | 76 | 80 | 43 | 54 | 43 | 85 | 43 | 163 | 1500 | 1500 | 1500 | 1500 | 1500 | 1500 | 1500 | 1500 | 1500 | 1500 | 43 | 650 | 750 | 1000 | 850 | 638 |
| 11/12/93 | 113 | 101 | 913 | 1000 | 135 | 875 | 900 | 1500 | 1500 | 1500 | 1500 | 1500 | 1500 | 1500 | 1500 | 1500 | 863 | 925 | 938 | 1050 | 888 | 838 | 775 | 938 |
| 11/13/93 | 1037 | 1037 | 938 | 1025 | 963 | 141 | 102 | 111 | 256 | 1500 | 1500 | 1500 | 1500 | 1500 | 1500 | 1500 | 1500 | 1500 | 338 | 1500 | 43 | 43 | 43 | 83 |
| 11/14/93 | 75 | 54 | 73 | 213 | 97 | 88 | 111 | 165 | 1500 | 1500 | 1500 | 1500 | 1500 | 1500 | 1500 | 1500 | 1500 | 1500 | 788 | 788 | 738 | 638 | 600 | 538 |
| 11/15/93 | 375 | 575 | 638 | 638 | 725 | 151 | 118 | 738 | 134 | 1500 | 1500 | 1500 | 1500 | 1500 | 1500 | 1500 | 1500 | 1500 | 425 | 47 | 513 | 838 | 988 | 1025 |
| 11/16/93 | 1100 | 1125 | 1087 | 1087 | 100 | 950 | 988 | 963 | 1500 | 1500 | 1500 | 1500 | 1500 | 1500 | 1500 | 1500 | 1500 | 1500 | 775 | 800 | 800 | 1225 | 1263 | 1037 |
| 11/17/93 | 925 | 875 | 43 | 350 | 47 | 43 | 105 | 1500 | 1500 | 1500 | 1500 | 1500 | 1500 | 1500 | 1500 | 1500 | 1500 | 900 | 813 | 850 | 763 | 725 | 700 | 638 | 838 |
| 11/18/93 | 775 | 925 | 825 | 825 | 900 | 950 | 938 | 1025 | 1500 | 1500 | 1500 | 1500 | 1500 | 1500 | 1500 | 1500 | 600 | 450 | 450 | 47 | 388 | 538 | 688 | 700 | 688 |
| 11/19/93 | 850 | 888 | 650 | 43 | 43 | 400 | 86 | 475 | 525 | 400 | 538 | 663 | 788 | 738 | 800 | 775 | 550 | 47 | 1500 | 425 | 43 | 47 | 74 | 43 |
| 11/20/93 | 84 | 538 | 64 | 89 | 92 | 338 | 60 | 238 | 137 | 175 | 250 | 238 | 188 | 163 | 137 | 225 | 43 | 153 | 663 | 850 | 963 | 1037 | 1087 | 1150 |
| 11/21/93 | 1162 | 900 | 43 | 43 | 76 | 43 | 43 | 388 | 238 | 325 | 288 | 500 | 1287 | 1075 | 738 | 938 | 1025 | 1162 | 1112 | 1037 | 900 | 1125 | 1212 | 1350 |
| 11/22/93 | 1237 | 1225 | 135 | 425 | 888 | 925 | 913 | 938 | 963 | 1125 | 1025 | 1000 | 1013 | 1212 | 1375 | 1362 | 1175 | 750 | 788 | 788 | 788 | 800 | 963 | 688 |
| 11/23/93 | 750 | 950 | 938 | 838 | 925 | 788 | 825 | 688 | 1187 | 1000 | 713 | 938 | 1000 | 1075 | 1037 | 950 | 838 | 813 | 1500 | 788 | 788 | 112 | 800 | 788 |
| 11/24/93 | 913 | 800 | 838 | 156 | 888 | 1112 | 1275 | 123 | 1112 | 1162 | 1212 | 1100 | 900 | 788 | 738 | 688 | 550 | 375 | 47 | 43 | 43 | 62 | 43 | 43 |
| 11/25/93 | 43 | 43 | 43 | 43 | 43 | 43 | 43 | 106 | 175 | 125 | 125 | 238 | 188 | 225 | 225 | 275 | 43 | 43 | 43 | 250 | 43 | 43 | 43 | 86 |
| 11/26/93 | 63 | 43 | 137 | 43 | 61 | 83 | 43 | 125 | 125 | 125 | 275 | 175 | 125 | 125 | 125 | 137 | 43 | 43 | 1500 | 43 | 43 | 43 | 43 | 188 |
| 11/27/93 | 64 | 150 | 58 | 47 | 117 | 43 | 56 | 110 | 125 | 137 | 200 | 163 | 200 | 250 | 263 | 225 | 313 | 43 | 43 | 54 | 43 | 43 | 43 | 43 |
| 11/28/93 | 68 | 43 | 43 | 81 | 325 | 59 | 43 | 188 | 388 | 225 | 175 | 200 | 238 | 288 | 225 | 125 | 43 | 388 | 49 | 863 | 67 | 71 | 43 | 78 |
| 11/29/93 | 43 | 43 | 488 | 139 | 43 | 463 | 43 | 213 | 263 | 913 | 713 | 513 | 450 | 375 | 313 | 125 | 163 | 43 | 43 | 52 | 43 | 350 | 288 | 47 |
| 11/30/93 | 43 | 43 | 43 | 43 | 313 | 43 | 425 | 313 | 200 | 288 | 1075 | 838 | 875 | 950 | 963 | 1000 | 963 | 1087 | 1150 | 1500 | 1275 | 1263 | 1138 | 1087 |
| 12/1/93 | 1075 | 888 | 538 | 550 | 650 | 128 | 152 | 575 | 112 | 162 | 513 | 688 | 638 | 913 | 1013 | 1075 | 1075 | 1100 | 1500 | 663 | 775 | 838 | 788 | 725 |
| 12/2/93 | 900 | 118 | 1375 | 1475 | 106 | 1150 | 1225 | 139 | 151 | 1150 | 1112 | 1312 | 1375 | 1225 | 1250 | 1000 | 1000 | 1500 | 1062 | 1500 | 988 | 900 | 788 | 763 |
| 12/3/93 | 688 | 650 | 121 | 513 | 525 | 525 | 101 | 1500 | 1500 | 350 | 300 | 300 | 238 | 238 | 213 | 600 | 600 | 1500 | 1125 | 1500 | 1250 | 1200 | 1050 | 838 |
| 12/4/93 | 613 | 738 | 900 | 738 | 775 | 738 | 513 | 1013 | 1413 | 875 | 850 | 1275 | 1250 | 1300 | 1500 | 1500 | 1500 | 1400 | 1300 | 1263 | 1112 | 800 | 900 | 975 |
| 12/5/93 | 988 | 900 | 1000 | 988 | 788 | 475 | 475 | 475 | 575 | 588 | 488 | 163 | 375 | 275 | 213 | 200 | 43 | 43 | 43 | 47 | 47 | 43 | 50 | 43 |
| 12/6/93 | 43 | 43 | 43 | 43 | 43 | 43 | 43 | 188 | 313 | 213 | 250 | 400 | 375 | 363 | 800 | 913 | 938 | 838 | 1500 | 713 | 1500 | 675 | 613 | 788 |
| 12/7/93 | 600 | 43 | 43 | 43 | 77 | 43 | 76 | 163 | 102 | 100 | 100 | 152 | 300 | 400 | 413 | 225 | 43 | 43 | 43 | 43 | 43 | 43 | 43 | 43 |
| 12/8/93 | 563 | 43 | 43 | 675 | 738 | 563 | 800 | 1025 | 938 | 975 | 1150 | 913 | 1162 | 1312 | 1037 | 1175 | 1337 | 1050 | 1500 | 1250 | 1237 | 1287 | 1075 | 1087 |
| 12/9/93 | 126 | 975 | 750 | 963 | 963 | 700 | 788 | 813 | 638 | 663 | 525 | 638 | 438 | 338 | 363 | 238 | 43 | 43 | 43 | 600 | 450 | 513 | 675 | 925 |
| 12/10/93 | 775 | 900 | 800 | 800 | 800 | 800 | 713 | 488 | 363 | 213 | 225 | 238 | 213 | 263 | 538 | 775 | 713 | 47 | 638 | 1500 | 675 | 69 | 400 | 43 |
| 12/11/93 | 475 | 43 | 47 | 47 | 43 | 47 | 43 | 338 | 313 | 263 | 238 | 275 | 475 | 475 | 775 | 700 | 463 | 713 | 775 | 43 | 43 | 988 | 1100 | 1075 |
| 12/12/93 | 738 | 575 | 638 | 1087 | 1300 | 1425 | 1413 | 1500 | 1425 | 1462 | 1300 | 1275 | 1325 | 1337 | 1275 | 1200 | 1062 | 1025 | 1500 | 988 | 1500 | 1062 | 103 | 838 |
| 12/13/93 | 700 | 625 | 488 | 750 | 625 | 575 | 600 | 363 | 375 | 213 | 238 | 275 | 313 | 313 | 288 | 125 | 43 | 450 | 1500 | 1500 | 43 | 43 | 80 | 43 |
| 12/14/93 | 43 | 78 | 73 | 43 | 43 | 43 | 43 | 250 | 163 | 163 | 125 | 175 | 137 | 125 | 200 | 238 | 43 | 43 | 52 | 43 | 43 | 43 | 47 | 52 |
| 12/15/93 | 52 | 52 | 47 | 43 | 863 | 775 | 788 | 813 | 863 | 900 | 1025 | 1187 | 1125 | 1100 | 1050 | 950 | 1075 | 950 | 1100 | 888 | 838 | 900 | 863 | 975 |
| 12/16/93 | 888 | 900 | 1013 | 1050 | 1112 | 925 | 988 | 925 | 913 | 838 | 875 | 925 | 988 | 875 | 850 | 775 | 500 | 525 | 1500 | 650 | 625 | 463 | 463 | 43 |
| 12/17/93 | 43 | 65 | 313 | 43 | 43 | 313 | 300 | 250 | 122 | 152 | 238 | 213 | 213 | 200 | 200 | 275 | 43 | 43 | 238 | 43 | 62 | 338 | 213 | 43 |
| 12/18/93 | 43 | 225 | 90 | 64 | 213 | 43 | 113 | 93 | 130 | 125 | 125 | 125 | 137 | 163 | 238 | 163 | 43 | 47 | 1500 | 43 | 400 | 43 | 43 | 43 |
| 12/19/93 | 67 | 61 | 43 | 98 | 123 | 513 | 475 | 112 | 106 | 375 | 313 | 288 | 425 | 475 | 450 | 525 | 688 | 1500 | 1500 | 65 | 43 | 375 | 43 | 83 |
| 12/20/93 | 43 | 147 | 79 | 124 | 166 | 43 | 127 | 53 | 325 | 363 | 250 | 213 | 313 | 613 | 438 | 275 | 43 | 43 | 1500 | 275 | 88 | 43 | 80 | 47 |
| 12/21/93 | 80 | 43 | 43 | 100 | 83 | 56 | 43 | 118 | 132 | 109 | 450 | 400 | 338 | 325 | 313 | 225 | 43 | 43 | 1500 | 700 | 563 | 538 | 525 | 675 |
| 12/22/93 | 675 | 116 | 588 | 563 | 475 | 375 | 105 | 60 | 200 | 150 | 263 | 213 | 213 | 188 | 363 | 150 | 43 | 475 | 575 | 500 | 338 | 463 | 375 | 43 |
| 12/23/93 | 54 | 43 | 66 | 102 | 165 | 52 | 81 | 104 | 213 | 125 | 150 | 450 | 538 | 738 | 713 | 463 | 43 | 43 | 1500 | 1500 | 43 | 43 | 43 | 47 |
| 12/24/93 | 71 | 43 | 43 | 43 | 43 | 375 | 74 | 43 | 125 | 137 | 175 | 188 | 200 | 225 | 263 | 263 | 43 | 1500 | 1500 | 43 | 43 | 43 | 288 | 263 |
| 12/25/93 | 263 | 137 | 146 | 123 | 100 | 93 | 75 | 61 | 125 | 112 | 137 | 213 | 225 | 263 | 288 | 125 | 43 | 43 | 163 | 66 | 43 | 43 | 43 | 338 |
| 12/26/93 | 350 | 43 | 275 | 134 | 75 | 59 | 43 | 145 | 163 | 117 | 180 | 263 | 250 | 163 | 150 | 125 | 43 | 1500 | 1500 | 350 | 43 | 200 | 43 | 43 |
| 12/27/93 | 43 | 43 | 101 | 325 | 43 | 43 | 43 | 43 | 275 | 188 | 300 | 438 | 525 | 438 | 550 | 550 | 475 | 425 | 388 | 43 | 43 | 43 | 43 | 43 |
| 12/28/93 | 43 | 288 | 111 | 101 | 43 | 43 | 43 | 170 | 188 | 125 | 238 | 163 | 175 | 225 | 300 | 275 | 250 | 1500 | 43 | 43 | 313 | 60 | 313 | 43 |
| 12/29/93 | 363 | 325 | 111 | 450 | 350 | 413 | 425 | 121 | 137 | 263 | 1500 | 1500 | 1500 | 1500 | 1500 | 1500 | 1500 | 1500 | 1500 | 1500 | 1500 | 1500 | 1500 | 1500 |
| 12/30/93 | 47 | 43 | 43 | 43 | 43 | 78 | 43 | 288 | 150 | 238 | 263 | 200 | 200 | 325 | 275 | 213 | 103 | 43 | 43 | 450 | 68 | 43 | 788 | 1500 |
| 12/31/93 | 1500 | 43 | 43 | 1013 | 1138 | 1500 | 1000 | 1500 | 1500 | 1125 | 1013 | 988 | 788 | 650 | 613 | 650 | 475 | 413 | 563 | 575 | 575 | 938 | 925 | 975 |

**Table AC-3-2 Site 1 Mixing Height (meters)**
**for Winter 1994**

| | Hour Beginning | | | | | | | | | | | | | | | | | | | | | | | |
|---|---|---|---|---|---|---|---|---|---|---|---|---|---|---|---|---|---|---|---|---|---|---|---|---|
| Date | 1 | 2 | 3 | 4 | 5 | 6 | 7 | 8 | 9 | 10 | 11 | 12 | 13 | 14 | 15 | 16 | 17 | 18 | 19 | 20 | 21 | 22 | 23 | 24 |
| 1/1/94 | 913 | 1013 | 800 | 925 | 1025 | 1100 | 1175 | 1050 | 1500 | 1500 | 1500 | 1500 | 1500 | 1500 | 1500 | 1500 | 1500 | 1250 | 1475 | 1500 | 1325 | 1100 | 1225 | 900 |
| 1/2/94 | 975 | 988 | 1050 | 925 | 1013 | 950 | 913 | 800 | 1500 | 1500 | 1500 | 1500 | 1500 | 1500 | 1500 | 1500 | 1500 | 1500 | 688 | 713 | 575 | 725 | 725 | 725 |
| 1/3/94 | 638 | 613 | 550 | 114 | 1225 | 1087 | 963 | 800 | 400 | 1500 | 1500 | 1500 | 1500 | 1500 | 1500 | 1500 | 1500 | 663 | 538 | 713 | 575 | 41 | 538 | 688 |
| 1/4/94 | 688 | 54 | 81 | 103 | 67 | 32 | 115 | 32 | 107 | 148 | 1500 | 1500 | 1500 | 1500 | 1500 | 1500 | 1500 | 1500 | 688 | 588 | 625 | 550 | 688 | 963 |
| 1/5/94 | 1025 | 925 | 950 | 1162 | 1037 | 1125 | 1375 | 1350 | 135 | 140 | 161 | 1500 | 1500 | 1500 | 1500 | 1500 | 1500 | 1500 | 1500 | 1112 | 1162 | 1100 | 1062 | 104 |
| 1/6/94 | 1375 | 1300 | 1050 | 1000 | 1037 | 1025 | 1037 | 1087 | 102 | 1500 | 1500 | 1500 | 1500 | 1500 | 1500 | 1300 | 1400 | 1200 | 1500 | 1500 | 1200 | 1175 | 1050 | 1062 |
| 1/7/94 | 102 | 1050 | 1112 | 900 | 763 | 563 | 550 | 500 | 500 | 1500 | 1500 | 1500 | 1500 | 1500 | 1500 | 1500 | 1500 | 1500 | 738 | 788 | 788 | 838 | 875 | 975 |
| 1/8/94 | 1000 | 925 | 738 | 450 | 1500 | 43 | 43 | 43 | 250 | 1500 | 1500 | 1500 | 1500 | 1500 | 1500 | 1500 | 575 | 425 | 425 | 575 | 750 | 43 | 43 | 69 |
| 1/9/94 | 97 | 31 | 675 | 800 | 775 | 813 | 900 | 963 | 1050 | 1500 | 1500 | 1500 | 1500 | 1500 | 1500 | 1500 | 1500 | 788 | 738 | 713 | 875 | 800 | 738 | 713 |
| 1/10/94 | 800 | 713 | 788 | 913 | 850 | 102 | 146 | 132 | 763 | 1500 | 1500 | 1500 | 1500 | 1500 | 1500 | 1500 | 1500 | 1500 | 425 | 400 | 638 | 127 | 738 | 750 |
| 1/11/94 | 850 | 111 | 119 | 109 | 1050 | 111 | 119 | 136 | 950 | 1500 | 1500 | 1500 | 1500 | 1500 | 1500 | 1500 | 638 | 1500 | 675 | 688 | 638 | 122 | 588 | 725 |
| 1/12/94 | 1500 | 688 | 750 | 738 | 838 | 613 | 400 | 488 | 738 | 1500 | 1500 | 1500 | 1500 | 1500 | 1500 | 1500 | 1500 | 663 | 613 | 625 | 663 | 625 | 625 | 775 |
| 1/13/94 | 775 | 124 | 1062 | 110 | 116 | 124 | 975 | 1050 | 1500 | 1500 | 1500 | 1500 | 1500 | 1500 | 1500 | 1500 | 1500 | 613 | 563 | 613 | 875 | 675 | 600 | 638 |
| 1/14/94 | 83 | 43 | 638 | 575 | 89 | 47 | 65 | 61 | 1500 | 1500 | 1500 | 1500 | 1500 | 1500 | 1500 | 1500 | 1500 | 43 | 56 | 30 | 43 | 67 | 34 | 75 |
| 1/15/94 | 55 | 89 | 52 | 77 | 43 | 61 | 288 | 238 | 149 | 103 | 1500 | 1500 | 1500 | 1500 | 1500 | 1500 | 1287 | 1300 | 1225 | 1138 | 1362 | 1187 | 988 | 1187 |
| 1/16/94 | 1225 | 1212 | 1187 | 1187 | 1162 | 888 | 1000 | 1138 | 1500 | 185 | 1500 | 157 | 1500 | 1500 | 1500 | 1500 | 1500 | 675 | 575 | 650 | 813 | 975 | 1125 | 975 |
| 1/17/94 | 1050 | 888 | 850 | 950 | 800 | 103 | 688 | 145 | 165 | 226 | 1500 | 1500 | 1500 | 1500 | 1500 | 1500 | 838 | 713 | 838 | 738 | 738 | 513 | 550 | 538 |
| 1/18/94 | 713 | 675 | 663 | 600 | 475 | 43 | 43 | 313 | 1500 | 1500 | 1500 | 1500 | 1500 | 1500 | 1500 | 1500 | 1500 | 37 | 36 | 38 | 36 | 30 | 32 | 25 |
| 1/19/94 | 27 | 32 | 25 | 30 | 27 | 38 | 36 | 36 | 1500 | 1500 | 1500 | 1500 | 1500 | 1500 | 1500 | 1500 | 1500 | 43 | 300 | 43 | 43 | 43 | 213 | 43 |
| 1/20/94 | 43 | 43 | 38 | 30 | 188 | 38 | 38 | 83 | 250 | 163 | 1500 | 1500 | 1500 | 1500 | 1500 | 1500 | 313 | 1500 | 27 | 30 | 188 | 32 | 25 | 25 |
| 1/21/94 | 27 | 156 | 78 | 140 | 81 | 36 | 63 | 41 | 137 | 120 | 1500 | 1500 | 1500 | 1500 | 1500 | 1500 | 1500 | 47 | 43 | 88 | 55 | 238 | 145 | 27 |
| 1/22/94 | 30 | 100 | 36 | 32 | 96 | 96 | 163 | 137 | 125 | 1500 | 1500 | 1500 | 1500 | 1500 | 1500 | 1500 | 350 | 70 | 32 | 59 | 115 | 32 | 25 | 25 |
| 1/23/94 | 32 | 30 | 62 | 46 | 125 | 63 | 32 | 225 | 191 | 159 | 1500 | 1500 | 1500 | 1500 | 1500 | 1500 | 1000 | 1375 | 1075 | 788 | 1000 | 963 | 108 | 114 |
| 1/24/94 | 144 | 463 | 188 | 113 | 111 | 195 | 166 | 130 | 738 | 1500 | 1500 | 1500 | 1500 | 1500 | 1500 | 1500 | 488 | 43 | 338 | 425 | 38 | 36 | 43 | 43 |
| 1/25/94 | 36 | 34 | 36 | 34 | 32 | 338 | 27 | 350 | 213 | 1500 | 1500 | 1500 | 1500 | 1500 | 1500 | 1500 | 325 | 30 | 27 | 775 | 1150 | 1138 | 1062 | 1050 |
| 1/26/94 | 1100 | 127 | 938 | 713 | 575 | 638 | 638 | 638 | 124 | 1500 | 1500 | 1500 | 1500 | 1500 | 1500 | 1500 | 575 | 575 | 513 | 575 | 575 | 513 | 513 | 513 |
| 1/27/94 | 27 | 32 | 30 | 30 | 34 | 34 | 263 | 263 | 1500 | 1500 | 1500 | 1500 | 1500 | 1500 | 1500 | 1500 | 338 | 450 | 38 | 41 | 263 | 47 | 40 | 47 |
| 1/28/94 | 47 | 47 | 43 | 43 | 43 | 47 | 43 | 288 | 163 | 150 | 275 | 325 | 1500 | 1500 | 1500 | 325 | 400 | 475 | 550 | 675 | 688 | 650 | 588 | 650 |
| 1/29/94 | 863 | 975 | 975 | 1013 | 688 | 700 | 688 | 725 | 101 | 1500 | 1500 | 1500 | 1500 | 1500 | 1500 | 1500 | 725 | 750 | 738 | 675 | 488 | 350 | 350 | 325 |
| 1/30/94 | 81 | 27 | 263 | 36 | 27 | 338 | 463 | 513 | 463 | 1500 | 1500 | 1500 | 1500 | 1500 | 1500 | 1500 | 538 | 325 | 27 | 400 | 30 | 25 | 27 | 71 |
| 1/31/94 | 41 | 81 | 126 | 159 | 123 | 263 | 59 | 425 | 100 | 115 | 172 | 1500 | 1500 | 1500 | 1500 | 1500 | 675 | 663 | 488 | 41 | 45 | 43 | 43 | 43 |
| 2/1/94 | 43 | 43 | 43 | 43 | 43 | 43 | 43 | 475 | 263 | 1500 | 1500 | 1500 | 1500 | 1500 | 1500 | 1500 | 288 | 43 | 43 | 500 | 43 | 663 | 825 | 900 |
| 2/2/94 | 838 | 47 | 43 | 43 | 43 | 43 | 43 | 137 | 163 | 188 | 1500 | 1500 | 1500 | 1500 | 1500 | 1500 | 288 | 43 | 200 | 43 | 43 | 56 | 43 | 43 |
| 2/3/94 | 300 | 43 | 188 | 43 | 60 | 43 | 43 | 275 | 263 | 1500 | 175 | 1500 | 1500 | 1500 | 1500 | 1500 | 613 | 425 | 43 | 425 | 425 | 775 | 638 | 43 |
| 2/4/94 | 43 | 43 | 82 | 43 | 43 | 43 | 43 | 150 | 125 | 1500 | 1500 | 1500 | 1500 | 1500 | 1500 | 1500 | 388 | 43 | 47 | 413 | 43 | 43 | 43 | 56 |
| 2/5/94 | 43 | 43 | 43 | 43 | 325 | 43 | 54 | 125 | 137 | 238 | 1500 | 1500 | 1500 | 1500 | 1500 | 1500 | 625 | 450 | 425 | 52 | 47 | 563 | 688 | 688 |
| 2/6/94 | 800 | 963 | 813 | 43 | 43 | 43 | 263 | 150 | 150 | 1500 | 1500 | 1500 | 1500 | 1500 | 1500 | 1500 | 550 | 600 | 738 | 775 | 900 | 813 | 925 | 650 |
| 2/7/94 | 750 | 850 | 713 | 725 | 900 | 850 | 788 | 625 | 158 | 147 | 1500 | 1500 | 1500 | 1500 | 1500 | 1500 | 1500 | 600 | 600 | 700 | 688 | 838 | 825 | 675 |
| 2/8/94 | 863 | 900 | 850 | 813 | 888 | 938 | 913 | 475 | 313 | 1500 | 1500 | 1500 | 1500 | 1500 | 1500 | 1500 | 1062 | 938 | 950 | 1037 | 1037 | 963 | 700 | 638 |
| 2/9/94 | 775 | 625 | 700 | 118 | 104 | 538 | 538 | 863 | 863 | 120 | 1500 | 1500 | 1500 | 1500 | 1500 | 1500 | 713 | 988 | 975 | 1075 | 1075 | 963 | 950 | 788 |
| 2/10/94 | 800 | 118 | 104 | 875 | 650 | 513 | 375 | 188 | 213 | 116 | 1500 | 1500 | 178 | 1500 | 1500 | 213 | 1500 | 288 | 67 | 63 | 43 | 51 | 400 | 50 |
| 2/11/94 | 140 | 113 | 62 | 86 | 413 | 538 | 43 | 413 | 146 | 625 | 1500 | 1500 | 1500 | 1500 | 1500 | 1500 | 1062 | 1050 | 1062 | 1025 | 938 | 900 | 925 | 488 |
| 2/12/94 | 43 | 52 | 43 | 450 | 47 | 47 | 600 | 588 | 475 | 1500 | 1500 | 1500 | 1500 | 1500 | 1500 | 1500 | 188 | 43 | 52 | 538 | 838 | 950 | 950 | 1000 |
| 2/13/94 | 875 | 888 | 43 | 43 | 413 | 450 | 400 | 413 | 313 | 250 | 275 | 1500 | 338 | 838 | 1500 | 1500 | 1500 | 1425 | 1500 | 900 | 875 | 675 | 725 | 638 |
| 2/14/94 | 663 | 563 | 43 | 43 | 110 | 43 | 43 | 525 | 575 | 638 | 1500 | 1500 | 1500 | 1500 | 1500 | 475 | 375 | 47 | 43 | 43 | 400 | 475 | 43 | 43 |
| 2/15/94 | 43 | 43 | 43 | 450 | 43 | 43 | 43 | 238 | 175 | 117 | 1500 | 1500 | 1500 | 1500 | 1500 | 1500 | 150 | 538 | 988 | 1037 | 975 | 1000 | 1062 | 963 |
| 2/16/94 | 863 | 56 | 130 | 111 | 70 | 72 | 59 | 200 | 313 | 625 | 1500 | 1500 | 1500 | 1500 | 1500 | 1500 | 375 | 575 | 725 | 963 | 575 | 600 | 43 | 43 |
| 2/17/94 | 43 | 1125 | 1425 | 1425 | 1087 | 863 | 1050 | 1212 | 1350 | 1425 | 158 | 1500 | 1500 | 1500 | 1500 | 1500 | 1013 | 1325 | 1187 | 1212 | 1125 | 1162 | 1000 | 875 | 688 |
| 2/18/94 | 613 | 625 | 450 | 575 | 738 | 750 | 925 | 1050 | 1062 | 788 | 825 | 1500 | 1500 | 1500 | 1500 | 1500 | 1075 | 788 | 938 | 688 | 600 | 688 | 713 | 688 | 738 |
| 2/19/94 | 688 | 638 | 813 | 725 | 713 | 738 | 838 | 838 | 763 | 675 | 1500 | 1500 | 1500 | 1500 | 1500 | 1500 | 1500 | 438 | 338 | 43 | 475 | 700 | 738 | 725 | 900 |
| 2/20/94 | 913 | 938 | 1037 | 1138 | 1237 | 1200 | 1112 | 788 | 913 | 1075 | 150 | 1500 | 1500 | 1500 | 1500 | 625 | 713 | 838 | 950 | 950 | 104 | 103 | 124 | 139 |
| 2/21/94 | 134 | 152 | 638 | 638 | 106 | 438 | 43 | 488 | 475 | 463 | 117 | 1500 | 1500 | 1500 | 1500 | 1500 | 313 | 338 | 72 | 525 | 738 | 738 | 838 | 825 |
| 2/22/94 | 638 | 713 | 600 | 838 | 950 | 1075 | 1125 | 1138 | 1062 | 1125 | 1500 | 1500 | 1500 | 1500 | 1500 | 925 | 988 | 863 | 838 | 1500 | 1500 | 1500 | 850 | 825 |
| 2/23/94 | 900 | 813 | 713 | 775 | 675 | 600 | 538 | 613 | 725 | 813 | 863 | 1500 | 1500 | 1500 | 1062 | 1050 | 1025 | 963 | 963 | 750 | 1025 | 938 | 813 | 925 |
| 2/24/94 | 1013 | 1300 | 1300 | 1237 | 1112 | 1037 | 1037 | 1000 | 1212 | 1138 | 1500 | 1500 | 1500 | 1500 | 1500 | 1500 | 1500 | 1413 | 1500 | 1500 | 1500 | 1125 | 1037 | 1125 |
| 2/25/94 | 1075 | 925 | 838 | 800 | 1500 | 600 | 738 | 788 | 638 | 1500 | 1500 | 288 | 313 | 1500 | 1500 | 1500 | 1500 | 109 | 56 | 77 | 43 | 338 | 43 | 49 |
| 2/26/94 | 1500 | 49 | 43 | 52 | 463 | 513 | 525 | 137 | 238 | 450 | 200 | 250 | 250 | 125 | 275 | 575 | 438 | 313 | 500 | 55 | 438 | 58 | 375 | 65 |
| 2/27/94 | 688 | 54 | 713 | 688 | 688 | 763 | 713 | 675 | 888 | 938 | 900 | 813 | 638 | 117 | 159 | 613 | 141 | 613 | 700 | 102 | 788 | 950 | 988 | 1000 |
| 2/28/94 | 1000 | 1037 | 1000 | 925 | 988 | 1000 | 1037 | 1013 | 1237 | 1138 | 1050 | 863 | 763 | 103 | 925 | 838 | 738 | 450 | 125 | 613 | 125 | 129 | 613 | 625 |
| 3/1/94 | 688 | 450 | 550 | 500 | 73 | 53 | 123 | 325 | 388 | 375 | 400 | 1500 | 1500 | 1500 | 106 | 225 | 363 | 288 | 43 | 43 | 638 | 738 | 850 | 77 |
| 3/2/94 | 67 | 103 | 84 | 163 | 115 | 100 | 43 | 118 | 125 | 188 | 238 | 1500 | 1500 | 425 | 413 | 500 | 500 | 563 | 488 | 800 | 1025 | 975 | 938 | 925 |
| 3/3/94 | 800 | 475 | 43 | 43 | 400 | 47 | 43 | 163 | 188 | 213 | 1500 | 1500 | 1500 | 1500 | 1500 | 538 | 525 | 111 | 43 | 43 | 43 | 563 | 688 | 663 |
| 3/4/94 | 43 | 43 | 43 | 43 | 43 | 675 | 613 | 213 | 513 | 1500 | 1500 | 1500 | 1500 | 1500 | 1500 | 950 | 1037 | 963 | 713 | 625 | 763 | 738 | 638 | 638 |
| 3/5/94 | 43 | 425 | 425 | 43 | 43 | 43 | 43 | 213 | 225 | 400 | 1500 | 1500 | 154 | 135 | 1500 | 475 | 413 | 263 | 113 | 157 | 43 | 575 | 102 | 688 |
| 3/6/94 | 563 | 513 | 575 | 788 | 800 | 750 | 750 | 650 | 675 | 600 | 638 | 613 | 1500 | 1500 | 1500 | 1500 | 300 | 375 | 413 | 538 | 488 | 575 | 575 | 688 |
| 3/7/94 | 600 | 525 | 575 | 525 | 43 | 338 | 50 | 388 | 313 | 513 | 1500 | 1500 | 1500 | 1500 | 1500 | 1500 | 388 | 213 | 43 | 43 | 107 | 338 | 313 | 79 |
| 3/8/94 | 93 | 120 | 135 | 153 | 167 | 156 | 139 | 119 | 236 | 153 | 150 | 1500 | 1500 | 1500 | 1500 | 1500 | 413 | 313 | 43 | 625 | 738 | 675 | 613 | 588 |
| 3/9/94 | 638 | 450 | 164 | 221 | 198 | 157 | 109 | 114 | 132 | 575 | 111 | 126 | 1500 | 1500 | 1500 | 127 | 179 | 225 | 43 | 43 | 43 | 688 | 563 | 613 |
| 3/10/94 | 688 | 738 | 43 | 43 | 43 | 300 | 238 | 225 | 213 | 188 | 1500 | 1500 | 1500 | 1500 | 1500 | 788 | 788 | 738 | 913 | 638 | 575 | 525 | 43 | 425 |
| 3/11/94 | 363 | 438 | 43 | 47 | 43 | 375 | 450 | 650 | 475 | 338 | 1500 | 1500 | 1500 | 1500 | 1500 | 888 | 113 | 775 | 563 | 43 | 43 | 43 | 43 | 43 |
| 3/12/94 | 338 | 43 | 77 | 62 | 43 | 43 | 238 | 250 | 250 | 137 | 250 | 1500 | 165 | 1500 | 1500 | 375 | 300 | 463 | 638 | 813 | 788 | 788 | 688 | 575 |
| 3/13/94 | 425 | 43 | 47 | 81 | 55 | 47 | 513 | 525 | 338 | 300 | 288 | 1500 | 1500 | 1500 | 563 | 588 | 600 | 688 | 513 | 513 | 525 | 713 | 900 | 975 |
| 3/14/94 | 900 | 888 | 888 | 43 | 563 | 725 | 588 | 163 | 213 | 600 | 688 | 1500 | 1500 | 1500 | 1500 | 105 | 1000 | 788 | 650 | 613 | 575 | 613 | 913 | 888 |
| 3/15/94 | 850 | 1025 | 988 | 875 | 700 | 388 | 788 | 513 | 463 | 104 | 613 | 165 | 156 | 172 | 1500 | 775 | 713 | 788 | 775 | 775 | 725 | 850 | 963 | 1000 |
| 3/16/94 | 1050 | 1162 | 127 | 725 | 800 | 538 | 137 | 638 | 975 | 938 | 700 | 135 | 1500 | 1500 | 1500 | 104 | 550 | 413 | 100 | 663 | 700 | 101 | 1212 | 100 |
| 3/17/94 | 1500 | 1500 | 1425 | 1388 | 118 | 1087 | 950 | 1212 | 1138 | 1150 | 1500 | 1500 | 1500 | 1500 | 1500 | 1275 | 1150 | 850 | 47 | 43 | 43 | 43 | 313 | 43 |
| 3/18/94 | 43 | 463 | 838 | 825 | 688 | 43 | 263 | 250 | 288 | 188 | 1500 | 1500 | 1500 | 1500 | 1500 | 1100 | 975 | 1013 | 1263 | 1050 | 925 | 1100 | 1050 | 1100 |
| 3/19/94 | 1100 | 950 | 863 | 813 | 1037 | 1087 | 1025 | 1112 | 1162 | 988 | 1500 | 1500 | 1500 | 1500 | 1500 | 1212 | 1200 | 1275 | 1025 | 950 | 913 | 888 | 913 | 900 |
| 3/20/94 | 813 | 650 | 588 | 43 | 54 | 375 | 450 | 425 | 313 | 650 | 141 | 128 | 650 | 109 | 625 | 613 | 538 | 788 | 963 | 1125 | 1013 | 1112 | 1263 | 1162 |
| 3/21/94 | 1162 | 1100 | 900 | 900 | 1087 | 975 | 1150 | 1000 | 950 | 975 | 1312 | 1500 | 1500 | 1500 | 1500 | 775 | 888 | 575 | 425 | 400 | 313 | 43 | 438 | 388 |
| 3/22/94 | 475 | 64 | 938 | 575 | 888 | 913 | 763 | 525 | 413 | 288 | 1500 | 1500 | 1500 | 1500 | 1500 | 713 | 1100 | 1150 | 1138 | 1187 | 1388 | 1437 | 1325 | 1375 |
| 3/23/94 | 1162 | 1250 | 1175 | 1450 | 1312 | 1150 | 988 | 825 | 950 | 938 | 988 | 988 | 1500 | 1500 | 1500 | 700 | 463 | 738 | 725 | 875 | 800 | 875 | 888 | 838 |
| 3/24/94 | 813 | 788 | 663 | 47 | 525 | 475 | 1500 | 163 | 425 | 350 | 1500 | 1500 | 1500 | 1500 | 1500 | 1500 | 413 | 575 | 43 | 400 | 43 | 688 | 650 | 475 |
| 3/25/94 | 43 | 43 | 388 | 54 | 413 | 58 | 125 | 125 | 125 | 111 | 263 | 1500 | 1500 | 1500 | 1500 | 1500 | 388 | 250 | 43 | 263 | 43 | 43 | 300 | 43 |
| 3/26/94 | 263 | 84 | 102 | 86 | 43 | 123 | 110 | 114 | 146 | 107 | 156 | 738 | 186 | 193 | 198 | 199 | 158 | 713 | 700 | 375 | 126 | 713 | 688 | 738 |
| 3/27/94 | 663 | 463 | 76 | 388 | 375 | 146 | 154 | 101 | 225 | 375 | 538 | 138 | 144 | 161 | 170 | 123 | 124 | 713 | 127 | 588 | 650 | 100 | 725 | 825 |
| 3/28/94 | 738 | 575 | 675 | 713 | 750 | 813 | 900 | 175 | 123 | 738 | 963 | 161 | 1500 | 1500 | 139 | 938 | 1125 | 112 | 938 | 575 | 118 | 118 | 70 | 425 |
| 3/29/94 | 325 | 350 | 363 | 106 | 105 | 188 | 313 | 150 | 127 | 863 | 1500 | 1500 | 1500 | 1500 | 550 | 575 | 650 | 538 | 43 | 288 | 43 | 488 | 43 | 43 |
| 3/30/94 | 1500 | 1500 | 60 | 375 | 112 | 49 | 363 | 175 | 375 | 338 | 288 | 263 | 325 | 1500 | 325 | 300 | 1500 | 1500 | 43 | 43 | 1500 | 675 | 1500 | 1500 |
| 3/31/94 | 1500 | 43 | 43 | 1500 | 1500 | 43 | 275 | 225 | 137 | 250 | 1500 | 350 | 1500 | 1500 | 1500 | 1500 | 1025 | 925 | 1150 | 1025 | 925 | 900 | 76 | 43 |

**Table AC-3-3 Site 1 Mixing Heights (meters)**
**for Spring 1994**

| | Hour Beginning | | | | | | | | | | | | | | | | | | | | | | |
|---|---|---|---|---|---|---|---|---|---|---|---|---|---|---|---|---|---|---|---|---|---|---|---|
| Date | 1 | 2 | 3 | 4 | 5 | 6 | 7 | 8 | 9 | 10 | 11 | 12 | 13 | 14 | 15 | 16 | 17 | 18 | 19 | 20 | 21 | 22 | 23 | 24 |
| 4/1/94 | 47 | 875 | 1050 | 813 | 650 | 513 | 525 | 825 | 938 | 900 | 850 | 863 | 738 | 1500 | 650 | 463 | 110 | 126 | 625 | 800 | 194 | 189 | 153 | 525 |
| 4/2/94 | 43 | 43 | 43 | 43 | 47 | 325 | 425 | 400 | 200 | 375 | 250 | 1500 | 1500 | 1500 | 1500 | 563 | 888 | 750 | 700 | 688 | 750 | 863 | 988 | 888 |
| 4/3/94 | 1025 | 103 | 108 | 121 | 688 | 838 | 975 | 838 | 1025 | 925 | 1500 | 1500 | 1500 | 1500 | 1000 | 1087 | 975 | 913 | 1013 | 863 | 963 | 963 | 963 | 1050 |
| 4/4/94 | 1075 | 1013 | 963 | 1062 | 888 | 1075 | 1125 | 1050 | 1150 | 1112 | 1500 | 1500 | 1500 | 1500 | 1500 | 688 | 122 | 463 | 475 | 425 | 388 | 43 | 43 | 43 |
| 4/5/94 | 388 | 43 | 43 | 43 | 375 | 43 | 338 | 313 | 375 | 388 | 563 | 1500 | 1500 | 1500 | 838 | 750 | 613 | 625 | 500 | 513 | 463 | 107 | 700 | 124 |
| 4/6/94 | 725 | 713 | 675 | 103 | 103 | 525 | 141 | 108 | 775 | 800 | 975 | 1013 | 1500 | 1500 | 125 | 900 | 888 | 688 | 788 | 888 | 963 | 825 | 750 | 850 |
| 4/7/94 | 963 | 1050 | 850 | 825 | 1000 | 1025 | 1000 | 888 | 1225 | 1500 | 1500 | 1500 | 1500 | 1500 | 1500 | 1462 | 1500 | 1462 | 1325 | 1087 | 938 | 825 | 850 | 875 |
| 4/8/94 | 863 | 700 | 650 | 500 | 43 | 47 | 375 | 400 | 425 | 250 | 1500 | 1500 | 1500 | 1500 | 1500 | 1500 | 513 | 650 | 550 | 375 | 325 | 43 | 43 | 625 |
| 4/9/94 | 43 | 463 | 338 | 43 | 663 | 725 | 463 | 263 | 375 | 275 | 1500 | 1500 | 1500 | 1500 | 1500 | 1500 | 1062 | 1025 | 900 | 900 | 104 | 1000 | 111 | 112 |
| 4/10/94 | 126 | 118 | 113 | 1062 | 1000 | 850 | 725 | 725 | 738 | 675 | 108 | 338 | 288 | 625 | 1500 | 963 | 1000 | 1013 | 988 | 900 | 938 | 975 | 1000 | 1150 |
| 4/11/94 | 1100 | 1075 | 1013 | 963 | 913 | 825 | 838 | 900 | 863 | 900 | 875 | 875 | 1500 | 1500 | 1500 | 563 | 775 | 850 | 750 | 750 | 700 | 713 | 575 | 600 |
| 4/12/94 | 700 | 888 | 825 | 938 | 1050 | 1075 | 1100 | 1050 | 1075 | 775 | 750 | 838 | 1500 | 1500 | 1500 | 1500 | 1013 | 950 | 938 | 1000 | 763 | 938 | 788 | 738 |
| 4/13/94 | 800 | 913 | 950 | 119 | 1000 | 1175 | 1300 | 1312 | 1287 | 1300 | 1500 | 1500 | 1375 | 1362 | 1500 | 1500 | 1337 | 1263 | 925 | 975 | 938 | 875 | 788 | 788 |
| 4/14/94 | 850 | 800 | 1025 | 1025 | 1150 | 1388 | 1225 | 1212 | 1162 | 1300 | 1500 | 1500 | 1500 | 1500 | 1200 | 1150 | 1275 | 1350 | 1050 | 963 | 1075 | 1087 | 1112 | 963 |
| 4/15/94 | 913 | 950 | 925 | 813 | 550 | 525 | 413 | 688 | 700 | 688 | 588 | 513 | 425 | 325 | 1500 | 538 | 488 | 363 | 213 | 43 | 43 | 888 | 1050 | 900 |
| 4/16/94 | 663 | 738 | 688 | 425 | 438 | 163 | 106 | 170 | 106 | 338 | 550 | 1500 | 1500 | 1500 | 1500 | 155 | 138 | 100 | 141 | 158 | 190 | 208 | 203 | 191 |
| 4/17/94 | 146 | 165 | 190 | 167 | 204 | 227 | 229 | 250 | 207 | 220 | 166 | 139 | 145 | 1500 | 1500 | 1500 | 750 | 550 | 638 | 725 | 725 | 600 | 700 | 700 |
| 4/18/94 | 700 | 788 | 43 | 43 | 43 | 263 | 550 | 425 | 263 | 200 | 1500 | 1500 | 1500 | 1500 | 1500 | 1500 | 463 | 338 | 788 | 450 | 413 | 43 | 625 | 538 |
| 4/19/94 | 43 | 763 | 43 | 613 | 613 | 350 | 1500 | 325 | 475 | 363 | 1500 | 1500 | 1500 | 1500 | 1500 | 1500 | 950 | 575 | 525 | 675 | 750 | 52 | 500 | 650 |
| 4/20/94 | 688 | 43 | 43 | 43 | 43 | 563 | 163 | 121 | 109 | 338 | 133 | 138 | 166 | 171 | 187 | 197 | 190 | 206 | 117 | 110 | 118 | 725 | 126 | 134 |
| 4/21/94 | 913 | 209 | 132 | 145 | 166 | 132 | 219 | 108 | 171 | 114 | 400 | 107 | 101 | 1500 | 1500 | 1500 | 1087 | 938 | 725 | 43 | 425 | 663 | 888 | 133 |
| 4/22/93 | 139 | 155 | 963 | 105 | 134 | 1000 | 1000 | 1050 | 101 | 1200 | 159 | 219 | 220 | 1500 | 266 | 1500 | 132 | 575 | 675 | 888 | 149 | 164 | 488 | 100 |
| 4/23/94 | 110 | 173 | 102 | 84 | 59 | 128 | 450 | 263 | 288 | 363 | 117 | 167 | 244 | 273 | 1500 | 203 | 158 | 1500 | 115 | 60 | 96 | 93 | 98 | 135 |
| 4/24/93 | 80 | 96 | 93 | 86 | 75 | 100 | 763 | 112 | 363 | 146 | 425 | 151 | 1500 | 1500 | 1500 | 1500 | 100 | 121 | 103 | 98 | 143 | 130 | 125 | 475 |
| 4/25/94 | 87 | 138 | 475 | 153 | 125 | 363 | 104 | 105 | 188 | 400 | 121 | 157 | 159 | 1500 | 1500 | 1500 | 713 | 425 | 413 | 475 | 463 | 43 | 500 | 813 |
| 4/26/94 | 128 | 108 | 63 | 43 | 43 | 125 | 163 | 400 | 107 | 117 | 1500 | 1500 | 1500 | 1500 | 1500 | 1500 | 1500 | 875 | 838 | 525 | 600 | 625 | 425 | 375 |
| 4/27/94 | 550 | 288 | 94 | 109 | 120 | 275 | 300 | 166 | 122 | 147 | 142 | 173 | 1500 | 1500 | 1500 | 1500 | 275 | 300 | 141 | 275 | 101 | 363 | 488 | 325 |
| 4/28/94 | 43 | 43 | 43 | 47 | 43 | 150 | 238 | 425 | 613 | 550 | 563 | 1500 | 1500 | 425 | 475 | 450 | 563 | 525 | 575 | 475 | 43 | 363 | 388 | 52 |
| 4/29/94 | 43 | 350 | 43 | 52 | 47 | 325 | 1500 | 163 | 263 | 300 | 1500 | 1500 | 1500 | 1500 | 1500 | 1500 | 475 | 325 | 288 | 350 | 463 | 650 | 688 | 738 |
| 4/30/94 | 788 | 875 | 888 | 850 | 538 | 188 | 250 | 513 | 575 | 513 | 425 | 1500 | 1500 | 1500 | 1500 | 1500 | 1025 | 1500 | 1162 | 863 | 475 | 500 | 525 | 925 |
| 5/1/94 | 900 | 838 | 1500 | 725 | 813 | 775 | 825 | 925 | 888 | 900 | 1500 | 1500 | 1500 | 1500 | 1500 | 1500 | 863 | 863 | 813 | 625 | 600 | 563 | 663 | 788 |
| 5/2/94 | 788 | 850 | 913 | 925 | 900 | 938 | 888 | 725 | 563 | 588 | 1500 | 1500 | 1500 | 1500 | 1500 | 1500 | 763 | 788 | 738 | 725 | 638 | 763 | 550 | 86 |
| 5/3/94 | 66 | 463 | 688 | 550 | 713 | 438 | 313 | 163 | 625 | 675 | 1500 | 1500 | 1500 | 1500 | 1500 | 1500 | 838 | 775 | 613 | 513 | 563 | 538 | 688 | 813 |
| 5/4/94 | 1500 | 1500 | 1500 | 1500 | 1500 | 1500 | 1500 | 1500 | 1500 | 1500 | 1500 | 1500 | 1500 | 1500 | 1500 | 1500 | 1500 | 725 | 313 | 463 | 425 | 84 | 25 | 105 |
| 5/5/94 | 825 | 838 | 663 | 30 | 101 | 288 | 425 | 288 | 350 | 338 | 134 | 1500 | 1500 | 1500 | 1500 | 1500 | 1500 | 375 | 313 | 41 | 25 | 34 | 79 | 124 |
| 5/6/94 | 98 | 101 | 176 | 67 | 52 | 388 | 263 | 500 | 675 | 800 | 338 | 153 | 233 | 1500 | 1500 | 1500 | 1500 | 563 | 1187 | 1050 | 775 | 375 | 625 | 675 |
| 5/7/94 | 775 | 425 | 513 | 102 | 123 | 139 | 157 | 313 | 110 | 450 | 1500 | 239 | 1500 | 1500 | 1500 | 1500 | 1500 | 538 | 400 | 1175 | 1200 | 813 | 513 | 638 |
| 5/8/94 | 575 | 788 | 700 | 813 | 850 | 775 | 638 | 638 | 425 | 288 | 177 | 201 | 237 | 1500 | 1500 | 1500 | 1500 | 288 | 263 | 25 | 30 | 550 | 25 | 25 |
| 5/9/94 | 32 | 27 | 34 | 30 | 62 | 225 | 125 | 128 | 388 | 112 | 138 | 134 | 1500 | 1500 | 1500 | 1500 | 1500 | 400 | 238 | 34 | 34 | 32 | 41 | 38 |
| 5/10/94 | 27 | 43 | 650 | 663 | 45 | 538 | 238 | 225 | 550 | 688 | 1500 | 1500 | 1500 | 1500 | 1500 | 1500 | 500 | 525 | 513 | 600 | 788 | 838 | 863 | 738 |
| 5/11/94 | 41 | 43 | 475 | 475 | 60 | 438 | 213 | 200 | 213 | 175 | 263 | 338 | 1500 | 1500 | 1500 | 1500 | 1500 | 375 | 225 | 25 | 313 | 663 | 538 | 700 |
| 5/12/94 | 788 | 788 | 750 | 725 | 738 | 663 | 663 | 913 | 900 | 1500 | 1500 | 1500 | 1500 | 1500 | 1500 | 1500 | 588 | 600 | 1337 | 1150 | 1187 | 888 | 475 | 463 |
| 5/13/94 | 663 | 875 | 1050 | 900 | 1050 | 1037 | 1112 | 1200 | 1237 | 1250 | 1250 | 1212 | 1500 | 1500 | 1500 | 1500 | 1150 | 1500 | 925 | 1500 | 1500 | 775 | 1500 | 788 |
| 5/14/94 | 1500 | 1500 | 1500 | 1500 | 1500 | 1500 | 1500 | 1500 | 1500 | 1500 | 1500 | 1500 | 1500 | 1500 | 1500 | 1500 | 1500 | 1500 | 1500 | 1500 | 1500 | 1500 | 1500 | 1500 |
| 5/15/94 | 1500 | 975 | 788 | 1500 | 650 | 1162 | 1312 | 1500 | 1375 | 1500 | 1500 | 1500 | 1500 | 1500 | 1500 | 1500 | 1500 | 1500 | 875 | 1500 | 1500 | 1500 | 1500 | 1500 |
| 5/16/94 | 1500 | 1500 | 513 | 475 | 513 | 250 | 250 | 238 | 300 | 438 | 1500 | 1500 | 1500 | 1500 | 1500 | 1500 | 1500 | 1500 | 413 | 650 | 925 | 850 | 900 | 1500 |
| 5/17/94 | 1500 | 1500 | 550 | 475 | 600 | 875 | 1050 | 850 | 825 | 988 | 1500 | 1500 | 1500 | 1500 | 1500 | 1500 | 1500 | 400 | 288 | 25 | 25 | 25 | 27 | 375 |
| 5/18/94 | 350 | 120 | 538 | 27 | 47 | 275 | 100 | 133 | 104 | 136 | 139 | 150 | 181 | 206 | 192 | 1500 | 1500 | 800 | 863 | 750 | 650 | 600 | 575 | 725 |
| 5/19/94 | 650 | 638 | 500 | 56 | 225 | 250 | 263 | 238 | 108 | 1500 | 1500 | 1500 | 1500 | 1500 | 1500 | 1500 | 1500 | 788 | 575 | 638 | 388 | 750 | 575 | 763 |
| 5/20/94 | 575 | 650 | 650 | 30 | 350 | 350 | 388 | 538 | 688 | 1500 | 1500 | 1500 | 775 | 1500 | 1500 | 1500 | 1500 | 938 | 738 | 675 | 588 | 625 | 525 | 38 |
| 5/21/94 | 41 | 638 | 675 | 36 | 663 | 338 | 250 | 150 | 250 | 1500 | 1500 | 1500 | 1500 | 1500 | 1500 | 1500 | 1500 | 388 | 238 | 475 | 550 | 750 | 850 | 788 |
| 5/22/94 | 650 | 25 | 538 | 488 | 25 | 125 | 713 | 938 | 938 | 1500 | 788 | 1500 | 1500 | 1500 | 1500 | 1500 | 1500 | 650 | 475 | 475 | 475 | 513 | 111 | 130 |
| 5/23/94 | 114 | 475 | 58 | 225 | 78 | 250 | 188 | 200 | 200 | 146 | 1500 | 1500 | 1500 | 1500 | 1500 | 1500 | 1500 | 525 | 650 | 588 | 738 | 700 | 613 | 413 |
| 5/24/94 | 475 | 43 | 43 | 43 | 43 | 150 | 125 | 263 | 575 | 513 | 1500 | 1500 | 1500 | 1500 | 1500 | 1500 | 1500 | 288 | 325 | 25 | 25 | 25 | 638 | 25 |
| 5/25/94 | 25 | 25 | 25 | 25 | 25 | 213 | 425 | 288 | 213 | 1500 | 1500 | 1500 | 1500 | 1500 | 1500 | 1500 | 1500 | 1500 | 375 | 25 | 25 | 25 | 675 | 25 |
| 5/26/94 | 25 | 638 | 500 | 25 | 25 | 175 | 125 | 188 | 1500 | 1500 | 1500 | 1500 | 1500 | 1500 | 1500 | 1500 | 1500 | 675 | 963 | 1000 | 1112 | 1125 | 938 | 800 |
| 5/27/94 | 488 | 663 | 713 | 43 | 613 | 638 | 913 | 838 | 725 | 1500 | 1500 | 1500 | 1500 | 1500 | 1500 | 1500 | 1500 | 1500 | 763 | 675 | 488 | 550 | 588 | 588 |
| 5/28/94 | 600 | 688 | 475 | 688 | 750 | 875 | 763 | 663 | 513 | 1500 | 111 | 1500 | 1500 | 1500 | 1500 | 1500 | 1500 | 838 | 550 | 112 | 124 | 513 | 130 | 200 |
| 5/29/94 | 161 | 638 | 178 | 725 | 101 | 168 | 200 | 188 | 250 | 488 | 563 | 838 | 101 | 1500 | 1500 | 1500 | 1500 | 663 | 588 | 413 | 488 | 550 | 116 | 81 |
| 5/30/94 | 563 | 575 | 575 | 638 | 763 | 825 | 763 | 875 | 900 | 1500 | 700 | 1500 | 1500 | 1500 | 1500 | 1500 | 1500 | 375 | 1500 | 1500 | 313 | 41 | 638 | 638 |
| 5/31/94 | 713 | 475 | 38 | 41 | 41 | 475 | 538 | 600 | 663 | 1500 | 1500 | 1500 | 1500 | 1500 | 1500 | 1500 | 1500 | 1500 | 538 | 700 | 550 | 425 | 538 | 738 |
| 6/1/94 | 875 | 875 | 950 | 738 | 588 | 149 | 264 | 257 | 963 | 1500 | 1500 | 1500 | 1500 | 1500 | 1500 | 1500 | 1500 | 963 | 813 | 688 | 688 | 850 | 738 | 119 |
| 6/2/94 | 116 | 425 | 413 | 363 | 161 | 109 | 350 | 135 | 188 | 1500 | 1500 | 1500 | 1500 | 1500 | 1500 | 1500 | 1500 | 450 | 438 | 32 | 100 | 127 | 738 | 106 |
| 6/3/94 | 139 | 57 | 438 | 763 | 575 | 400 | 550 | 121 | 151 | 1500 | 1500 | 1500 | 1500 | 1500 | 1500 | 1500 | 1500 | 1500 | 400 | 32 | 27 | 650 | 438 | 32 |
| 6/4/94 | 30 | 34 | 59 | 638 | 800 | 1062 | 1162 | 1437 | 1500 | 1500 | 1500 | 1500 | 1500 | 1500 | 1500 | 1500 | 1500 | 888 | 650 | 463 | 43 | 43 | 43 | 43 |
| 6/5/94 | 36 | 688 | 638 | 103 | 438 | 475 | 463 | 313 | 300 | 1500 | 1500 | 1500 | 1500 | 1500 | 1500 | 525 | 775 | 850 | 725 | 1500 | 788 | 750 | 963 | 1000 |
| 6/6/94 | 1037 | 1000 | 738 | 925 | 813 | 750 | 775 | 1237 | 1150 | 1500 | 1500 | 1500 | 1500 | 1500 | 1500 | 1500 | 1500 | 1025 | 1500 | 1275 | 913 | 725 | 888 | 988 |
| 6/7/94 | 475 | 34 | 738 | 725 | 650 | 525 | 788 | 825 | 1500 | 1500 | 1500 | 1500 | 1500 | 1500 | 1500 | 1500 | 1500 | 625 | 725 | 838 | 588 | 500 | 825 | 838 |
| 6/8/94 | 900 | 850 | 850 | 663 | 825 | 838 | 1025 | 963 | 888 | 1500 | 1500 | 1500 | 1500 | 1500 | 1500 | 1500 | 1500 | 888 | 788 | 600 | 538 | 450 | 638 | 563 |
| 6/9/94 | 688 | 663 | 575 | 25 | 213 | 525 | 425 | 300 | 438 | 1500 | 1500 | 1500 | 1500 | 1500 | 1500 | 1500 | 1500 | 913 | 788 | 638 | 775 | 688 | 550 | 86 |
| 6/10/94 | 488 | 84 | 59 | 73 | 125 | 125 | 125 | 163 | 488 | 575 | 1500 | 1500 | 1500 | 1500 | 1500 | 1500 | 1500 | 763 | 775 | 525 | 450 | 513 | 525 | 638 |
| 6/11/94 | 625 | 36 | 463 | 52 | 388 | 600 | 538 | 325 | 163 | 1500 | 1500 | 1500 | 1500 | 1500 | 1500 | 1500 | 1500 | 500 | 450 | 325 | 38 | 525 | 450 | 463 |
| 6/12/94 | 388 | 500 | 463 | 68 | 125 | 313 | 225 | 350 | 738 | 1500 | 1500 | 1500 | 1500 | 1500 | 1500 | 1500 | 1500 | 588 | 450 | 475 | 475 | 663 | 663 | 475 |
| 6/13/94 | 34 | 888 | 875 | 875 | 800 | 788 | 850 | 913 | 913 | 1500 | 1500 | 1500 | 1500 | 1500 | 1500 | 1500 | 1500 | 1500 | 625 | 825 | 713 | 625 | 538 | 438 |
| 6/14/94 | 613 | 813 | 850 | 1087 | 938 | 863 | 1075 | 1325 | 1475 | 1500 | 1500 | 1500 | 1500 | 1500 | 1500 | 1500 | 1500 | 1500 | 963 | 450 | 38 | 425 | 34 | 413 |
| 6/15/94 | 375 | 32 | 438 | 49 | 109 | 105 | 263 | 313 | 1500 | 1500 | 1500 | 1500 | 1500 | 1500 | 1500 | 1500 | 1500 | 900 | 750 | 625 | 675 | 538 | 688 | 750 |
| 6/16/94 | 663 | 675 | 488 | 388 | 488 | 650 | 850 | 800 | 1500 | 1500 | 1500 | 1500 | 1500 | 1500 | 1500 | 1500 | 1500 | 863 | 838 | 750 | 463 | 550 | 538 | 500 |
| 6/17/94 | 43 | 43 | 43 | 313 | 525 | 438 | 413 | 250 | 1500 | 1500 | 1500 | 1500 | 1500 | 1500 | 1500 | 1500 | 1500 | 1500 | 375 | 313 | 27 | 400 | 525 | 625 |
| 6/18/94 | 25 | 27 | 77 | 27 | 525 | 475 | 350 | 563 | 1500 | 1500 | 1500 | 1500 | 1500 | 1500 | 1500 | 1500 | 1500 | 1500 | 188 | 150 | 36 | 34 | 36 | 43 |
| 6/19/94 | 43 | 43 | 43 | 43 | 450 | 650 | 588 | 788 | 1500 | 1500 | 1500 | 1500 | 1500 | 1500 | 1500 | 1500 | 1500 | 1500 | 313 | 238 | 41 | 750 | 775 | 600 |
| 6/20/94 | 25 | 25 | 488 | 388 | 425 | 600 | 263 | 213 | 1500 | 1500 | 1500 | 1500 | 1500 | 1500 | 1500 | 1500 | 1500 | 1500 | 313 | 475 | 638 | 688 | 763 | 111 |
| 6/21/94 | 913 | 1037 | 863 | 538 | 263 | 375 | 625 | 388 | 1500 | 1500 | 1500 | 1500 | 1500 | 1500 | 1500 | 1500 | 1500 | 850 | 1138 | 1050 | 1500 | 1125 | 450 | 425 |
| 6/22/94 | 538 | 788 | 588 | 47 | 450 | 425 | 300 | 350 | 263 | 275 | 1500 | 363 | 1500 | 1500 | 1500 | 375 | 700 | 1138 | 588 | 350 | 638 | 713 | 575 | 413 |
| 6/23/94 | 738 | 25 | 25 | 25 | 150 | 313 | 137 | 350 | 1500 | 1500 | 1500 | 1500 | 1500 | 1500 | 1500 | 1500 | 1500 | 1500 | 738 | 513 | 488 | 588 | 25 | 563 |
| 6/24/94 | 738 | 775 | 688 | 725 | 263 | 388 | 925 | 1162 | 1500 | 1500 | 1500 | 1500 | 1500 | 1500 | 1500 | 1500 | 1500 | 1500 | 738 | 688 | 475 | 400 | 46 | 25 |
| 6/25/94 | 675 | 700 | 575 | 425 | 663 | 388 | 175 | 101 | 1500 | 1500 | 1500 | 1500 | 1500 | 1500 | 1500 | 1500 | 1500 | 1500 | 1500 | 238 | 450 | 25 | 25 | 1500 |
| 6/26/94 | 84 | 963 | 1050 | 1212 | 1175 | 988 | 1100 | 1175 | 1500 | 1500 | 1500 | 1500 | 1500 | 1500 | 1500 | 1500 | 1500 | 1462 | 1212 | 1125 | 913 | 863 | 913 | 925 |
| 6/27/94 | 738 | 650 | 463 | 43 | 475 | 103 | 108 | 122 | 1500 | 1500 | 1500 | 1500 | 1500 | 1500 | 1500 | 1500 | 1500 | 1500 | 438 | 463 | 43 | 400 | 638 | 43 |
| 6/28/94 | 43 | 475 | 788 | 43 | 363 | 263 | 413 | 388 | 1500 | 1500 | 1500 | 1500 | 1500 | 1500 | 1500 | 1500 | 1500 | 1500 | 488 | 288 | 43 | 43 | 43 | 638 |
| 6/29/94 | 1500 | 1500 | 25 | 32 | 600 | 550 | 238 | 150 | 1500 | 1500 | 1500 | 1500 | 1500 | 1500 | 1500 | 1500 | 1500 | 1500 | 838 | 750 | 663 | 675 | 713 | 675 |
| 6/30/94 | 575 | 375 | 25 | 675 | 463 | 300 | 475 | 137 | 135 | 1500 | 1500 | 1500 | 1500 | 1500 | 1500 | 1500 | 1500 | 1500 | 1500 | 463 | 625 | 738 | 27 | 27 |

**Table AC-3-4 Site 1 Mixing Height (meters)**
**for Summer 1994**

| | Hour Beginning | | | | | | | | | | | | | | | | | | | | | | | |
|---|---|---|---|---|---|---|---|---|---|---|---|---|---|---|---|---|---|---|---|---|---|---|---|---|
| Date | 1 | 2 | 3 | 4 | 5 | 6 | 7 | 8 | 9 | 10 | 11 | 12 | 13 | 14 | 15 | 16 | 17 | 18 | 19 | 20 | 21 | 22 | 23 | 24 |
| 7/1/94 | 750 | 738 | 513 | 32 | 300 | 102 | 115 | 850 | 1500 | 1500 | 1500 | 1500 | 1500 | 1500 | 1500 | 1500 | 1500 | 1500 | 738 | 550 | 450 | 43 | 750 | 625 |
| 7/2/94 | 67 | 800 | 838 | 43 | 43 | 938 | 1250 | 1087 | 1250 | 1138 | 1500 | 1500 | 1500 | 1500 | 1500 | 1500 | 1500 | 1500 | 963 | 763 | 700 | 713 | 775 | 725 |
| 7/3/94 | 750 | 775 | 663 | 700 | 875 | 105 | 123 | 838 | 1500 | 1500 | 1500 | 1500 | 1500 | 1500 | 1500 | 1500 | 1500 | 1500 | 888 | 713 | 700 | 800 | 838 | 763 |
| 7/4/94 | 650 | 550 | 41 | 575 | 700 | 650 | 738 | 688 | 1500 | 1500 | 1500 | 1500 | 1500 | 1500 | 1500 | 863 | 950 | 863 | 700 | 500 | 488 | 47 | 750 | 725 |
| 7/5/94 | 688 | 688 | 763 | 550 | 425 | 400 | 263 | 775 | 1500 | 1500 | 1500 | 1500 | 1500 | 1500 | 1500 | 1500 | 1500 | 1500 | 1263 | 850 | 825 | 725 | 575 | 600 |
| 7/6/94 | 600 | 688 | 863 | 950 | 775 | 850 | 825 | 713 | 189 | 1500 | 1500 | 1500 | 1500 | 1500 | 1500 | 1500 | 1500 | 1500 | 388 | 313 | 475 | 388 | 413 | 43 |
| 7/7/94 | 43 | 43 | 43 | 41 | 38 | 150 | 125 | 125 | 1500 | 1500 | 1500 | 1500 | 1500 | 1500 | 1500 | 1500 | 1500 | 238 | 1500 | 275 | 238 | 43 | 450 | 43 |
| 7/8/94 | 47 | 43 | 43 | 43 | 43 | 450 | 250 | 137 | 1500 | 1500 | 1500 | 1500 | 1500 | 1500 | 1500 | 1500 | 1500 | 1500 | 1500 | 175 | 288 | 56 | 700 | 47 |
| 7/9/94 | 638 | 43 | 663 | 27 | 263 | 450 | 213 | 1500 | 1500 | 1500 | 1500 | 1500 | 1500 | 1500 | 1500 | 1500 | 1500 | 1500 | 763 | 625 | 700 | 588 | 863 | 1025 |
| 7/10/94 | 588 | 43 | 32 | 25 | 688 | 139 | 100 | 1500 | 1500 | 1500 | 1500 | 1500 | 1500 | 1500 | 1500 | 1500 | 1500 | 1500 | 1013 | 838 | 875 | 913 | 900 | 900 |
| 7/11/94 | 825 | 775 | 563 | 488 | 463 | 650 | 538 | 550 | 425 | 313 | 1500 | 1500 | 1500 | 1500 | 1500 | 1500 | 1500 | 1500 | 900 | 763 | 825 | 825 | 838 | 738 |
| 7/12/94 | 488 | 43 | 43 | 825 | 25 | 313 | 288 | 1500 | 1500 | 1500 | 1500 | 1500 | 1500 | 1500 | 1500 | 1500 | 1500 | 1500 | 975 | 738 | 788 | 900 | 738 | 913 |
| 7/13/94 | 888 | 950 | 600 | 388 | 100 | 148 | 163 | 148 | 1500 | 1500 | 1500 | 1500 | 1500 | 1500 | 1500 | 1500 | 1500 | 1500 | 650 | 550 | 43 | 43 | 49 | 625 |
| 7/14/94 | 625 | 43 | 375 | 43 | 43 | 225 | 200 | 1500 | 1500 | 1500 | 1500 | 1500 | 1500 | 1500 | 1500 | 1500 | 1500 | 1500 | 850 | 763 | 688 | 43 | 47 | 43 |
| 7/15/94 | 425 | 47 | 43 | 43 | 43 | 188 | 125 | 1500 | 1500 | 1500 | 1500 | 1500 | 1500 | 1500 | 1500 | 1500 | 1500 | 1500 | 388 | 475 | 650 | 700 | 650 | 43 |
| 7/16/94 | 338 | 463 | 463 | 43 | 41 | 213 | 188 | 1500 | 1500 | 1500 | 1500 | 1500 | 1500 | 1500 | 1500 | 1500 | 1500 | 1500 | 1500 | 675 | 663 | 588 | 100 | 153 |
| 7/17/94 | 738 | 775 | 25 | 103 | 64 | 124 | 475 | 110 | 172 | 1500 | 1500 | 1500 | 1500 | 1500 | 1500 | 1500 | 1500 | 1500 | 763 | 713 | 775 | 688 | 638 | 25 |
| 7/18/94 | 388 | 51 | 25 | 32 | 413 | 105 | 144 | 159 | 130 | 1500 | 1500 | 1500 | 1500 | 1500 | 1500 | 1500 | 1500 | 1500 | 1200 | 1125 | 1025 | 688 | 788 | 1000 |
| 7/19/94 | 813 | 938 | 925 | 763 | 838 | 119 | 888 | 1500 | 1500 | 1500 | 1500 | 1500 | 1500 | 1500 | 1500 | 1500 | 1500 | 1500 | 513 | 38 | 41 | 30 | 32 | 27 |
| 7/20/94 | 47 | 400 | 34 | 105 | 36 | 263 | 250 | 1500 | 1500 | 1500 | 1500 | 1500 | 1500 | 1500 | 1500 | 1500 | 1500 | 450 | 350 | 43 | 43 | 34 | 36 | 32 |
| 7/21/94 | 97 | 63 | 54 | 85 | 53 | 163 | 325 | 175 | 1500 | 1500 | 1500 | 1500 | 1500 | 1500 | 1500 | 1500 | 1500 | 1500 | 1500 | 1500 | 1500 | 1500 | 1500 | 1500 |
| 7/22/94 | 313 | 575 | 43 | 388 | 600 | 150 | 188 | 1500 | 1500 | 1500 | 1500 | 1500 | 1500 | 1500 | 1500 | 1500 | 1500 | 1500 | 275 | 638 | 1500 | 1500 | 1375 | 1162 |
| 7/23/94 | 575 | 613 | 73 | 47 | 788 | 100 | 475 | 149 | 1500 | 1500 | 1500 | 1500 | 1500 | 1500 | 1500 | 1500 | 1500 | 1500 | 1500 | 475 | 43 | 43 | 513 | 350 |
| 7/24/94 | 43 | 43 | 65 | 94 | 88 | 175 | 163 | 1500 | 1500 | 1500 | 1500 | 1500 | 1500 | 1500 | 1500 | 1500 | 1500 | 1500 | 638 | 43 | 43 | 688 | 850 | 43 |
| 7/25/94 | 47 | 350 | 43 | 43 | 43 | 213 | 313 | 1500 | 1500 | 1500 | 1500 | 1500 | 1500 | 1500 | 1500 | 1500 | 1500 | 1500 | 625 | 650 | 775 | 750 | 788 | 463 |
| 7/26/94 | 638 | 538 | 650 | 77 | 43 | 163 | 163 | 1500 | 1500 | 1500 | 1500 | 1500 | 1500 | 1500 | 425 | 1500 | 1500 | 1500 | 1500 | 425 | 525 | 550 | 488 | 43 |
| 7/27/94 | 43 | 43 | 52 | 60 | 54 | 125 | 163 | 1500 | 1500 | 1500 | 1500 | 1500 | 1500 | 1500 | 1500 | 1500 | 1500 | 1500 | 350 | 625 | 43 | 43 | 1500 | 1500 |
| 7/28/94 | 43 | 43 | 43 | 43 | 43 | 137 | 150 | 225 | 1500 | 1500 | 1500 | 1500 | 1500 | 1500 | 1500 | 1500 | 1500 | 1500 | 688 | 1500 | 625 | 57 | 43 | 43 |
| 7/29/94 | 43 | 43 | 43 | 56 | 43 | 225 | 175 | 1500 | 1500 | 1500 | 1500 | 1500 | 1500 | 1500 | 1500 | 1500 | 1500 | 1500 | 1500 | 425 | 43 | 43 | 43 | 92 |
| 7/30/94 | 43 | 1500 | 1500 | 1500 | 1500 | 1500 | 1500 | 1500 | 1500 | 1500 | 1500 | 1500 | 1500 | 1500 | 1500 | 1500 | 1500 | 1500 | 788 | 1500 | 43 | 425 | 43 | 388 |
| 7/31/94 | 43 | 513 | 43 | 56 | 79 | 313 | 263 | 1500 | 1500 | 1500 | 1500 | 1500 | 1500 | 1500 | 1500 | 1500 | 1500 | 1500 | 1500 | 1325 | 475 | 963 | 875 | 43 |
| 8/1/94 | 463 | 43 | 43 | 43 | 463 | 425 | 125 | 163 | 1500 | 1500 | 1500 | 1500 | 1500 | 1500 | 1500 | 1500 | 1500 | 1500 | 1500 | 788 | 43 | 525 | 500 | 813 |
| 8/2/94 | 625 | 375 | 425 | 47 | 43 | 338 | 550 | 1500 | 1500 | 1500 | 1500 | 1500 | 1500 | 1500 | 1500 | 1500 | 1500 | 1500 | 475 | 688 | 500 | 450 | 538 | 575 |
| 8/3/94 | 525 | 525 | 43 | 43 | 43 | 250 | 125 | 1500 | 1500 | 1500 | 1500 | 1500 | 1500 | 1500 | 1500 | 1500 | 1500 | 1500 | 1500 | 1500 | 363 | 613 | 663 | 713 |
| 8/4/94 | 788 | 775 | 54 | 43 | 43 | 188 | 213 | 1500 | 1500 | 1500 | 1500 | 1500 | 1500 | 1500 | 1500 | 1500 | 1500 | 550 | 375 | 1500 | 43 | 563 | 475 | 43 |
| 8/5/94 | 1500 | 1500 | 43 | 43 | 43 | 363 | 475 | 1500 | 1500 | 1500 | 1500 | 1500 | 1500 | 1500 | 1500 | 1500 | 1500 | 1500 | 1500 | 588 | 126 | 725 | 713 | 800 |
| 8/6/94 | 788 | 825 | 50 | 43 | 118 | 675 | 788 | 1500 | 1500 | 1500 | 1500 | 1500 | 1500 | 1500 | 1500 | 1500 | 1500 | 838 | 713 | 600 | 475 | 563 | 438 | 450 |
| 8/7/94 | 638 | 713 | 663 | 43 | 85 | 263 | 638 | 1500 | 1500 | 1500 | 1500 | 1500 | 1500 | 1500 | 1500 | 1500 | 1500 | 1500 | 1500 | 43 | 375 | 463 | 688 | 900 |
| 8/8/94 | 50 | 52 | 64 | 43 | 64 | 425 | 263 | 1500 | 1500 | 1500 | 1500 | 1500 | 1500 | 1500 | 1500 | 1500 | 1500 | 1500 | 1500 | 1237 | 1000 | 763 | 1050 | 950 |
| 8/9/94 | 1138 | 938 | 1275 | 700 | 688 | 688 | 130 | 1500 | 1500 | 1500 | 1500 | 1500 | 1500 | 1500 | 1500 | 1500 | 1500 | 1500 | 1500 | 1500 | 43 | 925 | 1013 | 838 |
| 8/10/94 | 713 | 43 | 463 | 43 | 513 | 413 | 250 | 1500 | 1500 | 1500 | 1500 | 1500 | 1500 | 1500 | 1500 | 1500 | 1500 | 1500 | 1500 | 525 | 43 | 1138 | 1175 | 975 |
| 8/11/94 | 650 | 400 | 43 | 43 | 43 | 413 | 450 | 1500 | 1500 | 1500 | 1500 | 1500 | 1500 | 1500 | 1500 | 1500 | 1500 | 1500 | 1500 | 1500 | 1500 | 43 | 47 | 43 |
| 8/12/94 | 43 | 43 | 43 | 43 | 43 | 137 | 313 | 1500 | 1500 | 1500 | 1500 | 1500 | 1500 | 1500 | 1500 | 1500 | 1500 | 1500 | 700 | 863 | 525 | 43 | 438 | 513 |
| 8/13/94 | 52 | 64 | 47 | 43 | 43 | 150 | 338 | 213 | 1500 | 1500 | 1500 | 1500 | 1500 | 1500 | 1500 | 1500 | 1500 | 1500 | 1500 | 350 | 413 | 49 | 500 | 338 |
| 8/14/94 | 350 | 43 | 47 | 50 | 175 | 125 | 137 | 1500 | 1500 | 1500 | 1500 | 1500 | 1500 | 1500 | 1500 | 1500 | 1500 | 1500 | 1500 | 613 | 43 | 47 | 43 | 43 |
| 8/15/94 | 43 | 275 | 52 | 425 | 43 | 225 | 163 | 1500 | 1500 | 1500 | 1500 | 1500 | 1500 | 1500 | 1500 | 1500 | 1500 | 1500 | 600 | 563 | 575 | 575 | 588 | 613 |
| 8/16/94 | 463 | 43 | 525 | 43 | 338 | 150 | 488 | 1500 | 1500 | 1500 | 1500 | 1500 | 1500 | 1500 | 1500 | 1500 | 1500 | 1500 | 888 | 775 | 638 | 575 | 600 | 663 |
| 8/17/94 | 638 | 688 | 563 | 438 | 43 | 413 | 438 | 338 | 1500 | 1500 | 1500 | 1500 | 1500 | 1500 | 1500 | 1500 | 1500 | 1500 | 1500 | 43 | 238 | 71 | 300 | 325 |
| 8/18/94 | 425 | 80 | 43 | 56 | 43 | 124 | 500 | 1500 | 1500 | 1500 | 1500 | 1500 | 1500 | 1500 | 1500 | 1500 | 1500 | 1500 | 1500 | 263 | 43 | 47 | 638 | 650 | 800 |
| 8/19/94 | 775 | 700 | 47 | 64 | 43 | 225 | 263 | 163 | 1500 | 1500 | 1500 | 1500 | 1500 | 1500 | 1500 | 1500 | 1500 | 1500 | 1500 | 1500 | 43 | 650 | 688 | 43 |
| 8/20/94 | 513 | 413 | 43 | 43 | 463 | 350 | 188 | 1500 | 1500 | 1500 | 1500 | 1500 | 1500 | 1500 | 1500 | 1500 | 1500 | 1500 | 1500 | 475 | 625 | 575 | 775 | 43 |
| 8/21/94 | 43 | 488 | 43 | 43 | 575 | 500 | 663 | 1500 | 1500 | 1500 | 1500 | 1500 | 1500 | 1500 | 1500 | 1500 | 1500 | 1500 | 1500 | 1075 | 1500 | 1050 | 1087 | 125 |
| 8/22/94 | 1037 | 800 | 725 | 788 | 125 | 147 | 101 | 1500 | 1500 | 1500 | 1500 | 1500 | 1500 | 1500 | 1500 | 1500 | 1500 | 1500 | 1500 | 1500 | 663 | 575 | 588 | 513 |
| 8/23/94 | 450 | 43 | 63 | 43 | 47 | 184 | 116 | 1500 | 1500 | 1500 | 1500 | 1500 | 1500 | 1500 | 1500 | 1500 | 1500 | 1500 | 1500 | 275 | 43 | 363 | 43 | 413 |
| 8/24/94 | 43 | 275 | 43 | 43 | 43 | 121 | 213 | 1500 | 1500 | 1500 | 1500 | 1500 | 1500 | 1500 | 1500 | 1500 | 1500 | 1500 | 1500 | 713 | 700 | 625 | 525 | 400 |
| 8/25/94 | 463 | 43 | 43 | 43 | 43 | 425 | 425 | 1500 | 1500 | 1500 | 1500 | 1500 | 1500 | 1500 | 1500 | 1500 | 1500 | 1500 | 1500 | 43 | 63 | 463 | 43 | 95 |
| 8/26/94 | 43 | 43 | 54 | 43 | 100 | 263 | 149 | 1500 | 1500 | 1500 | 1500 | 1500 | 1500 | 1500 | 1500 | 1500 | 1500 | 1500 | 1500 | 43 | 250 | 43 | 115 | 66 |
| 8/27/94 | 43 | 43 | 43 | 67 | 47 | 175 | 225 | 1500 | 1500 | 1500 | 1500 | 363 | 1500 | 1500 | 1500 | 1500 | 213 | 163 | 488 | 700 | 600 | 43 | 463 | 588 |
| 8/28/94 | 650 | 750 | 43 | 43 | 350 | 225 | 350 | 288 | 1500 | 1500 | 1500 | 1500 | 1500 | 1500 | 1500 | 950 | 1500 | 1500 | 1500 | 475 | 43 | 638 | 713 | 650 |
| 8/29/94 | 675 | 43 | 43 | 463 | 475 | 375 | 375 | 1500 | 1500 | 1500 | 1500 | 1500 | 1500 | 1500 | 1500 | 1500 | 1500 | 1500 | 1500 | 775 | 775 | 938 | 925 | 725 |
| 8/30/94 | 825 | 863 | 738 | 600 | 50 | 175 | 600 | 1500 | 1500 | 1500 | 1500 | 1500 | 1500 | 1500 | 1500 | 1500 | 1500 | 1500 | 1500 | 1500 | 1500 | 91 | 96 | 43 |
| 8/31/94 | 43 | 43 | 52 | 90 | 125 | 325 | 122 | 1500 | 1500 | 1500 | 1500 | 1500 | 1500 | 1500 | 1500 | 1500 | 450 | 638 | 488 | 488 | 43 | 43 | 47 | 650 |
| 9/1/94 | 43 | 43 | 43 | 47 | 43 | 163 | 175 | 1500 | 1500 | 1500 | 1500 | 1500 | 1500 | 1500 | 1500 | 1500 | 1500 | 1500 | 1500 | 225 | 47 | 43 | 54 | 488 |
| 9/2/94 | 43 | 43 | 43 | 74 | 90 | 137 | 238 | 1500 | 1500 | 1500 | 1500 | 1500 | 1500 | 1500 | 1500 | 1500 | 1500 | 1500 | 1500 | 500 | 575 | 575 | 463 | 43 |
| 9/3/94 | 538 | 1000 | 1037 | 1062 | 1162 | 1050 | 1500 | 500 | 1500 | 1500 | 1500 | 1500 | 1500 | 1500 | 1500 | 1500 | 1500 | 1500 | 513 | 425 | 525 | 575 | 588 | 600 |
| 9/4/94 | 663 | 638 | 650 | 675 | 713 | 738 | 788 | 1500 | 1500 | 1500 | 1500 | 1500 | 1500 | 1500 | 1500 | 1500 | 1500 | 1500 | 1500 | 1500 | 513 | 43 | 400 | 43 |
| 9/5/94 | 638 | 47 | 43 | 43 | 69 | 132 | 1500 | 1500 | 1500 | 1500 | 1500 | 1500 | 1500 | 1500 | 1500 | 1500 | 1500 | 1500 | 1500 | 263 | 43 | 43 | 43 | 43 |
| 9/6/94 | 43 | 43 | 43 | 69 | 52 | 43 | 125 | 1500 | 1500 | 1500 | 1500 | 1500 | 1500 | 1500 | 1500 | 1500 | 1500 | 1500 | 1500 | 675 | 1500 | 800 | 47 | 838 | 825 |
| 9/7/94 | 500 | 525 | 43 | 47 | 43 | 43 | 213 | 1500 | 1500 | 1500 | 1500 | 1500 | 1500 | 1500 | 1500 | 1500 | 1500 | 1500 | 1500 | 43 | 43 | 43 | 738 | 825 | 963 |
| 9/8/94 | 900 | 438 | 47 | 43 | 43 | 43 | 438 | 1500 | 1500 | 1500 | 1500 | 1500 | 1500 | 1500 | 1500 | 1500 | 1500 | 1500 | 1500 | 775 | 775 | 513 | 388 | 47 |
| 9/9/94 | 625 | 588 | 663 | 43 | 43 | 475 | 875 | 1500 | 1500 | 1500 | 1500 | 1500 | 1500 | 1500 | 1500 | 1500 | 1500 | 1500 | 1500 | 375 | 475 | 575 | 700 | 775 |
| 9/10/94 | 788 | 863 | 888 | 122 | 43 | 62 | 463 | 1500 | 1500 | 1500 | 1500 | 1500 | 1500 | 1500 | 1500 | 1500 | 1500 | 1500 | 1500 | 475 | 475 | 475 | 600 | 538 |
| 9/11/94 | 688 | 638 | 638 | 113 | 563 | 43 | 263 | 1500 | 1500 | 1500 | 1500 | 1500 | 1500 | 1500 | 1500 | 1500 | 1500 | 1500 | 1500 | 1500 | 43 | 413 | 813 | 788 |
| 9/12/94 | 888 | 1000 | 900 | 900 | 875 | 113 | 588 | 1500 | 1500 | 1500 | 1500 | 1500 | 1500 | 1500 | 1500 | 1500 | 1500 | 1500 | 1500 | 1500 | 64 | 43 | 52 | 43 |
| 9/13/94 | 43 | 43 | 525 | 43 | 43 | 525 | 513 | 300 | 1500 | 1500 | 1500 | 1500 | 1500 | 1500 | 1500 | 1500 | 1500 | 1500 | 1500 | 913 | 925 | 850 | 925 | 800 |
| 9/14/94 | 863 | 775 | 788 | 950 | 950 | 763 | 763 | 1500 | 1500 | 1500 | 1500 | 1500 | 1500 | 1500 | 1500 | 1500 | 1500 | 1500 | 1500 | 613 | 638 | 825 | 688 | 550 |
| 9/15/94 | 463 | 425 | 375 | 43 | 43 | 363 | 108 | 1500 | 1500 | 1500 | 1500 | 1500 | 1500 | 1500 | 1500 | 1500 | 1500 | 1500 | 1500 | 43 | 43 | 43 | 43 | 43 |
| 9/16/94 | 47 | 47 | 54 | 47 | 47 | 47 | 275 | 1500 | 1500 | 1500 | 1500 | 1500 | 1500 | 1500 | 1500 | 1500 | 1500 | 1500 | 1500 | 313 | 56 | 738 | 488 | 613 |
| 9/17/94 | 575 | 43 | 81 | 90 | 60 | 43 | 163 | 1500 | 1500 | 1500 | 1500 | 1500 | 1500 | 1500 | 1500 | 1500 | 1500 | 1500 | 1500 | 875 | 663 | 763 | 825 | 625 |
| 9/18/94 | 85 | 90 | 52 | 43 | 413 | 525 | 1500 | 1500 | 1500 | 1500 | 1500 | 1500 | 1500 | 1500 | 1500 | 1500 | 1500 | 1500 | 1500 | 1500 | 1500 | 438 | 43 | 475 |
| 9/19/94 | 43 | 43 | 43 | 43 | 43 | 43 | 137 | 1500 | 1500 | 1500 | 1500 | 1500 | 1500 | 1500 | 1500 | 1500 | 1500 | 1500 | 1500 | 1500 | 1500 | 43 | 43 | 43 |
| 9/20/94 | 43 | 76 | 96 | 43 | 98 | 83 | 107 | 195 | 1500 | 1500 | 1500 | 1500 | 1500 | 1500 | 1500 | 1500 | 1500 | 1500 | 1500 | 450 | 638 | 663 | 613 | 863 |
| 9/21/94 | 550 | 563 | 425 | 43 | 49 | 50 | 188 | 1500 | 1500 | 1500 | 1500 | 1500 | 1500 | 1500 | 1500 | 1500 | 1500 | 1500 | 400 | 43 | 43 | 43 | 43 | 338 |
| 9/22/94 | 388 | 108 | 43 | 513 | 159 | 73 | 538 | 1500 | 1500 | 1500 | 1500 | 1500 | 1500 | 1500 | 1500 | 1500 | 1500 | 1500 | 1500 | 47 | 52 | 650 | 43 | 123 |
| 9/23/94 | 70 | 52 | 56 | 438 | 93 | 76 | 151 | 135 | 1500 | 1500 | 1500 | 1500 | 1500 | 1500 | 1500 | 1500 | 1500 | 1500 | 1500 | 43 | 67 | 43 | 313 | 43 |
| 9/24/94 | 45 | 45 | 43 | 43 | 74 | 47 | 263 | 1500 | 1500 | 1500 | 1500 | 1500 | 1500 | 1500 | 1500 | 1500 | 1500 | 1500 | 1500 | 47 | 1500 | 1500 | 638 | 43 |
| 9/25/94 | 43 | 43 | 43 | 130 | 112 | 63 | 108 | 1500 | 1500 | 1500 | 1500 | 1500 | 1500 | 1500 | 1500 | 1500 | 1500 | 1500 | 1500 | 43 | 43 | 450 | 363 | 525 |
| 9/26/94 | 43 | 450 | 43 | 238 | 388 | 425 | 250 | 525 | 1500 | 1500 | 1500 | 1500 | 1500 | 1500 | 1500 | 1500 | 1500 | 1500 | 1500 | 688 | 463 | 43 | 58 | 638 |
| 9/27/94 | 700 | 563 | 43 | 43 | 43 | 475 | 150 | 1500 | 1500 | 1500 | 1500 | 1500 | 1500 | 1500 | 1500 | 1500 | 1500 | 1500 | 1500 | 425 | 50 | 43 | 688 | 488 |
| 9/28/94 | 43 | 43 | 43 | 363 | 105 | 142 | 129 | 1500 | 1500 | 1500 | 1500 | 1500 | 1500 | 1500 | 1500 | 1500 | 1500 | 1500 | 1500 | 738 | 825 | 775 | 738 | 675 |
| 9/29/94 | 1187 | 838 | 638 | 688 | 90 | 80 | 575 | 1500 | 1500 | 1500 | 1500 | 1500 | 1500 | 1500 | 1500 | 1500 | 1500 | 1500 | 1500 | 43 | 47 | 43 | 43 | 47 |
| 9/30/94 | 288 | 43 | 52 | 47 | 43 | 225 | 121 | 1500 | 1500 | 1500 | 1500 | 1500 | 1500 | 1500 | 1500 | 1500 | 1500 | 1500 | 1500 | 43 | 43 | 200 | 43 | 43 |

# Appendix AC-4

# Local Climatic Data for Pocatello Airport

# October 1993 through October 1994

OCT 1993
POCATELLO, ID
NAT'L WEA SER OFC
20369 THUNDERBOLT STREET-C

INQUIRIES/COMMENTS CALL
(704) 271-4800

MUNICIPAL AIRPORT

ISSN 0198-1911

# LOCAL CLIMATOLOGICAL DATA

## Monthly Summary

LATITUDE 42° 55'N LONGITUDE 112° 36'W ELEVATION (GROUND) 4454 FEET TIME ZONE MOUNTAIN 24156

| DATE | TEMPERATURE °F | | | | | DEGREE DAYS BASE 65°F | | WEATHER TYPES | SNOW ICE PELLETS OR ICE ON GROUND AT 0500 | PRECIPITATION | | AVERAGE STATION PRESSURE IN INCHES | WIND (M.P.H.) | | | | | | SUNSHINE | | SKY COVER (TENTHS) | |
|---|---|---|---|---|---|---|---|---|---|---|---|---|---|---|---|---|---|---|---|---|---|---|
| | | | | | | | | | | | | | | | | PEAK GUST | | FASTEST MILE | | | | |
| | MAXIMUM | MINIMUM | AVERAGE | DEPARTURE FROM NORMAL | AVERAGE DEW POINT | HEATING (SEASON BEGINS WITH JULY) | COOLING (SEASON BEGINS WITH JAN) | 1 FOG<br>2 HEAVY FOG<br>3 THUNDERSTORM<br>4 ICE PELLETS<br>5 HAIL<br>6 GLAZE<br>7 DUSTSTORM<br>8 SMOKE, HAZE<br>9 BLOWING SNOW | INCHES | WATER EQUIVALENT (INCHES) | SNOW, ICE PELLETS (INCHES) | ELEV. 4478 FEET ABOVE M.S.L. | RESULTANT DIR | RESULTANT SPEED | AVERAGE SPEED | SPEED | DIRECTION | SPEED | DIRECTION | MINUTES | PERCENT OF TOTAL POSSIBLE | SUNRISE TO SUNSET | MIDNIGHT TO MIDNIGHT |
| 1 | 2 | 3 | 4 | 5 | 6 | 7A | 7B | 8 | 9 | 10 | 11 | 12 | 13 | 14 | 15 | 16 | 17 | 18 | 19 | 20 | 21 | 22 | 23 |
| 01 | 78 | 53 | 66* | 12 | 28 | 0 | 1 | | 0 | 0.00 | 0.0 | 25.530 | 24 | 11.9 | 14.0 | 30 | W | 22 | 26 | 667 | 95 | 7 | 5 |
| 02 | 79 | 36 | 58 | 5 | 32 | 7 | 0 | | 0 | 0.00 | 0.0 | 25.660 | 33 | 2.6 | 5.4 | 17 | NW | 12 | 35 | 702 | 100 | 0 | 0 |
| 03 | 82 | 34 | 58 | 5 | 33 | 7 | 0 | | 0 | 0.00 | 0.0 | 25.650 | 32 | 1.4 | 4.1 | 12 | NW | 9 | 30 | 700 | 100 | 0 | 0 |
| 04 | 84 | 35 | 60 | 8 | 33 | 5 | 0 | | 0 | 0.00 | 0.0 | 25.530 | 35 | 0.6 | 4.3 | 12 | NW | 8 | 30 | 677 | 97 | 5 | 4 |
| 05 | 84* | 37 | 61 | 9 | 39 | 4 | 0 | | 0 | 0.03 | 0.0 | 25.480 | 25 | 1.8 | 7.6 | 38 | W | 23 | 27 | 475 | 68 | 9 | 9 |
| 06 | 68 | 47 | 58 | 6 | 50 | 7 | 0 | 3 | 0 | 0.11 | 0.0 | 25.460 | 27 | 2.0 | 6.8 | 21 | E | 15 | 10 | 378 | 55 | 10 | 9 |
| 07 | 57 | 40 | 49 | -2 | 40 | 16 | 0 | | 0 | T | 0.0 | 25.420 | 25 | 10.8 | 12.6 | 28 | W | 21 | 27 | 166 | 24 | 9 | 8 |
| 08 | 50 | 38 | 44 | -7 | 37 | 21 | 0 | 1 | 0 | 0.13 | 0.0 | 25.500 | 02 | 4.2 | 7.4 | 18 | E | 12 | 02 | 12 | 2 | 10 | 9 |
| 09 | 52 | 36 | 44 | -7 | 38 | 21 | 0 | 1 | 0 | 0.17 | 0.0 | 25.610 | 25 | 1.3 | 5.2 | 14 | NW | 10 | 17 | 296 | 43 | 9 | 10 |
| 10 | 62 | 32 | 47 | -3 | 36 | 18 | 0 | 8 | 0 | 0.00 | 0.0 | 25.625 | 28 | 1.6 | 6.4 | 16 | SE | 12 | 33 | 625 | 92 | 7 | 6 |
| 11 | 57 | 35 | 46 | -4 | 41 | 19 | 0 | 1 | 0 | 0.27 | 0.0 | 25.540 | 01 | 3.8 | 6.4 | 17 | NE | 12 | 05 | 19 | 3 | 10 | 8 |
| 12 | 60 | 46 | 53 | 3 | 45 | 12 | 0 | 1 | 0 | 0.04 | 0.0 | 25.610 | 23 | 7.9 | 9.9 | 21 | W | 16 | 28 | 346 | 51 | 8 | 9 |
| 13 | 63 | 38 | 51 | 2 | 43 | 14 | 0 | 3 | 0 | 0.07 | 0.0 | 25.510 | 19 | 2.6 | 8.8 | 28 | W | 17 | 17 | 304 | 45 | 8 | 9 |
| 14 | 61 | 40 | 51 | 2 | 42 | 14 | 0 | | 0 | 0.01 | 0.0 | 25.440 | 26 | 8.0 | 11.4 | 25 | W | 20 | 27 | 484 | 72 | 7 | 8 |
| 15 | 53 | 40 | 47 | -1 | 43 | 18 | 0 | | 0 | 0.17 | 0.0 | 25.410 | 22 | 7.9 | 10.6 | 23 | SW | 17 | 28 | 75 | 11 | 9 | 8 |
| 16 | 55 | 35 | 45 | -3 | 40 | 20 | 0 | | 0 | 0.00 | 0.0 | 25.420 | 20 | 1.5 | 8.2 | 21 | SW | 14 | 20 | 42 | 6 | 10 | 9 |
| 17 | 62 | 30 | 46 | -2 | 37 | 19 | 0 | 2 8 | 0 | 0.00 | 0.0 | 25.370 | 27 | 4.5 | 9.4 | 20 | NW | 14 | 24 | 545 | 83 | 9 | 7 |
| 18 | 52 | 36 | 44 | -3 | 36 | 21 | 0 | | 0 | 0.00 | 0.0 | 25.510 | 24 | 9.1 | 12.1 | 26 | W | 18 | 29 | 491 | 75 | 5 | 4 |
| 19 | 58 | 30 | 44 | -3 | 33 | 21 | 0 | | 0 | 0.00 | 0.0 | 25.620 | 25 | 11.9 | 14.1 | 31 | W | 22 | 26 | 591 | 90 | 5 | 3 |
| 20 | 57 | 27 | 42 | -5 | 30 | 23 | 0 | | 0 | 0.00 | 0.0 | 25.780 | 24 | 6.2 | 11.4 | 21 | NW | 15 | 29 | 651 | 100 | 5 | 2 |
| 21 | 64 | 25 | 45 | -1 | 32 | 20 | 0 | | 0 | 0.00 | 0.0 | 25.680 | 16 | 1.7 | 8.2 | 22 | S | 16 | 18 | 372 | 57 | 10 | 8 |
| 22 | 67 | 32 | 50 | 4 | 34 | 15 | 0 | | 0 | 0.00 | 0.0 | 25.670 | 30 | 2.1 | 6.3 | 12 | SW | 9 | 34 | 604 | 94 | 0 | 3 |
| 23 | 71 | 32 | 52 | 7 | 34 | 13 | 0 | | 0 | 0.00 | 0.0 | 25.660 | 27 | 1.0 | 7.4 | 17 | SE | 13 | 26 | 643 | 100 | 1 | 1 |
| 24 | 65 | 31 | 48 | 3 | 34 | 17 | 0 | | 0 | 0.00 | 0.0 | 25.610 | 26 | 9.2 | 14.1 | 32 | W | 24 | 26 | 526 | 82 | 9 | 5 |
| 25 | 60 | 29 | 45 | 0 | 25 | 20 | 0 | | 0 | 0.00 | 0.0 | 25.740 | 24 | 5.0 | 7.7 | 21 | SW | 15 | 23 | 623 | 98 | 0 | 1 |
| 26 | 57 | 22 | 40 | -4 | 20 | 25 | 0 | | 0 | 0.00 | 0.0 | 25.870 | 07 | 2.8 | 7.5 | 23 | NE | 17 | 06 | 634 | 100 | 4 | 4 |
| 27 | 56 | 24 | 40 | -4 | 21 | 25 | 0 | | 0 | 0.00 | 0.0 | 25.700 | 22 | 8.5 | 9.2 | 21 | SW | 14 | 22 | 210 | 33 | 10 | 10 |
| 28 | 55 | 30 | 43 | 0 | 24 | 22 | 0 | | 0 | 0.01 | 0.0 | 25.430 | 23 | 3.4 | 12.7 | 31 | NE | 18 | 04 | 134 | 21 | 9 | 9 |
| 29 | 43 | 17 | 30* | -13 | 9 | 35 | 0 | | 0 | 0.00 | 0.0 | 25.640 | 06 | 9.6 | 11.5 | 26 | NE | 21 | 07 | 627 | 100 | 0 | 0 |
| 30 | 56 | 12* | 34 | -9 | 12 | 31 | 0 | | 0 | 0.00 | 0.0 | 25.680 | 32 | 0.4 | 5.1 | 18 | S | 14 | 19 | 620 | 99 | 6 | 3 |
| 31 | 56 | 16 | 36 | -6 | 19 | 29 | 0 | | 0 | 0.00 | 0.0 | 25.515 | 23 | 4.2 | 7.9 | 24 | SW | 17 | 24 | 430 | 69 | 9 | 5 |
| SUM | SUM | | | | | TOTAL | TOTAL | NUMBER OF DAYS | | TOTAL | TOTAL | FOR THE MONTH: | | | | | | | | TOTAL | % | SUM | SUM |
| 1924 | 1015 | | | | | 539 | 1 | | | 1.01 | 0.0 | 25.580 | 25 | 3.2 | 8.8 | 38 | W | 24 | 26 | 13669 | POS | 200 | 179 |
| AVG. | AVG. | AVG. | DEP. | AVG. | | DEP. | DEP. | PRECIPITATION | | DEP. | | | | | | DATE: 5 | | DATE: 24 | | POSSIBLE | HOURS | AVG | AVG |
| 62.1 | 32.7 | 47.4 | -0.6 | 32.8 | | 12 | 1 | ≥ .01 INCH 10 | | 0.10 | | | | | | | | | | 20543 | 67 | 6.5 | 5.5 |

| NUMBER OF DAYS | | | | SEASON TO DATE | |
|---|---|---|---|---|---|
| MAXIMUM TEMP. | | MINIMUM TEMP. | | TOTAL | TOTAL |
| ≥ 90° | ≤ 32° | ≤ 32° | ≤ 0° | 961 | 103 |
| 0 | 0 | 15 | 0 | DEP. | DEP. |
| | | | | 178 | -318 |

| SNOW, ICE PELLETS | |
|---|---|
| ≥ 1.0 INCH | 0 |
| THUNDERSTORMS | 2 |
| HEAVY FOG | 1 |
| CLEAR 6 | PARTLY CLOUDY 9 |

| GREATEST IN 24 HOURS AND DATES | | |
|---|---|---|
| | PRECIPITATION | SNOW, ICE PELLETS |
| | 0.31 | 0.0 |
| | 11-12 | |

| GREATEST DEPTH ON GROUND OF SNOW, ICE PELLETS OR ICE AND DATE |
|---|
| 0 |

CLOUDY 16

* EXTREME FOR THE MONTH - LAST OCCURRENCE IF MORE THAN ONE.
T TRACE AMOUNT.
+ ALSO ON EARLIER DATE(S).
HEAVY FOG: VISIBILITY 1/4 MILE OR LESS.
BLANK ENTRIES DENOTE MISSING OR UNREPORTED DATA.

DATA IN COLS 6 AND 12-15 ARE BASED ON 21 OR MORE OBSERVATIONS AT HOURLY INTERVALS. RESULTANT WIND IS THE VECTOR SUM OF WIND SPEEDS AND DIRECTIONS DIVIDED BY THE NUMBER OF OBSERVATIONS COLS 16 & 17: PEAK GUST - HIGHEST INSTANTANEOUS WIND SPEED ONE OF TWO WIND SPEEDS IS GIVEN UNDER COLS 18 & 19: FASTEST MILE - HIGHEST RECORDED SPEED FOR WHICH A MILE OF WIND PASSES STATION (DIRECTION IN COMPASS POINTS). FASTEST OBSERVED ONE MINUTE WIND - HIGHEST ONE MINUTE SPEED (DIRECTION IN TENS OF DEGREES). ERRORS WILL BE CORRECTED IN SUBSEQUENT PUBLICATIONS

I CERTIFY THAT THIS IS AN OFFICIAL PUBLICATION OF THE NATIONAL OCEANIC AND ATMOSPHERIC ADMINISTRATION, AND IS COMPILED FROM RECORDS ON FILE AT THE NATIONAL CLIMATIC DATA CENTER

Kenneth D. Hadeen
DIRECTOR
NATIONAL CLIMATIC DATA CENTER

noaa
NATIONAL OCEANIC AND ATMOSPHERIC ADMINISTRATION
NATIONAL ENVIRONMENTAL SATELLITE, DATA AND INFORMATION SERVICE
NATIONAL CLIMATIC DATA CENTER ASHEVILLE NORTH CAROLINA

OCT 1993
POCATELLO, ID

# OBSERVATIONS AT 3-HOUR INTERVALS

OCT 1993 POCATELLO, ID 24156

| HOUR (LST) | SKY COVER (TENTHS) | CEILING IN HUNDREDS OF FEET | VISIBILITY WHOLE MILES | VISIBILITY 16THS MILE | WEATHER | TEMPERATURE AIR °F | TEMPERATURE WET BULB °F | TEMPERATURE DEW POINT °F | REL HUMIDITY % | WIND DIRECTION | WIND SPEED (KNOTS) |
|---|---|---|---|---|---|---|---|---|---|---|---|
| **OCT 1st** | | | | | | | | | | | |
| 02 | 6 | 140 | 20 | | | 59 | 44 | 27 | 30 | 22 | 9 |
| 05 | 1 | UNL | 20 | | | 54 | 43 | 29 | 38 | 22 | 9 |
| 08 | 7 | UNL | 40 | | | 58 | 45 | 31 | 36 | 22 | 10 |
| 11 | 9 | UNL | 40 | | | 67 | 48 | 28 | 23 | 27 | 16 |
| 14 | 7 | UNL | 40 | | | 76 | 51 | 25 | 15 | 28 | 18 |
| 17 | 5 | UNL | 35 | | | 75 | 51 | 28 | 18 | 28 | 13 |
| 20 | 6 | UNL | 20 | | | 64 | 47 | 29 | 27 | 19 | 11 |
| 23 | 0 | UNL | 20 | | | 59 | 45 | 29 | 32 | 22 | 9 |
| **OCT 2nd** | | | | | | | | | | | |
| 02 | 0 | UNL | 20 | | | 45 | 38 | 29 | 54 | 00 | 0 |
| 05 | 0 | UNL | 20 | | | 38 | 34 | 27 | 65 | 16 | 3 |
| 08 | 1 | UNL | 40 | | | 46 | 40 | 33 | 61 | 32 | 4 |
| 11 | 1 | UNL | 40 | | | 67 | 51 | 36 | 32 | 03 | 9 |
| 14 | 0 | UNL | 40 | | | 79 | 55 | 35 | 20 | 33 | 9 |
| 17 | 0 | UNL | 40 | | | 76 | 53 | 32 | 20 | 31 | 6 |
| 20 | 0 | UNL | 20 | | | 58 | 46 | 32 | 38 | 12 | 4 |
| 23 | 0 | UNL | 20 | | | 45 | 39 | 32 | 61 | 03 | 5 |
| **OCT 3rd** | | | | | | | | | | | |
| 02 | 0 | UNL | 20 | | | 43 | 39 | 33 | 68 | 00 | 0 |
| 05 | 0 | UNL | 20 | | | 36 | 34 | 32 | 85 | 00 | 0 |
| 08 | 1 | UNL | 40 | | | 44 | 39 | 33 | 65 | 09 | 3 |
| 11 | 1 | UNL | 35 | | | 69 | 52 | 37 | 31 | 05 | 4 |
| 14 | 0 | UNL | 40 | | | 80 | 55 | 32 | 18 | 30 | 8 |
| 17 | 0 | UNL | 50 | | | 80 | 54 | 31 | 17 | 28 | 5 |
| 20 | 0 | UNL | 20 | | | 60 | 45 | 29 | 31 | 14 | 4 |
| 23 | 0 | UNL | 20 | | | 56 | 45 | 32 | 40 | 13 | 3 |
| **OCT 4th** | | | | | | | | | | | |
| 02 | 0 | UNL | 20 | | | 44 | 39 | 33 | 65 | 11 | 5 |
| 05 | 0 | UNL | 20 | | | 39 | 36 | 32 | 76 | 30 | 4 |
| 08 | 0 | UNL | 50 | | | 47 | 41 | 33 | 58 | 29 | 3 |
| 11 | 2 | UNL | 50 | | | 71 | 53 | 38 | 30 | 05 | 4 |
| 14 | 7 | UNL | 50 | | | 82 | 57 | 36 | 19 | 30 | 7 |
| 17 | 10 | UNL | 40 | | | 81 | 54 | 30 | 16 | 33 | 4 |
| 20 | 5 | UNL | 20 | | | 64 | 47 | 29 | 27 | 10 | 3 |
| 23 | 5 | UNL | 20 | | | 52 | 42 | 30 | 43 | 13 | 4 |
| **OCT 5th** | | | | | | | | | | | |
| 02 | 10 | UNL | 20 | | | 44 | 38 | 31 | 60 | 00 | 0 |
| 05 | 10 | UNL | 20 | | | 39 | 35 | 30 | 70 | 31 | 6 |
| 08 | 8 | UNL | 40 | | | 48 | 41 | 34 | 59 | 05 | 4 |
| 11 | 9 | 130 | 40 | | | 70 | 53 | 37 | 30 | 08 | 6 |
| 14 | 9 | 130 | 40 | | | 81 | 58 | 41 | 24 | 31 | 9 |
| 17 | 10 | 250 | 40 | | | 77 | 56 | 40 | 27 | 17 | 9 |
| 20 | 10 | 100 | 20 | | RW | 64 | 54 | 47 | 54 | 15 | 9 |
| 23 | 10 | 100 | 20 | | RW | 56 | 54 | 53 | 90 | 09 | 7 |
| **OCT 6th** | | | | | | | | | | | |
| 02 | 10 | 37 | 15 | | RW | 56 | 54 | 52 | 87 | 28 | 12 |
| 05 | 10 | 100 | 20 | | | 52 | 50 | 48 | 86 | 29 | 5 |
| 08 | 9 | UNL | 70 | | | 51 | 50 | 49 | 93 | 31 | 3 |
| 11 | 10 | UNL | 35 | | | 63 | 57 | 52 | 68 | 30 | 9 |
| 14 | 10 | 230 | 35 | | | 66 | 57 | 50 | 57 | 29 | 5 |
| 17 | 10 | 55 | 40 | | | 58 | 56 | 54 | 87 | 09 | 8 |
| 20 | 5 | UNL | 20 | | | 53 | 51 | 50 | 90 | 18 | 5 |
| 23 | 7 | UNL | 20 | | | 49 | 47 | 46 | 90 | 25 | 5 |
| **OCT 7th** | | | | | | | | | | | |
| 02 | 10 | 250 | 20 | | | 48 | 46 | 45 | 89 | 20 | 4 |
| 05 | 9 | 95 | 20 | | | 51 | 48 | 46 | 83 | 23 | 8 |
| 08 | 10 | 47 | 25 | | | 50 | 48 | 46 | 86 | 25 | 12 |
| 11 | 10 | 18 | 35 | | | 52 | 48 | 44 | 74 | 26 | 14 |
| 14 | 10 | 25 | 40 | | | 54 | 47 | 41 | 62 | 28 | 14 |
| 17 | 8 | 150 | 40 | | | 56 | 44 | 31 | 39 | 27 | 13 |
| 20 | 5 | UNL | 20 | | | 43 | 39 | 34 | 71 | 19 | 8 |
| 23 | 3 | UNL | 20 | | | 40 | 37 | 33 | 76 | 20 | 9 |
| **OCT 8th** | | | | | | | | | | | |
| 02 | 7 | 110 | 20 | | | 41 | 38 | 35 | 79 | 23 | 7 |
| 05 | 10 | 20 | 20 | | RW | 39 | 38 | 37 | 93 | 33 | 5 |
| 08 | 10 | 15 | 5 | | RF | 38 | 38 | 37 | 96 | 06 | 6 |
| 11 | 10 | 15 | 20 | | | 43 | 41 | 38 | 83 | 36 | 6 |
| 14 | 10 | 23 | 40 | | | 46 | 41 | 36 | 68 | 34 | 7 |
| 17 | 10 | 20 | 35 | | RW | 44 | 43 | 41 | 89 | 03 | 7 |
| 20 | 8 | 37 | 20 | | | 40 | 39 | 37 | 89 | 34 | 6 |
| 23 | 10 | 45 | 20 | | RW | 39 | 36 | 33 | 79 | 07 | 8 |
| **OCT 9th** | | | | | | | | | | | |
| 02 | 10 | 30 | 20 | | RW | 37 | 36 | 34 | 89 | 00 | 0 |
| 05 | 10 | 6 | 20 | | RW | 37 | 37 | 36 | 96 | 35 | 4 |
| 08 | 10 | 16 | 5 | | RF | 38 | 38 | 37 | 96 | 33 | 6 |
| 11 | 10 | 21 | 25 | | | 43 | 41 | 38 | 83 | 12 | 4 |
| 14 | 10 | 23 | 40 | | | 48 | 44 | 39 | 71 | 30 | 8 |
| 17 | 6 | 55 | 40 | | | 50 | 44 | 37 | 61 | 21 | 3 |
| 20 | 10 | 75 | 20 | | | 46 | 43 | 40 | 80 | 22 | 4 |
| 23 | 10 | 75 | 20 | | | 45 | 43 | 40 | 83 | 20 | 6 |
| **OCT 10th** | | | | | | | | | | | |
| 02 | 5 | UNL | 20 | | | 40 | 39 | 37 | 89 | 23 | 6 |
| 05 | 1 | UNL | 20 | | | 35 | 34 | 33 | 92 | 27 | 4 |
| 08 | 2 | UNL | 40 | | | 39 | 38 | 36 | 89 | 30 | 4 |
| 11 | 6 | UNL | 7 | | | 55 | 47 | 38 | 53 | 01 | 4 |
| 14 | 10 | UNL | 30 | | | 60 | 49 | 38 | 44 | 31 | 8 |
| 17 | 10 | UNL | 50 | | | 59 | 48 | 37 | 44 | 32 | 5 |
| 20 | 10 | 200 | 20 | | | 55 | 46 | 37 | 51 | 14 | 7 |
| 23 | 10 | UNL | 20 | | | 44 | 41 | 37 | 77 | 31 | 9 |
| **OCT 11th** | | | | | | | | | | | |
| 02 | 0 | UNL | 20 | | | 39 | 38 | 36 | 89 | 19 | 4 |
| 05 | 2 | UNL | 20 | | | 35 | 35 | 34 | 96 | 04 | 6 |
| 08 | 10 | 110 | 30 | | | 39 | 38 | 37 | 93 | 36 | 6 |
| 11 | 10 | 100 | 40 | | | 50 | 45 | 39 | 66 | 01 | 9 |
| 14 | 10 | 100 | 40 | | | 56 | 47 | 39 | 53 | 05 | 5 |
| 17 | 10 | 55 | 6 | | RF | 50 | 49 | 48 | 93 | 30 | 4 |
| 20 | 10 | 55 | 6 | | RF | 48 | 48 | 47 | 96 | 34 | 6 |
| 23 | 10 | 9 | 10 | | | 48 | 48 | 47 | 96 | 33 | 3 |
| **OCT 12th** | | | | | | | | | | | |
| 02 | 10 | 5 | 3 | | LF | 48 | 48 | 48 | 100 | 25 | 7 |
| 05 | 10 | 9 | 6 | | F | 47 | 46 | 45 | 93 | 22 | 12 |
| 08 | 10 | 80 | 20 | | | 48 | 46 | 44 | 86 | 21 | 8 |
| 11 | 10 | 90 | 25 | | | 54 | 50 | 47 | 77 | 27 | 13 |
| 14 | 7 | 28 | 25 | | | 59 | 51 | 44 | 58 | 27 | 13 |
| 17 | 4 | UNL | 25 | | | 58 | 51 | 44 | 60 | 28 | 8 |
| 20 | 5 | UNL | 20 | | | 51 | 47 | 44 | 77 | 14 | 5 |
| 23 | 6 | UNL | 20 | | | 49 | 46 | 44 | 83 | 19 | 6 |
| **OCT 13th** | | | | | | | | | | | |
| 02 | 10 | 230 | 20 | | | 43 | 42 | 41 | 93 | 33 | 8 |
| 05 | 10 | 220 | 20 | | | 40 | 40 | 39 | 96 | 35 | 7 |
| 08 | 10 | 200 | 25 | | | 43 | 43 | 42 | 96 | 02 | 4 |
| 11 | 10 | 250 | 30 | | | 62 | 52 | 43 | 50 | 16 | 13 |
| 14 | 6 | 250 | 40 | | TRW | 61 | 53 | 46 | 58 | 30 | 6 |
| 17 | 6 | 250 | 40 | | | 60 | 51 | 44 | 56 | 18 | 12 |
| 20 | 9 | 60 | 20 | | T | 49 | 48 | 47 | 93 | 22 | 6 |
| 23 | 10 | 65 | 20 | | | 50 | 47 | 44 | 80 | 15 | 9 |
| **OCT 14th** | | | | | | | | | | | |
| 02 | 10 | 95 | 20 | | | 48 | 46 | 45 | 89 | 02 | 3 |
| 05 | 10 | 55 | 20 | | | 45 | 44 | 43 | 93 | 23 | 5 |
| 08 | 9 | 100 | 50 | | | 44 | 44 | 43 | 96 | 26 | 8 |
| 11 | 6 | 100 | 35 | | | 55 | 50 | 45 | 69 | 24 | 14 |
| 14 | 3 | UNL | 40 | | | 59 | 50 | 42 | 54 | 28 | 15 |
| 17 | 7 | 50 | 35 | | | 58 | 49 | 41 | 53 | 26 | 12 |
| 20 | 9 | 55 | 20 | | | 50 | 46 | 42 | 74 | 26 | 12 |
| 23 | 10 | 110 | 20 | | | 48 | 44 | 39 | 71 | 25 | 7 |
| **OCT 15th** | | | | | | | | | | | |
| 02 | 10 | 50 | 20 | | | 49 | 45 | 40 | 71 | 16 | 7 |
| 05 | 10 | 45 | 15 | | | 44 | 44 | 43 | 96 | 14 | 4 |
| 08 | 10 | 50 | 50 | | | 48 | 46 | 44 | 86 | 30 | 6 |
| 11 | 10 | 20 | 7 | | RW | 46 | 45 | 44 | 93 | 28 | 13 |
| 14 | 9 | 55 | 40 | | | 50 | 48 | 46 | 86 | 28 | 15 |
| 17 | 9 | 70 | 40 | | | 52 | 48 | 44 | 74 | 23 | 11 |
| 20 | 1 | UNL | 20 | | | 44 | 43 | 42 | 93 | 17 | 8 |
| 23 | 1 | UNL | 20 | | | 42 | 41 | 40 | 93 | 21 | 9 |
| **OCT 16th** | | | | | | | | | | | |
| 02 | 10 | 45 | 20 | | | 42 | 41 | 40 | 93 | 21 | 9 |
| 05 | 8 | 200 | 20 | | | 43 | 42 | 40 | 89 | 16 | 7 |
| 08 | 9 | 39 | 20 | | | 40 | 39 | 38 | 93 | 32 | 7 |
| 11 | 10 | 50 | 30 | | | 48 | 45 | 42 | 80 | 08 | 6 |
| 14 | 10 | 90 | 40 | | | 54 | 48 | 43 | 67 | 09 | 8 |
| 17 | 10 | 90 | 40 | | | 52 | 46 | 39 | 61 | 12 | 5 |
| 20 | 8 | 250 | 20 | | | 45 | 43 | 40 | 83 | 27 | 6 |
| 23 | 7 | UNL | 20 | | | 41 | 40 | 39 | 93 | 09 | 5 |
| **OCT 17th** | | | | | | | | | | | |
| 02 | 8 | 70 | 7 | | | 34 | 34 | 34 | 100 | 10 | 4 |
| 05 | 4 | UNL | 2 | | FK | 35 | 35 | 35 | 100 | 36 | 6 |
| 08 | 9 | 250 | 5 | | FK | 36 | 36 | 36 | 100 | 18 | 7 |
| 11 | 9 | UNL | 40 | | | 48 | 43 | 38 | 69 | 18 | 8 |
| 14 | 9 | 200 | 60 | | | 57 | 48 | 39 | 51 | 30 | 8 |
| 17 | 8 | UNL | 100+ | | | 55 | 45 | 35 | 47 | 31 | 8 |
| 20 | 7 | 70 | 20 | | | 46 | 44 | 41 | 83 | 20 | 12 |
| 23 | 1 | UNL | 20 | | | 42 | 41 | 40 | 93 | 21 | 9 |
| **OCT 18th** | | | | | | | | | | | |
| 02 | 8 | 70 | 10 | | | 39 | 39 | 38 | 96 | 17 | 8 |
| 05 | 0 | UNL | 20 | | | 37 | 36 | 35 | 93 | 16 | 7 |
| 08 | 3 | UNL | 30 | | | 40 | 39 | 37 | 89 | 23 | 9 |
| 11 | 5 | UNL | 40 | | | 47 | 43 | 38 | 71 | 25 | 12 |
| 14 | 9 | 55 | 40 | | | 51 | 45 | 38 | 61 | 27 | 15 |
| 17 | 0 | UNL | 60 | | | 51 | 43 | 35 | 55 | 28 | 14 |
| 20 | 0 | UNL | 20 | | | 40 | 37 | 32 | 73 | 22 | 10 |
| 23 | 0 | UNL | 20 | | | 38 | 35 | 32 | 79 | 17 | 9 |

## MAXIMUM SHORT DURATION PRECIPITATION

| TIME PERIOD (MINUTES) | 5 | 10 | 15 | 20 | 30 | 45 | 60 | 80 | 100 | 120 | 150 | 180 |
|---|---|---|---|---|---|---|---|---|---|---|---|---|
| PRECIPITATION (INCHES) | 0.04 | 0.07 | 0.07 | 0.07 | 0.07 | 0.08 | 0.10 | 0.12 | 0.15 | 0.17 | 0.19 | 0.21 |
| ENDED: DATE | 13 | 13 | 13 | 13 | 13 | 11 | 11 | 11 | 11 | 11 | 11 | 11 |
| ENDED: TIME | 1928 | 1932 | 1932 | 1932 | 1932 | 1833 | 1847 | 1833 | 1847 | 1847 | 1905 | 1948 |

THE PRECIPITATION AMOUNTS FOR THE INDICATED TIME INTERVALS MAY OCCUR AT ANY TIME DURING THE MONTH. THE TIME INDICATED IS THE ENDING TIME OF THE INTERVAL. DATE AND TIME ARE NOT ENTERED FOR TRACE AMOUNTS.

# OBSERVATIONS AT 3-HOUR INTERVALS

OCT 1993
POCATELLO, ID

| HOUR (L.S.T.) | SKY COVER (TENTHS) | CEILING IN HUNDREDS OF FEET | VISIBILITY: WHOLE MILES | VISIBILITY: 16THS MILE | WEATHER | TEMPERATURE: AIR °F | TEMPERATURE: WET BULB °F | TEMPERATURE: DEW POINT °F | REL HUMIDITY % | WIND: DIRECTION | WIND: SPEED (KNOTS) |
|---|---|---|---|---|---|---|---|---|---|---|---|
| **OCT 19th** | | | | | | | | | | | |
| 02 | 0 | UNL | 20 | | | 35 | 33 | 30 | 82 | 21 | 6 |
| 05 | 2 | UNL | 20 | | | 31 | 30 | 28 | 89 | 25 | 9 |
| 08 | 9 | UNL | 25 | | | 38 | 36 | 34 | 86 | 31 | 5 |
| 11 | 3 | UNL | 30 | | | 51 | 43 | 35 | 55 | 26 | 19 |
| 14 | 6 | 230 | 50 | | | 57 | 46 | 35 | 44 | 26 | 19 |
| 17 | 4 | UNL | 40 | | | 55 | 46 | 36 | 49 | 28 | 15 |
| 20 | 5 | UNL | 20 | | | 47 | 41 | 35 | 63 | 22 | 12 |
| 23 | 0 | UNL | 20 | | | 42 | 39 | 35 | 76 | 26 | 14 |
| **OCT 20th** | | | | | | | | | | | |
| 02 | 0 | UNL | 20 | | | 36 | 34 | 32 | 85 | 17 | 11 |
| 05 | 0 | UNL | 20 | | | 32 | 31 | 29 | 89 | 17 | 9 |
| 08 | 1 | UNL | 30 | | | 32 | 30 | 28 | 85 | 31 | 8 |
| 11 | 10 | UNL | 25 | | | 48 | 42 | 34 | 59 | 16 | 10 |
| 14 | 7 | UNL | 30 | | | 54 | 44 | 32 | 43 | 25 | 12 |
| 17 | 1 | UNL | 40 | | | 54 | 42 | 28 | 37 | 28 | 10 |
| 20 | 0 | UNL | 20 | | | 42 | 36 | 29 | 60 | 13 | 7 |
| 23 | 0 | UNL | 20 | | | 33 | 31 | 28 | 82 | 33 | 10 |
| **OCT 21st** | | | | | | | | | | | |
| 02 | 0 | UNL | 20 | | | 28 | 27 | 26 | 92 | 32 | 9 |
| 05 | 3 | UNL | 20 | | | 28 | 27 | 26 | 92 | 10 | 4 |
| 08 | 10 | 230 | 45 | | | 30 | 30 | 29 | 96 | 14 | 6 |
| 11 | 10 | UNL | 40 | | | 54 | 45 | 36 | 51 | 32 | 7 |
| 14 | 10 | UNL | 40 | | | 63 | 49 | 35 | 35 | 24 | 12 |
| 17 | 10 | 200 | 30 | | | 59 | 47 | 34 | 39 | 17 | 12 |
| 20 | 10 | 250 | 20 | | | 51 | 43 | 34 | 52 | 29 | 6 |
| 23 | 10 | UNL | 20 | | | 44 | 39 | 34 | 68 | 32 | 6 |
| **OCT 22nd** | | | | | | | | | | | |
| 02 | 10 | 250 | 20 | | | 40 | 37 | 34 | 79 | 32 | 3 |
| 05 | 6 | 250 | 20 | | | 36 | 35 | 33 | 89 | 01 | 7 |
| 08 | 1 | UNL | 40 | | | 37 | 36 | 34 | 89 | 10 | 5 |
| 11 | 0 | UNL | 35 | | | 60 | 48 | 36 | 41 | 11 | 5 |
| 14 | 0 | UNL | 45 | | | 67 | 51 | 36 | 32 | 30 | 7 |
| 17 | 0 | UNL | 60 | | | 65 | 50 | 36 | 34 | 29 | 3 |
| 20 | 0 | UNL | 20 | | | 47 | 41 | 34 | 61 | 26 | 7 |
| 23 | 2 | UNL | 20 | | | 42 | 38 | 34 | 73 | 25 | 7 |
| **OCT 23rd** | | | | | | | | | | | |
| 02 | 0 | UNL | 20 | | | 36 | 34 | 32 | 85 | 10 | 5 |
| 05 | 1 | UNL | 20 | | | 36 | 34 | 32 | 85 | 11 | 5 |
| 08 | 9 | UNL | 40 | | | 35 | 34 | 32 | 89 | 03 | 4 |
| 11 | 0 | UNL | 35 | | | 60 | 48 | 37 | 43 | 13 | 4 |
| 14 | 0 | UNL | 60 | | | 70 | 53 | 39 | 32 | 30 | 9 |
| 17 | 0 | UNL | 60 | | | 67 | 51 | 35 | 31 | 26 | 7 |
| 20 | 0 | UNL | 20 | | | 56 | 45 | 32 | 40 | 15 | 10 |
| 23 | 0 | UNL | 20 | | | 49 | 42 | 33 | 54 | 33 | 5 |
| **OCT 24th** | | | | | | | | | | | |
| 02 | 0 | UNL | 20 | | | 39 | 36 | 32 | 76 | 31 | 8 |
| 05 | 0 | UNL | 20 | | | 34 | 33 | 31 | 89 | 34 | 7 |
| 08 | 10 | UNL | 50 | | | 39 | 36 | 33 | 79 | 16 | 6 |
| 11 | 10 | 230 | 70 | | | 59 | 48 | 37 | 44 | 11 | 6 |
| 14 | 8 | UNL | 70 | | | 65 | 49 | 33 | 30 | 26 | 21 |
| 17 | 6 | UNL | 50 | | | 58 | 46 | 34 | 41 | 24 | 16 |
| 20 | 6 | UNL | 20 | | | 51 | 43 | 35 | 55 | 24 | 15 |
| 23 | 0 | UNL | 20 | | | 48 | 42 | 34 | 59 | 23 | 15 |
| **OCT 25th** | | | | | | | | | | | |
| 02 | 0 | UNL | 20 | | | 41 | 36 | 28 | 60 | 24 | 11 |
| 05 | 0 | UNL | 20 | | | 38 | 34 | 27 | 65 | 25 | 10 |
| 08 | 3 | UNL | 90 | | | 32 | 30 | 28 | 85 | 23 | 3 |
| 11 | 0 | UNL | 70 | | | 48 | 41 | 33 | 56 | 28 | 8 |
| 14 | 0 | UNL | 100+ | | | 58 | 42 | 20 | 23 | 30 | 5 |
| 17 | 0 | UNL | 70 | | | 53 | 38 | 16 | 23 | 00 | 0 |
| 20 | 0 | UNL | 20 | | | 39 | 31 | 18 | 43 | 18 | 5 |
| 23 | 0 | UNL | 20 | | | 36 | 31 | 24 | 62 | 19 | 8 |
| **OCT 26th** | | | | | | | | | | | |
| 02 | 0 | UNL | 20 | | | 29 | 26 | 21 | 72 | 15 | 3 |
| 05 | 0 | UNL | 20 | | | 26 | 24 | 21 | 81 | 09 | 5 |
| 08 | 0 | UNL | 100+ | | | 30 | 27 | 22 | 72 | 06 | 6 |
| 11 | 1 | UNL | 100+ | | | 48 | 38 | 24 | 39 | 06 | 15 |
| 14 | 7 | UNL | 100+ | | | 56 | 40 | 19 | 24 | 06 | 8 |
| 17 | 2 | UNL | 60 | | | 52 | 38 | 17 | 25 | 05 | 4 |
| 20 | 6 | UNL | 20 | | | 36 | 30 | 19 | 50 | 16 | 5 |
| 23 | 7 | UNL | 20 | | | 34 | 29 | 20 | 57 | 22 | 8 |
| **OCT 27th** | | | | | | | | | | | |
| 02 | 10 | UNL | 20 | | | 33 | 28 | 19 | 56 | 21 | 6 |
| 05 | 8 | UNL | 20 | | | 30 | 26 | 19 | 64 | 22 | 5 |
| 08 | 10 | UNL | 40 | | | 27 | 25 | 20 | 75 | 17 | 3 |
| 11 | 10 | 130 | 40 | | | 49 | 38 | 22 | 35 | 24 | 8 |
| 14 | 10 | 250 | 40 | | | 53 | 39 | 21 | 29 | 27 | 8 |
| 17 | 10 | 250 | 40 | | | 52 | 39 | 21 | 30 | 21 | 8 |
| 20 | 10 | 250 | 20 | | | 47 | 37 | 23 | 39 | 22 | 12 |
| 23 | 10 | 180 | 20 | | | 46 | 37 | 24 | 42 | 22 | 11 |
| **OCT 28th** | | | | | | | | | | | |
| 02 | 10 | 150 | 20 | | | 48 | 37 | 22 | 36 | 22 | 13 |
| 05 | 10 | 150 | 20 | | | 47 | 36 | 21 | 36 | 22 | 12 |
| 08 | 10 | 95 | 40 | | | 47 | 36 | 20 | 34 | 23 | 11 |
| 11 | 10 | 80 | 25 | | | 48 | 37 | 22 | 36 | 28 | 13 |
| 14 | 6 | 60 | 40 | | | 55 | 43 | 28 | 36 | 22 | 10 |
| 17 | 10 | 60 | 30 | | | 50 | 42 | 32 | 50 | 29 | 7 |
| 20 | 9 | 80 | 20 | | | 39 | 32 | 21 | 49 | 08 | 12 |
| 23 | 4 | UNL | 20 | | | 31 | 26 | 18 | 59 | 05 | 13 |
| **OCT 29th** | | | | | | | | | | | |
| 02 | 0 | UNL | 20 | | | 27 | 23 | 15 | 61 | 07 | 18 |
| 05 | 0 | UNL | 20 | | | 24 | 20 | 9 | 53 | 06 | 11 |
| 08 | 0 | UNL | 70 | | | 23 | 19 | 10 | 57 | 04 | 6 |
| 11 | 0 | UNL | 70 | | | 37 | 27 | 8 | 30 | 05 | 13 |
| 14 | 0 | UNL | 70 | | | 43 | 31 | 7 | 23 | 06 | 7 |
| 17 | 0 | UNL | 50 | | | 39 | 28 | 5 | 24 | 05 | 8 |
| 20 | 0 | UNL | 20 | | | 25 | 20 | 9 | 51 | 07 | 8 |
| 23 | 0 | UNL | 20 | | | 21 | 17 | 8 | 57 | 17 | 6 |
| **OCT 30th** | | | | | | | | | | | |
| 02 | 0 | UNL | 20 | | | 18 | 15 | 9 | 68 | 24 | 5 |
| 05 | 0 | UNL | 20 | | | 13 | 12 | 9 | 84 | 24 | 7 |
| 08 | 4 | UNL | 50 | | | 19 | 18 | 14 | 81 | 06 | 3 |
| 11 | 3 | UNL | 50 | | | 42 | 31 | 12 | 29 | 07 | 6 |
| 14 | 8 | UNL | 50 | | | 54 | 38 | 12 | 19 | 00 | 0 |
| 17 | 9 | UNL | 40 | | | 51 | 36 | 13 | 22 | 19 | 12 |
| 20 | 9 | UNL | 20 | | | 32 | 25 | 12 | 43 | 21 | 5 |
| 23 | 5 | UNL | 20 | | | 26 | 22 | 15 | 63 | 00 | 0 |
| **OCT 31st** | | | | | | | | | | | |
| 02 | 1 | UNL | 20 | | | 18 | 17 | 13 | 81 | 01 | 4 |
| 05 | 7 | UNL | 20 | | | 17 | 16 | 14 | 88 | 03 | 4 |
| 08 | 2 | UNL | 35 | | | 20 | 19 | 16 | 84 | 12 | 3 |
| 11 | 10 | UNL | 40 | | | 45 | 34 | 18 | 34 | 04 | 6 |
| 14 | 10 | 230 | 50 | | | 53 | 39 | 20 | 27 | 25 | 6 |
| 17 | 10 | 230 | 40 | | | 53 | 40 | 24 | 32 | 23 | 14 |
| 20 | 7 | 85 | 20 | | | 43 | 35 | 22 | 43 | 22 | 9 |
| 23 | 6 | UNL | 20 | | | 38 | 32 | 24 | 57 | 22 | 9 |

## WEATHER CODES

| | | | | | |
|---|---|---|---|---|---|
| + | TORNADO | SW | SNOW SHOWERS | GF | GROUND FOG |
| T | THUNDERSTORM | SG | SNOW GRAINS | BD | BLOWING DUST |
| Q | SQUALL | SP | SNOW PELLETS | BN | BLOWING SAND |
| R | RAIN | IC | ICE CRYSTALS | BS | BLOWING SNOW |
| RW | RAIN SHOWERS | IP | ICE PELLETS | BY | BLOWING SPRAY |
| ZR | FREEZING RAIN | IPW | ICE PELLET SHOWERS | K | SMOKE |
| L | DRIZZLE | A | HAIL | H | HAZE |
| ZL | FREEZING DRIZZLE | F | FOG | D | DUST |
| S | SNOW | IF | ICE FOG | | |

CEILING: UNL INDICATES UNLIMITED
WIND DIRECTION: DIRECTIONS ARE THOSE FROM WHICH THE WIND BLOWS, INDICATED IN TENS OF DEGREES FROM TRUE NORTH: 1.E., 09 FOR EAST, 18 FOR SOUTH 27 FOR WEST. AN ENTRY OF 00 INDICATES CALM.
SPEED: THE OBSERVED AVERAGE ONE-MINUTE VALUE, EXP RESSED IN KNOTS (MPH=KNOTS X 1.15).

## SUMMARY BY HOURS

| HOUR (L.S.T.) | AVERAGES: SKY COVER (TENTHS) | AVERAGES: STATION PRESSURE (INCHES) | AVERAGES: TEMPERATURE: AIR TEMP °F | AVERAGES: TEMPERATURE: WET BULB °F | AVERAGES: TEMPERATURE: DEW POINT °F | AVERAGES: REL HUMIDITY % | AVERAGES: WIND SPEED (KNOTS) | RESULTANT WIND |
|---|---|---|---|---|---|---|---|---|
| 02 | | | | | | | | |
| 05 | | | | | | | | |
| 08 | | | | | | | | |
| 11 | | | | | | | | |
| 14 | | | | | | | | |
| 17 | | | | | | | | |
| 20 | | | | | | | | |
| 23 | | | | | | | | |

Linda - thx.

"WE DELIVER FOR YULE" AVL 288 12/15/93

NATIONAL CLIMATIC DATA CENTER
FEDERAL BUILDING
37 BATTERY PARK AVE
ASHEVILLE, NORTH CAROLINA 28801-2733

OFFICIAL BUSINESS
PENALTY FOR PRIVATE USE $300

FIRST CLASS
POSTAGE AND FEES PAID
NOAA
PERMIT G-19

OMA #5 12/21/93 11:42

LCD-10-24156-PD-9509

33766
J R SIMPLOT COMPANY
ATTN: J F COCHRANE - PO #35724
PO BOX 912
POCATELLO ID 83204

OCT 1993 24156
POCATELLO, ID
USCOMM - NOAA - ASHEVILLE, NC

HOURLY PRECIPITATION (WATER EQUIVALENT IN INCHES)

| DATE | A.M. HOUR ENDING AT | | | | | | | | | | | | P.M. HOUR ENDING AT | | | | | | | | | | | |
|---|---|---|---|---|---|---|---|---|---|---|---|---|---|---|---|---|---|---|---|---|---|---|---|---|
| | 1 | 2 | 3 | 4 | 5 | 6 | 7 | 8 | 9 | 10 | 11 | 12 | 1 | 2 | 3 | 4 | 5 | 6 | 7 | 8 | 9 | 10 | 11 | 12 |
| 01 | | | | | | | | | | | | | | | | | | | | | | | | |
| 02 | | | | | | | | | | | | | | | | | | | | | | | | |
| 03 | | | | | | | | | | | | | | | | | | | | | | | | |
| 04 | | | | | | | | | | | | | | | | | | | | | | | | |
| 05 | | | | | | | | | | | | | | | | | | | | T | T | 0.01 | 0.02 | T |
| 06 | | 0.04 | 0.03 | | | | T | T | T | | | | | | T | 0.04 | T | T | | | | | | |
| 07 | | | | | | | | | | | | | | | | | | | | | | | | |
| 08 | | | | | T | 0.01 | 0.03 | 0.03 | 0.02 | T | | | | | T | T | 0.01 | T | | | | | T | 0.03 |
| 09 | 0.03 | 0.03 | 0.02 | 0.01 | 0.01 | 0.02 | 0.04 | 0.01 | T | T | T | | | | | | | | | | | | | |
| 10 | | | | | | | | | | | | | | | | | | | | | | | | |
| 11 | | | | | | | | | | | | | | | T | T | 0.06 | 0.06 | 0.09 | 0.04 | T | T | T | 0.02 |
| 12 | 0.03 | 0.01 | T | T | | | | | | | | | | | | | | | | | | | | |
| 13 | | | | | | | | | | | | | | T | T | T | | | | 0.07 | | | T | |
| 14 | T | 0.01 | | | | | | | | | | | | | | | | | | | | | | |
| 15 | | | T | 0.02 | T | | | | T | 0.02 | 0.03 | 0.04 | 0.06 | T | | | | | | | | | | |
| 16 | | | | | | | | | | | | | | | | | | | | | | | | |
| 17 | | | | | | | | | | | | | | | | | | | | | | | | |
| 18 | | | | | | | | | | | | | | | | | | | | | | | | |
| 19 | | | | | | | | | | | | | | | | | | | | | | | | |
| 20 | | | | | | | | | | | | | | | | | | | | | | | | |
| 21 | | | | | | | | | | | | | | | | | | | | | | | | |
| 22 | | | | | | | | | | | | | | | | | | | | | | | | |
| 23 | | | | | | | | | | | | | | | | | | | | | | | | |
| 24 | | | | | | | | | | | | | | | | | | | | | | | | |
| 25 | | | | | | | | | | | | | | | | | | | | | | | | |
| 26 | | | | | | | | | | | | | | | | | | | | | | | | |
| 27 | | | | | | | | | | | | | | | | | | | | | | | | |
| 28 | | | | | | | | | | | | 0.01 | T | | | | | | | | | | | |
| 29 | | | | | | | | | | | | | | | | | | | | | | | | |
| 30 | | | | | | | | | | | | | | | | | | | | | | | | |
| 31 | | | | | | | | | | | | | | | | | | | | | | | | |

NOV 1993
POCATELLO, ID
NAT'L WEA SER OFC
20369 THUNDERBOLT STREET-C

INQUIRIES/COMMENTS CALL
(704) 271-4800

MUNICIPAL AIRPORT

ISSN 0198-1811

# LOCAL CLIMATOLOGICAL DATA
## Monthly Summary

LATITUDE 42° 55'N LONGITUDE 112° 36'W ELEVATION (GROUND) 4454 FEET TIME ZONE MOUNTAIN 24156

Weather types: 1 FOG; 2 HEAVY FOG; 3 THUNDERSTORM; 4 ICE PELLETS; 5 HAIL; 6 GLAZE; 7 DUSTSTORM; 8 SMOKE, HAZE; 9 BLOWING SNOW

| DATE 1 | TEMPERATURE °F: MAXIMUM 2 | MINIMUM 3 | AVERAGE 4 | DEPARTURE FROM NORMAL 5 | AVERAGE DEW POINT 6 | DEGREE DAYS BASE 65°F: HEATING (SEASON BEGINS WITH JUL) 7A | COOLING (SEASON BEGINS WITH JAN) 7B | WEATHER TYPES 8 | SNOW ICE PELLETS OR ICE ON GROUND AT 0500 INCHES 9 | PRECIPITATION: WATER EQUIVALENT (INCHES) 10 | SNOW, ICE PELLETS (INCHES) 11 | AVERAGE STATION PRESSURE IN INCHES ELEV. 4478 FEET ABOVE M.S.L. 12 | WIND (M.P.H.): RESULTANT DIR. 13 | RESULTANT SPEED 14 | AVERAGE SPEED 15 | PEAK GUST: SPEED 16 | DIRECTION 17 | FASTEST MILE: SPEED 18 | DIRECTION 19 | SUNSHINE: MINUTES 20 | PERCENT OF TOTAL POSSIBLE 21 | SKY COVER (TENTHS): SUNRISE TO SUNSET 22 | MIDNIGHT TO MIDNIGHT 23 |
|---|---|---|---|---|---|---|---|---|---|---|---|---|---|---|---|---|---|---|---|---|---|---|---|
| 01 | 49 | 27 | 38 | -4 | 23 | 27 | 0 | | 0 | 0.00 | 0.0 | 25.670 | 24 | 9.2 | 10.1 | 22 | W | 16 | 25 | 547 | 88 | 1 | 3 |
| 02 | 51 | 22 | 37 | -4 | 16 | 28 | 0 | | 0 | 0.00 | 0.0 | 25.780 | 22 | 9.5 | 10.4 | 25 | SW | 17 | 19 | 258 | 42 | 10 | 7 |
| 03 | 59* | 34 | 47* | 6 | 22 | 18 | 0 | | 0 | 0.00 | 0.0 | 25.490 | 22 | 14.3 | 17.8 | 41 | SW | 30 | 25 | 325 | 53 | 6 | 7 |
| 04 | 46 | 29 | 38 | -2 | 24 | 27 | 0 | | 0 | 0.01 | 0.1 | 25.570 | 24 | 7.3 | 10.7 | 23 | SW | 17 | 24 | 593 | 97 | 4 | 6 |
| 05 | 44 | 21 | 33 | -7 | 20 | 32 | 0 | | T | T | T | 25.720 | 22 | 7.0 | 7.8 | 15 | SW | 12 | 19 | 439 | 72 | 6 | 5 |
| 06 | 46 | 13 | 30 | -10 | 12 | 35 | 0 | | 0 | 0.00 | 0.0 | 25.620 | 23 | 7.1 | 8.4 | 23 | SW | 16 | 25 | 607 | 100 | 0 | 0 |
| 07 | 47 | 16 | 32 | -7 | 15 | 33 | 0 | | 0 | 0.00 | 0.0 | 25.490 | 22 | 5.7 | 7.5 | 23 | SW | 14 | 24 | 603 | 100 | 0 | 0 |
| 08 | 48 | 14 | 31 | -8 | 13 | 34 | 0 | | 0 | 0.00 | 0.0 | 25.610 | 23 | 4.8 | 6.6 | 17 | SW | 13 | 24 | 601 | 100 | 6 | 2 |
| 09 | 53 | 10 | 32 | -6 | 12 | 33 | 0 | | 0 | 0.00 | 0.0 | 25.690 | 36 | 3.6 | 5.5 | 14 | N | 10 | 36 | 531 | 89 | 9 | 6 |
| 10 | 53 | 17 | 35 | -3 | 16 | 30 | 0 | | 0 | 0.00 | 0.0 | 25.520 | 06 | 0.6 | 3.6 | 12 | SW | 9 | 08 | 212 | 36 | 9 | 8 |
| 11 | 49 | 12 | 31 | -6 | 14 | 34 | 0 | | 0 | 0.00 | 0.0 | 25.250 | 21 | 3.8 | 5.8 | 15 | SW | 10 | 19 | 551 | 93 | 5 | 5 |
| 12 | 45 | 23 | 34 | -3 | 17 | 31 | 0 | | 0 | 0.00 | 0.0 | 25.230 | 22 | 8.8 | 9.4 | 18 | SW | 14 | 26 | 520 | 88 | 8 | 6 |
| 13 | 35 | 17 | 26 | -11 | 21 | 39 | 0 | | 0 | 0.00 | 0.0 | 25.310 | 24 | 4.7 | 8.4 | 21 | W | 14 | 25 | 40 | 7 | 10 | 6 |
| 14 | 46 | 16 | 31 | -5 | 14 | 34 | 0 | | 0 | 0.00 | 0.0 | 25.580 | 24 | 0.5 | 7.4 | 18 | N | 14 | 01 | 545 | 93 | 1 | 1 |
| 15 | 45 | 11 | 28 | -8 | 9 | 37 | 0 | | 0 | 0.00 | 0.0 | 25.600 | 23 | 5.3 | 7.8 | 23 | S | 14 | 20 | 585 | 100 | 8 | 4 |
| 16 | 52 | 25 | 39 | 4 | 13 | 26 | 0 | | 0 | 0.00 | 0.0 | 25.590 | 19 | 11.3 | 13.0 | 24 | S | 18 | 17 | 548 | 94 | 3 | 3 |
| 17 | 54 | 17 | 36 | 1 | 16 | 29 | 0 | | 0 | 0.00 | 0.0 | 25.485 | 18 | 5.2 | 11.3 | 30 | S | 21 | 19 | 405 | 70 | 9 | 8 |
| 18 | 41 | 18 | 30 | -5 | 14 | 35 | 0 | | 0 | T | T | 25.610 | 24 | 12.7 | 14.5 | 44 | SW | 26 | 23 | 184 | 32 | 8 | 6 |
| 19 | 38 | 11 | 25 | -9 | 11 | 40 | 0 | | 0 | 0.00 | 0.0 | 25.860 | 22 | 7.4 | 8.0 | 18 | W | 13 | 24 | 577 | 100 | 0 | 0 |
| 20 | 45 | 8 | 27 | -7 | 11 | 38 | 0 | | 0 | 0.00 | 0.0 | 25.715 | 20 | 3.3 | 7.9 | 24 | SW | 20 | 20 | 523 | 91 | 3 | 3 |
| 21 | 53 | 14 | 34 | 1 | 11 | 31 | 0 | | 0 | 0.00 | 0.0 | 25.400 | 19 | 9.4 | 16.4 | 37 | S | 25 | 19 | 502 | 88 | 5 | 5 |
| 22 | 48 | 26 | 37 | 4 | 29 | 28 | 0 | | 0 | 0.31 | 2.5 | 25.210 | 19 | 17.3 | 18.5 | 43 | S | 29 | 17 | 196 | 34 | 10 | 10 |
| 23 | 26 | 17 | 22 | -10 | 18 | 43 | 0 | 9 | 2 | 0.06 | 0.7 | 25.460 | 23 | 13.2 | 13.9 | 28 | W | 18 | 26 | 0 | 0 | 10 | 9 |
| 24 | 19 | -7 | 6 | -26 | 6 | 59 | 0 | 2 9 | 2 | 0.14 | 2.8 | 25.700 | 23 | 10.1 | 10.9 | 26 | SW | 21 | 23 | 28 | 5 | 10 | 9 |
| 25 | 9 | -11 | -1 | -33 | -5 | 66 | 0 | 2 8 | 4 | 0.01 | 0.1 | 25.850 | 06 | 2.6 | 4.3 | 12 | E | 9 | 07 | 378 | 67 | 7 | 7 |
| 26 | 10 | -14* | -2* | -33 | -8 | 67 | 0 | 2 8 | 4 | T | T | 25.880 | 06 | 1.1 | 3.9 | 9 | SW | 7 | 24 | 394 | 70 | 3 | 4 |
| 27 | 18 | -12 | 3 | -28 | 0 | 62 | 0 | 1 8 | 4 | T | T | 25.820 | 05 | 2.8 | 4.6 | 13 | NE | 9 | 06 | 411 | 73 | 9 | 6 |
| 28 | 30 | 6 | 18 | -12 | 16 | 47 | 0 | 1 8 | 4 | 0.00 | 0.0 | 25.620 | 03 | 4.1 | 6.0 | 17 | NE | 13 | 03 | 112 | 20 | 10 | 9 |
| 29 | 44 | 17 | 31 | 1 | 22 | 34 | 0 | | 3 | 0.00 | 0.0 | 25.480 | 04 | 2.2 | 5.4 | 17 | N | 9 | 02 | 398 | 71 | 6 | 8 |
| 30 | 37 | 16 | 27 | -3 | 25 | 38 | 0 | 1 6 | 2 | 0.01 | T | 25.470 | 22 | 11.6 | 13.7 | 35 | SW | 26 | 24 | 0 | 0 | 10 | 9 |
| | SUM 1240 | SUM 413 | | | | TOTAL 1115 | TOTAL 0 | NUMBER OF DAYS | | TOTAL 0.54 | TOTAL 6.2 | FOR THE MONTH: 25.580 | 22 | 5.5 | 9.3 | 44 | SW | 30 | 25 | TOTAL 11613 | % FOR MONTH | SUM 186 | SUM 162 |
| | AVG. 41.3 | AVG. 13.8 | AVG. 27.6 | DEP. -8.0 | AVG. 14.1 | DEP. 233 | DEP. 0 | PRECIPITATION ≥ .01 INCH | 6 | DEP. -0.62 | | | | | | DATE: 18 | | DATE: 3 | | POSSIBLE 17560 | 66 | AVG 6.2 | AVG. 5.4 |

| NUMBER OF DAYS | | | | SEASON TO DATE | | | |
|---|---|---|---|---|---|---|---|
| MAXIMUM TEMP. | | MINIMUM TEMP. | | TOTAL 2076 | TOTAL 103 | SNOW, ICE PELLETS ≥ 1.0 INCH | 2 |
| ≥ 90° | ≤ 32° | ≤ 32° | ≤ 0° | DEP. | DEP. | THUNDERSTORMS | 0 |
| 0 | 6 | 29 | 4 | 411 | -318 | HEAVY FOG | 3 |
| | | | | | | CLEAR 8 PARTLY CLOUDY 8 CLOUDY 14 | |

| GREATEST IN 24 HOURS AND DATES | | | | GREATEST DEPTH ON GROUND OF SNOW, ICE PELLETS OR ICE AND DATE | |
|---|---|---|---|---|---|
| PRECIPITATION | | SNOW, ICE PELLETS | | | |
| 0.31 | 22-23 | 3.0 | 22-23 | 4 | 28+ |

* EXTREME FOR THE MONTH - LAST OCCURRENCE IF MORE THAN ONE.
T TRACE AMOUNT.
+ ALSO ON EARLIER DATE(S).
HEAVY FOG: VISIBILITY 1/4 MILE OR LESS.
BLANK ENTRIES DENOTE MISSING OR UNREPORTED DATA.

DATA IN COLS 6 AND 12-15 ARE BASED ON 21 OR MORE OBSERVATIONS AT HOURLY INTERVALS. RESULTANT WIND IS THE VECTOR SUM OF WIND SPEEDS AND DIRECTIONS DIVIDED BY THE NUMBER OF OBSERVATIONS. COLS 16 & 17: PEAK GUST - HIGHEST INSTANTANEOUS WIND SPEED. ONE OF TWO WIND SPEEDS IS GIVEN UNDER COLS 18 & 19: FASTEST MILE - HIGHEST RECORDED SPEED FOR WHICH A MILE OF WIND PASSES STATION (DIRECTION IN COMPASS POINTS). FASTEST OBSERVED ONE MINUTE WIND - HIGHEST ONE MINUTE SPEED (DIRECTION IN TENS OF DEGREES). ERRORS WILL BE CORRECTED IN SUBSEQUENT PUBLICATIONS.

I CERTIFY THAT THIS IS AN OFFICIAL PUBLICATION OF THE NATIONAL OCEANIC AND ATMOSPHERIC ADMINISTRATION, AND IS COMPILED FROM RECORDS ON FILE AT THE NATIONAL CLIMATIC DATA CENTER

Kenneth D Hadeen
DIRECTOR
NATIONAL CLIMATIC DATA CENTER

noaa
NATIONAL OCEANIC AND ATMOSPHERIC ADMINISTRATION
NATIONAL ENVIRONMENTAL SATELLITE, DATA AND INFORMATION SERVICE
NATIONAL CLIMATIC DATA CENTER ASHEVILLE NORTH CAROLINA

NOV 1993
POCATELLO, ID

# OBSERVATIONS AT 3-HOUR INTERVALS

NOV 1993 POCATELLO, ID 24156

| HOUR L.S.T. | SKY COVER (TENTHS) | CEILING IN HUNDREDS OF FEET | VISIBILITY WHOLE MILES | VISIBILITY 16THS MILE | WEATHER | TEMPERATURE AIR °F | TEMPERATURE WET BULB °F | TEMPERATURE DEW POINT °F | REL HUMIDITY % | WIND DIRECTION | WIND SPEED (KNOTS) |
|---|---|---|---|---|---|---|---|---|---|---|---|
| **NOV 1st** | | | | | | | | | | | |
| 02 | 6 | 250 | 20 | | | 35 | 31 | 25 | 67 | 22 | 10 |
| 05 | 7 | 70 | 20 | | | 34 | 30 | 25 | 70 | 23 | 9 |
| 08 | 3 | UNL | 40 | | | 33 | 31 | 27 | 79 | 24 | 12 |
| 11 | 2 | UNL | 40 | | | 41 | 35 | 27 | 58 | 27 | 12 |
| 14 | 0 | UNL | 50 | | | 47 | 37 | 22 | 37 | 26 | 11 |
| 17 | 0 | UNL | 50 | | | 45 | 35 | 19 | 35 | 23 | 5 |
| 20 | 0 | UNL | 20 | | | 34 | 29 | 19 | 54 | 19 | 5 |
| 23 | 0 | UNL | 20 | | | 30 | 26 | 19 | 64 | 22 | 9 |
| **NOV 2nd** | | | | | | | | | | | |
| 02 | 0 | UNL | 20 | | | 32 | 27 | 19 | 59 | 21 | 8 |
| 05 | 0 | UNL | 20 | | | 23 | 21 | 17 | 78 | 25 | 7 |
| 08 | 9 | 90 | 40 | | | 26 | 23 | 18 | 72 | 24 | 4 |
| 11 | 10 | 85 | 50 | | | 42 | 33 | 20 | 41 | 24 | 11 |
| 14 | 10 | UNL | 50 | | | 49 | 36 | 14 | 25 | 24 | 14 |
| 17 | 10 | UNL | 60 | | | 47 | 34 | 11 | 23 | 22 | 8 |
| 20 | 10 | 230 | 20 | | | 40 | 31 | 14 | 35 | 21 | 10 |
| 23 | 10 | 100 | 20 | | | 44 | 33 | 14 | 30 | 18 | 12 |
| **NOV 3rd** | | | | | | | | | | | |
| 02 | 10 | 250 | 20 | | | 46 | 35 | 19 | 34 | 19 | 16 |
| 05 | 10 | 250 | 20 | | | 47 | 36 | 19 | 33 | 19 | 17 |
| 08 | 10 | 120 | 40 | | | 47 | 36 | 18 | 31 | 20 | 16 |
| 11 | 8 | 90 | 40 | | | 51 | 38 | 19 | 28 | 22 | 17 |
| 14 | 6 | 85 | 35 | | | 58 | 42 | 23 | 26 | 26 | 23 |
| 17 | 0 | UNL | 15 | | | 54 | 41 | 25 | 33 | 26 | 17 |
| 20 | 6 | 90 | 20 | | | 48 | 39 | 27 | 44 | 23 | 10 |
| 23 | 2 | UNL | 20 | | | 35 | 31 | 25 | 67 | 02 | 6 |
| **NOV 4th** | | | | | | | | | | | |
| 02 | 10 | 55 | 20 | | | 38 | 35 | 30 | 73 | 22 | 3 |
| 05 | 3 | UNL | 20 | | | 32 | 27 | 19 | 59 | 22 | 10 |
| 08 | 2 | UNL | 40 | | | 29 | 27 | 23 | 78 | 21 | 5 |
| 11 | 2 | UNL | 40 | | | 40 | 34 | 25 | 55 | 24 | 15 |
| 14 | 6 | 100 | 30 | | | 45 | 36 | 23 | 42 | 27 | 14 |
| 17 | 9 | 85 | 45 | | | 43 | 34 | 19 | 38 | 24 | 10 |
| 20 | 10 | 60 | 20 | | SW | 38 | 33 | 26 | 62 | 16 | 6 |
| 23 | 10 | 70 | 20 | | | 33 | 32 | 30 | 89 | 15 | 5 |
| **NOV 5th** | | | | | | | | | | | |
| 02 | 10 | 95 | 20 | | | 27 | 26 | 25 | 92 | 21 | 5 |
| 05 | 10 | 95 | 20 | | | 26 | 25 | 24 | 92 | 22 | 4 |
| 08 | 10 | 85 | 40 | | | 29 | 27 | 24 | 82 | 21 | 6 |
| 11 | 10 | 85 | 40 | | | 36 | 31 | 22 | 57 | 24 | 8 |
| 14 | 4 | UNL | 40 | | | 42 | 33 | 18 | 38 | 26 | 7 |
| 17 | 0 | UNL | 30 | | | 39 | 31 | 17 | 41 | 23 | 9 |
| 20 | 0 | UNL | 20 | | | 28 | 24 | 17 | 63 | 22 | 7 |
| 23 | 0 | UNL | 20 | | | 28 | 24 | 16 | 61 | 19 | 10 |
| **NOV 6th** | | | | | | | | | | | |
| 02 | 0 | UNL | 20 | | | 20 | 18 | 14 | 78 | 22 | 8 |
| 05 | 0 | UNL | 20 | | | 19 | 17 | 12 | 74 | 00 | 0 |
| 08 | 0 | UNL | 40 | | | 18 | 17 | 13 | 81 | 19 | 3 |
| 11 | 1 | UNL | 40 | | | 40 | 32 | 18 | 41 | 36 | 3 |
| 14 | 0 | UNL | 40 | | | 45 | 32 | 10 | 24 | 24 | 14 |
| 17 | 0 | UNL | 40 | | | 41 | 30 | 9 | 27 | 25 | 9 |
| 20 | 0 | UNL | 20 | | | 28 | 23 | 11 | 49 | 21 | 6 |
| 23 | 0 | UNL | 20 | | | 32 | 26 | 14 | 47 | 23 | 10 |
| **NOV 7th** | | | | | | | | | | | |
| 02 | 0 | UNL | 20 | | | 21 | 19 | 13 | 71 | 21 | 3 |
| 05 | 0 | UNL | 20 | | | 18 | 16 | 12 | 77 | 32 | 5 |
| 08 | 0 | UNL | 50 | | | 20 | 18 | 15 | 81 | 02 | 7 |
| 11 | 0 | UNL | 40 | | | 38 | 30 | 17 | 43 | 25 | 8 |
| 14 | 0 | UNL | 50 | | | 46 | 35 | 18 | 33 | 27 | 10 |
| 17 | 0 | UNL | 40 | | | 42 | 33 | 18 | 38 | 23 | 7 |
| 20 | 0 | UNL | 20 | | | 30 | 25 | 17 | 58 | 20 | 7 |
| 23 | 0 | UNL | 20 | | | 23 | 20 | 14 | 68 | 23 | 7 |
| **NOV 8th** | | | | | | | | | | | |
| 02 | 0 | UNL | 20 | | | 20 | 18 | 13 | 74 | 20 | 6 |
| 05 | 0 | UNL | 20 | | | 16 | 15 | 12 | 84 | 24 | 5 |
| 08 | 3 | UNL | 40 | | | 17 | 15 | 11 | 77 | 02 | 5 |
| 11 | 10 | UNL | 40 | | | 38 | 31 | 18 | 44 | 30 | 3 |
| 14 | 4 | UNL | 40 | | | 47 | 35 | 17 | 30 | 27 | 9 |
| 17 | 0 | UNL | 40 | | | 44 | 33 | 13 | 28 | 26 | 6 |
| 20 | 0 | UNL | 20 | | | 26 | 21 | 11 | 53 | 24 | 5 |
| 23 | 0 | UNL | 20 | | | 22 | 18 | 10 | 60 | 19 | 4 |
| **NOV 9th** | | | | | | | | | | | |
| 02 | 0 | UNL | 20 | | | 22 | 18 | 8 | 55 | 32 | 5 |
| 05 | 0 | UNL | 20 | | | 14 | 12 | 7 | 74 | 22 | 4 |
| 08 | 8 | UNL | 40 | | | 14 | 13 | 10 | 84 | 00 | 0 |
| 11 | 9 | UNL | 40 | | | 39 | 31 | 16 | 39 | 33 | 7 |
| 14 | 9 | 150 | 40 | | | 49 | 36 | 16 | 27 | 36 | 7 |
| 17 | 7 | UNL | 40 | | | 45 | 33 | 14 | 29 | 32 | 3 |
| 20 | 10 | 250 | 20 | | | 38 | 29 | 11 | 33 | 35 | 6 |
| 23 | 10 | 220 | 20 | | | 27 | 23 | 14 | 58 | 35 | 5 |
| **NOV 10th** | | | | | | | | | | | |
| 02 | 10 | 220 | 20 | | | 24 | 21 | 14 | 66 | 13 | 4 |
| 05 | 10 | 230 | 20 | | | 25 | 22 | 15 | 66 | 11 | 3 |
| 08 | 10 | 230 | 40 | | | 26 | 23 | 16 | 66 | 00 | 0 |
| 11 | 10 | 220 | 70 | | | 37 | 30 | 17 | 44 | 35 | 4 |
| 14 | 10 | 250 | 50 | | | 48 | 35 | 15 | 27 | 12 | 5 |
| 17 | 7 | UNL | 60 | | | 43 | 34 | 21 | 42 | 00 | 0 |
| 20 | 4 | UNL | 20 | | | 27 | 23 | 14 | 58 | 21 | 5 |
| 23 | 2 | UNL | 20 | | | 25 | 21 | 14 | 63 | 00 | 0 |
| **NOV 11th** | | | | | | | | | | | |
| 02 | 2 | UNL | 20 | | | 18 | 16 | 12 | 77 | 28 | 5 |
| 05 | 0 | UNL | 20 | | | 14 | 13 | 9 | 80 | 21 | 6 |
| 08 | 0 | UNL | 40 | | | 14 | 13 | 9 | 80 | 36 | 4 |
| 11 | 2 | UNL | 30 | | | 37 | 30 | 17 | 44 | 16 | 4 |
| 14 | 7 | UNL | 30 | | | 48 | 36 | 18 | 30 | 28 | 5 |
| 17 | 10 | UNL | 40 | | | 41 | 32 | 18 | 40 | 25 | 3 |
| 20 | 8 | 250 | 20 | | | 38 | 30 | 15 | 39 | 21 | 8 |
| 23 | 10 | 110 | 20 | | | 38 | 29 | 12 | 34 | 22 | 7 |
| **NOV 12th** | | | | | | | | | | | |
| 02 | 6 | 120 | 20 | | | 31 | 25 | 12 | 45 | 23 | 6 |
| 05 | 6 | 130 | 20 | | | 24 | 21 | 13 | 63 | 22 | 6 |
| 08 | 6 | 250 | 20 | | | 26 | 22 | 15 | 63 | 22 | 8 |
| 11 | 7 | UNL | 30 | | | 39 | 31 | 18 | 43 | 24 | 9 |
| 14 | 10 | UNL | 25 | | | 44 | 34 | 19 | 37 | 26 | 12 |
| 17 | 9 | UNL | 30 | | | 40 | 32 | 18 | 41 | 22 | 8 |
| 20 | 7 | UNL | 20 | | | 32 | 27 | 19 | 59 | 20 | 8 |
| 23 | 0 | UNL | 20 | | | 28 | 26 | 21 | 75 | 20 | 7 |
| **NOV 13th** | | | | | | | | | | | |
| 02 | 0 | UNL | 20 | | | 28 | 26 | 21 | 75 | 23 | 8 |
| 05 | 0 | UNL | 20 | | | 25 | 24 | 21 | 85 | 21 | 7 |
| 08 | 10 | 23 | 20 | | | 30 | 27 | 22 | 72 | 23 | 10 |
| 11 | 10 | 25 | 30 | | | 31 | 27 | 21 | 67 | 25 | 11 |
| 14 | 10 | 32 | 30 | | | 32 | 28 | 22 | 67 | 23 | 7 |
| 17 | 10 | 85 | 20 | | | 32 | 29 | 23 | 69 | 33 | 7 |
| 20 | 5 | UNL | 20 | | | 25 | 24 | 21 | 85 | 05 | 5 |
| 23 | 1 | UNL | 20 | | | 23 | 22 | 20 | 88 | 36 | 4 |
| **NOV 14th** | | | | | | | | | | | |
| 02 | 0 | UNL | 20 | | | 23 | 21 | 18 | 81 | 09 | 4 |
| 05 | 3 | UNL | 20 | | | 21 | 19 | 14 | 74 | 17 | 3 |
| 08 | 5 | UNL | 30 | | | 24 | 21 | 14 | 66 | 08 | 4 |
| 11 | 0 | UNL | 70 | | | 37 | 28 | 12 | 36 | 01 | 12 |
| 14 | 0 | UNL | 70 | | | 44 | 32 | 9 | 24 | 05 | 6 |
| 17 | 0 | UNL | 80 | | | 37 | 28 | 12 | 36 | 24 | 9 |
| 20 | 0 | UNL | 20 | | | 28 | 23 | 14 | 56 | 21 | 9 |
| 23 | 1 | UNL | 20 | | | 25 | 22 | 16 | 69 | 19 | 7 |
| **NOV 15th** | | | | | | | | | | | |
| 02 | 0 | UNL | 20 | | | 22 | 20 | 14 | 71 | 19 | 6 |
| 05 | 0 | UNL | 20 | | | 16 | 15 | 11 | 81 | 36 | 7 |
| 08 | 7 | UNL | 30 | | | 12 | 11 | 8 | 84 | 34 | 7 |
| 11 | 9 | UNL | 35 | | | 37 | 29 | 15 | 41 | 18 | 4 |
| 14 | 10 | UNL | 50 | | | 44 | 32 | 11 | 26 | 26 | 8 |
| 17 | 4 | UNL | 50 | | | 38 | 27 | 1 | 21 | 23 | 7 |
| 20 | 3 | UNL | 20 | | | 26 | 20 | 6 | 42 | 21 | 7 |
| 23 | 1 | UNL | 20 | | | 33 | 25 | 7 | 33 | 19 | 12 |
| **NOV 16th** | | | | | | | | | | | |
| 02 | 1 | UNL | 20 | | | 35 | 26 | 9 | 34 | 19 | 15 |
| 05 | 0 | UNL | 20 | | | 34 | 27 | 13 | 42 | 20 | 13 |
| 08 | 9 | 100 | 35 | | | 27 | 22 | 13 | 56 | 36 | 5 |
| 11 | 2 | UNL | 40 | | | 46 | 34 | 15 | 29 | 20 | 15 |
| 14 | 2 | UNL | 50 | | | 51 | 37 | 16 | 25 | 18 | 10 |
| 17 | 1 | UNL | 40 | | | 44 | 33 | 15 | 31 | 17 | 14 |
| 20 | 1 | UNL | 20 | | | 41 | 31 | 12 | 30 | 18 | 9 |
| 23 | 5 | UNL | 20 | | | 42 | 32 | 14 | 32 | 19 | 12 |
| **NOV 17th** | | | | | | | | | | | |
| 02 | 3 | UNL | 20 | | | 32 | 26 | 13 | 45 | 36 | 7 |
| 05 | 1 | UNL | 20 | | | 18 | 16 | 12 | 77 | 35 | 6 |
| 08 | 10 | UNL | 60 | | | 18 | 16 | 11 | 74 | 00 | 0 |
| 11 | 9 | UNL | 50 | | | 46 | 35 | 18 | 33 | 03 | 6 |
| 14 | 10 | UNL | 40 | | | 54 | 39 | 18 | 24 | 17 | 15 |
| 17 | 10 | 250 | 30 | | | 45 | 35 | 20 | 37 | 19 | 18 |
| 20 | 9 | 250 | 20 | | | 40 | 33 | 21 | 47 | 19 | 11 |
| 23 | 9 | 250 | 20 | | | 39 | 32 | 20 | 47 | 19 | 10 |
| **NOV 18th** | | | | | | | | | | | |
| 02 | 10 | 90 | 20 | | | 38 | 29 | 13 | 36 | 22 | 9 |
| 05 | 10 | 90 | 20 | | | 41 | 33 | 19 | 41 | 23 | 10 |
| 08 | 10 | 85 | 35 | | | 38 | 30 | 16 | 41 | 24 | 15 |
| 11 | 10 | 55 | 35 | | | 34 | 31 | 26 | 73 | 23 | 21 |
| 14 | 9 | 80 | 25 | | | 37 | 29 | 16 | 42 | 26 | 22 |
| 17 | 2 | UNL | 30 | | | 34 | 24 | 2 | 26 | 01 | 7 |
| 20 | 0 | UNL | 20 | | | 24 | 18 | 4 | 42 | 25 | 8 |
| 23 | 0 | UNL | 20 | | | 20 | 17 | 11 | 68 | 21 | 5 |

## MAXIMUM SHORT DURATION PRECIPITATION

| TIME PERIOD (MINUTES) | 5 | 10 | 15 | 20 | 30 | 45 | 60 | 80 | 100 | 120 | 150 | 180 |
|---|---|---|---|---|---|---|---|---|---|---|---|---|
| PRECIPITATION (INCHES) | 0.07 | 0.08 | 0.09 | 0.10 | 0.11 | 0.12 | 0.15 | 0.19 | 0.21 | 0.23 | 0.23 | 0.23 |
| ENDED: DATE | 22 | 22 | 22 | 22 | 22 | 22 | 22 | 22 | 22 | 22 | 22 | 22 |
| ENDED: TIME | 1755 | 1755 | 1755 | 1755 | 1755 | 1755 | 1852 | 1855 | 1855 | 1855 | 1855 | 1855 |

THE PRECIPITATION AMOUNTS FOR THE INDICATED TIME INTERVALS MAY OCCUR AT ANY TIME DURING THE MONTH. THE TIME INDICATED IS THE ENDING TIME OF THE INTERVAL. DATE AND TIME ARE NOT ENTERED FOR TRACE AMOUNTS.

# OBSERVATIONS AT 3-HOUR INTERVALS

NOV 1993 POCATELLO, ID 24156

| HOUR L.S.T. | SKY COVER (TENTHS) | CEILING IN HUNDREDS OF FEET | VISIBILITY WHOLE MILES | VISIBILITY 16THS MILE | WEATHER | TEMPERATURE AIR °F | TEMPERATURE WET BULB °F | TEMPERATURE DEW POINT °F | REL HUMIDITY % | WIND DIRECTION | WIND SPEED (KNOTS) |
|---|---|---|---|---|---|---|---|---|---|---|---|
| **NOV 19th** | | | | | | | | | | | |
| 02 | 0 | UNL | 20 | | | 22 | 19 | 12 | 65 | 20 | 7 |
| 05 | 0 | UNL | 20 | | | 15 | 13 | 9 | 77 | 21 | 4 |
| 08 | 0 | UNL | 70 | | | 14 | 13 | 10 | 84 | 21 | 6 |
| 11 | 0 | UNL | 80 | | | 32 | 26 | 13 | 45 | 22 | 11 |
| 14 | 0 | UNL | 70 | | | 37 | 28 | 11 | 36 | 25 | 11 |
| 17 | 0 | UNL | 70 | | | 33 | 26 | 12 | 42 | 25 | 5 |
| 20 | 0 | UNL | 20 | | | 21 | 18 | 10 | 62 | 20 | 6 |
| 23 | 0 | UNL | 20 | | | 19 | 16 | 10 | 68 | 21 | 4 |
| **NOV 20th** | | | | | | | | | | | |
| 02 | 0 | UNL | 20 | | | 14 | 13 | 9 | 80 | 33 | 7 |
| 05 | 0 | UNL | 20 | | | 9 | 8 | 5 | 84 | 11 | 3 |
| 08 | 10 | UNL | 40 | | | 8 | 7 | 5 | 87 | 06 | 4 |
| 11 | 2 | UNL | 30 | | | 34 | 27 | 14 | 44 | 01 | 7 |
| 14 | 0 | UNL | 50 | | | 44 | 33 | 15 | 31 | 23 | 4 |
| 17 | 1 | UNL | 70 | | | 38 | 29 | 14 | 37 | 21 | 8 |
| 20 | 8 | UNL | 20 | | | 33 | 26 | 11 | 40 | 20 | 12 |
| 23 | 3 | UNL | 20 | | | 32 | 25 | 11 | 42 | 20 | 14 |
| **NOV 21st** | | | | | | | | | | | |
| 02 | 0 | UNL | 20 | | | 24 | 20 | 10 | 55 | 33 | 10 |
| 05 | 0 | UNL | 20 | | | 25 | 20 | 10 | 53 | 05 | 4 |
| 08 | 0 | UNL | 50 | | | 14 | 12 | 7 | 74 | 01 | 8 |
| 11 | 1 | UNL | 40 | | | 40 | 21 | 15 | 36 | 36 | 9 |
| 14 | 9 | UNL | 40 | | | 51 | 36 | 11 | 20 | 19 | 19 |
| 17 | 10 | 130 | 70 | | | 47 | 33 | 10 | 22 | 18 | 16 |
| 20 | 10 | 120 | 20 | | | 47 | 33 | 10 | 22 | 18 | 20 |
| 23 | 10 | 90 | 20 | | | 49 | 37 | 18 | 29 | 19 | 20 |
| **NOV 22nd** | | | | | | | | | | | |
| 02 | 10 | 55 | 15 | | RW | 42 | 36 | 28 | 58 | 18 | 21 |
| 05 | 10 | 90 | 20 | | | 40 | 37 | 32 | 73 | 20 | 18 |
| 08 | 10 | 85 | 40 | | | 40 | 36 | 31 | 70 | 18 | 16 |
| 11 | 10 | 110 | 40 | | | 42 | 37 | 31 | 65 | 18 | 17 |
| 14 | 9 | 95 | 25 | | | 44 | 37 | 28 | 54 | 17 | 25 |
| 17 | 10 | 29 | 2 | | SW | 33 | 33 | 32 | 96 | 25 | 12 |
| 20 | 10 | 9 | 3 | | S | 28 | 28 | 27 | 96 | 22 | 14 |
| 23 | 10 | 21 | 20 | | | 27 | 26 | 24 | 89 | 20 | 8 |
| **NOV 23rd** | | | | | | | | | | | |
| 02 | 3 | UNL | 20 | | | 22 | 20 | 17 | 81 | 23 | 14 |
| 05 | 10 | 29 | 20 | | | 25 | 23 | 19 | 78 | 21 | 12 |
| 08 | 10 | 100 | 20 | | | 23 | 22 | 19 | 85 | 25 | 11 |
| 11 | 10 | 28 | 2 | | SW | 23 | 22 | 19 | 85 | 22 | 13 |
| 14 | 10 | 20 | 1 | | SBS | 22 | 21 | 18 | 85 | 26 | 16 |
| 17 | 10 | 24 | 4 | | S | 22 | 21 | 18 | 85 | 23 | 11 |
| 20 | 10 | 70 | 20 | | | 20 | 18 | 15 | 81 | 23 | 12 |
| 23 | 10 | 25 | 20 | | | 18 | 17 | 16 | 91 | 24 | 7 |
| **NOV 24th** | | | | | | | | | | | |
| 02 | 10 | 17 | 3 | | S | 17 | 16 | 14 | 88 | 23 | 11 |
| 05 | 10 | 17 | 6 | | S | 14 | 13 | 11 | 88 | 22 | 12 |
| 08 | 10 | 21 | 3 | | S | 11 | 10 | 6 | 80 | 24 | 12 |
| 11 | 10 | 8 | 0 | 8 | SBS | 11 | 10 | 7 | 84 | 23 | 16 |
| 14 | 10 | 9 | 1 | | SBS | 13 | 12 | 9 | 84 | 23 | 14 |
| 17 | 10 | 21 | 1 | 4 | S | 12 | 11 | 9 | 88 | 23 | 4 |
| 20 | 7 | 25 | 7 | | S | 3 | 2 | 0 | 87 | 19 | 4 |
| 23 | 9 | 4 | 0 | 3 | FK | -6 | -7 | -10 | 82 | 00 | 0 |
| **NOV 25th** | | | | | | | | | | | |
| 02 | 10 | 3 | 3 | | SFK | -4 | -5 | -8 | 83 | 00 | 0 |
| 05 | 4 | UNL | 3 | | FK | -7 | -8 | -11 | 82 | 06 | 5 |
| 08 | 10 | 4 | 2 | | ICFK | -4 | -5 | -7 | 87 | 04 | 3 |
| 11 | 0 | UNL | 6 | | FK | 5 | 4 | -2 | 73 | 12 | 3 |
| 14 | 10 | UNL | 5 | | K | 5 | 4 | -1 | 76 | 06 | 6 |
| 17 | 10 | UNL | 4 | | K | -1 | -2 | -5 | 83 | 06 | 6 |
| 20 | 6 | UNL | 4 | | K | -1 | -2 | -4 | 87 | 08 | 6 |
| 23 | 8 | 1 | 0 | 4 | FK | -9 | -9 | -12 | 86 | 34 | 3 |
| **NOV 26th** | | | | | | | | | | | |
| 02 | 5 | UNL | 0 | 8 | FK | -11 | -12 | -16 | 78 | 23 | 3 |
| 05 | 5 | UNL | 5 | | FK | -13 | -14 | -19 | 74 | 19 | 4 |
| 08 | 7 | UNL | 7 | | | -10 | -11 | -14 | 82 | 04 | 4 |
| 11 | 1 | UNL | 7 | | | 3 | 2 | -3 | 76 | 00 | 0 |
| 14 | 0 | UNL | 10 | | | 10 | 8 | 1 | 67 | 07 | 5 |
| 17 | 0 | UNL | 20 | | | 5 | 4 | 0 | 80 | 36 | 4 |
| 20 | 0 | UNL | 8 | | | -5 | -6 | -8 | 87 | 25 | 5 |
| 23 | 6 | UNL | 2 | | ICFK | -6 | -7 | -10 | 82 | 06 | 3 |
| **NOV 27th** | | | | | | | | | | | |
| 02 | 2 | UNL | 2 | | FK | -7 | -8 | -11 | 82 | 00 | 0 |
| 05 | 3 | UNL | 8 | | | -8 | -9 | -13 | 78 | 08 | 4 |
| 08 | 4 | UNL | 5 | | FK | -12 | -13 | -16 | 82 | 17 | 3 |
| 11 | 10 | UNL | 7 | | | 9 | 8 | 5 | 84 | 29 | 3 |
| 14 | 8 | UNL | 15 | | | 15 | 13 | 6 | 67 | 06 | 7 |
| 17 | 8 | UNL | 20 | | | 15 | 14 | 10 | 81 | 36 | 5 |
| 20 | 6 | UNL | 15 | | | 7 | 6 | 4 | 87 | 31 | 3 |
| 23 | 3 | UNL | 10 | | | 9 | 8 | 6 | 88 | 03 | 4 |
| **NOV 28th** | | | | | | | | | | | |
| 02 | 10 | 100 | 5 | | FK | 12 | 11 | 8 | 84 | 08 | 6 |
| 05 | 10 | 120 | 10 | | | 18 | 17 | 15 | 88 | 03 | 9 |
| 08 | 10 | 150 | 15 | | | 15 | 14 | 11 | 84 | 03 | 9 |
| 11 | 10 | 140 | 35 | | | 22 | 20 | 15 | 74 | 03 | 5 |
| 14 | 10 | 130 | 50 | | | 24 | 22 | 19 | 81 | 03 | 8 |
| 17 | 10 | 130 | 40 | | | 26 | 25 | 23 | 88 | 22 | 3 |
| 20 | 5 | UNL | 20 | | | 28 | 26 | 22 | 78 | 29 | 5 |
| 23 | 8 | UNL | 20 | | | 22 | 21 | 19 | 88 | 09 | 6 |
| **NOV 29th** | | | | | | | | | | | |
| 02 | 10 | 85 | 20 | | | 21 | 20 | 18 | 88 | 01 | 5 |
| 05 | 8 | 95 | 20 | | | 20 | 19 | 16 | 84 | 09 | 4 |
| 08 | 6 | 70 | 20 | | | 22 | 21 | 18 | 85 | 10 | 6 |
| 11 | 1 | UNL | 45 | | | 40 | 33 | 21 | 47 | 00 | 0 |
| 14 | 9 | UNL | 40 | | | 39 | 34 | 26 | 60 | 02 | 8 |
| 17 | 10 | 250 | 35 | | | 30 | 28 | 25 | 82 | 08 | 5 |
| 20 | 10 | 85 | 20 | | | 29 | 28 | 26 | 89 | 06 | 3 |
| 23 | 10 | 100 | 20 | | | 30 | 28 | 26 | 85 | 02 | 5 |
| **NOV 30th** | | | | | | | | | | | |
| 02 | 10 | 120 | 20 | | | 26 | 25 | 24 | 92 | 07 | 6 |
| 05 | 9 | 250 | 15 | | | 22 | 21 | 20 | 92 | 21 | 3 |
| 08 | 9 | 110 | 10 | | | 19 | 18 | 17 | 92 | 20 | 7 |
| 11 | 10 | 20 | 2 | | SW | 33 | 32 | 30 | 89 | 23 | 17 |
| 14 | 10 | 5 | 2 | | ZLF | 32 | 29 | 25 | 75 | 25 | 19 |
| 17 | 10 | 30 | 25 | | | 35 | 33 | 30 | 82 | 22 | 13 |
| 20 | 10 | 40 | 20 | | | 32 | 29 | 25 | 75 | 22 | 15 |
| 23 | 10 | 200 | 20 | | | 30 | 27 | 22 | 72 | 20 | 15 |

## WEATHER CODES

| | | | | | |
|---|---|---|---|---|---|
| + | TORNADO | SW | SNOW SHOWERS | GF | GROUND FOG |
| T | THUNDERSTORM | SG | SNOW GRAINS | BD | BLOWING DUST |
| Q | SQUALL | SP | SNOW PELLETS | BN | BLOWING SAND |
| R | RAIN | IC | ICE CRYSTALS | BS | BLOWING SNOW |
| RW | RAIN SHOWERS | IP | ICE PELLETS | BY | BLOWING SPRAY |
| ZR | FREEZING RAIN | IPW | ICE PELLET SHOWERS | K | SMOKE |
| L | ORIZZLE | A | HAIL | H | HAZE |
| ZL | FREEZING ORIZZLE | F | FOG | D | DUST |
| S | SNOW | IF | ICE FOG | | |

CEILING: UNL INDICATES UNLIMITED
WIND DIRECTION: DIRECTIONS ARE THOSE FROM WHICH THE WIND BLOWS, INDICATED IN TENS OF DEGREES FROM TRUE NORTH: I.E., 09 FOR EAST, 18 FOR SOUTH 27 FOR WEST. AN ENTRY OF 00 INDICATES CALM.
SPEED: THE OBSERVED AVERAGE ONE-MINUTE VALUE, EXPRESSED IN KNOTS (MPH=KNOTS X 1.15).

## SUMMARY BY HOURS

| HOUR L.S.T. | AVERAGES SKY COVER (TENTHS) | AVERAGES STATION PRESSURE (INCHES) | AVERAGES TEMPERATURE AIR TEMP °F | AVERAGES TEMPERATURE WET BULB °F | AVERAGES TEMPERATURE DEW POINT °F | AVERAGES REL HUMIDITY % | AVERAGES WIND SPEED (MPH) | RESULTANT WIND DIRECTION | RESULTANT WIND SPEED (MPH) |
|---|---|---|---|---|---|---|---|---|---|
| 02 | 5 | 25.580 | 23 | 20 | 13 | 69 | 8 | 21 | 4.7 |
| 05 | 4 | 25.580 | 20 | 18 | 12 | 73 | 7 | 21 | 4.3 |
| 08 | 7 | 25.600 | 20 | 17 | 12 | 75 | 7 | 23 | 2.7 |
| 11 | 6 | 25.610 | 33 | 27 | 17 | 54 | 10 | 24 | 6.1 |
| 14 | 6 | 25.560 | 39 | 30 | 16 | 44 | 13 | 24 | 7.5 |
| 17 | 6 | 25.550 | 35 | 28 | 15 | 50 | 9 | 23 | 6.0 |
| 20 | 5 | 25.570 | 28 | 23 | 14 | 60 | 9 | 21 | 6.9 |
| 23 | 5 | 25.580 | 25 | 21 | 14 | 65 | 8 | 20 | 5.6 |

P&D ASHEVILLE N.C. 288 01/24/94 PM

NATIONAL CLIMATIC DATA CENTER
FEDERAL BUILDING
37 BATTERY PARK AVE
ASHEVILLE, NORTH CAROLINA 28801-2733

OFFICIAL BUSINESS
PENALTY FOR PRIVATE USE $300

FIRST CLASS
POSTAGE AND FEES PAID
NOAA
PERMIT G-19

LCD-10-24156-PD-9509

33766
J R SIMPLOT COMPANY
ATTN: J F COCHRANE - PO #35724
PO BOX 912
POCATELLO ID 83204

HOURLY PRECIPITATION (WATER EQUIVALENT IN INCHES) NOV 1993 24156
POCATELLO, ID
USCOMM - NOAA - ASHEVILLE, NC 125

| DATE | A.M. HOUR ENDING AT | | | | | | | | | | | | P.M. HOUR ENDING AT | | | | | | | | | | | | DATE |
|---|---|---|---|---|---|---|---|---|---|---|---|---|---|---|---|---|---|---|---|---|---|---|---|---|---|
| | 1 | 2 | 3 | 4 | 5 | 6 | 7 | 8 | 9 | 10 | 11 | 12 | 1 | 2 | 3 | 4 | 5 | 6 | 7 | 8 | 9 | 10 | 11 | 12 | |
| 01 | | | | | | | | | | | | | | | | | | | | | | | | | 01 |
| 02 | | | | | | | | | | | | | | | | | | | | | | | | | 02 |
| 03 | | | | | | | | | | | | | | | | | | | | | | | | | 03 |
| 04 | T | T | | | | | | | | | | | | | | | | | T | T | T | 0.01 | T | | 04 |
| 05 | | | | | | | T | T | | | | | | | | | | | | | | | | | 05 |
| 06 | | | | | | | | | | | | | | | | | | | | | | | | | 06 |
| 07 | | | | | | | | | | | | | | | | | | | | | | | | | 07 |
| 08 | | | | | | | | | | | | | | | | | | | | | | | | | 08 |
| 09 | | | | | | | | | | | | | | | | | | | | | | | | | 09 |
| 10 | | | | | | | | | | | | | | | | | | | | | | | | | 10 |
| 11 | | | | | | | | | | | | | | | | | | | | | | | | | 11 |
| 12 | | | | | | | | | | | | | | | | | | | | | | | | | 12 |
| 13 | | | | | | | | | | | | | | | | | | | | | | | | | 13 |
| 14 | | | | | | | | | | | | | | | | | | | | | | | | | 14 |
| 15 | | | | | | | | | | | | | | | | | | | | | | | | | 15 |
| 16 | | | | | | | | | | | | | | | | | | | | | | | | | 16 |
| 17 | | | | | | | | | | | | | | | | | | | | | | | | | 17 |
| 18 | | | | | | | | | T | T | T | | | | | | | | | | | | | | 18 |
| 19 | | | | | | | | | | | | | | | | | | | | | | | | | 19 |
| 20 | | | | | | | | | | | | | | | | | | | | | | | | | 20 |
| 21 | | | | | | | | | | | | | | | | | | | | | | | | | 21 |
| 22 | | T | 0.04 | 0.02 | T | | T | T | | | | | T | | T | T | 0.02 | 0.13 | 0.08 | 0.01 | 0.01 | T | | | 22 |
| 23 | | | | | | T | T | T | | | T | 0.04 | T | T | 0.02 | T | T | T | T | T | | | | T | 23 |
| 24 | T | 0.01 | 0.01 | T | T | T | T | T | T | T | 0.02 | 0.06 | T | 0.01 | 0.01 | T | T | 0.02 | T | T | T | | | T | 24 |
| 25 | 0.01 | T | T | T | T | | | T | T | T | | | | | | | | | | | | | | | 25 |
| 26 | | | | | | | T | T | | | | | | | | | | | | | | | T | T | 26 |
| 27 | | | | | | | | T | T | | | | | | | | | | | | | | | | 27 |
| 28 | | | | | | | | | | | | | | | | | | | | | | | | | 28 |
| 29 | | | | | | | | | | | | | | | | | | | | | | | | | 29 |
| 30 | | | | | | | | | | | T | 0.01 | T | T | T | T | | | | | | | | | 30 |

DEC 1993
POCATELLO, ID
NAT'L WEA SER OFC
20369 THUNDERBOLT STREET-C

INQUIRIES/COMMENTS CALL
(704) 271-4800

MUNICIPAL AIRPORT

ISSN 0198-1811

# LOCAL CLIMATOLOGICAL DATA

## Monthly Summary

LATITUDE 42° 55'N LONGITUDE 112° 36'W ELEVATION (GROUND) 4454 FEET TIME ZONE MOUNTAIN 24:56

| DATE | TEMPERATURE °F MAXIMUM | MINIMUM | AVERAGE | DEPARTURE FROM NORMAL | AVERAGE DEW POINT | DEGREE DAYS BASE 65°F HEATING (SEASON BEGINS WITH JUL) | COOLING (SEASON BEGINS WITH JAN) | WEATHER TYPES 1 FOG 2 HEAVY FOG 3 THUNDERSTORM 4 ICE PELLETS 5 HAIL 6 GLAZE 7 DUSTSTORM 8 SMOKE, HAZE 9 BLOWING SNOW | SNOW ICE PELLETS OR ICE ON GROUND AT 0500 INCHES | PRECIPITATION WATER EQUIVALENT (INCHES) | SNOW, ICE PELLETS (INCHES) | AVERAGE STATION PRESSURE IN INCHES ELEV. 4478 FEET ABOVE M.S.L. | WIND (M.P.H.) RESULTANT DIR. | RESULTANT SPEED | AVERAGE SPEED | PEAK GUST SPEED | PEAK GUST DIRECTION | FASTEST MILE SPEED | FASTEST MILE DIRECTION | SUNSHINE MINUTES | SUNSHINE PERCENT OF TOTAL POSSIBLE | SKY COVER (TENTHS) SUNRISE TO SUNSET | SKY COVER (TENTHS) MIDNIGHT TO MIDNIGHT |
|---|---|---|---|---|---|---|---|---|---|---|---|---|---|---|---|---|---|---|---|---|---|---|---|
| 1 | 2 | 3 | 4 | 5 | 6 | 7A | 7B | 8 | 9 | 10 | 11 | 12 | 13 | 14 | 15 | 16 | 17 | 18 | 19 | 20 | 21 | 22 | 23 |
| 01 | 38 | 31 | 35 | 6 | 25 | 30 | 0 | 6 | 2 | T | T | 25.660 | 19 | 16.8 | 17.3 | 37 | S | 23 | 19 | 0 | 0 | 10 | 10 |
| 02 | 38 | 29 | 34 | 5 | 26 | 31 | 0 | | 2 | 0.02 | T | 25.720 | 23 | 17.0 | 17.7 | 38 | SW | 28 | 23 | 350 | 63 | 6 | 7 |
| 03 | 37 | 21 | 29 | 1 | 22 | 36 | 0 | | 1 | 0.00 | 0.0 | 25.760 | 19 | 7.5 | 11.1 | 32 | S | 22 | 18 | 10 | 2 | 10 | 8 |
| 04 | 39 | 21 | 30 | 2 | 24 | 35 | 0 | 1 | 1 | 0.03 | 0.5 | 25.460 | 23 | 12.3 | 17.6 | 45 | W | 30 | 24 | 97 | 18 | 8 | 7 |
| 05 | 35 | 15 | 25 | -3 | 16 | 40 | 0 | | 1 | 0.00 | 0.0 | 25.610 | 11 | 0.1 | 7.3 | 21 | SW | 15 | 20 | 419 | 76 | 6 | 6 |
| 06 | 34 | 14 | 24 | -3 | 17 | 41 | 0 | | 1 | T | T | 25.430 | 23 | 3.7 | 7.7 | 25 | SW | 15 | 24 | 0 | 0 | 10 | 9 |
| 07 | 38 | 8 | 23 | -4 | 18 | 42 | 0 | | 1 | 0.00 | 0.0 | 25.480 | 09 | 1.5 | 6.9 | 23 | S | 15 | 18 | 183 | 33 | 10 | 8 |
| 08 | 50 | 29 | 40 | 14 | 24 | 25 | 0 | | T | 0.09 | 0.1 | 25.345 | 19 | 16.1 | 18.5 | 40 | SW | 28 | 22 | 26 | 5 | 10 | 10 |
| 09 | 46 | 34 | 40 | 14 | 30 | 25 | 0 | | T | T | 0.0 | 25.530 | 22 | 7.7 | 9.7 | 29 | SW | 22 | 20 | 116 | 21 | 9 | 9 |
| 10 | 56* | 28 | 42* | 16 | 28 | 23 | 0 | | 0 | 0.00 | 0.0 | 25.610 | 10 | 0.8 | 9.0 | 32 | S | 21 | 17 | 428 | 79 | 5 | 6 |
| 11 | 55 | 26 | 41 | 15 | 25 | 24 | 0 | | 0 | T | 0.0 | 25.210 | 20 | 3.9 | 9.2 | 36 | S | 25 | 18 | 211 | 39 | 10 | 9 |
| 12 | 48 | 22 | 35 | 10 | 25 | 30 | 0 | 9 | T | 0.30 | 2.5 | 25.310 | 23 | 17.6 | 18.5 | 38 | SW | 26 | 25 | 39 | 7 | 9 | 7 |
| 13 | 34 | 9 | 22 | -3 | 16 | 43 | 0 | | 2 | 0.00 | 0.0 | 25.605 | 03 | 3.0 | 6.6 | 15 | SW | 12 | 21 | 527 | 97 | 4 | 3 |
| 14 | 34 | 12 | 23 | -2 | 17 | 42 | 0 | | 2 | 0.00 | 0.0 | 25.330 | 06 | 4.1 | 4.7 | 13 | NE | 9 | 02 | 306 | 56 | 10 | 9 |
| 15 | 30 | 20 | 25 | 0 | 22 | 40 | 0 | | 2 | T | 0.1 | 25.250 | 23 | 10.8 | 11.3 | 24 | SW | 18 | 24 | 301 | 56 | 10 | 9 |
| 16 | 30 | 25 | 28 | 4 | 26 | 37 | 0 | | 2 | 0.07 | 1.2 | 25.480 | 24 | 9.7 | 9.9 | 21 | SW | 14 | 24 | 0 | 0 | 10 | 10 |
| 17 | 33 | 8 | 21 | -3 | 21 | 44 | 0 | 2 8 | 3 | 0.01 | 0.1 | 25.670 | 07 | 2.1 | 4.6 | 12 | E | 9 | 07 | 274 | 69 | 7 | 8 |
| 18 | 24 | 5 | 15 | -9 | 14 | 50 | 0 | 2 8 | 3 | 0.00 | 0.0 | 25.660 | 16 | 0.8 | 2.2 | 10 | SW | 7 | 24 | 239 | 44 | 8 | 10 |
| 19 | 29 | 15 | 22 | -2 | 19 | 43 | 0 | 8 | 3 | T | 0.1 | 25.630 | 22 | 5.2 | 6.1 | 13 | SW | 9 | 24 | 307 | 57 | 5 | 8 |
| 20 | 29 | 14 | 22 | -1 | 16 | 43 | 0 | 8 | 3 | T | T | 25.720 | 21 | 2.1 | 6.1 | 18 | N | 13 | 03 | 238 | 44 | 9 | 9 |
| 21 | 27 | 14 | 21 | -2 | 18 | 44 | 0 | 8 | 3 | 0.01 | 0.2 | 25.690 | 23 | 2.1 | 5.7 | 13 | SW | 9 | 21 | 59 | 11 | 9 | 9 |
| 22 | 26 | 19 | 23 | 0 | 17 | 42 | 0 | | 3 | 0.03 | 0.4 | 25.715 | 25 | 4.7 | 6.1 | 18 | SW | 13 | 21 | 31 | 5 | 10 | 10 |
| 23 | 27 | 5 | 16 | -7 | 13 | 49 | 0 | 2 | 3 | T | T | 25.910 | 21 | 3.3 | 5.8 | 17 | SW | 13 | 23 | 180 | 33 | 8 | 7 |
| 24 | 27 | 4 | 16 | -7 | 9 | 49 | 0 | 2 8 | 3 | 0.00 | 0.0 | 25.970 | 07 | 4.4 | 5.3 | 10 | E | 8 | 08 | 325 | 60 | 7 | 5 |
| 25 | 25 | 1* | 13* | -10 | 7 | 52 | 0 | 1 8 | 3 | 0.00 | 0.0 | 25.790 | 05 | 4.9 | 5.4 | 15 | NE | 10 | 05 | 403 | 74 | 10 | 7 |
| 26 | 30 | 8 | 19 | -4 | 15 | 46 | 0 | 8 | 3 | 0.00 | 0.0 | 25.490 | 07 | 1.2 | 3.2 | 10 | NE | 7 | 36 | 240 | 44 | 10 | 10 |
| 27 | 35 | 22 | 29 | 6 | 26 | 36 | 0 | 1 | 3 | 0.09 | 1.1 | 25.560 | 23 | 3.3 | 5.4 | 18 | NW | 10 | 22 | 7 | 1 | 10 | 10 |
| 28 | 30 | 22 | 26 | 3 | 24 | 39 | 0 | 2 8 | 4 | T | T | 25.850 | 02 | 2.3 | 4.5 | 10 | SE | 9 | 32 | 114 | 21 | 10 | 10 |
| 29 | 34 | 14 | 24 | 2 | 19 | 41 | 0 | 1 8 | 2 | T | T | 25.890 | 06 | 4.0 | 6.6 | 18 | E | 13 | 08 | 221 | 41 | 10 | 9 |
| 30 | 32 | 10 | 21 | -1 | 16 | 44 | 0 | 1 8 | 2 | 0.00 | 0.0 | 25.650 | 03 | 3.1 | 5.8 | 17 | SW | 12 | 21 | 286 | 53 | 10 | 10 |
| 31 | 37 | 24 | 31 | 9 | 25 | 34 | 0 | | 2 | 0.00 | 0.0 | 25.560 | 21 | 14.4 | 15.0 | 32 | SW | 23 | 22 | 36 | 7 | 10 | 9 |
| | SUM | SUM | | | | TOTAL | TOTAL | | | TOTAL | TOTAL | FOR THE MONTH: | | | | | | | | TOTAL | % | SUM | SUM |
| | 1087 | 529 | | | | 1200 | 0 | NUMBER OF DAYS | | 0.65 | 6.3 | 25.600 | 21 | 4.0 | 8.7 | 45 | W | 30 | -24 | 6077 | POSSIBLE | 272 | 258 |
| | AVG. | AVG. | AVG. | DEP | AVG. | DEP. | DEP. | PRECIPITATION | | DEP. | | | | | | DATE: 4 | | DATE: 4 | | POSSIBLE | HOURS | AVG | AVG |
| | 35.1 | 17.1 | 26.1 | 1.3 | 20.0 | -46 | 0 | ≥ .01 INCH | 9 | -0.46 | | | | | | | | | | 16896 | 38 | 8.8 | 8.3 |

| NUMBER OF DAYS | | | | SEASON TO DATE TOTAL | SEASON TO DATE TOTAL | SNOW, ICE PELLETS | | GREATEST IN 24 HOURS AND DATES | | | | GREATEST DEPTH ON GROUND OF SNOW, ICE PELLETS OR ICE AND DATE | |
|---|---|---|---|---|---|---|---|---|---|---|---|---|---|
| MAXIMUM TEMP. | | MINIMUM TEMP. | | | | ≥ 1.0 INCH | 3 | PRECIPITATION | | SNOW, ICE PELLETS | | | |
| ≥ 90° | ≤ 32° | ≤ 32° | ≤ 0° | 3276 | 103 | THUNDERSTORMS | 0 | 0.30 | 11-12 | 2.5 | 12 | 4 | 28+ |
| 0 | 13 | 30 | 0 | DEP. 365 | DEP. -318 | HEAVY FOG | 5 | | | | | | |
| | | | | | | CLEAR 0 | | PARTLY CLOUDY 6 | | CLOUDY 25 | | | |

* EXTREME FOR THE MONTH - LAST OCCURRENCE IF MORE THAN ONE.
T TRACE AMOUNT.
+ ALSO ON EARLIER DATE(S).
HEAVY FOG: VISIBILITY 1/4 MILE OR LESS.
BLANK ENTRIES DENOTE MISSING OR UNREPORTED DATA.

DATA IN COLS 6 AND 12-15 ARE BASED ON 21 OR MORE OBSERVATIONS AT HOURLY INTERVALS. RESULTANT WIND IS THE VECTOR SUM OF WIND SPEEDS AND DIRECTIONS DIVIDED BY THE NUMBER OF OBSERVATIONS COLS 16 & 17: PEAK GUST - HIGHEST INSTANTANEOUS WIND SPEED ONE OF TWO WIND SPEEDS IS GIVEN UNDER COLS 18 & 19. FASTEST MILE - HIGHEST RECORDED SPEED FOR WHICH A MILE OF WIND PASSES STATION (DIRECTION IN COMPASS POINTS). FASTEST OBSERVED ONE MINUTE WIND - HIGHEST ONE MINUTE SPEED (DIRECTION IN TENS OF DEGREES). ERRORS WILL BE CORRECTED IN SUBSEQUENT PUBLICATIONS

I CERTIFY THAT THIS IS AN OFFICIAL PUBLICATION OF THE NATIONAL OCEANIC AND ATMOSPHERIC ADMINISTRATION, AND IS COMPILED FROM RECORDS ON FILE AT THE NATIONAL CLIMATIC DATA CENTER

Kenneth S. Johnson

DIRECTOR
NATIONAL CLIMATIC DATA CENTER

noaa

NATIONAL OCEANIC AND ATMOSPHERIC ADMINISTRATION

NATIONAL ENVIRONMENTAL SATELLITE, DATA AND INFORMATION SERVICE

NATIONAL CLIMATIC DATA CENTER ASHEVILLE NORTH CAROLINA

DEC 1993
POCATELLO, ID

# OBSERVATIONS AT 3-HOUR INTERVALS

DEC 1993 POCATELLO, ID 24156

| HOUR L.S.T. | SKY COVER (TENTHS) | CEILING IN HUNDREDS OF FEET | VISIBILITY WHOLE MILES | VISIBILITY 16THS MILE | WEATHER | TEMPERATURE AIR °F | TEMPERATURE WET BULB °F | TEMPERATURE DEW POINT °F | REL HUMIDITY % | WIND DIRECTION | WIND SPEED (KNOTS) |
|---|---|---|---|---|---|---|---|---|---|---|---|
| | | | | | DEC 1st | | | | | | |
| 02 | 10 | 90 | 20 | | | 31 | 28 | 22 | 69 | 22 | 13 |
| 05 | 10 | 35 | 20 | | | 33 | 29 | 22 | 64 | 21 | 11 |
| 08 | 10 | 37 | 15 | | | 34 | 31 | 25 | 70 | 19 | 12 |
| 11 | 10 | 42 | 40 | | | 37 | 32 | 25 | 62 | 19 | 14 |
| 14 | 10 | 45 | 30 | | | 38 | 33 | 25 | 60 | 18 | 15 |
| 17 | 10 | 41 | 30 | | | 36 | 31 | 24 | 62 | 19 | 17 |
| 20 | 10 | 110 | 20 | | | 35 | 30 | 23 | 62 | 19 | 16 |
| 23 | 10 | 21 | 20 | | S | 35 | 32 | 28 | 76 | 20 | 19 |
| | | | | | DEC 2nd | | | | | | |
| | 10 | 29 | 20 | | | 37 | 33 | 28 | 70 | 24 | 20 |
| | 6 | 30 | 20 | | | 33 | 31 | 29 | 85 | 24 | 19 |
| | 10 | 60 | 30 | | | 30 | 28 | 26 | 85 | 24 | 15 |
| | 7 | 230 | 50 | | | 35 | 32 | 28 | 76 | 24 | 20 |
| | 4 | UNL | 50 | | | 37 | 33 | 28 | 70 | 24 | 18 |
| | 2 | UNL | 50 | | | 33 | 31 | 27 | 79 | 22 | 11 |
| | 10 | 250 | 20 | | | 31 | 29 | 25 | 79 | 20 | 9 |
| | 10 | UNL | 20 | | | 30 | 27 | 21 | 69 | 21 | 11 |
| | | | | | DEC 3rd | | | | | | |
| | 4 | UNL | 20 | | | 26 | 24 | 20 | 78 | 22 | 7 |
| | 0 | UNL | 20 | | | 23 | 21 | 17 | 78 | 21 | 6 |
| | 8 | 100 | 30 | | | 23 | 21 | 18 | 81 | 23 | 7 |
| | 10 | 30 | 40 | | | 28 | 26 | 22 | 78 | 07 | 4 |
| | 10 | 30 | 40 | | | 31 | 28 | 24 | 75 | 07 | 5 |
| | 10 | 32 | 30 | | | 35 | 31 | 26 | 70 | 20 | 12 |
| | 10 | 39 | 20 | | | 37 | 32 | 25 | 62 | 18 | 18 |
| | 10 | 50 | 20 | | | 37 | 32 | 23 | 57 | 18 | 19 |
| | | | | | DEC 4th | | | | | | |
| 02 | 10 | 130 | 20 | | | 36 | 31 | 23 | 59 | 04 | 6 |
| 05 | 10 | 130 | 20 | | | 33 | 29 | 22 | 64 | 34 | 8 |
| 08 | 10 | 15 | 1 | 8 | SWF | 35 | 32 | 27 | 73 | 17 | 22 |
| 11 | 10 | 23 | 5 | | SW | 35 | 32 | 28 | 76 | 19 | 21 |
| 14 | 7 | 29 | 15 | | | 36 | 33 | 28 | 73 | 24 | 23 |
| 17 | 3 | UNL | 30 | | | 33 | 30 | 24 | 70 | 25 | 25 |
| 20 | 4 | UNL | 20 | | | 29 | 26 | 22 | 75 | 24 | 15 |
| 23 | 3 | UNL | 20 | | | 24 | 23 | 20 | 85 | 25 | 10 |
| | | | | | DEC 5th | | | | | | |
| | 0 | UNL | 20 | | | 23 | 22 | 19 | 85 | 23 | 11 |
| | 0 | UNL | 20 | | | 23 | 21 | 18 | 81 | 21 | 8 |
| | 6 | UNL | 50 | | | 15 | 14 | 11 | 84 | 20 | 7 |
| | 7 | UNL | 50 | | | 29 | 25 | 16 | 58 | 00 | 0 |
| | 10 | UNL | 50 | | | 32 | 27 | 19 | 59 | 06 | 7 |
| | 10 | 250 | 30 | | | 25 | 23 | 18 | 75 | 03 | 6 |
| | 10 | 240 | 20 | | | 19 | 18 | 15 | 84 | 02 | 6 |
| | 10 | 230 | 20 | | | 15 | 14 | 11 | 84 | 07 | 5 |
| | | | | | DEC 6th | | | | | | |
| | 10 | 230 | 20 | | | 15 | 14 | 11 | 84 | 03 | 4 |
| | 10 | 110 | 20 | | | 16 | 15 | 11 | 81 | 07 | 5 |
| | 10 | 110 | 40 | | | 17 | 15 | 11 | 77 | 31 | 5 |
| | 10 | 75 | 40 | | | 21 | 19 | 14 | 74 | 24 | 6 |
| | 10 | 50 | 40 | | | 28 | 25 | 20 | 72 | 21 | 6 |
| | 10 | 90 | 30 | | | 31 | 28 | 24 | 75 | 23 | 11 |
| | 7 | 90 | 20 | | | 25 | 24 | 22 | 88 | 23 | 6 |
| | 8 | 37 | 20 | | | 28 | 26 | 22 | 78 | 19 | 7 |
| | | | | | DEC 7th | | | | | | |
| 02 | 8 | 35 | 20 | | | 23 | 22 | 20 | 88 | 01 | 5 |
| 05 | 1 | UNL | 20 | | | 13 | 12 | 11 | 92 | 08 | 4 |
| 08 | 10 | 70 | 20 | | | 9 | 8 | 6 | 88 | 35 | 3 |
| 11 | 10 | 230 | 15 | | | 25 | 23 | 18 | 75 | 06 | 4 |
| 14 | 10 | 95 | 30 | | | 36 | 31 | 24 | 62 | 22 | 6 |
| 17 | 10 | 70 | 30 | | | 31 | 29 | 25 | 79 | 07 | 8 |
| 20 | 10 | 60 | 20 | | | 37 | 31 | 20 | 50 | 18 | 12 |
| 23 | 10 | 55 | 20 | | | 37 | 31 | 22 | 55 | 18 | 7 |
| | | | | | DEC 8th | | | | | | |
| | 10 | 65 | 20 | | | 37 | 31 | 21 | 52 | 09 | 4 |
| | 10 | 55 | 20 | | | 39 | 32 | 22 | 51 | 18 | 13 |
| | 10 | 27 | 4 | | SW | 35 | 33 | 31 | 85 | 18 | 15 |
| | 10 | 80 | 25 | | | 43 | 36 | 25 | 49 | 18 | 14 |
| | 10 | 110 | 30 | | | 45 | 35 | 21 | 39 | 18 | 19 |
| | 10 | 120 | 40 | | | 45 | 35 | 20 | 37 | 17 | 22 |
| | 10 | 100 | 20 | | | 47 | 36 | 21 | 36 | 18 | 21 |
| | 10 | 29 | 20 | | | 40 | 36 | 31 | 70 | 23 | 15 |
| | | | | | DEC 9th | | | | | | |
| | 10 | 65 | 20 | | | 39 | 36 | 32 | 76 | 18 | 12 |
| | 3 | UNL | 20 | | | 37 | 34 | 30 | 76 | 23 | 15 |
| | 9 | 40 | 50 | | | 38 | 35 | 32 | 79 | 22 | 11 |
| | 10 | 65 | 70 | | | 42 | 38 | 32 | 68 | 22 | 8 |
| | 8 | 50 | 60 | | | 45 | 38 | 29 | 54 | 29 | 6 |
| | 8 | 60 | 60 | | | 38 | 34 | 29 | 70 | 03 | 4 |
| | 10 | 90 | 20 | | | 44 | 36 | 25 | 47 | 19 | 10 |
| | 10 | 95 | 20 | | | 41 | 37 | 32 | 70 | 23 | 6 |
| | | | | | DEC 10th | | | | | | |
| 02 | 10 | 140 | 20 | | | 44 | 38 | 30 | 58 | 14 | 7 |
| 05 | 6 | 140 | 20 | | | 33 | 32 | 30 | 89 | 36 | 9 |
| 08 | 4 | UNL | 40 | | | 29 | 29 | 28 | 96 | 03 | 6 |
| 11 | 4 | UNL | 40 | | | 43 | 38 | 32 | 65 | 36 | 7 |
| 14 | 4 | UNL | 40 | | | 56 | 43 | 27 | 33 | 17 | 16 |
| 17 | 6 | 250 | 40 | | | 50 | 39 | 25 | 38 | 17 | 3 |
| 20 | 7 | UNL | 20 | | | 46 | 37 | 25 | 44 | 07 | 6 |
| 23 | 8 | UNL | 20 | | | 30 | 29 | 28 | 92 | 36 | 5 |
| | | | | | DEC 11th | | | | | | |
| | 8 | 250 | 20 | | | 31 | 29 | 27 | 85 | 03 | 5 |
| | 5 | UNL | 20 | | | 30 | 29 | 27 | 89 | 01 | 5 |
| | 7 | UNL | 50 | | | 28 | 27 | 25 | 89 | 32 | 5 |
| | 10 | UNL | 50 | | | 46 | 38 | 28 | 50 | 03 | 7 |
| | 10 | 130 | 40 | | | 53 | 40 | 22 | 30 | 21 | 12 |
| | 10 | 130 | 30 | | | 47 | 37 | 24 | 41 | 19 | 8 |
| | 10 | 130 | 20 | | | 42 | 35 | 24 | 49 | 00 | 0 |
| | 10 | 90 | 20 | | | 48 | 37 | 22 | 36 | 18 | 15 |
| | | | | | DEC 12th | | | | | | |
| | 10 | 15 | 12 | | RW | 37 | 34 | 30 | 76 | 16 | 9 |
| | 10 | 8 | 2 | | S | 32 | 32 | 31 | 96 | 23 | 16 |
| | 10 | 6 | 0 | 8 | SBS | 30 | 29 | 28 | 92 | 25 | 20 |
| | 9 | 38 | 15 | | | 29 | 28 | 25 | 85 | 24 | 20 |
| | 9 | 38 | 30 | | | 31 | 29 | 25 | 79 | 25 | 21 |
| | 7 | 70 | 40 | | | 30 | 27 | 22 | 72 | 25 | 17 |
| | 0 | UNL | 20 | | | 25 | 23 | 20 | 81 | 22 | 13 |
| | 0 | UNL | 20 | | | 23 | 21 | 18 | 81 | 22 | 9 |
| | | | | | DEC 13th | | | | | | |
| 02 | 0 | UNL | 20 | | | 22 | 20 | 16 | 78 | 19 | 7 |
| 05 | 0 | UNL | 20 | | | 13 | 12 | 11 | 92 | 35 | 5 |
| 08 | 8 | UNL | 40 | | | 10 | 10 | 8 | 92 | 02 | 4 |
| 11 | 7 | UNL | 50 | | | 24 | 22 | 17 | 75 | 05 | 6 |
| 14 | 0 | UNL | 70 | | | 32 | 28 | 20 | 61 | 03 | 8 |
| 17 | 5 | UNL | 20 | | | 24 | 22 | 19 | 81 | 03 | 8 |
| 20 | 6 | UNL | 20 | | | 22 | 21 | 18 | 85 | 19 | 4 |
| 23 | 2 | UNL | 20 | | | 17 | 16 | 15 | 92 | 07 | 6 |
| | | | | | DEC 14th | | | | | | |
| | 5 | UNL | 20 | | | 13 | 12 | 11 | 92 | 08 | 5 |
| | 10 | UNL | 20 | | | 15 | 14 | 12 | 88 | 09 | 4 |
| | 10 | UNL | 40 | | | 16 | 15 | 12 | 84 | 11 | 4 |
| | 10 | 230 | 50 | | | 27 | 24 | 18 | 69 | 05 | 6 |
| | 10 | 230 | 60 | | | 33 | 29 | 22 | 64 | 08 | 6 |
| | 10 | 230 | 40 | | | 28 | 27 | 24 | 85 | 04 | 5 |
| | 10 | 230 | 20 | | | 23 | 22 | 19 | 85 | 04 | 5 |
| | 10 | 200 | 20 | | | 21 | 20 | 18 | 88 | 00 | 0 |
| | | | | | DEC 15th | | | | | | |
| | 10 | 230 | 20 | | | 22 | 21 | 19 | 88 | 26 | 4 |
| | 6 | UNL | 20 | | | 21 | 20 | 18 | 88 | 19 | 8 |
| | 8 | 250 | 30 | | | 21 | 20 | 18 | 88 | 21 | 10 |
| | 10 | 250 | 70 | | | 26 | 24 | 20 | 78 | 24 | 14 |
| | 10 | 11 | 25 | | | 29 | 27 | 24 | 82 | 24 | 13 |
| | 10 | 10 | 20 | | | 29 | 28 | 25 | 85 | 24 | 11 |
| | 10 | 11 | 20 | | | 29 | 28 | 26 | 89 | 22 | 8 |
| | 10 | 10 | 5 | | S | 30 | 29 | 28 | 92 | 24 | 8 |
| | | | | | DEC 16th | | | | | | |
| 02 | 10 | 7 | 15 | | | 29 | 28 | 27 | 92 | 25 | 10 |
| 05 | 10 | 7 | 15 | | | 28 | 27 | 26 | 92 | 24 | 11 |
| 08 | 10 | 5 | 10 | | | 27 | 26 | 25 | 92 | 24 | 7 |
| 11 | 10 | 7 | 10 | | | 28 | 26 | 23 | 82 | 25 | 12 |
| 14 | 10 | 12 | 15 | | | 30 | 28 | 25 | 82 | 24 | 12 |
| 17 | 10 | 7 | 2 | | SW | 29 | 29 | 28 | 96 | 23 | 5 |
| 20 | 10 | 18 | 5 | | SW | 28 | 27 | 26 | 92 | 23 | 5 |
| 23 | 10 | 49 | 15 | | S | 26 | 26 | 25 | 96 | 22 | 3 |
| | | | | | DEC 17th | | | | | | |
| | 10 | 17 | 15 | | S | 27 | 26 | 25 | 92 | 19 | 4 |
| | 10 | 24 | 20 | | | 26 | 25 | 24 | 92 | 20 | 5 |
| | 10 | 27 | 10 | | S | 25 | 25 | 24 | 96 | 35 | 4 |
| | 10 | 5 | 2 | 8 | SK | 30 | 28 | 25 | 82 | 01 | 4 |
| | 8 | 8 | 3 | | K | 30 | 28 | 25 | 82 | 08 | 7 |
| | 3 | UNL | 6 | | K | 24 | 23 | 21 | 88 | 97 | 6 |
| | 4 | UNL | 6 | | FK | 16 | 15 | 14 | 92 | 00 | 0 |
| | 10 | 3 | 0 | 8 | FK | 10 | 9 | 7 | 88 | 00 | 0 |
| | | | | | DEC 18th | | | | | | |
| | 10 | 1 | 0 | 1 | FK | 11 | 11 | 9 | 92 | 00 | 0 |
| | 10 | 0 | 0 | | IFK | 9 | 9 | 7 | 92 | 05 | 3 |
| | 10 | 2 | 0 | 4 | IFK | 9 | 9 | 7 | 92 | 00 | 0 |
| | 10 | 2 | 0 | 8 | FK | 17 | 16 | 13 | 84 | 00 | 0 |
| | 10 | 38 | 0 | 12 | FK | 22 | 21 | 19 | 88 | 12 | 4 |
| | 10 | 35 | 4 | | FK | 24 | 23 | 21 | 88 | 00 | 0 |
| | 10 | 36 | 6 | | FK | 21 | 20 | 19 | 92 | 00 | 0 |
| | 10 | 33 | 10 | | | 23 | 22 | 20 | 88 | 17 | 4 |

## MAXIMUM SHORT DURATION PRECIPITATION

| TIME PERIOD (MINUTES) | 5 | 10 | 15 | 20 | 30 | 45 | 60 | 80 | 100 | 120 | 150 | 180 |
|---|---|---|---|---|---|---|---|---|---|---|---|---|
| PRECIPITATION (INCHES) | 0.03 | 0.03 | 0.04 | 0.04 | 0.04 | 0.06 | 0.07 | 0.07 | 0.09 | 0.11 | 0.12 | 0.14 |
| ENDED: DATE | 12 | 12 | 12 | 12 | 12 | 12 | 12 | 12 | 12 | 12 | 12 | 12 |
| ENDED: TIME | 0340 | 0340 | 0340 | 0340 | 0912 | 0912 | 0929 | 0929 | 0340 | 0340 | 0340 | 0340 |

THE PRECIPITATION AMOUNTS FOR THE INDICATED TIME INTERVALS MAY OCCUR AT ANY TIME DURING THE MONTH. THE TIME INDICATED IS THE ENDING TIME OF THE INTERVAL. DATE AND TIME ARE NOT ENTERED FOR TRACE AMOUNTS.

# OBSERVATIONS AT 3-HOUR INTERVALS

DEC 1993 POCATELLO, ID 24156

| HOUR L.S.T. | SKY COVER (TENTHS) | CEILING IN HUNDREDS OF FEET | VISIBILITY WHOLE MILES | VISIBILITY 16THS MILE | WEATHER | TEMPERATURE AIR °F | TEMPERATURE WET BULB °F | TEMPERATURE DEW POINT °F | REL HUMIDITY % | WIND DIRECTION | WIND SPEED (KNOTS) |
|---|---|---|---|---|---|---|---|---|---|---|---|
| **DEC 19th** | | | | | | | | | | | |
| 02 | 10 | 39 | 15 | | | 24 | 23 | 20 | 85 | 22 | 6 |
| 05 | 10 | 35 | 15 | | S | 24 | 23 | 21 | 88 | 22 | 4 |
| 08 | 10 | 55 | 15 | | | 20 | 19 | 17 | 88 | 25 | 6 |
| 11 | 8 | 40 | 4 | | SK | 26 | 24 | 20 | 78 | 00 | 0 |
| 14 | 1 | UNL | 15 | | | 29 | 26 | 20 | 69 | 23 | 8 |
| 17 | 3 | UNL | 10 | | | 22 | 21 | 18 | 85 | 20 | 7 |
| 20 | 9 | 19 | 15 | | | 17 | 16 | 14 | 88 | 18 | 5 |
| 23 | 10 | 21 | 15 | | | 19 | 18 | 16 | 88 | 20 | 5 |
| **DEC 20th** | | | | | | | | | | | |
| 02 | 10 | 21 | 15 | | | 18 | 17 | 14 | 84 | 25 | 10 |
| 05 | 10 | 27 | 15 | | | 19 | 18 | 14 | 81 | 23 | 7 |
| 08 | 10 | 7 | 8 | | | 20 | 19 | 16 | 84 | 20 | 4 |
| 11 | 10 | 7 | 6 | | K | 23 | 21 | 18 | 81 | 19 | 6 |
| 14 | 10 | 12 | 6 | | K | 25 | 23 | 20 | 81 | 05 | 10 |
| 17 | 2 | UNL | 5 | | K | 18 | 17 | 15 | 88 | 02 | 6 |
| 20 | 2 | UNL | 6 | | K | 14 | 13 | 11 | 88 | 21 | 6 |
| 23 | 10 | 31 | 4 | | K | 19 | 18 | 17 | 92 | 18 | 3 |
| **DEC 21st** | | | | | | | | | | | |
| 02 | 10 | 19 | 8 | | | 22 | 21 | 19 | 88 | 18 | 3 |
| 05 | 10 | 24 | 7 | | SW | 23 | 22 | 19 | 85 | 00 | 0 |
| 08 | 10 | 7 | 4 | | SWK | 23 | 22 | 21 | 92 | 22 | 5 |
| 11 | 10 | 16 | 7 | | S | 23 | 21 | 18 | 81 | 01 | 8 |
| 14 | 10 | 15 | 15 | | | 27 | 24 | 18 | 69 | 00 | 0 |
| 17 | 5 | UNL | 20 | | | 19 | 18 | 14 | 81 | 19 | 6 |
| 20 | 6 | 23 | 10 | | | 20 | 19 | 18 | 92 | 22 | 5 |
| 23 | 10 | 25 | 10 | | | 21 | 21 | 20 | 96 | 22 | 6 |
| **DEC 22nd** | | | | | | | | | | | |
| 02 | 10 | 17 | 20 | | | 22 | 20 | 17 | 81 | 23 | 11 |
| 05 | 10 | 17 | 20 | | | 20 | 18 | 15 | 81 | 20 | 5 |
| 08 | 10 | 19 | 25 | | | 19 | 18 | 14 | 81 | 22 | 5 |
| 11 | 10 | 75 | 25 | | | 23 | 20 | 15 | 71 | 33 | 3 |
| 14 | 10 | 75 | 12 | | | 24 | 22 | 17 | 75 | 32 | 3 |
| 17 | 10 | 25 | 10 | | | 24 | 22 | 18 | 78 | 32 | 4 |
| 20 | 10 | 18 | 5 | | S | 23 | 22 | 19 | 85 | 27 | 7 |
| 23 | 10 | 17 | 6 | | S | 22 | 21 | 20 | 92 | 27 | 3 |
| **DEC 23rd** | | | | | | | | | | | |
| 02 | 9 | 17 | 3 | | F | 19 | 19 | 18 | 96 | 35 | 5 |
| 05 | 10 | 1 | 0 | 4 | F | 10 | 10 | 8 | 92 | 19 | 3 |
| 08 | 7 | 12 | 4 | | F | 11 | 11 | 9 | 92 | 11 | 3 |
| 11 | 10 | 5 | 5 | | F | 19 | 18 | 16 | 88 | 19 | 3 |
| 14 | 10 | 13 | 12 | | | 24 | 22 | 19 | 81 | 23 | 11 |
| 17 | 6 | UNL | 25 | | | 22 | 20 | 15 | 74 | 17 | 3 |
| 20 | 6 | UNL | 20 | | | 19 | 18 | 14 | 81 | 22 | 7 |
| 23 | 5 | UNL | 20 | | | 13 | 12 | 10 | 88 | 22 | 5 |
| **DEC 24th** | | | | | | | | | | | |
| 02 | 8 | UNL | 15 | | | 8 | 8 | 6 | 92 | 05 | 5 |
| 05 | 5 | UNL | 4 | | K | 5 | 4 | 2 | 87 | 10 | 5 |
| 08 | 9 | 4 | 0 | 2 | FK | 9 | 9 | 7 | 92 | 08 | 3 |
| 11 | 10 | UNL | 3 | | FK | 18 | 17 | 16 | 92 | 03 | 4 |
| 14 | 10 | UNL | 3 | | K | 25 | 22 | 16 | 69 | 04 | 5 |
| 17 | 1 | UNL | 10 | | | 19 | 18 | 14 | 81 | 08 | 6 |
| 20 | 1 | UNL | 10 | | | 11 | 10 | 6 | 88 | 03 | 5 |
| 23 | 1 | UNL | 2 | 8 | FK | 7 | 7 | 5 | 91 | 35 | 4 |
| **DEC 25th** | | | | | | | | | | | |
| 02 | 0 | UNL | 3 | | K | 4 | 3 | 1 | 87 | 00 | 0 |
| 05 | 5 | UNL | 2 | | K | 1 | 0 | -2 | 87 | 08 | 3 |
| 08 | 3 | UNL | 3 | | K | 2 | 1 | -1 | 87 | 08 | 3 |
| 11 | 10 | UNL | 6 | | K | 15 | 14 | 11 | 84 | 06 | 8 |
| 14 | 10 | UNL | 20 | | | 24 | 21 | 13 | 63 | 06 | 9 |
| 17 | 10 | UNL | 50 | | | 18 | 16 | 12 | 77 | 06 | 8 |
| 20 | 10 | UNL | 20 | | | 15 | 14 | 12 | 88 | 36 | 3 |
| 23 | 6 | UNL | 15 | | | 11 | 11 | 9 | 92 | 12 | 3 |
| **DEC 26th** | | | | | | | | | | | |
| 02 | 10 | UNL | 7 | | | 12 | 11 | 8 | 84 | 28 | 4 |
| 05 | 10 | 250 | 7 | | | 10 | 9 | 7 | 88 | 00 | 0 |
| 08 | 10 | 200 | 5 | | K | 11 | 10 | 8 | 88 | 18 | 3 |
| 11 | 10 | 200 | 20 | | | 22 | 20 | 16 | 78 | 07 | 6 |
| 14 | 10 | 200 | 40 | | | 29 | 25 | 18 | 64 | 08 | 4 |
| 17 | 10 | 140 | 10 | | | 27 | 25 | 20 | 75 | 06 | 5 |
| 20 | 10 | 120 | 15 | | | 24 | 23 | 20 | 85 | 00 | 0 |
| 23 | 10 | 120 | 15 | | | 23 | 22 | 19 | 85 | 00 | 0 |
| **DEC 27th** | | | | | | | | | | | |
| 02 | 10 | 120 | 7 | | | 23 | 22 | 20 | 88 | 20 | 4 |
| 05 | 10 | 85 | 7 | | | 25 | 24 | 21 | 85 | 00 | 0 |
| 08 | 10 | 90 | 15 | | | 26 | 25 | 23 | 88 | 08 | 6 |
| 11 | 10 | 33 | 2 | | S | 34 | 31 | 27 | 76 | 26 | 5 |
| 14 | 10 | 27 | 0 | 12 | S | 31 | 30 | 26 | 89 | 22 | 8 |
| 17 | 10 | 15 | 2 | 8 | SF | 31 | 30 | 29 | 92 | 21 | 5 |
| 20 | 10 | 27 | 2 | 8 | SF | 32 | 32 | 31 | 96 | 20 | 4 |
| 23 | 10 | 9 | 0 | 12 | SF | 29 | 29 | 28 | 96 | 30 | 3 |
| **DEC 28th** | | | | | | | | | | | |
| 02 | 10 | 1 | 0 | 8 | F | 26 | 26 | 25 | 96 | 00 | 0 |
| 05 | 10 | 1 | 0 | 10 | F | 26 | 26 | 25 | 96 | 01 | 3 |
| 08 | 10 | 3 | 2 | 8 | F | 22 | 22 | 21 | 96 | 36 | 5 |
| 11 | 10 | 1 | 1 | | F | 26 | 25 | 24 | 92 | 32 | 4 |
| 14 | 10 | 9 | 2 | | F | 30 | 28 | 24 | 78 | 36 | 4 |
| 17 | 10 | 9 | 2 | | SF | 27 | 26 | 24 | 89 | 00 | 0 |
| 20 | 10 | 5 | 2 | 8 | FK | 26 | 25 | 24 | 92 | 01 | 6 |
| 23 | 10 | 3 | 2 | | FK | 24 | 23 | 22 | 92 | 14 | 6 |
| **DEC 29th** | | | | | | | | | | | |
| 02 | 10 | 2 | 1 | 8 | FK | 23 | 23 | 23 | 100 | 08 | 5 |
| 05 | 10 | 3 | 4 | | FK | 19 | 19 | 18 | 96 | 22 | 3 |
| 08 | 10 | 8 | 3 | | FK | 21 | 20 | 19 | 92 | 31 | 3 |
| 11 | 10 | 15 | 2 | 8 | FK | 25 | 24 | 21 | 85 | 07 | 9 |
| 14 | 9 | 200 | 10 | | | 32 | 29 | 24 | 72 | 06 | 7 |
| 17 | 10 | UNL | 7 | | | 24 | 23 | 20 | 85 | 04 | 6 |
| 20 | 2 | UNL | 7 | | | 16 | 15 | 14 | 92 | 18 | 4 |
| 23 | 6 | UNL | 5 | | K | 18 | 17 | 15 | 88 | 28 | 9 |
| **DEC 30th** | | | | | | | | | | | |
| 02 | 10 | UNL | 7 | | | 16 | 15 | 14 | 92 | 05 | 6 |
| 05 | 10 | UNL | 7 | | | 13 | 12 | 11 | 92 | 02 | 6 |
| 08 | 10 | UNL | 6 | | FK | 14 | 13 | 12 | 92 | 07 | 5 |
| 11 | 10 | 230 | 6 | | FK | 25 | 24 | 22 | 88 | 36 | 6 |
| 14 | 10 | 230 | 8 | | | 32 | 28 | 20 | 61 | 05 | 4 |
| 17 | 10 | 200 | 10 | | | 24 | 22 | 18 | 78 | 05 | 6 |
| 20 | 8 | UNL | 15 | | | 17 | 16 | 14 | 88 | 30 | 4 |
| 23 | 10 | 90 | 4 | | K | 20 | 19 | 18 | 92 | 24 | 7 |
| **DEC 31st** | | | | | | | | | | | |
| 02 | 9 | 70 | 20 | | | 26 | 23 | 18 | 72 | 23 | 11 |
| 05 | 10 | 29 | 20 | | | 32 | 30 | 28 | 85 | 23 | 14 |
| 08 | 10 | 36 | 25 | | | 34 | 32 | 28 | 79 | 22 | 18 |
| 11 | 10 | 20 | 35 | | | 36 | 32 | 26 | 67 | 23 | 11 |
| 14 | 10 | 33 | 60 | | | 36 | 32 | 26 | 67 | 19 | 12 |
| 17 | 10 | 230 | 50 | | | 34 | 30 | 25 | 70 | 19 | 12 |
| 20 | 10 | 230 | 20 | | | 31 | 28 | 24 | 75 | 19 | 13 |
| 23 | 9 | 100 | 20 | | | 28 | 26 | 22 | 78 | 20 | 11 |

## WEATHER CODES

| | | | | | |
|---|---|---|---|---|---|
| * | TORNADO | SW | SNOW SHOWERS | GF | GROUND FOG |
| T | THUNDERSTORM | SG | SNOW GRAINS | BD | BLOWING DUST |
| Q | SQUALL | SP | SNOW PELLETS | BN | BLOWING SAND |
| R | RAIN | IC | ICE CRYSTALS | BS | BLOWING SNOW |
| RW | RAIN SHOWERS | IP | ICE PELLETS | BY | BLOWING SPRAY |
| ZR | FREEZING RAIN | IPW | ICE PELLET SHOWERS | K | SMOKE |
| L | DRIZZLE | A | HAIL | H | HAZE |
| ZL | FREEZING DRIZZLE | F | FOG | D | DUST |
| S | SNOW | IF | ICE FOG | | |

CEILING: UNL INDICATES UNLIMITED
WIND DIRECTION: DIRECTIONS ARE THOSE FROM WHICH THE WIND BLOWS, INDICATED IN TENS OF DEGREES FROM TRUE NORTH: I.E., 09 FOR EAST, 18 FOR SOUTH 27 FOR WEST. AN ENTRY OF 00 INDICATES CALM.
SPEED: THE OBSERVED AVERAGE ONE-MINUTE VALUE, EXPRESSED IN KNOTS (MPH=KNOTS X 1.15).

## SUMMARY BY HOURS

| HOUR L.S.T. | AVERAGES SKY COVER (TENTHS) | AVERAGES STATION PRESSURE (INCHES) | AVERAGES TEMPERATURE AIR TEMP °F | AVERAGES TEMPERATURE WET BULB °F | AVERAGES TEMPERATURE DEW POINT °F | AVERAGES REL HUMIDITY % | AVERAGES WIND SPEED (MPH) | RESULTANT WIND DIRECTION | RESULTANT WIND SPEED (MPH) |
|---|---|---|---|---|---|---|---|---|---|
| 02 | 8 | 25.600 | 24 | 22 | 19 | 83 | 7.5 | 22 | 3.2 |
| 05 | 8 | 25.590 | 22 | 21 | 18 | 85 | 7.7 | 22 | 3.5 |
| 08 | 9 | 25.610 | 21 | 20 | 18 | 87 | 8.4 | 21 | 4.2 |
| 11 | 9 | 25.630 | 28 | 26 | 21 | 76 | 8.9 | 23 | 2.5 |
| 14 | 9 | 25.590 | 33 | 29 | 22 | 68 | 10.7 | 21 | 4.1 |
| 17 | 8 | 25.590 | 29 | 26 | 22 | 76 | 9.4 | 20 | 3.2 |
| 20 | 8 | 25.590 | 26 | 24 | 20 | 78 | 8.3 | 20 | 5.3 |
| 23 | 8 | 25.600 | 25 | 23 | 20 | 83 | 7.9 | 21 | 5.5 |

NATIONAL CLIMATIC DATA CENTER
FEDERAL BUILDING
37 BATTERY PARK AVE
ASHEVILLE, NORTH CAROLINA 28801-2733

OFFICIAL BUSINESS
PENALTY FOR PRIVATE USE $300

FIRST CLASS
POSTAGE AND FEES PAID
NOAA
PERMIT G-19

LCD-10-24156-PD-9509

33766
J R SIMPLOT COMPANY
ATTN: J F COCHRANE - PO #35724
PO BOX 912
POCATELLO ID 83204

HOURLY PRECIPITATION (WATER EQUIVALENT IN INCHES) DEC 1993 24156
POCATELLO, ID
USCOMM - NOAA - ASHEVILLE, NC 125

| DATE | A.M. HOUR ENDING AT | | | | | | | | | | | | P.M. HOUR ENDING AT | | | | | | | | | | | | DATE |
|---|---|---|---|---|---|---|---|---|---|---|---|---|---|---|---|---|---|---|---|---|---|---|---|---|---|
| | 1 | 2 | 3 | 4 | 5 | 6 | 7 | 8 | 9 | 10 | 11 | 12 | 1 | 2 | 3 | 4 | 5 | 6 | 7 | 8 | 9 | 10 | 11 | 12 | |
| 01 | | | | T | T | | | | | | | | | | | | | | | | T | T | T | T | 01 |
| 02 | 0.01 | 0.01 | | | | | | | | | | | | | | | | | | | | | | | 02 |
| 03 | | | | | | | | | | | | | | | | | | | | | | | | | 03 |
| 04 | | | | | | | | T | T | 0.01 | T | 0.02 | T | T | | | | | | | | | | | 04 |
| 05 | | | | | | | | | | | | | | | | | | | | | | | | | 05 |
| 06 | | | | | | | | | | | | T | T | | | | T | | | | | | | | 06 |
| 07 | | | | | | | | | | | | | | | | | | | | | | | | | 07 |
| 08 | | | | | | | T | 0.01 | T | | | | | | | | | | | | T | T | 0.03 | 0.05 | 08 |
| 09 | T | | | | | | | | | | | T | T | | | | | | | | | | | | 09 |
| 10 | | | | | | | | | | | | | | | | | | | | | | | | | 10 |
| 11 | | | | | | | | | | | | | | | | | | | | | | | | T | 11 |
| 12 | 0.03 | 0.04 | 0.04 | 0.04 | 0.01 | 0.03 | T | 0.03 | 0.07 | 0.01 | | | | | | | | | | | | | | | 12 |
| 13 | | | | | | | | | | | | | | | | | | | | | | | | | 13 |
| 14 | | | | | | | | | | | | | | | | | | | | | | | | | 14 |
| 15 | | | | | | | | | | | | | | | | | | | | | | T | T | T | 15 |
| 16 | T | T | | | | | | | | | | | | | T | T | 0.01 | 0.02 | 0.02 | T | T | 0.01 | 0.01 | T | 16 |
| 17 | T | T | T | 0.01 | T | T | T | T | T | T | T | T | T | T | | | | | | | | | | | 17 |
| 18 | | | | | | | | | | | | | | | | | | | | | | | | | 18 |
| 19 | | | | | T | T | | | T | T | T | T | | | | | | | | | | | | | 19 |
| 20 | | | | | | | | | T | T | | | | | | | | | | | | | | | 20 |
| 21 | | | | | T | T | T | 0.01 | T | T | T | T | T | T | | | | | | | T | T | T | | 21 |
| 22 | | | | | | | | | | | | | T | T | | | | | | 0.01 | 0.01 | 0.01 | T | | 22 |
| 23 | T | | | | | | | | T | | | | | | | | | | | | | | | | 23 |
| 24 | | | | | | | | | | | | | | | | | | | | | | | | | 24 |
| 25 | | | | | | | | | | | | | | | | | | | | | | | | | 25 |
| 26 | | | | | | | | | | | | | | | | | | | | | | | | | 26 |
| 27 | | | | | | T | T | | | | T | T | T | 0.02 | 0.02 | T | 0.01 | 0.01 | T | 0.01 | 0.01 | T | 0.01 | | 27 |
| 28 | | | | | | | | | | T | | T | T | T | T | T | T | T | | | | T | T | | 28 |
| 29 | | | | T | | T | T | | | | | | | | | | | | | | | | | | 29 |
| 30 | | | | | | | | | | | | | | | | | | | | | | | | | 30 |
| 31 | | | | | | | | | | | | | | | | | | | | | | | | | 31 |

Linda Meads - file

JAN 1994
POCATELLO, ID
NAT'L WEA SER OFC
20369 THUNDERBOLT STREET-C

INQUIRIES/COMMENTS CALL
(704) 271-4800

MUNICIPAL AIRPORT

ISSN 0198-1811

# LOCAL CLIMATOLOGICAL DATA

## Monthly Summary

LATITUDE 42° 55'N LONGITUDE 112° 36'W ELEVATION (GROUND) 4454 FEET TIME ZONE MOUNTAIN 24156

JAN 1994
POCATELLO, ID

| DATE | TEMPERATURE °F MAXIMUM | MINIMUM | AVERAGE | DEPARTURE FROM NORMAL | AVERAGE DEW POINT | DEGREE DAYS BASE 65°F HEATING (SEASON BEGINS WITH JUL) | COOLING (SEASON BEGINS WITH JAN) | WEATHER TYPES 1 FOG 2 HEAVY FOG 3 THUNDERSTORM 4 ICE PELLETS 5 HAIL 6 GLAZE 7 DUSTSTORM 8 SMOKE, HAZE 9 BLOWING SNOW | SNOW ICE PELLETS OR ICE ON GROUND AT 0500 INCHES | PRECIPITATION WATER EQUIVALENT (INCHES) | SNOW, ICE PELLETS (INCHES) | AVERAGE STATION PRESSURE IN INCHES ELEV. 4478 FEET ABOVE M.S.L. | WIND (M.P.H.) RESULTANT DIR. | RESULTANT SPEED | AVERAGE SPEED | PEAK GUST SPEED | PEAK GUST DIRECTION | FASTEST MILE SPEED | FASTEST MILE DIRECTION | SUNSHINE MINUTES | SUNSHINE PERCENT OF TOTAL POSSIBLE | SKY COVER (TENTHS) SUNRISE TO SUNSET | SKY COVER (TENTHS) MIDNIGHT TO MIDNIGHT |
|---|---|---|---|---|---|---|---|---|---|---|---|---|---|---|---|---|---|---|---|---|---|---|---|
| 1 | 2 | 3 | 4 | 5 | 6 | 7A | 7B | 8 | 9 | 10 | 11 | 12 | 13 | 14 | 15 | 16 | 17 | 18 | 19 | 20 | 21 | 22 | 23 |
| 01 | 43 | 27 | 35 | 13 | 26 | 30 | 0 | | 1 | 0.03 | 0.2 | 25.540 | 21 | 13.7 | 15.9 | 38 | SW | 25 | 22 | 143 | 26 | 9 | 9 |
| 02 | 42 | 29 | 36 | 14 | 28 | 29 | 0 | | 1 | T | 0.0 | 25.750 | 20 | 14.4 | 14.9 | 31 | S | 23 | 19 | 350 | 64 | 10 | 8 |
| 03 | 42 | 34 | 38 | 16 | 30 | 27 | 0 | | T | 0.02 | T | 25.650 | 22 | 8.9 | 10.2 | 36 | SW | 24 | 21 | 0 | 0 | 10 | 10 |
| 04 | 51 | 29 | 40x | 18 | 31 | 25 | 0 | 2 8 | T | 0.15 | 0.0 | 25.450 | 21 | 6.3 | 10.1 | 28 | S | 21 | 20 | 144 | 26 | 10 | 10 |
| 05 | 40 | 31 | 36 | 14 | 27 | 29 | 0 | | 0 | 0.01 | 0.0 | 25.280 | 24 | 21.1 | 21.3 | 44 | SW | 29 | 25 | 218 | 40 | 8 | 9 |
| 06 | 37 | 26 | 32 | 10 | 23 | 33 | 0 | | 0 | T | T | 25.530 | 24 | 17.5 | 17.8 | 31 | SW | 23 | 26 | 344 | 63 | 7 | 6 |
| 07 | 34 | 21 | 28 | 6 | 16 | 37 | 0 | | 0 | 0.00 | 0.0 | 25.680 | 19 | 14.6 | 15.3 | 32 | S | 22 | 17 | 318 | 58 | 9 | 7 |
| 08 | 36 | 23 | 30 | 8 | 23 | 35 | 0 | | 0 | 0.05 | 0.5 | 25.510 | 25 | 0.3 | 7.2 | 24 | S | 17 | 19 | 0 | 0 | 10 | 10 |
| 09 | 34 | 30 | 32 | 10 | 30 | 33 | 0 | 1 6 | 1 | 0.03 | 0.3 | 25.460 | 24 | 11.1 | 11.3 | 23 | SW | 14 | 24 | 0 | 0 | 10 | 10 |
| 10 | 37 | 31 | 34 | 12 | 28 | 31 | 0 | 3 6 | T | T | T | 25.650 | 23 | 8.2 | 9.5 | 22 | S | 15 | 19 | 20 | 4 | 10 | 10 |
| 11 | 36 | 32 | 34 | 11 | 26 | 31 | 0 | | T | 0.02 | 0.2 | 25.670 | 21 | 11.9 | 13.4 | 30 | S | 21 | 18 | 71 | 13 | 10 | 9 |
| 12 | 40 | 32 | 36 | 13 | 29 | 29 | 0 | | 0 | T | T | 25.815 | 23 | 10.0 | 10.5 | 23 | SW | 15 | 24 | 28 | 5 | 10 | 10 |
| 13 | 41 | 35 | 38 | 15 | 31 | 27 | 0 | | 0 | T | 0.0 | 25.810 | 23 | 12.6 | 12.9 | 26 | SW | 18 | 24 | 0 | 0 | 10 | 10 |
| 14 | 47 | 30 | 39 | 16 | 31 | 26 | 0 | 2 8 | 0 | 0.00 | 0.0 | 25.730 | 19 | 0.9 | 7.2 | 18 | S | 13 | 20 | 92 | 16 | 10 | 9 |
| 15 | 47 | 26 | 37 | 14 | 29 | 28 | 0 | 2 8 | 0 | 0.00 | 0.0 | 25.520 | 25 | 6.5 | 11.6 | 39 | SW | 25 | 24 | 272 | 48 | 8 | 9 |
| 16 | 35 | 27 | 31 | 8 | 25 | 34 | 0 | | 0 | T | T | 25.630 | 23 | 15.0 | 15.2 | 29 | SW | 20 | 24 | 229 | 41 | 10 | 9 |
| 17 | 46 | 28 | 37 | 14 | 23 | 28 | 0 | | 0 | 0.00 | 0.0 | 25.690 | 23 | 13.2 | 13.5 | 28 | SW | 21 | 25 | 455 | 80 | 9 | 7 |
| 18 | 46 | 16 | 31 | 8 | 23 | 34 | 0 | 1 | 0 | 0.00 | 0.0 | 25.660 | 03 | 0.9 | 5.4 | 15 | SW | 10 | 22 | 567 | 100 | 7 | 4 |
| 19 | 47 | 14 | 31 | 8 | 20 | 34 | 0 | 8 | 0 | 0.00 | 0.0 | 25.600 | 24 | 0.7 | 3.9 | 15 | W | 12 | 25 | 569 | 100 | 4 | 3 |
| 20 | 46 | 14 | 30 | 6 | 21 | 35 | 0 | 8 | 0 | 0.00 | 0.0 | 25.760 | 04 | 2.7 | 4.3 | 12 | NE | 9 | 03 | 497 | 87 | 1 | 1 |
| 21 | 50 | 15 | 33 | 9 | 21 | 32 | 0 | 8 | 0 | 0.00 | 0.0 | 25.780 | 05 | 3.3 | 4.0 | 10 | NE | 8 | 07 | 514 | 90 | 4 | 5 |
| 22 | 49 | 16 | 33 | 9 | 21 | 32 | 0 | | 0 | 0.00 | 0.0 | 25.670 | 05 | 3.8 | 4.8 | 15 | N | 9 | 34 | 575 | 100 | 3 | 1 |
| 23 | 55x | 15 | 35 | 11 | 19 | 30 | 0 | | 0 | T | 0.0 | 25.420 | 18 | 3.4 | 8.5 | 35 | S | 18 | 19 | 428 | 74 | 8 | 6 |
| 24 | 52 | 25 | 39 | 15 | 29 | 26 | 0 | | 0 | T | 0.0 | 25.390 | 20 | 3.9 | 5.6 | 21 | SW | 14 | 22 | 510 | 88 | 7 | 7 |
| 25 | 52 | 23 | 38 | 14 | 27 | 27 | 0 | 8 | 0 | T | T | 25.280 | 26 | 1.5 | 6.2 | 22 | SW | 16 | 23 | 364 | 63 | 10 | 10 |
| 26 | 33 | 30 | 32 | 7 | 31 | 33 | 0 | 1 6 | 0 | 0.15 | 1.3 | 25.390 | 24 | 10.8 | 11.1 | 21 | SW | 15 | 26 | 0 | 0 | 10 | 10 |
| 27 | 34 | 25 | 30 | 5 | 28 | 35 | 0 | 1 8 | 2 | 0.11 | 1.1 | 25.480 | 25 | 4.5 | 5.3 | 12 | W | 9 | 27 | 307 | 52 | 10 | 10 |
| 28 | 39 | 17 | 28 | 3 | 19 | 37 | 0 | 2 8 | 1 | 0.00 | 0.0 | 25.640 | 06 | 4.0 | 8.8 | 22 | NE | 15 | 02 | 588 | 100 | 1 | 3 |
| 29 | 33 | 19 | 26 | 1 | 22 | 39 | 0 | | 1 | 0.02 | 0.2 | 25.670 | 24 | 7.9 | 8.4 | 17 | W | 14 | 25 | 202 | 34 | 10 | 10 |
| 30 | 29 | 4 | 17 | -8 | 6 | 48 | 0 | 8 | 1 | 0.00 | 0.0 | 25.800 | 05 | 7.8 | 9.1 | 26 | NE | 16 | 03 | 577 | 97 | 2 | 2 |
| 31 | 27 | -1x | 13x | -13 | 4 | 52 | 0 | | 1 | 0.00 | 0.0 | 25.850 | 22 | 5.8 | 6.7 | 18 | W | 12 | 25 | 422 | 71 | 5 | 3 |
| SUM | 1280 | 723 | | | | TOTAL 1006 | TOTAL 0 | NUMBER OF DAYS | | TOTAL 0.59 | TOTAL 3.8 | 25.605 | 22 | 6.2 | 10.0 | FOR THE MONTH: 44 | SW | 29 | 25 | TOTAL 8804 | % FOR MONTH | SUM 242 | SUM 227 |
| AVG. | 41.3 | AVG. 23.3 | AVG. 32.3 | DEP. 9.0 | AVG. 24.1 | DEP. -287 | DEP. 0 | PRECIPITATION ≥ .01 INCH 10 | | DEP. -0.45 | | | | | | DATE: 5 | | DATE: 5 | | POSSIBLE 17550 | MONTH 50 | AVG. 7.8 | AVG. 7.3 |

| NUMBER OF DAYS MAXIMUM TEMP. ≥ 90° | ≤ 32° | MINIMUM TEMP. ≤ 32° | ≤ 0° |
|---|---|---|---|
| | 2 | 29 | 1 |

| SEASON TO DATE TOTAL | TOTAL |
|---|---|
| DEP. 4282 | 0 |
| DEP. 78 | 0 |

| SNOW, ICE PELLETS ≥ 1.0 INCH | 2 |
|---|---|
| THUNDERSTORMS | 1 |
| HEAVY FOG | 4 |
| CLEAR 4 | PARTLY CLOUDY 6 |
| | CLOUDY 21 |

| GREATEST IN 24 HOURS AND DATES PRECIPITATION | | SNOW, ICE PELLETS | |
|---|---|---|---|
| 0.21 | 26-27 | 1.7 | 26-27 |

| GREATEST DEPTH ON GROUND OF SNOW, ICE PELLETS OR ICE AND DATE | |
|---|---|
| 2 | 29+ |

x EXTREME FOR THE MONTH - LAST OCCURRENCE IF MORE THAN ONE.
T TRACE AMOUNT.
+ ALSO ON EARLIER DATE(S).
HEAVY FOG: VISIBILITY 1/4 MILE OR LESS.
BLANK ENTRIES DENOTE MISSING OR UNREPORTED DATA.

DATA IN COLS 6 AND 12-15 ARE BASED ON 21 OR MORE OBSERVATIONS AT HOURLY INTERVALS. RESULTANT WIND IS THE VECTOR SUM OF WIND SPEEDS AND DIRECTIONS DIVIDED BY THE NUMBER OF OBSERVATIONS. COLS 16 & 17: PEAK GUST - HIGHEST INSTANTANEOUS WIND SPEED. ONE OF TWO WIND SPEEDS IS GIVEN UNDER COLS 18 & 19: FASTEST MILE - HIGHEST RECORDED SPEED FOR WHICH A MILE OF WIND PASSES STATION (DIRECTION IN COMPASS POINTS). FASTEST OBSERVED ONE MINUTE WIND - HIGHEST ONE MINUTE SPEED (DIRECTION IN TENS OF DEGREES). ERRORS WILL BE CORRECTED IN SUBSEQUENT PUBLICATIONS.

I CERTIFY THAT THIS IS AN OFFICIAL PUBLICATION OF THE NATIONAL OCEANIC AND ATMOSPHERIC ADMINISTRATION, AND IS COMPILED FROM RECORDS ON FILE AT THE NATIONAL CLIMATIC DATA CENTER

Kenneth D Hadeen
DIRECTOR
NATIONAL CLIMATIC DATA CENTER

noaa NATIONAL OCEANIC AND ATMOSPHERIC ADMINISTRATION — NATIONAL ENVIRONMENTAL SATELLITE, DATA AND INFORMATION SERVICE — NATIONAL CLIMATIC DATA CENTER ASHEVILLE NORTH CAROLINA

# OBSERVATIONS AT 3-HOUR INTERVALS

JAN 1994 POCATELLO, ID 24156

| HOUR L.S.T. | SKY COVER (TENTHS) | CEILING IN HUNDREDS OF FEET | VISIBILITY WHOLE MILES | VISIBILITY 16THS MILE | WEATHER | TEMPERATURE AIR °F | TEMPERATURE WET BULB °F | TEMPERATURE DEW POINT °F | REL HUMIDITY % | WIND DIRECTION | WIND SPEED (KNOTS) |
|---|---|---|---|---|---|---|---|---|---|---|---|
| **JAN 1st** | | | | | | | | | | | |
| 02 | 10 | 110 | 20 | | | 29 | 26 | 21 | 72 | 30 | 5 |
| 05 | 9 | 90 | 20 | | | 34 | 29 | 22 | 62 | 19 | 14 |
| 08 | 10 | 60 | 20 | | S | 37 | 31 | 22 | 55 | 17 | 17 |
| 11 | 10 | 85 | 35 | | | 39 | 33 | 25 | 57 | 22 | 12 |
| 14 | 10 | 75 | 40 | | | 40 | 34 | 24 | 53 | 22 | 12 |
| 17 | 10 | 5 | 8 | | RWSW | 34 | 33 | 31 | 89 | 21 | 15 |
| 20 | 10 | 8 | 20 | | | 36 | 34 | 32 | 85 | 24 | 18 |
| 23 | 10 | 9 | 20 | | | 35 | 34 | 32 | 89 | 23 | 12 |
| **JAN 2nd** | | | | | | | | | | | |
| 02 | 10 | 15 | 20 | | | 34 | 32 | 30 | 85 | 21 | 13 |
| 05 | 4 | UNL | 20 | | | 32 | 31 | 30 | 92 | 21 | 11 |
| 08 | 2 | UNL | 40 | | | 29 | 29 | 28 | 96 | 21 | 11 |
| 11 | 9 | 43 | 00+ | | | 40 | 35 | 28 | 62 | 20 | 10 |
| 14 | 10 | 230 | 70 | | | 41 | 35 | 27 | 58 | 18 | 11 |
| 17 | 10 | 110 | 50 | | | 39 | 34 | 27 | 62 | 19 | 14 |
| 20 | 10 | 110 | 20 | | | 39 | 34 | 26 | 60 | 18 | 18 |
| 23 | 10 | 50 | 20 | | | 39 | 34 | 26 | 60 | 19 | 14 |
| **JAN 3rd** | | | | | | | | | | | |
| 02 | 10 | 20 | 8 | | RS | 35 | 33 | 30 | 82 | 23 | 11 |
| 05 | 10 | 16 | 20 | | | 37 | 34 | 31 | 79 | 22 | 17 |
| 08 | 10 | 9 | 20 | | | 37 | 35 | 32 | 82 | 31 | 6 |
| 11 | 10 | 10 | 15 | | | 39 | 36 | 32 | 76 | 21 | 9 |
| 14 | 10 | 12 | 45 | | | 41 | 36 | 30 | 65 | 23 | 9 |
| 17 | 10 | 19 | 30 | | | 41 | 36 | 30 | 65 | 18 | 5 |
| 20 | 10 | 29 | 20 | | | 38 | 34 | 28 | 67 | 19 | 7 |
| 23 | 10 | 75 | 20 | | | 38 | 33 | 26 | 62 | 03 | 3 |
| **JAN 4th** | | | | | | | | | | | |
| 02 | 3 | UNL | 7 | | | 32 | 32 | 31 | 96 | 35 | 6 |
| 05 | 10 | 2 | 0 | 1 | FK | 30 | 30 | 30 | 100 | 10 | 4 |
| 08 | 10 | 200 | 1 | 8 | FK | 31 | 31 | 30 | 96 | 00 | 0 |
| 11 | 10 | 35 | 70 | | RW | 34 | 33 | 32 | 92 | 19 | 8 |
| 14 | 10 | 65 | 70 | | | 49 | 40 | 30 | 48 | 20 | 12 |
| 17 | 10 | 55 | 25 | | | 45 | 38 | 30 | 56 | 20 | 14 |
| 20 | 10 | 16 | 10 | | RW | 38 | 35 | 32 | 79 | 19 | 11 |
| 23 | 10 | 27 | 20 | | RW | 40 | 36 | 30 | 68 | 20 | 15 |
| **JAN 5th** | | | | | | | | | | | |
| 02 | 5 | UNL | 20 | | | 37 | 32 | 25 | 62 | 24 | 16 |
| 05 | 10 | 90 | 20 | | | 34 | 33 | 31 | 89 | 25 | 21 |
| 08 | 5 | UNL | 30 | | | 32 | 31 | 29 | 89 | 25 | 18 |
| 11 | 8 | 100 | 50 | | | 35 | 32 | 27 | 73 | 24 | 25 |
| 14 | 9 | 24 | 50 | | | 36 | 32 | 26 | 67 | 25 | 25 |
| 17 | 9 | 32 | 60 | | | 35 | 31 | 25 | 67 | 25 | 16 |
| 20 | 10 | 23 | 20 | | | 32 | 29 | 25 | 75 | 25 | 17 |
| 23 | 10 | 19 | 20 | | | 32 | 30 | 26 | 79 | 25 | 17 |
| **JAN 6th** | | | | | | | | | | | |
| 02 | 10 | 17 | 20 | | | 30 | 28 | 25 | 82 | 24 | 18 |
| 05 | 10 | 17 | 20 | | | 29 | 28 | 25 | 85 | 24 | 14 |
| 08 | 10 | 15 | 20 | | | 29 | 27 | 24 | 82 | 26 | 13 |
| 11 | 8 | 100 | 40 | | | 31 | 28 | 23 | 72 | 24 | 14 |
| 14 | 7 | 47 | 50 | | | 36 | 31 | 22 | 57 | 24 | 16 |
| 17 | 7 | 230 | 50 | | | 33 | 29 | 21 | 61 | 25 | 17 |
| 20 | 2 | UNL | 20 | | | 28 | 26 | 23 | 82 | 24 | 15 |
| 23 | 0 | UNL | 20 | | | 26 | 24 | 21 | 81 | 22 | 15 |
| **JAN 7th** | | | | | | | | | | | |
| 02 | 0 | UNL | 20 | | | 26 | 23 | 18 | 72 | 23 | 15 |
| 05 | 1 | UNL | 20 | | | 26 | 23 | 18 | 72 | 20 | 10 |
| 08 | 9 | UNL | 50 | | | 22 | 20 | 17 | 81 | 21 | 9 |
| 11 | 8 | UNL | 50 | | | 32 | 26 | 16 | 52 | 17 | 19 |
| 14 | 10 | 220 | 50 | | | 33 | 27 | 17 | 52 | 18 | 18 |
| 17 | 10 | 250 | 40 | | | 33 | 27 | 16 | 50 | 18 | 14 |
| 20 | 10 | 250 | 20 | | | 31 | 26 | 15 | 52 | 19 | 13 |
| 23 | 7 | UNL | 20 | | | 29 | 24 | 14 | 53 | 19 | 14 |
| **JAN 8th** | | | | | | | | | | | |
| 02 | 10 | UNL | 20 | | | 32 | 26 | 15 | 50 | 17 | 8 |
| 05 | 10 | 80 | 20 | | | 25 | 23 | 19 | 78 | 36 | 9 |
| 08 | 10 | 95 | 45 | | | 25 | 23 | 19 | 78 | 02 | 3 |
| 11 | 10 | 70 | 45 | | | 30 | 27 | 21 | 69 | 01 | 3 |
| 14 | [illegible] | 40 | 10 | | | 35 | 31 | 26 | 70 | 31 | 6 |
| 17 | [illegible] | :0 | 7 | | | 32 | 30 | 28 | 85 | 03 | 6 |
| 20 | [illegible] | 37 | 15 | | SW | 33 | 30 | 25 | 73 | 20 | 3 |
| 23 | [illegible] | 32 | 6 | | SW | 31 | 30 | 28 | 89 | 21 | 8 |
| **JAN 9th** | | | | | | | | | | | |
| 02 | 10 | 37 | 10 | | S | 31 | 30 | 29 | 92 | 23 | 6 |
| 05 | 10 | 3 | 3 | | SWF | 32 | 32 | 31 | 96 | 24 | 9 |
| 08 | 10 | 3 | 2 | | SW | 30 | 30 | 30 | 100 | 23 | 11 |
| 11 | 10 | 5 | 3 | | SW | 32 | 31 | 29 | 89 | 25 | 11 |
| 14 | 10 | 8 | 10 | | SW | 33 | 32 | 30 | 89 | 24 | 11 |
| 17 | 10 | 15 | 20 | | | 34 | 32 | 30 | 85 | 21 | 8 |
| 20 | 10 | 19 | 20 | | | 33 | 32 | 30 | 89 | 23 | 10 |
| 23 | 10 | 13 | 20 | | | 32 | 32 | 31 | 96 | 23 | 11 |
| **JAN 10th** | | | | | | | | | | | |
| 02 | 10 | 13 | 20 | | SW | 32 | 31 | 30 | 92 | 24 | 8 |
| 05 | 10 | 15 | 20 | | | 32 | 31 | 29 | 89 | 24 | 11 |
| 08 | 10 | 15 | 25 | | | 31 | 30 | 28 | 89 | 24 | 8 |
| 11 | 10 | 15 | 20 | | SG | 32 | 31 | 29 | 89 | 00 | 0 |
| 14 | 10 | 42 | 25 | | | 36 | 34 | 30 | 79 | 28 | 10 |
| 17 | 10 | 43 | 30 | | | 35 | 33 | 30 | 82 | 27 | 5 |
| 20 | 8 | 50 | 20 | | | 32 | 30 | 27 | 82 | 20 | 4 |
| 23 | 7 | 100 | 20 | | | 34 | 30 | 23 | 64 | 18 | 12 |
| **JAN 11th** | | | | | | | | | | | |
| 02 | 2 | UNL | 20 | | | 33 | 29 | 23 | 67 | 18 | 17 |
| 05 | 7 | UNL | 20 | | | 35 | 30 | 22 | 59 | 18 | 15 |
| 08 | 10 | 110 | 20 | | | 34 | 29 | 22 | 62 | 18 | 15 |
| 11 | 10 | 110 | 10 | | SW | 35 | 31 | 25 | [illegible] | 22 | 14 |
| 14 | 10 | 15 | 2 | | SW | 33 | 32 | 31 | [illegible] | 34 | 8 |
| 17 | 10 | 15 | 45 | | | 33 | 31 | 28 | [illegible] | 24 | 9 |
| 20 | [illegible] | 16 | 20 | | | 32 | 31 | 30 | 92 | 25 | 8 |
| 23 | 10 | 15 | 20 | | | 33 | 31 | 29 | 85 | 24 | 8 |
| **JAN 12th** | | | | | | | | | | | |
| 02 | 10 | 15 | 20 | | | 32 | 31 | 30 | 92 | 22 | 7 |
| 05 | 10 | 12 | 20 | | | 32 | 31 | 29 | 89 | 26 | 10 |
| 08 | 10 | 24 | 20 | | | 32 | 31 | 29 | 89 | 21 | 6 |
| 11 | 10 | 27 | 30 | | | 37 | 33 | 28 | 70 | 22 | 12 |
| 14 | 10 | 100 | 35 | | | 38 | 34 | 29 | 70 | 25 | 12 |
| 17 | 10 | 95 | 40 | | RW | 38 | 35 | 30 | 73 | 23 | 8 |
| 20 | 10 | 80 | 20 | | SW | 37 | 33 | 28 | 70 | 21 | 10 |
| 23 | 10 | 41 | 20 | | | 36 | 33 | 28 | 73 | 22 | 9 |
| **JAN 13th** | | | | | | | | | | | |
| 02 | 10 | 20 | 20 | | | 38 | 34 | 28 | 67 | 22 | 13 |
| 05 | 10 | 15 | 20 | | | 37 | 35 | 32 | 82 | 23 | 11 |
| 08 | 10 | 11 | 20 | | | 37 | 34 | 30 | 76 | 24 | 13 |
| 11 | 10 | 13 | 20 | | | 38 | 35 | 31 | 76 | 22 | 14 |
| 14 | 10 | 14 | 20 | | | 40 | 36 | 31 | 70 | 24 | 13 |
| 17 | 10 | 18 | 25 | | | 39 | 36 | 31 | 73 | 20 | 9 |
| 20 | 10 | 17 | 20 | | | 38 | 35 | 32 | 79 | 21 | 9 |
| 23 | 10 | 15 | 20 | | | 37 | 34 | 31 | 79 | 23 | 9 |
| **JAN 14th** | | | | | | | | | | | |
| 02 | 7 | 17 | 20 | | | 38 | 35 | 32 | 79 | 19 | 10 |
| 05 | 10 | 21 | 20 | | | 38 | 35 | 32 | 79 | 20 | 6 |
| 08 | 10 | 25 | 20 | | | 38 | 35 | 30 | 73 | 23 | 8 |
| 11 | 10 | 27 | 30 | | | 42 | 38 | 32 | 68 | 21 | 10 |
| 14 | 10 | 30 | 35 | | | 46 | 40 | 32 | 58 | 07 | 4 |
| 17 | 10 | 40 | 25 | | | 41 | 37 | 32 | 70 | 04 | 6 |
| 20 | 10 | 1 | 0 | 4 | FK | 31 | 31 | 31 | 100 | 04 | 6 |
| 23 | 10 | 1 | 0 | 4 | FK | 30 | 30 | 30 | 100 | 04 | 4 |
| **JAN 15th** | | | | | | | | | | | |
| 02 | 10 | 1 | 0 | 2 | FK | 29 | 29 | 28 | 96 | 09 | 3 |
| 05 | 10 | 1 | 0 | 2 | FK | 28 | 28 | 27 | 96 | 02 | 5 |
| 08 | 10 | 2 | 0 | 3 | FK | 28 | 28 | 27 | 96 | 03 | 5 |
| 11 | 10 | 1 | 0 | 1 | FK | 30 | 30 | 30 | 100 | 09 | 3 |
| 14 | 8 | 200 | 10 | | | 41 | 37 | 32 | 70 | 26 | 9 |
| 17 | 8 | UNL | 40 | | | 42 | 37 | 30 | 63 | 24 | 21 |
| 20 | 10 | 130 | 20 | | | 33 | 31 | 29 | 85 | 24 | 12 |
| 23 | 10 | 16 | 20 | | | 31 | 30 | 28 | 89 | 23 | 14 |
| **JAN 16th** | | | | | | | | | | | |
| 02 | 10 | 16 | 20 | | | 29 | 28 | 26 | 89 | 22 | 14 |
| 05 | 10 | 11 | 15 | | | 28 | 27 | 25 | 89 | 23 | 14 |
| 08 | 9 | 11 | 20 | | | 29 | 28 | 25 | 85 | 23 | 16 |
| 11 | 10 | 9 | 15 | | SW | 29 | 27 | 24 | 82 | 24 | 14 |
| 14 | 10 | 17 | 30 | | | 33 | 30 | 25 | 73 | 24 | 15 |
| 17 | 10 | UNL | 25 | | | 34 | 32 | 28 | 79 | 23 | 8 |
| 20 | 6 | UNL | 20 | | | 31 | 28 | 24 | 75 | 22 | 10 |
| 23 | 3 | UNL | 20 | | | 32 | 29 | 23 | 69 | 23 | 12 |
| **JAN 17th** | | | | | | | | | | | |
| 02 | 3 | UNL | 20 | | | 31 | 28 | 22 | 69 | 23 | 13 |
| 05 | 2 | UNL | 20 | | | 28 | 25 | 20 | 72 | 21 | 10 |
| 08 | 7 | 90 | 20 | | | 32 | 27 | 19 | 59 | 22 | 14 |
| 11 | 10 | 220 | 40 | | | 40 | 33 | 23 | 51 | 22 | 14 |
| 14 | 10 | 70 | 70 | | | 44 | 36 | 25 | 47 | 24 | 15 |
| 17 | 9 | UNL | 70 | | | 41 | 34 | 25 | 53 | 22 | 9 |
| 20 | 8 | 250 | 20 | | | 37 | 32 | 25 | 62 | 21 | 10 |
| 23 | 8 | UNL | 20 | | | 31 | 28 | 24 | 75 | 22 | 7 |
| **JAN 18th** | | | | | | | | | | | |
| 02 | 0 | UNL | 20 | | | 31 | 28 | 23 | 72 | 22 | 7 |
| 05 | 0 | UNL | 20 | | | 27 | 25 | 21 | 78 | 26 | 5 |
| 08 | 2 | UNL | 40 | | | 17 | 16 | 15 | 92 | 00 | 0 |
| 11 | 8 | UNL | 10 | | | 34 | 30 | 23 | 64 | 09 | 4 |
| 14 | 9 | 200 | 30 | | | 39 | 34 | 27 | 62 | 34 | 5 |
| 17 | 6 | UNL | 30 | | | 38 | 34 | 27 | 65 | 07 | 6 |
| 20 | 4 | UNL | 15 | | | 25 | 25 | 24 | 96 | 08 | 4 |
| 23 | 5 | UNL | 12 | | | 21 | 21 | 20 | 96 | 02 | 5 |

## MAXIMUM SHORT DURATION PRECIPITATION

| TIME PERIOD (MINUTES) | 5 | 10 | 15 | 20 | 30 | 45 | 60 | 80 | 100 | 120 | 150 | 180 |
|---|---|---|---|---|---|---|---|---|---|---|---|---|
| PRECIPITATION (INCHES) | 0.02 | 0.03 | 0.03 | 0.04 | 0.06 | 0.07 | 0.09 | 0.11 | 0.13 | 0.14 | 0.14 | 0.15 |
| ENDED: DATE | 04 | 04 | 04 | 04 | 04 | 04 | 04 | 04 | 04 | 04 | 04 | 04 |
| ENDED: TIME | 1947 | 1947 | 1957 | 1957 | 1947 | 1957 | 1947 | 1957 | 1957 | 2019 | 2019 | 2059 |

THE PRECIPITATION AMOUNTS FOR THE INDICATED TIME INTERVALS MAY OCCUR AT ANY TIME DURING THE MONTH. THE TIME INDICATED IS THE ENDING TIME OF THE INTERVAL. DATE AND TIME ARE NOT ENTERED FOR TRACE AMOUNTS.

# OBSERVATIONS AT 3-HOUR INTERVALS

JAN 1994 POCATELLO, ID 24156

| HOUR L.S.T. | SKY COVER (TENTHS) | CEILING IN HUNDREDS OF FEET | VISIBILITY WHOLE MILES | VISIBILITY 16THS MILE | WEATHER | TEMPERATURE AIR °F | TEMPERATURE WET BULB °F | TEMPERATURE DEW POINT °F | REL HUMIDITY % | WIND DIRECTION | WIND SPEED (KNOTS) |
|---|---|---|---|---|---|---|---|---|---|---|---|
| **JAN 19th** | | | | | | | | | | | |
| 02 | 3 | UNL | 15 | | | 20 | 19 | 18 | 92 | 05 | 3 |
| 05 | 6 | UNL | 20 | | | 17 | 16 | 15 | 92 | 31 | 3 |
| 08 | 8 | UNL | 8 | | | 14 | 13 | 12 | 92 | 08 | 3 |
| 11 | 6 | UNL | 15 | | | 30 | 28 | 25 | 82 | 00 | 0 |
| 14 | 3 | UNL | 60 | | | 46 | 36 | 20 | 36 | 26 | 8 |
| 17 | 0 | UNL | 50 | | | 44 | 35 | 21 | 40 | 22 | 4 |
| 20 | 0 | UNL | 20 | | | 30 | 27 | 23 | 75 | 13 | 3 |
| 23 | 0 | UNL | 20 | | | 24 | 23 | 22 | 92 | 03 | 4 |
| **JAN 20th** | | | | | | | | | | | |
| 02 | 0 | UNL | 15 | | | 20 | 20 | 19 | 96 | 19 | 4 |
| 05 | 2 | UNL | 10 | | | 19 | 18 | 17 | 92 | 00 | 0 |
| 08 | 2 | UNL | 0 | 1 | K | 15 | 14 | 13 | 92 | 00 | 0 |
| 11 | 1 | UNL | 1 | | K | 29 | 28 | 25 | 85 | 04 | 5 |
| 14 | 0 | UNL | 40 | | | 44 | 35 | 23 | 44 | 06 | 6 |
| 17 | 0 | UNL | 30 | | | 40 | 34 | 24 | 53 | 04 | 6 |
| 20 | 0 | UNL | 20 | | | 29 | 28 | 25 | 85 | 06 | 4 |
| 23 | 0 | UNL | 20 | | | 26 | 25 | 23 | 88 | 00 | 0 |
| **JAN 21st** | | | | | | | | | | | |
| 02 | 0 | UNL | 15 | | | 20 | 20 | 19 | 96 | 23 | 3 |
| 05 | 4 | UNL | 5 | | K | 18 | 17 | 16 | 92 | 01 | 4 |
| 08 | 3 | UNL | 20 | | | 16 | 15 | 13 | 88 | 05 | 3 |
| 11 | 8 | UNL | 40 | | | 32 | 30 | 26 | 79 | 05 | 6 |
| 14 | 5 | UNL | 60 | | | 47 | 37 | 23 | 39 | 03 | 5 |
| 17 | 9 | UNL | 50 | | | 40 | 34 | 26 | 57 | 04 | 3 |
| 20 | 10 | 250 | 20 | | | 31 | 29 | 25 | 79 | 00 | 0 |
| 23 | 4 | UNL | 20 | | | 25 | 24 | 23 | 92 | 02 | 5 |
| **JAN 22nd** | | | | | | | | | | | |
| 02 | 0 | UNL | 20 | | | 23 | 22 | 21 | 92 | 02 | 4 |
| 05 | 0 | UNL | 20 | | | 19 | 18 | 17 | 92 | 06 | 5 |
| 08 | 3 | UNL | 15 | | | 17 | 16 | 15 | 92 | 10 | 5 |
| 11 | 4 | UNL | 20 | | | 31 | 28 | 24 | 75 | 11 | 4 |
| 14 | 2 | UNL | 50 | | | 47 | 37 | 23 | 39 | 05 | 6 |
| 17 | 0 | UNL | 80 | | | 42 | 35 | 25 | 51 | 05 | 5 |
| 20 | 0 | UNL | 20 | | | 29 | 27 | 23 | 78 | 06 | 5 |
| 23 | 0 | UNL | 20 | | | 22 | 21 | 20 | 92 | 08 | 6 |
| **JAN 23rd** | | | | | | | | | | | |
| 02 | 1 | UNL | 20 | | | 19 | 18 | 16 | 88 | 01 | 4 |
| 05 | 2 | UNL | 20 | | | 17 | 16 | 14 | 88 | 02 | 6 |
| 08 | 5 | UNL | 30 | | | 16 | 15 | 14 | 92 | 11 | 4 |
| 11 | 7 | UNL | 50 | | | 31 | 29 | 25 | 79 | 04 | 6 |
| 14 | 10 | UNL | 40 | | | 53 | 40 | 23 | 31 | 36 | 7 |
| 17 | 10 | 140 | 45 | | | 50 | 37 | 17 | 27 | 21 | 13 |
| 20 | 10 | 75 | 20 | | | 48 | 36 | 18 | 30 | 18 | 14 |
| 23 | 10 | 39 | 20 | | | 42 | 34 | 23 | 47 | 22 | 10 |
| **JAN 24th** | | | | | | | | | | | |
| 02 | 10 | 27 | 20 | | | 37 | 34 | 31 | 79 | 21 | 10 |
| 05 | 7 | 70 | 20 | | | 35 | 33 | 31 | 85 | 22 | 5 |
| 08 | 0 | UNL | 30 | | | 31 | 30 | 28 | 89 | 11 | 4 |
| 11 | 2 | UNL | 40 | | | 47 | 40 | 32 | 56 | 32 | 6 |
| 14 | 10 | 250 | 40 | | | 50 | 41 | 31 | 48 | 34 | 4 |
| 17 | 10 | 250 | 60 | | | 47 | 39 | 30 | 52 | 19 | 8 |
| 20 | 3 | UNL | 20 | | | 34 | 32 | 29 | 82 | 00 | 0 |
| 23 | 10 | 220 | 15 | | | 28 | 28 | 27 | 96 | 20 | 3 |
| **JAN 25th** | | | | | | | | | | | |
| 02 | 10 | 220 | 15 | | | 28 | 28 | 27 | 96 | 35 | 4 |
| 05 | 10 | 220 | 20 | | | 28 | 27 | 26 | 92 | 34 | 4 |
| 08 | 9 | 220 | 20 | | | 23 | 23 | 22 | 96 | 20 | 4 |
| 11 | 10 | 250 | 20 | | | 35 | 33 | 31 | 85 | 02 | 6 |
| 14 | 10 | UNL | 40 | | | 50 | 39 | 26 | 39 | 01 | 8 |
| 17 | 10 | 250 | 40 | | | 40 | 34 | 25 | 55 | 05 | 6 |
| 20 | 10 | 90 | 20 | | | 32 | 30 | 27 | 82 | 21 | 6 |
| 23 | 10 | 5 | 7 | | | 33 | 32 | 30 | 89 | 23 | 13 |
| **JAN 26th** | | | | | | | | | | | |
| 02 | 10 | 5 | 7 | | | 32 | 32 | 31 | 96 | 23 | 12 |
| 05 | 10 | 3 | 4 | | ZL | 32 | 32 | 31 | 96 | 24 | 9 |
| 08 | 10 | 3 | 2 | | SW | 32 | 32 | 32 | 100 | 24 | 10 |
| 11 | 10 | 9 | 2 | 12 | SF | 32 | 32 | 31 | 96 | 24 | 8 |
| 14 | 10 | 5 | 2 | 8 | SF | 32 | 32 | 31 | 96 | 26 | 9 |
| 17 | 10 | 11 | 2 | 8 | SF | 32 | 32 | 31 | 96 | 26 | 9 |
| 20 | 10 | 12 | 3 | | SF | 32 | 30 | 28 | 85 | 24 | 9 |
| 23 | 10 | 10 | 2 | 8 | SF | 31 | 31 | 30 | 96 | 23 | 8 |
| **JAN 27th** | | | | | | | | | | | |
| 02 | 10 | 10 | 2 | | SF | 30 | 30 | 29 | 96 | 23 | 6 |
| 05 | 10 | 15 | 2 | | SF | 30 | 29 | 28 | 92 | 23 | 5 |
| 08 | 10 | 17 | 2 | | SF | 29 | 29 | 28 | 96 | 22 | 4 |
| 11 | 10 | 65 | 3 | | SF | 32 | 31 | 30 | 92 | 27 | 8 |
| 14 | 10 | 11 | 2 | 8 | SF | 33 | 32 | 30 | 89 | 28 | 6 |
| 17 | 10 | 65 | 3 | | SF | 31 | 30 | 29 | 92 | 27 | 4 |
| 20 | 10 | 75 | 4 | | SF | 29 | 29 | 28 | 96 | 19 | 4 |
| 23 | 8 | 65 | 1 | | GF | 27 | 27 | 27 | 100 | 00 | 0 |
| **JAN 28th** | | | | | | | | | | | |
| 02 | 4 | UNL | 4 | | FK | 20 | 19 | 18 | 92 | 06 | 8 |
| 05 | 1 | UNL | 20 | | | 20 | 19 | 18 | 92 | 04 | 7 |
| 08 | 0 | UNL | 40 | | | 18 | 17 | 15 | 88 | 10 | 3 |
| 11 | 0 | UNL | 100+ | | | 31 | 27 | 21 | 67 | 05 | 12 |
| 14 | 0 | UNL | 100+ | | | 37 | 30 | 18 | 46 | 02 | 13 |
| 17 | 6 | UNL | 60 | | | 33 | 27 | 17 | 52 | 10 | 5 |
| 20 | 4 | UNL | 20 | | | 24 | 23 | 20 | 85 | 21 | 8 |
| 23 | 10 | 20 | 15 | | | 26 | 25 | 24 | 92 | 21 | 6 |
| **JAN 29th** | | | | | | | | | | | |
| 02 | 10 | 17 | 15 | | | 27 | 25 | 22 | 81 | 22 | 8 |
| 05 | 7 | 250 | 20 | | | 22 | 21 | 18 | 85 | 23 | 6 |
| 08 | 10 | 17 | 20 | | | 22 | 21 | 18 | 85 | 22 | 6 |
| 11 | 10 | 60 | 40 | | | 28 | 26 | 21 | 75 | 25 | 9 |
| 14 | 10 | 130 | 40 | | | 32 | 28 | 22 | 67 | 26 | 11 |
| 17 | 10 | 70 | 20 | | | 31 | 28 | 24 | 75 | 21 | 6 |
| 20 | 10 | 41 | 15 | | | 27 | 26 | 25 | 92 | 21 | 6 |
| 23 | 10 | 95 | 10 | | | 25 | 25 | 24 | 96 | 00 | 0 |
| **JAN 30th** | | | | | | | | | | | |
| 02 | 5 | UNL | 20 | | | 18 | 17 | 16 | 92 | 05 | 4 |
| 05 | 0 | UNL | 20 | | | 10 | 9 | 6 | 84 | 10 | 6 |
| 08 | 1 | UNL | 40 | | | 11 | 10 | 6 | 80 | 09 | 7 |
| 11 | 0 | UNL | 70 | | | 25 | 20 | 8 | 48 | 05 | 14 |
| 14 | 0 | UNL | 100+ | | | 28 | 21 | 2 | 33 | 05 | 12 |
| 17 | 5 | UNL | 40 | | | 26 | 19 | 2 | 35 | 04 | 10 |
| 20 | 2 | UNL | 20 | | | 15 | 12 | 3 | 59 | 07 | 7 |
| 23 | 0 | UNL | 20 | | | 5 | 4 | 0 | 80 | 23 | 5 |
| **JAN 31st** | | | | | | | | | | | |
| 02 | 0 | UNL | 20 | | | 2 | 1 | -2 | 83 | 18 | 4 |
| 05 | 0 | UNL | 20 | | | 4 | 3 | 0 | 83 | 19 | 7 |
| 08 | 0 | UNL | 50 | | | 3 | 2 | -1 | 83 | 00 | 0 |
| 11 | 0 | UNL | 100+ | | | 21 | 17 | 5 | 50 | 18 | 5 |
| 14 | 10 | 110 | 100+ | | | 26 | 21 | 8 | 46 | 25 | 9 |
| 17 | 8 | 80 | 50 | | | 24 | 21 | 13 | 63 | 24 | 8 |
| 20 | 2 | UNL | 20 | | | 14 | 13 | 9 | 80 | 19 | 6 |
| 23 | 0 | UNL | 20 | | | 6 | 5 | 3 | 87 | 23 | 6 |

## WEATHER CODES

| | | | | | |
|---|---|---|---|---|---|
| + | TORNADO | SW | SNOW SHOWERS | GF | GROUND FOG |
| T | THUNDERSTORM | SG | SNOW GRAINS | BD | BLOWING DUST |
| Q | SQUALL | SP | SNOW PELLETS | BN | BLOWING SAND |
| R | RAIN | IC | ICE CRYSTALS | BS | BLOWING SNOW |
| RW | RAIN SHOWERS | IP | ICE PELLETS | BY | BLOWING SPRAY |
| ZR | FREEZING RAIN | IPW | ICE PELLET SHOWERS | K | SMOKE |
| L | DRIZZLE | A | HAIL | H | HAZE |
| ZL | FREEZING DRIZZLE | F | FOG | D | DUST |
| S | SNOW | IF | ICE FOG | | |

CEILING: UNL INDICATES UNLIMITED
WIND DIRECTION: DIRECTIONS ARE THOSE FROM WHICH THE WIND BLOWS, INDICATED IN TENS OF DEGREES FROM TRUE NORTH: I.E., 09 FOR EAST, 18 FOR SOUTH 27 FOR WEST. AN ENTRY OF 00 INDICATES CALM.
SPEED: THE OBSERVED AVERAGE ONE-MINUTE VALUE, EXP RESSED IN KNOTS (MPH=KNOTS X 1.15).

## SUMMARY BY HOURS

| HOUR L.S.T. | AVERAGES SKY COVER (TENTHS) | AVERAGES STATION PRESSURE (INCHES) | AVERAGES TEMPERATURE AIR TEMP °F | AVERAGES TEMPERATURE WET BULB °F | AVERAGES TEMPERATURE DEW POINT °F | AVERAGES REL HUMIDITY % | AVERAGES WIND SPEED (MPH) | RESULTANT WIND DIRECTION | RESULTANT WIND SPEED (MPH) |
|---|---|---|---|---|---|---|---|---|---|
| 02 | 6 | 25.600 | 28 | 26 | 24 | 84 | 9.8 | 22 | 6.7 |
| 05 | 7 | 25.600 | 27 | 25 | 23 | 85 | 9.8 | 23 | 5.7 |
| 08 | 7 | 25.610 | 26 | 24 | 22 | 85 | 8.4 | 22 | 5.2 |
| 11 | 8 | 25.640 | 33 | 30 | 25 | 73 | 10.6 | 22 | 5.2 |
| 14 | 8 | 25.590 | 39 | 34 | 25 | 59 | 11.7 | 25 | 6.2 |
| 17 | 8 | 25.590 | 37 | 32 | 25 | 65 | 10.3 | 22 | 5.7 |
| 20 | 7 | 25.600 | 32 | 29 | 25 | 78 | 9.5 | 21 | 6.9 |
| 23 | 7 | 25.610 | 29 | 27 | 24 | 82 | 9.5 | 22 | 7.1 |

NATIONAL CLIMATIC DATA CENTER
FEDERAL BUILDING
37 BATTERY PARK AVE
ASHEVILLE, NORTH CAROLINA 28801-2733

OFFICIAL BUSINESS
PENALTY FOR PRIVATE USE $300

FIRST CLASS
POSTAGE AND FEES PAID
NOAA
PERMIT G-19

LCD-10-24156-PD-9509

33766
J R SIMPLOT COMPANY
ATTN: J F COCHRANE - PO #35724
PO BOX 9[illegible]
POCATELLO ID 83204

83204-8912

HOURLY PRECIPITATION (WATER EQUIVALENT IN INCHES) JAN 1994 POCATELLO, ID 24156
USCOMM - NOAA - ASHEVILLE, NC 125

| DATE | A.M. HOUR ENDING AT | | | | | | | | | | | | P.M. HOUR ENDING AT | | | | | | | | | | | | DATE |
|---|---|---|---|---|---|---|---|---|---|---|---|---|---|---|---|---|---|---|---|---|---|---|---|---|---|
| | 1 | 2 | 3 | 4 | 5 | 6 | 7 | 8 | 9 | 10 | 11 | 12 | 1 | 2 | 3 | 4 | 5 | 6 | 7 | 8 | 9 | 10 | 11 | 12 | |
| 01 | | | | | | | | T | T | | | | | | T | 0.02 | T | 0.01 | T | | | | | | 01 |
| 02 | | | | | | | | | | | | | | | | | | | | | | | | T | 02 |
| 03 | T | 0.01 | 0.01 | T | | T | | | | | | | | | | | | | | | | | | | 03 |
| 04 | | | | | | | | | | | T | T | | | | | | T | 0.06 | 0.07 | 0.02 | T | T | T | 04 |
| 05 | T | | 0.01 | T | | | | | | | | | | | | | | | | | | | | | 05 |
| 06 | | | | | | | | | T | | | | | | | | | | | | | | | | 06 |
| 07 | | | | | | | | | | | | | | | | | | | | | | | | | 07 |
| 08 | | | | | | | | | | | T | T | 0.01 | T | T | 0.03 | T | | T | T | T | T | 0.01 | T | 08 |
| 09 | 0.01 | 0.01 | T | T | 0.01 | T | T | T | T | T | T | T | T | T | T | T | | | | | T | T | T | T | 09 |
| 10 | T | T | T | T | | | | | | | T | T | T | | | | | | | | | | | | 10 |
| 11 | | | | | | | | | | | T | 0.01 | 0.01 | T | T | | T | T | T | T | T | | | | 11 |
| 12 | | | | | | | | | | | | | | | | | | | | T | | | | | 12 |
| 13 | | | | | | | | | | | | | | | | | | | | | | | | | 13 |
| 14 | | | | | | | | | | | | | | | | | | | | | | | | | 14 |
| 15 | | | | | | | | | | | | | | | | | | | | | | | | | 15 |
| 16 | | | | | | | | | | T | T | T | | | | | | | | | | | | | 16 |
| 17 | | | | | | | | | | | | | | | | | | | | | | | | | 17 |
| 18 | | | | | | | | | | | | | | | | | | | | | | | | | 18 |
| 19 | | | | | | | | | | | | | | | | | | | | | | | | | 19 |
| 20 | | | | | | | | | | | | | | | | | | | | | | | | | 20 |
| 21 | | | | | | | | | | | | | | | | | | | | | | | | | 21 |
| 22 | | | | | | | | | | | | | | | | | | | | | | | | | 22 |
| 23 | | | | | | | | | | | | | | | | | | | | | | | | T | 23 |
| 24 | T | T | | | | | | | | | | | | | | | | | | | | | | | 24 |
| 25 | | | | | | | | | | | | | | | | | | | | | T | T | T | | 25 |
| 26 | | | | T | T | T | T | T | T | 0.01 | 0.02 | 0.01 | T | T | 0.01 | 0.02 | 0.03 | 0.01 | T | T | 0.01 | 0.01 | 0.02 | T | 26 |
| 27 | 0.01 | 0.01 | 0.01 | 0.01 | T | 0.01 | T | T | 0.01 | 0.01 | T | T | 0.01 | 0.01 | T | T | T | 0.01 | T | 0.01 | T | T | T | | 27 |
| 28 | | | | | | | | | | | | | | | | | | | | | | | | | 28 |
| 29 | | | | | | | | | | T | T | | | | | | | T | T | T | T | 0.01 | 0.01 | | 29 |
| 30 | | | | | | | | | | | | | | | | | | | | | | | | | 30 |
| 31 | | | | | | | | | | | | | | | | | | | | | | | | | 31 |

FEB 1994
POCATELLO, ID
NAT'L WEA SER OFC
20369 THUNDERBOLT STREET-C

INQUIRIES/COMMENTS CALL
(7041) 271-4800

MUNICIPAL AIRPORT

ISSN 0198-1811

# LOCAL CLIMATOLOGICAL DATA

## Monthly Summary

LATITUDE 42° 55'N LONGITUDE 112° 36'W ELEVATION (GROUND) 4454 FEET TIME ZONE MOUNTAIN 24156

| | TEMPERATURE °F | | | | | DEGREE DAYS BASE 65°F | | WEATHER TYPES 1 FOG 2 HEAVY FOG 3 THUNDERSTORM 4 ICE PELLETS 5 HAIL 6 GLAZE 7 DUSTSTORM 8 SMOKE, HAZE 9 BLOWING SNOW | SNOW ICE PELLETS OR ICE ON GROUND AT 0500 INCHES | PRECIPITATION | | AVERAGE STATION PRESSURE IN INCHES ELEV. 4478 FEET ABOVE M.S.L. | WIND (M.P.H.) | | | | | | SUNSHINE | | SKY COVER (TENTHS) | |
|---|---|---|---|---|---|---|---|---|---|---|---|---|---|---|---|---|---|---|---|---|---|---|---|
| | | | | | | | | | | | | | | | | | PEAK GUST | | FASTEST MILE | | | | | |
| DATE | MAXIMUM | MINIMUM | AVERAGE | DEPARTURE FROM NORMAL | AVERAGE DEW POINT | HEATING SEASON BEGINS WITH JULY | COOLING SEASON BEGINS WITH JAN | | | WATER EQUIVALENT (INCHES) | SNOW, ICE PELLETS (INCHES) | | RESULTANT DIR. | RESULTANT SPEED | AVERAGE SPEED | SPEED | DIRECTION | SPEED | DIRECTION | MINUTES | PERCENT OF TOTAL POSSIBLE | SUNRISE TO SUNSET | MIDNIGHT TO MIDNIGHT |
| 1 | 2 | 3 | 4 | 5 | 6 | 7A | 7B | 8 | 9 | 10 | 11 | 12 | 13 | 14 | 15 | 16 | 17 | 18 | 19 | 20 | 21 | 22 | 23 |
| 01 | 32 | 2 | 17 | -9 | 7 | 48 | 0 | | 1 | 0.00 | 0.0 | 25.820 | 22 | 5.4 | 7.5 | 20 | S | 15 | 19 | 597 | 100 | 0 | 0 |
| 02 | 35 | 1 | 18 | -8 | -8 | 47 | 0 | 8 | 1 | 0.00 | 0.0 | 25.620 | 07 | 1.6 | 4.5 | 20 | S | 13 | 20 | 598 | 100 | 2 | 1 |
| 03 | 37 | 2 | 20 | -6 | 9 | 45 | 0 | 8 | T | 0.00 | 0.0 | 25.490 | 20 | 3.0 | 5.9 | 16 | S | 13 | 18 | 516 | 86 | 8 | 5 |
| 04 | 36 | 2 | 19 | -8 | 10 | 46 | 0 | 8 | T | 0.00 | 0.0 | 25.510 | 21 | 2.7 | 4.4 | 9 | S | 9 | 17 | 572 | 95 | 1 | 1 |
| 05 | 40 | 5 | 23 | -4 | 11 | 42 | 0 | 8 | T | 0.00 | 0.0 | 25.550 | 21 | 5.5 | 6.0 | 18 | SW | 13 | 19 | 584 | 96 | 2 | 1 |
| 06 | 45 | 7 | 26 | -1 | 17 | 39 | 0 | 8 | T | T | T | 25.370 | 19 | 5.5 | 9.7 | 30 | S | 23 | 19 | 446 | 73 | 7 | 6 |
| 07 | 44 | 34 | 39 | 12 | 30 | 26 | 0 | | T | 0.01 | T | 25.050 | 20 | 13.8 | 14.1 | 30 | SW | 21 | 20 | 96 | 16 | 10 | 10 |
| 08 | 36 | 17 | 27 | -1 | 20 | 38 | 0 | 6 9 | T | 0.04 | 0.3 | 25.220 | 24 | 9.9 | 11.7 | 25 | SW | 18 | 26 | 195 | 32 | 10 | 9 |
| 09 | 36 | 13 | 25 | -3 | 15 | 40 | 0 | 9 | T | 0.05 | 0.5 | 25.490 | 21 | 14.3 | 14.8 | 32 | SW | 23 | 21 | 192 | 31 | 10 | 9 |
| 10 | 33 | 26 | 30 | 2 | 28 | 35 | 0 | 1 | 1 | 0.24 | 2.6 | 25.310 | 31 | 2.1 | 7.3 | 24 | SW | 16 | 24 | 0 | 0 | 10 | 10 |
| 11 | 29 | 16 | 23 | -5 | 21 | 42 | 0 | 1 | 4 | 0.21 | 2.5 | 25.410 | 24 | 7.6 | 10.6 | 25 | W | 18 | 25 | 425 | 68 | 6 | 6 |
| 12 | 31 | 1* | 16* | -13 | 13 | 49 | 0 | | 4 | 0.00 | 0.0 | 25.830 | 21 | 2.6 | 7.0 | 25 | S | 17 | 21 | 429 | 69 | 8 | 6 |
| 13 | 39 | 3 | 21 | -8 | 11 | 44 | 0 | | 4 | 0.00 | 0.0 | 25.680 | 19 | 7.2 | 13.8 | 35 | S | 25 | 18 | 484 | 77 | 8 | 6 |
| 14 | 43 | 19 | 31 | 2 | 17 | 34 | 0 | | 3 | 0.00 | 0.0 | 25.590 | 22 | 7.4 | 8.6 | 24 | S | 18 | 19 | 630 | 100 | 3 | 4 |
| 15 | 47 | 6 | 27 | -2 | 16 | 38 | 0 | 2 8 | 2 | 0.00 | 0.0 | 25.550 | 14 | 2.5 | 7.8 | 28 | S | 18 | 17 | 504 | 80 | 9 | 7 |
| 16 | 56 | 23 | 40 | 11 | 20 | 25 | 0 | | 2 | 0.00 | 0.0 | 25.480 | 18 | 1.2 | 7.8 | 32 | S | 16 | 19 | 569 | 89 | 10 | 10 |
| 17 | 51 | 33 | 42 | 12 | 27 | 23 | 0 | 3 5 | T | 0.25 | 2.5 | 25.070 | 18 | 18.9 | 19.6 | 40 | S | 28 | 20 | 45 | 7 | 10 | 10 |
| 18 | 36 | 28 | 32 | 2 | 28 | 33 | 0 | | 3 | 0.01 | 0.1 | 25.030 | 22 | 12.9 | 13.8 | 31 | W | 20 | 21 | 260 | 41 | 9 | 9 |
| 19 | 36 | 19 | 28 | -2 | 22 | 37 | 0 | | 1 | 0.02 | 0.2 | 25.260 | 23 | 9.0 | 9.8 | 23 | SW | 16 | 23 | 425 | 66 | 6 | 6 |
| 20 | 38 | 19 | 29 | -1 | 21 | 36 | 0 | | 1 | 0.03 | 0.3 | 25.360 | 14 | 2.0 | 7.3 | 25 | S | 14 | 17 | 383 | 59 | 10 | 8 |
| 21 | 38 | 24 | 31 | 0 | 23 | 34 | 0 | | 2 | 0.09 | 0.9 | 25.390 | 20 | 9.6 | 10.0 | 20 | SW | 14 | 22 | 453 | 70 | 6 | 7 |
| 22 | 32 | 24 | 28 | -3 | 21 | 37 | 0 | | T | 0.03 | 0.3 | 25.475 | 24 | 13.9 | 15.0 | 31 | W | 23 | 25 | 382 | 59 | 9 | 8 |
| 23 | 36 | 26 | 31 | 0 | 19 | 34 | 0 | 9 | T | 0.12 | 1.2 | 25.440 | 19 | 17.6 | 18.1 | 32 | S | 23 | 19 | 232 | 35 | 10 | 10 |
| 24 | 45 | 31 | 38 | 7 | 30 | 27 | 0 | 9 | 1 | 0.01 | 0.1 | 25.250 | 24 | 19.5 | 19.7 | 40 | SW | 26 | 24 | 181 | 28 | 8 | 9 |
| 25 | 56* | 32 | 44* | 12 | 31 | 21 | 0 | | 0 | 0.03 | 0.0 | 25.420 | 28 | 2.5 | 7.6 | 23 | SW | 16 | 23 | 382 | 58 | 10 | 10 |
| 26 | 43 | 30 | 37 | 5 | 34 | 28 | 0 | 1 8 | 0 | 0.21 | 0.0 | 25.425 | 20 | 3.7 | 5.8 | 14 | S | 10 | 19 | 0 | 0 | 10 | 10 |
| 27 | 42 | 34 | 38 | 6 | 35 | 27 | 0 | | 0 | 0.11 | 0.1 | 25.400 | 23 | 7.8 | 8.1 | 23 | SW | 14 | 28 | 6 | 1 | 10 | 10 |
| 28 | 47 | 34 | 41 | 9 | 32 | 24 | 0 | | 0 | T | 0.0 | 25.640 | 24 | 10.5 | 11.5 | 24 | W | 16 | 25 | 452 | 68 | 9 | 9 |

| | SUM | SUM | | | | TOTAL | TOTAL | NUMBER OF DAYS | TOTAL | TOTAL | FOR THE MONTH: | | | | | | | | TOTAL | % | SUM | SUM |
|---|---|---|---|---|---|---|---|---|---|---|---|---|---|---|---|---|---|---|---|---|---|---|
| | 1119 | 511 | | | | 999 | 0 | | 1.46 | 11.6 | 25.430 | 21 | 7.1 | 10.3 | 40 | SW | 28 | 20 | 10038 | FOR | 211 | 197 |
| | AVG. | AVG. | AVG. | DEP. | AVG. | DEP. | DEP. | PRECIPITATION | DEP. | | | | | | | | | | POSSIBLE | MONTH | AVG. | AVG. |
| | 40.0 | 18.3 | 29.2 | 0.1 | 20.5 | -6 | 0 | ≥ .01 INCH 16 | 0.54 | | | | | | DATE: 24+ | | DATE: 17 | | 17711 | 57 | 7.5 | 7.0 |

| NUMBER OF DAYS | | | | SEASON TO DATE | | SNOW, ICE PELLETS | | GREATEST IN 24 HOURS AND DATES | | | GREATEST DEPTH ON GROUND OF SNOW, ICE PELLETS OR ICE AND DATE | |
|---|---|---|---|---|---|---|---|---|---|---|---|---|
| MAXIMUM TEMP. | | MINIMUM TEMP. | | TOTAL | TOTAL | ≥ 1.0 INCH | 4 | | | | | |
| ≥ 90° | ≤ 32° | ≤ 32° | ≤ 0° | DEP. | DEP. | THUNDERSTORMS | 1 | PRECIPITATION | SNOW, ICE PELLETS | | | |
| 0 | 4 | 24 | 0 | 72 | 0 | HEAVY FOG | 1 | 0.43 10-11 | 4.3 | 10-11 | 5 | 11 |
| | | | | | | CLEAR 5 | PARTLY CLOUDY 4 | CLOUDY 19 | | | | |

FEB 1994
POCATELLO, ID

* EXTREME FOR THE MONTH - LAST OCCURRENCE IF MORE THAN ONE.
T TRACE AMOUNT.
+ ALSO ON EARLIER DATE(S).
HEAVY FOG: VISIBILITY 1/4 MILE OR LESS.
BLANK ENTRIES DENOTE MISSING OR UNREPORTED DATA.

DATA IN COLS 6 AND 12-15 ARE BASED ON 21 OR MORE OBSERVATIONS AT HOURLY INTERVALS. RESULTANT WIND IS THE VECTOR SUM OF WIND SPEEDS AND DIRECTIONS DIVIDED BY THE NUMBER OF OBSERVATIONS. COLS 16 & 17: PEAK GUST - HIGHEST INSTANTANEOUS WIND SPEED. ONE OF TWO WIND SPEEDS IS GIVEN UNDER COLS 18 & 19: FASTEST MILE - HIGHEST RECORDED SPEED FOR WHICH A MILE OF WIND PASSES STATION (DIRECTION IN COMPASS POINTS). FASTEST OBSERVED ONE MINUTE WIND - HIGHEST ONE MINUTE SPEED (DIRECTION IN TENS OF DEGREES). ERRORS WILL BE CORRECTED IN SUBSEQUENT PUBLICATIONS.

I CERTIFY THAT THIS IS AN OFFICIAL PUBLICATION OF THE NATIONAL OCEANIC AND ATMOSPHERIC ADMINISTRATION, AND IS COMPILED FROM RECORDS ON FILE AT THE NATIONAL CLIMATIC DATA CENTER

Kenneth D Hadeen
DIRECTOR
NATIONAL CLIMATIC DATA CENTER

noaa
NATIONAL OCEANIC AND ATMOSPHERIC ADMINISTRATION
NATIONAL ENVIRONMENTAL SATELLITE, DATA AND INFORMATION SERVICE
NATIONAL CLIMATIC DATA CENTER ASHEVILLE NORTH CAROLINA

# OBSERVATIONS AT 3-HOUR INTERVALS

FEB 1994 POCATELLO, ID 24156

| HOUR L.S.T. | SKY COVER (TENTHS) | CEILING IN HUNDREDS OF FEET | VISIBILITY WHOLE MILES | VISIBILITY 16THS MILE | WEATHER | TEMPERATURE AIR °F | TEMPERATURE WET BULB °F | TEMPERATURE DEW POINT °F | REL HUMIDITY % | WIND DIRECTION | WIND SPEED (KNOTS) |
|---|---|---|---|---|---|---|---|---|---|---|---|
| **FEB 1st** | | | | | | | | | | | |
| 02 | 0 | UNL | 20 | | | 4 | 3 | 1 | 87 | 24 | 4 |
| 05 | 0 | UNL | 20 | | | 4 | 3 | 1 | 87 | 00 | 0 |
| 08 | 2 | UNL | 20 | | | 5 | 4 | 1 | 83 | 00 | 0 |
| 11 | 0 | UNL | 70 | | | 21 | 17 | 8 | 57 | 17 | 5 |
| 14 | 0 | UNL | 100+ | | | 31 | 25 | 12 | 45 | 29 | 9 |
| 17 | 0 | UNL | 100+ | | | 31 | 25 | 13 | 47 | 25 | 8 |
| 20 | 0 | UNL | 20 | | | 24 | 19 | 8 | 50 | 19 | 12 |
| 23 | 0 | UNL | 20 | | | 24 | 20 | 9 | 53 | 19 | 13 |
| **FEB 2nd** | | | | | | | | | | | |
| 02 | 0 | UNL | 20 | | | 10 | 9 | 6 | 84 | 09 | 5 |
| 05 | 0 | UNL | 15 | | | 4 | 4 | 2 | 91 | 08 | 4 |
| 08 | 2 | UNL | 15 | | | 2 | 1 | -1 | 87 | 05 | 4 |
| 11 | 3 | UNL | 10 | | | 25 | 21 | 12 | 58 | 02 | 6 |
| 14 | 0 | UNL | 25 | | | 32 | 26 | 14 | 47 | 30 | 5 |
| 17 | 2 | UNL | 40 | | | 34 | 27 | 13 | 42 | 00 | 0 |
| 20 | 0 | UNL | 20 | | | 19 | 17 | 11 | 71 | 16 | 3 |
| 23 | 0 | UNL | 15 | | | 11 | 10 | 7 | 84 | 21 | 5 |
| **FEB 3rd** | | | | | | | | | | | |
| 02 | 3 | UNL | 12 | | | 7 | 6 | 4 | 87 | 20 | 4 |
| 05 | 4 | UNL | 10 | | | 6 | 6 | 4 | 91 | 04 | 3 |
| 08 | 8 | UNL | 5 | | K | 2 | 1 | -2 | 83 | 22 | 6 |
| 11 | 8 | UNL | 6 | | K | 18 | 17 | 13 | 81 | 08 | 4 |
| 14 | 7 | UNL | 20 | | | 34 | 27 | 12 | 40 | 32 | 4 |
| 17 | 7 | UNL | 40 | | | 32 | 25 | 12 | 43 | 22 | 5 |
| 20 | 3 | UNL | 20 | | | 26 | 21 | 11 | 53 | 18 | 9 |
| 23 | 0 | UNL | 20 | | | 20 | 18 | 12 | 71 | 35 | 8 |
| **FEB 4th** | | | | | | | | | | | |
| 02 | 0 | UNL | 20 | | | 15 | 13 | 8 | 74 | 19 | 6 |
| 05 | 2 | UNL | 20 | | | 7 | 6 | 4 | 87 | 00 | 0 |
| 08 | 1 | UNL | 8 | | | 4 | 3 | 0 | 83 | 00 | 0 |
| 11 | 4 | UNL | 4 | | K | 23 | 20 | 12 | 63 | 33 | 4 |
| 14 | 0 | UNL | 20 | | | 33 | 27 | 15 | 48 | 29 | 5 |
| 17 | 0 | UNL | 30 | | | 34 | 27 | 14 | 44 | 23 | 5 |
| 20 | 2 | UNL | 20 | | | 19 | 17 | 12 | 74 | 19 | 5 |
| 23 | 2 | UNL | 20 | | | 14 | 13 | 10 | 84 | 29 | 3 |
| **FEB 5th** | | | | | | | | | | | |
| 02 | 0 | UNL | 20 | | | 9 | 8 | 5 | 84 | 22 | 4 |
| 05 | 0 | UNL | 20 | | | 8 | 7 | 4 | 84 | 00 | 0 |
| 08 | 0 | UNL | 20 | | | 5 | 4 | 2 | 87 | 00 | 0 |
| 11 | 3 | UNL | 5 | | X | 23 | 20 | 13 | 65 | 20 | 3 |
| 14 | 0 | UNL | 10 | | | 36 | 29 | 16 | 44 | 20 | 6 |
| 17 | 0 | UNL | 50 | | | 38 | 30 | 16 | 41 | 23 | 8 |
| 20 | 0 | UNL | 20 | | | 25 | 22 | 16 | 69 | 24 | 9 |
| 23 | 0 | UNL | 20 | | | 25 | 21 | 14 | 63 | 21 | 10 |
| **FEB 6th** | | | | | | | | | | | |
| 02 | 0 | UNL | 20 | | | 24 | 21 | 15 | 69 | 22 | 8 |
| 05 | 0 | UNL | 20 | | | 11 | 10 | 8 | 88 | 05 | 3 |
| 08 | 2 | UNL | 20 | | | 8 | 8 | 6 | 92 | 03 | 5 |
| 11 | 8 | UNL | 20 | | | 30 | 25 | 16 | 56 | 09 | 6 |
| 14 | 10 | UNL | 30 | | | 41 | 33 | 22 | 47 | 29 | 5 |
| 17 | 10 | 70 | 30 | | | 40 | 34 | 24 | 53 | 19 | 9 |
| 20 | 10 | 90 | 20 | | | 37 | 32 | 23 | 57 | 19 | 20 |
| 23 | 10 | 70 | 20 | | | 37 | 32 | 25 | 62 | 20 | 15 |
| **FEB 7th** | | | | | | | | | | | |
| 02 | 10 | 80 | 20 | | SW | 34 | 32 | 28 | 79 | 18 | 14 |
| 05 | 10 | 55 | 15 | | SW | 35 | 32 | 28 | 76 | 20 | 18 |
| 08 | 10 | 20 | 2 | 8 | SW | 34 | 32 | 29 | 82 | 20 | 13 |
| 11 | 10 | 27 | 8 | | RS | 37 | 35 | 32 | 82 | 20 | 12 |
| 14 | 10 | 41 | 15 | | | 41 | 36 | 29 | 62 | 18 | 14 |
| 17 | 10 | 50 | 15 | | RW | 37 | 35 | 32 | 82 | 20 | 13 |
| 20 | 10 | 27 | 15 | | RW | 36 | 33 | 30 | 79 | 21 | 14 |
| 23 | 10 | 30 | 20 | | | 37 | 35 | 32 | 82 | 22 | 12 |
| **FEB 8th** | | | | | | | | | | | |
| 02 | 10 | 32 | 20 | | | 35 | 34 | 32 | 89 | 22 | 8 |
| 05 | 10 | 9 | 15 | | | 34 | 33 | 31 | 89 | 25 | 11 |
| 08 | 10 | 23 | 1 | | S | 26 | 25 | 24 | 92 | 02 | 7 |
| 11 | 10 | 17 | 2 | | S | 27 | 25 | 22 | 81 | 29 | 7 |
| 14 | 10 | 14 | 2 | 8 | S | 23 | 21 | 17 | 78 | 24 | 15 |
| 17 | 9 | 65 | 15 | | | 23 | 21 | 17 | 78 | 24 | 14 |
| 20 | 1 | UNL | 20 | | | 19 | 17 | 11 | 71 | 21 | 12 |
| 23 | 8 | 33 | 20 | | | 18 | 15 | 7 | 62 | 20 | 10 |
| **FEB 9th** | | | | | | | | | | | |
| 02 | 7 | UNL | 20 | | | 15 | 12 | 5 | 64 | 21 | 7 |
| 05 | 10 | UNL | 20 | | | 16 | 13 | 4 | 59 | 21 | 8 |
| 08 | 10 | 95 | 20 | | | 18 | 15 | 5 | 57 | 20 | 10 |
| 11 | 10 | 250 | 50 | | | 31 | 24 | 8 | 38 | 18 | 17 |
| 14 | 10 | 65 | 50 | | | 36 | 28 | 13 | 39 | 23 | 14 |
| 17 | 10 | 20 | 2 | 4 | S | 29 | 27 | 24 | 82 | 20 | 16 |
| 20 | 10 | 14 | 2 | 8 | SBS | 30 | 29 | 27 | 89 | 21 | 20 |
| 23 | 10 | 8 | 20 | | SW | 31 | 30 | 29 | 92 | 22 | 11 |
| **FEB 10th** | | | | | | | | | | | |
| 02 | 10 | 16 | 15 | | SW | 32 | 31 | 30 | 92 | 24 | 14 |
| 05 | 10 | 15 | 15 | | | 31 | 30 | 29 | 92 | 24 | 10 |
| 08 | 10 | 20 | 3 | | S | 29 | 29 | 28 | 96 | 00 | 0 |
| 11 | 10 | 5 | 1 | | S | 31 | 30 | 29 | 92 | 03 | 5 |
| 14 | 10 | 7 | 1 | | SF | 32 | 31 | 30 | 92 | 03 | 6 |
| 17 | 10 | 40 | 1 | 8 | SF | 31 | 31 | 30 | 96 | 05 | 3 |
| 20 | 10 | 3 | 6 | | F | 26 | 26 | 25 | 96 | 07 | 3 |
| 23 | 10 | 12 | 2 | | SF | 28 | 28 | 27 | 96 | 31 | 6 |
| **FEB 11th** | | | | | | | | | | | |
| 02 | 10 | 24 | 1 | | SF | 27 | 27 | 26 | 96 | 03 | 5 |
| 05 | 10 | 14 | 1 | | SF | 26 | 25 | 24 | 92 | 32 | 6 |
| 08 | 10 | 41 | 15 | | S | 23 | 22 | 21 | 92 | 25 | 5 |
| 11 | 10 | 70 | 20 | | | 26 | 24 | 21 | 81 | 26 | 9 |
| 14 | 7 | 70 | 30 | | | 28 | 27 | 24 | 85 | 23 | 16 |
| 17 | 1 | UNL | 50 | | | 24 | 22 | 19 | 81 | 25 | 13 |
| 20 | 1 | UNL | 15 | | | 21 | 20 | 18 | 88 | 23 | 11 |
| 23 | 3 | UNL | 15 | | | 17 | 16 | 14 | 88 | 22 | 9 |
| **FEB 12th** | | | | | | | | | | | |
| 02 | 5 | UNL | 15 | | | 17 | 16 | 14 | 88 | 23 | 10 |
| 05 | 5 | UNL | 20 | | | 3 | 2 | 0 | 87 | 24 | 7 |
| 08 | 10 | 16 | 15 | | | 19 | 18 | 15 | 84 | 22 | 8 |
| 11 | 10 | 27 | 20 | | | 20 | 18 | 15 | 81 | 33 | 6 |
| 14 | 6 | UNL | 40 | | | 30 | 26 | 17 | 58 | 04 | 4 |
| 17 | 6 | 250 | 40 | | | 31 | 26 | 17 | 56 | 12 | 3 |
| 20 | 3 | UNL | 15 | | | 21 | 19 | 14 | 74 | 00 | 0 |
| 23 | 1 | UNL | 20 | | | 20 | 18 | 12 | 71 | 01 | 6 |
| **FEB 13th** | | | | | | | | | | | |
| 02 | 0 | UNL | 20 | | | 13 | 12 | 9 | 84 | 33 | 9 |
| 05 | 0 | UNL | 20 | | | 5 | 4 | 2 | 87 | 35 | 8 |
| 08 | 4 | UNL | 20 | | | 5 | 4 | 2 | 87 | 36 | 7 |
| 11 | 6 | UNL | 25 | | | 28 | 24 | 17 | 63 | 08 | 4 |
| 14 | 10 | UNL | 40 | | | 38 | 30 | 17 | 43 | 18 | 16 |
| 17 | 10 | 250 | 40 | | | 35 | 28 | 16 | 46 | 19 | 18 |
| 20 | 10 | UNL | 15 | | | 35 | 27 | 12 | 39 | 19 | 20 |
| 23 | 6 | 250 | 20 | | | 33 | 26 | 13 | 44 | 19 | 16 |
| **FEB 14th** | | | | | | | | | | | |
| 02 | 4 | UNL | 20 | | | 28 | 23 | 14 | 56 | 22 | 11 |
| 05 | 5 | UNL | 20 | | | 26 | 22 | 14 | 60 | 22 | 11 |
| 08 | 0 | UNL | 30 | | | 26 | 22 | 12 | 55 | 20 | 9 |
| 11 | 3 | UNL | 80 | | | 39 | 31 | 18 | 43 | 22 | 9 |
| 14 | 4 | UNL | 100+ | | | 42 | 34 | 23 | 47 | 24 | 9 |
| 17 | 6 | UNL | 100+ | | | 40 | 33 | 21 | 47 | 24 | 4 |
| 20 | 8 | UNL | 20 | | | 31 | 27 | 20 | 64 | 21 | 4 |
| 23 | 0 | UNL | 20 | | | 23 | 21 | 18 | 81 | 31 | 5 |
| **FEB 15th** | | | | | | | | | | | |
| 02 | 0 | UNL | 20 | | | 15 | 14 | 13 | 92 | 06 | 5 |
| 05 | 0 | UNL | 20 | | | 11 | 10 | 8 | 88 | 08 | 4 |
| 08 | 10 | UNL | 40 | | | 9 | 9 | 7 | 92 | 11 | 4 |
| 11 | 10 | UNL | 15 | | | 30 | 25 | 17 | 58 | 07 | 7 |
| 14 | 10 | UNL | 30 | | | 42 | 34 | 23 | 47 | 08 | 7 |
| 17 | 10 | 250 | 20 | | | 44 | 34 | 20 | 38 | 23 | 4 |
| 20 | 10 | 140 | 20 | | | 42 | 33 | 19 | 40 | 19 | 13 |
| 23 | 9 | 240 | 20 | | | 39 | 31 | 19 | 45 | 20 | 9 |
| **FEB 16th** | | | | | | | | | | | |
| 02 | 10 | 120 | 20 | | | 28 | 25 | 20 | 72 | 33 | 4 |
| 05 | 10 | 95 | 20 | | | 28 | 26 | 22 | 78 | 05 | 5 |
| 08 | 10 | 220 | 50 | | | 25 | 24 | 21 | 85 | 03 | 6 |
| 11 | 10 | UNL | 40 | | | 43 | 35 | 24 | 47 | 01 | 6 |
| 14 | 10 | UNL | 40 | | | 55 | 40 | 19 | 24 | 13 | 8 |
| 17 | 10 | UNL | 30 | | | 53 | 38 | 17 | 24 | 19 | 10 |
| 20 | 10 | UNL | 20 | | | 47 | 35 | 15 | 28 | 15 | 6 |
| 23 | 10 | UNL | 20 | | | 46 | 35 | 18 | 33 | 25 | 7 |
| **FEB 17th** | | | | | | | | | | | |
| 02 | 10 | UNL | 20 | | | 46 | 35 | 19 | 34 | 17 | 17 |
| 05 | 10 | 240 | 20 | | | 46 | 36 | 21 | 37 | 16 | 14 |
| 08 | 10 | 85 | 70 | | | 48 | 39 | 27 | 44 | 17 | 20 |
| 11 | 10 | 85 | 50 | | | 51 | 41 | 28 | 41 | 19 | 16 |
| 14 | 10 | 55 | 40 | | | 44 | 37 | 29 | 56 | 17 | 22 |
| 17 | 10 | 95 | 20 | | | 48 | 39 | 28 | 46 | 18 | 19 |
| 20 | 10 | 50 | 20 | | TRW | 44 | 38 | 31 | 60 | 17 | 20 |
| 23 | 10 | 7 | 1 | | SW | 33 | 33 | 32 | 96 | 19 | 14 |
| **FEB 18th** | | | | | | | | | | | |
| 02 | 10 | 90 | 15 | | | 32 | 31 | 29 | 89 | 19 | 9 |
| 05 | 10 | 90 | 20 | | | 33 | 31 | 27 | 79 | 22 | 14 |
| 08 | 10 | 50 | 30 | | | 32 | 30 | 27 | 82 | 23 | 15 |
| 11 | 10 | 38 | 25 | | | 34 | 32 | 29 | 82 | 24 | 13 |
| 14 | 9 | 43 | 40 | | | 35 | 33 | 29 | 79 | 24 | 15 |
| 17 | 4 | UNL | 60 | | | 34 | 32 | 28 | 79 | 22 | 14 |
| 20 | 7 | UNL | 20 | | | 29 | 28 | 25 | 85 | 22 | 10 |
| 23 | 10 | 21 | 20 | | | 30 | 28 | 25 | 82 | 21 | 17 |

## MAXIMUM SHORT DURATION PRECIPITATION

| TIME PERIOD (MINUTES) | 5 | 10 | 15 | 20 | 30 | 45 | 60 | 80 | 100 | 120 | 150 | 180 |
|---|---|---|---|---|---|---|---|---|---|---|---|---|
| PRECIPITATION (INCHES) | 0.09 | 0.10 | 0.10 | 0.10 | 0.10 | 0.11 | 0.12 | 0.12 | 0.13 | 0.16 | 0.16 | 0.25 |
| ENDED: DATE | 17 | 17 | 17 | 17 | 17 | 17 | 17 | 17 | 17 | 17 | 17 | 17 |
| ENDED: TIME | 2254 | 2254 | 2254 | 2254 | 2254 | 2254 | 2259 | 2254 | 2254 | 2259 | 2254 | 2259 |

THE PRECIPITATION AMOUNTS FOR THE INDICATED TIME INTERVALS MAY OCCUR AT ANY TIME DURING THE MONTH. THE TIME INDICATED IS THE ENDING TIME OF THE INTERVAL. DATE AND TIME ARE NOT ENTERED FOR TRACE AMOUNTS.

# OBSERVATIONS AT 3-HOUR INTERVALS

FEB 1994 POCATELLO, ID 24156

| HOUR L.S.T. | SKY COVER (TENTHS) | CEILING IN HUNDREDS OF FEET | VISIBILITY WHOLE MILES | VISIBILITY 16THS MILE | WEATHER | TEMPERATURE AIR °F | TEMPERATURE WET BULB °F | TEMPERATURE DEW POINT °F | REL HUMIDITY % | WIND DIRECTION | WIND SPEED (KNOTS) |
|---|---|---|---|---|---|---|---|---|---|---|---|
| **FEB 19th** | | | | | | | | | | | |
| 02 | 10 | 40 | 10 | | S | 29 | 28 | 25 | 85 | 24 | 13 |
| 05 | 10 | 45 | 7 | | S | 27 | 26 | 24 | 89 | 22 | 9 |
| 08 | 10 | 45 | 4 | | S | 27 | 26 | 23 | 85 | 25 | 9 |
| 11 | 9 | 65 | 40 | | | 29 | 27 | 24 | 82 | 24 | 10 |
| 14 | 3 | UNL | 80 | | | 34 | 30 | 25 | 70 | 24 | 9 |
| 17 | 1 | UNL | 70 | | | 35 | 29 | 20 | 54 | 22 | 5 |
| 20 | 2 | UNL | 20 | | | 27 | 24 | 18 | 69 | 17 | 7 |
| 23 | 1 | UNL | 20 | | | 20 | 19 | 16 | 84 | 21 | 4 |
| **FEB 20th** | | | | | | | | | | | |
| | 3 | UNL | 20 | | | 26 | 24 | 19 | 75 | 20 | 10 |
| | 2 | UNL | 20 | | | 20 | 19 | 16 | 84 | 34 | 7 |
| | 6 | UNL | 30 | | | 27 | 24 | 18 | 69 | 06 | 6 |
| | 10 | 250 | 40 | | | 35 | 29 | 19 | 52 | 04 | 3 |
| | 10 | 60 | 15 | | | 35 | 30 | 22 | 59 | 11 | 10 |
| | 10 | 55 | 30 | | | 35 | 30 | 21 | 57 | 17 | 12 |
| | 10 | 41 | 20 | | | 32 | 29 | 24 | 72 | 12 | 4 |
| | 10 | 40 | 2 | | SW | 30 | 29 | 27 | 89 | 22 | 6 |
| **FEB 21st** | | | | | | | | | | | |
| | 10 | 15 | 1 | 8 | S | 30 | 29 | 28 | 92 | 21 | 12 |
| | 10 | 45 | 15 | | | 30 | 28 | 25 | 82 | 21 | 8 |
| | 10 | 85 | 30 | | | 28 | 26 | 22 | 78 | 19 | 8 |
| | 10 | 50 | 40 | | SW | 34 | 30 | 23 | 64 | 20 | 11 |
| | 7 | 43 | 50 | | | 35 | 30 | 21 | 57 | 25 | 8 |
| | 0 | UNL | 60 | | | 37 | 30 | 19 | 48 | 16 | 5 |
| | 3 | UNL | 20 | | | 28 | 25 | 20 | 72 | 22 | 6 |
| | 8 | UNL | 20 | | | 29 | 25 | 18 | 64 | 19 | 10 |
| **FEB 22nd** | | | | | | | | | | | |
| 02 | 10 | 50 | 20 | | | 29 | 26 | 21 | 72 | 29 | 3 |
| 05 | 10 | 12 | 2 | 8 | SW | 27 | 26 | 25 | 92 | 23 | 11 |
| 08 | 10 | 15 | 15 | | | 24 | 23 | 20 | 85 | 24 | 12 |
| 11 | 10 | 250 | 20 | | | 27 | 24 | 19 | 72 | 25 | 20 |
| 14 | 10 | 48 | 2 | 8 | SW | 30 | 28 | 24 | 78 | 25 | 14 |
| 17 | 6 | 80 | 70 | | | 32 | 28 | 22 | 67 | 24 | 14 |
| 20 | 7 | 250 | 20 | | | 24 | 23 | 20 | 85 | 20 | 10 |
| 23 | 2 | UNL | 20 | | | 26 | 23 | 17 | 69 | 21 | 14 |
| **FEB 23rd** | | | | | | | | | | | |
| | 10 | UNL | 20 | | | 27 | 24 | 18 | 69 | 21 | 10 |
| | 10 | 100 | 20 | | | 27 | 24 | 17 | 66 | 20 | 11 |
| | 10 | 80 | 30 | | | 27 | 23 | 15 | 61 | 18 | 12 |
| | 10 | 210 | 45 | | | 30 | 25 | 17 | 58 | 18 | 20 |
| | 10 | 100 | 50 | | | 35 | 28 | 17 | 48 | 18 | 18 |
| | 10 | 38 | 20 | | | 34 | 28 | 18 | 52 | 19 | 18 |
| | 10 | 25 | 1 | 8 | SW | 30 | 28 | 25 | 82 | 19 | 18 |
| | 10 | 15 | 1 | 8 | SW | 31 | 30 | 29 | 92 | 22 | 15 |
| **FEB 24th** | | | | | | | | | | | |
| | 10 | 29 | 20 | | | 37 | 34 | 30 | 76 | 22 | 21 |
| | 6 | 55 | 20 | | | 36 | 33 | 28 | 73 | 23 | 12 |
| | 6 | 120 | 30 | | | 37 | 33 | 28 | 70 | 24 | 16 |
| | 10 | 21 | 45 | | | 40 | 36 | 31 | 70 | 25 | 18 |
| | 8 | 31 | 60 | | | 43 | 38 | 31 | 63 | 24 | 23 |
| | 10 | 35 | 40 | | | 42 | 37 | 31 | 65 | 24 | 20 |
| | 8 | 200 | 20 | | | 41 | 37 | 32 | 70 | 24 | 20 |
| | 10 | 200 | 20 | | | 39 | 35 | 30 | 70 | 24 | 14 |
| **FEB 25th** | | | | | | | | | | | |
| 02 | 10 | 17 | 20 | | | 38 | 35 | 32 | 79 | 23 | 10 |
| 05 | 10 | 15 | 10 | | R | 38 | 35 | 31 | 76 | 25 | 8 |
| 08 | 10 | 14 | 40 | | | 37 | 34 | 31 | 79 | 21 | 9 |
| 11 | 10 | 130 | 50 | | | 41 | 37 | 32 | 70 | 02 | 5 |
| 14 | 10 | UNL | 60 | | | 52 | 42 | 29 | 41 | 31 | 4 |
| 17 | 9 | 110 | 40 | | | 53 | 43 | 31 | 43 | 25 | 5 |
| 20 | 10 | 85 | 20 | | | 36 | 34 | 31 | 82 | 01 | 6 |
| 23 | 10 | 55 | 20 | | | 34 | 33 | 32 | 92 | 28 | 4 |
| **FEB 26th** | | | | | | | | | | | |
| | 10 | 50 | 10 | | | 33 | 33 | 32 | 96 | 16 | 3 |
| | 10 | 65 | 20 | | R | 33 | 33 | 32 | 96 | 18 | 4 |
| | 10 | 42 | 3 | | RFK | 36 | 34 | 32 | 85 | 17 | 3 |
| | 10 | 23 | 2 | 8 | RFK | 38 | 35 | 32 | 79 | 32 | 3 |
| | 10 | 18 | 6 | | RF | 42 | 38 | 32 | 68 | 19 | 6 |
| | 10 | 55 | 15 | | | 43 | 41 | 38 | 83 | 19 | 9 |
| | 10 | 19 | 10 | | R | 39 | 39 | 38 | 96 | 26 | 4 |
| | 10 | 20 | 15 | | R | 38 | 38 | 37 | 96 | 21 | 6 |
| **FEB 27th** | | | | | | | | | | | |
| | 10 | 28 | 20 | | | 38 | 37 | 36 | 93 | 20 | 6 |
| | 10 | 60 | 20 | | | 38 | 37 | 35 | 89 | 00 | 0 |
| | 10 | 33 | 7 | | R | 38 | 37 | 35 | 89 | 23 | 11 |
| | 10 | 7 | 2 | | S | 35 | 34 | 34 | 96 | 23 | 9 |
| | 10 | 6 | 7 | | R | 39 | 38 | 36 | 89 | 25 | 12 |
| | 10 | 16 | 40 | | R | 41 | 40 | 38 | 89 | 24 | 6 |
| | 9 | 24 | 20 | | | 39 | 38 | 36 | 89 | 24 | 8 |
| | 10 | 55 | 20 | | | 37 | 36 | 34 | 89 | 23 | 11 |
| **FEB 28th** | | | | | | | | | | | |
| 02 | 10 | 11 | 20 | | | 36 | 34 | 32 | 85 | 22 | 12 |
| 05 | 10 | 13 | 20 | | | 34 | 33 | 32 | 92 | 23 | 7 |
| 08 | 10 | 13 | 20 | | | 34 | 33 | 31 | 89 | 23 | 10 |
| 11 | 9 | 36 | 70 | | | 37 | 34 | 31 | 79 | 27 | 11 |
| 14 | 10 | 75 | 70 | | | 45 | 38 | 30 | 56 | 25 | 14 |
| 17 | 10 | 90 | 40 | | | 46 | 39 | 29 | 52 | 26 | 10 |
| 20 | 8 | 95 | 20 | | | 38 | 36 | 33 | 82 | 21 | 8 |
| 23 | 5 | UNL | 20 | | | 39 | 36 | 33 | 79 | 20 | 9 |

## WEATHER CODES

| | | | | | |
|---|---|---|---|---|---|
| * | TORNADO | SW | SNOW SHOWERS | GF | GROUND FOG |
| T | THUNDERSTORM | SG | SNOW GRAINS | BD | BLOWING DUST |
| Q | SQUALL | SP | SNOW PELLETS | BN | BLOWING SAND |
| R | RAIN | IC | ICE CRYSTALS | BS | BLOWING SNOW |
| RW | RAIN SHOWERS | IP | ICE PELLETS | BY | BLOWING SPRAY |
| ZR | FREEZING RAIN | IPW | ICE PELLET SHOWERS | K | SMOKE |
| L | ORIZZLE | A | HAIL | H | HAZE |
| ZL | FREEZING ORIZZLE | F | FOG | O | DUST |
| S | SNOW | IF | ICE FOG | | |

CEILING: UNL INDICATES UNLIMITED
WIND DIRECTION: DIRECTIONS ARE THOSE FROM WHICH THE WIND BLOWS, INDICATED IN TENS OF DEGREES FROM TRUE NORTH: I.E., 09 FOR EAST, 18 FOR SOUTH 27 FOR WEST. AN ENTRY OF 00 INDICATES CALM.
SPEED: THE OBSERVED AVERAGE ONE-MINUTE VALUE, EXP RESSED IN KNOTS (MPH=KNOTS X 1.15).

## SUMMARY BY HOURS

| HOUR L.S.T. | AVERAGES SKY COVER (TENTHS) | AVERAGES STATION PRESSURE (INCHES) | AVERAGES TEMPERATURE AIR TEMP °F | AVERAGES TEMPERATURE WET BULB °F | AVERAGES TEMPERATURE DEW POINT °F | AVERAGES REL HUMIDITY % | AVERAGES WIND SPEED (MPH) | RESULTANT WIND DIRECTION | RESULTANT WIND SPEED (MPH) |
|---|---|---|---|---|---|---|---|---|---|
| 02 | 7 | 25.440 | 26 | 23 | 20 | 80 | 10.0 | 21 | 7.4 |
| 05 | 7 | 25.440 | 23 | 21 | 18 | 82 | 8.3 | 22 | 5.0 |
| 08 | 8 | 25.445 | 23 | 21 | 17 | 80 | 8.8 | 21 | 5.1 |
| 11 | 8 | 25.460 | 32 | 28 | 21 | 68 | 10.2 | 23 | 4.8 |
| 14 | 8 | 25.430 | 37 | 31 | 22 | 57 | 12.2 | 22 | 7.7 |
| 17 | 7 | 25.410 | 37 | 31 | 22 | 58 | 11.1 | 21 | 9.5 |
| 20 | 7 | 25.420 | 31 | 27 | 22 | 71 | 11.6 | 20 | 9.8 |
| 23 | 6 | 25.430 | 29 | 26 | 21 | 75 | 11.0 | 22 | 8.9 |

P&D ASHEVILLE N.C. 288 04/25/94 PM

NATIONAL CLIMATIC DATA CENTER
FEDERAL BUILDING
37 BATTERY PARK AVE
ASHEVILLE, NORTH CAROLINA 28801-2733

OFFICIAL BUSINESS
PENALTY FOR PRIVATE USE $300

FIRST CLASS
POSTAGE AND FEES PAID
NOAA
PERMIT G-19

LCD-10-24156-PD-9509

33765
J R SIMPLOT COMPANY
ATTN: J F COCHRANE - PO #35724
PO BOX 912
POCATELLO ID 83204

HOURLY PRECIPITATION (WATER EQUIVALENT IN INCHES)

FEB 1994 24156
POCATELLO, ID
USCOMM - NOAA - ASHEVILLE, NC 125

| DATE | A.M. HOUR ENDING AT | | | | | | | | | | | | P.M. HOUR ENDING AT | | | | | | | | | | | | DATE |
|---|---|---|---|---|---|---|---|---|---|---|---|---|---|---|---|---|---|---|---|---|---|---|---|---|---|
| | 1 | 2 | 3 | 4 | 5 | 6 | 7 | 8 | 9 | 10 | 11 | 12 | 1 | 2 | 3 | 4 | 5 | 6 | 7 | 8 | 9 | 10 | 11 | 12 | |
| 01 | | | | | | | | | | | | | | | | | | | | | | | | | 01 |
| 02 | | | | | | | | | | | | | | | | | | | | | | | | | 02 |
| 03 | | | | | | | | | | | | | | | | | | | | | | | | | 03 |
| 04 | | | | | | | | | | | | | | | | | | | | | | | | | 04 |
| 05 | | | | | | | | | | | | | | | | | | | | | | | | | 05 |
| 06 | | | | | | | | | | | | | | | | | | | | | | | T | | 06 |
| 07 | | T | T | | T | T | T | T | T | T | T | T | | | | | T | T | T | T | 0.01 | | | | 07 |
| 08 | T | | | | | T | 0.01 | 0.02 | T | T | T | T | T | 0.01 | T | T | T | T | T | T | | | | | | 08 |
| 09 | | | | | | | | | | | | | | | T | T | 0.01 | 0.01 | 0.01 | 0.01 | T | T | T | 0.01 | 09 |
| 10 | T | 0.01 | T | | | T | T | 0.01 | 0.02 | 0.01 | 0.02 | 0.04 | 0.04 | 0.02 | 0.02 | T | T | 0.02 | T | | T | T | 0.03 | T | 10 |
| 11 | T | 0.03 | 0.05 | 0.02 | 0.03 | 0.03 | 0.04 | 0.01 | T | | | | | | | | | | | | | | | | 11 |
| 12 | | | | | | | | | | | | | | | | | | | | | | | | | 12 |
| 13 | | | | | | | | | | | | | | | | | | | | | | | | | 13 |
| 14 | | | | | | | | | | | | | | | | | | | | | | | | | 14 |
| 15 | | | | | | | | | | | | | | | | | | | | | | | | | 15 |
| 16 | | | | | | | | | | | | | | | | | | | | | | | | | 16 |
| 17 | | | | | | | | | | | | | T | T | T | T | | | T | T | 0.09 | 0.04 | 0.12 | T | 17 |
| 18 | 0.01 | T | | | | | | | T | T | | | T | | | | | | | | | | | | 18 |
| 19 | T | T | T | T | 0.01 | T | 0.01 | T | T | | | | | | | | | | | | | | | | 19 |
| 20 | | | | | | | | | | | | | | | | | | | | | T | T | 0.01 | 0.02 | 20 |
| 21 | 0.05 | 0.04 | T | | | T | T | | | | T | T | T | | | | | | | | | | | | 21 |
| 22 | T | T | T | T | 0.01 | 0.01 | T | T | | | | T | T | 0.01 | T | T | | | | | | | | | 22 |
| 23 | | | | | | | | | | | | | | | | | T | T | T | T | T | 0.06 | 0.04 | 0.02 | 23 |
| 24 | 0.01 | | | | | | | | | | | | | | | | | | | | | | | | 24 |
| 25 | | | | | 0.01 | 0.01 | 0.01 | T | | | | | | | | | | | | | T | | | | 25 |
| 26 | | | T | T | T | T | T | 0.01 | 0.02 | 0.01 | 0.01 | 0.02 | 0.03 | 0.02 | 0.01 | 0.03 | T | T | 0.01 | 0.01 | 0.01 | 0.01 | 0.01 | | 26 |
| 27 | | | | T | T | | | 0.01 | T | 0.02 | 0.02 | 0.04 | 0.02 | T | T | | T | T | T | | T | T | T | T | 27 |
| 28 | T | | | | | | | | | | | | | | | | | | | | | | | | 28 |

MAR 1994
POCATELLO, ID
NAT'L WEA SER OFC
20369 THUNDERBOLT STREET-C

INQUIRIES/COMMENTS CALL
(704) 271-4800 VOICE
271-4010 TDD/271-4876 FAX

MUNICIPAL AIRPORT

ISSN # 0198-1811

# LOCAL CLIMATOLOGICAL DATA

## MONTHLY SUMMARY

LATITUDE 42 55'N LONGITUDE 112 36'W ELEVATION (GROUND) 4454 FEET TIME ZONE MOUNTAIN 2415

MAR 1994
POCATELLO, ID

| DATE | TEMPERATURE F | | | | | DEGREE DAYS BASE 65 F | | WEATHER TYPES | SNOW/ICE ON GRD AT 0500 | PRECIPITATION (INCHES) | | AVERAGE STATION PRESSURE | WIND (M.P.H.) | | | | | | | SUNSHINE | | SKY COVER TENTHS | |
|---|---|---|---|---|---|---|---|---|---|---|---|---|---|---|---|---|---|---|---|---|---|---|---|
| | MAXIMUM | MINIMUM | AVERAGE | DEPARTURE FROM NORMAL | AVERAGE DEW POINT | HEATING | COOLING | 1 FOG 2 HEAVY FOG 3 THUNDERSTORMS 4 ICE PELLETS 5 HAIL 6 GLAZE 7 DUSTSTORM 8 SMOKE, HAZE 9 BLOWING SNOW | (IN.) | WATER EQUIVALENT | SNOW ICE PELLETS | (INCHES OF Hg) ELEV. 4478 (FT.MSL) | RESULTANT DIR | RESULTANT SPEED | AVERAGE SPEED | PEAK GUST SPEED | PEAK GUST DIR | FASTEST 1-MIN SPEED | FASTEST 1-MIN DIR | MINUTES | PERCENT POSSIBLE | SUNRISE TO SUNSET | MIDNIGHT TO MIDNIGHT |
| 1 | 2 | 3 | 4 | 5 | 6 | 7A | 7B | 8 | 9 | 10 | 11 | 12 | 13 | 14 | 15 | 16 | 17 | 18 | 19 | 20 | 21 | 22 | 23 |
| 01 | 58 | 29 | 44 | 11 | 34 | 21 | 0 | | 0 | 0.00 | 0.0 | 25.760 | 23 | 3.7 | 6.0 | 18 | W | 14 | 28 | 610 | 91 | 5 | 5 |
| 02 | 62 | 27 | 45 | 12 | 33 | 20 | 0 | 8 | 0 | 0.00 | 0.0 | 25.710 | 13 | 1.3 | 6.0 | 25 | S | 14 | 18 | 672 | 100 | 5 | 3 |
| 03 | 65 | 29 | 47 | 14 | 34 | 18 | 0 | | 0 | 0.00 | 0.0 | 25.600 | 29 | 3.3 | 6.3 | 15 | N | 10 | 30 | 663 | 98 | 7 | 5 |
| 04 | 57 | 30 | 44 | 11 | 33 | 21 | 0 | | 0 | 0.00 | 0.0 | 25.570 | 24 | 8.9 | 10.2 | 25 | W | 18 | 25 | 593 | 87 | 9 | 8 |
| 05 | 48 | 32 | 40 | 7 | 33 | 25 | 0 | | 0 | T | 0.0 | 25.480 | 25 | 3.1 | 5.4 | 15 | NW | 12 | 31 | 136 | 20 | 10 | 10 |
| 06 | 50 | 29 | 40 | 6 | 27 | 25 | 0 | | 0 | 0.00 | 0.0 | 25.600 | 23 | 7.2 | 8.2 | 17 | W | 13 | 27 | 667 | 97 | 0 | 2 |
| 07 | 49 | 25 | 37 | 3 | 21 | 28 | 0 | | 0 | 0.00 | 0.0 | 25.610 | 24 | 4.8 | 6.7 | 18 | W | 14 | 26 | 690 | 100 | 1 | 2 |
| 08 | 51 | 25 | 38 | 4 | 21 | 27 | 0 | | 0 | 0.00 | 0.0 | 25.555 | 24 | 7.0 | 8.1 | 21 | W | 13 | 28 | 580 | 84 | 4 | 4 |
| 09 | 54 | 22 | 38 | 4 | 19 | 27 | 0 | | 0 | 0.00 | 0.0 | 25.590 | 24 | 4.0 | 6.4 | 23 | S | 16 | 19 | 695 | 100 | 0 | 0 |
| 10 | 56 | 26 | 41 | 6 | 29 | 24 | 0 | | 0 | 0.01 | 0.0 | 25.470 | 28 | 4.8 | 8.7 | 31 | SW | 16 | 26 | 502 | 72 | 10 | 7 |
| 11 | 54 | 29 | 42 | 7 | 29 | 23 | 0 | | 0 | 0.00 | 0.0 | 25.545 | 01 | 5.5 | 8.9 | 29 | N | 18 | 36 | 417 | 59 | 10 | 8 |
| 12 | 56 | 21 | 39 | 4 | 21 | 26 | 0 | | 0 | 0.00 | 0.0 | 25.895 | 23 | 3.8 | 7.4 | 17 | SW | 12 | 30 | 704 | 100 | 2 | 1 |
| 13 | 62 | 25 | 44 | 9 | 21 | 21 | 0 | | 0 | 0.00 | 0.0 | 25.840 | 23 | 5.2 | 7.4 | 18 | W | 14 | 27 | 654 | 93 | 9 | 6 |
| 14 | 67 | 33 | 50 | 14 | 18 | 15 | 0 | | 0 | 0.00 | 0.0 | 25.600 | 23 | 9.8 | 11.2 | 25 | W | 18 | 24 | 697 | 98 | 7 | 8 |
| 15 | 75* | 30 | 53* | 17 | 20 | 12 | 0 | | 0 | 0.00 | 0.0 | 25.475 | 18 | 8.6 | 13.9 | 33 | S | 21 | 18 | 606 | 85 | 8 | 7 |
| 16 | 65 | 39 | 52 | 16 | 24 | 13 | 0 | | 0 | 0.00 | 0.0 | 25.300 | 22 | 8.8 | 12.1 | 36 | SW | 25 | 25 | 153 | 21 | 10 | 10 |
| 17 | 53 | 32 | 43 | 7 | 23 | 22 | 0 | | 0 | 0.00 | 0.0 | 25.410 | 23 | 15.2 | 16.0 | 39 | SW | 25 | 25 | 664 | 92 | 3 | 3 |
| 18 | 59 | 27 | 43 | 6 | 28 | 22 | 0 | | 0 | 0.03 | 0.0 | 25.200 | 20 | 10.6 | 15.3 | 38 | SW | 28 | 18 | 368 | 51 | 9 | 6 |
| 19 | 49 | 27 | 38 | 1 | 19 | 27 | 0 | | 0 | 0.00 | 0.0 | 25.260 | 23 | 16.6 | 17.2 | 31 | SW | 23 | 23 | 363 | 50 | 8 | 6 |
| 20 | 51 | 16 | 34 | -3 | 10 | 31 | 0 | | 0 | 0.00 | 0.0 | 25.470 | 20 | 12.2 | 13.5 | 38 | S | 26 | 18 | 712 | 98 | 8+ | 2 |
| 21 | 58 | 32 | 45 | 7 | 21 | 20 | 0 | | 0 | 0.00 | 0.0 | 25.320 | 21 | 13.4 | 17.4 | 38 | W | 28 | 26 | 519 | 71 | 10 | 8 |
| 22 | 39 | 28 | 34 | -4 | 25 | 31 | 0 | 1 | 0 | 0.07 | 0.7 | 25.110 | 24 | 11.4 | 12.9 | 37 | SW | 28 | 24 | 0 | 0 | 10 | 10 |
| 23 | 39 | 23 | 31* | -7 | 17 | 34 | 0 | | T | 0.00 | 0.0 | 25.360 | 22 | 12.6 | 14.6 | 40 | SW | 30 | 23 | 506 | 69 | 5 | 4 |
| 24 | 52 | 14* | 33 | -5 | 15 | 32 | 0 | | 0 | 0.00 | 0.0 | 25.400 | 06 | 2.8 | 5.8 | 15 | SE | 10 | 20 | 642 | 87 | 9 | 6 |
| 25 | 55 | 19 | 37 | -2 | 18 | 28 | 0 | | 0 | 0.00 | 0.0 | 25.375 | 01 | 1.6 | 4.8 | 18 | E | 12 | 30 | 716 | 96 | 2 | 1 |
| 26 | 56 | 20 | 38 | -1 | 16 | 27 | 0 | | 0 | 0.00 | 0.0 | 25.470 | 04 | 5.6 | 11.5 | 29 | NE | 20 | 01 | 542 | 73 | 3 | 2 |
| 27 | 51 | 22 | 37 | -2 | 16 | 28 | 0 | | 0 | 0.00 | 0.0 | 25.630 | 28 | 2.4 | 8.5 | 22 | NE | 14 | 25 | 727 | 97 | 2 | 3 |
| 28 | 67 | 31 | 49 | 9 | 20 | 16 | 0 | | 0 | 0.00 | 0.0 | 25.540 | 25 | 3.4 | 14.2 | 37 | NE | 23 | 04 | 711 | 95 | 4 | 5 |
| 29 | 57 | 21 | 39 | -1 | 11 | 26 | 0 | | 0 | 0.00 | 0.0 | 25.720 | 03 | 6.5 | 7.9 | 30 | NE | 18 | 02 | 754 | 100 | 0 | 1 |
| 30 | 67 | 19 | 43 | 3 | 13 | 22 | 0 | | 0 | 0.00 | 0.0 | 25.690 | 02 | 3.1 | 5.0 | 20 | N | 13 | 01 | 708 | 94 | 1 | 1 |
| 31 | 65 | 21 | 43 | 3 | 23 | 22 | 0 | | 0 | 0.00 | 0.0 | 25.560 | 28 | 6.4 | 8.6 | 28 | SW | 20 | 24 | 648 | 85 | 7 | 6 |
| SUM | SUM | | | | | TOTAL | TOTAL | NUMBER OF DAYS | | TOTAL | TOTAL | FOR THE MONTH : | | | | | | | | TOTAL | % | SUM | SUM |
| 1747 | 803 | | | | | 734 | 0 | | | 0.11 | 0.7 | 25.520 | 23 | 4.9 | 9.9 | 40 | SW | 30 | 23 | 17619 | FOR | 174 | 150 |
| AVG. | AVG. | AVG. | DEP. | AVG. | | DEP. | DEP. | PRECIPITATION | | DEP. | | | | | | DATE:23 | | DATE:23 | | POSS | MONTH | AVG | AVG |
| 56.4 | 25.9 | 41.2 | 4.9 | 22.3 | | -156 | 0 | ≥ .01 INCH | 3 | -1.15 | | | | | | | | | | 22214 | 79 | 5.6 | 4.8 |

| NUMBER OF DAYS | | | | SEASON TO DATE | | SNOW, ICE PELLETS | | GREATEST IN 24 HOURS AND DATES | | | | GREATEST DEPTH ON GROUND OF SNOW, ICE PELLETS OR ICE AND DATE | |
|---|---|---|---|---|---|---|---|---|---|---|---|---|---|
| MAXIMUM TEMP. | | MINIMUM TEMP. | | TOTAL | TOTAL | ≥ 1.0 INCH | 0 | | | | | | |
| ≥ 90° | ≤ 32° | ≤ 32° | ≤ 0° | DEP. | DEP. | THUNDERSTORMS | 0 | PRECIPITATION | SNOW, ICE PELLETS | | | | |
| 0 | 0 | 29 | 0 | 6015 | 0 | HEAVY FOG | 0 | 0.07 | 22 | 0.7 | 22 | trace | 23+ |
| | | | | -84 | 0 | CLEAR 10 | PARTLY CLOUDY 9 | CLOUDY 12 | | | | | |

* EXTREME FOR THE MONTH - LAST OCCURRENCE IF MORE THAN ONE.
T TRACE AMOUNT.
+ ALSO ON EARLIER DATE(S).
HEAVY FOG: VISIBILITY 1/4 MILE OR LESS.
BLANK ENTRIES DENOTE MISSING OR UNREPORTED DATA.
TORNADO OBSERVED DAY 28.

DATA IN COLS 6 AND 12-15 ARE BASED ON 21 OR MORE OBSERVATIONS AT HOURLY INTERVALS. RESULTANT WIND IS THE VECTOR SUM OF WIND SPEEDS AND DIRECTIONS DIVIDED BY THE NUMBER OF OBSERVATIONS.
COLS 16 & 17 : PEAK GUST - HIGHEST INSTANTANEOUS WIND SPEED.
ONE OF TWO WINDS IS GIVEN UNDER COLS 18 & 19 : FASTEST MILE- HIGHEST RECORDED SPEED FOR WHICH A MILE OF WIND PASSES STATION (DIRECTIONIN COMPASS POINTS). FASTEST OBSERVED ONE MINUTE WIND - HIGHEST ONE MINUTE SPEED (DIRECTION IN TENS OF DEGREES).
ERRORS WILL BE CORRECTED IN SUBSEQUENT PUBLICATIONS.

I CERTIFY THAT THIS IS AN OFFICIAL PUBLICATION OF THE NATIONALOCEANIC AND ATMOSPHERIC ADMINISTRATION AND IS COMPILED FROM RECORDS ON FILE AT THE NATIONAL CLIMATICDATA CENTER.

Kenneth D Hadeen
DIRECTOR
NATIONAL CLIMATIC DATA CENTER

noaa NATIONAL OCEANIC AND ATMOSPHERIC ADMINISTRATION
NATIONAL ENVIRONMENTAL SATELLITE, DATA AND INFORMATION SERVICE
NATIONAL CLIMATIC DATA CENTER ASHEVILLE, NORTH CAROLINA

# OBSERVATIONS AT 3-HOUR INTERVALS

MAR 1994 POCATELLO, ID 24156

| HOUR L.S.T. | SKY COVER (TENTHS) | CEILING IN HUNDREDS OF FEET | VISIBILITY WHOLE MILES | VISIBILITY 16THS MILE | WEATHER | TEMPERATURE AIR °F | TEMPERATURE WET BULB °F | TEMPERATURE DEW POINT °F | REL HUMIDITY % | WIND DIRECTION | WIND SPEED (KNOTS) |
|---|---|---|---|---|---|---|---|---|---|---|---|
| **MAR 01** | | | | | | | | | | | |
| 02 | 10 | 110 | 20 | | | 37 | 35 | 33 | 86 | 22 | 3 |
| 05 | 10 | UNL | 20 | | | 32 | 32 | 31 | 96 | 31 | 4 |
| 08 | 10 | 250 | 30 | | | 31 | 31 | 30 | 96 | 09 | 6 |
| 11 | 9 | 120 | 45 | | | 50 | 43 | 35 | 57 | 20 | 10 |
| 14 | 2 | UNL | 80 | | | 55 | 46 | 36 | 49 | 24 | 7 |
| 17 | 3 | UNL | 80 | | | 57 | 46 | 35 | 44 | 21 | 6 |
| 20 | 0 | UNL | 20 | | | 42 | 39 | 35 | 76 | 21 | 6 |
| 23 | 0 | UNL | 20 | | | 37 | 36 | 34 | 89 | 34 | 6 |
| **MAR 02** | | | | | | | | | | | |
| 0 | UNL | 20 | | | | 30 | 29 | 28 | 92 | 03 | 6 |
| 0 | UNL | 7 | | | | 29 | 28 | 27 | 92 | 07 | 3 |
| 4 | UNL | 3 | | | X | 30 | 30 | 29 | 96 | 35 | 4 |
| 8 | UNL | 2 | | | X | 50 | 43 | 36 | 59 | 11 | 6 |
| 2 | UNL | 35 | | | | 61 | 49 | 38 | 43 | 02 | 4 |
| 8 | UNL | 50 | | | | 61 | 48 | 36 | 40 | 17 | 12 |
| 7 | UNL | 20 | | | | 51 | 43 | 35 | 55 | 17 | 11 |
| 1 | UNL | 20 | | | | 46 | 40 | 33 | 61 | 31 | 3 |
| **MAR 03** | | | | | | | | | | | |
| 0 | UNL | 20 | | | | 37 | 35 | 33 | 86 | 34 | 6 |
| 0 | UNL | 20 | | | | 31 | 30 | 29 | 92 | 25 | 3 |
| 4 | UNL | 30 | | | | 32 | 32 | 31 | 96 | 12 | 4 |
| 9 | UNL | 50 | | | | 58 | 47 | 35 | 42 | 00 | 0 |
| 9 | UNL | 70 | | | | 61 | 49 | 37 | 41 | 29 | 7 |
| 10 | UNL | 60 | | | | 61 | 47 | 33 | 35 | 28 | 7 |
| 10 | UNL | 20 | | | | 46 | 40 | 34 | 63 | 21 | 5 |
| 3 | UNL | 20 | | | | 41 | 38 | 34 | 76 | 22 | 5 |
| **MAR 04** | | | | | | | | | | | |
| 02 | 10 | UNL | 20 | | | 37 | 35 | 33 | 86 | 28 | 6 |
| 05 | 4 | UNL | 20 | | | 33 | 32 | 30 | 89 | 00 | 0 |
| 08 | 3 | UNL | 70 | | | 35 | 34 | 32 | 89 | 23 | 6 |
| 11 | 10 | 75 | 50 | | | 54 | 43 | 30 | 40 | 24 | 15 |
| 14 | 10 | 75 | 50 | | | 56 | 46 | 36 | 47 | 26 | 14 |
| 17 | 10 | 250 | 50 | | | 55 | 47 | 38 | 53 | 25 | 16 |
| 20 | 10 | 220 | 20 | | | 46 | 41 | 36 | 68 | 21 | 9 |
| 23 | 8 | UNL | 20 | | | 44 | 39 | 33 | 65 | 22 | 9 |
| **MAR 05** | | | | | | | | | | | |
| 10 | 110 | 20 | | | | 39 | 35 | 29 | 67 | 18 | 5 |
| 10 | 85 | 20 | | | | 37 | 35 | 32 | 82 | 18 | 6 |
| 10 | 120 | 100 | | | | 37 | 35 | 33 | 86 | 05 | 4 |
| 10 | 65 | 30 | | | | 43 | 39 | 34 | 71 | 28 | 6 |
| 10 | 48 | 30 | | | | 47 | 41 | 33 | 58 | 27 | 4 |
| 10 | 43 | 30 | | | RW | 41 | 39 | 36 | 83 | 26 | 6 |
| 10 | 40 | 20 | | | | 40 | 38 | 35 | 82 | 20 | 5 |
| 10 | 42 | 20 | | | RW | 38 | 37 | 35 | 89 | 20 | 6 |
| **MAR 06** | | | | | | | | | | | |
| 10 | 44 | 20 | | | | 38 | 36 | 33 | 82 | 22 | 5 |
| 10 | 230 | 20 | | | | 33 | 31 | 27 | 79 | 22 | 7 |
| 0 | UNL | 80 | | | | 31 | 29 | 25 | 79 | 22 | 5 |
| 0 | UNL | 60 | | | | 39 | 34 | 26 | 60 | 26 | 10 |
| 0 | UNL | 60 | | | | 46 | 37 | 26 | 46 | 30 | 6 |
| 0 | UNL | 50 | | | | 48 | 37 | 22 | 36 | 24 | 7 |
| 0 | UNL | 20 | | | | 38 | 33 | 26 | 62 | 19 | 6 |
| 0 | UNL | 20 | | | | 33 | 31 | 27 | 79 | 20 | 8 |
| **MAR 07** | | | | | | | | | | | |
| 02 | 0 | UNL | 20 | | | 30 | 28 | 25 | 82 | 22 | 8 |
| 05 | 0 | UNL | 20 | | | 29 | 26 | 22 | 75 | 19 | 4 |
| 08 | 0 | UNL | 70 | | | 30 | 27 | 22 | 72 | 19 | 4 |
| 11 | 0 | UNL | 60 | | | 40 | 31 | 16 | 38 | 26 | 11 |
| 14 | 0 | UNL | 60 | | | 45 | 35 | 20 | 37 | 28 | 8 |
| 17 | 2 | UNL | 50 | | | 48 | 36 | 17 | 29 | 03 | 5 |
| 20 | 4 | UNL | 20 | | | 36 | 30 | 20 | 52 | 18 | 4 |
| 23 | 10 | UNL | 20 | | | 33 | 30 | 24 | 70 | 19 | 4 |
| **MAR 08** | | | | | | | | | | | |
| 6 | 250 | 20 | | | | 36 | 31 | 22 | 57 | 19 | 6 |
| 7 | 250 | 20 | | | | 33 | 28 | 19 | 56 | 21 | 6 |
| 0 | UNL | 40 | | | | 30 | 27 | 21 | 69 | 23 | 9 |
| 0 | UNL | 40 | | | | 42 | 33 | 17 | 36 | 27 | 11 |
| 6 | UNL | 50 | | | | 48 | 37 | 20 | 33 | 28 | 5 |
| 7 | 47 | 70 | | | | 47 | 36 | 21 | 36 | 24 | 5 |
| 7 | 75 | 20 | | | | 38 | 32 | 22 | 53 | 21 | 7 |
| 0 | UNL | 20 | | | | 35 | 29 | 18 | 50 | 21 | 8 |
| **MAR 09** | | | | | | | | | | | |
| 0 | UNL | 20 | | | | 30 | 25 | 17 | 58 | 21 | 3 |
| 0 | UNL | 20 | | | | 26 | 23 | 17 | 69 | 18 | 4 |
| 0 | UNL | 60 | | | | 30 | 27 | 21 | 69 | 00 | 0 |
| 0 | UNL | 100 | | | | 44 | 34 | 19 | 37 | 29 | 9 |
| 1 | UNL | 100 | | | | 50 | 37 | 19 | 29 | 23 | 5 |
| 0 | UNL | 100 | | | | 53 | 39 | 21 | 29 | 27 | 5 |
| 0 | UNL | 20 | | | | 40 | 33 | 22 | 49 | 16 | 4 |
| 0 | UNL | 20 | | | | 44 | 35 | 22 | 42 | 19 | 14 |
| **MAR 10** | | | | | | | | | | | |
| 02 | 0 | UNL | 20 | | | 35 | 31 | 25 | 67 | 34 | 10 |
| 05 | 10 | UNL | 20 | | | 32 | 29 | 25 | 75 | 00 | 0 |
| 08 | 10 | UNL | 40 | | | 29 | 28 | 26 | 89 | 03 | 4 |
| 11 | 10 | UNL | 40 | | | 53 | 41 | 26 | 35 | 03 | 6 |
| 14 | 10 | 100 | 40 | | | 53 | 41 | 25 | 34 | 26 | 8 |
| 17 | 10 | 80 | 40 | | | 52 | 41 | 27 | 38 | 24 | 10 |
| 20 | 10 | 95 | 20 | | | 44 | 40 | 36 | 74 | 22 | 8 |
| 23 | 6 | 70 | 20 | | | 39 | 38 | 36 | 89 | 27 | 9 |
| **MAR 11** | | | | | | | | | | | |
| 10 | 29 | 20 | | | | 37 | 36 | 35 | 93 | 24 | 5 |
| 10 | 30 | 10 | | | | 37 | 36 | 35 | 93 | 31 | 6 |
| 10 | 10 | 7 | | | | 36 | 36 | 35 | 96 | 25 | 8 |
| 10 | 95 | 90 | | | | 44 | 39 | 34 | 68 | 36 | 6 |
| 10 | 200 | 40 | | | | 51 | 43 | 33 | 50 | 01 | 8 |
| 10 | UNL | 60 | | | | 51 | 38 | 20 | 30 | 36 | 16 |
| 10 | UNL | 20 | | | | 41 | 33 | 22 | 47 | 02 | 10 |
| 0 | UNL | 20 | | | | 32 | 28 | 20 | 61 | 03 | 6 |
| **MAR 12** | | | | | | | | | | | |
| 0 | UNL | 20 | | | | 28 | 25 | 19 | [illegible] | | 8 |
| 0 | UNL | 20 | | | | 24 | 22 | 18 | | | 4 |
| 0 | UNL | 50 | | | | 29 | 26 | 21 | 72 | | 1 |
| 0 | UNL | 100 | | | | 47 | 36 | 20 | 34 | | 8 |
| 2 | UNL | 70 | | | | 50 | 38 | 21 | 32 | 24 | 6 |
| 8 | UNL | 70 | | | | 55 | 41 | 22 | 28 | 23 | 5 |
| 2 | UNL | 20 | | | | 41 | 34 | 24 | 51 | 21 | 8 |
| 0 | UNL | 20 | | | | 39 | 32 | 21 | 49 | 21 | 8 |
| **MAR 13** | | | | | | | | | | | |
| 02 | 0 | UNL | 20 | | | 32 | 27 | 19 | 59 | 19 | 7 |
| 05 | 0 | UNL | 20 | | | 26 | 24 | 19 | 75 | 19 | 6 |
| 08 | 8 | UNL | 40 | | | 30 | 28 | 24 | 78 | 00 | 0 |
| 11 | 10 | UNL | 40 | | | 52 | 40 | 25 | 35 | 26 | 6 |
| 14 | 10 | UNL | 40 | | | 57 | 42 | 24 | 28 | 28 | 7 |
| 17 | 8 | UNL | 40 | | | 61 | 42 | 16 | 17 | 27 | 12 |
| 20 | 7 | 250 | 20 | | | 48 | 36 | 18 | 30 | 21 | 8 |
| 23 | 6 | UNL | 20 | | | 45 | 35 | 20 | 37 | 18 | 8 |
| **MAR 14** | | | | | | | | | | | |
| 10 | 250 | 20 | | | | 45 | 34 | 18 | 34 | 21 | 8 |
| 10 | UNL | 20 | | | | 39 | 32 | 20 | 47 | 21 | 8 |
| 10 | UNL | 40 | | | | 37 | 31 | 22 | 55 | 17 | 3 |
| 3 | UNL | 50 | | | | 59 | 42 | 19 | 21 | 23 | 14 |
| 7 | UNL | 100 | | | | 65 | 46 | 23 | 20 | 25 | 12 |
| 10 | UNL | 80 | | | | 66 | 44 | 15 | 14 | 25 | 12 |
| 10 | UNL | 20 | | | | 51 | 37 | 14 | 23 | 20 | 10 |
| 2 | UNL | 20 | | | | 44 | 34 | 19 | 37 | 21 | 8 |
| **MAR 15** | | | | | | | | | | | |
| 4 | UNL | 20 | | | | 49 | 38 | 22 | 35 | 21 | 9 |
| 3 | UNL | 20 | | | | 35 | 31 | 25 | 67 | 33 | 8 |
| 3 | UNL | 40 | | | | 39 | 33 | 25 | 57 | 02 | 5 |
| 8 | UNL | 80 | | | | 64 | 47 | 27 | 25 | 09 | 4 |
| 7 | UNL | 100 | | | | 73 | 48 | 19 | 13 | 18 | 15 |
| 10 | 250 | 60 | | | | 69 | 46 | 15 | 12 | 17 | 18 |
| 10 | 250 | 20 | | | | 60 | 41 | 14 | 16 | 18 | 18 |
| 10 | 140 | 20 | | | | 59 | 41 | 15 | 18 | 18 | 16 |
| **MAR 16** | | | | | | | | | | | |
| 02 | 10 | UNL | 20 | | | 57 | 41 | 21 | 25 | 18 | 15 |
| 05 | 10 | UNL | 20 | | | 48 | 37 | 22 | 36 | 28 | 3 |
| 08 | 10 | 210 | 90 | | | 46 | 38 | 27 | 48 | 36 | 3 |
| 11 | 10 | 210 | 90 | | | 64 | 46 | 25 | 23 | 18 | 11 |
| 14 | 10 | 210 | 80 | | | 63 | 46 | 26 | 25 | 28 | 14 |
| 17 | 10 | 100 | 30 | | | 59 | 44 | 25 | 27 | 24 | 6 |
| 20 | 10 | 120 | 20 | | | 55 | 41 | 22 | 28 | 21 | 8 |
| 23 | 10 | 130 | 10 | | | 49 | 39 | 26 | 41 | 23 | 19 |
| **MAR 17** | | | | | | | | | | | |
| 10 | 110 | 20 | | | | 41 | 35 | 26 | 55 | 24 | 19 |
| 1 | UNL | 20 | | | | 36 | 31 | 22 | 57 | 22 | 12 |
| 7 | 40 | 70 | | | | 39 | 33 | 23 | 53 | 23 | 15 |
| 2 | UNL | 80 | | | | 45 | 36 | 23 | 42 | 24 | 20 |
| 3 | UNL | 50 | | | | 50 | 38 | 21 | 32 | 24 | 16 |
| 0 | UNL | 60 | | | | 52 | 39 | 22 | 31 | 25 | 13 |
| 1 | UNL | 30 | | | | 38 | 32 | 22 | 53 | 18 | 5 |
| 0 | UNL | 20 | | | | 37 | 31 | 22 | 55 | 21 | 8 |
| **MAR 18** | | | | | | | | | | | |
| 0 | UNL | 20 | | | | 27 | 25 | 21 | 78 | 32 | 4 |
| 0 | UNL | 20 | | | | 31 | 29 | 26 | 82 | 35 | 6 |
| 10 | 220 | 40 | | | | 36 | 32 | 25 | 64 | 01 | 6 |
| 10 | 220 | 50 | | | | 57 | 41 | 20 | 24 | 20 | 19 |
| 10 | 65 | 40 | | | | 55 | 42 | 26 | 33 | 21 | 18 |
| 3 | UNL | 20 | | | | 53 | 43 | 33 | 47 | 18 | 24 |
| 9 | UNL | 20 | | | | 46 | 42 | 38 | 74 | 20 | 22 |
| 5 | UNL | 20 | | | | 49 | 42 | 35 | 59 | 18 | 18 |

# MAXIMUM SHORT DURATION PRECIPITATION

| TIME PERIOD (MINUTES) | 5 | 10 | 15 | 20 | 30 | 45 | 60 | 80 | 100 | 120 | 150 | 180 |
|---|---|---|---|---|---|---|---|---|---|---|---|---|
| PRECIPITATION (INCHES) | 0.01 | 0.01 | 0.02 | 0.02 | 0.03 | 0.03 | 0.03 | 0.03 | 0.03 | 0.04 | 0.04 | 0.05 |
| ENDED: DATE | 22 | 22 | 18 | 18 | 18 | 18 | 22 | 22 | 22 | 22 | 22 | [illegible] |
| ENDED: TIME (LST) | 1843 | 1843 | 1836 | 1836 | 1836 | 1836 | 1843 | 1843 | 1843 | 1843 | 1843 | |

THE PRECIPITATION AMOUNTS FOR THE INDICATED TIME INTERVALS MAY OCCUR AT ANY TIME DURING THE MONTH. THE TIME INDICATED IS THE ENDING TIME OF THE INTERVAL. DATE AND TIME ARE NOT ENTERED FOR TRACE AMOUNTS.

# OBSERVATIONS AT 3-HOUR INTERVALS

MAR 1994 24156
POCATELLO, ID

| HOUR L.S.T. | SKY COVER (TENTHS) | CEILING IN HUNDREDS OF FEET | VISIBILITY: WHOLE MILES | VISIBILITY: 16THS MILE | WEATHER | TEMPERATURE: AIR °F | TEMPERATURE: WET BULB °F | TEMPERATURE: DEW POINT °F | REL HUMIDITY % | WIND: DIRECTION | WIND: SPEED (KNOTS) |
|---|---|---|---|---|---|---|---|---|---|---|---|
| **MAR 19** | | | | | | | | | | | |
| 02 | 5 | UNL | 20 | | | 44 | 38 | 30 | 58 | 23 | 11 |
| 05 | 10 | 200 | 20 | | | 38 | 34 | 29 | 70 | 22 | 16 |
| 08 | 10 | 110 | 40 | | | 33 | 30 | 25 | 73 | 22 | 18 |
| 11 | 10 | 41 | 30 | | | 35 | 31 | 25 | 67 | 23 | 14 |
| 14 | 8 | 70 | 40 | | | 37 | 30 | 19 | 48 | 22 | 16 |
| 17 | 8 | 220 | 100 | | | 40 | 30 | 11 | 30 | 23 | 16 |
| 20 | 0 | UNL | 20 | | | 31 | 23 | 6 | 35 | 22 | 12 |
| 23 | 0 | UNL | 20 | | | 28 | 21 | 5 | 37 | 20 | 10 |
| **MAR 20** | | | | | | | | | | | |
| 0 | 0 | UNL | 20 | | | 23 | 18 | 7 | 50 | 21 | 8 |
| 0 | 0 | UNL | 20 | | | 18 | 16 | 10 | 71 | 22 | 7 |
| 0 | 0 | UNL | 70 | | | 28 | 23 | 12 | 51 | 21 | 5 |
| 1 | 1 | UNL | 100 | | | 39 | 29 | 9 | 29 | 23 | 10 |
| 2 | 1 | UNL | 100 | | | 46 | 33 | 9 | 22 | 23 | 14 |
| 9 | 1 | UNL | 100 | | | 51 | 36 | 12 | 21 | 22 | 8 |
| 0 | 0 | UNL | 20 | | | 41 | 31 | 12 | 30 | 18 | 23 |
| 1 | 0 | UNL | 20 | | | 41 | 31 | 12 | 30 | 19 | 20 |
| **MAR 21** | | | | | | | | | | | |
| 5 | 5 | UNL | 20 | | | 41 | 33 | 19 | 41 | 18 | 22 |
| 5 | 5 | UNL | 20 | | | 44 | 34 | 20 | 38 | 18 | 20 |
| 10 | 10 | 200 | 40 | | | 46 | 36 | 23 | 40 | 19 | 20 |
| 10 | 10 | UNL | 50 | | | 55 | 41 | 24 | 30 | 27 | 23 |
| 10 | 10 | 250 | 50 | | | 55 | 41 | 22 | 28 | 26 | 15 |
| 10 | 10 | 130 | 70 | | | 55 | 40 | 20 | 25 | 27 | 10 |
| 10 | 10 | 130 | 20 | | | 47 | 37 | 22 | 37 | 16 | 4 |
| 10 | 10 | 240 | 20 | | | 35 | 29 | 20 | 54 | 22 | 6 |
| **MAR 22** | | | | | | | | | | | |
| 02 | 10 | 120 | 20 | | | 39 | 32 | 22 | 51 | 22 | 8 |
| 05 | 10 | 120 | 20 | | | 37 | 31 | 23 | 57 | 23 | 13 |
| 08 | 10 | 130 | 30 | | | 34 | 30 | 23 | 64 | 24 | 8 |
| 11 | 10 | 55 | 50 | | | 37 | 32 | 24 | 59 | 01 | 3 |
| 14 | 10 | 39 | 20 | | | 37 | 33 | 28 | 70 | 22 | 7 |
| 17 | 10 | 7 | 1 | 8 | SW | 34 | 33 | 31 | 89 | 25 | 16 |
| 20 | 10 | 17 | 7 | | SW | 31 | 30 | 29 | 92 | 24 | 20 |
| 23 | 10 | 85 | 20 | | | 28 | 26 | 22 | 78 | 24 | 18 |
| **MAR 23** | | | | | | | | | | | |
| 6 | 95 | 20 | | | | 26 | 24 | 20 | 78 | 22 | 16 |
| 0 | UNL | 20 | | | | 24 | 22 | 17 | 75 | 23 | 18 |
| 2 | UNL | 50 | | | | 27 | 24 | 17 | 66 | 24 | 14 |
| 5 | UNL | 80 | | | | 34 | 28 | 18 | 52 | 24 | 15 |
| 5 | UNL | 70 | | | | 38 | 30 | 15 | 39 | 26 | 15 |
| 8 | 50 | 40 | | | | 37 | 30 | 18 | 46 | 19 | 15 |
| 0 | UNL | 20 | | | | 30 | 26 | 18 | 61 | 15 | 8 |
| 0 | UNL | 20 | | | | 27 | 22 | 13 | 56 | 00 | 0 |
| **MAR 24** | | | | | | | | | | | |
| 0 | UNL | 20 | | | | 17 | 16 | 13 | 84 | 00 | 0 |
| 7 | UNL | 20 | | | | 17 | 16 | 13 | 84 | 04 | 6 |
| 10 | UNL | 50 | | | | 20 | 18 | 15 | 81 | 00 | 0 |
| 10 | 230 | 100 | | | | 38 | 29 | 13 | 36 | 06 | 4 |
| 10 | UNL | 100 | | | | 49 | 36 | 16 | 27 | 03 | 3 |
| 7 | 250 | 40 | | | | 49 | 35 | 14 | 25 | 12 | 6 |
| 3 | UNL | 20 | | | | 40 | 31 | 17 | 39 | 14 | 6 |
| 3 | UNL | 20 | | | | 34 | 28 | 17 | 50 | 00 | 0 |
| **MAR 25** | | | | | | | | | | | |
| 02 | 2 | UNL | 20 | | | 26 | 24 | 21 | 81 | 13 | 3 |
| 05 | 0 | UNL | 20 | | | 20 | 19 | 18 | 92 | 34 | 5 |
| 08 | 3 | UNL | 50 | | | 26 | 25 | 22 | 85 | 07 | 6 |
| 11 | 0 | UNL | 100 | | | 47 | 37 | 22 | 37 | 03 | 7 |
| 14 | 0 | UNL | 100 | | | 53 | 40 | 22 | 30 | 35 | 9 |
| 17 | 0 | UNL | 60 | | | 53 | 38 | 14 | 21 | 07 | 4 |
| 20 | 0 | UNL | 20 | | | 38 | 29 | 14 | 37 | 18 | 4 |
| 23 | 0 | UNL | 20 | | | 28 | 23 | 13 | 53 | 26 | 4 |
| **MAR 26** | | | | | | | | | | | |
| 0 | UNL | 20 | | | | 26 | 22 | 15 | 63 | 20 | 4 |
| 0 | UNL | 20 | | | | 25 | 22 | 17 | 72 | 20 | 6 |
| 0 | UNL | 70 | | | | 32 | 29 | 24 | 72 | 31 | 3 |
| 0 | UNL | 100 | | | | 47 | 35 | 16 | 29 | 06 | 13 |
| 2 | UNL | 100 | | | | 54 | 39 | 16 | 22 | 04 | 10 |
| 9 | 80 | 15 | | | | 48 | 35 | 14 | 25 | 06 | 12 |
| 3 | UNL | 20 | | | | 37 | 29 | 14 | 39 | 05 | 9 |
| 0 | UNL | 20 | | | | 32 | 26 | 15 | 50 | 04 | 12 |
| **MAR 27** | | | | | | | | | | | |
| 0 | UNL | 20 | | | | 24 | 20 | 11 | 58 | 06 | 7 |
| 0 | UNL | 20 | | | | 25 | 22 | 17 | 72 | 32 | 6 |
| 0 | UNL | 50 | | | | 32 | 27 | 17 | 54 | 05 | 7 |
| 0 | UNL | 100 | | | | 44 | 33 | 15 | 31 | 36 | 6 |
| 1 | UNL | 100 | | | | 50 | 37 | 18 | 28 | 01 | 6 |
| 5 | UNL | 50 | | | | 50 | 37 | 18 | 28 | 22 | 12 |
| 6 | UNL | 20 | | | | 40 | 31 | 16 | 38 | 23 | 8 |
| 5 | UNL | 20 | | | | 41 | 32 | 17 | 38 | 20 | 10 |
| **MAR 28** | | | | | | | | | | | |
| 02 | 10 | UNL | 20 | | | 37 | 30 | 18 | 46 | 21 | 9 |
| 05 | 1 | UNL | 20 | | | 32 | 28 | 21 | 64 | 22 | 7 |
| 08 | 0 | UNL | 50 | | | 44 | 35 | 23 | 44 | 20 | 8 |
| 11 | 0 | UNL | 70 | | | 55 | 40 | 20 | 25 | 23 | 17 |
| 14 | 5 | UNL | 60 | | | 63 | 44 | 21 | 20 | 27 | 14 |
| 17 | 9 | 100 | 6 | | BD | 55 | 41 | 23 | 29 | 03 | 20 |
| 20 | 10 | 110 | 20 | | | 47 | 36 | 19 | 33 | 04 | 12 |
| 23 | 8 | UNL | 20 | | | 33 | 28 | 18 | 54 | 03 | 8 |
| **MAR 29** | | | | | | | | | | | |
| 2 | UNL | 20 | | | | 27 | 24 | 17 | 66 | 01 | 9 |
| 8 | UNL | 20 | | | | 28 | 23 | 11 | 49 | 05 | 4 |
| 1 | UNL | 100 | | | | 33 | 27 | 16 | 50 | 10 | 3 |
| 0 | UNL | 100 | | | | 50 | 35 | 8 | 18 | 02 | 16 |
| 0 | UNL | 100 | | | | 56 | 38 | 8 | 14 | 32 | 6 |
| 0 | UNL | 70 | | | | 55 | 37 | 7 | 14 | 36 | 13 |
| 0 | UNL | 30 | | | | 41 | 30 | 7 | 24 | 07 | 5 |
| 0 | UNL | 20 | | | | 27 | 22 | 11 | 51 | 00 | 0 |
| **MAR 30** | | | | | | | | | | | |
| 0 | UNL | 20 | | | | 27 | 22 | 12 | 53 | 00 | 0 |
| 0 | UNL | 20 | | | | 24 | 20 | 10 | 55 | 20 | 3 |
| 0 | UNL | 70 | | | | 30 | 25 | 14 | 51 | 05 | 3 |
| 0 | UNL | 60 | | | | 55 | 39 | 15 | 21 | 06 | 6 |
| 1 | UNL | 60 | | | | 65 | 44 | 15 | 14 | 03 | 8 |
| 1 | UNL | 60 | | | | 67 | 44 | 11 | 11 | 35 | 9 |
| 2 | UNL | 30 | | | | 51 | 36 | 11 | 20 | 00 | 0 |
| 1 | UNL | 20 | | | | 39 | 30 | 15 | 38 | 02 | 4 |
| **MAR 31** | | | | | | | | | | | |
| 02 | 1 | UNL | 20 | | | 29 | 26 | 21 | 72 | 00 | 0 |
| 05 | 1 | UNL | 20 | | | 24 | 22 | 18 | 78 | 00 | 0 |
| 08 | 1 | UNL | 50 | | | 37 | 30 | 18 | 46 | 01 | 5 |
| 11 | 8 | UNL | 50 | | | 63 | 45 | 22 | 21 | 34 | 5 |
| 14 | 10 | 140 | 50 | | | 64 | 45 | 23 | 21 | 27 | 16 |
| 17 | 10 | 120 | 40 | | | 56 | 43 | 27 | 33 | 28 | 15 |
| 20 | 10 | 210 | 20 | | | 44 | 38 | 30 | 58 | 21 | 11 |
| 23 | 10 | 100 | 20 | | | 43 | 39 | 34 | 71 | 00 | 0 |

# WEATHER CODES AND NOTES

| | | | | | |
|---|---|---|---|---|---|
| * | TORNADO | SW | SNOW SHOWERS | GF | GROUND FOG |
| T | THUNDERSTORM | SG | SNOW GRAINS | BD | BLOWING DUST |
| Q | SQUALL | SP | SNOW PELLETS | BN | BLOWING SAND |
| R | RAIN | IC | ICE CRYSTALS | BS | BLOWING SNOW |
| RW | RAIN SHOWERS | IP | ICE PELLETS | BY | BLOWING SPRAY |
| ZR | FREEZING RAIN | IPW | ICE PELLET SHOWERS | K | SMOKE |
| L | DRIZZLE | A | HAIL | H | HAZE |
| ZL | FREEZING DRIZZLE | F | FOG | D | DUST |
| S | SNOW | IF | ICE FOG | | |

CEILING: UNL INDICATES UNLIMITED
WIND DIRECTION: DIRECTIONS ARE THOSE FROM WHICH THE WIND IS BLOWING, INDICATED IN TENS OF DEGREES FROM TRUE NORTH: I.E. 09 FOR
EAST, 18 FOR SOUTH, 27 FOR WEST. AN ENTRY OF 00 INDICATES CALM.
SPEED: THE OBSERVED AVERAGE ONE-MINUTE VALUE (MPH=KNOTS X 1.15).

# SUMMARY BY HOURS

| HOUR L.S.T. | AVERAGES: SKY COVER (TENTHS) | AVERAGES: STATION PRESSURE (INCHES) | AVERAGES: TEMPERATURE: AIR °F | AVERAGES: TEMPERATURE: WET BULB °F | AVERAGES: TEMPERATURE: DEW POINT °F | AVERAGES: REL HUMIDITY % | AVERAGES: SPEED (MPH) | RESULTANT WIND: DIRECTION | RESULTANT WIND: SPEED (MPH) |
|---|---|---|---|---|---|---|---|---|---|
| 02 | 4 | 25.520 | 34 | 29 | 22 | 65 | 8.5 | 22 | 4.6 |
| 05 | 4 | 25.525 | 31 | 27 | 22 | 72 | 7.5 | 23 | 4.4 |
| 08 | 5 | 25.550 | 33 | 29 | 23 | 69 | 7.0 | 22 | 2.6 |
| 11 | 5 | 25.550 | 49 | 38 | 23 | 39 | 11.5 | 25 | 4.9 |
| 14 | 6 | 25.510 | 53 | 40 | 23 | 33 | 11.2 | 26 | 7.3 |
| 17 | 7 | 25.490 | 53 | 40 | 22 | 33 | 12.6 | 24 | 5.5 |
| 20 | 5 | 25.500 | 43 | 35 | 22 | 48 | 10.2 | 19 | 7.0 |
| 23 | 4 | 25.510 | 38 | 32 | 22 | 56 | 9.5 | 21 | 6.1 |

**801 TR2

P&D ASHEVILLE N.C. 288 07/20/94 PM

NATIONAL CLIMATIC DATA CENTER
ROOM 120
151 PATTON AVENUE
ASHEVILLE, NORTH CAROLINA 28801-5001

OFFICIAL BUSINESS
PENALTY FOR PRIVATE USE $300

FIRST CLASS
POSTAGE AND FEES PAID
NOAA
PERMIT G-19

LCD-10-24156-PD-9509

33786
J R SIMPLOT COMPANY
ATTN: J F COCHRANE - PO #35724
PO BOX 912
POCATELLO ID 83204

MAR 1994 24156
POCATELLO, ID
USCOM - NOAA - ASHEVILLE, NC

## HOURLY PRECIPITATION (WATER EQUIVALENT IN INCHES)

| DATE | A.M. HOUR ENDING AT | | | | | | | | | | | | P.M. HOUR ENDING AT | | | | | | | | | | | | DATE |
|---|---|---|---|---|---|---|---|---|---|---|---|---|---|---|---|---|---|---|---|---|---|---|---|---|---|
| | 1 | 2 | 3 | 4 | 5 | 6 | 7 | 8 | 9 | 10 | 11 | 12 | 1 | 2 | 3 | 4 | 5 | 6 | 7 | 8 | 9 | 10 | 11 | 12 | |
| 01 | | | | | | | | | | | | | | | | | | | | | | | | | 01 |
| 02 | | | | | | | | | | | | | | | | | | | | | | | | | 02 |
| 03 | | | | | | | | | | | | | | | | | | | | | | | | | 03 |
| 04 | | | | | | | | | | | | | | | | | | | | | | | | | 04 |
| 05 | | | | | | | | | | | | | | | T | T | T | T | | | | | T | T | 05 |
| 06 | | | | | | | | | | | | | | | | | | | | | | | | | 06 |
| 07 | | | | | | | | | | | | | | | | | | | | | | | | | 07 |
| 08 | | | | | | | | | | | | | | | | | | | | | | | | | 08 |
| 09 | | | | | | | | | | | | | | | | | | | | | | | | | 09 |
| 10 | | | | | | | | | | | | | | | | | | | T | 0.01 | | | | | 10 |
| 11 | | | | | | | | | | | | | | | | | | | | | | | | | 11 |
| 12 | | | | | | | | | | | | | | | | | | | | | | | | | 12 |
| 13 | | | | | | | | | | | | | | | | | | | | | | | | | 13 |
| 14 | | | | | | | | | | | | | | | | | | | | | | | | | 14 |
| 15 | | | | | | | | | | | | | | | | | | | | | | | | | 15 |
| 16 | | | | | | | | | | | | | | | | | | | | | | | | | 16 |
| 17 | | | | | | | | | | | | | | | | | | | | | | | | | 17 |
| 18 | | | | | | | | | | | | | | T | T | T | | T | 0.03 | | | | | | 18 |
| 19 | | | | | | | | | | | | | | | | | | | | | | | | | 19 |
| 20 | | | | | | | | | | | | | | | | | | | | | | | | | 20 |
| 21 | | | | | | | | | | | | | | | | | | | | | | | | | 21 |
| 22 | | | | | | | | | | | | 0.01 | 0.01 | T | | T | 0.01 | 0.02 | 0.02 | T | T | | | | 22 |
| 23 | | | | | | | | | | | | | | | | | | | | | | | | | 23 |
| 24 | | | | | | | | | | | | | | | | | | | | | | | | | 24 |
| 25 | | | | | | | | | | | | | | | | | | | | | | | | | 25 |
| 26 | | | | | | | | | | | | | | | | | | | | | | | | | 26 |
| 27 | | | | | | | | | | | | | | | | | | | | | | | | | 27 |
| 28 | | | | | | | | | | | | | | | | | | | | | | | | | 28 |
| 29 | | | | | | | | | | | | | | | | | | | | | | | | | 29 |
| 30 | | | | | | | | | | | | | | | | | | | | | | | | | 30 |
| 31 | | | | | | | | | | | | | | | | | | | | | | | | | 31 |

APR 1994
POCATELLO, ID
NAT'L WEA SER OFC
20369 THUNDERBOLT STREET-C

INQUIRIES/COMMENTS CALL
(704) 271-4800 VOICE
271-4010 TDD/271-4876 FAX

MUNICIPAL AIRPORT

ISSN # 0198-1811

# LOCAL CLIMATOLOGICAL DATA

## MONTHLY SUMMARY

LATITUDE 42 55'N LONGITUDE 112 36'W ELEVATION (GROUND) 4454 FEET TIME ZONE MOUNTAIN 24156

| | TEMPERATURE F | | | | | DEGREE DAYS BASE 65 F | | WEATHER TYPES (1 FOG, 2 HEAVY FOG, 3 THUNDERSTORMS, 4 ICE PELLETS, 5 HAIL, 6 GLAZE, 7 DUSTSTORM, 8 SMOKE/HAZE, 9 BLOWING SNOW) | SNOW/ ICE ON GRD AT 0500 | PRECIPITATION (INCHES) | | AVERAGE STATION PRESSURE (INCHES OF Hg) ELEV. 4478 (FT.MSL) | WIND (M.P.H.) | | | | | | SUNSHINE | | SKY COVER TENTHS | |
|---|---|---|---|---|---|---|---|---|---|---|---|---|---|---|---|---|---|---|---|---|---|---|---|
| | | | | | | | | | | | | | | | | | PEAK GUST | | FASTEST 1-MIN | | | | | |
| DATE | MAXIMUM | MINIMUM | AVERAGE | DEPARTURE FROM NORMAL | AVERAGE DEW POINT | HEATING | COOLING | | | WATER EQUIVALENT | SNOW ICE PELLETS | | RESULTANT DIR | RESULTANT SPEED | AVERAGE SPEED | SPEED | DIR | SPEED | DIR | MINUTES | PERCENT POSSIBLE | SUNRISE TO SUNSET | MIDNIGHT TO MIDNIGHT |
| 1 | 2 | 3 | 4 | 5 | 6 | 7A | 7B | 8 | 9 | 10 | 11 | 12 | 13 | 14 | 15 | 16 | 17 | 18 | 19 | 20 | 21 | 22 | 23 |
| 01 | 52 | 38 | 45 | 4 | 34 | 20 | 0 | 4 | 0 | 0.05 | 0.1 | 25.580 | 22 | 8.6 | 9.8 | 24 | SW | 16 | 23 | 324 | 43 | 8 | 7 |
| 02 | 66 | 28 | 47 | 6 | 31 | 18 | 0 | | 0 | 0.00 | 0.0 | 25.595 | 20 | 5.4 | 8.8 | 24 | S | 18 | 18 | 761 | 99 | 3 | 3 |
| 03 | 56 | 37 | 47 | 6 | 31 | 18 | 0 | | 0 | 0.06 | 0.0 | 25.370 | 22 | 14.6 | 17.0 | 32 | SW | 23 | 24 | 81 | 11 | 10 | 10 |
| 04 | 42 | 26 | 34* | -8 | 27 | 31 | 0 | 2 | 0 | 0.04 | 0.4 | 25.420 | 23 | 11.6 | 12.5 | 31 | SW | 22 | 23 | 195 | 25 | 10 | 7 |
| 05 | 51 | 20 | 36 | -6 | 23 | 29 | 0 | 2 | 0 | 0.00 | 0.0 | 25.460 | 21 | 7.7 | 8.6 | 25 | W | 15 | 19 | 566 | 73 | 10 | 8 |
| 06 | 53 | 37 | 45 | 3 | 32 | 20 | 0 | | 0 | 0.07 | 0.0 | 25.340 | 22 | 13.2 | 14.0 | 36 | SW | 23 | 23 | 146 | 19 | 10 | 10 |
| 07 | 47 | 33 | 40 | -2 | 25 | 25 | 0 | | 0 | 0.00 | 0.0 | 25.350 | 24 | 17.8 | 18.3 | 37 | W | 28 | 24 | 485 | 62 | 9 | 8 |
| 08 | 55 | 20* | 38 | -5 | 20 | 27 | 0 | | 0 | 0.00 | 0.0 | 25.370 | 20 | 3.0 | 6.6 | 23 | W | 14 | 17 | 723 | 92 | 6 | 5 |
| 09 | 53 | 36 | 45 | 2 | 30 | 20 | 0 | | 0 | 0.07 | 0.0 | 25.230 | 24 | 2.2 | 9.7 | 25 | W | 17 | 21 | 318 | 40 | 10 | 10 |
| 10 | 53 | 35 | 44 | 1 | 36 | 21 | 0 | 1 | 0 | 0.03 | 0.0 | 25.400 | 22 | 11.1 | 11.9 | 24 | SW | 17 | 22 | 332 | 42 | 10 | 10 |
| 11 | 61 | 34 | 48 | 4 | 31 | 17 | 0 | | 0 | 0.00 | 0.0 | 25.630 | 23 | 10.0 | 11.2 | 24 | SW | 17 | 26 | 791 | 100 | 1 | 1 |
| 12 | 68 | 36 | 52 | 8 | 30 | 13 | 0 | | 0 | T | 0.0 | 25.500 | 21 | 14.6 | 15.3 | 33 | S | 23 | 23 | 679 | 86 | 8 | 6 |
| 13 | 58 | 41 | 50 | 6 | 21 | 15 | 0 | | 0 | 0.00 | 0.0 | 25.390 | 23 | 17.4 | 17.8 | 35 | SW | 23 | 24 | 517 | 65 | 9 | 7 |
| 14 | 56 | 40 | 48 | 4 | 20 | 17 | 0 | | 0 | 0.00 | 0.0 | 25.410 | 24 | 17.2 | 17.9 | 32 | SW | 23 | 25 | 751 | 94 | 9 | 8 |
| 15 | 69 | 34 | 52 | 7 | 22 | 13 | 0 | | 0 | 0.00 | 0.0 | 25.690 | 22 | 7.7 | 9.0 | 20 | SW | 14 | 18 | 803 | 100 | 1 | 1 |
| 16 | 79 | 30 | 55 | 10 | 24 | 10 | 0 | | 0 | 0.00 | 0.0 | 25.660 | 20 | 3.7 | 9.8 | 26 | S | 17 | 18 | 752 | 93 | 5 | 4 |
| 17 | 83 | 35 | 59 | 14 | 30 | 6 | 0 | | 0 | 0.00 | 0.0 | 25.580 | 24 | 3.4 | 7.0 | 25 | SW | 16 | 27 | 725 | 90 | 7 | 5 |
| 18 | 84 | 45 | 65 | 19 | 33 | 0 | 0 | | 0 | 0.00 | 0.0 | 25.540 | 34 | 1.3 | 6.7 | 23 | SW | 15 | 21 | 638 | 79 | 9 | 8 |
| 19 | 83 | 44 | 64 | 18 | 36 | 1 | 0 | | 0 | T | 0.0 | 25.500 | 04 | 1.4 | 7.7 | 61 | N | 35 | 36 | 584 | 72 | 6 | 7 |
| 20 | 83 | 42 | 63 | 17 | 35 | 2 | 0 | | 0 | 0.00 | 0.0 | 25.490 | 30 | 2.8 | 5.5 | 21 | W | 13 | 29 | 816 | 100 | 1 | 2 |
| 21 | 86* | 45 | 66* | 19 | 35 | 0 | 1 | | 0 | 0.00 | 0.0 | 25.345 | 25 | 3.8 | 9.4 | 33 | SW | 23 | 22 | 546 | 67 | 10 | 7 |
| 22 | 68 | 45 | 57 | 10 | 38 | 8 | 0 | | 0 | 0.00 | 0.0 | 25.310 | 25 | 11.5 | 13.5 | 33 | W | 22 | 27 | 666 | 81 | 4 | 4 |
| 23 | 71 | 39 | 55 | 8 | 37 | 10 | 0 | 7 | 0 | T | 0.0 | 25.180 | 21 | 2.6 | 8.3 | 55 | SW | 35 | 26 | 355 | 43 | 9 | 9 |
| 24 | 61 | 36 | 49 | 2 | 39 | 16 | 0 | 23 | 0 | 0.02 | 0.0 | 25.090 | 27 | 3.7 | 8.1 | 35 | W | 23 | 28 | 472 | 57 | 8 | 8 |
| 25 | 49 | 30 | 40 | -8 | 35 | 25 | 0 | | 0 | 0.01 | 0.0 | 25.100 | 23 | 6.2 | 7.6 | 32 | W | 16 | 21 | 352 | 42 | 10 | 10 |
| 26 | 54 | 34 | 44 | -4 | 28 | 21 | 0 | | 0 | 0.08 | 0.5 | 25.220 | 02 | 9.7 | 11.2 | 28 | N | 18 | 36 | 568 | 68 | 10 | 10 |
| 27 | 51 | 34 | 43 | -5 | 31 | 22 | 0 | 1 | 0 | T | 0.0 | 25.305 | 02 | 8.2 | 8.8 | 24 | N | 17 | 01 | 283 | 34 | 10 | 10 |
| 28 | 54 | 31 | 43 | -5 | 22 | 22 | 0 | 1 | 0 | T | T | 25.470 | 04 | 8.7 | 9.5 | 21 | NE | 15 | 04 | 573 | 68 | 10 | 8 |
| 29 | 57 | 21 | 39 | -10 | 17 | 26 | 0 | | 0 | 0.00 | 0.0 | 25.570 | 21 | 0.9 | 6.8 | 17 | W | 14 | 29 | 810 | 96 | 0 | 0 |
| 30 | 64 | 27 | 46 | -3 | 27 | 19 | 0 | | 0 | 0.00 | 0.0 | 25.520 | 26 | 6.2 | 9.0 | 30 | SW | 22 | 24 | 703 | 83 | 10 | 8 |

| | | | | | | | | | | | | | | | | | | | | | | | |
|---|---|---|---|---|---|---|---|---|---|---|---|---|---|---|---|---|---|---|---|---|---|---|---|
| SUM | SUM | | | | | TOTAL | TOTAL | NUMBER OF DAYS | | TOTAL | TOTAL | FOR THE MONTH : | | | | | | | | TOTAL | % | SUM | SUM |
| 1867 | 1033 | | | | | 492 | 1 | | | 0.43 | 1.0 | 25.420 | 23 | 5.7 | 10.6 | 61 | N | 35 | 26 | 16315 | FOR | 223 | 201 |
| AVG. | AVG. | AVG. | DEP. | AVG. | | DEP. | DEP. | PRECIPITATION | | DEP. | | | | | | DATE:19 | | DATE:23+ | | POSS | MONTH | AVG | AVG |
| 62.7 | 34.4 | 48.3 | 3.4 | 29.2 | | -111 | 1 | ≥ .01 INCH | 9 | -0.77 | | | | | | | | | | 24127 | 68 | 7.4 | 6.7 |

| NUMBER OF DAYS | | | | SEASON TO DATE | | SNOW, ICE PELLETS | | GREATEST IN 24 HOURS AND DATES | | | | GREATEST DEPTH ON GROUND OF SNOW, ICE PELLETS OR ICE AND DATE |
|---|---|---|---|---|---|---|---|---|---|---|---|---|
| | | | | TOTAL | TOTAL | ≥ 1.0 INCH | 0 | | | | | |
| MAXIMUM TEMP. | | MINIMUM TEMP. | | 6507 | 1 | THUNDERSTORMS | 1 | PRECIPITATION | | SNOW, ICE PELLETS | | |
| ≥ 90° | ≤ 32° | ≤ 32 | ≤ 0° | DEP. | DEP. | HEAVY FOG | 3 | 0.10 | 09-10 | 0.5 | 26 | 0 |
| 0 | 1 | 9 | 0 | -195 | 3 | CLEAR 5 | PARTLY CLOUDY 5 | CLOUDY 20 | | | | |

POCATELLO, ID APR 1994

* EXTREME FOR THE MONTH - LAST OCCURRENCE IF MORE THAN ONE. T TRACE AMOUNT.
+ ALSO ON EARLIER DATE(S).
HEAVY FOG: VISIBILITY 1/4 MILE OR LESS.
BLANK ENTRIES DENOTE MISSING OR UNREPORTED DATA.

DATA IN COLS 6 AND 12-15 ARE BASED ON 21 OR MORE OBSERVATIONS AT HOURLY INTERVALS. RESULTANT WIND IS THE VECTOR SUM OF WIND SPEEDS AND DIRECTIONS DIVIDED BY THE NUMBER OF OBSERVATIONS.
COLS 16 & 17 : PEAK GUST - HIGHEST INSTANTANEOUS WIND SPEED.
ONE OF TWO WINDS IS GIVEN UNDER COLS 18 & 19 : FASTEST MILE- HIGHEST RECORDED SPEED FOR WHICH A MILE OF WIND PASSES STATION (DIRECTION IN COMPASS POINTS). FASTEST OBSERVED ONE MINUTE WIND - HIGHEST ONE MINUTE SPEED (DIRECTION IN TENS OF DEGREES).
ERRORS WILL BE CORRECTED IN SUBSEQUENT PUBLICATIONS.

I CERTIFY THAT THIS IS AN OFFICIAL PUBLICATION OF THE NATIONALOCEANIC AND ATMOSPHERIC ADMINISTRATION AND IS COMPILED FROM RECORDS ON FILE AT THE NATIONAL CLIMATICDATA CENTER.

Kenneth D Hadeen
DIRECTOR
NATIONAL CLIMATIC DATA CENTER

noaa NATIONAL OCEANIC AND ATMOSPHERIC ADMINISTRATION
NATIONAL ENVIRONMENTAL SATELLITE, DATA AND INFORMATION SERVICE
NATIONAL CLIMATIC DATA CENTER ASHEVILLE, NORTH CAROLINA

# OBSERVATIONS AT 3-HOUR INTERVALS

APR 1994 24156
POCATELLO, ID

| HOUR L.S.T. | SKY COVER (TENTHS) | CEILING IN HUNDREDS OF FEET | VISIBILITY WHOLE MILES | VISIBILITY 16THS MILE | WEATHER | TEMPERATURE AIR F | TEMPERATURE WET BULB F | TEMPERATURE DEW POINT F | REL HUMIDITY % | WIND DIRECTION | WIND SPEED (KNOTS) |
|---|---|---|---|---|---|---|---|---|---|---|---|
| **APR 01** | | | | | | | | | | | |
| 02 | 10 | 48 | 15 | | IP | 42 | 38 | 34 | 73 | 22 | 14 |
| 05 | 10 | 110 | 20 | | | 38 | 35 | 30 | 73 | 22 | 6 |
| 08 | 10 | 42 | 70 | | | 41 | 37 | 32 | 70 | 23 | 9 |
| 11 | 10 | 21 | 10 | | RW | 40 | 38 | 35 | 92 | 23 | 12 |
| 14 | 10 | 37 | 20 | | R | 46 | 43 | 40 | 80 | 25 | 12 |
| 17 | 2 | UNL | 40 | | | 52 | 45 | 37 | 57 | 16 | 9 |
| 20 | 0 | UNL | 30 | | | 46 | 41 | 35 | 66 | 18 | 7 |
| 23 | 0 | UNL | 20 | | | 42 | 38 | 32 | 68 | 21 | 7 |
| **APR 02** | | | | | | | | | | | |
| 02 | 6 | 100 | 20 | | | 34 | 33 | 31 | 89 | 23 | 7 |
| 05 | 2 | UNL | 25 | | | 32 | 31 | 29 | 89 | 18 | 5 |
| 08 | 7 | UNL | 25 | | | 42 | 38 | 34 | 73 | 34 | 3 |
| 11 | 7 | UNL | 20 | | | 56 | 45 | 33 | 42 | 28 | 6 |
| 14 | 4 | UNL | 35 | | | 63 | 48 | 34 | 34 | 31 | 6 |
| 17 | 4 | UNL | 40 | | | 61 | 47 | 33 | 35 | 15 | 8 |
| 20 | 3 | UNL | 25 | | | 54 | 43 | 30 | 40 | 17 | 11 |
| 23 | 0 | UNL | 25 | | | 50 | 41 | 25 | 33 | 17 | 15 |
| **APR 03** | | | | | | | | | | | |
| 02 | 10 | 14 | 20 | | | 54 | 41 | 23 | 38 | 18 | 17 |
| 05 | 10 | 95 | 20 | | | 53 | 41 | 25 | 34 | 19 | 13 |
| 08 | 10 | 110 | 40 | | | 56 | 43 | 29 | 36 | 17 | 14 |
| 11 | 10 | 65 | 30 | | | 50 | 44 | 38 | 64 | 25 | 14 |
| 14 | 10 | 46 | 15 | | | 50 | 45 | 39 | 66 | 27 | 15 |
| 17 | 10 | 17 | 7 | | RW | 42 | 41 | 40 | 93 | 24 | 16 |
| 20 | 8 | 120 | 20 | | | 42 | 36 | 28 | 58 | 24 | 18 |
| 23 | 8 | 25 | 20 | | | 38 | 32 | 23 | 55 | 24 | 18 |
| **APR 04** | | | | | | | | | | | |
| 02 | 8 | UNL | 20 | | | 35 | 30 | 23 | 62 | 25 | 15 |
| 05 | 2 | UNL | 20 | | | 32 | 28 | 22 | 67 | 24 | 17 |
| 08 | 10 | 15 | 40 | | | 33 | 31 | 27 | 79 | 23 | 16 |
| 11 | 10 | 21 | 15 | | | 38 | 33 | 26 | 62 | 23 | 19 |
| 14 | 10 | 14 | 2 | 8 | S | 37 | 33 | 27 | 67 | 26 | 8 |
| 17 | 10 | 35 | 15 | | | 33 | 33 | 32 | 96 | 25 | 4 |
| 20 | 5 | UNL | 20 | | | 32 | 32 | 31 | 96 | 22 | 6 |
| 23 | 8 | 3 | 0 | 4 | F | 27 | 26 | 25 | 92 | 21 | 6 |
| **APR 05** | | | | | | | | | | | |
| 02 | 4 | 2 | 0 | 4 | F | 25 | 24 | 22 | 88 | 22 | 5 |
| 05 | 2 | UNL | 20 | | | 20 | 19 | 18 | 92 | 18 | 4 |
| 08 | 10 | 130 | 40 | | | 28 | 27 | 26 | 92 | 00 | 0 |
| 11 | 10 | 75 | 40 | | | 41 | 36 | 28 | 60 | 22 | 9 |
| 14 | 10 | 41 | 40 | | | 46 | 37 | 24 | 42 | 25 | 12 |
| 17 | 10 | 250 | 60 | | | 49 | 37 | 20 | 32 | 24 | 11 |
| 20 | 10 | 220 | 25 | | | 42 | 35 | 24 | 49 | 19 | 9 |
| 23 | 10 | 120 | 20 | | | 42 | 35 | 25 | 51 | 19 | 13 |
| **APR 06** | | | | | | | | | | | |
| 02 | 10 | 11 | 20 | | | 43 | 36 | 26 | 51 | 20 | 10 |
| 05 | 10 | 85 | 10 | | R | 38 | 34 | 29 | 70 | 19 | 7 |
| 08 | 10 | 50 | 20 | | | 40 | 38 | 35 | 82 | 20 | 13 |
| 11 | 10 | 110 | 40 | | | 45 | 41 | 36 | 71 | 25 | 13 |
| 14 | 10 | 45 | 50 | | | 52 | 42 | 31 | 45 | 23 | 14 |
| 17 | 10 | 60 | 45 | | | 49 | 41 | 32 | 52 | 25 | 12 |
| 20 | 10 | 60 | 20 | | | 43 | 39 | 34 | 71 | 22 | 16 |
| 23 | 10 | 13 | 20 | | | 38 | 36 | 34 | 86 | 21 | 11 |
| **APR 07** | | | | | | | | | | | |
| 02 | 10 | 16 | 20 | | | 37 | 35 | 33 | 86 | 23 | 16 |
| 05 | 10 | 13 | 20 | | | 36 | 34 | 32 | 85 | 25 | 16 |
| 08 | 10 | 15 | 30 | | | 35 | 33 | 29 | 79 | 23 | 13 |
| 11 | 10 | 27 | 40 | | | 40 | 35 | 28 | 62 | 24 | 20 |
| 14 | 10 | 200 | 40 | | | 45 | 34 | 17 | 33 | 26 | 21 |
| 17 | 8 | 55 | 45 | | | 45 | 35 | 19 | 35 | 25 | 20 |
| 20 | 2 | UNL | 40 | | | 38 | 31 | 20 | 48 | 24 | 16 |
| 23 | 0 | UNL | 20 | | | 34 | 30 | 24 | 67 | 20 | 10 |
| **APR 08** | | | | | | | | | | | |
| 02 | 3 | UNL | 20 | | | 31 | 27 | 21 | 67 | 21 | 8 |
| 05 | 3 | UNL | 20 | | | 26 | 24 | 20 | 78 | 23 | 8 |
| 08 | 5 | UNL | 30 | | | 35 | 30 | 21 | 57 | 35 | 4 |
| 11 | 5 | UNL | 50 | | | 48 | 37 | 21 | 34 | 00 | 0 |
| 14 | 7 | 250 | 60 | | | 52 | 39 | 20 | 28 | 25 | 12 |
| 17 | 10 | UNL | 60 | | | 54 | 39 | 19 | 25 | 15 | 10 |
| 20 | 6 | 250 | 20 | | | 44 | 35 | 21 | 40 | 14 | 6 |
| 23 | 3 | 250 | 20 | | | 40 | 33 | 22 | 49 | 23 | 3 |
| **APR 09** | | | | | | | | | | | |
| 02 | 10 | 85 | 20 | | RW | 42 | 36 | 28 | 58 | 15 | 10 |
| 05 | 10 | 80 | 20 | | | 39 | 35 | 29 | 67 | 09 | 8 |
| 08 | 10 | 250 | 30 | | | 41 | 35 | 28 | 60 | 02 | 7 |
| 11 | 10 | 200 | 30 | | | 49 | 41 | 32 | 52 | 02 | 7 |
| 14 | 10 | 180 | 30 | | | 51 | 42 | 32 | 48 | 30 | 10 |
| 17 | 10 | 70 | 15 | | RW | 47 | 39 | 28 | 48 | 26 | 13 |
| 20 | 10 | 25 | 5 | | R | 40 | 35 | 29 | 65 | 22 | 9 |
| 23 | 10 | 15 | 5 | | R | 36 | 35 | 34 | 93 | 21 | 15 |
| **APR 10** | | | | | | | | | | | |
| 02 | 10 | 7 | 10 | | | 36 | 35 | 33 | 89 | 22 | 12 |
| 05 | 10 | 4 | 10 | | | 35 | 33 | 30 | 82 | 21 | 12 |
| 08 | 10 | 3 | 7 | | | 36 | 35 | 34 | 93 | 23 | 8 |
| 11 | 10 | 15 | 5 | | RWF | 41 | 40 | 38 | 89 | 19 | 4 |
| 14 | 10 | 40 | 40 | | | 47 | 43 | 38 | 71 | 25 | 12 |
| 17 | 10 | 90 | 60 | | | 52 | 46 | 39 | 61 | 24 | 14 |
| 20 | 10 | 85 | 20 | | | 48 | 43 | 37 | 66 | 21 | 9 |
| 23 | 10 | 100 | 20 | | | 46 | 42 | 37 | 71 | 22 | 10 |
| **APR 11** | | | | | | | | | | | |
| 02 | 6 | 100 | 20 | | | 39 | 36 | 32 | 76 | 22 | 10 |
| 05 | 3 | UNL | 20 | | | 36 | 34 | 31 | 82 | 23 | 10 |
| 08 | 7 | UNL | 60 | | | 41 | 37 | 32 | 70 | 24 | 11 |
| 11 | 7 | UNL | 80 | | | 50 | 42 | 34 | 54 | 26 | 15 |
| 14 | 2 | UNL | 80 | | | 57 | 44 | 29 | 34 | 24 | 4 |
| 17 | 10 | UNL | 50 | | | 60 | 46 | 30 | 32 | 24 | 13 |
| 20 | 1 | UNL | 20 | | | 50 | 41 | 31 | 48 | 19 | 9 |
| 23 | 1 | UNL | 20 | | | 43 | 38 | 31 | 63 | 20 | 8 |
| **APR 12** | | | | | | | | | | | |
| 02 | 0 | UNL | 20 | | | 36 | 33 | 28 | 73 | 24 | |
| 05 | 0 | UNL | 20 | | | 42 | 37 | 30 | 63 | 21 | |
| 08 | 1 | UNL | 50 | | | 53 | 43 | 32 | 45 | 29 | 18 |
| 11 | 10 | UNL | 50 | | | 63 | 46 | 28 | 27 | 23 | 15 |
| 14 | 10 | UNL | 50 | | | 65 | 48 | 29 | 26 | 23 | 20 |
| 17 | 8 | 90 | 40 | | | 65 | 49 | 33 | 30 | 19 | 18 |
| 20 | 10 | 90 | 20 | | | 58 | 46 | 34 | 41 | 22 | 14 |
| 23 | 10 | 70 | 20 | | | 49 | 40 | 28 | 44 | 22 | 9 |
| **APR 13** | | | | | | | | | | | |
| 02 | 1 | UNL | 20 | | | 46 | 39 | 29 | 52 | 20 | 12 |
| 05 | 0 | UNL | 20 | | | 43 | 37 | 29 | 58 | 22 | 15 |
| 08 | 10 | UNL | 60 | | | 45 | 37 | 25 | 46 | 23 | 18 |
| 11 | 10 | 210 | 60 | | | 52 | 40 | 24 | 34 | 24 | 19 |
| 14 | 10 | 210 | 45 | | | 56 | 41 | 21 | 26 | 23 | 19 |
| 17 | 10 | 210 | 40 | | | 56 | 38 | 11 | 17 | 24 | 15 |
| 20 | 10 | 210 | 20 | | | 50 | 36 | 15 | 25 | 22 | 14 |
| 23 | 10 | 70 | 20 | | | 48 | 36 | 17 | 29 | 22 | 11 |
| **APR 14** | | | | | | | | | | | |
| 02 | 10 | 100 | 20 | | | 46 | 34 | 15 | 29 | 23 | 9 |
| 05 | 10 | 130 | 20 | | | 43 | 34 | 21 | 42 | 23 | 17 |
| 08 | 10 | 200 | 50 | | | 42 | 35 | 24 | 49 | 25 | 18 |
| 11 | 7 | UNL | 50 | | | 48 | 37 | 20 | 33 | 26 | 18 |
| 14 | 10 | UNL | 50 | | | 55 | 40 | 21 | 27 | 25 | 18 |
| 17 | 10 | UNL | 40 | | | 55 | 40 | 21 | 27 | 24 | 16 |
| 20 | 7 | UNL | 25 | | | 46 | 35 | 18 | 33 | 23 | 16 |
| 23 | 3 | UNL | 20 | | | 43 | 33 | 18 | 37 | 22 | 14 |
| **APR 15** | | | | | | | | | | | |
| 02 | 0 | UNL | 20 | | | 39 | 31 | 18 | 43 | 21 | 9 |
| 05 | 0 | UNL | 20 | | | 35 | 29 | 20 | 54 | 22 | 8 |
| 08 | 0 | UNL | 50 | | | 45 | 36 | 22 | 40 | 21 | 10 |
| 11 | 1 | UNL | 50 | | | 55 | 41 | 22 | 28 | 24 | 9 |
| 14 | 0 | UNL | 45 | | | 65 | 46 | 23 | 20 | 25 | 5 |
| 17 | 5 | UNL | 50 | | | 68 | 46 | 20 | 16 | 23 | 5 |
| 20 | 0 | UNL | 50 | | | 54 | 41 | 25 | 33 | 18 | 8 |
| 23 | 0 | UNL | 20 | | | 52 | 40 | 23 | 32 | 18 | 4 |
| **APR 16** | | | | | | | | | | | |
| 02 | 0 | UNL | 20 | | | 39 | 34 | 26 | 60 | 35 | 7 |
| 05 | 0 | UNL | 20 | | | 35 | 31 | 26 | 70 | 34 | 3 |
| 08 | 2 | UNL | 40 | | | 48 | 40 | 31 | 52 | 06 | 3 |
| 11 | 6 | UNL | 40 | | | 71 | 48 | 21 | 15 | 21 | 10 |
| 14 | 1 | UNL | 40 | | | 77 | 52 | 26 | 15 | 29 | 10 |
| 17 | 10 | 240 | 50 | | | 75 | 50 | 23 | 14 | 19 | 15 |
| 20 | 10 | 240 | 20 | | | 66 | 45 | 20 | 17 | 18 | 15 |
| 23 | 1 | UNL | 20 | | | 60 | 42 | 17 | 19 | 19 | 4 |
| **APR 17** | | | | | | | | | | | |
| 02 | 3 | UNL | 20 | | | 43 | 36 | 26 | 51 | 36 | 6 |
| 05 | 3 | UNL | 20 | | | 39 | 35 | 29 | 67 | 06 | 0 |
| 08 | 7 | UNL | 40 | | | 55 | 43 | 28 | 36 | 02 | 3 |
| 11 | 8 | UNL | 40 | | | 75 | 53 | 33 | 22 | 08 | 6 |
| 14 | 10 | UNL | 40 | | | 80 | 54 | 31 | 17 | 28 | 7 |
| 17 | 10 | 120 | 50 | | | 81 | 54 | 29 | 15 | 24 | 8 |
| 20 | 10 | UNL | 50 | | | 67 | 49 | 30 | 25 | 20 | 10 |
| 23 | 10 | UNL | 20 | | | 56 | 45 | 32 | 40 | 21 | 6 |
| **APR 18** | | | | | | | | | | | |
| 02 | 10 | 120 | 20 | | | 55 | 44 | 31 | 40 | 01 | 0 |
| 05 | 8 | UNL | 20 | | | 47 | 41 | 34 | 61 | 03 | 4 |
| 08 | 10 | 120 | 40 | | | 58 | 48 | 38 | 48 | 29 | 6 |
| 11 | 5 | UNL | 30 | | | 77 | 55 | 35 | 22 | 06 | 8 |
| 14 | 9 | UNL | 40 | | | 82 | 55 | 30 | 15 | 36 | 4 |
| 17 | 10 | UNL | 45 | | | 82 | 55 | 30 | 15 | 31 | 8 |
| 20 | 8 | UNL | 40 | | | 64 | 48 | 32 | 30 | 19 | 6 |
| 23 | 8 | UNL | 20 | | | 57 | 46 | 34 | 42 | 07 | 8 |

# MAXIMUM SHORT DURATION PRECIPITATION

| TIME PERIOD (MINUTES) | 5 | 10 | 15 | 20 | 30 | 45 | 60 | 80 | 100 | 120 | 150 | 180 |
|---|---|---|---|---|---|---|---|---|---|---|---|---|
| PRECIPITATION (INCHES) | 0.02 | 0.02 | 0.02 | 0.03 | 0.03 | 0.04 | 0.06 | 0.07 | 0.07 | 0.08 | 0.08 | 0.08 |
| ENDED: DATE | 26 | 26 | 26 | 26 | 26 | 26 | 26 | 26 | 26 | 26 | 26 | 26 |
| ENDED: TIME (LST) | 0122 | 0221 | 0221 | 0221 | 0221 | 0221 | 0221 | 0221 | 0221 | 0259 | 0259 | 0259 |

THE PRECIPITATION AMOUNTS FOR THE INDICATED TIME INTERVALS MAY OCCUR AT ANY TIME DURING THE MONTH. THE TIME INDICATED IS THE ENDING TIME OF THE INTERVAL. DATE AND TIME ARE NOT ENTERED FOR TRACE AMOUNTS.

# OBSERVATIONS AT 3-HOUR INTERVALS

APR 1994 POCATELLO, ID 24156

| HOUR L.S.T. | SKY COVER (TENTHS) | CEILING IN HUNDREDS OF FEET | VISIBILITY: WHOLE MILES | VISIBILITY: 16THS MILE | WEATHER | TEMPERATURE: AIR F | TEMPERATURE: WET BULB F | TEMPERATURE: DEW POINT F | REL HUMIDITY % | WIND: DIRECTION | WIND: SPEED (KNOTS) |
|---|---|---|---|---|---|---|---|---|---|---|---|
| **APR 19** | | | | | | | | | | | |
| 02 | 8 | UNL | 20 | | | 55 | 44 | 33 | 44 | 11 | 6 |
| 05 | 8 | 120 | 20 | | | 45 | 42 | 38 | 77 | 36 | 7 |
| 08 | 3 | UNL | 40 | | | 57 | 47 | 38 | 49 | 36 | 7 |
| 11 | 4 | UNL | 40 | | | 77 | 55 | 37 | 24 | 32 | 7 |
| 14 | 3 | UNL | 30 | | | 82 | 56 | 34 | 19 | 33 | 8 |
| 17 | 10 | 80 | 30 | | | 68 | 52 | 38 | 33 | 07 | 13 |
| 20 | 10 | 100 | 20 | | | 68 | 51 | 35 | 30 | 17 | 10 |
| 23 | 5 | UNL | 20 | | | 54 | 45 | 35 | 49 | 19 | 7 |
| **APR 20** | | | | | | | | | | | |
| 02 | 6 | UNL | 20 | | | 51 | 45 | 38 | 61 | 21 | 5 |
| 05 | 2 | UNL | 20 | | | 45 | 41 | 37 | 74 | 22 | 3 |
| 08 | 0 | UNL | 40 | | | 56 | 49 | 42 | 60 | 02 | 4 |
| 11 | 0 | UNL | 50 | | | 75 | 56 | 41 | 30 | 00 | 0 |
| 14 | 3 | UNL | 60 | | | 82 | 56 | 34 | 18 | 27 | 8 |
| 17 | 3 | UNL | 50 | | | 82 | 53 | 24 | 12 | 28 | 9 |
| 20 | 1 | UNL | 20 | | | 68 | 50 | 33 | 27 | 14 | 6 |
| 23 | 0 | UNL | 20 | | | 60 | 48 | 35 | 39 | 29 | 4 |
| **APR 21** | | | | | | | | | | | |
| 02 | 0 | UNL | 20 | | | 52 | 46 | 40 | 64 | 07 | 4 |
| 05 | 3 | UNL | 20 | | | 45 | 42 | 38 | 77 | 32 | 6 |
| 08 | 10 | 140 | 50 | | | 58 | 49 | 40 | 51 | 04 | 6 |
| 11 | 10 | 240 | 50 | | | 77 | 57 | 42 | 29 | 31 | 6 |
| 14 | 9 | UNL | 50 | | | 85 | 55 | 26 | 12 | 23 | 17 |
| 17 | 10 | UNL | 30 | | | 83 | 54 | 26 | 12 | 20 | 16 |
| 20 | 8 | UNL | 20 | | | 66 | 50 | 36 | 33 | 17 | 6 |
| 23 | 7 | UNL | 20 | | | 64 | 49 | 34 | 32 | 24 | 4 |
| **APR 22** | | | | | | | | | | | |
| 02 | 0 | UNL | 20 | | | 56 | 45 | 34 | 44 | 18 | 8 |
| 05 | 2 | UNL | 20 | | | 48 | 43 | 38 | 69 | 22 | 8 |
| 08 | 1 | UNL | 45 | | | 53 | 46 | 39 | 59 | 23 | 14 |
| 11 | 6 | 240 | 50 | | | 59 | 49 | 40 | 58 | 24 | 8 |
| 14 | 2 | UNL | 50 | | | 67 | 52 | 38 | 35 | 23 | 16 |
| 17 | 2 | UNL | 50 | | | 67 | 51 | 36 | 32 | 26 | 11 |
| 20 | 9 | 130 | 20 | | | 56 | 47 | 39 | 53 | 28 | 15 |
| 23 | 9 | 95 | 20 | | | 50 | 45 | 40 | 69 | 15 | 6 |
| **APR 23** | | | | | | | | | | | |
| 02 | 10 | 100 | 20 | | | 46 | 42 | 38 | 74 | 18 | 6 |
| 05 | 10 | UNL | 20 | | | 42 | 39 | 36 | 76 | 00 | 0 |
| 08 | 10 | 130 | 50 | | | 51 | 46 | 40 | 66 | 36 | 4 |
| 11 | 10 | 240 | 50 | | | 60 | 50 | 41 | 50 | 36 | 7 |
| 14 | 9 | 80 | 50 | | | 66 | 50 | 34 | 31 | 35 | 6 |
| 17 | 8 | 250 | 30 | | | 69 | 48 | 24 | 18 | 20 | 18 |
| 20 | 5 | UNL | 15 | | | 49 | 44 | 39 | 69 | 14 | 5 |
| 23 | 10 | 110 | 20 | | | 46 | 43 | 40 | 80 | 27 | 6 |
| **APR 24** | | | | | | | | | | | |
| 02 | 10 | 130 | 20 | | | 45 | 43 | 41 | 86 | 30 | 4 |
| 05 | 9 | 250 | 20 | | | 40 | 39 | 37 | 89 | 00 | 0 |
| 08 | 5 | UNL | 35 | | | 44 | 43 | 42 | 93 | 29 | 7 |
| 11 | 9 | 40 | 35 | | RW | 57 | 48 | 40 | 53 | 35 | 8 |
| 14 | 9 | 45 | 40 | | | 56 | 48 | 40 | 55 | 25 | 14 |
| 17 | 10 | 250 | 40 | | | 53 | 46 | 39 | 59 | 27 | 9 |
| 20 | 10 | UNL | 20 | | | 48 | 43 | 38 | 69 | 22 | 4 |
| 23 | 10 | UNL | 20 | | | 39 | 36 | 33 | 79 | 13 | 7 |
| **APR 25** | | | | | | | | | | | |
| 02 | 10 | UNL | 20 | | | 35 | 34 | 32 | 89 | 19 | 5 |
| 05 | 9 | 250 | 20 | | | 33 | 32 | 30 | 89 | 00 | 0 |
| 08 | 10 | 15 | 40 | | | 40 | 38 | 35 | 82 | 00 | 0 |
| 11 | 10 | 130 | 30 | | | 46 | 42 | 37 | 71 | 29 | 9 |
| 14 | 10 | 37 | 30 | | RW | 38 | 37 | 35 | 89 | 22 | 14 |
| 17 | 9 | 110 | 40 | | | 45 | 41 | 36 | 71 | 23 | 11 |
| 20 | 9 | UNL | 20 | | | 40 | 38 | 35 | 82 | 19 | 6 |
| 23 | 10 | 40 | 20 | | | 43 | 39 | 35 | 74 | 22 | 6 |
| **APR 26** | | | | | | | | | | | |
| 02 | 10 | 11 | 2 | | SW | 35 | 34 | 33 | 92 | 05 | 7 |
| 05 | 10 | 80 | 20 | | | 36 | 36 | 35 | 96 | 00 | 0 |
| 08 | 10 | UNL | 40 | | | 39 | 35 | 30 | 70 | 02 | 16 |
| 11 | 10 | 40 | 60 | | | 45 | 37 | 25 | 46 | 05 | 11 |
| 14 | 10 | 60 | 60 | | | 52 | 40 | 23 | 32 | 02 | 10 |
| 17 | 10 | 70 | 50 | | | 51 | 38 | 21 | 31 | 36 | 13 |
| 20 | 10 | 150 | 40 | | | 43 | 36 | 26 | 51 | 06 | 9 |
| 23 | 10 | 35 | 20 | | | 38 | 36 | 33 | 82 | 06 | 7 |
| **APR 27** | | | | | | | | | | | |
| 02 | 10 | 16 | 20 | | | 36 | 34 | 32 | 85 | 01 | 6 |
| 05 | 10 | 5 | 15 | | | 35 | 34 | 33 | 92 | 01 | 3 |
| 08 | 10 | 13 | 10 | | | 36 | 35 | 33 | 89 | 02 | 12 |
| 11 | 10 | 24 | 25 | | | 42 | 37 | 31 | 65 | 01 | 13 |
| 14 | 9 | 55 | 40 | | | 48 | 40 | 30 | 50 | 36 | 12 |
| 17 | 10 | 48 | 50 | | | 48 | 40 | 29 | 48 | 02 | 6 |
| 20 | 10 | 55 | 40 | | | 44 | 39 | 32 | 63 | 10 | 3 |
| 23 | 10 | 45 | 20 | | R | 42 | 38 | 32 | 68 | 04 | 7 |
| **APR 28** | | | | | | | | | | | |
| 02 | 10 | 50 | 20 | | | 37 | 32 | 24 | 59 | 04 | 5 |
| 05 | 10 | UNL | 20 | | | 32 | 29 | 23 | 69 | 04 | 4 |
| 08 | 10 | 200 | 30 | | | 38 | 32 | 23 | 55 | 04 | 12 |
| 11 | 10 | 27 | 2 | 8 | SF | 40 | 36 | 31 | 70 | 03 | 11 |
| 14 | 10 | 39 | 30 | | | 49 | 40 | 28 | 44 | 06 | 13 |
| 17 | 10 | 200 | 60 | | | 53 | 39 | 18 | 25 | 35 | 10 |
| 20 | 3 | UNL | 20 | | | 38 | 30 | 17 | 43 | 02 | 6 |
| 23 | 0 | UNL | 20 | | | 33 | 27 | 17 | 52 | 09 | 8 |
| **APR 29** | | | | | | | | | | | |
| 02 | 1 | UNL | 20 | | | 28 | 24 | 16 | 61 | 08 | 6 |
| 05 | 0 | UNL | 40 | | | 23 | 20 | 14 | 68 | 22 | 6 |
| 08 | 0 | UNL | 70 | | | 37 | 30 | 17 | 44 | 05 | 3 |
| 11 | 0 | UNL | 70 | | | 50 | 37 | 18 | 28 | 35 | 6 |
| 14 | 2 | UNL | 70 | | | 53 | 38 | 15 | 22 | 18 | 7 |
| 17 | 0 | UNL | 70 | | | 56 | 40 | 18 | 23 | 27 | 5 |
| 20 | 0 | UNL | 70 | | | 47 | 35 | 17 | 30 | 18 | 7 |
| 23 | 0 | UNL | 20 | | | 35 | 29 | 18 | 50 | 22 | 5 |
| **APR 30** | | | | | | | | | | | |
| 02 | 0 | UNL | 20 | | | 32 | 28 | 20 | 61 | 35 | 3 |
| 05 | 0 | UNL | 40 | | | 30 | 27 | 23 | 75 | 33 | 9 |
| 08 | 0 | UNL | 40 | | | 47 | 38 | 26 | 44 | 36 | 5 |
| 11 | 0 | 250 | 40 | | | 57 | 44 | 28 | 33 | 31 | 10 |
| 14 | 0 | 250 | 40 | | | 64 | 46 | 24 | 22 | 24 | 12 |
| 17 | 0 | 250 | 40 | | | 59 | 46 | 31 | 35 | 26 | 14 |
| 20 | 0 | UNL | 20 | | | 49 | 41 | 31 | 50 | 21 | 13 |
| 23 | 0 | UNL | 20 | | | 46 | 39 | 29 | 52 | 24 | 7 |

# WEATHER CODES AND NOTES

| | | | | | |
|---|---|---|---|---|---|
| * | TORNADO | SW | SNOW SHOWERS | GF | GROUND FOG |
| T | THUNDERSTORM | SG | SNOW GRAINS | BD | BLOWING DUST |
| Q | SQUALL | SP | SNOW PELLETS | BN | BLOWING SAND |
| R | RAIN | IC | ICE CRYSTALS | BS | BLOWING SNOW |
| RW | RAIN SHOWERS | IP | ICE PELLETS | BY | BLOWING SPRAY |
| ZR | FREEZING RAIN | IPW | ICE PELLET SHOWERS | K | SMOKE |
| L | DRIZZLE | A | HAIL | H | HAZE |
| ZL | FREEZING DRIZZLE | F | FOG | D | DUST |
| S | SNOW | IF | ICE FOG | | |

CEILING: UNL INDICATES UNLIMITED
WIND DIRECTION: DIRECTIONS ARE THOSE FROM WHICH THE WIND IS BLOWING, INDICATED IN TENS OF DEGREES FROM TRUE NORTH: I.E. 09 FOR
EAST, 18 FOR SOUTH, 27 FOR WEST. AN ENTRY OF 00 INDICATES CALM.
SPEED: THE OBSERVED AVERAGE ONE-MINUTE VALUE (MPH=KNOTS X 1.15).

# SUMMARY BY HOURS

| HOUR L.S.T. | AVERAGES: SKY COVER (TENTHS) | AVERAGES: STATION PRESSURE (INCHES) | AVERAGES: TEMPERATURE: AIR F | AVERAGES: TEMPERATURE: WET BULB F | AVERAGES: TEMPERATURE: DEW POINT F | AVERAGES: REL HUMIDITY % | AVERAGES: SPEED (MPH) | RESULTANT WIND: DIRECTION | RESULTANT WIND: SPEED (MPH) |
|---|---|---|---|---|---|---|---|---|---|
| 02 | 6 | 25.420 | 41 | 36 | 29 | 65 | 9.1 | 21 | 4.9 |
| 05 | 6 | 25.420 | 37 | 34 | 29 | 73 | 7.8 | 23 | 4.9 |
| 08 | 7 | 25.450 | 44 | 38 | 31 | 62 | 10.2 | 24 | 3.2 |
| 11 | 7 | 25.450 | 54 | 43 | 31 | 47 | 11.4 | 27 | 5.9 |
| 14 | 8 | 25.420 | 59 | 45 | 29 | 37 | 13.1 | 26 | 9.6 |
| 17 | 8 | 25.390 | 59 | 44 | 28 | 37 | 13.3 | 24 | 8.5 |
| 20 | 7 | 25.400 | 50 | 40 | 29 | 48 | 10.9 | 20 | 8.0 |
| 23 | 6 | 25.420 | 45 | 38 | 29 | 57 | 9.4 | 20 | 6.4 |

P&D ASHEVILLE N.C. 288 08/10/94 PM

NATIONAL CLIMATIC DATA CENTER
ROOM 120
151 PATTON AVENUE
ASHEVILLE, NORTH CAROLINA 28801-5001

OFFICIAL BUSINESS
PENALTY FOR PRIVATE USE $300

FIRST CLASS
POSTAGE AND FEES PAID
NOAA
PERMIT G-19

LCD-10-24156-PD-9509

33766
J R SIMPLOT COMPANY
ATTN: J F COCHRANE - PO #35724
PO BOX 912
POCATELLO ID 83204

# HOURLY PRECIPITATION (WATER EQUIVALENT IN INCHES)

APR 1994 24156
POCATELLO, ID
USCCM - NOAA - ASHEVILLE, NC 125

| DATE | A.M. HOUR ENDING AT | | | | | | | | | | | | P.M. HOUR ENDING AT | | | | | | | | | | | | DATE |
|---|---|---|---|---|---|---|---|---|---|---|---|---|---|---|---|---|---|---|---|---|---|---|---|---|---|
| | 1 | 2 | 3 | 4 | 5 | 6 | 7 | 8 | 9 | 10 | 11 | 12 | 1 | 2 | 3 | 4 | 5 | 6 | 7 | 8 | 9 | 10 | 11 | 12 | |
| 01 | | 0.01 | | | | | | | T | T | 0.01 | 0.02 | 0.01 | T | T | | | | | | | | | | 01 |
| 02 | | | | | | | | | | | | | | | | | | | | | | | | | 02 |
| 03 | | | | | | | | | | T | T | T | T | T | 0.02 | 0.02 | 0.02 | T | | | | | | | 03 |
| 04 | | | | | | | | | | | T | T | T | T | T | 0.03 | 0.01 | | T | | | | | | 04 |
| 05 | | | | | | | | | | | | | | | | | | | | | | | | | 05 |
| 06 | | | T | T | 0.01 | 0.01 | T | T | 0.02 | T | T | | | | | | | | | T | T | 0.02 | 0.01 | T | 06 |
| 07 | | | | | | | | | | | | | | | | | | | | | | | | | 07 |
| 08 | | | | | | | | | | | | | | | | | | | | | | | | | 08 |
| 09 | | T | T | | | | | | | | | | | | T | T | T | T | T | 0.01 | 0.01 | 0.03 | 0.01 | 0.01 | 09 |
| 10 | T | T | | | | | | | | -0.01 | 0.02 | T | | | | | | | | | | | | | 10 |
| 11 | | | | | | | | | | | | | | | | | | | | | | | | | 11 |
| 12 | | | | | | | | | | | | | | | | | | T | T | | | | | | 12 |
| 13 | | | | | | | | | | | | | | | | | | | | | | | | | 13 |
| 14 | | | | | | | | | | | | | | | | | | | | | | | | | 14 |
| 15 | | | | | | | | | | | | | | | | | | | | | | | | | 15 |
| 16 | | | | | | | | | | | | | | | | | | | | | | | | | 16 |
| 17 | | | | | | | | | | | | | | | | | | | | | | | | | 17 |
| 18 | | | | | | | | | | | | | | | | | | | | | | | | | 18 |
| 19 | | | | | | | | | | | | | | | | | | T | T | | | | | | 19 |
| 20 | | | | | | | | | | | | | | | | | | | | | | | | | 20 |
| 21 | | | | | | | | | | | | | | | | | | | | | | | | | 21 |
| 22 | | | | | | | | | | | | | | | | | | | | | | | | | 22 |
| 23 | | | | | | | | | | | | | | | | | | T | T | | | | | T | 23 |
| 24 | T | T | | | | | T | T | | T | T | T | 0.02 | T | | | | | | | | | | | 24 |
| 25 | | | | | | | | | | | | | T | 0.01 | T | | | | | | | | | | 25 |
| 26 | T | 0.06 | 0.02 | | | | | | | | | | | | | | | | | | | | | | 26 |
| 27 | | | T | T | T | | T | T | | | | | | | | | | | | | | | T | T | 27 |
| 28 | | | | | | | | | T | T | T | T | T | | | | | | | | | | | | 28 |
| 29 | | | | | | | | | | | | | | | | | | | | | | | | | 29 |
| 30 | | | | | | | | | | | | | | | | | | | | | | | | | 30 |

MAY 1994
POCATELLO, ID
NAT'L WEA SER OFC
20369 THUNDERBOLT STREET-C

INQUIRIES/COMMENTS CALL
(704) 271-4800 VOICE
271-4010 TDD/271-4876 FAX

MUNICIPAL AIRPORT

ISSN # 0198-1811

# LOCAL CLIMATOLOGICAL DATA

## MONTHLY SUMMARY

LATITUDE 42° 55'N LONGITUDE 112° 36'W ELEVATION (GROUND) 4454 FEET TIME ZONE MOUNTAIN 24156

MAY 1994
POCATELLO, ID

| DATE | TEMPERATURE °F MAXIMUM | MINIMUM | AVERAGE | DEPARTURE FROM NORMAL | AVERAGE DEW POINT | DEGREE DAYS BASE 65 °F HEATING | COOLING | WEATHER TYPES 1 FOG 2 HEAVY FOG 3 THUNDERSTORMS 4 ICE PELLETS 5 HAIL 6 GLAZE 7 DUSTSTORM 8 SMOKE, HAZE 9 BLOWING SNOW | SNOW/ICE ON GRD AT 0500 (IN.) | PRECIPITATION (INCHES) WATER EQUIVALENT | SNOW ICE PELLETS | AVERAGE STATION PRESSURE (INCHES OF Hg) ELEV. 4478 (FT.MSL) | WIND (M.P.H.) RESULTANT DIR | RESULTANT SPEED | AVERAGE SPEED | PEAK GUST SPEED | PEAK GUST DIR | FASTEST 1-MIN SPEED | FASTEST 1-MIN DIR | SUNSHINE MINUTES | SUNSHINE PERCENT POSSIBLE | SKY COVER TENTHS SUNRISE TO SUNSET | SKY COVER TENTHS MIDNIGHT TO MIDNIGHT |
|---|---|---|---|---|---|---|---|---|---|---|---|---|---|---|---|---|---|---|---|---|---|---|---|
| 1 | 2 | 3 | 4 | 5 | 6 | 7A | 7B | 8 | 9 | 10 | 11 | 12 | 13 | 14 | 15 | 16 | 17 | 18 | 19 | 20 | 21 | 22 | 23 |
| 01 | 59 | 36 | 48 | -1 | 32 | 17 | 0 | | 0 | 0.03 | 0.0 | 25.470 | 23 | 11.2 | 12.4 | 28 | W | 20 | 28 | 635 | 75 | 6 | 6 |
| 02 | 67 | 31* | 49 | -1 | 29 | 16 | 0 | | 0 | T | 0.0 | 25.440 | 24 | 8.3 | 11.1 | 28 | SW | 16 | 23 | 674 | 79 | 8 | 8 |
| 03 | 68 | 41 | 55 | 5 | 32 | 10 | 0 | | 0 | 0.00 | 0.0 | 25.450 | 23 | 8.4 | 10.0 | 26 | W | 15 | 27 | 796 | 94 | 5 | 6 |
| 04 | 73 | 46 | 60 | 10 | 40 | 5 | 0 | | 0 | 0.24 | 0.0 | 25.430 | 19 | 6.2 | 11.2 | 26 | S | 18 | 30 | 360 | 42 | 9 | 9 |
| 05 | 71 | 47 | 59 | 9 | 48 | 6 | 0 | 3 | 0 | 0.14 | 0.0 | 25.440 | 01 | 1.9 | 7.6 | 24 | SE | 16 | 22 | 678 | 79 | 9 | 9 |
| 06 | 80 | 43 | 62 | 11 | 40 | 3 | 0 | 3 | 0 | 0.02 | 0.0 | 25.390 | 04 | 7.4 | 12.7 | 61 | S | 30 | 19 | 634 | 74 | 3 | 3 |
| 07 | 74 | 41 | 58 | 7 | 41 | 7 | 0 | 3 | 0 | 0.03 | 0.0 | 25.390 | 24 | 2.7 | 9.4 | 40 | S | 28 | 18 | 721 | 84 | 8 | 7 |
| 08 | 73 | 45 | 59 | 8 | 41 | 6 | 0 | | 0 | 0.00 | 0.0 | 25.460 | 25 | 3.4 | 8.4 | 18 | S | 13 | 22 | 622 | 72 | 9 | 9 |
| 09 | 82 | 43 | 63 | 11 | 38 | 2 | 0 | | 0 | 0.00 | 0.0 | 25.490 | 28 | 3.9 | 6.8 | 20 | NW | 12 | 32 | 814 | 94 | 1 | 1 |
| 10 | 83 | 44 | 64 | 12 | 41 | 1 | 0 | | 0 | 0.00 | 0.0 | 25.520 | 24 | 7.2 | 8.3 | 24 | SW | 12 | 22 | 815 | 94 | 7 | 6 |
| 11 | 86* | 48 | 67* | 15 | 39 | 0 | 2 | | 0 | 0.00 | 0.0 | 25.490 | 24 | 5.2 | 6.8 | 15 | W | 12 | 20 | 850 | 98 | 2 | 2 |
| 12 | 79 | 53 | 66 | 14 | 46 | 0 | 1 | | 0 | 0.02 | 0.0 | 25.380 | 24 | 9.2 | 10.3 | 32 | SW | 22 | 20 | 445 | 51 | 9 | 9 |
| 13 | 69 | 49 | 59 | 6 | 32 | 6 | 0 | | 0 | 0.00 | 0.0 | 25.420 | 23 | 14.7 | 15.1 | 33 | SW | 22 | 25 | 794 | 91 | 5 | 5 |
| 14 | 78 | 36 | 57 | 4 | 22 | 8 | 0 | | 0 | 0.00 | 0.0 | 25.390 | 22 | 5.7 | 8.7 | 22 | S | 16 | 19 | 835 | 95 | 8 | 6 |
| 15 | 81 | 47 | 64 | 11 | 35 | 1 | 0 | | 0 | 0.01 | 0.0 | 25.220 | 22 | 10.5 | 14.2 | 45 | S | 30 | 20 | 394 | 45 | 10 | 9 |
| 16 | 58 | 42 | 50 | -4 | 36 | 15 | 0 | 3 | 0 | 0.15 | 0.0 | 25.230 | 27 | 3.8 | 8.5 | 22 | NW | 15 | 30 | 407 | 46 | 10 | 9 |
| 17 | 58 | 37 | 48* | -6 | 38 | 17 | 0 | 1 45 | 0 | 0.11 | T | 25.300 | 23 | 6.7 | 9.4 | 26 | SW | 18 | 23 | 501 | 57 | 8 | 8 |
| 18 | 70 | 36 | 53 | -1 | 38 | 12 | 0 | | 0 | T | 0.0 | 25.380 | 29 | 3.9 | 8.0 | 22 | W | 14 | 29 | 678 | 77 | 7 | 7 |
| 19 | 67 | 42 | 55 | 1 | 38 | 10 | 0 | | 0 | 0.04 | 0.0 | 25.400 | 23 | 4.5 | 10.6 | 38 | W | 23 | 27 | 594 | 67 | 7 | 7 |
| 20 | 63 | 39 | 51 | -4 | 36 | 14 | 0 | | 0 | 0.00 | 0.0 | 25.465 | 24 | 9.7 | 11.0 | 26 | W | 18 | 29 | 796 | 90 | 6 | 5 |
| 21 | 73 | 33 | 53 | -2 | 32 | 12 | 0 | | 0 | 0.00 | 0.0 | 25.470 | 32 | 2.6 | 6.8 | 17 | NW | 12 | 27 | 844 | 95 | 5 | 4 |
| 22 | 75 | 36 | 56 | 1 | 37 | 9 | 0 | | 0 | 0.00 | 0.0 | 25.480 | 25 | 7.6 | 9.3 | 22 | W | 16 | 24 | 892 | 100 | 8 | 6 |
| 23 | 79 | 39 | 59 | 3 | 36 | 6 | 0 | 3 | 0 | 0.00 | 0.0 | 25.580 | 25 | 5.6 | 7.8 | 16 | NW | 12 | 27 | 874 | 98 | 4 | 4 |
| 24 | 81 | 39 | 60 | 4 | 35 | 5 | 0 | | 0 | 0.00 | 0.0 | 25.540 | 25 | 5.6 | 7.0 | 15 | NW | 12 | 27 | 891 | 100 | 3 | 2 |
| 25 | 85 | 38 | 62 | 6 | 35 | 3 | 0 | | 0 | 0.00 | 0.0 | 25.390 | 34 | 3.9 | 8.0 | 28 | N | 16 | 36 | 897 | 100 | 1 | 1 |
| 26 | 83 | 44 | 64 | 7 | 38 | 1 | 0 | | 0 | 0.00 | 0.0 | 25.330 | 20 | 8.0 | 11.4 | 37 | SW | 25 | 16 | 648 | 72 | 7 | 6 |
| 27 | 77 | 50 | 64 | 7 | 46 | 1 | 0 | 3 | 0 | 0.29 | 0.0 | 25.400 | 23 | 8.9 | 10.6 | 40 | SW | 30 | 20 | 502 | 56 | 9 | 8 |
| 28 | 76 | 41 | 59 | 2 | 44 | 6 | 0 | 3 | 0 | 0.03 | 0.0 | 25.480 | 20 | 5.5 | 8.5 | 30 | S | 16 | 18 | 715 | 79 | 7 | 6 |
| 29 | 79 | 45 | 62 | 5 | 43 | 3 | 0 | | 0 | 0.00 | 0.0 | 25.440 | 24 | 9.8 | 10.8 | 33 | W | 20 | 24 | 798 | 88 | 10 | 8 |
| 30 | 80 | 52 | 66 | 8 | 40 | 0 | 1 | | 0 | 0.00 | 0.0 | 25.480 | 23 | 7.3 | 10.4 | 24 | W | 17 | 23 | 904 | 100 | 1 | 2 |
| 31 | 67 | 52 | 60 | 2 | 50 | 5 | 0 | 3 | 0 | 0.46 | 0.0 | 25.390 | 23 | 5.9 | 9.4 | 26 | SW | 16 | 23 | 159 | 18 | 10 | 9 |

| | | | | | | | | | | | | | | | | | | | | | | | |
|---|---|---|---|---|---|---|---|---|---|---|---|---|---|---|---|---|---|---|---|---|---|---|---|
| SUM | SUM | | | | TOTAL | TOTAL | NUMBER OF DAYS | TOTAL | TOTAL | FOR THE MONTH : | | | | | | | | TOTAL | % | SUM | SUM |
| 2294 | 1315 | | | | 207 | 4 | | 1.57 | T | 25.425 | 24 | 5.5 | 9.7 | 61 | S | 30 | 20 | 21167 | FOR | 202 | 187 |
| AVG. | AVG. | AVG. | DEP. | AVG. | DEP. | DEP. | PRECIPITATION | DEP. | | | | | | DATE: 6 | | DATE:27+ | | POSS | MONTH | AVG | AVG |
| 74.0 | 42.4 | 58.2 | 4.6 | 37.9 | -146 | 4 | ≥ .01 INCH 13 | 0.22 | | | | | | | | | | 27246 | 78 | 6.5 | 6.0 |

| NUMBER OF DAYS | | | | SEASON TO DATE TOTAL | SEASON TO DATE TOTAL | SNOW, ICE PELLETS | GREATEST IN 24 HOURS AND DATES | | | GREATEST DEPTH ON GROUND OF SNOW, ICE PELLETS OR ICE AND DATE | |
|---|---|---|---|---|---|---|---|---|---|---|---|
| MAXIMUM TEMP. | | MINIMUM TEMP. | | 6714 | 5 | ≥ 1.0 INCH 0 | | | | | |
| ≥ 90° | ≤ 32° | ≤ 32° | ≤ 0° | DEP. | DEP. | THUNDERSTORMS 8 | PRECIPITATION | SNOW, ICE PELLETS | | 0 | |
| 0 | 0 | 1 | 0 | -341 | 5 | HEAVY FOG 0 | 0.46 | 31 | trace | 17 | |
| | | | | | | CLEAR 6 | PARTLY CLOUDY 11 | | CLOUDY 14 | | |

* EXTREME FOR THE MONTH - LAST OCCURRENCE IF MORE THAN ONE.
T TRACE AMOUNT.
+ ALSO ON EARLIER DATE(S).
HEAVY FOG: VISIBILITY 1/4 MILE OR LESS.
BLANK ENTRIES DENOTE MISSING OR UNREPORTED DATA.

DATA IN COLS 6 AND 12-15 ARE BASED ON 21 OR MORE OBSERVATIONS AT HOURLY INTERVALS. RESULTANT WIND IS THE VECTOR SUM OF WIND SPEEDS AND DIRECTIONS DIVIDED BY THE NUMBER OF OBSERVATIONS.
COLS 16 & 17 : PEAK GUST - HIGHEST INSTANTANEOUS WIND SPEED.
ONE OF TWO WINDS IS GIVEN UNDER COLS 18 & 19 : FASTEST MILE- HIGHEST RECORDED SPEED FOR WHICH A MILE OF WIND PASSES STATION (DIRECTION IN COMPASS POINTS). FASTEST OBSERVED ONE MINUTE WIND - HIGHEST ONE MINUTE SPEED (DIRECTION IN TENS OF DEGREES).
ERRORS WILL BE CORRECTED IN SUBSEQUENT PUBLICATIONS.

I CERTIFY THAT THIS IS AN OFFICIAL PUBLICATION OF THE NATIONAL OCEANIC AND ATMOSPHERIC ADMINISTRATION AND IS COMPILED FROM RECORDS ON FILE AT THE NATIONAL CLIMATIC DATA CENTER.

Kenneth D Hadeen
DIRECTOR
NATIONAL CLIMATIC DATA CENTER

noaa NATIONAL OCEANIC AND ATMOSPHERIC ADMINISTRATION
NATIONAL ENVIRONMENTAL SATELLITE, DATA, AND INFORMATION SERVICE
NATIONAL CLIMATIC DATA CENTER ASHEVILLE, NORTH CAROLINA

# OBSERVATIONS AT 3-HOUR INTERVALS

MAY 1994 POCATELLO, ID 24156

| HOUR L.S.T. | SKY COVER (TENTHS) | CEILING IN HUNDREDS OF FEET | VISIBILITY WHOLE MILES | VISIBILITY 16THS MILE | WEATHER | TEMPERATURE AIR °F | TEMPERATURE WET BULB °F | TEMPERATURE DEW POINT °F | REL HUMIDITY % | WIND DIRECTION | WIND SPEED (KNOTS) |
|---|---|---|---|---|---|---|---|---|---|---|---|
| **MAY 01** | | | | | | | | | | | |
| 02 | 10 | 31 | 20 | | | 44 | 42 | 39 | 83 | 21 | 10 |
| 05 | 10 | 21 | 20 | | RW | 43 | 42 | 40 | 89 | 21 | 8 |
| 08 | 10 | 16 | 20 | | | 43 | 41 | 38 | 83 | 25 | 13 |
| 11 | 9 | 100 | 30 | | | 51 | 43 | 34 | 52 | 24 | 15 |
| 14 | 3 | UNL | 50 | | | 57 | 44 | 30 | 36 | 26 | 15 |
| 17 | 2 | UNL | 70 | | | 58 | 44 | 27 | 31 | 24 | 9 |
| 20 | 2 | UNL | 40 | | | 47 | 37 | 24 | 41 | 20 | 7 |
| 23 | 2 | UNL | 20 | | | 44 | 35 | 22 | 42 | 18 | 7 |
| **MAY 02** | | | | | | | | | | | |
| 02 | 7 | UNL | 20 | | | 35 | 30 | 22 | 59 | 21 | 4 |
| 05 | 5 | UNL | 50 | | | 38 | 32 | 22 | 53 | 22 | 6 |
| 08 | 4 | UNL | 50 | | | 49 | 40 | 30 | 48 | 01 | 8 |
| 11 | 10 | 95 | 50 | | | 61 | 45 | 25 | 25 | 24 | 9 |
| 14 | 10 | 100 | 40 | | | 65 | 47 | 27 | 24 | 23 | 14 |
| 17 | 10 | 250 | 40 | | | 62 | 47 | 32 | 33 | 24 | 13 |
| 20 | 10 | 250 | 40 | | | 53 | 45 | 37 | 55 | 18 | 13 |
| 23 | 9 | 250 | 20 | | | 51 | 43 | 35 | 55 | 21 | 8 |
| **MAY 03** | | | | | | | | | | | |
| 02 | 10 | 250 | 20 | | | 46 | 41 | 36 | 68 | 22 | 6 |
| 05 | 10 | UNL | 20 | | | 44 | 41 | 37 | 77 | 21 | 6 |
| 08 | 5 | UNL | 50 | | | 52 | 46 | 39 | 61 | 21 | 6 |
| 11 | 3 | UNL | 50 | | | 61 | 46 | 30 | 31 | 21 | 8 |
| 14 | 8 | UNL | 60 | | | 65 | 45 | 22 | 19 | 26 | 13 |
| 17 | 0 | UNL | 70 | | | 67 | 47 | 26 | 21 | 27 | 13 |
| 20 | 8 | UNL | 60 | | | 52 | 43 | 32 | 47 | 23 | 6 |
| 23 | 8 | 100 | 20 | | | 55 | 46 | 36 | 49 | 17 | 9 |
| **MAY 04** | | | | | | | | | | | |
| 02 | 1 | UNL | 20 | | | 52 | 44 | 35 | 53 | 20 | 8 |
| 05 | 10 | 95 | 20 | | | 56 | 45 | 33 | 42 | 18 | 9 |
| 08 | 10 | 80 | 50 | | | 61 | 48 | 36 | 40 | 19 | 15 |
| 11 | 8 | 80 | 50 | | | 71 | 52 | 34 | 26 | 20 | 12 |
| 14 | 9 | 100 | 50 | | | 70 | 54 | 40 | 34 | 18 | 15 |
| 17 | 10 | 85 | 45 | | RW | 67 | 54 | 43 | 42 | 30 | 16 |
| 20 | 10 | 65 | 20 | | RW | 57 | 51 | 45 | 64 | 06 | 7 |
| 23 | 10 | 55 | 20 | | RW | 51 | 51 | 50 | 96 | 08 | 6 |
| **MAY 05** | | | | | | | | | | | |
| 02 | 10 | 80 | 20 | | RW | 53 | 50 | 47 | 80 | 16 | 9 |
| 05 | 10 | 100 | 20 | | | 48 | 47 | 46 | 93 | 26 | 6 |
| 08 | 10 | 90 | 20 | | | 53 | 50 | 48 | 83 | 06 | 5 |
| 11 | 9 | 90 | 20 | | | 64 | 55 | 49 | 58 | 36 | 6 |
| 14 | 8 | 90 | 25 | | | 68 | 57 | 49 | 51 | 35 | 8 |
| 17 | 10 | UNL | 60 | | | 68 | 56 | 46 | 45 | 34 | 5 |
| 20 | 10 | UNL | 50 | | | 60 | 54 | 50 | 70 | 12 | 5 |
| 23 | 3 | UNL | 20 | | | 51 | 49 | 47 | 86 | 06 | 6 |
| **MAY 06** | | | | | | | | | | | |
| 02 | 2 | UNL | 20 | | | 48 | 46 | 43 | 83 | 04 | 9 |
| 05 | 2 | UNL | 20 | | | 46 | 44 | 41 | 83 | 06 | 7 |
| 08 | 0 | UNL | 50 | | | 55 | 48 | 41 | 60 | 03 | 15 |
| 11 | 0 | UNL | 100 | | | 71 | 53 | 36 | 28 | 02 | 15 |
| 14 | 1 | UNL | 100 | | | 78 | 55 | 35 | 21 | 02 | 12 |
| 17 | 9 | 85 | 20 | | RW | 71 | 52 | 35 | 27 | 17 | 17 |
| 20 | 10 | 65 | 20 | | RW | 60 | 51 | 44 | 56 | 06 | 15 |
| 23 | 0 | UNL | 20 | | | 52 | 49 | 47 | 83 | 23 | 6 |
| **MAY 07** | | | | | | | | | | | |
| 02 | 0 | UNL | 20 | | | 50 | 46 | 42 | 74 | 05 | 8 |
| 05 | 7 | UNL | 20 | | | 43 | 42 | 40 | 89 | 24 | 3 |
| 08 | 4 | UNL | 50 | | | 60 | 52 | 45 | 58 | 01 | 4 |
| 11 | 7 | 110 | 50 | | | 65 | 52 | 41 | 42 | 30 | 8 |
| 14 | 8 | 110 | 50 | | | 71 | 55 | 42 | 35 | 29 | 9 |
| 17 | 10 | 200 | 50 | | | 72 | 53 | 37 | 28 | 27 | 10 |
| 20 | 10 | 85 | 7 | | TRW | 55 | 48 | 41 | 60 | 18 | 24 |
| 23 | 9 | 130 | 20 | | | 53 | 47 | 42 | 66 | 18 | 12 |
| **MAY 08** | | | | | | | | | | | |
| 02 | 7 | 110 | 20 | | | 50 | 45 | 39 | 66 | 20 | 9 |
| 05 | 10 | 110 | 20 | | | 46 | 42 | 37 | 71 | 08 | 5 |
| 08 | 10 | UNL | 40 | | | 58 | 48 | 38 | 48 | 21 | 9 |
| 11 | 8 | 110 | 50 | | | 65 | 53 | 42 | 43 | 35 | 8 |
| 14 | 8 | 110 | 50 | | | 66 | 53 | 41 | 40 | 33 | 8 |
| 17 | 10 | UNL | 40 | | | 72 | 55 | 40 | 32 | 01 | 5 |
| 20 | 10 | 250 | 40 | | | 59 | 51 | 43 | 56 | 17 | 6 |
| 23 | 10 | 100 | 20 | | | 57 | 50 | 44 | 62 | 29 | 6 |
| **MAY 09** | | | | | | | | | | | |
| 02 | 4 | UNL | 20 | | | 53 | 46 | 40 | 62 | 00 | 0 |
| 05 | 0 | UNL | 40 | | | 45 | 43 | 40 | 83 | 00 | 0 |
| 08 | 0 | UNL | 50 | | | 57 | 50 | 44 | 62 | 24 | 5 |
| 11 | 0 | UNL | 50 | | | 73 | 56 | 43 | 34 | 32 | 4 |
| 14 | 1 | UNL | 50 | | | 81 | 56 | 35 | 19 | 32 | 10 |
| 17 | 1 | UNL | 40 | | | 82 | 55 | 29 | 15 | 33 | 9 |
| 20 | 5 | UNL | 40 | | | 63 | 51 | 40 | 43 | 21 | 6 |
| 23 | 0 | UNL | 20 | | | 52 | 45 | 38 | 59 | 22 | 8 |
| **MAY 10** | | | | | | | | | | | |
| 02 | 0 | UNL | 20 | | | 46 | 43 | 39 | 77 | 23 | 5 |
| 05 | 2 | UNL | 50 | | | 45 | 42 | 39 | 80 | 00 | 0 |
| 08 | 7 | UNL | 50 | | | 62 | 51 | 42 | 48 | 23 | 8 |
| 11 | 7 | UNL | 40 | | | 70 | 56 | 46 | 42 | 26 | 10 |
| 14 | 6 | UNL | 40 | | | 79 | 58 | 42 | 27 | 29 | 10 |
| 17 | 7 | UNL | 50 | | | 82 | 57 | 36 | 19 | 22 | 10 |
| 20 | 8 | UNL | 60 | | | 69 | 56 | 47 | 46 | 21 | 8 |
| 23 | 6 | UNL | 20 | | | 68 | 52 | 37 | 32 | 22 | 10 |
| **MAY 11** | | | | | | | | | | | |
| 02 | 3 | UNL | 20 | | | 55 | 47 | 38 | 53 | 23 | 8 |
| 05 | 5 | UNL | 50 | | | 50 | 43 | 36 | 59 | 21 | 7 |
| 08 | 2 | UNL | 40 | | | 62 | 50 | 39 | 43 | 22 | 7 |
| 11 | 0 | UNL | 40 | | | 77 | 58 | 45 | 32 | 28 | 6 |
| 14 | 3 | UNL | 40 | | | 80 | 57 | 39 | 23 | 26 | 7 |
| 17 | 3 | UNL | 40 | | | 84 | 58 | 37 | 19 | 31 | 5 |
| 20 | 4 | UNL | 60 | | | 76 | 56 | 40 | 28 | 09 | 4 |
| 23 | 3 | UNL | 20 | | | 62 | 51 | 42 | 48 | 22 | 6 |
| **MAY 12** | | | | | | | | | | | |
| 02 | 5 | UNL | 20 | | | 56 | 49 | 42 | 60 | 22 | 7 |
| 05 | 8 | 130 | 50 | | | 58 | 51 | 44 | 60 | 23 | 10 |
| 08 | 10 | 130 | 40 | | | 62 | 53 | 46 | 56 | 24 | 6 |
| 11 | 9 | 130 | 30 | | | 68 | 56 | 47 | 47 | 25 | 13 |
| 14 | 10 | 130 | 40 | | | 76 | 57 | 42 | 30 | 23 | 5 |
| 17 | 10 | 120 | 40 | | | 75 | 58 | 46 | 36 | 29 | 6 |
| 20 | 10 | 80 | 30 | | | 63 | 54 | 47 | 56 | 24 | 15 |
| 23 | 8 | 120 | 20 | | | 55 | 53 | 52 | 90 | 21 | 6 |
| **MAY 13** | | | | | | | | | | | |
| 02 | 8 | 110 | 20 | | | 58 | 53 | 49 | 72 | 23 | 10 |
| 05 | 8 | 110 | 20 | | | 53 | 50 | 47 | 80 | 23 | 9 |
| 08 | 3 | UNL | 40 | | | 52 | 45 | 38 | 59 | 23 | 17 |
| 11 | 4 | UNL | 40 | | | 60 | 48 | 35 | 39 | 27 | 15 |
| 14 | 8 | UNL | 40 | | | 68 | 50 | 31 | 25 | 25 | 14 |
| 17 | 9 | UNL | 45 | | | 68 | 48 | 26 | 21 | 23 | 16 |
| 20 | 0 | UNL | 45 | | | 57 | 40 | 16 | 20 | 21 | 12 |
| 23 | 0 | UNL | 20 | | | 55 | 38 | 12 | 18 | 22 | 12 |
| **MAY 14** | | | | | | | | | | | |
| 02 | 0 | UNL | 20 | | | 53 | 37 | 10 | 18 | 22 | 12 |
| 05 | 0 | UNL | 25 | | | 37 | 31 | 20 | 50 | 22 | 4 |
| 08 | 3 | UNL | 40 | | | 58 | 43 | 24 | 27 | 19 | 4 |
| 11 | 10 | UNL | 40 | | | 68 | 48 | 27 | 21 | 29 | 10 |
| 14 | 10 | UNL | 50 | | | 75 | 51 | 25 | 16 | 29 | 9 |
| 17 | 10 | UNL | 45 | | | 77 | 52 | 28 | 16 | 25 | 9 |
| 20 | 10 | UNL | 50 | | | 68 | 48 | 25 | 20 | 17 | 12 |
| 23 | 10 | 200 | 20 | | | 63 | 45 | 25 | 24 | 15 | 5 |
| **MAY 15** | | | | | | | | | | | |
| 02 | 10 | 250 | 20 | | | 57 | 43 | 27 | 32 | 27 | 4 |
| 05 | 10 | 80 | 20 | | RW | 64 | 52 | 41 | 43 | 24 | 8 |
| 08 | 10 | 130 | 30 | | | 69 | 52 | 36 | 30 | 18 | 23 |
| 11 | 10 | 250 | 40 | | | 77 | 56 | 40 | 27 | 20 | 26 |
| 14 | 10 | 110 | 40 | | RW | 63 | 54 | 47 | 56 | 18 | 9 |
| 17 | 10 | 240 | 35 | | | 65 | 48 | 31 | 28 | 28 | 14 |
| 20 | 10 | 220 | 45 | | | 58 | 45 | 30 | 35 | 26 | 9 |
| 23 | 10 | 110 | 20 | | | 48 | 41 | 32 | 54 | 23 | 6 |
| **MAY 16** | | | | | | | | | | | |
| 02 | 6 | UNL | 20 | | | 46 | 39 | 31 | 56 | 22 | 7 |
| 05 | 10 | 120 | 20 | | | 45 | 38 | 30 | 56 | 18 | 6 |
| 08 | 10 | 140 | 40 | | | 52 | 43 | 32 | 47 | 28 | 3 |
| 11 | 10 | 140 | 30 | | | 56 | 45 | 33 | 42 | 30 | 6 |
| 14 | 10 | 140 | 20 | | | 51 | 45 | 38 | 61 | 29 | 9 |
| 17 | 10 | 140 | 60 | | | 55 | 46 | 38 | 53 | 06 | 12 |
| 20 | 10 | 110 | 35 | | | 50 | 46 | 43 | 77 | 27 | 11 |
| 23 | 10 | 15 | 15 | | RW | 45 | 45 | 44 | 96 | 25 | 10 |
| **MAY 17** | | | | | | | | | | | |
| 02 | 10 | 16 | 10 | | | 44 | 43 | 42 | 93 | 24 | 7 |
| 05 | 10 | 8 | 10 | | RWA | 43 | 42 | 41 | 93 | 23 | 6 |
| 08 | 10 | 16 | 15 | | R | 39 | 38 | 36 | 89 | 21 | 10 |
| 11 | 10 | 35 | 40 | | | 49 | 43 | 36 | 61 | 22 | 12 |
| 14 | 8 | 47 | 40 | | | 53 | 45 | 36 | 53 | 25 | 9 |
| 17 | 4 | UNL | 40 | | | 56 | 47 | 37 | 49 | 27 | 8 |
| 20 | 5 | UNL | 25 | | | 50 | 44 | 37 | 61 | 08 | 6 |
| 23 | 4 | UNL | 20 | | | 42 | 40 | 37 | 83 | 36 | 6 |
| **MAY 18** | | | | | | | | | | | |
| 02 | 5 | UNL | 20 | | | 42 | 40 | 38 | 86 | 20 | 6 |
| 05 | 3 | UNL | 20 | | | 40 | 38 | 36 | 86 | 17 | 3 |
| 08 | 2 | UNL | 25 | | | 49 | 46 | 42 | 77 | 03 | 5 |
| 11 | 10 | 240 | 45 | | | 64 | 51 | 39 | 40 | 06 | 9 |
| 14 | 9 | 240 | 50 | | | 63 | 50 | 37 | 38 | 29 | 12 |
| 17 | 8 | 100 | 30 | | RW | 64 | 49 | 33 | 32 | 28 | 8 |
| 20 | 8 | 100 | 20 | | | 55 | 47 | 40 | 57 | 27 | 8 |
| 23 | 5 | UNL | 20 | | | 49 | 45 | 41 | 74 | 29 | 5 |

# MAXIMUM SHORT DURATION PRECIPITATION

| TIME PERIOD (MINUTES) | 5 | 10 | 15 | 20 | 30 | 45 | 60 | 80 | 100 | 120 | 150 | 180 |
|---|---|---|---|---|---|---|---|---|---|---|---|---|
| PRECIPITATION (INCHES) | 0.09 | 0.18 | 0.22 | 0.25 | 0.28 | 0.30 | 0.32 | 0.32 | 0.33 | 0.33 | 0.42 | 0.44 |
| ENDED: DATE | 31 | 31 | 31 | 31 | 31 | 31 | 31 | 31 | 31 | 31 | 31 | 31 |
| ENDED: TIME (LST) | 1625 | 1625 | 1627 | 1627 | 1635 | 1635 | 1635 | 1708 | 1708 | 1805 | 1830 | 1830 |

THE PRECIPITATION AMOUNTS FOR THE INDICATED TIME INTERVALS MAY OCCUR AT ANY TIME DURING THE MONTH. THE TIME INDICATED IS THE ENDING TIME OF THE INTERVAL. DATE AND TIME ARE NOT ENTERED FOR TRACE AMOUNTS.

# OBSERVATIONS AT 3-HOUR INTERVALS

MAY 1994 POCATELLO, ID 24156

| HOUR L.S.T. | SKY COVER (TENTHS) | CEILING IN HUNDREDS OF FEET | VISIBILITY WHOLE MILES | VISIBILITY 16THS MILE | WEATHER | TEMPERATURE AIR °F | TEMPERATURE WET BULB °F | TEMPERATURE DEW POINT °F | REL HUMIDITY % | WIND DIRECTION | WIND SPEED (KNOTS) |
|---|---|---|---|---|---|---|---|---|---|---|---|
| **MAY 19** | | | | | | | | | | | |
| 02 | 10 | 41 | 20 | | | 47 | 45 | 42 | 83 | 24 | 6 |
| 05 | 10 | 37 | 10 | | R | 47 | 45 | 43 | 86 | 09 | 4 |
| 08 | 10 | 48 | 40 | | RW | 46 | 45 | 43 | 89 | 04 | 5 |
| 11 | 10 | 47 | 40 | | | 57 | 48 | 40 | 53 | 12 | 14 |
| 14 | 3 | UNL | 60 | | | 67 | 47 | 23 | 19 | 21 | 16 |
| 17 | 7 | 60 | 50 | | | 60 | 46 | 30 | 32 | 18 | 9 |
| 20 | 8 | 100 | 30 | | | 54 | 45 | 36 | 51 | 29 | 8 |
| 23 | 1 | UNL | 20 | | | 44 | 41 | 37 | 77 | 20 | 6 |
| **MAY 20** | | | | | | | | | | | |
| 0 | UNL | 20 | | | | 42 | 38 | 34 | 73 | 20 | 6 |
| 4 | UNL | 40 | | | | 41 | 38 | 35 | 79 | 19 | 4 |
| 5 | UNL | 45 | | | | 51 | 44 | 37 | 59 | 26 | 7 |
| 5 | UNL | 50 | | | | 56 | 47 | 39 | 53 | 26 | 15 |
| 2 | UNL | 60 | | | | 61 | 48 | 35 | 38 | 29 | 16 |
| 10 | 50 | 40 | | | | 61 | 48 | 35 | 38 | 26 | 15 |
| 9 | 110 | 40 | | | | 50 | 44 | 37 | 61 | 23 | 7 |
| 2 | UNL | 20 | | | | 45 | 40 | 34 | 66 | 20 | 8 |
| **MAY 21** | | | | | | | | | | | |
| 1 | UNL | 20 | | | | 41 | 37 | 33 | 73 | 15 | 3 |
| 1 | UNL | 50 | | | | 36 | 34 | 32 | 85 | 28 | 4 |
| 4 | UNL | 100 | | | | 52 | 45 | 38 | 59 | 06 | 3 |
| 3 | UNL | 70 | | | | 65 | 50 | 37 | 36 | 32 | 8 |
| 4 | UNL | 100 | | | | 71 | 52 | 35 | 27 | 27 | 10 |
| 8 | UNL | 50 | | | | 71 | 51 | 32 | 24 | 32 | 8 |
| 5 | UNL | 40 | | | | 61 | 44 | 25 | 25 | 16 | 6 |
| 2 | UNL | 20 | | | | 50 | 39 | 24 | 36 | 04 | 4 |
| **MAY 22** | | | | | | | | | | | |
| 0 | UNL | 20 | | | | 44 | 39 | 33 | 65 | 30 | 4 |
| 0 | UNL | 50 | | | | 41 | 37 | 33 | 73 | 13 | 4 |
| 2 | UNL | 100 | | | | 53 | 48 | 43 | 69 | 23 | 12 |
| 10 | UNL | 100 | | | | 63 | 51 | 41 | 45 | 24 | 14 |
| 9 | UNL | 100 | | | | 70 | 53 | 39 | 32 | 25 | 12 |
| 10 | UNL | 60 | | | | 74 | 53 | 33 | 22 | 25 | 11 |
| 10 | UNL | 30 | | | | 65 | 52 | 41 | 42 | 30 | 4 |
| 8 | UNL | 20 | | | | 51 | 44 | 37 | 59 | 21 | 6 |
| **MAY 23** | | | | | | | | | | | |
| 7 | UNL | 20 | | | | 46 | 42 | 37 | 71 | 01 | 9 |
| 1 | UNL | 40 | | | | 39 | 36 | 31 | 73 | 21 | 6 |
| 7 | UNL | 100 | | | | 56 | 48 | 40 | 55 | 27 | 5 |
| 5 | UNL | 100 | | | | 68 | 53 | 40 | 36 | 30 | 7 |
| 0 | UNL | 100 | | | | 75 | 54 | 35 | 23 | 29 | 8 |
| 2 | UNL | 60 | | | | 78 | 54 | 33 | 20 | 23 | 10 |
| 7 | UNL | 40 | | | | 64 | 51 | 40 | 42 | 24 | 7 |
| 8 | UNL | 20 | | | | 55 | 46 | 36 | 49 | 20 | 7 |
| **MAY 24** | | | | | | | | | | | |
| 0 | UNL | 20 | | | | 45 | 40 | 35 | 68 | 22 | 8 |
| 0 | UNL | 30 | | | | 42 | 38 | 34 | 73 | 26 | 5 |
| 0 | UNL | 90 | | | | 57 | 50 | 44 | 62 | 27 | 6 |
| 0 | UNL | 100 | | | | 71 | 55 | 41 | 34 | 29 | 6 |
| 4 | UNL | 100 | | | | 78 | 53 | 29 | 17 | 25 | 9 |
| 8 | UNL | 70 | | | | 79 | 53 | 29 | 16 | 25 | 3 |
| 7 | UNL | 50 | | | | 66 | 51 | 38 | 36 | 21 | 6 |
| 1 | UNL | 20 | | | | 53 | 43 | 31 | 43 | 23 | 3 |
| **MAY 25** | | | | | | | | | | | |
| 02 | 0 | UNL | 20 | | | 46 | 41 | 35 | 66 | 00 | 0 |
| 05 | 0 | UNL | 30 | | | 43 | 39 | 33 | 68 | 28 | 5 |
| 08 | 1 | UNL | 50 | | | 60 | 49 | 39 | 46 | 29 | 4 |
| 11 | 2 | UNL | 50 | | | 78 | 56 | 39 | 25 | 04 | 8 |
| 14 | 2 | UNL | 50 | | | 82 | 54 | 27 | 13 | 33 | 12 |
| 17 | 1 | UNL | 50 | | | 84 | 56 | 32 | 15 | 34 | 12 |
| 20 | 0 | UNL | 50 | | | 70 | 53 | 38 | 31 | 04 | 4 |
| 23 | 0 | UNL | 20 | | | 55 | 46 | 37 | 51 | 25 | 5 |
| **MAY 26** | | | | | | | | | | | |
| 2 | UNL | 20 | | | | 51 | 44 | 37 | 59 | 21 | 4 |
| 1 | UNL | 30 | | | | 46 | 41 | 36 | 68 | 18 | 5 |
| 1 | UNL | 40 | | | | 65 | 51 | 38 | 37 | 19 | 4 |
| 6 | UNL | 40 | | | | 76 | 54 | 36 | 24 | 29 | 7 |
| 9 | 130 | 40 | | | | 78 | 55 | 35 | 21 | 22 | 15 |
| 10 | 150 | 30 | | | | 78 | 56 | 39 | 25 | 22 | 13 |
| 10 | 250 | 50 | | | | 71 | 53 | 38 | 30 | 16 | 11 |
| 8 | 250 | 20 | | | | 69 | 53 | 39 | 34 | 19 | 16 |
| **MAY 27** | | | | | | | | | | | |
| 4 | UNL | 20 | | | | 60 | 50 | 41 | 50 | 07 | 6 |
| 3 | UNL | 15 | | | | 57 | 50 | 44 | 62 | 25 | 8 |
| 10 | 120 | 30 | | | | 62 | 54 | 48 | 60 | 23 | 12 |
| 10 | 55 | 15 | | | | 66 | 55 | 47 | 51 | 25 | 12 |
| 9 | UNL | 30 | | | | 73 | 56 | 42 | 33 | 27 | 8 |
| 10 | 40 | 5 | | | TRW | 54 | 52 | 51 | 90 | 24 | 21 |
| 10 | 120 | 30 | | | | 54 | 51 | 49 | 83 | 22 | 5 |
| 8 | UNL | 20 | | | | 51 | 48 | 46 | 83 | 20 | 9 |
| **MAY 28** | | | | | | | | | | | |
| 02 | 6 | UNL | 20 | | | 50 | 47 | 44 | 80 | 19 | 9 |
| 05 | 3 | UNL | 20 | | | 41 | 40 | 38 | 89 | 22 | 6 |
| 08 | 0 | UNL | 30 | | | 56 | 51 | 46 | 69 | 22 | 7 |
| 11 | 8 | UNL | 40 | | | 68 | 55 | 45 | 44 | 04 | 5 |
| 14 | 10 | 240 | 30 | | T | 69 | 55 | 45 | 42 | 18 | 14 |
| 17 | 10 | 85 | 30 | | RW | 63 | 55 | 49 | 61 | 12 | 9 |
| 20 | 8 | 120 | 30 | | | 63 | 52 | 43 | 48 | 27 | 12 |
| 23 | 5 | UNL | 20 | | | 53 | 48 | 43 | 69 | 19 | 8 |
| **MAY 29** | | | | | | | | | | | |
| 7 | 95 | 20 | | | | 51 | 46 | 42 | 72 | 22 | 7 |
| 7 | 260 | 40 | | | | 47 | 44 | 41 | 80 | 25 | 4 |
| 8 | 260 | 40 | | | | 61 | 50 | 41 | 48 | 21 | 9 |
| 10 | 75 | 40 | | | | 67 | 54 | 44 | 44 | 26 | 9 |
| 10 | UNL | 50 | | | | 75 | 56 | 41 | 30 | 26 | 16 |
| 10 | 250 | 40 | | | | 76 | 58 | 44 | 32 | 27 | 14 |
| 9 | 250 | 30 | | | | 69 | 55 | 45 | 42 | 22 | 8 |
| 2 | UNL | 20 | | | | 59 | 50 | 43 | 56 | 20 | 8 |
| **MAY 30** | | | | | | | | | | | |
| 0 | UNL | 20 | | | | 52 | 47 | 43 | 72 | 20 | 6 |
| 4 | UNL | 40 | | | | 54 | 46 | 39 | 57 | 21 | 8 |
| 0 | UNL | 80 | | | | 61 | 50 | 40 | 46 | 23 | 15 |
| 0 | UNL | 80 | | | | 70 | 53 | 39 | 32 | 24 | 12 |
| 0 | UNL | 80 | | | | 75 | 55 | 39 | 27 | 25 | 12 |
| 1 | UNL | 70 | | | | 79 | 56 | 37 | 22 | 25 | 7 |
| 2 | UNL | 30 | | | | 70 | 54 | 41 | 35 | 11 | 6 |
| 8 | UNL | 20 | | | | 61 | 53 | 46 | 58 | 08 | 6 |
| **MAY 31** | | | | | | | | | | | |
| 02 | 6 | UNL | 20 | | | 55 | 50 | 45 | 69 | 06 | 5 |
| 05 | 8 | 120 | 20 | | | 52 | 48 | 45 | 77 | 01 | 6 |
| 08 | 10 | 120 | 40 | | | 59 | 53 | 48 | 67 | 24 | 7 |
| 11 | 10 | 55 | 10 | | RW | 62 | 57 | 53 | 73 | 23 | 14 |
| 14 | 10 | 250 | 30 | | | 65 | 57 | 52 | 63 | 31 | 7 |
| 17 | 10 | 70 | 10 | | TRW | 58 | 55 | 53 | 84 | 18 | 6 |
| 20 | 10 | 70 | 20 | | | 56 | 54 | 53 | 90 | 20 | 10 |
| 23 | 10 | 25 | 20 | | | 57 | 54 | 52 | 84 | 21 | 11 |

# WEATHER CODES AND NOTES

| | | | | | |
|---|---|---|---|---|---|
| * | TORNADO | SW | SNOW SHOWERS | GF | GROUND FOG |
| T | THUNDERSTORM | SG | SNOW GRAINS | BD | BLOWING DUST |
| Q | SQUALL | SP | SNOW PELLETS | BN | BLOWING SAND |
| R | RAIN | IC | ICE CRYSTALS | BS | BLOWING SNOW |
| RW | RAIN SHOWERS | IP | ICE PELLETS | BY | BLOWING SPRAY |
| ZR | FREEZING RAIN | IPW | ICE PELLET SHOWERS | K | SMOKE |
| L | DRIZZLE | A | HAIL | H | HAZE |
| ZL | FREEZING DRIZZLE | F | FOG | D | DUST |
| S | SNOW | IF | ICE FOG | | |

CEILING: UNL INDICATES UNLIMITED
WIND DIRECTION: DIRECTIONS ARE THOSE FROM WHICH THE WIND IS BLOWING, INDICATED IN TENS OF DEGREES FROM TRUE NORTH: I.E. 09 FOR
EAST, 18 FOR SOUTH, 27 FOR WEST. AN ENTRY OF 00 INDICATES CALM.
SPEED: THE OBSERVED AVERAGE ONE-MINUTE VALUE (MPH=KNOTS X 1.15).

# SUMMARY BY HOURS

| HOUR L.S.T. | AVERAGES SKY COVER (TENTHS) | AVERAGES STATION PRESSURE (INCHES) | AVERAGES TEMPERATURE AIR °F | AVERAGES TEMPERATURE WET BULB °F | AVERAGES TEMPERATURE DEW POINT °F | AVERAGES REL HUMIDITY % | AVERAGES SPEED (MPH) | RESULTANT WIND DIRECTION | RESULTANT WIND SPEED (MPH) |
|---|---|---|---|---|---|---|---|---|---|
| 02 | 5 | 25.420 | 49 | 43 | 37 | 67 | 7.5 | 21 | 4.3 |
| 05 | 5 | 25.430 | 46 | 42 | 37 | 73 | 6.4 | 22 | 4.1 |
| 08 | 5 | 25.455 | 56 | 48 | 40 | 58 | 9.6 | 23 | 5.6 |
| 11 | 7 | 25.450 | 66 | 52 | 39 | 40 | 12.0 | 26 | 6.5 |
| 14 | 7 | 25.415 | 70 | 52 | 37 | 32 | 12.7 | 26 | 9.0 |
| 17 | 7 | 25.390 | 70 | 52 | 36 | 33 | 12.0 | 26 | 7.6 |
| 20 | 7 | 25.400 | 60 | 49 | 39 | 49 | 9.9 | 20 | 5.3 |
| 23 | 5 | 25.420 | 53 | 46 | 38 | 61 | 8.6 | 21 | 5.9 |

P&D ASHEVILLE N.C. 288 08/31/94 PM

NATIONAL CLIMATIC DATA CENTER
ROOM 120
151 PATTON AVENUE
ASHEVILLE, NORTH CAROLINA 28801-5001

OFFICIAL BUSINESS
PENALTY FOR PRIVATE USE $300

FIRST CLASS
POSTAGE AND FEES PAID
NOAA
PERMIT G-19

LCD-10-24156-PD-9509
33766
J R SIMPLOT COMPANY
ATTN: J F COCHRANE - PO #35724
PO BOX 912
POCATELLO ID 33204

MAY 1994 24156
POCATELLO, ID
USCOM - NOAA - ASHEVILLE, NC 125

## HOURLY PRECIPITATION (WATER EQUIVALENT IN INCHES)

| DATE | A.M. HOUR ENDING AT | | | | | | | | | | | | P.M. HOUR ENDING AT | | | | | | | | | | | | DATE |
|---|---|---|---|---|---|---|---|---|---|---|---|---|---|---|---|---|---|---|---|---|---|---|---|---|---|
| | 1 | 2 | 3 | 4 | 5 | 6 | 7 | 8 | 9 | 10 | 11 | 12 | 1 | 2 | 3 | 4 | 5 | 6 | 7 | 8 | 9 | 10 | 11 | 12 | |
| 01 | T | T | T | 0.03 | T | T | | | | | | | | | | | T | | | | | | | | 01 |
| 02 | | | | | | | | | | | | | | | | | | | | | | | | | 02 |
| 03 | | | | | | | | | | | | | | | | | | | | | | | | | 03 |
| 04 | | | | | | | | | | | | | | T | | T | T | T | T | T | T | 0.08 | 0.09 | 0.07 | 04 |
| 05 | 0.05 | 0.03 | 0.06 | T | | | | | | | | | | | | | | | | | | | | | 05 |
| 06 | | | | | | | | | | | | | | | | | T | T | T | 0.02 | T | | | | 06 |
| 07 | | | | | | | | | | | | | | | | | | | T | T | 0.01 | 0.02 | | T | 07 |
| 08 | | | | | | | | | | | | | | | | | | | | | | | | | 08 |
| 09 | | | | | | | | | | | | | | | | | | | | | | | | | 09 |
| 10 | | | | | | | | | | | | | | | | | | | | | | | | | 10 |
| 11 | | | | | | | | | | | | | | | | | | | | | | | | | 11 |
| 12 | | | | | | | | | | | | | | | | | | | | | T | 0.02 | | | 12 |
| 13 | | | | | | | | | | | | | | | | | | | | | | | | | 13 |
| 14 | | | | | | | | | | | | | | | | | | | | | | | | | 14 |
| 15 | | | T | T | 0.01 | T | T | | | | | | | T | T | T | | | | | | | | | 15 |
| 16 | | | | | | | | | | | | | | | | | | | | | 0.02 | 0.05 | 0.02 | 0.06 | 16 |
| 17 | | | | | 0.03 | 0.06 | 0.02 | T | T | T | | | T | | T | | | | | | | | | | 17 |
| 18 | | | | | | | | | | | | | | | | | T | T | | | | | T | | 18 |
| 19 | T | | T | T | T | T | 0.02 | 0.02 | T | | | | | | | | | | | | | | | | 19 |
| 20 | | | | | | | | | | | | | | | | | | | | | | | | | 20 |
| 21 | | | | | | | | | | | | | | | | | | | | | | | | | 21 |
| 22 | | | | | | | | | | | | | | | | | | | | | | | | | 22 |
| 23 | | | | | | | | | | | | | | | | | | | | | | | | | 23 |
| 24 | | | | | | | | | | | | | | | | | | | | | | | | | 24 |
| 25 | | | | | | | | | | | | | | | | | | | | | | | | | 25 |
| 26 | | | | | | | | | | | | | | | | | | | | | | | | | 26 |
| 27 | | | | | | | | | | | T | T | T | | | T | 0.20 | 0.09 | T | T | | | | | 27 |
| 28 | | | | | | | | | | | | | | T | T | 0.02 | 0.01 | | | | | | | | 28 |
| 29 | | | | | | | | | | | | | | | | | | | | | | | | | 29 |
| 30 | | | | | | | | | | | | | | | | | | | | | | | | | 30 |
| 31 | | | | | | | | | | | T | 0.02 | T | | | 0.03 | 0.30 | 0.02 | 0.09 | | T | T | | | 31 |

JUN 1994
POCATELLO, ID
NAT'L WEA SER OFC
20369 THUNDERBOLT STREET-C

INQUIRIES/COMMENTS CALL
(704) 271-4800 VOICE
271-4010 TDD/271-4876 FAX

MUNICIPAL AIRPORT

ISSN # 0198-1811

# LOCAL CLIMATOLOGICAL DATA

## MONTHLY SUMMARY

LATITUDE 42° 55'N LONGITUDE 112° 36'W ELEVATION (GROUND) 4454 FEET TIME ZONE MOUNTAIN 24156

JUN 1994
POCATELLO, ID

| | TEMPERATURE °F | | | | | DEGREE DAYS BASE 65 °F | | WEATHER TYPES 1 FOG 2 HEAVY FOG 3 THUNDERSTORMS 4 ICE PELLETS 5 HAIL 6 GLAZE 7 DUSTSTORM 8 SMOKE, HAZE 9 BLOWING SNOW | SNOW/ ICE ON GRD AT 0500 (IN.) | PRECIPITATION (INCHES) | | AVERAGE STATION PRESSURE (INCHES OF Hg) ELEV. 4478 (FT.MSL) | WIND (M.P.H.) | | | | | | SUNSHINE | | SKY COVER TENTHS | |
|---|---|---|---|---|---|---|---|---|---|---|---|---|---|---|---|---|---|---|---|---|---|---|---|
| | | | | | | | | | | | | | | | | PEAK GUST | | FASTEST 1-MIN | | | | | |
| DATE | MAXIMUM | MINIMUM | AVERAGE | DEPARTURE FROM NORMAL | AVERAGE DEW POINT | HEATING | COOLING | | | WATER EQUIVALENT | SNOW ICE PELLETS | | RESULTANT DIR | RESULTANT SPEED | AVERAGE SPEED | SPEED | DIR | SPEED | DIR | MINUTES | PERCENT POSSIBLE | SUNRISE TO SUNSET | MIDNIGHT TO MIDNIGHT |
| 1 | 2 | 3 | 4 | 5 | 6 | 7A | 7B | 8 | 9 | 10 | 11 | 12 | 13 | 14 | 15 | 16 | 17 | 18 | 19 | 20 | 21 | 22 | 23 |
| 01 | 68 | 48 | 58 | 0 | 46 | 7 | 0 | | 0 | T | 0.0 | 25.570 | 23 | 12.0 | 13.0 | 32 | W | 21 | 29 | 836 | 92 | 4 | 3 |
| 02 | 79 | 40 | 60 | 2 | 42 | 5 | 0 | | 0 | 0.00 | 0.0 | 25.580 | 35 | 4.3 | 7.0 | 16 | N | 12 | 33 | 869 | 96 | 5 | 5 |
| 03 | 88 | 50 | 69 | 10 | 47 | 0 | 4 | 3 | 0 | T | 0.0 | 25.380 | 02 | 2.9 | 9.7 | 31 | SW | 16 | 16 | 529 | 58 | 7 | 7 |
| 04 | 77 | 53 | 65 | 5 | 37 | 0 | 0 | | 0 | 0.00 | 0.0 | 25.450 | 24 | 11.0 | 12.5 | 31 | SW | 22 | 23 | 876 | 96 | 5 | 4 |
| 05 | 88 | 42 | 65 | 5 | 35 | 0 | 0 | | 0 | 0.00 | 0.0 | 25.360 | 24 | 0.6 | 8.8 | 28 | SW | 16 | 22 | 891 | 98 | 5 | 4 |
| 06 | 76 | 47 | 62 | 2 | 35 | 3 | 0 | | 0 | 0.04 | 0.0 | 25.280 | 24 | 13.9 | 16.3 | 40 | W | 25 | 24 | 670 | 73 | 8 | 8 |
| 07 | 65 | 40 | 53 | -7 | 34 | 12 | 0 | 34 | 0 | 0.03 | T | 25.480 | 23 | 10.8 | 12.8 | 37 | W | 21 | 27 | 621 | 68 | 6 | 5 |
| 08 | 66 | 38 | 52* | -8 | 28 | 13 | 0 | | 0 | 0.00 | 0.0 | 25.640 | 24 | 12.1 | 12.9 | 23 | W | 16 | 26 | 817 | 89 | 3 | 5 |
| 09 | 75 | 47 | 61 | 0 | 28 | 4 | 0 | | 0 | 0.00 | 0.0 | 25.630 | 23 | 6.8 | 9.4 | 24 | SW | 16 | 22 | 892 | 97 | 3 | 3 |
| 10 | 81 | 39 | 60 | -1 | 35 | 5 | 0 | | 0 | 0.00 | 0.0 | 25.580 | 24 | 7.7 | 8.6 | 18 | SW | 14 | 24 | 916 | 100 | 0 | 0 |
| 11 | 89 | 50 | 70 | 9 | 39 | 0 | 5 | | 0 | 0.00 | 0.0 | 25.455 | 24 | 5.5 | 8.2 | 20 | NW | 15 | 30 | 823 | 90 | 5 | 4 |
| 12 | 81 | 52 | 67 | 6 | 46 | 0 | 2 | | 0 | 0.00 | 0.0 | 25.340 | 22 | 6.5 | 8.9 | 23 | NW | 14 | 25 | 358 | 39 | 10 | 10 |
| 13 | 82 | 57 | 70 | 8 | 44 | 0 | 5 | | 0 | 0.00 | 0.0 | 25.190 | 25 | 11.6 | 12.9 | 30 | W | 21 | 27 | 412 | 45 | 9 | 9 |
| 14 | 61 | 45 | 53 | -9 | 26 | 12 | 0 | | 0 | 0.00 | 0.0 | 25.340 | 26 | 16.8 | 17.7 | 40 | W | 26 | 26 | 848 | 92 | 2 | 3 |
| 15 | 72 | 33* | 53 | -10 | 30 | 12 | 0 | | 0 | 0.00 | 0.0 | 25.315 | 28 | 6.5 | 10.5 | 28 | W | 20 | 28 | 888 | 97 | 1 | 4 |
| 16 | 69 | 47 | 58 | -5 | 31 | 7 | 0 | | 0 | 0.00 | 0.0 | 25.500 | 24 | 11.3 | 12.0 | 26 | SW | 18 | 24 | 740 | 80 | 4 | 5 |
| 17 | 82 | 34 | 58 | -5 | 33 | 7 | 0 | | 0 | 0.00 | 0.0 | 25.500 | 02 | 4.4 | 7.5 | 20 | N | 13 | 36 | 920 | 100 | 1 | 0 |
| 18 | 86 | 45 | 66 | 3 | 32 | 0 | 1 | | 0 | 0.00 | 0.0 | 25.460 | 24 | 6.9 | 8.7 | 21 | SW | 16 | 25 | 921 | 100 | 1 | 1 |
| 19 | 92 | 49 | 71 | 7 | 35 | 0 | 6 | | 0 | 0.00 | 0.0 | 25.510 | 26 | 4.9 | 7.7 | 17 | SW | 12 | 24 | 921 | 100 | 1 | 1 |
| 20 | 99* | 47 | 73 | 9 | 39 | 0 | 8 | | 0 | 0.00 | 0.0 | 25.500 | 01 | 3.4 | 7.1 | 18 | N | 12 | 33 | 862 | 94 | 1 | 2 |
| 21 | 88 | 60 | 74* | 10 | 47 | 0 | 9 | 3 | 0 | 0.03 | 0.0 | 25.520 | 22 | 2.3 | 9.1 | 46 | NE | 25 | 04 | 650 | 71 | 10 | 10 |
| 22 | 92 | 52 | 72 | 7 | 48 | 0 | 7 | | 0 | 0.00 | 0.0 | 25.540 | 11 | 0.7 | 7.7 | 30 | SW | 21 | 22 | 801 | 87 | 3 | 4 |
| 23 | 90 | 49 | 70 | 5 | 41 | 0 | 5 | | 0 | 0.00 | 0.0 | 25.510 | 24 | 6.1 | 7.6 | 21 | SW | 14 | 24 | 920 | 100 | 1 | 1 |
| 24 | 88 | 45 | 67 | 2 | 37 | 0 | 2 | | 0 | 0.00 | 0.0 | 25.510 | 24 | 7.3 | 8.4 | 25 | SW | 16 | 24 | 918 | 100 | 3 | 4 |
| 25 | 97 | 45 | 71 | 5 | 38 | 0 | 6 | | 0 | 0.00 | 0.0 | 25.390 | 36 | 3.0 | 6.6 | 15 | N | 12 | 33 | 877 | 95 | 1 | 2 |
| 26 | 75 | 55 | 65 | -1 | 33 | 0 | 0 | | 0 | 0.00 | 0.0 | 25.525 | 23 | 13.6 | 14.3 | 32 | W | 22 | 25 | 827 | 90 | 3 | 2 |
| 27 | 82 | 41 | 62 | -4 | 31 | 3 | 0 | | 0 | 0.00 | 0.0 | 25.660 | 24 | 5.3 | 6.9 | 16 | SW | 13 | 26 | 800 | 87 | 3 | 3 |
| 28 | 93 | 44 | 69 | 2 | 36 | 0 | 4 | | 0 | 0.00 | 0.0 | 25.580 | 32 | 1.5 | 6.3 | 15 | SW | 10 | 26 | 912 | 99 | 2 | 2 |
| 29 | 91 | 54 | 73 | 6 | 39 | 0 | 8 | | 0 | 0.00 | 0.0 | 25.500 | 24 | 9.6 | 11.1 | 30 | W | 18 | 26 | 919 | 100 | 2 | 2 |
| 30 | 94 | 47 | 71 | 4 | 39 | 0 | 6 | 3 | 0 | T | 0.0 | 25.470 | 27 | 4.9 | 7.7 | 21 | W | 14 | 29 | 854 | 93 | 1 | 2 |

| SUM | SUM | | | | TOTAL | TOTAL | NUMBER OF DAYS | TOTAL | TOTAL | FOR THE MONTH : | | | | | | | | TOTAL | % FOR MONTH | SUM | SUM |
|---|---|---|---|---|---|---|---|---|---|---|---|---|---|---|---|---|---|---|---|---|---|
| 2466 | 1395 | | | | 90 | 78 | | 0.10 | T | 25.475 | 25 | 6.0 | 9.9 | 46 | NE | 26 | 26 | 24088 | | 110 | 115 |
| AVG. | AVG. | AVG. | DEP. | AVG. | DEP. | DEP. | PRECIPITATION | DEP. | | | | | | DATE:21 | | DATE:14 | | POSS | | AVG | AVG |
| 82.2 | 46.5 | 64.4 | 1.7 | 37.0 | -35 | 22 | ≥ .01 INCH 3 | -0.92 | | | | | | | | | | 27515 | 88 | 3.7 | 3.9 |

| NUMBER OF DAYS | | | | SEASON TO DATE | | SNOW, ICE PELLETS | GREATEST IN 24 HOURS AND DATES | | | GREATEST DEPTH ON GROUND OF SNOW, ICE PELLETS OR ICE AND DATE |
|---|---|---|---|---|---|---|---|---|---|---|
| | | | | TOTAL | TOTAL | ≥ 1.0 INCH 0 | | | | |
| MAXIMUM TEMP. | | MINIMUM TEMP. | | 6804 | 83 | THUNDERSTORMS 4 | PRECIPITATION | SNOW, ICE PELLETS | | 0 |
| ≥ 90° | ≤ 32° | ≤ 32° | ≤ 0° | DEP. | DEP. | HEAVY FOG 0 | 0.46 | 31-01 | trace | 07 |
| 8 | 0 | 0 | 0 | -376 | 27 | CLEAR 18 | PARTLY CLOUDY 8 | CLOUDY 4 | | |

* EXTREME FOR THE MONTH - LAST OCCURRENCE IF MORE THAN ONE.
T TRACE AMOUNT.
+ ALSO ON EARLIER DATE(S).
HEAVY FOG: VISIBILITY 1/4 MILE OR LESS.
BLANK ENTRIES DENOTE MISSING OR UNREPORTED DATA.

DATA IN COLS 6 AND 12-15 ARE BASED ON 21 OR MORE OBSERVATIONS AT HOURLY INTERVALS. RESULTANT WIND IS THE VECTOR SUM OF WIND SPEEDS AND DIRECTIONS DIVIDED BY THE NUMBER OF OBSERVATIONS.
COLS 16 & 17 : PEAK GUST - HIGHEST INSTANTANEOUS WIND SPEED.
ONE OF TWO WINDS IS GIVEN UNDER COLS 18 & 19 : FASTEST MILE- HIGHEST RECORDED SPEED FOR WHICH A MILE OF WIND PASSES STATION (DIRECTION IN COMPASS POINTS). FASTEST OBSERVED ONE MINUTE WIND - HIGHEST ONE MINUTE SPEED (DIRECTION IN TENS OF DEGREES).
ERRORS WILL BE CORRECTED IN SUBSEQUENT PUBLICATIONS.

I CERTIFY THAT THIS IS AN OFFICIAL PUBLICATION OF THE NATIONAL OCEANIC AND ATMOSPHERIC ADMINISTRATION AND IS COMPILED FROM RECORDS ON FILE AT THE NATIONAL CLIMATIC DATA CENTER.

Kenneth D Hadeen
DIRECTOR
NATIONAL CLIMATIC DATA CENTER

noaa NATIONAL OCEANIC AND ATMOSPHERIC ADMINISTRATION
NATIONAL ENVIRONMENTAL SATELLITE, DATA AND INFORMATION SERVICE
NATIONAL CLIMATIC DATA CENTER ASHEVILLE, NORTH CAROLINA

# OBSERVATIONS AT 3-HOUR INTERVALS

JUN 1994 24156
POCATELLO, ID

| HOUR L.S.T. | SKY COVER (TENTHS) | CEILING IN HUNDREDS OF FEET | VISIBILITY WHOLE MILES | VISIBILITY 16THS MILE | WEATHER | TEMPERATURE AIR °F | TEMPERATURE WET BULB °F | TEMPERATURE DEW POINT °F | REL HUMIDITY % | WIND DIRECTION | WIND SPEED (KNOTS) |
|---|---|---|---|---|---|---|---|---|---|---|---|
| **JUN 01** | | | | | | | | | | | |
| 02 | 2 | UNL | 20 | | | 54 | 52 | 50 | 86 | 23 | 10 |
| 05 | 3 | UNL | 25 | | | 50 | 49 | 48 | 93 | 22 | 6 |
| 08 | 3 | UNL | 40 | | | 59 | 54 | 50 | 72 | 22 | 13 |
| 11 | 4 | UNL | 60 | | | 66 | 56 | 49 | 55 | 26 | 13 |
| 14 | 7 | 210 | 80 | | | 65 | 53 | 44 | 47 | 26 | 15 |
| 17 | 3 | UNL | 80 | | | 68 | 54 | 42 | 39 | 23 | 14 |
| 20 | 1 | UNL | 70 | | | 58 | 50 | 43 | 58 | 22 | 8 |
| 23 | 0 | UNL | 20 | | | 49 | 45 | 41 | 74 | 22 | 9 |
| **JUN 02** | | | | | | | | | | | |
| 1 | UNL | 20 | | | | 43 | 41 | 39 | 86 | 21 | 7 |
| 0 | UNL | 20 | | | | 42 | 40 | 38 | 86 | 13 | 4 |
| 0 | UNL | 90 | | | | 55 | 49 | 43 | 64 | 34 | 6 |
| 4 | UNL | 70 | | | | 68 | 53 | 40 | 36 | 02 | 8 |
| 7 | UNL | 70 | | | | 73 | 53 | 36 | 26 | 34 | 8 |
| 3 | UNL | 70 | | | | 78 | 58 | 42 | 28 | 33 | 8 |
| 10 | UNL | 60 | | | | 63 | 54 | 47 | 56 | 04 | 6 |
| 10 | UNL | 20 | | | | 58 | 51 | 45 | 62 | 35 | 4 |
| **JUN 03** | | | | | | | | | | | |
| 10 | UNL | 20 | | | | 54 | 50 | 46 | 75 | 01 | 6 |
| 10 | 110 | 20 | | | | 53 | 50 | 48 | 83 | 25 | 6 |
| 8 | 60 | 40 | | | RW | 64 | 55 | 48 | 56 | 09 | 13 |
| 3 | UNL | 50 | | | | 79 | 60 | 47 | 33 | 36 | 12 |
| 7 | 250 | 40 | | | | 86 | 64 | 51 | 30 | 01 | 9 |
| 8 | 60 | 40 | | | | 76 | 60 | 49 | 39 | 23 | 9 |
| 8 | 100 | 40 | | | | 67 | 58 | 52 | 59 | 31 | 3 |
| 4 | UNL | 20 | | | | 63 | 54 | 46 | 54 | 16 | 3 |
| **JUN 04** | | | | | | | | | | | |
| 02 | 2 | UNL | 20 | | | 57 | 52 | 47 | 69 | 32 | 4 |
| 05 | 3 | UNL | 30 | | | 58 | 45 | 30 | 35 | 20 | 8 |
| 08 | 5 | UNL | 40 | | | 62 | 49 | 37 | 40 | 22 | 14 |
| 11 | 8 | UNL | 40 | | | 71 | 55 | 41 | 34 | 24 | 17 |
| 14 | 1 | UNL | 40 | | | 74 | 53 | 35 | 24 | 25 | 12 |
| 17 | 3 | UNL | 40 | | | 75 | 54 | 36 | 24 | 27 | 15 |
| 20 | 8 | 250 | 40 | | | 63 | 52 | 42 | 46 | 21 | 7 |
| 23 | 6 | 120 | 20 | | | 59 | 47 | 36 | 42 | 21 | 4 |
| **JUN 05** | | | | | | | | | | | |
| 4 | UNL | 20 | | | | 48 | 42 | 35 | 61 | 20 | 6 |
| 8 | UNL | 30 | | | | 43 | 40 | 37 | 80 | 07 | 4 |
| 10 | UNL | 40 | | | | 61 | 51 | 43 | 52 | 05 | 6 |
| 5 | UNL | 40 | | | | 77 | 56 | 40 | 27 | 36 | 10 |
| 2 | UNL | 50 | | | | 87 | 60 | 39 | 18 | 03 | 10 |
| 3 | UNL | 50 | | | | 87 | 55 | 25 | 10 | 23 | 14 |
| 2 | UNL | 50 | | | | 76 | 51 | 25 | 15 | 18 | 8 |
| 1 | UNL | 20 | | | | 72 | 50 | 29 | 20 | 17 | 8 |
| **JUN 06** | | | | | | | | | | | |
| 7 | 250 | 20 | | | | 76 | 51 | 24 | 14 | 17 | 16 |
| 10 | 250 | 30 | | | | 57 | 47 | 37 | 47 | 22 | 9 |
| 2 | UNL | 40 | | | | 63 | 50 | 38 | 40 | 22 | 16 |
| 8 | 250 | 30 | | | | 69 | 52 | 37 | 31 | 24 | 22 |
| 10 | 250 | 30 | | | | 70 | 50 | 31 | 24 | 26 | 17 |
| 10 | 60 | 30 | | | | 64 | 48 | 31 | 29 | 27 | 14 |
| 10 | 60 | 20 | | | RW | 52 | 45 | 38 | 59 | 27 | 15 |
| 10 | 65 | 20 | | | | 49 | 45 | 40 | 71 | 18 | 9 |
| **JUN 07** | | | | | | | | | | | |
| 02 | 2 | UNL | 20 | | | 42 | 40 | 38 | 86 | 21 | 8 |
| 05 | 0 | UNL | 30 | | | 41 | 37 | 31 | 68 | 22 | 9 |
| 08 | 0 | UNL | 70 | | | 49 | 41 | 32 | 52 | 23 | 10 |
| 11 | 4 | UNL | 50 | | | 57 | 45 | 33 | 40 | 25 | 12 |
| 14 | 6 | 250 | 50 | | | 64 | 46 | 27 | 25 | 25 | 13 |
| 17 | 10 | 85 | 50 | | | 56 | 46 | 35 | 45 | 27 | 12 |
| 20 | 10 | 47 | 30 | | RW | 47 | 45 | 42 | 83 | 24 | 5 |
| 23 | 8 | 140 | 20 | | | 47 | 42 | 37 | 68 | 21 | 10 |
| **JUN 08** | | | | | | | | | | | |
| 10 | 130 | 20 | | | | 45 | 41 | 37 | 74 | 22 | 14 |
| 3 | UNL | 30 | | | | 38 | 36 | 33 | 82 | 23 | 8 |
| 1 | UNL | 100 | | | | 48 | 42 | 34 | 59 | 23 | 12 |
| 2 | UNL | 100 | | | | 55 | 44 | 32 | 42 | 25 | 9 |
| 0 | UNL | 100 | | | | 62 | 45 | 24 | 23 | 28 | 13 |
| 7 | UNL | 80 | | | | 65 | 44 | 18 | 16 | 25 | 13 |
| 10 | UNL | 80 | | | | 55 | 44 | 32 | 42 | 22 | 8 |
| 10 | UNL | 20 | | | | 56 | 41 | 22 | 27 | 19 | 9 |
| **JUN 09** | | | | | | | | | | | |
| 10 | 120 | 20 | | | | 52 | 40 | 25 | 35 | 22 | 8 |
| 8 | 110 | 30 | | | | 48 | 40 | 29 | 48 | 09 | 6 |
| 2 | UNL | 50 | | | | 59 | 45 | 28 | 31 | 25 | 8 |
| 2 | UNL | 50 | | | | 66 | 47 | 25 | 21 | 29 | 5 |
| 2 | UNL | 50 | | | | 73 | 51 | 29 | 20 | 25 | 12 |
| 0 | UNL | 60 | | | | 74 | 51 | 27 | 17 | 22 | 14 |
| 0 | UNL | 50 | | | | 64 | 49 | 33 | 32 | 21 | 8 |
| 0 | UNL | 20 | | | | 57 | 44 | 28 | 33 | 18 | 7 |
| **JUN 10** | | | | | | | | | | | |
| 02 | 0 | UNL | 20 | | | 45 | 39 | 31 | 58 | 23 | 6 |
| 05 | 0 | UNL | 20 | | | 40 | 36 | 30 | 68 | 24 | 6 |
| 08 | 0 | UNL | 70 | | | 57 | 48 | 40 | 53 | 25 | 6 |
| 11 | 0 | UNL | 50 | | | 69 | 51 | 35 | 29 | 27 | 10 |
| 14 | 0 | UNL | 50 | | | 78 | 55 | 34 | 20 | 27 | 10 |
| 17 | 0 | UNL | 60 | | | 81 | 56 | 36 | 20 | 24 | 12 |
| 20 | 0 | UNL | 60 | | | 68 | 55 | 44 | 42 | 23 | 6 |
| 23 | 0 | UNL | 20 | | | 58 | 47 | 36 | 44 | 21 | 6 |
| **JUN 11** | | | | | | | | | | | |
| 0 | UNL | 20 | | | | 62 | 48 | 35 | 37 | 20 | 8 |
| 1 | UNL | 30 | | | | 54 | 46 | 38 | 55 | 17 | 4 |
| 2 | UNL | 70 | | | | 70 | 52 | 36 | 29 | 27 | 5 |
| 2 | UNL | 70 | | | | 78 | 58 | 42 | 28 | 27 | 8 |
| 6 | UNL | 70 | | | | 86 | 59 | 38 | 18 | 27 | 9 |
| 10 | UNL | 60 | | | | 86 | 59 | 37 | 18 | 24 | 8 |
| 10 | UNL | 40 | | | | 76 | 56 | 40 | 28 | 17 | 8 |
| 6 | 250 | 20 | | | | 69 | 55 | 45 | 42 | 12 | 3 |
| **JUN 12** | | | | | | | | | | | |
| 8 | UNL | 20 | | | | 58 | 51 | 44 | 60 | 19 | |
| 10 | 120 | 30 | | | | 52 | 48 | 45 | 77 | 21 | |
| 10 | 150 | 40 | | | | 65 | 55 | 48 | 54 | 20 | 8 |
| 10 | 150 | 40 | | | | 71 | 58 | 49 | 46 | 24 | 9 |
| 10 | 150 | 40 | | | | 78 | 59 | 45 | 31 | 26 | 10 |
| 10 | 130 | 50 | | | | 79 | 60 | 46 | 31 | 24 | 9 |
| 10 | UNL | 40 | | | | 74 | 58 | 46 | 37 | 16 | 6 |
| 10 | 160 | 20 | | | | 66 | 54 | 44 | 45 | 30 | 4 |
| **JUN 13** | | | | | | | | | | | |
| 02 | 10 | 220 | 20 | | | 72 | 55 | 42 | 34 | 20 | 12 |
| 05 | 10 | 250 | 30 | | | 65 | 55 | 47 | 52 | 22 | 11 |
| 08 | 10 | 150 | 40 | | | 67 | 55 | 46 | 47 | 23 | 10 |
| 11 | 9 | 150 | 40 | | | 75 | 58 | 45 | 34 | 27 | 12 |
| 14 | 8 | 120 | 50 | | | 80 | 59 | 45 | 29 | 28 | 12 |
| 17 | 10 | 160 | 40 | | | 75 | 58 | 45 | 34 | 25 | 9 |
| 20 | 6 | 130 | 40 | | | 68 | 54 | 43 | 41 | 26 | 13 |
| 23 | 6 | 250 | 15 | | | 60 | 47 | 35 | 39 | 27 | 18 |
| **JUN 14** | | | | | | | | | | | |
| 2 | UNL | 20 | | | | 53 | 45 | 37 | 55 | 26 | 17 |
| 9 | 85 | 100 | | | | 49 | 42 | 35 | 59 | 23 | 14 |
| 1 | UNL | 100 | | | | 51 | 40 | 26 | 38 | 27 | 18 |
| 1 | UNL | 100 | | | | 55 | 40 | 19 | 24 | 26 | 22 |
| 1 | UNL | 100 | | | | 59 | 43 | 22 | 24 | 26 | 20 |
| 0 | UNL | 70 | | | | 60 | 43 | 20 | 21 | 25 | 18 |
| 0 | UNL | 30 | | | | 51 | 39 | 24 | 35 | 20 | 6 |
| 8 | UNL | 20 | | | | 49 | 37 | 20 | 32 | 23 | 5 |
| **JUN 15** | | | | | | | | | | | |
| 10 | 240 | 20 | | | | 45 | 36 | 23 | 42 | 02 | 6 |
| 0 | UNL | 100 | | | | 33 | 31 | 28 | 82 | 04 | 6 |
| 0 | UNL | 70 | | | | 54 | 44 | 32 | 43 | 34 | 6 |
| 2 | UNL | 70 | | | | 66 | 51 | 37 | 34 | 31 | 11 |
| 2 | UNL | 50 | | | | 70 | 50 | 29 | 22 | 26 | 14 |
| 0 | UNL | 50 | | | | 68 | 48 | 26 | 21 | 28 | 17 |
| 2 | UNL | 40 | | | | 59 | 46 | 33 | 38 | 24 | 7 |
| 10 | 200 | 20 | | | | 53 | 43 | 32 | 45 | 24 | 8 |
| **JUN 16** | | | | | | | | | | | |
| 02 | 10 | 200 | 20 | | | 52 | 42 | 31 | 45 | 20 | 9 |
| 05 | 10 | 100 | 100 | | | 49 | 41 | 32 | 52 | 22 | 6 |
| 08 | 10 | 130 | 80 | | | 52 | 43 | 33 | 49 | 23 | 13 |
| 11 | 7 | 240 | 70 | | | 55 | 44 | 33 | 44 | 26 | 11 |
| 14 | 1 | UNL | 80 | | | 66 | 48 | 29 | 25 | 24 | 16 |
| 17 | 0 | UNL | 50 | | | 68 | 48 | 25 | 20 | 25 | 14 |
| 20 | 0 | UNL | 40 | | | 59 | 46 | 33 | 38 | 24 | 7 |
| 23 | 0 | UNL | 20 | | | 51 | 40 | 27 | 40 | 23 | 7 |
| **JUN 17** | | | | | | | | | | | |
| 0 | UNL | 20 | | | | 41 | 35 | 27 | 58 | 19 | 6 |
| 0 | UNL | 25 | | | | 35 | 31 | 26 | 70 | 34 | 6 |
| 0 | UNL | 100 | | | | 56 | 45 | 33 | 42 | 04 | 7 |
| 0 | UNL | 100 | | | | 70 | 50 | 29 | 22 | 35 | 9 |
| 2 | UNL | 60 | | | | 79 | 55 | 35 | 20 | 04 | 6 |
| 0 | UNL | 70 | | | | 80 | 56 | 37 | 21 | 34 | 6 |
| 0 | UNL | 70 | | | | 70 | 53 | 39 | 32 | 03 | 6 |
| 0 | UNL | 20 | | | | 57 | 45 | 33 | 40 | 20 | 6 |
| **JUN 18** | | | | | | | | | | | |
| 0 | UNL | 20 | | | | 48 | 41 | 33 | 56 | 22 | 8 |
| 6 | UNL | 25 | | | | 54 | 44 | 33 | 45 | 23 | 9 |
| 0 | UNL | 50 | | | | 66 | 51 | 37 | 34 | 26 | 12 |
| 0 | UNL | 60 | | | | 75 | 52 | 30 | 19 | 23 | 11 |
| 0 | UNL | 60 | | | | 80 | 53 | 26 | 14 | 26 | 8 |
| 0 | UNL | 70 | | | | 84 | 55 | 28 | 13 | 04 | 4 |
| 1 | UNL | 70 | | | | 77 | 55 | 37 | 24 | 00 | 0 |
| 0 | UNL | 20 | | | | 57 | 46 | 35 | 44 | 20 | 7 |

# MAXIMUM SHORT DURATION PRECIPITATION

| TIME PERIOD (MINUTES) | 5 | 10 | 15 | 20 | 30 | 45 | 60 | 80 | 100 | 120 | 150 | 180 |
|---|---|---|---|---|---|---|---|---|---|---|---|---|
| PRECIPITATION (INCHES) | 0.01 | 0.01 | 0.01 | 0.01 | 0.02 | 0.02 | 0.03 | 0.03 | 0.03 | 0.04 | 0.04 | 0.04 |
| ENDED: DATE | 06 | 06 | 06 | 06 | 06 | 06 | 06 | 06 | 06 | 06 | 06 | 06 |
| ENDED: TIME (LST) | 2136 | 2136 | 2136 | 2136 | 2136 | 2136 | 2136 | 2136 | 2136 | 2159 | 2159 | 2159 |

THE PRECIPITATION AMOUNTS FOR THE INDICATED TIME INTERVALS MAY OCCUR AT ANY TIME DURING THE MONTH. THE TIME INDICATED IS THE ENDING TIME OF THE INTERVAL. DATE AND TIME ARE NOT ENTERED FOR TRACE AMOUNTS.

# OBSERVATIONS AT 3-HOUR INTERVALS

JUN 1994 24156
POCATELLO, ID

| HOUR L.S.T. | SKY COVER (TENTHS) | CEILING IN HUNDREDS OF FEET | VISIBILITY: WHOLE MILES | VISIBILITY: 16THS MILE | WEATHER | TEMPERATURE: AIR °F | TEMPERATURE: WET BULB °F | TEMPERATURE: DEW POINT °F | REL HUMIDITY% | WIND: DIRECTION | WIND: SPEED (KNOTS) |
|---|---|---|---|---|---|---|---|---|---|---|---|
| **JUN 19** | | | | | | | | | | | |
| 02 | 0 | UNL | 20 | | | 56 | 45 | 34 | 44 | 23 | 8 |
| 05 | 1 | UNL | 20 | | | 52 | 43 | 33 | 49 | 22 | 8 |
| 08 | 1 | UNL | 60 | | | 65 | 50 | 35 | 33 | 22 | 10 |
| 11 | 0 | UNL | 50 | | | 75 | 55 | 37 | 25 | 28 | 7 |
| 14 | 1 | UNL | 50 | | | 85 | 57 | 34 | 16 | 30 | 7 |
| 17 | 7 | UNL | 60 | | | 90 | 59 | 33 | 13 | 33 | 7 |
| 20 | 1 | UNL | 100 | | | 80 | 58 | 40 | 24 | 11 | 5 |
| 23 | 0 | UNL | 20 | | | 61 | 48 | 35 | 38 | 00 | 0 |
| **JUN 20** | | | | | | | | | | | |
| 0 | 0 | UNL | 20 | | | 51 | 46 | 40 | 66 | 07 | 4 |
| 0 | 0 | UNL | 30 | | | 51 | 46 | 41 | 69 | 00 | 0 |
| 1 | 1 | UNL | 50 | | | 68 | 55 | 44 | 42 | 04 | 4 |
| 1 | 1 | UNL | 50 | | | 89 | 62 | 44 | 21 | 03 | 8 |
| 1 | 1 | UNL | 50 | | | 99 | 64 | 40 | 13 | 33 | 10 |
| 2 | 2 | UNL | 60 | | | 97 | 62 | 37 | 12 | 36 | 9 |
| 2 | 2 | UNL | 50 | | | 82 | 59 | 41 | 23 | 09 | 6 |
| 8 | 8 | UNL | 20 | | | 74 | 53 | 35 | 24 | 19 | 6 |
| **JUN 21** | | | | | | | | | | | |
| 10 | 10 | 130 | 20 | | | 66 | 53 | 42 | 42 | 02 | 6 |
| 10 | 10 | 130 | 20 | | | 69 | 53 | 40 | 35 | 19 | 4 |
| 10 | 10 | UNL | 40 | | | 77 | 61 | 51 | 40 | 31 | 9 |
| 10 | 10 | UNL | 40 | | | 79 | 60 | 46 | 31 | 23 | 9 |
| 10 | 10 | 250 | 40 | | | 86 | 63 | 49 | 28 | 24 | 7 |
| 9 | 9 | 100 | 40 | | | 85 | 65 | 54 | 35 | 36 | 9 |
| 10 | 10 | 70 | 20 | | RW | 65 | 58 | 53 | 65 | 14 | 14 |
| 10 | 10 | 120 | 20 | | | 62 | 56 | 51 | 67 | 34 | 8 |
| **JUN 22** | | | | | | | | | | | |
| 02 | 10 | 120 | 20 | | | 60 | 55 | 52 | 75 | 01 | 8 |
| 05 | 10 | UNL | 20 | | | 53 | 51 | 50 | 90 | 06 | 5 |
| 08 | 0 | UNL | 40 | | | 68 | 59 | 53 | 59 | 11 | 6 |
| 11 | 0 | UNL | 40 | | | 81 | 62 | 50 | 34 | 16 | 6 |
| 14 | 1 | UNL | 40 | | | 88 | 62 | 45 | 22 | 26 | 7 |
| 17 | 5 | UNL | 15 | | | 87 | 61 | 43 | 21 | 22 | 18 |
| 20 | 4 | UNL | 40 | | | 77 | 58 | 45 | 32 | 09 | 6 |
| 23 | 0 | UNL | 20 | | | 60 | 52 | 45 | 58 | 33 | 6 |
| **JUN 23** | | | | | | | | | | | |
| 0 | 0 | UNL | 20 | | | 58 | 51 | 44 | 60 | 17 | 4 |
| 1 | 1 | UNL | 30 | | | 49 | 46 | 43 | 80 | 21 | 4 |
| 0 | 0 | UNL | 45 | | | 63 | 55 | 49 | 61 | 26 | 5 |
| 0 | 0 | UNL | 50 | | | 80 | 60 | 47 | 31 | 24 | 8 |
| 0 | 0 | UNL | 60 | | | 88 | 58 | 34 | 15 | 24 | 10 |
| 0 | 0 | UNL | 60 | | | 88 | 60 | 38 | 17 | 24 | 10 |
| 4 | 4 | UNL | 60 | | | 75 | 57 | 44 | 33 | 22 | 6 |
| 1 | 1 | UNL | 20 | | | 59 | 47 | 36 | 42 | 20 | 4 |
| **JUN 24** | | | | | | | | | | | |
| 0 | 0 | UNL | 20 | | | 53 | 43 | 32 | 45 | 30 | 3 |
| 0 | 0 | UNL | 50 | | | 47 | 40 | 32 | 56 | 27 | 5 |
| 0 | 0 | UNL | 70 | | | 67 | 51 | 37 | 33 | 24 | 14 |
| 0 | 0 | UNL | 50 | | | 78 | 58 | 43 | 29 | 24 | 12 |
| 7 | 7 | 250 | 60 | | | 85 | 59 | 40 | 20 | 26 | 11 |
| 7 | 7 | 250 | 50 | | | 87 | 57 | 32 | 14 | 24 | 8 |
| 9 | 9 | UNL | 30 | | | 74 | 57 | 43 | 33 | 21 | 7 |
| 8 | 8 | UNL | 20 | | | 62 | 48 | 34 | 35 | 22 | 4 |
| **JUN 25** | | | | | | | | | | | |
| 02 | 9 | 250 | 20 | | | 54 | 46 | 39 | 57 | 01 | 4 |
| 05 | 6 | UNL | 50 | | | 48 | 43 | 37 | 66 | 26 | 5 |
| 08 | 8 | UNL | 50 | | | 70 | 52 | 35 | 28 | 08 | 4 |
| 11 | 0 | UNL | 90 | | | 86 | 59 | 39 | 19 | 06 | 7 |
| 14 | 0 | UNL | 70 | | | 94 | 59 | 30 | 10 | 34 | 8 |
| 17 | 0 | UNL | 60 | | | 95 | 60 | 33 | 11 | 32 | 6 |
| 20 | 0 | UNL | 50 | | | 85 | 60 | 41 | 21 | 07 | 7 |
| 23 | 0 | UNL | 20 | | | 64 | 53 | 44 | 48 | 21 | 6 |
| **JUN 26** | | | | | | | | | | | |
| 0 | 0 | UNL | 20 | | | 70 | 53 | 38 | 31 | 20 | 12 |
| 5 | 5 | UNL | 50 | | | 69 | 51 | 35 | 29 | 23 | 11 |
| 5 | 5 | UNL | 50 | | | 70 | 52 | 36 | 29 | 23 | 12 |
| 4 | 4 | UNL | 40 | | | 73 | 53 | 36 | 26 | 25 | 16 |
| 0 | 0 | UNL | 40 | | | 72 | 53 | 35 | 26 | 25 | 16 |
| 1 | 1 | UNL | 40 | | | 74 | 52 | 30 | 20 | 25 | 17 |
| 1 | 1 | UNL | 40 | | | 62 | 46 | 27 | 27 | 21 | 10 |
| 0 | 0 | UNL | 20 | | | 57 | 44 | 28 | 33 | 21 | 7 |
| **JUN 27** | | | | | | | | | | | |
| 0 | 0 | UNL | 20 | | | 50 | 41 | 30 | 46 | 18 | 5 |
| 0 | 0 | UNL | 60 | | | 46 | 39 | 29 | 52 | 19 | 4 |
| 0 | 0 | UNL | 80 | | | 58 | 47 | 35 | 42 | 32 | 3 |
| 0 | 0 | UNL | 80 | | | 68 | 49 | 29 | 23 | 27 | 6 |
| 1 | 1 | UNL | 80 | | | 77 | 53 | 31 | 19 | 27 | 7 |
| 8 | 8 | 130 | 60 | | | 81 | 52 | 22 | 11 | 26 | 11 |
| 7 | 7 | 250 | 30 | | | 68 | 53 | 39 | 35 | 21 | 6 |
| 10 | 10 | 130 | 20 | | | 62 | 47 | 31 | 31 | 24 | 3 |
| **JUN 28** | | | | | | | | | | | |
| 02 | 1 | UNL | 20 | | | 55 | 44 | 31 | 40 | 00 | 0 |
| 05 | 1 | UNL | 50 | | | 45 | 41 | 36 | 71 | 03 | 5 |
| 08 | 0 | UNL | 60 | | | 69 | 52 | 37 | 31 | 34 | 5 |
| 11 | 1 | UNL | 70 | | | 84 | 61 | 45 | 26 | 36 | 7 |
| 14 | 2 | UNL | 70 | | | 88 | 58 | 34 | 15 | 24 | 5 |
| 17 | 3 | UNL | 50 | | | 92 | 59 | 32 | 12 | 23 | 8 |
| 20 | 1 | UNL | 40 | | | 83 | 60 | 44 | 25 | 21 | 5 |
| 23 | 5 | UNL | 20 | | | 70 | 53 | 37 | 30 | 22 | 4 |
| **JUN 29** | | | | | | | | | | | |
| 1 | 1 | UNL | 20 | | | 59 | 50 | 42 | 54 | 17 | 3 |
| 1 | 1 | UNL | 40 | | | 55 | 49 | 43 | 64 | 06 | 6 |
| 5 | 5 | UNL | 50 | | | 74 | 55 | 39 | 28 | 25 | 8 |
| 3 | 3 | UNL | 50 | | | 84 | 57 | 35 | 17 | 26 | 16 |
| 0 | 0 | UNL | 50 | | | 90 | 62 | 42 | 19 | 26 | 16 |
| 0 | 0 | UNL | 50 | | | 90 | 59 | 34 | 14 | 25 | 14 |
| 0 | 0 | UNL | 40 | | | 75 | 57 | 43 | 32 | 24 | 8 |
| 0 | 0 | UNL | 20 | | | 65 | 50 | 36 | 34 | 21 | 8 |
| **JUN 30** | | | | | | | | | | | |
| 0 | 0 | UNL | 20 | | | 56 | 46 | 36 | 47 | 25 | 6 |
| 0 | 0 | UNL | 40 | | | 48 | 43 | 37 | 66 | 35 | 8 |
| 0 | 0 | UNL | 50 | | | 75 | 53 | 34 | 22 | 34 | 5 |
| 0 | 0 | UNL | 50 | | | 87 | 59 | 37 | 17 | 31 | 7 |
| 0 | 0 | UNL | 50 | | | 91 | 59 | 34 | 13 | 32 | 7 |
| 1 | 1 | UNL | 50 | | | 93 | 62 | 41 | 16 | 24 | 9 |
| 9 | 9 | 70 | 30 | | | 78 | 63 | 53 | 42 | 20 | 5 |
| 2 | 2 | UNL | 20 | | | 69 | 54 | 42 | 38 | 22 | 5 |

# WEATHER CODES AND NOTES

| | | | | | |
|---|---|---|---|---|---|
| & | TORNADO | S | SNOW | IF | ICE FOG |
| &C | FUNNEL CLOUD | SW | SNOW SHOWERS | GF | GROUND FOG |
| &W | WATER SPOUT | SG | SNOW GRAINS | BD | BLOWING DUST |
| T | THUNDERSTORM | SP | SNOW PELLETS | BN | BLOWING SAND |
| R | RAIN | IC | ICE CRYSTALS | BS | BLOWING SNOW |
| RW | RAIN SHOWERS | IP | ICE PELLETS | BY | BLOWING SPRAY |
| ZR | FREEZING RAIN | IPW | ICE PELLET SHOWERS | K | SMOKE |
| L | DRIZZLE | A | HAIL | H | HAZE |
| ZL | FREEZING DRIZZLE | F | FOG | D | DUST |

CEILING: UNL INDICATES UNLIMITED
WIND DIRECTION: DIRECTIONS ARE THOSE FROM WHICH THE WIND IS BLOWING, INDICATED IN TENS OF DEGREES FROM TRUE NORTH: I.E. 09 FOR
EAST, 18 FOR SOUTH, 27 FOR WEST. AN ENTRY OF 00 INDICATES CALM.
SPEED: THE OBSERVED AVERAGE ONE-MINUTE VALUE (MPH=KNOTS X 1.15).

# SUMMARY BY HOURS

| HOUR L.S.T. | AVERAGES: SKY COVER (TENTHS) | AVERAGES: STATION PRESSURE (INCHES) | AVERAGES: TEMPERATURE: AIR °F | AVERAGES: TEMPERATURE: WET BULB °F | AVERAGES: TEMPERATURE: DEW POINT °F | AVERAGES: REL HUMIDITY% | AVERAGES: SPEED (MPH) | RESULTANT WIND: DIRECTION | RESULTANT WIND: SPEED (MPH) |
|---|---|---|---|---|---|---|---|---|---|
| 02 | 4 | 25.460 | 55 | 46 | 37 | 55 | 8.4 | 22 | 5.0 |
| 05 | 4 | 25.485 | 50 | 43 | 37 | 64 | 7.4 | 22 | 3.8 |
| 08 | 3 | 25.520 | 63 | 50 | 39 | 43 | 10.3 | 25 | 5.7 |
| 11 | 3 | 25.515 | 73 | 54 | 38 | 30 | 12.3 | 27 | 8.4 |
| 14 | 3 | 25.480 | 79 | 55 | 36 | 22 | 12.5 | 27 | 10.0 |
| 17 | 4 | 25.450 | 79 | 55 | 34 | 21 | 12.9 | 26 | 10.4 |
| 20 | 5 | 25.440 | 68 | 53 | 40 | 39 | 8.1 | 21 | 4.5 |
| 23 | 4 | 25.460 | 60 | 48 | 36 | 43 | 7.2 | 22 | 5.2 |

P&D ASHEVILLE N.C. 288 09/08/94 PM

NATIONAL CLIMATIC DATA CENTER
ROOM 120
151 PATTON AVENUE
ASHEVILLE, NORTH CAROLINA 28801-5001

OFFICIAL BUSINESS
PENALTY FOR PRIVATE USE $300

FIRST CLASS
POSTAGE AND FEES PAID
NOAA
PERMIT G-19

LCD-10-24156-PD-9509

33766
J R SIMPLOT COMPANY
ATTN: J F COCHRANE - PO #35724
PO BOX 912
POCATELLO ID 83204

## HOURLY PRECIPITATION (WATER EQUIVALENT IN INCHES)

JUN 1994 24156
POCATELLO, ID
USCOM - NOAA - ASHEVILLE, NC 125

| DATE | A.M. HOUR ENDING AT | | | | | | | | | | | | P.M. HOUR ENDING AT | | | | | | | | | | | | DATE |
|---|---|---|---|---|---|---|---|---|---|---|---|---|---|---|---|---|---|---|---|---|---|---|---|---|---|
| | 1 | 2 | 3 | 4 | 5 | 6 | 7 | 8 | 9 | 10 | 11 | 12 | 1 | 2 | 3 | 4 | 5 | 6 | 7 | 8 | 9 | 10 | 11 | 12 | |
| 01 | | | | | | | | | | | | | T | | | | | | | | | | | | 01 |
| 02 | | | | | | | | | | | | | | | | | | | | | | | | | 02 |
| 03 | | | | | | | | T | | | | | | | | | | T | | | | | | | 03 |
| 04 | | | | | | | | | | | | | | | | | | | | | | | | | 04 |
| 05 | | | | | | | | | | | | | | | | | | | | | | | | | 05 |
| 06 | | | | | | | | | | | | | | | | | | | T | T | 0.02 | 0.02 | T | | 06 |
| 07 | | | | | | | | | | | | | | | | T | | | T | 0.01 | 0.02 | | | | 07 |
| 08 | | | | | | | | | | | | | | | | | | | | | | | | | 08 |
| 09 | | | | | | | | | | | | | | | | | | | | | | | | | 09 |
| 10 | | | | | | | | | | | | | | | | | | | | | | | | | 10 |
| 11 | | | | | | | | | | | | | | | | | | | | | | | | | 11 |
| 12 | | | | | | | | | | | | | | | | | | | | | | | | | 12 |
| 13 | | | | | | | | | | | | | | | | | | | | | | | | | 13 |
| 14 | | | | | | | | | | | | | | | | | | | | | | | | | 14 |
| 15 | | | | | | | | | | | | | | | | | | | | | | | | | 15 |
| 16 | | | | | | | | | | | | | | | | | | | | | | | | | 16 |
| 17 | | | | | | | | | | | | | | | | | | | | | | | | | 17 |
| 18 | | | | | | | | | | | | | | | | | | | | | | | | | 18 |
| 19 | | | | | | | | | | | | | | | | | | | | | | | | | 19 |
| 20 | | | | | | | | | | | | | | | | | | | | | | | | | 20 |
| 21 | | | | | | | | | | | | | | | | | | T | 0.01 | 0.02 | T | | | | 21 |
| 22 | | | | | | | | | | | | | | | | | | | | | | | | | 22 |
| 23 | | | | | | | | | | | | | | | | | | | | | | | | | 23 |
| 24 | | | | | | | | | | | | | | | | | | | | | | | | | 24 |
| 25 | | | | | | | | | | | | | | | | | | | | | | | | | 25 |
| 26 | | | | | | | | | | | | | | | | | | | | | | | | | 26 |
| 27 | | | | | | | | | | | | | | | | | | | | | | | | | 27 |
| 28 | | | | | | | | | | | | | | | | | | | | | | | | | 28 |
| 29 | | | | | | | | | | | | | | | | | | | | | | | | | 29 |
| 30 | | | | | | | | | | | | | | | | | | | | | | T | | | 30 |

JUL 1994
POCATELLO, ID
NAT'L WEA SER OFC
20369 THUNDERBOLT STREET-C

INQUIRIES/COMMENTS CALL
(704) 271-4800 VOICE
271-4010 TDD/271-4876 FAX

MUNICIPAL AIRPORT

ISSN # 0198-1811

# LOCAL CLIMATOLOGICAL DATA

## MONTHLY SUMMARY

LATITUDE 42° 55'N LONGITUDE 112° 36'W ELEVATION (GROUND) 4454 FEET TIME ZONE MOUNTAIN 24156

POCATELLO, ID JUL 1994

| DATE | TEMPERATURE °F MAXIMUM | MINIMUM | AVERAGE | DEPARTURE FROM NORMAL | AVERAGE DEW POINT | DEGREE DAYS BASE 65 °F HEATING | COOLING | WEATHER TYPES 1 FOG 2 HEAVY FOG 3 THUNDERSTORMS 4 ICE PELLETS 5 HAIL 6 GLAZE 7 DUSTSTORM 8 SMOKE, HAZE 9 BLOWING SNOW | SNOW/ICE ON GRD AT 0500 (IN.) | PRECIPITATION (INCHES) WATER EQUIVALENT | SNOW ICE PELLETS | AVERAGE STATION PRESSURE (INCHES OF Hg) ELEV. 4478 (FT.MSL) | WIND (M.P.H.) RESULTANT DIR | RESULTANT SPEED | AVERAGE SPEED | PEAK GUST SPEED | PEAK GUST DIR | FASTEST 1-MIN SPEED | FASTEST 1-MIN DIR | SUNSHINE MINUTES | SUNSHINE PERCENT POSSIBLE | SKY COVER TENTHS SUNRISE TO SUNSET | SKY COVER TENTHS MIDNIGHT TO MIDNIGHT |
|---|---|---|---|---|---|---|---|---|---|---|---|---|---|---|---|---|---|---|---|---|---|---|---|
| 1 | 2 | 3 | 4 | 5 | 6 | 7A | 7B | 8 | 9 | 10 | 11 | 12 | 13 | 14 | 15 | 16 | 17 | 18 | 19 | 20 | 21 | 22 | 23 |
| 01 | 91 | 52 | 72 | 4 | 36 | 0 | 7 | | 0 | 0.00 | 0.0 | 25.420 | 25 | 9.9 | 11.5 | 25 | SW | 17 | 28 | 918 | 100 | 0 | 0 |
| 02 | 81 | 46 | 64 | -4 | 43 | 1 | 0 | | 0 | 0.00 | 0.0 | 25.390 | 24 | 12.3 | 13.5 | 30 | SW | 20 | 25 | 868 | 95 | 8 | 7 |
| 03 | 79 | 53 | 66 | -2 | 32 | 0 | 1 | | 0 | 0.00 | 0.0 | 25.420 | 24 | 13.4 | 14.2 | 25 | W | 20 | 26 | 696 | 76 | 6 | 7 |
| 04 | 80 | 48 | 64 | -5 | 30 | 1 | 0 | | 0 | 0.00 | 0.0 | 25.390 | 24 | 9.7 | 10.7 | 24 | W | 16 | 26 | 857 | 94 | 5 | 3 |
| 05 | 84 | 43 | 64 | -5 | 36 | 1 | 0 | | 0 | T | 0.0 | 25.370 | 26 | 7.8 | 10.6 | 39 | W | 28 | 23 | 686 | 75 | 6 | 4 |
| 06 | 67 | 43 | 55* | -14 | 40 | 10 | 0 | 1 | 0 | 0.15 | 0.0 | 25.620 | 24 | 5.1 | 9.9 | 21 | SW | 15 | 23 | 529 | 58 | 9 | 8 |
| 07 | 80 | 42* | 61 | -8 | 42 | 4 | 0 | | 0 | 0.00 | 0.0 | 25.620 | 02 | 2.5 | 5.3 | 17 | NW | 12 | 31 | 913 | 100 | 1 | 1 |
| 08 | 89 | 43 | 66 | -4 | 41 | 0 | 1 | | 0 | 0.00 | 0.0 | 25.555 | 29 | 2.9 | 5.6 | 15 | NW | 10 | 32 | 900 | 99 | 0 | 0 |
| 09 | 99 | 49 | 74 | 4 | 40 | 0 | 9 | | 0 | 0.00 | 0.0 | 25.495 | 26 | 1.8 | 7.1 | 24 | SW | 16 | 23 | 902 | 99 | 2 | 2 |
| 10 | 90 | 58 | 74 | 3 | 39 | 0 | 9 | | 0 | 0.00 | 0.0 | 25.505 | 23 | 12.1 | 13.4 | 30 | SW | 21 | 23 | 842 | 93 | 3 | 2 |
| 11 | 86 | 46 | 66 | -5 | 31 | 0 | 1 | | 0 | 0.00 | 0.0 | 25.540 | 23 | 9.9 | 10.6 | 26 | SW | 18 | 24 | 908 | 100 | 0 | 0 |
| 12 | 88 | 48 | 68 | -3 | 30 | 0 | 3 | | 0 | 0.00 | 0.0 | 25.500 | 24 | 8.1 | 9.1 | 24 | W | 17 | 24 | 906 | 100 | 2 | 1 |
| 13 | 86 | 49 | 68 | -3 | 38 | 0 | 3 | | 0 | 0.00 | 0.0 | 25.520 | 25 | 2.1 | 7.4 | 17 | E | 12 | 25 | 883 | 97 | 1 | 1 |
| 14 | 88 | 45 | 67 | -4 | 37 | 0 | 2 | | 0 | 0.00 | 0.0 | 25.500 | 25 | 7.1 | 10.0 | 23 | W | 16 | 25 | 904 | 100 | 1 | 1 |
| 15 | 92 | 46 | 69 | -2 | 39 | 0 | 4 | | 0 | 0.00 | 0.0 | 25.530 | 27 | 1.7 | 6.3 | 16 | NE | 10 | 33 | 903 | 100 | 0 | 0 |
| 16 | 92 | 47 | 70 | -1 | 39 | 0 | 5 | | 0 | 0.00 | 0.0 | 25.540 | 23 | 5.9 | 8.3 | 18 | W | 14 | 25 | 901 | 100 | 3 | 4 |
| 17 | 95 | 48 | 72 | 1 | 37 | 0 | 7 | | 0 | 0.00 | 0.0 | 25.530 | 24 | 7.5 | 8.1 | 23 | SW | 16 | 24 | 824 | 92 | 6 | 7 |
| 18 | 93 | 54 | 74 | 3 | 39 | 0 | 9 | | 0 | 0.00 | 0.0 | 25.475 | 24 | 11.4 | 12.6 | 33 | W | 23 | 25 | 898 | 100 | 3 | 3 |
| 19 | 86 | 56 | 71 | 0 | 42 | 0 | 6 | | 0 | 0.00 | 0.0 | 25.530 | 23 | 6.4 | 8.3 | 16 | SW | 14 | 24 | 896 | 100 | 0 | 0 |
| 20 | 90 | 49 | 70 | -1 | 38 | 0 | 5 | | 0 | 0.00 | 0.0 | 25.620 | 02 | 6.9 | 9.0 | 23 | N | 16 | 02 | 894 | 100 | 0 | 1 |
| 21 | 96 | 46 | 71 | -1 | 35 | 0 | 6 | | 0 | 0.00 | 0.0 | 25.560 | 34 | 3.3 | 7.0 | 15 | NW | 10 | 35 | 893 | 100 | 0 | 0 |
| 22 | 100 | 50 | 75 | 3 | 42 | 0 | 10 | 3 | 0 | T | 0.0 | 25.510 | 17 | 1.6 | 9.5 | 44 | S | 32 | 18 | 811 | 91 | 7 | 6 |
| 23 | 94 | 58 | 76 | 4 | 55 | 0 | 11 | 3 | 0 | 0.11 | 0.0 | 25.575 | 22 | 1.2 | 9.3 | 44 | S | 32 | 18 | 420 | 47 | 7 | 7 |
| 24 | 94 | 51 | 73 | 1 | 49 | 0 | 8 | | 0 | 0.00 | 0.0 | 25.560 | 33 | 2.0 | 6.7 | 22 | NW | 12 | 29 | 760 | 86 | 2 | 2 |
| 25 | 99 | 54 | 77 | 5 | 48 | 0 | 12 | | 0 | 0.00 | 0.0 | 25.570 | 03 | 4.4 | 7.0 | 32 | N | 20 | 01 | 850 | 96 | 1 | 1 |
| 26 | 102* | 53 | 78 | 6 | 45 | 0 | 13 | | 0 | 0.00 | 0.0 | 25.580 | 02 | 6.2 | 8.2 | 38 | N | 26 | 01 | 827 | 94 | 2 | 2 |
| 27 | 98 | 53 | 76 | 4 | 46 | 0 | 11 | | 0 | 0.00 | 0.0 | 25.550 | 02 | 1.0 | 8.3 | 46 | S | 38 | 17 | 686 | 78 | 8 | 6 |
| 28 | 99 | 55 | 77 | 6 | 46 | 0 | 12 | 3 | 0 | T | 0.0 | 25.520 | 01 | 6.3 | 8.6 | 31 | NW | 18 | 33 | 664 | 75 | 10 | 8 |
| 29 | 101 | 56 | 79* | 8 | 44 | 0 | 14 | | 0 | 0.00 | 0.0 | 25.490 | 35 | 3.5 | 7.4 | 25 | W | 21 | 25 | 757 | 86 | 3 | 3 |
| 30 | 98 | 57 | 78 | 7 | 48 | 0 | 13 | 3 | 0 | 0.00 | 0.0 | 25.460 | 33 | 4.4 | 7.3 | 32 | N | 21 | 35 | 652 | 74 | 10 | 9 |
| 31 | 95 | 60 | 78 | 7 | 54 | 0 | 13 | 3 | 0 | 0.34 | 0.0 | 25.540 | 02 | 2.0 | 8.8 | 46 | SW | 26 | 23 | 675 | 77 | 7 | 7 |
| SUM | 2812 | SUM | 1558 | | | TOTAL | 17 | TOTAL | 195 | NUMBER OF DAYS | | TOTAL | 0.60 | TOTAL | 0.0 | FOR THE MONTH : | 25.515 | 26 | 3.7 | 9.0 | 46 | SW | 38 | 17 | TOTAL | 25023 | % FOR MONTH | SUM AVG | 113 | SUM AVG | 103 |
| AVG. | 90.7 | AVG. | 50.3 | AVG. | 70.5 | DEP. | -0.1 | AVG. | 40.6 | DEP. | 8 | DEP. | 12 | PRECIPITATION ≥ .01 INCH | 3 | DEP. | -0.05 | | | | | DATE:31+ | | | DATE:27 | | POSS | 27850 | | 90 | | 3.6 | | 3.3 |

| NUMBER OF DAYS | | | | SEASON TO DATE TOTAL | | SNOW, ICE PELLETS ≥ 1.0 INCH | 0 | GREATEST IN 24 HOURS AND DATES | | | GREATEST DEPTH ON GROUND OF SNOW, ICE PELLETS OR ICE AND DATE |
|---|---|---|---|---|---|---|---|---|---|---|---|
| MAXIMUM TEMP. | | MINIMUM TEMP. | | 17 | 278 | THUNDERSTORMS | 5 | PRECIPITATION | SNOW, ICE PELLETS | | 0 |
| ≥ 90° | ≤ 32° | ≤ 32° | ≤ 0° | DEP. | DEP. | HEAVY FOG | 0 | 0.34 | 31 | 0.0 | |
| 19 | 0 | 0 | 0 | 8 | 39 | CLEAR 19 | PARTLY CLOUDY 7 | CLOUDY 5 | | | |

* EXTREME FOR THE MONTH - LAST OCCURRENCE IF MORE THAN ONE.
T TRACE AMOUNT.
+ ALSO ON EARLIER DATE(S).
HEAVY FOG: VISIBILITY 1/4 MILE OR LESS.
BLANK ENTRIES DENOTE MISSING OR UNREPORTED DATA.

DATA IN COLS 6 AND 12-15 ARE BASED ON 21 OR MORE OBSERVATIONS AT HOURLY INTERVALS. RESULTANT WIND IS THE VECTOR SUM OF WIND SPEEDS AND DIRECTIONS DIVIDED BY THE NUMBER OF OBSERVATIONS.
COLS 16 & 17 : PEAK GUST - HIGHEST INSTANTANEOUS WIND SPEED.
ONE OF TWO WINDS IS GIVEN UNDER COLS 18 & 19 : FASTEST MILE- HIGHEST RECORDED SPEED FOR WHICH A MILE OF WIND PASSES STATION (DIRECTION IN COMPASS POINTS). FASTEST OBSERVED ONE MINUTE WIND - HIGHEST ONE MINUTE SPEED (DIRECTION IN TENS OF DEGREES).
ERRORS WILL BE CORRECTED IN SUBSEQUENT PUBLICATIONS.

I CERTIFY THAT THIS IS AN OFFICIAL PUBLICATION OF THE NATIONAL OCEANIC AND ATMOSPHERIC ADMINISTRATION, AND IS COMPILED FROM RECORDS ON FILE AT THE NATIONAL CLIMATIC DATA CENTER.

Kenneth D Hadeen
DIRECTOR
NATIONAL CLIMATIC DATA CENTER

noaa NATIONAL OCEANIC AND ATMOSPHERIC ADMINISTRATION
NATIONAL ENVIRONMENTAL SATELLITE, DATA, AND INFORMATION SERVICE
NATIONAL CLIMATIC DATA CENTER ASHEVILLE, NORTH CAROLINA

# OBSERVATIONS AT 3-HOUR INTERVALS

JUL 1994 24156
POCATELLO, ID

| HOUR L.S.T. | SKY COVER (TENTHS) | CEILING IN HUNDREDS OF FEET | VISIBILITY WHOLE MILES | VISIBILITY 16THS MILE | WEATHER | TEMPERATURE AIR °F | TEMPERATURE WET BULB °F | TEMPERATURE DEW POINT °F | REL HUMIDITY % | WIND DIRECTION | WIND SPEED (KNOTS) |
|---|---|---|---|---|---|---|---|---|---|---|---|
| **JUL 01** | | | | | | | | | | | |
| 02 | 0 | UNL | 20 | | | 60 | 49 | 38 | 44 | 22 | 6 |
| 05 | 0 | UNL | 30 | | | 62 | 47 | 32 | 33 | 23 | 10 |
| 08 | 0 | UNL | 40 | | | 73 | 55 | 39 | 29 | 24 | 9 |
| 11 | 0 | UNL | 40 | | | 82 | 59 | 41 | 23 | 26 | 15 |
| 14 | 0 | UNL | 40 | | | 88 | 57 | 31 | 13 | 27 | 12 |
| 17 | 0 | UNL | 40 | | | 88 | 58 | 34 | 15 | 29 | 11 |
| 20 | 0 | UNL | 30 | | | 77 | 56 | 39 | 26 | 21 | 8 |
| 23 | 0 | UNL | 20 | | | 60 | 46 | 32 | 35 | 21 | 8 |
| **JUL 02** | | | | | | | | | | | |
| 02 | 0 | UNL | 20 | | | 51 | 44 | 36 | 57 | 35 | 5 |
| 05 | 0 | UNL | 45 | | | 50 | 42 | 34 | 54 | 24 | 7 |
| 08 | 5 | UNL | 40 | | | 70 | 56 | 45 | 41 | 22 | 17 |
| 11 | 8 | UNL | 40 | | | 76 | 59 | 47 | 36 | 23 | 15 |
| 14 | 10 | 130 | 40 | | | 76 | 59 | 47 | 36 | 25 | 17 |
| 17 | 9 | UNL | 40 | | | 81 | 59 | 44 | 27 | 24 | 14 |
| 20 | 10 | UNL | 30 | | | 72 | 58 | 49 | 44 | 24 | 8 |
| 23 | 10 | 250 | 20 | | | 65 | 54 | 46 | 50 | 21 | 9 |
| **JUL 03** | | | | | | | | | | | |
| 02 | 8 | UNL | 20 | | | 61 | 48 | 35 | 38 | 21 | 8 |
| 05 | 9 | UNL | 100 | | | 56 | 47 | 38 | 51 | 22 | 13 |
| 08 | 5 | UNL | 70 | | | 58 | 47 | 35 | 42 | 25 | 15 |
| 11 | 0 | UNL | 70 | | | 70 | 52 | 35 | 28 | 26 | 16 |
| 14 | 6 | UNL | 70 | | | 77 | 53 | 31 | 19 | 26 | 14 |
| 17 | 10 | 220 | 40 | | | 75 | 53 | 32 | 21 | 22 | 14 |
| 20 | 9 | 220 | 30 | | | 63 | 49 | 36 | 37 | 21 | 10 |
| 23 | 6 | UNL | 20 | | | 62 | 43 | 17 | 17 | 22 | 13 |
| **JUL 04** | | | | | | | | | | | |
| 02 | 0 | UNL | 20 | | | 49 | 39 | 27 | 43 | 30 | 7 |
| 05 | 0 | UNL | 100 | | | 50 | 39 | 23 | 35 | 21 | 6 |
| 08 | 0 | UNL | 70 | | | 62 | 47 | 32 | 33 | 25 | 11 |
| 11 | 2 | UNL | 70 | | | 72 | 51 | 30 | 21 | 26 | 11 |
| 14 | 9 | 130 | 60 | | | 76 | 52 | 29 | 18 | 26 | 14 |
| 17 | 10 | 130 | 40 | | | 78 | 53 | 28 | 16 | 25 | 10 |
| 20 | 0 | UNL | 40 | | | 71 | 54 | 40 | 33 | 19 | 6 |
| 23 | 0 | UNL | 20 | | | 56 | 45 | 33 | 42 | 23 | 6 |
| **JUL 05** | | | | | | | | | | | |
| 02 | 0 | UNL | 20 | | | 50 | 43 | 35 | 57 | 32 | 4 |
| 05 | 1 | UNL | 20 | | | 44 | 39 | 34 | 68 | 01 | 5 |
| 08 | 8 | 130 | 40 | | | 71 | 55 | 43 | 37 | 32 | 7 |
| 11 | 4 | UNL | 60 | | | 77 | 56 | 39 | 26 | 28 | 9 |
| 14 | 8 | 100 | 60 | | | 82 | 58 | 39 | 22 | 29 | 10 |
| 17 | 2 | UNL | 20 | | | 70 | 53 | 39 | 32 | 27 | 23 |
| 20 | 7 | 130 | 60 | | | 60 | 47 | 33 | 36 | 26 | 13 |
| 23 | 0 | UNL | 20 | | | 51 | 39 | 23 | 34 | 18 | 8 |
| **JUL 06** | | | | | | | | | | | |
| 02 | 3 | UNL | 20 | | | 46 | 39 | 29 | 52 | 23 | 7 |
| 05 | 10 | 28 | 20 | | | 47 | 43 | 38 | 71 | 24 | 10 |
| 08 | 10 | 28 | 40 | | | 46 | 45 | 44 | 93 | 25 | 10 |
| 11 | 10 | 85 | 40 | | | 53 | 47 | 41 | 64 | 22 | 12 |
| 14 | 9 | 75 | 50 | | | 62 | 50 | 39 | 43 | 28 | 4 |
| 17 | 9 | 90 | 60 | | | 66 | 51 | 38 | 36 | 26 | 7 |
| 20 | 10 | 75 | 70 | | | 58 | 51 | 44 | 60 | 05 | 7 |
| 23 | 10 | 90 | 20 | | | 55 | 50 | 46 | 72 | 04 | 5 |
| **JUL 07** | | | | | | | | | | | |
| 02 | 0 | UNL | 20 | | | 45 | 44 | 43 | 93 | 06 | 4 |
| 05 | 1 | UNL | 20 | | | 43 | 43 | 42 | 96 | 04 | 3 |
| 08 | 6 | UNL | 30 | | | 55 | 50 | 45 | 69 | 32 | 4 |
| 11 | 0 | UNL | 40 | | | 69 | 55 | 44 | 41 | 01 | 7 |
| 14 | 0 | UNL | 40 | | | 76 | 58 | 44 | 32 | 31 | 10 |
| 17 | 0 | UNL | 45 | | | 79 | 55 | 34 | 20 | 11 | 5 |
| 20 | 0 | UNL | 50 | | | 68 | 56 | 46 | 45 | 03 | 4 |
| 23 | 0 | UNL | 20 | | | 54 | 48 | 43 | 67 | 23 | 3 |
| **JUL 08** | | | | | | | | | | | |
| 02 | 0 | UNL | 20 | | | 51 | 46 | 41 | 69 | 22 | 4 |
| 05 | 0 | UNL | 20 | | | 47 | 45 | 42 | 83 | 14 | 3 |
| 08 | 1 | UNL | 20 | | | 63 | 54 | 46 | 54 | 33 | 4 |
| 11 | 0 | UNL | 20 | | | 81 | 59 | 42 | 25 | 36 | 6 |
| 14 | 1 | UNL | 30 | | | 86 | 59 | 39 | 19 | 30 | 9 |
| 17 | 1 | UNL | 30 | | | 89 | 59 | 34 | 14 | 27 | 7 |
| 20 | 0 | UNL | 30 | | | 80 | 59 | 44 | 28 | 20 | 4 |
| 23 | 0 | UNL | 20 | | | 62 | 50 | 39 | 43 | 24 | 5 |
| **JUL 09** | | | | | | | | | | | |
| 02 | 0 | UNL | 20 | | | 57 | 48 | 40 | 53 | 04 | 3 |
| 05 | 0 | UNL | 30 | | | 51 | 46 | 42 | 72 | 07 | 4 |
| 08 | 1 | UNL | 30 | | | 71 | 56 | 45 | 40 | 02 | 4 |
| 11 | 0 | UNL | 30 | | | 89 | 63 | 46 | 23 | 03 | 8 |
| 14 | 3 | UNL | 30 | | | 97 | 63 | 39 | 13 | 28 | 8 |
| 17 | 5 | UNL | 30 | | | 97 | 61 | 32 | 10 | 23 | 4 |
| 20 | 3 | UNL | 30 | | | 81 | 59 | 42 | 25 | 22 | 7 |
| 23 | 0 | UNL | 20 | | | 70 | 52 | 36 | 29 | 25 | 6 |
| **JUL 10** | | | | | | | | | | | |
| 02 | 0 | UNL | 20 | | | 60 | 53 | 48 | 65 | 32 | 8 |
| 05 | 2 | UNL | 30 | | | 62 | 51 | 41 | 46 | 22 | 8 |
| 08 | 7 | 130 | 40 | | | 69 | 53 | 38 | 32 | 23 | 14 |
| 11 | 5 | UNL | 40 | | | 78 | 58 | 44 | 30 | 25 | 14 |
| 14 | 1 | UNL | 40 | | | 87 | 61 | 42 | 21 | 24 | 16 |
| 17 | 2 | UNL | 40 | | | 88 | 60 | 38 | 17 | 23 | 14 |
| 20 | 0 | UNL | 40 | | | 76 | 55 | 37 | 24 | 21 | 9 |
| 23 | 0 | UNL | 20 | | | 59 | 46 | 33 | 38 | 22 | 10 |
| **JUL 11** | | | | | | | | | | | |
| 02 | 0 | UNL | 20 | | | 56 | 45 | 32 | 40 | 20 | 7 |
| 05 | 0 | UNL | 30 | | | 47 | 42 | 37 | 68 | 23 | 7 |
| 08 | 0 | UNL | 70 | | | 66 | 51 | 36 | 33 | 31 | 6 |
| 11 | 0 | UNL | 50 | | | 75 | 53 | 34 | 22 | 26 | 8 |
| 14 | 0 | UNL | 50 | | | 83 | 55 | 30 | 15 | 24 | 15 |
| 17 | 0 | UNL | 50 | | | 85 | 54 | 21 | 9 | 24 | 14 |
| 20 | 0 | UNL | 50 | | | 73 | 51 | 28 | 19 | 22 | 11 |
| 23 | 0 | UNL | 20 | | | 69 | 47 | 20 | 15 | 19 | 9 |
| **JUL 12** | | | | | | | | | | | |
| 02 | 2 | UNL | 20 | | | 57 | 43 | 25 | 29 | 22 | 4 |
| 05 | 0 | UNL | 100 | | | 49 | 39 | 25 | 39 | 20 | 6 |
| 08 | 0 | UNL | 50 | | | 63 | 51 | 40 | 43 | 32 | 5 |
| 11 | 0 | UNL | 50 | | | 76 | 53 | 31 | 19 | 29 | 7 |
| 14 | 4 | UNL | 60 | | | 85 | 54 | 24 | 11 | 25 | 7 |
| 17 | 3 | UNL | 50 | | | 86 | 56 | 30 | 13 | 26 | 15 |
| 20 | 3 | UNL | 40 | | | 74 | 54 | 38 | 27 | 23 | 9 |
| 23 | 1 | UNL | 20 | | | 62 | 47 | 32 | 33 | 25 | 8 |
| **JUL 13** | | | | | | | | | | | |
| 02 | 0 | UNL | 20 | | | 54 | 46 | 39 | 57 | 23 | 9 |
| 05 | 0 | UNL | 60 | | | 50 | 44 | 37 | 61 | 24 | 5 |
| 08 | 0 | UNL | 60 | | | 65 | 52 | 41 | 42 | 05 | 8 |
| 11 | 0 | UNL | 60 | | | 76 | 59 | 46 | 35 | 04 | 5 |
| 14 | 3 | UNL | 60 | | | 83 | 56 | 34 | 17 | 26 | 9 |
| 17 | 2 | UNL | 50 | | | 85 | 56 | 31 | 14 | 28 | 6 |
| 20 | 3 | UNL | 30 | | | 72 | 56 | 43 | 35 | 21 | 5 |
| 23 | 3 | UNL | 20 | | | 64 | 47 | 29 | 27 | 19 | 4 |
| **JUL 14** | | | | | | | | | | | |
| 02 | 0 | UNL | 20 | | | 52 | 44 | 35 | 53 | 29 | 4 |
| 05 | 0 | UNL | 50 | | | 45 | 39 | 32 | 61 | 21 | 5 |
| 08 | 0 | UNL | 40 | | | 61 | 53 | 46 | 58 | 26 | 6 |
| 11 | 0 | UNL | 30 | | | 77 | 55 | 36 | 23 | 24 | 12 |
| 14 | 2 | UNL | 30 | | | 85 | 57 | 34 | 16 | 28 | 12 |
| 17 | 3 | UNL | 40 | | | 87 | 58 | 33 | 14 | 25 | 14 |
| 20 | 3 | UNL | 30 | | | 69 | 56 | 45 | 42 | 22 | 8 |
| 23 | 1 | UNL | 20 | | | 62 | 50 | 40 | 45 | 02 | 6 |
| **JUL 15** | | | | | | | | | | | |
| 02 | 0 | UNL | 20 | | | 54 | 48 | 42 | 64 | 29 | 5 |
| 05 | 0 | UNL | 30 | | | 48 | 44 | 40 | 74 | 27 | 4 |
| 08 | 0 | UNL | 50 | | | 66 | 54 | 44 | 45 | 34 | 3 |
| 11 | 0 | UNL | 50 | | | 83 | 60 | 44 | 25 | 03 | 8 |
| 14 | 1 | UNL | 50 | | | 88 | 58 | 33 | 14 | 33 | 4 |
| 17 | 0 | UNL | 50 | | | 91 | 58 | 31 | 12 | 13 | 3 |
| 20 | 0 | UNL | 50 | | | 79 | 58 | 43 | 28 | 21 | 7 |
| 23 | 3 | UNL | 20 | | | 65 | 50 | 36 | 34 | 21 | 7 |
| **JUL 16** | | | | | | | | | | | |
| 02 | 0 | UNL | 20 | | | 53 | 47 | 42 | 66 | 27 | 6 |
| 05 | 3 | UNL | 20 | | | 48 | 45 | 41 | 77 | 22 | 7 |
| 08 | 5 | UNL | 50 | | | 65 | 54 | 45 | 49 | 30 | 5 |
| 11 | 3 | UNL | 30 | | | 79 | 59 | 45 | 30 | 30 | 8 |
| 14 | 2 | UNL | 30 | | | 87 | 59 | 37 | 17 | 27 | 10 |
| 17 | 1 | UNL | 60 | | | 90 | 59 | 34 | 14 | 25 | 12 |
| 20 | 9 | UNL | 60 | | | 77 | 56 | 39 | 26 | 20 | 7 |
| 23 | 10 | UNL | 20 | | | 68 | 49 | 28 | 22 | 18 | 7 |
| **JUL 17** | | | | | | | | | | | |
| 02 | 8 | UNL | 20 | | | 58 | 45 | 31 | 36 | 00 | 0 |
| 05 | 8 | UNL | 30 | | | 49 | 42 | 35 | 59 | 23 | 5 |
| 08 | 6 | 250 | 40 | | | 68 | 52 | 37 | 32 | 26 | 8 |
| 11 | 6 | UNL | 40 | | | 85 | 58 | 37 | 18 | 27 | 7 |
| 14 | 5 | UNL | 40 | | | 92 | 59 | 33 | 12 | 27 | 10 |
| 17 | 5 | UNL | 50 | | | 94 | 61 | 36 | 13 | 24 | 12 |
| 20 | 8 | UNL | 60 | | | 79 | 58 | 42 | 27 | 20 | 7 |
| 23 | 10 | UNL | 20 | | | 73 | 53 | 36 | 26 | 21 | 7 |
| **JUL 18** | | | | | | | | | | | |
| 02 | 7 | UNL | 20 | | | 62 | 50 | 39 | 43 | 00 | 0 |
| 05 | 7 | UNL | 20 | | | 55 | 47 | 38 | 53 | 00 | 0 |
| 08 | 5 | UNL | 40 | | | 76 | 56 | 39 | 26 | 24 | 12 |
| 11 | 3 | UNL | 25 | | | 85 | 62 | 47 | 27 | 26 | 13 |
| 14 | 5 | UNL | 25 | | | 91 | 62 | 43 | 19 | 24 | 17 |
| 17 | 0 | UNL | 40 | | | 90 | 60 | 37 | 15 | 25 | 17 |
| 20 | 0 | UNL | 50 | | | 76 | 54 | 34 | 22 | 23 | 14 |
| 23 | 0 | UNL | 20 | | | 71 | 52 | 34 | 26 | 23 | 12 |

# MAXIMUM SHORT DURATION PRECIPITATION

| TIME PERIOD (MINUTES) | 5 | 10 | 15 | 20 | 30 | 45 | 60 | 80 | 100 | 120 | 150 | 180 |
|---|---|---|---|---|---|---|---|---|---|---|---|---|
| PRECIPITATION (INCHES) | 0.06 | 0.09 | 0.11 | 0.13 | 0.14 | 0.16 | 0.20 | 0.28 | 0.33 | 0.34 | 0.34 | 0.34 |
| ENDED: DATE | 31 | 31 | 31 | 31 | 31 | 31 | 31 | 31 | 31 | 31 | 31 | 31 |
| ENDED: TIME (LST) | 1936 | 1941 | 1947 | 1947 | 2001 | 2058 | 2031 | 2052 | 2107 | 2116 | 2116 | 2116 |

THE PRECIPITATION AMOUNTS FOR THE INDICATED TIME INTERVALS MAY OCCUR AT ANY TIME DURING THE MONTH. THE TIME INDICATED IS THE ENDING TIME OF THE INTERVAL. DATE AND TIME ARE NOT ENTERED FOR TRACE AMOUNTS.

# OBSERVATIONS AT 3-HOUR INTERVALS

JUL 1994 24156
POCATELLO, ID

| HOUR L.S.T. | SKY COVER (TENTHS) | CEILING IN HUNDREDS OF FEET | VISIBILITY WHOLE MILES | VISIBILITY 16THS MILE | WEATHER | TEMPERATURE AIR °F | TEMPERATURE WET BULB °F | TEMPERATURE DEW POINT °F | REL HUMIDITY % | WIND DIRECTION | WIND SPEED (KNOTS) |
|---|---|---|---|---|---|---|---|---|---|---|---|
| **JUL 19** | | | | | | | | | | | |
| 02 | 0 | UNL | 20 | | | 60 | 51 | 44 | 56 | 21 | 8 |
| 05 | 0 | UNL | 70 | | | 58 | 50 | 42 | 56 | 21 | 7 |
| 08 | 0 | UNL | 40 | | | 67 | 56 | 47 | 49 | 24 | 12 |
| 11 | 0 | UNL | 40 | | | 76 | 57 | 43 | 31 | 17 | 4 |
| 14 | 1 | UNL | 40 | | | 82 | 59 | 42 | 24 | 23 | 5 |
| 17 | 0 | UNL | 40 | | | 86 | 60 | 42 | 21 | 24 | 8 |
| 20 | 0 | UNL | 40 | | | 78 | 59 | 45 | 31 | 20 | 4 |
| 23 | 0 | UNL | 20 | | | 69 | 53 | 39 | 34 | 08 | 4 |
| **JUL 20** | | | | | | | | | | | |
| 02 | 0 | UNL | 20 | | | 58 | 48 | 39 | 49 | 19 | 6 |
| 05 | 0 | UNL | 80 | | | 51 | 46 | 42 | 72 | 00 | 0 |
| 08 | 0 | UNL | 70 | | | 65 | 53 | 42 | 43 | 02 | 8 |
| 11 | 0 | UNL | 60 | | | 84 | 59 | 40 | 21 | 03 | 13 |
| 14 | 0 | UNL | 60 | | | 89 | 60 | 38 | 17 | 01 | 12 |
| 17 | 0 | UNL | 50 | | | 88 | 55 | 23 | 9 | 05 | 12 |
| 20 | 5 | UNL | 30 | | | 75 | 56 | 40 | 28 | 02 | 6 |
| 23 | 0 | UNL | 20 | | | 58 | 47 | 37 | 46 | 21 | 4 |
| **JUL 21** | | | | | | | | | | | |
| 02 | 0 | UNL | 20 | | | 56 | 45 | 34 | 44 | 23 | 5 |
| 05 | 0 | UNL | 90 | | | 48 | 41 | 32 | 54 | 24 | 7 |
| 08 | 0 | UNL | 80 | | | 64 | 50 | 38 | 38 | 05 | 4 |
| 11 | 0 | UNL | 60 | | | 86 | 61 | 44 | 23 | 02 | 8 |
| 14 | 0 | UNL | 60 | | | 93 | 60 | 35 | 13 | 33 | 8 |
| 17 | 2 | UNL | 50 | | | 96 | 61 | 33 | 11 | 35 | 9 |
| 20 | 0 | UNL | 40 | | | 83 | 57 | 37 | 19 | 09 | 6 |
| 23 | 0 | UNL | 20 | | | 65 | 47 | 28 | 25 | 35 | 4 |
| **JUL 22** | | | | | | | | | | | |
| 02 | 1 | UNL | 20 | | | 57 | 46 | 34 | 42 | 27 | 4 |
| 05 | 2 | UNL | 20 | | | 52 | 46 | 40 | 64 | 31 | 6 |
| 08 | 2 | UNL | 60 | | | 69 | 55 | 44 | 41 | 02 | 6 |
| 11 | 9 | UNL | 60 | | | 90 | 63 | 45 | 21 | 04 | 5 |
| 14 | 8 | UNL | 60 | | | 96 | 63 | 40 | 14 | 32 | 8 |
| 17 | 9 | UNL | 60 | | | 98 | 62 | 35 | 11 | 33 | 5 |
| 20 | 10 | 130 | 50 | | T | 89 | 62 | 43 | 20 | 17 | 9 |
| 23 | 10 | 130 | 20 | | | 81 | 60 | 46 | 29 | 16 | 18 |
| **JUL 23** | | | | | | | | | | | |
| 02 | 10 | 95 | 20 | | | 74 | 60 | 50 | 43 | 27 | 4 |
| 05 | 10 | 60 | 20 | | | 71 | 61 | 54 | 55 | 21 | 12 |
| 08 | 9 | 110 | 40 | | | 68 | 61 | 57 | 68 | 21 | 3 |
| 11 | 1 | UNL | 40 | | | 86 | 67 | 56 | 36 | 03 | 4 |
| 14 | 2 | UNL | 40 | | | 93 | 68 | 54 | 27 | 34 | 9 |
| 17 | 10 | 90 | 50 | | RW | 70 | 61 | 55 | 59 | 20 | 17 |
| 20 | 9 | 250 | 50 | | | 68 | 62 | 58 | 71 | 06 | 7 |
| 23 | 1 | UNL | 20 | | | 60 | 56 | 53 | 78 | 33 | 6 |
| **JUL 24** | | | | | | | | | | | |
| 02 | 1 | UNL | 20 | | | 56 | 54 | 52 | 87 | 01 | 8 |
| 05 | 1 | UNL | 20 | | | 51 | 51 | 50 | 96 | 36 | 5 |
| 08 | 0 | UNL | 50 | | | 65 | 59 | 55 | 70 | 36 | 6 |
| 11 | 0 | UNL | 40 | | | 83 | 64 | 52 | 34 | 05 | 4 |
| 14 | 1 | UNL | 50 | | | 91 | 63 | 45 | 20 | 23 | 6 |
| 17 | 9 | 250 | 60 | | | 91 | 62 | 43 | 19 | 32 | 3 |
| 20 | 3 | UNL | 60 | | | 83 | 61 | 45 | 26 | 11 | 4 |
| 23 | 1 | UNL | 20 | | | 67 | 56 | 48 | 51 | 34 | 8 |
| **JUL 25** | | | | | | | | | | | |
| 02 | 0 | UNL | 20 | | | 63 | 55 | 49 | 61 | 09 | 6 |
| 05 | 2 | UNL | 20 | | | 57 | 53 | 49 | 75 | 31 | 5 |
| 08 | 0 | UNL | 60 | | | 73 | 59 | 49 | 43 | 02 | 5 |
| 11 | 0 | UNL | 50 | | | 88 | 66 | 53 | 30 | 01 | 6 |
| 14 | 1 | UNL | 40 | | | 96 | 66 | 48 | 20 | 31 | 8 |
| 17 | 8 | 70 | 50 | | | 90 | 63 | 45 | 21 | 01 | 17 |
| 20 | 1 | UNL | 60 | | | 82 | 61 | 47 | 29 | 14 | 8 |
| 23 | 0 | UNL | 20 | | | 68 | 57 | 48 | 49 | 07 | 5 |
| **JUL 26** | | | | | | | | | | | |
| 02 | 0 | UNL | 20 | | | 60 | 53 | 48 | 65 | 08 | 5 |
| 05 | 0 | UNL | 30 | | | 53 | 50 | 47 | 80 | 21 | 3 |
| 08 | 0 | UNL | 50 | | | 70 | 57 | 48 | 46 | 01 | 3 |
| 11 | 0 | UNL | 40 | | | 91 | 65 | 50 | 25 | 02 | 8 |
| 14 | 2 | UNL | 40 | | | 99 | 65 | 44 | 15 | 32 | 10 |
| 17 | 6 | 250 | 40 | | | 96 | 65 | 45 | 17 | 01 | 23 |
| 20 | 6 | 120 | 30 | | | 80 | 59 | 43 | 27 | 05 | 10 |
| 23 | 0 | UNL | 20 | | | 70 | 55 | 43 | 38 | 05 | 6 |
| **JUL 27** | | | | | | | | | | | |
| 02 | 0 | UNL | 20 | | | 59 | 52 | 46 | 62 | 25 | 3 |
| 05 | 6 | UNL | 30 | | | 55 | 51 | 47 | 75 | 05 | 3 |
| 08 | 10 | UNL | 40 | | | 68 | 58 | 50 | 53 | 01 | 3 |
| 11 | 8 | UNL | 30 | | | 87 | 64 | 49 | 27 | 36 | 9 |
| 14 | 9 | 250 | 30 | | | 95 | 64 | 43 | 17 | 32 | 7 |
| 17 | 6 | 250 | 30 | | | 93 | 63 | 44 | 18 | 36 | 12 |
| 20 | 9 | 95 | 20 | | | 80 | 61 | 48 | 33 | 04 | 10 |
| 23 | 8 | 120 | 20 | | | 79 | 58 | 42 | 27 | 14 | 8 |
| **JUL 28** | | | | | | | | | | | |
| 02 | 4 | UNL | 20 | | | 63 | 54 | 46 | 54 | 00 | 0 |
| 05 | 3 | UNL | 20 | | | 58 | 53 | 48 | 70 | 07 | 5 |
| 08 | 10 | UNL | 40 | | | 68 | 58 | 50 | 53 | 35 | 6 |
| 11 | 10 | 130 | 30 | | | 84 | 63 | 50 | 31 | 36 | 7 |
| 14 | 10 | UNL | 30 | | | 99 | 64 | 42 | 14 | 02 | 12 |
| 17 | 10 | 120 | 30 | | | 92 | 63 | 45 | 20 | 02 | 14 |
| 20 | 10 | 85 | 20 | | RW | 84 | 59 | 41 | 22 | 03 | 10 |
| 23 | 4 | UNL | 20 | | | 71 | 57 | 46 | 41 | 03 | 6 |
| **JUL 29** | | | | | | | | | | | |
| 02 | 1 | UNL | 20 | | | 62 | | | | 00 | 0 |
| 05 | 0 | UNL | 20 | | | 56 | 50 | 45 | 67 | 00 | 0 |
| 08 | 2 | UNL | 40 | | | 70 | 57 | 47 | 44 | 05 | 3 |
| 11 | 0 | UNL | 40 | | | 89 | 64 | 49 | 25 | 02 | 7 |
| 14 | 2 | UNL | 60 | | | 98 | 63 | 40 | 13 | 04 | 6 |
| 17 | 8 | 130 | 40 | | | 99 | 61 | 31 | 9 | 35 | 8 |
| 20 | 10 | 130 | 25 | | | 81 | 62 | 50 | 34 | 30 | 7 |
| 23 | 5 | UNL | 20 | | | 74 | 58 | 46 | 37 | 04 | 8 |
| **JUL 30** | | | | | | | | | | | |
| 02 | 0 | UNL | 20 | | | 65 | 55 | 47 | 52 | 03 | 4 |
| 05 | 9 | 300 | 40 | | | 58 | 52 | 46 | 65 | 25 | 4 |
| 08 | 10 | UNL | 40 | | | 72 | 58 | 48 | 43 | 00 | 0 |
| 11 | 10 | UNL | 40 | | | 89 | 64 | 49 | 25 | 30 | 6 |
| 14 | 10 | 250 | 40 | | | 95 | 64 | 44 | 17 | 30 | 10 |
| 17 | 10 | 100 | 30 | | | 92 | 66 | 50 | 24 | 29 | 11 |
| 20 | 10 | 110 | 15 | | | 76 | 61 | 51 | 42 | 04 | 7 |
| 23 | 8 | 120 | 15 | | | 71 | 60 | 53 | 53 | 22 | 3 |
| **JUL 31** | | | | | | | | | | | |
| 02 | 10 | 140 | 20 | | | 69 | 58 | 50 | 51 | 34 | 7 |
| 05 | 9 | 140 | 20 | | | 66 | 58 | 53 | 63 | 08 | 5 |
| 08 | 8 | UNL | 30 | | | 77 | 63 | 55 | 47 | 03 | 3 |
| 11 | 5 | UNL | 30 | | | 85 | 66 | 55 | 36 | 29 | 6 |
| 14 | 8 | 120 | 30 | | | 95 | 68 | 53 | 24 | 34 | 9 |
| 17 | 6 | 120 | 30 | | | 92 | 64 | 47 | 21 | 11 | 12 |
| 20 | 10 | 65 | 3 | | TRW | 65 | 61 | 58 | 78 | 30 | 15 |
| 23 | 1 | UNL | 20 | | | 64 | 59 | 55 | 73 | 35 | 10 |

# WEATHER CODES AND NOTES

| | | | | | |
|---|---|---|---|---|---|
| & | TORNADO | S | SNOW | IF | ICE FOG |
| &C | FUNNEL CLOUD | SW | SNOW SHOWERS | GF | GROUND FOG |
| &W | WATER SPOUT | SG | SNOW GRAINS | BD | BLOWING DUST |
| T | THUNDERSTORM | SP | SNOW PELLETS | BN | BLOWING SAND |
| R | RAIN | IC | ICE CRYSTALS | BS | BLOWING SNOW |
| RW | RAIN SHOWERS | IP | ICE PELLETS | BY | BLOWING SPRAY |
| ZR | FREEZING RAIN | IPW | ICE PELLET SHOWERS | K | SMOKE |
| L | DRIZZLE | A | HAIL | H | HAZE |
| ZL | FREEZING DRIZZLE | F | FOG | D | DUST |

CEILING: UNL INDICATES UNLIMITED
WIND DIRECTION: DIRECTIONS ARE THOSE FROM WHICH THE WIND IS BLOWING, INDICATED IN TENS OF DEGREES FROM TRUE NORTH: I.E. 09 FOR
EAST, 18 FOR SOUTH, 27 FOR WEST. AN ENTRY OF 00 INDICATES CALM.
SPEED: THE OBSERVED AVERAGE ONE-MINUTE VALUE (MPH=KNOTS X 1.15).

# SUMMARY BY HOURS

| HOUR L.S.T. | AVERAGES SKY COVER (TENTHS) | AVERAGES STATION PRESSURE (INCHES) | AVERAGES TEMPERATURE AIR °F | AVERAGES TEMPERATURE WET BULB °F | AVERAGES TEMPERATURE DEW POINT °F | AVERAGES REL HUMIDITY % | AVERAGES SPEED (MPH) | RESULTANT WIND DIRECTION | RESULTANT WIND SPEED (MPH) |
|---|---|---|---|---|---|---|---|---|---|
| 02 | 2 | 25.510 | 57 | 48 | 40 | 54 | 5.6 | 26 | 2.2 |
| 05 | 3 | 25.530 | 53 | 46 | 40 | 64 | 6.3 | 23 | 3.6 |
| 08 | 4 | 25.560 | 67 | 54 | 44 | 46 | 7.8 | 28 | 3.8 |
| 11 | 3 | 25.550 | 81 | 59 | 44 | 28 | 9.9 | 30 | 4.7 |
| 14 | 4 | 25.510 | 88 | 60 | 39 | 19 | 11.4 | 28 | 8.5 |
| 17 | 5 | 25.480 | 87 | 59 | 37 | 18 | 13.1 | 27 | 6.2 |
| 20 | 5 | 25.490 | 75 | 57 | 43 | 34 | 9.2 | 22 | 2.8 |
| 23 | 3 | 25.510 | 65 | 51 | 38 | 40 | 8.3 | 21 | 2.9 |

P&D ASHEVILLE [illegible]

NATIONAL CLIMATIC DATA CENTER
ROOM 120
151 PATTON AVENUE
ASHEVILLE, NORTH CAROLINA 28801-5001

OFFICIAL BUSINESS
PENALTY FOR PRIVATE USE $300

FIRST CLASS
POSTAGE AND FEES PAID
NOAA
PERMIT G-19

LCD-10-24156-PD-9509

33766
J R SIMPLOT COMPANY
ATTN: J F COCHRANE - PO #35724
PO BOX 912
POCATELLO ID 83204

HOURLY PRECIPITATION (WATER EQUIVALENT IN INCHES)

JUL 1994 24156
POCATELLO, ID
USCOM - NOAA - ASHEVILLE, NC 125

| DATE | A.M. HOUR ENDING AT | | | | | | | | | | | | P.M. HOUR ENDING AT | | | | | | | | | | | | DATE |
|---|---|---|---|---|---|---|---|---|---|---|---|---|---|---|---|---|---|---|---|---|---|---|---|---|---|
| | 1 | 2 | 3 | 4 | 5 | 6 | 7 | 8 | 9 | 10 | 11 | 12 | 1 | 2 | 3 | 4 | 5 | 6 | 7 | 8 | 9 | 10 | 11 | 12 | |
| 01 | | | | | | | | | | | | | | | | | | | | | | | | | 01 |
| 02 | | | | | | | | | | | | | | | | | | | | | | | | | 02 |
| 03 | | | | | | | | | | | | | | | | | | | | | | | | | 03 |
| 04 | | | | | | | | | | | | | | | | | | | | | | | | | 04 |
| 05 | | | | | | | | | | | | | | | | | | | T | | | | | | 05 |
| 06 | | T | T | | | 0.11 | 0.04 | T | | | | | | | | | | | | | | | | | 06 |
| 07 | | | | | | | | | | | | | | | | | | | | | | | | | 07 |
| 08 | | | | | | | | | | | | | | | | | | | | | | | | | 08 |
| 09 | | | | | | | | | | | | | | | | | | | | | | | | | 09 |
| 10 | | | | | | | | | | | | | | | | | | | | | | | | | 10 |
| 11 | | | | | | | | | | | | | | | | | | | | | | | | | 11 |
| 12 | | | | | | | | | | | | | | | | | | | | | | | | | 12 |
| 13 | | | | | | | | | | | | | | | | | | | | | | | | | 13 |
| 14 | | | | | | | | | | | | | | | | | | | | | | | | | 14 |
| 15 | | | | | | | | | | | | | | | | | | | | | | | | | 15 |
| 16 | | | | | | | | | | | | | | | | | | | | | | | | | 16 |
| 17 | | | | | | | | | | | | | | | | | | | | | | | | | 17 |
| 18 | | | | | | | | | | | | | | | | | | | | | | | | | 18 |
| 19 | | | | | | | | | | | | | | | | | | | | | | | | | 19 |
| 20 | | | | | | | | | | | | | | | | | | | | | | | | | 20 |
| 21 | | | | | | | | | | | | | | | | | | | | | | | | | 21 |
| 22 | | | | | | | | | | | | | | | | | | | | | | | | T | 22 |
| 23 | T | | | | T | | T | | | | | | | | | 0.09 | 0.02 | T | | | | | | | 23 |
| 24 | | | | | | | | | | | | | | | | | | | | | | | | | 24 |
| 25 | | | | | | | | | | | | | | | | | | | | | | | | | 25 |
| 26 | | | | | | | | | | | | | | | | | | | | | | | | | 26 |
| 27 | | | | | | | | | | | | | | | | | | | | | | | | | 27 |
| 28 | | | | | | | | | | | | | | | | | | | T | T | T | | | | 28 |
| 29 | | | | | | | | | | | | | | | | | | | | | | | | | 29 |
| 30 | | | | | | | | | | | | | | | | | | | | | | | | | 30 |
| 31 | | | | | | | | | | | | | | | | | | | | 0.16 | 0.17 | 0.01 | | | 31 |

002979

AUG 1994
POCATELLO, ID
NAT'L WEA SER OFC
20369 THUNDERBOLT STREET-C

INQUIRIES/COMMENTS CALL
(704) 271-4800 VOICE
271-4010 TDD/271-4876 FAX

MUNICIPAL AIRPORT

ISSN # 0198-1811

# LOCAL CLIMATOLOGICAL DATA

## MONTHLY SUMMARY

LATITUDE 42° 55'N LONGITUDE 112 36'W ELEVATION (GROUND) 4454 FEET TIME ZONE MOUNTAIN 2415

AUG 1994
POCATELLO, ID

| DATE | TEMPERATURE F: MAXIMUM | MINIMUM | AVERAGE | DEPARTURE FROM NORMAL | AVERAGE DEW POINT | DEGREE DAYS BASE 65 F: HEATING | COOLING | WEATHER TYPES (1 FOG, 2 HEAVY FOG, 3 THUNDERSTORMS, 4 ICE PELLETS, 5 HAIL, 6 GLAZE, 7 DUSTSTORM, 8 SMOKE/HAZE, 9 BLOWING SNOW) | SNOW/ICE ON GRD AT 0500 (IN.) | PRECIPITATION (INCHES): WATER EQUIVALENT | SNOW ICE PELLETS | AVERAGE STATION PRESSURE (INCHES OF Hg) ELEV. 4478 (FT.MSL) | WIND (M.P.H.): RESULTANT DIR | RESULTANT SPEED | AVERAGE SPEED | PEAK GUST: SPEED | PEAK GUST: DIR | FASTEST 1-MIN: SPEED | FASTEST 1-MIN: DIR | SUNSHINE: MINUTES | SUNSHINE: PERCENT POSSIBLE | SKY COVER TENTHS: SUNRISE TO SUNSET | SKY COVER TENTHS: MIDNIGHT TO MIDNIGHT |
|---|---|---|---|---|---|---|---|---|---|---|---|---|---|---|---|---|---|---|---|---|---|---|---|
| 1 | 2 | 3 | 4 | 5 | 6 | 7A | 7B | 8 | 9 | 10 | 11 | 12 | 13 | 14 | 15 | 16 | 17 | 18 | 19 | 20 | 21 | 22 | 23 |
| 01 | 92 | 58 | 75 | 4 | 54 | 0 | 10 | | 0 | 0.00 | 0.0 | 25.590 | 36 | 4.1 | 8.0 | 36 | N | 22 | 34 | 709 | 81 | 6 | 6 |
| 02 | 94 | 53 | 74 | 3 | 49 | 0 | 9 | | 0 | 0.00 | 0.0 | 25.550 | 36 | 5.1 | 8.8 | 21 | NW | 16 | 02 | 755 | 87 | 3 | 4 |
| 03 | 98 | 53 | 76 | 5 | 45 | 0 | 11 | | 0 | 0.00 | 0.0 | 25.520 | 01 | 4.9 | 7.0 | 23 | N | 14 | 36 | 865 | 100 | 1 | 1 |
| 04 | 102* | 54 | 78 | 7 | 44 | 0 | 13 | | 0 | 0.00 | 0.0 | 25.500 | 34 | 5.0 | 7.5 | 23 | NE | 17 | 03 | 865 | 100 | 4 | 2 |
| 05 | 99 | 54 | 77 | 6 | 42 | 0 | 12 | | 0 | 0.00 | 0.0 | 25.480 | 25 | 4.7 | 7.6 | 23 | W | 16 | 26 | 862 | 100 | 1 | 0 |
| 06 | 93 | 63 | 78 | 7 | 37 | 0 | 13 | | 0 | 0.00 | 0.0 | 25.520 | 24 | 11.1 | 12.3 | 28 | W | 21 | 24 | 859 | 100 | 1 | 0 |
| 07 | 98 | 49 | 74 | 3 | 33 | 0 | 9 | | 0 | 0.00 | 0.0 | 25.420 | 30 | 2.8 | 6.5 | 17 | W | 12 | 29 | 771 | 90 | 3 | 3 |
| 08 | 92 | 62 | 77 | 6 | 37 | 0 | 12 | 8 | 0 | T | 0.0 | 25.390 | 22 | 6.4 | 12.2 | 38 | S | 22 | 18 | 380 | 44 | 10 | 9 |
| 09 | 89 | 68 | 79* | 9 | 44 | 0 | 14 | | 0 | 0.00 | 0.0 | 25.545 | 22 | 9.7 | 12.4 | 38 | S | 25 | 18 | 539 | 63 | 8 | 6 |
| 10 | 94 | 56 | 75 | 5 | 50 | 0 | 10 | 3 | 0 | 0.01 | 0.0 | 25.630 | 19 | 2.5 | 9.1 | 37 | W | 24 | 26 | 539 | 63 | 8 | 7 |
| 11 | 90 | 59 | 75 | 5 | 54 | 0 | 10 | 3 | 0 | 0.00 | 0.0 | 25.590 | 03 | 0.5 | 8.1 | 36 | S | 22 | 19 | 545 | 64 | 5 | 7 |
| 12 | 93 | 53 | 73 | 3 | 51 | 0 | 8 | 3 | 0 | 0.03 | 0.0 | 25.590 | 35 | 0.5 | 6.8 | 55 | W | 35 | 27 | 551 | 65 | 5 | 4 |
| 13 | 96 | 51 | 74 | 4 | 43 | 0 | 9 | | 0 | 0.00 | 0.0 | 25.665 | 04 | 3.5 | 5.7 | 20 | N | 9 | 09 | 839 | 100 | 2 | 2 |
| 14 | 97 | 49 | 73 | 3 | 39 | 0 | 8 | | 0 | 0.00 | 0.0 | 25.630 | 32 | 2.4 | 7.7 | 26 | W | 18 | 26 | 760 | 90 | 3 | 3 |
| 15 | 95 | 54 | 75 | 6 | 40 | 0 | 10 | | 0 | 0.00 | 0.0 | 25.530 | 25 | 6.8 | 9.5 | 25 | W | 18 | 27 | 832 | 99 | 0 | 0 |
| 16 | 92 | 48 | 70 | 1 | 31 | 0 | 5 | 8 | 0 | 0.00 | 0.0 | 25.470 | 24 | 6.6 | 7.7 | 23 | W | 15 | 26 | 835 | 100 | 5 | 3 |
| 17 | 94 | 47 | 71 | 2 | 28 | 0 | 6 | | 0 | 0.00 | 0.0 | 25.520 | 23 | 7.0 | 8.7 | 18 | SW | 13 | 24 | 739 | 89 | 3 | 3 |
| 18 | 93 | 53 | 73 | 5 | 34 | 0 | 8 | | 0 | 0.00 | 0.0 | 25.510 | 24 | 3.7 | 6.8 | 32 | S | 20 | 18 | 737 | 89 | 8 | 8 |
| 19 | 93 | 55 | 74 | 6 | 46 | 0 | 9 | | 0 | 0.00 | 0.0 | 25.510 | 21 | 1.0 | 7.1 | 31 | S | 24 | 17 | 793 | 96 | 5 | 5 |
| 20 | 93 | 51 | 72 | 4 | 48 | 0 | 7 | 3 | 0 | 0.22 | 0.0 | 25.470 | 03 | 1.3 | 7.7 | 32 | E | 21 | 08 | 385 | 47 | 5 | 5 |
| 21 | 91 | 58 | 75 | 7 | 48 | 0 | 10 | 3 | 0 | 0.14 | 0.0 | 25.370 | 18 | 8.7 | 14.6 | 58 | S | 40 | 19 | 486 | 59 | 6 | 7 |
| 22 | 79 | 55 | 67 | -1 | 42 | 0 | 2 | 8 | 0 | 0.00 | 0.0 | 25.440 | 24 | 12.5 | 13.9 | 36 | W | 23 | 27 | 819 | 100 | 2 | 2 |
| 23 | 87 | 40 | 64 | -3 | 31 | 1 | 0 | | 0 | 0.00 | 0.0 | 25.560 | 26 | 1.8 | 6.0 | 17 | W | 12 | 29 | 753 | 92 | 6 | 3 |
| 24 | 91 | 45 | 68 | 1 | 35 | 0 | 3 | | 0 | 0.00 | 0.0 | 25.520 | 26 | 6.2 | 8.1 | 24 | W | 17 | 26 | 814 | 100 | 0 | 0 |
| 25 | 92 | 46 | 69 | 2 | 31 | 0 | 4 | | 0 | 0.00 | 0.0 | 25.535 | 27 | 3.0 | 5.3 | 16 | W | 9 | 17 | 811 | 100 | 0 | 0 |
| 26 | 88 | 49 | 69 | 2 | 29 | 0 | 4 | | 0 | 0.00 | 0.0 | 25.515 | 25 | 8.0 | 9.3 | 26 | SW | 18 | 24 | 787 | 97 | 4 | 3 |
| 27 | 85 | 50 | 68 | 2 | 34 | 0 | 3 | | 0 | 0.00 | 0.0 | 25.540 | 21 | 4.3 | 7.0 | 26 | S | 17 | 19 | 407 | 50 | 10 | 8 |
| 28 | 90 | 49 | 70 | 4 | 44 | 0 | 5 | | 0 | T | 0.0 | 25.530 | 22 | 4.7 | 7.9 | 37 | S | 22 | 20 | 763 | 95 | 2 | 1 |
| 29 | 84 | 54 | 69 | 4 | 37 | 0 | 4 | | 0 | T | 0.0 | 25.510 | 24 | 11.4 | 13.2 | 31 | SW | 23 | 23 | 745 | 93 | 1 | 2 |
| 30 | 81 | 45 | 63 | -2 | 32 | 2 | 0 | | 0 | 0.00 | 0.0 | 25.530 | 25 | 4.2 | 6.3 | 14 | NW | 9 | 24 | 744 | 93 | 0 | 1 |
| 31 | 85 | 40* | 63* | -2 | 31 | 2 | 0 | | 0 | 0.00 | 0.0 | 25.450 | 28 | 2.5 | 6.4 | 16 | W | 12 | 32 | 739 | 93 | 1 | 1 |

| | | | | | | | | | | | | | | | | | | | | | | | |
|---|---|---|---|---|---|---|---|---|---|---|---|---|---|---|---|---|---|---|---|---|---|---|---|
| SUM | SUM | | | | TOTAL | TOTAL | NUMBER OF DAYS | TOTAL | TOTAL | FOR THE MONTH : | | | | | | | | | | TOTAL | % FOR MONTH | SUM | SUM |
| 2840 | 1621 | | | | 5 | 228 | | 0.40 | 0.0 | 25.520 | 25 | 3.5 | 8.6 | 58 | S | 40 | 19 | 22028 | | 118 | 106 |
| AVG. | AVG. | AVG. | DEP. | AVG. | DEP. | DEP. | PRECIPITATION | DEP. | | | | | | | | DATE:21 | | DATE:21 | | POSS | | AVG | AVG |
| 91.6 | 52.3 | 72.0 | 3.3 | 39.9 | -24 | 84 | ≥ .01 INCH 4 | -0.27 | | | | | | | | | | | | 25842 | 85 | 3.8 | 3.4 |

| NUMBER OF DAYS | | | | SEASON TO DATE TOTAL | SEASON TO DATE TOTAL | SNOW, ICE PELLETS | GREATEST IN 24 HOURS AND DATES | | | GREATEST DEPTH ON GROUND OF SNOW, ICE PELLETS OR ICE AND DATE |
|---|---|---|---|---|---|---|---|---|---|---|
| MAXIMUM TEMP. | | MINIMUM TEMP. | | 22 | 506 | ≥ 1.0 INCH 0 | PRECIPITATION | SNOW, ICE PELLETS | | 0 |
| ≥ 90° | ≤ 32° | ≤ 32° | ≤ 0° | DEP. | DEP. | THUNDERSTORMS 5 | 0.22 | 20 | 0.0 | |
| 23 | 0 | 0 | 0 | -16 | 123 | HEAVY FOG 0 | CLEAR 16 | PARTLY CLOUDY 10 | CLOUDY 5 | |

* EXTREME FOR THE MONTH - LAST OCCURRENCE IF MORE THAN ONE.
T TRACE AMOUNT.
+ ALSO ON EARLIER DATE(S).
HEAVY FOG: VISIBILITY 1/4 MILE OR LESS.
BLANK ENTRIES DENOTE MISSING OR UNREPORTED DATA.

DATA IN COLS 6 AND 12-15 ARE BASED ON 21 OR MORE OBSERVATIONS AT HOURLY INTERVALS. RESULTANT WIND IS THE VECTOR SUM OF WIND SPEEDS AND DIRECTIONS DIVIDED BY THE NUMBER OF OBSERVATIONS.
COLS 16 & 17 : PEAK GUST - HIGHEST INSTANTANEOUS WIND SPEED.
ONE OF TWO WINDS IS GIVEN UNDER COLS 18 & 19 : FASTEST MILE- HIGHEST RECORDED SPEED FOR WHICH A MILE OF WIND PASSES STATION (DIRECTION IN COMPASS POINTS). FASTEST OBSERVED ONE MINUTE WIND - HIGHEST ONE MINUTE SPEED (DIRECTION IN TENS OF DEGREES).
*ERRORS WILL BE CORRECTED IN SUBSEQUENT PUBLICATIONS.*

I CERTIFY THAT THIS IS AN OFFICIAL PUBLICATION OF THE NATIONAL OCEANIC AND ATMOSPHERIC ADMINISTRATION AND IS COMPILED FROM RECORDS ON FILE AT THE NATIONAL CLIMATIC DATA CENTER.

Kenneth D Hadeen
DIRECTOR
NATIONAL CLIMATIC DATA CENTER

noaa NATIONAL OCEANIC AND ATMOSPHERIC ADMINISTRATION
NATIONAL ENVIRONMENTAL SATELLITE, DATA, AND INFORMATION SERVICE
NATIONAL CLIMATIC DATA CENTER ASHEVILLE, NORTH CAROLINA

# OBSERVATIONS AT 3-HOUR INTERVALS

AUG 1994 POCATELLO, ID 24156

| HOUR L.S.T. | SKY COVER (TENTHS) | CEILING IN HUNDREDS OF FEET | VISIBILITY WHOLE MILES | VISIBILITY 16THS MILE | WEATHER | TEMPERATURE AIR °F | TEMPERATURE WET BULB °F | TEMPERATURE DEW POINT °F | REL HUMIDITY % | WIND DIRECTION | WIND SPEED (KNOTS) |
|---|---|---|---|---|---|---|---|---|---|---|---|
| **AUG 01** | | | | | | | | | | | |
| 02 | 10 | 130 | 20 | | | 59 | 57 | 56 | 90 | 01 | 6 |
| 05 | 10 | 250 | 20 | | | 59 | 57 | 56 | 90 | 01 | 7 |
| 08 | 3 | UNL | 40 | | | 66 | 61 | 58 | 76 | 00 | 0 |
| 11 | 3 | UNL | 30 | | | 80 | 66 | 58 | 47 | 36 | 7 |
| 14 | 6 | 120 | 30 | | | 87 | 66 | 54 | 32 | 27 | 7 |
| 17 | 8 | 120 | 25 | | | 91 | 66 | 51 | 26 | 33 | 11 |
| 20 | 10 | 100 | 30 | | | 72 | 59 | 49 | 44 | 35 | 10 |
| 23 | 1 | UNL | 20 | | | 67 | 58 | 51 | 57 | 19 | 8 |
| **AUG 02** | | | | | | | | | | | |
| 02 | 0 | UNL | 20 | | | 63 | 57 | 52 | 68 | 09 | 7 |
| 05 | 0 | UNL | 20 | | | 56 | 54 | 52 | 87 | 09 | 4 |
| 08 | 0 | UNL | 40 | | | 65 | 57 | 52 | 63 | 26 | 6 |
| 11 | 0 | UNL | 40 | | | 84 | 64 | 52 | 33 | 02 | 10 |
| 14 | 0 | UNL | 30 | | | 92 | 64 | 47 | 21 | 36 | 10 |
| 17 | 8 | 250 | 40 | | | 93 | 63 | 42 | 17 | 32 | 8 |
| 20 | 10 | 250 | 20 | | | 80 | 60 | 47 | 37 | 30 | 7 |
| 23 | 10 | UNL | 20 | | | 72 | 59 | 49 | 44 | 08 | 11 |
| **AUG 03** | | | | | | | | | | | |
| 02 | 2 | UNL | 15 | | | 61 | 54 | 49 | 65 | 33 | 9 |
| 05 | 0 | UNL | 20 | | | 56 | 52 | 49 | 78 | 29 | 5 |
| 08 | 0 | UNL | 40 | | | 69 | 57 | 49 | 49 | 00 | 0 |
| 11 | 0 | UNL | 50 | | | 88 | 64 | 49 | 25 | 36 | 9 |
| 14 | 2 | UNL | 60 | | | 96 | 64 | 44 | 17 | 34 | 7 |
| 17 | 2 | UNL | 50 | | | 96 | 63 | 39 | 14 | 35 | 9 |
| 20 | 1 | UNL | 40 | | | 81 | 60 | 45 | 28 | 05 | 7 |
| 23 | 0 | UNL | 20 | | | 74 | 56 | 41 | 31 | 06 | 5 |
| **AUG 04** | | | | | | | | | | | |
| 02 | 0 | UNL | 20 | | | 59 | 52 | 46 | 62 | 33 | 8 |
| 05 | 0 | UNL | 20 | | | 55 | 50 | 45 | 69 | 04 | 4 |
| 08 | 2 | UNL | 40 | | | 73 | 59 | 50 | 45 | 33 | 5 |
| 11 | 10 | UNL | 30 | | | 93 | 66 | 51 | 24 | 30 | 12 |
| 14 | 8 | UNL | 30 | | | 99 | 65 | 43 | 15 | 31 | 10 |
| 17 | 0 | UNL | 40 | | | 100 | 62 | 34 | 10 | 29 | 10 |
| 20 | 0 | UNL | 40 | | | 86 | 61 | 43 | 22 | 18 | 4 |
| 23 | 0 | UNL | 20 | | | 72 | 59 | 49 | 44 | 07 | 9 |
| **AUG 05** | | | | | | | | | | | |
| 02 | 0 | UNL | 20 | | | 65 | 54 | 46 | 50 | 08 | 4 |
| 05 | 0 | UNL | 20 | | | 57 | 51 | 45 | 64 | 00 | 0 |
| 08 | 0 | UNL | 30 | | | 69 | 56 | 47 | 46 | 31 | 3 |
| 11 | 0 | UNL | 30 | | | 88 | 63 | 47 | 24 | 36 | 4 |
| 14 | 1 | UNL | 30 | | | 96 | 63 | 41 | 15 | 29 | 12 |
| 17 | 1 | UNL | 40 | | | 99 | 60 | 28 | 8 | 28 | 10 |
| 20 | 0 | UNL | 20 | | | 77 | 60 | 48 | 36 | 21 | 8 |
| 23 | 0 | UNL | 20 | | | 76 | 57 | 42 | 30 | 22 | 9 |
| **AUG 06** | | | | | | | | | | | |
| 02 | 0 | UNL | 20 | | | 67 | 52 | 38 | 35 | 23 | 8 |
| 05 | 1 | UNL | 20 | | | 68 | 51 | 35 | 30 | 23 | 9 |
| 08 | 0 | UNL | 30 | | | 72 | 55 | 41 | 33 | 23 | 15 |
| 11 | 0 | UNL | 30 | | | 83 | 59 | 42 | 24 | 26 | 14 |
| 14 | 0 | UNL | 30 | | | 90 | 60 | 37 | 15 | 28 | 14 |
| 17 | 0 | UNL | 40 | | | 92 | 57 | 26 | 9 | 28 | 14 |
| 20 | 0 | UNL | 20 | | | 76 | 57 | 42 | 30 | 20 | 7 |
| 23 | 0 | UNL | 20 | | | 69 | 51 | 33 | 27 | 19 | 7 |
| **AUG 07** | | | | | | | | | | | |
| 02 | 0 | UNL | 20 | | | 62 | 48 | 34 | 35 | 22 | 6 |
| 05 | 1 | UNL | 20 | | | 49 | 43 | 37 | 64 | 00 | 0 |
| 08 | 2 | UNL | 40 | | | 65 | 52 | 40 | 40 | 35 | 6 |
| 11 | 0 | UNL | 40 | | | 85 | 60 | 41 | 21 | 33 | 7 |
| 14 | 0 | UNL | 40 | | | 95 | 58 | 24 | 8 | 28 | 10 |
| 17 | 7 | UNL | 40 | | | 96 | 59 | 27 | 8 | 28 | 6 |
| 20 | 10 | 250 | 30 | | | 83 | 57 | 35 | 18 | 08 | 6 |
| 23 | 4 | UNL | 20 | | | 77 | 52 | 26 | 15 | 19 | 9 |
| **AUG 08** | | | | | | | | | | | |
| 02 | 7 | 250 | 20 | | | 65 | 48 | 31 | 28 | 22 | 6 |
| 05 | 10 | UNL | 20 | | | 70 | 50 | 30 | 23 | 32 | 8 |
| 08 | 10 | 250 | 6 | | K | 73 | 54 | 38 | 28 | 07 | 6 |
| 11 | 9 | 250 | 40 | | | 87 | 55 | 25 | 10 | 25 | 13 |
| 14 | 10 | 120 | 30 | | | 84 | 59 | 40 | 21 | 25 | 10 |
| 17 | 9 | 130 | 40 | | | 89 | 58 | 32 | 13 | 03 | 9 |
| 20 | 10 | 120 | 20 | | | 80 | 60 | 45 | 29 | 18 | 19 |
| 23 | 10 | 250 | 20 | | | 76 | 60 | 50 | 40 | 19 | 17 |
| **AUG 09** | | | | | | | | | | | |
| 02 | 5 | 130 | 20 | | | 75 | 59 | 48 | 39 | 18 | 22 |
| 05 | 8 | 130 | 20 | | | 69 | 57 | 49 | 49 | 22 | 6 |
| 08 | 9 | 130 | 40 | | | 76 | 61 | 52 | 43 | 23 | 10 |
| 11 | 10 | 110 | 40 | | | 78 | 58 | 42 | 28 | 26 | 14 |
| 14 | 2 | UNL | 40 | | | 84 | 59 | 41 | 22 | 27 | 12 |
| 17 | 7 | UNL | 60 | | | 88 | 56 | 27 | 11 | 26 | 10 |
| 20 | 9 | UNL | 70 | | | 80 | 54 | 30 | 16 | 16 | 5 |
| 23 | 1 | UNL | 20 | | | 76 | 61 | 52 | 43 | 18 | 16 |
| **AUG 10** | | | | | | | | | | | |
| 02 | 2 | UNL | 20 | | | 75 | 60 | 49 | 40 | 19 | 6 |
| 05 | 3 | UNL | 20 | | | 58 | 53 | 49 | 72 | 36 | 6 |
| 08 | 5 | UNL | 40 | | | 74 | 60 | 50 | 43 | 32 | 3 |
| 11 | 8 | UNL | 40 | | | 88 | 64 | 49 | 26 | 07 | 7 |
| 14 | 8 | 250 | 40 | | | 93 | 64 | 45 | 19 | 21 | 10 |
| 17 | 10 | 230 | 45 | | | 88 | 62 | 44 | 22 | 16 | 15 |
| 20 | 10 | 110 | 40 | | | 71 | 61 | 54 | 55 | 12 | 6 |
| 23 | 10 | 85 | 20 | | | 71 | 62 | 56 | 59 | 12 | 8 |
| **AUG 11** | | | | | | | | | | | |
| 02 | 10 | 100 | 20 | | | 64 | 60 | 57 | 78 | 35 | 6 |
| 05 | 8 | 120 | 20 | | | 61 | 58 | 56 | 86 | 00 | 0 |
| 08 | 8 | 120 | 40 | | | 66 | 62 | 59 | 78 | 33 | 4 |
| 11 | 0 | UNL | 40 | | | 82 | 65 | 55 | 40 | 14 | 4 |
| 14 | 3 | UNL | 40 | | | 88 | 67 | 55 | 33 | 21 | 7 |
| 17 | 10 | 250 | 60 | | | 82 | 59 | 43 | 25 | 18 | 12 |
| 20 | 10 | 250 | 60 | | | 72 | 59 | 50 | 46 | 06 | 8 |
| 23 | 10 | 250 | 20 | | | 63 | 56 | 51 | 65 | 36 | 5 |
| **AUG 12** | | | | | | | | | | | |
| 02 | 4 | UNL | 20 | | | 59 | 56 | 54 | 84 | 35 | 3 |
| 05 | 8 | 130 | 20 | | | 57 | 55 | 53 | 87 | 00 | 0 |
| 08 | 2 | UNL | 40 | | | 68 | 59 | 53 | 59 | 00 | 0 |
| 11 | 2 | UNL | 40 | | | 85 | 63 | 50 | 30 | 09 | 6 |
| 14 | 3 | UNL | 40 | | | 88 | 64 | 49 | 26 | 02 | 3 |
| 17 | 10 | 60 | 6 | | TRWBD | 84 | 62 | 47 | 28 | 28 | 16 |
| 20 | 7 | 100 | 30 | | | 67 | 58 | 52 | 59 | 01 | 7 |
| 23 | 0 | UNL | 20 | | | 57 | 54 | 51 | 81 | 03 | 5 |
| **AUG 13** | | | | | | | | | | | |
| 02 | 0 | UNL | 20 | | | 59 | 54 | 51 | 75 | 04 | 8 |
| 05 | 3 | UNL | 20 | | | 53 | 51 | 50 | 90 | 00 | 0 |
| 08 | 2 | UNL | 60 | | | 64 | 58 | 53 | 68 | 00 | 0 |
| 11 | 0 | UNL | 50 | | | 81 | 63 | 51 | 35 | 36 | 6 |
| 14 | 1 | UNL | 50 | | | 91 | 64 | 48 | 23 | 07 | 6 |
| 17 | 7 | 120 | 50 | | | 95 | 59 | 26 | 8 | 02 | 8 |
| 20 | 4 | UNL | 30 | | | 76 | 54 | 35 | 23 | 09 | 5 |
| 23 | 1 | UNL | 20 | | | 63 | 50 | 38 | 40 | 24 | 6 |
| **AUG 14** | | | | | | | | | | | |
| 02 | 0 | UNL | 20 | | | 55 | 46 | 37 | 51 | 23 | 6 |
| 05 | 0 | UNL | 20 | | | 57 | 47 | 38 | 49 | 16 | 3 |
| 08 | 2 | UNL | 45 | | | 67 | 52 | 38 | 35 | 35 | 4 |
| 11 | 0 | UNL | 45 | | | 88 | 60 | 39 | 18 | 05 | 6 |
| 14 | 0 | UNL | 45 | | | 94 | 60 | 34 | 12 | 34 | 10 |
| 17 | 0 | UNL | 50 | | | 96 | 62 | 36 | 12 | 32 | 10 |
| 20 | 1 | UNL | 20 | | | 81 | 59 | 44 | 27 | 26 | 12 |
| 23 | 1 | UNL | 20 | | | 71 | 57 | 47 | 43 | 09 | 5 |
| **AUG 15** | | | | | | | | | | | |
| 02 | 0 | UNL | 20 | | | 64 | 52 | 42 | 45 | 23 | 3 |
| 05 | 0 | UNL | 20 | | | 56 | 50 | 45 | 67 | 34 | 8 |
| 08 | 0 | UNL | 45 | | | 74 | 57 | 45 | 36 | 11 | 4 |
| 11 | 0 | UNL | 45 | | | 85 | 59 | 39 | 20 | 27 | 16 |
| 14 | 0 | UNL | 45 | | | 92 | 61 | 39 | 16 | 26 | 15 |
| 17 | 0 | UNL | 50 | | | 94 | 61 | 35 | 13 | 29 | 10 |
| 20 | 1 | UNL | 20 | | | 74 | 57 | 43 | 33 | 24 | 7 |
| 23 | 1 | UNL | 20 | | | 66 | 49 | 31 | 27 | 21 | 8 |
| **AUG 16** | | | | | | | | | | | |
| 02 | 0 | UNL | 20 | | | 61 | 46 | 29 | 30 | 00 | 0 |
| 05 | 0 | UNL | 20 | | | 51 | 44 | 36 | 57 | 00 | 0 |
| 08 | 1 | UNL | 20 | | | 63 | 50 | 38 | 40 | 26 | 4 |
| 11 | 10 | UNL | 8 | | | 79 | 53 | 29 | 16 | 26 | 6 |
| 14 | 7 | 30 | 5 | | K | 90 | 57 | 27 | 10 | 26 | 8 |
| 17 | 0 | UNL | 30 | | | 92 | 57 | 25 | 9 | 25 | 11 |
| 20 | 1 | UNL | 20 | | | 71 | 50 | 29 | 21 | 22 | 8 |
| 23 | 0 | UNL | 20 | | | 71 | 50 | 30 | 22 | 21 | 8 |
| **AUG 17** | | | | | | | | | | | |
| 02 | 0 | UNL | 20 | | | 63 | 47 | 31 | 30 | 20 | 8 |
| 05 | 0 | UNL | 20 | | | 52 | 42 | 30 | 43 | 17 | 3 |
| 08 | 2 | UNL | 15 | | | 73 | 51 | 28 | 19 | 22 | 7 |
| 11 | 3 | UNL | 10 | | | 81 | 56 | 35 | 19 | 24 | 11 |
| 14 | 1 | UNL | 30 | | | 90 | 57 | 26 | 10 | 27 | 8 |
| 17 | 1 | UNL | 25 | | | 93 | 57 | 22 | 8 | 27 | 10 |
| 20 | 8 | UNL | 25 | | | 78 | 53 | 28 | 16 | 19 | 5 |
| 23 | 1 | UNL | 20 | | | 61 | 46 | 29 | 30 | 21 | 8 |
| **AUG 18** | | | | | | | | | | | |
| 02 | 9 | 130 | 20 | | | 61 | 46 | 31 | 32 | 19 | 6 |
| 05 | 9 | 130 | 20 | | | 56 | 45 | 34 | 44 | 07 | 4 |
| 08 | 10 | UNL | 20 | | | 64 | 50 | 38 | 38 | 28 | 4 |
| 11 | 9 | 100 | 12 | | | 79 | 56 | 38 | 23 | 27 | 8 |
| 14 | 8 | 100 | 12 | | | 90 | 59 | 34 | 14 | 32 | 6 |
| 17 | 6 | UNL | 15 | | | 91 | 57 | 27 | 10 | 24 | 6 |
| 20 | 7 | UNL | 15 | | | 79 | 53 | 28 | 15 | 19 | 4 |
| 23 | 3 | UNL | 15 | | | 77 | 56 | 38 | 25 | 19 | 11 |

# MAXIMUM SHORT DURATION PRECIPITATION

| TIME PERIOD (MINUTES) | 5 | 10 | 15 | 20 | 30 | 45 | 60 | 80 | 100 | 120 | 150 | 180 |
|---|---|---|---|---|---|---|---|---|---|---|---|---|
| PRECIPITATION (INCHES) | 0.06 | 0.10 | 0.12 | 0.13 | 0.14 | 0.14 | 0.16 | 0.16 | 0.16 | 0.17 | 0.19 | 0.22 |
| ENDED: DATE | 20 | 20 | 20 | 20 | 20 | 20 | 20 | 20 | 20 | 20 | 20 | 20 |
| ENDED: TIME (LST) | 1441 | 1441 | 1447 | 1450 | 1450 | 1450 | 1459 | 1459 | 1459 | 1630 | 1630 | 1630 |

THE PRECIPITATION AMOUNTS FOR THE INDICATED TIME INTERVALS MAY OCCUR AT ANY TIME DURING THE MONTH. THE TIME INDICATED IS THE ENDING TIME OF THE INTERVAL. DATE AND TIME ARE NOT ENTERED FOR TRACE AMOUNTS.

# OBSERVATIONS AT 3-HOUR INTERVALS

AUG 1994 24156
POCATELLO, ID

| HOUR L.S.T. | SKY COVER (TENTHS) | CEILING IN HUNDREDS OF FEET | VISIBILITY: WHOLE MILES | VISIBILITY: 16THS MILE | WEATHER | TEMPERATURE: AIR F | TEMPERATURE: WET BULB F | TEMPERATURE: DEW POINT F | REL. HUMIDITY % | WIND: DIRECTION | WIND: SPEED (KNOTS) |
|---|---|---|---|---|---|---|---|---|---|---|---|
| **AUG 19** | | | | | | | | | | | |
| 02 | 8 | 250 | 20 | | | 76 | 60 | 50 | 40 | 18 | 19 |
| 05 | 7 | UNL | 20 | | | 58 | 52 | 47 | 67 | 06 | 4 |
| 08 | 4 | UNL | 30 | | | 69 | 57 | 49 | 49 | 00 | 0 |
| 11 | 0 | UNL | 20 | | | 86 | 64 | 51 | 30 | 22 | 4 |
| 14 | 10 | UNL | 20 | | | 91 | 66 | 51 | 26 | 36 | 6 |
| 17 | 10 | UNL | 20 | | | 92 | 61 | 37 | 14 | 00 | 0 |
| 20 | 8 | UNL | 30 | | | 79 | 57 | 39 | 24 | 18 | 4 |
| 23 | 7 | UNL | 20 | | | 65 | 52 | 40 | 40 | 32 | 7 |
| **AUG 20** | | | | | | | | | | | |
| 02 | 2 | UNL | 20 | | | 58 | 51 | 44 | 60 | 32 | 8 |
| 05 | 2 | UNL | 20 | | | 59 | 51 | 44 | 58 | 12 | 5 |
| 08 | 0 | UNL | 25 | | | 67 | 55 | 47 | 49 | 00 | 0 |
| 11 | 0 | UNL | 30 | | | 86 | 64 | 50 | 29 | 31 | 6 |
| 14 | 6 | 250 | 30 | | RW | 88 | 67 | 31 | 13 | 14 | 13 |
| 17 | 10 | 80 | 30 | | T | 76 | 61 | 51 | 42 | 11 | 5 |
| 20 | 10 | 300 | 20 | | | 67 | 59 | 53 | 61 | 33 | 10 |
| 23 | 8 | 300 | 20 | | | 70 | 56 | 46 | 42 | 11 | 3 |
| **AUG 21** | | | | | | | | | | | |
| 02 | 10 | 250 | 20 | | | 66 | 56 | 49 | 55 | 01 | 3 |
| 05 | 10 | UNL | 20 | | | 63 | 55 | 48 | 58 | 00 | 0 |
| 08 | 4 | UNL | 30 | | | 77 | 60 | 49 | 37 | 19 | 15 |
| 11 | 1 | UNL | 30 | | | 85 | 63 | 49 | 29 | 18 | 15 |
| 14 | 7 | 60 | 30 | | | 88 | 63 | 46 | 23 | 22 | 14 |
| 17 | 10 | 80 | 40 | | T | 76 | 59 | 46 | 35 | 27 | 20 |
| 20 | 10 | 130 | 15 | | RW | 72 | 58 | 47 | 41 | 19 | 35 |
| 23 | 5 | UNL | 20 | | | 72 | 56 | 44 | 37 | 13 | 13 |
| **AUG 22** | | | | | | | | | | | |
| 02 | 0 | UNL | 20 | | | 66 | 56 | 48 | 53 | 24 | 7 |
| 05 | 0 | UNL | 20 | | | 59 | 53 | 49 | 70 | 21 | 5 |
| 08 | 1 | UNL | 25 | | | 64 | 54 | 45 | 50 | 23 | 16 |
| 11 | 0 | UNL | 15 | | | 70 | 56 | 45 | 41 | 23 | 17 |
| 14 | 5 | UNL | 5 | | K | 77 | 57 | 41 | 28 | 25 | 18 |
| 17 | 0 | UNL | 40 | | | 77 | 55 | 37 | 24 | 27 | 16 |
| 20 | 0 | UNL | 20 | | | 63 | 49 | 35 | 35 | 21 | 9 |
| 23 | 0 | UNL | 20 | | | 58 | 46 | 34 | 41 | 21 | 5 |
| **AUG 23** | | | | | | | | | | | |
| 02 | 0 | UNL | 20 | | | 50 | 41 | 31 | 48 | 24 | 3 |
| 05 | 0 | UNL | 20 | | | 44 | 38 | 31 | 60 | 22 | 6 |
| 08 | 1 | UNL | 25 | | | 56 | 45 | 33 | 42 | 03 | 4 |
| 11 | 0 | UNL | 15 | | | 73 | 51 | 30 | 20 | 34 | 5 |
| 14 | 5 | UNL | 5 | | K | 83 | 55 | 29 | 14 | 28 | 8 |
| 17 | 0 | UNL | 40 | | | 86 | 55 | 26 | 11 | 29 | 8 |
| 20 | 0 | UNL | 20 | | | 72 | 52 | 32 | 23 | 13 | 6 |
| 23 | 0 | UNL | 20 | | | 61 | 46 | 31 | 32 | 33 | 5 |
| **AUG 24** | | | | | | | | | | | |
| 02 | 0 | UNL | 20 | | | 52 | 44 | 36 | 55 | 00 | 0 |
| 05 | 0 | UNL | 20 | | | 48 | 43 | 38 | 69 | 25 | 3 |
| 08 | 0 | UNL | 40 | | | 58 | 48 | 38 | 48 | 27 | 3 |
| 11 | 0 | UNL | 40 | | | 81 | 56 | 34 | 18 | 28 | 8 |
| 14 | 0 | UNL | 40 | | | 89 | 57 | 30 | 12 | 26 | 11 |
| 17 | 1 | UNL | 30 | | | 90 | 57 | 29 | 11 | 28 | 11 |
| 20 | 2 | UNL | 20 | | | 73 | 53 | 36 | 26 | 19 | 9 |
| 23 | 0 | UNL | 20 | | | 68 | 50 | 31 | 25 | 18 | 8 |
| **AUG 25** | | | | | | | | | | | |
| 02 | 1 | UNL | 20 | | | 60 | 46 | 32 | 35 | 21 | 6 |
| 05 | 0 | UNL | 20 | | | 48 | 41 | 34 | 59 | 22 | 5 |
| 08 | 0 | UNL | 30 | | | 61 | 47 | 33 | 35 | 00 | 0 |
| 11 | 0 | UNL | 30 | | | 80 | 56 | 35 | 20 | 30 | 5 |
| 14 | 0 | UNL | 35 | | | 89 | 58 | 32 | 13 | 32 | 7 |
| 17 | 0 | UNL | 30 | | | 91 | 57 | 25 | 9 | 27 | 7 |
| 20 | 0 | UNL | 20 | | | 75 | 52 | 31 | 20 | 16 | 3 |
| 23 | 0 | UNL | 20 | | | 62 | 46 | 27 | 27 | 00 | 0 |
| **AUG 26** | | | | | | | | | | | |
| 02 | 0 | UNL | 20 | | | 55 | 43 | 30 | 39 | 29 | 6 |
| 05 | 1 | UNL | 20 | | | 51 | 43 | 34 | 52 | 26 | 6 |
| 08 | 0 | UNL | 50 | | | 72 | 51 | 31 | 22 | 23 | 8 |
| 11 | 0 | UNL | 40 | | | 81 | 53 | 25 | 13 | 22 | 13 |
| 14 | 8 | 240 | 40 | | | 85 | 54 | 24 | 11 | 27 | 13 |
| 17 | 9 | UNL | 45 | | | 87 | 56 | 27 | 11 | 25 | 10 |
| 20 | 2 | UNL | 20 | | | 71 | 51 | 33 | 25 | 18 | 7 |
| 23 | 5 | UNL | 20 | | | 58 | 44 | 29 | 33 | 00 | 0 |
| **AUG 27** | | | | | | | | | | | |
| 02 | 8 | UNL | 20 | | | 54 | 44 | 34 | 47 | 00 | 0 |
| 05 | 8 | UNL | 20 | | | 53 | 44 | 34 | 49 | 00 | 0 |
| 08 | 10 | 250 | 30 | | | 57 | 46 | 34 | 42 | 16 | 5 |
| 11 | 10 | UNL | 30 | | | 75 | 53 | 34 | 22 | 22 | 6 |
| 14 | 10 | 230 | 20 | | | 85 | 54 | 23 | 10 | 27 | 6 |
| 17 | 10 | 220 | 30 | | | 84 | 54 | 24 | 11 | 31 | 5 |
| 20 | 9 | UNL | 35 | | | 76 | 59 | 46 | 35 | 18 | 11 |
| 23 | 0 | UNL | 20 | | | 72 | 56 | 44 | 37 | 19 | 15 |
| **AUG 28** | | | | | | | | | | | |
| 02 | 0 | UNL | 20 | | | 59 | 51 | 45 | 60 | 32 | 6 |
| 05 | 0 | UNL | 20 | | | 52 | 48 | 44 | 74 | 03 | 4 |
| 08 | 0 | UNL | 70 | | | 66 | 55 | 47 | 51 | 34 | 6 |
| 11 | 0 | UNL | 60 | | | 84 | 62 | 47 | 28 | 31 | 8 |
| 14 | 6 | 130 | 50 | | | 88 | 62 | 44 | 22 | 25 | 8 |
| 17 | 6 | 70 | 45 | | | 87 | 61 | 42 | 21 | 20 | 19 |
| 20 | 0 | UNL | 70 | | | 72 | 55 | 42 | 34 | 20 | 6 |
| 23 | 0 | UNL | 20 | | | 64 | 51 | 40 | 42 | 23 | 7 |
| **AUG 29** | | | | | | | | | | | |
| 02 | 0 | UNL | 20 | | | 57 | 50 | 43 | 60 | 25 | 4 |
| 05 | 1 | UNL | 20 | | | 55 | 50 | 46 | 72 | 33 | 4 |
| 08 | 1 | UNL | 50 | | | 66 | 53 | 43 | 43 | 23 | 15 |
| 11 | 0 | UNL | 30 | | | 74 | 54 | 37 | 26 | 23 | 17 |
| 14 | 0 | UNL | 30 | | | 81 | 56 | 36 | 20 | 25 | 15 |
| 17 | 2 | UNL | 7 | | | 82 | 53 | 25 | 12 | 24 | 17 |
| 20 | 2 | UNL | 15 | | | 66 | 48 | 29 | 25 | 21 | 10 |
| 23 | 0 | UNL | 20 | | | 62 | 47 | 31 | 31 | 21 | 10 |
| **AUG 30** | | | | | | | | | | | |
| 02 | 0 | UNL | 20 | | | 55 | 43 | 28 | 36 | 22 | 7 |
| 05 | 0 | UNL | 20 | | | 47 | 39 | 30 | 52 | 21 | 6 |
| 08 | 0 | UNL | 20 | | | 57 | 47 | 36 | 46 | 25 | 6 |
| 11 | 0 | UNL | 15 | | | 67 | 51 | 36 | 32 | 24 | 5 |
| 14 | 0 | UNL | 20 | | | 75 | 53 | 33 | 22 | 29 | 4 |
| 17 | 0 | UNL | 15 | | | 80 | 54 | 30 | 16 | 34 | 4 |
| 20 | 6 | 250 | 15 | | | 61 | 48 | 34 | 37 | 19 | 6 |
| 23 | 1 | UNL | 15 | | | 55 | 44 | 31 | 40 | 08 | 4 |
| **AUG 31** | | | | | | | | | | | |
| 02 | 2 | UNL | 15 | | | 50 | 41 | 31 | 48 | 19 | 5 |
| 05 | 0 | UNL | 15 | | | 41 | 37 | 32 | 70 | 22 | 6 |
| 08 | 1 | UNL | 15 | | | 53 | 42 | 30 | 42 | 28 | 4 |
| 11 | 0 | UNL | 15 | | | 73 | 54 | 37 | 27 | 34 | 7 |
| 14 | 0 | UNL | 20 | | | 82 | 54 | 27 | 13 | 34 | 8 |
| 17 | 0 | UNL | 20 | | | 85 | 54 | 22 | 10 | 27 | 8 |
| 20 | 2 | UNL | 20 | | | 66 | 49 | 31 | 27 | 19 | 8 |
| 23 | 0 | UNL | 20 | | | 58 | 44 | 29 | 33 | 00 | 0 |

# WEATHER CODES AND NOTES

| | | | | | |
|---|---|---|---|---|---|
| $ | TORNADO | S | SNOW | IF | ICE FOG |
| $C | FUNNEL CLOUD | SW | SNOW SHOWERS | GF | GROUND FOG |
| $W | WATER SPOUT | SG | SNOW GRAINS | BD | BLOWING DUST |
| T | THUNDERSTORM | SP | SNOW PELLETS | BN | BLOWING SAND |
| R | RAIN | IC | ICE CRYSTALS | BS | BLOWING SNOW |
| RW | RAIN SHOWERS | IP | ICE PELLETS | BY | BLOWING SPRAY |
| ZR | FREEZING RAIN | IPW | ICE PELLET SHOWERS | K | SMOKE |
| L | DRIZZLE | A | HAIL | H | HAZE |
| ZL | FREEZING DRIZZLE | F | FOG | D | DUST |

CEILING: UNL INDICATES UNLIMITED
WIND DIRECTION: DIRECTIONS ARE THOSE FROM WHICH THE WIND IS BLOWING, INDICATED IN TENS OF DEGREES FROM TRUE NORTH: I.E. 09 FOR
EAST, 18 FOR SOUTH, 27 FOR WEST. AN ENTRY OF 00 INDICATES CALM.
SPEED: THE OBSERVED AVERAGE ONE-MINUTE VALUE (MPH=KNOTS X 1.15).

# SUMMARY BY HOURS

| HOUR L.S.T. | AVERAGES: SKY COVER (TENTHS) | AVERAGES: STATION PRESSURE (INCHES) | AVERAGES: TEMPERATURE: AIR 'F | AVERAGES: TEMPERATURE: WET BULB 'F | AVERAGES: TEMPERATURE: DEW POINT 'F | AVERAGES: REL. HUMIDITY % | AVERAGES: SPEED (MPH) | RESULTANT WIND: DIRECTION | RESULTANT WIND: SPEED (MPH) |
|---|---|---|---|---|---|---|---|---|---|
| 02 | 3 | 25.515 | 61 | 51 | 41 | 51 | 7.4 | 23 | 2.6 |
| 05 | 3 | 25.530 | 55 | 49 | 42 | 63 | 4.5 | 27 | 1.1 |
| 08 | 3 | 25.560 | 67 | 54 | 43 | 45 | 6.0 | 25 | 3.2 |
| 11 | 3 | 25.560 | 82 | 59 | 42 | 26 | 10.2 | 27 | 5.3 |
| 14 | 4 | 25.520 | 88 | 60 | 38 | 18 | 11.1 | 27 | 7.6 |
| 17 | 5 | 25.480 | 89 | 59 | 33 | 15 | 11.6 | 27 | 7.7 |
| 20 | 5 | 25.490 | 74 | 55 | 40 | 31 | 9.6 | 19 | 5.1 |
| 23 | 3 | 25.510 | 67 | 53 | 39 | 38 | 8.6 | 18 | 4.6 |

002979

P&D ASHEVILLE N.C. 288 11/14/94 PM

NATIONAL CLIMATIC DATA CENTER
ROOM 120
151 PATTON AVENUE
ASHEVILLE, NORTH CAROLINA 28801-5001

OFFICIAL BUSINESS
PENALTY FOR PRIVATE USE $300

FIRST CLASS
POSTAGE AND FEES PAID
NOAA
PERMIT G-19

LCD-10-24156-PD-9509

33736
J R SIMPLOT COMPANY
ATTN: J F COCHRANE - PO #35724
PO BOX 912
POCATELLO ID 83204

HOURLY PRECIPITATION (WATER EQUIVALENT IN INCHES)

AUG 1994 24156
POCATELLO, ID
USCOM - NOAA - ASHEVILLE, NC 125

| DATE | A.M. HOUR ENDING AT | | | | | | | | | | | | P.M. HOUR ENDING AT | | | | | | | | | | | | DATE |
|---|---|---|---|---|---|---|---|---|---|---|---|---|---|---|---|---|---|---|---|---|---|---|---|---|---|
| | 1 | 2 | 3 | 4 | 5 | 6 | 7 | 8 | 9 | 10 | 11 | 12 | 1 | 2 | 3 | 4 | 5 | 6 | 7 | 8 | 9 | 10 | 11 | 12 | |
| 01 | | | | | | | | | | | | | | | | | | | | | | | | | 01 |
| 02 | | | | | | | | | | | | | | | | | | | | | | | | | 02 |
| 03 | | | | | | | | | | | | | | | | | | | | | | | | | 03 |
| 04 | | | | | | | | | | | | | | | | | | | | | | | | | 04 |
| 05 | | | | | | | | | | | | | | | | | | | | | | | | | 05 |
| 06 | | | | | | | | | | | | | | | | | | | | | | | | | 06 |
| 07 | | | | | | | | | | | | | | | | | | | | | | | | | 07 |
| 08 | | | | | | | | | | | | | | | | | | | T | T | | | | | 08 |
| 09 | | | | | | | | | | | | | | | | | | | | | | | | | 09 |
| 10 | | | | | | | | | | | | | | | | | | | T | 0.01 | | | | | 10 |
| 11 | | | | | | | | | | | | | | | | | | | | | | | | | 11 |
| 12 | | | | | | | | | | | | | | | | | T | 0.03 | T | | | | | | 12 |
| 13 | | | | | | | | | | | | | | | | | | | | | | | | | 13 |
| 14 | | | | | | | | | | | | | | | | | | | | | | | | | 14 |
| 15 | | | | | | | | | | | | | | | | | | | | | | | | | 15 |
| 16 | | | | | | | | | | | | | | | | | | | | | | | | | 16 |
| 17 | | | | | | | | | | | | | | | | | | | | | | | | | 17 |
| 18 | | | | | | | | | | | | | | | | | | | | | | | | | 18 |
| 19 | | | | | | | | | | | | | | | | | | | | | | | | | 19 |
| 20 | | | | | | | | | | | | | | T | 0.16 | 0.01 | 0.05 | | T | | | | | | 20 |
| 21 | | | | | | | | | | | | | | | T | T | | 0.01 | 0.12 | 0.01 | T | | | | 21 |
| 22 | | | | | | | | | | | | | | | | | | | | | | | | | 22 |
| 23 | | | | | | | | | | | | | | | | | | | | | | | | | 23 |
| 24 | | | | | | | | | | | | | | | | | | | | | | | | | 24 |
| 25 | | | | | | | | | | | | | | | | | | | | | | | | | 25 |
| 26 | | | | | | | | | | | | | | | | | | | | | | | | | 26 |
| 27 | | | | | | | | | | | | | | | | | | | | | | | | | 27 |
| 28 | | | | | | | | | | | | | | | | | T | | | | | | | | 28 |
| 29 | | | | T | | | | | | | | | | | | | | | | | | | | | 29 |
| 30 | | | | | | | | | | | | | | | | | | | | | | | | | 30 |
| 31 | | | | | | | | | | | | | | | | | | | | | | | | | 31 |

- 003241

SEP 1994
POCATELLO, ID
NAT'L WEA SER OFC
20369 THUNDERBOLT STREET-C

INQUIRIES/COMMENTS CALL
(704) 271-4800 VOICE
271-4010 TDD/271-4876 FAX

MUNICIPAL AIRPORT

ISSN # 0198-1811

# LOCAL CLIMATOLOGICAL DATA

## MONTHLY SUMMARY

LATITUDE 42° 55'N LONGITUDE 112° 36'W ELEVATION (GROUND) 4454 FEET TIME ZONE MOUNTAIN 24156

SEP 1994
POCATELLO, ID

| | TEMPERATURE °F | | | | | DEGREE DAYS BASE 65 °F | | WEATHER TYPES 1 FOG 2 HEAVY FOG 3 THUNDERSTORMS 4 ICE PELLETS 5 HAIL 6 GLAZE 7 DUSTSTORM 8 SMOKE,HAZE 9 BLOWING SNOW | SNOW/ICE ON GRD AT 0500 (IN.) | PRECIPITATION (INCHES) | | AVERAGE STATION PRESSURE (INCHES OF Hg) ELEV. 4478 (FT.MSL) | WIND (M.P.H.) | | | | | | SUNSHINE | | SKY COVER TENTHS | |
|---|---|---|---|---|---|---|---|---|---|---|---|---|---|---|---|---|---|---|---|---|---|---|---|
| DATE | MAXIMUM | MINIMUM | AVERAGE | DEPARTURE FROM NORMAL | AVERAGE DEW POINT | HEATING | COOLING | | | WATER EQUIVALENT | SNOW ICE PELLETS | | RESULTANT DIR | RESULTANT SPEED | AVERAGE SPEED | PEAK GUST SPEED | PEAK GUST DIR | FASTEST 1-MIN SPEED | FASTEST 1-MIN DIR | MINUTES | PERCENT POSSIBLE | SUNRISE TO SUNSET | MIDNIGHT TO MIDNIGHT |
| 1 | 2 | 3 | 4 | 5 | 6 | 7A | 7B | 8 | 9 | 10 | 11 | 12 | 13 | 14 | 15 | 16 | 17 | 18 | 19 | 20 | 21 | 22 | 23 |
| 01 | 89 | 47 | 68 | 4 | 35 | 0 | 3 | | 0 | 0.00 | 0.0 | 25.390 | 34 | 1.3 | 6.1 | 21 | W | 12 | 28 | 701 | 89 | 5 | 3 |
| 02 | 91 | 48 | 70 | 6 | 33 | 0 | 5 | | 0 | 0.00 | 0.0 | 25.370 | 21 | 6.9 | 8.8 | 33 | S | 22 | 20 | 556 | 70 | 7 | 6 |
| 03 | 78 | 56 | 67 | 4 | 35 | 0 | 2 | | 0 | T | 0.0 | 25.440 | 25 | 13.5 | 14.5 | 32 | W | 23 | 27 | 697 | 89 | 1 | 2 |
| 04 | 74 | 48 | 61 | -2 | 31 | 4 | 0 | | 0 | 0.00 | 0.0 | 25.620 | 23 | 12.6 | 13.4 | 31 | SW | 22 | 25 | 784 | 100 | 0 | 0 |
| 05 | 82 | 32* | 57 | -6 | 26 | 8 | 0 | | 0 | 0.00 | 0.0 | 25.700 | 24 | 3.1 | 4.8 | 15 | W | 12 | 27 | 754 | 97 | 1 | 2 |
| 06 | 89 | 40 | 65 | 3 | 33 | 0 | 0 | | 0 | 0.00 | 0.0 | 25.630 | 10 | 0.4 | 7.4 | 40 | S | 33 | 17 | 707 | 91 | 5 | 3 |
| 07 | 91 | 46 | 69 | 7 | 36 | 0 | 4 | | 0 | 0.00 | 0.0 | 25.560 | 32 | 2.8 | 6.9 | 18 | NW | 14 | 30 | 775 | 100 | 4 | 2 |
| 08 | 95* | 50 | 73* | 11 | 34 | 0 | 8 | | 0 | 0.00 | 0.0 | 25.440 | 22 | 5.0 | 9.7 | 30 | SW | 18 | 22 | 687 | 89 | 5 | 4 |
| 09 | 84 | 56 | 70 | 9 | 24 | 0 | 5 | | 0 | 0.00 | 0.0 | 25.410 | 24 | 10.1 | 11.7 | 33 | SW | 18 | 26 | 674 | 88 | 1 | 3 |
| 10 | 79 | 45 | 62 | 1 | 28 | 3 | 0 | | 0 | 0.00 | 0.0 | 25.410 | 24 | 8.2 | 9.5 | 29 | SW | 14 | 25 | 644 | 84 | 4 | 5 |
| 11 | 79 | 46 | 63 | 2 | 28 | 2 | 0 | | 0 | 0.00 | 0.0 | 25.390 | 25 | 5.6 | 8.5 | 18 | W | 12 | 31 | 729 | 96 | 4 | 3 |
| 12 | 79 | 46 | 63 | 3 | 32 | 2 | 0 | | 0 | 0.00 | 0.0 | 25.370 | 24 | 5.6 | 7.5 | 18 | SW | 14 | 22 | 720 | 95 | 7 | 5 |
| 13 | 76 | 47 | 62 | 2 | 34 | 3 | 0 | | 0 | 0.00 | 0.0 | 25.385 | 25 | 8.6 | 10.2 | 25 | W | 16 | 27 | 716 | 94 | 3 | 3 |
| 14 | 68 | 49 | 59 | 0 | 41 | 6 | 0 | | 0 | 0.02 | 0.0 | 25.540 | 24 | 10.0 | 10.6 | 33 | NW | 20 | 33 | 207 | 27 | 10 | 7 |
| 15 | 73 | 37 | 55 | -4 | 37 | 10 | 0 | | 0 | 0.00 | 0.0 | 25.690 | 26 | 4.3 | 5.4 | 14 | W | 10 | 31 | 752 | 100 | 2 | 3 |
| 16 | 79 | 38 | 59 | 0 | 36 | 6 | 0 | | 0 | 0.00 | 0.0 | 25.660 | 33 | 4.7 | 6.1 | 16 | NW | 9 | 33 | 732 | 98 | 2 | 2 |
| 17 | 86 | 36 | 61 | 3 | 32 | 4 | 0 | | 0 | 0.00 | 0.0 | 25.630 | 28 | 5.4 | 8.1 | 32 | SW | 23 | 24 | 728 | 97 | 2 | 1 |
| 18 | 85 | 40 | 63 | 5 | 32 | 2 | 0 | | 0 | 0.00 | 0.0 | 25.650 | 32 | 4.3 | 5.7 | 15 | NW | 9 | 35 | 722 | 97 | 1 | 2 |
| 19 | 86 | 39 | 63 | 5 | 32 | 2 | 0 | | 0 | 0.00 | 0.0 | 25.630 | 33 | 4.5 | 5.2 | 16 | NW | 10 | 33 | 723 | 98 | 1 | 0 |
| 20 | 84 | 41 | 63 | 6 | 32 | 2 | 0 | | 0 | 0.00 | 0.0 | 25.590 | 27 | 4.5 | 5.5 | 14 | SW | 10 | 23 | 738 | 100 | 0 | 0 |
| 21 | 75 | 42 | 59 | 2 | 33 | 6 | 0 | | 0 | 0.00 | 0.0 | 25.660 | 01 | 5.8 | 9.8 | 28 | N | 20 | 02 | 735 | 100 | 1 | 0 |
| 22 | 80 | 33 | 57 | 0 | 16 | 8 | 0 | | 0 | 0.00 | 0.0 | 25.670 | 05 | 2.4 | 6.5 | 14 | N | 9 | 03 | 732 | 100 | 5 | 3 |
| 23 | 84 | 34 | 59 | 2 | 23 | 6 | 0 | | 0 | 0.00 | 0.0 | 25.550 | 27 | 1.1 | 3.7 | 12 | W | 9 | 25 | 729 | 100 | 0 | 0 |
| 24 | 89 | 36 | 63 | 7 | 28 | 2 | 0 | | 0 | 0.00 | 0.0 | 25.550 | 02 | 3.1 | 5.7 | 18 | N | 12 | 32 | 726 | 100 | 0 | 0 |
| 25 | 88 | 42 | 65 | 9 | 27 | 0 | 0 | | 0 | 0.00 | 0.0 | 25.590 | 31 | 1.4 | 5.4 | 14 | N | 12 | 32 | 723 | 100 | 0 | 0 |
| 26 | 82 | 40 | 61 | 6 | 27 | 4 | 0 | | 0 | 0.00 | 0.0 | 25.560 | 23 | 6.9 | 8.5 | 22 | W | 16 | 23 | 720 | 100 | 6 | 5 |
| 27 | 85 | 36 | 61 | 6 | 28 | 4 | 0 | | 0 | 0.00 | 0.0 | 25.550 | 26 | 2.3 | 5.3 | 18 | W | 12 | 29 | 661 | 92 | 1 | 1 |
| 28 | 90 | 40 | 65 | 10 | 30 | 0 | 0 | | 0 | 0.00 | 0.0 | 25.470 | 19 | 3.5 | 8.2 | 23 | SW | 15 | 17 | 590 | 83 | 3 | 4 |
| 29 | 70 | 52 | 61 | 7 | 53 | 4 | 0 | 3 | 0 | 0.23 | 0.0 | 25.410 | 20 | 7.5 | 10.1 | 37 | SW | 25 | 22 | 191 | 27 | 10 | 10 |
| 30 | 57 | 49 | 53* | -1 | 51 | 12 | 0 | 1 | 0 | 0.13 | 0.0 | 25.390 | 01 | 2.0 | 3.7 | 8 | N | 7 | 34 | 22 | 3 | 10 | 10 |

| SUM | SUM | | | | TOTAL | TOTAL | NUMBER OF DAYS | TOTAL | TOTAL | FOR THE MONTH : | | | | | | | | TOTAL | | SUM | SUM |
|---|---|---|---|---|---|---|---|---|---|---|---|---|---|---|---|---|---|---|---|---|---|
| 2447 | 1291 | | | | 100 | 27 | | 0.38 | 0.0 | 25.530 | 25 | 3.7 | 7.8* | 40 | S | 33 | 17 | 19575 | FOR MONTH | 101 | 89 |
| AVG. | AVG. | AVG. | DEP. | AVG. | DEP. | DEP. | PRECIPITATION | DEP. | | | | | | DATE: 6 | | DATE: 6 | | POSS | | AVG | AVG |
| 81.6 | 43.0 | 62.3 | 3.3 | 32.2 | -119 | -11 | ≥ .01 INCH 3 | -0.47 | | | | | | | | | | 22500 | 87 | 3.4 | 3.0 |

| NUMBER OF DAYS | | | | SEASON TO DATE | | SNOW, ICE PELLETS | GREATEST IN 24 HOURS AND DATES | | GREATEST DEPTH ON GROUND OF SNOW, ICE PELLETS OR ICE AND DATE |
|---|---|---|---|---|---|---|---|---|---|
| MAXIMUM TEMP. | | MINIMUM TEMP. | | TOTAL | TOTAL | ≥ 1.0 INCH 0 | PRECIPITATION | SNOW, ICE PELLETS | |
| ≥ 90° | ≤ 32° | ≤ 32° | ≤ 0° | DEP. | DEP. | THUNDERSTORMS 1 | | | |
| 4 | 0 | 1 | 0 | -134 | 112 | HEAVY FOG 0 | 0.24 29-30 | 0.0 | 0 |
| | | | | | | CLEAR 17 PARTLY CLOUDY 10 CLOUDY 3 | | | |

* EXTREME FOR THE MONTH - LAST OCCURRENCE IF MORE THAN ONE.
T TRACE AMOUNT.
+ ALSO ON EARLIER DATE(S).
HEAVY FOG: VISIBILITY 1/4 MILE OR LESS.
BLANK ENTRIES DENOTE MISSING OR UNREPORTED DATA.

DATA IN COLS 6 AND 12-15 ARE BASED ON 21 OR MORE OBSERVATIONS AT HOURLY INTERVALS. RESULTANT WIND IS THE VECTOR SUM OF WIND SPEEDS AND DIRECTIONS DIVIDED BY THE NUMBER OF OBSERVATIONS.
COLS 16 & 17 : PEAK GUST - HIGHEST INSTANTANEOUS WIND SPEED.
ONE OF TWO WINDS IS GIVEN UNDER COLS 18 & 19 : FASTEST MILE- HIGHEST RECORDED SPEED FOR WHICH A MILE OF WIND PASSES STATION (DIRECTION IN COMPASS POINTS). FASTEST OBSERVED ONE MINUTE WIND - HIGHEST ONE MINUTE SPEED (DIRECTION IN TENS OF DEGREES).
ERRORS WILL BE CORRECTED IN SUBSEQUENT PUBLICATIONS.

I CERTIFY THAT THIS IS AN OFFICIAL PUBLICATION OF THE NATIONAL OCEANIC AND ATMOSPHERIC ADMINISTRATION, AND IS COMPILED FROM RECORDS ON FILE AT THE NATIONAL CLIMATIC DATA CENTER.

Kenneth D Hadeen
DIRECTOR
NATIONAL CLIMATIC DATA CENTER

noaa NATIONAL OCEANIC AND ATMOSPHERIC ADMINISTRATION
NATIONAL ENVIRONMENTAL SATELLITE, DATA AND INFORMATION SERVICE
NATIONAL CLIMATIC DATA CENTER ASHEVILLE, NORTH CAROLINA

# OBSERVATIONS AT 3-HOUR INTERVALS

SEP 1994 24156
POCATELLO, ID

| HOUR L.S.T. | SKY COVER (TENTHS) | CEILING IN HUNDREDS OF FEET | VISIBILITY WHOLE MILES | VISIBILITY 16THS MILE | WEATHER | TEMPERATURE AIR °F | TEMPERATURE WET BULB °F | TEMPERATURE DEW POINT °F | REL HUMIDITY % | WIND DIRECTION | WIND SPEED (KNOTS) |
|---|---|---|---|---|---|---|---|---|---|---|---|
| **SEP 01** | | | | | | | | | | | |
| 02 | 0 | UNL | 20 | | | 56 | 45 | 34 | 44 | 10 | 4 |
| 05 | 3 | UNL | 20 | | | 48 | 43 | 37 | 66 | 05 | 4 |
| 08 | 0 | UNL | 25 | | | 58 | 49 | 40 | 51 | 05 | 6 |
| 11 | 6 | 250 | 30 | | | 78 | 58 | 42 | 28 | 04 | 5 |
| 14 | 7 | 250 | 35 | | | 83 | 58 | 38 | 20 | 24 | 9 |
| 17 | 5 | UNL | 35 | | | 88 | 56 | 27 | 11 | 28 | 8 |
| 20 | 0 | UNL | 20 | | | 71 | 52 | 34 | 26 | 18 | 3 |
| 23 | 0 | UNL | 20 | | | 59 | 46 | 31 | 35 | 00 | 0 |
| **SEP 02** | | | | | | | | | | | |
| 02 | 0 | UNL | 20 | | | 51 | 43 | 33 | 50 | 03 | 3 |
| 05 | 10 | 130 | 20 | | | 50 | 43 | 35 | 57 | 27 | 3 |
| 08 | 1 | UNL | 40 | | | 57 | 48 | 39 | 51 | 23 | 4 |
| 11 | 1 | UNL | 40 | | | 87 | 58 | 35 | 16 | 17 | 15 |
| 14 | 10 | 250 | 30 | | | 87 | 56 | 28 | 12 | 22 | 14 |
| 17 | 10 | 110 | 40 | | | 83 | 54 | 26 | 12 | 21 | 11 |
| 20 | 5 | UNL | 30 | | | 74 | 51 | 28 | 18 | 26 | 6 |
| 23 | 10 | 130 | 20 | | | 74 | 50 | 24 | 15 | 23 | 8 |
| **SEP 03** | | | | | | | | | | | |
| 02 | 8 | 250 | 20 | | | 68 | 50 | 32 | 26 | 23 | 9 |
| 05 | 10 | 130 | 15 | | | 64 | 50 | 37 | 37 | 24 | 18 |
| 08 | 1 | UNL | 35 | | | 66 | 51 | 38 | 36 | 24 | 12 |
| 11 | 0 | UNL | 40 | | | 73 | 53 | 35 | 25 | 26 | 17 |
| 14 | 0 | UNL | 40 | | | 77 | 53 | 29 | 17 | 27 | 20 |
| 17 | 0 | UNL | 35 | | | 76 | 53 | 33 | 21 | 26 | 15 |
| 20 | 0 | UNL | 25 | | | 61 | 48 | 35 | 38 | 20 | 6 |
| 23 | 0 | UNL | 20 | | | 59 | 47 | 34 | 39 | 21 | 8 |
| **SEP 04** | | | | | | | | | | | |
| 02 | 0 | UNL | 20 | | | 57 | 46 | 35 | 44 | 20 | 8 |
| 05 | 0 | UNL | 20 | | | 55 | 44 | 33 | 44 | 21 | 10 |
| 08 | 0 | UNL | 60 | | | 58 | 47 | 37 | 46 | 24 | 17 |
| 11 | 0 | UNL | 60 | | | 67 | 51 | 36 | 32 | 25 | 15 |
| 14 | 0 | UNL | 60 | | | 71 | 52 | 34 | 26 | 26 | 16 |
| 17 | 0 | UNL | 60 | | | 73 | 49 | 22 | 15 | 26 | 14 |
| 20 | 0 | UNL | 30 | | | 57 | 44 | 28 | 33 | 21 | 7 |
| 23 | 0 | UNL | 20 | | | 49 | 38 | 22 | 35 | 20 | 7 |
| **SEP 05** | | | | | | | | | | | |
| 02 | 0 | UNL | 20 | | | 44 | 36 | 25 | 47 | 22 | 5 |
| 05 | 0 | UNL | 20 | | | 37 | 32 | 25 | 62 | 26 | 4 |
| 08 | 0 | UNL | 60 | | | 50 | 39 | 25 | 38 | 15 | 4 |
| 11 | 0 | UNL | 60 | | | 68 | 48 | 26 | 21 | 26 | 5 |
| 14 | 0 | UNL | 60 | | | 78 | 52 | 24 | 13 | 27 | 10 |
| 17 | 0 | UNL | 60 | | | 82 | 54 | 26 | 13 | 24 | 8 |
| 20 | 7 | UNL | 25 | | | 67 | 48 | 26 | 21 | 16 | 5 |
| 23 | 4 | UNL | 20 | | | 55 | 43 | 29 | 37 | 00 | 0 |
| **SEP 06** | | | | | | | | | | | |
| 02 | 0 | UNL | 20 | | | 50 | 41 | 29 | 45 | 36 | 4 |
| 05 | 0 | UNL | 20 | | | 46 | 39 | 30 | 54 | 00 | 0 |
| 08 | 9 | 130 | 60 | | | 50 | 42 | 32 | 50 | 23 | 4 |
| 11 | 2 | UNL | 50 | | | 75 | 53 | 34 | 22 | 06 | 7 |
| 14 | 4 | UNL | 50 | | | 88 | 59 | 35 | 15 | 33 | 6 |
| 17 | 1 | UNL | 25 | | | 83 | 57 | 36 | 19 | 18 | 21 |
| 20 | 4 | UNL | 20 | | | 69 | 51 | 35 | 29 | 32 | 3 |
| 23 | 1 | UNL | 20 | | | 63 | 49 | 36 | 37 | 22 | 7 |
| **SEP 07** | | | | | | | | | | | |
| 02 | 0 | UNL | 20 | | | 52 | 45 | 38 | 59 | 33 | 8 |
| 05 | 3 | UNL | 20 | | | 51 | 44 | 37 | 59 | 00 | 0 |
| 08 | 0 | UNL | 40 | | | 63 | 51 | 40 | 43 | 07 | 4 |
| 11 | 0 | UNL | 60 | | | 85 | 60 | 43 | 23 | 01 | 10 |
| 14 | 3 | UNL | 70 | | | 89 | 60 | 38 | 17 | 27 | 10 |
| 17 | 10 | UNL | 60 | | | 89 | 56 | 24 | 9 | 25 | 3 |
| 20 | 3 | UNL | 20 | | | 77 | 54 | 32 | 19 | 15 | 5 |
| 23 | 0 | UNL | 20 | | | 68 | 51 | 36 | 31 | 29 | 4 |
| **SEP 08** | | | | | | | | | | | |
| 02 | 3 | UNL | 20 | | | 57 | 47 | 38 | 49 | 34 | 7 |
| 05 | 0 | UNL | 20 | | | 50 | 43 | 36 | 59 | 00 | 0 |
| 08 | 7 | 100 | 60 | | | 65 | 51 | 39 | 39 | 00 | 0 |
| 11 | 8 | UNL | 50 | | | 88 | 61 | 41 | 19 | 28 | 12 |
| 14 | 8 | UNL | 50 | | | 94 | 59 | 31 | 11 | 22 | 13 |
| 17 | 0 | UNL | 50 | | | 92 | 58 | 27 | 10 | 20 | 13 |
| 20 | 0 | UNL | 20 | | | 82 | 53 | 24 | 12 | 17 | 14 |
| 23 | 0 | UNL | 20 | | | 64 | 46 | 27 | 25 | 18 | 5 |
| **SEP 09** | | | | | | | | | | | |
| 02 | 9 | 230 | 20 | | | 67 | 49 | 31 | 26 | 09 | 5 |
| 05 | 5 | UNL | 20 | | | 57 | 47 | 38 | 49 | 25 | 7 |
| 08 | 5 | UNL | 50 | | | 69 | 47 | 21 | 16 | 22 | 10 |
| 11 | 0 | UNL | 40 | | | 77 | 50 | 19 | 11 | 24 | 16 |
| 14 | 1 | UNL | 40 | | | 82 | 52 | 18 | 9 | 26 | 15 |
| 17 | 1 | UNL | 60 | | | 82 | 52 | 19 | 10 | 28 | 11 |
| 20 | 2 | UNL | 20 | | | 68 | 47 | 22 | 17 | 25 | 8 |
| 23 | 2 | UNL | 20 | | | 59 | 44 | 25 | 27 | 22 | |
| **SEP 10** | | | | | | | | | | | |
| 02 | 10 | UNL | 20 | | | 53 | 43 | 32 | 45 | 22 | 8 |
| 05 | 1 | UNL | 20 | | | 47 | 39 | 29 | 50 | 22 | 6 |
| 08 | 0 | UNL | 50 | | | 60 | 44 | 25 | 26 | 24 | 8 |
| 11 | 0 | UNL | 35 | | | 67 | 48 | 29 | 24 | 25 | 8 |
| 14 | 7 | 110 | 40 | | | 76 | 52 | 28 | 17 | 29 | 8 |
| 17 | 8 | 100 | 60 | | | 76 | 52 | 29 | 18 | 23 | 8 |
| 20 | 8 | 120 | 40 | | | 67 | 48 | 28 | 23 | 20 | 7 |
| 23 | 5 | UNL | 20 | | | 58 | 43 | 25 | 28 | 19 | 6 |
| **SEP 11** | | | | | | | | | | | |
| 02 | 2 | UNL | 20 | | | 50 | 39 | 25 | 38 | 22 | 9 |
| 05 | 0 | UNL | 20 | | | 49 | 39 | 25 | 39 | 21 | 8 |
| 08 | 7 | UNL | 60 | | | 54 | 42 | 28 | 37 | 24 | 7 |
| 11 | 5 | UNL | 50 | | | 64 | 48 | 31 | 29 | 28 | 8 |
| 14 | 2 | UNL | 50 | | | 76 | 52 | 29 | 18 | 31 | 7 |
| 17 | 1 | UNL | 60 | | | 79 | 53 | 27 | 15 | 31 | 10 |
| 20 | 2 | UNL | 20 | | | 64 | 48 | 31 | 29 | 09 | 6 |
| 23 | 0 | UNL | 20 | | | 54 | 42 | 27 | 35 | 20 | 7 |
| **SEP 12** | | | | | | | | | | | |
| 02 | 0 | UNL | 20 | | | 53 | 42 | 28 | 38 | 22 | |
| 05 | 2 | UNL | 20 | | | 49 | 41 | 32 | 52 | 22 | |
| 08 | 10 | UNL | 45 | | | 55 | 45 | 34 | 45 | 22 | |
| 11 | 10 | UNL | 35 | | | 63 | 49 | 36 | 37 | 26 | 7 |
| 14 | 6 | UNL | 35 | | | 74 | 54 | 37 | 26 | 31 | 6 |
| 17 | 3 | UNL | 45 | | | 77 | 53 | 29 | 17 | 24 | 5 |
| 20 | 2 | UNL | 30 | | | 59 | 45 | 30 | 33 | 18 | 5 |
| 23 | 4 | UNL | 20 | | | 55 | 44 | 31 | 40 | 21 | 5 |
| **SEP 13** | | | | | | | | | | | |
| 02 | 6 | 250 | 20 | | | 54 | 44 | 32 | 43 | 19 | 4 |
| 05 | 5 | UNL | 20 | | | 50 | 42 | 32 | 50 | 19 | 6 |
| 08 | 1 | UNL | 35 | | | 58 | 46 | 34 | 41 | 23 | 9 |
| 11 | 3 | UNL | 35 | | | 64 | 50 | 36 | 36 | 28 | 9 |
| 14 | 5 | UNL | 40 | | | 75 | 53 | 32 | 21 | 29 | 8 |
| 17 | 2 | UNL | 50 | | | 74 | 52 | 31 | 21 | 27 | 14 |
| 20 | 2 | UNL | 20 | | | 61 | 49 | 37 | 41 | 25 | 12 |
| 23 | 2 | UNL | 20 | | | 55 | 46 | 37 | 51 | 24 | 12 |
| **SEP 14** | | | | | | | | | | | |
| 02 | 3 | UNL | 20 | | | 50 | 44 | 37 | 61 | 24 | 9 |
| 05 | 8 | 60 | 20 | | | 52 | 46 | 39 | 61 | 23 | 10 |
| 08 | 10 | 47 | 20 | | | 50 | 47 | 45 | 83 | 23 | 7 |
| 11 | 10 | 33 | 25 | | RW | 53 | 48 | 43 | 69 | 26 | 8 |
| 14 | 9 | 250 | 30 | | | 65 | 52 | 40 | 40 | 24 | 5 |
| 17 | 8 | 95 | 50 | | | 53 | 49 | 46 | 77 | 24 | 15 |
| 20 | 4 | UNL | 20 | | | 54 | 47 | 41 | 62 | 24 | 5 |
| 23 | 2 | UNL | 20 | | | 51 | 45 | 39 | 64 | 24 | 3 |
| **SEP 15** | | | | | | | | | | | |
| 02 | 1 | UNL | 20 | | | 48 | 44 | 39 | 71 | 24 | 7 |
| 05 | 1 | UNL | 20 | | | 40 | 39 | 37 | 89 | 24 | 4 |
| 08 | 0 | UNL | 60 | | | 50 | 46 | 41 | 71 | 25 | 5 |
| 11 | 0 | UNL | 50 | | | 63 | 52 | 43 | 48 | 30 | 8 |
| 14 | 0 | UNL | 50 | | | 70 | 52 | 35 | 28 | 30 | 7 |
| 17 | 9 | UNL | 50 | | | 71 | 53 | 37 | 29 | 27 | 5 |
| 20 | 6 | UNL | 20 | | | 61 | 47 | 33 | 35 | 21 | 5 |
| 23 | 7 | UNL | 20 | | | 48 | 42 | 35 | 61 | 28 | 4 |
| **SEP 16** | | | | | | | | | | | |
| 02 | 4 | UNL | 20 | | | 45 | 40 | 33 | 63 | 29 | 5 |
| 05 | 2 | UNL | 20 | | | 39 | 37 | 34 | 82 | 33 | 7 |
| 08 | 2 | UNL | 45 | | | 51 | 44 | 36 | 57 | 36 | 6 |
| 11 | 5 | UNL | 40 | | | 68 | 53 | 39 | 35 | 33 | 8 |
| 14 | 2 | UNL | 40 | | | 76 | 55 | 37 | 24 | 31 | 6 |
| 17 | 2 | UNL | 40 | | | 78 | 56 | 37 | 23 | 34 | 8 |
| 20 | 1 | UNL | 20 | | | 64 | 50 | 37 | 37 | 18 | 4 |
| 23 | 0 | UNL | 20 | | | 53 | 43 | 31 | 43 | 00 | 0 |
| **SEP 17** | | | | | | | | | | | |
| 02 | 0 | UNL | 20 | | | 46 | 40 | 33 | 61 | 30 | 5 |
| 05 | 0 | UNL | 20 | | | 41 | 37 | 31 | 68 | 35 | 4 |
| 08 | 0 | UNL | 60 | | | 53 | 44 | 35 | 51 | 36 | 3 |
| 11 | 0 | UNL | 50 | | | 77 | 55 | 36 | 23 | 33 | 5 |
| 14 | 0 | UNL | 40 | | | 85 | 57 | 32 | 15 | 32 | 8 |
| 17 | 5 | UNL | 40 | | | 81 | 54 | 30 | 16 | 24 | 11 |
| 20 | 0 | UNL | 20 | | | 71 | 51 | 32 | 24 | 24 | 12 |
| 23 | 0 | UNL | 20 | | | 60 | 46 | 31 | 34 | 24 | 8 |
| **SEP 18** | | | | | | | | | | | |
| 02 | 2 | UNL | 20 | | | 48 | 41 | 33 | 56 | 32 | 4 |
| 05 | 6 | UNL | 20 | | | 46 | 40 | 32 | 58 | 25 | 4 |
| 08 | 1 | UNL | 50 | | | 54 | 43 | 30 | 40 | 25 | 3 |
| 11 | 0 | UNL | 50 | | | 74 | 53 | 35 | 24 | 26 | 4 |
| 14 | 1 | UNL | 50 | | | 83 | 55 | 28 | 13 | 32 | 6 |
| 17 | 0 | UNL | 50 | | | 83 | 55 | 29 | 14 | 35 | 6 |
| 20 | 2 | UNL | 20 | | | 67 | 50 | 34 | 30 | 35 | 8 |
| 23 | 2 | UNL | 20 | | | 56 | 45 | 34 | 44 | 27 | 5 |

# MAXIMUM SHORT DURATION PRECIPITATION

| TIME PERIOD (MINUTES) | 5 | 10 | 15 | 20 | 30 | 45 | 60 | 80 | 100 | 120 | 150 | 180 |
|---|---|---|---|---|---|---|---|---|---|---|---|---|
| PRECIPITATION (INCHES) | 0.04 | 0.05 | 0.07 | 0.07 | 0.07 | 0.07 | 0.08 | 0.08 | 0.08 | 0.10 | 0.10 | 0.10 |
| ENDED: DATE | 29 | 29 | 29 | 29 | 29 | 29 | 29 | 29 | 29 | 29 | 29 | 29 |
| ENDED: TIME (LST) | 1538 | 1542 | 1546 | 1546 | 1546 | 1546 | 1559 | 1559 | 1559 | 1659 | 1659 | 1559 |

THE PRECIPITATION AMOUNTS FOR THE INDICATED TIME INTERVALS MAY OCCUR AT ANY TIME DURING THE MONTH. THE TIME INDICATED IS THE ENDING TIME OF THE INTERVAL. DATE AND TIME ARE NOT ENTERED FOR TRACE AMOUNTS.

# OBSERVATIONS AT 3-HOUR INTERVALS

SEP 1994 24156
POCATELLO, ID

| HOUR L.S.T. | SKY COVER (TENTHS) | CEILING IN HUNDREDS OF FEET | VISIBILITY WHOLE MILES | VISIBILITY 16THS MILE | WEATHER | TEMPERATURE AIR °F | TEMPERATURE WET BULB °F | TEMPERATURE DEW POINT °F | REL HUMIDITY % | WIND DIRECTION | WIND SPEED (KNOTS) |
|---|---|---|---|---|---|---|---|---|---|---|---|
| **SEP 19** | | | | | | | | | | | |
| 02 | 1 | UNL | 20 | | | 47 | 40 | 31 | 54 | 32 | 3 |
| 05 | 0 | UNL | 20 | | | 44 | 38 | 30 | 58 | 00 | 0 |
| 08 | 0 | UNL | 40 | | | 52 | 44 | 35 | 53 | 27 | 4 |
| 11 | 0 | UNL | 50 | | | 74 | 53 | 34 | 25 | 35 | 8 |
| 14 | 0 | UNL | 50 | | | 86 | 57 | 31 | 14 | 35 | 7 |
| 17 | 2 | UNL | 50 | | | 82 | 55 | 29 | 15 | 36 | 4 |
| 20 | 0 | UNL | 20 | | | 65 | 49 | 34 | 32 | 36 | 4 |
| 23 | 0 | UNL | 20 | | | 50 | 41 | 31 | 48 | 26 | 4 |
| **SEP 20** | | | | | | | | | | | |
| 0 | 0 | UNL | 20 | | | 45 | 38 | 29 | 54 | 27 | 4 |
| 0 | 0 | UNL | 20 | | | 44 | 37 | 27 | 51 | 24 | 5 |
| 0 | 0 | UNL | 50 | | | 52 | 42 | 31 | 45 | 29 | 5 |
| 0 | 0 | UNL | 50 | | | 70 | 52 | 36 | 29 | 28 | 8 |
| 0 | 0 | UNL | 50 | | | 80 | 54 | 31 | 17 | 29 | 5 |
| 0 | 0 | UNL | 50 | | | 81 | 53 | 25 | 13 | 00 | 0 |
| 0 | 2 | UNL | 20 | | | 69 | 52 | 36 | 30 | 23 | 9 |
| 0 | 0 | UNL | 20 | | | 60 | 50 | 40 | 48 | 24 | 7 |
| **SEP 21** | | | | | | | | | | | |
| 0 | 0 | UNL | 20 | | | 48 | 44 | 39 | 71 | 31 | 4 |
| 0 | 0 | UNL | 20 | | | 48 | 43 | 38 | 69 | 24 | 8 |
| 0 | 0 | UNL | 45 | | | 51 | 46 | 40 | 66 | 26 | 4 |
| 0 | 1 | UNL | 25 | | | 67 | 52 | 38 | 35 | 02 | 17 |
| 0 | 0 | UNL | 40 | | | 72 | 53 | 36 | 27 | 05 | 12 |
| 0 | 0 | UNL | 60 | | | 72 | 51 | 30 | 21 | 04 | 11 |
| 0 | 0 | UNL | 20 | | | 56 | 42 | 24 | 29 | 03 | 6 |
| 0 | 0 | UNL | 20 | | | 47 | 38 | 27 | 46 | 06 | 6 |
| **SEP 22** | | | | | | | | | | | |
| 02 | 0 | UNL | 20 | | | 40 | 32 | 20 | 45 | 06 | 8 |
| 05 | 2 | UNL | 20 | | | 34 | 29 | 20 | 57 | 19 | 6 |
| 08 | 8 | UNL | 30 | | | 49 | 37 | 21 | 33 | 11 | 6 |
| 11 | 6 | UNL | 30 | | | 66 | 44 | 15 | 14 | 03 | 6 |
| 14 | 6 | UNL | 30 | | | 76 | 48 | 11 | 8 | 36 | 4 |
| 17 | 2 | UNL | 60 | | | 76 | 49 | 15 | 10 | 03 | 5 |
| 20 | 0 | UNL | 20 | | | 57 | 39 | 13 | 17 | 17 | 5 |
| 23 | 0 | UNL | 20 | | | 47 | 36 | 18 | 31 | 24 | 3 |
| **SEP 23** | | | | | | | | | | | |
| 0 | 0 | UNL | 20 | | | 42 | 32 | 15 | 33 | 00 | 0 |
| 0 | 0 | UNL | 20 | | | 34 | 30 | 23 | 64 | 21 | 3 |
| 0 | 0 | UNL | 30 | | | 48 | 37 | 21 | 34 | 00 | 0 |
| 0 | 0 | UNL | 20 | | | 70 | 47 | 19 | 14 | 27 | 4 |
| 0 | 0 | UNL | 20 | | | 80 | 53 | 27 | 14 | 35 | 4 |
| 0 | 0 | UNL | 50 | | | 82 | 54 | 27 | 13 | 22 | 3 |
| 0 | 0 | UNL | 20 | | | 65 | 46 | 25 | 22 | 12 | 4 |
| 0 | 0 | UNL | 20 | | | 52 | 41 | 26 | 37 | 00 | 0 |
| **SEP 24** | | | | | | | | | | | |
| 0 | 0 | UNL | 20 | | | 44 | 36 | 25 | 47 | 00 | 0 |
| 0 | 0 | UNL | 20 | | | 45 | 38 | 28 | 52 | 01 | 3 |
| 0 | 0 | UNL | 40 | | | 46 | 38 | 28 | 50 | 00 | 0 |
| 0 | 0 | UNL | 20 | | | 73 | 52 | 31 | 21 | 34 | 4 |
| 0 | 0 | UNL | 20 | | | 88 | 57 | 28 | 11 | 09 | 5 |
| 0 | 0 | UNL | 20 | | | 87 | 55 | 24 | 10 | 35 | 9 |
| 0 | 0 | UNL | 20 | | | 64 | 46 | 24 | 22 | 15 | 4 |
| 0 | 0 | UNL | 20 | | | 53 | 44 | 33 | 47 | 33 | 8 |
| **SEP 25** | | | | | | | | | | | |
| 02 | 0 | UNL | 20 | | | 46 | 37 | 25 | 44 | 17 | 3 |
| 05 | 0 | UNL | 20 | | | 44 | 36 | 24 | 45 | 00 | 0 |
| 08 | 0 | UNL | 30 | | | 50 | 41 | 30 | 46 | 00 | 0 |
| 11 | 0 | UNL | 20 | | | 78 | 54 | 31 | 18 | 03 | 5 |
| 14 | 0 | UNL | 30 | | | 87 | 56 | 28 | 12 | 32 | 10 |
| 17 | 0 | UNL | 70 | | | 86 | 55 | 25 | 11 | 32 | 8 |
| 20 | 0 | UNL | 20 | | | 69 | 48 | 23 | 18 | 14 | 4 |
| 23 | 0 | UNL | 20 | | | 58 | 44 | 27 | 31 | 19 | 7 |
| **SEP 26** | | | | | | | | | | | |
| 0 | 0 | UNL | 20 | | | 49 | 38 | 24 | 38 | 34 | 8 |
| 0 | 0 | UNL | 20 | | | 43 | 35 | 23 | 45 | 17 | 5 |
| 8 | 0 | UNL | 20 | | | 53 | 41 | 27 | 37 | 00 | 0 |
| 4 | 0 | UNL | 12 | | | 73 | 51 | 29 | 20 | 24 | 10 |
| 2 | 0 | UNL | 12 | | | 79 | 53 | 29 | 16 | 23 | 14 |
| 10 | 0 | UNL | 10 | | | 80 | 53 | 26 | 14 | 24 | 9 |
| 10 | 0 | UNL | 15 | | | 67 | 48 | 28 | 23 | 20 | 9 |
| 3 | 0 | UNL | 15 | | | 55 | 43 | 29 | 37 | 20 | 6 |
| **SEP 27** | | | | | | | | | | | |
| 1 | 0 | UNL | 15 | | | 47 | 39 | 29 | 50 | 35 | 5 |
| 0 | 0 | UNL | 15 | | | 43 | 37 | 28 | 56 | 28 | 4 |
| 0 | 0 | UNL | 15 | | | 49 | 41 | 32 | 52 | 09 | 4 |
| 1 | 0 | UNL | 15 | | | 74 | 52 | 30 | 20 | 00 | 0 |
| 1 | 0 | UNL | 30 | | | 83 | 55 | 28 | 13 | 22 | 7 |
| 2 | 0 | UNL | 15 | | | 84 | 55 | 27 | 12 | 30 | 5 |
| 2 | 0 | UNL | 7 | | | 68 | 48 | 27 | 21 | 18 | 5 |
| 0 | 0 | UNL | 15 | | | 56 | 43 | 27 | 33 | 00 | 0 |
| **SEP 28** | | | | | | | | | | | |
| 02 | 0 | UNL | 15 | | | 48 | 39 | 28 | 46 | 04 | 5 |
| 05 | 0 | UNL | 10 | | | 42 | 37 | 31 | 65 | 24 | 4 |
| 08 | 1 | UNL | 25 | | | 50 | 42 | 32 | 50 | 35 | 4 |
| 11 | 4 | UNL | 30 | | | 75 | 53 | 33 | 22 | 06 | 4 |
| 14 | 1 | UNL | 30 | | | 86 | 57 | 33 | 15 | 21 | 4 |
| 17 | 9 | 240 | 40 | | | 83 | 54 | 27 | 13 | 17 | 13 |
| 20 | 10 | 230 | 20 | | | 77 | 51 | 24 | 14 | 17 | 12 |
| 23 | 10 | 230 | 10 | | | 70 | 53 | 38 | 31 | 27 | 6 |
| **SEP 29** | | | | | | | | | | | |
| 10 | 80 | 20 | | | | 58 | 56 | 55 | 90 | 26 | 5 |
| 10 | 60 | 15 | | | RW | 57 | 56 | 55 | 93 | 20 | 5 |
| 10 | 85 | 35 | | | | 58 | 56 | 55 | 90 | 20 | 11 |
| 10 | 85 | 40 | | | | 64 | 59 | 55 | 73 | 19 | 13 |
| 10 | 200 | 40 | | | | 69 | 58 | 51 | 53 | 17 | 16 |
| 10 | 65 | 15 | | | RW | 55 | 54 | 53 | 93 | 25 | 9 |
| 10 | 95 | 20 | | | | 53 | 52 | 51 | 93 | 32 | 4 |
| 10 | 49 | 20 | | | | 54 | 52 | 51 | 90 | 17 | 3 |
| **SEP 30** | | | | | | | | | | | |
| 10 | 20 | 15 | | | R | 53 | 52 | 51 | 93 | 00 | 0 |
| 10 | 27 | 15 | | | | 52 | 51 | 50 | 93 | 00 | 0 |
| 10 | 50 | 20 | | | L | 52 | 51 | 50 | 93 | 06 | 4 |
| 10 | 16 | 7 | | | R | 54 | 52 | 51 | 90 | 05 | 4 |
| 10 | 17 | 10 | | | R | 57 | 54 | 52 | 84 | 00 | 0 |
| 10 | 130 | 10 | | | | 56 | 54 | 52 | 87 | 06 | 4 |
| 10 | 60 | 15 | | | | 52 | 51 | 51 | 96 | 06 | 3 |
| 10 | 16 | 3 | | | F | 50 | 50 | 50 | 100 | 26 | 3 |

## WEATHER CODES AND NOTES

| | | | | | |
|---|---|---|---|---|---|
| & | TORNADO | S | SNOW | IF | ICE FOG |
| &C | FUNNEL CLOUD | SW | SNOW SHOWERS | GF | GROUND FOG |
| &W | WATER SPOUT | SG | SNOW GRAINS | BD | BLOWING DUST |
| T | THUNDERSTORM | SP | SNOW PELLETS | BN | BLOWING SAND |
| R | RAIN | IC | ICE CRYSTALS | BS | BLOWING SNOW |
| RW | RAIN SHOWERS | IP | ICE PELLETS | BY | BLOWING SPRAY |
| ZR | FREEZING RAIN | IPW | ICE PELLET SHOWERS | K | SMOKE |
| L | DRIZZLE | A | HAIL | H | HAZE |
| ZL | FREEZING DRIZZLE | F | FOG | D | DUST |

CEILING: UNL INDICATES UNLIMITED
WIND DIRECTION: DIRECTIONS ARE THOSE FROM WHICH THE WIND IS BLOWING, INDICATED IN TENS OF DEGREES FROM TRUE NORTH: I.E. 09 FOR
EAST, 18 FOR SOUTH, 27 FOR WEST. AN ENTRY OF 00 INDICATES CALM.
SPEED: THE OBSERVED AVERAGE ONE-MINUTE VALUE (MPH=KNOTS X 1.15).

## SUMMARY BY HOURS

| HOUR L.S.T. | AVERAGES SKY COVER (TENTHS) | AVERAGES STATION PRESSURE (INCHES) | AVERAGES TEMPERATURE AIR °F | AVERAGES TEMPERATURE WET BULB °F | AVERAGES TEMPERATURE DEW POINT °F | AVERAGES REL HUMIDITY % | AVERAGES SPEED (MPH) | RESULTANT WIND DIRECTION | RESULTANT WIND SPEED (MPH) |
|---|---|---|---|---|---|---|---|---|---|
| 02 | 2 | 25.530 | 51 | 42 | 32 | 51 | 6.2 | 27 | 2.3 |
| 05 | 3 | 25.540 | 47 | 40 | 33 | 59 | 5.7 | 23 | 4.2 |
| 08 | 3 | 25.570 | 54 | 45 | 34 | 49 | 6.1 | 23 | 3.3 |
| 11 | 3 | 25.565 | 71 | 52 | 35 | 30 | 9.6 | 28 | 4.4 |
| 14 | 3 | 25.520 | 79 | 54 | 32 | 21 | 10.0 | 27 | 6.2 |
| 17 | 4 | 25.500 | 78 | 54 | 30 | 22 | 10.2 | 26 | 5.7 |
| 20 | 3 | 25.500 | 65 | 48 | 31 | 31 | 7.3 | 20 | 3.9 |
| 23 | 2 | 25.520 | 56 | 45 | 32 | 42 | 5.7 | 23 | 4.3 |

"HAPPY HOLIDAYS" AUL 288 12/20/94 PM

NATIONAL CLIMATIC DATA CENTER
ROOM 120
151 PATTON AVENUE
ASHEVILLE, NORTH CAROLINA 28801-5001

OFFICIAL BUSINESS
PENALTY FOR PRIVATE USE $300

FIRST CLASS
POSTAGE AND FEES PAID
NOAA
PERMIT G-19

LCD-10-24156-PD-9509

33766
J R SIMPLOT COMPANY
ATTN: J F COCHRANE - PO #35724
PO BOX 912
POCATELLO ID 83204

HOURLY PRECIPITATION (WATER EQUIVALENT IN INCHES)

SEP 1994 24156
POCATELLO, ID
USCOM - NOAA - ASHEVILLE, NC 125

| DATE | A.M. HOUR ENDING AT | | | | | | | | | | | | P.M. HOUR ENDING AT | | | | | | | | | | | | DATE |
|---|---|---|---|---|---|---|---|---|---|---|---|---|---|---|---|---|---|---|---|---|---|---|---|---|---|
| | 1 | 2 | 3 | 4 | 5 | 6 | 7 | 8 | 9 | 10 | 11 | 12 | 1 | 2 | 3 | 4 | 5 | 6 | 7 | 8 | 9 | 10 | 11 | 12 | |
| 01 | | | | | | | | | | | | | | | | | | | | | | | | | 01 |
| 02 | | | | | | | | | | | | | | | | | | | | | | | | | 02 |
| 03 | | | | | | T | T | | | | | | | | | | | | | | | | | | 03 |
| 04 | | | | | | | | | | | | | | | | | | | | | | | | | 04 |
| 05 | | | | | | | | | | | | | | | | | | | | | | | | | 05 |
| 06 | | | | | | | | | | | | | | | | | | | | | | | | | 06 |
| 07 | | | | | | | | | | | | | | | | | | | | | | | | | 07 |
| 08 | | | | | | | | | | | | | | | | | | | | | | | | | 08 |
| 09 | | | | | | | | | | | | | | | | | | | | | | | | | 09 |
| 10 | | | | | | | | | | | | | | | | | | | | | | | | | 10 |
| 11 | | | | | | | | | | | | | | | | | | | | | | | | | 11 |
| 12 | | | | | | | | | | | | | | | | | | | | | | | | | 12 |
| 13 | | | | | | | | | | | | | | | | | | | | | | | | | 13 |
| 14 | | | | | | | | T | T | | T | 0.01 | | | | T | 0.01 | | | | | | | | 14 |
| 15 | | | | | | | | | | | | | | | | | | | | | | | | | 15 |
| 16 | | | | | | | | | | | | | | | | | | | | | | | | | 16 |
| 17 | | | | | | | | | | | | | | | | | | | | | | | | | 17 |
| 18 | | | | | | | | | | | | | | | | | | | | | | | | | 18 |
| 19 | | | | | | | | | | | | | | | | | | | | | | | | | 19 |
| 20 | | | | | | | | | | | | | | | | | | | | | | | | | 20 |
| 21 | | | | | | | | | | | | | | | | | | | | | | | | | 21 |
| 22 | | | | | | | | | | | | | | | | | | | | | | | | | 22 |
| 23 | | | | | | | | | | | | | | | | | | | | | | | | | 23 |
| 24 | | | | | | | | | | | | | | | | | | | | | | | | | 24 |
| 25 | | | | | | | | | | | | | | | | | | | | | | | | | 25 |
| 26 | | | | | | | | | | | | | | | | | | | | | | | | | 26 |
| 27 | | | | | | | | | | | | | | | | | | | | | | | | | 27 |
| 28 | | | | | | | | | | | | | | | | | | | | | | | | | 28 |
| 29 | 0.02 | 0.01 | T | 0.02 | 0.03 | 0.03 | T | | | | | | T | 0.02 | | 0.08 | 0.02 | T | T | | | | | T | 29 |
| 30 | 0.01 | 0.02 | T | T | T | | T | T | 0.01 | 0.02 | 0.02 | 0.02 | 0.02 | 0.01 | T | T | | | | | | | | | 30 |

OCT 1994
POCATELLO, ID
NAT'L WEA SER OFC
20369 THUNDERBOLT STREET-C

INQUIRIES/COMMENTS CALL
(704) 271-4800 VOICE
271-4010 TDD/271-4876 FAX

MUNICIPAL AIRPORT

ISSN # 0198-1811

# LOCAL CLIMATOLOGICAL DATA

## MONTHLY SUMMARY

LATITUDE 42° 55'N LONGITUDE 112° 36'W ELEVATION (GROUND) 4454 FEET TIME ZONE MOUNTAIN 24156

OCT 1994
POCATELLO, ID

| | TEMPERATURE °F | | | | | DEGREE DAYS BASE 65 °F | | WEATHER TYPES | SNOW/ICE ON GRD AT 0500 (IN.) | PRECIPITATION (INCHES) | | AVERAGE STATION PRESSURE (INCHES OF Hg) ELEV. 4478 (FT.MSL) | WIND (M.P.H.) | | | | | | SUNSHINE | | SKY COVER TENTHS | |
|---|---|---|---|---|---|---|---|---|---|---|---|---|---|---|---|---|---|---|---|---|---|---|
| | | | | | | | | | | | | | | | | PEAK GUST | | FASTEST 2-MIN | | | | |
| DATE | MAXIMUM | MINIMUM | AVERAGE | DEPARTURE FROM NORMAL | AVERAGE DEW POINT | HEATING | COOLING | 1 FOG 2 HEAVY FOG 3 THUNDERSTORMS 4 ICE PELLETS 5 HAIL 6 GLAZE 7 DUSTSTORM 8 SMOKE, HAZE 9 BLOWING SNOW | | WATER EQUIVALENT | SNOW ICE PELLETS | | RESULTANT DIR | RESULTANT SPEED | AVERAGE SPEED | SPEED | DIR | SPEED | DIR | MINUTES | PERCENT POSSIBLE | SUNRISE TO SUNSET | MIDNIGHT TO MIDNIGHT |
| 1 | 2 | 3 | 4 | 5 | 6 | 7A | 7B | 8 | 9 | 10 | 11 | 12 | 13 | 14 | 15 | 16 | 17 | 18 | 19 | 20 | 21 | 22 | 23 |
| 01 | 65 | 47 | 56 | 2 | 49 | 9 | 0 | 2 | 0 | T | 0.0 | 25.420 | 22 | 7.0 | 8.1 | 30 | SW | 21 | 24 | 496 | 70 | 9 | 9 |
| 02 | 63 | 37 | 50 | -3 | 37 | 15 | 0 | | 0 | 0.07 | 0.0 | 25.330 | 27 | 10.3 | 15.3 | 44 | W | 29 | 26 | 612 | 87 | 4 | 5 |
| 03 | 47 | 32 | 40 | -13 | 32 | 25 | 0 | | 0 | 0.01 | 0.0 | 25.420 | 02 | 9.6 | 10.4 | 23 | N | 16 | 35 | 219 | 31 | 10 | 9 |
| 04 | 52 | 33 | 43 | -9 | 42 | 22 | 0 | 1 3 | 0 | 0.37 | 0.0 | 25.460 | 05 | 5.8 | 9.4 | 32 | E | 18 | 09 | 0 | 0 | 10 | 10 |
| 05 | 54 | 43 | 49 | -3 | 45 | 16 | 0 | 1 3 | 0 | 0.23 | 0.0 | 25.230 | 22 | 6.2 | 11.5 | 40 | SE | 22 | 12 | 87 | 13 | 10 | 10 |
| 06 | 57 | 45 | 51 | -1 | 41 | 14 | 0 | | 0 | 0.02 | 0.0 | 25.415 | 23 | 13.5 | 13.9 | 28 | SW | 20 | 23 | 375 | 54 | 10 | 9 |
| 07 | 61 | 41 | 51 | 0 | 36 | 14 | 0 | | 0 | 0.00 | 0.0 | 25.630 | 23 | 8.7 | 9.9 | 21 | SW | 15 | 23 | 582 | 84 | 3 | 3 |
| 08 | 67 | 32 | 50 | -1 | 34 | 15 | 0 | | 0 | 0.00 | 0.0 | 25.725 | 23 | 2.4 | 6.0 | 20 | S | 14 | 18 | 685 | 100 | 1 | 1 |
| 09 | 74 | 33 | 54 | 3 | 34 | 11 | 0 | | 0 | 0.00 | 0.0 | 25.620 | 16 | 1.8 | 8.3 | 24 | S | 16 | 18 | 683 | 100 | 1 | 2 |
| 10 | 76* | 34 | 55 | 5 | 32 | 10 | 0 | | 0 | 0.00 | 0.0 | 25.460 | 18 | 3.5 | 11.1 | 31 | S | 22 | 18 | 612 | 90 | 8 | 7 |
| 11 | 65 | 41 | 53 | 3 | 36 | 12 | 0 | | 0 | T | 0.0 | 25.440 | 22 | 9.6 | 13.1 | 46 | W | 25 | 18 | 378 | 56 | 7 | 6 |
| 12 | 67 | 32 | 50 | 0 | 35 | 15 | 0 | | 0 | 0.00 | 0.0 | 25.420 | 04 | 6.5 | 8.1 | 25 | E | 15 | 02 | 446 | 66 | 9 | 7 |
| 13 | 60 | 40 | 50 | 1 | 38 | 15 | 0 | | 0 | T | 0.0 | 25.320 | 22 | 6.6 | 8.6 | 20 | SW | 15 | 22 | 154 | 23 | 10 | 10 |
| 14 | 59 | 36 | 48 | -1 | 39 | 17 | 0 | 1 | 0 | 0.36 | 0.0 | 25.070 | 22 | 9.7 | 12.1 | 37 | S | 25 | 18 | 10 | 1 | 10 | 9 |
| 15 | 42 | 34 | 38 | -10 | 34 | 27 | 0 | 1 | 0 | 0.18 | T | 25.120 | 26 | 7.1 | 11.7 | 25 | N | 17 | 23 | 0 | 0 | 10 | 10 |
| 16 | 51 | 36 | 44 | -4 | 35 | 21 | 0 | | 0 | T | 0.0 | 25.400 | 25 | 4.5 | 7.7 | 22 | SW | 12 | 23 | 308 | 46 | 8 | 7 |
| 17 | 51 | 37 | 44 | -4 | 37 | 21 | 0 | | 0 | T | 0.0 | 25.400 | 22 | 12.5 | 12.9 | 26 | SW | 20 | 25 | 47 | 7 | 9 | 9 |
| 18 | 56 | 36 | 46 | -1 | 38 | 19 | 0 | | 0 | 0.09 | 0.0 | 25.450 | 19 | 5.4 | 7.7 | 18 | S | 14 | 23 | 302 | 46 | 7 | 6 |
| 19 | 62 | 32 | 47 | 0 | 35 | 18 | 0 | | 0 | 0.00 | 0.0 | 25.505 | 19 | 5.3 | 11.7 | 28 | S | 20 | 17 | 522 | 80 | 3 | 2 |
| 20 | 61 | 32 | 47 | 0 | 34 | 18 | 0 | | 0 | 0.00 | 0.0 | 25.520 | 24 | 7.6 | 11.3 | 32 | SW | 21 | 25 | 597 | 92 | 4 | 4 |
| 21 | 59 | 39 | 49 | 3 | 32 | 16 | 0 | | 0 | 0.00 | 0.0 | 25.500 | 23 | 14.8 | 15.4 | 38 | SW | 25 | 24 | 353 | 54 | 7 | 5 |
| 22 | 53 | 30 | 42 | -4 | 27 | 23 | 0 | | 0 | 0.00 | 0.0 | 25.590 | 23 | 6.9 | 9.1 | 20 | W | 15 | 25 | 647 | 100 | 0 | 1 |
| 23 | 61 | 26 | 44 | -1 | 27 | 21 | 0 | | 0 | 0.00 | 0.0 | 25.590 | 25 | 2.9 | 6.3 | 16 | W | 13 | 28 | 644 | 100 | 1 | 3 |
| 24 | 64 | 26 | 45 | 0 | 29 | 20 | 0 | 8 | 0 | 0.00 | 0.0 | 25.620 | 04 | 1.2 | 3.7 | 10 | NW | 7 | 29 | 641 | 100 | 2 | 1 |
| 25 | 68 | 25 | 47 | 2 | 27 | 18 | 0 | | 0 | 0.00 | 0.0 | 25.580 | 02 | 2.3 | 4.5 | 12 | NE | 9 | 34 | 610 | 96 | 1 | 1 |
| 26 | 64 | 29 | 47 | 3 | 29 | 18 | 0 | | 0 | 0.00 | 0.0 | 25.510 | 24 | 6.1 | 10.0 | 25 | SW | 21 | 22 | 73 | 11 | 10 | 8 |
| 27 | 69 | 48 | 59* | 15 | 28 | 6 | 0 | | 0 | 0.00 | 0.0 | 25.430 | 22 | 14.6 | 15.4 | 40 | SW | 28 | 24 | 393 | 62 | 10 | 10 |
| 28 | 62 | 32 | 47 | 4 | 27 | 18 | 0 | | 0 | T | 0.0 | 25.460 | 24 | 19.9 | 20.8 | 47 | SW | 32 | 24 | 453 | 72 | 5 | 6 |
| 29 | 48 | 22 | 35 | -8 | 20 | 30 | 0 | | 0 | 0.00 | 0.0 | 25.600 | 23 | 6.6 | 7.8 | 17 | SW | 14 | 23 | 627 | 100 | 0 | 0 |
| 30 | 48 | 17* | 33* | -10 | 18 | 32 | 0 | | 0 | 0.00 | 0.0 | 25.620 | 23 | 10.1 | 10.6 | 29 | SW | 18 | 24 | 603 | 96 | 3 | 3 |
| 31 | 53 | 31 | 42 | 0 | 17 | 23 | 0 | | 0 | 0.00 | 0.0 | 25.540 | 18 | 19.0 | 19.6 | 39 | S | 26 | 18 | 10 | 2 | 10 | 7 |
| SUM | 1839 | 1058 | | | | TOTAL 559 | TOTAL 0 | NUMBER OF DAYS | | TOTAL 1.33 | TOTAL T | FOR THE MONTH : 25.465 | 23 | 5.9 | 10.7 | 47 | SW | 32 | 24 | TOTAL 12169 | % FOR MONTH | SUN 192 | SUN 180 |
| AVG. | 59.3 | AVG. 34.1 | AVG. 46.7 | DEP. -1.3 | AVG. 32.9 | DEP. 32 | DEP. 0 | PRECIPITATION ≥ .01 INCH | 8 | DEP. 0.42 | | | | | | DATE:28 | | DATE:28 | | POSS 20543 | 59 | AVG. 6.2 | AVG. 5.8 |

| NUMBER OF DAYS | | | | SEASON TO DATE TOTAL | SEASON TO DATE TOTAL | SNOW, ICE PELLETS | | GREATEST IN 24 HOURS AND DATES | | | | GREATEST DEPTH ON GROUND OF SNOW, ICE PELLETS OR ICE AND DATE | |
|---|---|---|---|---|---|---|---|---|---|---|---|---|---|
| MAXIMUM TEMP. ≥ 90° | MAXIMUM TEMP. ≤ 32° | MINIMUM TEMP. ≤ 32° | MINIMUM TEMP. ≤ 0° | DEP. 681 | DEP. 533 | ≥ 1.0 INCH | 0 | PRECIPITATION | | SNOW, ICE PELLETS | | | |
| | | | | | | THUNDERSTORMS | 2 | 0.46 | 04-05 | trace | 15 | 0 | |
| 0 | 0 | 14 | 0 | -102 | 112 | HEAVY FOG | 1 | | | | | | |

CLEAR 10 PARTLY CLOUDY 6 CLOUDY 15

* EXTREME FOR THE MONTH - LAST OCCURRENCE IF MORE THAN ONE.
T TRACE AMOUNT.
+ ALSO ON EARLIER DATE(S).
HEAVY FOG: VISIBILITY 1/4 MILE OR LESS.
BLANK ENTRIES DENOTE MISSING OR UNREPORTED DATA.

DATA IN COLS 6 AND 12-15 ARE BASED ON 21 OR MORE OBSERVATIONS AT HOURLY INTERVALS. RESULTANT WIND IS THE VECTOR SUM OF WIND SPEEDS AND DIRECTIONS DIVIDED BY THE NUMBER OF OBSERVATIONS.
COLS 16 & 17 : PEAK GUST - HIGHEST INSTANTANEOUS WIND SPEED.
ONE OF TWO WINDS IS GIVEN UNDER COLS 18 & 19 : FASTEST MILE- HIGHEST RECORDED SPEED FOR WHICH A MILE OF WIND PASSES STATION (DIRECTION IN COMPASS POINTS). FASTEST OBSERVED ONE MINUTE WIND - HIGHEST ONE MINUTE SPEED (DIRECTION IN TENS OF DEGREES).
ERRORS WILL BE CORRECTED IN SUBSEQUENT PUBLICATIONS.

I CERTIFY THAT THIS IS AN OFFICIAL PUBLICATION OF THE NATIONAL OCEANIC AND ATMOSPHERIC ADMINISTRATION, AND IS COMPILED FROM RECORDS ON FILE AT THE NATIONAL CLIMATIC DATA CENTER.

Kenneth D Hadeen
DIRECTOR
NATIONAL CLIMATIC DATA CENTER

noaa NATIONAL OCEANIC AND ATMOSPHERIC ADMINISTRATION — NATIONAL ENVIRONMENTAL SATELLITE, DATA, AND INFORMATION SERVICE — NATIONAL CLIMATIC DATA CENTER ASHEVILLE, NORTH CAROLINA

# OBSERVATIONS AT 3-HOUR INTERVALS

OCT 1994 24156
POCATELLO, ID

| HOUR L.S.T. | SKY COVER (TENTHS) | CEILING IN HUNDREDS OF FEET | VISIBILITY WHOLE MILES | VISIBILITY 16THS MILE | WEATHER | TEMPERATURE AIR °F | TEMPERATURE WET BULB °F | TEMPERATURE DEW POINT °F | REL HUMIDITY % | WIND DIRECTION | WIND SPEED (KNOTS) |
|---|---|---|---|---|---|---|---|---|---|---|---|
| **OCT 01** | | | | | | | | | | | |
| 02 | 10 | 24 | 0 | 12 | F | 49 | 49 | 49 | 100 | 00 | 0 |
| 05 | 10 | 3 | 2 | | F | 49 | 49 | 49 | 100 | 20 | 5 |
| 08 | 10 | 90 | 20 | | | 50 | 50 | 49 | 96 | 22 | 4 |
| 11 | 10 | 39 | 30 | | | 57 | 53 | 49 | 75 | 23 | 7 |
| 14 | 7 | 90 | 30 | | | 63 | 55 | 49 | 61 | 22 | 5 |
| 17 | 8 | UNL | 40 | | | 64 | 55 | 49 | 58 | 23 | 7 |
| 20 | 10 | 100 | 20 | | | 59 | 53 | 49 | 70 | 18 | 10 |
| 23 | 10 | 130 | 20 | | | 59 | 51 | 45 | 60 | 24 | 18 |
| **OCT 02** | | | | | | | | | | | |
| 02 | 6 | 120 | 20 | | | 53 | 50 | 47 | 80 | 25 | 8 |
| 05 | 4 | UNL | 20 | | | 50 | 48 | 46 | 86 | 25 | 16 |
| 08 | 5 | UNL | 30 | | | 51 | 46 | 42 | 72 | 22 | 8 |
| 11 | 2 | UNL | 40 | | | 58 | 47 | 37 | 46 | 26 | 19 |
| 14 | 6 | 250 | 20 | | | 60 | 46 | 31 | 34 | 26 | 20 |
| 17 | 3 | UNL | 10 | | | 58 | 40 | 12 | 16 | 28 | 17 |
| 20 | 8 | 55 | 20 | | | 40 | 38 | 36 | 86 | 04 | 10 |
| 23 | 10 | 14 | 5 | | R | 38 | 37 | 36 | 93 | 02 | 9 |
| **OCT 03** | | | | | | | | | | | |
| 02 | 10 | 18 | 10 | | R | 37 | 35 | 33 | 86 | 35 | 9 |
| 05 | 10 | 28 | 20 | | | 35 | 33 | 30 | 82 | 35 | 8 |
| 08 | 10 | 40 | 60 | | | 37 | 34 | 31 | 79 | 35 | 8 |
| 11 | 10 | 27 | 50 | | | 42 | 36 | 29 | 60 | 02 | 12 |
| 14 | 10 | 19 | 20 | | RW | 42 | 39 | 35 | 76 | 02 | 9 |
| 17 | 8 | 90 | 35 | | | 45 | 40 | 35 | 68 | 04 | 10 |
| 20 | UNL | UNL | 20 | | | 36 | 35 | 34 | 93 | 04 | 7 |
| 23 | UNL | UNL | 20 | | | 33 | 33 | 32 | 96 | 05 | 7 |
| **OCT 04** | | | | | | | | | | | |
| 02 | 10 | 250 | 20 | | | 35 | 35 | 34 | 96 | 06 | 12 |
| 05 | 10 | 1 | 3 | | F | 35 | 35 | 34 | 96 | 10 | 7 |
| 08 | 10 | 60 | 25 | | | 38 | 37 | 36 | 93 | 03 | 9 |
| 11 | 10 | 55 | 30 | | R | 45 | 44 | 42 | 89 | 11 | 10 |
| 14 | 10 | 46 | 8 | | R | 49 | 48 | 47 | 93 | 27 | 9 |
| 17 | 10 | 65 | 10 | | | 50 | 50 | 49 | 96 | 02 | 7 |
| 20 | 10 | 120 | 20 | | | 47 | 47 | 46 | 96 | 02 | 6 |
| 23 | 10 | 27 | 5 | | TRW | 47 | 47 | 46 | 96 | 28 | 15 |
| **OCT 05** | | | | | | | | | | | |
| 02 | 9 | 80 | 15 | | TRW | 50 | 48 | 46 | 86 | 27 | 7 |
| 05 | 9 | 70 | 15 | | | 47 | 46 | 45 | 93 | 11 | 6 |
| 08 | 10 | 35 | 4 | | RWF | 49 | 47 | 45 | 86 | 19 | 11 |
| 11 | 10 | 75 | 20 | | | 51 | 48 | 46 | 83 | 24 | 5 |
| 14 | 10 | 36 | 20 | | | 52 | 50 | 48 | 86 | 24 | 8 |
| 17 | 10 | 40 | 15 | | RW | 48 | 47 | 46 | 93 | 22 | 12 |
| 20 | 10 | 60 | 20 | | | 48 | 46 | 45 | 89 | 23 | 12 |
| 23 | 10 | 13 | 20 | | | 47 | 45 | 43 | 86 | 24 | 12 |
| **OCT 06** | | | | | | | | | | | |
| 02 | 10 | 15 | 20 | | | 46 | 44 | 41 | 83 | 23 | 14 |
| 05 | 10 | 12 | 20 | | | 46 | 44 | 42 | 86 | 23 | 14 |
| 08 | 10 | 11 | 10 | | RW | 45 | 44 | 42 | 89 | 22 | 12 |
| 11 | 10 | 55 | 15 | | RW | 46 | 42 | 37 | 71 | 24 | 13 |
| 14 | 10 | UNL | 35 | | | 55 | 47 | 40 | 57 | 25 | 16 |
| 17 | 8 | 120 | 30 | | | 57 | 48 | 40 | 53 | 24 | 12 |
| 20 | 10 | 55 | 20 | | | 52 | 46 | 41 | 66 | 20 | 6 |
| 23 | 3 | UNL | 20 | | | 48 | 44 | 40 | 74 | 21 | 8 |
| **OCT 07** | | | | | | | | | | | |
| 02 | 10 | 90 | 20 | | | 46 | 41 | 36 | 68 | 21 | 8 |
| 05 | 8 | 55 | 20 | | | 43 | 40 | 36 | 76 | 21 | 8 |
| 08 | 8 | 55 | 50 | | | 46 | 41 | 35 | 66 | 22 | 9 |
| 11 | 5 | UNL | 40 | | | 54 | 46 | 37 | 53 | 24 | 12 |
| 14 | 0 | UNL | 40 | | | 59 | 47 | 35 | 41 | 28 | 7 |
| 17 | 0 | UNL | 45 | | | 60 | 48 | 37 | 43 | 24 | 9 |
| 20 | 0 | UNL | 20 | | | 47 | 42 | 36 | 66 | 19 | 7 |
| 23 | 0 | UNL | 20 | | | 42 | 39 | 35 | 76 | 20 | 7 |
| **OCT 08** | | | | | | | | | | | |
| 02 | 0 | UNL | 20 | | | 40 | 36 | 31 | 70 | 19 | 5 |
| 05 | 0 | UNL | 20 | | | 33 | 32 | 31 | 92 | 00 | 0 |
| 08 | 0 | UNL | 40 | | | 40 | 37 | 34 | 79 | 19 | 3 |
| 11 | 0 | UNL | 40 | | | 59 | 48 | 36 | 42 | 01 | 4 |
| 14 | 1 | UNL | 60 | | | 66 | 49 | 33 | 29 | 28 | 8 |
| 17 | 5 | UNL | 70 | | | 66 | 49 | 31 | 27 | 30 | 6 |
| 20 | 2 | UNL | 20 | | | 58 | 47 | 35 | 42 | 18 | 12 |
| 23 | 0 | UNL | 20 | | | 54 | 44 | 34 | 47 | 19 | 5 |
| **OCT 09** | | | | | | | | | | | |
| 02 | 0 | UNL | 20 | | | 41 | 39 | 36 | 83 | 33 | 8 |
| 05 | 0 | UNL | 20 | | | 38 | 36 | 34 | 86 | 30 | 6 |
| 08 | 5 | UNL | 40 | | | 39 | 37 | 35 | 86 | 25 | 3 |
| 11 | 0 | UNL | 40 | | | 63 | 49 | 36 | 37 | 07 | 7 |
| 14 | 0 | UNL | 35 | | | 72 | 52 | 34 | 25 | 15 | 8 |
| 17 | 0 | UNL | 50 | | | 70 | 51 | 32 | 25 | 18 | 14 |
| 20 | 2 | UNL | 20 | | | 57 | 46 | 34 | 42 | 19 | 10 |
| 23 | 5 | UNL | 20 | | | 52 | 43 | 32 | 47 | 06 | 5 |
| **OCT 10** | | | | | | | | | | | |
| 02 | 7 | UNL | 20 | | | 43 | 39 | 33 | 68 | 35 | 9 |
| 05 | 3 | UNL | 20 | | | 36 | 35 | 33 | 89 | 10 | 4 |
| 08 | 8 | UNL | 40 | | | 40 | 38 | 35 | 82 | 09 | 5 |
| 11 | 8 | UNL | 35 | | | 47 | 52 | 38 | 35 | 04 | 7 |
| 14 | 10 | UNL | 50 | | | 75 | 52 | 30 | 19 | 19 | 15 |
| 17 | 6 | UNL | 50 | | | 71 | 49 | 26 | 19 | 18 | 17 |
| 20 | 4 | UNL | 20 | | | 61 | 47 | 28 | 26 | 18 | 12 |
| 23 | 1 | UNL | 20 | | | 51 | 40 | 29 | 46 | 35 | 8 |
| **OCT 11** | | | | | | | | | | | |
| 02 | 3 | UNL | 20 | | | 47 | 41 | 33 | 58 | 03 | 4 |
| 05 | 4 | UNL | 10 | | | 51 | 45 | 38 | 61 | 23 | 20 |
| 08 | 8 | 120 | 50 | | | 49 | 45 | 40 | 71 | 15 | 10 |
| 11 | 7 | 120 | 50 | | | 58 | 48 | 38 | 48 | 27 | 11 |
| 14 | 7 | UNL | 40 | | | 65 | 50 | 35 | 33 | 24 | 14 |
| 17 | 6 | UNL | 50 | | | 62 | 48 | 35 | 37 | 28 | 12 |
| 20 | 7 | 250 | 20 | | | 49 | 43 | 36 | 61 | 19 | 6 |
| 23 | 4 | UNL | 20 | | | 47 | 42 | 36 | 66 | 19 | 12 |
| **OCT 12** | | | | | | | | | | | |
| 02 | 1 | UNL | 20 | | | 37 | 35 | 33 | 86 | 30 | 6 |
| 05 | 0 | UNL | 20 | | | 35 | 34 | 33 | 92 | 21 | 4 |
| 08 | 8 | UNL | 35 | | | 40 | 39 | 37 | 89 | 11 | 4 |
| 11 | 7 | UNL | 45 | | | 56 | 47 | 38 | 51 | 02 | 8 |
| 14 | 9 | UNL | 60 | | | 64 | 49 | 35 | 34 | 08 | 8 |
| 17 | 10 | 250 | 50 | | | 62 | 48 | 34 | 35 | 02 | 13 |
| 20 | 10 | 140 | 20 | | | 55 | 45 | 34 | 45 | 03 | 11 |
| 23 | 10 | UNL | 20 | | | 47 | 41 | 35 | 63 | 03 | 8 |
| **OCT 13** | | | | | | | | | | | |
| 02 | 10 | 110 | 20 | | | 44 | 40 | 36 | 74 | 21 | 4 |
| 05 | 10 | 90 | 20 | | | 47 | 41 | 35 | 69 | 00 | 0 |
| 08 | 10 | 120 | 35 | | | 45 | 42 | 39 | 80 | 24 | 9 |
| 11 | 10 | 230 | 40 | | | 51 | 46 | 40 | 66 | 23 | 8 |
| 14 | 9 | 250 | 40 | | | 60 | 50 | 40 | 48 | 24 | 12 |
| 17 | 10 | UNL | 40 | | | 55 | 47 | 40 | 57 | 24 | 9 |
| 20 | 8 | UNL | 20 | | | 47 | 43 | 39 | 74 | 20 | 6 |
| 23 | 8 | UNL | 20 | | | 43 | 41 | 38 | 83 | 21 | 6 |
| **OCT 14** | | | | | | | | | | | |
| 02 | 7 | UNL | 20 | | | 39 | 37 | 35 | 86 | 00 | 0 |
| 05 | 9 | 250 | 20 | | | 39 | 39 | 37 | 93 | 30 | 6 |
| 08 | 10 | 70 | 35 | | | 44 | 42 | 39 | 83 | 11 | 6 |
| 11 | 10 | 95 | 70 | | | 57 | 49 | 41 | 55 | 18 | 22 |
| 14 | 10 | 60 | 9 | | RWF | 48 | 46 | 45 | 89 | 28 | 14 |
| 17 | 10 | 17 | 10 | | R | 43 | 42 | 41 | 93 | 22 | 13 |
| 20 | 10 | 12 | 10 | | R | 39 | 38 | 37 | 93 | 23 | 12 |
| 23 | 10 | 9 | 6 | | RF | 38 | 37 | 36 | 93 | 24 | 12 |
| **OCT 15** | | | | | | | | | | | |
| 02 | 10 | 25 | 10 | | | 37 | 36 | 34 | 89 | 19 | 4 |
| 05 | 10 | 3 | 10 | | | 35 | 35 | 34 | 96 | 25 | 12 |
| 08 | 10 | 9 | 15 | | SW | 34 | 33 | 32 | 92 | 23 | 14 |
| 11 | 10 | 11 | 35 | | | 36 | 34 | 32 | 85 | 23 | 15 |
| 14 | 10 | 37 | 35 | | | 39 | 36 | 32 | 76 | 24 | 13 |
| 17 | 10 | 24 | 35 | | | 42 | 38 | 34 | 73 | 36 | 12 |
| 20 | 10 | 12 | 6 | | RF | 38 | 37 | 36 | 93 | 36 | 12 |
| 23 | 10 | 48 | 20 | | | 39 | 37 | 35 | 86 | 02 | 5 |
| **OCT 16** | | | | | | | | | | | |
| 02 | 10 | 43 | 20 | | | 38 | 36 | 33 | 82 | 03 | 7 |
| 05 | 10 | 50 | 20 | | | 38 | 35 | 30 | 73 | 35 | 6 |
| 08 | 10 | 55 | 25 | | | 38 | 37 | 36 | 93 | 25 | 7 |
| 11 | 9 | 75 | 45 | | | 45 | 40 | 35 | 68 | 28 | 4 |
| 14 | 9 | 49 | 70 | | | 48 | 43 | 37 | 66 | 27 | 10 |
| 17 | 4 | UNL | 50 | | | 50 | 44 | 37 | 61 | 24 | 8 |
| 20 | 2 | UNL | 20 | | | 42 | 39 | 35 | 76 | 20 | 7 |
| 23 | 0 | UNL | 20 | | | 38 | 36 | 33 | 82 | 21 | 5 |
| **OCT 17** | | | | | | | | | | | |
| 02 | 10 | 100 | 20 | | | 41 | 38 | 35 | 79 | 19 | 7 |
| 05 | 8 | 95 | 20 | | | 40 | 38 | 35 | 82 | 22 | 8 |
| 08 | 7 | 85 | 40 | | | 42 | 39 | 35 | 76 | 22 | 9 |
| 11 | 9 | 19 | 60 | | | 45 | 41 | 36 | 71 | 23 | 14 |
| 14 | 10 | 35 | 45 | | | 49 | 43 | 37 | 64 | 24 | 16 |
| 17 | 10 | 43 | 30 | | | 50 | 45 | 40 | 69 | 21 | 8 |
| 20 | 10 | 70 | 20 | | | 47 | 43 | 38 | 71 | 21 | 13 |
| 23 | 10 | 31 | 20 | | | 47 | 42 | 36 | 66 | 24 | 12 |
| **OCT 18** | | | | | | | | | | | |
| 02 | 10 | 48 | 20 | | RW | 44 | 42 | 40 | 86 | 20 | 10 |
| 05 | 10 | 33 | 15 | | RW | 43 | 42 | 40 | 89 | 20 | 5 |
| 08 | 10 | 35 | 10 | | R | 42 | 41 | 39 | 89 | 20 | 6 |
| 11 | 10 | 55 | 25 | | R | 45 | 42 | 39 | 80 | 20 | 10 |
| 14 | 3 | UNL | 45 | | | 52 | 46 | 39 | 61 | 16 | 7 |
| 17 | 1 | UNL | 40 | | | 53 | 46 | 38 | 57 | 09 | 7 |
| 20 | 0 | UNL | 20 | | | 41 | 38 | 35 | 79 | 21 | 4 |
| 23 | 0 | UNL | 20 | | | 38 | 36 | 34 | 86 | 15 | 5 |

# MAXIMUM SHORT DURATION PRECIPITATION

| TIME PERIOD (MINUTES) | 5 | 10 | 15 | 20 | 30 | 45 | 60 | 80 | 100 | 120 | 150 | 180 |
|---|---|---|---|---|---|---|---|---|---|---|---|---|
| PRECIPITATION (INCHES) | 0.03 | 0.05 | 0.06 | 0.07 | 0.08 | 0.10 | 0.12 | 0.15 | 0.19 | 0.20 | 0.23 | 0.24 |
| ENDED: DATE | 04 | 04 | 04 | 04 | 04 | 04 | 04 | 14 | 05 | 05 | 15 | 15 |
| ENDED: TIME (LST) | 2241 | 2244 | 2248 | 2248 | 2259 | 2318 | 2327 | 2311 | 0007 | 0007 | 0010 | 0010 |

THE PRECIPITATION AMOUNTS FOR THE INDICATED TIME INTERVALS MAY OCCUR AT ANY TIME DURING THE MONTH. THE TIME INDICATED IS THE ENDING TIME OF THE INTERVAL. DATE AND TIME ARE NOT ENTERED FOR TRACE AMOUNTS.

# OBSERVATIONS AT 3-HOUR INTERVALS

OCT 1994 24156
POCATELLO, ID

| HOUR L.S.T. | SKY COVER (TENTHS) | CEILING IN HUNDREDS OF FEET | VISIBILITY: WHOLE MILES | VISIBILITY: 16THS MILE | WEATHER | TEMPERATURE: AIR °F | TEMPERATURE: WET BULB °F | TEMPERATURE: DEW POINT °F | REL HUMIDITY % | WIND: DIRECTION | WIND: SPEED (KNOTS) |
|---|---|---|---|---|---|---|---|---|---|---|---|
| **OCT 19** | | | | | | | | | | | |
| 02 | 0 | UNL | 20 | | | 35 | 34 | 33 | 92 | 32 | 8 |
| 05 | 0 | UNL | 20 | | | 32 | 32 | 31 | 96 | 36 | 8 |
| 08 | 0 | UNL | 30 | | | 39 | 37 | 35 | 86 | 35 | 8 |
| 11 | 3 | UNL | 30 | | | 57 | 47 | 38 | 49 | 18 | 13 |
| 14 | 7 | 65 | 30 | | | 60 | 47 | 34 | 38 | 19 | 12 |
| 17 | 2 | UNL | 80 | | | 58 | 47 | 36 | 44 | 18 | 11 |
| 20 | 0 | UNL | 20 | | | 51 | 43 | 35 | 55 | 17 | 14 |
| 23 | 0 | UNL | 20 | | | 51 | 43 | 35 | 55 | 19 | 13 |
| **OCT 20** | | | | | | | | | | | |
| 00 | 0 | UNL | 20 | | | 45 | 39 | 32 | 61 | 04 | 3 |
| 03 | 5 | UNL | 20 | | | 37 | 35 | 32 | 82 | 34 | 8 |
| 06 | 4 | UNL | 50 | | | 42 | 39 | 36 | 79 | 33 | 4 |
| 09 | 5 | UNL | 30 | | | 57 | 46 | 34 | 42 | 24 | 12 |
| 12 | 5 | UNL | 40 | | | 60 | 47 | 34 | 38 | 26 | 14 |
| 15 | 0 | UNL | 60 | | | 57 | 45 | 33 | 40 | 26 | 10 |
| 18 | 0 | UNL | 20 | | | 49 | 42 | 33 | 54 | 21 | 9 |
| 21 | 8 | UNL | 20 | | | 42 | 38 | 33 | 71 | 21 | 9 |
| **OCT 21** | | | | | | | | | | | |
| 00 | 10 | 200 | 20 | | | 42 | 38 | 34 | 73 | 20 | 9 |
| 03 | 5 | UNL | 20 | | | 45 | 39 | 32 | 61 | 20 | 10 |
| 06 | 8 | 90 | 30 | | | 48 | 40 | 31 | 52 | 20 | 12 |
| 09 | 9 | 100 | 30 | | | 55 | 44 | 32 | 42 | 24 | 15 |
| 12 | 6 | 85 | 30 | | | 58 | 46 | 33 | 39 | 25 | 20 |
| 15 | 0 | UNL | 60 | | | 56 | 45 | 32 | 40 | 25 | 17 |
| 18 | 0 | UNL | 20 | | | 46 | 40 | 34 | 63 | 23 | 11 |
| 21 | 0 | UNL | 20 | | | 41 | 37 | 33 | 73 | 23 | 8 |
| **OCT 22** | | | | | | | | | | | |
| 02 | 0 | UNL | 20 | | | 37 | 35 | 33 | 86 | 12 | 3 |
| 05 | 0 | UNL | 20 | | | 34 | 33 | 31 | 89 | 21 | 6 |
| 08 | 0 | UNL | 70 | | | 38 | 35 | 31 | 76 | 21 | 12 |
| 11 | 0 | UNL | 70 | | | 47 | 38 | 25 | 42 | 24 | 12 |
| 14 | 0 | UNL | 60 | | | 51 | 39 | 23 | 34 | 25 | 13 |
| 17 | 1 | UNL | 100 | | | 51 | 38 | 21 | 31 | 27 | 3 |
| 20 | 5 | UNL | 20 | | | 40 | 34 | 24 | 53 | 17 | 5 |
| 23 | 1 | UNL | 20 | | | 34 | 30 | 25 | 70 | 14 | 5 |
| **OCT 23** | | | | | | | | | | | |
| 00 | 9 | UNL | 20 | | | 29 | 28 | 25 | 85 | 24 | 4 |
| 03 | 1 | UNL | 20 | | | 31 | 29 | 27 | 85 | 23 | 4 |
| 06 | 0 | UNL | 50 | | | 32 | 31 | 29 | 89 | 00 | 0 |
| 09 | 0 | UNL | 60 | | | 50 | 41 | 30 | 46 | 25 | 7 |
| 12 | 0 | UNL | 60 | | | 58 | 45 | 30 | 35 | 28 | 11 |
| 15 | 5 | UNL | 100 | | | 59 | 43 | 24 | 26 | 24 | 5 |
| 18 | 4 | UNL | 20 | | | 43 | 37 | 28 | 56 | 11 | 3 |
| 21 | 8 | UNL | 20 | | | 35 | 32 | 27 | 73 | 35 | 6 |
| **OCT 24** | | | | | | | | | | | |
| 00 | 1 | UNL | 20 | | | 32 | 30 | 27 | 82 | 10 | 6 |
| 03 | 1 | UNL | 20 | | | 28 | 27 | 25 | 89 | 00 | 0 |
| 06 | 4 | UNL | 60 | | | 31 | 29 | 27 | 85 | 00 | 0 |
| 09 | 5 | UNL | 15 | | | 48 | 40 | 31 | 52 | 09 | 6 |
| 12 | 0 | UNL | 50 | | | 63 | 47 | 31 | 30 | 09 | 5 |
| 15 | 0 | UNL | 100 | | | 60 | 46 | 30 | 32 | 29 | 4 |
| 18 | 0 | UNL | 20 | | | 43 | 37 | 30 | 60 | 11 | 5 |
| 21 | 0 | UNL | 20 | | | 35 | 33 | 29 | 79 | 33 | 4 |
| **OCT 25** | | | | | | | | | | | |
| 02 | 0 | UNL | 20 | | | 31 | 29 | 27 | 85 | 36 | 3 |
| 05 | 0 | UNL | 20 | | | 28 | 27 | 24 | 85 | 04 | 3 |
| 08 | 0 | UNL | 40 | | | 29 | 28 | 25 | 85 | 05 | 3 |
| 11 | 1 | UNL | 25 | | | 53 | 42 | 29 | 40 | 07 | 6 |
| 14 | 0 | UNL | 35 | | | 64 | 47 | 27 | 25 | 07 | 5 |
| 17 | 0 | UNL | 70 | | | 63 | 46 | 27 | 26 | 09 | 4 |
| 20 | 0 | UNL | 20 | | | 47 | 39 | 28 | 48 | 00 | 0 |
| 23 | 1 | UNL | 20 | | | 40 | 35 | 28 | 62 | 34 | 8 |
| **OCT 26** | | | | | | | | | | | |
| 00 | 1 | UNL | 20 | | | 34 | 32 | 28 | 79 | 04 | 6 |
| 03 | 0 | UNL | 20 | | | 31 | 29 | 27 | 85 | 30 | 5 |
| 06 | 9 | 120 | 40 | | | 36 | 33 | 29 | 76 | 35 | 5 |
| 09 | 9 | 250 | 50 | | | 60 | 46 | 31 | 34 | 24 | 12 |
| 12 | 10 | 210 | 60 | | | 60 | 45 | 29 | 31 | 25 | 11 |
| 15 | 10 | 130 | 70 | | | 56 | 44 | 31 | 39 | 22 | 8 |
| 18 | 10 | 120 | 20 | | | 50 | 41 | 30 | 46 | 23 | 9 |
| 21 | 10 | 200 | 20 | | | 50 | 42 | 32 | 50 | 23 | 9 |
| **OCT 27** | | | | | | | | | | | |
| 00 | 10 | 120 | 20 | | | 53 | 43 | 32 | 45 | 20 | 13 |
| 03 | 10 | 200 | 20 | | | 53 | 43 | 31 | 43 | 22 | 10 |
| 06 | 10 | 200 | 50 | | | 50 | 41 | 31 | 48 | 22 | 9 |
| 09 | 10 | UNL | 40 | | | 63 | 47 | 31 | 30 | 19 | 14 |
| 12 | 10 | UNL | 40 | | | 68 | 47 | 24 | 19 | 24 | 24 |
| 15 | 10 | 240 | 60 | | | 60 | 45 | 27 | 29 | 23 | 7 |
| 18 | 10 | UNL | 20 | | | 55 | 42 | 27 | 34 | 23 | 10 |
| 21 | 4 | UNL | 20 | | | 57 | 42 | 23 | 27 | 21 | 14 |
| **OCT 28** | | | | | | | | | | | |
| 02 | 6 | 120 | 20 | | | 60 | 43 | 22 | 23 | 24 | 16 |
| 05 | 10 | 70 | 20 | | | 55 | 44 | 31 | 40 | 22 | 15 |
| 08 | 10 | 90 | 40 | | | 48 | 44 | 39 | 71 | 24 | 25 |
| 11 | 3 | UNL | 50 | | | 47 | 41 | 33 | 58 | 24 | 28 |
| 14 | 2 | UNL | 60 | | | 51 | 39 | 23 | 34 | 26 | 21 |
| 17 | 8 | UNL | 70 | | | 46 | 36 | 22 | 39 | 23 | 18 |
| 20 | 4 | UNL | 20 | | | 38 | 32 | 22 | 53 | 21 | 12 |
| 23 | 0 | UNL | 20 | | | 34 | 29 | 22 | 62 | 19 | 10 |
| **OCT 29** | | | | | | | | | | | |
| 00 | 0 | UNL | 20 | | | 30 | 27 | 22 | 72 | 23 | 8 |
| 03 | 0 | UNL | 20 | | | 27 | 25 | 20 | 75 | 23 | 5 |
| 06 | 0 | UNL | 100 | | | 29 | 27 | 23 | 78 | 23 | 5 |
| 09 | 0 | UNL | 100 | | | 40 | 34 | 25 | 55 | 25 | 9 |
| 12 | 0 | UNL | 100 | | | 46 | 35 | 18 | 33 | 31 | 4 |
| 15 | 0 | UNL | 70 | | | 45 | 34 | 17 | 33 | 22 | 4 |
| 18 | 0 | UNL | 20 | | | 33 | 28 | 18 | 54 | 19 | 7 |
| 21 | 0 | UNL | 20 | | | 26 | 23 | 17 | 69 | 21 | 6 |
| **OCT 30** | | | | | | | | | | | |
| 00 | 0 | UNL | 20 | | | 22 | 20 | 17 | 81 | 22 | 4 |
| 03 | 0 | UNL | 20 | | | 19 | 18 | 15 | 84 | 23 | 3 |
| 06 | 8 | UNL | 35 | | | 21 | 20 | 17 | 85 | 21 | 4 |
| 09 | 0 | UNL | 100 | | | 41 | 34 | 23 | 49 | 25 | 13 |
| 12 | 1 | UNL | 100 | | | 47 | 36 | 18 | 31 | 24 | 16 |
| 15 | 8 | 250 | 60 | | | 45 | 34 | 18 | 34 | 24 | 14 |
| 18 | 6 | UNL | 20 | | | 39 | 31 | 19 | 45 | 21 | 11 |
| 21 | 0 | UNL | 20 | | | 38 | 31 | 18 | 44 | 22 | 13 |
| **OCT 31** | | | | | | | | | | | |
| 02 | 0 | UNL | 20 | | | 33 | 28 | 19 | 56 | 23 | 8 |
| 05 | 0 | UNL | 20 | | | 32 | 28 | 20 | 61 | 22 | 9 |
| 08 | 10 | 150 | 30 | | | 42 | 33 | 18 | 38 | 18 | 16 |
| 11 | 10 | 110 | 80 | | | 49 | 36 | 15 | 26 | 18 | 23 |
| 14 | 10 | 65 | 80 | | | 50 | 36 | 15 | 25 | 18 | 21 |
| 17 | 10 | 65 | 50 | | | 50 | 36 | 15 | 25 | 18 | 21 |
| 20 | 10 | 65 | 20 | | | 51 | 37 | 14 | 23 | 17 | 20 |
| 23 | 10 | 70 | 20 | | | 52 | 38 | 18 | 26 | 18 | 22 |

# WEATHER CODES AND NOTES

| | | | | | |
|---|---|---|---|---|---|
| & | TORNADO | S | SNOW | IF | ICE FOG |
| &C | FUNNEL CLOUD | SW | SNOW SHOWERS | GF | GROUND FOG |
| &W | WATER SPOUT | SG | SNOW GRAINS | BD | BLOWING DUST |
| T | THUNDERSTORM | SP | SNOW PELLETS | BN | BLOWING SAND |
| R | RAIN | IC | ICE CRYSTALS | BS | BLOWING SNOW |
| RW | RAIN SHOWERS | IP | ICE PELLETS | BY | BLOWING SPRAY |
| ZR | FREEZING RAIN | IPW | ICE PELLET SHOWERS | K | SMOKE |
| L | DRIZZLE | A | HAIL | H | HAZE |
| ZL | FREEZING DRIZZLE | F | FOG | D | DUST |

CEILING: UNL INDICATES UNLIMITED
WIND DIRECTION: DIRECTIONS ARE THOSE FROM WHICH THE WIND IS BLOWING, INDICATED IN TENS OF DEGREES FROM TRUE NORTH: I.E. 09 FOR
EAST, 18 FOR SOUTH, 27 FOR WEST. AN ENTRY OF 00 INDICATES CALM.
SPEED: THE OBSERVED AVERAGE ONE-MINUTE VALUE (MPH=KNOTS X 1.15).

# SUMMARY BY HOURS

| HOUR L.S.T. | AVERAGES: SKY COVER (TENTHS) | AVERAGES: STATION PRESSURE (INCHES) | AVERAGES: TEMPERATURES: AIR °F | AVERAGES: TEMPERATURES: WET BULB °F | AVERAGES: TEMPERATURES: DEW POINT °F | AVERAGES: REL HUMIDITY % | AVERAGES: SPEED (MPH) | RESULTANT WIND: DIRECTION | RESULTANT WIND: SPEED (MPH) |
|---|---|---|---|---|---|---|---|---|---|
| 02 | 5 | 25.460 | 40 | 37 | 33 | 77 | 7.9 | 24 | 2.7 |
| 05 | 5 | 25.465 | 38 | 36 | 33 | 81 | 8.2 | 24 | 4.7 |
| 08 | 7 | 25.485 | 40 | 38 | 34 | 79 | 8.9 | 22 | 5.1 |
| 11 | 6 | 25.490 | 52 | 43 | 34 | 54 | 13.3 | 23 | 7.9 |
| 14 | 6 | 25.460 | 57 | 45 | 33 | 45 | 13.9 | 24 | 10.1 |
| 17 | 6 | 25.450 | 55 | 44 | 32 | 46 | 11.8 | 23 | 6.6 |
| 20 | 5 | 25.460 | 47 | 40 | 33 | 62 | 10.3 | 20 | 6.1 |
| 23 | 5 | 25.460 | 43 | 38 | 32 | 68 | 10.6 | 22 | 5.5 |

P&D ASHEVILLE N.C. 288 01/31/95 PM

NATIONAL CLIMATIC DATA CENTER
ROOM 120
151 PATTON AVENUE
ASHEVILLE, NORTH CAROLINA 28801-5001

OFFICIAL BUSINESS
PENALTY FOR PRIVATE USE $300

FIRST CLASS
POSTAGE AND FEES PAID
NOAA
PERMIT G-19

LCD-10-24156-PD-9509

33766
J R SIMPLOT COMPANY
ATTN: J F COCHRANE - PO #35724
PO BOX 912
POCATELLO ID 83204

## HOURLY PRECIPITATION (WATER EQUIVALENT IN INCHES)

OCT 1994 24156
POCATELLO, ID
USCOM - NOAA - ASHEVILLE, NC 125

| DATE | A.M. HOUR ENDING AT | | | | | | | | | | | | P.M. HOUR ENDING AT | | | | | | | | | | | | DATE |
|---|---|---|---|---|---|---|---|---|---|---|---|---|---|---|---|---|---|---|---|---|---|---|---|---|---|
| | 1 | 2 | 3 | 4 | 5 | 6 | 7 | 8 | 9 | 10 | 11 | 12 | 1 | 2 | 3 | 4 | 5 | 6 | 7 | 8 | 9 | 10 | 11 | 12 | |
| 01 | | | | | | | | | | | | | T | | | | | | | | | | | | 01 |
| 02 | | | | | | | | | | | | | | | | | | | | | | 0.01 | 0.05 | 0.01 | 02 |
| 03 | T | T | T | | | | | | | | | | 0.01 | T | T | | | | | | | | | | 03 |
| 04 | | | | | | 0.01 | T | T | | | 0.01 | T | T | 0.08 | 0.01 | 0.03 | 0.03 | 0.01 | | | | | 0.10 | 0.09 | 04 |
| 05 | 0.03 | T | 0.01 | | T | | | 0.03 | 0.03 | T | T | T | 0.01 | | | | T | 0.08 | 0.04 | | | | | | 05 |
| 06 | | | 0.01 | T | | T | T | T | T | | T | T | | | | | | | T | T | 0.01 | | | | 06 |
| 07 | | | | | | | | | | | | | | | | | | | | | | | | | 07 |
| 08 | | | | | | | | | | | | | | | | | | | | | | | | | 08 |
| 09 | | | | | | | | | | | | | | | | | | | | | | | | | 09 |
| 10 | | | | | | | | | | | | | | | | | | | | | | | | | 10 |
| 11 | | | | | | | | | | | | | | | | | | | | | T | T | | | 11 |
| 12 | | | | | | | | | | | | | | | | | | | | | | | | | 12 |
| 13 | | | | | T | | | | | | | | | | | | | | | | | | | | 13 |
| 14 | | | | | | | | | | | | | T | 0.03 | 0.03 | 0.01 | 0.04 | T | T | 0.01 | 0.02 | 0.07 | 0.10 | 0.05 | 14 |
| 15 | 0.02 | T | | | | T | T | T | T | T | T | T | T | | | | | 0.01 | 0.04 | 0.08 | 0.02 | 0.01 | | | 15 |
| 16 | | | | | | | | | | T | | | | | | | | | | | | | | | 16 |
| 17 | | | | T | T | | | | | | | | | | | | | | | | | T | T | | 17 |
| 18 | T | T | T | 0.02 | 0.01 | T | 0.01 | 0.01 | 0.02 | 0.02 | T | T | T | | | | | | | | | | | | 18 |
| 19 | | | | | | | | | | | | | | | | | | | | | | | | | 19 |
| 20 | | | | | | | | | | | | | | | | | | | | | | | | | 20 |
| 21 | | | | | | | | | | | | | | | | | | | | | | | | | 21 |
| 22 | | | | | | | | | | | | | | | | | | | | | | | | | 22 |
| 23 | | | | | | | | | | | | | | | | | | | | | | | | | 23 |
| 24 | | | | | | | | | | | | | | | | | | | | | | | | | 24 |
| 25 | | | | | | | | | | | | | | | | | | | | | | | | | 25 |
| 26 | | | | | | | | | | | | | | | | | | | | | | | | | 26 |
| 27 | | | | | | | | | | | | | | | | | | | | | | | | | 27 |
| 28 | | | | | | | T | T | T | | | | | | | | | | | | | | | | 28 |
| 29 | | | | | | | | | | | | | | | | | | | | | | | | | 29 |
| 30 | | | | | | | | | | | | | | | | | | | | | | | | | 30 |
| 31 | | | | | | | | | | | | | | | | | | | | | | | | | 31 |

## Appendix AD – Quality Assurance /Quality Summary of Data

Appendix AD comprises two attachments:

(1) Appendix AD-1 – Program Evaluation

(2) Appendix AD-2 – Quarterly Audit Reports

# Appendix AD-1
# Program Evaluation

# Quality Assurance/Quality Summary of Data

## AD 1 PROGRAM EVALUATION

This appendix compares data collection performance with data quality objectives identified in the EMF Air Pathways Quality Assurance Project Plan (QAPP). These objectives were presented in Section 2.0 of the QAPP (Bechtel, 1994e).

### AD 1.1 FIELD PROGRAM

#### Completeness of Sample Collection

Data recovery rates (DRR) for field data collection are summarized in Table AD-1. DRR were calculated as follows:

$$DRR = [(\#\ samples\ possible - \#\ samples\ void)/ (\#\ samples\ possible)] \times 100$$

Target DRR specified in the QAPP are shown across the bottom row of Table AD-1.

Sampling for crystalline silica and gaseous particulate fluorides were eliminated from the monitoring program, effective May 1, 1994, per agreement with EPA. As indicated in Table AD-1, all target data recoveries were exceeded for TSP, $PM_{10}$, silica, fluorides, and lo-vol samples for the overall program.

### AD 1.2 PRECISION IN PARTICULATE CONCENTRATION MEASUREMENTS

Precision statistics were calculated for TSP and $PM_{10}$ samplers in accordance with procedures specified in the EPA's Prevention of Significant Deterioration (PSD) Guidelines for calculating single instrument precision for manual methods. Precision statistics were calculated with co-located samples collected at Site 1 for TSP and $PM_{10}$. Site 1 was designated as the primary sampler; Site 8 was the co-located sampler. Precision results were calculated for each calendar quarter.

**TABLE AD-1**
**SUMMARY OF DATA RECOVERY RATES**

| Samples | Sample Type | | | | |
|---|---|---|---|---|---|
| | TSP | $PM_{10}$ | Si | Fl | Lo-Vol |
| October 1993 Number Possible | 105 | 105 | 28 | 20 | 4 |
| October 1993 Completed | 97 | 97 | 21 | 20 | 4 |
| DRR | 92% | 92% | 75% | 100% | 100% |
| November 1993 Possible | 105 | 105 | 32 | 32 | 4 |
| November 1993 Completed | 104 | 104 | 31 | 32 | 4 |
| DRR | 99% | 99% | 97% | 100% | 100% |
| December 1993 Number Possible | 112 | 112 | 32 | 32 | 4 |
| December 1993 Completed | 111 | 109 | 28 | 27 | 4 |
| DRR | 99% | 96% | 88% | 84% | 100% |
| January 1994 Number Possible | 105 | 105 | 28 | 28 | 4 |
| January 1994 Completed | 105 | 103 | 24 | 28 | 4 |
| DRR | 100% | 98% | 88% | 100% | 100% |
| February 1994 Number Possible | 98 | 98 | 28 | 28 | 4 |
| February 1994 Completed | 98 | 91 | 22 | 26 | 4 |
| DRR | 100% | 93% | 79% | 93% | 100% |
| March 1994 Number Possible | 112 | 112 | 32 | 32 | 4 |
| March 1994 Completed | 98 | 112 | 32 | 30 | 4 |
| DRR | 88% | 100% | 100% | 94% | 100% |
| April 1994 Number Possible | 105 | 105 | 32 | 32 | 4 |
| April 1994 Completed | 102 | 97 | 29 | 30 | 4 |
| DRR | 97% | 92% | 91% | 94% | 100% |
| May 1994 Number Possible | 105 | 105 | NS | NS | 4 |
| May 1994 Completed | 103 | 102 | NS | NS | 3 |
| DRR | 98% | 97% | NS | NS | 75% |
| June 1994 Number Possible | 105 | 105 | NS | NS | 4 |
| June 1994 Completed | 104 | 103 | NS | NS | 4 |
| DRR | 99% | 98% | NS | NS | 100% |
| July 1994 Number Possible | 105 | 105 | NS | NS | 4 |
| July 1994 Completed | 101 | 102 | NS | NS | 4 |
| DRR | 96% | 97% | NS | NS | 100% |
| August 1994 Number Possible | 94 | 94 | NS | NS | 3 |
| August 1994 Completed | 92 | 93 | NS | NS | 3 |
| DRR | 98% | 99% | NS | NS | 100% |
| September 1994 Number Possible | 90 | 90 | NS | NS | 3 |
| September '94 Completed | 87 | 89 | NS | NS | 3 |
| DRR | 97% | 99% | NS | NS | 100% |
| October 1994 Number Possible | 70 | 70 | NS | NS | 1 |
| October 1994 Completed | 69 | 68 | NS | NS | 1 |
| DRR | 99% | 97% | NS | NS | 100% |
| **All Months – Number Possible** | **1311** | **1311** | **212** | **204** | **47** |
| **All Months – Number Completed** | **1271** | **1270** | **189** | **195** | **46** |
| **Overall DRR** | **97%** | **97%** | **89%** | **96%** | **98%** |
| **QAPP DRR Target** | **80%** | **80%** | **85%** | **85%** | **80%** |

Precision data for $PM_{10}$ are summarized in Table AD-2. Precision data for TSP are summarized in Table AD-3. Upper and lower 95% probability limits for TSP and $PM_{10}$ are also summarized in the tables. Figures AD-1 through AD-8 present a plot of the co-located $PM_{10}$ and TSP sampling results for each quarter of the monitoring program.

The precision goals (Bechtel, 1994e) for $PM_{10}$ measurements were $\pm$ 5 $\mu g/m^3$ for concentrations less than 80 $\mu g/m^3$ and 7% for concentrations above 80 $\mu g/m^3$. None of the $PM_{10}$ concentrations detected in the set of co-located results exceeded 80 $\mu g/m^3$. Sixty of the 63 paired samples met the applicable goal for precision ($\pm$ 5 $\mu g/m^3$). Three sets of samples collected during the third quarter of the program did not meet the precision goal (i.e., the samples collected on April 20, 1994, June 13, 1994, and June 25, 1994).

Co-located lo-vol samples were also collected as part of the EMF air monitoring program. The duplicate lo-vol sampler was located at monitoring Site 3 and is designated as Site 9 in the data base. The percent difference for each month is summarized in Table AD-4. Precision goals for lo-vol samples were not established in the QAPP.

## AD 1.3 COMPLETENESS OF METEOROLOGICAL MEASUREMENTS

Data recovery rates for meteorological parameters were calculated in a manner similar to the air quality DDRs. The total number of possible hourly observations minus the number of hours void or missing, divided by the total hours possible was used to determine the meteorological DDRs. A summary of the data recovery rates for meteorological parameters are provided at the bottom of the hourly data summaries included in Appendix AB-1. All DDRs for meteorological parameters exceeded the 90% target for meteorological data recovery established in the *Meteorological Data Acquisition Plan* (Bechtel 1994i).

## TABLE AD-2

### $PM_{10}$ Quarterly Precision Results

| Date | Site 1 | Site 8 | % Difference | Date | Site 1 | Site 8 | % Difference | Date | Site 1 | Site 8 | % Difference | Date | Site 1 | Site 8 | % Difference |
|---|---|---|---|---|---|---|---|---|---|---|---|---|---|---|---|
| 10/2/93 | 35.3 | 34.9 | 1.1 | 1/8/94 | 11.6 | 11.0 | 5.2 | 4/2/94 | 17.6 | 20.3 | -15.5 | 7/1/94 | 41.1 | 46.0 | -12.1 |
| 10/8/93 | 10.6 | 11.0 | -4.1 | 1/14/94 | 15.4 | 14.5 | 6.4 | 4/8/94 | 9.4 | 10.0 | -6.5 | 7/7/94 | 18.1 | 16.7 | 8.0 |
| 10/12/93 | 23.1 | 23.3 | -0.5 | 1/20/94 | 49.4 | 49.4 | 0.0 | 4/14/94 | 53.1 | 56.1 | -5.6 | 7/13/94 | 41.4 | 40.6 | 2.0 |
| 10/16/93 | 9.4 | 10.9 | -16.9 | 1/26/94 | 39.5 | 41.6 | -5.4 | 4/20/94 | 33.3 | 42.1 | -26.3 | 7/19/94 | 31.2 | 31.6 | -1.1 |
| 10/20/93 | 34.3 | 33.8 | 1.5 | 2/1/94 | 32.3 | 31.8 | 1.6 | 4/26/94 | 4.1 | 6.0 | -46.0 | 7/31/94 | 35.4 | 35.8 | -1.2 |
| 10/24/93 | 48.0 | 47.2 | 1.6 | 2/7/94 | 8.8 | 10.6 | -20.5 | 5/2/94 | 18.8 | 20.3 | -8.2 | 8/6/94 | 44.8 | 45.6 | -1.7 |
| 10/28/93 | 30.8 | 29.4 | 4.4 | 2/13/94 | 11.6 | 11.7 | -0.5 | 5/8/94 | 16.8 | 17.0 | -1.2 | 8/12/94 | 47.7 | 47.2 | 1.0 |
| 11/5/93 | 24.5 | 24.7 | -0.7 | 2/19/94 | 20.3 | 21.2 | -4.4 | 5/14/94 | 20.1 | 18.9 | 6.4 | 8/18/94 | 56.8 | 56.4 | 0.9 |
| 11/9/93 | 28.2 | 29.0 | -3.1 | 2/25/94 | 41.2 | 39.4 | 4.3 | 5/20/94 | 21.8 | 23.3 | -6.9 | 8/30/94 | 52.1 | 50.1 | 3.8 |
| 11/13/93 | 33.8 | 37.9 | -12.3 | 3/3/94 | 36.7 | 37.7 | -2.6 | 5/26/94 | 32.1 | 32.6 | -1.8 | 9/5/94 | 24.9 | 24.6 | 1.3 |
| 11/17/93 | 16.4 | 16.7 | -2.0 | 3/9/94 | 23.1 | 21.7 | 6.0 | 6/1/94 | 26.0 | 28.9 | -11.2 | 9/11/94 | 31.6 | 31.7 | -0.3 |
| 11/21/93 | 19.0 | 19.1 | -0.7 | 3/15/94 | 18.3 | 17.9 | 2.3 | 6/7/94 | 10.0 | 9.8 | 2.2 | 9/17/94 | 23.5 | 23.3 | 0.9 |
| 11/29/93 | 43.2 | 44.5 | -3.1 | 3/21/94 | 29.5 | 29.2 | 0.8 | 6/13/94 | 36.1 | 18.7 | 48.3 | 9/23/94 | 50.4 | 49.6 | 1.5 |
| 12/3/93 | 15.2 | 15.7 | -2.9 | 3/27/94 | 26.1 | 27.3 | -4.8 | 6/19/94 | 25.5 | 25.4 | 0.5 | | | mean | 0.2 |
| 12/7/93 | 15.3 | 15.2 | 0.3 | | | mean | -0.8 | 6/25/94 | 14.0 | 22.7 | -62.5 | | | stdev | 4.3 |
| 12/11/93 | 19.9 | 21.0 | -5.3 | | | stdev | 6.7 | | | mean | -9.0 | | | upper 95% | 6.2 |
| 12/15/93 | 41.9 | 45.6 | -8.8 | | | upper 95% | 8.4 | | | stdev | 23.7 | | | lower 95% | -5.7 |
| 12/19/93 | 30.7 | 32.3 | -5.4 | | | lower 95% | -10.1 | | | upper 95% | 23.9 | | | | |
| 12/23/93 | 21.2 | 23.0 | -8.6 | | | | | | | lower 95% | -41.8 | | | | |
| 12/27/93 | 35.5 | 37.0 | -4.2 | | | | | | | | | | | | |
| 12/31/93 | 25.7 | 27.5 | -6.9 | | | | | | | | | | | | |
| | | mean | -3.6 | | | | | | | | | | | | |
| | | stdev | 4.9 | | | | | | | | | | | | |
| | | upper 95% | 3.2 | | | | | | | | | | | | |
| | | lower 95% | -10.4 | | | | | | | | | | | | |

Notes: Additional co-located sampling was conducted during the first 3 months of monitoring

stdev = Standard deviation

**TABLE AD-3**
**TSP Quarterly Precision Results**

| Date | Site 1 | Site 8 | % Difference | Date | Site 1 | Site 8 | % Difference | Date | Site 1 | Site 8 | % Difference | Date | Site 1 | Site 8 | % Difference |
|---|---|---|---|---|---|---|---|---|---|---|---|---|---|---|---|
| 10/2/93 | 77.9 | 77.7 | 0.2 | 1/8/94 | 29.6 | 28.5 | 3.6 | 4/8/94 | 37.7 | 36.5 | 3.1 | 7/1/94 | 106.9 | 100.4 | 6.1 |
| 10/4/93 | 100.8 | 102.2 | -1.4 | 1/14/94 | 43.6 | 33.6 | 23.0 | 4/14/94 | 141.1 | 137.8 | 2.3 | 7/7/94 | 33.4 | 34.1 | -2.2 |
| 10/8/93 | 23.9 | 24.0 | -0.6 | 1/20/94 | 89.5 | 88.8 | 0.8 | 4/20/94 | 85.0 | 83.2 | 2.2 | 7/13/94 | 77.5 | 73.7 | 4.9 |
| 10/12/93 | 37.6 | 37.4 | 0.6 | 1/26/94 | 57.3 | 57.6 | -0.5 | 5/2/94 | 44.8 | 45.6 | -1.9 | 7/19/94 | 76.3 | 74.2 | 2.7 |
| 10/16/93 | 15.0 | 16.9 | -12.0 | 2/1/94 | 66.8 | 68.0 | -1.8 | 5/8/94 | 32.4 | 32.9 | -1.7 | 7/25/94 | 65.1 | 62.2 | 4.5 |
| 10/20/93 | 61.2 | 60.5 | 1.1 | 2/7/94 | 22.3 | 22.7 | -1.9 | 5/14/94 | 44.1 | 42.0 | 4.8 | 7/31/94 | 81.7 | 75.1 | 8.1 |
| 10/24/93 | 93.7 | 100.6 | -7.3 | 2/13/94 | 33.0 | 32.3 | 2.1 | 5/20/94 | 39.6 | 42.3 | -6.6 | 8/6/94 | 109.6 | 96.0 | 12.4 |
| 10/28/93 | 51.9 | 75.8 | -46.0 | 2/19/94 | 45.1 | 43.8 | 2.9 | 5/26/94 | 85.5 | 84.7 | 1.0 | 8/12/94 | 128.2 | 115.5 | 9.8 |
| 11/1/93 | 95.51 | 95.0 | 0.6 | 2/25/94 | 67.0 | 67.8 | -1.2 | 6/1/94 | 64.3 | 64.3 | 0.0 | 8/18/94 | 161.9 | 160.2 | 1.1 |
| 11/5/93 | 45.06 | 43.7 | 3.1 | 3/3/94 | 77.9 | 76.9 | 1.3 | 6/7/94 | 36.6 | 33.5 | 8.5 | 8/24/94 | 148.5 | 140.8 | 5.2 |
| 11/9/93 | 54.22 | 55.0 | -1.4 | 3/9/94 | 57.0 | 51.9 | 8.9 | 6/13/94 | 92.6 | 91.5 | 1.1 | 8/30/94 | 131.2 | 124.1 | 5.4 |
| 11/13/93 | 73.14 | 66.5 | 9.0 | 3/15/94 | 59.5 | 61.3 | -3.0 | 6/19/94 | 50.4 | 49.1 | 2.7 | 9/5/94 | 65.8 | 60.9 | 7.4 |
| 11/17/93 | 48.88 | 47.3 | 3.3 | 3/21/94 | 56.5 | 80.8 | -43.0 | 6/25/94 | 51.8 | 45.6 | 11.9 | 9/11/94 | 80.4 | 71.6 | 11.0 |
| 11/21/93 | 63.92 | 69.1 | -8.2 | 3/27/94 | 60.2 | 52.0 | 13.6 | | | mean | 2.1 | 9/23/94 | 104.5 | 94.7 | 9.4 |
| 11/25/93 | 68.94 | 71.8 | -4.1 | | | mean | 0.3 | | | stdev | 4.5 | | | mean | 6.1 |
| 11/29/93 | 62.37 | 62.6 | -0.3 | | | stdev | 13.9 | | | upper 95% | 8.3 | | | stdev | 3.8 |
| 12/3/93 | 33.8 | 32.8 | 3.0 | | | upper 95% | 19.5 | | | lower 95% | -4.1 | | | upper 95% | 11.4 |
| 12/7/93 | 29.0 | 29.7 | -2.4 | | | lower 95% | -18.9 | | | | | | | lower 95% | 0.8 |
| 12/11/93 | 34.8 | 42.9 | -23.1 | | | | | | | | | | | | |
| 12/19/93 | 45.1 | 44.3 | 1.9 | | | | | | | | | | | | |
| 12/23/93 | 38.5 | 50.6 | -31.5 | | | | | | | | | | | | |
| 12/27/93 | 49.7 | 50.6 | -1.8 | | | | | | | | | | | | |
| 12/31/93 | 47.8 | 46.3 | 3.2 | | | | | | | | | | | | |
| | | mean | -5.0 | | | | | | | | | | | | |
| | | stdev | 12.3 | | | | | | | | | | | | |
| | | upper 95% | 12.1 | | | | | | | | | | | | |
| | | lower 95% | -22.1 | | | | | | | | | | | | |

Note: stdev = Standard deviation

**TABLE AD-4**
**LO-VOL MONTHLY PRECISION RESULTS**

| Date | Site 3 | Site 9 | % Difference |
|---|---|---|---|
| Oct-93 | 202.0 | 142.7 | 29.4 |
| Nov-93 | 71.8 | 53.8 | 25.1 |
| Dec-93 | 34.9 | 31.2 | 10.5 |
| Jan-94 | 33.7 | 29.6 | 11.9 |
| Feb-94 | 29.2 | 26.6 | 8.8 |
| Mar-94 | 67.5 | 56.6 | 16.1 |
| Apr-94 | 64.5 | 43.8 | 32.1 |
| May-94 | 54.9 | 51.5 | 6.3 |
| Jun-94 | 134.1 | 86.9 | 35.2 |
| Jul-94 | 106.2 | 97.1 | 8.5 |
| | | mean | 18.4 |
| | | standard dev. | 10.4 |
| | | upper 95% | 32.8 |
| | | lower 95% | 4.0 |

Note: Sampling at Sites 3 and 9 ended August 1994.

**Figure AD-1**
**Fall Quarter PM-10 Co-located Sampling**

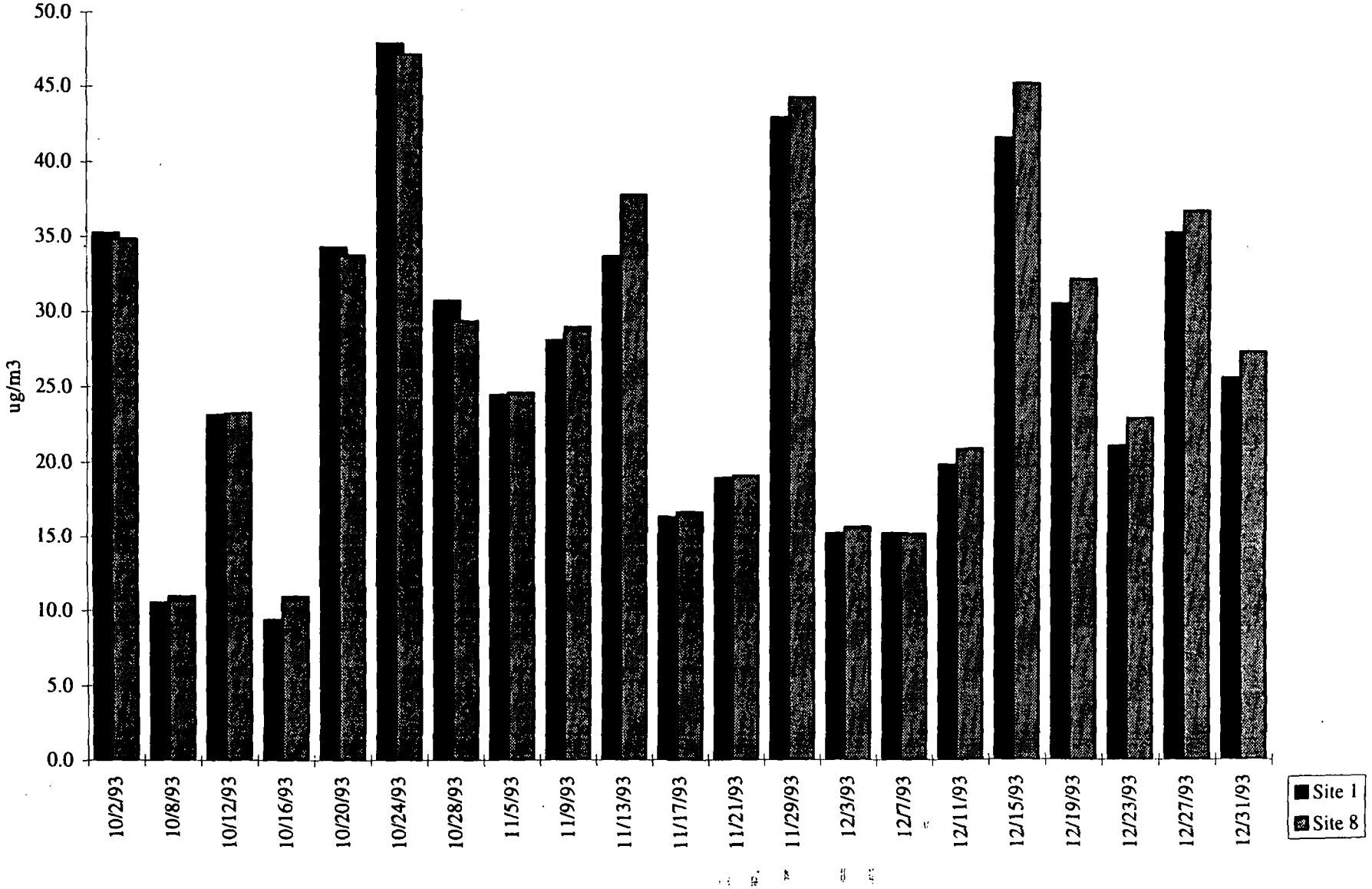

**Figure AD-2**
**Winter Quarter PM-10 Co-located Sampling**

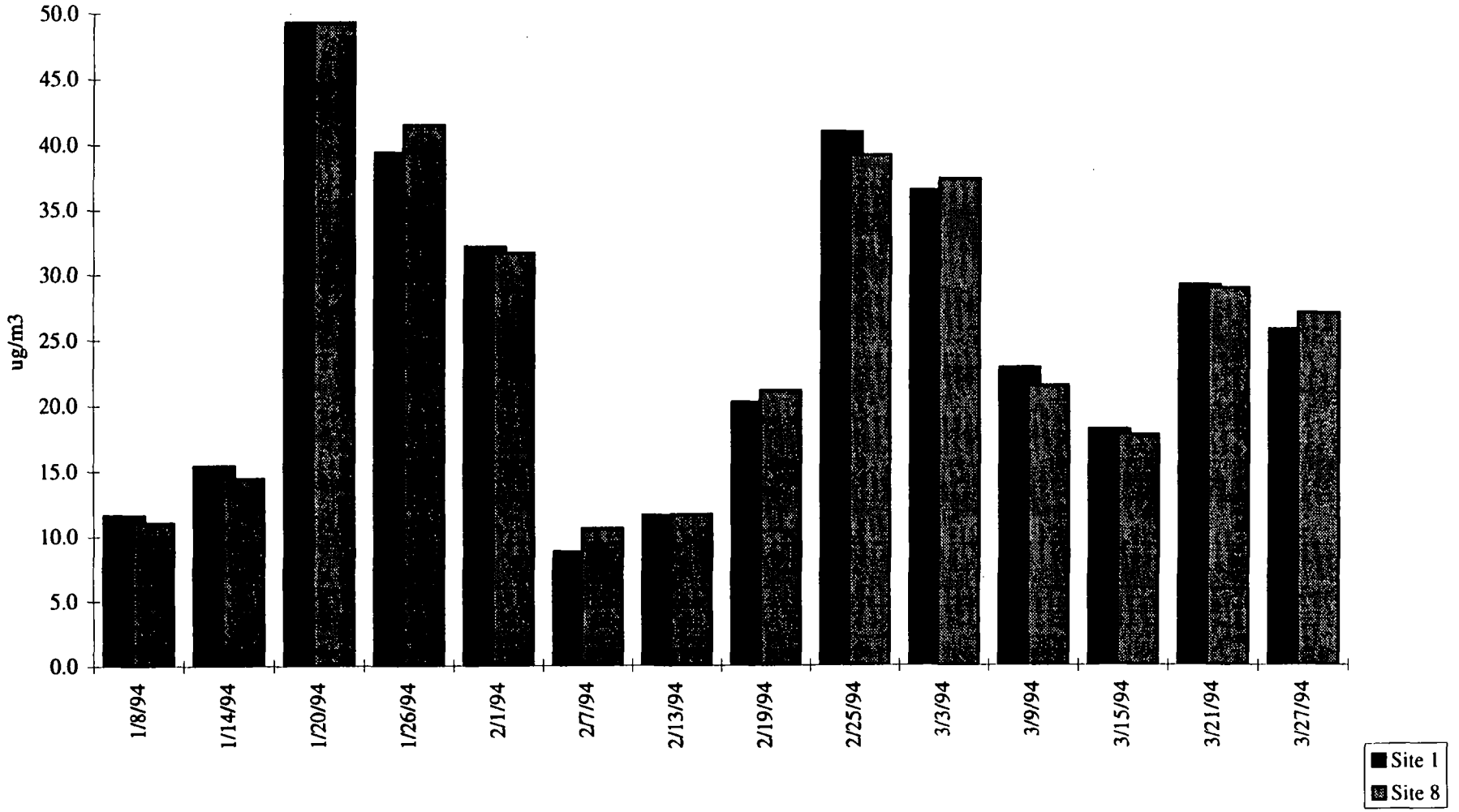

**Figure AD-3**
**Spring Quarter PM-10 Co-located Sampling**

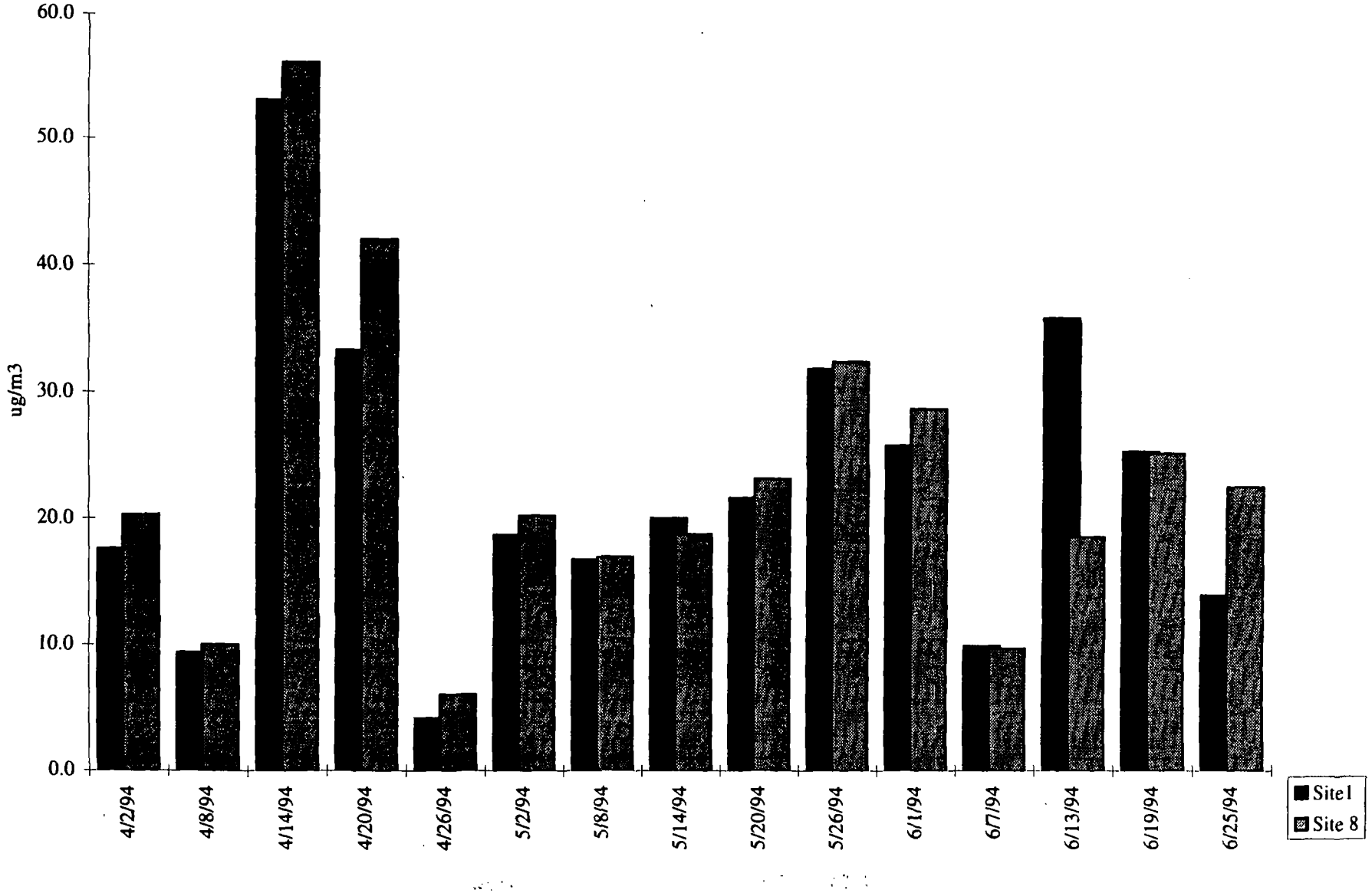

**Figure AD-4**
**Summer Quarter PM-10 Co-located Sampling**

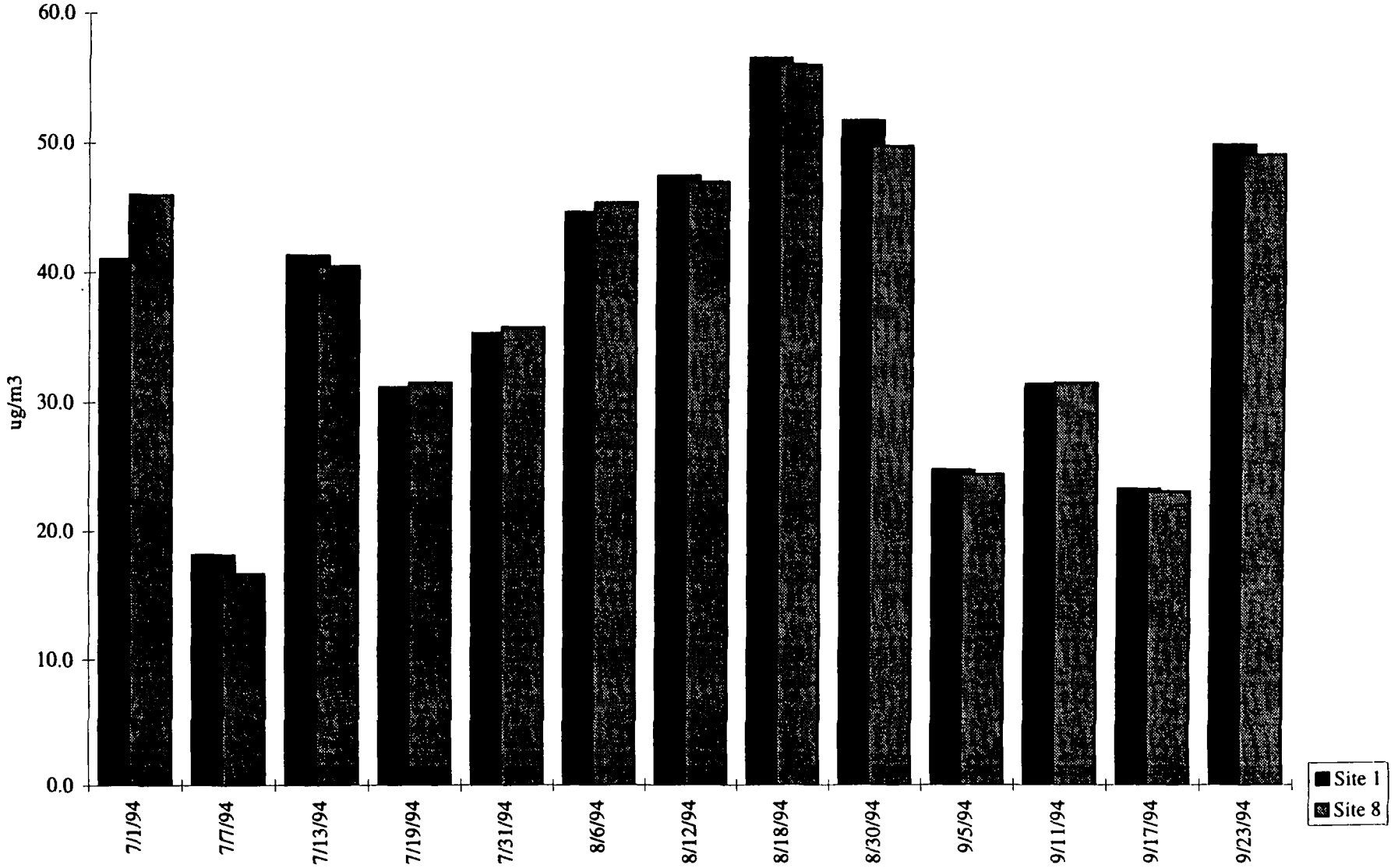


TBLAD_2 Chart 4

8/21/95

**Figure AD-5**
**Fall Quarter TSP Co-located Sampling**

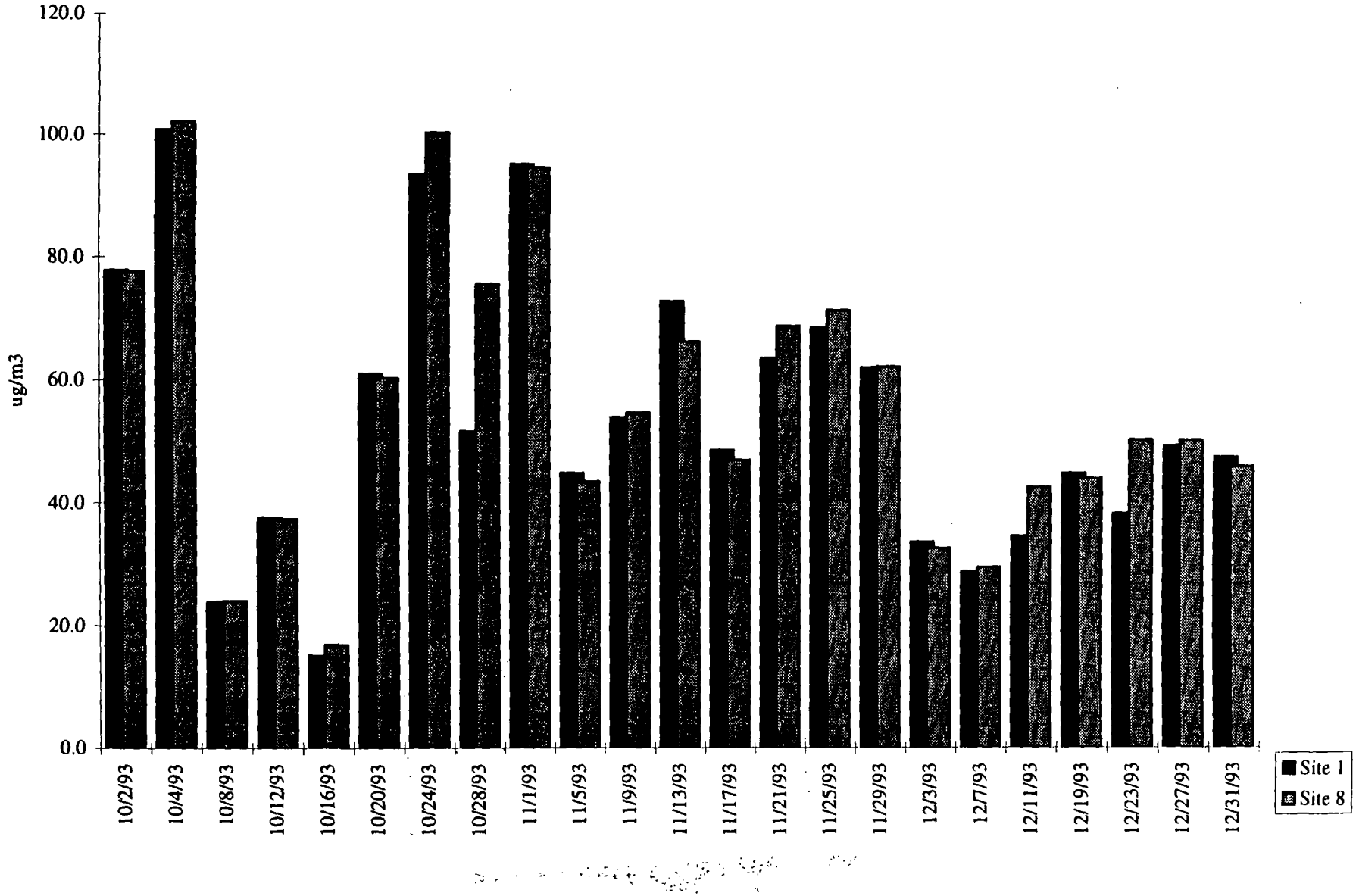

**Figure AD-6**
**Winter Quarter TSP Co-located Sampling**

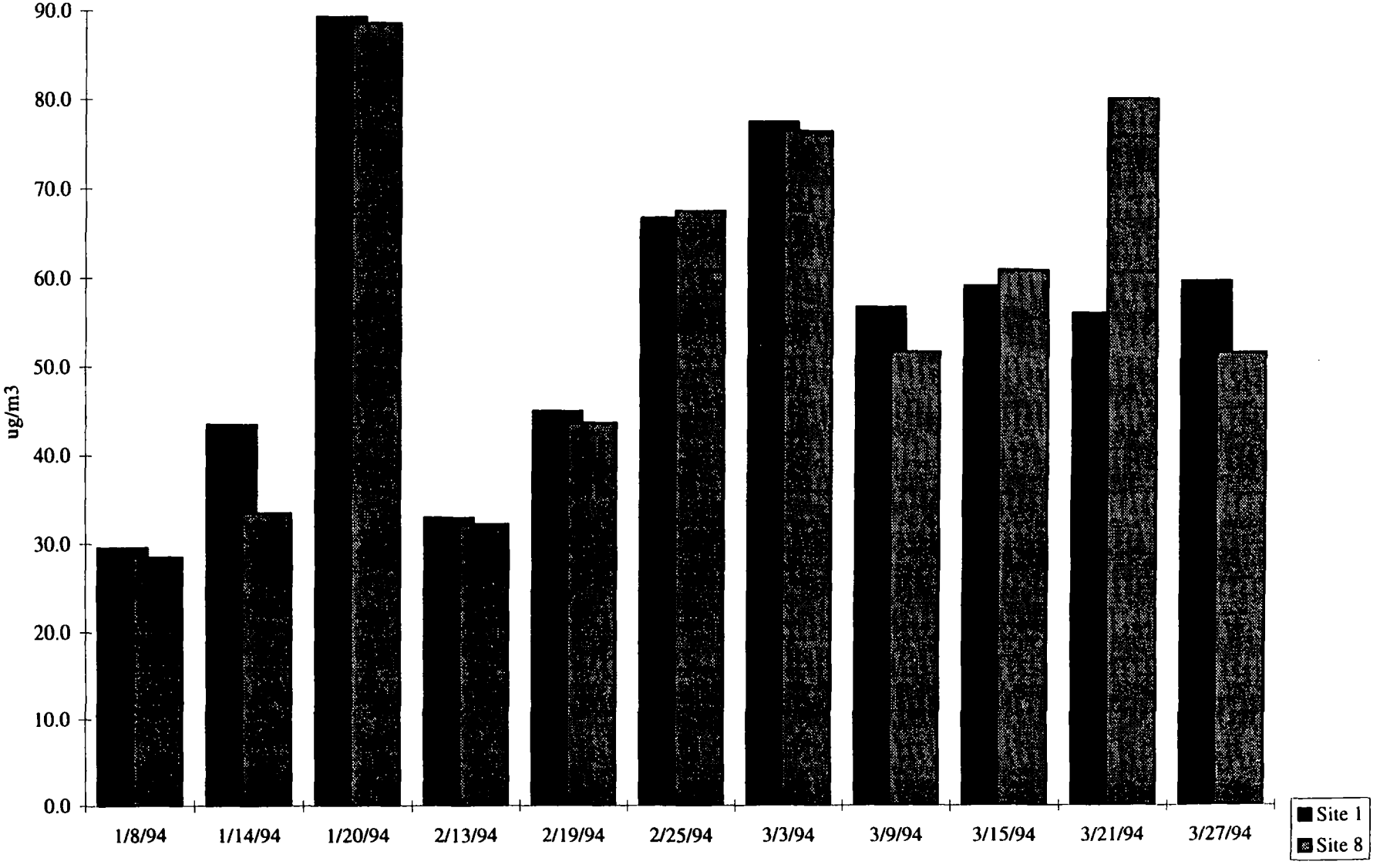


TBLAD_3 Chart 2

8/21/95

**Figure AD-7**
**Spring Quarter TSP Co-located Sampling**

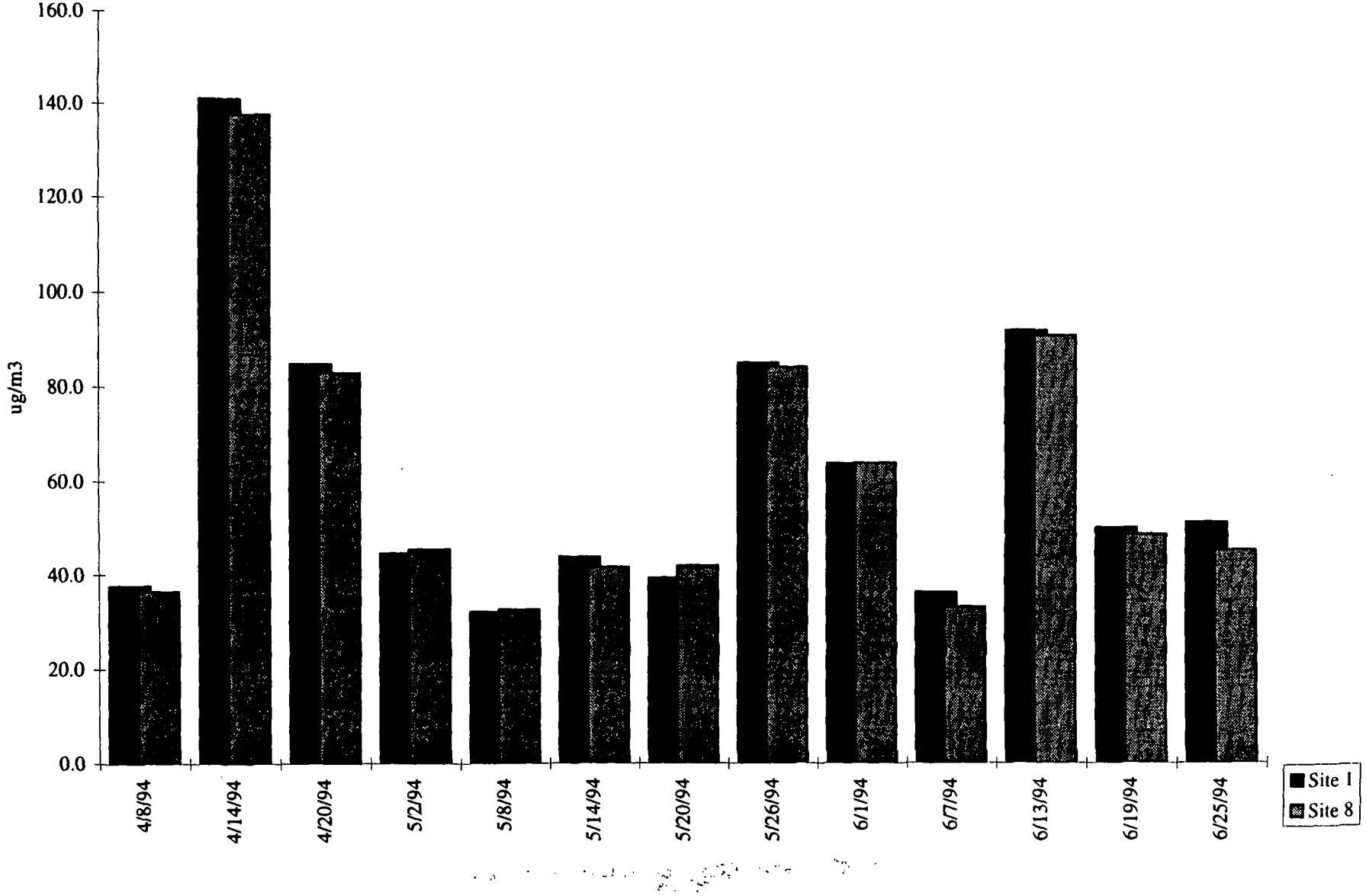


TBLAD_3 Chart 3

8/21/95

**Figure AD-8**
**Summer Quarter TSP Co-located Sampling**

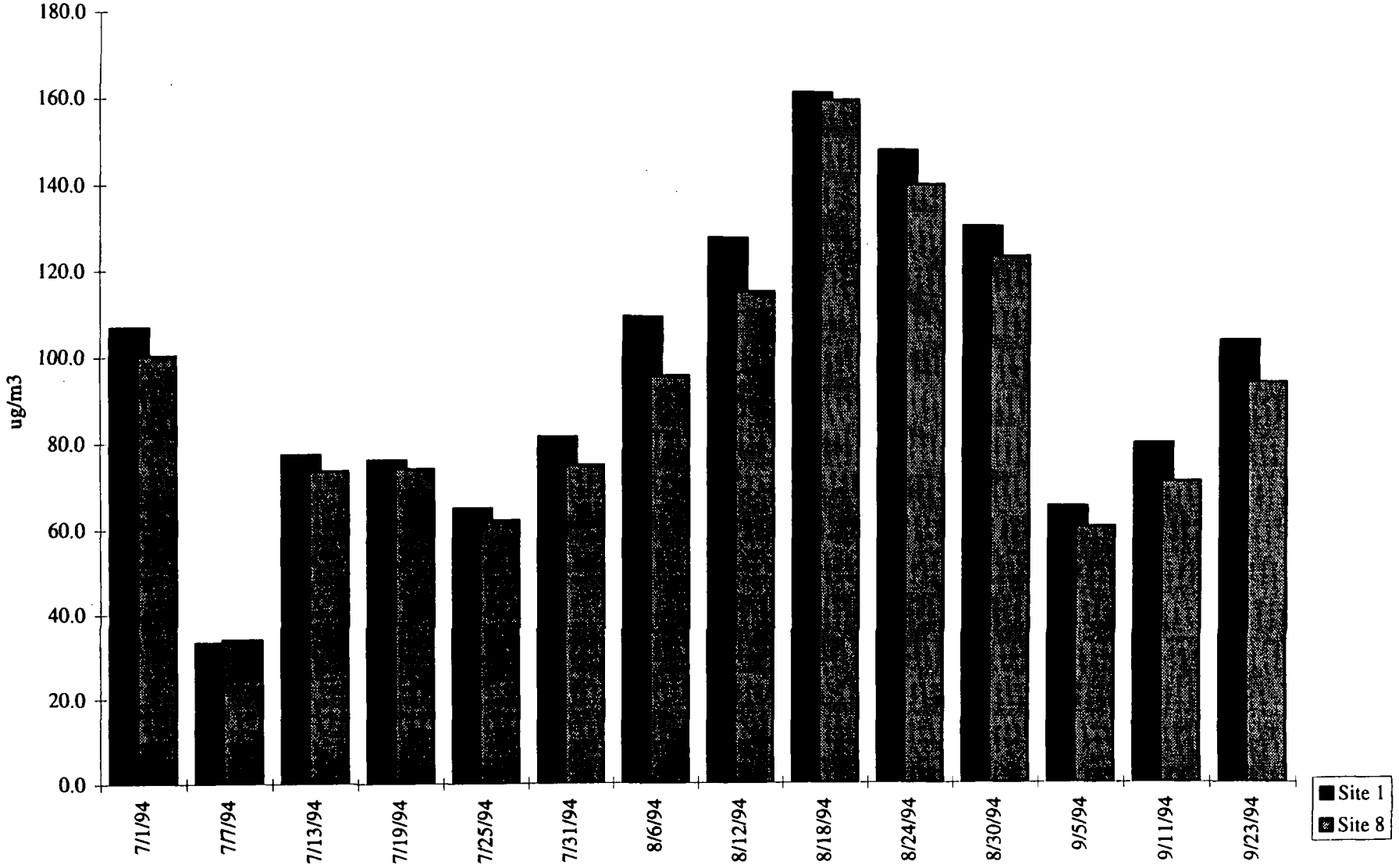

## AD 2 LABORATORY PERFORMANCE

Summaries for laboratory data recovery by month are provided in Tables AD-5 through AD-11. All target goals were met for the sampling period. Further detail on the evaluation of laboratory performance is presented in Appendix J (PARCC), located in Part II of the RI. Appendix J describes the precision, accuracy, representativeness, completeness, and data comparability for laboratory analysis of all sampling media (i.e., groundwater, soil, surface water, and air).

An additional study of data comparability was performed. A set of particulate filters collected on October 21 and 27, 1994 were split into equal parts. The first half was analyzed by Chester LabNet and IT Analytical Services (the laboratories used for routine analysis of all air samples), while the second half was analyzed by Lockheed Analytical Services. This additional comparison of laboratory performance is reported in Section AD 5.

TABLE AD-5
EASTERN MICHAUD FLATS RI/FS OCTOBER, 1993 AIR PROGRAM
SUMMARY OF DATA QUALITY

| Data Quality Indicator | Purpose | Method of Measurement | Goal | Results Found by Validation |
|---|---|---|---|---|
| Precision | Determination of reproducibility of results | Field duplicates (FD)<br>Lab duplicates (LD)<br>Analysis<br>Validation | Reproducible data within 20 percent relative percent difference criterion | FD—139 of 156 within limits (89.1 percent)<br>LD—105 of 105 within limits (100 percent) |
| Accuracy | Bias determination<br>Effect of matrix | Matrix spikes<br>Lab Control Samples (LCS)<br>Validation | Effect of bias on accuracy, acceptable limits:<br>± 20 percent for liquid LCSs<br>within published acceptance criteria for solid LCSs<br>±25 percent for inorganics MS | MS/MSD—184 of 201 within limits (91.5 percent)<br>LCS—108 of 109 within limits (99.1 percent) |
| Representativeness | Identification of false positives or negatives | Blank Evaluation<br>Holding Times<br>Sample Preservation<br>Field quality control samples<br>Validation | Data that accurately represent conditions at the site | Included in validation<br>Included in validation<br>Acceptable<br>Field blank contamination addressed during the validation (if necessary) |
| Comparability | Data appropriate to combine with others | Comparison with other data sets<br>Methods evaluation<br>Validation | Comparable data | Data should be comparable with previous results and future events. |
| Completeness (Analytical) | Predetermined goals met | Comparison of planned and actual analyses<br>Validation | 95 percent | 2281 of 2281 analyses acceptable (100 percent completeness) |

(1) Twenty percent RPD criteria applicable only to instances where results of original and duplicate samples are 5X greater than the detection limit

TABLE AD-6
EASTERN MICHAUD FLATS RI/FS NOVEMBER 1993 AIR PROGRAM
SUMMARY OF DATA QUALITY

| Data Quality Indicator | Purpose | Method of Measurement | Goal | Results Found by Validation |
|---|---|---|---|---|
| Precision | Determination of reproducibility of results | Field duplicates (FD)<br>Lab duplicates (LD)<br>Analysis<br>Validation | Reproducible data within 20 percent relative percent difference criterion[1] | FD—127 of 138 within limits (92.0 percent)<br>LD—112 of 112 within limits (100 percent) |
| Accuracy | Bias determination<br>Effect of matrix | Matrix spikes<br>Lab Control Samples (LCS)<br>Validation | Effect of bias on accuracy, acceptable limits:<br>± 20 percent for LCSs<br>±25 percent for inorganics MS<br>±20 percent for radiological MS | MS/MSD—210 of 226 within limits (92.9 percent)<br>LCS—143 of 144 within limits (99.3 percent) |
| Representativeness | Identification of false positives or negatives | Blank Evaluation<br>Holding Times<br>Sample Preservation<br>Field quality control samples<br>Validation | Data that accurately represent conditions at the site | Included in validation<br>Included in validation<br>Acceptable<br>Field blank contamination addressed during the validation (if necessary) |
| Comparability | Data appropriate to combine with others | Comparison with other data sets<br>Methods evaluation<br>Validation | Comparable data | Data should be comparable with previous results and future events. |
| Completeness (Analytical) | Predetermined goals met | Comparison of planned and actual analyses<br>Validation | 95 percent | 3287 of 3287 analyses acceptable (100 percent completeness) |

[1]Twenty percent RPD criteria applicable only to instances where results of original and duplicate samples are 5X greater than the detection limit

TABLE AD-7
EASTERN MICHAUD FLATS RI/FS DECEMBER 1993 AIR PROGRAM
SUMMARY OF DATA QUALITY

| Data Quality Indicator | Purpose | Method of Measurement | Goal | Results Found by Validation |
|---|---|---|---|---|
| Precision | Determination of reproducibility of results | Field duplicates (FD)<br>Lab duplicates (LD)<br>Analysis<br>Validation | Reproducible data within 20 percent relative percent difference criterion[1] | FD—124 of 132 within limits (93.9 percent)<br>LD—101 of 105 within limits (96.2 percent) |
| Accuracy | Bias determination<br>Effect of matrix | Matrix spikes<br>Lab Control Samples (LCS)<br>Validation | Effect of bias on accuracy, acceptable limits:<br>± 20 percent for LCSs<br>±25 percent for inorganics MS<br>±20 percent for radiological MS | MS/MSD—153 of 164 within limits (93.3 percent)<br>LCS—107 of 109 within limits (98.2 percent) |
| Representativeness | Identification of false positives or negatives | Blank Evaluation<br>Holding Times<br>Sample Preservation<br>Field quality control samples<br>Validation | Data that accurately represent conditions at the site | Included in validation<br>Included in validation<br>Acceptable<br>Field blank contamination addressed during the validation (if necessary) |
| Comparability | Data appropriate to combine with others | Comparison with other data sets<br>Methods evaluation<br>Validation | Comparable data | Data should be comparable with previous results and future events. |
| Completeness (Analytical) | Predetermined goals met | Comparison of planned and actual analyses<br>Validation | 95 percent | 2852 of 2852 analyses acceptable (100 percent completeness) |

[1]Twenty percent RPD criteria applicable only to instances where results of original and duplicate samples are 5X greater than the detection limit

TABLE AD-8
EASTERN MICHAUD FLATS RI/FS JANUARY 1994 AIR PROGRAM
SUMMARY OF DATA QUALITY

| Data Quality Indicator | Purpose | Method of Measurement | Goal | Results Found by Validation |
|---|---|---|---|---|
| Precision | Determination of reproducibility of results | Field duplicates (FD)<br>Lab duplicates (LD)<br>Analysis<br>Validation | Reproducible data within 20 % relative percent difference criterion* | FD—36 of 36 within limits (100 %)<br>LD—86 of 90 within limits (95.6 %) |
| Accuracy | Bias determination<br>Effect of matrix | Matrix spikes<br>Lab Control Samples (LCS)<br>Validation | Effect of bias on accuracy, acceptable limits:<br>± 20 % for LCSs<br>± 25 % for inorganics MS<br>± 20 % for radiological MS | MS/MSD—153 of 155 within limits (98.7 %)<br>LCS—94 of 95 within limits (98.9 %) |
| Representativeness | Identification of false positives or negatives | Blank Evaluation<br>Holding Times<br>Sample Preservation<br>Field quality control samples<br>Validation | Data that accurately represent conditions at the site | Included in validation<br>Included in validation<br>Acceptable<br>Field blank contamination addressed during the validation (if necessary) |
| Comparability | Data appropriate to combine with others | Comparison with other data sets<br>Methods evaluation<br>Validation | Comparable data | Data should be comparable with previous results and future events. |
| Completeness (Analytical) | Predetermined goals met | Comparison of planned and actual analyses<br>Validation | 95 % | 2,510 of 2,510 analyses acceptable (100% completeness) |

*Twenty percent RPD criteria applicable only to instances where results of original and duplicate samples are 5 times greater than the detection limit

TABLE AD-9
EASTERN MICHAUD FLATS RI/FS FEBRUARY 1994 AIR PROGRAM
SUMMARY OF DATA QUALITY

| Data Quality Indicator | Purpose | Method of Measurement | Goal | Results Found by Validation |
|---|---|---|---|---|
| Precision | Determination of reproducibility of results | Field duplicates (FD)<br>Lab duplicates (LD)<br>Analysis<br>Validation | Reproducible data within 20 percent relative percent difference criterion[1] | FD—30 of 32 within limits (93.8 percent)<br>LD—33 of 35 within limits (94.3 percent) |
| Accuracy | Bias determination<br>Effect of matrix | Matrix spikes (MS)<br>Matrix Spike Duplicates (MSD)<br>Lab Control Samples (LCS)<br>Validation | Effect of bias on accuracy, acceptable limits:<br>± 20 percent for LCSs<br>±25 percent for inorganics MS<br>±20 percent for radiological MS | MS/MSD—82 of 82 within limits (100 percent)<br>LCS—46 of 46 within limits (100 percent) |
| Representativeness | Identification of false positives or negatives | Blank Evaluation<br>Holding Times<br>Sample Preservation<br>Field quality control samples<br>Validation | Data that accurately represent conditions at the site | Included in validation<br>Included in validation<br>Acceptable<br>Field blank contamination addressed during the validation (if necessary) |
| Comparability | Data appropriate to combine with others | Comparison with other data sets<br>Methods evaluation<br>Validation | Comparable data | Data should be comparable with previous results and future events. |
| Completeness (Analytical) | Predetermined goals met | Comparison of planned and actual analyses<br>Validation | 95 percent | 1,268 of 1,268 analyses acceptable (100 percent completeness) |

[1]Twenty percent RPD criteria applicable only to instances where results of original and duplicate samples are 5X greater than the detection limit

ABLE AD-10
EASTERN MICHAUD FLATS RI/FS AIR PROGRAM -MARCH 1994 SAMPLING
SUMMARY OF DATA QUALITY

| Data Quality Indicator | Purpose | Method of Measurement | Goal | Results Found by Validation |
|---|---|---|---|---|
| Precision | Determination of reproducibility of results | Field duplicates (FD)<br>Lab duplicates (LD)<br>Analysis<br>Validation | Reproducible data within 20 percent relative percent difference criterion[1] | FD—39 of 42 within limits (92.9 percent)<br>LD—63 of 63 within limits (100 percent) |
| Accuracy | Bias determination<br>Effect of matrix | Matrix spikes (MS)<br>Matrix spike duplicates (MSD)<br>Lab Control Samples (LCS)<br>Validation | Effect of bias on accuracy, acceptable limits:<br>± 20 percent for LCSs<br>±25 percent for inorganics MS<br>±20 percent for radiological MS | MS/MSD—102 of 102 within limits (100 percent)<br>LCS—67 of 67 within limits (100 percent) |
| Representativeness | Identification of false positives or negatives | Blank Evaluation<br>Holding Times<br>Sample Preservation<br>Field quality control samples<br>Validation | Data that accurately represent conditions at the site | Included in validation<br>Included in validation<br>Acceptable<br>Field blank contamination addressed during the validation (if necessary) |
| Comparability | Data appropriate to combine with others | Comparison with other data sets<br>Methods evaluation<br>Validation | Comparable data | Data should be comparable with previous results and future events. |
| Completeness (Analytical) | Predetermined goals met | Comparison of planned and actual analyses<br>Validation | 95 percent | 1582 of 1592 analyses acceptable (99.4 percent completeness) |

[1]Twenty percent RPD criteria applicable only to instances where results of original and duplicate samples are 5X greater than the detection limit

TABLE AD-11

EASTERN MICHAUD FLATS RI/FS AIR PROGRAM - REMAINING DATA SET (POST-MARCH 1994)

SUMMARY OF DATA QUALITY

| Data Quality Indicator | Purpose | Method of Measurement | Goal | Results Found by Validation |
|---|---|---|---|---|
| Precision | Determination of reproducibility of results | Field duplicates (FD)<br>Lab duplicates (LD)<br>Analysis<br>Validation | Reproducible data within 20 percent relative percent difference criterion | FD—31 of 34 within limits (91.2 percent)<br>LD—43 of 43 within limits (100 percent) |
| Accuracy | Bias determination<br>Effect of matrix | Matrix spikes<br>Lab Control Samples (LCS)<br>Validation | Effect of bias on accuracy, acceptable limits:<br>± 20 percent for LCSs<br>±25 percent for inorganics MS<br>±20 percent for radiological MS | MS/MSD—108 of 110 within limits (96.5 percent)<br>LCS—53 of 53 within limits (100 percent) |
| Representativeness | Identification of false positives or negatives | Blank Evaluation<br>Holding Times<br>Sample Preservation<br>Field quality control samples<br>Validation | Data that accurately represent conditions at the site | Included in validation<br>Included in validation<br>Acceptable<br>Field Blank contamination addressed during the validation (if necessary) |
| Comparability | Data appropriate to combine with others | Comparison with other data sets<br>Methods evaluation<br>Validation | Comparable data | Data should be comparable with previous results and future events. |
| Completeness (Analytical) | Predetermined goals met | Comparison of planned and actual analyses<br>Validation | 95 percent | 1,544 of 1,547 analyses (99.8 % completeness) |

CONFIDENTIAL: WORK PRODUCT PREPARED IN ANTICIPATION OF LITIGATION; PRIVILEGED ATTORNEY-CLIENT COMMUNICATION; DO NOT COPY OR DISTRIBUTE FOR ANY PURPOSE, INCLUDING LEGAL DISCOVERY, WITHOUT THE PRIOR CONSENT OF CLIENT'S ATTORNEY.

## AD 3 SUMMARY OF CORRECTIVE ACTIONS

During the first quarter performance audit conducted on November 3–7, 1993, a leak was found in the Site 6 lo-vol sampler, which resulted in a -16% drop in flow through the filter media. No leaks were found in lo-vol samplers operated at Sites 3, 4, and 5. Subsequent tests on the Site 6 sampler revealed that the flow leak was constant. The Site 6 sampler was subsequently repaired and the leak eliminated. Complete audit results for the first quarter audit are provided in Appendix AD-2.

During the month of February, the laboratory discovered that several glass fiber filters had been inadvertently included with the quartz filters shipped to the EMF air monitoring project. Some of these filters were used to collect particulate samples. Since glass fiber filters contain high levels of impurities known to influence inorganic and radiological sample analyses, these samples were subsequently voided.

## AD 4 PROGRAM AUDITS

In accordance with the QAPP, quarterly performance audits were conducted during the monitoring program. Audit procedures were based on methodologies provided in Section 2.11 of the EPA's Quality Assurance Handbook (EPA, 1990e).

The first audit was conducted on November 3–7, 1993 by BEI San Francisco personnel. Second and third quarter audits were performed by $CH_2M$ Hill on February 8–9 and May 26, 1994, respectively. The final audit was conducted by Bechtel personnel on October 4, 1994.

### First Quarter Audit

Results for the first quarter audit are summarized in Tables AD-12 through AD-16 (re-printed from the complete audit report in Appendix AD-2). During the first quarter audit, the co-located TSP sampler flowrate (designated as Site 8) and the Site 5 TSP sampler exceeded the ± 7% audit criteria. Both Sites 5 and 8 (co-located) TSP samplers were subsequently re-calibrated before the next sample day.

Tables AD-13 and AD-14 summarize audit results for fluoride and silica samplers. These results were later discounted since the results could not be duplicated by field technicians. It is believed that the device constructed by the auditor to attach a rotameter to the inlet side of the filter holder did not provide an adequate seal, causing erroneous flow readings during the audit. Later tests were conducted by securing the adapter beneath the upper portion of the holder retained by three swing bolts. Results of these tests indicated that the calibrations of fluoride and silica samplers were within acceptable limits. The complete audit report for the first quarter of monitoring is provided in Appendix AD-2.

### Second Quarter Audit

The second audit of the monitoring program was conducted by $CH_2M$ Hill on February 8–9, 1994. The results of this audit are summarized in Tables AD-17 through AD-20. The Site 6 $PM_{10}$ sampler flowrate exceeded the audit criteria of ± 7% as was later re-calibrated. All other sampling equipment and field operations were within acceptable audit criteria. Lo-vol samplers

were not audited during the second quarter audit because the lo-vol sampler flowrates exceeded the range of the audit device. The complete audit report for the second quarter audit is provided in Appendix AD-2.

### Third Quarter Audit

The third audit of the monitoring program was conducted by $CH_2M$ Hill on May 26, 1994. The results of this audit are summarized in Tables AD-21 through AD-25. All sampling equipment and field operations were within acceptable audit criteria. The complete audit report for the third quarter audit is provided in Appendix AD-2.

### Final Audit

The final audit of the monitoring program was conducted by BEI personnel on October 4, 1994. The results of this audit are presented in Table AD-26. All audit results were within acceptable audit criteria. The complete report for the final audit is presented in Appendix AD-2.

## TABLE AD-12

### RESULTS OF HI-VOL SAMPLERS AUDIT

| Date | Time[1] (Begin/End) | Sampler[2] I.D. | AUDIT DATA | | | | | SITE DATA | % Difference |
|---|---|---|---|---|---|---|---|---|---|
| | | | Water Manometer ΔH ($^{\circ}H_2O$) | Ambient Temp. $T_a$ ($^{\circ}C$) | Flowrate[3] $Q_a$ (ACMM) | Flowrate[4] $Q_a$ (ACFM) | Flowrate[5] $Q_{STP}$ (SCFM) | Reported[6] Flowrate (SCFM) | Audit Flowrate vs. Reported Flowrate |
| Nov 7 | 1435/1445 | 1T | 4.75 | 8.0 | 1.10 | 38.9 | 35.3 | 34.3 | -2.8 |
| Nov 7 | 1450/1500 | 1P | 5.05 | 8.0 | 1.13 | 40.1 | 36.4 | 35.9 | -1.3 |
| Nov 6 | 1625/1635 | 2T | 5.05 | 7.5 | 1.13 | 40.0 | 36.4 | 34.3 | -5.8 |
| Nov 6 | 1638/1648 | 2P | 4.90 | 7.5 | 1.12 | 39.4 | 35.9 | 33.9 | -5.5 |
| Nov 7 | 1543-1553 | 3T | 5.30 | 7.5 | 1.16 | 41.0 | 37.3 | 34.7 | -7.0 |
| Nov 7 | 1558-1608 | 3P | 5.05 | 7.5 | 1.13 | 40.0 | 36.4 | 34 | -6.6 |
| Nov 7 | 1705-1715 | 4T | 4.75 | 5.0 | 1.09 | 38.7 | 35.5 | 34.4 | -3.1 |
| Nov 7 | 1720-1730 | 4P | 5.25 | 5.0 | 1.15 | 40.6 | 37.3 | 36.1 | -3.2 |
| Nov 6 | 1525-1535 | 5T | 5.15 | 8.5 | 1.15 | 40.5 | 36.7 | 33.6 | -8.5 |
| Nov 6 | 1540-1550 | 5P | 4.85 | 8.5 | 1.11 | 39.3 | 35.6 | 34.4 | -3.5 |
| Nov 6 | 1342-1352 | 6T | 5.00 | 8.0 | 1.13 | 39.9 | 36.2 | 34.2 | -5.5 |
| Nov 6 | 1400-1410 | 6P | 5.05 | 8.5 | 1.14 | 40.1 | 36.4 | 34.6 | -4.8 |
| Nov 4 | 1535-1545 | 7T | 4.70 | 6.0 | 1.09 | 38.5 | 35.2 | 34.7 | -1.5 |
| Nov 4 | 1552-1602 | 7P | 4.80 | 6.0 | 1.10 | 38.9 | 35.6 | 36.2 | 1.6 |
| Nov 7 | 1400-1410 | 8T | 5.20 | 8.0 | 1.15 | 40.7 | 36.9 | 34.3 | -7.1 |
| Nov 7 | 1418-1428 | 8P | 5.30 | 8.0 | 1.16 | 41.0 | 37.3 | 36 | -3.4 |

(1) Mountain Standard Time
(2) The number denotes the site (e.g., 5 = Site 5). The letter "T" denotes a TSP sampler and the letter "P" denotes a $PM_{10}$ sampler.
(3) $Q_a = (\Delta H\ (T_a/P_a))^{1/2}$ in actual cubic meters per minute (ACMM), where $P_a$ is 25.5 "Hg (based on site elevation)
(4) $Q_a = (\Delta H\ (T_a/P_a))^{1/2}$ in actual cubic feet per minute (ACFM)
(5) $Q_{STP} = (\Delta P\ (P_a/P_{STD})(298.15/T_a))^{1/2}$
(6) Flowrate reported by site for conditions at the time of the audit.

TABLE AD-13
RESULTS OF FLUORIDE SAMPLERS AUDIT

| Date | Site No. | Approx.(1) Time (MST) | Pump No. | Pump Flow Setting (LPM) | AUDIT DATA | | | | | SITE DATA | | % (3) Difference |
|---|---|---|---|---|---|---|---|---|---|---|---|---|
| | | | | | Ambient Temp. $T_a$ (°C) | Ambient Pressure $P_a$ ("Hg) | Audit Rotameter Indication (LPM) | Actual(2) Flowrate $Q_a$ (ALPM) | Standard(2) Flowrate $Q_{STP}$ (SLPM) | Reported Flowrate (ALPM) | Reported Flowrate (SLPM) | |
| Nov 7 | 1 | 1510 | 8 | 1.2 | 8.5 | 25.5 | 0.93 | 1.03 | 0.86 | 1.3 | 1.2 | 40.0 |
| | | | 9 | 1.2 | 8.5 | 25.5 | 0.93 | 1.03 | 0.86 | 1.2 | 1.1 | 28.3 |
| Nov 6 | 2 | 0900 | 7 | 1.2 | -4 | 25.5 | 1.17 | 1.29 | 1.07 | 1.2 | 1.1 | 2.5 |
| | | | 12 | 1.2 | -4 | 25.5 | 1.27 | 1.40 | 1.16 | 1.2 | 1.1 | -5.4 |
| Nov 6 | 6 | 1408 | 2 | 1.3 | 8.5 | 25.5 | 1.13 | 1.25 | 1.04 | 1.4 | 1.3 | 25.3 |
| | | | 5 | 1.3 | 8.5 | 25.5 | 0.98 | 1.09 | 0.90 | 1.1 | 1 | 10.8 |
| Nov 7 | 7 | 1320 | 3 | 1.2 | 6 | 25.5 | 1.02 | 1.13 | 0.94 | 1.3 | 1.2 | 27.9 |
| | | | 1 | 1.2 | 6 | 25.5 | 1.15 | 1.27 | 1.06 | 1.3 | 1.2 | 13.7 |

(1) Mountain Standard Time

(2) $y = mx+b$ where $y$ = rotameter indication and $x$ = flowrate
Regression results from rotameter calibration:

| | $Q_a$ | $Q_{STP}$ |
|---|---|---|
| m = | 0.9214 | 1.1114 |
| b = | -0.0225 | -0.0228 |
| r = | 0.9999 | 0.9999 |

(3) ((Reported Standard Flowrate - Audit Standard Flowrate)/Audit Standard Flowrate) * 100

## TABLE AD-14
## RESULTS OF SILICA SAMPLERS AUDIT

| Date | Site No. | Approx.[1] Time (MST) | Pump No. | Pump Flow Setting (LPM) | AUDIT DATA | | | | | | | SITE DATA | | % [5] Difference |
|---|---|---|---|---|---|---|---|---|---|---|---|---|---|---|
| | | | | | Audit Point No. | Ambient Temp. $T_a$ (°C) | Ambient Pressure $P_a$ ("Hg) | Audit[2] Rotameter Indication at Tubing (LPM) | Audit[3] Rotameter Indication at Filter (LPM) | Actual[4] Flowrate $Q_a$ (ALPM) | Standard[4] Flowrate $Q_{STP}$ (SLPM) | Reported Flowrate (ALPM) | Reported Flowrate (SLPM) | |
| Nov 7 | 1 | 1510 | 11 | 2.0 | 1[6] | 8.5 | 25.5 | 1.77 | 1.05 | 1.16 | 0.97 | 2.1 | 1.9 | 96.8 |
| | | | | | 2[7] | 8.5 | 25.5 | 1.77 | 1.05 | 1.16 | 0.97 | 2.1 | 1.9 | 96.8 |
| Nov 6 | 2 | 0900 | 6 | 2.0 | 2[6] | 7.5 | 25.5 | 1.71 | 0.87 | 0.97 | 0.80 | 2 | 1.8 | 124.1 |
| | | | | | 3[7] | 7.5 | 25.5 | 1.71 | 0.82 | 0.91 | 0.76 | 2 | 1.8 | 137.4 |
| Nov 6 | 6 | 1428 | 4 | 2.15 | 3[7] | 8.5 | 25.5 | 1.87 | 0.6 | 0.68 | 0.56 | 2.2 | 2 | 256.9 |
| Nov 7 | 7 | 1320 | 10 | 2.1 | 4[6] | 6 | 25.5 | 1.87 | 0.4 | 0.46 | 0.38 | 2.2 | 2 | 425.7 |
| | | | | | 5[7] | 6 | 25.5 | 1.87 | 0.4 | 0.46 | 0.38 | 2.2 | 2 | 425.7 |

NO - not obtained

(1) Mountain Standard Time

(2) Audit rotameter pneumatically connected directly to the pump tubing.

(3) Audit rotameter pneumatically connected to filter adapter with filter adapter pressed down over the inlet of the GPS11 Dual Sampling Module.

(4) $y = mx+b$ where $y$ = rotameter indication and $x$ = flowrate

Regression results for rotameter calibration:

| | $Q_a$ | $Q_{STP}$ |
|---|---|---|
| m = | 0.9214 | 1.1114 |
| b = | -0.0225 | -0.022 |
| r = | 0.9999 | 0.9999 |

(5) ((Reported Standard Flowrate - Audit Standard Flowrate)/Audit Standard Flowrate) * 100

(6) Audit rotameter indication with "funnel type" filter adapter pressed over GPS11 inlet.

(7) Audit rotameter indication with "electrical fixture" type filter adapter pressed over GPS11 inlet.

## TABLE AD-15
## RESULTS OF LO-VOL SAMPLERS AUDIT

| Date | Site No. | Approx.(1) Time | Dry Gas Meter No. | Ambient Temp. (°C) | Ambient Pressure ("Hg) | Equipment Configuration | Site DGM | | | Audit DGM | | | % (2) Difference |
|---|---|---|---|---|---|---|---|---|---|---|---|---|---|
| | | | | | | | Revolutions in 60 Seconds (revs) | Seconds for 1 Revolution (sec) | Average Flowrate (ACFM) | Revolutions in 60 Seconds (revs) | Seconds for 1 Revolution (sec) | Average Flowrate (ACFM) | |
| Nov 7 | 3 | 1620 | 2 | 7.5 | 25.5 | Audit DGM not attached | 1.27 | 44 | 1.32 | | | | 2.9 |
| | | | | | | Audit DGM Attached | 1.3 | 50 | 1.25 | 1.3 | 47.6 | 1.28 | -2.4 |
| Nov 7 | 3 | 1630 | 3 | 7.5 | 25.5 | Audit DGM not attached | 1.13 | 54 | 1.12 | | | | -10.3 |
| | | | | | | Audit DGM Attached | 1.05 | 54.5 | 1.08 | 1.25 | 48.1 | 1.25 | -13.9 |
| Nov 7 | 4 | 1740 | 5 | 5 | 25.5 | Audit DGM not attached | 1.17 | 52.5 | 1.16 | | | | -11.9 |
| | | | | | | Audit DGM Attached | 1.2 | 55.8 | 1.14 | 1.3 | 45.3 | 1.31 | -13.3 |
| Nov 6 | 5 | 1552 | 1 | 8.5 | 25.5 | Audit DGM not attached | NO | NO | | | | | |
| | | | | | | Audit DGM Attached | 1.25 | 49.2 | 1.23 | 1.3 | 46.3 | 1.30 | -4.9 |
| Nov 6 | 6 | 1435 | 4 | 8.5 | 25.5 | Audit DGM not attached | NO | NO | | | | | |
| | | | | | | Audit DGM Attached | 1.3 | 46.9 | 1.29 | 1.3 | 46.9 | 1.29 | 0.0 |

NO = not obtained during audit
(1) Mountain Standard Time
(2) ((Site DGM - Audit DGM)/Audit DGM) * 100

## TABLE AD-16
## RESULTS OF METEOROLOGICAL SENSORS AUDIT

| Audit Point No. | Approx. Time (MST) | Site No. | Sensor Type | Sensor Model | Serial Number | Sensor Range | Audit Value | Sensor Response | | Difference | |
|---|---|---|---|---|---|---|---|---|---|---|---|
| | | | | | | | | DDAS[1] | SCR[2] | DDAS[1] | SCR[2] |
| 1 | 1330 | 1 | Wind Direction | Met One 024 | SI1010 | 0° - 540° | 178 | 181 | 180 | 3 | 2 |
| 2 | 1340 | | Wind Direction | " | " | 0° - 540° | 268 | 272 | 270 | 4 | 2 |
| 3 | 1345 | | Wind Direction | " | " | 0° - 540° | 88 | 89 | 88 | 1 | 0 |
| 4 | 1330 | | Wind Speed | Met One 014 | A1060 | 0 - 50 mph | 0 | 1 | 1.5 | 1.0 | 1.5 |
| 5 | 1340 | | Wind Speed | " | " | 0 - 50 mph | 18.9 | 18.8 | 19 | -0.1 | 0.1 |
| 6 | 1345 | | Temperature | Met One 060 | ---[3] | -50 to +50° C | 5.5 | 5.8 | 5.3 | 0.3 | -0.2 |
| 7 | 1355 | | Relative Humidity | Met One 083 | ---[3] | 0 - 100% | 43 | 37 | 37 | -6 | -6 |
| 8 | - | | Sigma theta | ---[4] | --- | 0 - 100° | NA | - | - | - | - |
| 9 | - | | Mixing Height | Aerovironment 300C | ---[3] | 0 - 1,000 m | NA | - | - | - | - |
| 10 | 1630 | 7 | Wind Direction | Met One 024 | B1582 | 0° - 540° | 183 | 180 | 183 | -3 | 0 |
| 11 | 1640 | | Wind Direction | " | " | 0° - 540° | 8 | 4 | 0 | -4 | -8 |
| 12 | 1630 | | Wind Speed | Met One 014 | SIM-1 | 0 - 50 mph | 0.0 | 1.0 | 1.0 | 1.0 | 1.0 |
| 13 | 1640 | | Wind Speed | " | " | 0 - 50 mph | 18.9 | 18.8 | 19 | -0.1 | 0.1 |
| 14 | 1715 | | Temperature | Met One 060 | ---[3] | -50 to +50° C | 2.5 | 2.5 | 2.3 | 0.0 | -0.2 |
| 15 | - | | Sigma theta | ---[4] | --- | 0 - 100° | NA | - | - | - | - |

NA = not audited
(1) DDAS = digital data acquisition system
(2) SCR - strip chart recorder
(3) Serial number could not be verified by auditor.
(4) Sigma theta calculated by DDAS.

TABLE AD-17

| TSP Hi-Vol Sampler Audit Results | | | |
|---|---|---|---|
| Site # | TSP Sampler I.D. | Audit Flow % Difference | EPA and Monitoring Plan Limit % |
| #1 | 8T | -2.8 | ±7 |
| #1 | 1T | 1.4 | ±7 |
| #2 | 2T | -3.4 | ±7 |
| #3 | 3T | -5.7 | ±7 |
| #4 | 4T | -2.5 | ±7 |
| #5 | 5T | -6.9 | ±7 |
| #6 | 6T | -4.6 | ±7 |
| #7 | 7T | -3.2 | ±7 |
| All eight TSP samplers passed the performance audit | | | |

TABLE AD-18

| $PM_{10}$ Hi-Vol Sampler Audit Results | | | | | |
|---|---|---|---|---|---|
| Site # | $PM_{10}$ Sampler I.D. | Audit Flowrate Percent Difference | EPA Flowrate % Difference Requirement | Design Flowrate Percent Difference | EPA design Flowrate % Difference Requirement |
| #1 | 1P | 0.0 | ±7 | 0.7 | ±10 |
| #1 | 8P | 1.4 | ±7 | -0.9 | ±10 |
| #3 | 2P | -5.5 | ±7 | 0.9 | ±10 |
| #4 | 4P | -3.6 | ±7 | 4.4 | ±10 |
| #5 | 5P | -2.5 | ±7 | 0.0 | ±10 |
| #6 | 6P | -7.3 | ±7 | 4.4 | ±10 |
| #7 | 7P | 2.9 | ±7 | -1.8 | ±10 |

Source: $CH_2M$ Hill Second Quarterly Audit Report - March 1994

TABLE AD-19

| Silica Sampler Audit Results | | | | | | |
|---|---|---|---|---|---|---|
| Site # | Actual Field Conditions | | Silica MSA Pump # | Simplot Measured Flowrate (lpm) | Audit Flowrate (lpm) | % Flowrate Difference |
| | pressure mmHg | temperature °C | | | | |
| #1 | 646 | 4.1 | #4 | 2.0 | 2.18 | -8.3 |
| #2 | 642 | 22.2 | #11 | 2.0 | 2.16 | -7.4 |
| #6 | 639 | 0.1 | #6 | 2.0 | 1.91 | 4.7 |
| #7 | 636 | 1.0 | #10 | 2.0 | 2.05 | -2.4 |

TABLE AD-20

| Fluoride Sampler Audit Results | | | | | | |
|---|---|---|---|---|---|---|
| Site # | Actual Field Conditions | | Fluoride MSA Pump # | Simplot Measured Flowrate (lpm) | CH2M HILL Audit Flowrate (lpm) | % Flowrate Difference |
| | pressure mmHg | temperature °C | | | | |
| #1 | 646 | 4.1 | #13 | 1.20 | 1.30 | -7.6 |
| #1 | 646 | 4.1 | # | 1.20 | 1.29 | -7.0 |
| #2 | 642 | 22.2 | #7 | 1.1 | 1.25 | -12.0 |
| #2 | 642 | 22.2 | #12 | 1.1 | 1.25 | -12.0 |
| #6 | 639 | 0.1 | #5 | 1.31 | 1.27 | 3.1 |
| #6 | 639 | 0.1 | #12 | 1.25 | 1.29 | -3.1 |
| #7 | 636 | 1.0 | #3 | 1.20 | 1.27 | -5.5 |
| #7 | 636 | 1.0 | #1 | 1.20 | 1.28 | -6.3 |

Source: $CH_2M$ Hill Second Quarterly Audit Report - March 1994

TABLE AD-21

| TSP Hi-Vol Sampler Audit Results | | | |
|---|---|---|---|
| **Site #** | **TSP Sampler I.D.** | **Audit Flow % Difference** | **EPA and Monitoring Plan Limit %** |
| #1 | 8T | -.9 | ±7 |
| #1 | 1T | -3.6 | ±7 |
| #2 | 2T | -2.7 | ±7 |
| #3 | 3T | -4.7 | ±7 |
| #4 | 4T | -2.7 | ±7 |
| #5 | 5T | -5.4 | ±7 |
| #6 | 6T | -2.7 | ±7 |
| #7 | 7T | -3.5 | 7 |
| | | | |
| All eight TSP samplers passed the performance audit | | | |

TABLE AD-22

| $PM_{10}$ Hi-Vol Sampler Audit Results | | | | | |
|---|---|---|---|---|---|
| **Site #** | **$PM_{10}$ Sampler I.D.** | **Audit Flowrate Percent Difference** | **EPA Flowrate % Difference Requirement** | **Design Flowrate Percent Difference** | **EPA design Flowrate % Difference Requirement** |
| #1 | 1P | -0.9 | ±7 | 0.9 | ±10 |
| #1 | 8P | -1.7 | ±7 | 4.4 | ±10 |
| #2 | 2P | -3.6 | ±7 | -0.9 | ±10 |
| #3 | 3P | -0.9 | ±7 | 0.9 | ±10 |
| #4 | 4P | 0.9 | ±7 | 0.9 | ±10 |
| #5 | 5P | -4 | ±7 | 0.0 | ±10 |
| #6 | 6P | -3.5 | ±7 | -0.9 | ±10 |
| #7 | 7P | -0.9 | ±7 | 0.9 | ±10 |

Source: $CH_2M$ Hill Third Quarterly Audit Report - July 1994

TABLE AD-23

| Silica Sampler Audit Results | | | | | | |
|---|---|---|---|---|---|---|
| Site # | Actual Field Conditions | | Silica MSA Pump # | Simplot Measured Flowrate (lpm) | Audit Flowrate (lpm) | % Flowrate Difference |
| | pressure mmHg | temperature °C | | | | |
| #1 | 650.2 | 34.2 | #4 | 2.0 | 2.20 | -9.1 |
| #2 | 651 | 22.8 | #12 | 2.0 | 2.13 | -6.1 |
| #6 | 651.7 | 23.3 | #6 | 2.0 | 2.12 | 5.7 |
| #7 | 642 | 26.9 | #10 | 2.2 | 2.26 | -3.1 |
| #8 | 650.2 | 34.2 | #1 | 2.2 | 2.25 | -2.2 |

TABLE AD-24

| Fluoride Sampler Audit Results | | | | | | |
|---|---|---|---|---|---|---|
| Site # | Actual Field Conditions | | Fluoride MSA Pump # | Simplot Measured Flowrate (lpm) | CH2M HILL Audit Flowrate (lpm) | % Flowrate Difference |
| | pressure mmHg | temperature °C | | | | |
| #1 | 650.2 | 34.2 | #13 | 1.20 | 1.28 | -6.2 |
| #2 | 651.1 | 22.8 | #7 | 1.2 | 1.28 | -6.3 |
| #6 | 651.7 | 23.3 | #5 | 1.20 | 1.30 | -7.6 |
| #7 | 642 | 26.9 | #3 | 1.20 | 1.27 | -5.5 |
| #8 | 650.2 | 34.2 | #9 | 1.20 | 1.27 | -5.5 |

Source: $CH_2M$ Hill Third Quarterly Audit Report - July 1994

TABLE AD-25

| Site # | Vacuum Pump I.D. | Site Dry Gas Meter S/N | Audit Drycal DC-1 Flow Meter | Site Meter Determined Flowrate (cfm) | Audit Meter Flowrate (cfm) | % Difference |
|---|---|---|---|---|---|---|
| 3 | 3-1091 | 6840569 | B-811 | 1.10 | 1.12 | -1.8 |
| 3 | 2-0639-3 | 6840572 | B-811 | 1.24 | 1.18 | 5.1 |
| 4 | 506934 | 6847879 | B-811 | 1.12 | 1.13 | -0.9 |
| 5 | 106935 | 6844554 | B-811 | 1.09 | 1.18 | -7.6 |
| 6 | 52667-6 | 6844553 | B-811 | 1.19 | 1.17 | 1.7 |

Source: $CH_2M$ Hill Third Quarterly Audit Report - July 1994

TABLE AD-26
AUDIT RESULTS (10/4/94)

| Sampler ID | Q Audit (acfm) | Q station (acfm) | % Diff. | Operating Flow (acfm) |
|---|---|---|---|---|
| 1-T | 41.4 | 40.0 | -3.4 | N/A |
| 1-P | 41.8 | 41.2 | -1.4 | 40.5 |
| 2-T | 41.4 | 39.9 | -3.6 | N/A |
| 2-P | 41.4 | 39.7 | -4.1 | 38.8 |
| 4-T | 41.8 | 39.3 | -5.9 | N/A |
| 4-P | 41.8 | 41.0 | -1.9 | 40.3 |
| 5-T | 44.0 | 42.1 | -4.3 | N/A |
| 5-P | 44.0 | 42.1 | -4.3 | 39.3 |
| 6-T | 39.0 | 36.8 | -5.6 | N/A |
| 6-P | 39.0 | 37.6 | -3.6 | 39.4 |
| 7-T | 42.1 | 42.9 | 1.9 | N/A |
| 7-P | 41.4 | 42.4 | 2.4 | 40.9 |
| 8-T | 41.8 | 40.3 | -3.6 | N/A |
| 8-P | 41.0 | 41.1 | 0.2 | 41.1 |

## AD 5 ANALYTICAL DATA COMPARABILITY

As an additional assessment of the quality of analytical laboratory results, a set of particulate filters were split into two equal fractions with each fraction being analyzed at two laboratories. Twelve $PM_{10}$ samples taken on October 21 and 27, 1994 at Sites 1, 2, 6, and 7 were used as the basis for this comparability test. Each of the 12 filters were split into equal amounts by weight (approximately half of each filter). Six halves were analyzed by Chester LabNet for metals analysis and another six halves were analyzed by IT Analytical Services for radionuclides. Chester LabNet and IT Analytical Labs performed the routine sample analysis for the EMF air pathways monitoring study. The corresponding 12 halves were analyzed by Lockheed Analytical Services, located in Las Vegas, Nevada, for metals and radionuclides.

The split filters were appropriately labeled such that Chester and Lockheed analyzed metals from the same parent filters, and IT and Lockheed analyzed radionuclides from the same parent filters. Following receipt of analytical data from each laboratory, all data were evaluated by BEI data validators to assess laboratory analytical data comparability. The results of this assessment are presented in this section.

### INORGANIC METALS

The inorganic data set showed acceptable inter-laboratory precision, with only 9 out of 90 separate analyses outside acceptance criteria, (i.e., 90 percent of samples were within control limits). One notable feature of the inorganic data set was that in most data pairs, where both laboratories recorded detects, the results reported by Chester were higher than those reported by Lockheed. This finding occurred in 82 percent of the samples analyzed. Overall inorganic inter-laboratory precision data showed 90 percent of samples were acceptable and thus samples were judged comparable.

### RADIOLOGICAL ANALYSIS

The comparability of radiological data was found to be acceptable, with the exception of total uranium. Unlike the inorganic metals samples described above, radiological samples analyzed

both by IT and Lockheed showed no consistent high or low bias between laboratories and thus were comparable, with the exception of total uranium.

A consistent high bias was observed between total uranium samples analyzed by Lockheed and those analyzed by IT. A detailed investigation was conducted to determine the nature of this bias. The difference was determined to be attributable to the sample digestion method utilized by Lockheed. Lockheed digested both the sample and the filter media, whereas IT extracted the sample from the filter media, (as specified by the analytical method established in the QAPP). Lockheed subsequently observed that such filter media may contain interferents that cause anomalous uranium results. These differences most likely account for the high bias in the Lockheed total uranium results.

# Appendix AD-2

# Quarterly Audit Reports

# QUARTERLY PERFORMANCE AUDIT

for Quarter 4, 1993
(October 1, 1993 through December 31, 1993)

of the
EASTERN MICHAUD FLATS
AIR PATHWAYS MONITORING PROGRAM
POCATELLO, IDAHO

Prepared for

FMC Corporation
and
J.R. Simplot Company

Prepared by

Bechtel Environmental, Inc.
50 Beale Street
San Francisco, CA 94105

January, 1994

# TABLE OF CONTENTS


| Section | | | Page |
|---|---|---|---|
| 1.0 | SUMMARY | | 1-1 |
| 2.0 | INTRODUCTION | | 2-1 |
| | 2.1 | Purpose and Scope | 2-1 |
| | 2.2 | Organization of Report | 2-1 |
| 3.0 | PROGRAM EVALUATION | | 3-1 |
| | 3.1 | Audit Methodology | 3-1 |
| | 3.2 | Audit Results | 3-1 |
| | 3.3 | Recommendations | 3-3 |
| 4.0 | HI-VOL SAMPLING PROGRAM | | 4-1 |
| | 4.1 | Audit Methodology | 4-1 |
| | 4.2 | Audit Results | 4-2 |
| | 4.3 | Recommendations | 4-2 |
| 5.0 | FLUORIDE SAMPLING PROGRAM | | 5-1 |
| | 5.1 | Audit Methodology | 5-1 |
| | 5.2 | Audit Results | 5-2 |
| | 5.3 | Recommendations | 5-2 |
| 6.0 | SILICA SAMPLING PROGRAM | | 6-1 |
| | 6.1 | Audit Methodology | 6-1 |
| | 6.2 | Audit Results | 6-2 |
| | 6.3 | Recommendations | 6-3 |
| 7.0 | LO-VOL SAMPLING PROGRAM | | 7-1 |
| | 7.1 | Audit Methodology | 7-1 |
| | 7.2 | Audit Results | 7-2 |
| | 7.3 | Recommendations | 7-2 |
| 8.0 | METEOROLOGICAL MONITORING PROGRAM | | 8-1 |
| | 8.1 | Audit Methodology | 8-1 |
| | 8.2 | Audit Results | 8-2 |
| | 8.3 | Recommendations | 8-2 |
| 9.0 | REFERENCES | | 9-1 |

# LIST OF APPENDICES


| Appendix | Title |
|---|---|
| A | Hi-Vol Orifice Certification |
| B | Calibration of Rotameter to Primary Flow Standard |
| C | Calibration of Dry Gas Meter to Primary Flow Standard |

# LIST OF FIGURES


| Figure | | Page |
|---|---|---|
| 4-1 | Configuration of Equipment for Hi-Vol Sampler Audit | 4-6 |
| 4-2 | High Volume Sampler Calibration/Audit Form | 4-7 |
| 5-1 | Configuration of Equipment for Fluoride Sampler Audit | 5-5 |
| 6-1 | Filter Adapters for Silica Samplers Audit | 6-5 |
| 6-2 | Configuration of Equipment for Silica Sampler Audit | 6-6 |
| 6-3 | GPS11 Sampling Module | 6-7 |
| 7-1 | Configuration of Equipment for Lo-Vol Sampler Audit | 7-5 |

# LIST OF TABLES


| Tables | | Page |
|---|---|---|
| 4-1 | Results of Hi-Vol Samplers Audit | 4-5 |
| 5-1 | Results of Fluoride Samplers Audit | 5-4 |
| 6-1 | Results of Silica Samplers Audit | 6-4 |
| 7-1 | Results of Lo-Vol Samplers Audit | 7-4 |
| 8-1 | Results of Meteorological Sensors Audit | 8-4 |

# LIST OF ACRONYMS AND ABBREVIATIONS

| | |
|---|---|
| ACFM | actual cubic feet per minute |
| ACMM | actual cubic meters per minute |
| ALM | actual liters per minute |
| APMP | Air Pathways Monitoring Program |
| DDAS | digital data acquisition system |
| DGM | dry gas meter |
| EMF | Eastern Michaud Flats |
| EPA | Environmental Protection Agency |
| Hi-Vol | ambient air sampler designed to pull air through a filter at approximately 40 acfm |
| Lo-Vol | ambient air sampler designed to pull air through a filter at approximately 1.2 acfm |
| LPM | liters per minute |
| mph | miles per hour |
| $P_a$ | ambient pressure |
| $PM_{10}$ | particulate material 10 microns, or smaller, in aerodynamic diameter |
| PSD | Prevention of Significant Deterioration |
| PSP | personal sampling pump |
| $P_{STD}$ | standard pressure |
| $Q_a$ | actual flow |
| QAPP | Quality Assurance Program Plan |
| $Q_{STP}$ | flow corrected to standard temperature and pressure |
| RH | relative humidity |
| SCFM | standard cubic feet per minute |
| SCMM | standard cubic meters per minute |
| SCR | strip chart recorder |
| SLPM | standard liters per minute |
| SOP | Standard Operating Procedures |
| SPT | stagnation pressure tap |
| $T_a$ | ambient temperature |
| TEMP | temperature |
| $T_{STD}$ | standard temperature |
| TSP | total suspended particulate |
| WD | wind direction |
| WS | wind speed |

# 1.0
# SUMMARY

An independent performance audit of the Eastern Michaud Flats (EMF) Air Pathways Monitoring Program (APMP) was conducted by Bechtel Environmental, Inc. from November 3 through November 7, 1993. The audit was conducted in accordance with recommendations provided in Ambient Monitoring Guidelines for Prevention of Significant Deterioration (EPA, 1987) and to provide an independent assessment of the overall field program. The audit was conducted by Mr. Clay McCurley of Bechtel Environmental. Mr. McCurley was accompanied at different times during the audit by Howard Hammeren of BEI; and Kelly Green or Nicole Hill of Simplot.

The results of the audit indicate the APMP is operated in a manner which meets the major requirements and guidelines the U.S. Environmental Protection Agency (EPA) has established for operating an ambient air monitoring program. Minor non-conformance issues are currently being resolved. The Quality Assurance Program Plan (QAPP) and Standard Operating Procedures (SOP) for the APMP were revised and issued November 24, 1993.
For the most part, the APMP was well organized and operated, however the audit found some areas that require further attention. Two of the hi-vol samplers were found to be outside audit criteria limits and should be re-calibrated. Hi-vol elapsed time meters should be calibrated to verify accuracy. A tree near site 3 has the potential to influence the particulate sampling results at that location.

For the fluorides and silica sampling programs, the project personnel were found to be using the rotameter on the personal sampling pump to set the flowrates through the media. The resolution of these rotameters may not be adequate to determine the sample flows accurately. It was recommended to use a more accurate external rotameter to check flowrates through these systems.

For the silica sampling program, possible leaks were found in the GPS11 sampling modules that support the filters. The field supervisor has indicated, at the time of this report, that areas of suspected leakage in these holders has been sealed.

For the lo-vol sampling program, leak checks of the GPS11 sampling modules (that support the filters) were recommended. It was suggested that the degree of leakage be determined and the sample modules repaired as necessary.

For the meteorological monitoring program, project personnel were instructed to check the calibration of the strip chart recorder for wind direction at site 7 and re-check the calibration of the relative humidity sensor at site 1.

# 2.0
# INTRODUCTION

## 2.1 Purpose and Scope

An independent performance audit of the Eastern Michaud Flats (EMF) Air Pathways Monitoring Program (APMP) was conducted by Bechtel Environmental, Inc. from November 3 through November 7, 1993. The audit was conducted in accordance with the recommendations provided in Ambient Monitoring Guidelines for Prevention of Significant Deterioration (EPA, 1987) which specifies quarterly audits to assess single instrument accuracy for total suspended particulate (TSP) and particulate matter 10 microns, or smaller, in aerodynamic diameter ($PM_{10}$) and semi-annual audits of meteorological monitoring systems. This audit report is for the period from October 1 through December 31, 1993 (Fourth Quarter, 1993).. The person who conducted the audit was not associated with the project on an on-going basis and used independent audit equipment. The objectives of the audit were to provide an independent assessment of the overall field program and independent assessments of the project's hi-vol sampling, fluorides sampling, silica sampling, lo-vol sampling and meteorological monitoring.

## 2.2 Organization of Report

This report is organized into nine sections with three appendices. Section 1.0 summarizes the results of the performance audit. Section 2.0 describes the purpose and scope of this report and describes how it is organized. Subsequent sections describe the program evaluation (section 3.0), the hi-vol sampling program audit (section 4.0), the fluorides sampling program audit (section 5.0), the silica sampling program audit (section 6.0, the lo-vol sampling program audit (section 7.0) and the meteorological monitoring program audit (section 8.0). Each section is subdivided into descriptions of the audit methodology, audit results, and recommendations. Section 9 documents the references used to prepare this report and the appendices contain calibration information for the equipment that was used to perform the audit.

# 3.0
# PROGRAM EVALUATION

## 3.1 Audit Methodology

The field program of the EMF APMP was evaluated using the Section 2.0.11 of the EPA's "Questionnaire for the Evaluation of Ambient Air Monitoring Programs - Field" taken from the EPA's Quality Assurance Handbook for Air Pollution Measurement Systems (EPA, 1977). The questionnaire provides spaces for responding "yes" or "no", a space for "comments" and indicates if the question being addressed is refers to a "requirement" or a "guideline" for operating monitoring systems in accordance with the Quality Assurance Handbook.

Many of the questions (from the Questionnaire) were not applicable to the APMP (e.g., questions concerning operation of continuous monitoring systems for sulfur dioxide and nitrogen oxides). Only the questions applicable to the EMF Air Pathways Monitoring Program were selected and presented to the field supervisor and field technicians during the progress of the audit. Their responses were validated by observation.

## 3.2 Audit Results

The APMP was audited in the field from November 3 through November 7, 1993. During this period, the projects's field supervisor and field technicians were asked questions from the questionnaire and their answers were verified by the auditor. It was found that, for the majority of the questions, the APMP was operated in accordance with the requirements and guidelines presented in the Quality Assurance Handbook for Air Quality Measurement Systems (EPA, 1977). For example:

- Copies of Instrument Manuals were found to be readily available and maintained at the site. Staffing was found to be adequate with one trained full-time site technician and 2 trained part-time technicians. The supply of tools was adequate, with the exception of a multimeter that would be helpful for troubleshooting electrical malfunctions.

- The APMP's hi-vol samplers were found to be Reference Method Designation RFPS-1087-062 and each sampler was equipped with a flow measuring device, timer, and elapsed time meter. The hi-vols were calibrated with a certified orifice.

- Monitoring sites were observed to be located in accordance with EPA siting criteria. One site, site 3, may be influenced by a nearby small tree.

- It was verified that the APMP has developed a "Monitoring Plan", "Quality Assurance/Quality Control Plan" and "Standard Operating Procedures" for the project. The revised versions of these documents were issued on November 24, 1993.

The remainder of this section describes areas where the APMP differs from EPA recommended guidance (answers to questionnaire was "no") and provides recommendations for corrective actions.

| QUESTION | RESPONSE |
|---|---|
| I.C.4.e. | It is not known if the timers on the hi-vol samplers are accurate to ±2 minutes. The field supervisor indicated the timers would soon be calibrated. |
| I.C.4.i | The field technicians indicated a spare brushless motor and spare $PM_{10}$ head is needed. |
| II.B.1. | Field supervisor indicated instrument maintenance and history records are kept but need further development, which is planned. |
| II.C.1. | APMP Standard Operating Procedures are revised. |
| II.C.2.c. | APMP Quality Assurance Project Plan has been revised. |
| II.D.2. | Formal written schedule has been prepared but still needs to be placed in tabular form. This is being prepared. |
| III.D.2. | Precision has not yet been reported but will be done. |
| IV.B.6. | It is not known if the timers on the hi-vol samplers are accurate to ±2 minutes. The field supervisor indicated the timers would soon be calibrated. |
| IV.B.8. | Site does not use barometer. Instead, altitude specific barometric pressure is used. |
| IV.B.10 | Rotameters currently not calibrated monthly but field supervisor indicated this would be incorporated into SOP. |

| QUESTION | RESPONSE |
|---|---|
| IV.B.12. | Hi-vol orifices will not be calibrated twice/year. Hi-vol orifices will be calibrated once/year and after any event that could effect the accuracy of the unit. |

## 3.3 Recommendations

Other than specific recommendations indicated in the following sections, no overall program problems requiring immediate corrective actions were identified.

# 4.0
# HI-VOL SAMPLING PROGRAM

## 4.1 Audit Methodology

The audit methodology of the hi-vol sampling program included the following:

- The locations of the samplers were checked against the probe siting criteria of the PSD Guidelines (EPA, 1987).

- The site technicians' hi-vol filter handling techniques, sampler operation procedures, and data recording techniques were observed.

- Each hi-vol sampler was inspected to verify the use and proper operation of a timer, elapsed time meter, flow recorder, filter cassette, and power supply.

- The flowrate of each hi-vol sampler was audited using a BGI, Inc. High Volume Orifice Model 25A (s/n R21). A copy of the calibration certificate is enclosed in Appendix A. The audit was conducted in accordance with procedures in the hi-vol's "Operation and Maintenance Manual" (Wedding, 1992) and the EPA's Quality Assurance Handbook for Air Pollution Measurement Systems (EPA, 1977). The audit equipment was configured as presented in Figure 4-1 and an example of the audit form used is presented in Figure 4-2. The ambient temperature was measured with a NIST-traceable mercury thermometer, and the barometric pressure (25.5 inches of mercury) used for the audit calculations was based on the area elevation above mean sea level.

  Once the data were collected, flowrate calculations in accordance with the orifice certification (Appendix A) were made to determine actual flowrate ($Q_a$) and standard flowrate ($Q_{STD}$) through the orifice. The project's field supervisor was provided with the data collected at the SPT (e.g., $\Delta H$, $T_a$, $P_a$) only. The field supervisor calculated $Q_a$ and $Q_{STP}$ as normal and reported these flowrates to the auditor who calculated the percent

difference in accordance with specifications in the EPA's Quality Assurance Handbook for Air Pollution Measurement Systems (EPA, 1977). The Handbook (Section No.: 2.11.7) specifies "if the audit flowrate percentage difference is within ± 7 percent, the sampler calibration is acceptable. Differences exceeding ±7 percent will require re-calibration. Differences exceeding ±10 percent may result in the invalidation of all data subsequent to the last calibration or valid flow check" (EPA, 1977).

## 4.2 Audit Results

All hi-vol sampling sites were audited from November 4 through November 7, 1993. The locations of all samplers, with the exception of the samplers at site 3, were found to be satisfactory in meeting probe siting criteria for PSD (EPA, 1987). Site 3 siting issues are described in section 4.3 below. Auditing was restricted to afternoon hours to prevent the water manometer from freezing.

The results of the audit are presented in Table 4-1. The calibration of all hi-vol samplers was within the EPA limits (± 7 percent) with the exception of the TSP sampler at site 5 (sampler 5T) and the co-located TSP sampler at site 1 (sampler 8T). The $Q_{STD}$ reported for sampler 5T (33.6 SCFM) was 8.5 percent lower than the $Q_{STD}$ measured by the audit orifice (36.7 SCFM). The $Q_{STD}$ reported for sampler 8T (34.3 SCFM) was 7.1 percent lower than the $Q_{STD}$ measured by the audit orifice (36.9).

The flowrates pressures indicated by the Dickson recorders were recorded by the auditor but the results are not included in this report since the charts are (currently) not being used by the project to determine or document flowrates.

## 4.3 Recommendations

- Hi-vol samplers 5T and 8T should be re-calibrated.

- Site 3 is located about 50-60 feet NE of a tree that is about 25 feet high. The PSD guidelines indicate "Trees provide surfaces for particulate deposition and also restrict airflow. Therefore, the sampler should be placed at least 20 meters (66 feet) from the

dripline of trees" (EPA, 1987). The distance from the samplers to this tree should be measured to verify satisfactory siting.

- It is not known if the elapsed time meter on each hi-vol sampler operates properly. Each elapsed time meter should be calibrated to an accurate timer over a 24-hour period. This may be accomplished by acquiring an electric analog clock (known to keep good time), presetting all hands (hour, minute, second) to midnight, and plugging the clock in parallel with the timer when the hi-vol is prepared for sampling. At the end of the sampling, the elapsed time meter indication should be compared with the analog clock. Meters that indicate a difference of ±2 minutes, or greater, should be noted.

- The SPT of each hi-vol sampler should be outfitted with a better cap. The black plastic tubing, currently in use on many of the samplers, stiffens in cold temperature and its inner diameter is too large. Many of the samplers using this black tubing leak which causes the Dickson recorders to record lower than actual flowrates. The cap should be attached to the hi-vol samplers such that they do not become detached from the sampler when removed from the SPT.

- On each Dickson recorder, the bar that lifts the pen from the paper chart should be checked and straightened as necessary to prevent the pen from wedging against it.

- The Dickson recorder pen should be zeroed on the circular chart prior to each calibration and sample collection. The pen should be pushed all the way up onto the arm.

- Site 3 is also located near farms. The PSD guidelines indicate that "stations should not be located in an unpaved area unless there is vegetative ground cover year round so that the impact of re-entrained or fugitive dusts will be kept to a minimum" (EPA, 1987). Plowed fields were visible within about ½ mile to the east and west. Farming activities in these fields should be closely monitored and correlated with the hi-vol sampling results at this site.

Site 6 is located in a heavily farmed area. Plowed fields were observed in all directions of the samplers. Farming activities in these fields should be closely monitored and correlated with the hi-vol sampling results at this site.

Newly delivered boxes of hi-vol filters should be inspected for damage and/or tampering upon receipt from the lab. The packing slip, found inside each box, should be verified with the contents of the box, signed, dated, stapled to the courier receipt (e.g. Federal Express) and kept with the project files (as a "Chain of Custody" form). Any signs of tampering (e.g., box previously opened) should be indicated on the packing slip.

## Table 4-1. Results of Hi-Vol Samplers Audit

| Date | Time[1] (Begin/End) | Sampler[2] I.D. | AUDIT DATA | | | | | SITE DATA | % Difference |
|---|---|---|---|---|---|---|---|---|---|
| | | | Water Manometer ΔH ("$H_2O$) | Ambient Temp. $T_a$ (°C) | Flowrate[3] $Q_a$ (ACMM) | Flowrate[4] $Q_a$ (ACFM) | Flowrate[5] $Q_{STP}$ (SCFM) | Reported[6] Flowrate (SCFM) | Audit Flowrate vs. Reported Flowrate |
| Nov 7 | 1435/1445 | 1T | 4.75 | 8.0 | 1.10 | 38.9 | 35.3 | 34.3 | -2.8 |
| Nov 7 | 1450/1500 | 1P | 5.05 | 8.0 | 1.13 | 40.1 | 36.4 | 35.9 | -1.3 |
| Nov 6 | 1625/1635 | 2T | 5.05 | 7.5 | 1.13 | 40.0 | 36.4 | 34.3 | -5.8 |
| Nov 6 | 1638/1648 | 2P | 4.90 | 7.5 | 1.12 | 39.4 | 35.9 | 33.9 | -5.5 |
| Nov 7 | 1543-1553 | 3T | 5.30 | 7.5 | 1.16 | 41.0 | 37.3 | 34.7 | -7.0 |
| Nov 7 | 1558-1608 | 3P | 5.05 | 7.5 | 1.13 | 40.0 | 36.4 | 34 | -6.6 |
| Nov 7 | 1705-1715 | 4T | 4.75 | 5.0 | 1.09 | 38.7 | 35.5 | 34.4 | -3.1 |
| Nov 7 | 1720-1730 | 4P | 5.25 | 5.0 | 1.15 | 40.6 | 37.3 | 36.1 | -3.2 |
| Nov 6 | 1525-1535 | 5T | 5.15 | 8.5 | 1.15 | 40.5 | 36.7 | 33.6 | -8.5 |
| Nov 6 | 1540-1550 | 5P | 4.85 | 8.5 | 1.11 | 39.3 | 35.6 | 34.4 | -3.5 |
| Nov 6 | 1342-1352 | 6T | 5.00 | 8.0 | 1.13 | 39.9 | 36.2 | 34.2 | -5.5 |
| Nov 6 | 1400-1410 | 6P | 5.05 | 8.5 | 1.14 | 40.1 | 36.4 | 34.6 | -4.8 |
| Nov 4 | 1535-1545 | 7T | 4.70 | 6.0 | 1.09 | 38.5 | 35.2 | 34.7 | -1.5 |
| Nov 4 | 1552-1602 | 7P | 4.80 | 6.0 | 1.10 | 38.9 | 35.6 | 36.2 | 1.6 |
| Nov 7 | 1400-1410 | 8T | 5.20 | 8.0 | 1.15 | 40.7 | 36.9 | 34.3 | -7.1 |
| Nov 7 | 1418-1428 | 8P | 5.30 | 8.0 | 1.16 | 41.0 | 37.3 | 36 | -3.4 |

(1) Mountain Standard Time
(2) The number denotes the site (e.g., 5 = Site 5). The letter "T" denotes a TSP sampler and the letter "P" denotes a $PM_{10}$ sampler.
(3) $Q_a = (\Delta H\ (T_a/P_a))^{1/2}$ in actual cubic meters per minute (ACMM), where $P_a$ is 25.5 "Hg (based on site elevation)
(4) $Q_a = (\Delta H\ (T_a/P_a))^{1/2}$ in actual cubic feet per minute (ACFM)
(5) $Q_{STP} = (\Delta P\ (P_a/P_{STD})(298.15/T_a))^{1/2}$
(6) Flowrate reported by site for conditions at the time of the audit.
(7) Flowrate indicated by Dickson circular chart recorder on the respective sampler.
(8) % difference = ((reported flowrate - audit flowrate)/audit flowrate) * 100
(9) % difference = ((recorder flowrate - audit flowrate)/audit flowrate) * 100

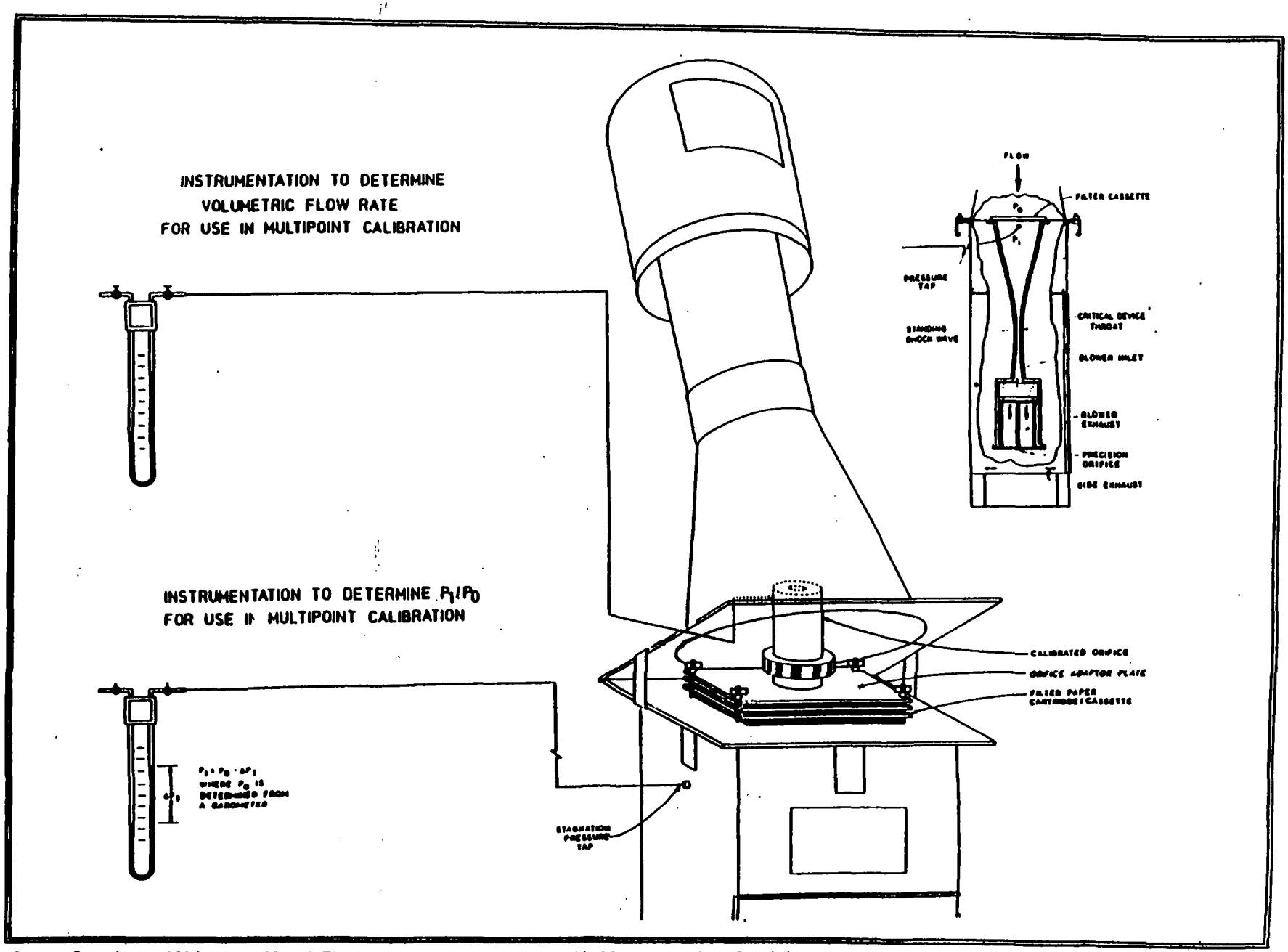


(Source: Operations and Maintenance Manual, The Wedding and Associates' $PM_{10}$ Critical Flow High-Volume Sampler)

**Figure 4-1. Configuration of Equipment for Hi-Vol Sampler Audit**

## HIGH VOLUME SAMPLER CALIBRATION/AUDIT FORM

Project: _____ Date: _____ Time: _____

Sampler Location: _____ Calibrated by: _____

Sampler No.: _____ Verified by: _____

Rotameter No.: _____ Verification Date: _____

Orifice Calibrator No: _____ Sampler Station: _____

Orifice Calibration: $Qr = a(\Delta H)^b$ where a = _____ • Elevation: _____ ft (MSL)

and b = _____ • Ambient Temp. ($T_a$): _____ °C

• Standard Pressure ($P_s$): _____ in. Hg

Calculation of Ambient Barometric Pressure

Nearest FAA/NWS Weather Station: _____ Standard Barometric Pressure ($P'_{std}$): 29.92 in.

Weather Station Elevation: _____ ft (MSL) Pressure Deviation ($\Delta P' = P' - P'_{std}$): _____ in.

Altimeter Setting at Time of Calibration (P'): _____ in. Hg Sampler Station Pressure ($P_a = P_s$) + $\Delta P'$): _____ in.

| Run No. | Voltage or Plate No. | (ΔH) Manometer –Orifice in $H_2O$ Left / Right | (ΔH) Manometer –Orifice in $H_2O$ Total ΔH | I Rotameter Reading | $Q_r$ (2) Flow Rate (CMM) | SC (3) Standard Correction Factor | $Q_{std}$ Flow Rate Corrected (SCMM) | Conversion Factor to (SCFM) | $Q_{std}$ Flow Rate Corrected (SCFM) |
|---|---|---|---|---|---|---|---|---|---|
| 1 | | | | | | | | | |
| 2 | | | | | | | | | |
| 3 | | | | | | | | | |
| 4 | | | | | | | | | |
| 5 | | | | | | | | | |
| 6 | | | | | | | | | |
| 7 | | | | | | | | | |
| 8 | | | | | | | | | |
| 9 | | | | | | | | | |

$Q_{std}$ set to _____ SCFM when I = _____ CFM

Notes: 1) $T_a(°C) = (T_a(°F) - 32°) \times (5 \div 9)$, $T_a(°K) = T_a(°C) + 273.15°$

2) $Q_r = a(\Delta H)^b$ as defined above

3) $SC = \left[\frac{T_{std} \times P_a}{T_a \times P'_{std}}\right]^{1/2} = \left[\frac{298°K \times (\quad) \text{ in. Hg}}{(\quad)°K \times 29.92 \text{ in. Hg}}\right]^{1/2} =$ _____

Rotameter Calibration Results

$Q_{std} = a\,I + b$, where a = _____ and b = _____

Correlation coefficient (r) = _____

**Figure 4-2. High Volume Sampler Calibration/Audit Form**

# 5.0
# FLUORIDE SAMPLING PROGRAM

## 5.1 Audit Methodology

The audit methodology of the fluorides sampling program included a review of the site technicians' fluoride cartridge handling techniques, sampler operation procedures, and data recording procedures. Also, a one-point flowrate check of each fluoride sampling system using a rotameter (as a transfer standard) calibrated to a primary flow standard (bubble flow meter). Appendix B contains a diagram of how the equipment was configured to calibrate the rotameter to the primary flow standard, a "Rotameter Flow Calibration Worksheet" with the results of the calibration, and graph presenting the relationship between the rotameter and primary flow standard flowrates.

The rotameter calibrated was an SKC-West Model B125-50 (S/N B2660 with a flow range from 0 to 7 liters per minute (LPM). Flowrate markings were on the left and right side with the black ball corresponding to the left-side markings and the metal ball corresponding to the right-side markings. Only the black ball and left-side markings were calibrated and used. The primary flow standard was a Hastings HBM-1A (S/N 1090) Mini-Flo Calibrator with graduated cylinders traceable to NIST flow standards.

Figure 5-1 presents how the calibrated rotameter was attached to the fluoride sampling systems at the monitoring sites. A clean cartridge, taken from the fluoride cartridges available at the site, was used. Prior to each flow audit, ambient temperature was measured and recorded in the auditor's logbook. The barometric pressure (25.5 inches of mercury) used for the audit calculations was based on the area elevation above mean sea level.

After the temperature was recorded, the audit sampling cartridge was connected (via the tubing connector) to the personal sampling pump (PSP). The site technician was instructed to start the pump, set the pump flowrate (as indicated by the pump rotameter) to the flow normally used for sampling and report the pump rotameter setting to the auditor. The auditor recorded the pump flowrate setting and audit rotameter flowrate.

After these measurements were recorded, the auditor corrected the audit flowrate to standard temperature and pressure and the Field Supervisor provided the auditor with the actual and standard flowrates for this pump rotameter setting. The reported flowrate was then compared to the audit flowrate.

## 5.2 Audit Results

The techniques used to handle the fluoride cartridges were found to be adequate to insure sample integrity. As well, the techniques used to document and track the fluoride cartridges, and the procedures used to record and file the sampling data, were found to be adequate.

All fluoride sampling systems were audited from November 6 through November 7, 1993. Table 5-1 presents the results of the audit. All reported flowrates were higher than the audit flowrate, with the exception of pump No. 12 at site 2 where the reported standard flowrate was 5.4 percent lower than the audit standard flowrate. The highest percentage difference between the reported and audit flowrates (40.0 percent) was at site 1 where pump No. 8 was reported to be operating at 1.20 SLPM and the audit flowrate indicated 0.86 SLPM.

## 5.3 Recommendations

- The PSP rotameter should not be used to measure the flowrate through the fluoride filters. Instead, the site technicians should set the pump flowrate to an appropriate rotameter (in the 0-5 LPM range) pneumatically connected to the inlet of the sampling cartridge. This rotameter (calibration rotameter) should be certified to a primary flow standard, such as the Hastings HBM-1A bubble flow meter at the site, as necessary to ensure accuracy.

- The tool boxes sheltering the pumps are too small and, in many cases, the pneumatic lines connecting the pumps to the sample cartridges are too short. These circumstances make it difficult for the field technicians to access the pumps and view the pump rotameters for flowrate adjustments. Larger boxes to shelter the pumps should be installed and longer pneumatic lines should be used.

Newly delivered boxes of fluoride cartridges should be inspected for damage and/or tampering upon receipt from the lab. The packing slip, found inside each box, should be verified with the contents of the box, signed, dated, stapled to the courier receipt (e.g. Federal Express) and kept with the project files (as a "Chain of Custody" form). Any signs of tampering (e.g., box previously opened) should be indicated on the packing slip.

## Table 5-1. Results of Fluoride Samplers Audit

| Date | Site No. | Approx.[1] Time (MST) | Pump No. | Pump Flow Setting (LPM) | AUDIT DATA | | | | | SITE DATA | | % [3] Difference |
|---|---|---|---|---|---|---|---|---|---|---|---|---|
| | | | | | Ambient Temp. $T_a$ (°C) | Ambient Pressure $P_a$ ("Hg) | Audit Rotameter Indication (LPM) | Actual[2] Flowrate $Q_a$ (ALPM) | Standard[2] Flowrate $Q_{STP}$ (SLPM) | Reported Flowrate (ALPM) | Reported Flowrate (SLPM) | |
| Nov 7 | 1 | 1510 | 8 | 1.2 | 8.5 | 25.5 | 0.93 | 1.03 | 0.86 | 1.3 | 1.2 | 40.0 |
| | | | 9 | 1.2 | 8.5 | 25.5 | 0.93 | 1.03 | 0.86 | 1.2 | 1.1 | 28.3 |
| Nov 6 | 2 | 0900 | 7 | 1.2 | -4 | 25.5 | 1.17 | 1.29 | 1.07 | 1.2 | 1.1 | 2.5 |
| | | | 12 | 1.2 | -4 | 25.5 | 1.27 | 1.40 | 1.16 | 1.2 | 1.1 | -5.4 |
| Nov 6 | 6 | 1408 | 2 | 1.3 | 8.5 | 25.5 | 1.13 | 1.25 | 1.04 | 1.4 | 1.3 | 25.3 |
| | | | 5 | 1.3 | 8.5 | 25.5 | 0.98 | 1.09 | 0.90 | 1.1 | 1 | 10.8 |
| Nov 7 | 7 | 1320 | 3 | 1.2 | 6 | 25.5 | 1.02 | 1.13 | 0.94 | 1.3 | 1.2 | 27.9 |
| | | | 1 | 1.2 | 6 | 25.5 | 1.15 | 1.27 | 1.06 | 1.3 | 1.2 | 13.2 |

(1) Mountain Standard Time

(2) y = mx+b where y = rotameter indication and x = flowrate
Regression results from rotameter calibration:

| | $Q_a$ | $Q_{STP}$ |
|---|---|---|
| m = | 0.9214 | 1.1114 |
| b = | -0.0225 | -0.0228 |
| r = | 0.9999 | 0.9999 |

(3) ((Reported Standard Flowrate - Audit Standard Flowrate)/Audit Standard Flowrate) * 100

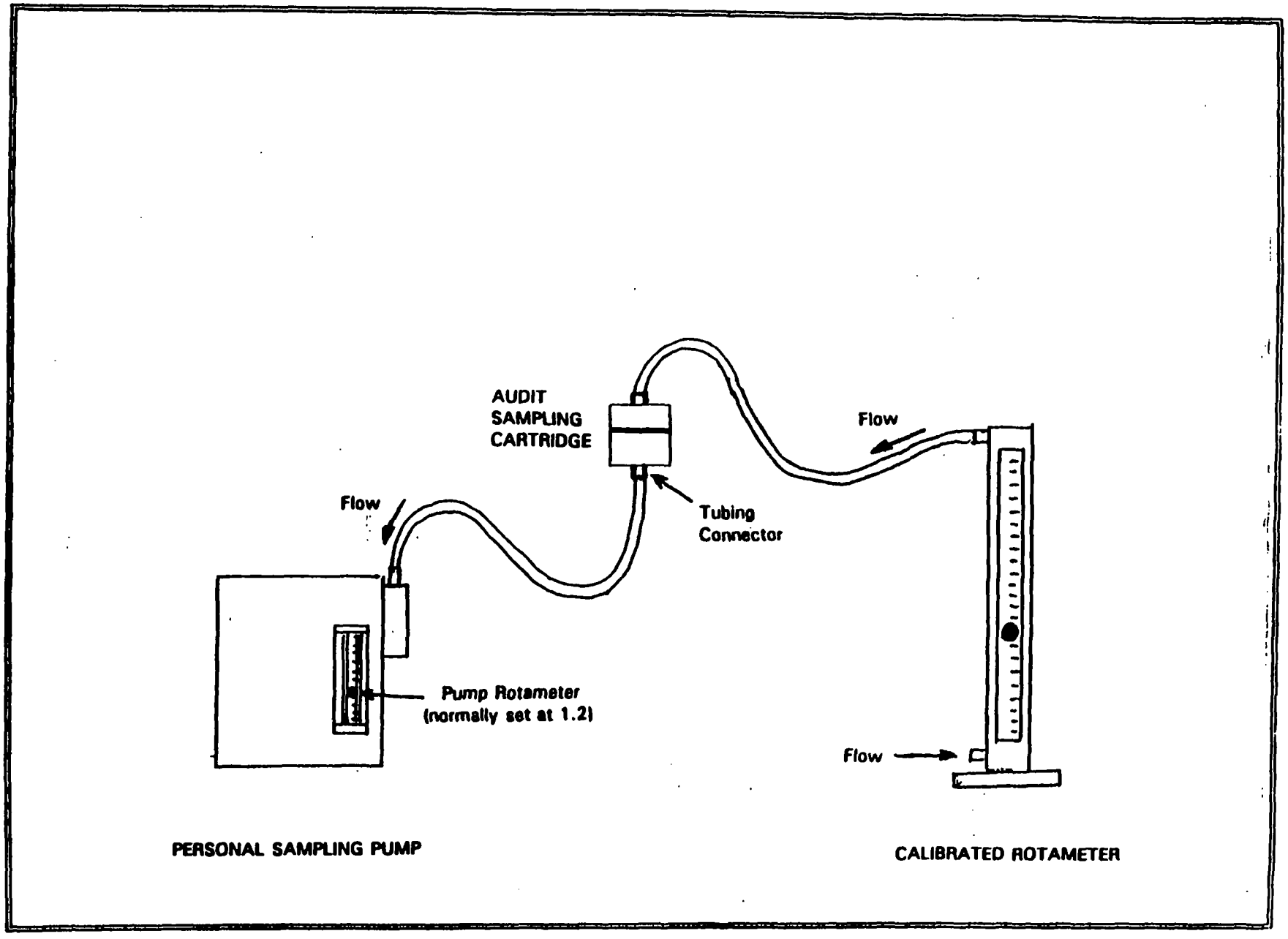


**Figure 5-1. Configuration of Equipment for Fluoride Sampler Audit**

# 6.0
# SILICA SAMPLING PROGRAM

## 6.1 Audit Methodology

The audit methodology of the silica sampling systems at the EMF site included a review of the site technicians' filter handling techniques, sampler operation procedures, and data recording procedures. A one-point flowrate check of each silica sampling system was made using specialized filter adapters (constructed at the site) pneumatically connected to the calibrated rotameter described in section 5.1. At the time of the audit, no equipment was available at the site to permit measurement of the flowrate at the inlet of the GPS11 sampling module holding the filter. It was determined that flowrate measurement at this location would be beneficial, so the two devices presented in Figure 6-1 were constructed from materials obtained at a local hardware store. The configuration of each filter adapter was such that a vacuum type seal was created when the adapter's foam rubber gasket was carefully placed over the GPS11 inlet. Prior to conducting the audit, these seals were tested by placing them in a flat table, drawing a suction, and observing for leakage. Both filter adapters held tight to the table for several seconds (greater than 10 seconds) after the vacuum was drawn. For validation reasons, two different types of filter adapters were constructed. Obtaining the same flowrate through each filter adapter would provide assurance that the seal against the GPS11 inlet was complete. If the flowrates proved to be different, then it could be assumed that one, or both filter adapters leaked.

Figure 6-2 presents how the calibrated rotameter was attached to the silica sampling systems at the monitoring sites. Prior to the audit, the field technician installed a clean filter in the GPS11 sampling module, turned on the PSP, adjusted the PSP to the pump rotameter setting normally used for sampling and report this setting to the auditor. This setting was recorded in the auditor's logbook along with the ambient temperature at the time of the audit. The barometric pressure (25.5 inches of mercury) used for the audit calculations was based on the area elevation above mean sea level.

After the temperature was recorded, the filter adapter (with the rotameter pneumatically connected) was pressed down over the inlet of the GPS11 sampling module and the flow indicated by the audit rotameter was recorded. After this flowrate measurement was obtained, the pneumatic line (connecting the PSP to the GPS11 sampling module) was disconnected (at the module outlet) and connected directly to the rotameter. This flowrate was also recorded in the auditor's logbook.

After these measurements were recorded, the auditor corrected the audit flowrate to standard temperature and pressure and the Field Supervisor provided the auditor with the actual and standard flowrates for the pump rotameter setting. The reported flowrate was then compared to the audit flowrate.

## 6.2 Audit Results

The techniques used to handle the silica sampling filters were found to be adequate to ensure sample integrity. As well, the techniques used to document and track the filters, and the procedures used to record and file the sampling data, were found to be adequate.

All silica sampling systems were audited from November 6 through November 7, 1993. Table 6-1 presents the results of the audit. All reported flowrates were higher than the audit flowrate. The highest percentage difference between the reported and audit flowrates (425.7 percent) was at site 7 where pump No. 10 was reported to be operating at 2.0 SLPM and the audit flowrate indicated 0.38 SLPM.

The large differences measured between the audit rotameter (GPS11 inlet) and the tubing to the pump (GPS11 outlet) indicated a possible leak in the GPS11 sampling module. Subsequent inspection of a spare GPS11 sampling module at the site concluded that the round plate screwed in to the bottom of the lower canister on each sampling module, as shown in Figure 6-3, was not sealed against leaks. A leak at this location was confirmed by pinching the tubing connected to round plate, filling the lower canister with water, and observing water dripping at a rate of approximately 1-2 drops per second. The field technicians were informed of the leakage.

## 6.3 Recommendations

- The Field Supervisor, has indicated, through verbal communication that the field technicians have sealed all leaks in the GPS11 Sampling Modules used for silica sampling (Hammeren, 1993). Another independent audit should be conducted as soon as possible to verify the validity of the claim.

- The PSP rotameter should not be used to measure the flowrate through the silica filters. Instead, the site technicians should set the pump flowrate to an appropriate rotameter (in the 0-5 LPM range) pneumatically connected to the GPS 11 sampling module inlet. A device, similar to the filter adapters constructed for the audit, may be used for connecting the rotameter to the GPS11 inlet. This rotameter (calibration rotameter) should be certified to a primary flow standard, such as the Hastings HBM-1A bubble flow meter at the site, as necessary to ensure accuracy.

- The tool boxes sheltering the pumps are too small and, in many cases, the pneumatic lines connecting the pumps to the GPS11 sampling modules are too short. These circumstances make it difficult for the field technicians to access the pumps and view the pump rotameters for flowrate adjustments. Larger boxes to shelter the pumps should be installed and longer pneumatic lines should be used.

- Newly delivered boxes of silica filters should be inspected for damage and/or tampering upon receipt from the lab. The packing slip, found inside each box, should be verified with the contents of the box, signed, dated, stapled to the courier receipt (e.g. Federal Express) and kept with the project files (as a "Chain of Custody" form). Any signs of tampering (e.g., box previously opened) should be indicated on the packing slip.

- The laboratory providing the silica filters should be contacted determine if it is feasible to slit (up one side) the paper pocket inside the envelope holding the filter. The field technicians were observed to have some difficulty removing and replacing the silica filters inside this pocket. Slitting the pocket up one side would make removal and replacement easier.

## Table 6-1. Results of Silica Samplers Audit

| Date | Site No. | Approx.[1] Time (MST) | Pump No. | Pump Flow Setting (LPM) | AUDIT DATA | | | | | | | SITE DATA | | % [5] Difference |
|---|---|---|---|---|---|---|---|---|---|---|---|---|---|---|
| | | | | | Audit Point No. | Ambient Temp. $T_a$ (°C) | Ambient Pressure $P_a$ ("Hg) | Audit[2] Rotameter Indication at Tubing (LPM) | Audit[3] Rotameter Indication at Filter (LPM) | Actual[4] Flowrate $Q_a$ (ALPM) | Standard[4] Flowrate $Q_{STP}$ (SLPM) | Reported Flowrate (ALPM) | Reported Flowrate (SLPM) | |
| Nov 7 | 1 | 1510 | 11 | 2.0 | 1[6] | 8.5 | 25.5 | 1.77 | 1.05 | 1.16 | 0.97 | 2.1 | 1.9 | 96 8 |
| | | | | | 2[7] | 8.5 | 25.5 | 1.77 | 1.05 | 1.16 | 0.97 | 2.1 | 1.9 | 96 8 |
| Nov 6 | 2 | 0900 | 6 | 2.0 | 2[6] | 7.5 | 25.5 | 1.71 | 0.87 | 0.97 | 0.80 | 2 | 1.8 | 124.1 |
| | | | | | 3[7] | 7.5 | 25.5 | 1.71 | 0.82 | 0.91 | 0.76 | 2 | 1.8 | 137 4 |
| Nov 6 | 6 | 1428 | 4 | 2.15 | 3[7] | 8.5 | 25.5 | 1.87 | 0.6 | 0.68 | 0.56 | 2.2 | 2 | 256 9 |
| Nov 7 | 7 | 1320 | 10 | 2.1 | 4[6] | 6 | 25.5 | 1.87 | 0.4 | 0.46 | 0.38 | 2.2 | 2 | 425 7 |
| | | | | | 5[7] | 6 | 25.5 | 1.87 | 0.4 | 0.46 | 0.38 | 2.2 | 2 | 425 7 |

NO - not obtained

(1) Mountain Standard Time

(2) Audit rotameter pneumatically connected directly to the pump tubing.

(3) Audit rotameter pneumatically connected to filter adapter with filter adapter pressed down over the inlet of the GPS11 Dual Sampling Module.

(4) $y = mx+b$ where $y$ = rotameter indication and $x$ = flowrate

Regression results for rotameter calibration:

| | $Q_a$ | $Q_{STP}$ |
|---|---|---|
| m = | 0.9214 | 1.1114 |
| b = | -0.0225 | -0.022 |
| r = | 0.9999 | 0.9999 |

(5) ((Reported Standard Flowrate - Audit Standard Flowrate)/Audit Standard Flowrate) * 100

(6) Audit rotameter indication with "funnel type" filter adapter pressed over GPS11 inlet.

(7) Audit rotameter indication with "electrical fixture" type filter adapter pressed over GPS11 inlet.

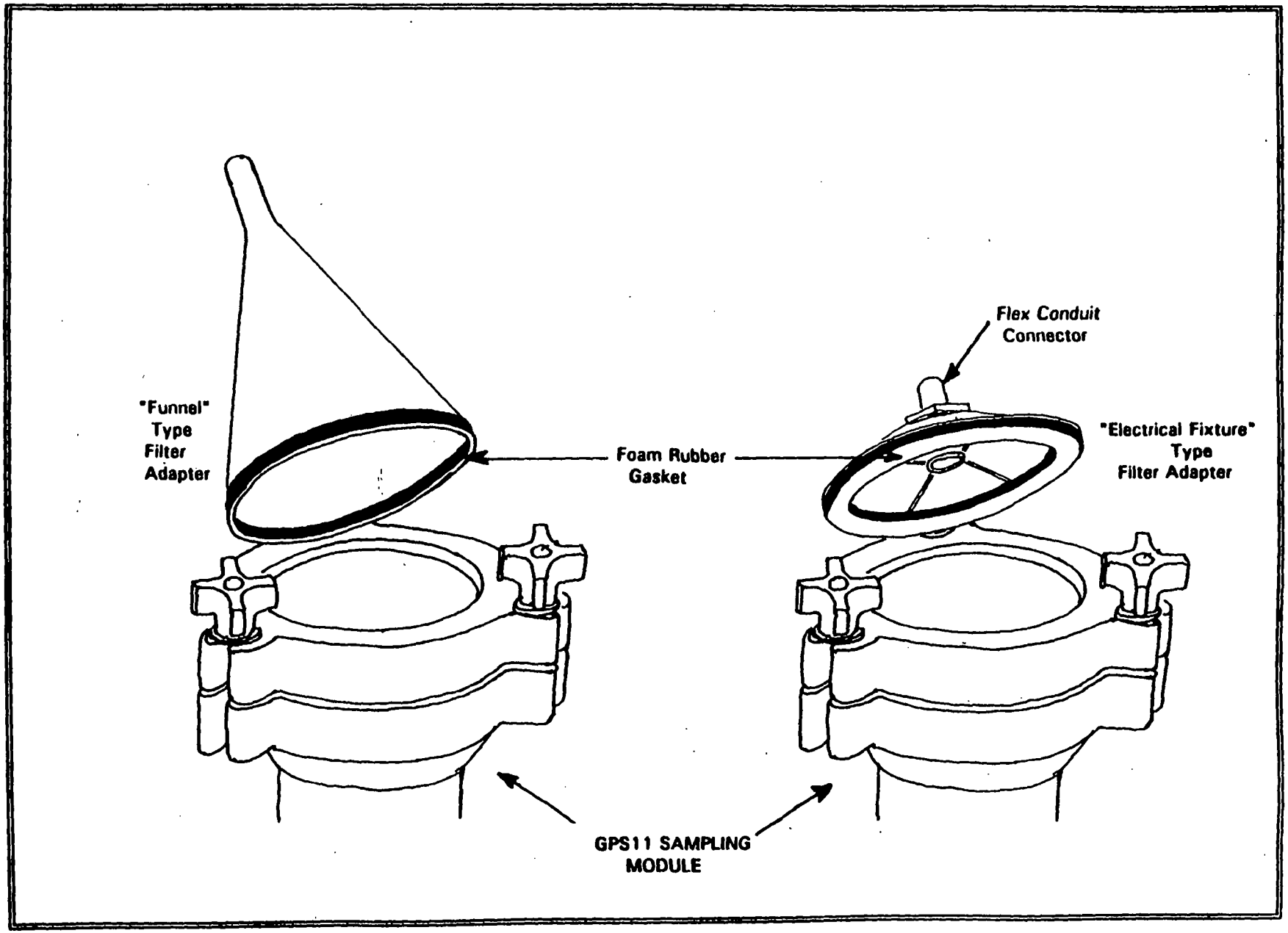


**Figure 6-1. Filter Adapters for Silica Samplers Audit**

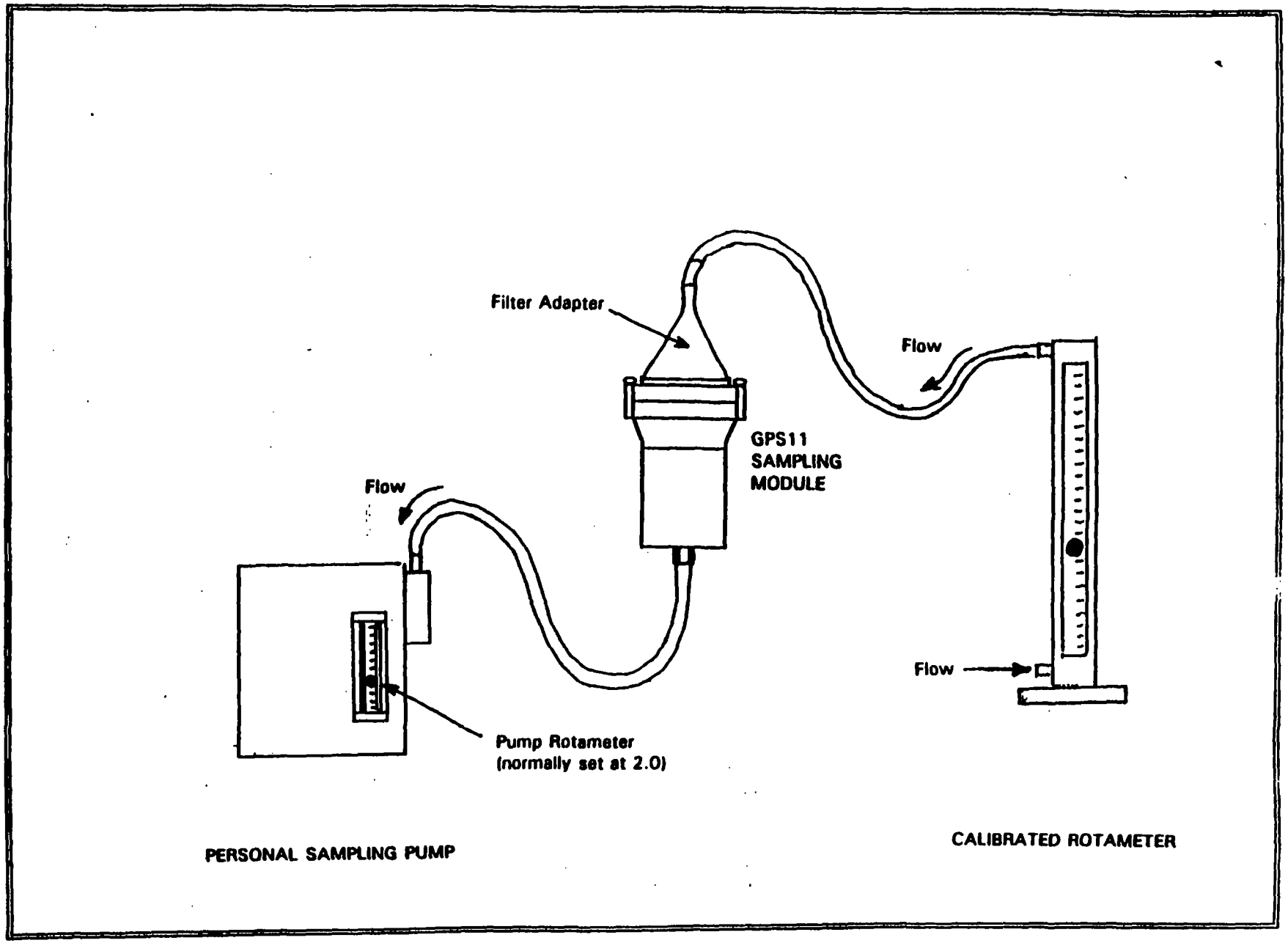


**Figure 6-2. Configuration of Equipment for Silica Sampler Audit**

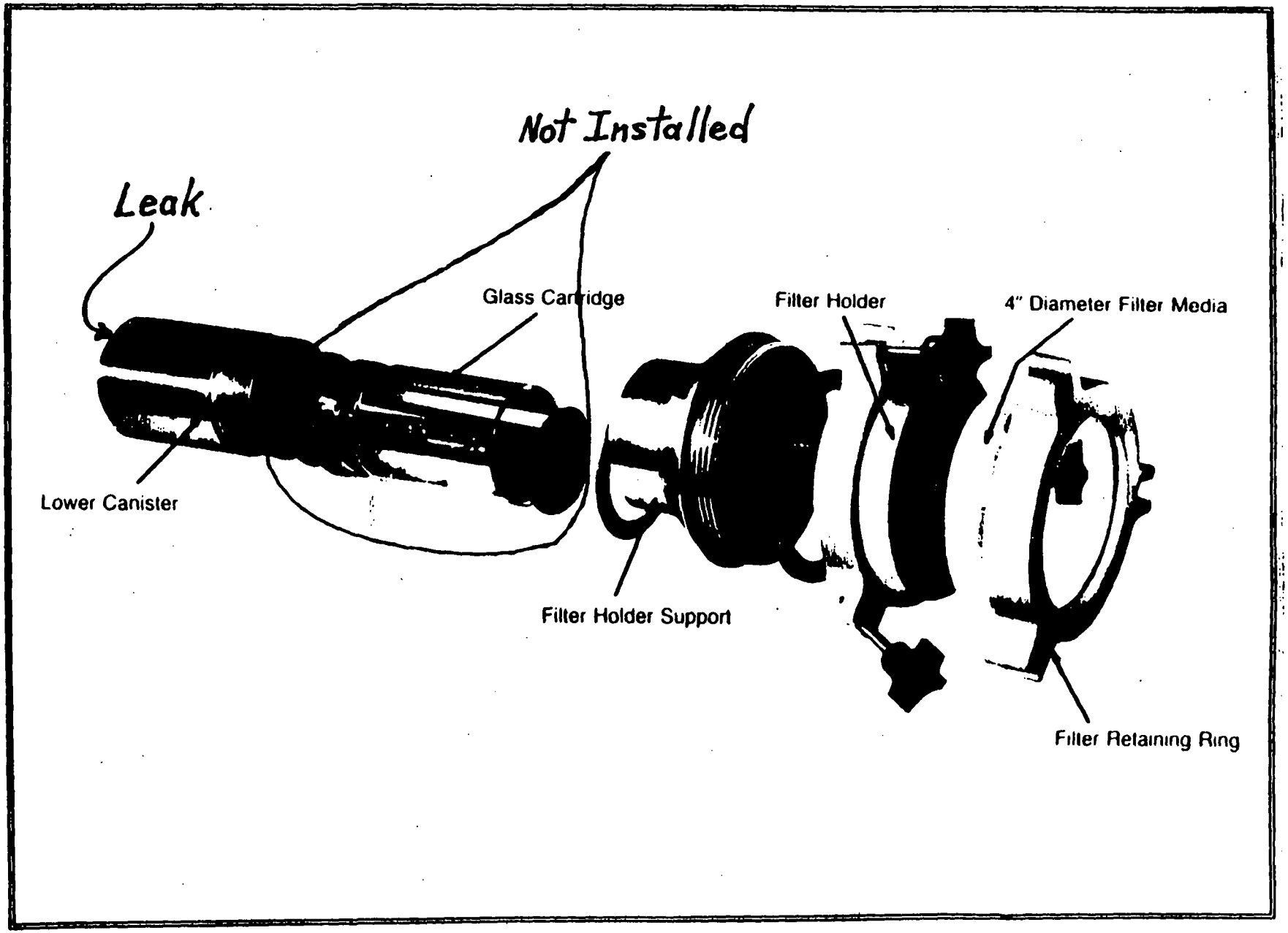


**Figure 6-3. GPS11 Sampling Module**

# 7.0
# LO-VOL SAMPLING PROGRAM

## 7.1 Audit Methodology

The audit methodology of the lo-vol sampling systems at the EMF site included a review of the site technicians' filter handling techniques, sampler operation procedures, and data recording procedures. The audit also included a flowrate check of the dry gas meter (DGM) being used to record sample volume at each sampling site (site DGM). The flowrate of air exhausting each sampling system's dry gas meter (DGM), in actual cubic feet per minute (ACFM), was audited using an audit DGM (S/N 8820746) that was calibrated to a primary flow standard. The configuration of the audit DGM to the primary flow standard and the calibration information is contained in Appendix C. From the calibration (audit DGM to primary flow standard), it was determined that the audit DGM records 1.00 ACFM (1 revolution of meter gauge) in 1.03 minutes.

The audit DGM was attached to the site DGM as presented in Figure 7-1. The audit DGM was pneumatically connected to the exhaust of the site DGM and the revolutions of the site DGM were timed and compared to the revolutions of the audit DGM. The revolutions were time in two ways; 1) number of revolutions in 60 seconds and 2) number of seconds for completion of 1 revolution. It was assumed that one revolution was equivalent to one actual cubic foot of air. The flowrates measured for the site DGMs were averaged and compared to the audit DGM flowrates with and without the audit DGM attached.

To determine the extent of the load the audit DGM was placing on the site DGM (slowing the flowrate) when connected, the DGM's at both sites 3 and 4 were also timed prior to connecting the audit DGM. A check of the flowrate of air passing through the lo-vol filters (at the inlet of the GPS11 sampling module) was not attempted due to the lack of a suitable device to hold the filter adapter (described in section 6.1) to the inlet of the GPS11 sampling module for extended periods (e.g., minutes).

## 7.2 Audit Results

The techniques used to handle the lo-vol filters were not observed, however, it is assumed the field technicians use the same techniques as with the silica filters which are adequate. The techniques used to document and track the filters, and the procedures used to record and file the sampling data, were observed and found to be adequate.

All lo-vol sampling systems were audited from November 6 through November 7, 1993. Table 7-1 presents the results of the audit. All site DGMs recorded flowrates lower than the audit DGM, with the exception of the DGM at site 6 where the flowrate measured the same. In all cases tested, connecting the audit DGM to the exhaust of the site DGM appeared to create a small restriction (2 percent to 6 percent) to the flowrate of the site DGM.

## 7.3 Recommendations

- Since the lo-vol sampling systems employs the same type of filter holder as the silica samplers (GPS11 sampling module), the potential exists that the modules leak. The GPS11 sampling modules should be leak-checked. The leak check procedure should include flowrate measurements at the inlet of the GPS11 sampling module (using a filter adapter similar to the filter adapter described in section 6.1) and exhaust of the site DGM. These flowrates should be compared. If substantial differences are found, the GPS11 sampling modules should be immediately repaired. If small leaks are detected, the measurements should be repeated several times over the remaining monthly sampling period and the volume of air sampled (at the end of the sampling period) should be corrected. Any leaks found should be repaired prior to placing the lo-vol sampling systems back into service.

- The field supervisor should contact the DGM manufacturer to inquire about potential adverse effects of moisture on the DGM's operation. The sampling systems are currently configured such that moisture (e.g., mist from rain) could wet the filter. Moisture from wet filters could get into the DGMs via the pump. If moisture is found to be a problem for the DGMs, actions should be taken to mitigate the potential problem.

Also, it was observed that the pumps were mounted sideways on the inside wall of the DGM enclosure. Mounting the pumps in this manner may inhibit the effectiveness of the pump's moisture traps. Inquiries should be placed with the pump manufacturer regarding this mounting arrangement.

Flowrates through the lo-vol sampling systems should set using device (e.g., rotameter) that measures flowrate at the inlet of the GPS11 sampling module. A device, similar to the filter adapters constructed for the audit, may be used for connecting the rotameter to the GPS11 inlet. This rotameter (calibration rotameter) should be certified to a primary flow standard, such as the Hastings HBM-1A bubble flow meter at the site, as necessary to ensure accuracy. Lo-vol flowrates should be checked at the GPS11 inlet, and adjusted if necessary, each time the site is visited.

**Table 7-1. Results of Lo-Vol Samplers Audit**

| Date | Site No. | Approx.(1) Time | Dry Gas Meter No. | Ambient Temp. (°C) | Ambient Pressure (°Hg) | Equipment Configuration | Site DGM | | | Audit DGM | | | % (2) Difference |
|---|---|---|---|---|---|---|---|---|---|---|---|---|---|
| | | | | | | | Revolutions in 60 Seconds (revs) | Seconds for 1 Revolution (sec) | Average Flowrate (ACFM) | Revolutions in 60 Seconds (revs) | Seconds for 1 Revolution (sec) | Average Flowrate (ACFM) | |
| Nov 7 | 3 | 1620 | 2 | 7.5 | 25.5 | Audit DGM not attached | 1.27 | 44 | 1.32 | | | | 2.9 |
| | | | | | | Audit DGM Attached | 1.3 | 50 | 1.25 | 1.3 | 47.6 | 1.28 | -2.4 |
| Nov 7 | 3 | 1630 | 3 | 7.5 | 25.5 | Audit DGM not attached | 1.13 | 54 | 1.12 | | | | -10.3 |
| | | | | | | Audit DGM Attached | 1.05 | 54.5 | 1.08 | 1.25 | 48.1 | 1.25 | -13.9 |
| Nov 7 | 4 | 1740 | 5 | 5 | 25.5 | Audit DGM not attached | 1.17 | 52.5 | 1.16 | | | | -11.9 |
| | | | | | | Audit DGM Attached | 1.2 | 55.8 | 1.14 | 1.3 | 45.3 | 1.31 | -13.3 |
| Nov 6 | 5 | 1552 | 1 | 8.5 | 25.5 | Audit DGM not attached | NO | NO | | | | | |
| | | | | | | Audit DGM Attached | 1.25 | 49.2 | 1.23 | 1.3 | 46.3 | 1.30 | -4.9 |
| Nov 6 | 6 | 1435 | 4 | 8.5 | 25.5 | Audit DGM not attached | NO | NO | | | | | |
| | | | | | | Audit DGM Attached | 1.3 | 46.9 | 1.29 | 1.3 | 46.9 | 1.29 | 0.0 |

NO = not obtained during audit
(1) Mountain Standard Time
(2) ((Site DGM - Audit DGM)/Audit DGM) * 100

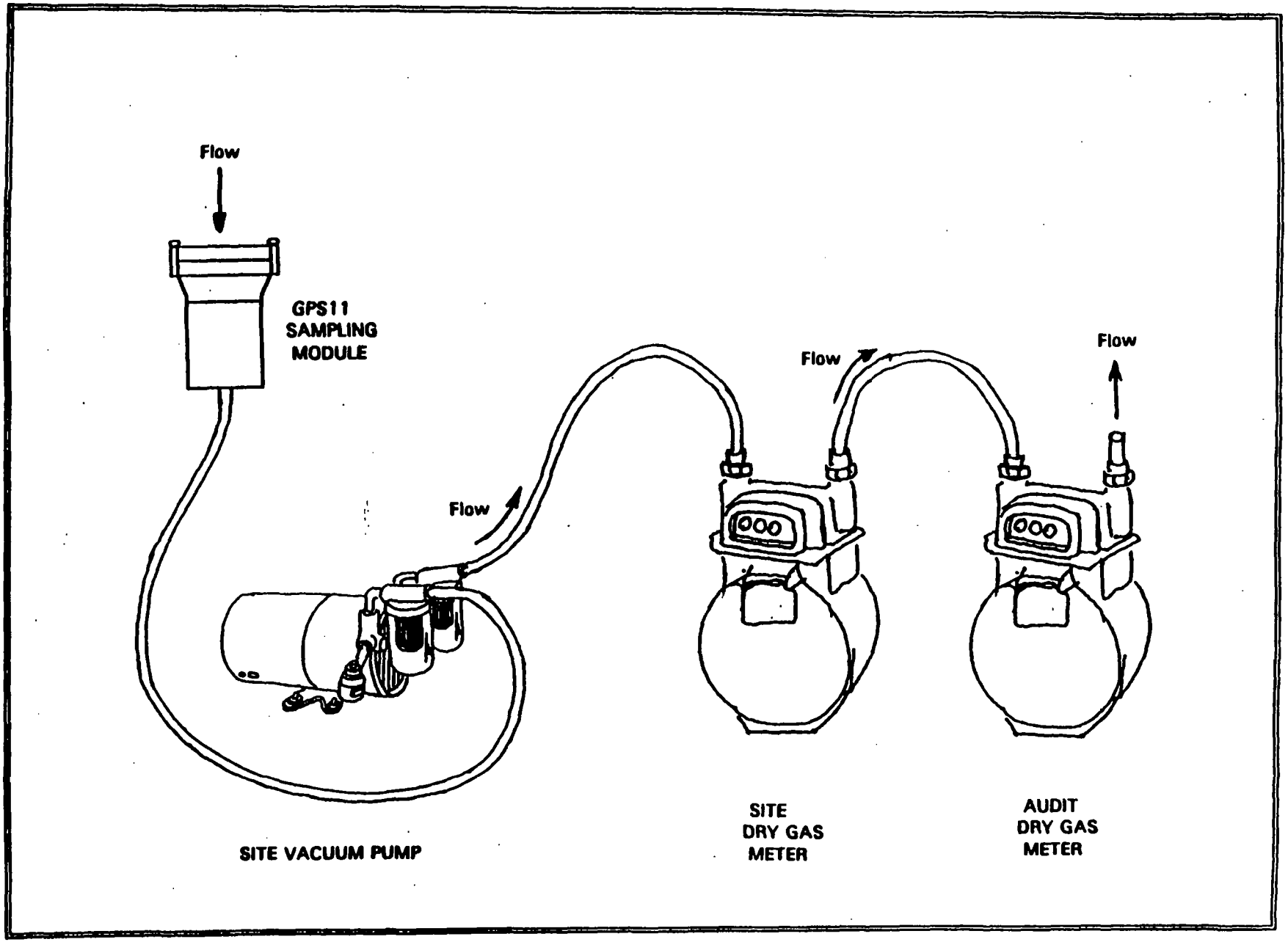


**Figure 7-1. Configuration of Equipment for Lo-Vol Sampler Audit**

# 8.0
# METEOROLOGICAL MONITORING PROGRAM

## 8.1 Audit Methodology

The methodology for auditing the meteorological monitoring instrumentation at the EMF site included a review of the methods used to collect meteorological data and an audit check of all wind speed (WS), wind direction (WD), temperature (TEMP), and relative humidity (RH) sensors. The systems calculating the standard deviation of the horizontal wind direction (sigma theta) at sites 1 and 7 were not audited due to lack of a fixture that allows the wind vane to be fixed (locked) in multiple directions. Also, the mixing height measurement system (at site 1) was not audited due to the absence of routine calibration/audit procedures in the instrument manual.

Each WD measurement system was audited by siting (with a Brunton Type 60 Siting compass) the orientation of the crossarm (secured at the top of the tower) with respect to true north. The value obtained from the compass was the audit value. The vane was then turned parallel with the crossarm in both directions and the responses of the digital data acquisition system (DDAS) and strip chart recorder (SCR) were compared to the audit value. In addition to these two directional checks, a third direction was checked at site 1. Each WD sensor was also checked to ensure it turned freely indicating the bearings were in good condition.

Each WS measurement system was audited by removing the anemometer cups and checking the DDAS and SCR for zero response (0 mph). Then, a 300-rpm synchronous motor (Met One Model 049-1) was connected to the sensor shaft, rotated counterclockwise and the DDAS and SCR responses were compared to the wind speed that should be indicated for that rpm (18.9 mph in accordance with manufacturer's specifications). Each WS sensor was also checked to ensure it spun freely indicating the bearings were in good condition.

Each TEMP measurement system was audited by holding a NIST-traceable mercury thermometer (ERTCO Type 609-FC, S/N 3104) adjacent to the system's thermistor temperature

probe and comparing the thermometer's indicated temperature to the ambient temperature indicated by the DDAS and SCR.

The RH measurement system at site 1 was audited with a Weksler Instruments Corporation Model 31-55C Sling Psychrometer. The responses of DDAS and SCR were compared to the RH value indicated on the slide rule chart supplied with the psychrometer.

## 8.2 Audit Results

The results of the meteorological monitoring systems audit are presented in Table 8-1. Both WD measurement systems (sites 1 and 7) responded within PSD specifications (EPA, 1987) criteria of ± 5°, except at site 7 where the SCR responded -8° when the vane was pointing toward the north. Both WS measurement systems responded within PSD specifications for the 300 rpm spin rate produced by the synchronous motor, however, the systems indicate 1 mph when the sensor shaft is not spinning (zero).

Both temperature measurement systems responded within PSD specifications for temperature. The RH measurement system at site 1 did not respond within PSD specifications (1.5° C dew point temperature over a range of -30 to +30°C). The dew point temperature values (that would correspond the audit RH and dry bulb temperature values and site 1 RH and dry bulb temperature values) were estimated in accordance with published estimating equations (Iribarne, 1981). The dewpoint temperature corresponding to the audit RH value (43%) was 266.99° K. The dewpoint temperature corresponding to the site RH value (37%) was 264.70° K. The difference is 2.29° K (°C) which exceeds the PSD specification of 1.5° C.

## 8.3 Recommendations

The percent difference found for SCR wind direction at site 7 (see Figure 8-1, audit point 11) may have been operator error reading the chart. The SCR at site 7 may need to be re-calibrated (for its response to the analog voltages received from the WD systems signal conditioning card) to indicate the proper wind direction when the winds are from the north, or the output from the WD signal conditioning card may require slight adjustment.

- The results of the audit of the relative humidity sensor at site 1 indicate the sensor should be re-calibrated, however, the thermometers of the sling psychrometer used for the audit had not been certified prior to the audit. The thermometers of the psychrometer should first be certified to a NIST-traceable thermometer prior to re-calibrating the RH measurement system and adjustments should be made as necessary.

- The turnbuckles at the base of the guy wire supporting the tower at site 7 have not been secured. The owner of the tower, prior to allowing future climbing activities, should thread a cable through the eye of each turnbuckle and clamp the cable to the guy wire, or tower base (to prevent the turnbuckle from turning and loosening the guy wire).

- The WS measurement systems at sites 1 and 7 indicate 1 mph when the anemometer cups are not turning. Data reduction and validation procedures should flag these WS values and treat them as calms (0 mph).

**Table 8-1. Results of Meteorological Sensors Audit**

| Audit Point No. | Approx. Time (MST) | Site No. | Sensor Type | Sensor Model | Serial Number | Sensor Range | Audit Value | Sensor Response | | Difference | |
|---|---|---|---|---|---|---|---|---|---|---|---|
| | | | | | | | | DDAS[1] | SCR[2] | DDAS[1] | SCR[2] |
| 1 | 1330 | 1 | Wind Direction | Met One 024 | SI1010 | 0° - 540° | 178 | 181 | 180 | 3 | 2 |
| 2 | 1340 | | Wind Direction | " | " | 0° - 540° | 268 | 272 | 270 | 4 | 2 |
| 3 | 1345 | | Wind Direction | " | " | 0° - 540° | 88 | 89 | 88 | 1 | 0 |
| 4 | 1330 | | Wind Speed | Met One 014 | A1060 | 0 - 50 mph | 0 | 1 | 1.5 | 1.0 | 1.5 |
| 5 | 1340 | | Wind Speed | " | " | 0 - 50 mph | 18.9 | 18.8 | 19 | -0.1 | 0.1 |
| 6 | 1345 | | Temperature | Met One 060 | ...[3] | -50 to +50° C | 5.5 | 5.8 | 5.3 | 0.3 | -0.2 |
| 7 | 1355 | | Relative Humidity | Met One 083 | ...[3] | 0 - 100% | 43 | 37 | 37 | -6 | -6 |
| 8 | - | | Sigma theta | ...[4] | --- | 0 - 100° | NA | - | - | - | - |
| 9 | - | | Mixing Height | Aerovironment 300C | ...[3] | 0 - 1,000 m | NA | - | - | - | - |
| 10 | 1630 | 7 | Wind Direction | Met One 024 | B1582 | 0° - 540° | 183 | 180 | 183 | -3 | 0 |
| 11 | 1640 | | Wind Direction | " | " | 0° - 540° | 8 | 4 | 0 | -4 | -8 |
| 12 | 1630 | | Wind Speed | Met One 014 | SIM-1 | 0 - 50 mph | 0.0 | 1.0 | 1.0 | 1.0 | 1.0 |
| 13 | 1640 | | Wind Speed | " | " | 0 - 50 mph | 18.9 | 18.8 | 19 | -0.1 | 0.1 |
| 14 | 1715 | | Temperature | Met One 060 | ...[3] | -50 to +50° C | 2.5 | 2.5 | 2.3 | 0.0 | -0.2 |
| 15 | - | | Sigma theta | ...[4] | --- | 0 - 100° | NA | - | - | - | - |

NA = not audited
(1) DDAS = digital data acquisition system
(2) SCR - strip chart recorder
(3) Serial number could not be verified by auditor.
(4) Sigma theta calculated by DDAS.

# 9.0
# REFERENCES


APMP, 1993. "Eastern Michaud Flats Air Pathways Monitoring Program", Bechtel Environmental, Inc., February, 1993.

EPA, 1987. Ambient Monitoring Guidelines for Prevention of Significant Deterioration (PSD), U.S. Environmental Protection Agency, Office of Air Quality Planning and Standards, Research Triangle Park, EPA-450/48-87-007, May 1987.

EPA, 1977. Quality Assurance Handbook for Air Pollution Measurement Systems, Volume II, Ambient Air Specific Methods, EPA-600/44-77-027a. Office of Research and Development, Environmental Monitoring Systems Laboratory, Research Triangle Park, N.C., May, 1977.

Hammeren, 1993. Verbal communication with H. Hammeren, Field Supervisor, EMF Air Pathways Monitoring Program, November 16, 1993.

Iribarne, 1981. Atmospheric Thermodynamics, Second Edition. J. V. Iribarne and W. L. Godson, 1981.

Wedding, 1992. Operations and Maintenance Manual, The Wedding and Associates' $PM_{10}$ Critical Flow High-Volume Sampler, October, 1987 (Rev. D, 1992).

# APPENDIX A

## Hi-Vol Orifice Certification

BGI Incorporated
58 Guinan Street
Waltham, MA 02154
Tel. (617) 891-9380

# *High Volume Orifice Calibration Certificate*

Pa: 762.0 mm of Hg | Roots Meter Serial No.: 7509364 | Calibration Performed by: J.Lazaro

Ta: 20.0 °C | Calibrator Orifice Model No.: 25A | Calibration Date: 28MAY93

RH: 54 % | Calibrator Orifice Serial No.: R21 | Date placed in service: _____

## Q Standard Calibration Data

| (1) Run Point No. | (2) Elapsed Time-Δt Min. | (3) Initial Volume Vm $M^3$ | (4) Meter Inlet Static Pressure-ΔP mm of Hg | (5) Standard Volume Vstd $M^3$ | (6) Calibrator Orifice Static Pressure-ΔH Y in. of $H_2O$ | (6) ΔH mm of Hg | (7) X Metric Flow Rate Qstd $M^3$/min. | (8) English Flow Rate Qstd $ft^3$/min. | (9) Y $\sqrt{\Delta H \left[\frac{Pa}{760}\right] \left[\frac{298.18}{Ta}\right]}$ |
|---|---|---|---|---|---|---|---|---|---|
| 1 | 1.467 | 1 | 3.3 | 1.015 | 2.0 | 3.74 | 0.692 | 24.4 | 1.428 |
| 2 | 0.977 | 1 | 7.8 | 1.009 | 4.5 | 8.40 | 1.033 | 36.5 | 2.142 |
| 3 | 0.926 | 1 | 8.7 | 1.008 | 5.0 | 9.34 | 1.089 | 38.4 | 2.258 |
| 4 | 0.844 | 1 | 10.5 | 1.006 | 6.0 | 11.21 | 1.191 | 42.1 | 2.474 |
| 5 | 0.730 | 1 | 14.0 | 1.001 | 8.0 | 14.94 | 1.371 | 48.4 | 2.856 |

Slope(m): 2.10 Intercept(b): -0.027514 Correlation Coefficient(r): 0.999991

## Q Actual Calibration Data

| (1) Run Point No. | (2) Elapsed Time-Δt Min. | (3) Initial Volume Vm $M^3$ | (4) Meter Inlet Static Pressure-ΔP mm of Hg | (5a) Actual Volume Va $M^3$ | (6) Calibrator Orifice Static Pressure-ΔH in. of $H_2O$ | (6) ΔH mm of Hg | (7a) X Metric Flow Rate Qa $M^3$/min. | (9a) Y $\sqrt{\Delta H \left[\frac{Ta}{Pa}\right]}$ |
|---|---|---|---|---|---|---|---|---|
| 1 | 1.467 | 1 | 3.3 | 0.996 | 2.0 | 3.74 | 0.679 | 0.877 |
| 2 | 0.977 | 1 | 7.8 | 0.990 | 4.5 | 8.40 | 1.013 | 1.316 |
| 3 | 0.926 | 1 | 8.7 | 0.989 | 5.0 | 9.34 | 1.068 | 1.387 |
| 4 | 0.844 | 1 | 10.5 | 0.986 | 6.0 | 11.21 | 1.168 | 1.519 |
| 5 | 0.730 | 1 | 14.0 | 0.982 | 8.0 | 14.94 | 1.345 | 1.754 |

Slope(m): 1.32 Intercept(b): -0.016972 Correlation Coefficient(r): 0.999991

## Equations:

$$Vstd(5) = Vm(3) \frac{(Pa-\Delta P)\ Tstd}{Pstd \times Ta} \qquad Qstd = \frac{Vstd}{\Delta t}$$

$$Va(5a) = Vm(3) \frac{(Pa-\Delta P)}{Pstd} \qquad Qa = \frac{Vstd}{\Delta t}$$

## Standard Conditions:

Tstd= 25°C= 298.18°K
Pstd= 760mm of Hg

## For additional information consult:

1. The Federal Register, Vol.47, No. 234, pp. 54896-54921, December 6, 1982.
2. Quality Assurance Handbook, Vol.II (EPA 600/4-77-27/a), Section 2.11.
3. Graseby/GMW/Andersen Instruction Manual.

## Notes:

1. EPA recommends calibrators should be recalibrated after one year of field use.

©1993 BGI Inc. Rev. 1.1

## Plot of Linear Regression Qstd/Qa and Traditional Qstd - ΔP
## (Note ΔH is inches of $H_2o$)

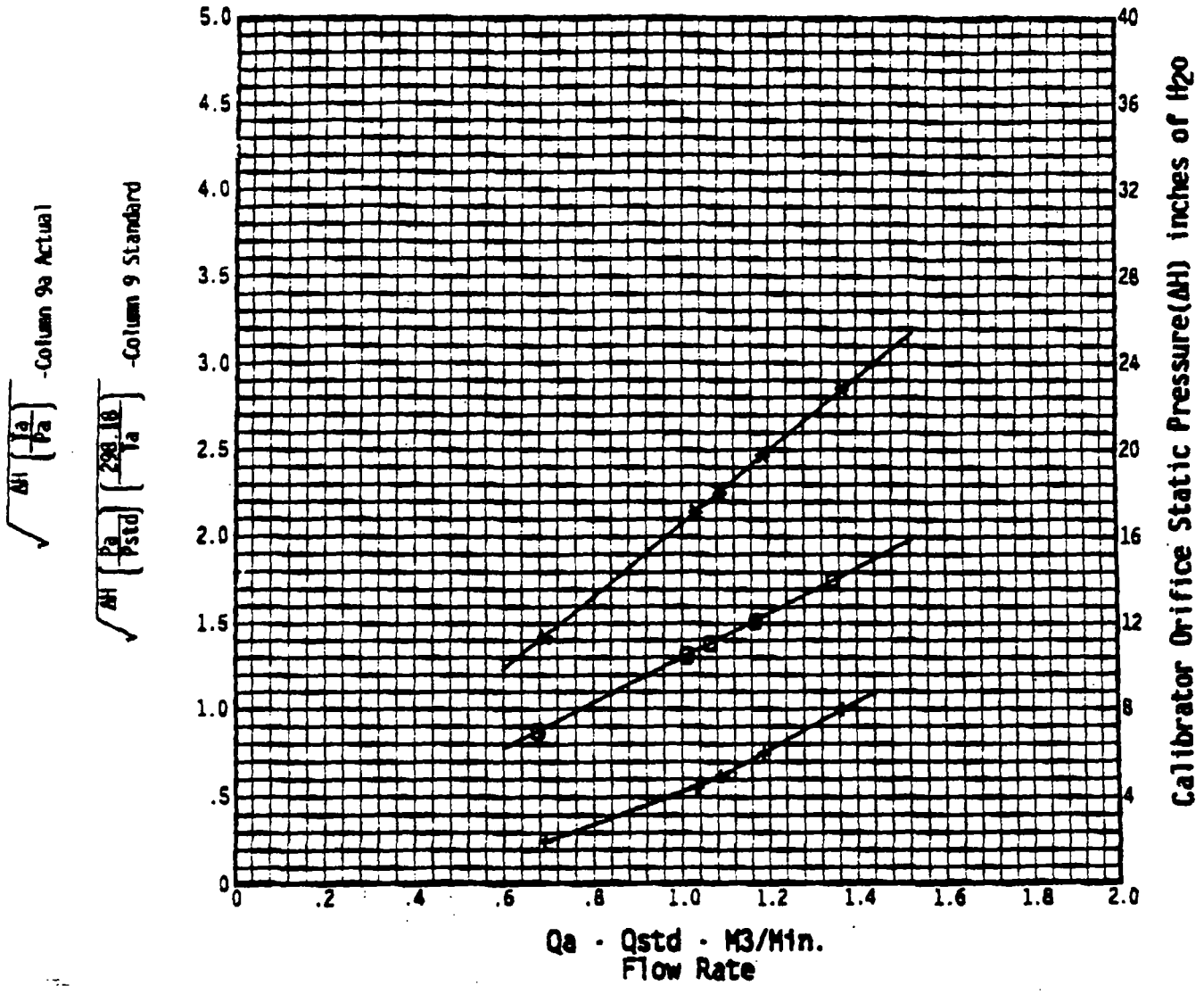


(7) vs (9) * = Qstd
(7a) vs (9a) o = Qa
(7) vs (6) + = Qstd vs ΔH

### Use of curve for determining Qa or Qstd.

To find Qa calculate:

$$Qa = \left[\frac{\Delta H \, Ta}{Pa}\right]^{\frac{1}{2}}$$

To find Qstd calculate:

$$Qstd = \left[\Delta H \frac{Pa}{760} \cdot \frac{298.18}{Ta}\right]^{\frac{1}{2}}$$

Where:

ΔH= Calibrator Manometer Reading in inches of water.
Ta= Actual Absolute Temperature in degress Kelvin(°K).
Pa= Actual Barometric Pressure in millimeters(mm) of Mercury(Hg).

dmd ROOTS

DRESSER MANUFACTURING DIVISION
DRESSER MEASUREMENT
P.O. BOX 42178, HOUSTON, TEXAS 77242

UNIT DESCRIPTION:

# ROOTS® METER TEST DATA SHEET

| | | |
|---|---|---|
| DATE | : | 06/10/92 |
| BILL OF MATERIAL | : | 048553-120 |
| MODEL | : | 5M125 |
| SERIAL NO. | : | 7509364 |
| ACCESSORY S/N | : | |
| CUSTOMER NO. | : | _____ |
| PROVER | : | 50 cu. ft. |

## T E S T  S P E C I F I C A T I O N S

MAXIMUM FLOW: 5,000 cfh

MAXIMUM WORKING PRESSURE : 125 psig

MINIMUM STATIC TEST PRESSURE: 250 psig

MINIMUM LEAK TEST PRESSURE: 157 psig

## T E S T  D A T A

| TEST POINT | FLOW RATE DISP. VOLUME cfh | PERCENT OF RATED CAPACITY | ACCURACY % | DIFFERENTIAL INCHES WATER COLUMN | PERCENT ERROR +/- |
|---|---|---|---|---|---|
| 01 | 5,000 | 100 % | 100.70 | 1.47 | .70 |
| 02 | 4,000 | 80 % | 100.54 | .96 | .54 |
| 03 | 3,000 | 60 % | 100.51 | .57 | .51 |
| 04 | 1,995 | 40 % | 100.40 | .28 | .40 |
| 05 | 1,000 | 20 % | 100.37 | .11 | .37 |
| 06 | 500 | 10 % | 100.26 | .05 | .26 |
| 07 | 250 | 5 % | 99.95 | .04 | -.05 |

Above data has been determined from tests performed with air at atmospheric pressure and ambient temperature using positive displacement proving devices dimensionally traceable to the United States NIST.

Test date 06/10/92 by F.J.GRZELCZYK

# APPENDIX B

## Calibration of Rotameter to Primary Flow Standard

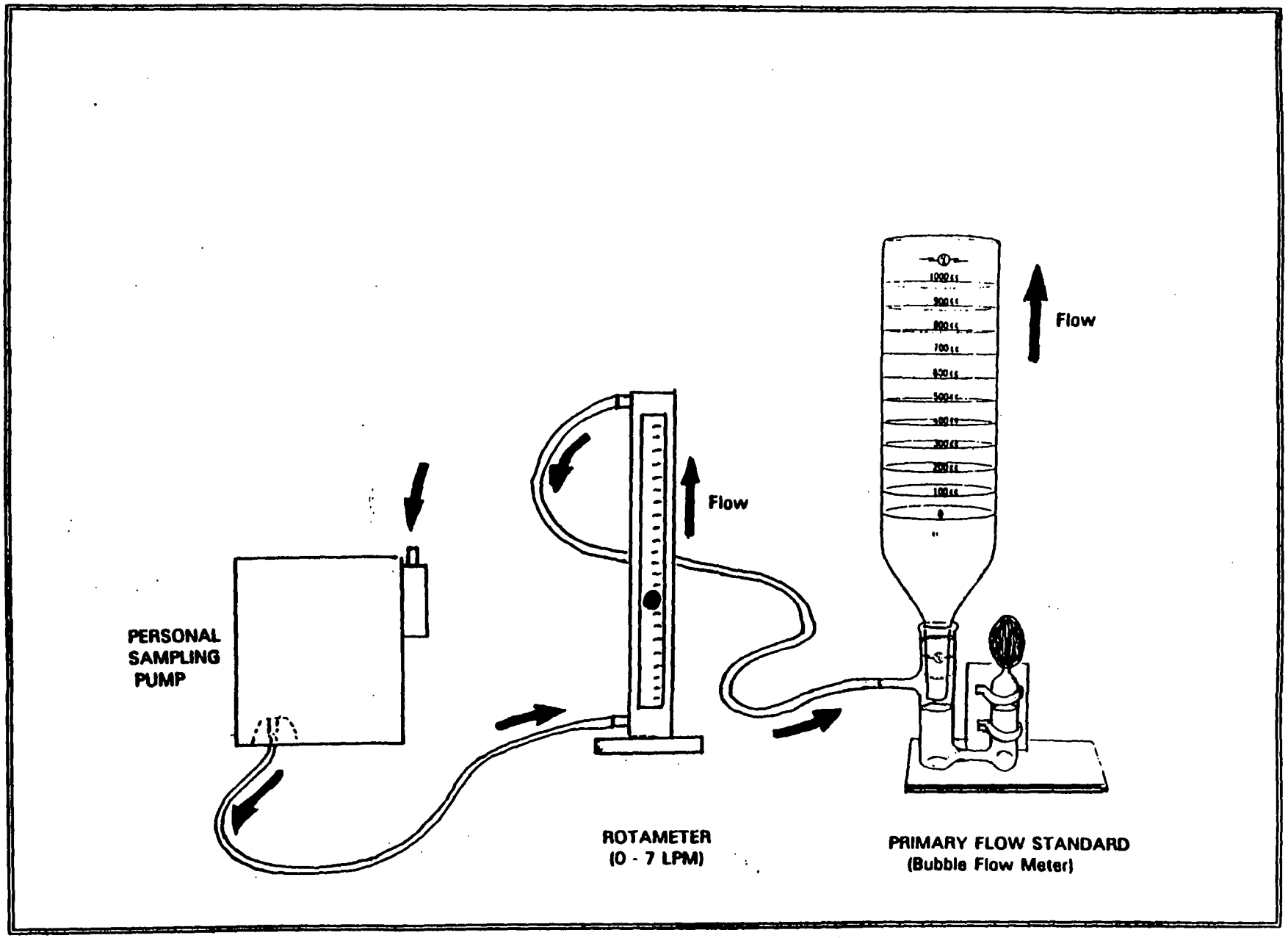


**Configuration of Equipment for Calibration of Audit Rotameter**

# ROTAMETER FLOW CALIBRATION WORKSHEET

Project Name: Eastern Michaud Flats
Project No. 21372-003-318EØØ
Instrument Calibrated: SKC-West 0-7 lpm S/N B125-50 B2669
Calibrated by: C. McCurley

Ambient Room Temp. ($T_a$) 20.0 °C
Ambient Pressure ($P_a$) 25.5 Hg
Calibrated with: Hastings HBM-1A S/N 1090
Date: 11/4/93

| Calib. Point No. | Volume Displaced (cc) | Instrument[2] Indicated Flow (cc/min) | Elapsed Time (min) (sec) 1 | 2 | 3 | 4 | 5 | Average Elapsed Time (min) | Actual Flowrate (cc/min) | Standard[1] Flowrate ($Q_{STP}$) (cc/min) |
|---|---|---|---|---|---|---|---|---|---|---|
| 1 | 100 | 600 | 8.79 | 8.75 | 8.75 | | | 0.1460 | 684.9 | 568 |
| 2 | 100 | 900 | 5.97 | 5.96 | 6.01 | 5.97 | 5.97 | 0.0997 | 1,003.0 | 832 |
| 3 | 100 | 1,200 | 4.58 | 4.54 | 4.54 | 4.50 | 4.59 | 0.0758 | 1,319.3 | 1,094 |
| 4 | 1,000 | 1,600 | 34.26 | 34.50 | 34.40 | 34.35 | 34.49 | 0.5733 | 1,744.3 | 1,446 |
| 5 | 1,000 | 1,980 | 27.57 | 27.57 | 27.40 | 27.65 | 27.53 | 0.4590 | 2,178.6 | 1,807 |
| 6 | 1,000 | 2,270 | 24.21 | 24.06 | 23.98 | 24.00 | 23.94 | 0.4007 | 2,495.6 | 2,069 |
| 7 | | | | | | | | | | |
| 8 | | | | | | | | | | |
| 9 | | | | | | | | | | |
| 10 | | | | | | | | | | |

(1) $F_{STP} = ((P_a - P_v)/29.92) * (293/(273+T_a)) * (Vol_{(cc)}/Time_{(min)})$

$= \left(\frac{Vol}{Time}\right)\left(\frac{25.5 - .69}{29.92} \times \frac{293}{273+20}\right)$

Where: $T_a$ = Temperature of Gas (°C) (Ambient)
$P_a$ = Ambient Pressure (in. of Hg)
$P_v$ = Vapor Pressure of $H_2O$ (in. of Hg) =

$= " \quad (0.8292 \times 1) = 0.8292$

(2) left side of rotameter - black ball center

m = 1.1114
b = -22.80
r = .9999

where y = rotameter
x = $Q_{STP}$

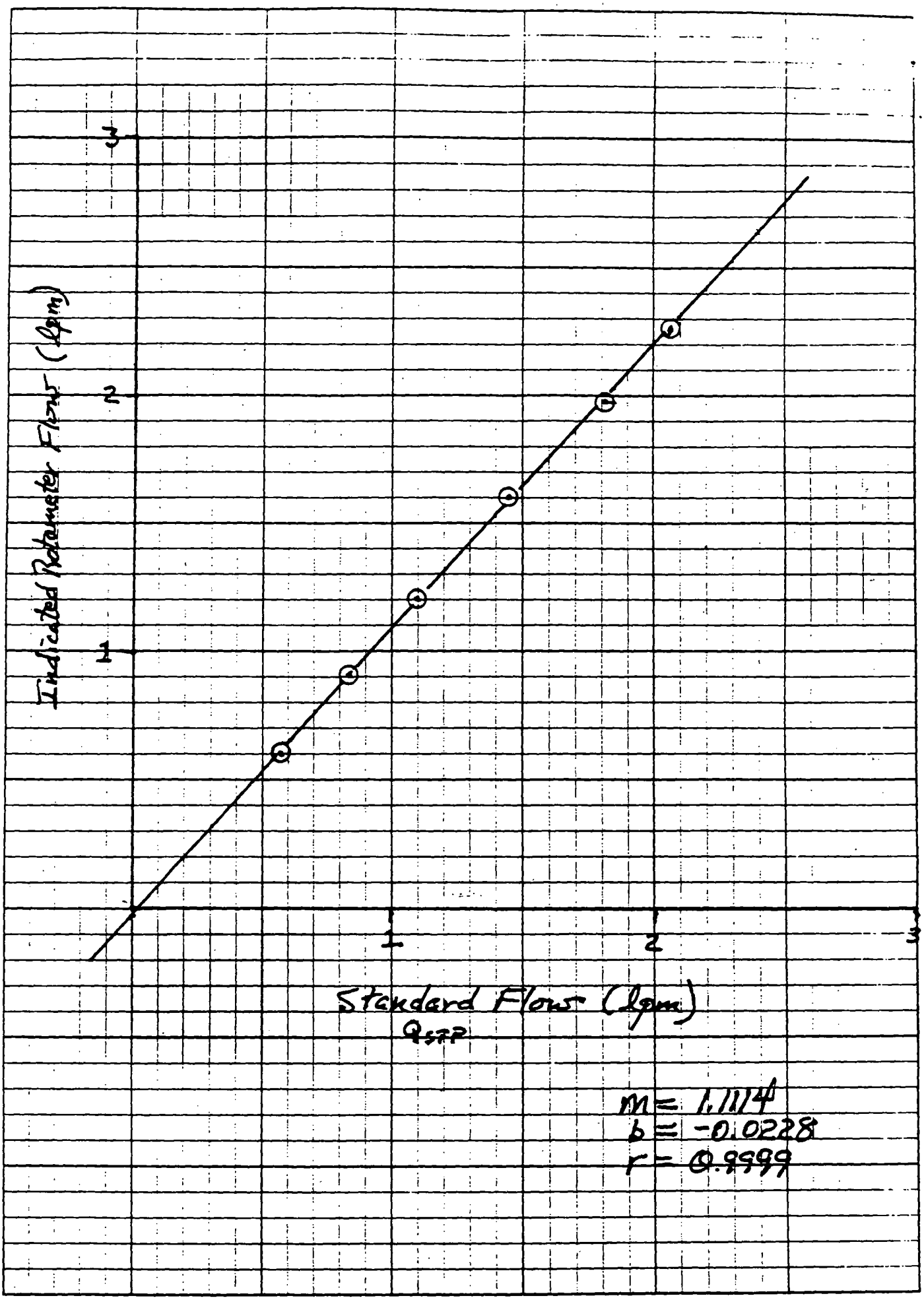
Indicated Rotameter Flow (lpm)
3
2
1
1
2
3
Standard Flow (lpm)
$Q_{STP}$
m = 1.1114
b = -0.0228
r = 0.9999

# APPENDIX C
# Calibration of Dry Gas Meter to Primary Flow Standard

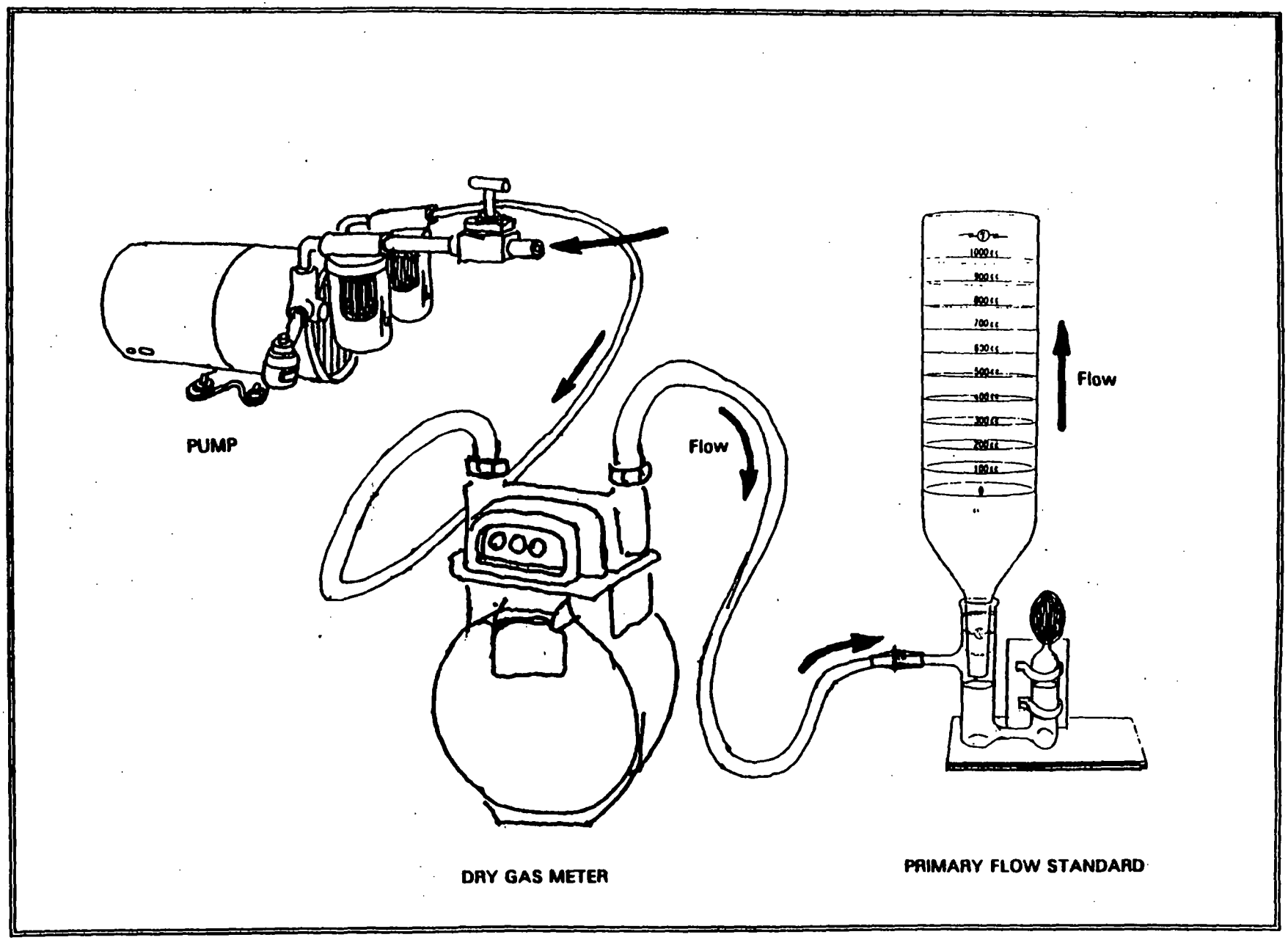


**Configuration of Equipment for Calibration of Audit Dry Gas Meter**

# DRY GAS METER (DGM) FLOW CALIBRATION WORKSHEET

**Project Name:** Eastern Michaud Flats
**Project No.** 21372-003-318E00
**Instrument Calibrated:** Audit Dry Gas Meter S/N 8820746
**Calibrated by:** C. McCurley

**Ambient Temp. ($T_a$)** 20.0 °C
**Ambient Pressure ($P_a$)** 25.5 Hg
**Calibrated with:** Hastings HBM-1A S/N 1090
**Date:** 11/6/93

| Calib. Point No. | Number of Revolutions (where 1 revolution = 1 ACFM) | Time For 1 Revolution (Before) (min) | Time For 1 Revolution (After) (min) | Average Time (min) | Indicated DGM Flowrate (ACFM) | Elapsed Time (sec) to displace 1,000 cc volume of primary flow standard (PFS) | | | | | Average Elapsed Time (min) | Measured Flowrate with Primary Flow Standard (ACFM) | % Diff, PFS vs. DGM | Standard[1] Flowrate $Q_{STP}$ (Based on PFS) (SCFM) |
|---|---|---|---|---|---|---|---|---|---|---|---|---|---|---|
| | | | | | | 1 | 2 | 3 | 4 | 5 | | | | |
| 1 | 1 | 3.30 | 3.30 | 3.30 | 0.30 | 7.25 | 7.19 | 7.26 | 7.14 | 7.13 | 0.12 | 0.29 | 2.8 | 0.24 |
| 2 | 1 | 2.42 | 2.43 | 2.43 | 0.41 | 5.16 | 5.12 | 5.13 | 5.16 | 5.22 | 0.09 | 0.41 | 0.2 | 0.34 |
| 3 | 1 | 1.43 | 1.41 | 1.42 | 0.71 | 2.94 | 2.97 | 2.92 | 3.02 | 2.94 | 0.05 | 0.72 | -1.5 | 0.59 |
| 4 | 1 | 1.03 | 0.98 | 1.01 | 1.00 | 2.19 | 2.12 | 2.28 | 2.06 | 1.94 | 0.04 | 1.00 | -0.6 | 0.83 |
| 5 | | | | | | | | | | | | | | |
| 6 | | | | | | | | | | | | | | |
| 7 | | | | | | | | | | | | | | |
| 8 | | | | | | | | | | | | | | |
| 9 | | | | | | | | | | | | | | |
| 10 | | | | | | | | | | | | | | |

(1) $F_{STP} = ((P_a - P_v)/29.92)*(298/(273+T_a))*(Vol_{(cc)}/Time_{(min)})$ = 0.8292

Where: $T_a$ = Temperature of Gas (°C) (Ambient)
$P_a$ = Ambient Pressure (in. of Hg)
$P_v$ = Vapor Pressure of $H_2O$ (in. of Hg) = 0.69

# EASTERN MICHAUD FLATS AIR PATHWAYS MONITORING NETWORK

## QUARTERLY PERFORMANCE AUDIT REPORT

## 1ST QUARTER, 1994

**Prepared For**

**J.R. Simplot Company**
**and**
**FMC Corporation**

**Prepared by**

**CH2M HILL**

**March 1994**

# 1994 1st Quarter Performance Audit Report
# on
# J.R. Simplot/FMC's
# Eastern Michaud Flats Air Pathways Monitoring Network

The Eastern Michaud Flats, (EMF) Air Pathways Monitoring Program is operated near Pocatello, Idaho. This air monitoring program was developed based upon discussions with EPA in 1993. The EMF air monitoring program is an element of the Remedial Investigation/Feasibility Study being performed under an Administrative Order on Consent issued by the EPA on May 30, 1991 pursuant to the Comprehensive Environmental Response, Compensation, and Liability Act.

The main purpose of the program as stated in the written EMF Air Pathways Monitoring Plan is to characterize the off-site impact in air quality attribution to potential airborne releases from FMC and J.R. Simplot. A second purpose is to assess the potential scope of deposition of chemical constituents on surface soils.

Field sampling for the EFM air pathways monitoring program consists of monitoring for total suspended particulates (TSP), particulate matter less than 10 microns ($PM_{10}$), trace metals, radionuclides, fluorides, silica, and meteorological parameters (i.e., wind speed, wind direction, temperature, relative humidity, mixing height, sigma theta). Specific activities of the monitoring effort include:

- Continuous measurement of meteorological parameters at two locations;
- Sampling and chemical analysis for inorganics at seven off-site locations, one of which is a background site;
- Sampling analysis of radioisotopes at seven locations, one of which is a background site;
- Duplicate sampling particulates samples at two locations;
- Sampling for gaseous fluorides and silica at four sites.

The EMF Air Pathways Monitoring Program QAPP requires performance audits of field sampling equipment to be conducted on a quarterly schedule in accordance with recommendations in the EPA's Volume II Quality Assurance Handbook.

This report summarizes the performance audits conducted by CH2M HILL on eight TSP hi-vol samplers and eight $PM_{10}$ hi-vol samplers at seven locations, four silica and four fluoride samplers at four locations, five lo-vol samplers at four locations and two meteorological stations performed on February 8-19, 1994.

## $PM_{10}$ and TSP Hi-Vol Sampler Performance Audits

Eight TSP Hi-Vol and $PM_{10}$ Hi-Vol samplers were audited using CH2M HILL's certified orifice. All standards and equipment used to conduct the audits were different from the calibration standards and equipment used to perform routine station calibrations by J.R. Simplot field operators. The CH2M HILL variable resistance orifice used in the audits for TSP and $PM_{10}$ samplers conducted by CH2M HILL is calibrated annually to a traceable NIST standard.

TSP Hi-Vol samplers were audited by comparing the audit flowrate, measured in $m^3$ per minute at actual conditions of temperature and pressure as indicated by the audit device, to the indicated sampler flowrate. The indicated TSP sampler flowrate is determined by reading the stagnation port pressure ($\Delta H$) and converting the stagnation port reading to flowrate using the Wedding look-up table specific to the sampler.

The audit orifice was placed on the sampler and the sampler was operated under normal operating conditions. The sampler was allowed to warm up for 5 to 10 minutes prior to measuring the pressure at the orifice port and the sampler stagnation port using a water manometer. The actual temperature and barometric pressure were measured during each field audit.

The difference between the measured audit flowrate and sampler indicated flow must be within ±7 percent to pass the audit.

The results of the TSP Hi-Vol samplers audits were recorded on field data sheets which are attached. The audit data and calculations are presented on the field data sheets and results are summarized below:

| TSP Hi-Vol Sampler Audit Results | | | |
|---|---|---|---|
| **Site #** | **TSP Sampler I.D.** | **Audit Flow % Difference** | **EPA and Monitoring Plan Limit %** |
| #1 | 8T | -2.8 | ±7 |
| #1 | 1T | 1.4 | ±7 |
| #2 | 2T | -3.4 | ±7 |
| #3 | 3T | -5.7 | ±7 |
| #4 | 4T | -2.5 | ±7 |
| #5 | 5T | -6.9 | ±7 |
| #6 | 6T | -4.6 | ±7 |
| #7 | 7T | -3.2 | ±7 |
| All eight TSP samplers passed the performance audit | | | |

$PM_{10}$ Hi-Vol samplers were audited as per the EPA Volume II Quality Assurance Handbook procedures by comparing the audit flowrate measured by the audit device to the indicated sampler flowrate similar to the TSP audit method as described above. Flowrates measured in $m^3$/minute were compared at actual conditions of temperature and pressure. Field measurements of temperature and pressure were recorded using CH2M HILL certified equipment traceable to NIST standards. Specific calculations related to the $PM_{10}$ sampler audits can be seen in the attached Audit Data Sheets and are as outlined in the EPA's Quality Assurance Handbook Volume II. The difference between the audit flow and the sampler indicated flow must be within ±7 percent to pass the audit.

The Wedding $PM_{10}$ Hi-Vol samplers are designed to operate at 1.13 $m^3$/minute at actual conditions of temperature and pressure in order to collect the correct particle size on the filter. Therefore, in addition to a ±7 percent agreement between the audit flow and the indicated sampler flow, the $PM_{10}$ sampler flow must be within ±10% of the design flowrate of 1.13 $m^3$/minute when operating the sampler with a filter installed.

As part of the $PM_{10}$ sampler field audit, a clean unused filter was installed onto the sampler using the normal filter cassette. The sampler was operated under normal conditions. A measurement of the indicated sampler flowrate with the filter installed is determined by reading the stagnation port pressure using a water manometer. Calculations for determining the design flowrate % difference are provided in the attached field data sheets and $PM_{10}$ audit results are summarized below:

| $PM_{10}$ Hi-Vol Sampler Audit Results | | | | | |
|---|---|---|---|---|---|
| **Site #** | **$PM_{10}$ Sampler I.D.** | **Audit Flowrate Percent Difference** | **EPA Flowrate % Difference Requirement** | **Design Flowrate Percent Difference** | **EPA design Flowrate % Difference Requirement** |
| #1 | 1P | 0.0 | ±7 | 0.7 | ±10 |
| #1 | 8P | 1.4 | ±7 | -0.9 | ±10 |
| #3 | 2P | -5.5 | ±7 | 0.9 | ±10 |
| #4 | 4P | -3.6 | ±7 | 4.4 | ±10 |
| #5 | 5P | -2.5 | ±7 | 0.0 | ±10 |
| #6 | 6P | -7.3 | ±7 | 4.4 | ±10 |
| #7 | 7P | 2.9 | ±7 | -1.8 | ±10 |

The $PM_{10}$ Hi-Vol sampler 6P was the only site where the results of the audit flowrate percent difference calculation showed a greater percentage than the limit of ±7%. It showed a marginal failure of the audit at -7.3% difference. All other samplers passed the requirements for audit flowrate % difference and design flowrate percent difference as shown above.

The silica and fluoride MSA sampling pumps were audited by measurement of the actual field flowrate at actual conditions of temperature and pressure using a DryCal DC-1 Flow Calibrator certified traceable to NIST standards. To perform the flowrate audit on the silica and fluoride samplers, the Simplot field operator was asked to setup the monitor for sampling as if preparing to start a sample run. The sampler was allowed to warm up with a new filter installed and then the field operator adjusted the flowrate if needed using the J.R. Simplot field rotameter (transfer standard) as outlined in the standard operating procedures.

After the field operator had set the flowrate for the sampler, CH2M HILL's audit flowmeter (the dry cell flow calibrator) was installed on the sampler with the filter cassette still in line. See the attached drawings showing the configurations for the audit device installation on the sampler. The audit flow measuring device was installed immediately upstream of the intake to the filter cassette. The actual field temperature and pressure were also recorded. Results of the flowrate audits can be seen below:

## FIELD AUDIT CONFIGURATION FOR SILICA SAMPLER

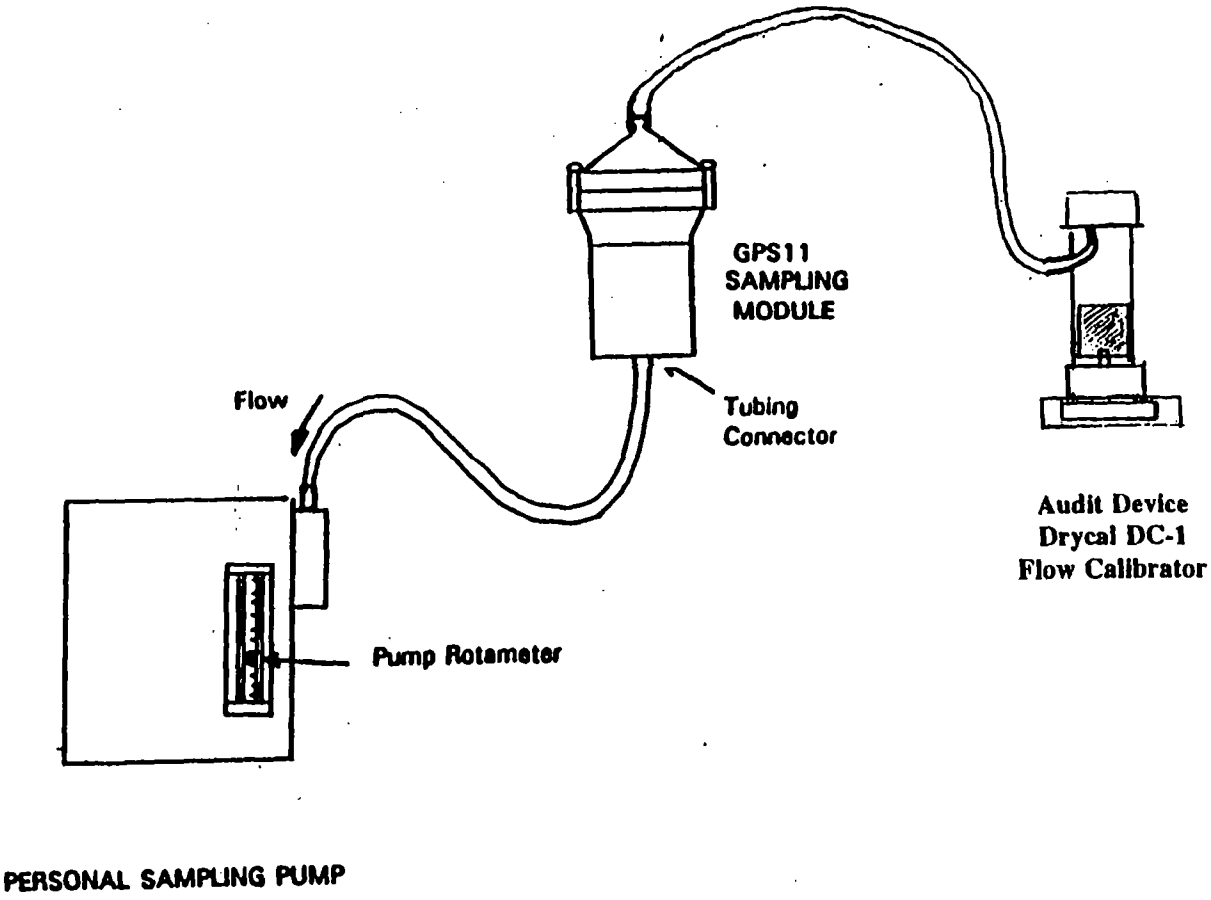


**Configuration of Equipment for Silica Sampler and Audit Device**

| Silica Sampler Audit Results | | | | | | |
|---|---|---|---|---|---|---|
| Site # | Actual Field Conditions | | Silica MSA Pump # | Simplot Measured Flowrate (lpm) | Audit Flowrate (lpm) | % Flowrate Difference |
| | pressure mmHg | temperature °C | | | | |
| #1 | 646 | 4.1 | #4 | 2.0 | 2.18 | -8.3 |
| #2 | 642 | 22.2 | #11 | 2.0 | 2.16 | -7.4 |
| #6 | 639 | 0.1 | #6 | 2.0 | 1.91 | 4.7 |
| #7 | 636 | 1.0 | #10 | 2.0 | 2.05 | -2.4 |

Results indicated that two of the silica sampling pumps flowrates were outside the limit of agreement of the flowrate determined by the audit device. The limit for % difference of sampler and audit device flowrates as stated in the QAPP is ±7%.

Similarly, the fluoride samplers were audited for flowrate using the same procedures. The results of the audit were documented on attached field data sheets and summarized below:

| Fluoride Sampler Audit Results | | | | | | |
|---|---|---|---|---|---|---|
| Site # | Actual Field Conditions | | Fluoride MSA Pump # | Simplot Measured Flowrate (lpm) | CH2M HILL Audit Flowrate (lpm) | % Flowrate Difference |
| | pressure mmHg | temperature °C | | | | |
| #1 | 646 | 4.1 | #13 | 1.20 | 1.30 | -7.6 |
| #1 | 646 | 4.1 | # | 1.20 | 1.29 | -7.0 |
| #2 | 642 | 22.2 | #7 | 1.1 | 1.25 | -12.0 |
| #2 | 642 | 22.2 | #12 | 1.1 | 1.25 | -12.0 |
| #6 | 639 | 0.1 | #5 | 1.31 | 1.27 | 3.1 |
| #6 | 639 | 0.1 | #12 | 1.25 | 1.29 | -3.1 |
| #7 | 636 | 1.0 | #3 | 1.20 | 1.27 | -5.5 |
| #7 | 636 | 1.0 | #1 | 1.20 | 1.28 | -6.3 |

## FIELD AUDIT CONFIGURATION FOR FLUORIDE SAMPLER

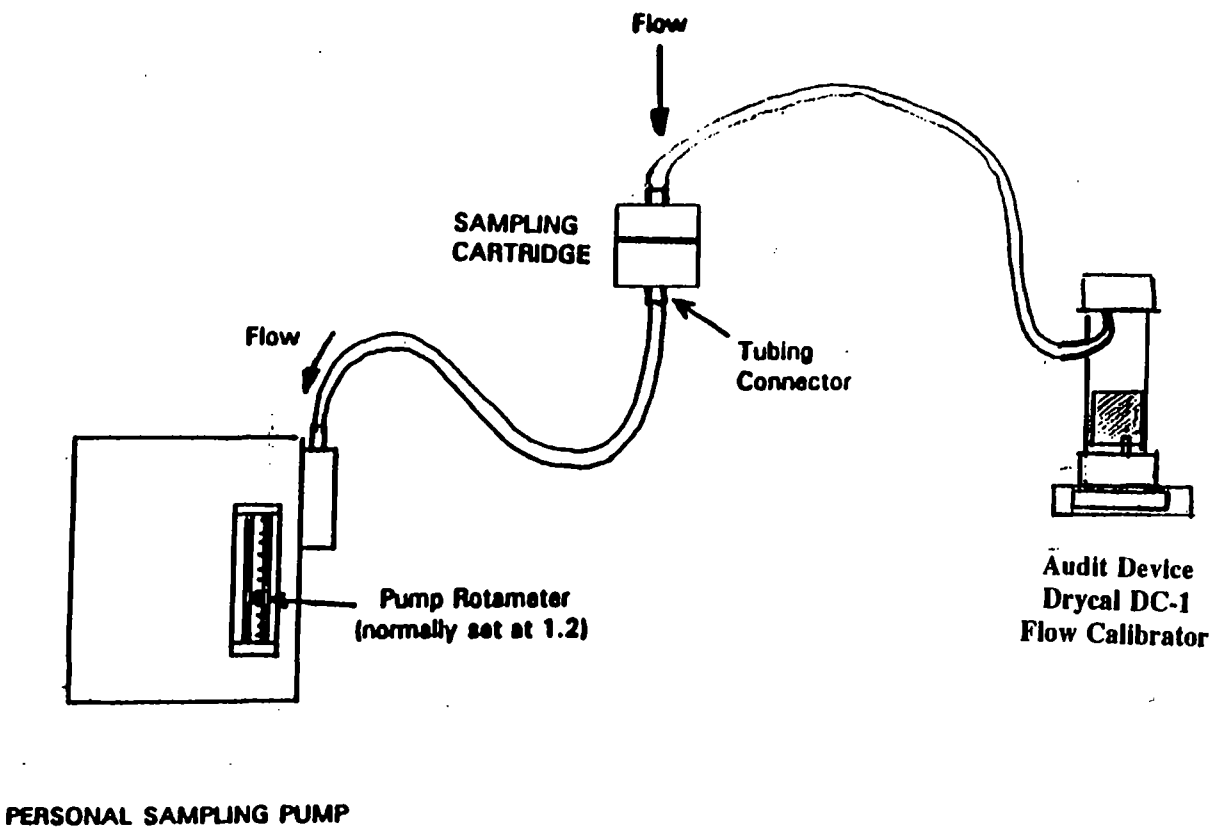


Configuration of Equipment for Fluoride Sampler and Audit Device

## Lo-Vol Total Suspended Particulate Sampler
## Audit Results

The lo-vol TSP samplers are operated at Sites 3, 4, 5 and 6. Filters are loaded on the first day of the month and run continuously for 30 days. Two lo-vol samplers are located at Site 3. One of these two is the collocated sampler which is identified as Site 9 for identification purposes.

The lo-vol field dry gas meter is continuously attached to the exhaust of the sampler vacuum pump to measure total flow in actual cubic feet over the sampling period.

An attempt was made to audit the lo-vol samplers flowrate with CH2M HILL's audit wet test meter. However, the wet test meter had been damaged during shipment to Pocatello, so an alternative audit method was devised.

J.R. Simplot's calibration dry gas meter was certified as a transfer standard by using CH2M HILL's certified DryCal DC-1 Flow Calibrator to verify the accuracy of Simplot's dry gas meter 5-275.

Simplot's dry gas meter was positioned in series with the CH2M HILL's certified flow device and a flowrate of air similar to that which is used in the lo-vol sampler was generated using a spare vacuum pump in Simplot's field trailer. Readings were recorded every minute for ten minutes on the audit device and the dry gas meter. Results as shown in attachment field data sheet indicated that the dry gas meter and the audit device agreed within 1.4%.

Simplot's dry gas meter was then used as a transfer standard in the field to audit the lo-vol sampler flowrates.

The audit dry gas meter was attached to the exhaust of the site dry gas meter to conduct the flowrate audit. See the attached drawing which illustrates the field audit configuration. No interference with the monthly sample flowrate occurred during the audits.

Both dry gas meters (site and audit transfer standard) were timed with a stopwatch to determine the time required to record 10 $ft^3$ on the gas meter. The flowrates in $ft^3$/min. at actual conditions of temperature and pressure were then calculated. These site and audit flowrates were compared and % differences determined. Results are shown in the attached field data sheets and summarized below:

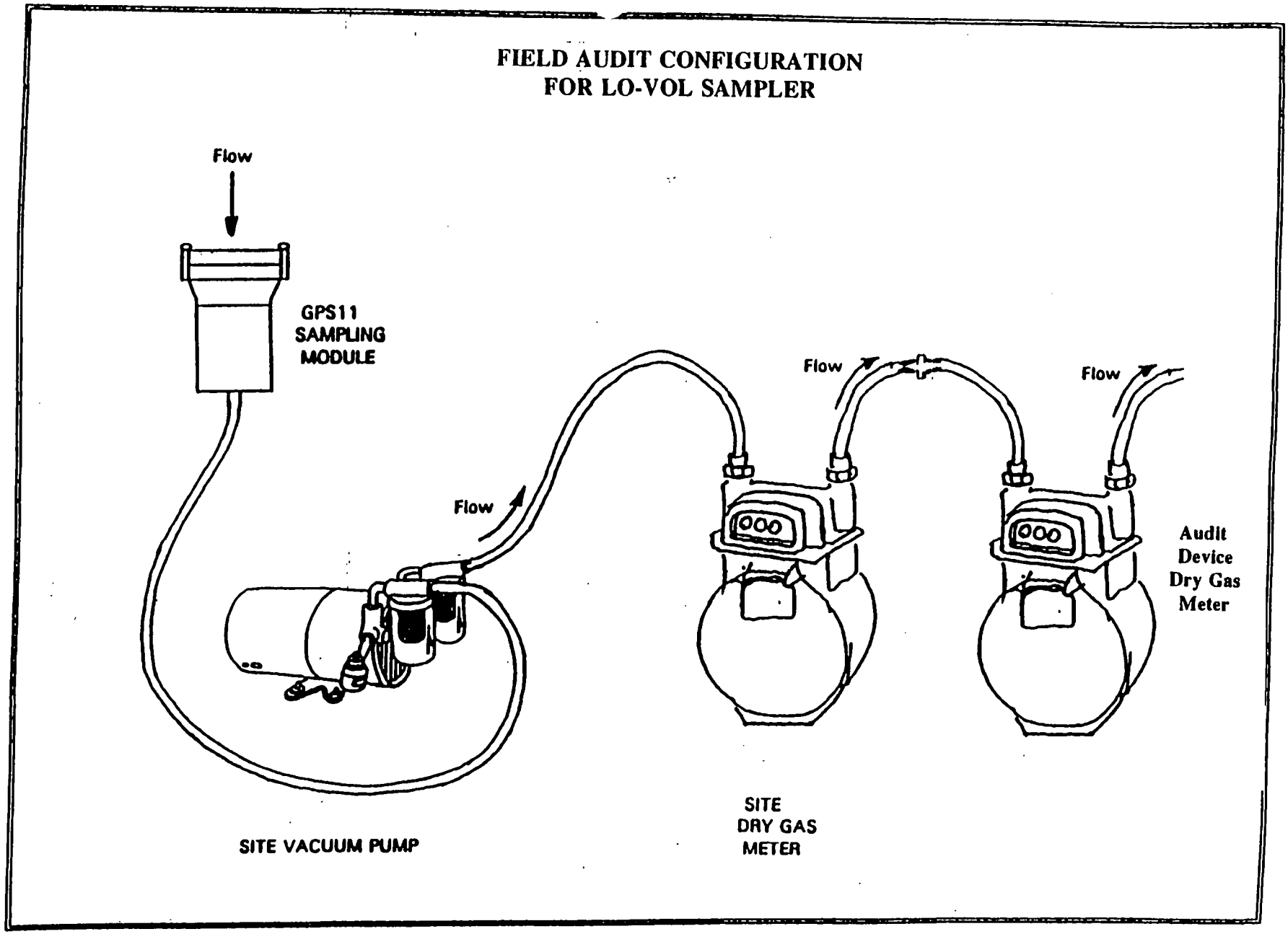


**Configuration of Equipment for Lo-Vol Sampler and Audit Device**

| Site # | Vacuum Pump I.D. | Site Dry Gas Meter S/N | Audit Dry Gas Meter | Site Meter Determined Flowrate (cfm) | Audit Meter Flowrate (cfm) | % Difference |
|---|---|---|---|---|---|---|
| 3 | 3-1091 | 6840569 | 5-275 | 1.22 | 1.27 | 4.1% |
| 3 | 2-0639-3 | 6840572 | 5-275 | 1.39 | 1.38 | -0.7% |
| 4 | 506934 | 6847879 | 5-275 | 1.30 | 1.14 | -12.3% |
| 5 | 106935 | 6844554 | 5-275 | 1.32 | 1.19 | -9.9% |
| 6 | 52667-6 | 6844553 | 5-275 | 1.29 | 1.22 | -5.4% |

No specific pass/fail criteria for performance audits on lo-vol TSP samplers were outlined in the EMFS QAPP. Therefore, no conclusions can be drawn as to whether the lo-vol samplers passed the performance audit.

## Meteorological Performance Audits

### Methodology

CH2M HILL conducts meteorological performance audits in accordance with EPA criteria, as defined in EPA-600/4-82-060, "Quality Assurance Handbook for Air Pollution Measurement Systems, Volume IV, Meteorological Methods" (September 1989).

During each meteorological audit, all sensors, cups, vanes, shields, cables, etc., are inspected to determine whether any unusual wear has occurred. Any such wear is identified in the audit report. System outputs are checked by use of a digital voltmeter, automated output, and stripchart output.

### EMF Meteorological Site Descriptions

There are two meteorological monitoring stations in operation as part of the EMF air monitoring program. These meteorological stations are located at Sites 1 and 7. Site 1 consists of a 65 foot tower with Met One instrumentation for wind speed and wind direction. Temperature and relative humidity are also measured continuously at Site 1. A mixing height sounder is also operated at Site 1.

Site 7 meteorological station consists of a 30 foot tower with Met One instrumentation for wind speed, wind direction and temperature. Meteorological data are recorded continuously on PC-based data system with stripchart recorders as backup.

## Results of the Meteorological Audits at Site 1 and Site 7

A verification of the internal electronic zero/span responses was performed by activating the zero and span switches on the translator cards as outlined in the Met One manual. Voltage, recorder, and computer outputs were recorded. All parameters were in adjustment for electronic zero and spans. (See field data sheets.) The site log indicated that field operators are checking zero/span settings routinely.

Starting torques of wind speed and wind direction sensors could not be measured during this field audit because audit micro torque watches were inadvertently not shipped to the site. Wind speed and wind direction sensor bearings were tested by hand, however, and were found to be moving smoothly with no indications of bearing wear or noise.

### Wind Speed Sensors

The wind speed sensor is challenged for accuracy with a synchronous motor test. After removal of the anemometer cups, a synchronous motor is attached to the wind speed sensor shaft and three known rotational speeds of 300, 600 and 900 rpm are applied to the sensor. For each rotational speed, the outputs for voltage, stripchart recorder and computer are recorded. Results are shown below for wind speed sensors at Site 1 and Site 7.

| Wind Speed Motor Test | | | | | |
|---|---|---|---|---|---|
| **Motor RPM** | **Desired Responses (mph)** | **Site 1 WS Sensor Response (DAS)** | **Site 2 WS Sensor Response** | **Site 1 % Difference** | **Site 7 % Difference** |
| 300 | 18.9 | 18.9 | 18.2 | 0% | -3.7% |
| 600 | 36.8 | 36.8 | 36.4 | 0% | -1.1% |
| 900 | 48.6 | 50.0 | 50 | 2.9% | 2.9% |

Reported wind speeds are compared to the expected speeds and the wind sensor is determined to have failed the audit if the percent difference is greater than five. Both wind speed sensors passed the audit.

### Wind Direction Sensors

The wind direction sensors were audited by first checking the alignment of the crossarm by using a Brunton compass and tripod. The Brunton compass was corrected for the magnetic declination of 15.1° East so that all compass bearing measurements were true readings referenced to true north. The crossarm at Site 7 was found to be within 1° of

true north-south (180°/360°) orientation. The crossarm at Site 1 was correctly oriented at east/west (90°/270°). The wind direction vane was then rotated and held in four different directions (parallel or perpendicular to the crossarm). The four directions were north (360°), south (180°), east (90°) and west (270°). Indicated wind directions as recorded on the data acquisition system (computer) must be within ±5 degrees for each orientation position. Data as shown on the field data sheets demonstrates that:

- Site 1 WD sensor responded within ±4° with the correct responses and passed the test.
- Site 7 WD sensor responded within ±4° with the correct responses and passed the test.

**Temperature Sensors**

Temperature sensors at Site 1 and Site 7 were audited using an NIST traceable mercury thermometer. The temperature sensors were audited at two temperatures.

The temperature sensor probe and the audit thermometer were immersed in an ice slurry/water bath and results compared. The temperature sensor probe and the audit thermometer were also compared at the current ambient air temperature.

| | **NIST Reference Temperature (°C)** | **Site #1 Temperature Sensor (°C)** | **Difference (°C)** |
|---|---|---|---|
| Ice Bath | 0.0 | 0.0 | 0 |
| Ambient Air Temperature | -3.2 | -2.7 | 0.5 |

| | **NIST Reference Temperature (°C)** | **Site #7 Temperature Sensor (°C)** | **Difference (°C)** |
|---|---|---|---|
| Ice Bath Slurry | 0.1 | 0.0 | 0.2 |
| Ambient Air Temperature | -4.0 | -4.1 | 0.1 |

The temperature sensor response must be within ±1°C of the NIST thermometer audit temperture to pass the audit. Temperature sensors at Sites 1 and 7 passed the performance audit as shown above.

## Relative Humidity

An attempt to audit the relative humidity sensor at Site 1 using a sling psychrometer was made to compare current air % RH. However, the sling psychrometer would not work properly in the cold winter air. Therefore, a comparison was made for the current ambient air % RH by calling the nearby National Weather Station and comparing their sensor reading to Site 1 RH sensor. The Site 1 RH sensor was reading 82% RH and the National Weather Station reported 81% RH. Agreement should be within ±5% RH. Therefore, the RH sensor at Site 1 passed the audit.

## Mixing Height Sounder

The AeroVironment Model 300-D monostotic radar system located at Site 1 was not audited at this time.

## Conclusions

The meteorological systems at Site 1 and Site 7 were field audited for performance. All parameters passed the audit. No attempt was made to audit the mixing height sounder at Site 1.

# FIELD DATA SHEETS

## CH2M HILL
## $PM_{10}$ VFC SAMPLER FIELD AUDIT SHEET

| | | |
|---|---|---|
| CLIENT J.R. Simplot / FMC | Project No. RME 37386.A0.01 | |
| Station Location Site #1 | Date 2-8-94 | Time 4:02 pm |
| Sampler Model Wedding $PM_{10}$ VFC, "IP" | S/N 034093160441 | |
| Pa 644 mm Hg. \| Ta −2.5 °C 270.5 °K | Unusual Conditions | |
| Audit Orifice S/N A12 | Orifice Calibration Date 2-93 | |
| Orifice Calibration Relationship: m = 1.0149 | b = −0.0295 | r = 0.9996 |
| Sampler Calibration Relationship: m = from | b = look up table | |
| Orifice Pressure Drop ($\Delta H_2O$) 2.9 in. $H_2O$ | Qa(audit)[a] 1.12 $m^3$/min | |

| | With Orifice Installed | Without Orifice Installed |
|---|---|---|
| Stagnation Pressure (ΔPstg) | 22.3 inches of $H_2O$ | 20.3 inches of $H_2O$ |
| Stagnation Pressure (ΔPstg) | 41.7 mm Hg | 37.9 mm Hg |
| Absolute Stagnation Pressure ($P_1$)[b] | 602.3 mm Hg | 606.1 mm Hg |
| Stagnation Pressure Ratio ($P_1$/Pa) | 0.9352 | 0.9411 |
| Qa(sampler)[c] | 1.12 $m^3$/min | 1.138 $m^3$/min |

Audit Flow Rate Percentage Difference[d] 0.0 %

Qa(corrected sampler)[e] 1.138 $m^3$/min

Design Flow Rate Percentage Difference[f] 0.7 %

(a) $Qa(audit)=(1/m)[(\Delta H_2O)(Ta/Pa)]^{1/2}-b)$ $= \dfrac{\sqrt{(2.9)\left(\frac{270.5}{644}\right)}}{1.0149} + 0.0295 = 1.12$

(b) $P_1=Pa-\Delta Pstg$

(c) Determine Qa (sampler) manufacturer's lookup table (or alternate calibration relationship)

(d) Audit % Difference $=\left[\dfrac{Qa(sampler)-Qa(audit)}{Qa(audit)}\right][100]$

where Qa(sampler) is measured with orifice installed

(e) Qa(corrected sampler) $=Qa(sampler)\left[\dfrac{100-(Audit\ \%\ Difference)}{100}\right]$

where Qa (sampler) is measured without orifice installed

(f) Design Flow Rate % Difference $=\left[\dfrac{Qa(corrected\ sampler)-1.13}{1.13}\right][100]$

Signatures:

Auditor [signature] Observer _____

sea10028227.wp5/1
3/22/94

## CH2M HILL
## $PM_{10}$ VFC SAMPLER FIELD AUDIT SHEET

| | | | |
|---|---|---|---|
| CLIENT Simplot/FMC | | Project No. RME 37386.A0.01 | |
| Station Location Site #1 | | Date 2-8-94 | Time 3:53 pm |
| Sampler Model Wedding PM10 VFC "8P" Colocated | | S/N 03409316054 | |
| Pa 644 mm Hg. | Ta -2.2 °C 270.8 °K | Unusual Conditions | |
| Audit Orifice S/N A12 | | Orifice Calibration Date 2-28-93 | |
| Orifice Calibration Relationship: m = 1.0149 | | b = -0.0295 | r = 0.9996 |
| Sampler Calibration Relationship: m = | | from look up table | |
| Orifice Pressure Drop ($\Delta H_2O$) 2.9 in. $H_2O$ | | Qa(audit)[a] 1.12 $m^3$/min | |
| | | With Orifice Installed | Without Orifice Installed |
| Stagnation Pressure (ΔPstg) | | 20.8 inches of $H_2O$ | 20.7 inches of $H_2O$ |
| Stagnation Pressure (ΔPstg) | | 38.9 mm Hg | 38.7 mm Hg |
| Absolute Stagnation Pressure ($P_1$)[b] | | 605.1 mm Hg | 605.3 mm Hg |
| Stagnation Pressure Ratio ($P_1$/Pa) | | 0.9396 | 0.9399 |
| Qa(sampler)[c] | | 1.136 $m^3$/min | 1.139 $m^3$/min |
| Audit Flow Rate Percentage Difference[d] 1.4 % | | | |
| Qa(corrected sampler)[e] 1.12 $m^3$/min | | | |
| Design Flow Rate Percentage Difference[f] -0.9 % | | | |

(a) $Qa(audit)=(1/m)[(\Delta H_2O)(Ta/Pa)]^{1/2}-b)$ $= \dfrac{\sqrt{(2.9)\left(\frac{270.8}{644}\right)}+0.0295}{1.0149} = 1.12$

(b) $P_1=Pa-\Delta Pstg$

(c) Determine Qa (sampler) manufacturer's lookup table (or alternate calibration relationship)

(d) $\text{Audit \% Difference}=\left[\dfrac{Qa(sampler)-Qa(audit)}{Qa(audit)}\right][100]$

where Qa(sampler) is measured with orifice installed

(e) $Qa(\text{corrected sampler})=Qa(sampler)\left[\dfrac{100-(\text{Audit \% Difference})}{100}\right]$

where Qa (sampler) is measured without orifice installed

(f) $\text{Design Flow Rate \% Difference}=\left[\dfrac{Qa(\text{corrected sampler})-1.13}{1.13}\right][100]$

Signatures:

Auditor [signature] Observer _____

# CH2M HILL FIELD AUDIT SHEET
# TOTAL SUSPENDED PARTICULATE
# VFC SAMPLER
# AUDIT DATA SHEET

| | | | |
|---|---|---|---|
| CLIENT J.R. Simplot/FMC | | Project No. RME 37386.A0.01 | |
| Station Location Site #1 | | Date 2-8-94 | Time 3:41 pm |
| Sampler Model Wedding TSP VFC | S/N "ST" 030930798UTSB | Auditor Maureen Kenny | |
| Pa 644 mm Hg, Ta −2.6 °C 270.5 °K | | Unusual conditions: | |
| Audit Orifice S/N A12 | | Orifice Calibration Date 2-28-93 | |
| Orifice calibration relationship: m= 1.0149 | b= −0.0295 | r= 0.9996 | |
| Sampler calibration relationship: m= from look up table | b= | r= | |
| Orifice Pressure Drop ($\Delta H_2O$) 2.9 in. $H_2O$ | | Qa (Audit)[a] 1.12 $m^3$/min | |
| Stagnation Pressure ($\Delta$Pstg) 22.1 in. $H_2O$ | | | |
| Stagnation Pressure ($\Delta$Pstg) 41.3 mm Hg | | | |
| Absolute Stagnation Pressure ($P_1$)[b] 602.7 mm Hg | | | |
| Stagnation Pressure Ratio ($P_1$/Pa) 0.9359 | | | |
| Qa(sampler)[b] 1.089 $m^3$/min | | | |
| Audit Flowrate % Difference[c] −2.8 % | | | |

[a]For calculation of orifice flow rates:

$$Qa(audit)=\frac{1}{m}([(\Delta H_2O)(\frac{Ta}{Pa})]^{1/2}-b) \quad =\sqrt{\frac{(2.9)\frac{270.5}{644}+0.0295}{1.0149}}=1.12$$

[b]For calculation of sampler flow rates:

$$P_1=Pa-\Delta Pstg$$

Determine Qa(sampler) from manufacturer's lookup table (or from alternate calibration relationship)

[c]Audit Flowrate % Difference =

$$\frac{Qa(sampler)-Qa(audit)}{Qa(audit)}[100]$$

Comments:

Signatures: Auditor Maureen Kenny Observer

# CH2M HILL FIELD AUDIT SHEET
# TOTAL SUSPENDED PARTICULATE
# VFC SAMPLER
# AUDIT DATA SHEET

| | |
|---|---|
| CLIENT FMC / SIMPLOT | Project No. RME 37386.A0.01 |
| Station Location Site #1 | Date 2-8-94 Time 3:24 pm |
| Sampler Model Wedding TSP S/N "1-T" 0709308014TSB | Auditor [signature] |
| Pa 644 mm Hg, Ta -2.0 °C 271 °K Unusual conditions: | |
| Audit Orifice S/N A12 | Orifice Calibration Date 2-28-93 |
| Orifice calibration relationship: m= 1.0149 b= -0.0295 r= 0.9996 | |
| Sampler calibration relationship: m= from b= look up r= table | |
| Orifice Pressure Drop ($\Delta H_2O$) 2.8 in. $H_2O$ | Qa (Audit)[a] 1.10 $m^3$/min |
| Stagnation Pressure ($\Delta$Pstg) 22.2 in. $H_2O$ | |
| Stagnation Pressure ($\Delta$Pstg) 41.5 mm Hg | |
| Absolute Stagnation Pressure ($P_1$)[b] 602.5 mm Hg | |
| Stagnation Pressure Ratio ($P_1$/Pa) 0.9356 | |
| Qa(sampler)[b] 1.081 $m^3$/min | |
| Audit Flowrate % Difference[c] -1.7 % | |

[a]For calculation of orifice flow rates:

$$Qa(audit) = \frac{1}{m}\left(\left[(\Delta H_2O)\left(\frac{Ta}{Pa}\right)\right]^{1/2} - b\right) = \frac{\sqrt{2.8\left(\frac{271}{644}\right)} + 0.0295}{1.0149} = 1.10$$

[b]For calculation of sampler flow rates:

$$P_1 = Pa - \Delta Pstg$$

Determine Qa(sampler) from manufacturer's lookup table (or from alternate calibration relationship)

[c]Audit Flowrate % Difference =

$$\frac{Qa(sampler) - Qa(audit)}{Qa(audit)}[100]$$

Comments:

Signatures: Auditor [signature] Observer

sea10028228.wp5/1
3/22/94

## CH2M HILL
## $PM_{10}$ VFC SAMPLER FIELD AUDIT SHEET

| | | | |
|---|---|---|---|
| CLIENT Simplot/FMC | | Project No. RME 37386.A0.01 | |
| Station Location Site #2 | | Date 2-8-94 | Time 1:42 pm |
| Sampler Model Wedding PM10 VFC "2-P" | | S/N 07409 "2-P" 3165SUB | |
| Pa 642 mm Hg. | Ta −2.7 °C 270.3 °K | Unusual Conditions | |
| Audit Orifice S/N A12 | | Orifice Calibration Date 2-28-93 | |
| Orifice Calibration Relationship: m = 1.0149 | b = −0.0295 | r = 0.9996 | |
| Sampler Calibration Relationship: m = from look up | b = | r = table | |
| Orifice Pressure Drop ($\Delta H_2O$) 2.9 in. $H_2O$ | | Qa(audit)[a] 1.12 $m^3$/min | |
| | | With Orifice Installed | Without Orifice Installed |
| Stagnation Pressure (ΔPstg) | | 23.0 inches of $H_2O$ | 21.2 inches of $H_2O$ |
| Stagnation Pressure (ΔPstg) | | 43.0 mm Hg | 39.6 mm Hg |
| Absolute Stagnation Pressure ($P_1$)[b] | | 598.5 mm Hg | 601.9 mm Hg |
| Stagnation Pressure Ratio ($P_1$/Pa) | | 0.9330 | 0.9383 |
| Qa(sampler)[c] | | 1.058 $m^3$/min | 1.080 $m^3$/min |
| Audit Flow Rate Percentage Difference[d] −5.5 % | | | |
| Qa(corrected sampler)[e] 1.140 $m^3$/min | | | |
| Design Flow Rate Percentage Difference[f] 0.9 % | | | |

(a) $Qa(audit)=(1/m)[(\Delta H_2O)(Ta/Pa)]^{1/2}-b)$ $= \sqrt{(2.9)\frac{270.3}{642}} + 0.0295 = 1.12$
$1.0149$

(b) $P_1=Pa-\Delta Pstg$

(c) Determine Qa (sampler) manufacturer's lookup table (or alternate calibration relationship)

(d) Audit % Difference $= \left[\frac{Qa(sampler)-Qa(audit)}{Qa(audit)}\right][100]$

where Qa(sampler) is measured with orifice installed

(e) $Qa(corrected\ sampler)=Qa(sampler)\left[\frac{100-(Audit\ \%\ Difference)}{100}\right]$

where Qa (sampler) is measured without orifice installed

(f) Design Flow Rate % Difference $= \left[\frac{Qa(corrected\ sampler)-1.13}{1.13}\right][100]$

Signatures:

Auditor [signature] Observer _____

# CH2M HILL FIELD AUDIT SHEET
# TOTAL SUSPENDED PARTICULATE
# VFC SAMPLER
# AUDIT DATA SHEET

| | |
|---|---|
| CLIENT Simplot/FMC | Project No. RME 37386.A0.01 |
| Station Location Site #2 FMC Fenceline | Date 2-8-94 Time 1:28 pm |
| Sampler Model Wedding VFC 8 S/N "2-T" 0709308054TSB | Auditor |
| Pa 641.5 mm Hg, Ta -2.7 °C 270.3 °K Unusual conditions: | |
| Audit Orifice S/N A12 | Orifice Calibration Date 2-28-93 |
| Orifice calibration relationship: m= 1.0149 b= -0.0295 r= 0.9996 | |
| Sampler calibration relationship: m= from look up table b= r= | |
| Orifice Pressure Drop ($\Delta H_2O$) 2.7 in. $H_2O$ | Qa (Audit)[a] 1.08 $m^3$/min |
| Stagnation Pressure ($\Delta$Pstg) 24.9 in. $H_2O$ | |
| Stagnation Pressure ($\Delta$Pstg) 46.5 mm Hg | |
| Absolute Stagnation Pressure ($P_1$)[b] 595 mm Hg | |
| Stagnation Pressure Ratio ($P_1$/Pa) 0.9275 | |
| Qa(sampler)[b] 1.043 $m^3$/min | |
| Audit Flowrate % Difference[c] -3.4 % | |

[a]For calculation of orifice flow rates:

$$Qa(audit) = \frac{1}{m}\left(\left[(\Delta H_2O)\left(\frac{Ta}{Pa}\right)\right]^{1/2} - b\right) = \frac{\sqrt{(2.7)\left(\frac{270.3}{641.3}\right)} + 0.0295}{1.0149} = 1.08$$

[b]For calculation of sampler flow rates:

$$P_1 = Pa - \Delta Pstg$$

Determine Qa(sampler) from manufacturer's lookup table (or from alternate calibration relationship)

[c]Audit Flowrate % Difference =

$$\frac{Qa(sampler) - Qa(audit)}{Qa(audit)}[100]$$

Comments:

gnatures: Auditor Warren Krug Observer

sea10028228.wp5/1
3/22/94

# CH2M HILL
## $PM_{10}$ VFC SAMPLER FIELD AUDIT SHEET

| | | | |
|---|---|---|---|
| CLIENT Simplot/FMC | | Project No. RME 37386.A0.01 | |
| Station Location ~~Weld Rd~~ Site #3 | | Date 2-10-94 | Time 9:15 AM |
| Sampler Model Wedding VFC "3P" | | S/N 114092 3P 15284 | |
| Pa 645 mm Hg. | Ta 4.8 °C 277.8 °K | Unusual Conditions | |
| Audit Orifice S/N A12 | | Orifice Calibration Date 2-28-93 | |
| Orifice Calibration Relationship: m = 1.0149 | b = -0.0295 | r = 0.9996 | |
| Sampler Calibration Relationship: m = | Known look up table | | |
| Orifice Pressure Drop ($\Delta H_2O$) 3.0 in. $H_2O$ | | Qa(audit)[a] 1.15 $m^3$/min | |

| | With Orifice Installed | Without Orifice Installed |
|---|---|---|
| Stagnation Pressure ($\Delta$Pstg) | 21.2 inches of $H_2O$ | 20.7 inches of $H_2O$ |
| Stagnation Pressure ($\Delta$Pstg) | 39.6 mm Hg | 38.7 mm Hg |
| Absolute Stagnation Pressure ($P_1$)[b] | 605.4 mm Hg | 606.3 mm Hg |
| Stagnation Pressure Ratio ($P_1$/Pa) | 0.9386 | 0.9400 |
| Qa(sampler)[c] | 1.129 $m^3$/min | 1.131 $m^3$/min |

Audit Flow Rate Percentage Difference[d] -1.8%

Qa(corrected sampler)[e] 1.15 $m^3$/min

Design Flow Rate Percentage Difference[f] 1.8 %

(a) $Qa(audit) = (1/m)[(\Delta H_2O)(Ta/Pa)]^{1/2} - b)$ $= \sqrt{\frac{(3.0)\ \frac{277.8}{645}}{1.0149}} + .0295 = 1.15$

(b) $P_1 = Pa - \Delta Pstg$

(c) Determine Qa (sampler) manufacturer's lookup table (or alternate calibration relationship)

(d) Audit % Difference $= \left[\frac{Qa(sampler) - Qa(audit)}{Qa(audit)}\right][100]$

where Qa(sampler) is measured with orifice installed

(e) Qa(corrected sampler) $= Qa(sampler)\left[\frac{100 - (Audit\ \%\ Difference)}{100}\right]$

where Qa (sampler) is measured without orifice installed

(f) Design Flow Rate % Difference $= \left[\frac{Qa(corrected\ sampler) - 1.13}{1.13}\right][100]$

Signatures:

Auditor [signature] Observer

# CH2M HILL FIELD AUDIT SHEET
# TOTAL SUSPENDED PARTICULATE
# VFC SAMPLER
# AUDIT DATA SHEET

| | |
|---|---|
| CLIENT Simplot/FMC | Project No. RME 37386.A0.01 |
| Station Location Site #3 | Date 2-10-94 Time 8:57 AM |
| Sampler Model Wedding VFC S/N "3T" 070930802UTSB | Auditor [signature] |
| Pa 645 mm Hg, Ta 5.1 °C 278.1 °K Unusual conditions: | |
| Audit Orifice S/N A12 | Orifice Calibration Date 2-28-93 |
| Orifice calibration relationship: m= 1.0149 b= -0.0295 r= 0.9996 | |
| Sampler calibration relationship: m= from look up table b= r= | |
| Orifice Pressure Drop ($\Delta H_2O$) 3.0 in. $H_2O$ | Qa (Audit)[a] 1.15 $m^3$/min |
| Stagnation Pressure ($\Delta$Pstg) 24.6 in. $H_2O$ | |
| Stagnation Pressure ($\Delta$Pstg) 46.0 mm Hg | |
| Absolute Stagnation Pressure ($P_1$)[b] 599 mm Hg | |
| Stagnation Pressure Ratio ($P_1$/Pa) 0.9287 | |
| Qa(sampler)[b] 1.084 $m^3$/min | |
| Audit Flowrate % Difference[c] -5.7 % | |

[a]For calculation of orifice flow rates:

$$Qa(audit) = \frac{1}{m}\left(\left[(\Delta H_2O)\left(\frac{Ta}{Pa}\right)\right]^{1/2} - b\right) = \frac{\sqrt{(3.0)\frac{(278.1)}{645}} + 0.0295}{1.0149} = 1.15$$

[b]For calculation of sampler flow rates:

$$P_1 = Pa - \Delta Pstg$$

Determine Qa(sampler) from manufacturer's lookup table (or from alternate calibration relationship)

[c]Audit Flowrate % Difference =

$$\frac{Qa(sampler) - Qa(audit)}{Qa(audit)}[100]$$

Comments:

gnatures: Auditor [signature] Observer

sea10028228.wp5/1
3/22/94

## CH2M HILL
## $PM_{10}$ VFC SAMPLER FIELD AUDIT SHEET

| | | | |
|---|---|---|---|
| CLIENT Simplot / FMC | | Project No. RME 37386.A0.01 | |
| Station Location Site #4 | | Date 2-10-94 | Time 9:30 Am |
| Sampler Model Wedding VFC "4P" | | S/N 03409316064 "4P" | |
| Pa 645 mm Hg. | Ta 2.1 °C 275.1 °K | Unusual Conditions | |
| Audit Orifice S/N A12 | | Orifice Calibration Date 2-28-93 | |
| Orifice Calibration Relationship: m = 1.0149 | | b = -0.0295 | r = 0.9996 |
| Sampler Calibration Relationship: m = | | frozen look up Table | |
| Orifice Pressure Drop ($\Delta H_2O$) 3.2 in. $H_2O$ | | Qa(audit)[a] 1.18 $m^3$/min | |
| | | With Orifice Installed | Without Orifice Installed |
| Stagnation Pressure (ΔPstg) | | 21.0 inches of $H_2O$ | 20.8 inches of $H_2O$ |
| Stagnation Pressure (ΔPstg) | | 39.2 mm Hg | 38.9 mm Hg |
| Absolute Stagnation Pressure ($P_1$)[b] | | 606 mm Hg | 606.3 mm Hg |
| Stagnation Pressure Ratio ($P_1$/Pa) | | 0.9392 | 0.9397 |
| Qa(sampler)[c] | | 1.137 $m^3$/min | 1.139 $m^3$/min |
| Audit Flow Rate Percentage Difference[d] -3.6 % | | | |
| Qa(corrected sampler)[e] 1.18 $m^3$/min | | | |
| Design Flow Rate Percentage Difference[f] 4.4 % | | | |

(a) $Qa(audit) = (1/m)[(\Delta H_2O)(Ta/Pa)]^{1/2} - b)$ $= \dfrac{\sqrt{(3.2)\left(\frac{275.1}{645.2}\right)} + 0.0295}{1.0149} = 1.18$

(b) $P_1 = Pa - \Delta Pstg$

(c) Determine Qa (sampler) manufacturer's lookup table (or alternate calibration relationship)

(d) Audit % Difference $= \left[\dfrac{Qa(sampler) - Qa(audit)}{Qa(audit)}\right][100]$

where Qa(sampler) is measured with orifice installed

(e) Qa(corrected sampler) $= Qa(sampler)\left[\dfrac{100 - (Audit\ \%\ Difference)}{100}\right]$

where Qa (sampler) is measured without orifice installed

(f) Design Flow Rate % Difference $= \left[\dfrac{Qa(corrected\ sampler) - 1.13}{1.13}\right][100]$

Signatures:

Auditor [signature] Observer _____

# CH2M HILL FIELD AUDIT SHEET
# TOTAL SUSPENDED PARTICULATE
# VFC SAMPLER
# AUDIT DATA SHEET

| | |
|---|---|
| CLIENT Simplot/FMC | Project No. RME 39386.A0.01 |
| Station Location Site #4 | Date 2-10-94 Time 9:30 Am |
| Sampler Model Wedding VFC 8 S/N "4T" 0709305040TSB | Auditor [signature] |
| Pa 645 mm Hg, Ta 2.2 °C 275.3 °K Unusual conditions: | |
| Audit Orifice S/N A12 | Orifice Calibration Date 2-28-93 |
| Orifice calibration relationship: m= 1.0149 b= -0.0295 r= 0.9996 | |
| Sampler calibration relationship: m= from look up table | |
| Orifice Pressure Drop ($\Delta H_2O$) 3.0 in. $H_2O$ | Qa (Audit)[a] 1.14 $m^3$/min |
| Stagnation Pressure ($\Delta$Pstg) 19.8 in. $H_2O$ | |
| Stagnation Pressure ($\Delta$Pstg) 37.0 mm Hg | |
| Absolute Stagnation Pressure ($P_1$)[b] 608.2 mm Hg | |
| Stagnation Pressure Ratio ($P_1$/Pa) 0.9427 | |
| Qa(sampler)[b] 1.112 $m^3$/min | |
| Audit Flowrate % Difference[c] -2.5% | |

[a]For calculation of orifice flow rates:

$$Qa(audit) = \frac{1}{m}\left(\left[(\Delta H_2O)\left(\frac{Ta}{Pa}\right)\right]^{1/2} - b\right) = \frac{\sqrt{(3.0)\frac{(275.3)}{(645.2)}} + 0.0295}{1.0149} = 1.14$$

[b]For calculation of sampler flow rates:

$$P_1 = Pa - \Delta Pstg$$

Determine Qa(sampler) from manufacturer's lookup table (or from alternate calibration relationship)

[c]Audit Flowrate % Difference =

$$\frac{Qa(sampler) - Qa(audit)}{Qa(audit)}[100]$$

Comments:

Signatures: Auditor [signature] Observer

sea10028228.wp5/1
3/22/94

**CH2M HILL**

**$PM_{10}$ VFC SAMPLER FIELD AUDIT SHEET**

| | | | |
|---|---|---|---|
| CLIENT Simplot / FMC | | Project No. RME 37386.A0.01 | |
| Station Location Site #5 Michaud Creek | | Date 2-10-94 | Time 1:44 pm |
| Sampler Model Wedding VFC "5P" | | S/N 07409316 56UB "5P" | |
| Pa 639 mm Hg. | Ta 2.8 °C 275.8 °K | Unusual Conditions | |
| Audit Orifice S/N A12 | | Orifice Calibration Date 2-28-93 | |
| Orifice Calibration Relationship: m = 1.0149 b = -0.0295 r = 0.9996 | | | |
| Sampler Calibration Relationship: m = from look up table | | | |
| Orifice Pressure Drop ($\Delta H_2O$) 2.9 in. $H_2O$ | | Qa(audit)[a] 1.13 $m^3$/min | |
| | | With Orifice Installed | Without Orifice Installed |
| Stagnation Pressure ($\Delta$Pstg) | | 21.0 inches of $H_2O$ | 20.7 inches of $H_2O$ |
| Stagnation Pressure ($\Delta$Pstg) | | 39.2 mm Hg | 38.7 mm Hg |
| Absolute Stagnation Pressure ($P_1$)[b] | | 599.8 mm Hg | 600.3 mm Hg |
| Stagnation Pressure Ratio ($P_1$/Pa) | | 0.9387 | 0.9394 |
| Qa(sampler)[c] | | 1.102 $m^3$/min | 1.102 $m^3$/min |
| Audit Flow Rate Percentage Difference[d] -2.5% | | | |
| Qa(corrected sampler)[e] 1.13 $m^3$/min | | | |
| Design Flow Rate Percentage Difference[f] 0.0 % | | | |

(a) $Qa(audit)=(1/m)[(\Delta H_2O)(Ta/Pa)]^{1/2}-b)$ $= \dfrac{\sqrt{(2.9)\left(\frac{275.8}{639}\right)} + 0.0295}{1.0149} = 1.13$

(b) $P_1=Pa-\Delta Pstg$

(c) Determine Qa (sampler) manufacturer's lookup table (or alternate calibration relationship)

(d) $\text{Audit \% Difference}=\left[\dfrac{Qa(sampler)-Qa(audit)}{Qa(audit)}\right][100]$

where Qa(sampler) is measured with orifice installed

(e) $Qa(corrected\ sampler)=Qa(sampler)\left[\dfrac{100-(\text{Audit \% Difference})}{100}\right]$

where Qa (sampler) is measured without orifice installed

(f) $\text{Design Flow Rate \% Difference}=\left[\dfrac{Qa(corrected\ sampler)-1.13}{1.13}\right][100]$

Signatures:

Auditor Warren Kruz Observer

sea10028227.wp5/1
3/22/94

# CH2M HILL FIELD AUDIT SHEET
# TOTAL SUSPENDED PARTICULATE
# VFC SAMPLER
# AUDIT DATA SHEET

| | | | |
|---|---|---|---|
| CLIENT Simplot/FMC | | Project No. RME 37386.A0.01 | |
| Station Location Site #5 "Michaud Creek" | | Date 2-10-94 | Time 1:55 pm |
| Sampler Model Wedding VFC | S/N "ST" 0709307990735 | Auditor Warren Young | |
| Pa 639 mm Hg, Ta 2.5 °C 275.5 °K Unusual conditions: | | | |
| Audit Orifice S/N A12 | | Orifice Calibration Date 2-28-93 | |
| Orifice calibration relationship: m= 1.0149 b= -0.0295 r= 0.9996 | | | |
| Sampler calibration relationship: m= from look up table b= r= | | | |
| Orifice Pressure Drop ($\Delta H_2O$) 3.0 in. $H_2O$ | | Qa (Audit)[a] 1.15 $m^3$/min | |
| Stagnation Pressure ($\Delta$Pstg) 22.4 in. $H_2O$ | | | |
| Stagnation Pressure ($\Delta$Pstg) 41.8 mm Hg | | | |
| Absolute Stagnation Pressure ($P_1$)[b] 597.2 mm Hg | | | |
| Stagnation Pressure Ratio ($P_1$/Pa) 0.9346 | | | |
| Qa(sampler)[b] 1.071 $m^3$/min | | | |
| Audit Flowrate % Difference[c] -6.9 | | | |

[a]For calculation of orifice flow rates:

$$Qa(audit) = \frac{1}{m}\left([(\Delta H_2O)(\frac{Ta}{Pa})]^{1/2} - b\right) = \frac{\sqrt{(3.0)\frac{275.5}{639}} + 0.0295}{1.0149} = 1.15$$

[b]For calculation of sampler flow rates:

$$P_1 = Pa - \Delta Pstg$$

Determine Qa(sampler) from manufacturer's lookup table (or from alternate calibration relationship)

[c]Audit Flowrate % Difference =

$$\frac{Qa(sampler) - Qa(audit)}{Qa(audit)}[100]$$

Comments:

Signatures: Auditor Warren Young Observer

**CH2M HILL**

**$PM_{10}$ VFC SAMPLER FIELD AUDIT SHEET**

| | | | |
|---|---|---|---|
| CLIENT Simplot / FMC | | Project No. RME 37386.A0.01 | |
| Station Location Site #6 "Background" | | Date 2-8-94 | Time 9:47 Am |
| Sampler Model Wedding VFC "6-P" | | S/N 6-P 07409316570B | |
| Pa 640 mm Hg. | Ta -1.6 °C 271.4 °K | Unusual Conditions | |
| Audit Orifice S/N A12 | | Orifice Calibration Date 2-28-93 | |
| Orifice Calibration Relationship: m = 1.0149 b = -0.0295 r = 0.9996 | | | |
| Sampler Calibration Relationship: m = from look up table b = | | | |
| Orifice Pressure Drop ($\Delta H_2O$) 3.0 in. $H_2O$ | | Qa(audit)[a] 1.14 $m^3$/min | |
| | | With Orifice Installed | Without Orifice Installed |
| Stagnation Pressure ($\Delta$Pstg) | | 25.4 inches of $H_2O$ | 20.7 inches of $H_2O$ |
| Stagnation Pressure ($\Delta$Pstg) | | 47.5 mm Hg | 38.67 mm Hg |
| Absolute Stagnation Pressure ($P_1$)[b] | | 592 mm Hg | 600.8 mm Hg |
| Stagnation Pressure Ratio ($P_1$/Pa) | | 0.9257 | 0.9375 |
| Qa(sampler)[c] | | 1.057 $m^3$/min | 1.105 $m^3$/min |
| Audit Flow Rate Percentage Difference[d] -7.3 | | | |
| Qa(corrected sampler)[e] 1.18 $m^3$/min | | | |
| Design Flow Rate Percentage Difference[f] 4.4 % | | | |

(a) $Qa(audit)=(1/m)[(\Delta H_2O)(Ta/Pa)]^{1/2}-b)$ $= \dfrac{\sqrt{(3.0)\left(\frac{271.4}{640}\right)} + 0.0295}{1.0149} = 1.14$

(b) $P_1=Pa-\Delta Pstg$

(c) Determine Qa (sampler) manufacturer's lookup table (or alternate calibration relationship)

(d) $\text{Audit \% Difference}=\left[\dfrac{Qa(sampler)-Qa(audit)}{Qa(audit)}\right][100]$

where Qa(sampler) is measured with orifice installed

(e) $Qa(\text{corrected sampler})=Qa(sampler)\left[\dfrac{100-(\text{Audit \% Difference})}{100}\right]$

where Qa (sampler) is measured without orifice installed

(f) $\text{Design Flow Rate \% Difference}=\left[\dfrac{Qa(\text{corrected sampler})-1.13}{1.13}\right][100]$

Signatures:

Auditor [signature] Observer

sea10028227.wp5/1
3/22/94

# CH2M HILL FIELD AUDIT SHEET
# TOTAL SUSPENDED PARTICULATE
# VFC SAMPLER
# AUDIT DATA SHEET

| | | | |
|---|---|---|---|
| CLIENT Simplot / FMC | | Project No. EME 37386.A0.01 | |
| Station Location Site #6 "Background" | | Date 2-8-94 | Time 10:10 AM |
| Sampler Model Wedding VFC | S/N "#6" 0709308034T5B | Auditor Warren Krug | |
| Pa 640 mm Hg, Ta -1.6 °C 271.2 °K Unusual conditions: | | | |
| Audit Orifice S/N A12 | | Orifice Calibration Date 2-28-93 | |
| Orifice calibration relationship: m= 1.0149 b= -0.0295 r= 0.9996 | | | |
| Sampler calibration relationship: m= from look up table b= | | | |
| Orifice Pressure Drop ($\Delta H_2O$) 2.9 in. $H_2O$ | | Qa (Audit)[a] 1.12 $m^3$/min | |
| Stagnation Pressure ($\Delta$Pstg) 22.6 in. $H_2O$ | | | |
| Stagnation Pressure ($\Delta$Pstg) 42.2 mm Hg | | | |
| Absolute Stagnation Pressure ($P_1$)[b] 597.3 mm Hg | | | |
| Stagnation Pressure Ratio ($P_1$/Pa) 0.9340 | | | |
| Qa(sampler)[b] 1.068 $m^3$/min | | | |
| Audit Flowrate % Difference[c] -4.6 % | | | |

[a]For calculation of orifice flow rates:

$$Qa(audit) = \frac{1}{m}\left([(\Delta H_2O)(\frac{Ta}{Pa})]^{1/2} - b\right) = \sqrt{\frac{(2.9)(271.2)}{640}} + 0.0295 = 1.12$$
$$1.0149$$

[b]For calculation of sampler flow rates:

$$P_t = Pa - \Delta Pstg$$

Determine Qa(sampler) from manufacturer's lookup table (or from alternate calibration relationship)

[c]Audit Flowrate % Difference =

$$\frac{Qa(sampler) - Qa(audit)}{Qa(audit)}[100]$$

Comments:

Signatures: Auditor Warren Krug Observer

# CH2M HILL FIELD AUDIT SHEET
# TOTAL SUSPENDED PARTICULATE
# VFC SAMPLER
# AUDIT DATA SHEET

| | |
|---|---|
| CLIENT Simplot / FMC | Project No. RME 37386.A0.01 |
| Station Location Site #7 | Date 2-10-94 Time 10:30 Am |
| Sampler Model Wedding VFC S/N 070930800UTSB "7T" | Auditor Warren King |
| Pa 636 mm Hg, Ta 1.4 °C 274.4 °K Unusual conditions: | |
| Audit Orifice S/N A12 | Orifice Calibration Date 2-28-94 |
| Orifice calibration relationship: m= 1.0149 b= -0.0295 r= 0.9995 | |
| Sampler calibration relationship: m= from b= look up r= table | |
| Orifice Pressure Drop ($\Delta H_2O$) 3.0 in. $H_2O$ | Qa (Audit)[a] 1.15 $m^3$/min |
| Stagnation Pressure ($\Delta$Pstg) 20.8 in. $H_2O$ | |
| Stagnation Pressure ($\Delta$Pstg) 38.9 mm Hg | |
| Absolute Stagnation Pressure ($P_1$)[b] 597.1 mm Hg | |
| Stagnation Pressure Ratio ($P_1$/Pa) 0.9388 | |
| Qa(sampler)[b] 1.113 $m^3$/min | |
| Audit Flowrate % Difference[c] -3.2 % | |

[a]For calculation of orifice flow rates:

$$Qa(audit) = \frac{1}{m}([(\Delta H_2O)(\frac{Ta}{Pa})]^{1/2} - b) = \frac{\sqrt{(3.0)\frac{274}{636}} + 0.0295}{1.0149} = 1.15$$

[b]For calculation of sampler flow rates:

$$P_1 = Pa - \Delta Pstg$$

Determine Qa(sampler) from manufacturer's lookup table (or from alternate calibration relationship)

[c]Audit Flowrate % Difference =

$$\frac{Qa(sampler) - Qa(audit)}{Qa(audit)}[100]$$

Comments:

Signatures: Auditor Warren King Observer

sea10028228.wp5/1
3/22/94

# CH2M HILL
## $PM_{10}$ VFC SAMPLER FIELD AUDIT SHEET

| | | | |
|---|---|---|---|
| CLIENT Simplot / FMC | | Project No. RML 37386. A0.01 | |
| Station Location Site #7 | | Date 2-10-94 | Time 10:30 AM |
| Sampler Model Wedding VFC "7P" | | S/N 03409216074 "7P" | |
| Pa 636 mm Hg. | Ta 1.4 °C 274.4 °K | Unusual Conditions | |
| Audit Orifice S/N A12 | | Orifice Calibration Date 2-28-93 | |
| Orifice Calibration Relationship: m = 1.0149 | | b = -0.0295 | r = 0.9996 |
| Sampler Calibration Relationship: m = | | From look up table | |
| Orifice Pressure Drop ($\Delta H_2O$) 2.8 in. $H_2O$ | | Qa(audit)[a] 1.11 $m^3$/min | |
| | | With Orifice Installed | Without Orifice Installed |
| Stagnation Pressure ($\Delta P_{stg}$) | | 20.0 inches of $H_2O$ | 19.9 inches of $H_2O$ |
| Stagnation Pressure ($\Delta P_{stg}$) | | 37.4 mm Hg | 37.2 mm Hg |
| Absolute Stagnation Pressure ($P_1$)[b] | | 598.6 mm Hg | 598.8 mm Hg |
| Stagnation Pressure Ratio ($P_1/Pa$) | | 0.9412 | 0.9415 |
| Qa(sampler)[c] | | 1.142 $m^3$/min | 1.143 $m^3$/min |
| Audit Flow Rate Percentage Difference[d] 2.9 % | | | |
| Qa(corrected sampler)[e] 1.11 $m^3$/min | | | |
| Design Flow Rate Percentage Difference[f] -1.8 % | | | |

(a) $Qa(audit)=(1/m)[(\Delta H_2O)(Ta/Pa)]^{1/2}-b)$ $= \dfrac{\sqrt{(2.8)\left(\frac{274.4}{636}\right)} + 0.0295}{1.0149} = 1.11$

(b) $P_1=Pa-\Delta Pstg$

(c) Determine Qa (sampler) manufacturer's lookup table (or alternate calibration relationship)

(d) Audit % Difference $= \left[\dfrac{Qa(sampler)-Qa(audit)}{Qa(audit)}\right][100]$

where Qa(sampler) is measured with orifice installed

(e) Qa(corrected sampler) $= Qa(sampler)\left[\dfrac{100-(Audit\ \%\ Difference)}{100}\right]$

where Qa (sampler) is measured without orifice installed

(f) Design Flow Rate % Difference $= \left[\dfrac{Qa(corrected\ sampler)-1.13}{1.13}\right][100]$

Signatures:

Auditor [signature] Observer _____

sea10028227.wp5/1
3/22/94

# METEOROLOGICAL SENSOR TESTS

CLIENT J. R. Simplot PROJECT NUMBER

SITE LOCATION Site #1 DATE 2/11/94

## I. TRANSLATOR CALIBRATION TESTS, AS FOUND CONDITION

| | VOLTS (CHART / DAS) | STRIP CHART | DAS |
|---|---|---|---|
| **WIND SPEED** | | | |
| ZERO | .0017 / 1.10 | 1.1 | 1.5 |
| SPAN 1 | .853 5.07 | 49.5 | 50 |
| SPAN 2 | | | |
| **WIND DIRECTION** | | | |
| ZERO | -.2 -.003 | 0.0 | 0.1 |
| SPAN 1 | 1.02 5.00 | 178 | 180 |
| SPAN 2 | 0 - 0 | -50 | -50 wrong |
| **TEMPERATURE** | | | |
| ZERO | 0 - - 0 | -50 | -50 |
| SPAN | 1.02 - 5.0 | 49.5 | 50 |
| **VERTICAL WIND SPEED** | | | |
| ZERO RH | .0013 - .0005 | 0 | -.05 % |
| SPAN | .851 - 2.0 | 99 | 100 % |
| **OTHER** | | | |
| ZERO | | | |
| SPAN | | | |
| **OTHER** | | | |
| ZERO | | | |
| SPAN | | | |
| **OTHER** | | | |
| ZERO | | | |
| SPAN | | | |

## II. CALIBRATION TESTS OF SENSORS

A. WIND SPEED SENSOR S/N R1276 Made 014

1. SUBSTITUTION BOX TEST

| | VOLTS | STRIP CHART | DAS |
|---|---|---|---|
| CAL AT 15 mph | | | |
| CAL AT 45 mph | | | |
| CAL AT 90 mph | | | |

2. WIND SPEED MOTOR TEST

| | | | |
|---|---|---|---|
| 300 rpm | 1.89V | 18.3 | 18.9 |
| 600 rpm | 3.68V | 36 | 36.8 |
| 900 rpm | 5.35 | 52.5 | 50 mph |

3. WIND SPEED BEARINGS _____ gm-cm STARTING THRESHOLD _____

**METEOROLOGICAL SENSOR TESTS**

CH2M HILL

CLIENT ~~[illegible]~~ JR Simplot PROJECT NUMBER [illegible]

SITE LOCATION Site #1 DATE 2/[illegible]/94

B. VERTICAL WIND SPEED SENSOR S/N _____

1. SUBSTITUTION BOX TEST

| | VOLTS CW | VOLTS CCW | STRIP CHART CW | STRIP CHART CCW | DAS CW | DAS CCW |
|---|---|---|---|---|---|---|
| 300 rpm | | | | | | |
| 600 rpm | | | | | | |
| 900 rpm | | | | | | |

2. VWS BEARINGS _____ gm-cm STARTING THRESHOLD _____

C. TEMPERATURE SENSOR S/N 110-3-3 Model 083C-1

1. SUBSTITUTION BOX TEST

| | VOLTS | STRIP CHART | DAS |
|---|---|---|---|
| CAL A 4 F | | | |
| CAL B 32 F | | | |
| CAL C 68 F | | | |
| 2. NBS CALIBRATION TEST AMBIENT AIR NIST TEMP. 26.2F | 2.3 | -3.2 | -2.7 |
| 3. ICE BATH NIST TEMP. 32° | | | |

D. WIND DIRECTION SENSOR S/N 292 Model 024

1. WIND DIRECTION BEARINGS _____ gm-cm STARTING THRESHOLD _____

| 2. LINEARITY OF W/D | VOLTS | STRIP CHART | DAS |
|---|---|---|---|
| 30 | | | |
| 60 | | | |
| 90 | 2.13 ~~[illegible]~~ | ~~[illegible]~~ ~~[illegible]~~ 90 | ~~[illegible]~~ 88 (2) |
| 120 | | | |
| 150 | | | |
| 180 | 1.64 | 176 | 178.4 (1.6) |
| 210 | | | |
| 240 | | | |
| 270 | 2.5 | 270 | 272 (2) |
| 300 | | | |
| 330 | | | |
| 360 (00) | 3.35 | 364 | ~~[illegible]~~ 364 (4) |
| 390 (30) | | | |
| 420 (60) | | | |
| 450 (90) | ~~4.15~~ | ~~4.50~~ | ~~88~~ |
| 480 (120) | | | |
| 510 (150) | | | |
| 540 (180) | | | |

3. CROSS ARM ALIGNMENT TEST: 15.1

DECLINATION ~~[illegible]~~ TRUE BEARING OF CROSSARM 90/270

E N S W

III. COMMENTS

Trust to use Sling PSY. Would not read because below zero —

R.H DAS CHART AIRPORT

82.6% 82% 81%

# METEOROLOGICAL SENSOR TESTS

CLIENT Simplot PROJECT NUMBER

SITE LOCATION Site #7 DATE 2/11/94

## I. TRANSLATOR CALIBRATION TESTS, AS FOUND CONDITION

| | DAS VOLTS/Chart | STRIP CHART | DAS |
|---|---|---|---|
| **WIND SPEED** | | | |
| ZERO | .015 | 1.4 | 1.0 |
| SPAN 1 | .83 | 50.4 | 49.9 |
| SPAN 2 | .0 | | |
| **WIND DIRECTION** | | | |
| ZERO | -.003 / 0 | 3 | .1 |
| SPAN 1 | .05 | 541 | 179.5 |
| SPAN 2 | .001 | -49 | -50 |
| **TEMPERATURE** | | | |
| ZERO | -.002 / 0 | -49° | -50° |
| SPAN | 5.0 / 1.05 | 50 | 49.9° |
| **VERTICAL WIND SPEED** | | | |
| ZERO | | | |
| SPAN | | | |
| **OTHER** | | | |
| ZERO | | | |
| SPAN | | | |
| **OTHER** | | | |
| ZERO | | | |
| SPAN | | | |
| **OTHER** | | | |
| ZERO | | | |
| SPAN | | | |

## II. CALIBRATION TESTS OF SENSORS

A. WIND SPEED SENSOR S/N 014

1. SUBSTITUTION BOX TEST

| | VOLTS | STRIP CHART | DAS |
|---|---|---|---|
| CAL AT 15 mph | | | |
| CAL AT 45 mph | | | |
| CAL AT 90 mph | | | |

2. WIND SPEED MOTOR TEST

| | | | |
|---|---|---|---|
| 300 rpm | | 18.1 | 18.2 |
| 600 rpm | | 36.4 | 36.4 |
| 900 rpm | | 50 - | 50 - |

3. WIND SPEED BEARINGS ~ gm-cm STARTING THRESHOLD ~

# METEOROLOGICAL SENSOR TESTS

CLIENT Simplot PROJECT NUMBER _____

SITE LOCATION Site #7 DATE 8/11/94

B. VERTICAL WIND SPEED SENSOR S/N _____

1. SUBSTITUTION BOX TEST

| | VOLTS CW | VOLTS CCW | STRIP CHART CW | STRIP CHART CCW | DAS CW | DAS CCW |
|---|---|---|---|---|---|---|
| 300 rpm | | | | | | |
| 600 rpm | | | | | | |
| 900 rpm | | | | | | |

2. VWS BEARINGS _____ gm-cm STARTING THRESHOLD _____

C. TEMPERATURE SENSOR S/N 0214

1. SUBSTITUTION BOX TEST

| | VOLTS | STRIP CHART | DAS |
|---|---|---|---|
| CAL A 4 F | ~~2.28~~ | ~~-3.8~~ | ~~-4.1~~ |
| CAL B 32 F | | | |
| CAL C 68 F | | | |

2. NBS CALIBRATION TEST

| | | | |
|---|---|---|---|
| AMBIENT AIR NIST TEMP. 74.8°F | 2.28 | -3.8°C | -4.1°C |
| 3. ICE BATH NIST TEMP. 31.9°F | 2.453 | .5°C | .0°C |

D. WIND DIRECTION SENSOR S/N M024-1059

1. WIND DIRECTION BEARINGS — gm-cm STARTING THRESHOLD —

| 2. LINEARITY OF W/D | VOLTS | STRIP CHART | DAS |
|---|---|---|---|
| 30 | | | |
| 60 | | | |
| 90 | | 93.6 | 93.6 (36) |
| 120 | | | |
| 150 | | | |
| 180 | | 181.0 | 181 (1) |
| 210 | | | |
| 240 | | | |
| 270 | | ~~272~~ | 273 (3) |
| 300 | | | |
| 330 | | | |
| 360 (00) | | 360 | 359 (1) |
| 390 (30) | | | |
| 420 (60) | | | |
| 450 (90) | | | |
| 480 (120) | | | |
| 510 (150) | | | |
| 540 (180) | | | |

3. CROSS ARM ALIGNMENT TEST:

DECLINATION 15.1 TRUE BEARING OF CROSSARM 181°

COMMENTS _____

Simplot/FMC Silica and Fluoride Sampler Audits

Site #1

2-10-94

Silica

baro. pressure = 646.2 mm Hg

ambient T = 4.1°C

pump #4 Simplot rotameter = "2.0" = 1.88 lpm

CH₂ measured flowrate 2.18 lpm

Fluoride

pump #13 Simplot rotameter = "1.2" = 1.09 lpm

CH₂ measured flowrate = 1.30 lpm

Fluoride

pump #9 Simplot rotameter = "1.2" = 1.09 lpm

CH₂ measured flowrate = 1.29 lpm

Site #2

2-10-94

642.3 mm Hg

22.2°C

Silica

pump #11 simplot rotameter = "2.0" = 1.88 lpm

CH₂M measured flowrate = 2.16 l/min

Fluoride

pump #7 Simplot rotameter "1.1"

CH₂M Hill flowrate measured 1.25 l/min

Fluoride

pump #12 Simplot rotameter setting "1.1"

CH₂ measured flowrate = 1.25 l/min

Site #6

2-8-94

639.5 mm Hg

0.1°C

Silica

pump #6 2.0 on the Simplot rotameter

CH₂M flowrate = 1.912 lpm

Fluoride

pump #5 1.31 on rotameter

CH₂M # measured flowrate = 1.273 lpm

Fluoride

pump #2 rotameter setting = "1.25"

CH₂M measured flowrate = 1.295 l/min

TOPICS DISCUSSED

ACTION/NOTES

SHEET ____ OF ____

TOPICS DISCUSSED | ACTION/NOTES

# Simplot/FMC Silica and Fluoride Sampler Audits

Site #7

2-10-94

636 mm Hg

1.0 °C

Silica

pump #10 "2.0" on rotameter

CHz measured flowrate = 2.05 lpm

Fluoride

pump #3 "1.2" on rotameter

CHz measured flowrate = 1.27 lpm

Fluoride

pump #1 "1.2" on rotameter

CHz measured flowrate = 1.28 lpm

SKC Rotameter Calib. 2-9-94 HH

Lab Temp = 22° C B.P. = 25.47

| Setting | volume | time sec | tAv | lpm |
|---|---|---|---|---|
| 1.0 | 80cc | 5.96/5.90/5.90 | 5.92 | .81 |
| 1.2 | 80cc | 4.46/4.41/4.34 | 4.40 | 1.09 |
| 1.8 | 80cc | 2.81/2.93/2.81/2.81 | 2.84 | 1.69 |
| 2.0 | 500cc | 15.99/16.00/15.78 | 15.92 | 1.88 |
| 2.2 | 500cc | 14.28/14.46/14.34 | 14.36 | 2.09 |
| 1.8 | 500cc | 17.65/17.55 | 17.60 | 1.70 |

$r^2 = .9986$

$m = 1.047$ $b = -0.2$

Calibration of Simplots Dry Gas Meter
~~[illegible]~~ For Use As A Field Transfer Standard
S-275

| CH2M Hill Calibrator flowrate | Simplot Dry Gas Meter S/N 275 ft³ | time |
|---|---|---|
| 18.28 l/min | 0 | 0 |
| 18.42 | 1 | |
| 18.48 | 2 | |
| 18.55 | 3 | 6 min 3 sec |
| 18.47 | 4 | 6 min 3 sec |
| 18.47 | 5 | 7 min 36 sec |
| 18.59 | 6 | 9 min 4 sec |
| 18.59 | 7 | 10 min 37 sec |
| 18.58 | 8 | 12 min |
| 18.64 | 9 | 13 min 38 sec |
| 18.55 | 10 | 15 min 05 |

Average flow = 18.51 l/min

$\frac{279.2 \text{ l}}{15.083 \text{ min}}$ $\frac{10 \text{ ft}^3}{15.083 \text{ min}} = \frac{283.2 \text{ l}}{15.083} = 18.78 \text{ l/min}$

% difference = $\frac{(283.2 - 279.2)}{279.2}(100) = 1.43\%$

# Low Vol Sampler Audit

Site # 3

pump I.D. 2-0693-3

site dry gas meter serial number b840572

temp. 4°C

pressure 30.46

note: sampler flow ≈ 1.0 ft³/min

time it takes for 1.0 ft³ on audit drygas meter 0 min 44 sec

audit dry gas meter = $\frac{\text{time for } 10 \text{ ft}^3}{10 \text{ ft}^3 / 7.20 \text{ min}}$ = 1.39 ft³/min 7 min 12

site sample gas meter time for 10 ft³ 7 min 16

$\frac{10 \text{ ft}^3}{7.27 \text{ min}}$ = 1.38 ft³/min

% difference = $\frac{(1.38 - 1.39) \times 100}{(1.39)}$ = -0.7%

# Low Vol Sampler Audit

Site # 3

pump I.D. 3-1091

site dry gas meter serial number 6840569

temp. 4°C

pressure 30.46

note: sampler flow = ~ 1.0 $ft^3$/min

time it takes for 1.0 $ft^3$ on audit dry gas meter 0 min 48 sec

audit dry gas meter — time for 10 $ft^3$, 8 min 10 s

$\frac{10\ ft^3}{8.17\ min} = 1.22\ ft^3/min$

site sample gas meter time for 10 $ft^3$ 7 min 54 s

$\frac{10\ ft^3}{7.90\ min} = 1.27\ ft^3/min$

% difference $= \frac{1.27 - 1.22}{1.22} \times 100 = 4.1\%$

# Low Vol Sampler Audit

Site # 4

pump I.D. 506934

site dry gas meter serial number 6847879

temp. 8°C

pressure 30.46

note: sampler flow = ≈ 1.0 $ft^3$/min

time it takes for 1.0 $ft^3$ ___ min 48 sec
on audit dry gas meter

audit dry gas meter — time for 10 $ft^3$ 7 min 43 sec

$\frac{10\ ft^3}{7.72\ min} = 1.30\ ft^3/min$

site sample gas meter time for 10 $ft^3$ 8 min 46 sec

$\frac{10\ ft^3}{8.77\ min} = 1.14\ ft^3/min$

$$\% \text{ difference} = \left(\frac{1.14 - 1.30}{1.30}\right) \times 100 = -12.3\%$$

# Low Vol Sampler Audit

Site # 5

pump I.D. 106935

site dry gas meter serial number 6844554

temp. 4°C

pressure 30.46

note: sampler flow = ~ 1.0 $ft^3$/min

time it takes for 1.0 $ft^3$ on audit dry gas meter ___ min 47 sec

audit dry gas meter — time for 10 $ft^3$ 7 min 33 s

$\frac{10\ ft^3}{7.5\ min} = 1.32\ ft^3/min$

site sample gas meter time for 10 $ft^3$ 8 min 26 s

$\frac{10\ ft^3}{8.43\ min} = 1.19\ ft^3/min$

% difference $= \frac{1.19 - 1.32}{1.32} \times 100 = -9.9\%$

# Low Vol Sampler Audit

Site # 6

pump I.D. #52667-6

site dry gas meter serial number 6844553

temp. 2°C

pressure 30.46

note: sampler flow = ~ 1.0 $ft^3$/min

time it takes for 1.0 $ft^3$ 0 min 47 sec
on audit drygas meter

audit dry gas meter — time for 10 $ft^3$ 7 min 46

$= 10 ft^3 / 7.77 = 1.29\ ft^3/min$

site sample gas meter time for 10 $ft^3$ 8 min

$10 ft^3 / 8.18 = 1.22\ ft^3/min$

$$\% \text{ difference} = \left(\frac{1.22 - 1.29}{1.29}\right) \times 100 = -5.4\%$$

# CERTIFICATE OF NIST (NBS) TRACEABILITY

## DryCal DC-1 Flow Calibrator

The DryCal DC-1 is a true primary flow standard: Calibration is neither required nor possible as accuracy is dependent upon the dimensions of the flow measuring cell and the accuracy of the internal computer's crystal clock. Certification of NIST traceability therefore depends upon verification of these values.

BIOS International certifies that the following DryCal products have been tested against precision gauge blocks and frequency counters. These, in turn, are periodically tested against NIST traceable standards by certified outside laboratories:

### CELL CERTIFICATION

Cell DC-1S Diameter 0.9445 inch +/- 0.001 inch

Cell DC-1H Diameter 1.7495 inch +/- 0.001 inch ✓

Cell Serial Number H0360

By Peter L. Bean 4-22-93

Encoder Length (10 openings) 1.000 inches +/- 0.001 inch

Cell Serial Number H0360

By Peter L. Bean 4-22-93

### BASE CERTIFICATION

Base Timing Output 100.07285 ms +/- 0.05% (100.0228 to 100.1289 ms)

Base Serial Number _____

By _____

**Bios International Corporation**

**Pompton Plains, New Jersey, U.S.A.**

# CERTIFICATE OF NIST (NBS) TRACEABILITY

## DryCal DC-1 Flow Calibrator

The DryCal DC-1 is a true primary flow standard: Calibration is neither required nor possible as accuracy is dependent upon the dimensions of the flow measuring cell and the accuracy of the internal computer's crystal clock. Certification of NIST traceability therefore depends upon verification of these values.

BIOS International certifies that the following DryCal products have been tested against precision gauge blocks and frequency counters. These, in turn, are periodically tested against NIST traceable standards by certified outside laboratories:

### CELL CERTIFICATION

Cell DC-1S Diameter 0.9445 inch +/- 0.001 inch ✓

Cell DC-1H Diameter 1.7495 inch +/- 0.001 inch

Cell Serial Number 50751

By Peter L. Bosa 4-22-93

Encoder Length (10 openings) 1.000 inches +/- 0.001 inch

Cell Serial Number 50751

By Peter L. Bosa 4-22-93

### BASE CERTIFICATION

Base Timing Output 100.07285 ms +/- 0.05% (100.0228 to 100.1289 ms)

Base Serial Number _____

By _____

**Bios International Corporation**

**Pompton Plains, New Jersey, U.S.A.**

# CERTIFICATE OF NIST (NBS) TRACEABILITY

## DryCal DC-1 Flow Calibrator

The DryCal DC-1 is a true primary flow standard: Calibration is neither required nor possible as accuracy is dependent upon the dimensions of the flow measuring cell and the accuracy of the internal computer's crystal clock. Certification of NIST traceability therefore depends upon verification of these values.

BIOS International certifies that the following DryCal products have been tested against precision gauge blocks and frequency counters. These, in turn, are periodically tested against NIST traceable standards by certified outside laboratories:

## CELL CERTIFICATION

Cell DC-1S Diameter 0.9445 inch +/- 0.001 inch

Cell DC-1H Diameter 1.7495 inch +/- 0.001 inch

Cell Serial Number _____

By _____

Encoder Length (10 openings) 1.000 inches +/- 0.001 inch

Cell Serial Number _____

By _____

## BASE CERTIFICATION

Base Timing Output 100.07285 ms +/- 0.05% (100.0228 to 100.1289 ms)

Base Serial Number 80811

By [signature] 4-22-93

**Bios International Corporation**

**Pompton Plains, New Jersey, U.S.A.**

# EASTERN MICHAUD FLATS AIR PATHWAYS MONITORING NETWORK

## QUARTERLY PERFORMANCE AUDIT REPORT

## 2ND QUARTER, 1994

**Prepared For**

**J.R. Simplot Company**
**and**
**FMC Corporation**

**Prepared by**

**CH2M HILL**

**July 1994**

# 1994 2nd Quarter Performance Audit Report
# on
# J.R. Simplot/FMC's
# Eastern Michaud Flats Air Pathways Monitoring Network

The Eastern Michaud Flats, (EMF) Air Pathways Monitoring Program is operated near Pocatello, Idaho. This air monitoring program was developed based upon discussions with EPA in 1993. The EMF air monitoring program is an element of the Remedial Investigation/Feasibility Study being performed under an Administrative Order on Consent issued by the EPA on May 30, 1991 pursuant to the Comprehensive Environmental Response, Compensation, and Liability Act.

The main purpose of the program as stated in the written EMF Air Pathways Monitoring Plan is to characterize the off-site impact in air quality attribution to potential airborne releases from FMC and J.R. Simplot. A second purpose is to assess the potential scope of deposition of chemical constituents on surface soils.

Field sampling for the EFM air pathways monitoring program consists of monitoring for total suspended particulates (TSP), particulate matter less than 10 microns ($PM_{10}$), trace metals, radionuclides, fluorides, silica, and meteorological parameters (i.e., wind speed, wind direction, temperature, relative humidity, mixing height, sigma theta). Specific activities of the monitoring effort include:

- Continuous measurement of meteorological parameters at two locations;
- Sampling and chemical analysis for inorganics at seven off-site locations, one of which is a background site;
- Sampling analysis of radioisotopes at seven locations, one of which is a background site;
- Duplicate sampling particulates samples at two locations;
- Sampling for gaseous fluorides and silica at four sites.

The EMF Air Pathways Monitoring Program QAPP requires performance audits of field sampling equipment to be conducted on a quarterly schedule in accordance with recommendations in the EPA's Volume II Quality Assurance Handbook.

This report summarizes the performance audits conducted by CH2M HILL on eight TSP hi-vol samplers and eight $PM_{10}$ hi-vol samplers at seven locations, four silica and four fluoride samplers at four locations, five lo-vol samplers at four locations and two meteorological stations performed on May 26, 1994.

## $PM_{10}$ and TSP Hi-Vol Sampler Performance Audits

Eight TSP Hi-Vol and $PM_{10}$ Hi-Vol samplers were audited using CH2M HILL's certified orifice. All standards and equipment used to conduct the audits were different from the calibration standards and equipment used to perform routine station calibrations by J.R. Simplot field operators. The CH2M HILL variable resistance orifice used in the audits for TSP and $PM_{10}$ samplers conducted by CH2M HILL is calibrated annually to a traceable NIST standard.

TSP Hi-Vol samplers were audited by comparing the audit flowrate, measured in $m^3$ per minute at actual conditions of temperature and pressure as indicated by the audit device, to the indicated sampler flowrate. The indicated TSP sampler flowrate is determined by reading the stagnation port pressure ($\Delta H$) and converting the stagnation port reading to flowrate using the Wedding look-up table specific to the sampler.

The audit orifice was placed on the sampler and the sampler was operated under normal operating conditions. The sampler was allowed to warm up for 5 to 10 minutes prior to measuring the pressure at the orifice port and the sampler stagnation port using a water manometer. The actual temperature and barometric pressure were measured during each field audit.

The difference between the measured audit flowrate and sampler indicated flow must be within ±7 percent to pass the audit.

The results of the TSP Hi-Vol samplers audits were recorded on field data sheets which are attached. The audit data and calculations are presented on the field data sheets and results are summarized below:

| TSP Hi-Vol Sampler Audit Results | | | |
|---|---|---|---|
| **Site #** | **TSP Sampler I.D.** | **Audit Flow % Difference** | **EPA and Monitoring Plan Limit %** |
| #1 | 8T | -.9 | ±7 |
| #1 | 1T | -3.6 | ±7 |
| #2 | 2T | -2.7 | ±7 |
| #3 | 3T | -4.7 | ±7 |
| #4 | 4T | -2.7 | ±7 |
| #5 | 5T | -5.4 | ±7 |
| #6 | 6T | -2.7 | ±7 |
| #7 | 7T | -3.5 | 7 |
| | | | |
| All eight TSP samplers passed the performance audit | | | |
| | | | |

$PM_{10}$ Hi-Vol samplers were audited as per the EPA Volume II Quality Assurance Handbook procedures by comparing the audit flowrate measured by the audit device to the indicated sampler flowrate similar to the TSP audit method as described above. Flowrates measured in $m^3$/minute were compared at actual conditions of temperature and pressure. Field measurements of temperature and pressure were recorded using CH2M HILL certified equipment traceable to NIST standards. Specific calculations related to the $PM_{10}$ sampler audits can be seen in the attached Audit Data Sheets and are as outlined in the EPA's Quality Assurance Handbook Volume II. The difference between the audit flow and the sampler indicated flow must be within ±7 percent to pass the audit.

The Wedding $PM_{10}$ Hi-Vol samplers are designed to operate at 1.13 $m^3$/minute at actual conditions of temperature and pressure in order to collect the correct particle size on the filter. Therefore, in addition to a ±7 percent agreement between the audit flow and the indicated sampler flow, the $PM_{10}$ sampler flow must be within ±10% of the design flowrate of 1.13 $m^3$/minute when operating the sampler with a filter installed.

As part of the $PM_{10}$ sampler field audit, a clean unused filter was installed onto the sampler using the normal filter cassette. The sampler was operated under normal conditions. A measurement of the indicated sampler flowrate with the filter installed is

5/94 Audit CH2M Hill

determined by reading the stagnation port pressure using a water manometer. Calculations for determining the design flowrate % difference are provided in the attached field data sheets and $PM_{10}$ audit results are summarized below:

| $PM_{10}$ Hi-Vol Sampler Audit Results | | | | | |
|---|---|---|---|---|---|
| **Site #** | **$PM_{10}$ Sampler I.D.** | **Audit Flowrate Percent Difference** | **EPA Flowrate % Difference Requirement** | **Design Flowrate Percent Difference** | **EPA design Flowrate % Difference Requirement** |
| #1 | 1P | -0.9 | ±7 | 0.9 | ±10 |
| #1 | 8P | -1.7 | ±7 | 4.4 | ±10 |
| #2 | 2P | -3.6 | ±7 | -0.9 | ±10 |
| #3 | 3P | -0.9 | ±7 | 0.9 | ±10 |
| #4 | 4P | 0.9 | ±7 | 0.9 | ±10 |
| #5 | 5P | -4 | ±7 | 0.0 | ±10 |
| #6 | 6P | -3.5 | ±7 | -0.9 | ±10 |
| #7 | 7P | -0.9 | ±7 | 0.9 | ±10 |

The $PM_{10}$ Hi-Vol samplers were audited and all samplers passed the requirements for audit flowrate % difference and design flowrate percent difference as shown above.

The silica and fluoride MSA sampling pumps were audited by measurement of the actual field flowrate at actual conditions of temperature and pressure using a DryCal DC-1 Flow Calibrator certified traceable to NIST standards. To perform the flowrate audit on the silica and fluoride samplers, the Simplot field operator was asked to setup the monitor for sampling as if preparing to start a sample run. The sampler was allowed to warm up with a new filter installed and then the field operator adjusted the flowrate if needed using the J.R. Simplot field rotameter (transfer standard) as outlined in the J.R. Simplot field monitoring standard operating procedures.

After the field operator had set the flowrate for the sampler, CH2M HILL's audit flowmeter (the dry cell flow calibrator) was installed on the sampler with the filter cassette still in line. See the attached drawings showing the configurations for the audit device installation on the sampler. The audit flow measuring device was installed immediately upstream of the intake to the filter cassette. The actual field temperature and pressure were also recorded. Results of the flowrate audits can be seen below:

## FIELD AUDIT CONFIGURATION FOR SILICA SAMPLER

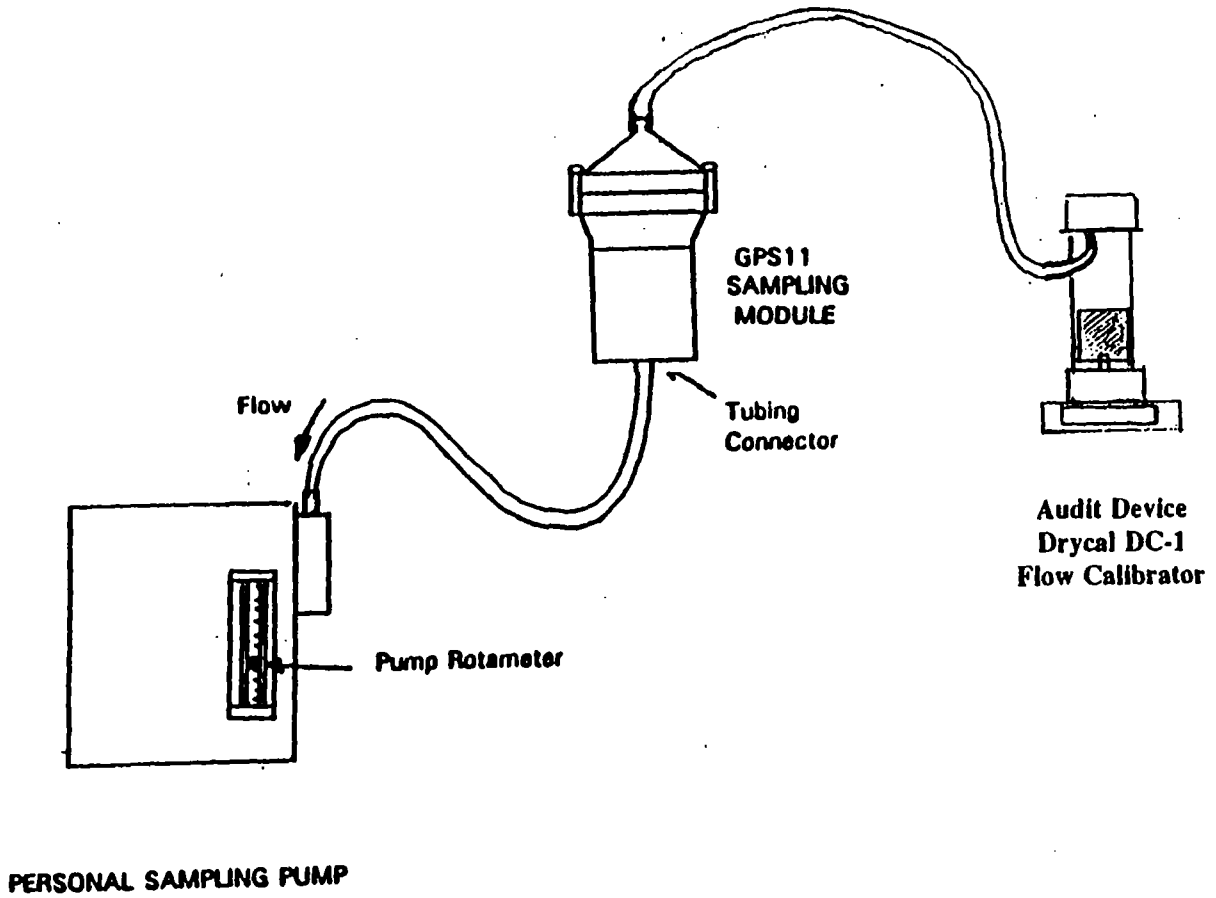


**Configuration of Equipment for Silica Sampler and Audit Device**

| Silica Sampler Audit Results | | | | | | |
|---|---|---|---|---|---|---|
| Site # | Actual Field Conditions | | Silica MSA Pump # | Simplot Measured Flowrate (lpm) | Audit Flowrate (lpm) | % Flowrate Difference |
| | pressure mmHg | temperature °C | | | | |
| #1 | 650.2 | 34.2 | #4 | 2.0 | 2.20 | -9.1 |
| #2 | 651 | 22.8 | #12 | 2.0 | 2.13 | -6.1 |
| #6 | 651.7 | 23.3 | #6 | 2.0 | 2.12 | 5.7 |
| #7 | 642 | 26.9 | #10 | 2.2 | 2.26 | -3.1 |
| #8 | 650.2 | 34.2 | #1 | 2.2 | 2.25 | -2.2 |

Results indicated that one of the silica sampling pumps flowrates were outside the limit of agreement of the flowrate determined by the audit device. The limit for % difference of sampler and audit device flowrates as stated in the QAPP is ±7%. 7.15 H.H.

Similarly, the fluoride samplers were audited for flowrate using the same procedures. The results of the audit were documented on attached field data sheets and summarized below:

| Fluoride Sampler Audit Results | | | | | | |
|---|---|---|---|---|---|---|
| Site # | Actual Field Conditions | | Fluoride MSA Pump # | Simplot Measured Flowrate (lpm) | CH2M HILL Audit Flowrate (lpm) | % Flowrate Difference |
| | pressure mmHg | temperature °C | | | | |
| #1 | 650.2 | 34.2 | #13 | 1.20 | 1.28 | -6.2 |
| #2 | 651.1 | 22.8 | #7 | 1.2 | 1.28 | -6.3 |
| #6 | 651.7 | 23.3 | #5 | 1.20 | 1.30 | -7.6 |
| #7 | 642 | 26.9 | #3 | 1.20 | 1.27 | -5.5 |
| #8 | 650.2 | 34.2 | #9 | 1.20 | 1.27 | -5.5 |

## FIELD AUDIT CONFIGURATION FOR FLUORIDE SAMPLER

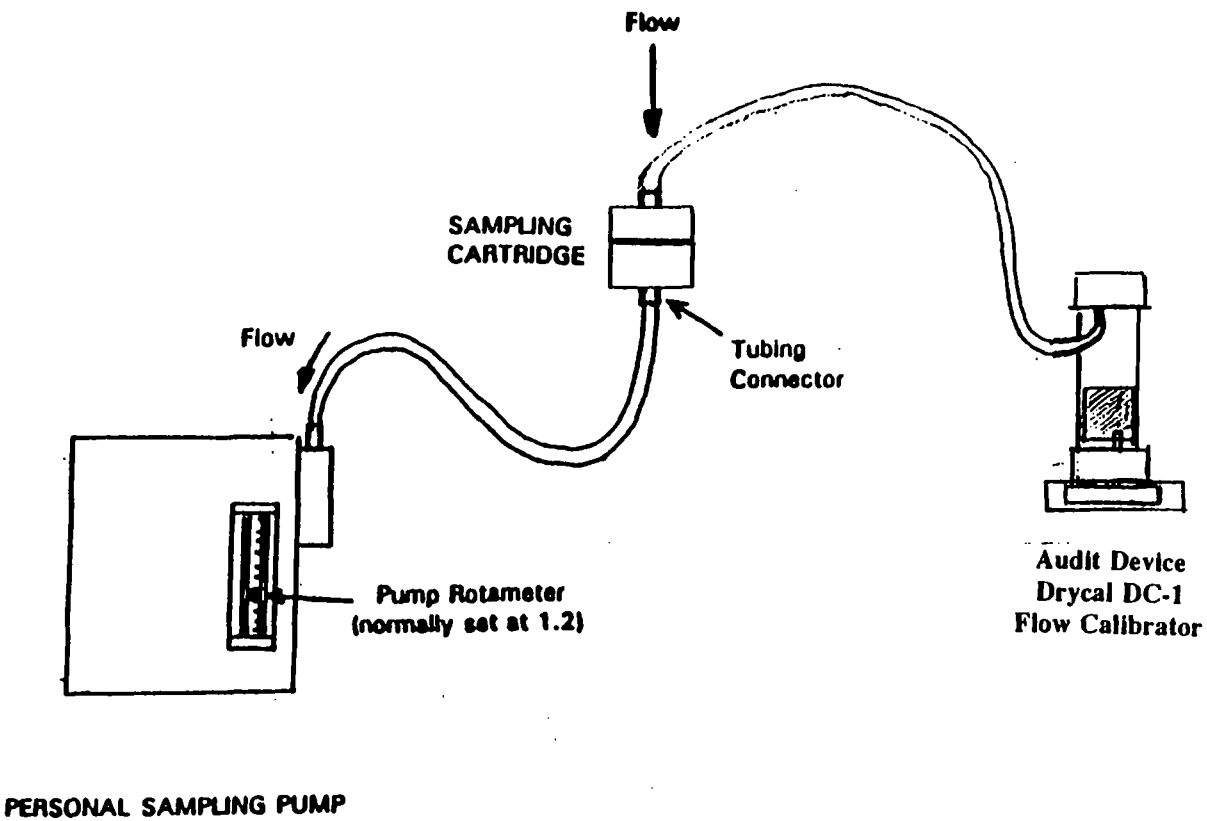


Configuration of Equipment for Fluoride Sampler and Audit Device

## Lo-Vol Total Suspended Particulate Sampler
## Audit Results

The lo-vol TSP samplers are operated at Sites 3, 4, 5 and 6. Filters are loaded on the first day of the month and run continuously for 30 days. Two lo-vol samplers are located at Site 3. One of these two is the collocated sampler which is identified as Site 9 for identification purposes.

The lo-vol field dry gas meter is continuously attached to the exhaust of the sampler vacuum pump to measure total flow in actual cubic feet over the sampling period.

CH2M HILL's certified DryCal DC-1 Flow Calibrator was used to verify the accuracy of Simplot's dry gas meter 5-275.

Simplot's dry gas meter was positioned in series with the CH2M HILL's certified flow device. The flowrate was continually measured (every 30 seconds) on the dry cell flow meter for a total of 10 test. The results were recorded. See the attached drawing which illustrates the field audit configuration. No interference with the monthly sample flowrate occurred during the audits.

The field dry gas meters were timed with a stopwatch to determine the time required to record 10 $ft^3$ on the gas meter. The flowrates in $ft^3$/min. at actual conditions of temperature and pressure were then calculated. These site and audit flowrates were compared and % differences determined. Results are shown in the attached field data sheets and summarized below:

| Site # | Vacuum Pump I.D. | Site Dry Gas Meter S/N | Audit Drycal DC-1 Flow Meter | Site Meter Determined Flowrate (cfm) | Audit Meter Flowrate (cfm) | % Difference |
|---|---|---|---|---|---|---|
| 3 | 3-1091 | 6840569 | B-811 | 1.10 | 1.12 | -1.8 |
| 3 | 2-0639-3 | 6840572 | B-811 | 1.24 | 1.18 | 5.1 |
| 4 | 506934 | 6847879 | B-811 | 1.12 | 1.13 | -0.9 |
| 5 | 106935 | 6844554 | B-811 | 1.09 | 1.18 | -7.6 |
| 6 | 52667-6 | 6844553 | B-811 | 1.19 | 1.17 | 1.7 |

No specific pass/fail criteria for performance audits on lo-vol TSP samplers were outlined in the EMFS QAPP. Therefore, no conclusions can be drawn as to whether the lo-vol samplers passed the performance audit.

## Meteorological Performance Audits

### Methodology

CH2M HILL conducts meteorological performance audits in accordance with EPA criteria, as defined in EPA-600/4-82-060, "Quality Assurance Handbook for Air Pollution Measurement Systems, Volume IV, Meteorological Methods" (September 1989).

During each meteorological audit, all sensors, cups, vanes, shields, cables, etc., are inspected to determine whether any unusual wear has occurred. Any such wear is identified in the audit report. System outputs are checked by use of a digital voltmeter, automated output, and stripchart output.

### EMF Meteorological Site Descriptions

There are two meteorological monitoring stations in operation as part of the EMF air monitoring program. These meteorological stations are located at Sites 1 and 7. Site 1 consists of a 65 foot tower with Met One instrumentation for wind speed and wind direction. Temperature and relative humidity are also measured continuously at Site 1. A mixing height sounder is also operated at Site 1.

Site 7 meteorological station consists of a 30 foot tower with Met One instrumentation for wind speed, wind direction and temperature. Meteorological data are recorded

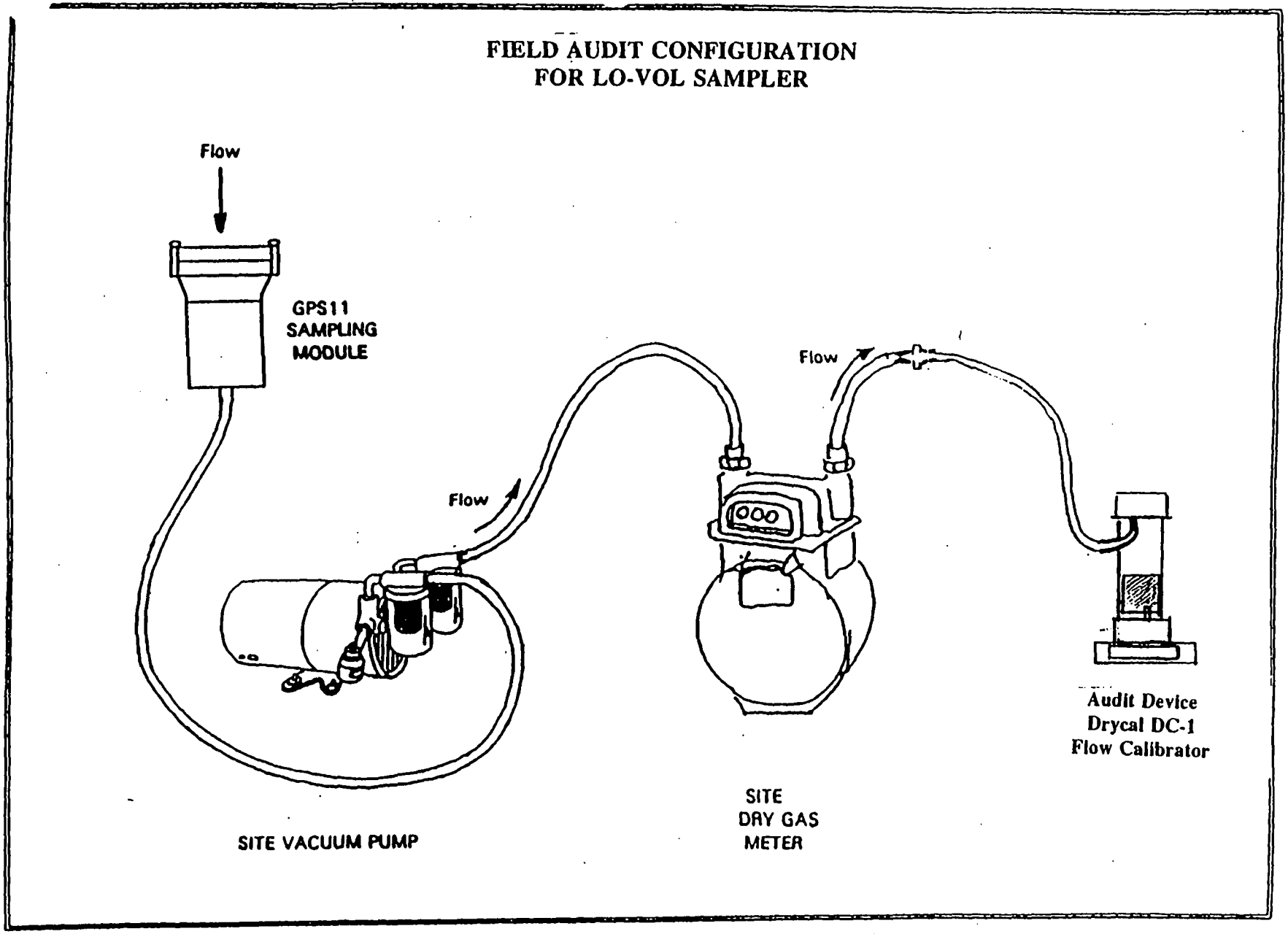


Configuration of Equipment for Lo-Vol Sampler and Audit Device

continuously on PC-based data system with stripchart recorders as backup.

## Results of the Meteorological Audits at Site 1 and Site 7

A verification of the internal electronic zero/span responses was performed by activating the zero and span switches on the translator cards as outlined in the Met One manual. Voltage, recorder, and computer outputs were recorded. All parameters were in adjustment for electronic zero and spans. (See field data sheets.) The site log indicated that field operators are checking zero/span settings routinely.

Starting torques of wind speed were checked with torque watch and were recorded as reading <.2 The wind direction sensor bearings were tested by hand, and found to be moving smoothly with no indications of bearing wear or noise.

### Wind Speed Sensors

The wind speed sensor is challenged for accuracy with a synchronous motor test. After removal of the anemometer cups, a synchronous motor is attached to the wind speed sensor shaft and three known rotational speeds of 300, 600 and 800 rpm are applied to the sensor. For each rotational speed, the outputs for voltage, stripchart recorder and computer are recorded. Results are shown below for wind speed sensors at Site 1 and Site 7.

| Wind Speed Motor Test | | | | | |
|---|---|---|---|---|---|
| **Motor RPM** | **Desired Responses (mph)** | **Site 1 WS Sensor Response (DAS)** | **Site 2 WS Sensor Response** | **Site 1 % Difference** | **Site 7 % Difference** |
| 300 | 18.9 | 19.1 | 18.7 | 1.0% | -1.0% |
| 600 | 37.7 | 37 | 36.5 | -3.5% | -3.2% |
| 800 | 48.6 | 48.4 | 50 | 2.9% | -.4% |

Reported wind speeds are compared to the expected speeds and the wind sensor is determined to have failed the audit if the percent difference is greater than five. Both wind speed sensors passed the audit.

### Wind Direction Sensors

The wind direction sensors were audited by first checking the alignment of the crossarm by using a Brunton compass and tripod. The Brunton compass was corrected for the

magnetic declination of 15.1° East so that all compass bearing measurements were true readings referenced to true north. The crossarm at Site 7 was found to be within 1° of true north-south (180°/360°) orientation. The crossarm at Site 1 was correctly oriented at east/west (90°/270°). The wind direction vane was then rotated and held in four different directions (parallel or perpendicular to the crossarm). The four directions were north (360°), south (180°), east (90°) and west (270°). Indicated wind directions as recorded on the data acquisition system (computer) must be within ±5 degrees for each orientation position. Data as shown on the field data sheets demonstrates that:

- Site 1 WD sensor responded within ±2° with the correct responses and passed the test.
- Site 7 WD sensor responded within ±3° with the correct responses and passed the test.

**Temperature Sensors**

Temperature sensors at Site 1 and Site 7 were audited using an NIST traceable mercury thermometer. The temperature sensors were audited at two temperatures.

The temperature sensor probe and the audit thermometer were immersed in an ice slurry/water bath and results compared. The temperature sensor probe and the audit thermometer were also compared at the current ambient air temperature.

| | NIST Reference Temperature (°C) | Site #1 Temperature Sensor (°C) | Difference (°C) |
|---|---|---|---|
| Ice Bath | 0.0 | n/a | 0 |
| Ambient Air Temperature | 20 | 20.7 | -0.7 |

| | NIST Reference Temperature (°C) | Site #7 Temperature Sensor (°C) | Difference (°C) |
|---|---|---|---|
| Ice Bath Slurry | 0.0 | 0.1 | 0.1 |
| Ambient Air Temperature | 21 | 22. | 0.1 |

The temperature sensor response must be within ±1°C of the NIST thermometer audit temperture to pass the audit. Temperature sensors at Sites 1 and 7 passed the

performance audit as shown above.

**Relative Humidity**

The humidity sensor at Site 1 was audited using a sling psychrometer was made to compare current air % RH. The Site 1 RH sensor was reading 39.8% RH and the sling psychrometer reading was 44% RH. Agreement should be within ±5% RH. Therefore, the RH sensor at Site 1 passed the audit.

**Mixing Height Sounder**

The AeroVironment Model 300-D monostotic radar system located at Site 1 was not audited at this time.

**Conclusions**

The meteorological systems at Site 1 and Site 7 were field audited for performance. All parameters passed the audit. No attempt was made to audit the mixing height sounder at Site 1.

# FIELD DATA AUDIT SHEETS

## CH2M HILL
## $PM_{10}$ VFC SAMPLER FIELD AUDIT SHEET

| | | | |
|---|---|---|---|
| CLIENT JR Simplot / FMC | | Project No. RMO 37386, A0.01 | |
| Station Location SITE #1 "1P" | | Date 5/25/94 | Time 1400 |
| Sampler Model Wedding PM10 VFC | | S/N 034093160411 | |
| Pa 646 mm Hg. | Ta 28 °C 301 °K | Unusual Conditions | |
| Audit Orifice S/N | | Orifice Calibration Date | |
| Orifice Calibration Relationship: m = | b = | r = | |
| Sampler Calibration Relationship: m = | b = | r = | |
| Orifice Pressure Drop ($\Delta H_2O$) 2.7 in. $H_2O$ | | Qa(audit)[a] 1.15 $m^3$/min | |
| | | With Orifice Installed | Without Orifice Installed |
| Stagnation Pressure (ΔPstg) | | 26.7 inches of $H_2O$ | 23.7 inches of $H_2O$ |
| Stagnation Pressure (ΔPstg) | | 49.6 mm Hg | 44.0 mm Hg |
| Absolute Stagnation Pressure ($P_1$)[b] | | 596.8 mm Hg | 602.4 mm Hg |
| Stagnation Pressure Ratio ($P_1$/Pa) | | .9233 | .9319 |
| Qa(sampler)[c] | | 1.14 $m^3$/min | 1.17 $m^3$/min |
| Audit Flow Rate Percentage Difference[d] −.87 | | | |
| Qa(corrected sampler)[e] 1.14 $m^3$/min | | | |
| Design Flow Rate Percentage Difference[f] .89 % | | | |

(a) $Qa(audit) = (1/m)[(\Delta H_2O)(Ta/Pa)]^{1/2} - b)$

(b) $P_1 = Pa - \Delta Pstg$

(c) Determine Qa (sampler) manufacturer's lookup table (or alternate calibration relationship)

(d) $$\text{Audit \% Difference} = \left[\frac{Qa(\text{sampler}) - Qa(\text{audit})}{Qa(\text{audit})}\right][100]$$

where Qa(sampler) is measured with orifice installed

(e) $$Qa(\text{corrected sampler}) = Qa(\text{sampler})\left[\frac{100 - (\text{Audit \% Difference})}{100}\right]$$

where Qa (sampler) is measured without orifice installed

(f) $$\text{Design Flow Rate \% Difference} = \left[\frac{Qa(\text{corrected sampler}) - 1.13}{1.13}\right][100]$$

Signatures:

Auditor _____ Observer _____

FMC/SimpLot

CH2M HILL

PM$_{10}$ VFC SAMPLER FIELD AUDIT SHEET RME37386.A0.01

| | | |
|---|---|---|
| Station Location Site #1 8P | Date 5/25/94 | Time 1330 |
| Sampler Model Wedding PM10 VFC | S/N 034093/6054 | ^N = _____ |
| Sampler Calibration Relationship: m = .990 b = -.01187 r = .9999 | | |
| Orifice Pressure Drop ( $H_2O$) 2.9 in. $H_2O$ | Qa(audit)[a] 1.18 $m^3$/min | |
| | With Orifice Installed | Without Orifice Installed |
| Stagnation Pressure (ΔPstg) | 26.8 inches of $H_2O$ | 23.4 inches of $H_2O$ |
| Stagnation Pressure (ΔPstg) | 49.8 mm Hg | 43.5 mm Hg |
| Absolute Stagnation Pressure (P1)[b] | 596.6 mm Hg | 602.9 mm Hg |
| Stagnation Pressure Ratio (P1/Pa) | .9230 | .9327 |
| Qa(sampler)[c] | 1.16 $m^3$/min | 1.18 $m^3$/min |
| Audit Flow Rate Percentage Difference[d] -1.69 | | |
| Qa(corrected sampler)[e] 1.18 $m^3$/min | | |
| Design Flow Rate Percentage Difference[f] 4.42 % | | |

PA = 646.4

TA 28°C 301°K

$$(a)Qa(orfice)=(1/m)[(\Delta H_2O)(Ta/Pa)]^{1/2}-b)$$

$$(b)P1=Pa-\Delta Pstg$$

**(c)Determine Qa (sampler) from manufacturer's lookup table (or from alternate calibration relationship)**

$$(d)Audit\%Difference=\frac{Qa(sampler)-Qa(audit)}{Qa(audit)}[100]$$

$$(e)Qa(correctedsampler)=Qa(sampler)\frac{100-(Audit\%Difference)}{100}$$

$$(f)DesignFlowRate\%Difference=\frac{Qa(correctedsampler)-1.13}{1.13}[100]$$

Auditor_____ Observer_____

CH2M HILL

JR SIMPLOT/FMC $PM_{10}$ VFC SAMPLER FIELD AUDIT SHEET RME 37386, A001

| | | | |
|---|---|---|---|
| Station Location S/No #2 "2P" | | Date 5/25/94 | Time 830 |
| Sampler Model | Wedding PM10 VFC | S/N 07409316550B | ^N = ____ |
| Sampler Calibration Relationship: m = .990 b = -.0118 r = .9999 | | | |
| Orifice Pressure Drop ( $H_2O$) 2.6 in. $H_2O$ | | Qa(audit)[a] 1.12 $m^3$/min | |
| | | With Orifice Installed | Without Orifice Installed |
| Stagnation Pressure (ΔPstg) | | 15.5 inches of $H_2O$ | 23.5 inches of $H_2O$ |
| Stagnation Pressure (ΔPstg) | | 47.4 mm Hg | 43.7 mm Hg |
| Absolute Stagnation Pressure (P1)[b] | | 599.6 mm Hg | 603.3 mm Hg |
| Stagnation Pressure Ratio (P1/Pa) | | .9267 | .9325 |
| Qa(sampler)[c] | | 1.08 $m^3$/min | 1.10 $m^3$/min |
| Audit Flow Rate Percentage Difference[d] -3.57 | | | |
| Qa(corrected sampler)[e] 1.12 $m^3$/min | | | |
| Design Flow Rate Percentage Difference[f] -.88 % | | | |

Pa 647 mm Hg

Ta 25°C 298°K

(a) $Qa(orfice)=(1/m)[(\Delta H_2O)(Ta/Pa)]^{1/2}-b)$

(b) $P1=Pa-\Delta Pstg$

(c) **Determine Qa (sampler) from manufacturer's lookup table (or from alternate calibration relationship)**

(d) $$Audit\%Difference=\frac{Qa(sampler)-Qa(audit)}{Qa(audit)}[100]$$

(e) $$Qa(correctedsampler)=Qa(sampler)\frac{100-(Audit\%Difference)}{100}$$

(f) $$DesignFlowRate\%Difference=\frac{Qa(correctedsampler)-1.13}{1.13}[100]$$

Auditor_____ Observer_____

# CH2M HILL
## $PM_{10}$ VFC SAMPLER FIELD AUDIT SHEET

| | | | |
|---|---|---|---|
| CLIENT JR Simplot / FMC | | Project No. RME 37386.A0.01 | |
| Station Location SITE #3 "3P" | | Date 5/25/94 | Time |
| Sampler Model Wedding VFC | | S/N 1140921528 U | |
| Pa 645 mm Hg. | Ta 26 °C 299 °K | Unusual Conditions | |
| Audit Orifice S/N | | Orifice Calibration Date | |
| Orifice Calibration Relationship: m = .990 | | b = -0.01187 | r = .9999 |
| Sampler Calibration Relationship: m = Look | | b = up Table | |
| Orifice Pressure Drop ($\Delta H_2O$) 2.7 in. $H_2O$ | | Qa(audit)* 1.14 $m^3$/min | |
| | | With Orifice Installed | Without Orifice Installed |
| Stagnation Pressure (ΔPstg) | | 27 inches of $H_2O$ | 23.9 inches of $H_2O$ |
| Stagnation Pressure (ΔPstg) | | 50.7 mm Hg | 44.5 mm Hg |
| Absolute Stagnation Pressure ($P_1$)* | | 594.8 mm Hg | 600.5 mm Hg |
| Stagnation Pressure Ratio ($P_1/Pa$) | | .9227 | .9310 |
| Qa(sampler)* | | 1.13 $m^3$/min | 1.15 $m^3$/min |
| Audit Flow Rate Percentage Difference* -.88 | | | |
| Qa(corrected sampler)* 1.14 $m^3$/min | | | |
| Design Flow Rate Percentage Difference* .89 % | | | |

(a) $Qa(audit) = (1/m)[(\Delta H_2O)(Ta/Pa)]^{1/2} - b)$

(b) $P_1 = Pa - \Delta Pstg$

(c) Determine Qa (sampler) manufacturer's lookup table (or alternate calibration relationship)

(d) $\text{Audit \% Difference} = \left[\frac{Qa(sampler) - Qa(audit)}{Qa(audit)}\right][100]$

where Qa(sampler) is measured with orifice installed

(e) $Qa(\text{corrected sampler}) = Qa(sampler)\left[\frac{100 - (\text{Audit \% Difference})}{100}\right]$

where Qa (sampler) is measured without orifice installed

(f) $\text{Design Flow Rate \% Difference} = \left[\frac{Qa(\text{corrected sampler}) - 1.13}{1.13}\right][100]$

Signatures:

Auditor_____ Observer_____

CH2M HILL

JR Sampler / FMC PM$_{10}$ VFC SAMPLER FIELD AUDIT SHEET RME-37386.A001

| | | | |
|---|---|---|---|
| Station Location SITE # 4 " 4P" | | Date 5/25/94 | Time |
| Sampler Model | Wedding VFC | S/N 0340931606U | ^N = _____ |
| Sampler Calibration Relationship: m = .990 b = -0.01187 r = .9999 | | | |
| Orifice Pressure Drop ( $H_2O$) 2.7 in. $H_2O$ | | Qa(audit)[a] 1.14 $m^3$/min | |
| | | With Orifice Installed | Without Orifice Installed |
| Stagnation Pressure (ΔPstg) | | 25.9 inches of $H_2O$ | 24.3 inches of $H_2O$ |
| Stagnation Pressure (ΔPstg) | | 48.2 mm Hg | 45.2 mm Hg |
| Absolute Stagnation Pressure (P1)[b] | | 596.8 mm Hg | 599.8 mm Hg |
| Stagnation Pressure Ratio (P1/Pa) | | .9253 | .9299 |
| Qa(sampler)[c] | | 1.15 $m^3$/min | 1.16 $m^3$/min |
| Audit Flow Rate Percentage Difference[d] .87 | | | |
| Qa(corrected sampler)[e] 1.14 $m^3$/min | | | |
| Design Flow Rate Percentage Difference[f] .88 % | | | |

Pa 645

Ta 28°C = 301 K

$$(a)Qa(orfice)=(1/m)[(\Delta H_2O)(Ta/Pa)]^{1/2}-b)$$

$$\frac{\sqrt{(2.7)\frac{301}{645}}+.01187}{.990}=$$

$$(b)P1=Pa-\Delta Pstg$$

**(c)Determine Qa (sampler) from manufacturer's lookup table (or from alternate calibration relationship)**

$$(d)Audit\%Difference=\frac{Qa(sampler)-Qa(audit)}{Qa(audit)}[100]$$

$$(e)Qa(correctedsampler)=Qa(sampler)\frac{100-(Audit\%Difference)}{100}$$

$$(f)DesignFlowRate\%Difference=\frac{Qa(correctedsampler)-1.13}{1.13}[100]$$

Auditor_____ Observer_____

CH2M HILL

JR Simplot/FMC $PM_{10}$ VFC SAMPLER FIELD AUDIT SHEET RME 37386, A0.01

| | | |
|---|---|---|
| Station Location Site #5 "5P" | Date 5/25/94 | Time |
| Sampler Model Wedding VFC | S/N 0740931656UB | ^N = _____ |
| Sampler Calibration Relationship: m = .990 b = -0.01187 r = .9999 | | |
| Orifice Pressure Drop ( $H_2O$) 2.7 in. $H_2O$ | Qa(audit)[a] 1.14 $m^3$/min | |
| | With Orifice Installed | Without Orifice Installed |
| Stagnation Pressure (ΔPstg) | 25.7 inches of $H_2O$ | 22.2 inches of $H_2O$ |
| Stagnation Pressure (ΔPstg) | 47.8 mm Hg | 41.3 mm Hg |
| Absolute Stagnation Pressure (P1)[b] | 595.2 mm Hg | 601.7 mm Hg |
| Stagnation Pressure Ratio (P1/Pa) | .9257 | .9358 |
| Qa(sampler)[c] | 1.094 $m^3$/min | 1.13 $m^3$/min |
| Audit Flow Rate Percentage Difference[d] -4.0 | | |
| Qa(corrected sampler)[e] 1.13 $m^3$/min | | |
| Design Flow Rate Percentage Difference[f] 0 % | | |

Pa 643

Ta 25°C 298°K

$$(a)Qa(orfice)=(1/m)[(\Delta H_2O)(Ta/Pa)]^{1/2}-b)$$

$$\sqrt{(2.7)\frac{298}{643}+.01187}$$

$$(b)P1=Pa-\Delta Pstg$$

$$.990 = 1.14$$

**(c)Determine Qa (sampler) from manufacturer's lookup table (or from alternate calibration relationship)**

$$(d)Audit\%Difference=\frac{Qa(sampler)-Qa(audit)}{Qa(audit)}[100]$$

$$(e)Qa(correctedsampler)=Qa(sampler)\frac{100-(Audit\%Difference)}{100}$$

$$(f)DesignFlowRate\%Difference=\frac{Qa(correctedsampler)-1.13}{1.13}[100]$$

Auditor_____ Observer_____

CH2M HILL

JR Simplot / FMC $PM_{10}$ VFC SAMPLER FIELD AUDIT SHEET RME 37386.A0.01

| | | | |
|---|---|---|---|
| Station Location | Site #6 "6P" | Date 5/25/94 | Time |
| Sampler Model | Wedding VFC | S/N 07409216570[illegible] | ^N = |
| Sampler Calibration Relationship: m = .990 | b = -0.01187 | r = .9999 | |
| Orifice Pressure Drop ( $H_2O$) 2.7 in. $H_2O$ | | Qa(audit)[a] 1.13 $m^3$/min | |
| | | With Orifice Installed | Without Orifice Installed |
| Stagnation Pressure (ΔPstg) | | 27 inches of $H_2O$ | 23.8 inches of $H_2O$ |
| Stagnation Pressure (ΔPstg) | | 50.2 mm Hg | 44.3 mm Hg |
| Absolute Stagnation Pressure (P1)[b] | | 597.8 mm Hg | 603.7 mm Hg |
| Stagnation Pressure Ratio (P1/Pa) | | .9925 | .9316 |
| Qa(sampler)[c] | | 1.09 $m^3$/min | 1.11 $m^3$/min |
| Audit Flow Rate Percentage Difference[d] -3.5 | | | |
| Qa(corrected sampler)[e] 1.12 $m^3$/min | | | |
| Design Flow Rate Percentage Difference[f] -.89 % | | | |

Pa 648

Ta 21°C = 294°K

(a) $Qa(orfice) = (1/m)[(\Delta H_2O)(Ta/Pa)]^{1/2} - b$

$$\frac{\sqrt{(2.7)\frac{294}{648}} + .01187}{.990} = 1.13$$

(b) $P1 = Pa - \Delta Pstg$

(c) **Determine Qa (sampler) from manufacturer's lookup table (or from alternate calibration relationship)**

$$(d)\ Audit\%Difference = \frac{Qa(sampler) - Qa(audit)}{Qa(audit)}[100]$$

$$(e)\ Qa(correctedsampler) = Qa(sampler)\frac{100 - (Audit\%Difference)}{100}$$

$$(f)\ DesignFlowRate\%Difference = \frac{Qa(correctedsampler) - 1.13}{1.13}[100]$$

Auditor _____ Observer _____

CH2M HILL

JR Simplot/FMC $PM_{10}$ VFC SAMPLER FIELD AUDIT SHEET RMC 37386. A0.01

| | | |
|---|---|---|
| Station Location Site #7 "7P" | Date 5/25/94 | Time |
| Sampler Model Wedding VFC | S/N 03093/607U | ^N = ____ |
| Sampler Calibration Relationship: m = .990 b = -0.0187 r = .9999 | | |
| Orifice Pressure Drop ( $H_2O$) 2.7 in. $H_2O$ | Qa(audit)[a] 1.15 $m^3$/min | |
| | With Orifice Installed | Without Orifice Installed |
| Stagnation Pressure (ΔPstg) | 26 inches of $H_2O$ | 23.9 inches of $H_2O$ |
| Stagnation Pressure (ΔPstg) | 48.4 mm Hg | 44.5 mm Hg |
| Absolute Stagnation Pressure (P1)[b] | 589.5 mm Hg | 593. mm Hg |
| Stagnation Pressure Ratio (P1/Pa) | .9241 | .9296 |
| Qa(sampler)[c] | 1.14 $m^3$/min | 1.16 $m^3$/min |
| Audit Flow Rate Percentage Difference[d] -.87 | | |
| Qa(corrected sampler)[e] 1.14 $m^3$/min | | |
| Design Flow Rate Percentage Difference[f] .88 % | | |

Pa = 637.9

Tq = 26°C = 299

(a) $Qa(orfice)=(1/m)[(\Delta H_2O)(Ta/Pa)]^{1/2}-b)$

$$\frac{\sqrt{(2.7)\frac{299}{637.9}}\pm.0118}{.990} \approx$$

(b) $PI=Pa-\Delta Pstg$

(c) **Determine Qa (sampler) from manufacturer's lookup table (or from alternate calibration relationship)**

$$(d)\,Audit\%Difference=\frac{Qa(sampler)-Qa(audit)}{Qa(audit)}[100]$$

$$(e)\,Qa(correctedsampler)=Qa(sampler)\frac{100-(Audit\%Difference)}{100}$$

$$(f)\,DesignFlowRate\%Difference=\frac{Qa(correctedsampler)-1.13}{1.13}[100]$$

Auditor_____ Observer_____

**CH2M HILL FIELD AUDIT SHEET**
**TOTAL SUSPENDED PARTICULATE**
**VFC**

FMC/Simplot **AUDIT DATA SHEET** RME 37386, A0.01

| | | |
|---|---|---|
| Station Location #1 8T | Date 5/25/94 | Time 1345 |
| Sampler Model Wedding TSP Hi | S/N 070930798UTSB | Auditor Wayman Gay |
| Pa 646.4 mm Hg, Ta 28 °C 301 K, Unusual conditions: | | |
| Audit Orifice S/N | Orifice Calibration Date | |
| Orifice calibration relationship: m= .990 b= -0.01187 r= .9999 | | |
| Sampler calibration relationship: m= Look UP Chart r= ~~[illegible]~~ | | |
| Orifice Pressure Drop ($\Delta H_2O$) 2.6 in. $H_2O$ | Qa Audit 1.12 $m^3$min | |
| Stagnation Pressure ($\Delta$Pstg) 25.4/47.24 mm Hg | | |
| Absolute Stagnation Pressure (P1) 599.1 mm Hg | | |
| Stagnation Pressure Ratio (P1/Pa) .9269 | | |
| Qa(sampler)[b] 1.11 $m^3$min | | |
| Audit Flowrate % Difference[c] -.89 | | |

[a]For calculation of orifice flow rates:

$$Qa(audit) = \frac{1}{m}\left(\left[\Delta(H_2O)\left(\frac{Ta}{Pa}\right)\right]^{1/2} - b\right)$$

[b]For calculation of sampler flow rates:
Determine Qa(sampler) from manufacturer's lookup table (or from alternate calibration relationship)

[c]Audit Flowrate % Difference =

$$\frac{Qa(sampler) - (audit)}{Qa(audit)} 100$$

**CH2M HILL FIELD AUDIT SHEET**
**TOTAL SUSPENDED PARTICULATE**
**VFC**

FMC / SUNPLOT **AUDIT DATA SHEET** RME37386.A0.01

| | | |
|---|---|---|
| Station Location Site #1 - 1T | Date 5/25/94 | Time 1300 |
| Sampler Model Welding TSP S/N 07093080/UTSP | Auditor Waymon Gray | |
| Pa 646.4 mm Hg, Ta 28 °C 301 K, Unusual conditions: | | |
| Audit Orifice S/N | Orifice Calibration Date | |
| Orifice calibration relationship: m= .990 b= -0.01187 r= .9999 | | |
| Sampler calibration relationship: m= b= r= | | |
| Orifice Pressure Drop ($\Delta H_2O$) 2.6 in. $H_2O$ | Qa Audit 1.12 $m^3$min | |
| Stagnation Pressure (ΔPstg) 26.6 $H_2O$ = 48.6 mm Hg | | |
| Absolute Stagnation Pressure (P1) 597.8 mm Hg | | |
| Stagnation Pressure Ratio (P1/Pa) .9248 | | |
| Qa(sampler)[b] 1.08 $m^3$min | | |
| Audit Flowrate % Difference[c] -3.57 | | |

[a]For calculation of orifice flow rates:

$$Qa(audit)=\frac{1}{m}([\Delta(H_2O)(\frac{Ta}{Pa})]^{1/2}-b)$$

$$\frac{\sqrt{(2.6)\frac{301}{646.4}}+.01187}{.990}=1.12$$

[b]For calculation of sampler flow rates:
Determine Qa(sampler) from manufacturer's lookup table (or from alternate calibration relationship)

[c]Audit Flowrate % Difference =

$$\frac{Qa(sampler)-(audit)}{Qa(audit)}100$$

**CH2M HILL FIELD AUDIT SHEET**
**TOTAL SUSPENDED PARTICULATE**
**VFC**

JR SIMPLOT/FMC **AUDIT DATA SHEET** RME 37386.A0.01

| | | |
|---|---|---|
| Station Location SITE #2 FMC Fenceline "2T" | Date 5/25/94 | Time 800 |
| Sampler Model Wedding VFC S/N 0709308 05UTSB | Auditor Wayman Gray | |
| Pa 647 mm Hg, Ta 25 °C 298 K, Unusual conditions: | | |
| Audit Orifice S/N | Orifice Calibration Date | |
| Orifice calibration relationship: m= .990 b= -.01187 r= .9999 | | |
| Sampler calibration relationship: m= LOOK b= UP TABLE | | |
| Orifice Pressure Drop ($\Delta H_2O$) 2.6 in. $H_2O$ | Qa Audit 1.11 $m^3$min | |
| Stagnation Pressure ($\Delta$Pstg) 25.8 $H_2O$ 48.2 mm Hg | | |
| Absolute Stagnation Pressure (P1) 598.8 mm Hg | | |
| Stagnation Pressure Ratio (P1/Pa) .9255 | | |
| Qa(sampler)[b] 1.08 $m^3$min | | |
| Audit Flowrate % Difference[c] -2.70 | | |

[a]For calculation of orifice flow rates:

$$Qa(audit) = \frac{1}{m}([\Delta(H_2O)(\frac{Ta}{Pa})]^{1/2} - b)$$

$$\frac{\sqrt{(2.6)\frac{298}{647}} + .01187}{.990} = 1.11$$

[b]For calculation of sampler flow rates:
Determine Qa(sampler) from manufacturer's lookup table (or from alternate calibration relationship)

[c]Audit Flowrate % Difference =

$$\frac{Qa(sampler) - (audit)}{Qa(audit)} 100$$

**CH2M HILL FIELD AUDIT SHEET**
**TOTAL SUSPENDED PARTICULATE**
**VFC**

JR Sampler / FMC **AUDIT DATA SHEET** RM# 37386.A0.01

| | | |
|---|---|---|
| Station Location SITE #3 "3T" | Date 5/24/94 | Time 9:30 |
| Sampler Model Welding VFC S/N 07093080204SB | Auditor Waymon Gay | |
| Pa 645 mm Hg, Ta 26 °C 299 K, Unusual conditions: | | |
| Audit Orifice S/N | Orifice Calibration Date | |
| Orifice calibration relationship: m= .990 b= -0.01187 r= .9999 | | |
| Sampler calibration relationship: m= LOOK= UP CHART | | |
| Orifice Pressure Drop ($\Delta H_2O$) 2.7 in. $H_2O$ | Qa Audit 1.14 $m^3$min | |
| Stagnation Pressure (ΔPstg) 27.0 H20 = 50.22 mm Hg | | |
| Absolute Stagnation Pressure (P1) 594.78 mm Hg | | |
| Stagnation Pressure Ratio (P1/Pa) .9221 | | |
| Qa(sampler)[b] 1.09 $m^3$min | | |
| Audit Flowrate % Difference[c] -4.38 | | |

[a]For calculation of orifice flow rates:

$$Qa(audit) = \frac{1}{m}([\Delta(H_2O)(\frac{Ta}{Pa})]^{1/2} - b)$$

[b]For calculation of sampler flow rates:
Determine Qa(sampler) from manufacturer's lookup table (or from alternate calibration relationship)

[c]Audit Flowrate % Difference =

$$\frac{Qa(sampler) - (audit)}{Qa(audit)} 100$$

**CH2M HILL FIELD AUDIT SHEET**
**TOTAL SUSPENDED PARTICULATE**
**VFC**

JR Simplot / FMC **AUDIT DATA SHEET** QME 37386.A0.01

| | | |
|---|---|---|
| Station Location SITE #4 "4T" | Date 5/25/94 | Time |
| Sampler Model Wedding VFC S/N 07093086UT5B | Auditor W Aymen GAy | |
| Pa 645.5 mm Hg, Ta 28 °C 301 K, Unusual conditions: | | |
| Audit Orifice S/N | Orifice Calibration Date | |
| Orifice calibration relationship: m= .990 b= -.01187 r= .9999 | | |
| Sampler calibration relationship: m= Look b= up Table= | | |
| Orifice Pressure Drop ($\Delta H_2O$) 2.6 in. $H_2O$ | Qa Audit 1.11 $m^3$min | |
| Stagnation Pressure (ΔPstg) 26.4 "H2O 49.1 mm Hg | | |
| Absolute Stagnation Pressure (P1) 596.4 mm Hg | | |
| Stagnation Pressure Ratio (P1/Pa) .9239 | | |
| Qa(sampler)[b] 1.08 $m^3$min | | |
| Audit Flowrate % Difference[c] -2.7 | | |

[a]For calculation of orifice flow rates:

$$Qa(audit) = \frac{1}{m}([\Delta(H_2O)(\frac{Ta}{Pa})]^{1/2} - b)$$

[b]For calculation of sampler flow rates:
Determine Qa(sampler) from manufacturer's lookup table (or from alternate calibration relationship)

[c]Audit Flowrate % Difference =

$$\frac{Qa(sampler) - (audit)}{Qa(audit)} 100$$

**CH2M HILL FIELD AUDIT SHEET**
**TOTAL SUSPENDED PARTICULATE**
**VFC**

JR Simplot / FMC **AUDIT DATA SHEET** RME 37386.A0.01

| | | |
|---|---|---|
| Station Location Site #5 "5T" | Date 5/25/94 | Time |
| Sampler Model Modified VFC S/N 070930799 UTSB | Auditor L Jaymon GAy | |
| Pa 643 mm Hg, Ta 25 °C 298 K, Unusual conditions: | | |
| Audit Orifice S/N | Orifice Calibration Date | |
| Orifice calibration relationship: m= .990 b= -0.01187 r= .9999 | | |
| Sampler calibration relationship: m= look b= up Table | | |
| Orifice Pressure Drop ($\Delta H_2O$) 2.6 in. $H_2O$ | Qa Audit 1.12 $m^3$min | |
| Stagnation Pressure (ΔPstg) 26"H20 48.4 mm Hg | | |
| Absolute Stagnation Pressure (P1) 594.6 mm Hg | | |
| Stagnation Pressure Ratio (P1/Pa) .9247 | | |
| Qa(sampler)[b] 1.06 $m^3$min | | |
| Audit Flowrate % Difference[c] -5.35 | | |

[a]For calculation of orifice flow rates:

$$Qa(audit) = \frac{1}{m}([\Delta(H_2O)(\frac{Ta}{Pa})]^{1/2} - b)$$

$$\frac{\sqrt{(2.6)\frac{298}{643}} + .01187}{.990}$$

[b]For calculation of sampler flow rates:
Determine Qa(sampler) from manufacturer's lookup table (or from alternate calibration relationship)

[c]Audit Flowrate % Difference =

$$\frac{Qa(sampler) - (audit)}{Qa(audit)} 100$$

**CH2M HILL FIELD AUDIT SHEET**
**TOTAL SUSPENDED PARTICULATE**
**VFC**

JR Simplot / FMC **AUDIT DATA SHEET** RME 37386.A0.01

| | | |
|---|---|---|
| Station Location Site #6 "6T" | Date 5/25/94 | Time |
| Sampler Model Unidentified VFC S/N 070930803UTSB | Auditor Wayman Gary | |
| Pa 648 mm Hg, Ta 21 °C 294 K, Unusual conditions: | | |
| Audit Orifice S/N | Orifice Calibration Date | |
| Orifice calibration relationship: m= .990 b= -0.01187 r= .9999 | | |
| Sampler calibration relationship: m= look b= up Table | | |
| Orifice Pressure Drop ($\Delta H_2O$) 2.6 in. $H_2O$ | Qa Audit 1.10 $m^3$min | |
| Stagnation Pressure ($\Delta$Pstg) 26.2" $H_2O$ 48.7 mm Hg | | |
| Absolute Stagnation Pressure (P1) 599.3 mm Hg | | |
| Stagnation Pressure Ratio (P1/Pa) .9248 | | |
| Qa(sampler)[b] 1.07 $m^3$min | | |
| Audit Flowrate % Difference[c] -2.7 | | |

[a]For calculation of orifice flow rates:

$$Qa(audit) = \frac{1}{m}\left(\left[\Delta(H_2O)\left(\frac{Ta}{Pa}\right)\right]^{1/2} - b\right)$$

[b]For calculation of sampler flow rates:
Determine Qa(sampler) from manufacturer's lookup table (or from alternate calibration relationship)

[c]Audit Flowrate % Difference =

$$\frac{Qa(sampler) - (audit)}{Qa(audit)} 100$$

**CH2M HILL FIELD AUDIT SHEET**
**TOTAL SUSPENDED PARTICULATE**
**VFC**

JR Simplot / FMC **AUDIT DATA SHEET** RME 37386.A0.01

| | | |
|---|---|---|
| Station Location Site #7 "7T" | | Date 5/25/94 Time |
| Sampler Model Wedding VFC | S/N 07095800UTSB | Auditor Wayman Gay |
| Pa 637.9 mm Hg, Ta 26 °C 299 K, Unusual conditions: | | |
| Audit Orifice S/N | | Orifice Calibration Date |
| Orifice calibration relationship: m= .990 b= -0.01187 r= .9999 | | |
| Sampler calibration relationship: m= Look b= up Table | | |
| Orifice Pressure Drop ($\Delta H_2O$) 2.6 in. $H_2O$ | | Qa Audit 1.13 $m^3$min |
| Stagnation Pressure (ΔPstg) 25.7"H20 47.8 mm Hg | | |
| Absolute Stagnation Pressure (P1) 590.1 mm Hg | | |
| Stagnation Pressure Ratio (P1/Pa) .9251 | | |
| Qa(sampler)[b] 1.09 $m^3$min | | |
| Audit Flowrate % Difference[c] −3.5 | | |

[a]For calculation of orifice flow rates:

$$Qa(audit) = \frac{1}{m}\left([\Delta(H_2O)(\frac{Ta}{Pa})]^{1/2} - b\right)$$

$$\frac{\sqrt{(2.6)\frac{299}{637.9}} + .01187}{.990}$$

[b]For calculation of sampler flow rates:
Determine Qa(sampler) from manufacturer's lookup table (or from alternate calibration relationship)

[c]Audit Flowrate % Difference =

$$\frac{Qa(sampler) - (audit)}{Qa(audit)} 100$$

For Silica and (Fluoride) Sampler Audits

Record the following:

Site # 1 — Barometric Pressure 650.2

Date 5/24/94 — Ambient Temp 34.2°C

Pump # ~~E~~ 13

Simplot rotameter setting = 1.2 — Simplot flowrate = ____

CH2M Hill dry cell flowmeter flowrate 1.29

For Silica and Fluoride Sampler Audits

Record the following:

Site # 2

Date 5/24/94

Barometric Pressure 651.1

Ambient Temp 22.8

(OW) 17.0

Pump # 7

SKC-West Int Simplot rotameter setting = 1.2 Simplot flowrate =

CH2M Hill dry cell flowmeter flowrate 1.28

For Silica and (Fluoride) Sampler Audits

Record the following:

site # 6 Barometric Pressure 657.7 (23.1

Date 5/24/94 Ambient Temp 23.3 C

Pump # ~~5~~ 5

Simplot rotameter setting = 1.2 Simplot flowrate =

CH2M Hill dry cell flowmeter flowrate 1.3

For Silica and Fluoride Sampler Audits

Record the following:

site # 7 Barometric Pressure 642/15.

Date 5/24/94 Ambient Temp 26.9

Pump # ~~E~~ 3

Simplot rotameter setting = 1.2 Simplot flowrate =

CH2M Hill dry cell flowmeter flowrate 1.27

For Silica and (Fluoride) Sampler Audits

Record the following:

Site # 8 Barometric Pressure 650.2 (25:

Date 5/24/94 Ambient Temp 34.2°C

Pump # ~~E~~ 9

Simplot rotameter setting = 1.2 Simplot flowrate = ____

CH2M Hill dry cell flowmeter flowrate [redacted] 1.27

For (Silica) and Fluoride Sampler Audits

Record the following:

site # 1 — Barometric Pressure 650.2

Date 5/24/94 — Ambient Temp 34.2°C

Pump # ~~4~~ 4

Simplot rotameter setting = ~~2.4~~ 2.0 Simplot flowrate =

CH2M Hill dry cell flowmeter flowrate 2.20

For Silica and Fluoride Sampler Audits

Record the following:

Site # 2

Date 5/24/94

Barometric Pressure 651.1

Ambient Temp 22.8

Pump # 12

Simplot rotameter setting = 2.0 Simplot flowrate = ____

CH2M Hill dry cell flowmeter flowrate 2.13

For Silica and Fluoride Sampler Audits

Record the following:

Site # 6

Date 5/24/94

Barometric Pressure 651.7/25.6

Ambient Temp 23.3 ~~26.6~~

Pump # ~~6~~ 6

Simplot rotameter setting = 2.0 Simplot flowrate = ____

CH2M Hill dry cell flowmeter flowrate 2.12

For (Silica) and Fluoride Sampler Audits

Record the following:

Site # 607 Barometric Pressure 642 (25.1

Date 5/24/94 Ambient Temp 26.9°C

Pump # ~~E~~ 10

Simplot rotameter setting = [redacted] 2.19 Simplot flowrate = ____

CH2M Hill dry cell flowmeter flowrate 2.26

For Silica and Fluoride Sampler Audits

Record the following:

Site # 8

Date 5/24/94

Barometric Pressure 650.2 (25

Ambient Temp 34.2°C

Pump # 1

Simplot rotameter setting = 2.20 ws Simplot flowrate = ___

CH2M Hill dry cell flowmeter flowrate 2.25

# Low Vol Sampler Audit

Site # 3 Date 5/24/94

pump I.D. 3

site dry gas meter serial number 6840569

ambient temp. of gas 39.7°C

pressure 649.1 (25.5 in Hg)

Measure time for 10 ft³ on simplot's dry gas meter

10 revolutions (1 cft) 9 min 06 sec.

Measure flowrate continually (every 30 seconds) on dry ~~gas~~ cell flow meter

| | Flowrate (l/min) | |
|---|---|---|
| test 1 | 32.9 | 31.7 |
| test 2 | 32.7 | 31.7 |
| test 3 | 32.1 | 31.8 |
| test 4 | 31.9 | 32.6 |
| test 5 | 31.7 | 31.6 |
| test 6 | 31.6 | 31.7 |
| test 7 | 31.8 | 31.8 |
| test 8 | 32.2 | 31.9 |
| test 9 | 31.9 | 31.2 |
| test 10 | 31.7 | 32.1 |
| ~~Ave~~ total = | | |
| ave. flowrate = | 32.0 | 31.8 |

~~Orifice~~ site sample dry gas meter flowrate 1.10 acfm

CH2M Hill dry cell flow meter flowrate 1.12 acfm

# Low Vol Sampler Audit

Site # 3 Date 5/24/94

pump I.D. 2

site dry gas meter serial number 6840572

ambient temp. of gas 39.7°C

pressure 649.1

Measure time for 10 ft³ on single dry gas meter

10 revolutions 8 min 02 sec.

Measure flowrate continually (every 30 seconds) on dry ~~gas~~ cell flow meter

| | flowrate (ℓ/min) | |
|---|---|---|
| test 1 | 33.2 | 33.1 |
| test 2 | 33.6 | 33.5 |
| test 3 | 33.1 | 34.0 |
| test 4 | 33.2 | 33.0 |
| test 5 | 33.7 | 33.1 |
| test 6 | 32.8 | 32.8 |
| test 7 | 33.1 | 33.7 |
| test 8 | 33.2 | 34.2 |
| test 9 | 33.8 | 33.6 |
| test 10 | 33.9 | 33.8 |

~~Ave~~ total = 33.4

ave. flowrate = 33.4

~~audit~~ site sample dry gas meter flowrate 1.24 acfm

(CH2M Hill) dry cell flow meter flowrate 1.18 acfm

# Low Vol Sampler Audit

Site # 4 Date 5/24/94

pump I.D. 5

site dry gas meter serial number ~~35~~ 6847879

ambient temp. of gas 35°C

pressure 649.6 (25.57 in Hg)

Measure time for 10 ft³ on single dry gas meter

10 revolutions 8 min 58 sec.

Measure flowrate continually (every 30 seconds) on dry ~~gas~~ cell flow meter

| | flowrate (ℓ/min) | |
|---|---|---|
| test 1 | 32.2 | 31.6 |
| test 2 | 32.1 | 31.6 |
| test 3 | 32.0 | 31.9 |
| test 4 | 31.9 | 31.7 |
| test 5 | 31.8 | 31.3 |
| test 6 | 31.7 | 31.1 |
| test 7 | 32.0 | 31.7 |
| test 8 | 31.9 | 31.3 |
| test 9 | 31.7 | 31.1 |
| test 10 | 31.6 | 31.5 |
| ~~Ave~~ total = | | |
| ave. flowrate = | 31.9 | 31.5 |

~~Orifice~~ site sample dry gas meter flowrate 1.12 acfm

Citizen Hill dry cell flow meter flowrate 1.13 acfm

# Low Vol Sampler Audit

Site # 5 Date 5/24/94

pump I.D. 1

site dry gas meter serial number 6844532

ambient temp. of gas 20.9 c

pressure 647.8 (25.)

Measure time for 10 ft³ on single dot's dry gas meter

10 revolutions 9 min 12 sec.

Measure flowrate continually (every 30 seconds) on dry ~~gas~~ cell flow meter

| | flowrate (l/min) | |
|---|---|---|
| test 1 | 33.4 | 33.5 |
| test 2 | 32.9 | 33.1 |
| test 3 | 33.1 | 33.3 |
| test 4 | 32.9 | 33.4 |
| test 5 | 33.3 | 33.8 |
| test 6 | 33.3 | 33.5 |
| test 7 | 33.4 | 33.0 |
| test 8 | 32.9 | 33.8 |
| test 9 | 33.0 | 33.1 |
| test 10 | 33.3 | 33.7 |

~~Ave~~ total =

ave. flowrate = 33.4

~~Orifice~~ site sample dry gas meter flowrate 1.09 acfm

CH2M Hill dry cell flow meter flowrate 1.18 acfm

# Low Vol Sampler Audit

Site # 6 Date 5/24/94

pump I.D. 4

site dry gas meter serial number 6844553

ambient temp. of gas 27°C 19°C out

pressure ———

Measure time for 10 ft³ on single dry gas meter

10 revolutions 8 min 24 sec.

Measure flowrate continually (every 30 seconds) on dry ~~gas~~ cell flow meter

| | flowrate (ℓ/min) | |
|---|---|---|
| test 1 | 33.0 | 33.2 |
| test 2 | 33.0 | 32.8 |
| test 3 | 33.4 | 33.0 |
| test 4 | 33.5 | 33.0 |
| test 5 | 33.0 | 33.2 |
| test 6 | 33.3 | 33.3 |
| test 7 | 33.2 | 34.0 |
| test 8 | 33.9 | 33.1 |
| test 9 | 33.2 | 33.0 |
| test 10 | 33.0 | 32.8 |

~~Ave~~ total =

ave. flowrate = 33.25 - 33.15

~~Orifice~~ site sample dry gas meter flowrate 1.19 acfm

CH2M Hill dry cell flow meter flowrate 1.17 acfm

# METEOROLOGICAL SENSOR TESTS

CLIENT JR Simplot PROJECT NUMBER PME 37386.1

SITE LOCATION SITE #7 DATE 5/26/94

B. VERTICAL WIND SPEED SENSOR S/N _____

1. SUBSTITUTION BOX TEST

| | VOLTS CW | VOLTS CCW | STRIP CHART CW | STRIP CHART CCW | DAS CW | DAS CCW |
|---|---|---|---|---|---|---|
| 300 rpm | | | | | | |
| 600 rpm | | | | | | |
| 900 rpm | | | | | | |

2. VWS BEARINGS _____ gm-cm STARTING THRESHOLD _____

C. TEMPERATURE SENSOR S/N _____

1. SUBSTITUTION BOX TEST

| | VOLTS | STRIP CHART | DAS |
|---|---|---|---|
| CAL A 4 F | | | |
| CAL B 32 F | | | |
| CAL C 68 F | | | |

2. NBS CALIBRATION TEST

| | | | |
|---|---|---|---|
| AMBIENT AIR NIST TEMP. 70°F 21°C | 3.53 | 21 | 22 |
| 3. ICE BATH NIST TEMP. 32°F 0°C | 2.50 | 1°C | 1°C |
| Hot 82° | 3.90 | 30°C | 29.2°C |

D. WIND DIRECTION SENSOR S/N _____

1. WIND DIRECTION BEARINGS Tested By HAND OK gm-cm STARTING THRESHOLD _____

| 2. LINEARITY OF W/D | VOLTS | STRIP CHART | DAS |
|---|---|---|---|
| 30 | | | |
| 60 | | | |
| 90 | .830 | 90 | 89.5 |
| 120 | | | |
| 150 | | | |
| 180 | 1.64 | 182 | 182.5 -? |
| 210 | | | |
| 240 | | | |
| 270 | 2.550 | 273 | 273 - |
| 300 | | | |
| 330 | | | |
| 360 (00) | 3.37 | 364 | 2.0 |
| 390 (30) | | | |
| 420 (60) | | | |
| 450 (90) | | | |
| 480 (120) | | | |
| 510 (150) | | | |
| 540 (180) | | | |

3. CROSS ARM ALIGNMENT TEST:

DECLINATION 15.1 TRUE BEARING OF CROSSARM 0°/180°

II. COMMENTS _____

# METEOROLOGICAL SENSOR TESTS

CLIENT JR Simplot PROJECT NUMBER RME 37386.A1

SITE LOCATION SITE #7 DATE 5/26

## I. TRANSLATOR CALIBRATION TESTS, AS FOUND CONDITION

| | VOLTS | STRIP CHART | DAS |
|---|---|---|---|
| **WIND SPEED** | | | |
| ZERO | .087 | 1.2 | .7 |
| SPAN 1 | 3.00 | 50.5 | 49.9 |
| SPAN 2 | | | |
| **WIND DIRECTION** | | | |
| ZERO | -.005 | 2° | 0.0° |
| SPAN 1 | 5.00 | 540 | 179.7 |
| SPAN 2 | | | |
| **TEMPERATURE** | | | |
| ZERO | -.003 | -47°C | -50° |
| SPAN | 5.05 | +.50 | 49.9 |
| **VERTICAL WIND SPEED** | | | |
| ZERO | | | |
| SPAN | | | |
| **OTHER** | | | |
| ZERO | | | |
| SPAN | | | |
| **OTHER** | | | |
| ZERO | | | |
| SPAN | | | |
| **OTHER** | | | |
| ZERO | | | |
| SPAN | | | |

## II. CALIBRATION TESTS OF SENSORS

A. WIND SPEED SENSOR S/N _____

1. SUBSTITUTION BOX TEST

| | VOLTS | STRIP CHART | DAS |
|---|---|---|---|
| CAL AT 15 mph | | | |
| CAL AT 45 mph | | | |
| CAL AT 90 mph | | | |

2. WIND SPEED MOTOR TEST

| | | | |
|---|---|---|---|
| 300 rpm | 1.867 | 19.3 | 18.7 |
| 600 rpm | 3.65 | 37.2 | 36.5 |
| ~~900~~ 900 rpm | 4.21 | 43 | ~~48.4~~ 48.4 kn |

3. WIND SPEED BEARINGS ~~<.2~~ <.2 gm-cm STARTING THRESHOLD _____

# METEOROLOGICAL SENSOR TESTS

CLIENT JR Simplot PROJECT NUMBER

SITE LOCATION Site #1 DATE 5/26/94

## I. TRANSLATOR CALIBRATION TESTS, AS FOUND CONDITION

| | VOLTS | STRIP CHART | DAS |
|---|---|---|---|
| **WIND SPEED** | | | |
| ZERO | .100 | .1 MPH | .1 MPH |
| SPAN 1 | 5.07 | 50 MPH | 50 MPH |
| SPAN 2 | | | |
| **WIND DIRECTION** | | | |
| ZERO | -.002 | 0 | 0.1 |
| SPAN 1 | 4.95 | 540(180) | 179 |
| SPAN 2 | | | |
| **TEMPERATURE** | | | |
| ZERO | -.001 | -50 | -50 |
| SPAN | 5.00 | 50 | 49 |
| ~~VERTICAL WIND SPEED~~ | | | |
| ZERO R.H | .000 | 0 | 0 |
| SPAN | 1.995 | 99 | 100 |
| **OTHER** | | | |
| ZERO | | | |
| SPAN | | | |
| **OTHER** | | | |
| ZERO | | | |
| SPAN | | | |
| **OTHER** | | | |
| ZERO | | | |
| SPAN | | | |

## II. CALIBRATION TESTS OF SENSORS

A. WIND SPEED SENSOR S/N SIM-1

1. SUBSTITUTION BOX TEST

| | VOLTS | STRIP CHART | DAS |
|---|---|---|---|
| CAL AT 15 mph | | | |
| CAL AT 45 mph | | | |
| CAL AT 90 mph | | | |

2. WIND SPEED MOTOR TEST

| | | | |
|---|---|---|---|
| 300 rpm | 1.904 | 18.5 | 19.1 |
| 600 rpm | 3.70 | 36.5 | 37 |
| ~~900 rpm~~ 600 | ~~4.91 MV~~ 5.51 | ~~48.3 MS~~ 54 | ~~49.2 MV~~ 50 |

3. WIND SPEED BEARINGS ~~[illegible]~~ gm-cm STARTING THRESHOLD

~~[illegible]~~ 1.2

**METEOROLOGICAL SENSOR TESTS**

CLIENT JR Simplot PROJECT NUMBER

SITE LOCATION Site #1 DATE 5/26/94

B. VERTICAL WIND SPEED SENSOR S/N

1. SUBSTITUTION BOX TEST

| | VOLTS CW | VOLTS CCW | STRIP CHART CW | STRIP CHART CCW | DAS CW | DAS CCW |
|---|---|---|---|---|---|---|
| 300 rpm | | | | | | |
| 600 rpm | | | | | | |
| 900 rpm | | | | | | |

2. VWS BEARINGS _____ gm-cm STARTING THRESHOLD _____

C. TEMPERATURE SENSOR S/N 110 3-3 Model 083C1

1. SUBSTITUTION BOX TEST

| | VOLTS | STRIP CHART | DAS |
|---|---|---|---|
| CAL A 4 F | | | |
| CAL B 32 F | | | |
| CAL C 68 F | | | |
| 2. NBS CALIBRATION TEST AMBIENT AIR NIST TEMP. 69.8°F 20°C | 3.52 | 21.3 | 20.7C |
| 3. ICE BATH NIST TEMP. | | | |

D. WIND DIRECTION SENSOR S/N B1582

1. WIND DIRECTION BEARINGS , Checked by Hand OK gm-cm STARTING THRESHOLD

| 2. LINEARITY OF W/D | VOLTS | STRIP CHART | DAS | |
|---|---|---|---|---|
| 30 | | | | |
| 60 | | | | |
| 90 | 2.18 | 90 | 89.7 | .3 |
| 120 | | | | |
| 150 | | | | |
| 180 | 1.661 | 180 | 180 181 | 1 |
| 210 | | | | |
| 240 | | | | |
| 270 | 2.650 | 270 | 272 | 2 |
| 300 | | | | |
| 330 | | | | |
| 360 (00) | 3.50 | 360 | 358 | .2 |
| 390 (30) | | | | |
| 420 (60) | | | | |
| 450 (90) | | | | |
| 480 (120) | | | | |
| 510 (150) | | | | |
| 540 (180) | | | | |

3. CROSS ARM ALIGNMENT TEST:

DECLINATION 15.1 TRUE BEARING OF CROSSARM 90°/270°

III. COMMENTS ~~Air~~ USWeather RH

| | Temp | Dry | WET | DAS | VOLT | CHART |
|---|---|---|---|---|---|---|
| | 65 | 16 | 11 | = 39.8 | 791 | 39 |
| RH | 37° | 65 | 54 | 44 (44) | | |

## 1.0 INTRODUCTION

A performance audit of the EMF Air Pathways monitoring program was conducted in Pocatello, Idaho on October 4, 1994. The audit was conducted by Mr. Howard Hammeren of Bechtel Environmental, Inc. Mr. Hammeren is the program supervisor in San Francisco for the project and is not directly involved in the day-to-day operation of the samplers. Mr. Hammeren was accompanied during the audit by Kelly Green. Ms. Green is the operator of the field program in Pocatello.

The EMF air pathways monitoring program consists of six monitoring sites which collect TSP and PM-10 using critical orifice flow controlled Wedding and Associates particulate samplers. The sampling program is described in detail in the monitoring plan prepared for the project (BEI, 1993) and in monthly data summaries issued for the project (BEI, 1994a,b). Monitoring Site 3 was not audited since sample collection at this site was suspended during the month of August 1994.

Performance audits of the particulate samplers were conducted by performing a one-point audit flow check of each sampler. The audit was conducted in accordance with procedures outlined in Section 2.11 of the EPA's Volume II Quality Assurance Handbook for Air Pollutant Measurement Systems (EPA, 1990).

Section 2.0 of this report presents audit methodologies and evaluation criteria. Audit results are provided in Section 3.0. Field audit forms and audit orifice certification information are provided in the Appendix.

The results of the audit indicated that all samplers on the EMF air monitoring program were within applicable EPA acceptable criteria.

## 2.0 AUDIT PROCEDURES

This section presents the methodologies used for the performance audit of the particulate samplers used on the EMF air monitoring program. Audit procedures were based on methodologies provided in Section 2.11 of the EPA's Volume II Quality Assurance Handbook (EPA, 1990).

### 2.1 Methodologies

All particulate samplers used on the EMF program are Wedding & Associates samplers which employ a critical orifice as the means of flow control. These samplers are specially manufactured for local barometric pressure and average temperature. Both the TSP and PM-10 samplers were manufactured to operate at a nominal flow rate of 40 actual cubic feet per minute (ACFM).

A Sierra Anderson Model 25-A (BGI serial number R-21) calibration orifice was used to perform the audit. This orifice was re-certified by calibration against a roots meter on June 22, 1994. The orifice certification documents are provided in the Appendix.

Particulate samplers were audited by installing the calibration orifice on the sampler with a clean filter below it. Due to the fixed design of the calibration orifice, it was necessary to punch several holes (about 5mm in diameter) in the filter to obtain flow readings near the nominal operating range of the samplers (40 ACFM). Attempts to use an un-modified filter or no filter resulted in sampler stagnation pressures beyond the look-up table ranges supplied in the Wedding & Associates tables.

The calibrator was mounted on the filter holder assembly then secured to the sampler inlet. Audit flowrate was determined by taking water manometer readings ($\Delta H$) of the pressure drop across the calibration orifice. This manometer reading was then converted to a flowrate using the orifice calibration curve. The flowrate curve for the orifice used was:

$$Q_r = 16.8\ (\Delta H)^{1/2} + 0.5\ \text{CFM}$$

where $Q_r$ is the indicated flowrate in CFM; $\Delta H$ is the manometer reading, and the other constants were determined by the orifice certification. For $PM_{10}$ sampler audits, the audit flowrate is

converted to actual CFM for comparison to the indicated sampler flowrate.

To convert the indicated orifice flow, $Q_r$, to actual CFM ($Q_a$) the following correction was applied:

$$Q_a = Q_r [P_s/P_a * T_a/T_s]^{1/2}$$

where $P_s$ and $T_s$ are pressure and temperature at standard conditions, and $P_a$ and $T_a$ are pressure and temperature at audit conditions.

To determine sampler flow rate, stagnation pressure readings were taken on the sampler (with the audit orifice in place) and used to look up actual sampler flowrate in manufacturer supplied tables. The values obtained in the Wedding supplied table were used for comparison to the audit flowrate in actual CFM. The flowrate for critical orifice controlled samplers is determined by the following steps:

1) The manometer reading is converted to inches of mercury - inches of mercury = inches water/13.6. The value is recorded as $\Delta P$ (see field audit forms in Appendix).

2) The stagnation pressure ($P_1$) is calculated, $P_1$: $P_1 = P_a - \Delta P$ where $P_a$ is the local barometric pressure (inches of mercury).

3) The ratio of $P_1/P_a$ is calculated.

4) The actual sampler flowrate, $Q_o$, corresponding to the calculated value of $P_1/P_a$ and ambient temperature is obtained from the Wedding & Associates look-up table.

The $Q_o$ obtained from the Wedding look-up tables is then compared to the $Q_a$ determined by the audit calibration orifice.

The second part of the audit (applicable to PM-10 samplers only) involves verification that the normal sampler operating flow rate is within a range of 36-44 ACFM. Wedding PM-10 inlet heads are designed to operate at a nominal flow rate of 40 ACFM to achieve a 10 um size

selective cut. To verify that PM-10 samplers are operated at the design flow rate, a clean filter was loaded in the sampler (without the audit orifice) and the sampler switched on to determine stagnation pressure under normal operating conditions. Sampler flow rate was then determined in the same manner as shown in steps 1-4 above.

## 2.2 Audit Criteria

For single point audit flow checks, the difference between the audit flow and the indicated sampler flow should be within ± 7%. For $PM_{10}$ samplers, the flowrate setting should be in the range of 36-44 actual CFM with a nominal setting of 40 CFM. Wedding & Associates $PM_{10}$ samplers are designed to operate at 40 CFM.

For TSP samplers, the difference between the audit flow and indicated sampler flow should be within ± 7%. TSP samplers should be operated in the range of 39-60 CFM.

## 3.0 AUDIT RESULTS

The audit results are summarized in Table 3-1. Audit results for all samplers were within ±7% and are considered satisfactory. The last column of Table 3-1 shows the normal operating flow rate of PM-10 samplers as determined with a clean filter and no audit device on the sampler. All PM-10 samplers were found to be operating within the range of 36-44 ACFM.

TABLE 3-1
Audit Results (10/4/94)

| Sampler ID | Q Audit (acfm) | Q station (acfm) | % Diff. | Operating Flow (acfm) |
|---|---|---|---|---|
| 1-T | 41.4 | 40.0 | -3.4 | N/A |
| 1-P | 41.8 | 41.2 | -1.4 | 40.5 |
| 2-T | 41.4 | 39.9 | -3.6 | N/A |
| 2-P | 41.4 | 39.7 | -4.1 | 38.8 |
| 4-T | 41.8 | 39.3 | -5.9 | N/A |
| 4-P | 41.8 | 41.0 | -1.9 | 40.3 |
| 5-T | 44.0 | 42.1 | -4.3 | N/A |
| 5-P | 44.0 | 42.1 | -4.3 | 39.3 |
| 6-T | 39.0 | 36.8 | -5.6 | N/A |
| 6-P | 39.0 | 37.6 | -3.6 | 39.4 |
| 7-T | 42.1 | 42.9 | 1.9 | N/A |
| 7-P | 41.4 | 42.4 | 2.4 | 40.9 |
| 8-T | 41.8 | 40.3 | -3.6 | N/A |
| 8-P | 41.0 | 41.1 | 0.2 | 41.1 |

## 4.0 REFERENCES

BEI, 1993. Eastern Michaud Flats Air Pathways Monitoring Program, Bechtel Environmental, September 1993.

BEI, 1994a. EMF Air Pathways Monitoring Report for the November 1993 Sampling Period. Bechtel Environmental, May 1994.

BEI, 1994b. EMF Air Pathways Monitoring Report for the December 1993 Sampling Period. Bechtel Environmental, May 1994.

EPA, 1990. Quality Assurance Handbook for Air Pollutant Measurement Systems, Volume II: Ambient Air Specific Methods. U. S. EPA, Office of Research and Development, Environmental Monitoring Systems Laboratory, Research Triangle Park, North Carolina, 1990.

# APPENDIX

# $PM_{10}$/TSP AUDIT RECORD

**EMF Project, Pocatello, Idaho**

Bechtel Environmental

Date: 10/4/94 Site Location/Number: 1

$PM_{10}$/TSP Samplers

Make: Wedding ID: 1T # 07093080/UTSB
1P # 034093/604 U
8T # 070930798 UTSB
8P # 034093/605 U

Orifice Calibrator

Make: BGI Type: (Variable/~~Fixed~~)

Serial Number: R21 Date of Last Certification: 6/22/94

Air Temperature: 10 °C Standard BP ($P_a$): 25.47 " Hg

Audited By: H. Hammeren

| | 1 | 2 | 3 | 4 | 5 | 6 | 7 | 8 |
|---|---|---|---|---|---|---|---|---|
| | ΔH orifice ("$H_2O$) | $Q_r$ cfm | $Q_a$ Orifice | ΔH Sampler | ΔP (ΔH/13.6) | $P_1/P_a$ | $Q_o$ | % Diff |
| 1T | 5.3 | 39.2 | 41.4 | 19.5 | 1.433 | .943 | 40.0 | -3.4 |
| 1P | 5.4 | 39.5 | 41.8 | 19.8 | 1.456 | .943 | 41.2 | -1.4 |
| 8T | 5.4 | 39.5 | 41.8 | 19.7 | 1.448 | .943 | 40.3 | -3.6 |
| 8P | 5.2 | 38.8 | 41.0 | 20.7 | 1.522 | .940 | 41.1 | +.2 |

$Q_r=(\Delta H)^{1/2}*k + b$, where k and b are orifice constants

$Q_a= Q_r\{P_s/P_a*T_a/T_s\}^{1/2}$ where $P_a$ and $T_a$ are local temp and BP,

$T_s$=298°K and $P_s$=29.92 " Hg

$P_1=P_a-\Delta P$ % Diff = $(Q_o-Q_a/Q_a) \times 100$

$Q_o$= Actual CFM from tables

Comments: 8P and 8T are co-located samplers

Checked By: Date:

1P - 22.4" = .935 ⇒ 40.5 CFM

8P 20.9" = .940 ⇒ 41.1 CFM

# $PM_{10}$/TSP AUDIT RECORD

**EMF Project, Pocatello, Idaho**

Bechtel Environmental

Date: 10/4/94 Site Location/Number: 2

$PM_{10}$/TSP Samplers

Make: Wedding ID: 2T # 070930805 UTSB 2P # 074093165SUB

Orifice Calibrator

Make: BGI Type: (Variable/Fixed)

Serial Number: R21 Date of Last Certification: 6/22/94

Air Temperature: 10 °C Standard BP ($P_a$): 25.47 " Hg

Audited By: H. Hammeren

| | 1 | 2 | 3 | 4 | 5 | 6 | 7 | 8 |
|---|---|---|---|---|---|---|---|---|
| | ΔH orifice ("$H_2O$) | $Q_r$ cfm | $Q_a$ Orifice | ΔH Sampler | ΔP (ΔH/13.6) | $P_1/P_a$ | $Q_o$ | % Diff |
| 2T | 5.3 | 39.2 | 41.4 | 19.7 | 1.448 | .943 | 39.9 | -3.6 |
| 2P | 5.3 | 39.2 | 41.4 | 19.7 | 1.448 | .943 | 39.7 | -4.1 |
| | | | | | | | | |
| | | | 2P | 21.7 | 1.595 | .937 | 38.8 | |

$Q_r=(\Delta H)^{1/2}*k + b$, where k and b are orifice constants

$Q_a= Q_r\{P_s/P_a*T_a/T_s\}^{1/2}$ where $P_a$ and $T_a$ are local temp and BP,

$T_s$=298°K and $P_s$=29.92 " Hg

$P_1=P_a-\Delta P$ % Diff = $(Q_o-Q_a/Q_a) \times 100$

$Q_o$= Actual CFM from tables

Comments:

Checked By: Date:

# $PM_{10}$/TSP AUDIT RECORD

**EMF Project, Pocatello, Idaho**

Bechtel Environmental

Date: 10/4/94 Site Location/Number: 4

$PM_{10}$/TSP Samplers 4T # 0709 30804 UTSB

Make: Wedding ID: 4P # 0340931606U

Orifice Calibrator

Make: BGI Type: (Variable/Fixed) _____

Serial Number: R21 Date of Last Certification: 6/22/94

Air Temperature: 10 °C Standard BP ($P_a$): 25.47 " Hg

Audited By: H. Hammeren

| | 1 | 2 | 3 | 4 | 5 | 6 | 7 | 8 |
|---|---|---|---|---|---|---|---|---|
| | ΔH orifice ("$H_2O$) | $Q_r$ cfm | $Q_a$ Orifice | ΔH Sampler | ΔP (ΔH/13.6) | $P_1/P_a$ | $Q_o$ | % Diff |
| 4T | 5.4 | 39.5 | 41.8 | 20.9 | 1.536 | .940 | 39.3 | -5.9 |
| 4P | 5.4 | 39.5 | 41.8 | 19.5 | 1.433 | .943 | 41.0 | -1.9 |
| | | | | | | | | |
| | | | 4P | 22.7 | 1.669 | .934 | 40.3 | |

$Q_r=(\Delta H)^{1/2}*k + b$, where k and b are orifice constants

$Q_a= Q_r\{P_s/P_a*T_a/T_s\}^{1/2}$ where $P_a$ and $T_a$ are local temp and BP,

$T_s$=298°K and $P_s$=29.92 " Hg

$P_1=P_a-\Delta P$ % Diff = $(Q_o-Q_a/Q_a) \times 100$

$Q_o$= Actual CFM from tables

Comments: _____

Checked By: _____ Date: _____

# $PM_{10}$/TSP AUDIT RECORD

**EMF Project, Pocatello, Idaho**

Bechtel Environmental

Date: 10/5/94 Site Location/Number: 5

$PM_{10}$/TSP Samplers 5T # 07093079 9 UTSB

Make: Wedding ID: 5P # 074093/656UB

Orifice Calibrator

Make: BGI Type: (Variable/~~Fixed~~) P

Serial Number: R21 Date of Last Certification: 6/22/94

Air Temperature: 10 °C Standard BP ($P_a$): 25.47 " Hg

Audited By: H. Hammeren

| | 1 | 2 | 3 | 4 | 5 | 6 | 7 | 8 |
|---|---|---|---|---|---|---|---|---|
| | ΔH orifice ("$H_2O$) | $Q_r$ cfm | $Q_a$ Orifice | ΔH Sampler | ΔP (ΔH/13.6) | $P_1/P_a$ | $Q_o$ | % Diff |
| 5T | 6.0 | 41.6 | 44.0 | 13.6 | 1.0 | .961 | 42.1 | -4.3 |
| 5P | 6.0 | 41.6 | 44.0 | 12.8 | .941 | .963 | 42.1 | -4.3 |
| | | | | | | | | |
| | | | 5P | 21.4 | 1.573 | .938 | 39.3 | |

$Q_r=(\Delta H)^{1/2}*k + b$, where k and b are orifice constants

$Q_a= Q_r\{P_s/P_a*T_a/T_s\}^{1/2}$ where $P_a$ and $T_a$ are local temp and BP,

$T_s$=298°K and $P_s$=29.92 " Hg

$P_1=P_a-\Delta P$ % Diff = $(Q_o-Q_a/Q_a) \times 100$

$Q_o$= Actual CFM from tables

Comments: _____

_____

Checked By: _____ Date: _____

# $PM_{10}$/TSP AUDIT RECORD

**EMF Project, Pocatello, Idaho**

Bechtel Environmental

Date: 10/4/94 Site Location/Number: 6

$PM_{10}$/TSP Samplers

Make: Wedding 6T # 070930803 UTSB

ID: 6P # 074093165TUB

Orifice Calibrator

Make: BGI Type: (Variable/Fixed)

Serial Number: R21 Date of Last Certification: 6/22/94

Air Temperature: 10 °C Standard BP ($P_a$): 25.47 " Hg

Audited By: H. Hammeren

| | 1 | 2 | 3 | 4 | 5 | 6 | 7 | 8 |
|---|---|---|---|---|---|---|---|---|
| | ΔH orifice ("$H_2O$) | $Q_r$ cfm | $Q_a$ Orifice | ΔH Sampler | ΔP (ΔH/13.6) | $P_1/P_a$ | $Q_o$ | % Diff |
| 6T | 4.7 | 36.9 | 39.0 | 26.6 | 1.956 | .923 | 36.8 | -5.6 |
| 6P | 4.7 | 36.9 | 39.0 | 26.8 | 1.971 | .922 | 37.6 | -3.6 |
| | | | | | | | | |
| | | | 6P | 22.0 | 1.617 | .936 | 39.4 | |

$Q_r=(\Delta H)^{1/2}*k + b$, where k and b are orifice constants

$Q_a= Q_r\{P_s/P_a*T_a/T_s\}^{1/2}$ where $P_a$ and $T_a$ are local temp and BP,

$T_s=298°K$ and $P_s=29.92$ " Hg

$P_1=P_a-\Delta P$ % Diff = $(Q_o-Q_a/Q_a) \times 100$

$Q_o$= Actual CFM from tables

Comments: _____

_____

Checked By: _____ Date: _____

# $PM_{10}$/TSP AUDIT RECORD

**EMF Project, Pocatello, Idaho**

Bechtel Environmental

Date: 10/4/94 Site Location/Number: 7

$PM_{10}$/TSP Samplers

Make: Wedding ID: TT #07093080 0 UTSB
TP #0340931607 U

Orifice Calibrator

Make: R21 Type: (Variable/Fixed) _____

Serial Number: R21 Date of Last Certification: 6/22/94

Air Temperature: 10 °C Standard BP ($P_a$): 25.47 " Hg

Audited By: H. Hammern

| | 1 | 2 | 3 | 4 | 5 | 6 | 7 | 8 |
|---|---|---|---|---|---|---|---|---|
| | ΔH orifice ("$H_2O$) | $Q_r$ cfm | $Q_a$ Orifice | ΔH Sampler | ΔP (ΔH/13.6) | $P_1/P_a$ | $Q_o$ | % Diff |
| TT | 5.5 | 39.9 | 42.1 | 13.4 | .985 | .961 | 42.9 | 1.9 |
| TP | 5.3 | 39.2 | 41.4 | 13.0 | .956 | .962 | 42.4 | 2.4 |
| | | | | | | | | |
| | | | TP | 20.4 | 1.500 | .941 | 40.9 | |

$Q_r=(\Delta H)^{1/2}*k + b$, where k and b are orifice constants

$Q_a= Q_r\{P_s/P_a*T_a/T_s\}^{1/2}$ where $P_a$ and $T_a$ are local temp and BP,

$T_s=298°K$ and $P_s=29.92$ " Hg

$P_1=P_a-\Delta P$ % Diff = $(Q_o-Q_a/Q_a) \times 100$

$Q_o$= Actual CFM from tables

Comments: _____

_____

Checked By: _____ Date: _____

BGI Incorporated
58 Guinan Street
Waltham, MA 02154
Tel. (617) 891-9380

# *High Volume Orifice Calibration Certificate*

Pa: 752.3 mm of Hg | Roots Meter Serial No.: 7509364 | Calibration Performed by: S.BUTLER

Ta: 22.0 °C | Calibrator Orifice Model No.: 25A | Calibration Date: 22JUN94

RH: 50 % | Calibrator Orifice Serial No.: R21 | Date placed in service: _____

## Q Standard Calibration Data

| (1) Run Point No. | (2) Elapsed Time-Δt Min. | (3) Initial Volume VM $M^3$ | (4) Meter Inlet Static Pressure-ΔP mm of Hg | (5) Standard Volume Vstd $M^3$ | (6) Calibrator Orifice Static Pressure-ΔH Y in. of $H_2O$ | (6) ΔH mm of Hg | (7) X Metric Flow Rate Qstd $M^3$/min. | (8) English Flow Rate Qstd $ft^3$/min. | (9) Y $\sqrt{\Delta H \left[\frac{Pa}{760}\right]\left[\frac{298.18}{Ta}\right]}$ |
|---|---|---|---|---|---|---|---|---|---|
| 1 | 1.447 | 1 | 3.3 | 0.995 | 2.0 | 3.74 | 0.688 | 24.3 | 1.414 |
| 2 | 1.024 | 1 | 6.8 | 0.991 | 4.0 | 7.47 | 0.968 | 34.2 | 2.000 |
| 3 | 0.916 | 1 | 8.6 | 0.988 | 5.0 | 9.34 | 1.079 | 38.1 | 2.236 |
| 4 | 0.873 | 1 | 9.5 | 0.987 | 5.5 | 10.27 | 1.131 | 39.9 | 2.345 |
| 5 | 0.721 | 1 | 13.9 | 0.981 | 8.0 | 14.94 | 1.361 | 48.1 | 2.828 |

Slope(m): 2.10 Intercept(b): -0.032808 Correlation Coefficient(r): 0.999999

## Q Actual Calibration Data

| (1) Run Point No. | (2) Elapsed Time-Δt Min. | (3) Initial Volume VM $M^3$ | (4) Meter Inlet Static Pressure-ΔP mm of Hg | (5a) Actual Volume Va $M^3$ | (6) Calibrator Orifice Static Pressure-ΔH in. of $H_2O$ | (6) ΔH mm of Hg | (7a) X Metric Flow Rate Qa $M^3$/min. | (9a) Y $\sqrt{\Delta H \left[\frac{Ta}{Pa}\right]}$ |
|---|---|---|---|---|---|---|---|---|
| 1 | 1.447 | 1 | 3.3 | 0.996 | 2.0 | 3.74 | 0.688 | 0.886 |
| 2 | 1.024 | 1 | 6.8 | 0.991 | 4.0 | 7.47 | 0.968 | 1.253 |
| 3 | 0.916 | 1 | 8.6 | 0.989 | 5.0 | 9.34 | 1.079 | 1.401 |
| 4 | 0.873 | 1 | 9.5 | 0.988 | 5.5 | 10.27 | 1.131 | 1.469 |
| 5 | 0.721 | 1 | 13.9 | 0.982 | 8.0 | 14.94 | 1.362 | 1.772 |

Slope(m): 1.32 Intercept(b): -0.019763 Correlation Coefficient(r): 0.999999

## Equations:

$$Vstd(5) = Vm(3)\frac{(Pa-\Delta P)\ Tstd}{Pstd \times Ta} \qquad Qstd = \frac{Vstd}{\Delta t}$$

$$Va(5a) = Vm(3)\frac{(Pa-\Delta P)}{Pstd} \qquad Qa = \frac{Vstd}{\Delta t}$$

## Standard Conditions:

Tstd= 25°C= 298.18°K
Pstd= 760mm of Hg

$Q = (\Delta H)^{1/2} K + b$

K 16.8 4.53

$Q = 16.8(\Delta H^{1/2}) + .53$

## For additional information consult:

1. The Federal Register, Vol.47, No. 234, pp. 54896-54921, December 6, 1982.
2. Quality Assurance Handbook, Vol.II (EPA 600/4-77-277a), Section 2.11.
3. Graseby/GMW/Andersen Instruction Manual.

## Notes:

1. EPA recommends calibrators should be recalibrated after one year of field use.

©1993 BGI Inc. Rev. 1.3

## Plot of Linear Regression Qstd/Qa and Traditional Qstd - ΔP
## (Note ΔH is inches of $H_2O$)

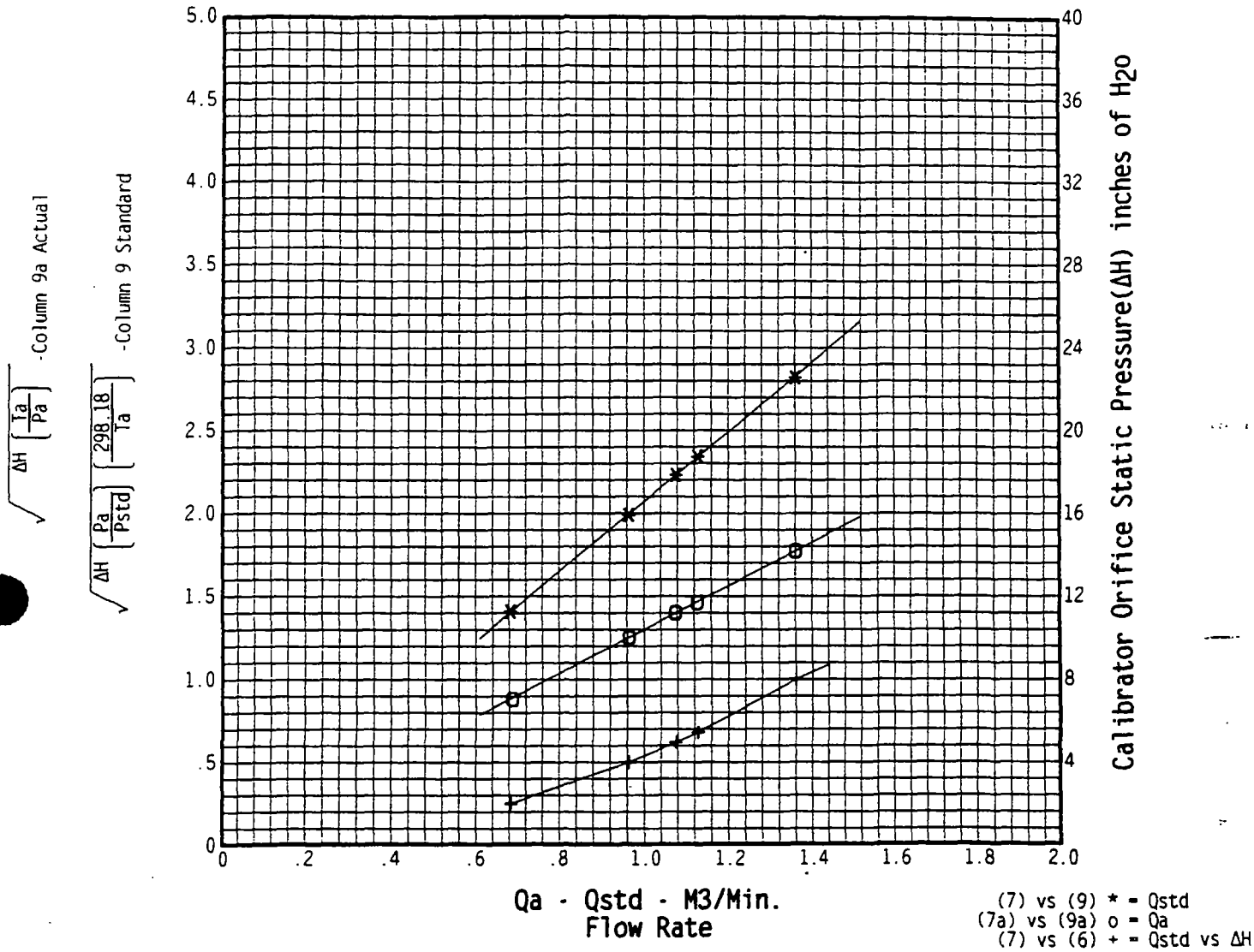


## Use of Curve for determining Qa or Qstd.

To find Qa calculate:

$$Qa = \left[\frac{\Delta H \; Ta}{Pa}\right]^{\frac{1}{2}}$$

To find Qstd calculate:

$$Qstd = \left[\Delta H \frac{Pa}{760} \bullet \frac{298.18}{Ta}\right]^{\frac{1}{2}}$$

Where:

ΔH= Calibrator Manometer Reading in inches of water.
Ta= Actual Absolute Temperature in degress Kelvin(°K).
Pa= Actual Barometric Pressure in millimeters(mm) of Mercury(Hg).
b = Intercept
m = Slope

## To find Qa or Qstd by Calculation.

To determine Qa calculate:

$$Qa = \frac{\left[\frac{\Delta H \; Ta}{Pa}\right]^{\frac{1}{2}} - b}{m}$$

To determine Qstd calculate:

$$Qstd = \frac{\left[\Delta H \frac{Pa}{760} \bullet \frac{298.18}{Ta}\right]^{\frac{1}{2}} - b}{m}$$

©1993 BGI Inc. Rev. 1.3

dmd DRESSER ROOTS DRESSER

DRESSER MANUFACTURING DIVISION
DRESSER MEASUREMENT
P.O. BOX 42176, HOUSTON, TEXAS 77242

UNIT DESCRIPTION:

# ROOTS® METER TEST DATA SHEET

DATE : 06/10/92
BILL OF MATERIAL : 048553-120
MODEL : 5M125
SERIAL NO. : 7509364
ACCESSORY S/N :
CUSTOMER NO. : _____

PROVER : 50 cu. ft.

## TEST SPECIFICATIONS

MAXIMUM FLOW: 5,000 cfh

MAXIMUM WORKING PRESSURE : 125 psig

MINIMUM STATIC TEST PRESSURE: 250 psig

MINIMUM LEAK TEST PRESSURE: 157 psig

## TEST DATA

| TEST PT NT | FLOW RATE DISP. VOLUME cfh | PERCENT OF RATED CAPACITY | ACCURACY % | DIFFERENTIAL INCHES WATER COLUMN | PERCENT ERROR +/- |
|---|---|---|---|---|---|
| 01 | 5,000 | 100 % | 100.70 | 1.47 | .70 |
| 02 | 4,000 | 80 % | 100.54 | .96 | .54 |
| 03 | 3,000 | 60 % | 100.51 | .57 | .51 |
| 04 | 1,995 | 40 % | 100.40 | .28 | .40 |
| 05 | 1,000 | 20 % | 100.37 | .11 | .37 |
| 06 | 500 | 10 % | 100.26 | .05 | .26 |
| 07 | 250 | 5 % | 99.95 | .04 | -.05 |

Above data has been determined from tests performed with air at atmospheric pressure and ambient temperature using positive displacement proving devices dimensionally traceable to the United States NIST.

Test date 06/10/92 by F.J.GRZELCZYK

# Appendix AE

## Emission Inventories

Appendix AE comprises three sections:

(1) FMC Corporation Emission Inventories

(2) J.R. Simplot Company Emission Inventories

(3) BAPCO Emission Inventories

# BAPCO Emission Inventories

# FMC Corporation Emission Inventories

| POINT SOURCES PM10 | Material Type | Tons/hr | Tons/yr | Emission Factor lb/Ton | | Source | Uncontrolled Maximum Daily PM10 (lbs/day) | Average Annual PM10 (Tons/yr) | Capture Eff. | Fugitive Emissions Maximum Daily PM10 (lbs/day) | Average Annual PM10 (Tons/yr) | Control Eff. | (Foot-notes) | Controlled Maximum Daily PM10 (lbs/day) | Average Annual PM10 (Tons/yr) | Operations Hours per Day | Operations Days per Year | %Fall | %Winter | Fall (lbs/day) | Winter (lbs/day) |
|---|---|---|---|---|---|---|---|---|---|---|---|---|---|---|---|---|---|---|---|---|---|
| Coke Dryer Scrubber | | | | | | | | | | | | | | | | | | | | | |
| Coke dryer Fuel (NG in MCF) | | 4.50E-05 | 3.50E-02 | 5.00 | (lb/MCF) | TB 1.4-1 | 1.80E-03 | 8.75E-05 | 95.00% | 9E-05 | 0.000004375 | 98.50% | 1 | 2.57E-05 | 1.25E-06 | 8 | 90 | 33 | 25 | 0.00 | 0.00 |
| Coke Dryer | Coke | 130 | 35,000 | 5.88E-02 | | See Footnote 2a | 61.10 | 1.03 | 95.00% | 3.06 | 0.05 | 98.50% | 1,2a | 0.87 | 1.47E-02 | 8 | 90 | 33 | 25 | 0.33 | 0.33 |
| Total Stack | | | | | | | 61.10 | 1.03 | | | | | | 0.87 | 1.47E-02 | | | | | 0.33 | 0.33 |
| Total Fugitives | | | | | | | | | | 3.06 | 0.05 | | | | | 8 | 90 | 33 | 25 | 1.14 | 0.86 |
| Coke Dryer Baghouse | | | | | | | | | | | | | | | | | | | | | |
| Screening | Coke | 150 | 35,000 | 6.00E-03 | | See Footnote 2b | 7.2 | 1.05E-01 | 95.00% | 0.36 | 5.25E-03 | 98.00% | 1,2b | 0.14 | 2.00E-03 | 8 | 90 | 33 | 25 | 0.04 | 0.04 |
| Screen => C3 | | 50 | 35,000 | 3.00E-03 | | See Footnote 2c | 1.2 | 5.25E-02 | 95.00% | 0.06 | 2.63E-03 | 98.00% | 1,2c | 2.28E-02 | 9.98E-04 | 8 | 90 | 33 | 25 | 0.02 | 0.02 |
| C3 => Dryer | | 50 | 35,000 | 3.00E-03 | | See Footnote 2c | 1.2 | 5.25E-02 | 95.00% | 0.06 | 2.63E-03 | 98.00% | 1,2c | 2.28E-02 | 9.98E-04 | 8 | 90 | 33 | 25 | 0.02 | 0.02 |
| Screen => C4A (Fines) | | 3 | 2,000 | 3.00E-03 | | See Footnote 2c | 0.072 | 3.00E-03 | 95.00% | 3.60E-03 | 1.50E-04 | 98.00% | 1,2c | 1.37E-03 | 5.70E-05 | 8 | 90 | 33 | 25 | 0.00 | 0.00 |
| Dryer => C5A | | 50 | 35,000 | 3.00E-03 | | See Footnote 2c | 1.2 | 5.25E-02 | 95.00% | 0.06 | 2.63E-03 | 98.00% | 1,2c | 2.28E-02 | 9.98E-04 | 8 | 90 | 33 | 25 | 0.02 | 0.02 |
| Total Stack | | | | | | | 10.872 | 2.66E-01 | | | | | | 0.21 | 5.04E-03 | | | | | 0.11 | 0.11 |
| Total Fugitives | | | | | | | | | | 0.54 | 1.33E-02 | | | | | 8 | 90 | 33 | 25 | 0.29 | 0.22 |
| Drum mixer Baghouse | | | | 2.30 | (lb/hr) | SET 2/90/PM10Frac.FrmTB8.1-4 | 249.93 | 13.87 | 75.00% | 62.48 | 3.47 | 98.00% | 1 | 9.78 | 0.54 | 5 | 111 | 50 | 0 | 9.78 | 0.00 |
| Asphalt Drum Mixer Fuel (Gallons) #5 | | 162 | 450 | | | | | | | | | | | | | | | | | | |
| Drum mixer | Aggregate | 450 | 87,366 | | | | | | | | | | | | | | | | | | |
| Drum mixer | Asphalt | 25 | 4,630 | | | | | | | | | | | | | | | | | | |
| Feed conveyor=>Drum mixer | | 450 | 87,366 | | | | | | | | | | | | | | | | | | |
| Total Fugitives | | | | | | | | | | 62.48 | 3.47 | | | | | 5 | 111 | 50 | 0 | 62.48 | 0.00 |
| Running Total | | | | | | | | | | 66.08 | 3.53 | | | 10.85 | 0.56 | | | | | | |

Footnotes:

1. Control efficiencies supplied by Bannock Paving:
   Coke Dryer Scrubber = 98.5%
   Coke Baghouse = 98%

2. AP-42 Chapter 7.2 is the basis for the coke plant emission factors. The emission factors are derived as follows:

   a.) Assume coke dryer emissions are similar to (TB 7.2-1) coke oven emissions. Assume that particulate emissions in a drying operation account for only 25% as much as oven emissions, since most of the particulate is driven off in the oven.
   Particle size distribution for PM10 = 50% (TB 7.2-2, "Pushing")
   Thus, EF = (.47)*(.25)*(.50 for PM10) = 0.059 lb/Ton PM10 Uncontrolled

   b.) Coke screening is part of coke handling (TB 7.2-1)
   EF = 0.006 lb/Ton TSP controlled by a cyclone
   Assume cyclone efficiency = 50% with particle size for PM10 = 50%
   Thus, EF = 0.006 lb/Ton PM10 Uncontrolled

   c.) Assume coke transfers (continuous) generate approximately 1/2 as much PM10 as the screening process.
   Thus, EF = 0.003 lb/Ton PM10 Uncontrolled

| Fugitive Emissions From Process Operations and Aggregate Handling | Material Type | Tons/hr | Tons/yr | Emission Factor lb/Ton | Source | Uncontrolled Emissions Max. Daily PM10 (Lbs/day) | Avg. Annual PM10 (Tons/yr) | Control Eff. | (Foot-notes) | Controlled Emissions Max.Daily PM10 (Lbs/day) | Avg.Annual PM10 (Tons/yr) | Operations Hrs/day | Days/yr | %Fall | %Winter | Fall Lbs/day | Winter Tons/day |
|---|---|---|---|---|---|---|---|---|---|---|---|---|---|---|---|---|---|
| Slag Crushing | Slag | | | | | | | | (1) | | | | | | | | |
| Dozer=>Feeder | | 450 | 400,021 | 0.0199 | Cold Slag Excavation | 71.64 | 3.98 | 65.98% | | 24.37 | 1.35 | 8 | 120 | 0 | 0 | 0.00 | 0.00 |
| Feeder=>Crusher | | 450 | 400,021 | 0.0199 | Cold Slag Excavation | 71.64 | 3.98 | 65.98% | | 24.37 | 1.35 | 8 | 120 | 0 | 0 | 0.00 | 0.00 |
| Crusher | | 450 | 400,021 | 0.0199 | Cold Slag Excavation | 71.64 | 3.98 | 65.98% | | 24.37 | 1.35 | 8 | 120 | 0 | 0 | 0.00 | 0.00 |
| Crusher=>Screen #1 | | 450 | 400,021 | 0.0199 | Cold Slag Excavation | 71.64 | 3.98 | 65.98% | | 24.37 | 1.35 | 8 | 120 | 0 | 0 | 0.00 | 0.00 |
| Screen #1 | | 450 | 400,021 | 0.0199 | Cold Slag Excavation | 71.64 | 3.98 | 65.98% | | 24.37 | 1.35 | 8 | 120 | 0 | 0 | 0.00 | 0.00 |
| Screen #1=>54" cone crusher | | 450 | 400,021 | 0.0199 | Cold Slag Excavation | 71.64 | 3.98 | 65.98% | | 24.37 | 1.35 | 8 | 120 | 0 | 0 | 0.00 | 0.00 |
| 54" Cone Crusher | | 450 | 400,021 | 0.0199 | Cold Slag Excavation | 71.64 | 3.98 | 65.98% | | 24.37 | 1.35 | 8 | 120 | 0 | 0 | 0.00 | 0.00 |
| 54" Cone=>Screen 2 | | 450 | 400,021 | 0.0199 | Cold Slag Excavation | 71.64 | 3.98 | 65.98% | | 24.37 | 1.35 | 8 | 120 | 0 | 0 | 0.00 | 0.00 |
| Screen #2 | | 450 | 400,021 | 0.0199 | Cold Slag Excavation | 71.64 | 3.98 | 65.98% | | 24.37 | 1.35 | 8 | 120 | 0 | 0 | 0.00 | 0.00 |
| Screen #2=>Fines bin | | 375 | 400,021 | 0.0199 | Cold Slag Excavation | 59.70 | 3.98 | 65.98% | | 20.31 | 1.35 | 8 | 120 | 0 | 0 | 0.00 | 0.00 |
| Screen #2=>45° Cone crusher | | 375 | 400,021 | 0.0199 | Cold Slag Excavation | 59.70 | 3.98 | 65.98% | | 20.31 | 1.35 | 8 | 120 | 0 | 0 | 0.00 | 0.00 |
| Cone Crusher | | 75 | 50,000 | 0.0199 | Cold Slag Excavation | 11.94 | 0.50 | 65.98% | | 4.06 | 0.17 | 8 | 120 | 0 | 0 | 0.00 | 0.00 |
| Screen #2=>Screen #3 | | 375 | 400,021 | 0.0199 | Cold Slag Excavation | 59.70 | 3.98 | 65.98% | | 20.31 | 1.35 | 8 | 120 | 0 | 0 | 0.00 | 0.00 |
| Screen #3 | | 375 | 400,021 | 0.0199 | Cold Slag Excavation | 59.70 | 3.98 | 65.98% | | 20.31 | 1.35 | 8 | 120 | 0 | 0 | 0.00 | 0.00 |
| Screen #3=>Roller Crusher | | 375 | 400,021 | 0.0199 | Cold Slag Excavation | 59.70 | 3.98 | 65.98% | | 20.31 | 1.35 | 8 | 120 | 0 | 0 | 0.00 | 0.00 |
| Roller Crusher | | 375 | 400,021 | 0.0199 | Cold Slag Excavation | 59.70 | 3.98 | 65.98% | | 20.31 | 1.35 | 8 | 120 | 0 | 0 | 0.00 | 0.00 |
| Roller crusher=>Fines bin | | 375 | 400,021 | 0.0199 | Cold Slag Excavation | 59.70 | 3.98 | 65.98% | | 20.31 | 1.35 | 8 | 120 | 0 | 0 | 0.00 | 0.00 |
| Roller crushr=>Screen #4 | | 375 | 400,021 | 0.0199 | Cold Slag Excavation | 59.70 | 3.98 | 65.98% | | 20.31 | 1.35 | 8 | 120 | 0 | 0 | 0.00 | 0.00 |
| Screen #4 | | 75 | 50,000 | 0.0199 | Cold Slag Excavation | 11.94 | 0.50 | 65.98% | | 4.06 | 0.17 | 8 | 120 | 0 | 0 | 0.00 | 0.00 |
| Screen #4=>Chip bin #3 | | 75 | 50,000 | 0.0199 | Cold Slag Excavation | 11.94 | 0.50 | 65.98% | | 4.06 | 0.17 | 8 | 120 | 0 | 0 | 0.00 | 0.00 |
| Chip bin=>Stockpile | | 75 | 50,000 | 0.0199 | Cold Slag Excavation | 11.94 | 0.50 | 0.00% | | 11.94 | 0.50 | 8 | 120 | 0 | 0 | 0.00 | 0.00 |
| Stockpile=>Truck | | 75 | 50,000 | 0.0199 | Cold Slag Excavation | 11.94 | 0.50 | 0.00% | | 11.94 | 0.50 | 8 | 120 | 33 | 25 | 8.21 | 8.29 |
| Totals | | | | | | 1,182.06 | 70.15 | | | 417.89 | 24.52 | | | | | 8.21 | 8.29 |
| | Running Total | | | | | | | | | 417.89 | 24.52 | | | | | | |

Footnote:

1. Efficiency calculated using particle sizing from Cat. 3 and control efficiencies for various sizings from TB C.2-3 for 061 (Dust suppression by water sprays).
   Sizing 0-2.5 = 15%/51% = 29.41%
   Sizing 2.5-6.0 = (34%/51%)-(15%/51%) = 37.26%
   Sizing 6.0-10 = (100%)-(34%/51%)-(15%/51%) = 33.33%
   Control Efficiency = (29.41%*40%)+(37.26%*65%)+(33.33%*90%) = 65.98%

2. Deleted

| Fugitive Emissions From Process Operations and Aggregate Handling | Material Type | Tons/hr | Tons/yr | Emission Factor lb/Ton | Source | Uncontrolled Emissions Max. Daily PM10 (Lbs/day) | Avg. Annual PM10 (Tons/yr) | Control Eff. | (Foot-notes) | Controlled Emissions Max.Daily PM10 (Lbs/day) | Avg.Annual PM10 (Tons/yr) | Operations Hrs/day | Days/yr | %Fall | %Winter | Fall Lbs/day | Winter Tons/day |
|---|---|---|---|---|---|---|---|---|---|---|---|---|---|---|---|---|---|
| Silica Crushing | Silica | | | | | | | | | | | | | | | | |
| FEL => Hopper | | 450 | 206,227 | 0.0024 | TB 8.19.1-1 (Batch Drop) | 11.88 | 0.25 | 0.00% | (2) | 11.88 | 0.25 | 11 | 43 | 75 | 0 | 11.88 | 0.00 |
| Hopper => Conveyor | | 450 | 206,227 | 0.06 | TB 8.19.1-1 (Continuos Drop) | 297.00 | 6.19 | 0.00% | (2) | 297.00 | 6.19 | 11 | 43 | 75 | 0 | 297.00 | 0.00 |
| Conveyor => Jaw | | 450 | 206,227 | 0.06 | TB 8.19.1-1 (Continuos Drop) | 297.00 | 6.19 | 0.00% | (2) | 297.00 | 6.19 | 11 | 43 | 75 | 0 | 297.00 | 0.00 |
| Crusher | | 450 | 206,227 | 0.017 | TB 8.19.2-1 (Dry Material Crushing) | 84.15 | 1.75 | 0.00% | (2) | 84.15 | 1.75 | 11 | 43 | 75 | 0 | 84.15 | 0.00 |
| Jaw => Tub Feeder | | 450 | 206,227 | 0.06 | TB 8.19.1-1 (Continuos Drop) | 297.00 | 6.19 | 0.00% | (2) | 297.00 | 6.19 | 11 | 43 | 75 | 0 | 297.00 | 0.00 |
| Tub Feeder => Conveyor | | 450 | 206,227 | 0.06 | TB 8.19.1-1 (Continuos Drop) | 297.00 | 6.19 | 0.00% | (2) | 297.00 | 6.19 | 11 | 43 | 75 | 0 | 297.00 | 0.00 |
| Conveyor => Splitter | | 450 | 206,227 | 0.06 | TB 8.19.1-1 (Continuos Drop) | 297.00 | 6.19 | 0.00% | (2) | 297.00 | 6.19 | 11 | 43 | 75 | 0 | 297.00 | 0.00 |
| Conv. 1 => Conv. 2 | | 450 | 206,227 | 0.06 | TB 8.19.1-1 (Continuos Drop) | 297.00 | 6.19 | 0.00% | (2) | 297.00 | 6.19 | 11 | 43 | 75 | 0 | 297.00 | 0.00 |
| Conv. 2 => Screens | | 450 | 206,227 | 0.06 | TB 8.19.1-1 (Continuos Drop) | 297.00 | 6.19 | 65.98% | (1,2) | 101.04 | 2.10 | 11 | 43 | 75 | 0 | 101.04 | 0.00 |
| Screen | | 450 | 206,227 | 0.12 | TB 8.19.1-1 (Flat Screens) | 594.00 | 12.37 | 65.98% | (1,2) | 202.08 | 4.21 | 11 | 43 | 75 | 0 | 202.08 | 0.00 |
| Screens => 54" cone | | 450 | 206,227 | 0.06 | TB 8.19.1-1 (Continuos Drop) | 297.00 | 6.19 | 65.98% | (1,2) | 101.04 | 2.10 | 11 | 43 | 75 | 0 | 101.04 | 0.00 |
| 54" Cone Crusher | | 450 | 206,227 | 0.017 | TB 8.19.2-1 (Dry Material Crushing) | 84.15 | 1.75 | 65.98% | (1,2) | 28.63 | 0.60 | 11 | 43 | 75 | 0 | 28.63 | 0.00 |
| 54" cone => Conveyor | | 450 | 206,227 | 0.06 | TB 8.19.1-1 (Continuos Drop) | 297.00 | 6.19 | 65.98% | (1,2) | 101.04 | 2.10 | 11 | 43 | 75 | 0 | 101.04 | 0.00 |
| Conveyor => Screen | | 450 | 206,227 | 0.06 | TB 8.19.1-1 (Continuos Drop) | 297.00 | 6.19 | 65.98% | (1,2) | 101.04 | 2.10 | 11 | 43 | 75 | 0 | 101.04 | 0.00 |
| Screen | | 450 | 206,227 | 0.12 | TB 8.19.1-1 (Flat Screens) | 594.00 | 12.37 | 65.98% | (1,2) | 202.08 | 4.21 | 11 | 43 | 75 | 0 | 202.08 | 0.00 |
| Fines => Stockpile | | 450 | 206,227 | 0.06 | TB 8.19.1-1 (Continuos Drop) | 297.00 | 6.19 | 0.00% | (2) | 297.00 | 6.19 | 11 | 43 | 75 | 0 | 297.00 | 0.00 |
| Screen => Conveyor | | 450 | 206,227 | 0.06 | TB 8.19.1-1 (Continuos Drop) | 297.00 | 6.19 | 65.98% | (1,2) | 101.04 | 2.10 | 11 | 43 | 75 | 0 | 101.04 | 0.00 |
| Conveyor => Stockpile | | 450 | 206,227 | 0.06 | TB 8.19.1-1 (Continuos Drop) | 297.00 | 6.19 | 0.00% | (2) | 297.00 | 6.19 | 11 | 43 | 75 | 0 | 297.00 | 0.00 |
| Loader Conv. => Trucks | | 450 | 206,227 | 0.0024 | TB 8.19.1-1 (Batch Drop) | 11.88 | 0.25 | 0.00% | (2) | 11.88 | 0.25 | 11 | 43 | 75 | 0 | 11.88 | 0.00 |
| Belly Dump => Hopper | | 450 | 206,227 | 0.0024 | TB 8.19.1-1 (Batch Drop) | 11.88 | 0.25 | 0.00% | (2) | 11.88 | 0.25 | 11 | 43 | 75 | 0 | 11.88 | 0.00 |
| Hopper => Conveyor | | 450 | 206,227 | 0.06 | TB 8.19.1-1 (Continuos Drop) | 297.00 | 6.19 | 0.00% | (2) | 297.00 | 6.19 | 11 | 43 | 75 | 0 | 297.00 | 0.00 |
| Conveyor => Stockpile | | 450 | 206,227 | 0.06 | TB 8.19.1-1 (Continuos Drop) | 297.00 | 6.19 | 0.00% | (2) | 297.00 | 6.19 | 11 | 43 | 75 | 0 | 297.00 | 0.00 |
| Stockpile => FEL | | 450 | 206,227 | 0.0024 | TB 8.19.1-1 (Batch Drop) | 11.88 | 0.25 | 0.00% | (2) | 11.88 | 0.25 | 11 | 43 | 75 | 0 | 11.88 | 0.00 |
| Totals | | | | | | 5,858.82 | 122.05 | | | 4,039.65 | 84.15 | | | | | 4039.65 | 0.00 |
| | Running Total | | | | | | | | | 4,457.55 | 108.67 | | | | | | |

Footnote:

1. Efficiency calculated using particle sizing from Cat. 3 and control efficiencies for various sizings from TB C.2-3 for 061 (Dust suppression by water sprays).
   Sizing 0-2.5 = 15%/51% = 29.41%
   Sizing 2.5-6.0 = (34%/51%)-(15%/51%) = 37.26%
   Sizing 6.0-10 = (100%)-(34%/51%)-(15%/51%) = 33.33%
   Control Efficiency = (29.41%*40%)+(37.26%*65%)+(33.33%*90%) = 65.98%

2. Other transfer and process emissions are based on sand and gravel emission factors (TB 8.19.1-1,8.19.2-1).

| Fugitive Emissions From Process Operations and Aggregate Handling | Material Type | Tons/hr | Tons/yr | Emission Factor lb/Ton | Source | Uncontrolled Emissions Max. Daily PM10 (Lbs/day) | Avg. Annual PM10 (Tons/yr) | Control Efficiency | (Footnotes) | Controlled Emissions Max. Daily PM10 (Lbs/day) | Avg. Annual PM10 (Tons/yr) | Operations Hrs/day | Days/yr | %Fall | %Winter | Fall Lbs/day | Winter Lbs/day |
|---|---|---|---|---|---|---|---|---|---|---|---|---|---|---|---|---|---|
| Coke Plant | Coke | | | | | | | | | | | | | | | | |
| Railcar=>Grated hopper | | 130 | 35,000 | 0.003 | See Footnote 1a | 3.12 | 0.05 | 0.00% | (1a,4) | 3.12 | 0.05 | 8 | 90 | 33.33 | 25 | 1.17 | 1.17 |
| Hopper=>Conveyor #1 | | 130 | 35,000 | 0.003 | See Footnote 1a | 3.12 | 0.05 | 0.00% | (1a,4) | 3.12 | 0.05 | 8 | 90 | 33.33 | 25 | 1.17 | 1.17 |
| C1 => Splitter Fraction | | 130 | 35,000 | 0.003 | See Footnote 1a | 3.12 | 0.05 | 0.00% | (1a,4) | 3.12 | 0.05 | 8 | 90 | 33.33 | 25 | 1.17 | 1.17 |
| C4A => Slurry | | 3 | 35,000 | 0.003 | See Footnote 1a | 0.07 | 0.05 | 0.00% | (1a,4) | 0.07 | 0.05 | 8 | 90 | 33.33 | 25 | 0.07 | 0.07 |
| FEL => Truck | | 5 | 35,000 | 0.50 | See Footnote 1b | 60.00 | 8.75 | 0.00% | (1b,4) | 60.00 | 8.75 | 24 | 308 | 33.33 | 25 | 56.81 | 56.82 |
| Totals | | | | | | 69.43 | 8.96 | | | 69.43 | 8.96 | | | | | 60.38 | 60.39 |
| Asphalt Plant | Asphalt | | | | | | | | (2) | | | | | | | | |
| Loader=>Bin feeder | | 450 | 87,366 | 0.06 | TB 8.19.1-1 (Continuos Drop) | 135.00 | 2.62 | 0.00% | (2) | 135.00 | 2.62 | 5 | 111 | 50 | 0 | 70.84 | 0.00 |
| Bin feeder=>Conveyor | | 450 | 87,366 | 0.06 | TB 8.19.1-1 (Continuos Drop) | 135.00 | 2.62 | 0.00% | (2) | 135.00 | 2.62 | 5 | 111 | 50 | 0 | 70.84 | 0.00 |
| Conveyor=>Scalp screen | | 450 | 87,366 | 0.06 | TB 8.19.1-1 (Continuos Drop) | 135.00 | 2.62 | 0.00% | (2) | 135.00 | 2.62 | 5 | 111 | 50 | 0 | 70.84 | 0.00 |
| Scalp screen=>Feed conveyor | | 450 | 87,366 | 0.06 | TB 8.19.1-1 (Continuos Drop) | 135.00 | 2.62 | 80.00% | (2,3) | 27.00 | 0.52 | 5 | 111 | 50 | 0 | 14.17 | 0.00 |
| Drum mixer=>Drag conveyor | | 450 | 87,366 | 0.06 | TB 8.19.1-1 (Continuos Drop) | 135.00 | 2.62 | 50.00% | (2,5) | 67.50 | 1.31 | 5 | 111 | 50 | 0 | 35.42 | 0.00 |
| Drag conveyor=>Silo storage 1 | | 450 | 87,366 | 0.06 | TB 8.19.1-1 (Continuos Drop) | 135.00 | 2.62 | 50.00% | (2,5) | 67.50 | 1.31 | 5 | 111 | 50 | 0 | 35.42 | 0.00 |
| Totals | | | | | | 810.00 | 15.73 | | | 567.00 | 11.01 | | | | | 297.52 | 0.00 |
| | Running Total | | | | | | | | | 5,093.98 | 128.64 | | | | | | |

Footnotes:

1. AP-42 Chapter 7.2 is the basis for the coke plant emission factors. The emission factors are derived as follows:

   a.) Assume coke transfers (continuous) generate approximately 1/2 as much PM10 as the screening process.
   Thus, EF = 0.003 lb/Ton PM10 Uncontrolled

   b.) Assume moving coke from pile to truck is similar to "pushing" (TB 7.2-1).
   EF = 1.15 lb/Ton TSP Uncontrolled
   Particle size distribution for PM10 = 43.3% (TB 7.2-2).
   Thus, EF = 0.50 lb/Ton PM10 Uncontrolled

2. Assumed same emission factor as sand and gravel transfers.

3. Assumed 80% efficiency for a partially covered transfer, same as Ash Grove Cement claims.

4. Equipment at the coke plant is jointly owned by BAPCO and FMC.

5. Assume 50% control efficiency for covered conveyered belt.

**Fugitive Emissions from Vehicle Traffic**

**Unpaved Roads**

Emission Factor = k*5.9*(s/12)*(S/30)*((W/3)^0.7)*((w/4)^0.5)*((365-p)/365)

Where:

| | | | |
|---|---|---|---|
| k= | 0.36 | for PM10 | Pg. 11.2.1-3 AP-42 |
| s= | 13.21 | % Silt | % silt from FMC Road 2 (F02) |
| S= | | Mean Vehicle Speed | |
| W= | | Mean Vehicle Weight | |
| w= | | Mean Number of Wheels | |
| p= | 0 | # of Days with >= .01 in. precip. and/or snow cover. | NWS/NOAA data, 1990. 96 annual |

| Road | Vehicle Type | # of Wheels | Veh. Weight (Tons) | Veh Speed (mph) | daily Emission Factor PM10 (lb/VMT) | Dist per Trip (ft) | No. of Trips per day | per year | Uncontrol'd Emissions Max.Daily PM10 (Lbs/day) | Uncontrol'd Emissions Avg.Annual PM10 (Tons/yr) | Control Efficiency | Controlled Emissions Maxi. Daily PM10 (Lbs/day) | Controlled Emissions Avg. Annual PM10 (Tons/yr) | Operations Hrs/day | Operations Days/yr | Operations %Fall | Operations %Winter | Fall Lbs/day | Winter Lbs/day | (Foot-notes) | annual ef |
|---|---|---|---|---|---|---|---|---|---|---|---|---|---|---|---|---|---|---|---|---|---|
| Road B | HP - MD | 6 | 10 | 20 | 4.44 | 3168 | 1 | 94 | 2.66 | 0.09 | 70% | 0.80 | 0.03 | 10 | 260 | 50 | 0 | 0.32 | 0.00 | | 3.27 |
| Road B | HP - HD | 10 | 23 | 20 | 10.26 | 3168 | 8 | 2050 | 49.24 | 4.65 | 70% | 14.77 | 1.39 | 8 | 260 | 50 | 0 | 14.77 | 0.00 | | 7.56 |
| Road B | HP - HD | 18 | 38 | 20 | 19.56 | 3168 | 3 | 780 | 35.21 | 3.37 | 70% | 10.56 | 1.01 | 8 | 260 | 50 | 0 | 10.56 | 0.00 | | 14.42 |
| Road B | HP - HD | 26 | 46 | 20 | 26.87 | 3168 | 4 | 887 | 64.49 | 5.27 | 70% | 19.35 | 1.58 | 10 | 260 | 50 | 0 | 18.24 | 0.00 | | 19.80 |
| Road 3 | C - LD | 4 | 5 | 20 | 2.23 | 3000 | 10 | 2200 | 12.67 | 1.03 | 70% | 3.80 | 0.31 | 10 | 260 | 25 | 5 | 1.78 | 0.47 | | 1.64 |
| Road 3 | C - MD | 6 | 10 | 20 | 4.44 | 3000 | 10 | 2200 | 25.20 | 2.04 | 70% | 7.56 | 0.61 | 10 | 260 | 25 | 5 | 3.54 | 0.94 | | 3.27 |
| Road 3 | C - HD | 10 | 28 | 20 | 11.77 | 3000 | 10 | 2200 | 66.89 | 5.42 | 70% | 20.07 | 1.63 | 10 | 260 | 25 | 5 | 9.39 | 2.50 | | 8.68 |
| Road 3 | SI - MD | 6 | 10 | 20 | 4.44 | 800 | 2 | 410 | 1.34 | 0.10 | 70% | 0.40 | 0.03 | 8 | 260 | 75 | 0 | 0.40 | 0.00 | | 3.27 |
| Road 3 | SI - HD | 10 | 23 | 20 | 10.26 | 800 | 20 | 4510 | 31.09 | 2.58 | 70% | 9.33 | 0.77 | 8 | 260 | 75 | 0 | 9.33 | 0.00 | | 7.56 |
| Road 3 | SI - HD | 18 | 35 | 20 | 18.47 | 800 | 10 | 1640 | 27.98 | 1.69 | 70% | 8.39 | 0.51 | 8 | 260 | 75 | 0 | 8.39 | 0.00 | | 13.61 |
| Road 3 | SI - HD | 26 | 46 | 20 | 26.87 | 800 | 10 | 1640 | 40.71 | 2.46 | 70% | 12.21 | 0.74 | 8 | 260 | 75 | 0 | 12.21 | 0.00 | | 19.80 |
| Road 4 | SI - MD | 6 | 10 | 5 | 1.11 | 800 | 10 | 410 | 1.68 | 0.03 | 70% | 0.50 | 0.01 | 8 | 260 | 75 | 0 | 0.13 | 0.00 | | 0.82 |
| Road 4 | SI - HD | 10 | 23 | 5 | 2.56 | 800 | 10 | 4510 | 3.89 | 0.65 | 70% | 1.17 | 0.19 | 8 | 260 | 75 | 0 | 1.17 | 0.00 | | 1.89 |
| Road 4 | SI - HD | 18 | 35 | 5 | 4.62 | 800 | 10 | 1640 | 6.99 | 0.42 | 70% | 2.10 | 0.13 | 8 | 260 | 75 | 0 | 2.10 | 0.00 | | 3.40 |
| Road 4 | SI - HD | 26 | 46 | 5 | 6.72 | 800 | 10 | 1640 | 10.18 | 0.62 | 70% | 3.05 | 0.18 | 8 | 260 | 75 | 0 | 3.05 | 0.00 | | 4.95 |
| Road 4 | FEL | 4 | 10 | 5 | 0.91 | 800 | 100 | 10000 | 13.72 | 0.51 | 70% | 4.12 | 0.15 | 8 | 111 | 0 | 0 | 0.00 | 0.00 | | 0.67 |
| S1 | Belly | 50 | 95 | 15 | 13.82 | 44880 | 45 | 1926 | 5,286.15 | 280.11 | 70% | 1,585.85 | 84.03 | 13 | 43 | 75 | 0 | 1585.85 | 0.00 | (1,2) | 34.22 |
| Totals | | | | | | | | w/o S1 | 393.94 | 30.93 | w/o S1 | 118.18 | 9.28 | | | | w/o S1 | 95.38 | 3.92 | | 0.00 |
| | Running Total | | | | | | | | | | | 1,704.03 | 93.31 | | | | | | | | |

Footnotes:

Vehicle Type Descriptions: HP - Hot Plant, C - Coke Plant, SI - Silica Plant, LD - Light Duty, MD - Medium Duty, HD - Heavy Duty, FEL - Front End Loader

1. Silt content for the Silica Mine road (S1) was estimated at 6.0% using AP-42 Table 11.2.1-1 for sand and gravel processing.
2. The silica mine haul road is approximately 9.5 miles long; approximately 5.25 miles of the road are in the NAA and approximately 1 mile is paved road and 4.25 miles are unpaved.

**Fugitive Emissions from Vehicle Traffic**

**Paved Roads**

Medium and Heavy Trucks — Source

Emission Factor = k(3.5)*((sL/.35)^.3)

Where:

k= 0.22 for PM10 — Pg. 11.2.6-3 AP-42

sL= road surface silt loading 0.19 oz/sqyd — silt loading from FMC Road 11 (F11)

| Road | Vehicle Type | Emission Factor PM10 (lb/VMT) | Dist per Trip (ft) | No. of Trips per day | per year | Uncontrolled Emissions Max.Daily PM10 (Lbs/day) | Uncontrolled Emissions Avg.Annual PM10 (Tons/yr) | Control Efficiency | Controlled Emissions Max. Daily PM10 (Lbs/day) | Controlled Emissions Avg.Ann. PM10 (Tons/yr) | Operations Hrs/day | Operations Days/yr | Operations %Fall | Operations %Winter | Fall Lbs/day | Winter Lbs/day | (Footnotes) |
|---|---|---|---|---|---|---|---|---|---|---|---|---|---|---|---|---|---|
| A1 | HP - MD | 0.64 | 6366 | 1 | 94 | 0.78 | 0.04 | 50% | 0.39 | 0.02 | 10 | 260 | 33 | 25 | 0.14 | 0.14 | (1) |
| A1 | HP - HD | 0.64 | 6366 | 8 | 2050 | 6.20 | 0.79 | 50% | 3.10 | 0.40 | 10 | 260 | 33 | 25 | 3.02 | 3.06 | (1) |
| A1 | HP - HD | 0.64 | 6366 | 3 | 780 | 2.33 | 0.30 | 50% | 1.16 | 0.15 | 10 | 260 | 33 | 25 | 1.15 | 1.16 | (1) |
| A1 | HP - HD | 0.64 | 6366 | 4 | 887 | 3.10 | 0.34 | 50% | 1.55 | 0.17 | 10 | 260 | 33 | 25 | 1.31 | 1.32 | (1) |
| A1 | SI - MD | 0.64 | 6366 | 2 | 410 | 1.55 | 0.16 | 50% | 0.78 | 0.08 | 10 | 260 | 33 | 25 | 0.60 | 0.61 | (1) |
| A1 | SI - HD | 0.64 | 6366 | 20 | 4510 | 15.50 | 1.75 | 50% | 7.75 | 0.87 | 10 | 260 | 33 | 25 | 6.65 | 6.72 | (1) |
| A1 | SI - HD | 0.64 | 6366 | 10 | 1640 | 7.75 | 0.64 | 50% | 3.88 | 0.32 | 10 | 260 | 33 | 25 | 2.42 | 2.44 | (1) |
| A1 | SI - HD | 0.64 | 6366 | 10 | 1640 | 7.75 | 0.64 | 50% | 3.88 | 0.32 | 10 | 260 | 33 | 25 | 2.42 | 2.44 | (1) |
| A2 | HP - MD | 0.64 | 3168 | 1 | 94 | 0.39 | 0.02 | 50% | 0.19 | 0.01 | 10 | 260 | 33 | 25 | 0.07 | 0.07 | (1) |
| A2 | HP - HD | 0.64 | 3168 | 8 | 2050 | 3.09 | 0.40 | 50% | 1.54 | 0.20 | 10 | 260 | 33 | 25 | 1.51 | 1.52 | (1) |
| A2 | HP - HD | 0.64 | 3168 | 3 | 780 | 1.16 | 0.15 | 50% | 0.58 | 0.08 | 10 | 260 | 33 | 25 | 0.57 | 0.58 | (1) |
| A2 | HP - HD | 0.64 | 3168 | 4 | 887 | 1.54 | 0.17 | 50% | 0.77 | 0.09 | 10 | 260 | 33 | 25 | 0.65 | 0.66 | (1) |
| A2 | SI - MD | 0.64 | 3168 | 2 | 410 | 0.77 | 0.08 | 50% | 0.39 | 0.04 | 10 | 260 | 33 | 25 | 0.30 | 0.30 | (1) |
| A2 | SI - HD | 0.64 | 3168 | 20 | 4510 | 7.71 | 0.87 | 50% | 3.86 | 0.43 | 10 | 260 | 33 | 25 | 3.31 | 3.35 | (1) |
| A2 | SI - HD | 0.64 | 3168 | 10 | 1640 | 3.86 | 0.32 | 50% | 1.93 | 0.16 | 10 | 260 | 33 | 25 | 1.20 | 1.22 | (1) |
| A2 | SI - HD | 0.64 | 3168 | 10 | 1640 | 3.86 | 0.32 | 50% | 1.93 | 0.16 | 10 | 260 | 33 | 25 | 1.20 | 1.22 | (1) |
| SI | Tripbelly | 0.64 | 11969 | 45 | 1926 | 65.57 | 1.40 | 50% | 32.79 | 0.70 | 8 | 43 | 75 | 0 | 32.79 | 0.00 | (1,2) |
| Totals | | | | | w/o SI | 67.32 | 6.97 | w/o SI | 33.66 | 3.49 | | | | w/o SI | 26.54 | 26.81 | |
| Light Duty Vehicles | | | | | | | | Totals of Paved Roads | 66.45 | 4.19 | | | | | | | |
| Emission Factors from pg. 11.2.6-4 | | | | | | | | w/o sI | 35.78 | 3.76 | | | | | | | |

| Road | Vehicle Type | Emission Factor PM10 (lb/VMT) | Dist per Trip (ft) | No. of Trips per day | per year | Uncontrolled Emissions Max. Daily PM10 (Lbs/day) | Uncontrolled Emissions Avg.Annual PM10 (Tons/yr) | Control Efficiency | Controlled Emissions Max. Daily PM10 (Lbs/day) | Controlled Emissions Avg.Ann. PM10 (Tons/yr) | Operations Hrs/day | Operations Days/yr | Operations %Fall | Operations %Winter | Fall Lbs/day | Winter Lbs/day |
|---|---|---|---|---|---|---|---|---|---|---|---|---|---|---|---|---|
| A1 | PU | 0.33 | 6336 | 6 | 1560 | 2.38 | 0.31 | 50% | 1.19 | 0.15 | 10 | 260 | 33 | 25 | 1.18 | 1.19 |
| A2 | PU | 0.33 | 3168 | 6 | 1560 | 1.19 | 0.15 | 50% | 0.59 | 0.08 | 10 | 260 | 33 | 25 | 0.59 | 0.59 |
| A3 | PU | 0.33 | 1800 | 6 | 1560 | 0.68 | 0.09 | 50% | 0.34 | 0.04 | 10 | 260 | 33 | 25 | 0.33 | 0.34 |
| Totals | | | | | | 4.24 | 0.55 | | 2.12 | 0.28 | | | | | 2.10 | 2.12 |
| | Running Total | | | | | | | | 1,772.60 | 97.77 | | | | | | |
| Footnotes: | | | | | | | | w/o SI | 153.96 | 13.04 | | | | | | |

Vehicle Type Descriptions: HP - Hot Plant, C - Coke Plant, SI - Silica Plant, LD - Light Duty, MD - Medium Duty, HD - Heavy Duty, FEL - Front End Loader

1. Magnesium chloride is applied to all plant roads, including the silica mine haul road. Assume 50% control efficiency.
2. The silica mine haul road is approximately 9.5 miles long; approximately 5.25 miles of the road are in the NAA and approximately 1 mile is paved road and 4.25 miles are unpaved.

**Fugitive Emissions from Storage Piles**

Emission Factors for Active Storage Piles

6.3 lb/acre/day for PM10 — Table 8.19.1-1

Calculations: (Area of Pile[sqft] * Active EF[lb/acre/dy] * 2.3e-5 [acres/sqft])/2000 = Tons/dy

Emission Factors for Inactive days

1.7 lb/acre/day for PM10 — Table 8.19.1-1

(Area of Pile[sqft] * Active EF[lb/acre/dy] * 2.3e-5 [acres/sqft] * Active Days)/2000
+(Area of Pile[sqft] * Inactive EF[lb/acre/dy] * 2.3e-5 [acres/sqft] * Inactive Days)/2000
= Tons/yr

Includes:
Loading of aggregate onto piles
Equipment traffic in storage area
Wind erosion
8-12 hour working day

| | Area | Active Days | Uncontrolled Emissions Max. Daily PM10 (Lbs/day) | Uncontrolled Emissions Avg. Annual PM10 (Tons/yr) | Control Efficiency | Controlled Emissions Max. Daily PM10 (Lbs/day) | Controlled Emissions Avg. Annual PM10 (Tons/yr) | Operations Hrs/day | Days/yr | %Fall | %Winter | Fall Lbs/day | Winter Lbs/day | (Footnotes) |
|---|---|---|---|---|---|---|---|---|---|---|---|---|---|---|
| Asphalt Hot Plant | (sqft) | | | | | | | | | | | | | |
| 3/8" plant mix | 4100 | 111 | 0.59 | 0.05 | 0.00% | 0.59 | 0.05 | 8 | 111 | 50 | 0 | 0.59 | 0.00 | |
| 1" rock | 9500 | 111 | 1.37 | 0.12 | 0.00% | 1.37 | 0.12 | 8 | 111 | 50 | 0 | 1.37 | 0.00 | |
| 1/2" chip aggr. | 2600 | 111 | 0.38 | 0.03 | 0.00% | 0.38 | 0.03 | 8 | 111 | 50 | 0 | 0.38 | 0.00 | |
| 1/4" minus aggr | 14000 | 111 | 2.02 | 0.18 | 0.00% | 2.02 | 0.18 | 8 | 111 | 50 | 0 | 2.02 | 0.00 | |
| | | | | | | 4.37 | 0.39 | | | | | | | |
| Coke Plant | | | | | | | | | | | | | | |
| Wet Pile | 79300 | 90 | 11.47 | 0.94 | 50.00% | 5.73 | 0.47 | 8 | 90 | 33 | 25 | 5.73 | 5.73 | (1) |
| Fines | 51200 | 90 | 7.40 | 0.61 | 0.00% | 7.40 | 0.61 | 3 | 90 | 33 | 25 | 7.40 | 7.40 | |
| Processed Coke | 3400 | 90 | 0.49 | 0.04 | 0.00% | 0.49 | 0.04 | 8 | 90 | 33 | 25 | 0.49 | 0.49 | |
| | | | | | | 13.63 | 1.12 | | | | | | | |
| Slag Crusher | | | | | | | | | | | | | | |
| 3/8" | 13050 | 95 | 1.89 | 0.16 | 0.00% | 1.89 | 0.16 | 8 | 95 | 33 | 25 | 1.89 | 1.89 | |
| 1/4" | 12125 | 95 | 1.75 | 0.15 | 0.00% | 1.75 | 0.15 | 8 | 95 | 33 | 25 | 1.75 | 1.75 | |
| Ballast | 142196 | 95 | 20.57 | 1.73 | 0.00% | 20.57 | 1.73 | 8 | 95 | 33 | 25 | 20.57 | 20.57 | |
| 1"minus | 76913 | 95 | 11.12 | 0.93 | 0.00% | 11.12 | 0.93 | 8 | 95 | 33 | 25 | 11.12 | 11.12 | |
| 3/4"minus | 39624 | 95 | 5.73 | 0.48 | 0.00% | 5.73 | 0.48 | 8 | 95 | 33 | 25 | 5.73 | 5.73 | |
| | | | | | | 41.06 | 3.45 | | | | | | | |
| Silica Mine Storage Piles | 0 | 90 | 0.00 | 0.00 | 0.00% | 0.00 | 0.00 | 8 | 90 | 50 | 0 | 0.00 | 0.00 | (2) |
| Totals | | | | | | 59.06 | 4.96 | | | | | 59.06 | 54.69 | |

Footnote:
1. The coke storage piles are assumed to have the same wind erosion emissions as the aggregate piles.
2. Emissions from the silica storage piles shared by BAPCO and FMC are included in the FMC inventory.

Bannock Paving
1990 PM10 Emission Inventory

| | Tons/yr | Lbs/day | | |
|---|---|---|---|---|
| | | Worst Case | Fall | Winter |
| POINT SOURCES: | 0.56 | 10.85 | 0.44 | 0.44 |
| PROCESS/HANDLING FUGITIVES: | 132.17 | 5,160.06 | 430.03 | 69.76 |
| OTHER FUGITIVES: | 102.73 | 1,831.66 | 1,801 71 | 87.54 |
| TOTAL PLANT: | 235.47 | 7,002.57 | 2,232.18 | 157.74 |

| | (Lbs/day) | (Tons/yr) |
|---|---|---|
| Point Sources: | 10.85 | 0.56 |
| Point Fugitives: | 66.08 | 3.53 |
| Area Sources: | 1,054.32 | 44.49 |
| Roads: | 153.96 | 13.04 |
| Stockpiles: | 59.06 | 4.96 |

| POINT SOURCES TSP | Material Type | Tons/hr | Tons/yr | Emission Factor lb/Ton | | Source | Uncontrolled Maximum Daily TSP (lbs/day) | Average Annual TSP (Tons/yr) | Capture Eff. | Fugitive Emissions Maximum Daily TSP (lbs/day) | Average Annual TSP (Tons/yr) | Control Eff. | (Foot-notes) | Controlled Maximum Daily TSP (lbs/day) | Average Annual TSP (Tons/yr) | Operations Hours per Day | Days per Year | %Fall | %Winter | Fall (lbs/day) | Winter (lbs/day) |
|---|---|---|---|---|---|---|---|---|---|---|---|---|---|---|---|---|---|---|---|---|---|
| Coke Dryer Scrubber | | | | | | | | | | | | | | | | | | | | | |
| Coke dryer Fuel (NG in MCF) | | 4.50E-05 | 0.035 | 5.00 | (lb/MCF) | TB 1.4-1 | 1.80E-03 | 8.75E-05 | 95.00% | 0.00 | 0.00 | 98.50% | 1 | 2.57E-05 | 1.25E-06 | 8 | 90 | 33 | 25 | 2.57E-05 | 2.57E-05 |
| Coke Dryer | Coke | 130 | 35,000 | 0.1175 | | See Footnote 2a | 122.20 | 2.06 | 95.00% | 6.11 | 0.10 | 98.50% | 1,2a | 1.74 | 2.93E-02 | 8 | 90 | 33 | 25 | 0.65 | 0.65 |
| Total Stack | | | | | | | 122.20 | 2.06 | | | | | | 1.74 | 2.93E-02 | | | | | 0.65 | 0.65 |
| Total Fugitives | | | | | | | | | | 6.11 | 0.10 | | | | | 8 | 90 | 33 | 25 | 2.28 | 1.71 |
| Coke Dryer Baghouse | | | | | | | | | | | | | | | | | | | | | |
| Screening | Coke | 150 | 35000 | 0.006 | | See Footnote 2b | 7.20 | 0.11 | 95.00% | 0.36 | 0.01 | 98.00% | 1,2b | 0.14 | 2.00E-03 | 8 | 90 | 33 | 25 | 4.43E-02 | 4.43E-02 |
| Screen => C3 | | 50 | 35,000 | 0.003 | | See Footnote 2c | 1.20 | 0.05 | 95.00% | 0.06 | 0.00 | 98.00% | 1,2c | 2.28E-02 | 9.98E-04 | 8 | 90 | 33 | 25 | 2.22E-02 | 2.22E-02 |
| C3 => Dryer | | 50 | 35,000 | 0.003 | | See Footnote 2c | 1.20 | 0.05 | 95.00% | 0.06 | 0.00 | 98.00% | 1,2c | 2.28E-02 | 9.98E-04 | 8 | 90 | 33 | 25 | 2.22E-02 | 2.22E-02 |
| Screen => C4A (Fines) | | 3 | 2,000 | 0.003 | | See Footnote 2c | 0.07 | 0.00 | 95.00% | 0.00 | 0.00 | 98.00% | 1,2c | 1.37E-03 | 5.70E-05 | 8 | 90 | 33 | 25 | 1.27E-03 | 1.27E-03 |
| Dryer => C5A | | 50 | 35,000 | 0.003 | | See Footnote 2c | 1.20 | 0.05 | 95.00% | 0.06 | 0.00 | 98.00% | 1,2c | 2.28E-02 | 9.98E-04 | 8 | 90 | 33 | 25 | 2.22E-02 | 2.22E-02 |
| Total Stack | | | | | | | 10.87 | 0.27 | | | | | | 0.21 | 5.04E-03 | | | | | 1.12E-01 | 1.12E-01 |
| Total Fugitives | | | | | | | | | | 0.54 | 0.01 | | | | | 8 | 90 | 33 | 25 | 0.29 | 0.22 |
| Drum mixer Baghouse | | | | 2.30 | (lb/hr) | SET 2/90 | 766.67 | 42.55 | 75.00% | 191.67 | 10.64 | 98.00% | 1 | 11.50 | 0.64 | 5 | 111 | 50 | 0 | 11.50 | 0.00 |
| Asphalt Drum Mixer Fuel (Gallons) #5 | | 162 | 450 | | | | | | | | | | | | | | | | | | |
| Drum mixer | Aggregate | 450 | 87,366 | | | | | | | | | | | | | | | | | | |
| Drum mixer | Asphalt | 25 | 4,630 | | | | | | | | | | | | | | | | | | |
| Feed conveyor=>Drum mixer | | 450 | 87,366 | | | | | | | | | | | | | | | | | | |
| Total Fugitives | | | | | | | | | | 191.67 | 10.64 | | | | | 5 | 111 | 50 | 0 | 191.67 | 0.00 |
| Running Total | | | | | | | | | | 198.32 | 10.75 | | | 13.45 | 0.67 | | | | | | |

Footnotes:

1 Control efficiencies supplied by Bannock Paving:
Coke Dryer Scrubber = 98.5%
Coke Baghouse = 98%

2. AP-42 Chapter 7.2 is the basis for the coke plant emission factors. The emission factors are derived as follows:

a.) Assume coke dryer emissions are similar to (TB 7.2-1) coke oven emissions. Assume that particulate emissions in a drying operation account for only 25% as much as oven emissions, since most of the particulate is driven off in the oven.
Particle size distribution for PM10 = 50% (TB 7.2-2, "Pushing")
Thus, EF = (.47)*(.25) = 0.1175 lb/Ton TSP Uncontrolled

b.) Coke screening is part of coke handling (TB 7.2-1)
EF = 0.006 lb/Ton TSP controlled by a cyclone
Assume cyclone efficiency = 50%
Thus, EF = 0.006 lb/Ton TSP Uncontrolled

c.) Assume coke transfers (continuous) generate approximately 1/2 as much TSP as the screening process.
Thus, EF = 0.003 lb/Ton TSP Uncontrolled

| Fugitive Emissions From Process Operations and Aggregate Handling | Material Type | Tons/hr | Tons/yr | Emission Factor lb/Ton | Source | Uncontrolled Emissions Max. Daily TSP (Lbs/day) | Uncontrolled Emissions Avg. Annual TSP (Tons/yr) | Control Eff. | (Footnotes) | Controlled Emissions Max.Daily TSP (Lbs/day) | Controlled Emissions Avg.Annual TSP (Tons/yr) | Operations Hrs/day | Operations Days/yr | Operations %Fall | Operations %Winter | Fall Lbs/day | Winter Tons/day |
|---|---|---|---|---|---|---|---|---|---|---|---|---|---|---|---|---|---|
| Slag Crushing | Slag | | | | | | | | (1) | | | | | | | | |
| Dozer=>Feeder | | 450 | 400,021 | 0.0434 | Cold Slag Excavation | 156.24 | 8.68 | 65.98% | (1) | 53.15 | 2.95 | 8 | 120 | 0 | 0 | 0.00 | 0.00 |
| Feeder=>Crusher | | 450 | 400,021 | 0.0434 | Cold Slag Excavation | 156.24 | 8.68 | 65.98% | (1) | 53.15 | 2.95 | 8 | 120 | 0 | 0 | 0.00 | 0.00 |
| Crusher | | 450 | 400,021 | 0.0434 | Cold Slag Excavation | 156.24 | 8.68 | 65.98% | (1) | 53.15 | 2.95 | 8 | 120 | 0 | 0 | 0.00 | 0.00 |
| Crusher=>Screen #1 | | 450 | 400,021 | 0.0434 | Cold Slag Excavation | 156.24 | 8.68 | 65.98% | (1) | 53.15 | 2.95 | 8 | 120 | 0 | 0 | 0.00 | 0.00 |
| Screen #1 | | 450 | 400,021 | 0.0434 | Cold Slag Excavation | 156.24 | 8.68 | 65.98% | (1) | 53.15 | 2.95 | 8 | 120 | 0 | 0 | 0.00 | 0.00 |
| Screen #1=>54" cone crusher | | 450 | 400,021 | 0.0434 | Cold Slag Excavation | 156.24 | 8.68 | 65.98% | (1) | 53.15 | 2.95 | 8 | 120 | 0 | 0 | 0.00 | 0.00 |
| 54" Cone Crusher | | 450 | 400,021 | 0.0434 | Cold Slag Excavation | 156.24 | 8.68 | 65.98% | (1) | 53.15 | 2.95 | 8 | 120 | 0 | 0 | 0.00 | 0.00 |
| 54" Cone=>Screen 2 | | 450 | 400,021 | 0.0434 | Cold Slag Excavation | 156.24 | 8.68 | 65.98% | (1) | 53.15 | 2.95 | 8 | 120 | 0 | 0 | 0.00 | 0.00 |
| Screen #2 | | 450 | 400,021 | 0.0434 | Cold Slag Excavation | 156.24 | 8.68 | 65.98% | (1) | 53.15 | 2.95 | 8 | 120 | 0 | 0 | 0.00 | 0.00 |
| Screen #2=>Fines bin | | 375 | 400,021 | 0.0434 | Cold Slag Excavation | 130.20 | 8.68 | 65.98% | (1) | 44.29 | 2.95 | 8 | 120 | 0 | 0 | 0.00 | 0.00 |
| Screen #2=>45" Cone crusher | | 375 | 400,021 | 0.0434 | Cold Slag Excavation | 130.20 | 8.68 | 65.98% | (1) | 44.29 | 2.95 | 8 | 120 | 0 | 0 | 0.00 | 0.00 |
| Cone Crusher | | 75 | 50,000 | 0.0434 | Cold Slag Excavation | 26.04 | 1.09 | 65.98% | (1) | 8.86 | 0.37 | 8 | 120 | 0 | 0 | 0.00 | 0.00 |
| Screen #2=>Screen #3 | | 375 | 400,021 | 0.0434 | Cold Slag Excavation | 130.20 | 8.68 | 65.98% | (1) | 44.29 | 2.95 | 8 | 120 | 0 | 0 | 0.00 | 0.00 |
| Screen #3 | | 375 | 400,021 | 0.0434 | Cold Slag Excavation | 130.20 | 8.68 | 65.98% | (1) | 44.29 | 2.95 | 8 | 120 | 0 | 0 | 0.00 | 0.00 |
| Screen #3=>Roller Crusher | | 375 | 400,021 | 0.0434 | Cold Slag Excavation | 130.20 | 8.68 | 65.98% | (1) | 44.29 | 2.95 | 8 | 120 | 0 | 0 | 0.00 | 0.00 |
| Roller Crusher | | 375 | 400,021 | 0.0434 | Cold Slag Excavation | 130.20 | 8.68 | 65.98% | (1) | 44.29 | 2.95 | 8 | 120 | 0 | 0 | 0.00 | 0.00 |
| Roller crusher=>Fines bin | | 375 | 400,021 | 0.0434 | Cold Slag Excavation | 130.20 | 8.68 | 65.98% | (1) | 44.29 | 2.95 | 8 | 120 | 0 | 0 | 0.00 | 0.00 |
| Roller crusher=>Screen #4 | | 375 | 400,021 | 0.0434 | Cold Slag Excavation | 130.20 | 8.68 | 65.98% | (1) | 44.29 | 2.95 | 8 | 120 | 0 | 0 | 0.00 | 0.00 |
| Screen #4 | | 75 | 50,000 | 0.0434 | Cold Slag Excavation | 26.04 | 1.09 | 65.98% | (1) | 8.86 | 0.37 | 8 | 120 | 0 | 0 | 0.00 | 0.00 |
| Screen #4=>Chip bin #3 | | 75 | 50,000 | 0.0434 | Cold Slag Excavation | 26.04 | 1.09 | 65.98% | (1) | 8.86 | 0.37 | 8 | 120 | 0 | 0 | 0.00 | 0.00 |
| Chip bin=>Stockpile | | 75 | 50,000 | 0.0434 | Cold Slag Excavation | 26.04 | 1.09 | 0.00% | | 26.04 | 1.09 | 8 | 120 | 0 | 0 | 0.00 | 0.00 |
| Stockpile=>Truck | | 75 | 50,000 | 0.0434 | Cold Slag Excavation | 26.04 | 1.09 | 0.00% | | 26.04 | 1.09 | 8 | 120 | 33 | 25 | 17.90 | 18.08 |
| Totals | | | | | | 2,577.96 | 152.99 | | | 911.38 | 53.48 | | | | | 17.90 | 18.08 |
| | Running Total | | | | | | | | | 911.38 | 53.48 | | | | | | |

Footnote:

1. Efficiency calculated using particle sizing from Cat. 3 and control efficiencies for various sizings from TB C.2-3 for 061 (Dust suppression by water sprays).
   Sizing 0-2.5 = 15%/51% = 29.41%
   Sizing 2.5-6.0 = (34%/51%)-(15%/51%) = 37.26%
   Sizing 6.0-10 = (100%)-(34%/51%)-(15%/51%) = 33.33%
   Control Efficiency = (29.41%*40%)+(37.26%*65%)+(33.33%*90%) = 65.98%

2. Deleted

| Fugitive Emissions From Process Operations and Aggregate Handling | Material Type | Tons/hr | Tons/yr | Emission Factor lb/Ton | Source | Uncontrolled Emissions Max. Daily TSP (Lbs/day) | Uncontrolled Emissions Avg. Annual TSP (Tons/yr) | Control Eff. | (Foot-notes) | Controlled Emissions Max.Daily TSP (Lbs/day) | Controlled Emissions Avg.Annual TSP (Tons/yr) | Operations Hrs/day | Operations Days/yr | Operations %Fall | Operations %Winter | Fall Lbs/day | Winter Tons/day |
|---|---|---|---|---|---|---|---|---|---|---|---|---|---|---|---|---|---|
| Silica Crushing | Silica | | | | | | | | | | | | | | | | |
| FEL => Hopper | | 450 | 206,227 | 0.056 | TB 8.19.1-1 (Batch Drop) | 277.20 | 5.77 | 0.00% | (2) | 277.20 | 5.77 | 11 | 43 | 75 | 0 | 277.20 | 0.00 |
| Hopper => Conveyor | | 450 | 206,227 | 0.13 | TB 8.19.1-1 (Continuos Drop) | 643.50 | 13.40 | 0.00% | (2) | 643.50 | 13.40 | 11 | 43 | 75 | 0 | 643.50 | 0.00 |
| Conveyor => Jaw | | 450 | 206,227 | 0.13 | TB 8.19.1-1 (Continuos Drop) | 643.50 | 13.40 | 0.00% | (2) | 643.50 | 13.40 | 11 | 43 | 75 | 0 | 643.50 | 0.00 |
| Crusher | | 450 | 206,227 | 0.28 | TB 8.19.2-1 (Dry Material Crushing) | 1,386.00 | 28.87 | 0.00% | (2) | 1,386.00 | 28.87 | 11 | 43 | 75 | 0 | 1,386.00 | 0.00 |
| Jaw => Tub Feeder | | 450 | 206,227 | 0.13 | TB 8.19.1-1 (Continuos Drop) | 643.50 | 13.40 | 0.00% | (2) | 643.50 | 13.40 | 11 | 43 | 75 | 0 | 643.50 | 0.00 |
| Tub Feeder => Conveyor | | 450 | 206,227 | 0.13 | TB 8.19.1-1 (Continuos Drop) | 643.50 | 13.40 | 0.00% | (2) | 643.50 | 13.40 | 11 | 43 | 75 | 0 | 643.50 | 0.00 |
| Conveyor => Splitter | | 450 | 206,227 | 0.13 | TB 8.19.1-1 (Continuos Drop) | 643.50 | 13.40 | 0.00% | (2) | 643.50 | 13.40 | 11 | 43 | 75 | 0 | 643.50 | 0.00 |
| Conv. 1 => Conv. 2 | | 450 | 206,227 | 0.13 | TB 8.19.1-1 (Continuos Drop) | 643.50 | 13.40 | 0.00% | (2) | 643.50 | 13.40 | 11 | 43 | 75 | 0 | 643.50 | 0.00 |
| Conv. 2 => Screens | | 450 | 206,227 | 0.13 | TB 8.19.1-1 (Continuos Drop) | 643.50 | 13.40 | 65.98% | (1,2) | 218.92 | 4.56 | 11 | 43 | 75 | 0 | 218.92 | 0.00 |
| Screen | | 450 | 206,227 | 0.16 | TB 8.19.1-1 (Flat Screens) | 792.00 | 16.50 | 65.98% | (1,2) | 269.44 | 5.61 | 11 | 43 | 75 | 0 | 269.44 | 0.00 |
| Screens => 54" cone | | 450 | 206,227 | 0.13 | TB 8.19.1-1 (Continuos Drop) | 643.50 | 13.40 | 65.98% | (1,2) | 218.92 | 4.56 | 11 | 43 | 75 | 0 | 218.92 | 0.00 |
| 54" Cone Crusher | | 450 | 206,227 | 0.28 | TB 8.19.2-1 (Dry Material Crushing) | 1,386.00 | 28.87 | 65.98% | (1,2) | 471.52 | 9.82 | 11 | 43 | 75 | 0 | 471.52 | 0.00 |
| 54" cone => Conveyor | | 450 | 206,227 | 0.13 | TB 8.19.1-1 (Continuos Drop) | 643.50 | 13.40 | 65.98% | (1,2) | 218.92 | 4.56 | 11 | 43 | 75 | 0 | 218.92 | 0.00 |
| Conveyor => Screen | | 450 | 206,227 | 0.13 | TB 8.19.1-1 (Continuos Drop) | 643.50 | 13.40 | 65.98% | (1,2) | 218.92 | 4.56 | 11 | 43 | 75 | 0 | 218.92 | 0.00 |
| Screen | | 450 | 206,227 | 0.16 | TB 8.19.1-1 (Flat Screens) | 792.00 | 16.50 | 65.98% | (1,2) | 269.44 | 5.61 | 11 | 43 | 75 | 0 | 269.44 | 0.00 |
| Fines => Stockpile | | 450 | 206,227 | 0.13 | TB 8.19.1-1 (Continuos Drop) | 643.50 | 13.40 | 0.00% | (2) | 643.50 | 13.40 | 11 | 43 | 75 | 0 | 643.50 | 0.00 |
| Screen => Conveyor | | 450 | 206,227 | 0.13 | TB 8.19.1-1 (Continuos Drop) | 643.50 | 13.40 | 65.98% | (1,2) | 218.92 | 4.56 | 11 | 43 | 75 | 0 | 218.92 | 0.00 |
| Conveyor => Stockpile | | 450 | 206,227 | 0.13 | TB 8.19.1-1 (Continuos Drop) | 643.50 | 13.40 | 0.00% | (2) | 643.50 | 13.40 | 11 | 43 | 75 | 0 | 643.50 | 0.00 |
| Loader Conv. => Trucks | | 450 | 206,227 | 0.056 | TB 8.19.1-1 (Batch Drop) | 277.20 | 5.77 | 0.00% | (2) | 277.20 | 5.77 | 11 | 43 | 75 | 0 | 277.20 | 0.00 |
| Belly Dump => Hopper | | 450 | 206,227 | 0.056 | TB 8.19.1-1 (Batch Drop) | 277.20 | 5.77 | 0.00% | (2) | 277.20 | 5.77 | 11 | 43 | 75 | 0 | 277.20 | 0.00 |
| Hopper => Conveyor | | 450 | 206,227 | 0.13 | TB 8.19.1-1 (Continuos Drop) | 643.50 | 13.40 | 0.00% | (2) | 643.50 | 13.40 | 11 | 43 | 75 | 0 | 643.50 | 0.00 |
| Conveyor => Stockpile | | 450 | 206,227 | 0.13 | TB 8.19.1-1 (Continuos Drop) | 643.50 | 13.40 | 0.00% | (2) | 643.50 | 13.40 | 11 | 43 | 75 | 0 | 643.50 | 0.00 |
| Stockpile => FEL | | 450 | 206,227 | 0.056 | TB 8.19.1-1 (Batch Drop) | 277.20 | 5.77 | 0.00% | (2) | 277.20 | 5.77 | 11 | 43 | 75 | 0 | 277.20 | 0.00 |
| Totals | | | | | | 15,117.30 | 314.91 | | | 11,034.79 | 229.87 | | | | | 11,034.79 | 0.00 |
| | Running Total | | | | | | | | | 11,946.17 | 283.35 | | | | | | |

Footnote:

1. Efficiency calculated using particle sizing from Cat. 3 and control efficiencies for various sizings from TB C.2-3 for 061 (Dust suppression by water sprays).
   Sizing 0-2.5 = 15%/51% = 29.41%
   Sizing 2.5-6.0 = (34%/51%)-(15%/51%) = 37.26%
   Sizing 6.0-10 = (100%)-(34%/51%)-(15%/51%) = 33.33%
   Control Efficiency = (29.41%*40%)+(37.26%*65%)+(33.33%*90%) = 65.98%

2. Other transfer and process emissions are based on sand and gravel emission factors (TB 8.19.1-1,8.19.2-1).

| Fugitive Emissions From Process Operations and Aggregate Handling | Material Type | Tons/hr | Tons/yr | Emission Factor lb/Ton | Source | Uncontrolled Emissions Max. Daily TSP (Lbs/day) | Uncontrolled Emissions Avg. Annual TSP (Tons/yr) | Control Efficiency | (Footnotes) | Controlled Emissions Max. Daily TSP (Lbs/day) | Controlled Emissions Avg. Annual TSP (Tons/yr) | Hrs/day | Operations Days/yr | %Fall | %Winter | Fall Lbs/day | Winter Lbs/day |
|---|---|---|---|---|---|---|---|---|---|---|---|---|---|---|---|---|---|
| Coke Plant | Coke | | | | | | | | | | | | | | | | |
| Railcar=>Grated hopper | | 130 | 35,000 | 0.003 | See Footnote 1a | 3.12 | 0.05 | 0.00% | (1a,4) | 3.12 | 0.05 | 8 | 90 | 33.33 | 25 | 1.17 | 1.17 |
| Hopper=>Conveyor #1 | | 130 | 35,000 | 0.003 | See Footnote 1a | 3.12 | 0.05 | 0.00% | (1a,4) | 3.12 | 0.05 | 8 | 90 | 33.33 | 25 | 1.17 | 1.17 |
| C1 => Splitter Fraction | | 130 | 35,000 | 0.003 | See Footnote 1a | 3.12 | 0.05 | 0.00% | (1a,4) | 3.12 | 0.05 | 8 | 90 | 33.33 | 25 | 1.17 | 1.17 |
| C4A => Slurry | | 3 | 35,000 | 0.003 | See Footnote 1a | 0.07 | 0.05 | 0.00% | (1a,4) | 0.07 | 0.05 | 8 | 90 | 33.33 | 25 | 0.07 | 0.07 |
| FEL => Truck | | 5 | 35,000 | 1.15 | See Footnote 1b | 138.00 | 20.13 | 0.00% | (1b,4) | 138.00 | 20.13 | 24 | 308 | 33.33 | 25 | 130.67 | 130.68 |
| Totals | | | | | | 147.43 | 20.34 | | | 147.43 | 20.34 | | | | | 134.24 | 134.25 |
| Asphalt Plant | Asphalt | | | | | | | | | | | | | | | | |
| Loader=>Bin feeder | | 450 | 87,366 | 0.13 | TB 8.19.1-1 (Continuos Drop) | 292.50 | 5.68 | 0.00% | (2) | 292.50 | 5.68 | 5 | 111 | 50 | 0 | 153.48 | 0.00 |
| Bin feeder=>Conveyor | | 450 | 87,366 | 0.13 | TB 8.19.1-1 (Continuos Drop) | 292.50 | 5.68 | 0.00% | (2) | 292.50 | 5.68 | 5 | 111 | 50 | 0 | 153.48 | 0.00 |
| Conveyor=>Scalp screen | | 450 | 87,366 | 0.13 | TB 8.19.1-1 (Continuos Drop) | 292.50 | 5.68 | 0.00% | (2) | 292.50 | 5.68 | 5 | 111 | 50 | 0 | 153.48 | 0.00 |
| Scalp screen=>Feed conveyor | | 450 | 87,366 | 0.13 | TB 8.19.1-1 (Continuos Drop) | 292.50 | 5.68 | 80.00% | (2,3) | 58.50 | 1.14 | 5 | 111 | 50 | 0 | 30.70 | 0.00 |
| Drum mixer=>Drag conveyor | | 450 | 87,366 | 0.13 | TB 8.19.1-1 (Continuos Drop) | 292.50 | 5.68 | 50.00% | (2,5) | 146.25 | 2.84 | 5 | 111 | 50 | 0 | 76.74 | 0.00 |
| Drag conveyor=>Silo storage 1 | | 450 | 87,366 | 0.13 | TB 8.19.1-1 (Continuos Drop) | 292.50 | 5.68 | 50.00% | (2,5) | 146.25 | 2.84 | 5 | 111 | 50 | 0 | 76.74 | 0.00 |
| Totals | | | | | | 1,755.00 | 34.07 | | | 1,228.50 | 23.85 | | | | | 644.62 | 0.00 |
| | Running Total | | | | | | | | | 13,322.10 | 327.53 | | | | | | |

Footnotes:

1. AP-42 Chapter 7.2 is the basis for the coke plant emission factors. The emission factors are derived as follows:

   a.) Assume coke transfers (continuous) generate approximately 1/2 as much TSP as the screening process
   Thus, EF = 0.003 lb/Ton TSP Uncontrolled

   b.) Assume moving coke from pile to truck is similar to "pushing" (TB 7.2-1).
   EF = 1.15 lb/Ton TSP Uncontrolled

2. Assumed same emission factor as sand and gravel transfers.

3. Assumed 80% efficiency for a partially covered transfer, same as Ash Grove Cement claims

4. Equipment at the coke plant is jointly owned by BAPCO and FMC.

5. Assume 50% control efficiency for covered conveyered belt.

**Fugitive Emissions from Vehicle Traffic**

**Unpaved Roads**

Emission Factor = k*5.9*(s/12)*(S/30)*((W/3)^0.7)*((w/4)^0.5)*((365-p)/365)

Where:

| | | |
|---|---|---|
| k= | 0.8 | for TSP Pg. 11.2.1-3 AP-42 |
| s= | 13.2 | % Silt from FMC Road 2 (F02) |
| S= | | Mean Vehicle Speed |
| W= | | Mean Vehicle Weight |
| w= | | Mean Number of Wheels |
| p= | 0 | # of Days with >= .01 in. precip. and/or snow cover. NWS/NOAA data, 1990. 96 annual |

| Road | Vehicle Type | # of Wheels | Veh. Weight (Tons) | Veh Speed (mph) | Emission Factor TSP (lb/VMT) | Dist per Trip (ft) | No. of Trips per day | per year | Uncontrol'd Emissions Max.Daily TSP (Lbs/day) | Uncontrol'd Emissions Avg.Annual TSP (Tons/yr) | Control Efficiency | Controlled Emissions Maxi. Daily TSP (Lbs/day) | Avg. Annual TSP (Tons/yr) | Operations Hrs/day | Operations Days/yr | Operations %Fall | Operations %Winter | Fall Lbs/day | Winter Lbs/day | (Foot-notes) | annuals ef |
|---|---|---|---|---|---|---|---|---|---|---|---|---|---|---|---|---|---|---|---|---|---|
| Road B | HP - MD | 6 | 10 | 20 | 9.86 | 3168 | 1 | 94 | 5.91 | 0.20 | 70% | 1.77 | 0.06 | 10 | 260 | 50 | 0 | 0.71 | 0.00 | | 7.26 |
| Road B | HP - HD | 10 | 23 | 20 | 22.80 | 3168 | 8 | 2050 | 109.42 | 10.33 | 70% | 32.83 | 3.10 | 8 | 260 | 50 | 0 | 32.83 | 0.00 | | 16.80 |
| Road B | HP - HD | 18 | 38 | 20 | 43.47 | 3168 | 3 | 780 | 78.24 | 7.50 | 70% | 23.47 | 2.25 | 8 | 260 | 50 | 0 | 23.47 | 0.00 | | 32.03 |
| Road B | HP - HD | 26 | 46 | 20 | 59.71 | 3168 | 4 | 887 | 143.31 | 11.71 | 70% | 42.99 | 3.51 | 10 | 260 | 50 | 0 | 40.54 | 0.00 | | 44.01 |
| Road 3 | C - LD | 4 | 5 | 20 | 4.95 | 3000 | 10 | 2200 | 28.15 | 2.28 | 70% | 8.44 | 0.68 | 10 | 260 | 25 | 5 | 3.95 | 1.05 | | 3.65 |
| Road 3 | C - MD | 6 | 10 | 20 | 9.86 | 3000 | 10 | 2200 | 56.00 | 4.54 | 70% | 16.80 | 1.36 | 10 | 260 | 25 | 5 | 7.86 | 2.10 | | 7.26 |
| Road 3 | C - HD | 10 | 28 | 20 | 26.16 | 3000 | 10 | 2200 | 148.65 | 12.05 | 70% | 44.59 | 3.62 | 10 | 260 | 25 | 5 | 20.86 | 5.56 | | 19.28 |
| Road 3 | SI - MD | 6 | 10 | 20 | 9.86 | 800 | 2 | 410 | 2.99 | 0.23 | 70% | 0.90 | 0.07 | 8 | 260 | 75 | 0 | 0.90 | 0.00 | | 7.26 |
| Road 3 | SI - HD | 10 | 23 | 20 | 22.80 | 800 | 20 | 4510 | 69.08 | 5.74 | 70% | 20.72 | 1.72 | 8 | 260 | 75 | 0 | 20.72 | 0.00 | | 16.80 |
| Road 3 | SI - HD | 18 | 35 | 20 | 41.03 | 800 | 10 | 1640 | 62.17 | 3.76 | 70% | 18.65 | 1.13 | 8 | 260 | 75 | 0 | 18.65 | 0.00 | | 30.24 |
| Road 3 | SI - HD | 26 | 46 | 20 | 59.71 | 800 | 10 | 1640 | 90.48 | 5.47 | 70% | 27.14 | 1.64 | 8 | 260 | 75 | 0 | 27.14 | 0.00 | | 44.01 |
| Road 4 | SI - MD | 6 | 10 | 5 | 2.46 | 800 | 10 | 410 | 3.73 | 0.06 | 70% | 1.12 | 0.02 | 8 | 260 | 75 | 0 | 0.29 | 0.00 | | 1.82 |
| Road 4 | SI - HD | 10 | 23 | 5 | 5.70 | 800 | 10 | 4510 | 8.64 | 1.44 | 70% | 2.59 | 0.43 | 8 | 260 | 75 | 0 | 2.59 | 0.00 | | 4.20 |
| Road 4 | SI - HD | 18 | 35 | 5 | 10.26 | 800 | 10 | 1640 | 15.54 | 0.94 | 70% | 4.66 | 0.28 | 8 | 260 | 75 | 0 | 4.66 | 0.00 | | 7.56 |
| Road 4 | SI - HD | 26 | 46 | 5 | 14.93 | 800 | 10 | 1640 | 22.62 | 1.37 | 70% | 6.79 | 0.41 | 8 | 260 | 75 | 0 | 6.79 | 0.00 | | 11.00 |
| Road 4 | FEL | 4 | 10 | 5 | 2.01 | 800 | 100 | 10000 | 30.49 | 1.12 | 70% | 9.15 | 0.34 | 8 | 111 | 0 | 0 | 0.00 | 0.00 | | 1.48 |
| SI | Belly | 50 | 95 | 15 | 13.82 | 44880 | 45 | 1926 | 5,286.15 | 622.47 | 70% | 1,585.85 | 186.74 | 13 | 43 | 75 | 0 | 1585.85 | 0.00 | (1,2) | 76.05 |
| Totals | | | | | | | | w/o SI | 875.43 | 68.73 | w/o SI | 262.63 | 20.62 | | | | w/o SI | 211.96 | 8.71 | | 0.00 |
| | Running Total | | | | | | | | | | | 1,848.47 | 207.36 | | | | | | | | |

Footnotes:

Vehicle Type Descriptions: HP - Hot Plant, C - Coke Plant, SI - Silica Plant, LD - Light Duty, MD - Medium Duty, HD - Heavy Duty, FEL - Front End Loader

1. Silt content for the Silica Mine road (S1) was estimated at 6.0% using AP-42 Table 11.2.1-1 for sand and gravel processing.
2. The silica mine haul road is approximately 9.5 miles long; approximately 5.25 miles of the road are in the NAA and approximately 1 mile is paved road and 4.25 miles are unpaved.

**Fugitive Emissions from Vehicle Traffic**

**Paved Roads**

**Medium and Heavy Trucks** Source

Emission Factor = k*I*(4/n)*(s/10)*(L/1000)*(W/3)^0.7

Where:

| | | | |
|---|---|---|---|
| k= | 0.077 | for TSP | Pg. 11.2.6-1 AP-42 |
| n= | 2 | number of lanes | |
| s= | 17.90 | % | silt loading from FMC Road 11 (F11) |
| I= | 7 | industrial factor | W= Average vehicle weight in tons |
| L= | 149 | lb/mile | |

| Road | Vehicle Type | Emission Factor TSP (lb/VMT) | Dist per Trip (ft) | No. of Trips per day | No. of Trips per year | Uncontrolled Emissions Max.Daily TSP (Lbs/day) | Uncontrolled Emissions Avg.Annual TSP (Tons/yr) | Control Efficiency | Controlled Emissions Max. Daily TSP (Lbs/day) | Controlled Emissions Avg.Ann. TSP (Tons/yr) | Operations Hrs/day | Operations Days/yr | Operations %Fall | Operations %Winter | Fall Lbs/day | Winter Lbs/day | (Foot-notes) | Apprx. Veh. Weight (Tons) |
|---|---|---|---|---|---|---|---|---|---|---|---|---|---|---|---|---|---|---|
| A1 | HP - MD | 0.41 | 6366 | 1 | 94 | 0.50 | 0.02 | 50% | 0.25 | 0.01 | 10 | 260 | 33 | 25 | 0.09 | 0.09 | (1) | 5 |
| A1 | HP - HD | 0.80 | 6366 | 8 | 2050 | 7.74 | 0.99 | 50% | 3.87 | 0.50 | 10 | 260 | 33 | 25 | 3.78 | 3.81 | (1) | 13 |
| A1 | HP - HD | 0.80 | 6366 | 3 | 780 | 2.90 | 0.38 | 50% | 1.45 | 0.19 | 10 | 260 | 33 | 25 | 1.44 | 1.45 | (1) | 13 |
| A1 | HP - HD | 0.80 | 6366 | 4 | 887 | 3.87 | 0.43 | 50% | 1.93 | 0.21 | 10 | 260 | 33 | 25 | 1.63 | 1.65 | (1) | 13 |
| A1 | SI - MD | 0.41 | 6366 | 2 | 410 | 0.99 | 0.10 | 50% | 0.50 | 0.05 | 10 | 260 | 33 | 25 | 0.39 | 0.39 | (1) | 5 |
| A1 | SI - HD | 0.80 | 6366 | 20 | 4510 | 19.35 | 2.18 | 50% | 9.67 | 1.09 | 10 | 260 | 33 | 25 | 8.31 | 8.39 | (1) | 13 |
| A1 | SI - HD | 0.80 | 6366 | 10 | 1640 | 9.67 | 0.79 | 50% | 4.84 | 0.40 | 10 | 260 | 33 | 25 | 3.02 | 3.05 | (1) | 13 |
| A1 | SI - HD | 0.80 | 6366 | 10 | 1640 | 9.67 | 0.79 | 50% | 4.84 | 0.40 | 10 | 260 | 33 | 25 | 3.02 | 3.05 | (1) | 13 |
| A2 | HP - MD | 0.41 | 3168 | 1 | 94 | 0.25 | 0.01 | 50% | 0.12 | 0.01 | 10 | 260 | 33 | 25 | 0.04 | 0.04 | (1) | 5 |
| A2 | HP - HD | 0.80 | 3168 | 8 | 2050 | 3.85 | 0.49 | 50% | 1.93 | 0.25 | 10 | 260 | 33 | 25 | 1.88 | 1.90 | (1) | 13 |
| A2 | HP - HD | 0.80 | 3168 | 3 | 780 | 1.44 | 0.19 | 50% | 0.72 | 0.09 | 10 | 260 | 33 | 25 | 0.71 | 0.72 | (1) | 13 |
| A2 | HP - HD | 0.80 | 3168 | 4 | 887 | 1.93 | 0.21 | 50% | 0.96 | 0.11 | 10 | 260 | 33 | 25 | 0.81 | 0.82 | (1) | 13 |
| A2 | SI - MD | 0.41 | 3168 | 2 | 410 | 0.49 | 0.05 | 50% | 0.25 | 0.03 | 10 | 260 | 33 | 25 | 0.19 | 0.19 | (1) | 5 |
| A2 | SI - HD | 0.80 | 3168 | 20 | 4510 | 9.63 | 1.09 | 50% | 4.81 | 0.54 | 10 | 260 | 33 | 25 | 4.13 | 4.18 | (1) | 13 |
| A2 | SI - HD | 0.80 | 3168 | 10 | 1640 | 4.81 | 0.39 | 50% | 2.41 | 0.20 | 10 | 260 | 33 | 25 | 1.50 | 1.52 | (1) | 13 |
| A2 | SI - HD | 0.80 | 3168 | 10 | 1640 | 4.81 | 0.39 | 50% | 2.41 | 0.20 | 10 | 260 | 33 | 25 | 1.50 | 1.52 | (1) | 13 |
| S1 | Tripbelly | 1.99 | 11969 | 45 | 1926 | 202.75 | 4.34 | 50% | 101.38 | 2.17 | 8 | 43 | 75 | 0 | 101.38 | 0.00 | (2) | 47.5 |
| Totals | | | | | w/o S1 | 81.92 | 8.52 | w/o S1 | 40.96 | 4.26 | | | | w/o S1 | 32.45 | 32.78 | | |

**Light Duty Vehicles** Road Totals 142.33 6.43

Emission Factors from pg. 11.2.6-1

| Road | Vehicle Type | Emission Factor TSP (lb/VMT) | Dist per Trip (ft) | No. of Trips per day | No. of Trips per year | Uncontrolled Emissions Max. Daily TSP (Lbs/day) | Uncontrolled Emissions Avg.Annual TSP (Tons/yr) | Control Efficiency | Controlled Emissions Max. Daily TSP (Lbs/day) | Controlled Emissions Avg.Ann. TSP (Tons/yr) | Operations Hrs/day | Operations Days/yr | Operations %Fall | Operations %Winter | Fall Lbs/day | Winter Lbs/day | Apprx. Veh. Weight (Tons) |
|---|---|---|---|---|---|---|---|---|---|---|---|---|---|---|---|---|---|
| A1 | PU | 0.22 | 6336 | 6 | 1560 | 1.56 | 0.20 | 50% | 0.78 | 0.10 | 10 | 260 | 33 | 25 | 0.77 | 0.78 | 2 |
| A2 | PU | 0.22 | 3168 | 6 | 1560 | 0.78 | 0.10 | 50% | 0.39 | 0.05 | 10 | 260 | 33 | 25 | 0.39 | 0.39 | 2 |
| A3 | PU | 0.22 | 1800 | 6 | 1560 | 0.44 | 0.06 | 50% | 0.22 | 0.03 | 10 | 260 | 33 | 25 | 0.22 | 0.22 | 2 |
| Totals | | | | | | 2.78 | 0.36 | | 1.39 | 0.18 | | | | | 1.38 | 1.39 | |
| | Running Total | | | | | | | | 1,992.20 | 213.97 | | | | | | | |
| Footnotes: | | | | | | | | w/o S1 | 304.98 | 25.06 | | | | | | | |

Vehicle Type Descriptions: HP - Hot Plant, C - Coke Plant, SI - Silica Plant, LD - Light Duty, MD - Medium Duty, HD - Heavy Duty, FEL - Front End Loader

1. Magnesium chloride is applied to all plant roads, including the silica mine haul road. Assume 50% control efficiency.
2. The silica mine haul road is approximately 9.5 miles long; approximately 5.25 miles of the road are in the NAA and approximately 1 mile is paved road and 4.25 miles are unpaved.

**Fugitive Emissions from Storage Piles**

Emission Factors for Active Storage Piles

13 2 lb/acre/day for TSP — Table 8.19.1-1 — Calculations: (Area of Pile[sqft] * Active EF[lb/acre/dy] * 2.3e-5 [acres/sqft])/2000 = Tons/dy

Emission factors for Inactive Storage Piles

3.5 lb/acre/day for TSP — Table 8.19.1-1 — (Area of Pile[sqft] * Active EF[lb/acre/dy] * 2.3e-5 [acres/sqft] * Active Days)/2000 +(Area of Pile[sqft] * Inactive EF[lb/acre/dy] * 2.3e-5 [acres/sqft] * Inactive Days)/2000 = Tons/yr

Includes:
Loading of aggregate onto piles
Equipment traffic in storage area
Wind erosion
8-12 hour working day

| | Area | Active Days | Uncontrolled Emissions Max. Daily TSP | Uncontrolled Emissions Avg. Annual TSP | Control Efficiency | Controlled Emissions Max. Daily TSP | Controlled Emissions Avg. Annual TSP | Operations | | | | | | |
|---|---|---|---|---|---|---|---|---|---|---|---|---|---|---|
| Asphalt Hot Plant | (sqft) | | (Lbs/day) | (Tons/yr) | | (Lbs/day) | (Tons/yr) | Hrs/day | Days/yr | %Fall | %Winter | Fall Lbs/day | Winter Lbs/day | (Footnotes) |
| 3/8" plant mix | 4100 | 111 | 1.24 | 0.11 | 0.00% | 1.24 | 0.11 | 8 | 111 | 50 | 0 | 1.24 | 0.00 | |
| 1" rock | 9500 | 111 | 2.88 | 0.26 | 0.00% | 2.88 | 0.26 | 8 | 111 | 50 | 0 | 2.88 | 0.00 | |
| 1/2" chip aggr. | 2600 | 111 | 0.79 | 0.07 | 0.00% | 0.79 | 0.07 | 8 | 111 | 50 | 0 | 0.79 | 0.00 | |
| 1/4" minus aggr | 14000 | 111 | 4.24 | 0.38 | 0.00% | 4.24 | 0.38 | 8 | 111 | 50 | 0 | 4.24 | 0.00 | |
| | | | | | | 9.15 | 0.82 | | | | | | | |
| Coke Plant | | | | | | | | | | | | | | |
| Wet Pile | 79300 | 90 | 24.03 | 1.96 | 50.00% | 12.02 | 0.98 | 8 | 90 | 33 | 25 | 12.02 | 12.02 | (1) |
| Fines | 51200 | 90 | 15.52 | 1.26 | 0.00% | 15.52 | 1.26 | 3 | 90 | 33 | 25 | 15.52 | 15.52 | |
| Processed Coke | 3400 | 90 | 1.03 | 0.08 | 0.00% | 1.03 | 0.08 | 8 | 90 | 33 | 25 | 1.03 | 1.03 | |
| | | | | | | 28.56 | 2.33 | | | | | | | |
| Slag Crusher | | | | | | | | | | | | | | |
| 3/8" | 13050 | 95 | 3.95 | 0.33 | 0.00% | 3.95 | 0.33 | 8 | 95 | 33 | 25 | 3.95 | 3.95 | |
| 1/4" | 12125 | 95 | 3.67 | 0.31 | 0.00% | 3.67 | 0.31 | 8 | 95 | 33 | 25 | 3.67 | 3.67 | |
| Ballast | 142196 | 95 | 43.09 | 3.59 | 0.00% | 43.09 | 3.59 | 8 | 95 | 33 | 25 | 43.09 | 43.09 | |
| 1"minus | 76913 | 95 | 23.31 | 1.94 | 0.00% | 23.31 | 1.94 | 8 | 95 | 33 | 25 | 23.31 | 23.31 | |
| 3/4"minus | 39624 | 95 | 12.01 | 1.00 | 0.00% | 12.01 | 1.00 | 8 | 95 | 33 | 25 | 12.01 | 12.01 | |
| | | | | | | 86.03 | 7.17 | | | | | | | |
| Silica Mine Storage Piles | 0 | 90 | 0.00 | 0.00 | 0.00% | 0.00 | 0.00 | 8 | 90 | 50 | 0 | 0.00 | 0.00 | (2) |
| Totals | | | | | | 123.74 | 10.31 | | | | | 123.74 | 114.59 | |

Footnote:
1. The coke storage piles are assumed to have the same wind erosion emissions as the aggregate piles.
2. Emissions from the silica storage piles shared by BAPCO and FMC are included in the FMC inventory.

**Bannock Paving**
**1990 TSP Emission Inventory**

| | Tons/yr | Lbs/day | | |
|---|---|---|---|---|
| | | Worst Case | Fall | Winter |
| POINT SOURCES: | 0.67 | 13.45 | 0.76 | 0.76 |
| PROCESS/HANDLING FUGITIVES: | 338.29 | 13,520.42 | 991.01 | 154.27 |
| OTHER FUGITIVES: | 224.28 | 474.83 | 2,056.75 | 157.48 |
| TOTAL PLANT: | 563.24 | 14,008.70 | 3,048.52 | 312.51 |

| | (Lbs/day) | (Tons/yr) |
|---|---|---|
| Point Sources: | 13.45 | 0.67 |
| Point Fugitive: | 198.32 | 10.75 |
| Area Sources: | 2,287.32 | 97.67 |
| Roads: | 304.98 | 25.06 |
| Stockpiles: | 123.74 | 10.31 |

Slag 1
Slag 2
Slag 3
Coke 1
Coke 2
Asphalt 1
Asphalt 2

missions Calculations
r Bannock Paving Co.
rticulate Metals

| SOURCES | Max. Daily PM10 (lbs/day) | Annual PM10 (Tons/yr) | Max. Daily PM10 (g/s) | Avg. Annual PM10 (g/s) | Sb in PM10 | Data Source/ Confidence | Antimony Daily (g/s) | Antimony Annual (g/s) | As in PM10 | Data Source/ Confidence | Arsenic Daily (g/s) | Arsenic Annual (g/s) | Be in PM10 | Data Source/ Confidence | Beryllium Daily (g/s) | Beryllium Annual (g/s) | Cd in PM10 | Data Source/ Confidence | Cadmium Daily (g/s) | Cadmium Annual (g/s) |
|---|---|---|---|---|---|---|---|---|---|---|---|---|---|---|---|---|---|---|---|---|
| Dryer Scrubber (pt) | 0.87 | 1.47E-02 | 4.57E-03 | 4.21E-04 | 0.0000% | B/1 | 0.00 | 0.00 | 0.0010% | B/1 | 4.70E-08 | 4.34E-09 | 0.00004% | B/1 | 1.92E-09 | 1.77E-10 | 0.0000% | B/1 | 0.00 | 0.00 |
| Dryer Scrubber (fug) | 3.06 | 5.14E-02 | 1.60E-02 | 1.48E-03 | 0.0000% | B/1 | 0.00 | 0.00 | 0.0010% | B/1 | 1.65E-07 | 1.52E-08 | 0.00004% | B/1 | 6.72E-09 | 6.20E-10 | 0.0000% | B/1 | 0.00 | 0.00 |
| ke Dryer Baghouse (pt) | 0.21 | 5.04E-03 | 1.08E-03 | 1.45E-04 | 0.0000% | B/1 | 0.00 | 0.00 | 0.0010% | B/1 | 1.12E-08 | 1.49E-09 | 0.00004% | B/1 | 4.54E-10 | 6.08E-11 | 0.0000% | B/1 | 0.00 | 0.00 |
| ke Dryer Baghouse (fug) | 0.54 | 1.33E-02 | 2.85E-03 | 3.82E-04 | 0.0000% | B/1 | 0.00 | 0.00 | 0.0010% | B/1 | 2.94E-08 | 3.93E-09 | 0.00004% | B/1 | 1.20E-09 | 1.60E-10 | 0.0000% | B/1 | 0.00 | 0.00 |
| um mixer Baghouse (pt) | 9.78 | 0.54 | 5.13E-02 | 1.56E-02 | | F | 0.00 | 0.00 | | F | 0.00 | 0.00 | | F | 0.00 | 0.00 | | F | 0.00 | 0.00 |
| um mixer Baghouse (fug) | 62.48 | 3.47 | 0.33 | 0.10 | | F | 0.00 | 0.00 | | F | 0.00 | 0.00 | | F | 0.00 | 0.00 | | F | 0.00 | 0.00 |
| g Crushing | 417.89 | 24.52 | 2.19 | 0.71 | 0.056% | B/1 | 1.23E-03 | 3.97E-04 | 0.009% | B/1 | 2.01E-04 | 6.45E-05 | 0.00003% | B/1 | 7.12E-07 | 2.29E-07 | 0.076% | B/1 | 1.68E-03 | 5.39E-04 |
| ke Plant | 69.43 | 8.96 | 0.36 | 0.26 | 0.0000% | B/1 | 0.00 | 0.00 | 0.0010% | B/1 | 3.75E-06 | 2.65E-06 | 0.00004% | B/1 | 0.00 | 0.00 | 0.0000% | B/1 | 0.00 | 0.00 |
| phalt Plant | 567.00 | 11.01 | 2.98 | 0.32 | | F | 0.00 | 0.00 | | F | 0.00 | 0.00 | | F | 0.00 | 0.00 | | F | 0.00 | 0.00 |
| paved Roads | 118.18 | 9.28 | 0.62 | 0.27 | 0.0000% | B/1 | 0.00 | 0.00 | 0.0000% | B/1 | 0.00 | 0.00 | 0.00003% | B/2 | 2.01E-07 | 8.66E-08 | 0.0000% | B/1 | 0.00 | 0.00 |
| ved Roads | 35.78 | 3.76 | 0.19 | 0.11 | 0.0000% | B/1 | 0.00 | 0.00 | 0.0000% | B/1 | 0.00 | 0.00 | 0.00003% | B/2 | 6.10E-08 | 3.51E-08 | 0.0152% | B/1 | 2.85E-05 | 1.64E-05 |
| phalt Hot Plant | 4.37 | 0.39 | 0.02 | 1.13E-02 | | F | 0.00 | 0.00 | | F | 0.00 | 0.00 | | F | 0.00 | 0.00 | | F | 0.00 | 0.00 |
| ke Plant Stockpile | 13.63 | 1.12 | 0.07 | 0.03 | 0.0000% | B/1 | 0.00 | 0.00 | 0.0010% | B/1 | 7.36E-07 | 3.31E-07 | 0.00004% | B/1 | 3.00E-08 | 1.35E-08 | 0.0000% | B/1 | 0.00 | 0.00 |
| g Crusher | 41.06 | 3.45 | 0.22 | 0.10 | 0.056% | B/1 | 1.21E-04 | 5.58E-05 | 0.009% | B/1 | 1.97E-05 | 9.07E-06 | 0.00003% | B/1 | 7.00E-08 | 3.22E-08 | 0.076% | B/1 | 1.65E-04 | 7.57E-05 |
| tals | 1344.28 | 66.58 | 7.06 | 1.92 | | Total (g/s) | 1.36E-03 | 4.53E-04 | | Total (g/s) | 2.25E-04 | 7.66E-05 | | Total (g/s) | 1.24E-06 | 5.05E-07 | | Total (g/s) | 1.87E-03 | 6.31E-04 |
| | Notes: | | | | | Total (lb/dy, ton/yr) | 0.26 | 1.57E-02 | | Total (lb/dy, ton/yr) | 0.04 | 2.66E-03 | | Total (lb/dy, ton/yr) | 2.36E-04 | 1.76E-05 | | Total (lb/dy, ton/yr) | 0.36 | 2.19E-02 |
| | Data source | | | | | Point | 0.00 | 0.00 | | Point | 0.00 | 0.00 | | Point | 4.51E-07 | 8.25E-09 | | Point | 0.00 | 0.00 |
| | Negligible Emissions (No emissions assumed | | | NE | | Fugitive | 0.00 | 0.00 | | Fugitive | 0.00 | 0.00 | | Fugitive | 1.51E-06 | 2.71E-08 | | Fugitive | 0.00 | 0.00 |
| | Pacific Northwest Speciation Profiles | | | A | | Area | 2.35E-01 | 1.38E-02 | | Area | 3.89E-02 | 2.33E-03 | | Area | 1.65E-04 | 1.17E-05 | | Area | 3.19E-01 | 1.87E-02 |
| | Source test results | | | B | | Roads | 0.00 | 0.00 | | Roads | 0.00 | 0.00 | | Roads | 5.00E-05 | 4.23E-06 | | Roads | 5.44E-03 | 5.71E-04 |
| | Chemical Analysis of Material Handled | | | C | | Stockpiles | 2.31E-02 | 1.94E-03 | | Stockpiles | 3.90E-03 | 3.27E-04 | | Stockpiles | 1.90E-05 | 1.59E-06 | | Stockpiles | 3.14E-02 | 2.63E-03 |
| | Engineering Assumption | | | D | | | | | | | | | | | | | | | | |
| | SARA Title III Inventory | | | E | | Confidence | 1 | High | | 3 | Medium | | | | | | | | | |
| | No Data For Estimating | | | F | | | 2 | Medium High | | 4 | Low | | | | | | | | | |

| | PM10 | | | | Antimony | | Arsenic | | Beryllium | | Cadmium | |
|---|---|---|---|---|---|---|---|---|---|---|---|---|
| g 1 | 49.63 | 4.18 | 0.26 | 0.12 | 8.17E-05 | 3.75E-05 | 1.33E-05 | 6.10E-06 | 8.45E-08 | 3.90E-08 | 1.15E-04 | 5.33E-05 |
| 2 | 35.42 | 2.99 | 0.19 | 0.09 | 3.97E-05 | 1.82E-05 | 6.45E-06 | 2.96E-06 | 6.03E-08 | 2.79E-08 | 5.79E-05 | 2.71E-05 |
| | 439.89 | 26.38 | 2.31 | 0.76 | 1.23E-03 | 3.97E-04 | 2.01E-04 | 6.45E-05 | 7.49E-07 | 2.46E-07 | 1.68E-03 | 5.41E-04 |
| ke 1 | 35.63 | 2.98 | 0.19 | 0.09 | 0.00 | 0.00 | 0.00 | 0.00 | 6.75E-08 | 3.09E-08 | 4.08E-06 | 2.35E-06 |
| ke 2 | 95.03 | 10.89 | 0.50 | 0.31 | 0.00 | 0.00 | 0.00 | 0.00 | 1.98E-07 | 1.26E-07 | 4.08E-06 | 2.35E-06 |
| phalt 1 | 651.48 | 16.34 | 3.42 | 0.47 | 0.00 | 0.00 | 0.00 | 0.00 | 3.75E-08 | 1.74E-08 | 4.08E-06 | 2.35E-06 |
| phalt 2 | 26.36 | 2.25 | 0.14 | 0.06 | 0.00 | 0.00 | 0.00 | 0.00 | 3.75E-08 | 1.74E-08 | 4.08E-06 | 2.35E-06 |

missions Calculations
or Bannock Paving Co.
articulate Metals

| SOURCES | Cr in PM10 | Data Source/ Confidence | Chromium Daily (g/s) | Chromium Annual (g/s) | Pb in PM10 | Data Source/ Confidence | Lead Daily (g/s) | Lead Annual (g/s) | Ni in PM10 | Data Source/ Confidence | Nickel Daily (g/s) | Nickel Annual (g/s) | Si in PM10 | Data Source/ Confidence | Silica Daily (g/s) | Silica Annual (g/s) | Phosphorus in PM10 | Data Source/ Confidence | Phosphorus Daily (g/s) | Phosphorus Annual (g/s) | Fluoride in TSP | Data Source/ Confidence | Fluoride Daily (g/s) | Fluoride Annual (g/s) |
|---|---|---|---|---|---|---|---|---|---|---|---|---|---|---|---|---|---|---|---|---|---|---|---|---|
| ke Dryer Scrubber (pt) | 0.0282% | B/1 | 1.29E-06 | 1.19E-07 | 0.0026% | B/1 | 1.21E-07 | 1.11E-08 | 0.0146% | B/1 | 6.67E-07 | 6.15E-08 | 2.2960% | B/1 | 1.05E-04 | 9.68E-06 | 0.1639% | B/1 | 7.49E-06 | 6.91E-07 | NE | B/1 | 0.00 | 0.00 |
| ke Dryer Scrubber (fug) | 0.0282% | B/1 | 4.53E-06 | 4.18E-07 | 0.0026% | B/1 | 4.23E-07 | 3.90E-08 | 0.0146% | B/1 | 2.34E-06 | 2.16E-07 | 2.2960% | B/1 | 3.68E-04 | 3.40E-05 | 0.1639% | B/1 | 2.63E-05 | 2.42E-06 | NE | B/1 | 0.00 | 0.00 |
| oke Dryer Baghouse (pt) | 0.0282% | B/1 | 3.06E-07 | 4.10E-08 | 0.0026% | B/1 | 2.86E-08 | 3.83E-09 | 0.0146% | B/1 | 1.58E-07 | 2.12E-08 | 2.2960% | B/1 | 2.49E-05 | 3.33E-06 | 0.1639% | B/1 | 1.78E-06 | 2.38E-07 | NE | B/1 | 0.00 | 0.00 |
| oke Dryer Baghouse (fug) | 0.0282% | B/1 | 8.06E-07 | 1.08E-07 | 0.0026% | B/1 | 7.53E-08 | 1.01E-08 | 0.0146% | B/1 | 4.17E-07 | 5.58E-08 | 2.2960% | B/1 | 6.55E-05 | 8.77E-06 | 0.1639% | B/1 | 4.68E-06 | 6.26E-07 | NE | B/1 | 0.00 | 0.00 |
| rum mixer Baghouse (pt) | | F | 0.00 | 0.00 | | F | 0.00 | 0.00 | | F | 0.00 | 0.00 | | F | 0.00 | 0.00 | | F | 0.00 | 0.00 | | F | 0.00 | 0.00 |
| rum mixer Baghouse (fug) | | F | 0.00 | 0.00 | | F | 0.00 | 0.00 | | F | 0.00 | 0.00 | | F | 0.00 | 0.00 | | F | 0.00 | 0.00 | | F | 0.00 | 0.00 |
| lag Crushing | 0.080% | B/1 | 1.75E-03 | 5.64E-04 | 0.016% | B/1 | 3.49E-04 | 1.12E-04 | 0.013% | B/1 | 2.95E-04 | 9.50E-05 | 20.42% | B/1 | 0.45 | 0.14 | 2.09% | B/1 | 4.59E-02 | 1.48E-02 | 2.09% | B/1 | 1.00E-01 | 3.22E-02 |
| ake Plant | 0.0282% | B/1 | 1.03E-04 | 7.28E-05 | 0.0026% | B/1 | 9.61E-06 | 6.80E-06 | 0.0146% | B/1 | 5.32E-05 | 3.76E-05 | 2.2960% | B/1 | 8.37E-03 | 5.92E-03 | 0.1639% | B/1 | 5.97E-04 | 4.22E-04 | NE | B/1 | 0.00 | 0.00 |
| sphalt Plant | | F | 0.00 | 0.00 | | F | 0.00 | 0.00 | | F | 0.00 | 0.00 | | F | 0.00 | 0.00 | | F | 0.00 | 0.00 | | F | 0.00 | 0.00 |
| npaved Roads | 0.0845% | B/1 | 5.24E-04 | 2.26E-04 | 0.0000% | B/1 | 0.00 | 0.00 | 0.0136% | B/1 | 8.44E-05 | 3.63E-05 | 16.85% | B/1 | 0.10 | 0.04 | 1.25% | B/1 | 7.77E-03 | 3.34E-03 | 2.09% | D/3 | 2.88E-02 | 1.24E-02 |
| ved Roads | 0.0414% | B/1 | 7.78E-05 | 4.48E-05 | 0.0076% | B/1 | 1.44E-05 | 8.27E-06 | 0.0086% | B/1 | 1.62E-05 | 9.32E-06 | 18.55% | B/1 | 0.03 | 0.02 | 1.16% | B/1 | 2.17E-03 | 1.25E-03 | 2.09% | D/3 | 4.50E-03 | 2.56E-03 |
| sphalt Hot Plant | | F | 0.00 | 0.00 | | F | 0.00 | 0.00 | | F | 0.00 | 0.00 | | F | 0.00 | 0.00 | | F | 0.00 | 0.00 | | F | 0.00 | 0.00 |
| oke Plant Stockpile | 0.0282% | B/1 | 2.02E-05 | 9.09E-06 | 0.0026% | B/1 | 1.89E-06 | 8.49E-07 | 0.0146% | B/1 | 1.04E-05 | 4.70E-06 | 2.2960% | B/1 | 1.64E-03 | 7.39E-04 | 0.1639% | B/1 | 1.17E-04 | 5.28E-05 | NE | B/1 | 0.00 | 0.00 |
| lag Crusher | 0.080% | B/1 | 1.72E-04 | 7.92E-05 | 0.016% | B/1 | 3.43E-05 | 1.58E-05 | 0.013% | B/1 | 2.90E-05 | 1.34E-05 | 20.42% | B/1 | 4.40E-02 | 2.02E-02 | 2.09% | B/1 | 4.51E-03 | 2.07E-03 | 2.09% | B/1 | 9.44E-03 | 4.31E-03 |
| otals | | Total (g/s) | 2.66E-03 | 9.96E-04 | | Total (g/s) | 4.10E-04 | 1.44E-04 | | Total (g/s) | 4.92E-04 | 1.97E-04 | | Total (g/s) | 0.64 | 0.24 | | Total (g/s) | 6.11E-02 | 2.19E-02 | | Total (g/s) | 1.43E-01 | 5.14E-02 |
| | | Total (lb/dy, ton/yr) | 0.51 | 0.03 | | Total (lb/dy, ton/yr) | 0.08 | 5.01E-03 | | Total (lb/dy, ton/yr) | 0.09 | 6.84E-03 | | Total (lb/dy, ton/yr) | 122.28 | 8.21 | | Total (lb/dy, ton/yr) | 11.64 | 0.76 | | Total (lb/dy, ton/yr) | 27.20 | 1.79 |
| | | Point | 3.04E-04 | 5.56E-06 | | Point | 0.00 | 0.00 | | Point | 1.57E-04 | 2.88E-06 | | Point | 0.02 | 0.00 | | Point | 0.00 | 0.00 | | Point | 0.00 | 0.00 |
| | | Fugitive | 1.02E-03 | 1.83E-05 | | Fugitive | 0.00 | 0.00 | | Fugitive | 5.25E-04 | 9.44E-06 | | Fugitive | 0.08 | 0.00 | | Fugitive | 0.01 | 0.00 | | Fugitive | 0.00 | 0.00 |
| | | Area | 3.54E-01 | 2.21E-02 | | Area | 6.84E-02 | 4.14E-03 | | Area | 6.64E-02 | 4.61E-03 | | Area | 86.93 | 5.21 | | Area | 8.85 | 0.53 | | Area | 19.06 | 1.12 |
| | | Roads | 1.15E-01 | 9.40E-03 | | Roads | 2.73E-03 | 2.87E-04 | | Roads | 1.92E-02 | 1.59E-03 | | Roads | 26.55 | 2.26 | | Roads | 1.89 | 0.16 | | Roads | 6.35 | 0.52 |
| | | Stockpiles | 3.67E-02 | 3.07E-03 | | Stockpiles | 6.90E-03 | 5.78E-04 | | Stockpiles | 7.52E-03 | 6.28E-04 | | Stockpiles | 8.70 | 0.73 | | Stockpiles | 0.88 | 0.07 | | Stockpiles | 1.80 | 0.15 |

| | Chromium | | | Lead | | | Nickel | | | Silica | | | Phosphorus | | | Fluoride | | |
|---|---|---|---|---|---|---|---|---|---|---|---|---|---|---|---|---|---|---|
| g 1 | | 2.02E-04 | 9.19E-05 | | 2.52E-05 | 1.18E-05 | | 3.39E-05 | 1.55E-05 | | 4.95E-02 | 2.29E-02 | | 4.45E-03 | 2.05E-03 | | 1.11E-02 | 5.04E-03 |
| g 2 | | 1.42E-04 | 6.45E-05 | | 1.33E-05 | 6.34E-06 | | 2.39E-05 | 1.09E-05 | | 3.43E-02 | 1.59E-02 | | 2.89E-03 | 1.33E-03 | | 7.85E-03 | 3.55E-03 |
| g 3 | | 1.84E-03 | 6.02E-04 | | 3.52E-04 | 1.14E-04 | | 3.10E-04 | 1.02E-04 | | 4.68E-01 | 1.53E-01 | | 4.73E-02 | 1.54E-02 | | 1.05E-01 | 3.43E-02 |
| ke 1 | | 1.06E-04 | 4.77E-05 | | 3.94E-06 | 2.03E-06 | | 2.48E-05 | 1.12E-05 | | 2.16E-02 | 1.00E-02 | | 1.54E-03 | 7.09E-04 | | 4.76E-03 | 2.14E-03 |
| ke 2 | | 1.94E-04 | 1.12E-04 | | 1.22E-05 | 8.03E-06 | | 7.03E-05 | 4.44E-05 | | 2.87E-02 | 1.53E-02 | | 2.05E-03 | 1.08E-03 | | 4.76E-03 | 2.14E-03 |
| phalt 1 | | 8.60E-05 | 3.86E-05 | | 2.05E-06 | 1.18E-06 | | 1.44E-05 | 6.52E-06 | | 1.99E-02 | 9.29E-03 | | 1.42E-03 | 6.56E-04 | | 4.76E-03 | 2.14E-03 |
| phalt 2 | | 8.60E-05 | 3.86E-05 | | 2.05E-06 | 1.18E-06 | | 1.44E-05 | 6.52E-06 | | 1.99E-02 | 9.29E-03 | | 1.42E-03 | 6.56E-04 | | 4.76E-03 | 2.14E-03 |

**Emissions Calculations for Bannock Paving Company**

| Radionuclides SOURCES | Source Type | Max. Daily PM10 (lbs/day) | Annual PM10 (Tons/yr) | Max. Daily PM10 (g/s) | Avg. Annual PM10 (g/s) | U-238 (pCi/g) | U-238 Max. (pCi/s) | U-238 Ann. (pCi/s) | U-234 (pCi/g) | U-234 Max. (pCi/s) | U-234 Ann. (pCi/s) | U-235 (pCi/g) | U-235 Max. (pCi/s) | U-235 Ann. (pCi/s) | Th-230 (pCi/g) | Th-230 Max. (pCi/s) | Th-230 Ann. (pCi/s) | Ra-226 (pCi/g) | Ra-226 Max. (pCi/s) | Ra-226 Ann. (pCi/s) |
|---|---|---|---|---|---|---|---|---|---|---|---|---|---|---|---|---|---|---|---|---|
| Coke Dryer Scrubber (pt) | point | 0.87 | 1.47E-02 | 4.57E-03 | 4.21E-04 | 2.19 | 0.01 | 0.00 | 2.32 | 1.06E-02 | 9.79E-04 | 0.10 | 4.64E-04 | 4.28E-05 | 0.20 | 9.14E-04 | 8.43E-05 | 0.80 | 3.66E-03 | 3.37E-04 |
| Coke Dryer Scrubber (fug) | fugitive | 3.06 | 5.14E-02 | 1.60E-02 | 1.48E-03 | 2.19 | 3.51E-02 | 3.24E-03 | 2.32 | 3.72E-02 | 3.43E-03 | 0.10 | 1.63E-03 | 1.50E-04 | 0.20 | 3.21E-03 | 2.96E-04 | 0.80 | 1.28E-02 | 1.18E-03 |
| Coke Dryer Baghouse (pt) | point | 0.21 | 5.04E-03 | 1.08E-03 | 1.45E-04 | 2.19 | 0.00 | 0.00 | 2.32 | 2.52E-03 | 3.37E-04 | 0.10 | 1.10E-04 | 1.47E-05 | 0.20 | 2.17E-04 | 2.90E-05 | 0.80 | 8.68E-04 | 1.16E-04 |
| Coke Dryer Baghouse (fug) | fugitive | 0.54 | 1.33E-02 | 2.85E-03 | 3.82E-04 | 2.19 | 6.24E-03 | 8.36E-04 | 2.32 | 6.63E-03 | 8.87E-04 | 0.10 | 2.90E-04 | 3.88E-05 | 0.20 | 5.71E-04 | 7.64E-05 | 0.80 | 2.28E-03 | 3.06E-04 |
| Drum mixer Baghouse (pt) | point | 9.78 | 0.54 | 5.13E-02 | 1.56E-02 | | 0.00 | 0.00 | | 0.00 | 0.00 | | 0.00 | 0.00 | | 0.00 | 0.00 | | 0.00 | 0.00 |
| Drum mixer Baghouse (fug) | fugitive | 62.48 | 3.47 | 0.33 | 0.10 | | 0.00 | 0.00 | | 0.00 | 0.00 | | 0.00 | 0.00 | | 0.00 | 0.00 | | 0.00 | 0.00 |
| Slag Crushing | area | 417.89 | 24.52 | 2.19 | 0.71 | 12.73 | 27.92 | 8.98 | 13.51 | 29.63 | 9.53 | 0.59 | 1.30 | 0.42 | 13.63 | 29.90 | 9.61 | 22.30 | 48.92 | 15.73 |
| Coke Plant | area | 69.43 | 8.96 | 0.36 | 0.26 | 2.19 | 0.80 | 0.56 | 2.32 | 0.85 | 0.60 | 0.10 | 0.04 | 0.03 | ND | 0.00 | 0.00 | ND | 0.00 | 0.00 |
| Asphalt Plant | area | 567.00 | 11.01 | 2.98 | 0.32 | | 0.00 | 0.00 | | 0.00 | 0.00 | | 0.00 | 0.00 | | 0.00 | 0.00 | | 0.00 | 0.00 |
| Unpaved Roads | area | 118.18 | 9.28 | 0.62 | 0.27 | 12.73 | 7.90 | 3.40 | 13.51 | 8.38 | 3.61 | 0.59 | 0.37 | 0.16 | 0.59 | 0.37 | 0.16 | 22.30 | 13.84 | 5.95 |
| Paved Roads | area | 35.78 | 3.76 | 0.19 | 0.11 | 12.73 | 2.39 | 1.38 | 13.51 | 2.54 | 1.46 | 0.59 | 0.11 | 0.06 | 0.59 | 0.11 | 0.06 | 22.30 | 4.19 | 2.41 |
| Asphalt Hot Plant | area | 4.37 | 0.39 | 0.02 | 0.01 | | 0.00 | 0.00 | | 0.00 | 0.00 | | 0.00 | 0.00 | | 0.00 | 0.00 | | 0.00 | 0.00 |
| Coke Plant | area | 13.63 | 1.12 | 0.07 | 0.03 | 2.19 | 1.57E-01 | 7.04E-02 | 2.32 | 1.66E-01 | 7.48E-02 | 0.10 | 7.27E-03 | 3.27E-03 | 0.20 | 1.43E-02 | 6.44E-03 | 0.80 | 5.72E-02 | 2.58E-02 |
| Slag Crusher | area | 41.06 | 3.45 | 0.22 | 0.10 | 12.73 | 2.74 | 1.26 | 13.51 | 2.91 | 1.34 | 0.59 | 0.13 | 0.06 | 13.63 | 2.94 | 1.35 | 22.30 | 4.81 | 2.21 |
| Totals | | 1344.28 | 66.58 | 7.06 | 1.92 | | Ci/day | Ci/yr | | Ci/day | Ci/yr | | Ci/day | Ci/yr | | Ci/day | Ci/yr | | Ci/day | Ci/yr |
| | | | | | | Point | 1.07E-09 | 3.91E-08 | Point | 1.13E-09 | 4.15E-08 | Point | 4.96E-11 | 1.81E-09 | Point | 9.77E-11 | 3.57E-09 | Point | 3.91E-10 | 1.43E-08 |
| | | | | | | Fugitive | 3.57E-09 | 1.28E-07 | Fugitive | 3.79E-09 | 1.36E-07 | Fugitive | 1.66E-10 | 5.96E-09 | Fugitive | 3.26E-10 | 1.17E-08 | Fugitive | 1.31E-09 | 4.69E-08 |
| | | | | | | Area | 2.48E-06 | 3.01E-04 | Area | 2.63E-06 | 3.19E-04 | Area | 1.15E-07 | 1.40E-05 | Area | 2.58E-06 | 3.03E-04 | Area | 4.23E-06 | 4.96E-04 |
| | | | | | | Roads | 8.89E-07 | 1.51E-04 | Roads | 9.43E-07 | 1.60E-04 | Roads | 4.13E-08 | 6.99E-06 | Roads | 4.13E-08 | 6.99E-06 | Roads | 1.56E-06 | 2.64E-04 |
| | | | | | | Stockpiles | 2.51E-07 | 4.20E-05 | Stockpiles | 2.66E-07 | 4.46E-05 | Stockpiles | 1.16E-08 | 1.95E-06 | Stockpiles | 2.55E-07 | 4.28E-05 | Stockpiles | 4.20E-07 | 7.05E-05 |

| | | PM10 | | | | U-238 | | | U-234 | | | U-235 | | | Th-230 | | | Ra-226 | | |
|---|---|---|---|---|---|---|---|---|---|---|---|---|---|---|---|---|---|---|---|---|
| Slag 1 | area | 49.63 | 4.18 | 0.26 | 0.12 | 12.20 | 3.32 | 1.53 | 12.95 | 3.52 | 1.62 | 0.57 | 0.15 | 0.07 | 9.34 | 2.05 | 0.94 | 21.38 | 5.81 | 2.68 |
| Slag 2 | area | 35.42 | 2.99 | 0.19 | 0.09 | 7.80 | 2.37 | 1.09 | 8.28 | 2.51 | 1.16 | 0.36 | 0.11 | 0.05 | 4.63 | 1.03 | 0.47 | 13.66 | 4.15 | 1.92 |
| Slag 3 | area | 439.89 | 26.38 | 2.31 | 0.76 | 16.36 | 29.39 | 9.66 | 17.36 | 31.19 | 10.25 | 0.76 | 1.36 | 0.45 | 13.80 | 29.97 | 9.65 | 28.67 | 51.50 | 16.93 |
| Coke 1 | area | 35.63 | 2.98 | 0.19 | 0.09 | 5.82 | 1.63 | 0.75 | 6.18 | 1.73 | 0.80 | 0.27 | 0.08 | 0.03 | 0.37 | 0.08 | 0.04 | 7.17 | 2.63 | 1.22 |
| Coke 2 | area | 95.03 | 10.89 | 0.50 | 0.31 | 10.20 | 2.31 | 1.25 | 10.83 | 2.45 | 1.33 | 0.47 | 0.11 | 0.06 | 0.57 | 0.07 | 0.03 | 7.97 | 2.59 | 1.20 |
| Asphalt 1 | area | 651.48 | 16.34 | 3.42 | 0.47 | 3.64 | 1.47 | 0.68 | 3.86 | 1.56 | 0.72 | 0.17 | 0.07 | 0.03 | 0.17 | 0.07 | 0.03 | 6.37 | 2.57 | 1.19 |
| Asphalt 2 | area | 26.36 | 2.25 | 0.14 | 0.06 | 3.64 | 1.47 | 0.68 | 3.86 | 1.56 | 0.72 | 0.17 | 0.07 | 0.03 | 0.17 | 0.07 | 0.03 | 6.37 | 2.57 | 1.19 |

**Emissions Calculations for Bannock Paving Company**

| Radionuclides | Pb-210 | | | Po-210 | | | Th-232 | | | Ra-228 | | | Total Rads | |
|---|---|---|---|---|---|---|---|---|---|---|---|---|---|---|
| | | Max. | Ann. | | Max. | Ann. | | Max. | Ann. | | Max. | Ann. | Max. | Annual |
| SOURCES | (pCi/g) | (pCi/s) | (pCi/s) | (pCi/g) | (pCi/s) | (pCi/s) | (pCi/g) | (pCi/s) | (pCi/s) | (pCi/g) | (pCi/s) | (pCi/s) | Ci/yr | Ci/yr |
| Coke Dryer Scrubber (pt) | 2.40 | 1.10E-02 | 1.01E-03 | 1.30 | 5.94E-03 | 5.48E-04 | ND | 0.00 | 0.00 | ND | 0.00 | 0.00 | 1.34E-06 | 1.24E-07 |
| Coke Dryer Scrubber (fug) | 2.40 | 3.85E-02 | 3.55E-03 | 1.30 | 2.09E-02 | 1.92E-03 | ND | 0.00 | 0.00 | ND | 0.00 | 0.00 | 4.71E-06 | 4.34E-07 |
| Coke Dryer Baghouse (pt) | 2.40 | 2.60E-03 | 3.48E-04 | 1.30 | 1.41E-03 | 1.89E-04 | ND | 0.00 | 0.00 | ND | 0.00 | 0.00 | 3.18E-07 | 4.26E-08 |
| Coke Dryer Baghouse (fug) | 2.40 | 6.85E-03 | 9.17E-04 | 1.30 | 3.71E-03 | 4.96E-04 | ND | 0.00 | 0.00 | ND | 0.00 | 0.00 | 8.38E-07 | 1.12E-07 |
| Drum mixer Baghouse (pt) | | 0.00 | 0.00 | | 0.00 | 0.00 | | | | | | | 0.00 | 0.00 |
| Drum mixer Baghouse (fug) | | 0.00 | 0.00 | | 0.00 | 0.00 | | | | | | | 0.00 | 0.00 |
| Slag Crushing | 86.44 | 189.64 | 60.98 | 70.90 | 155.55 | 50.01 | 3.65 | 8.01 | 2.57 | 3.65 | 8.01 | 2.57 | 1.57E-02 | 5.06E-03 |
| Coke Plant | 37.70 | 13.74 | 9.72 | ND | 0.00 | 0.00 | ND | 0.00 | 0.00 | ND | 0.00 | 0.00 | 4.86E-04 | 3.44E-04 |
| Asphalt Plant | | 0.00 | 0.00 | | 0.00 | 0.00 | | | | | | | 0.00 | 0.00 |
| Unpaved Roads | 86.44 | 53.63 | 23.07 | 70.90 | 43.99 | 18.92 | 3.65 | 2.26 | 0.97 | 3.65 | 2.26 | 0.97 | 4.19E-03 | 1.80E-03 |
| Paved Roads | 86.44 | 16.24 | 9.35 | 70.90 | 13.32 | 7.67 | 3.65 | 0.69 | 0.39 | 3.65 | 0.69 | 0.39 | 1.27E-03 | 7.31E-04 |
| Asphalt Hot Plant | | 0.00 | 0.00 | | 0.00 | 0.00 | | | | | | | 0.00 | 0.00 |
| Coke Plant | 2.40 | 0.17 | 0.08 | 1.30 | 9.30E-02 | 4.19E-02 | ND | 0.00 | 0.00 | ND | 0.00 | 0.00 | 2.10E-05 | 9.45E-06 |
| Slag Crusher | 86.44 | 18.63 | 8.57 | 70.90 | 15.28 | 7.03 | 3.65 | 0.79 | 0.36 | 3.65 | 0.79 | 0.36 | 1.55E-03 | 7.11E-04 |
| Totals | | Ci/day | Ci/yr | | Ci/day | Ci/yr | | Ci/day | Ci/yr | | Ci/day | Ci/yr | Ci/day | Ci/yr |
| | Point | 1.17E-09 | 4.29E-08 | Point | 6.35E-10 | 2.32E-08 | Point | 0.00 | 0.00 | Point | 0.00 | 0.00 | 1.43E-13 | 5.25E-12 |
| | Fugitive | 3.92E-09 | 1.41E-07 | Fugitive | 2.12E-09 | 7.63E-08 | Fugitive | 0.00 | 0.00 | Fugitive | 0.00 | 0.00 | 4.79E-13 | 1.72E-11 |
| | Area | 1.76E-05 | 2.23E-03 | Area | 1.34E-05 | 1.58E-03 | Area | 6.92E-07 | 8.12E-05 | Area | 6.92E-07 | 8.12E-05 | 1.40E-09 | 1.70E-07 |
| | Roads | 6.04E-06 | 1.02E-03 | Roads | 4.95E-06 | 8.39E-04 | Roads | 2.55E-07 | 4.32E-05 | Roads | 2.55E-07 | 4.32E-05 | 4.72E-10 | 8.00E-08 |
| | Stockpiles | 1.62E-06 | 2.73E-04 | Stockpiles | 1.33E-06 | 2.23E-04 | Stockpiles | 6.80E-08 | 1.14E-05 | Stockpiles | 6.80E-08 | 1.14E-05 | 1.35E-10 | 2.27E-08 |

| | Pb-210 | | | Po-210 | | | Th-232 | | | Ra-228 | | |
|---|---|---|---|---|---|---|---|---|---|---|---|---|
| Slag 1 | 82.87 | 22.52 | 10.40 | 67.97 | 18.47 | 8.53 | 3.50 | 0.95 | 0.44 | 3.50 | 0.95 | 0.44 |
| Slag 2 | 52.96 | 16.07 | 7.43 | 43.44 | 13.18 | 6.10 | 2.24 | 0.68 | 0.31 | 2.24 | 0.68 | 0.31 |
| Slag 3 | 111.14 | 199.62 | 65.61 | 91.16 | 163.73 | 53.81 | 4.69 | 8.43 | 2.77 | 4.69 | 8.43 | 2.77 |
| Coke 1 | 27.10 | 10.15 | 4.71 | 21.56 | 8.28 | 3.84 | 1.04 | 0.42 | 0.20 | 1.04 | 0.42 | 0.20 |
| Coke 2 | 67.20 | 23.77 | 14.35 | 22.86 | 8.21 | 3.80 | 1.04 | 0.42 | 0.20 | 1.04 | 0.42 | 0.20 |
| Asphalt 1 | 24.70 | 9.98 | 4.63 | 20.26 | 8.19 | 3.80 | 1.04 | 0.42 | 0.20 | 1.04 | 0.42 | 0.20 |
| Asphalt 2 | 24.70 | 9.98 | 4.63 | 20.26 | 8.19 | 3.80 | 1.04 | 0.42 | 0.20 | 1.04 | 0.42 | 0.20 |