PHASE II ENVIRONMENTAL SITE ASSESSMENT

MICHIGAN MEADOWS APARTMENTS
3800 WEST MICHIGAN STREET
INDIANAPOLIS, INDIANA
MUNDELL PROJECT NO. M01046

#6061202

Prepared for:

Mr. Daniel P. McInerny, Esq.
Bose McKinney & Evans LLP
2700 First Indiana Plaza
135 North Pennsylvania Street
Indianapolis, Indiana 46204

May 5, 2005

Prepared by:

MUNDELL & ASSOCIATES, INC.
429 East Vermont Street, Suite 200
Indianapolis, Indiana 46202-3688
317-630-9060, fax 317-630-9065
http://www.MundellAssociates.com

ANY UNAUTHORIZED DISSEMINATION OR REUSE OF THIS DOCUMENT WILL BE AT THE USER'S SOLE RISK AND WITH THE CONDITION THAT MUNDELL & ASSOCIATES, INC. BE HELD HARMLESS FROM ANY AND ALL CLAIMS FOR LOSSES OR DAMAGES AND EXPENSES ARISING OUT OF OR RESULTING FROM SUCH UNAUTHORIZED DISCLOSURE OR REUSE.

MUNDELL & ASSOCIATES, INC.

429 East Vermont Street, Suite 200, Indianapolis, Indiana 46202-3688
Phone: 317-630-9060, Fax: 317-630-9065, email: info@MundellAssociates.com

May 5, 2005

Mr. William Wieringa
Project Manager
Office of Land Quality
Indiana Department of Environmental Management
North Senate Avenue
P.O. Box 6015
Indianapolis, Indiana 46206-6015

Re: Phase II Environmental Site Assessment
Michigan Meadows Apartments
3800 West Michigan Street
Indianapolis, Indiana
MUNDELL Project No. M01046

Dear Mr. Wieringa:

MUNDELL & ASSOCIATES, INC. (MUNDELL) on behalf of AIMCO, Inc. is hereby submitting the *Phase II Environmental Site Assessment* report for the above referenced Site. The investigation was performed to further delineate the severity and extent of volatile organic compound impacts to groundwater beneath the site, and to aid in determining the likely source of those impacts.

If you have questions about information in this report, please contact MUNDELL at (317) 630-9060.

Sincerely,
MUNDELL & ASSOCIATES, INC.

Leena Lothe
Staff Environmental Engineer

John A. Mundell, P.E., L.P.G.
President/Senior Environmental Consultant

jam/lal

cc: Mr. Jerry O'Callaghan, IDEM
Mr. Stephen Evanoff, AIMCO

Attachment: *Phase II Environmental Site Assessment*

MUNDELL & ASSOCIATES, INC.

429 East Vermont Street, Suite 200, Indianapolis, Indiana 46202-3688
Phone: 317-630-9060, Fax: 317-630-9065, email: info@MundellAssociates.com

May 5, 2005

Mr. Daniel P. McInerny, Esq.
Bose McKinney & Evans LLP
2700 First Indiana Plaza
135 North Pennsylvania Street
INDIANAPOLIS, INDIANA 46204

Re: Phase II Environmental Site Assessment
Michigan Meadows Apartments
3800 West Michigan Street
Indianapolis, Indiana
MUNDELL Project No. M01046

Dear Mr. McInerny:

MUNDELL & ASSOCIATES, INC. (MUNDELL) has completed the Phase II Environmental Site Assessment for the above-referenced Site per your request. This report, *Phase II Environmental Site Assessment*, documents the activities completed at the site from August 19th through August 27th, September 10th, and September 30th, 2004. These activities were performed to determine the presence of potential chemical impacts, if any, to soil and groundwater from surrounding potential contaminant sources.

We appreciate the opportunity to be of service to Bose McKinney & Evans LLP for this project and look forward to working with you on future assignments. In the meantime, if you have questions about information in this report or if we can be of further assistance, please contact MUNDELL at (317) 630-9060.

Sincerely,
MUNDELL & ASSOCIATES, INC.

Leena Eothe
Staff Environmental Engineer

John A. Mundell, P.E., L.P.G.
President/Senior Environmental Consultant

/lal

Attachment: *Phase II Environmental Site Assessment*

TABLE OF CONTENTS

1.0 INTRODUCTION 1
1.1 PREVIOUS INVESTIGATIONS 1
1.1.1 GM AGT Plant 10 Soil and Groundwater Impacts 2
1.1.2 MUNDELL's Review of Keramida March 2002 Phase II Investigation 2
1.1.3 Keramida October 2002 RWP and August 2004 RWP 3
1.1.4 MUNDELL's April 2003 Air Quality Study 4
1.1.5 MUNDELL's November 2003 Phase I Site Assessment 5
1.1.6 MUNDELL's August 2004 Phase II Investigation – Michigan Plaza 5
1.2 Areas of Concern at the Michigan Meadows Apartments 6
1.3 Scope of Work 6
1.3.1 2-D Electrical Resistivity Survey 7
1.3.2 Northern Property Line Investigation 7
1.3.3 Additional Property Investigation 7
1.3.4 Air Monitoring Program 7
1.3.5 Little Eagle Creek Sampling 7

2.0 FIELD INVESTIGATIONS 8
2.1 Two-Dimension Resistivity Imaging Geophysical Survey 8
2.1.1 Relationship Between Lithology and Resistivity 8
2.1.2 Two-Dimensional Resistivity Imaging Method 9
2.1.3 Two-Dimensional Resistivity Imaging Results, Findings, and Interpretation 10
2.2 Hollow Stem Auger Soil Sampling 12
2.3 Installation of Monitoring Wells 13
2.4 Soil Analysis 13
2.5 Groundwater Sample Collection and Analysis 14
2.6 Little Eagle Creek Sampling 14
2.7 MUNDELL October 2004 Air Quality Investigation 15

3.0 RESULTS 16
3.1 Geologic Findings 16
3.1.1 Regional Geology 16
3.1.2 Near-surface Soil Characteristics 16
3.1.3 Site Geology 17
3.2 Hydrogeologic Findings 18
3.2.1 Regional Hydrogeology 18
3.3 Soil Analytical Results 18
3.4 Groundwater Analytical Results 19
3.5 Surface Water Sampling Results (Little Eagle Creek) 19
3.6 Indoor Air Sampling Results 20

4.0 CONCLUSIONS 21

5.0 LIMITATIONS 23

6.0 PROFESSIONAL CREDENTIALS 24

7.0 REFERENCES 25

FIGURES

Figure 1. Site Vicinity/Topographic Map
Figure 2. Site Plan
Figure 3. 2D Resistivity Profile
Figure 4. Soil Analytical Results
Figure 5. Groundwater Analytical Results
Figure 6. Surface Water Analytical Results

TABLES

Table 1. Monitoring Wells Survey Data
Table 2. Groundwater Sampling Information
Table 3. Soil Analytical Results
Table 4. Groundwater Analytical Results
Table 5. Surface Water Analytical Results

APPENDICES

Appendix A. 2D Resistivity Imaging Method – Technical Background
Appendix B. Soil Boring Logs
Appendix C. Monitoring Well Construction Diagrams
Appendix D Laboratory Certificates of Analysis
Appendix E: Little Eagle Creek Stream Gage Data - USGS

PHASE II ENVIRONMENTAL SITE ASSESSMENT
MICHIGAN MEADOWS APRTMENTS
3800 WEST MICHIGAN STREET
INDIANAPOLIS, INDIANA
MUNDELL PROJECT NO. M01046

1.0 INTRODUCTION

In August 2004, MUNDELL & ASSOCIATES, INC. (MUNDELL) performed a Phase II Environmental Site Assessment (ESA) of the Michigan Meadows Apartments property located at 3800 West Michigan Street in Indianapolis, Indiana (Site). The location of the Site is presented in **Figure 1**, Site Vicinity Map.

The Site is located in a mixed residential/commercial and industrial area on the southwest side of Indianapolis. The Michigan Meadows Apartments consist of 23 multi-story apartment buildings (a total of individual 253 units) and support structures (red brick) on approximately 13.7 acres of land. The complex includes a maintenance shop building, a swimming pool, a playground, asphalt-paved parking lots and driving areas. Records indicate that the buildings were constructed in three phases between 1962 and 1965, and there have been no additions to the buildings since their construction.

1.1 PREVIOUS INVESTIGATIONS

Environmental subsurface investigations conducted by a number of environmental consultants (*e.g.*, Engineering Science, Inc.; Fluor Daniel GTI, Keramida Environmental) since 1992 have disclosed volatile organic chemical (VOC) impacts to area groundwater from the operations of the location of the former General Motors Corporation Allison Gas Turbine Division (GM AGT) Plant 10 facility located due north of the Michigan Meadows Apartments across Little Eagle Creek. Groundwater sampling has indicated these impacts have apparently moved from this facility southward to the Site (see Section 7.0 for a list of report references). The former GM AGT has been entered into the IDEM Voluntary Remediation Program (VRP) by the Genuine Parts Company.

A company named BHT Corporation (BHT), the previous owner of the former GM AGT Plant 10 facility utilized trichloroethylene (TCE) and tetrachloroethylene (PCE) as a parts degreaser in their parts rebuilding operations from the 1950s to the 1970s. Prior to 1956, the property north of Michigan Meadows Apartments was vacant land. Between 1956 and 1973, BHT operated the facility for carburetor and brake re-manufacturing. General Motors purchased the property from BHT in 1973, and subsequently used it for

warehousing obsolete machines, tooling, and fixtures until the mid-1980s. The property became part of the GM AGT Division in 1973.

1.1.1 GM AGT Plant 10 Soil and Groundwater Impacts

Engineering Science, Inc. (ESI) conducted a *Phase I* at the GM AGT Plant 10 site (1992 and 1993), and the Plant 10 site was identified as a potential area of concern (PAOC). A follow-up assessment was conducted in November 1993, and was documented as *Phase II Assessment* Final Report for General Motors Corporation Allison Gas Turbine Division. Results of this investigation identified trichloroethene (TCE), vinyl chloride (VC), 1,2-dichloroethene (1,2-DCE), tetrachloroethene (PCE), toluene, and methylene chloride in the soil at the GM AGT Plant 10 facility. Compounds most frequently detected included TCE, 1,2-DCE, and VC.

OBG conducted a *Buyer Environmental Assessment* for the former GM AGT Plant 10 facility (the Plant) in March of 1994. VOCs detected in the subsurface soil were 1,2-DCE and TCE. VOCs detected in the groundwater were trans-1,2-DCE, cis-1,2-DCE and TCE. Between June 1995 and January 1997, Fluor Daniel GTI conducted additional investigation activities, which included installation, and monitoring of on-site and off-site wells, soil and groundwater collection via push probe methods, Little Eagle Creek stream gauging, surface water sampling, and slug testing. These results are documented in their *Feasibility Study Report* (June 1997) and *Remedial Investigation* report (September 1997).

As a part of the *Phase II* investigation for the *Remediation Work Plan (RWP)* (March 2002; October 2002), Keramida conducted off-site subsurface sampling for volatile organic chemicals (VOCs), including testing at 3800 to 3823 West Michigan Street and the surrounding areas. One soil boring, KB-17, located southwest of Building No. 1 on the Michigan Meadows Apartments Site, exhibited a PCE concentration of 0.19 mg/kg and a TCE concentration of 2.4 mg/kg above the groundwater table. Both the concentrations exceeded the IDEM VRP Tier II Residential cleanup goal. The source of this impact was not identified. Off-Site groundwater samples taken from both the shallow and deep groundwater system indicated chlorinated solvent groundwater impacts (most notably cis-1,2-DCE and vinyl chloride) beneath the Michigan Meadows Apartments above IDEM VRP Tier II Residential and Non-residential cleanup goals.

1.1.2 MUNDELL's Review of Keramida March 2002 Phase II Investigation

The most recent *Phase II* investigation by Keramida (Keramida, 2002) established a clear connection between the contamination found at the former Allison facility and the contamination detected beneath the Michigan Meadows Apartments and Michigan Plaza (the Properties). MUNDELL's October 2002 review of the study stated that the investigation failed to delineate the full vertical and horizontal extent of chemical impacts to the underlying groundwater system. The organic chemical groundwater plume maps for dissolved cis-1,2-DCE, TCE, and VC shown in the Keramida *Phase II* had been developed using widely spaced groundwater monitoring wells. MUNDELL believed that

these wells do not adequately define those plumes beneath the Properties, and that additional shallow and deep monitoring wells placed immediately south of Little Eagle Creek on the north side of the Michigan Meadows property, as well as others to the southeast (downgradient of the apparent plume centerlines) and south (beyond Michigan Plaza) were necessary to provide more detailed plume definition.

MUNDELL also indicated that the potential existed for a deeper, dense non-aqueous phase liquid (DNAPL) solvent source to have migrated from the Plant onto the Michigan Meadows Apartment property. As such, MUNDELL believed that the proposed chemical source treatment at the Plant site would not be effective in reducing the observed high groundwater concentrations beneath the Michigan Meadows Apartments. MUNDELL recommended that additional soil borings and monitoring well installations would be necessary to provide enough information to develop an informed remedial plan.

MUNDELL also indicated that not enough chemical sampling has been completed in Little Eagle Creek to determine the transient variation in concentrations that may be present in this nearby surface water body. This lack of data suggested to MUNDELL that the evaluation produced an inaccurate assessment of the potential exposures through recreational activities that the residents of Michigan Meadows Apartments or its visitors experience as they come into direct contact with the waters of Little Eagle Creek.

MUNDELL's review also indicated that no data had been collected by Keramida during the Phase II investigation to determine if the groundwater plume beneath the Michigan Meadows Apartments was causing indoor air impacts that are a human-health concern to its residences. Based on this review, MUNDELL recommended that additional soil borings, monitoring wells, sediment and surface water sampling, and air monitoring within the Properties be completed as part of future investigative activities by Genuine under the IDEM VRP.

1.1.3 Keramida October 2002 RWP and August 2004 RWP

In October 2002, Keramida submitted a *Remediation Work Plan* (*RWP*) to the IDEM VRP that outlined its plans for the remediation of the former GM AGT Plant 10 facility. In August 2004, Keramida submitted a revised *RWP* based on comments received by IDEM. Both *RWPs* show groundwater flowing south from the former GM AGT Plant 10 facility to Michigan Meadows Apartments and Michigan Plaza (as indicated by potentiometric maps provided in the 2002 *RWP* (Figures 9a through 9h) and 2004 RWP (Figures 12a through 12n)). In additional, groundwater analytical summary maps in the 2002 *RWP* (Figure 12b and 13a for cis-1,2-DCE; Figure 12c and 13b for vinyl chloride), the 2004 RWP (Figures 15b, 15c, 16a, 1b) and plume maps in the Keramida 2002 *Phase II Investigation* Report (Figures 20a and 20b for cis-1,2-DCE, and Figure 22a and 22b for vinyl chloride)), clearly demonstrated that the former GM AGT Plant 10 facility is directly upgradient of the property and the likely sole source of groundwater impacts on the Michigan Meadows Apartments site and a contributing source to the Michigan Plaza Site.

1.1.4 MUNDELL's April 2003 Air Quality Study

Indoor air sampling performed by MUNDELL on December 10, 2001 had detected the presence of volatile organic chemicals at low concentrations in several apartment building basement areas in the northwestern portion of the Michigan Meadows property nearest the former GM AGT Plant 10 facility. These findings, along with a review of the subsurface investigations and remediation conducted by Keramida as part of the VRP activities, raised a concern that additional investigations at the Michigan Meadows Apartments and the Michigan Plaza were warranted to further define the severity and extent of groundwater impacts, and the resulting potential impact on indoor air quality for the facilities. As such, MUNDELL completed a more comprehensive indoor air quality investigation during April 2003 in coordination with IDEM and the Marion County Health Department (MCHD) designed to detect potential impacts at the Site that could pose a human-health concern to the current residents and tenants. The final results of this investigation were made available for review by IDEM and the MCHD to supplement ongoing studies by Keramida.

Air quality samples were collected from 23 Michigan Meadows Apartments buildings (Bldg Nos. 1 through 23) and 4 tenant units (3801, 3805, 3815 and 3817 West Michigan) at the Michigan Plaza Shopping Center. Each air sample was collected in a six-liter, evacuated, stainless steel Summa Canister equipped with a passive flow controller set to fill the canister over a 24-hour period.

All air samples collected were tested for the four chemicals of concern (COCs) previously identified in the shallow and deep impacted groundwater beneath the former GM AGT Plant 10 facility and the Site during the Keramida VRP investigations: PCE, TCE, cis-1,2-DCE and VC. The sampling and testing program followed the general principles outlined in the *Massachusetts Indoor Air Sampling and Evaluation Guide* (WSC Policy #02-430, April 2002, Office of Research and Standards, Department of Environmental Protection) which is being considered as the basis for future IDEM indoor air quality policy development.

In addition to the indoor air sampling activities, the evaluation also included the collection of 5 soil gas samples and 5 groundwater samples taken at the installed soil gas monitoring well locations. Sampling locations were determined based on impacted groundwater data contained in previous investigations conducted by Keramida. Four sampling points were designated within Michigan Meadows Apartments and one within the parking lot of the Michigan Plaza Shopping Center.

Nine of the 23 apartment buildings (Buildings 1, 6, 7, 10, 11, 12, 13, 20 and 21) exhibited concentrations of either PCE or TCE in their basement areas above current draft U.S. EPA or IDEM target vapor levels. None of the other two COCs (i.e., cis-1,2-DCE and VC) were found above U.S. EPA and IDEM draft vapor concentration levels.

A July 1, 2003 response letter was received from IDEM after review of MUNDELL's June 2003 *Air Quality Investigation Report*. IDEM stated that it did not believe the information presented indicated an imminent health threat requiring immediate action to relocate or other immediate abatement action. IDEM did feel that the report indicated the potential for a vapor intrusion problem and that further investigation was prudent (Refer to Appendix K of the *Phase I Environmental Site Assessment*, MUNDELL, December 2003 for a copy of the IDEM letter).

1.1.5 MUNDELL's November 2003 Phase I Site Assessment

Subsequent to the 2003 indoor air study, MUNDELL performed a detailed *Phase I Environmental Site Assessment* of the Michigan Meadows Apartments site in November 2003. This *Phase I ESA* included a reconnaissance visit to the Site, a review of the previously listed available environmental database and related agency information for the Site and surrounding properties, interviews, prior ownership records, aerial photographs, published geologic information, and other related items. This information was used to evaluate existing or potential environmental impairment of the Site due to current or past land use or from surrounding properties.

The *Phase I ESA* indicated the presence of known groundwater impacts in the area and other areas of off-site environmental concern, including 1) groundwater impacts from the former GM AGT Plant 10 facility located north of the Site, 2) violations and enforcement actions (RCRIS) documented for the General Motors Corporation Allison Transmission Plants 3 & 12/1, which exists upgradient of the site, and 3) petroleum releases from the Speedway/SM #6122 facility and the Marathon Ashland Petroleum Speedway.

The *Phase I ESA* also indicated the historical existence of a dry cleaner just south of the Site at Michigan Plaza (Accent Dry Cleaners: 3819 W. Michigan Street - Michigan Plaza) that poses a potential environmental concern due to the use of hazardous substances (e.g. perchloroethene) from the previous dry cleaning operations.

Based on the *Phase I ESA* findings and conclusions, MUNDELL recommended the advancement of additional soil borings and installation of monitoring wells on the Site within the areas of concern (northern property line, areas in the vicinity of Building Nos. 1 and 12), to determine potential impacts from the former GM AGT Plant 10 facility.

1.1.6 MUNDELL's August 2004 Phase II Investigation – Michigan Plaza

A recent Phase II Investigation on the Michigan Plaza Shopping Center south of the Apartments property was conducted by MUNDELL in August 2004. This study included the advancement of Geoprobe soil borings at five (5) locations, and soil and groundwater sampling and analytical testing. The results indicate detectable levels of nine (9) VOCs (PCE, TCE, cis-1,2-DCE, trans-1,2-DCE, VC, chloroform, methylene chloride, toluene and acetone) in the soil and groundwater beneath Michigan Plaza. The results, summarized in the report *Phase II Environmental Site Assessment Michigan Plaza,*

indicate the impacts are likely to be from former drycleaning operations at the Plaza as well as from impacted groundwater coming onto the Plaza site from the north. Additional investigation of the Site was recommended to identify chemical source areas contributing to the impacts, and to more fully delineate the vertical and horizontal extent of contamination.

1.2 Areas of Concern at the Michigan Meadows Apartments

Three (3) areas with potential environmental concerns were identified as a result of the previous investigations and the Phase I ESA by MUNDELL conducted with respect to the Site. These areas are as follows:

1) The northern property line of the Michigan Meadows apartments property:

   The organic chemical groundwater plume maps for dissolved cis-1,2-DCE, TCE, and vinyl chloride (VC) shown in the Keramida *Phase II* (see Figures 20, 21 and 22 in the Phase I ESA, Appendix J) had been developed using widely spaced groundwater monitoring wells. MUNDELL believed that these wells do not adequately define those plumes beneath the properties, and that additional shallow and deep monitoring wells be placed along the northern property line of Michigan apartments to better determine the horizontal and vertical chlorinated organic impacts to the groundwater system.

2) The central area in the vicinity of Building No. 12:

   Building No. 12 exhibited the second highest indoor air concentration for TCE with respect to the apartment buildings (0.44 ug/m^3), during the air sampling event conducted by MUNDELL in April 2003.

3) The Southern area within the Apartments property in the vicinity of Building No. 1:

   As per the Keramida Phase II Investigation, soil boring KB-17 located southwest of Building No. 1 on the Michigan Meadows Apartments Site exhibited a PCE soil concentration of 0.19 mg/kg and a TCE soil concentration of 2.4 mg/kg above the groundwater table. Both the concentrations exceeded the VRP Tier II Residential cleanup goal. Also, Building No. 1 exhibited the highest indoor air concentrations for PCE and TCE with respect to the rest of the apartment buildings (190 ug/m^3 and 2.0 ug/m^3), during the air sampling event conducted by MUNDELL in April 2003. The levels of indoor airborne PCE (39 to 46 ug/m^3) were also elevated during the October 2004 sampling event.

1.3 Scope of Work

As recommended in the *Phase I Environmental Site Assessment*, MUNDELL, December 2003, additional monitoring wells were installed at the Site to monitor ongoing impacts from the former GM AGT Plant 10 facility and to better determine the horizontal and vertical chlorinated organic impacts to the groundwater system. Air and surface water sampling and testing was also completed to provide supporting technical data related to

environmental impacts at the site. The following summarizes the scope involved in these activities.

1.3.1 2-D Electrical Resistivity Survey

A two-dimensional resistivity imaging geophysical survey was used along the northern site boundary to appropriately locate the horizontal and vertical position of the monitoring well screens to optimize groundwater sampling along zones with higher potentials for groundwater transport.

1.3.2 Northern Property Line Investigation

Five (5) wells (MMW-3S, MMW-4D, MMW-5D, MMW-6D, and MMW-7S) were installed along the northern property line to confirm the presence/absence of chlorinated organic impacts coming from the north and to better evaluate the groundwater remediation progress on the former GM AGT Plant 10 facility (see **Figure 2** for the locations of these wells).

1.3.3 Additional Property Investigation

Two (2) additional wells (MMW-1S and MMW-2S) were installed to determine the distribution of chlorinated organic chemicals beneath the Michigan Meadows Apartments buildings, and to explore a possible association between the groundwater impacts and the observed indoor air concentrations (see **Figure 2** for locations).

1.3.4 Air Monitoring Program

Additional, selected air monitoring was completed to further evaluate the level and distribution of chlorinated organic chemicals in the indoor air of the Michigan Meadows Apartments. Recommended locations included 'breathing zone' samples on each floor of the buildings exhibiting prior highest PCE/TCE concentrations (Building Nos. 1 and 20), two (2) samples at existing soil gas monitoring well locations, and three (3) ambient air samples on the Apartments property. This follow up air monitoring round constituting sampling at the Apartments was conducted by MUNDELL in October 2004. The results of this event are documented in a separate report, '*Air Quality Investigation Report – October 2004*'.

1.3.5 Little Eagle Creek Sampling

The Little Eagle Creek meandering to the north and the east side of the Site was sampled to confirm that the contribution of chlorinated solvents to the surface water is consistently below levels of acceptable human health risk. Three samples (upstream, adjacent, and downstream) were collected in October 2004 during low-flow conditions in the Creek.

2.0 FIELD INVESTIGATIONS

2.1 Two-Dimension Resistivity Imaging Geophysical Survey

A two-dimensional resistivity imaging geophysical survey was performed along the northern property line on August 19th, 2004. The primary goal of this geophysical survey was to image the stratigraphic interrelationships of the unconsolidated subsurface materials through the use of 2-dimensional resistivity imaging calibrated with drilling observations from five new boring/well installations. Of particular interest was the identification of primary transport pathways through the upgradient site boundary as well as the base elevation variation of the upper sand and gravel aquifer system. These stratigraphic features would suggest potential locations for screening monitoring wells for evaluating existing cis-1,2-DCE and VC plume concentration variations as well as determining the presence of potential Dense Nonaqueous Phase Liquid (DNAPL) accumulations near the base of the aquifer. The geophysical survey was confined to a single line of data collection along the northern boundary of the site quasi-parallel to Little Eagle Creek (see graphic insert below and **Figure 2**).

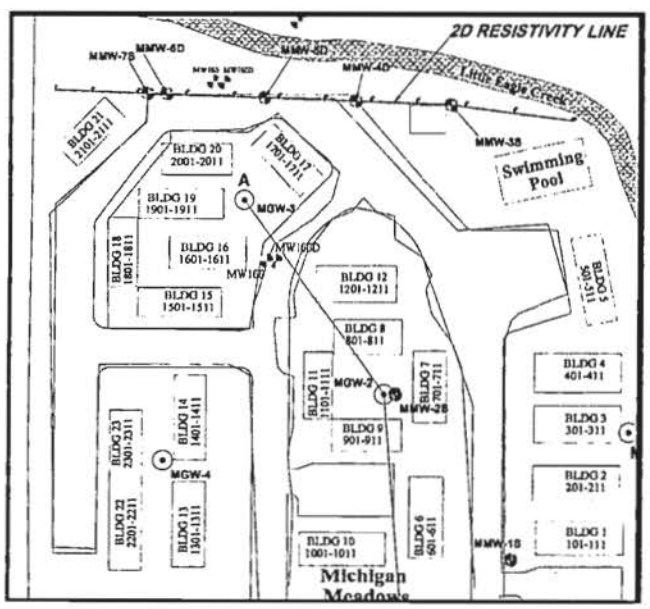

2.1.1 Relationship Between Lithology and Resistivity

The resistivity cross section presented in this report is a two-dimensional (2-D) representation of the general distribution of electrical resistivity in the subsurface. Electrical resistivity in clastic sediments, i.e., gravel, sand, silt, and clay, is related to a number of variables as discussed further in **Appendix A**. There is no unique, direct

conversion from resistivity values to lithology. However, based on site knowledge, resistivity magnitudes, geometries and interrelationships of various resistivity anomalies, reasonable geologic interpretations can often be made, particularly when calibration, or "ground truthing", is included. In practice, resistivity is found to be strongly controlled by water content (important in unsaturated materials), soil and groundwater chemistry, clay content, and grain size distribution and cementation. In a given setting, the fine-grained sediments, particularly clay-rich sediments such as lacustrine sediments or overbank deposits, are excellent conductors of electricity, often much better than fresh water sand and gravel aquifers which are generally the more resistive materials.

It should be noted that the range of resistivity values assumed to be applicable to sand and gravel reflects primarily the influence of clay minerals on the resistivity such that the more resistive materials are generally the "cleanest" materials (i.e., lacking in clay minerals). However, this relationship does not necessarily correspond to the best yielding aquifer materials. Amongst "clean" sand and gravel materials, resistivity is inversely related to porosity. That is, granular materials with high porosity will have lower resistivity than granular materials with lower porosity. For example, a well-sorted, uniform gravel (GP) will have a lower resistivity than a poorly sorted, well graded, sand (SW), given identical water chemistry conditions. This relationship is known as Archie's Formula and for fully saturated materials is:

$R_t = a\phi^{-m} R_w$, where:

R_t and R_w are total and water resistivity respectively,
a is a constant which depends on lithology and ranges from about 0.6 to 1.4
m is a constant which depends on lithology and ranges from about 1.3 to 3

Thus, it is clear that as porosity increases, resistivity decreases in this relationship. Again, this relationship is only valid for "clean", clay-free materials. Conceptually, very porous sand and gravel deposits could become less distinguishable from clayey soils. Calibration with drilling and interpretation of the stratigraphic environment both are very important in determining the meaning of resistivity results.

2.1.2 Two-Dimensional Resistivity Imaging Method

Electrical resistivity measurements can be made using a number of different individual methods and instruments including electromagnetic conductivity meters (e.g., Geonics EM-31 and EM34-3), time domain electromagnetic systems (TDEM), magnetotellurics systems, VLF-EM, and by direct current (DC) resistivity measurements using a wide range of electrode configurations. The choice of instrument type and method depends on user preference, site-specific factors (e.g., ambient electrical noise), project objectives, portability, cost, and other factors. For this site the instrument chosen was an *Advanced Geosciences Sting/Swift* automated electrical resistivity imaging system. This system requires direct ground contact via an array of stainless steel electrode stakes, and records an apparent resistivity pseudosection, which can then be inverse-modeled to provide a cross-section of the "true" resistivity of the subsurface materials. **Appendix A** contains

further information on the electrical resistivity method, instrumentation, data processing, and modeling parameters.

2.1.3 Two-Dimensional Resistivity Imaging Results, Findings, and Interpretation

The details of data processing involved in the creation of a two-dimensional resistivity section are provided in **Appendix A**. The raw apparent resistivity data obtained in the field was input into an inversion modeling program called *EarthImager 2D*. Quality control and modeling parameters were adjusted to obtain a reasonable match between the actual raw field data and a calculated field data set. The goal of the inversion modeling is to minimize the difference between the two raw data sections by adjusting the true resistivity earth model. This is done in an iterative fashion until convergence is reached. The results of the model are scrutinized for reasonableness, which is the final evaluation parameter for model acceptance.

Figure 3 contains the final 2-D resistivity model. It is depicted as a color-filled contour plot of resistivity values in cross-section format. The length of the cross section is 632 ft (192.5 m) and has a maximum depth of 159 ft (48.4 m). The color scale consists of 16 divisions ranging from 8 to 510 ohm-meters with logarithmic steps. The lowest values are depicted in blue and the colors step through green, yellow, orange and red as resistivity increases. The section has a trapezoidal taper, i.e., narrows with depth, due to the loss of subsurface coverage as electrode separation is increased. At the third iteration in the modeling process, convergence was achieved. The root mean square (RMS) differential between the field data and the calculated field data was 13.29 percent. Qualitatively speaking, this represents a good fit with a reasonable expectation that the model is an accurate depiction of the subsurface resistivity conditions.

Overall, the appearance of the resistivity model is suggestive of a subsurface that does not consist of simple horizontal stratagraphic sequences. The greatest degree of horizontal stratification is the relatively consistent transition from high resistivity (generally above 150 ohm-meters, i.e., yellow to red) to lesser resistivity (many locations less than 100 ohm-meters, i.e., green color) at an approximate depth of about 5 meters. This transition is interpreted as the decrease in resistivity caused by the transition from unsaturated to saturated conditions (water table) and is thus noted on **Figure 3.** This finding is consistent with the water level observations in the wells, also depicted on **Figure 3.** Below the interpreted water table, there appear to be numerous "pods" of both high resistivity and low resistivity materials. Many of these "pods" appear to be in bowl-shaped depressions suggesting possible channels or valleys in their morphology. Beginning at a depth of about 60 ft below the ground surface, the resistivity appears to dramatically decrease in the western one-third of the section (as shown by the blue color). However, in the eastern two-thirds of the section, the opposite is true, and resistivity tends to increase as shown by the yellow to red colors). Review of a nearby water well located about a quarter mile to the southwest (Indiana Department of Natural Resources Reference Number 180311) indicates that black shale was encountered at a depth of 80 feet, and limestone at 190 feet. Nominally, the noted resistivity transitions on the lower half of the section are consistent with the appearance of bedrock in the nearby well.

Thus, an interpreted top-of-bedrock boundary has been placed on **Figure 3.** Because the finding of black shale in the nearby well, and the relatively low resistivity of the interpreted bedrock at the site (from less than 20 to about 300 ohm-meters), the bedrock appears to also be black shale (limestone tends to have high to very high resistivity values, often well in excess of 1,000 to ohm-meters). The variation in the bedrock resistivity could be explained either as the presence of a greater degree of fracturing to the west (blue) or may be a stratigraphic, facies change from west to east with shale to the west and, for example siltstone or sandstone to the east. None of the soil borings depicted on **Figure 3** reached bedrock, and therefore the interpretation of the bedrock surface is unconfirmed.

The material lying above the bedrock surface is known to be unconsolidated Pleistocene sediments. These sediments were deposited in a glacial environment, and regionally are known consist of glacial till and glacial outwash.

The soil borings (see the following section) were split-spoon sampled and descriptive logs generated (**Appendix B**). This descriptive information was interpreted relative to the resistivity cross section (**Figure 3**). The relationship between soil type and resistivity appears to be consistent with that described in Section 2.1.1 above, that is clay soils have a relatively uniform low to moderate resistivity (i.e., about 70 to 100 ohm-meters, green color), and sand and gravel resistivity values range more widely. The well-graded mixtures of sand tend to represent the highest resistivity materials, often in excess of 150 ohm-meters and ranging into the 400 ohm-meter range (particularly where unsaturated at the east end of the section above the water table). The poorly-graded materials which have higher porosity tend to have correspondingly lower resistivity values. The best illustration of this finding is material interpreted to be largely cobble to boulder gravel in boring/monitoring well MMW-4D from about 35 to 60 feet in depth. Although noted as an SW (well-graded sand) according to the Unified Soil Classification System (USCS) on the boring log, drilling was very difficult. Cobbles were brought up on the augers, and recovery was poor in the sampler. On the cross section, this zone appears to have a low resistivity (about 40 ohm-meters, light blue color).

The interpretation of the unconsolidated materials was added to **Figure 3.** The interpreted depositional environment is one of a high-energy, fluvial system of braided channels proximal to a glacier margin. The large cobbles drilled up in MMW-4D were not well rounded and subangular, and clearly were transported a relatively short distance. There appears to be large gravel-filled channels on the eastern half of the section and the bedrock may be in excess of 120 feet at the deepest point of the valley. The sharpest water table boundary is apparent in this area and this sharp contrast further suggests uniform coarse material since air-filled, high porosity material can be the most resistive (i.e., USCS classifications GP and SP).

An interpreted bedrock ridge appears in the center of the section with a depth to rock of about 40 ft at the crest. This ridge appears to be a divide in the type of depositional environment. West of the bedrock ridge, there appears to be more numerous, more irregularly-shaped sand deposits interspersed with clay deposits (fluvial in nature). In

addition, in this area there is almost a lack of a sharp boundary at the water table. The elevated resistivity below the water table and the lack of transition at the water table point to the sands being well graded (SW according to the USCS). This suggests a lower energy, more distal fluvial environment.

In terms of hydraulic characteristics, the thick, more uniform sand and gravel deposits on the eastern half of the section are probably quite transmissive with a relatively high degree of homogeneity. However, the well-graded sands west of the bedrock ridge appear to be complex in shape interwoven with the clays. The transmissivity of the well-graded materials would be expected to be more restricted and the morphology of the channels suggests a more tortuous groundwater flow environment.

2.2 Hollow Stem Auger Soil Sampling

Seven (7) monitoring wells were installed at the Site from August 20th, 2004 through August 27th, 2004. Monitoring wells were installed by American Drilling Services (ADS) by means of a CME and an ATV drill rig, under the direction of MUNDELL. Borings were advanced using a hollow stem auger, with a 2-inch diameter, 4-foot long, macro-core soil sampler placed inside the hollow stem auger. A 2.0-foot long split spoon sampler attached to drill rods was used for sampling below the water table. Five (5) monitoring wells (MMW-3S, MMW-4D, MMW-5D, MMW-6D, AND MMW-7S) were installed along the northern property line. One monitoring well (MMW-2S) was installed in the center of the property in the grassy area between buildings No. 7, 8, 9, and 11, and another (MMW-1S) was installed along the south west corner of building No. 1. The locations of the monitoring wells are presented in **Figure 2**.

The soil samples were collected from within a disposable vinyl tube located inside the hollow stem of the macro-core soil sampler. Soil samples were collected continuously to the base of each boring and field screened by a MUNDELL geologist. Each sample was divided into 1.0-foot intervals and placed into plastic bags and sealed. After the soil sample was collected, the split spoon sampler was decontaminated and reattached to the boring rod. Soil samples were collected continuously to a depth of 16 feet bgs (four foot disposable vinyl tube inside the HSA), and then collected every 5 feet (two feet split spoon sampler) to the bottom of each soil boring. The soil was classified into lithologic intervals using the Munsell Soil Color Chart and the Unified Soil Classification System (USCS) by examining color, grain size, silt and clay content and plasticity. Field screening of the soil samples included observations of moisture content, odor, staining and the detection of total volatile organic vapors (TOVs) using a photo-ionization detector (PID) calibrated to 100 parts per million (ppm) isobutylene.

One soil sample, approximately 1.5 - 2 feet above the water table was collected at each of the seven borings. The samples were placed in soil jars and shipped to the lab on ice for VOC 8260 analysis.

2.3 Installation of Monitoring Wells

Seven (7) permanent monitoring wells were installed with a hollow-stem auger mounted on the CME or the ATV drilling rig. Each well was installed at the location of the hollow-stem auger soil borings previously discussed. All of the permanent monitoring wells were constructed of 2-inch diameter, flush joint, threaded Schedule 40 PVC materials. Six of the monitoring wells were constructed using 10-foot long, 0.010-inch machine-slotted PVC screens, which were set at or within 4-5 feet above the groundwater surface. A sand filter pack, consisting of No. 5 sand, was installed around the bottom of each screen to a height approximately 2 to 3 feet above the top of the screen. A 15 foot PVC screen was installed in the construction of monitoring well MMW-4D, followed by a 3.5 feet (62.5 feet to 66 feet bgs) solid PVC riser pipe fitted with a slip cap at the bottom. This solid PVC pipe at the bottom of the well can serve as a sump for any potential DNAPL along the clay layer. Also, a ten foot PVC screen followed by a 1.5 foot sump (solid PVC riser pipe) at the bottom was installed in the construction of monitoring well MMW-3S. The monitoring wells were backfilled with a volclay bentonite grout mixed with water to create bentonite slurry, pumped into the annular space above the sand filter pack to roughly 5 to 7 feet bgs. Medium bentonite chips/ bentonite pellets were placed above the bentonite slurry to 1 foot bgs. The monitoring wells were finished with a flush-mounted, bolt-down steel manhole cover set in place with a concrete pad to provide protection and stability to the wells. Each monitoring well was fitted with a watertight well cap to prevent the infiltration of surface water. Once each well was completed, static groundwater elevations were recorded via an electric oil/water interface probe. During this investigation, no wells were found with separate-phase hydrocarbon on the top of the groundwater surface. All groundwater monitoring well survey and sampling data are provided in **Tables 1** and **2,** respectively. Well construction diagrams for the monitoring wells are provided in **Appendix C**.

All soil cuttings generated during the drilling of the permanent monitoring wells and groundwater pumped out of the wells during well development was placed in 55-gallon drums located at the Site for later disposal. In accordance with IDEM guidelines, the contents in each drum were then identified with a label describing them as non-hazardous materials.

The monitoring wells were developed on August 27th, 2004 by ADS. A well pump was used to pump out water till it ran clear. The well development water was stored in the 55 gallon drums on site, and was disposed of later along with the soil cuttings.

2.4 Soil Analysis

Soil samples for laboratory analysis were collected approximately 2-3 feet above the water table at each of the borings to delineate impacted unsaturated soils. These samples were placed into glass jars and sealed with a Teflon lined lid. After collection, the soil samples were transported on ice in a cooler to Pace Analytical Laboratories (Pace) in Indianapolis, Indiana, using appropriate chain-of-custody protocol for assignment of laboratory tests. All soil samples collected as a part of the *Phase II Investigation* were

analyzed for VOCs via U.S. Method 8260. Pace laboratory certificates of analysis for the soil samples analyzed are provided in **Appendix D**.

2.5 Groundwater Sample Collection and Analysis

On September 10th, 2004, MUNDELL personnel removed the watertight well cap from all the currently installed onsite wells (MMW-1S, MMW-2S, MMW-3S, MMW-4D, MMW-5D, MMW-6D, MMW-7S) and allowed the water level in each well to equilibrate with atmospheric pressure. The wells were sampled using a purging technique by removing 3 times the volume of static water calculated in each well. Groundwater was purged and collected using a 3.0 ft long, 1.6 in outer diameter, pre-cleaned, disposable single-check valve polyethylene bailer. All excess purge water was transported to 55-gallon drums located at the Site for proper disposal. Groundwater samples were then transferred from the bailer into three 40-milliliter glass sample vials containing the preservative hydrochloric acid (HCl). Groundwater sample vials were sealed in plastic bags and placed in a cooler containing ice. All water samples were delivered to Pace Analytical services, Inc. (Pace) using the appropriate chain-of-custody protocol for laboratory tests. All water samples collected as a part of the *Phase II Investigation* were analyzed for volatile organic compound (VOCs) via U.S. Method 8260. Pace laboratory certificates of analysis for the groundwater samples analyzed are presented in **Appendix D**.

The monitoring wells were surveyed by MUNDELL on September 30th, 2004. The top of each new well riser was surveyed assuming an interpolated elevation from a USGS raster graphic map (1994) of a 7.5-minute topographic quadrangle (1992). The Keramida Phase II Investigation report, March 2002, presented a 712.54 feet elevation for MW-165S (MW-165 is located along the northern property line, fairly in line with the MUNDELL monitoring wells.) This elevation was used as the reference point for surveying the MUNDELL monitoring wells. Once the new monitoring wells were surveyed, depth measurements to the static water level were recorded via an electronic oil/water interface probe. All groundwater sampling data is exhibited in **Table 2.**

In order to verify groundwater quality conditions (based on an evaluation of soil analytical test results) at the location of monitoring well MMW-1S, the monitoring well was re-sampled on March 15th, 2005. The sampling involved a purging technique of removing 3 times the volume of static water calculated in the well. The sample was analyzed for volatile organic compound (VOCs) via U.S. Method 8260. Pace laboratory certificates of analysis for the groundwater samples analyzed are presented in **Appendix D**.

2.6 Little Eagle Creek Sampling

Surface water sampling was conducted at the Little Eagle Creek meandering just north and east of the apartment complex, on September 30th, 2004. Three samples (upstream, adjacent, and downstream) were collected during low-flow conditions in Little Eagle Creek, as seen by the gauging data plot obtained from the U.S. Geological Survey

provided in **Appendix E**. The samples were collected by submersing a plastic bottle into the creek, capping it in the submersed position, and then quickly transferring the sample into the VOC vials for analysis. The samples were placed on ice, and taken to the lab.

2.7 MUNDELL October 2004 Air Quality Investigation

Another round of air sampling which included sampling of the prior highest PCE/TCE concentration units at the apartments was conducted by MUNDELL in October 2004. Air quality samples were collected from two (2) Michigan Meadows Apartments buildings (Bldg Nos. 1 and 20). In addition to the indoor air sampling activities, the evaluation also included the collection of two soil gas samples (MGW-1, and MGW-3), and three ambient air samples (MAA-1, MAA-2, and MAA-3) in the apartments area. These sampling locations were determined based on their prior highest PCE/TCE concentrations. Each air sample was collected in a six-liter, evacuated, stainless steel Summa Canister equipped with a passive flow controller set to fill the canister over a 24-hour period.

All eleven (11) air samples collected were tested for the four chemicals of concern (COCs) previously identified in the shallow and deep impacted groundwater beneath the former GM AGT Plant 10 facility and the Site during the Keramida VRP investigations: PCE, TCE, cis-1,2-DCE and VC. The sampling and testing program followed the general principles outlined in the *Massachusetts Indoor Air Sampling and Evaluation Guide* (WSC Policy #02-430, April 2002, Office of Research and Standards, Department of Environmental Protection) which is being considered as the basis for future IDEM indoor air quality policy development.

3.0 RESULTS

3.1 Geologic Findings

3.1.1 Regional Geology

Marion County is situated within the southern part of the physiographic region known as the Tipton Till Plain, with most of the county underlain by a thick assemblage of glacial deposits located within the White River Basin. These glacial sediments, which include glacial till, randomly arranged ice contact sand and gravel, silt, lake clays, outwash sands and gravel, and alluvial materials, were deposited on a strongly dissected pre-glacial landscape formed on bedrock of highly variable resistance to erosion. The glacial drift cover in Marion County is believed to represent most of the major periods of glaciation that collectively constitute the Pleistocene Ice Age in this area of the United States. The deposits closest to the land surface are generally from the most recent period of glaciation known as the late Wisconsin age, and were formed as a result of several major ice advances into Marion County. The thickness of Wisconsinan glacial drift, which is comprised of loam till of the Trafalgar Formation and some outwash, ranges from 50 to 150 ft in the area (Fenlon et al., 1994).

3.1.2 Near-surface Soil Characteristics

The U. S. Department of Agriculture (USDA) Soil Survey of Marion County, Indiana (USDA, 1991) indicates that the Site consists of Urban land-Fox complex with estimated slopes between zero and three percent. The urban land complex indicates that fifty percent of the predominant soil type has been disturbed and has been covered with an impervious layer consisting of buildings, sidewalks, streets and other structures. The undisturbed areas of the complex retain the original soil characteristics. The Fox soils are identifiable in lawns, gardens, parks and other open areas. They have a representative profile of the series, but alteration is evident in many areas where topsoil has been stripped.

The Fox soil series generally consists of nearly level to moderately sloping, well-drained soils that are moderately-deep over sand and gravelly sand. The typical profile for the Fox series is as follows: the surface layer is dark brown loam 8 inches thick. The subsoil is 30 inches thick. The upper 10 inches is dark brown friable loam; the next 6 inches is dark brown, firm sandy clay loam; and the next 14 inches is dark brown, firm gravelly clay loam.

3.1.3 Site Geology

The surface of Marion County consists of Pleistocene glacial deposits and recent alluvial stream deposits. Marion County is situated within the southern part of the physiographic region known as the Tipton Till Plain. While most of the glacial material in the county consists of fine-grained silts and clay, sand and gravel outwash soils are commonly found along major streams. These outwash deposits, which fill the White River Valley and its major tributaries, were deposited in a complex fashion during what is thought to have been three primary ice advances and subsequent meltwater discharges from ice margins upstream from Marion County (Fleming et al., 2000). The Wisconsin-age sediments, within the White River Valley and a variety of smaller sand and gravel and fine-grained till units are distributed in a discontinuous nature throughout the valley.

The Site itself is situated with an area containing variable thickness of outwash overlying complexly interbedded sand and gravel and fine-grained glacial till. Thick unbroken sections of sand and gravel are present locally, and are typically unconfined within the upper portions of the system, and confined or semi-confined by bodies of glacial till at depth (Fleming et al., 2000). Estimated thickness of the unconfined sand and gravel outwash in the area ranges from 20 to 40 ft on top of an undifferentiated Pre-Wisconsinan glacial till (Brown and Fleming, 2000).

The bedrock beneath the unconsolidated deposits in Marion County consists of sedimentary rocks of Mississippian, Devonian and Silurian age. The bedrock surface slopes gently to the southwest. Therefore, younger Mississippian rocks are at the bedrock surface in the southwest corner of the county and progressively older Devonian and Silurian rocks are at the bedrock surface in the central and northeast portion of the county, respectively (Harrison, 1963; Fleming et al., 1993). Bedrock beneath the unconsolidated deposits at the site is Mississippian and Devonian age New Albany Shale. The top of the bedrock surface is estimated to be between EL 625 to EL 650 above MSL.

The soil stratigraphy encountered during the advancement of the soil borings within the site (MMW-1S and MMW-2S) included 0.5 to 3.0 ft surficial sand and gravel (base course) and clayey fill overlying a natural, fine-grained Silty Clay layer (a low plasticity CL, according to the USCS) near the ground surface down to a depth of about 2.0 to 11.0 feet below ground surface (bgs). This layer overlies a well-graded, gravelly sand (SW) layer that was encountered down to a depth of about 18.0 ft bgs. The top of the unconfined groundwater table was encountered within this layer between about 15 to 16 ft bgs. This layer overlies a Silty Sand (SM) layer and a Clayey Silt (ML) layer that was encountered down to a depth of about 17 to 20 ft bgs. This layer was followed by a layer of Sandy Gravel with silt (GM).

The monitoring wells along the northern fenceline (MMW-3S, MMW-4D, MMW-5D, MMW-6D, MMW-7S) exhibited a slightly different stratigraphy. The stratigraphy included about a foot of surficial sand and gravel fill overlying a natural, well-graded, Gravelly Sand (SW) layer, or a layer of poorly graded Sand with little or no fines (SP) encountered down to a depth of about 29.0 to 65 bgs. The top of the unconfined

groundwater table was encountered within this layer between about 11.5 to 14 ft bgs. Occasionally, this layer overlies a Silty Sand (SM) layer or a Clayey Silt (ML) layer followed by a fine-grained Silty Clay (CL). Additional detailed lithological descriptions of these areas may be obtained from the boring logs provided in **Appendix B**. A detailed discussion of the stratigraphic sequence is provided in Section 2.1.3.

3.2 Hydrogeologic Findings

3.2.1 Regional Hydrogeology

The site itself is located adjacent to the Little Eagle Creek. Based on local experience and published hydrogeologic data in this area (e.g., Meyer et al., 1975; Herring, 1976; Smith, 1983; Fleming et al., 2000), shallow regional groundwater levels in the vicinity are expected to range between EL 700 and EL 705 above MSL, with groundwater flow from the site generally towards the south-southeast in the direction of flow in Little Eagle Creek.

The surface waters of the White River, Eagle Creek and Fall Creek are sources of industrial and public water supplies and comprise approximately 90 percent of the water used in Marion County. The unconsolidated sand and gravel aquifers associated with the surface water bodies are the major source of groundwater supply in Marion County. The Little Eagle Creek is the principal surface water feature in the area. The Site is not located within a Marion County wellhead protection area (Refer to Appendix F, *Phase I Environmental Site Assessment*, MUNDELL, December 2003).

The Site is located within one of seven Marion County Health Department (MCHD) No Well Zones (NWZs). NWZs have been designated by the MCHD, and reflect areas of contaminated groundwater identified by MCHD through routine sampling of potable wells.

3.3 Soil Analytical Results

Three volatile organic compounds (VOCs) (PCE, TCE, and cis-1,2-DCE) were detected in soil samples taken from above the groundwater table at this Site. Of the seven (7) soil samples tested from the soil borings, quantifiable concentrations of PCE impacts were detected in one (1) of the samples: MMW-1S from 14 to 15 ft below the ground surface, and within approximately 1.5 ft of the top of the groundwater table. The detected PCE concentration (2,100 micrograms/kg) exceeded both the IDEM RISC Default Industrial and Residential Closure Levels. Detectable soil concentrations of TCE (19 ug/kg) in MMW-1S from 14 to 15 ft bgs and cis-1,2-DCE (28 ug/kgz) in MMW-7S from 15.5 to 16.5 ft bgs were also observed. Both concentrations were well below the IDEM RISC Default Closure levels for both residential and industrial sites. No other volatile organic chemicals were detected in any of the soil samples tested. The soil analytical results are depicted in **Table 3** and presented on **Figure 4.**

Previous investigations by others (see Section 1.2) also indicated PCE and TCE soil impacts in the vicinity of MMW-1S.

3.4 Groundwater Analytical Results

Groundwater analytical results are summarized in **Table 4** and shown on **Figure 5**. As indicated, detectable levels of five VOCs (PCE, TCE, cis-1,2-DCE, trans-1,2-DCE, and VC) were observed in the groundwater collected beneath the Site. Elevated groundwater levels of cis-1,2-DCE, trans-1,2-DCE and vinyl chloride were observed in the monitoring wells installed along the northern property line. The detectable concentration ranges of cis-1,2-DCE (8.5 to 3,400 ug/L) and VC (200 to 400 ug/L) extended well above both the IDEM RISC Default Industrial and Residential Cleanup Levels. Based on the distribution of the cis-1,2-DCE and VC impacts along the northern property line and groundwater analytical testing results from previous investigations performed by others, these impacts are likely caused by releases from the former GM AGT Plant 10 facility located immediately north and upgradient of the Site.

Groundwater was found to be impacted by TCE in monitoring well MMW-3S (5.2 ug/L) located near the northeastern boundary of the site and also in monitoring well MMW-1S (10 ug/L) located southwest of Building No. 1 within the southeastern portion of the site. TCE concentrations exceeded the IDEM RISC Default Residential Cleanup Level at both locations, and the Industrial Cleanup Level at MMW-1S. In addition, the groundwater sampled in monitoring well MMW-1S in March 2005 was also observed to be impacted by PCE (150 ug/L) above both the IDEM RISC Default Industrial and Residential Cleanup Levels.

It should be noted that based on the observed 2,100 ug/kg PCE soil concentration near the top of the groundwater table in monitoring well MMW-1S, MUNDELL requested in March 2005 that Pace Analytical Services review the reported PCE groundwater concentration for the September 10, 2004 sampling event. After review, Pace determined that the result, listed as 'ND' (not detected at or above adjusted reporting limit), was incorrect, and should have been reported as 3 J ug/L, indicating with the 'J' that the concentration was estimated above the adjusted method detection limit but below the adjusted reporting limit. An amended laboratory report for the September 10, 2004 groundwater results for MMW-1S documenting this correction was provided by Pace, and is included in **Appendix D.** As a result of this finding, MUNDELL re-sampled MMW-1S in March 2005.

3.5 Surface Water Sampling Results (Little Eagle Creek)

Two (2) out of the three surface water samples exhibited detectable concentrations of cis-1,2-DCE during the September 2004 sampling event. The adjacent sample (MSW-2) and the downstream sample (MSW-3) exhibited cis-1,2-DCE concentrations of 12 ug/L and 9.6 ug/L, respectively. These results were consistent with the results reported in the Keramida *Phase II Investigation Report*, March 2002. The sampling was conducted in the low flow period (Refer to **Appendix E**), which should reflect a 'worst case' scenario

with respect to the expected concentrations resulting from impacted groundwater discharge from the former GM facility into Little Eagle Creek.

3.6 Indoor Air Sampling Results

The results of this event are documented in a separate report, '*Air Quality Investigation Report - October 2004 Sampling Event*'. All eleven (11) of the air samples (Building Nos. 1 and 20, ambient air, and soil gas wells samples) collected at the apartment property during this event indicated airborne concentrations of TCE above both the current draft U.S. EPA guidance target indoor air concentrations and the IDEM draft default concentrations. Also, two of the air samples within Building No. 1 indicated airborne PCE concentrations above both the current draft U.S. EPA guidance target indoor air concentrations and the IDEM draft default concentrations. The presence of detectable TCE and PCE levels in the three (3) ambient air samples and identified ambient air sources of PCE and TCE in the vicinity of the Site (see *Air Quality Investigation Report* for details) indicates general degraded ambient air quality as a partial contributor to the TCE and PCE levels observed in the apartments. However, based on the more significant levels of PCE in Building No. 1 and the detected PCE groundwater impacts in the vicinity of the building, further investigation is required to determine if impacted groundwater may also be contributing to degraded indoor air quality in Building No. 1.

4.0 CONCLUSIONS

The *Phase II Environmental Site Assessment* activities were conducted by MUNDELL at the Michigan Apartments property located at 3800 West Michigan Street, Indianapolis, Indiana to aid in determining the likely source of observed volatile organic compound groundwater impacts beneath the site, and to further delineate the extent of these impacts. Based on observations made and the data collected during this *Phase II Investigation*, it can be concluded that:

1) Elevated groundwater concentrations of three (3) volatile organic chemicals (cis-1,2-dichloroethene (cis-1,2-DCE), trans-1,2-dichloroethene (trans-1,2-DCE) and vinyl chloride (VC)) were detected in the new monitoring wells installed along the northern property line. Detectable concentrations of cis-1,2-DCE (8.5 to 3,400 ug/L) and VC (200 to 400 ug/L) were well above both the IDEM RISC Default Industrial and Residential Cleanup Levels.

2) Based on the distribution of the cis-1,2-DCE and VC impacts along the northern property line and groundwater analytical testing results from previous investigations performed by others, these impacts are likely caused by releases from the former GM AGT Plant 10 facility located immediately north and upgradient of the Site.

3) Groundwater was found to be impacted by the volatile organic chemical trichloroethene (TCE) in monitoring well MMW-3S (5.2 ug/L) located in the northeastern portion of the site and also in monitoring well MMW-1S (150 ug/L) located southwest of Building No. 1 within the southeastern portion of the site. TCE concentration exceeded the IDEM RISC Default Residential Cleanup Level at both locations, and the Industrial Cleanup Level at MMW-1S. In addition, groundwater was also found to be impacted by the volatile organic chemical perchloroethene (PCE) in monitoring well MMW-1S. The observed PCE concentration (150 ug/L) exceeded both the IDEM RISC Default Industrial and Residential Cleanup Levels.

4) Two volatile organic chemicals, PCE and TCE were detected in a soil sample taken from within 1.5 ft of the top of the groundwater table in the soil boring at monitoring well MMW-1S located southwest of Building No. 1 in the southeastern portion of the Site. The PCE concentration of 2,100 ug/kg, exceeded the IDEM RISC Default Industrial and Residential Cleanup Levels. However, based on the soil screening PID headspace levels and the nearness of the soil sample to the top of the groundwater table, it is likely that the cause of the observed impacts is from impacted groundwater and not

from a surface release in the immediate vicinity. Additional investigation is necessary to determine the actual source of this groundwater impact.

5) The presence of detectable TCE and PCE levels in the three (3) ambient air samples collected during the air quality investigation, and identified nearby ambient air sources of PCE and TCE in the vicinity of the Site (see *Air Quality Investigation Report* for details), indicates that the degraded ambient air quality in the vicinity of the Site is likely a significant contributor to the TCE and PCE indoor air detected in most of the apartments. However, based on the more significant indoor air levels of PCE in Building No. 1, and the observed PCE groundwater impacts in the vicinity of that building, further investigation is required to determine whether impacted groundwater may also be contributing to the degraded indoor air quality in Building No. 1.

6) Surface water samples from Little Eagle Creek collected adjacent to and immediately downstream of the former former GM AGT Plant 10 facility exhibited detectable levels of cis-1,2-DCE (9.6 to 12 ug/L). These results, collected during low flow conditions in the creek, should be representative of 'worst case' exposure conditions for any receptors that use the creek near the Site.

5.0 LIMITATIONS

Our professional services have been performed, our findings obtained, and our recommendations prepared in accordance with customary principles and practices in the fields of environmental science and engineering. This statement is in lieu of other statements either expressed or implied. This company is not responsible for the independent conclusions, opinions or recommendations made by others based on the records review, Site observations, field exploration, and laboratory test data presented in this report.

It should be noted that environmental evaluations are inherently limited in the sense that conclusions are drawn and recommendations developed from information obtained from limited research and Site evaluation. For these types of evaluations, it is often necessary to use information prepared by others and MUNDELL cannot be responsible for the accuracy of such information. Additionally, the passage of time may result in a change in the environmental characteristics at this Site and surrounding properties. This report does not warrant against future operations or conditions, nor does this warrant operations or conditions present of a type or at a location not investigated. This report is not a regulatory compliance audit and is not intended to satisfy the requirements of any state, federal, or local real estate transfer laws.

This report is intended for the sole use of Bose McKinney & Evans LLP and AIMCO. This report may not be used or relied upon by any other party without the written consent of MUNDELL. The scope of services performed in execution of this evaluation may not be appropriate to satisfy the needs of other users, and use or re-use of this document or the findings, conclusions, or recommendations is at the risk of said user.

Our conclusions regarding the potential environmental impact of nearby, off-site facilities on the Site are based on readily available information from the environmental databases and the assumed groundwater flow direction. A detailed file review of each facility was beyond the scope of work.

MUNDELL reviewed past ownership of the project Site in an attempt to determine past Site usage. MUNDELL is not a professional title insurance firm and makes no guarantee, explicit or implied, that the listing reviewed represented a comprehensive delineation of past Site ownership or tenancy for legal purposes.

MUNDELL does not warrant the correctness, completeness, currentness, merchantability, or fitness of any information related to records review provided in this report. Such information is not the product of an independent review conducted by MUNDELL, but is only publicly available environmental information maintained by federal, state, and local government agencies.

6.0 PROFESSIONAL CREDENTIALS

A qualifications statement of the environmental professionals responsible for this Phase II Environmental Site Assessment and preparation of the report has been delivered to Bose McKinney & Evans LLP, under separate cover. This statement includes relevant individual and corporate qualifications.

7.0 REFERENCES

Engineering-Science, Inc., April 21, 1993, *Phase I Information* Review Report for General Motors Corporation Allison Gas Turbine Division Plant 10.

Engineering-Science, Inc., June 1993, *Soil Gas Data AGT Site*, , June 1993.

Engineering-Science, Inc., November 19, 1993, *Phase II Site Assessment Final Report* for General Motors Corporation Allison Gas Turbine Division Plant 10.

Fluor Daniel GTI, June 3, 1997, *Feasibility Study Report,* General Motors-Allison Gas Turbine Plant 10, (DRAFT).

Fluor Daniel GTI, September 19, 1997, *Remedial Investigation Report,* General Motors-Allison Gas Turbine Plant 10. (DRAFT).

Geophere, Inc., September 2000, *Geophysical Survey for Buried Materials at the Allison Engine Company Plant 10 Site.*

Indiana Department of Environmental Management, July 1, 2003, Response Letter, Michigan Meadows Apartments and Michigan Plaza Shopping Center, Indianapolis, Indiana.

Keramida Environmental, Inc., March 29, 2002, *Phase II Investigation Report*, Former General Motors Corporation, Allison Gas Turbine Division Plant 10, Indianapolis, Indiana.

Keramida Environmental Inc., October 30, 2002, *Remediation Work Plan,* Former General Motors Corporation, Allison Gas Turbine Division, Plant 10, Indianapolis, Indiana.

Mundell & Associates, Inc., January 18, 2002, *Air Quality Monitoring Results*, Michigan Meadows Apartments, 3800 West Michigan, Indianapolis, Indiana.

Mundell & Associates, Inc., October 22, 2002, *Review of Keramida Environmental, Inc. Phase II Investigation Report*, Former General Motors Corporation Allison Gas Turbine Division Plant 10, 700 North Olin Avenue, Indianapolis, Indiana.

Mundell & Associates, Inc., February 14, 2003, *Review of Keramida Environmental, Inc. Remediation Work Plan*, Former General Motors Corporation Allison Gas Turbine Division Plant 10, 700 North Olin Avenue, Indianapolis, Indiana.

Mundell & Associates, Inc., December 29, 2003, *Phase I Environmental Site Assessment*, Michigan Plaza, 3801-3823 West Michigan Street, Indianapolis, Indiana

Mundell & Associates, Inc., June 9, 2003, *Air Quality Investigation Report*, Michigan Meadows Apartments and Michigan Plaza Shopping Center, Indianapolis, Indiana.

Mundell & Associates, Inc., April 4, 2005 *Air Quality Investigation Report-October 2004*, Michigan Apartments and Michigan Plaza, 3800 & 3801-3823 West Michigan Street, Indianapolis, Indiana

O'Brien & Gere Engineers, Inc., May 1994, *Buyer Environmental Assessment*, Allison Engine Company, Inc.

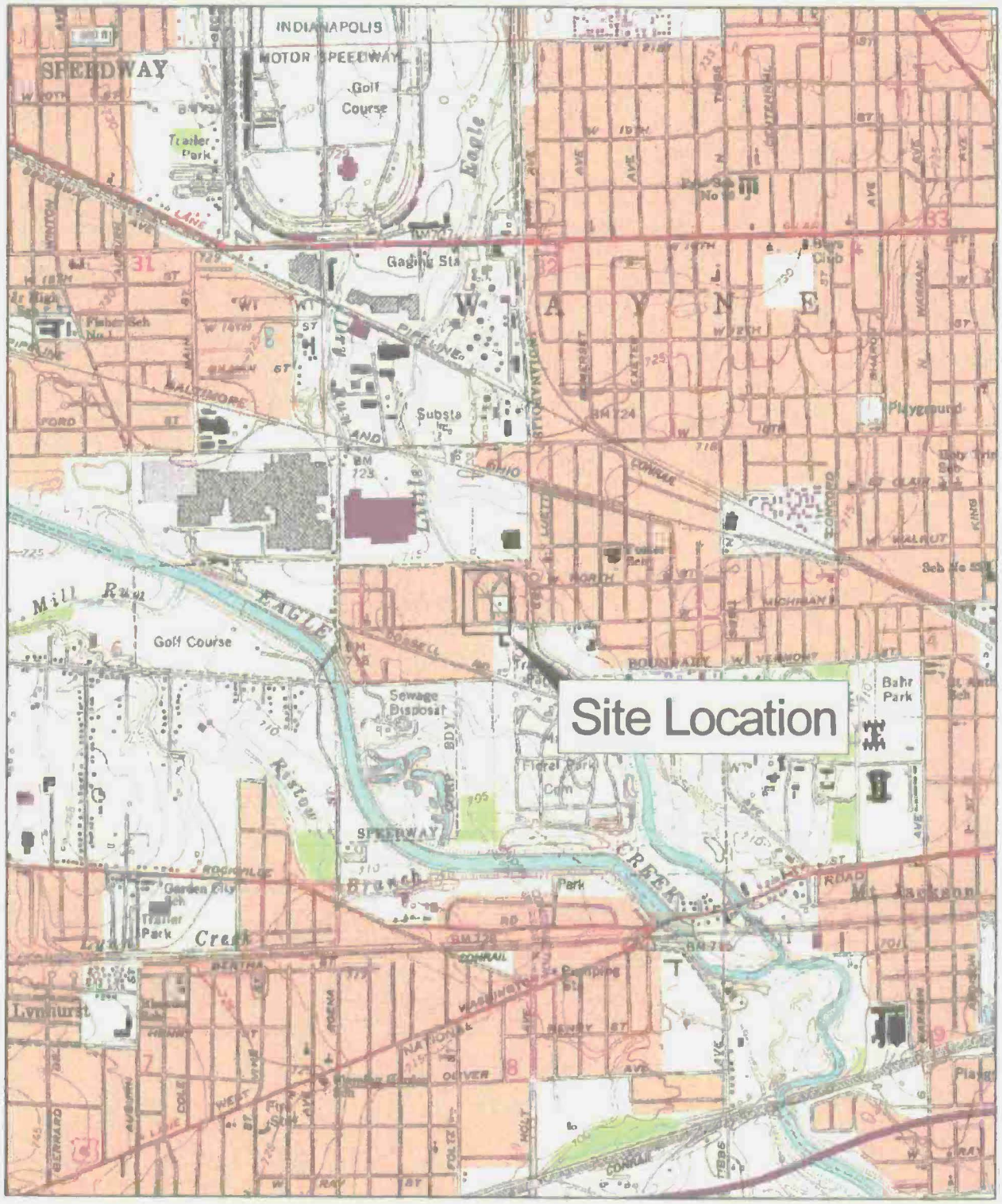

Source: Maywood, Indiana Quadrangle
USGS 7.5 Minutes Series (Topographic)
1986

0 1,000 2,000
Scale in Feet

MUNDELL & ASSOCIATES, INC. *Consulting Professionals for the Earth & Environment* *429 East Vermont Street, Suite 200* *Indianapolis, Indiana 46202-3688* *317-630-9060, fax 317-630-9065*	Project Number: M01046 Drawing File: Site Vicinity.skd Date Prepared: 5/15/03 Scale: 1"= 2,000 Feet	**SITE VICINITY MAP** Michigan Apartments Phase II Site Investigation 3800 West Michigan Avenue Indianapolis, Indiana	FIGURE 1

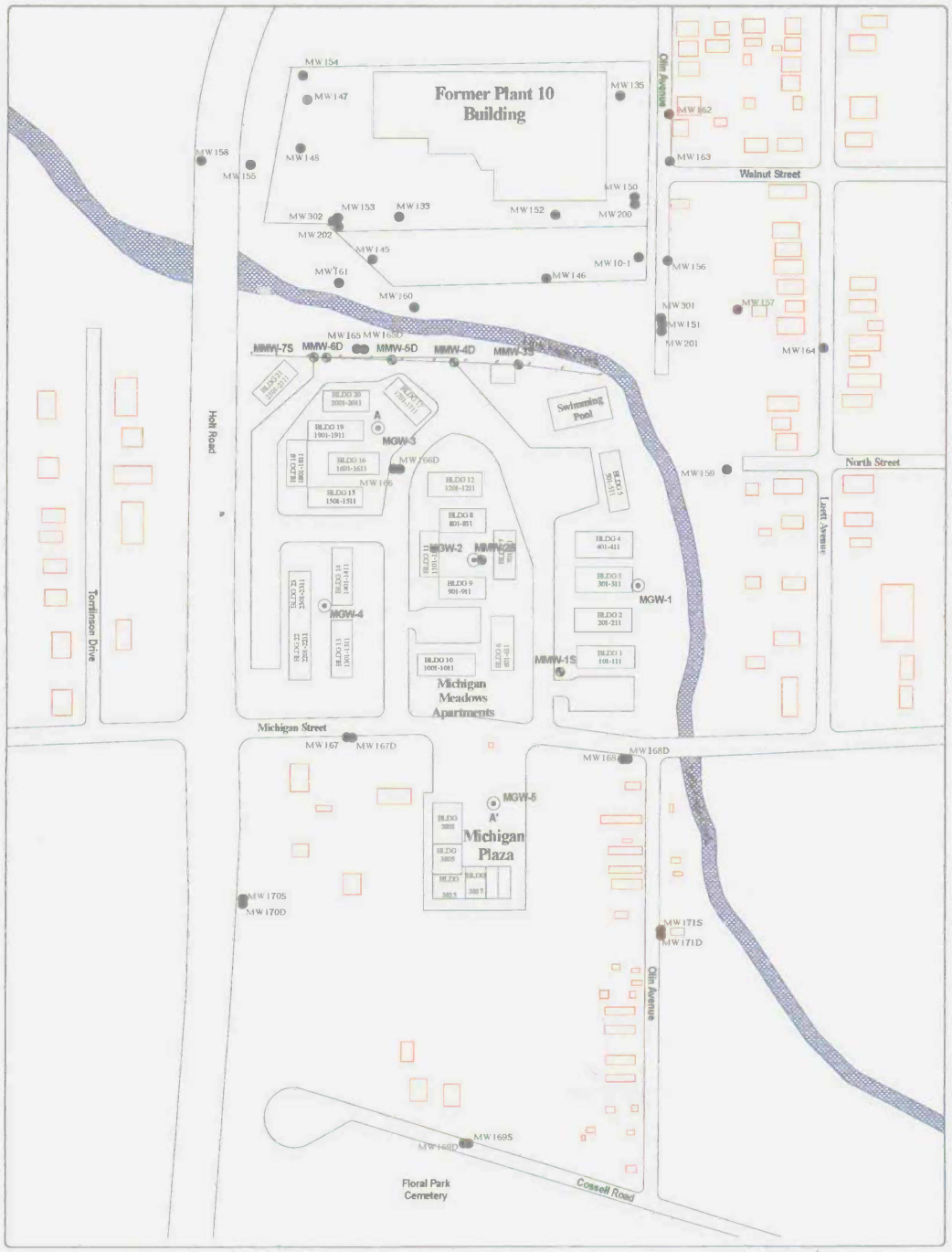

LEGEND

Fence

MW160 Keramida Monitoring Wells

MMW-5D New MUNDELL Monitoring Wells (August 2004)

NORTH

SCALE 0 200 feet

Keramida Monitoring Well Locations Referenced from Keramida Environmental, Inc. Project No. 2829 March 13, 2002

MUNDELL & ASSOCIATES, INC.
Consulting Professionals for the Earth & Environment
429 East Vermont Street, Suite 200
Indianapolis, Indiana 46202-3688
317-630-9060, fax 317-630-9065

Project Number:	M01046
Drawing File:	Base Map.SKF
Date Prepared:	11/17/04
Scale:	1"=200'±

SITE PLAN
Phase II Site Investigation
Michigan Meadows Apartments
3800 West Michigan Avenue
Indianapolis, Indiana

FIGURE
2

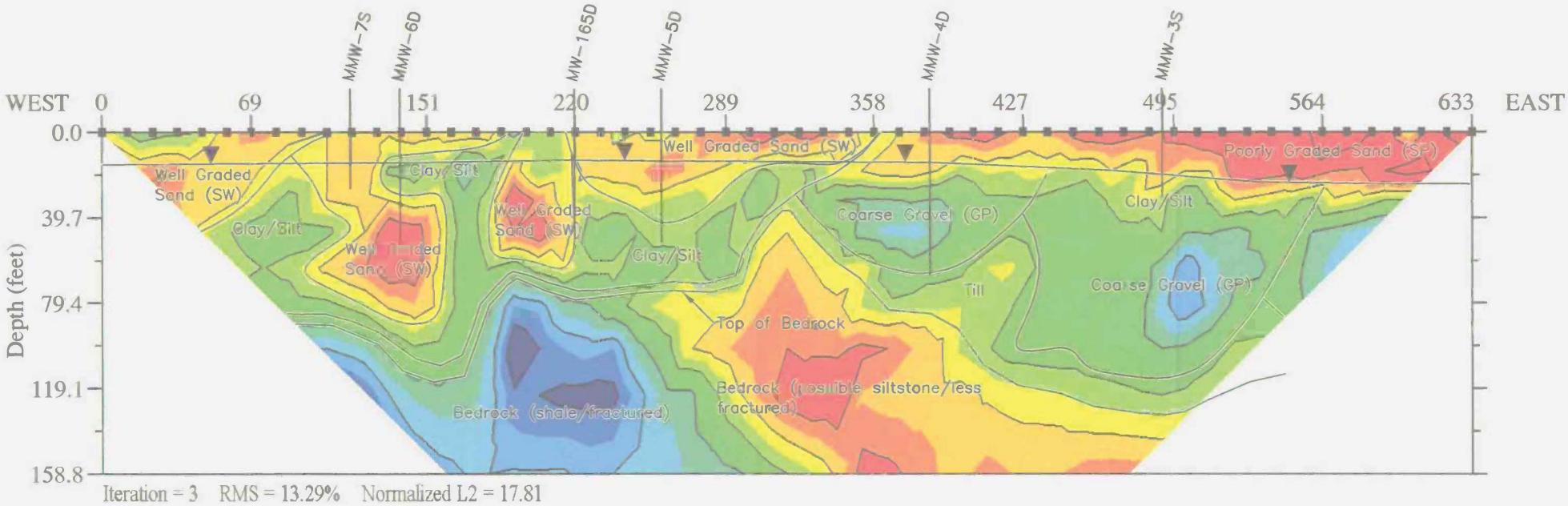

RESISTIVITY (OHM-M)	COLOR
8.037	
10.600	
13.980	
18.437	
24.315	
32.068	
42.292	
55.776	
73.559	
97.013	
127.944	
168.736	
222.535	
293.487	
387.061	
510.470	

MUNDELL & ASSOCIATES, INC
Consulting Professionals for the Earth and the Environment
429 East Vermont Street, Suite 200
Indianapolis, Indiana 46202-3688
317-630-9060, fax 317-630-9065
www.MundellAssociates.com

PROJECT NO.:	M01046	FILE NO.:	
DRAWING:	AS SHOWN	PLOT SIZE:	B landscape
DRAFTED BY:	GBB	DATE:	2/10/05
CHECKED BY:	JAM	DATE:	2/10/05
APPROVED BY:	JAM	DATE:	2/10/05

2D RESISTIVITY PROFILE - AUGUST 2004
SHOWING WELL LOCATIONS
AND GEOLOGIC INTERPRETATIONS
MICHIGAN MEADOWS APARTMENTS
INDIANAPOLIS, INDIANA

FIGURE 3

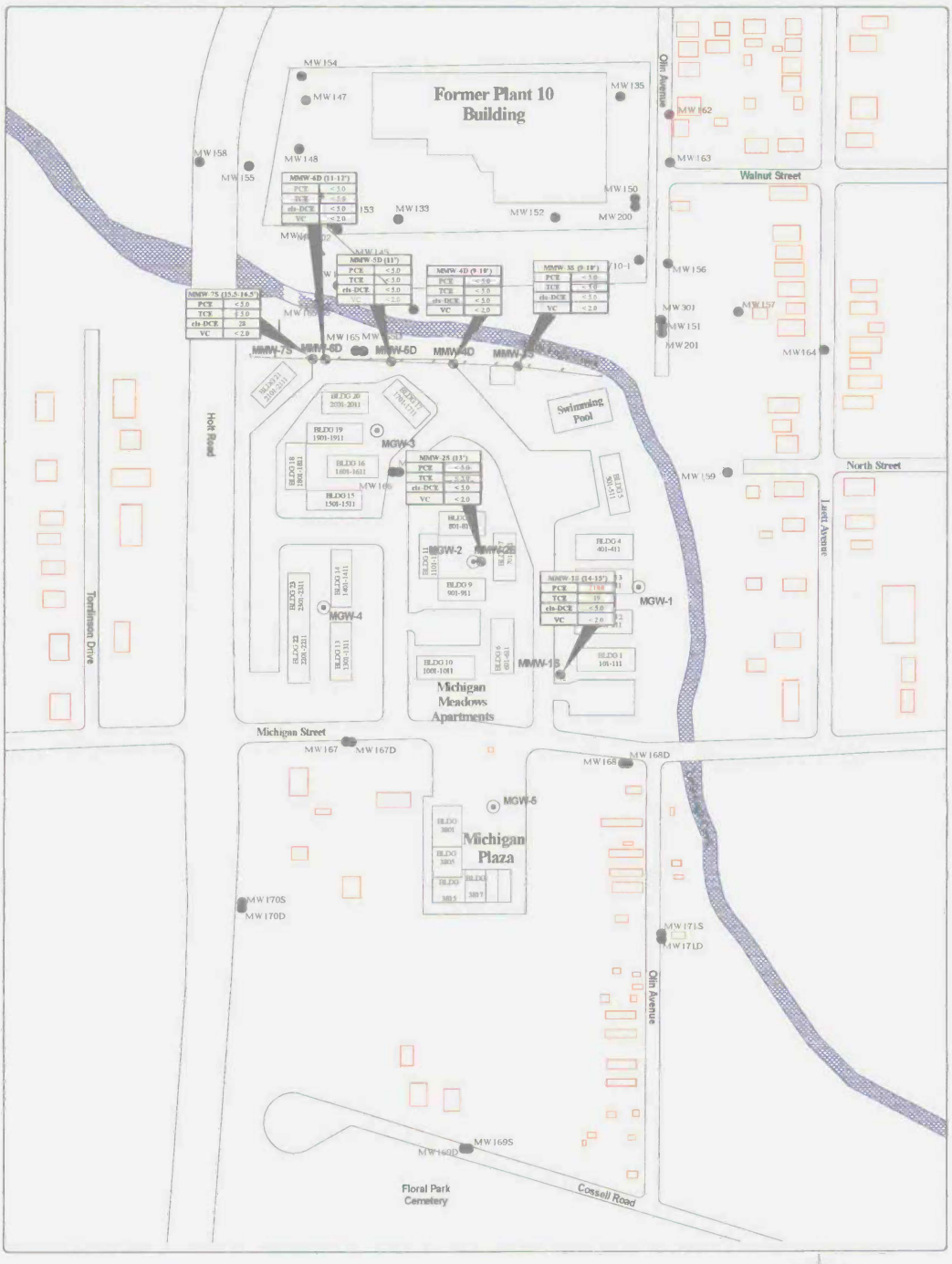

LEGEND

Fence

MW160 Keramida Monitoring Wells

MMW-5D New MUNDELL Monitoring Wells (August 2004)

Sample Location	
PCE	Tetrachloroethene (ug/kg)
TCE	Trichloroethene (ug/kg)
cis-DCE	cis-1,2-Dichloroethene (ug/kg)
VC	Vinyl Chloride (ug/kg)
Note: ND (Not Detected)	

Keramida Monitoring Well Locations Referenced from Keramida Environmental, Inc. Project No. 2829 March 13, 2002

MUNDELL & ASSOCIATES, INC.
Consulting Professionals for the Earth & Environment
429 East Vermont Street, Suite 200
Indianapolis, Indiana 46202-3688
317-630-9060, fax 317-630-9065

Project Number: M01046
Drawing File: Base Map.SKF
Date Prepared: 11/17/04
Scale: 1"=200'±

SOIL ANALYTICAL RESULTS
Phase II Site Investigation
Michigan Meadows Apartments
3800 West Michigan Avenue
Indianapolis, Indiana

FIGURE
4

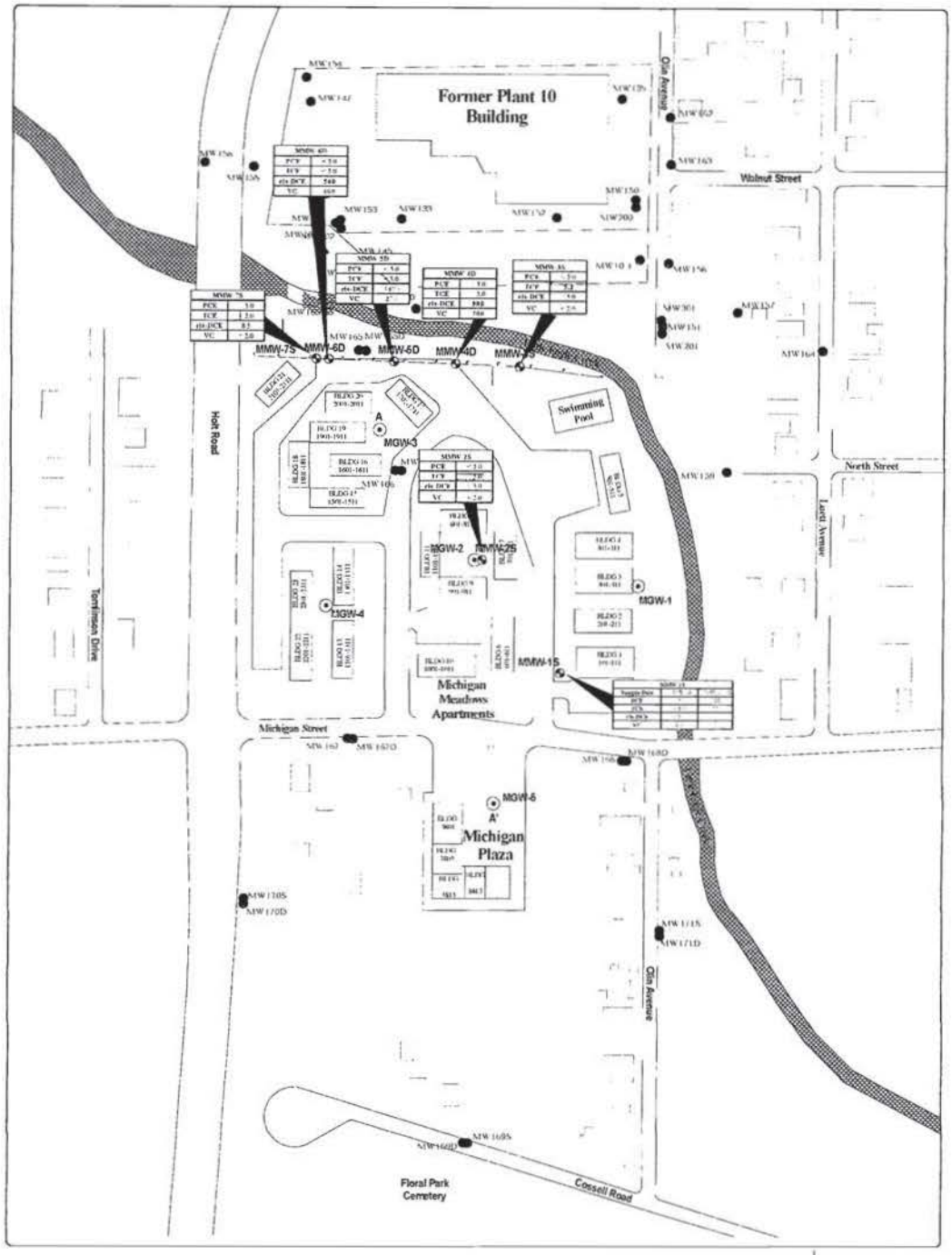

LEGEND

Fence

MW160 Keramida Monitoring Wells

MMW-6D New MUNDELL Monitoring Wells (August 2004)

Sample Location	
PCE	Tetrachloroethene (ug/L)
TCE	Trichloroethene (ug/L)
cis-DCE	cis-1,2-Dichloroethene (ug/L)
VC	Vinyl Chloride (ug/L)
Note: ND (Not Detected)	

NORTH

SCALE 0 200 feet

Keramida Monitoring Well Locations Referenced from Keramida Environmental, Inc. Project No. 2829 March 19, 2002

MUNDELL & ASSOCIATES, INC.

Consulting Professionals for the Earth & Environment

429 East Vermont Street, Suite 200
Indianapolis, Indiana 46202-3688
317-630-9060, fax 317-630-9065

Project Number: M01046
Drawing File: Base Map.SKF
Date Prepared: 11/17/04
Scale: 1"=200'

GROUNDWATER ANALYTICAL RESULTS
Phase II Site Investigation
Michigan Meadows Apartments
3800 West Michigan Avenue
Indianapolis, Indiana

FIGURE
5

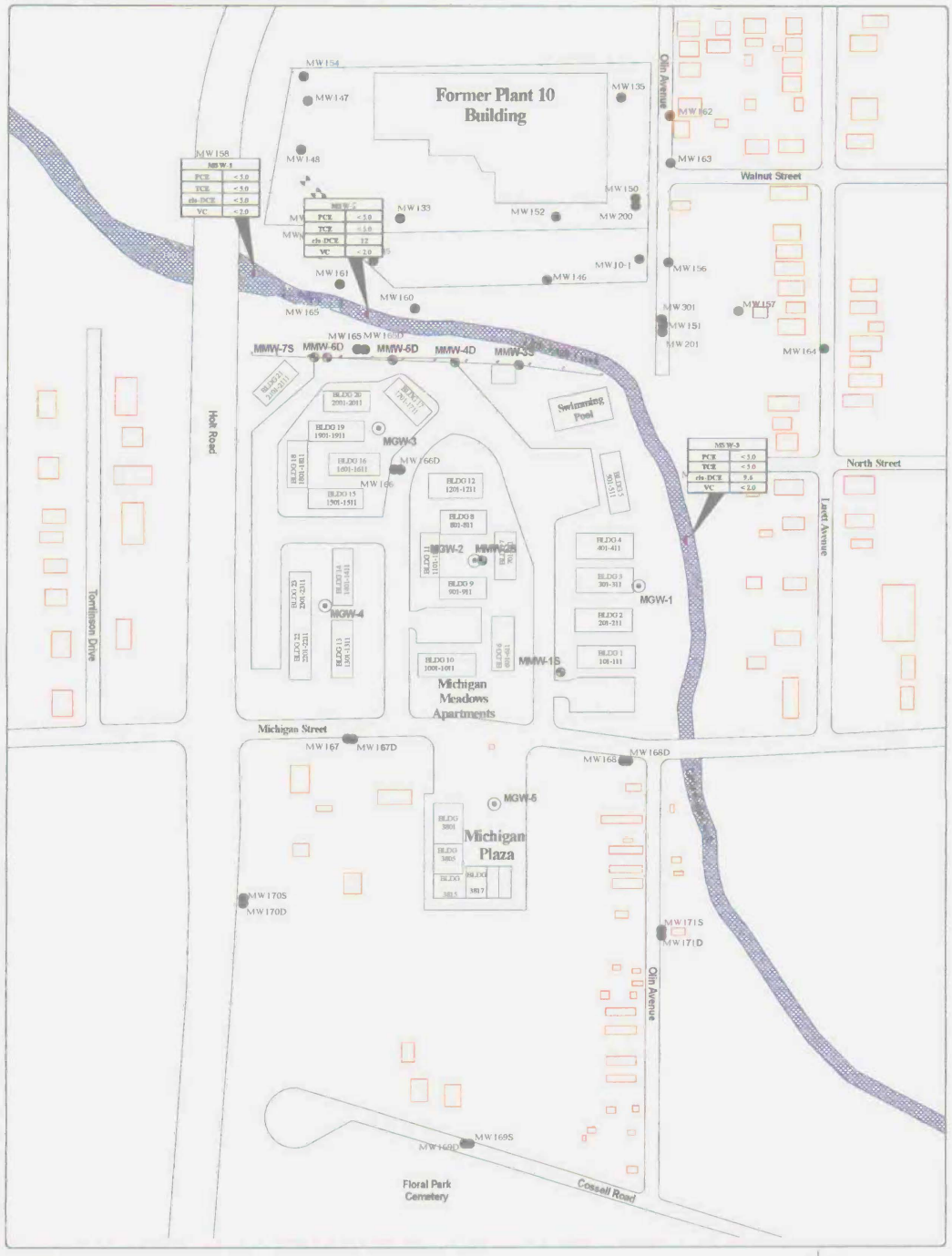

LEGEND

- Fence
- MW160 — Keramida Monitoring Wells
- MMW-5D — New MUNDELL Monitoring Wells (August 2004)
- MSW-1 — MUNDELL Surface Water Sampling Locations (Little Eagle Creek - September 2004)
- 12 — Detectable Concentrations

Sample Location	
PCE	Tetrachloroethene (ug/L)
TCE	Trichloroethene (ug/L)
cis-DCE	cis-1,2-Dichloroethene (ug/L)
VC	Vinyl Chloride (ug/L)
Note: ND (Not Detected)	

NORTH

SCALE 0 200 feet

Keramida Monitoring Well Locations Referenced from Keramida Environmental, Inc. Project No. 2829 March 13, 2002

MUNDELL & ASSOCIATES, INC.
Consulting Professionals for the Earth & Environment
429 East Vermont Street, Suite 200
Indianapolis, Indiana 46202-3688
317-630-9060, fax 317-630-9065

Project Number: M01046
Drawing File: Base Map.SKF
Date Prepared: 11/17/04
Scale: 1"=200' ±

SURFACE WATER ANALYTICAL RESULTS
Little Eagle Creek - September 2004
Phase II Site Investigation
Michigan Meadows Apartments
3800 West Michigan Avenue
Indianapolis, Indiana

FIGURE 6

Table 1
Monitoring Wells Survey Data
Michigan Meadows Apartments
3800 West Michigan Street, Indianapolis, Indiana
MUNDELL Project Number M01046

Well	Top of Casing Elevation (feet MSL)	Total Depth (feet)	Screened Interval (feet)	Depth To Water (feet)	Groundwater Elevation (feet MSL)
MMW-1S	713.66	20.00	10.00 - 20.00	16.24	697.42
MMW-2S	713.43	20.00	10.00 - 20.00	15.65	697.78
MMW-3S	711.58	30.00	18.50 - 19.50	12.58	699.00
MMW-4D	711.64	66.00	47.50 - 62.50	13.79	697.85
MMW-5D	711.75	51.00	36.00 - 46.00	13.71	698.04
MMW-6D	712.68	51.00	39.00 - 49.00	14.52	698.16
MMW-7S	712.35	26.00	12.00 - 22.00	14.12	698.23

NOTES:
Reference elevation during the surveying event was elevation of Keramida monitoring well MW-165S (TOC elevation= 712.54 feet) documented in *Keramida Phase II Investigation Report, March 2002*
Wells Installation Date: August 2004
Wells Surveying Date: September 30th, 2004
Water Level Collection Date: September 10, 2004

Table 2
Groundwater Sampling Information
Water Level Collection Date: September 10th, 2004
Michigan Meadows Apartments
3800 West Michigan Street
MUNDELL Project Number M01046

Well	Sampling Date	Depth to Groundwater (feet)	Depth to Product (feet)	Product Thickness (feet)	Purge Volume (gallons)
MMW-1S	09/10/04	16.24	ND	ND	1.80
MMW-2S	09/10/04	15.65	ND	ND	2.09
MMW-3S	09/10/04	12.58	ND	ND	8.36
MMW-4D	09/10/04	13.79	ND	ND	25.06
MMW-5D	09/10/04	13.71	ND	ND	17.90
MMW-6D	09/10/04	14.52	ND	ND	17.51
MMW-7S	09/10/04	14.12	ND	ND	5.70

NOTES:

ND - Not detected

Table 3
Soil Analytical Results
Michigan Meadows Apartments
Indianapolis, Indiana
MUNDELL Job No.: M01046

Sample (Depth in feet)	Sample Date	PCE	TCE	cis-1,2-DCE	trans-1,2-DCE	Vinyl chloride
		ug/kg	ug/kg	ug/kg	ug/kg	ug/kg
MMW-1S (14-15')	9/10/2004	2,100	19	< 5.0	< 5.0	< 2.0
MMW-2S (13')	9/10/2004	< 5.0	< 5.0	< 5.0	< 5.0	< 2.0
MMW-3S (9-10')	9/10/2004	< 5.0	< 5.0	< 5.0	< 5.0	< 2.0
MMW-4D (9-10')	9/10/2004	< 5.0	< 5.0	< 5.0	< 5.0	< 2.0
MMW-5D (11')	9/10/2004	< 5.0	< 5.0	< 5.0	< 5.0	< 2.0
MMW-6D (11-12')	9/10/2004	< 5.0	< 5.0	< 5.0	< 5.0	< 2.0
MMW-7S (15.5-16.5')	9/10/2004	< 5.0	< 5.0	28	< 5.0	< 2.0
IDEM RISC Default Industrial Cleanup Level	-	**640**	**82**	**5,800**	**14,000**	**13**
IDEM RISC Default Residential Cleanup Level	-	**58**	**57**	**400**	**680**	**13**

Note:
All Values Over IDEM RISC Industrial Default Cleanup Level shown in RED
All Values Over IDEM RISC Residential Default Cleanup Level shown in **BLUE**
PCE = Tetrachloroethene; TCE = Trichloroethene; cis-1,2-DCE = cis-1,2-Dichloroethene; trans-1,2-DCE = trans-1,2-Dichloroethene

Table 4
Groundwater Analytical Results
Michigan Meadows Apartments
Indianapolis, Indiana
MUNDELL Job No.: M01046

Sample	Sample Date	PCE	TCE	cis-1,2-DCE	trans-1,2-DCE	Vinyl chloride
		ug/l	ug/l	ug/l	ug/l	ug/l
MMW-1S	9/10/2004	3.1 J	< 5.0	< 5.0	< 5.0	4.1
	3/15/2005	150	10	< 5.0	< 5.0	< 2.0
MMW-2S	9/10/2004	< 5.0	< 5.0	< 5.0	< 5.0	< 2.0
MMW-3S	9/10/2004	< 5.0	**5.2**	< 5.0	< 5.0	< 2.0
MMW-4D	9/10/2004	< 5.0	< 5.0	**980**	< 5.0	200
MMW-5D	9/10/2004	< 5.0	< 5.0	3,400	13	270
MMW-6D	9/10/2004	< 5.0	< 5.0	**540**	< 5.0	400
MMW-7S	9/10/2004	< 5.0	< 5.0	8.5	< 5.0	< 2.0
DUP (MMW-4D)	9/10/2004	< 5.0	< 5.0	1,100	< 5.0	200
TB-01	9/10/2004	< 5.0	< 5.0	< 5.0	< 5.0	< 2.0
IDEM RISC Default Industrial Cleanup Level	-	**55**	**7.2**	**1,000**	**2,000**	**2**
IDEM RISC Default Residential Cleanup Level	-	**5**	**5**	**70**	**100**	**2**

Note:

All Values Over IDEM RISC Industrial Default Cleanup Level shown in RED
All Values Over IDEM RISC Residential Default Cleanup Level shown in **BLUE**
PCE = Tetrachloroethene; TCE = Trichloroethene; cis-1,2-DCE = cis-1,2-Dichloroethene; trans-1,2-DCE = trans-1,2-Dichloroethene
TB-01 = trip blank

Table 5
Surface Water Analytical Results
Michigan Apartments
Indianapolis, Indiana
MUNDELL Job No.: M01046

Sample	Sample Date	PCE	TCE	cis-1,2-DCE	trans-1,2-DCE	Vinyl chloride
		ug/l	ug/l	ug/l	ug/l	ug/l
MSW-1	9/30/2004	< 5.0	< 5.0	< 5.0	< 5.0	< 2.0
MSW-2	9/30/2004	< 5.0	< 5.0	**12**	< 5.0	< 2.0
MSW-3	9/30/2004	< 5.0	< 5.0	**9.6**	< 5.0	< 2.0

NOTES:

9.6 Detectable Conc.

PCE: Tetrachloroethene

TCE: Trichloroethene

cis-1,2-DCE: cis-1,2-Dichloroethene

trans-1,2-DCE: trans-1,2-Dichloroethene

APPENDIX A

2D Resistivity Imaging Method
Technical Background

Appendix A

2-Dimensional Resistivity Imaging Method - Technical Background

To address the vertical and lateral resistivity characteristics of the subsurface, Mundell acquired 2-dimensional electrical resistivity imaging data (i.e., cross sections) at key locations.

Electrical Resistivity Background Information

In the resistivity method, artificially-generated electric current (I, amps) is introduced into the subsurface and potential difference (V, volts) is measured along the surface in the area undergoing current flow (**Diagram A.1**). Electrical resistivity is calculated using geometrical factors related to electrode arrangements known as arrays.

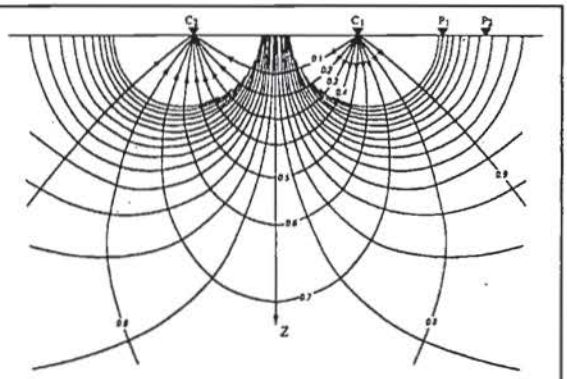

Diagram A.1. Distribution of current and potential lines for two current electrodes at the surface of a homogeneous half space.

Resistivity is one of the most variable physical properties of natural materials. Certain minerals such as native metals and graphite conduct electricity via the passage of electrons. However, electronic conduction is generally rare. Most rock-forming minerals are insulators, and electrical current is carried through a rock or soil mainly by the passage of ions in pore waters; this is termed ionic conduction. Thus, most rocks and soils conduct electricity by electrolytic rather than electronic processes. It follows that porosity and permeability are the major control variables of the resistivity of rocks, and that resistivity generally increases as porosity and permeability decrease. In unsaturated materials, moisture content also strongly influences resistivity. The electrical conductivity of the water in the pores also has a strong influence on resistivity as well.

Traditionally, electrical resistivity data were collected in differing electrode array configurations and modes of data collection depending upon the project objectives. **Diagram A.2** illustrates some of the more common electrode array configurations. Each array type has specific application depending upon the resistivity structure of the subsurface. For example, the Wenner and Schlumberger array types are primarily used in situations were the subsurface is largely horizontally stratified, whereas the dipole-dipole array is more applicable in those situations where lateral variations in electrical resistivity are being sought. Choice of array type has also traditionally depended upon whether the data were being collected in a profiling mode, sounding mode, or a combination of both known as a pseudosection. Practical and economic considerations have often been as large a factor as technical considerations because of the amount of effort required to collect electrical resistivity data.

ARRAY	GEOMETRY	K	DISPLAY	USE
GRADIENT		See Fig. 31	Plan contours of ρ_a	Profiling
DIPOLE-DIPOLE		$\pi n(n+1)(n+2)a$	ρ_a vs n	Sounding-Profiling
POLE-DIPOLE		$2\pi n(n+1)a$	ρ_a vs n	Sounding-Profiling
SCHLUMBERGER		$\pi n(n+1)a$	ρ_a vs $(n+1/2)a = AB/2$	Sounding
WENNER		$2\pi a$	ρ_a vs a	Sounding

Diagram E.2. The common arrays used in resistivity. The dipole-dipole array was chose for this project.

With rapid advances in computer and electronics technologies, acquisition and processing of large amounts of high quality resistivity data have become practical. Whereas in the past data collection was segregated into horizontal profiling and 1-dimensional vertical soundings, it has now become possible to collected data in sufficiently high volume to model 2-dimensional or 3-dimensional apparent resistivity data resulting in a "true" resistivity cross-section or volume.

Resistivity Instrumentation

The electrical resistivity instrumentation used for this project consisted of an Advanced Geosciences, Inc. (AGI) SuperSting R8 portable earth resistivity meter with internal memory storage. The SuperSting R8, electrode switching was handled internally with the use of 56 electrodes with built-in switches. Each switchable electrode had a unique number or address that was used by the SuperSting R8 to control the switching process during data collection. Ground contact was made with stainless steel electrode stakes.

One of the traditional practical shortcomings of electrical resistivity, aside from its labor-intensive nature, is the difficulty in establishing consistent, high quality ground contact. As a result, resistivity data have often been plagued with high levels of spurious noise introduced by poor electrical contact, high contact resistance, and other undesirable effects caused by stray electrical currents and spontaneous potentials. The SuperSting R8 has been programmed to optimize accuracy and reduce data noise. This has been accomplished in a couple ways. First, prior to data collection, the SuperSting R8 has the ability to conduct electrode resistance testing to ensure that consistent, high quality contact is made with the ground at each electrode. Second, during data acquisition, the SuperSting R8 conducts repeat readings and carries out running statistical analysis for each configuration until the desired level of accuracy is realized.

The equipment operator programs the SuperSting R8 to collect data in any array the operator wishes. Typically, a standard array is selected and specification regarding the number of electrodes and the data collection scheme are programmed directly into the instrument. The SuperSting R8 executes the custom command file, ordering the system to switch on four active electrodes at a given time (i.e., typically two current and two potential electrodes). The electrodes are typically laid out in a straight line, evenly spaced, 3.5 meters in this case (total line length therefore of 192.5 meters or about 631.6 feet). The final resistivity data from each four-electrode combination along with the electrode positions are stored in internal memory for later downloading and processing.

With the SuperSting R8 the switching is controlled directly by the R8 unit itself. With the Sting R8 it is theoretically possible to connect and control as many as 65,000 electrodes. All electrodes are controlled from the R8 directly without need for a separate switchbox. Any combination of current and voltage electrode connections can be set up remotely before a reading is taken. A 600-reading 2D profile can be measured in less than two hours with the SuperSting R8 unit.

Electrical Resistivity Equipment Specifications

Table A.1 below summarizes the specifications for the SuperSting R8 resistivity meter.

TABLE A.1 STING R8 RESISTIVITY METER SPECIFICATIONS

ITEM	SPECIFICATION
Measurement modes	Apparent resistivity, resistance, induced polarization (IP), battery voltage
Measurement range	+/- 10V
Measuring resolution	Max 30 nV, depends on voltage level
Screen resolution	4 digits in engineering notation.
Output current	1mA - 1.2A continuous
Output voltage	800 Vp-p, actual electrode voltage depends on transmitted current and ground resistivity.
Output power	200W
Input channels	Eight channels.
Input gain ranging	Automatic, always uses full dynamic range of receiver.
Input impedance	>20 Mohms
Input voltage	Max 10 V
SP compensation	Automatic cancellation of SP voltages during resistivity measurement. Constant and linearly varying SP cancels completely (V/I and IP measurements).
Type of IP measurement	Time domain chargeabilitiy (M), six time slots measured and stored in memory
IP current transmission	ON+, OFF, ON-, OFF
IP cycle times	0.5, 1, 2, 4 and 8 s
Measure cycles	Running average of measurement displayed after each cycle. Automatic cycle stops when reading errors fall below user set limit or user set max cycles are done.
Resistivity cycle times	Basic measure time is 0.4, 0.8, 1.2, 3.6, 7.2 or 14.4 s as selected by user via keyboard. Autoranging and commutation adds about 1.4 s
Signal processing	Continuous averaging after each complete cycle. Noise errors calculated and displayed as percentage of reading.Reading displayed as resistance (dV/I) and apparent resistivity (ohmm or ohmft). Resistivity is calculated using user entered electrode distances.
Noise suppression	Better than 100 dB at f>20 Hz Better than 120 dB at power line frequencies (16 2/3, 20, 50 & 60 Hz)

TABLE A.1 STING R8 RESISTIVITY METER SPECIFICATIONS

ITEM	SPECIFICATION
Total accuracy	Better than 1% of reading in most cases (lab measurements). Field measurement accuracy depends on ground noise and resistivity. Instrument will calculate and display running estimate of measuring accuracy.
System calibration	Calibration is done digitally by the microprocessor based on correction values stored in memory.
Supported configurations	Resistance, Schlumberger, Wenner, dipole-dipole, pole-dipole and pole-pole.
Operating system	Stored in re-programmable flash memory. Updated versions can be downloaded from our web site and stored in the flash memory.
Data storage	Full resolution reading average and error are stored along with user entered coordinates and time of day for each measurement. Storage is effected automatically in a job oriented file system.
Memory capacity	The memory can store more than 79,000 measurements (resistivity mode) and more than 26,000 measurements in combined resistivity/IP mode
Data transmission	RS-232C channel available to dump data from instrument to a Windows type computer on user command.
Automatic multi-electrodes	The SuperSting is designed to run dipole-dipole, pole-dipole, pole-pole, Wenner and Schlumberger surveys including roll-along surveys completely automatic with the Swift Dual Mode Automatic Multi-electrode system (patent 6,404;203). The SuperSting can run any other array by using user programmed command files. These files are ASCII files and can be created using a regular text editor. The command files are downloaded to the SuperSting RAM memory and can

TABLE A.1 STING R8 RESISTIVITY METER SPECIFICATIONS

ITEM	SPECIFICATION
	at any time be recalled and run. Therefore there is no need for a fragile computer in the field.
User controls	20 key tactile, weather proof keyboard with numeric entry keys and function keys. On/Off switch Measure button, integrated within main keyboard. LCD night light switch (push to illuminate).
Display	Graphics LCD display (16 lines x 30 characters) with night light.
Power supply, field	12/24 V DC external power, connector on front panel. Maximum power output is increased when using 24V supply.
Power supply, office	Mains operated DC power supply.
Operating time	Depends on survey conditions and size of battery used. With 24V battery usage survey times can be reduced thanks to the higher output power available.
Weight	10.2 kg (22.5 lb), instrument only.
Dimensions	Width 184 mm (7.25"), length 406 mm (16") and height 273 mm (10.75").

Dipole-Dipole Array Setup

For the Sting R8 all 56 electrodes were laid out along the lines of data collection at a spacing of 3.5 meters. These setups resulted in a line length of 192.5 meters (633 feet). The Sting R8 resistivity meter was instructed to collected apparent resistivity data using the dipole-dipole configuration. **Diagram A.3** shows the positions of the electrodes and the locations of the individual data points for the dipole-dipole array for a 30-electrode cable. For each data point there are four corresponding electrode positions; two current and two potential (A/B and M/N on **Diagram A.3** – an example data point is circled on each of the three setups shown). Progressively greater electrode separations result in greater depths. The depth axis shown on the left of the graphs is "pseudodepth" which is simply a convenient way of showing the relative depth penetration of different electrode combinations. Actual depth must be determined through inversion modeling discussed below. The pseudodepth for a given electrode separation (i.e., A/B and M/N) is limited to a maximum of seven electrode spacings. So, for example, if the electrodes 1 and 2 are the current electrodes (B and A, respectively), the furthest potential electrode locations allowed are electrodes 9 and 10 (M and N, respectively). This constraint is imposed by theoretical limitations of the dipole-dipole array.

The uppermost setup on **Diagram A.3** shows the initial setup used on each line for the first (and only in this case) setup. As needed, additional setups for moving forward down the line

are shown in the middle and bottom setups (not used at this site). The process of moving down the line of data collection is termed "roll-along". The subsequent setups beyond the initial setup have fewer data points on the left-hand portion because of the overlapping redundancy with the previous setups makes data collection on the left-hand side unnecessary. The first roll-along setup (middle of **Diagram A.3**) is arranged so that electrodes 16–30 come before electrodes 1-15 because during the roll-along process 15 electrodes are moved ahead in the direction of data collection at a given time. Thus, beyond the initial setup new data are added each move. The second roll-along (bottom of **Diagram A.3**) differs from the first in that the electrodes are again in normal order, i.e. 1-30 consecutive.

Electrode Contact Resistance Testing

A critically important component to resistivity data acquisition is establishing acceptable electrode contact with the ground. Poor or inconsistent electrical contact with the ground caused by high contact resistance introduces noise into resistivity data. This has been historically one of the technical shortcomings of this method. However, the Supersting R8 is equipped to easily assess and correct inconsistent and/or high electrode contact resistance problems.

Each of the Swift electrodes was attached to a stainless steel (corrosion-resistant) electrode stake that was driven into the ground approximately one foot. Once all electrodes were attached to the stainless steel stakes, an automated electrode contact resistance test was run by the Sting R8. This test consists of passing electrical current between adjacent electrodes while simultaneously measuring voltage (V) and current (I). From these measurements the contact resistance is calculated (i.e., resistance, $R = V/I$). This testing serves several quality assurance needs. First, if the electrode is not properly connected to the grounded stake or if there are problems with the internal switching electronics of the electrode, an error will be indicated by the Sting R8. Thus, the operator can verify that all electrodes are properly connected and that all internal circuitry is operating properly. Second, the Sting R8 units display the resistance value of the individual electrode pairs. The goal of the contact resistance testing is to establish relatively consistent electrode resistance values, all within an acceptable range. Typically, electrode resistance values of greater than approximately 1000 ohms justify additional efforts to improve contact. Improved electrode contact can be achieved by driving the stake deeper or at a new location and/or by pouring salt water on the ground at the electrode location. All contact resistances at this site were less than 1000 ohms without the need for adding salt water. However, salt water was added to all electrode stake locations to improve the contact resistance in order to collect higher quality data.

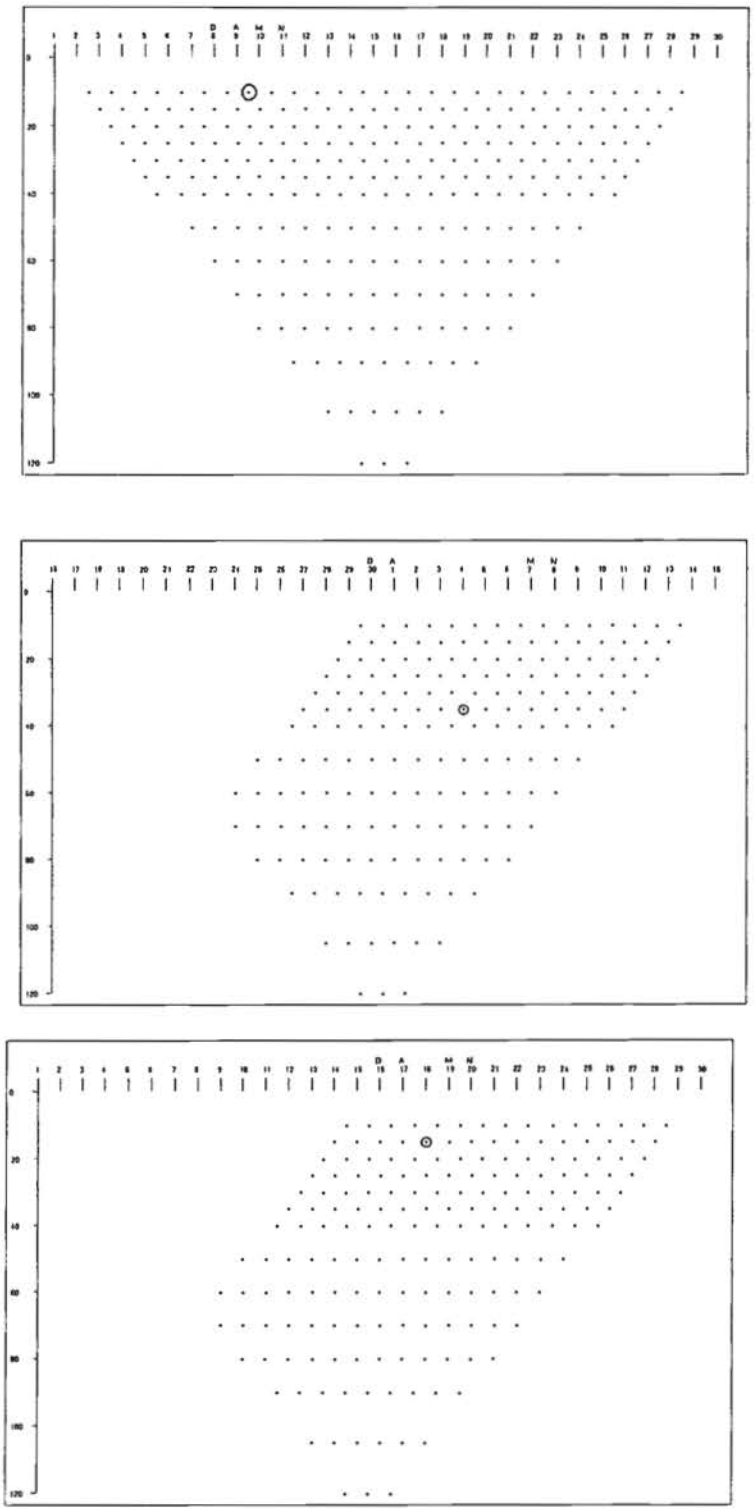

Diagram A.3. Layout of dipole-dipole array. 30 electrodes were used as shown along the horizontal portion of the diagrams above. The individual points show the locations where the data points plot in depth at the mid point between current and potential electrodes. A and B are the current electrode positions, and M and N are the potential electrode positions. Top view is the initial layout where the full data set is acquired, the middle diagram is the first roll-along setup, and the bottom diagram shows the second roll-along setup. The first and second roll-along setups are alternated beyond the first three setups.

2-Dimensional Resistivity Data Processing Procedures (pre-modeling)

The resistivity data were acquired with 2-dimension inversion modeling in mind. The data were stored in the Supersting R8 memory, and then down loaded a PC and saved to disk as AGI Sting format files. **Table A.3** is a portion of an example data file. The dipole-dipole command file controlling the collection of data was called "dip10.cmd" in this example and contained 246 individual command lines to collect the individual data points in the pseudosection (see top panel of **Diagram A.3**). Included in this data file are the date and time, electrode positions, measured resistance (V/I) and associated measurement error, output current of the resistivity meter, and the calculated apparent resistivity based on the formula for dipole-dipole array (see **Diagram A.2**). The data from this file could be used to create an apparent resistivity pseudosection.

Table A.3. Example of Sting Data File

Command Line Number	Collection Mode Indicator	Date	Time	V/I (ohms)	error (10ths of percent)	Output Current (milliamps)	Apparent Resistivity (ohm-ft)	Command File Name	x-coordinate of A electrode	y-coordinate of A electrode	x-coordinate of B electrode	y-coordinate of B electrode	x-coordinate of M electrode	y-coordinate of M electrode	x-coordinate of N electrode	y-coordinate of N electrode
1	USER	19990101	10:51:14	1.07E+01	2	100	2.02E+03	dip10	10	0	0	0	20	0	30	0
7	USER	19990101	10:52:27	3.26E-02	7	100	5.16E+02	dip10	10	0	0	0	80	0	90	0
8	USER	19990101	10:52:41	8.45E-02	0	100	6.37E+02	dip10	20	0	0	0	100	0	120	0
⋮	⋮	⋮	⋮	⋮	⋮	⋮	⋮	⋮	⋮	⋮	⋮	⋮	⋮	⋮	⋮	⋮
244	USER	19990101	11:51:14	8.22E+00	1	100	1.55E+03	dip10	260	0	250	0	270	0	280	0
245	USER	19990101	11:51:30	1.90E+00	0	100	1.43E+03	dip10	260	0	250	0	280	0	290	0
246	USER	19990101	11:51:44	1.13E+01	0	100	2.12E+03	dip10	270	0	260	0	280	0	290	0

However, since the goal was to introduce the apparent resistivity data into an inversion modeling program, the relevant data (electrode positions, electrode separation, and apparent resistivity) were extracted from the Sting format files and passed in the appropriate format to the inversion modeling program discussed below.

2-Dimensional Resistivity Modeling

Two-dimensional (2D) electrical imaging surveys are widely used to map areas of moderately complex geology where conventional resistivity sounding and profiling techniques are inadequate. The results from such surveys are usually plotted in the form of a pseudosection that gives an approximate but distorted picture of the subsurface.

The RES2DINV program, written by Dr. Meng Heng Loke, uses the smoothness-constrained least-squares method inversion technique to produce a 2D model of the subsurface from the apparent resistivity data alone. It is completely automatic and the user does not even have to supply a starting model. This program has been optimized for the inversion of large data sets. The use of available memory is optimized so as to reduce the computer time by minimizing disk swapping. On a Pentium based microcomputer, the inversion of a single

pseudosection is usually completed within minutes. The Wenner, pole-pole, dipole-dipole, pole-dipole, Wenner-Schlumberger and rectangular arrays are supported. Topographic corrections can also be carried out by this program. Together with the 2D forward modeling program RES2DMOD, it forms a complete 2D resistivity forward modeling and inversion package.

The program will automatically choose the optimum inversion parameters for a particular data set. However, the parameters that affect the inversion process can be modified by the user (actual values used are shown on the title blocks for each resistivity profile provided in this report, i.e., Figures 2 and 3). Three different variations of the least-squares method are provided: a very fast quasi-Newton method, a slower but more accurate Gauss-Newton method, and a moderately fast hybrid technique that incorporates the advantages of the quasi-Newton and Gauss-Newton methods. The smoothing filter can be adjusted to emphasize resistivity variations in the vertical or horizontal directions. Two different variations of the smoothness constrained least-squares method are provided; one optimized to reduce the difference between the calculated and measured apparent resistivity values, the other which guaranties models with smooth resistivity variations even with noisy data sets. Resistivity information from borehole and other sources can also be included to constrain the inversion process.

The calculated apparent resistivity data is derived from the model. The RMS error is an indication of how well the calculated apparent resistivity data matches the actual apparent resistivity data. At this site there was good to excellent RMS error indicating that the model, although uncalibrated to actual resistivities, does produce calculated apparent resistivities that closely match the actual field data.

MUNDELL & ASSOCIATES, INC. App. B

BORING LOG

BORING NO: MMW-1S

PAGE 1 OF 1

CLIENT: AIMCO
PROJECT LOCATION: Indianapolis, Indiana
PROJECT NAME: Michigan Meadows
PROJECT NO: M01046
DRILLING CONTRACTOR: American Drilling Services
DRILLER: Bernie Byers
BORING LOCATION: Grassy Area SW Corner of Bldg 1
FIELD GEOLOGIST: Leena Lothe & Jason Armour
NOTES: Soil sample MMW-1S collected at 14.5'

DATE BEGAN: 08/20/04
DATE FINISHED: 08/20/04
DRILLING METHOD: HSA with 4' Geoprobe Sampler
DRILL EQUIP: CME 70
GW DEPTH (OBSERVED): 16'
DEPTH OF BORING: 20'
TOP OF CASING ELEVATION: 713.66'
SURFACE ELEVATION: N/A
COMMENTS:

Lithologic Description	USCS Symbol	Stratum Depth (feet)	PID Headspace (ppm)	Rec. %	Sample Location	Sample ID	Depth (feet)
TOPSOIL: About a foot of topsoil			3.3				0.0
FILL: FILL silty clay with trace sand and trace to some gravel, light brown (7.5 YR 6/3) fill material with roots noted, coal/slag fragment noted at 3 feet, dark brown (7.5 YR 3/2) slight moist, no odor		1	3.2	100%			
			3.4				
CL: SILTY CLAY with some fine to medium sand, very dusky red (10 R 2.5/2), dry, no odor	CL	3	3.6				
			4.4	65%			5.0
			5.2				
			5.3				
			4.9				
			NA	40%			
			NA				
			5.0				10.0
SW: FINE TO MEDIUM SAND with some coarse sand, trace to some fine to medium gravel, trace silt, light gray (2.5 Y 7/2), powdery texture, dry, no odor	SW	11	4.6				
			NA	70%			
			9.3				
			10.9				15.0
- very moist at 15.5', and wet at 16'			8.1				
- 2' split spoon samples			NA	0%			
			NA				
SM: SILTY SAND, sand silt mixture, dark gray (2.5 Y 4/1), slightly wet, no odor	SM	18	4.0	100%			
- End of Boring at 20'			3.5				20.0

Water Level Information

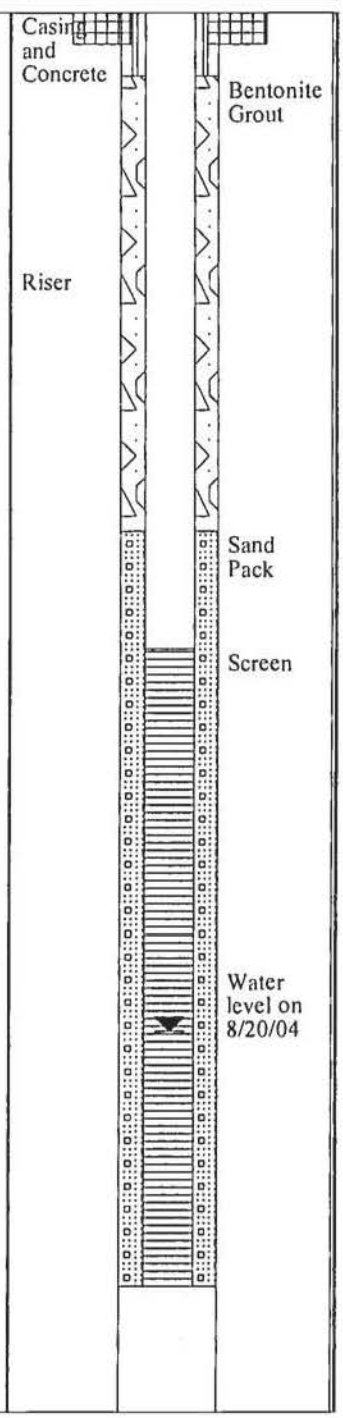

MUNDELL & ASSOCIATES, INC.

BORING LOG

BORING NO: MMW-2S

PAGE 1 OF 1

CLIENT: AIMCO
PROJECT LOCATION: Indianapolis, Indiana
PROJECT NAME: Michigan Meadows
PROJECT NO: M01046
DRILLING CONTRACTOR: American Drilling Services
DRILLER: Bernie Byers
BORING LOCATION: Center of Property, by building 7
FIELD GEOLOGIST: Leena Lothe & Jason Armour
NOTES: Soil sample MMW-2S collected at 13.0'

DATE BEGAN: 08/20/04
DATE FINISHED: 08/20/04
DRILLING METHOD: HSA with 4' Geoprobe Sampler
DRILL EQUIP: CME 70
GW DEPTH (OBSERVED): 15'
DEPTH OF BORING: 20'
TOP OF CASING ELEVATION: 713.43'
SURFACE ELEVATION: N/A
COMMENTS:

Lithologic Description	USCS Symbol	Stratum Depth (feet)	PID Headspace (ppm)	Rec. %	Sample Location	Sample ID	Depth (feet)
TOPSOIL: About a foot of topsoil			3.1				0.0
FILL: Potential FILL, silty clay with trace to some sand, dark yellowish brown (10 YR 3/6) dry, no odor		1	2.8				
			2.4	75%			
CL: SILTY CLAY with trace to some sand and fine to medium gravel, very dark brown (10 YR 2/2), dry, no odor		3	3.0				
			2.8				
	CL		2.9				5.0
- Mottled sand observed at about 7 feet, red (2.5 YR 4/6)			3.0	85%			
			2.6				
			2.8				
			2.7				
SW/SM: FINE TO COARSE SAND with trace fine gravel, some silt, possibly grading to SM at about 15', very dark brown (10 YR 2/2), dry, no odor		10	3.0	80%			10.0
			2.5				
	SW/SM		NA				
- Trace medium gravel observed beyond 11.75 feet			16				
			1.9	75%			15.0
SM: SILTY SAND fine to medium sand with fine gravel, sand silt mixture, very dark brown (10 YR 2/2), wet, no odor			2.1				
	SM		NA				
ML: CLAYEY SILT exhibiting dilatancy, with trace fine sand and fine gravel, gray (2.5 Y 5/1), wet, no odor		17	1.6				
	ML		1.9	70%			
			2.1				
GM: Fine to medium SANDY GRAVEL with some silt, slightly wet, no odor	GM	19.5					20.0
- End of Boring at 20'							

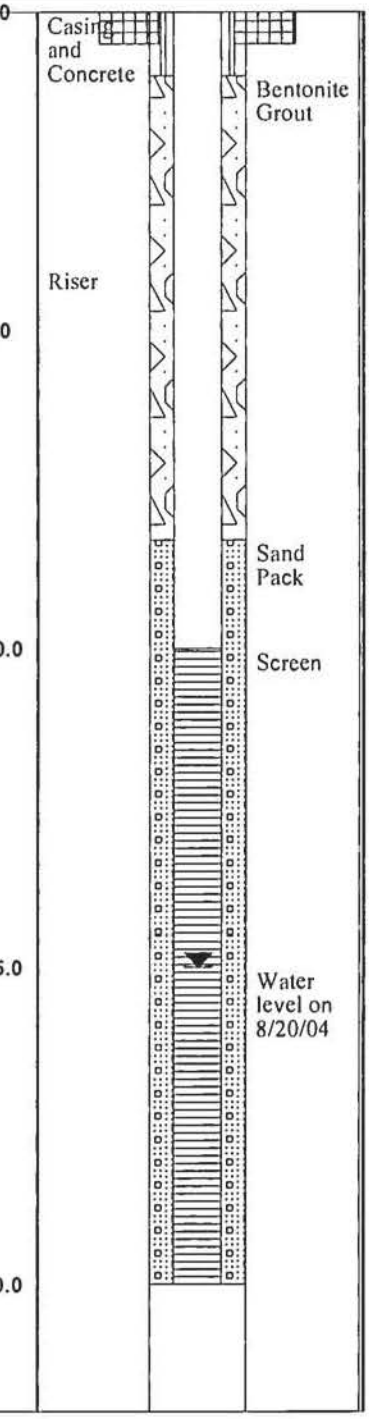

MUNDELL & ASSOCIATES, INC.

BORING LOG

BORING NO: MMW-3S

CLIENT: AIMCO
PROJECT LOCATION: Indianapolis, Indiana
PROJECT NAME: Michigan Meadows
PROJECT NO: M01046
DRILLING CONTRACTOR: American Drilling Services
DRILLER: Bernie Byers
BORING LOCATION: North east corner of the playground
FIELD GEOLOGIST: Leena Lothe
NOTES: Soil sample MMW-3S collected at 10.0'

DATE BEGAN: 08/26/04
DATE FINISHED: 08/26/04
DRILLING METHOD: HSA with 4' Geoprobe Sampler
DRILL EQUIP: ATV
GW DEPTH (OBSERVED): 12.5 '
DEPTH OF BORING: 30'
TOP OF CASING ELEVATION: 711.58
SURFACE ELEVATION: N/A
COMMENTS: split spoon after 13'

Lithologic Description	USCS Symbol	Stratum Depth (feet)	PID Headspace (ppm)	Rec. %	Sample Location	Sample ID	Depth (feet)
TOPSOIL: About a foot of topsoil with grass, potential fill material			6.2				0.0
CL: SILTY CLAY with trace sand, dark yellowish brown (10 YR 4/4), dry, no odor	CL	1	6.4				
SP: FINE TO MEDIUM SAND, very dark brown (10 YR 2/2), dry, no odor	SP	2	8.0	80%			
			5.1				
			5.6				5.0
			5.2				
SW: FINE TO MEDIUM SAND with trace to some gravel, very dark brown (10 YR 2/2), dry, no odor	SW	5.5	7.1	90%			
			5.9				
- slight reddish yellow discoloration (5 YR 6/8) noted at about 6 feet			7.0				
SM: SILTY CLAYEY SAND mixture, very dark brown (10 YR 2/2), dry, no odor	SM	9.0	8.0				10.0
SW: FINE TO MEDIUM SAND with trace to some gravel, very dark brown (10 YR 3/2), wet, no odor	SW	10.0	6.4	75%			
			7.3				
			6.7				
CL: SILTY CLAY with trace to some sand, wet, no odor	CL	13.0	4.8				
SW: FINE TO MEDIUM SAND with trace to some silt, and trace to some gravel, wet, no odor	SW	14.0	5.2	80%			15.0
SM: SILTY CLAYEY SAND mixture, wet, no odor	SM	18.0	6.5				
SW: FINE TO MEDIUM SAND with trace to some silt, and trace to some gravel, wet, no odor	SW	18.5	5.9	75%			
		20.0					20.0

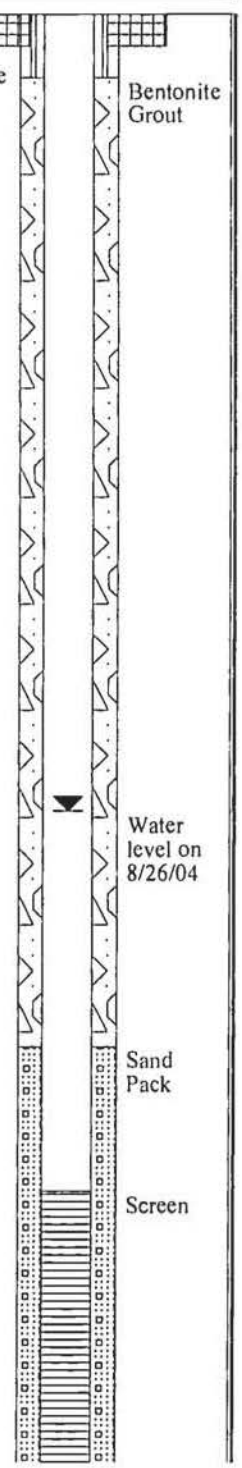

MUNDELL & ASSOCIATES, INC.

BORING LOG

BORING NO: MMW-3S

CLIENT: AIMCO
PROJECT LOCATION: Indianapolis, Indiana
PROJECT NAME: Michigan Meadows
PROJECT NO: M01046
DRILLING CONTRACTOR: American Drilling Services
DRILLER: Bernie Byers
BORING LOCATION: North east corner of the playground
FIELD GEOLOGIST: Leena Lothe
NOTES: Soil sample MMW-3S collected at 10.0'

DATE BEGAN: 08/26/04
DATE FINISHED: 08/26/04
DRILLING METHOD: HSA with 4' Geoprobe Sampler
DRILL EQUIP: ATV
GW DEPTH (OBSERVED): 12.5'
DEPTH OF BORING: 30'
TOP OF CASING ELEVATION: 711.58
SURFACE ELEVATION: N/A
COMMENTS: split spoon after 13'

Lithologic Description	USCS Symbol	Stratum Depth (feet)	PID Headspace (ppm)	Rec. %	Sample Location	Sample ID	Depth (feet)	Water Level Information
SW: FINE TO MEDIUM SAND with trace to some silt, and trace to some gravel, wet, no odor	SW	23.0	8.0 6.7	60%				
		25.0					25.0	
SM: SILTY SANDY CLAYEY mixture	SM	28.0	6.2					Sump (Riser with a cap)
CL: SILTY CLAY (soft), wet, no odor - End of the Boring at 30'	CL	29.0		50%			30.0	

MUNDELL & ASSOCIATES, INC.

BORING LOG

BORING NO: MMW-4D

CLIENT: AIMCO
PROJECT LOCATION: Indianapolis, Indiana
PROJECT NAME: Michigan Meadows
PROJECT NO: M01046
DRILLING CONTRACTOR: American Drilling Services
DRILLER: Bernie Byers
BORING LOCATION: Grass Area NW of basketball pole
FIELD GEOLOGIST: Leena Lothe
NOTES: Soil sample MMW-4D collected at 9 - 10'

DATE BEGAN: 08/25/04
DATE FINISHED: 08/25/04
DRILLING METHOD: HSA with 4' Geoprobe Sampler
DRILL EQUIP: CME 70
GW DEPTH (OBSERVED): 11.5 '
DEPTH OF BORING: 66'
TOP OF CASING ELEVATION: 711.64
SURFACE ELEVATION: N/A
COMMENTS: Sand heaving, drillers washing split spoon, spl. sp

Lithologic Description	USCS Symbol	Stratum Depth (feet)	PID Headspace (ppm)	Rec. %	Sample Location	Sample ID	Depth (feet)
TOPSOIL: About a foot of topsoil with grass, potential fill material - fine to medium sand with trace gravel	TOPS		0.9				0.0
SW: FINE TO MEDIUM SAND with trace to some gravel, brown (10 YR 4/3), dry, no odor	SW	1	0.8				
- black (2.5 Y 2/2) coloration at approximately 3'		2	1.4	60%			
			6.8				
			6.7				5.0
		5.5	7.3				
			6.0	60%			
- intermittant red coloration observed (2.5 YR 4/8) at 7'			6.1				
			NA				
- gray (2.5 YR 5/0) coloration observed at 9'		9.0	7.2				10.0
		10.0	7.1	60%			
SM: SILTY CLAYEY SAND, brown (10 YR 4/3), dry, no odor	SM		6.1				
SW: FINE TO MEDIUM SAND with trace to some fine to medium gravel, clayey sand, strong brown (7.5 YR 5/6), dry, no odor	SW / SM		5.8				
SM: SILTY CLAYEY SAND mixture, slight dilationary property observed, gray (10 YR 5/1), dry, no odor		13.0	4.2				
CL: SILTY CLAY with trace to some sand, wet, no odor	CL	14.0	6.6	70%			15.0
SW: FINE TO MEDIUM SAND with trace to some silt, wet, no odor	SW		5.8				
SP: FINE TO MEDIUM SAND - silty-clayey sand, trace to some gravel, wet, no odor	SP						
		18.0					
		18.5					
			3.6				20.0
		20.0	4.6	80%			

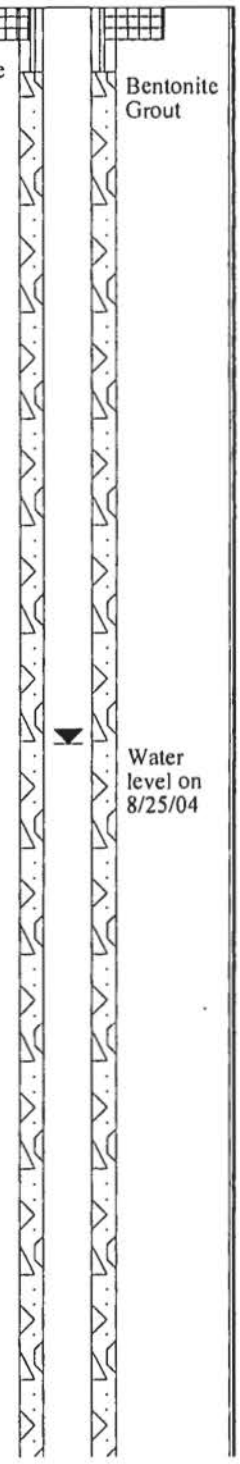

MUNDELL & ASSOCIATES, INC.

BORING LOG

BORING NO: MMW-4D

CLIENT: AIMCO
PROJECT LOCATION: Indianapolis, Indiana
PROJECT NAME: Michigan Meadows
PROJECT NO: M01046
DRILLING CONTRACTOR: American Drilling Services
DRILLER: Bernie Byers
BORING LOCATION: Grass Area NW of basketball pole
FIELD GEOLOGIST: Leena Lothe
NOTES: Soil sample MMW-4D collected at 9 - 10'

DATE BEGAN: 08/25/04
DATE FINISHED: 08/25/04
DRILLING METHOD: HSA with 4' Geoprobe Sampler
DRILL EQUIP: CME 70
GW DEPTH (OBSERVED): 11.5 '
DEPTH OF BORING: 66'
TOP OF CASING ELEVATION: 711.64
SURFACE ELEVATION: N/A
COMMENTS: Sand heaving, drillers washing split spoon, spl. s

Lithologic Description	USCS Symbol	Stratum Depth (feet)	PID Headspace (ppm)	Rec. %	Sample Location	Sample ID	Depth (feet)	Water Level Information
		23.0						
			4.7					
SW: FINE TO MEDIUM SAND with trace to some fine to medium gravel, moist, no odor		25.0	6.4	100%			25.0	
	SW	28.0						Riser
		29.0	8.0					
		30.0	8.1	90%			30.0	
GM: SANDY GRAVELS, GRAVEL-SAND-SILT mixtures, wet, no odor	GM							
SW: FINE TO MEDIUM SAND with trace to some silt, and trace to some gravel, wet, no odor	SW		7.5					
SM: SILTY SANDY CLAYEY mixture			7.4	85%			35.0	
- stone chips & pebbles noted at 35.5'	SM							
SW: FINE TO MEDIUM SAND with some clay (soft), wet, no odor			6.0					
			9.2	65%			40.0	
- cobble chips layer observed at 40', 45', and at 50' (3-4 inches of cobble at 50')	SW							
			8.4					
				55%			45.0	

MUNDELL & ASSOCIATES, INC.

BORING LOG

BORING NO: MMW-4D

CLIENT: AIMCO
PROJECT LOCATION: Indianapolis, Indiana
PROJECT NAME: Michigan Meadows
PROJECT NO: M01046
DRILLING CONTRACTOR: American Drilling Services
DRILLER: Bernie Byers
BORING LOCATION: Grass Area NW of basketball pole
FIELD GEOLOGIST: Leena Lothe
NOTES: Soil sample MMW-4D collected at 9 - 10'

DATE BEGAN: 08/25/04
DATE FINISHED: 08/25/04
DRILLING METHOD: HSA with 4' Geoprobe Sampler
DRILL EQUIP: CME 70
GW DEPTH (OBSERVED): 11.5'
DEPTH OF BORING: 66'
TOP OF CASING ELEVATION: 711.64
SURFACE ELEVATION: N/A
COMMENTS: Sand heaving, drillers washing split spoon, spl. sp

Lithologic Description	USCS Symbol	Stratum Depth (feet)	PID Headspace (ppm)	Rec. %	Sample Location	Sample ID	Depth (feet)	Water Level Information
			38					Sand Pack
								Screen
			12.3	55%			50.0	
			10.2					
			7.0					
			10.1	75%			55.0	
			6.1	90%			60.0	
			11.0					
CL: HARD COMPACT CLAY, with trace to some sand, moist, no odor	CL							Sump (Riser with a cap)
			3.5	60%			65.0	
			4.9					
- End of the Boring at 66'								

MUNDELL & ASSOCIATES, INC.

BORING LOG

BORING NO: MMW-5D

CLIENT: AIMCO
PROJECT LOCATION: Indianapolis, Indiana
PROJECT NAME: Michigan Meadows
PROJECT NO: M01046
DRILLING CONTRACTOR: American Drilling Services
DRILLER: Bernie Byers
BORING LOCATION: Central area of the northern fenceline
FIELD GEOLOGIST: Leena Lothe
NOTES: Soil sample MMW-5D collected at 11'

DATE BEGAN: 08/24/04
DATE FINISHED: 08/24/04
DRILLING METHOD: HSA with 4' Geoprobe Sampler
DRILL EQUIP: CME 70
GW DEPTH (OBSERVED): 12.0'
DEPTH OF BORING: 51'
TOP OF CASING ELEVATION: 711.75
SURFACE ELEVATION: N/A
COMMENTS: Sand heaving, split spoon after 19'

Lithologic Description	USCS Symbol	Stratum Depth (feet)	PID Headspace (ppm)	Rec. %	Sample Location	Sample ID	Depth (feet)
TOPSOIL: About a foot of topsoil, top two inches asphalt	TOPSOIL		NA				0.0
SP: FINE TO MEDIUM SAND with trace gravel, dark yellowish brown (10YR 4/6), intermittant gray (10 YR 5/1) and red (10R 4/6) coloration, dry, no odor	SP	1	2.6				
SW: FINE TO MEDIUM SAND with trace to some gravel, dry, no odor	SW	2	4.3	70%			
			3.6				
			NA				
			4.0				5.0
			5.8	70%			
			7.2				
			6.0				
SM: SILTY CLAYEY SAND mixture, with trace to some gravel, dry, no odor	SM	9.5	6.1				
SW: FINE TO MEDIUM SAND with medium to large coarse gravel (10-12'), moist, no odor	SW	10.5	7.2	80%			10.0
			4.0				
			NA				
			4.4				
			5.4	75%			
SP: FINE TO MEDIUM SAND with trace to some gravel, wet, no odor	SP	15.0	7.2				15.0
SW: FINE TO MEDIUM SAND with trace to some gravel, wet, no odor	SW	19.0	7.8				20.0
			13.1	60%			

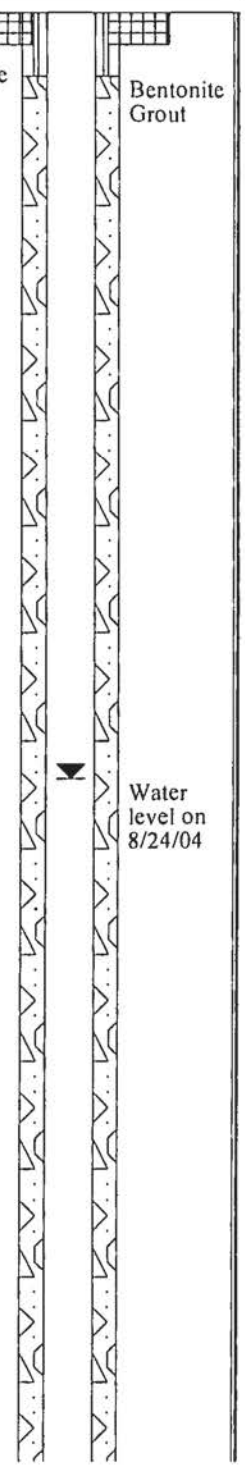

MUNDELL & ASSOCIATES, INC.

BORING LOG

BORING NO: MMW-5D

CLIENT: AIMCO
PROJECT LOCATION: Indianapolis, Indiana
PROJECT NAME: Michigan Meadows
PROJECT NO: M01046
DRILLING CONTRACTOR: American Drilling Services
DRILLER: Bernie Byers
BORING LOCATION: Central area of the northern fenceline
FIELD GEOLOGIST: Leena Lothe
NOTES: Soil sample MMW-5D collected at 11'

DATE BEGAN: 08/24/04
DATE FINISHED: 08/24/04
DRILLING METHOD: HSA with 4' Geoprobe Sampler
DRILL EQUIP: CME 70
GW DEPTH (OBSERVED): 12.0 '
DEPTH OF BORING: 51'
TOP OF CASING ELEVATION: 711.75
SURFACE ELEVATION: N/A
COMMENTS: Sand heaving, split spoon after 19'

Lithologic Description	USCS Symbol	Stratum Depth (feet)	PID Headspace (ppm)	Rec. %	Sample Location	Sample ID	Depth (feet)	Water Level Information
SW: FINE TO MEDIUM SAND with trace to some gravel, wet, no odor	SW		10.6 12.4	70%			25.0	
SW: FINE TO MEDIUM SAND with trace to some gravel, wet, no odor - coarse gravel & gravel chips noted at 30.5'	SW		13.7 15.6	90%			30.0	
SW: FINE TO MEDIUM SAND with trace to some gravel, trace silt, wet, no odor	SW		4.5 5.3	60%			35.0	
SW: FINE TO MEDIUM SAND with trace to some gravel, wet, no odor	SW		29.3 23.7	90%			40.0	
SW: FINE TO MEDIUM SAND with trace to some gravel, trace silt, wet, no odor			35	100%			45.0	

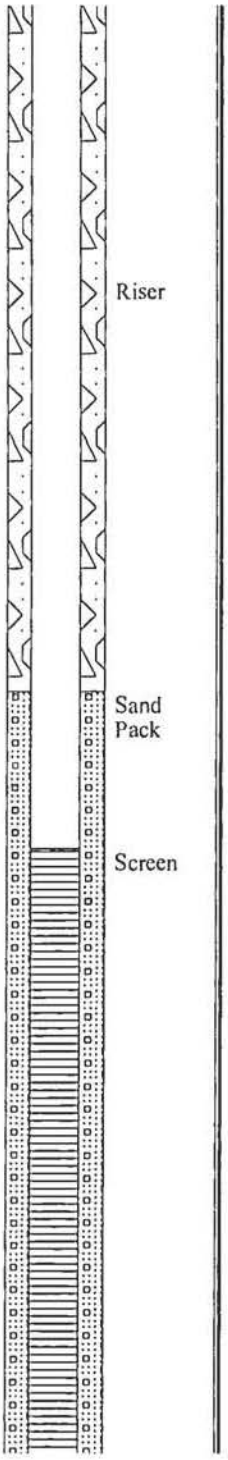

MUNDELL & ASSOCIATES, INC.

BORING LOG

BORING NO: MMW-5D

CLIENT: AIMCO
PROJECT LOCATION: Indianapolis, Indiana
PROJECT NAME: Michigan Meadows
PROJECT NO: M01046
DRILLING CONTRACTOR: American Drilling Services
DRILLER: Bernie Byers
BORING LOCATION: Central area of the northern fenceline
FIELD GEOLOGIST: Leena Lothe
NOTES: Soil sample MMW-5D collected at 11'

DATE BEGAN: 08/24/04
DATE FINISHED: 08/24/04
DRILLING METHOD: HSA with 4' Geoprobe Sampler
DRILL EQUIP: CME 70
GW DEPTH (OBSERVED): 12.0 '
DEPTH OF BORING: 51'
TOP OF CASING ELEVATION: 711.75
SURFACE ELEVATION: N/A
COMMENTS: Sand heaving, split spoon after 19'

Lithologic Description	USCS Symbol	Stratum Depth (feet)	PID Headspace (ppm)	Rec. %	Sample Location	Sample ID	Depth (feet)	Water Level Information
CL: COMPACT CLAY, with trace to some sand, moist, no odor	CL	45.5	14.8					
			NA					
- noted a thin sand seam at 50.25'			12.2	50%			50.0	
- End of the Boring at 51'							55.0	

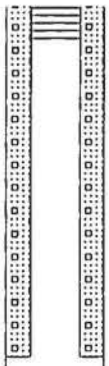

MUNDELL & ASSOCIATES, INC.

BORING LOG

BORING NO: MMW-6D

CLIENT: AIMCO
PROJECT LOCATION: Indianapolis, Indiana
PROJECT NAME: Michigan Meadows
PROJECT NO: M01046
DRILLING CONTRACTOR: American Drilling Services
DRILLER: Bernie Byers
BORING LOCATION: NW area along northern fenceline
FIELD GEOLOGIST: Leena Lothe
NOTES: Soil sample MMW-6D collected at 11-12'

DATE BEGAN: 08/23/04
DATE FINISHED: 08/23/04
DRILLING METHOD: HSA with 4' Geoprobe Sampler
DRILL EQUIP: CME 70
GW DEPTH (OBSERVED): 14.0 '
DEPTH OF BORING: 51'
TOP OF CASING ELEVATION: 712.68
SURFACE ELEVATION: N/A
COMMENTS: split spoon after 24'

Lithologic Description	USCS Symbol	Stratum Depth (feet)	PID Headspace (ppm)	Rec. %	Sample Location	Sample ID	Depth (feet)	Water Level Information
TOPSOIL: Top two inches asphalt followed by 4 inches base gravel	TOPSOIL		NA				0.0	Casing and Concrete
SW: FINE TO MEDIUM SAND with trace to some fine to medium gravel, reddish brown (5 YR 4/3), dry, no odor	SW	1	0.7	75%				Bentonite Grout
			1.4					
			2.3					
- yellow (2.5 Y 7/6) coloration noted at 3.5', roots noted.			2.4	80%				Riser
			4.9				5.0	
			2.3					
			2.5					
SP: FINE TO MEDIUM SAND with trace to some gravel, red (10 R 4/8) coloration noted at approx. 8', dry, no odor	SP	7.5						
SW: FINE TO MEDIUM SAND with trace to some gravel, light yellowish brown (2.5Y 6/3) moist, no odor	SW	8.0	1.7	75%				
			2.7					
			3.6				10.0	
			4.9			MMW-6D		
CL: SANDY SILTY CLAY with trace to some mottled sand, red coloration (10R 4/8), moist, no odor	CL	11.5	3.1	70%				
			5.6					Water level on 8/23/04
			7.3				15.0	
			7.7					
			5.6	75%				
			5.8					
			8.1					
			6.1				20.0	
			NA					
SP: FINE CLAYEY SILTY SAND, with trace to some gravel, gray (2YR 5/0), wet, no odor	SP	21.0 / 21.5	3.5					
SW: FINE TO MEDIUM SAND with trace to some gravel, wet, no odor	SW	22.0	7.2	65%				

MUNDELL & ASSOCIATES, INC.

BORING LOG

BORING NO: MMW-6D

CLIENT: AIMCO
PROJECT LOCATION: Indianapolis, Indiana
PROJECT NAME: Michigan Meadows
PROJECT NO: M01046
DRILLING CONTRACTOR: American Drilling Services
DRILLER: Bernie Byers
BORING LOCATION: NW area along northern fenceline
FIELD GEOLOGIST: Leena Lothe
NOTES: Soil sample MMW-6D collected at 11-12'

DATE BEGAN: 08/23/04
DATE FINISHED: 08/23/04
DRILLING METHOD: HSA with 4' Geoprobe Sampler
DRILL EQUIP: CME 70
GW DEPTH (OBSERVED): 14.0'
DEPTH OF BORING: 51'
TOP OF CASING ELEVATION: 712.68
SURFACE ELEVATION: N/A
COMMENTS: split spoon after 24'

Lithologic Description	USCS Symbol	Stratum Depth (feet)	PID Headspace (ppm)	Rec. %	Sample Location	Sample ID	Depth (feet)	Water Level Information
SP: FINE SILTY SAND, with trace to some gravel, wet, no odor		23.0	9.8					
		24.0	5.3					
	SP		6.2	70%			25.0	
			10.2					
			4.1	50%				Riser
			9.6					
			10.8	50%				
SW: FINE TO MEDIUM SAND with trace to some silt, wet, no odor		30.0	5.2				30.0	
	SW	31.5	7.7	60%				
							35.0	
SP: FINE TO MEDIUM SAND with trace to some gravel, trace silt, wet, no odor	SP	37.25	14.7					Sand Pack
SW: FINE TO MEDIUM SAND with trace to some gravel, wet, no odor		37.5	25.1	80%				Screen
	SW						40.0	
			17.4					
				60%			45.0	

MUNDELL & ASSOCIATES, INC.

BORING LOG

BORING NO: MMW-6D

CLIENT: AIMCO
PROJECT LOCATION: Indianapolis, Indiana
PROJECT NAME: Michigan Meadows
PROJECT NO: M01046
DRILLING CONTRACTOR: American Drilling Services
DRILLER: Bernie Byers
BORING LOCATION: NW area along northern fenceline
FIELD GEOLOGIST: Leena Lothe
NOTES: Soil sample MMW-6D collected at 11-12'

DATE BEGAN: 08/23/04
DATE FINISHED: 08/23/04
DRILLING METHOD: HSA with 4' Geoprobe Sampler
DRILL EQUIP: CME 70
GW DEPTH (OBSERVED): 14.0'
DEPTH OF BORING: 51'
TOP OF CASING ELEVATION: 712.68
SURFACE ELEVATION: N/A
COMMENTS: split spoon after 24'

Lithologic Description	USCS Symbol	Stratum Depth (feet)	PID Headspace (ppm)	Rec. %	Sample Location	Sample ID	Depth (feet)	Water Level Information
			10.2					
		48						
			6.9					
	CL			80%			50.0	
			7.2					
- End of the Boring at 51'								

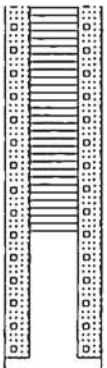

MUNDELL & ASSOCIATES, INC.

BORING LOG

BORING NO: MMW-7S

CLIENT: AIMCO
PROJECT LOCATION: Indianapolis, Indiana
PROJECT NAME: Michigan Meadows
PROJECT NO: M01046
DRILLING CONTRACTOR: American Drilling Services
DRILLER: Bernie Byers
BORING LOCATION: NW corner well
FIELD GEOLOGIST: Leena Lothe
NOTES: Soil sample MMW-7S collected at 15.5-16.5'

DATE BEGAN: 08/24/04
DATE FINISHED: 08/24/04
DRILLING METHOD: HSA with 4' Geoprobe Sampler
DRILL EQUIP: CME 70
GW DEPTH (OBSERVED): 16.0 '
DEPTH OF BORING: 26'
TOP OF CASING ELEVATION: 712.35
SURFACE ELEVATION: N/A
COMMENTS: split spoon after 24'

Lithologic Description	USCS Symbol	Stratum Depth (feet)	PID Headspace (ppm)	Rec. %	Sample Location	Sample ID	Depth (feet)
ASPHALT: Top three inches asphalt followed by subase	ASPHA		1.2				0.0
SW: FINE TO MEDIUM SAND, potential fill with trace fine to medium gravel, light yellowish brown (2.5 Y 6/4), dry, no odor		1	4.1				
			3.7	90%			
- color change beyond 2.0' to dark yellowish brown (10 YR 3/4)			6.7				
			5.6				
	SW		4.8				5.0
			5.9	80%			
SW: PEBBLES with trace fine sand, gray (10 YR 6/1), dry, no odor		7.5	4.9				
		8.0	5.4				
			7.1				
			8.8	90%			10.0
	SW	11.5	5.4				
			4.9				
			7.1				
			6.8	90%			
SP: FINE TO MEDIUM COARSE SAND, dark grayish brown (10 YR 4/2) moist, no odor			6.7				15.0
			4.2				
	SP		5.5				
			7.3	90%			
			7.4				20.0
		21.0					
		21.5					
		22.0					

Water Level Information
Casing and Concrete
Bentonite Grout
Riser
Sand Pack
Screen
Water level on 8/24/04

MUNDELL & ASSOCIATES, INC.

BORING LOG

BORING NO: MMW-7S

CLIENT: AIMCO
PROJECT LOCATION: Indianapolis, Indiana
PROJECT NAME: Michigan Meadows
PROJECT NO: M01046
DRILLING CONTRACTOR: American Drilling Services
DRILLER: Bernie Byers
BORING LOCATION: NW corner well
FIELD GEOLOGIST: Leena Lothe
NOTES: Soil sample MMW-7S collected at 15.5-16.5'

DATE BEGAN: 08/24/04
DATE FINISHED: 08/24/04
DRILLING METHOD: HSA with 4' Geoprobe Sampler
DRILL EQUIP: CME 70
GW DEPTH (OBSERVED): 16.0 '
DEPTH OF BORING: 26'
TOP OF CASING ELEVATION: 712.35
SURFACE ELEVATION: N/A
COMMENTS: split spoon after 24'

Lithologic Description	USCS Symbol	Stratum Depth (feet)	PID Headspace (ppm)	Rec. %	Sample Location	Sample ID	Depth (feet)	Water Level Information
		23.0						
		24.0	3.7					
			9.1	90%			25.0	
- End of the Boring at 26'								
							30.0	

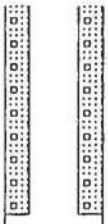

App. C

WELL CONSTRUCTION DIAGRAM

WELL NO. MMW-1S

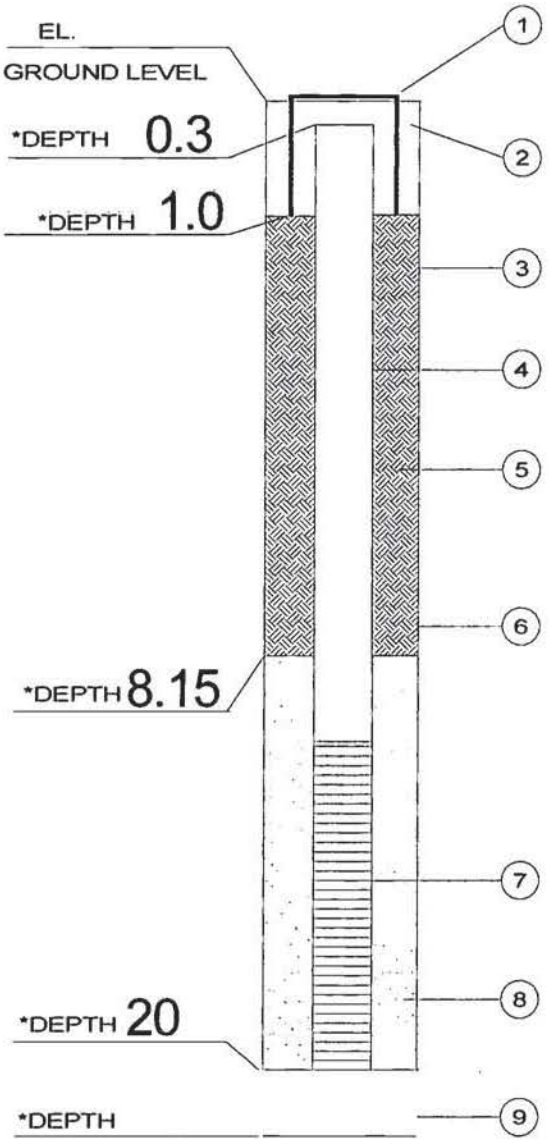

*DEPTH IN FEET BELOW GROUND LEVEL

GEOLOGIST/FIELD SCIENTIST
Jason Armour/Leena Lothe

1. PROTECTIVE CASING I.D. 8.0 INCHES
2. SURFACE SEAL TYPE Concrete
3. BOREHOLE DIAMETER 4 INCHES
4. RISER PIPE:
   a. Type PVC
   b. I.D. 2.0 INCHES
   c. Length 10.0 FEET
   d. Joint Type Flush Threaded
5. BACKFILL:
   a. Type Bentonite Chips
   b. Installation
6. TYPE OF SEAL Bentonite Chips
7. SCREEN:
   a. Type PVC
   b. I.D. 2.0 INCHES
   c. Slot Size 0.01 INCHES
   d. Length 10.0 FEET
8. SCREEN FILTER TYPE #5 Sand
9. BACKFILL TYPE

DATE COMPLETED 8/20/04

DEVELOPMENT METHOD Well Pump

DRILLING CONTRACTOR American Dr. Services

DRILLER Bernie Byers

RIG TYPE CME 75

WELL CONSTRUCTION DIAGRAM

3800 West Michigan Street
Indianapolis, Indiana

Project Number: M01046
Drawing File: MW Construction Diagram
Date Prepared: 2/28/05
Scale: AS SHOWN
Drn. By: | Ckd. By: | Approved By:

MUNDELL & ASSOCIATES, INC.
429 East Vermont Street, Suite 200
Indianapolis, Indiana 46202-3688

WELL CONSTRUCTION DIAGRAM

WELL NO. MMW-2S

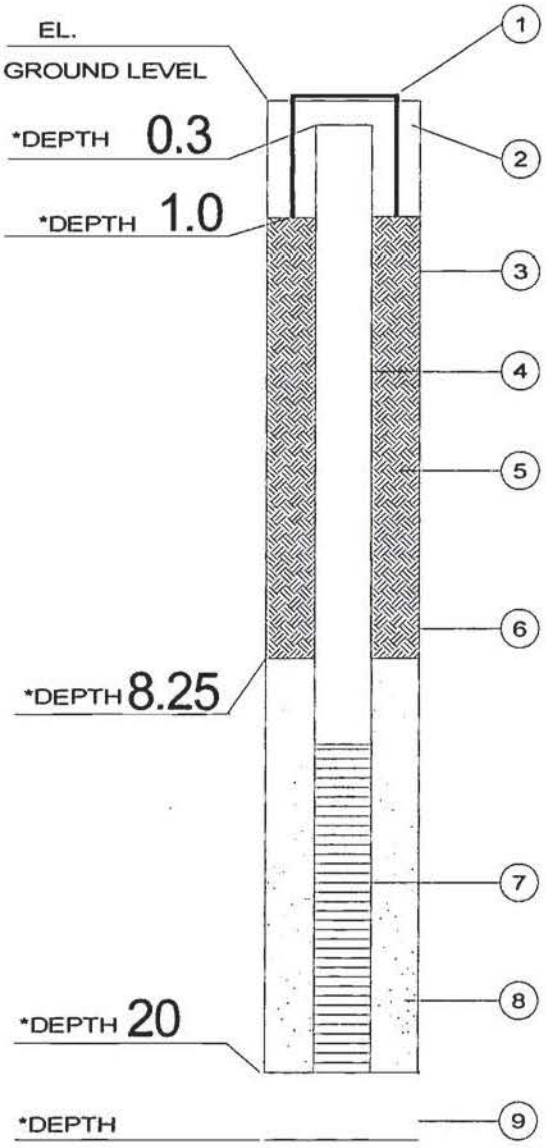

*DEPTH IN FEET BELOW GROUND LEVEL

GEOLOGIST/FIELD SCIENTIST
Jason Armour/Leena Lothe

1. PROTECTIVE CASING I.D. 8.0 INCHES
2. SURFACE SEAL TYPE Concrete
3. BOREHOLE DIAMETER 4 INCHES
4. RISER PIPE:
   a. Type PVC
   b. I.D. 2.0 INCHES
   c. Length 10.0 FEET
   d. Joint Type Flush Threaded
5. BACKFILL:
   a. Type Bentonite Chips
   b. Installation
6. TYPE OF SEAL Bentonite Chips
7. SCREEN:
   a. Type PVC
   b. I.D. 2.0 INCHES
   c. Slot Size 0.01 INCHES
   d. Length 10.0 FEET
8. SCREEN FILTER TYPE #5 Sand
9. BACKFILL TYPE

DATE COMPLETED 8/20/04

DEVELOPMENT METHOD Well Pump

DRILLING CONTRACTOR American Dr. Services

DRILLER Bernie Byers

RIG TYPE CME 75

WELL CONSTRUCTION DIAGRAM

3800 West Michigan Street
Indianapolis, Indiana

Project Number: M01046
Drawing File: MW Construction Diagram
Date Prepared: 2/28/05
Scale: AS SHOWN
Drn. By: | Ckd. By: | Approved By:

MUNDELL & ASSOCIATES, INC.
429 East Vermont Street, Suite 200
Indianapolis, Indiana 46202-3688

WELL CONSTRUCTION DIAGRAM

WELL NO. MMW-3S

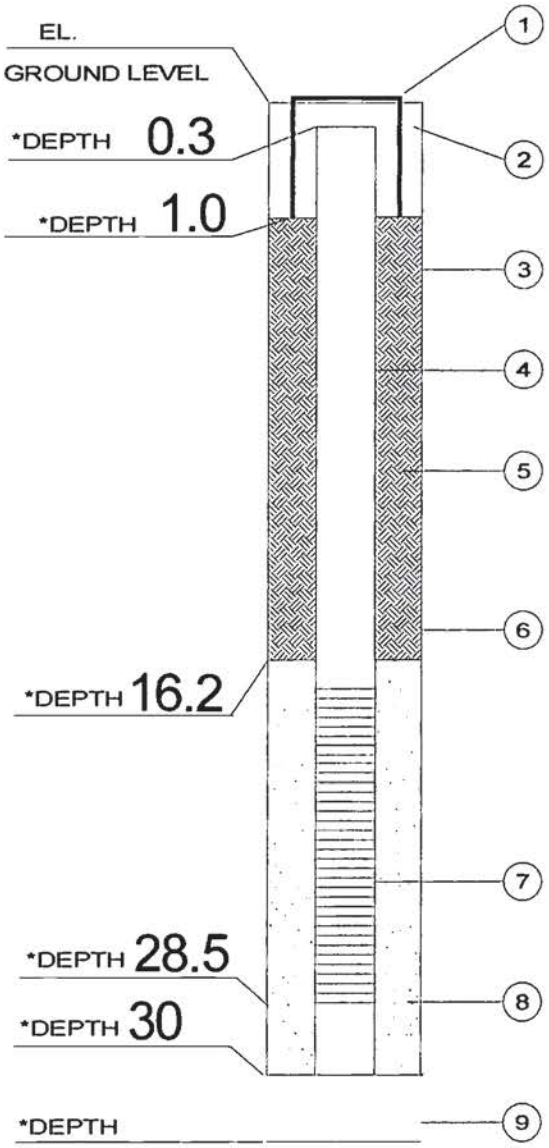

*DEPTH IN FEET BELOW GROUND LEVEL

1. PROTECTIVE CASING I.D. 6.0 INCHES
2. SURFACE SEAL TYPE Concrete
3. BOREHOLE DIAMETER 4 INCHES
4. RISER PIPE:
   a. Type PVC
   b. I.D. 2.0 INCHES
   c. Length 18.5' RISER, 1.5' SUMP FEET
   d. Joint Type Flush Threaded
5. BACKFILL:
   a. Type
   b. Installation
6. TYPE OF SEAL Bentonite Pellets
7. SCREEN:
   a. Type PVC
   b. I.D. 2.0 INCHES
   c. Slot Size 0.01 INCHES
   d. Length 10.0' Screen, 1.5' Sump
8. SCREEN FILTER TYPE #5 Sand
9. BACKFILL TYPE

DATE COMPLETED 8/26/04

DEVELOPMENT METHOD Well Pump

DRILLING CONTRACTOR American Dr. Services

DRILLER Bernie Byers

RIG TYPE ATV - CME 750

GEOLOGIST/FIELD SCIENTIST
Jason Lougheed/Leena Lothe

WELL CONSTRUCTION DIAGRAM

3800 West Michigan Street
Indianapolis, Indiana

Project Number: M01046
Drawing File: MW Construction Diagram
Date Prepared: 2/28/05
Scale: AS SHOWN
Drn. By: | Ckd. By: | Approved By:

MUNDELL & ASSOCIATES, INC.
429 East Vermont Street, Suite 200
Indianapolis, Indiana 46202-3688

WELL CONSTRUCTION DIAGRAM

WELL NO. MMW-4D

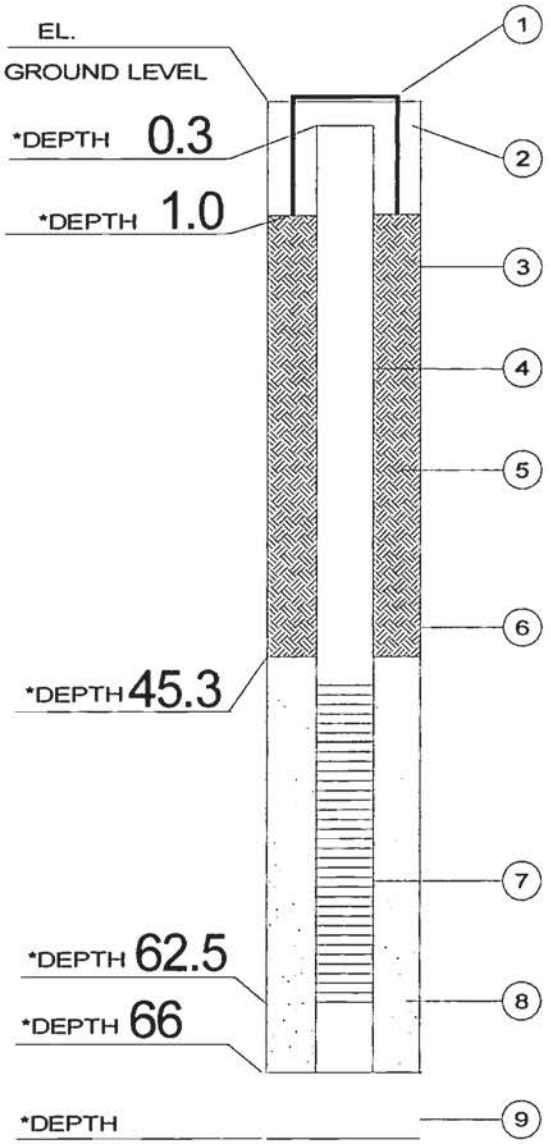

*DEPTH IN FEET BELOW GROUND LEVEL

GEOLOGIST/FIELD SCIENTIST
Leena Lothe

1. PROTECTIVE CASING I.D. 6.0 INCHES
2. SURFACE SEAL TYPE Concrete
3. BOREHOLE DIAMETER 4 INCHES
4. RISER PIPE:
   a. Type PVC
   b. I.D. 2.0 INCHES
   c. Length 47.5' RISER, 3.5' SUMP FEET
   d. Joint Type Flush Threaded
5. BACKFILL: Bentonite Grout (slurry)
   a. Type
   b. Installation
6. TYPE OF SEAL Bentonite Pellets
7. SCREEN:
   a. Type PVC
   b. I.D. 2.0 INCHES
   c. Slot Size 0.01 INCHES
   d. Length 15' Screen, 3.5' Sump
8. SCREEN FILTER TYPE #5 Sand
9. BACKFILL TYPE

DATE COMPLETED 8/25/04
DEVELOPMENT METHOD Well Pump
DRILLING CONTRACTOR American Dr. Services
DRILLER Bernie Byers
RIG TYPE CME 70

WELL CONSTRUCTION DIAGRAM

3800 West Michigan Street
Indianapolis, Indiana

Project Number: M01046
Drawing File: MW Construction Diagram
Date Prepared: 2/28/05
Scale: AS SHOWN
Drn. By: | Ckd. By: | Approved By:

MUNDELL & ASSOCIATES, INC.
429 East Vermont Street, Suite 200
Indianapolis, Indiana 46202-3688

WELL CONSTRUCTION DIAGRAM

WELL NO. MMW-5D

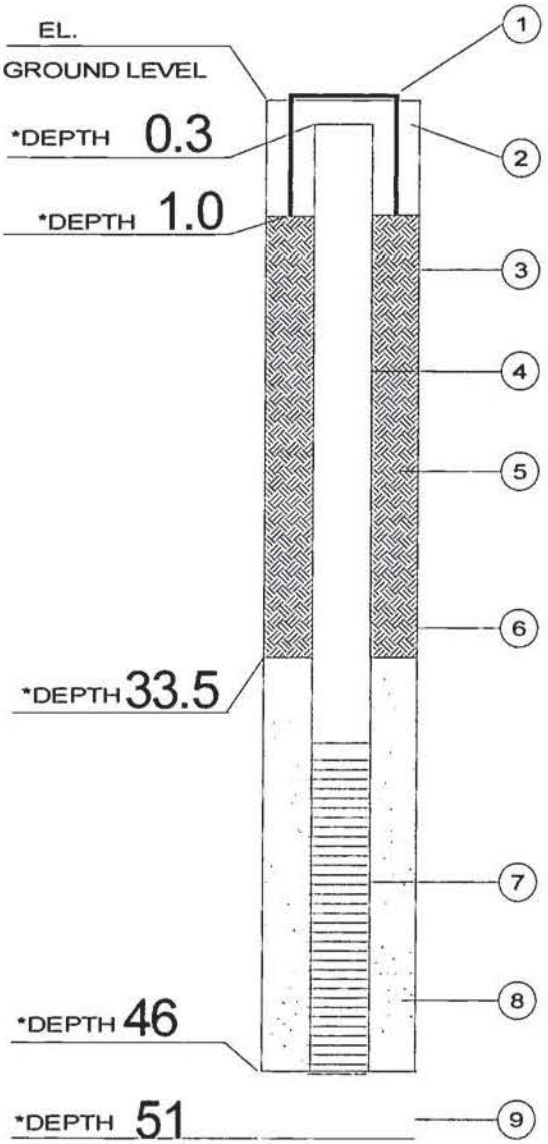

*DEPTH IN FEET BELOW GROUND LEVEL

1. PROTECTIVE CASING I.D. 6.0 INCHES
2. SURFACE SEAL TYPE Concrete
3. BOREHOLE DIAMETER 4 INCHES
4. RISER PIPE:
   a. Type PVC
   b. I.D. 2.0 INCHES
   c. Length 36 FEET
   d. Joint Type Flush Threaded
5. BACKFILL: Bentonite Grout (slurry)
   a. Type
   b. Installation
6. TYPE OF SEAL Bentonite Pellets
7. SCREEN:
   a. Type PVC
   b. I.D. 2.0 INCHES
   c. Slot Size 0.01 INCHES
   d. Length 10.0
8. SCREEN FILTER TYPE #5 Sand
9. BACKFILL TYPE

DATE COMPLETED 8/24/04

DEVELOPMENT METHOD Well Pump

DRILLING CONTRACTOR American Dr. Services

DRILLER Bernie Byers

RIG TYPE CME 70

GEOLOGIST/FIELD SCIENTIST
Leena Lothe

WELL CONSTRUCTION DIAGRAM

3800 West Michigan Street
Indianapolis, Indiana

Project Number: M01046
Drawing File: MW Construction Diagram
Date Prepared: 2/28/05
Scale: AS SHOWN
Drn. By: | Ckd. By: | Approved By:

MUNDELL & ASSOCIATES, INC.
429 East Vermont Street, Suite 200
Indianapolis, Indiana 46202-3688

WELL CONSTRUCTION DIAGRAM

WELL NO. MMW-6D

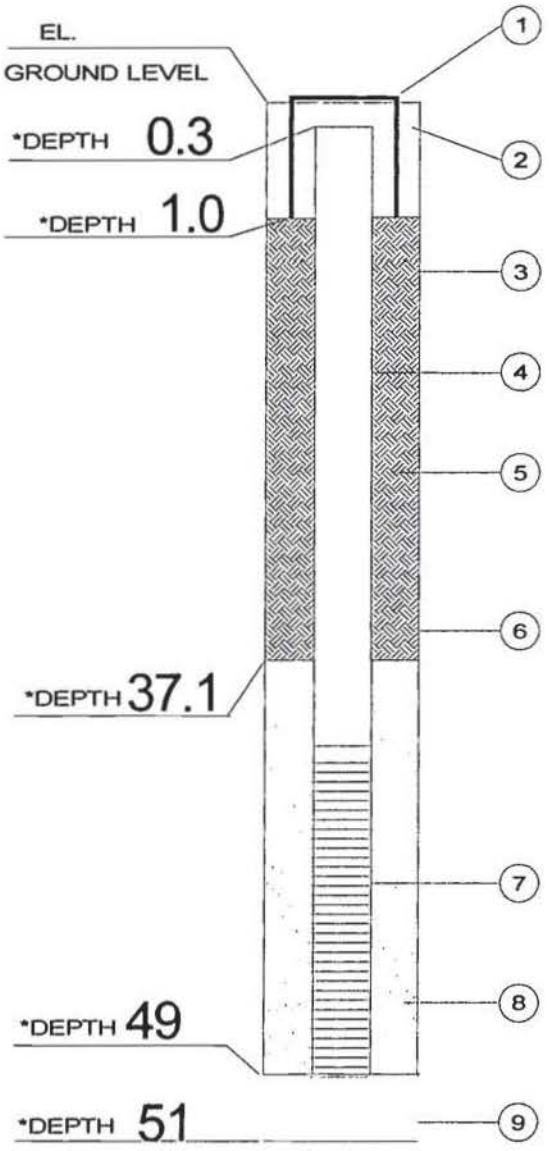

*DEPTH IN FEET BELOW GROUND LEVEL

GEOLOGIST/FIELD SCIENTIST
Leena Lothe

1. PROTECTIVE CASING I.D. 6.0 INCHES
2. SURFACE SEAL TYPE Concrete
3. BOREHOLE DIAMETER 4 INCHES
4. RISER PIPE:
   a. Type PVC
   b. I.D. 2.0 INCHES
   c. Length 39.0 FEET
   d. Joint Type Flush Threaded
5. BACKFILL: Bentonite Grout (slurry)
   a. Type
   b. Installation
6. TYPE OF SEAL Bentonite Pellets
7. SCREEN:
   a. Type PVC
   b. I.D. 2.0 INCHES
   c. Slot Size 0.01 INCHES
   d. Length 10.0
8. SCREEN FILTER TYPE #5 Sand
9. BACKFILL TYPE

DATE COMPLETED 8/23/04
DEVELOPMENT METHOD Well Pump
DRILLING CONTRACTOR American Dr. Services
DRILLER Bernie Byers
RIG TYPE CME 70

WELL CONSTRUCTION DIAGRAM

3800 West Michigan Street
Indianapolis, Indiana

Project Number: M01046
Drawing File: MW Construction Diagram
Date Prepared: 2/28/05
Scale: AS SHOWN
Dm. By: | Ckd. By: | Approved By:

MUNDELL & ASSOCIATES, INC.
429 East Vermont Street, Suite 200
Indianapolis, Indiana 46202-3688

WELL CONSTRUCTION DIAGRAM

WELL NO. MMW-7S

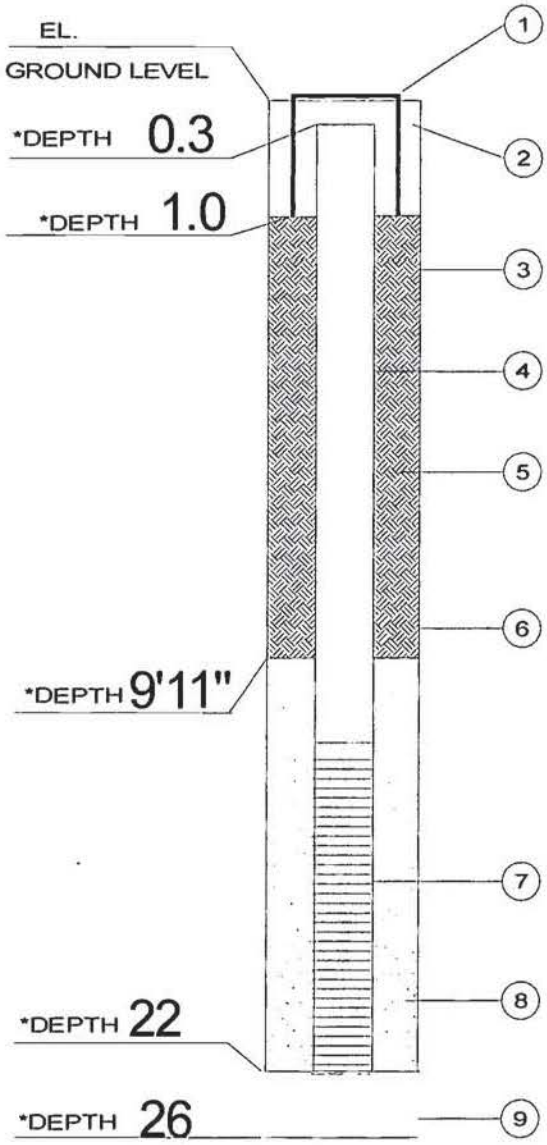

*DEPTH IN FEET BELOW GROUND LEVEL

1. PROTECTIVE CASING I.D. 6.0 INCHES
2. SURFACE SEAL TYPE Concrete
3. BOREHOLE DIAMETER 4 INCHES
4. RISER PIPE:
   a. Type PVC
   b. I.D. 2.0 INCHES
   c. Length 12.0 FEET
   d. Joint Type Flush Threaded
5. BACKFILL:
   a. Type
   b. Installation
6. TYPE OF SEAL Bentonite Pellets
7. SCREEN:
   a. Type PVC
   b. I.D. 2.0 INCHES
   c. Slot Size 0.01 INCHES
   d. Length 10.0
8. SCREEN FILTER TYPE #5 Sand
9. BACKFILL TYPE

DATE COMPLETED 8/24/04

DEVELOPMENT METHOD Well Pump

DRILLING CONTRACTOR American Dr. Services

DRILLER Bernie Byers, Rick Davis

RIG TYPE CME 70

GEOLOGIST/FIELD SCIENTIST
Leena Lothe/Jason Lougheed

WELL CONSTRUCTION DIAGRAM 3800 West Michigan Street Indianapolis, Indiana	Project Number: M01046 Drawing File: MW Construction Diagram Date Prepared: 2/28/05 Scale: AS SHOWN Drn. By: | Ckd. By: | Approved By:	MUNDELL & ASSOCIATES, INC. 429 East Vermont Street, Suite 200 Indianapolis, Indiana 46202-3688

APPENDIX D

Laboratory Certificates of Analysis

Pace Analytical®
www.pacelabs.com

Pace Analytical Services, Inc.
7726 Moller Road
Indianapolis, IN 46268
Phone: 317.875.5894
Fax: 317.872.6189

September 01, 2004

Mr. John Mundell
Mundell & Associates, Inc.
429 East Vermont Street
Suite 200
Indianapolis, IN 46202

RE: Lab Project Number: 5038030
Client Project ID: Michigan Meadows/M01046

Dear Mr. Mundell:

Enclosed are the analytical results for sample(s) received by the laboratory on August 20, 2004. Results reported herein conform to the most current NELAC standards, where applicable, unless otherwise narrated in the body of the report.

If you have any questions concerning this report please feel free to contact me.

Sincerely,

Mick Mayse

Mick Mayse
mmayse@pacelabs.com
Project Manager

Enclosures

REPORT OF LABORATORY ANALYSIS

This report shall not be reproduced, except in full,
without the written consent of Pace Analytical Services, Inc.

Pace Analytical™
www.pacelabs.com

Pace Analytical Services, Inc.
7726 Moller Road
Indianapolis, IN 46268
Phone: 317.875.5894
Fax: 317.872.6189

September 1, 2004

Case Narrative- Project Review
Project 5038030 (Mundell & Associates, Inc.)

Sample Receiving

No discrepancies were noted concerning sample receipt or sample transfer.

GC/MS Volatiles- Method 8260

The spike and spike duplicate information listed on page 12 for sample 503722530 is considered batch quality control data because it was not run on a sample from this project. Therefore this spike recovery information should not be used to evaluate sample data from this project. There was no project-specific sample spiked for this analysis. All other quality control indicators for this project (method blank and LCS results) are within laboratory acceptance limits.

I have reviewed the data from this project and all other discrepancies are sufficiently covered in the footnotes in the sample results section and the quality control section of the final report.

Tim Harrison
Quality Manager
Pace Analytical Services

The review of this project and the associated case narrative are part of a 10% review process for final reports. This process is completed by the Quality Manager as part of Pace Analytical's certification requirements.

Pace Analytical®
www.pacelabs.com

Pace Analytical Services, Inc.
7726 Moller Road
Indianapolis, IN 46268
Phone: 317.875.5894
Fax: 317.872.6189

Lab Project Number: 5038030
Client Project ID: Michigan Meadows/M01046

Solid results are reported on a wet weight basis

Lab Sample No: 503730335 Project Sample Number: 5038030-001 Date Collected: 08/19/04 12:32
Client Sample ID: MMW-1S Matrix: Soil Date Received: 08/20/04 17:00

Parameters	Results	Units	Report Limit	DF	Analyzed	By	CAS No.	Qual	RegLmt
Wet Chemistry									
Percent Moisture	Method: SM 2540G								
Percent Moisture	3.7	%		1.0	08/27/04	ART2			
GC/MS Volatiles									
GC/MS VOCs by 8260	Prep/Method: EPA 5030 / EPA 8260								
Dichlorodifluoromethane	ND	ug/kg	5.0	1.0	08/25/04 06:28	TMB	75-71-8		
Chloromethane	ND	ug/kg	5.0	1.0	08/25/04 06:28	TMB	74-87-3		
Vinyl chloride	ND	ug/kg	2.0	1.0	08/25/04 06:28	TMB	75-01-4		
Bromomethane	ND	ug/kg	5.0	1.0	08/25/04 06:28	TMB	74-83-9		
Chloroethane	ND	ug/kg	5.0	1.0	08/25/04 06:28	TMB	75-00-3		
Trichlorofluoromethane	ND	ug/kg	5.0	1.0	08/25/04 06:28	TMB	75-69-4		
Methylene chloride	ND	ug/kg	20.	1.0	08/25/04 06:28	TMB	75-09-2		
1,1-Dichloroethene	ND	ug/kg	5.0	1.0	08/25/04 06:28	TMB	75-35-4		
trans-1,2-Dichloroethene	ND	ug/kg	5.0	1.0	08/25/04 06:28	TMB	156-60-5		
1,1-Dichloroethane	ND	ug/kg	5.0	1.0	08/25/04 06:28	TMB	75-34-3		
2,2-Dichloropropane	ND	ug/kg	5.0	1.0	08/25/04 06:28	TMB	594-20-7		
cis-1,2-Dichloroethene	ND	ug/kg	5.0	1.0	08/25/04 06:28	TMB	156-59-2		
Chloroform	ND	ug/kg	5.0	1.0	08/25/04 06:28	TMB	67-66-3		
Bromochloromethane	ND	ug/kg	5.0	1.0	08/25/04 06:28	TMB	74-97-5		
1,1,1-Trichloroethane	ND	ug/kg	5.0	1.0	08/25/04 06:28	TMB	71-55-6		
Carbon tetrachloride	ND	ug/kg	5.0	1.0	08/25/04 06:28	TMB	56-23-5		
1,1-Dichloropropene	ND	ug/kg	5.0	1.0	08/25/04 06:28	TMB	563-58-6		
Benzene	ND	ug/kg	5.0	1.0	08/25/04 06:28	TMB	71-43-2		
1,2-Dichloroethane	ND	ug/kg	5.0	1.0	08/25/04 06:28	TMB	107-06-2		
Trichloroethene	19.	ug/kg	5.0	1.0	08/25/04 06:28	TMB	79-01-6		
1,2-Dichloropropane	ND	ug/kg	5.0	1.0	08/25/04 06:28	TMB	78-87-5		
Bromodichloromethane	ND	ug/kg	5.0	1.0	08/25/04 06:28	TMB	75-27-4		
Dibromomethane	ND	ug/kg	5.0	1.0	08/25/04 06:28	TMB	74-95-3		
Toluene	ND	ug/kg	5.0	1.0	08/25/04 06:28	TMB	108-88-3		
1,1,2-Trichloroethane	ND	ug/kg	5.0	1.0	08/25/04 06:28	TMB	79-00-5		
Tetrachloroethene	2100	ug/kg	120	25.0	08/25/04 17:08	TMB	127-18-4		
1,3-Dichloropropane	ND	ug/kg	5.0	1.0	08/25/04 06:28	TMB	142-28-9		
Dibromochloromethane	ND	ug/kg	5.0	1.0	08/25/04 06:28	TMB	124-48-1		
1,2-Dibromoethane (EDB)	ND	ug/kg	5.0	1.0	08/25/04 06:28	TMB	106-93-4		
Chlorobenzene	ND	ug/kg	5.0	1.0	08/25/04 06:28	TMB	108-90-7		
1,1,1,2-Tetrachloroethane	ND	ug/kg	5.0	1.0	08/25/04 06:28	TMB	630-20-6		
Ethylbenzene	ND	ug/kg	5.0	1.0	08/25/04 06:28	TMB	100-41-4		

REPORT OF LABORATORY ANALYSIS
This report shall not be reproduced, except in full,
without the written consent of Pace Analytical Services, Inc.

Pace Analytical®
www.pacelabs.com

Pace Analytical Services, Inc.
7726 Moller Road
Indianapolis, IN 46268
Phone: 317.875.5894
Fax: 317.872.6189

Lab Project Number: 5038030
Client Project ID: Michigan Meadows/M01046

Lab Sample No: 503730335 | Project Sample Number: 5038030-001 | Date Collected: 08/19/04 12:32
Client Sample ID: MMW-1S | Matrix: Soil | Date Received: 08/20/04 17:00

Parameters	Results	Units	Report Limit	DF	Analyzed	By	CAS No.	Qual	RegLmt
m&p-Xylene	ND	ug/kg	5.0	1.0	08/25/04 06:28	TMB			
o-Xylene	ND	ug/kg	5.0	1.0	08/25/04 06:28	TMB	95-47-6		
Styrene	ND	ug/kg	5.0	1.0	08/25/04 06:28	TMB	100-42-5		
Bromoform	ND	ug/kg	5.0	1.0	08/25/04 06:28	TMB	75-25-2		
Isopropylbenzene (Cumene)	ND	ug/kg	5.0	1.0	08/25/04 06:28	TMB	98-82-8		
1,1,2,2-Tetrachloroethane	ND	ug/kg	5.0	1.0	08/25/04 06:28	TMB	79-34-5		
Bromobenzene	ND	ug/kg	5.0	1.0	08/25/04 06:28	TMB	108-86-1		
1,2,3-Trichloropropane	ND	ug/kg	5.0	1.0	08/25/04 06:28	TMB	96-18-4		
n-Propylbenzene	ND	ug/kg	5.0	1.0	08/25/04 06:28	TMB	103-65-1		
2-Chlorotoluene	ND	ug/kg	5.0	1.0	08/25/04 06:28	TMB	95-49-8		
1,3,5-Trimethylbenzene	ND	ug/kg	5.0	1.0	08/25/04 06:28	TMB	108-67-8		
4-Chlorotoluene	ND	ug/kg	5.0	1.0	08/25/04 06:28	TMB	106-43-4		
1,2,4-Trimethylbenzene	ND	ug/kg	5.0	1.0	08/25/04 06:28	TMB	95-63-6		
sec-Butylbenzene	ND	ug/kg	5.0	1.0	08/25/04 06:28	TMB	135-98-8		
tert-Butylbenzene	ND	ug/kg	5.0	1.0	08/25/04 06:28	TMB	98-06-6		
p-Isopropyltoluene	ND	ug/kg	5.0	1.0	08/25/04 06:28	TMB	99-87-6		
1,3-Dichlorobenzene	ND	ug/kg	5.0	1.0	08/25/04 06:28	TMB	541-73-1		
1,4-Dichlorobenzene	ND	ug/kg	5.0	1.0	08/25/04 06:28	TMB	106-46-7		
n-Butylbenzene	ND	ug/kg	5.0	1.0	08/25/04 06:28	TMB	104-51-8		
1,2-Dichlorobenzene	ND	ug/kg	5.0	1.0	08/25/04 06:28	TMB	95-50-1		
1,2-Dibromo-3-chloropropane	ND	ug/kg	5.0	1.0	08/25/04 06:28	TMB	96-12-8		
1,2,4-Trichlorobenzene	ND	ug/kg	5.0	1.0	08/25/04 06:28	TMB	120-82-1		
Hexachloro-1,3-butadiene	ND	ug/kg	5.0	1.0	08/25/04 06:28	TMB	87-68-3		
Naphthalene	ND	ug/kg	5.0	1.0	08/25/04 06:28	TMB	91-20-3		
1,2,3-Trichlorobenzene	ND	ug/kg	5.0	1.0	08/25/04 06:28	TMB	87-61-6		
trans-1,3-Dichloropropene	ND	ug/kg	5.0	1.0	08/25/04 06:28	TMB	10061-02-6		
cis-1,3-Dichloropropene	ND	ug/kg	5.0	1.0	08/25/04 06:28	TMB	10061-01-5		
2-Chloroethylvinyl ether	ND	ug/kg	50.	1.0	08/25/04 06:28	TMB	110-75-8		
Acetone	ND	ug/kg	100	1.0	08/25/04 06:28	TMB	67-64-1		
2-Butanone (MEK)	ND	ug/kg	10.	1.0	08/25/04 06:28	TMB	78-93-3		
4-Methyl-2-pentanone (MIBK)	ND	ug/kg	10.	1.0	08/25/04 06:28	TMB	108-10-1		
Carbon disulfide	ND	ug/kg	10.	1.0	08/25/04 06:28	TMB	75-15-0		
Acrolein	ND	ug/kg	100	1.0	08/25/04 06:28	TMB	107-02-8		
Acrylonitrile	ND	ug/kg	100	1.0	08/25/04 06:28	TMB	107-13-1		
2-Hexanone	ND	ug/kg	100	1.0	08/25/04 06:28	TMB	591-78-6		
Vinyl acetate	ND	ug/kg	100	1.0	08/25/04 06:28	TMB	108-05-4		
Iodomethane	ND	ug/kg	100	1.0	08/25/04 06:28	TMB	74-88-4		
Methyl-tert-butyl ether	ND	ug/kg	5.0	1.0	08/25/04 06:28	TMB	1634-04-4		
Ethyl methacrylate	ND	ug/kg	100	1.0	08/25/04 06:28	TMB	97-63-2		

REPORT OF LABORATORY ANALYSIS
This report shall not be reproduced, except in full,
without the written consent of Pace Analytical Services, Inc.

Pace Analytical®
www.pacelabs.com

Pace Analytical Services, Inc.
7726 Moller Road
Indianapolis, IN 46268
Phone: 317.875.5894
Fax: 317.872.6189

Lab Project Number: 5038030
Client Project ID: Michigan Meadows/M01046

Lab Sample No: 503730335 Project Sample Number: 5038030-001 Date Collected: 08/19/04 12:32
Client Sample ID: MMW-1S Matrix: Soil Date Received: 08/20/04 17:00

Parameters	Results	Units	Report Limit	DF	Analyzed	By	CAS No.	Qual	RegLmt
trans-1,4-Dichloro-2-butene	ND	ug/kg	100	1.0	08/25/04 06:28	TMB	110-57-6		
Dibromofluoromethane (S)	103	%		1.0	08/25/04 06:28	TMB	1868-53-7		
Toluene-d8 (S)	97	%		1.0	08/25/04 06:28	TMB	2037-26-5		
4-Bromofluorobenzene (S)	91	%		1.0	08/25/04 06:28	TMB	460-00-4		

REPORT OF LABORATORY ANALYSIS
This report shall not be reproduced, except in full,
without the written consent of Pace Analytical Services, Inc.

Pace Analytical®
www.pacelabs.com

Pace Analytical Services, Inc.
7726 Moller Road
Indianapolis, IN 46268
Phone: 317.875.5894
Fax: 317.872.6189

Lab Project Number: 5038030
Client Project ID: Michigan Meadows/M01046

Lab Sample No: 503730343 | Project Sample Number: 5038030-002 | Date Collected: 08/19/04 15:30
Client Sample ID: MMW-2S | Matrix: Soil | Date Received: 08/20/04 17:00

Parameters	Results	Units	Report Limit	DF	Analyzed	By	CAS No.	Qual	RegLmt
Wet Chemistry									
Percent Moisture	Method: SM 2540G								
Percent Moisture	4.0	%		1.0	08/27/04	ART2			
GC/MS Volatiles									
GC/MS VOCs by 8260	Prep/Method: EPA 5030 / EPA 8260								
Dichlorodifluoromethane	ND	ug/kg	5.0	1.0	08/25/04 07:00	TMB	75-71-8		
Chloromethane	ND	ug/kg	5.0	1.0	08/25/04 07:00	TMB	74-87-3		
Vinyl chloride	ND	ug/kg	2.0	1.0	08/25/04 07:00	TMB	75-01-4		
Bromomethane	ND	ug/kg	5.0	1.0	08/25/04 07:00	TMB	74-83-9		
Chloroethane	ND	ug/kg	5.0	1.0	08/25/04 07:00	TMB	75-00-3		
Trichlorofluoromethane	ND	ug/kg	5.0	1.0	08/25/04 07:00	TMB	75-69-4		
Methylene chloride	ND	ug/kg	20.	1.0	08/25/04 07:00	TMB	75-09-2		
1,1-Dichloroethene	ND	ug/kg	5.0	1.0	08/25/04 07:00	TMB	75-35-4		
trans-1,2-Dichloroethene	ND	ug/kg	5.0	1.0	08/25/04 07:00	TMB	156-60-5		
1,1-Dichloroethane	ND	ug/kg	5.0	1.0	08/25/04 07:00	TMB	75-34-3		
2,2-Dichloropropane	ND	ug/kg	5.0	1.0	08/25/04 07:00	TMB	594-20-7		
cis-1,2-Dichloroethene	ND	ug/kg	5.0	1.0	08/25/04 07:00	TMB	156-59-2		
Chloroform	ND	ug/kg	5.0	1.0	08/25/04 07:00	TMB	67-66-3		
Bromochloromethane	ND	ug/kg	5.0	1.0	08/25/04 07:00	TMB	74-97-5		
1,1,1-Trichloroethane	ND	ug/kg	5.0	1.0	08/25/04 07:00	TMB	71-55-6		
Carbon tetrachloride	ND	ug/kg	5.0	1.0	08/25/04 07:00	TMB	56-23-5		
1,1-Dichloropropene	ND	ug/kg	5.0	1.0	08/25/04 07:00	TMB	563-58-6		
Benzene	ND	ug/kg	5.0	1.0	08/25/04 07:00	TMB	71-43-2		
1,2-Dichloroethane	ND	ug/kg	5.0	1.0	08/25/04 07:00	TMB	107-06-2		
Trichloroethene	ND	ug/kg	5.0	1.0	08/25/04 07:00	TMB	79-01-6		
1,2-Dichloropropane	ND	ug/kg	5.0	1.0	08/25/04 07:00	TMB	78-87-5		
Bromodichloromethane	ND	ug/kg	5.0	1.0	08/25/04 07:00	TMB	75-27-4		
Dibromomethane	ND	ug/kg	5.0	1.0	08/25/04 07:00	TMB	74-95-3		
Toluene	ND	ug/kg	5.0	1.0	08/25/04 07:00	TMB	108-88-3		
1,1,2-Trichloroethane	ND	ug/kg	5.0	1.0	08/25/04 07:00	TMB	79-00-5		
Tetrachloroethene	ND	ug/kg	5.0	1.0	08/25/04 07:00	TMB	127-18-4		
1,3-Dichloropropane	ND	ug/kg	5.0	1.0	08/25/04 07:00	TMB	142-28-9		
Dibromochloromethane	ND	ug/kg	5.0	1.0	08/25/04 07:00	TMB	124-48-1		
1,2-Dibromoethane (EDB)	ND	ug/kg	5.0	1.0	08/25/04 07:00	TMB	106-93-4		
Chlorobenzene	ND	ug/kg	5.0	1.0	08/25/04 07:00	TMB	108-90-7		
1,1,1,2-Tetrachloroethane	ND	ug/kg	5.0	1.0	08/25/04 07:00	TMB	630-20-6		
Ethylbenzene	ND	ug/kg	5.0	1.0	08/25/04 07:00	TMB	100-41-4		
m&p-Xylene	ND	ug/kg	5.0	1.0	08/25/04 07:00	TMB			

REPORT OF LABORATORY ANALYSIS

This report shall not be reproduced, except in full,
without the written consent of Pace Analytical Services, Inc.

Pace Analytical®
www.pacelabs.com

Pace Analytical Services, Inc.
7726 Moller Road
Indianapolis, IN 46268
Phone: 317.875.5894
Fax: 317.872.6189

Lab Project Number: 5038030
Client Project ID: Michigan Meadows/M01046

Lab Sample No: 503730343 | Project Sample Number: 5038030-002 | Date Collected: 08/19/04 15:30
Client Sample ID: MMW-2S | Matrix: Soil | Date Received: 08/20/04 17:00

Parameters	Results	Units	Report Limit	DF	Analyzed	By	CAS No.	Qual	RegLmt
o-Xylene	ND	ug/kg	5.0	1.0	08/25/04 07:00	TMB	95-47-6		
Styrene	ND	ug/kg	5.0	1.0	08/25/04 07:00	TMB	100-42-5		
Bromoform	ND	ug/kg	5.0	1.0	08/25/04 07:00	TMB	75-25-2		
Isopropylbenzene (Cumene)	ND	ug/kg	5.0	1.0	08/25/04 07:00	TMB	98-82-8		
1,1,2,2-Tetrachloroethane	ND	ug/kg	5.0	1.0	08/25/04 07:00	TMB	79-34-5		
Bromobenzene	ND	ug/kg	5.0	1.0	08/25/04 07:00	TMB	108-86-1		
1,2,3-Trichloropropane	ND	ug/kg	5.0	1.0	08/25/04 07:00	TMB	96-18-4		
n-Propylbenzene	ND	ug/kg	5.0	1.0	08/25/04 07:00	TMB	103-65-1		
2-Chlorotoluene	ND	ug/kg	5.0	1.0	08/25/04 07:00	TMB	95-49-8		
1,3,5-Trimethylbenzene	ND	ug/kg	5.0	1.0	08/25/04 07:00	TMB	108-67-8		
4-Chlorotoluene	ND	ug/kg	5.0	1.0	08/25/04 07:00	TMB	106-43-4		
1,2,4-Trimethylbenzene	ND	ug/kg	5.0	1.0	08/25/04 07:00	TMB	95-63-6		
sec-Butylbenzene	ND	ug/kg	5.0	1.0	08/25/04 07:00	TMB	135-98-8		
tert-Butylbenzene	ND	ug/kg	5.0	1.0	08/25/04 07:00	TMB	98-06-6		
p-Isopropyltoluene	ND	ug/kg	5.0	1.0	08/25/04 07:00	TMB	99-87-6		
1,3-Dichlorobenzene	ND	ug/kg	5.0	1.0	08/25/04 07:00	TMB	541-73-1		
1,4-Dichlorobenzene	ND	ug/kg	5.0	1.0	08/25/04 07:00	TMB	106-46-7		
n-Butylbenzene	ND	ug/kg	5.0	1.0	08/25/04 07:00	TMB	104-51-8		
1,2-Dichlorobenzene	ND	ug/kg	5.0	1.0	08/25/04 07:00	TMB	95-50-1		
1,2-Dibromo-3-chloropropane	ND	ug/kg	5.0	1.0	08/25/04 07:00	TMB	96-12-8		
1,2,4-Trichlorobenzene	ND	ug/kg	5.0	1.0	08/25/04 07:00	TMB	120-82-1		
Hexachloro-1,3-butadiene	ND	ug/kg	5.0	1.0	08/25/04 07:00	TMB	87-68-3		
Naphthalene	ND	ug/kg	5.0	1.0	08/25/04 07:00	TMB	91-20-3		
1,2,3-Trichlorobenzene	ND	ug/kg	5.0	1.0	08/25/04 07:00	TMB	87-61-6		
trans-1,3-Dichloropropene	ND	ug/kg	5.0	1.0	08/25/04 07:00	TMB	10061-02-6		
cis-1,3-Dichloropropene	ND	ug/kg	5.0	1.0	08/25/04 07:00	TMB	10061-01-5		
2-Chloroethylvinyl ether	ND	ug/kg	50.	1.0	08/25/04 07:00	TMB	110-75-8		
Acetone	ND	ug/kg	100	1.0	08/25/04 07:00	TMB	67-64-1		
2-Butanone (MEK)	ND	ug/kg	10.	1.0	08/25/04 07:00	TMB	78-93-3		
4-Methyl-2-pentanone (MIBK)	ND	ug/kg	10.	1.0	08/25/04 07:00	TMB	108-10-1		
Carbon disulfide	ND	ug/kg	10.	1.0	08/25/04 07:00	TMB	75-15-0		
Acrolein	ND	ug/kg	100	1.0	08/25/04 07:00	TMB	107-02-8		
Acrylonitrile	ND	ug/kg	100	1.0	08/25/04 07:00	TMB	107-13-1		
2-Hexanone	ND	ug/kg	100	1.0	08/25/04 07:00	TMB	591-78-6		
Vinyl acetate	ND	ug/kg	100	1.0	08/25/04 07:00	TMB	108-05-4		
Iodomethane	ND	ug/kg	100	1.0	08/25/04 07:00	TMB	74-88-4		
Methyl-tert-butyl ether	ND	ug/kg	5.0	1.0	08/25/04 07:00	TMB	1634-04-4		
Ethyl methacrylate	ND	ug/kg	100	1.0	08/25/04 07:00	TMB	97-63-2		
trans-1,4-Dichloro-2-butene	ND	ug/kg	100	1.0	08/25/04 07:00	TMB	110-57-6		

REPORT OF LABORATORY ANALYSIS
This report shall not be reproduced, except in full,
without the written consent of Pace Analytical Services, Inc.

Pace Analytical®
www.pacelabs.com

Pace Analytical Services, Inc.
7726 Moller Road
Indianapolis, IN 46268
Phone: 317.875.5894
Fax: 317.872.6189

Lab Project Number: 5038030
Client Project ID: Michigan Meadows/M01046

Lab Sample No: 503730343 Project Sample Number: 5038030-002 Date Collected: 08/19/04 15:30
Client Sample ID: MMW-2S Matrix: Soil Date Received: 08/20/04 17:00

Parameters	Results	Units	Report Limit	DF	Analyzed	By	CAS No.	Qual	RegLmt
Dibromofluoromethane (S)	104	%		1.0	08/25/04 07:00	TMB	1868-53-7		
Toluene-d8 (S)	99	%		1.0	08/25/04 07:00	TMB	2037-26-5		
4-Bromofluorobenzene (S)	91	%		1.0	08/25/04 07:00	TMB	460-00-4		

REPORT OF LABORATORY ANALYSIS
This report shall not be reproduced, except in full,
without the written consent of Pace Analytical Services, Inc.

Pace Analytical®
www.pacelabs.com

Pace Analytical Services, Inc.
7726 Moller Road
Indianapolis, IN 46268
Phone: 317.875.5894
Fax: 317.872.6189

Lab Project Number: 5038030
Client Project ID: Michigan Meadows/M01046

PARAMETER FOOTNOTES

Dilution factor shown represents the factor applied to the reported result and reporting limit due to changes in sample preparation, dilution of the extract, or moisture content

ND	Not detected at or above adjusted reporting limit
NC	Not Calculable
J	Estimated concentration above the adjusted method detection limit and below the adjusted reporting limit
MDL	Adjusted Method Detection Limit
(S)	Surrogate

REPORT OF LABORATORY ANALYSIS
This report shall not be reproduced, except in full,
without the written consent of Pace Analytical Services, Inc.

Pace Analytical®
www.pacelabs.com

Pace Analytical Services, Inc.
7726 Moller Road
Indianapolis, IN 46268
Phone: 317.875.5894
Fax: 317.872.6189

QUALITY CONTROL DATA

Lab Project Number: 5038030
Client Project ID: Michigan Meadows/M01046

QC Batch: 75899 Analysis Method: EPA 8260
QC Batch Method: EPA 5030 Analysis Description: GC/MS VOCs by 8260
Associated Lab Samples: 503730335 503730343

METHOD BLANK: 503737199
Associated Lab Samples: 503730335 503730343

Parameter	Units	Blank Result	Reporting Limit	Footnotes
Dichlorodifluoromethane	ug/kg	ND	5.0	
Chloromethane	ug/kg	ND	5.0	
Vinyl chloride	ug/kg	ND	2.0	
Bromomethane	ug/kg	ND	5.0	
Chloroethane	ug/kg	ND	5.0	
Trichlorofluoromethane	ug/kg	ND	5.0	
Methylene chloride	ug/kg	ND	20.	
1,1-Dichloroethene	ug/kg	ND	5.0	
trans-1,2-Dichloroethene	ug/kg	ND	5.0	
1,1-Dichloroethane	ug/kg	ND	5.0	
2,2-Dichloropropane	ug/kg	ND	5.0	
cis-1,2-Dichloroethene	ug/kg	ND	5.0	
Chloroform	ug/kg	ND	5.0	
Bromochloromethane	ug/kg	ND	5.0	
1,1,1-Trichloroethane	ug/kg	ND	5.0	
Carbon tetrachloride	ug/kg	ND	5.0	
1,1-Dichloropropene	ug/kg	ND	5.0	
Benzene	ug/kg	ND	5.0	
1,2-Dichloroethane	ug/kg	ND	5.0	
Trichloroethene	ug/kg	ND	5.0	
1,2-Dichloropropane	ug/kg	ND	5.0	
Bromodichloromethane	ug/kg	ND	5.0	
Dibromomethane	ug/kg	ND	5.0	
Toluene	ug/kg	ND	5.0	
1,1,2-Trichloroethane	ug/kg	ND	5.0	
Tetrachloroethene	ug/kg	ND	5.0	
1,3-Dichloropropane	ug/kg	ND	5.0	
Dibromochloromethane	ug/kg	ND	5.0	
1,2-Dibromoethane (EDB)	ug/kg	ND	5.0	
Chlorobenzene	ug/kg	ND	5.0	
1,1,1,2-Tetrachloroethane	ug/kg	ND	5.0	

REPORT OF LABORATORY ANALYSIS
This report shall not be reproduced, except in full,
without the written consent of Pace Analytical Services, Inc.

Pace Analytical®
www.pacelabs.com

Pace Analytical Services, Inc.
7726 Moller Road
Indianapolis, IN 46268
Phone: 317.875.5894
Fax: 317.872.6189

QUALITY CONTROL DATA

Lab Project Number: 5038030
Client Project ID: Michigan Meadows/M01046

METHOD BLANK: 503737199
Associated Lab Samples: 503730335 503730343

Parameter	Units	Blank Result	Reporting Limit	Footnotes
Ethylbenzene	ug/kg	ND	5.0	
m&p-Xylene	ug/kg	ND	5.0	
o-Xylene	ug/kg	ND	5.0	
Styrene	ug/kg	ND	5.0	
Bromoform	ug/kg	ND	5.0	
Isopropylbenzene (Cumene)	ug/kg	ND	5.0	
1,1,2,2-Tetrachloroethane	ug/kg	ND	5.0	
Bromobenzene	ug/kg	ND	5.0	
1,2,3-Trichloropropane	ug/kg	ND	5.0	
n-Propylbenzene	ug/kg	ND	5.0	
2-Chlorotoluene	ug/kg	ND	5.0	
1,3,5-Trimethylbenzene	ug/kg	ND	5.0	
4-Chlorotoluene	ug/kg	ND	5.0	
1,2,4-Trimethylbenzene	ug/kg	ND	5.0	
sec-Butylbenzene	ug/kg	ND	5.0	
tert-Butylbenzene	ug/kg	ND	5.0	
p-Isopropyltoluene	ug/kg	ND	5.0	
1,3-Dichlorobenzene	ug/kg	ND	5.0	
1,4-Dichlorobenzene	ug/kg	ND	5.0	
n-Butylbenzene	ug/kg	ND	5.0	
1,2-Dichlorobenzene	ug/kg	ND	5.0	
1,2-Dibromo-3-chloropropane	ug/kg	ND	5.0	
1,2,4-Trichlorobenzene	ug/kg	ND	5.0	
Hexachloro-1,3-butadiene	ug/kg	ND	5.0	
Naphthalene	ug/kg	ND	5.0	
1,2,3-Trichlorobenzene	ug/kg	ND	5.0	
trans-1,3-Dichloropropene	ug/kg	ND	5.0	
cis-1,3-Dichloropropene	ug/kg	ND	5.0	
2-Chloroethylvinyl ether	ug/kg	ND	50.	
Acetone	ug/kg	ND	100	
2-Butanone (MEK)	ug/kg	ND	10.	
4-Methyl-2-pentanone (MIBK)	ug/kg	ND	10.	
Carbon disulfide	ug/kg	ND	10.	
Acrolein	ug/kg	ND	100	
Acrylonitrile	ug/kg	ND	100	
2-Hexanone	ug/kg	ND	100	

REPORT OF LABORATORY ANALYSIS
This report shall not be reproduced, except in full,
without the written consent of Pace Analytical Services, Inc.

Pace Analytical®
www.pacelabs.com

Pace Analytical Services, Inc.
7726 Moller Road
Indianapolis, IN 46268
Phone: 317.875.5894
Fax: 317.872.6189

QUALITY CONTROL DATA

Lab Project Number: 5038030
Client Project ID: Michigan Meadows/M01046

METHOD BLANK: 503737199
Associated Lab Samples: 503730335 503730343

Parameter	Units	Blank Result	Reporting Limit	Footnotes
Vinyl acetate	ug/kg	ND	100	
Iodomethane	ug/kg	ND	100	
Methyl-tert-butyl ether	ug/kg	ND	5.0	
Ethyl methacrylate	ug/kg	ND	100	
trans-1,4-Dichloro-2-butene	ug/kg	ND	100	
Dibromofluoromethane (S)	%	102		
Toluene-d8 (S)	%	98		
4-Bromofluorobenzene (S)	%	93		

LABORATORY CONTROL SAMPLE: 503737207

Parameter	Units	Spike Conc.	LCS Result	LCS % Rec	Footnotes
Dichlorodifluoromethane	ug/kg	50.00	44.32	89	
Chloromethane	ug/kg	50.00	48.13	96	
Vinyl chloride	ug/kg	50.00	52.58	105	
Bromomethane	ug/kg	50.00	49.49	99	
Chloroethane	ug/kg	50.00	57.39	115	
Trichlorofluoromethane	ug/kg	50.00	56.30	113	
Methylene chloride	ug/kg	50.00	54.13	108	
1,1-Dichloroethene	ug/kg	50.00	57.59	115	
trans-1,2-Dichloroethene	ug/kg	50.00	55.37	111	
1,1-Dichloroethane	ug/kg	50.00	55.92	112	
2,2-Dichloropropane	ug/kg	50.00	50.58	101	
cis-1,2-Dichloroethene	ug/kg	50.00	53.99	108	
Chloroform	ug/kg	50.00	55.87	112	
Bromochloromethane	ug/kg	50.00	62.60	125	
1,1,1-Trichloroethane	ug/kg	50.00	55.05	110	
Carbon tetrachloride	ug/kg	50.00	54.30	109	
1,1-Dichloropropene	ug/kg	50.00	54.64	109	
Benzene	ug/kg	50.00	55.15	110	
1,2-Dichloroethane	ug/kg	50.00	56.47	113	
Trichloroethene	ug/kg	50.00	55.84	112	
1,2-Dichloropropane	ug/kg	50.00	53.90	108	
Bromodichloromethane	ug/kg	50.00	53.37	107	

REPORT OF LABORATORY ANALYSIS

This report shall not be reproduced, except in full,
without the written consent of Pace Analytical Services, Inc.

CREDITED IN ACCORDANCE nelac

Pace Analytical®
www.pacelabs.com

Pace Analytical Services, Inc.
7726 Moller Road
Indianapolis, IN 46268
Phone: 317.875.5894
Fax: 317.872.6189

QUALITY CONTROL DATA

Lab Project Number: 5038030
Client Project ID: Michigan Meadows/M01046

LABORATORY CONTROL SAMPLE: 503737207

Parameter	Units	Spike Conc.	LCS Result	LCS % Rec	Footnotes
Dibromomethane	ug/kg	50.00	53.40	107	
Toluene	ug/kg	50.00	55.51	111	
1,1,2-Trichloroethane	ug/kg	50.00	55.44	111	
Tetrachloroethene	ug/kg	50.00	44.22	88	
1,3-Dichloropropane	ug/kg	50.00	53.84	108	
Dibromochloromethane	ug/kg	50.00	47.54	95	
1,2-Dibromoethane (EDB)	ug/kg	50.00	53.07	106	
Chlorobenzene	ug/kg	50.00	53.36	107	
1,1,1,2-Tetrachloroethane	ug/kg	50.00	51.72	103	
Ethylbenzene	ug/kg	50.00	53.08	106	
m&p-Xylene	ug/kg	100.00	107.0	107	
o-Xylene	ug/kg	50.00	53.26	107	
Styrene	ug/kg	50.00	51.84	104	
Bromoform	ug/kg	50.00	46.08	92	
Isopropylbenzene (Cumene)	ug/kg	50.00	50.64	101	
1,1,2,2-Tetrachloroethane	ug/kg	50.00	49.90	100	
Bromobenzene	ug/kg	50.00	50.47	101	
1,2,3-Trichloropropane	ug/kg	50.00	40.41	81	
n-Propylbenzene	ug/kg	50.00	53.08	106	
2-Chlorotoluene	ug/kg	50.00	53.07	106	
1,3,5-Trimethylbenzene	ug/kg	50.00	51.98	104	
4-Chlorotoluene	ug/kg	50.00	51.95	104	
1,2,4-Trimethylbenzene	ug/kg	50.00	51.92	104	
sec-Butylbenzene	ug/kg	50.00	54.10	108	
tert-Butylbenzene	ug/kg	50.00	49.03	98	
p-Isopropyltoluene	ug/kg	50.00	50.27	101	
1,3-Dichlorobenzene	ug/kg	50.00	51.40	103	
1,4-Dichlorobenzene	ug/kg	50.00	50.23	100	
n-Butylbenzene	ug/kg	50.00	50.89	102	
1,2-Dichlorobenzene	ug/kg	50.00	52.02	104	
1,2-Dibromo-3-chloropropane	ug/kg	50.00	57.73	115	
1,2,4-Trichlorobenzene	ug/kg	50.00	45.77	92	
Hexachloro-1,3-butadiene	ug/kg	50.00	50.46	101	
Naphthalene	ug/kg	50.00	46.23	92	
1,2,3-Trichlorobenzene	ug/kg	50.00	47.95	96	
trans-1,3-Dichloropropene	ug/kg	50.00	49.04	98	
cis-1,3-Dichloropropene	ug/kg	50.00	48.54	97	

REPORT OF LABORATORY ANALYSIS
This report shall not be reproduced, except in full,
without the written consent of Pace Analytical Services, Inc.

Pace Analytical®
www.pacelabs.com

Pace Analytical Services, Inc.
7726 Moller Road
Indianapolis, IN 46268
Phone: 317.875.5894
Fax: 317.872.6189

QUALITY CONTROL DATA

Lab Project Number: 5038030
Client Project ID: Michigan Meadows/M01046

LABORATORY CONTROL SAMPLE: 503737207

Parameter	Units	Spike Conc.	LCS Result	LCS % Rec	Footnotes
Methyl-tert-butyl ether	ug/kg	100.00	115.2	115	
Dibromofluoromethane (S)				100	
Toluene-d8 (S)				100	
4-Bromofluorobenzene (S)				100	

MATRIX SPIKE & MATRIX SPIKE DUPLICATE: 503737215 503737223

Parameter	Units	503722530 Result	Spike Conc.	MS Result	MSD Result	MS % Rec	MSD % Rec	RPD	Footnotes
1,1-Dichloroethene	ug/kg	0	50.00	63.91	57.41	128	115	11	
Benzene	ug/kg	0	50.00	47.27	40.81	94	82	15	
Trichloroethene	ug/kg	0	50.00	74.87	62.83	150	126	18	
Toluene	ug/kg	0	50.00	42.85	34.77	86	70	21	
Chlorobenzene	ug/kg	0	50.00	31.26	23.11	62	46	30	
Dibromofluoromethane (S)						99	101		
Toluene-d8 (S)						104	103		
4-Bromofluorobenzene (S)						98	98		1

REPORT OF LABORATORY ANALYSIS
This report shall not be reproduced, except in full,
without the written consent of Pace Analytical Services, Inc.

Pace Analytical®
www.pacelabs.com

Pace Analytical Services, Inc.
7726 Moller Road
Indianapolis, IN 46268
Phone: 317.875.5894
Fax: 317.872.6189

QUALITY CONTROL DATA

Lab Project Number: 5038030
Client Project ID: Michigan Meadows/M01046

QC Batch: 76004 Analysis Method: SM 2540G
QC Batch Method: SM 2540G Analysis Description: Percent Moisture
Associated Lab Samples: 503730335 503730343

SAMPLE DUPLICATE: 503744013

Parameter	Units	503739153 Result	DUP Result	RPD	Footnotes
Percent Moisture	%	15.20	14.70	3	

REPORT OF LABORATORY ANALYSIS
This report shall not be reproduced, except in full,
without the written consent of Pace Analytical Services, Inc.

Pace Analytical®
www.pacelabs.com

Pace Analytical Services, Inc.
7726 Moller Road
Indianapolis, IN 46268
Phone: 317.875.5894
Fax: 317.872.6189

Lab Project Number: 5038030
Client Project ID: Michigan Meadows/M01046

QUALITY CONTROL DATA PARAMETER FOOTNOTES

Consistent with EPA guidelines, unrounded concentrations are displayed and have been used to calculate % Rec and RPD values.

LCS(D)	Laboratory Control Sample (Duplicate)
MS(D)	Matrix Spike (Duplicate)
DUP	Sample Duplicate
ND	Not detected at or above adjusted reporting limit
NC	Not Calculable
J	Estimated concentration above the adjusted method detection limit and below the adjusted reporting limit
MDL	Adjusted Method Detection Limit
RPD	Relative Percent Difference
(S)	Surrogate
[1]	Matrix (MS) and or surrogate spike recovery (S) was affected by the sample matrix. Refer to the batch QC recoveries blank and LCS to demonstrate that the analytical system was operating in control.

REPORT OF LABORATORY ANALYSIS

This report shall not be reproduced, except in full,
without the written consent of Pace Analytical Services, Inc.

Pace Analytical®
www.pacelabs.com

CHAIN OF CUSTODY / Analytical Request Document

The Chain-of-Custody is a LEGAL DOCUMENT. All relevant fields must be completed accurately.

776748

Page: 1 of 1

Required Client Information: Section A

Company: Mundell & Associates
Address: 429 East Vermont St
Indianapolis, IN
Phone: 317-630-9060 Fax: 317-630-9065

Required Client Information: Section B

Report To: John Mundell
Copy To: Leena Lothe
Invoice To: Barb Whaley
P.O.
Project Name: Michigan Meadows
Project Number: M01046

Client Information (Check quote/contract):
Requested Due Date:
*TAT: 2 weeks

* Turn around times less than 14 days subject to laboratory and contractual obligations and may result in a Rush Turnaround Surcharge.
Turn Around Time (TAT) in calendar days.

To Be Completed by Pace Analytical and Client Section C

Quote Reference:
Project Manager:
Project #: 5038030
Profile #:

Section D Required Client Information:

SAMPLE ID
One character per box.
(A–Z, 0–9 / .–)
Sample IDs MUST BE UNIQUE

Valid Matrix Codes

MATRIX	CODE
WATER	WT
SOIL	SL
OIL	OL
WIPE	WP
AIR	AR
TISSUE	TS
OTHER	OT

Requested Analysis: VOCs 8260

ITEM #	SAMPLE ID	MATRIX CODE	DATE COLLECTED (mm / dd / yy)	TIME COLLECTED (hh:mm a/p)	# Containers	Unpreserved	H_2SO_4	HNO_3	HCl	NaOH	$Na_2S_2O_3$	Methanol	Other	VOCs 8260	Remarks / Lab ID
1	MMW-1S	SL	8/19/04	12:32p	1	✓								X	503730335
2	MMW-2S	SL	↓	3:30p	1	✓								X	343
3															
4															
5															
6															
7															
8															
9															
10															
11															
12															

SHIPMENT METHOD	AIRBILL NO.	SHIPPING DATE	NO. OF COOLERS	ITEM NUMBER	RELINQUISHED BY / AFFILIATION	DATE	TIME	ACCEPTED BY / AFFILIATION	DATE	TIME
					LALothe	5:00	8/19/04	Todd Massey	8.20.04	5:00

SAMPLE CONDITION

Temp in °C	3
Received on Ice	Y/N
Sealed Cooler	Y/N
Samples Intact	Y/N

SAMPLE NOTES
Chain Z OK TM
W1

Additional Comments:

ORIGINAL

SAMPLER NAME AND SIGNATURE
PRINT Name of SAMPLER: LEENA LOTHE
SIGNATURE of SAMPLER: LALothe
DATE Signed: (MM / DD / YY) 08/19/04

SEE REVERSE SIDE FOR INSTRUCTIONS

Form COC01 Rev 0402

Pace Analytical®
www.pacelabs.com

Pace Analytical Services, Inc.
7726 Moller Road
Indianapolis, IN 46268
Phone: 317.875.5894
Fax: 317.872.6189

RECEIVED
SEP 10 2004

September 07, 2004

Mr. John Mundell
Mundell & Associates, Inc.
429 East Vermont Street
Suite 200
Indianapolis, IN 46202

RE: Lab Project Number: 5038195
Client Project ID: Michigan Meadows/M01046

Dear Mr. Mundell:

Enclosed are the analytical results for sample(s) received by the laboratory on August 27, 2004. Results reported herein conform to the most current NELAC standards, where applicable, unless otherwise narrated in the body of the report.

If you have any questions concerning this report please feel free to contact me.

Sincerely,

Mick Mayse

Mick Mayse
mmayse@pacelabs.com
Project Manager

Enclosures

REPORT OF LABORATORY ANALYSIS

This report shall not be reproduced, except in full,
without the written consent of Pace Analytical Services, Inc.

Pace Analytical®
www.pacelabs.com

Pace Analytical Services, Inc.
7726 Moller Road
Indianapolis, IN 46268
Phone: 317.875.5894
Fax: 317.872.6189

Lab Project Number: 5038195
Client Project ID: Michigan Meadows/M01046

Solid results are reported on a wet weight basis

Lab Sample No: 503750598 | Project Sample Number: 5038195-001 | Date Collected: 08/26/04 14:30
Client Sample ID: MMW-3S (9-10) | Matrix: Soil | Date Received: 08/27/04 10:38

Parameters	Results	Units	Report Limit	DF	Analyzed	By	CAS No.	Qual	RegLmt
Wet Chemistry									
Percent Moisture	Method: SM 2540G								
Percent Moisture	6.6	%		1.0	09/03/04	LAD			
GC/MS Volatiles									
GC/MS VOCs by 8260	Prep/Method: EPA 5030 / EPA 8260								
Dichlorodifluoromethane	ND	ug/kg	5.0	1.0	08/31/04 00:51	TMB	75-71-8		
Chloromethane	ND	ug/kg	5.0	1.0	08/31/04 00:51	TMB	74-87-3		
Vinyl chloride	ND	ug/kg	2.0	1.0	08/31/04 00:51	TMB	75-01-4		
Bromomethane	ND	ug/kg	5.0	1.0	08/31/04 00:51	TMB	74-83-9		
Chloroethane	ND	ug/kg	5.0	1.0	08/31/04 00:51	TMB	75-00-3		
Trichlorofluoromethane	ND	ug/kg	5.0	1.0	08/31/04 00:51	TMB	75-69-4		
Methylene chloride	ND	ug/kg	20.	1.0	09/07/04 13:39	TMB	75-09-2		
1,1-Dichloroethene	ND	ug/kg	5.0	1.0	08/31/04 00:51	TMB	75-35-4		
trans-1,2-Dichloroethene	ND	ug/kg	5.0	1.0	08/31/04 00:51	TMB	156-60-5		
1,1-Dichloroethane	ND	ug/kg	5.0	1.0	08/31/04 00:51	TMB	75-34-3		
2,2-Dichloropropane	ND	ug/kg	5.0	1.0	08/31/04 00:51	TMB	594-20-7		
cis-1,2-Dichloroethene	ND	ug/kg	5.0	1.0	08/31/04 00:51	TMB	156-59-2		
Chloroform	ND	ug/kg	5.0	1.0	08/31/04 00:51	TMB	67-66-3		
Bromochloromethane	ND	ug/kg	5.0	1.0	08/31/04 00:51	TMB	74-97-5		
1,1,1-Trichloroethane	ND	ug/kg	5.0	1.0	08/31/04 00:51	TMB	71-55-6		
Carbon tetrachloride	ND	ug/kg	5.0	1.0	08/31/04 00:51	TMB	56-23-5		
1,1-Dichloropropene	ND	ug/kg	5.0	1.0	08/31/04 00:51	TMB	563-58-6		
Benzene	ND	ug/kg	5.0	1.0	08/31/04 00:51	TMB	71-43-2		
1,2-Dichloroethane	ND	ug/kg	5.0	1.0	08/31/04 00:51	TMB	107-06-2		
Trichloroethene	ND	ug/kg	5.0	1.0	08/31/04 00:51	TMB	79-01-6		
1,2-Dichloropropane	ND	ug/kg	5.0	1.0	08/31/04 00:51	TMB	78-87-5		
Bromodichloromethane	ND	ug/kg	5.0	1.0	08/31/04 00:51	TMB	75-27-4		
Dibromomethane	ND	ug/kg	5.0	1.0	08/31/04 00:51	TMB	74-95-3		
Toluene	ND	ug/kg	5.0	1.0	08/31/04 00:51	TMB	108-88-3		
1,1,2-Trichloroethane	ND	ug/kg	5.0	1.0	08/31/04 00:51	TMB	79-00-5		
Tetrachloroethene	ND	ug/kg	5.0	1.0	08/31/04 00:51	TMB	127-18-4		
1,3-Dichloropropane	ND	ug/kg	5.0	1.0	08/31/04 00:51	TMB	142-28-9		
Dibromochloromethane	ND	ug/kg	5.0	1.0	08/31/04 00:51	TMB	124-48-1		
1,2-Dibromoethane (EDB)	ND	ug/kg	5.0	1.0	08/31/04 00:51	TMB	106-93-4		
Chlorobenzene	ND	ug/kg	5.0	1.0	08/31/04 00:51	TMB	108-90-7		
1,1,1,2-Tetrachloroethane	ND	ug/kg	5.0	1.0	08/31/04 00:51	TMB	630-20-6		
Ethylbenzene	ND	ug/kg	5.0	1.0	08/31/04 00:51	TMB	100-41-4		

REPORT OF LABORATORY ANALYSIS
This report shall not be reproduced, except in full,
without the written consent of Pace Analytical Services, Inc.

CREDITED IN ACCORDANCE nelac

Pace Analytical®
www.pacelabs.com

Pace Analytical Services, Inc.
7726 Moller Road
Indianapolis, IN 46268
Phone: 317.875.5894
Fax: 317.872.6189

Lab Project Number: 5038195
Client Project ID: Michigan Meadows/M01046

Lab Sample No: 503750598 | Project Sample Number: 5038195-001 | Date Collected: 08/26/04 14:30
Client Sample ID: MMW-3S (9-10) | Matrix: Soil | Date Received: 08/27/04 10:38

Parameters	Results	Units	Report Limit	DF	Analyzed	By	CAS No.	Qual	RegLmt
m&p-Xylene	ND	ug/kg	5.0	1.0	08/31/04 00:51	TMB			
o-Xylene	ND	ug/kg	5.0	1.0	08/31/04 00:51	TMB	95-47-6		
Styrene	ND	ug/kg	5.0	1.0	08/31/04 00:51	TMB	100-42-5		
Bromoform	ND	ug/kg	5.0	1.0	08/31/04 00:51	TMB	75-25-2		
Isopropylbenzene (Cumene)	ND	ug/kg	5.0	1.0	08/31/04 00:51	TMB	98-82-8		
1,1,2,2-Tetrachloroethane	ND	ug/kg	5.0	1.0	08/31/04 00:51	TMB	79-34-5		
Bromobenzene	ND	ug/kg	5.0	1.0	08/31/04 00:51	TMB	108-86-1		
1,2,3-Trichloropropane	ND	ug/kg	5.0	1.0	08/31/04 00:51	TMB	96-18-4		
n-Propylbenzene	ND	ug/kg	5.0	1.0	08/31/04 00:51	TMB	103-65-1		
2-Chlorotoluene	ND	ug/kg	5.0	1.0	08/31/04 00:51	TMB	95-49-8		
1,3,5-Trimethylbenzene	ND	ug/kg	5.0	1.0	08/31/04 00:51	TMB	108-67-8		
4-Chlorotoluene	ND	ug/kg	5.0	1.0	08/31/04 00:51	TMB	106-43-4		
1,2,4-Trimethylbenzene	ND	ug/kg	5.0	1.0	08/31/04 00:51	TMB	95-63-6		
sec-Butylbenzene	ND	ug/kg	5.0	1.0	08/31/04 00:51	TMB	135-98-8		
tert-Butylbenzene	ND	ug/kg	5.0	1.0	08/31/04 00:51	TMB	98-06-6		
p-Isopropyltoluene	ND	ug/kg	5.0	1.0	08/31/04 00:51	TMB	99-87-6		
1,3-Dichlorobenzene	ND	ug/kg	5.0	1.0	08/31/04 00:51	TMB	541-73-1		
1,4-Dichlorobenzene	ND	ug/kg	5.0	1.0	08/31/04 00:51	TMB	106-46-7		
n-Butylbenzene	ND	ug/kg	5.0	1.0	08/31/04 00:51	TMB	104-51-8		
1,2-Dichlorobenzene	ND	ug/kg	5.0	1.0	08/31/04 00:51	TMB	95-50-1		
1,2-Dibromo-3-chloropropane	ND	ug/kg	5.0	1.0	08/31/04 00:51	TMB	96-12-8		
1,2,4-Trichlorobenzene	ND	ug/kg	5.0	1.0	08/31/04 00:51	TMB	120-82-1		
Hexachloro-1,3-butadiene	ND	ug/kg	5.0	1.0	08/31/04 00:51	TMB	87-68-3		
Naphthalene	ND	ug/kg	5.0	1.0	08/31/04 00:51	TMB	91-20-3		
1,2,3-Trichlorobenzene	ND	ug/kg	5.0	1.0	08/31/04 00:51	TMB	87-61-6		
trans-1,3-Dichloropropene	ND	ug/kg	5.0	1.0	08/31/04 00:51	TMB	10061-02-6		
cis-1,3-Dichloropropene	ND	ug/kg	5.0	1.0	08/31/04 00:51	TMB	10061-01-5		
2-Chloroethylvinyl ether	ND	ug/kg	50.	1.0	08/31/04 00:51	TMB	110-75-8		
Acetone	ND	ug/kg	100	1.0	08/31/04 00:51	TMB	67-64-1		
2-Butanone (MEK)	ND	ug/kg	10.	1.0	08/31/04 00:51	TMB	78-93-3		
4-Methyl-2-pentanone (MIBK)	ND	ug/kg	10.	1.0	08/31/04 00:51	TMB	108-10-1		
Carbon disulfide	ND	ug/kg	10.	1.0	08/31/04 00:51	TMB	75-15-0		
Acrolein	ND	ug/kg	100	1.0	08/31/04 00:51	TMB	107-02-8		
Acrylonitrile	ND	ug/kg	100	1.0	08/31/04 00:51	TMB	107-13-1		
2-Hexanone	ND	ug/kg	100	1.0	08/31/04 00:51	TMB	591-78-6		
Vinyl acetate	ND	ug/kg	100	1.0	08/31/04 00:51	TMB	108-05-4		
Iodomethane	ND	ug/kg	100	1.0	08/31/04 00:51	TMB	74-88-4		
Methyl-tert-butyl ether	ND	ug/kg	5.0	1.0	08/31/04 00:51	TMB	1634-04-4		
Ethyl methacrylate	ND	ug/kg	100	1.0	08/31/04 00:51	TMB	97-63-2		

REPORT OF LABORATORY ANALYSIS
This report shall not be reproduced, except in full,
without the written consent of Pace Analytical Services, Inc.

Pace Analytical®
www.pacelabs.com

Pace Analytical Services, Inc.
7726 Moller Road
Indianapolis, IN 46268
Phone: 317.875.5894
Fax: 317.872.6189

Lab Project Number: 5038195
Client Project ID: Michigan Meadows/M01046

Lab Sample No: 503750598 Project Sample Number: 5038195-001 Date Collected: 08/26/04 14:30
Client Sample ID: MMW-3S (9-10) Matrix: Soil Date Received: 08/27/04 10:38

Parameters	Results	Units	Report Limit	DF	Analyzed	By	CAS No.	Qual	RegLmt
trans-1,4-Dichloro-2-butene	ND	ug/kg	100	1.0	08/31/04 00:51	TMB	110-57-6		
Dibromofluoromethane (S)	104	%		1.0	08/31/04 00:51	TMB	1868-53-7		
Toluene-d8 (S)	106	%		1.0	08/31/04 00:51	TMB	2037-26-5		
4-Bromofluorobenzene (S)	99	%		1.0	08/31/04 00:51	TMB	460-00-4		

REPORT OF LABORATORY ANALYSIS
This report shall not be reproduced, except in full,
without the written consent of Pace Analytical Services, Inc.

Pace Analytical®
www.pacelabs.com

Pace Analytical Services, Inc.
7726 Moller Road
Indianapolis, IN 46268
Phone: 317.875.5894
Fax: 317.872.6189

Lab Project Number: 5038195
Client Project ID: Michigan Meadows/M01046

PARAMETER FOOTNOTES

Dilution factor shown represents the factor applied to the reported result and reporting limit due to changes in sample preparation, dilution of the extract, or moisture content

ND	Not detected at or above adjusted reporting limit
NC	Not Calculable
J	Estimated concentration above the adjusted method detection limit and below the adjusted reporting limit
MDL	Adjusted Method Detection Limit
(S)	Surrogate

REPORT OF LABORATORY ANALYSIS
This report shall not be reproduced, except in full,
without the written consent of Pace Analytical Services, Inc.

CERTIFIED IN ACCORDANCE nelac

Pace Analytical®
www.pacelabs.com

Pace Analytical Services, Inc.
7726 Moller Road
Indianapolis, IN 46268
Phone: 317.875.5894
Fax: 317.872.6189

QUALITY CONTROL DATA

Lab Project Number: 503B195
Client Project ID: Michigan Meadows/M01046

QC Batch: 76295
QC Batch Method: EPA 5030
Associated Lab Samples: 503750598

Analysis Method: EPA B260
Analysis Description: GC/MS VOCs by 8260

METHOD BLANK: 503757924
Associated Lab Samples: 503750598

Parameter	Units	Blank Result	Reporting Limit	Footnotes
Dichlorodifluoromethane	ug/kg	ND	5.0	
Chloromethane	ug/kg	ND	5.0	
Vinyl chloride	ug/kg	ND	2.0	
Bromomethane	ug/kg	ND	5.0	
Chloroethane	ug/kg	ND	5.0	
Trichlorofluoromethane	ug/kg	ND	5.0	
Methylene chloride	ug/kg	3B.	20.	1
1,1-Dichloroethene	ug/kg	ND	5.0	
trans-1,2-Dichloroethene	ug/kg	ND	5.0	
1,1-Dichloroethane	ug/kg	ND	5.0	
2,2-Dichloropropane	ug/kg	ND	5.0	
cis-1,2-Dichloroethene	ug/kg	ND	5.0	
Chloroform	ug/kg	ND	5.0	
Bromochloromethane	ug/kg	ND	5.0	
1,1,1-Trichloroethane	ug/kg	ND	5.0	
Carbon tetrachloride	ug/kg	ND	5.0	
1,1-Dichloropropene	ug/kg	ND	5.0	
Benzene	ug/kg	ND	5.0	
1,2-Dichloroethane	ug/kg	ND	5.0	
Trichloroethene	ug/kg	ND	5.0	
1,2-Dichloropropane	ug/kg	ND	5.0	
Bromodichloromethane	ug/kg	ND	5.0	
Dibromomethane	ug/kg	ND	5.0	
Toluene	ug/kg	ND	5.0	
1,1,2-Trichloroethane	ug/kg	ND	5.0	
Tetrachloroethene	ug/kg	ND	5.0	
1,3-Dichloropropane	ug/kg	ND	5.0	
Dibromochloromethane	ug/kg	ND	5.0	
1,2-Dibromoethane (EDB)	ug/kg	ND	5.0	
Chlorobenzene	ug/kg	ND	5.0	
1,1,1,2-Tetrachloroethane	ug/kg	ND	5.0	

REPORT OF LABORATORY ANALYSIS
This report shall not be reproduced, except in full,
without the written consent of Pace Analytical Services, Inc.

Pace Analytical®
www.pacelabs.com

Pace Analytical Services, Inc.
7726 Moller Road
Indianapolis, IN 46268
Phone: 317.875.5894
Fax: 317.872.6189

QUALITY CONTROL DATA

Lab Project Number: 5038195
Client Project ID: Michigan Meadows/M01046

METHOD BLANK: 503757924
Associated Lab Samples: 503750598

Parameter	Units	Blank Result	Reporting Limit	Footnotes
Ethylbenzene	ug/kg	ND	5.0	
m&p-Xylene	ug/kg	ND	5.0	
o-Xylene	ug/kg	ND	5.0	
Styrene	ug/kg	ND	5.0	
Bromoform	ug/kg	ND	5.0	
Isopropylbenzene (Cumene)	ug/kg	ND	5.0	
1,1,2,2-Tetrachloroethane	ug/kg	ND	5.0	
Bromobenzene	ug/kg	ND	5.0	
1,2,3-Trichloropropane	ug/kg	ND	5.0	
n-Propylbenzene	ug/kg	ND	5.0	
2-Chlorotoluene	ug/kg	ND	5.0	
1,3,5-Trimethylbenzene	ug/kg	ND	5.0	
4-Chlorotoluene	ug/kg	ND	5.0	
1,2,4-Trimethylbenzene	ug/kg	ND	5.0	
sec-Butylbenzene	ug/kg	ND	5.0	
tert-Butylbenzene	ug/kg	ND	5.0	
p-Isopropyltoluene	ug/kg	ND	5.0	
1,3-Dichlorobenzene	ug/kg	ND	5.0	
1,4-Dichlorobenzene	ug/kg	ND	5.0	
n-Butylbenzene	ug/kg	ND	5.0	
1,2-Dichlorobenzene	ug/kg	ND	5.0	
1,2-Dibromo-3-chloropropane	ug/kg	ND	5.0	
1,2,4-Trichlorobenzene	ug/kg	ND	5.0	
Hexachloro-1,3-butadiene	ug/kg	ND	5.0	
Naphthalene	ug/kg	ND	5.0	
1,2,3-Trichlorobenzene	ug/kg	ND	5.0	
trans-1,3-Dichloropropene	ug/kg	ND	5.0	
cis-1,3-Dichloropropene	ug/kg	ND	5.0	
2-Chloroethylvinyl ether	ug/kg	ND	50.	
Acetone	ug/kg	ND	100	
2-Butanone (MEK)	ug/kg	ND	10.	
4-Methyl-2-pentanone (MIBK)	ug/kg	ND	10.	
Carbon disulfide	ug/kg	ND	10.	
Acrolein	ug/kg	ND	100	
Acrylonitrile	ug/kg	ND	100	
2-Hexanone	ug/kg	ND	100	

REPORT OF LABORATORY ANALYSIS
This report shall not be reproduced, except in full,
without the written consent of Pace Analytical Services, Inc.

CREDITED IN ACCORDANCE WITH nelac

Pace Analytical®
www.pacelabs.com

Pace Analytical Services, Inc.
7726 Moller Road
Indianapolis, IN 46268
Phone: 317.875.5894
Fax: 317.872.6189

QUALITY CONTROL DATA

Lab Project Number: 5038195
Client Project ID: Michigan Meadows/M01046

METHOD BLANK: 503757924
Associated Lab Samples: 503750598

Parameter	Units	Blank Result	Reporting Limit	Footnotes
Vinyl acetate	ug/kg	ND	100	
Iodomethane	ug/kg	ND	100	
Methyl-tert-butyl ether	ug/kg	ND	5.0	
Ethyl methacrylate	ug/kg	ND	100	
trans-1,4-Dichloro-2-butene	ug/kg	ND	100	
Dibromofluoromethane (S)	%	101		
Toluene-d8 (S)	%	99		
4-Bromofluorobenzene (S)	%	97		

LABORATORY CONTROL SAMPLE: 503757932

Parameter	Units	Spike Conc.	LCS Result	LCS % Rec	Footnotes
Dichlorodifluoromethane	ug/kg	50.00	29.10	58	
Chloromethane	ug/kg	50.00	34.55	69	
Vinyl chloride	ug/kg	50.00	42.09	84	
Bromomethane	ug/kg	50.00	34.47	69	
Chloroethane	ug/kg	50.00	45.77	92	
Trichlorofluoromethane	ug/kg	50.00	51.70	103	
Methylene chloride	ug/kg	50.00	85.90	172	
1,1-Dichloroethene	ug/kg	50.00	57.71	115	
trans-1,2-Dichloroethene	ug/kg	50.00	54.98	110	
1,1-Dichloroethane	ug/kg	50.00	55.08	110	
2,2-Dichloropropane	ug/kg	50.00	50.84	102	
cis-1,2-Dichloroethene	ug/kg	50.00	53.80	108	
Chloroform	ug/kg	50.00	54.50	109	
Bromochloromethane	ug/kg	50.00	50.53	101	
1,1,1-Trichloroethane	ug/kg	50.00	55.20	110	
Carbon tetrachloride	ug/kg	50.00	52.81	106	
1,1-Dichloropropene	ug/kg	50.00	54.18	108	
Benzene	ug/kg	50.00	52.36	105	
1,2-Dichloroethane	ug/kg	50.00	52.44	105	
Trichloroethene	ug/kg	50.00	54.95	110	
1,2-Dichloropropane	ug/kg	50.00	50.81	102	
Bromodichloromethane	ug/kg	50.00	53.21	106	

REPORT OF LABORATORY ANALYSIS

This report shall not be reproduced, except in full,
without the written consent of Pace Analytical Services, Inc.

CREDITED IN ACCORDANCE nelac

Pace Analytical®
www.pacelabs.com

Pace Analytical Services, Inc.
7726 Moller Road
Indianapolis, IN 46268
Phone: 317.875.5894
Fax: 317.872.6189

QUALITY CONTROL DATA

Lab Project Number: 5038195
Client Project ID: Michigan Meadows/M01046

LABORATORY CONTROL SAMPLE: 503757932

Parameter	Units	Spike Conc.	LCS Result	LCS % Rec	Footnotes
Dibromomethane	ug/kg	50.00	51.28	103	
Toluene	ug/kg	50.00	52.05	104	
1,1,2-Trichloroethane	ug/kg	50.00	51.59	103	
Tetrachloroethene	ug/kg	50.00	43.17	86	
1,3-Dichloropropane	ug/kg	50.00	48.82	98	
Dibromochloromethane	ug/kg	50.00	49.81	100	
1,2-Dibromoethane (EDB)	ug/kg	50.00	51.96	104	
Chlorobenzene	ug/kg	50.00	50.90	102	
1,1,1,2-Tetrachloroethane	ug/kg	50.00	50.08	100	
Ethylbenzene	ug/kg	50.00	50.86	102	
m&p-Xylene	ug/kg	100.00	101.5	102	
o-Xylene	ug/kg	50.00	51.10	102	
Styrene	ug/kg	50.00	49.53	99	
Bromoform	ug/kg	50.00	44.45	89	
Isopropylbenzene (Cumene)	ug/kg	50.00	48.39	97	
1,1,2,2-Tetrachloroethane	ug/kg	50.00	46.47	93	
Bromobenzene	ug/kg	50.00	48.59	97	
1,2,3-Trichloropropane	ug/kg	50.00	39.38	79	
n-Propylbenzene	ug/kg	50.00	49.59	99	
2-Chlorotoluene	ug/kg	50.00	50.55	101	
1,3,5-Trimethylbenzene	ug/kg	50.00	50.28	101	
4-Chlorotoluene	ug/kg	50.00	48.94	98	
1,2,4-Trimethylbenzene	ug/kg	50.00	48.76	98	
sec-Butylbenzene	ug/kg	50.00	50.93	102	
tert-Butylbenzene	ug/kg	50.00	48.24	96	
p-Isopropyltoluene	ug/kg	50.00	47.69	95	
1,3-Dichlorobenzene	ug/kg	50.00	49.05	98	
1,4-Dichlorobenzene	ug/kg	50.00	47.29	95	
n-Butylbenzene	ug/kg	50.00	45.63	91	
1,2-Dichlorobenzene	ug/kg	50.00	49.45	99	
1,2-Dibromo-3-chloropropane	ug/kg	50.00	46.86	94	
1,2,4-Trichlorobenzene	ug/kg	50.00	44.18	88	
Hexachloro-1,3-butadiene	ug/kg	50.00	51.10	102	
Naphthalene	ug/kg	50.00	43.45	87	
1,2,3-Trichlorobenzene	ug/kg	50.00	44.58	89	
trans-1,3-Dichloropropene	ug/kg	50.00	47.15	94	
cis-1,3-Dichloropropene	ug/kg	50.00	48.99	98	

REPORT OF LABORATORY ANALYSIS

This report shall not be reproduced, except in full,
without the written consent of Pace Analytical Services, Inc.

Pace Analytical®
www.pacelabs.com

Pace Analytical Services, Inc.
7726 Moller Road
Indianapolis, IN 46268
Phone: 317.875.5894
Fax: 317.872.6189

QUALITY CONTROL DATA

Lab Project Number: 5038195
Client Project ID: Michigan Meadows/M01046

LABORATORY CONTROL SAMPLE: 503757932

Parameter	Units	Spike Conc.	LCS Result	LCS % Rec	Footnotes
Methyl-tert-butyl ether	ug/kg	100.00	154.9	155	
Dibromofluoromethane (S)				102	
Toluene-d8 (S)				102	
4-Bromofluorobenzene (S)				99	

MATRIX SPIKE & MATRIX SPIKE DUPLICATE: 503757940 503757957

Parameter	Units	503751497 Result	Spike Conc.	MS Result	MSD Result	MS % Rec	MSD % Rec	RPD	Footnotes
1,1-Dichloroethene	ug/kg	0	59.45	65.26	64.65	110	109	1	
Benzene	ug/kg	0	59.45	46.67	43.69	78	74	7	
Trichloroethene	ug/kg	0	59.45	46.89	49.92	79	84	6	
Toluene	ug/kg	0	59.45	37.15	42.05	62	71	12	
Chlorobenzene	ug/kg	0	59.45	26.34	32.17	44	54	20	2
Dibromofluoromethane (S)						109	102		
Toluene-d8 (S)						102	106		
4-Bromofluorobenzene (S)						101	97		

REPORT OF LABORATORY ANALYSIS

This report shall not be reproduced, except in full,
without the written consent of Pace Analytical Services, Inc.

CREDITED IN ACCORDANCE nelac

Pace Analytical®
www.pacelabs.com

Pace Analytical Services, Inc.
7726 Moller Road
Indianapolis, IN 46268
Phone: 317.875.5894
Fax: 317.872.6189

QUALITY CONTROL DATA

Lab Project Number: 5038195
Client Project ID: Michigan Meadows/M01046

QC Batch: 76554
QC Batch Method: SM 2540G
Associated Lab Samples: 503750598

Analysis Method: SM 2540G
Analysis Description: Percent Moisture

SAMPLE DUPLICATE: 503768459

Parameter	Units	503750598 Result	DUP Result	RPD	Footnotes
Percent Moisture	%	6.600	6.800	4	

REPORT OF LABORATORY ANALYSIS
This report shall not be reproduced, except in full,
without the written consent of Pace Analytical Services, Inc.

Pace Analytical®
www.pacelabs.com

Pace Analytical Services, Inc.
7726 Moller Road
Indianapolis, IN 46268
Phone: 317.875.5894
Fax: 317.872.6189

Lab Project Number: 5038195
Client Project ID: Michigan Meadows/M01046

QUALITY CONTROL DATA PARAMETER FOOTNOTES

Consistent with EPA guidelines, unrounded concentrations are displayed and have been used to calculate % Rec and RPD values.

LCS(D)	Laboratory Control Sample (Duplicate)
MS(D)	Matrix Spike (Duplicate)
DUP	Sample Duplicate
ND	Not detected at or above adjusted reporting limit
NC	Not Calculable
J	Estimated concentration above the adjusted method detection limit and below the adjusted reporting limit
MDL	Adjusted Method Detection Limit
RPD	Relative Percent Difference
(S)	Surrogate
[1]	Associated samples with positive hits for this compound reanalyzed for confirmation. 08/31/04 tmb
[2]	The reported recovery fails to meet the established criteria.

REPORT OF LABORATORY ANALYSIS
This report shall not be reproduced, except in full,
without the written consent of Pace Analytical Services, Inc.

CREDITED IN ACCORDANCE WITH nelac

Pace Analytical®
www.pacelabs.com

The Chain-of-Custody is a LEGAL DOCUMENT. All relevant fields must be completed accurately.

Page: 1 of 1

823602

To Be Completed by Pace Analytical and Client

Section A — Required Client Information:

Company: Mundell & Associates
Address: 429 E. Vermont St
Indianapolis, IN 46202
Phone: 317-630-9060 Fax: 317-630-9065

Section B — Required Client Information:

Report To: John Mundell
Copy To: Leena Lothe
Invoice To: Barb Whaley
P.O.
Project Name: Michigan Meadows
Project Number: M01046.

Client Information (Check quote/contract):
Requested Due Date: *TAT: 2 weeks

* Turn around times less than 14 days subject to laboratory and contractual obligations and may result in a Rush Turnaround Surcharge.
Turn Around Time (TAT) in calendar days.

Section C

Quote Reference:
Project Manager:
Project #: 5038145
Profile #:
Requested Analysis: VOCs 8260

Section D — Required Client Information:

Valid Matrix Codes

MATRIX	CODE
WATER	WT
SOIL	SL
OIL	OL
WIPE	WP
AIR	AR
TISSUE	TS
OTHER	OT

ITEM #	SAMPLE ID (One character per box. (A–Z, 0–9 / .–) Sample IDs MUST BE UNIQUE)	MATRIX CODE	DATE COLLECTED (mm / dd / yy)	TIME COLLECTED (hh:mm a/p)	# Containers	Unpreserved	H_2SO_4	HNO_3	HCl	NaOH	$Na_2S_2O_3$	Methanol	Other	Remarks / Lab ID
1	MMW-35(9-10)	SL	08/26/04	2:30p	1	✓								5D37605 98
2														
3														
4														
5														
6														
7														
8														
9														
10														
11														
12														

SITE LOCATION: ☐ NC ☐ SC ☐ GA ☐ Other_____

REGULATORY AGENCY: ☐ NPDES ☐ GROUND WATER ☐ DRINKING WATER ☐ UST ☐ RCRA ☐ Other_____

RELINQUISHED BY / AFFILIATION	DATE	TIME	ACCEPTED BY / AFFILIATION	DATE	TIME
JOL/M.S.	8/27/04	10:24	Tyron Benford	8/27	103

SAMPLE CONDITION

Temp in °C	5
Received on Ice	(Y)/N
Sealed Cooler	Y/(N)
Samples Intact	(Y)/N

SAMPLE NOTES

Additional Comments: Pace del. WI

SAMPLER NAME AND SIGNATURE

PRINT Name of SAMPLER: LEENA LOTHE
SIGNATURE of SAMPLER: [signature]
DATE Signed: (MM / DD / YY) 08/26/04

ORIGINAL

SEE REVERSE SIDE FOR INSTRUCTIONS

Form COC01 Rev. 0

Pace Analytical®
www.pacelabs.com

Pace Analytical Services, Inc.
7726 Moller Road
Indianapolis, IN 46268
Phone: 317.875.5894
Fax: 317.872.6189

September 07, 2004

Mr. John Mundell
Mundell & Associates, Inc.
429 East Vermont Street
Suite 200
Indianapolis, IN 46202

RE: Lab Project Number: 5038146
Client Project ID: Michigan Meadows / M01046

Dear Mr. Mundell:

Enclosed are the analytical results for sample(s) received by the laboratory on August 26, 2004. Results reported herein conform to the most current NELAC standards, where applicable, unless otherwise narrated in the body of the report.

If you have any questions concerning this report please feel free to contact me.

Sincerely,

Mick Mayse

Mick Mayse
mmayse@pacelabs.com
Project Manager

Enclosures

REPORT OF LABORATORY ANALYSIS

This report shall not be reproduced, except in full,
without the written consent of Pace Analytical Services, Inc.

Pace Analytical®
www.pacelabs.com

Pace Analytical Services, Inc.
7726 Moller Road
Indianapolis, IN 46268
Phone: 317.875.5894
Fax: 317.872.6189

Lab Project Number: 5038146
Client Project ID: Michigan Meadows / M01046

Solid results are reported on a wet weight basis

Lab Sample No: 503744989 | Project Sample Number: 5038146-001 | Date Collected: 08/25/04 10:06
Client Sample ID: MMW-4D (9-10') | Matrix: Soil | Date Received: 08/26/04 10:14

Parameters	Results	Units	Report Limit	DF	Analyzed	By	CAS No.	Qual	RegLmt
Wet Chemistry									
Percent Moisture	Method: SM 2540G								
Percent Moisture	6.0	%		1.0	09/03/04	LAD			
GC/MS Volatiles									
GC/MS VOCs by 8260	Prep/Method: EPA 5030 / EPA 8260								
Dichlorodifluoromethane	ND	ug/kg	5.0	1.0	08/30/04 15:54	TMB	75-71-8		
Chloromethane	ND	ug/kg	5.0	1.0	08/30/04 15:54	TMB	74-87-3		
Vinyl chloride	ND	ug/kg	2.0	1.0	08/30/04 15:54	TMB	75-01-4		
Bromomethane	ND	ug/kg	5.0	1.0	08/30/04 15:54	TMB	74-83-9		
Chloroethane	ND	ug/kg	5.0	1.0	08/30/04 15:54	TMB	75-00-3		
Trichlorofluoromethane	ND	ug/kg	5.0	1.0	08/30/04 15:54	TMB	75-69-4		
Methylene chloride	ND	ug/kg	20.	1.0	09/07/04 13:07	TMB	75-09-2		
1,1-Dichloroethene	ND	ug/kg	5.0	1.0	08/30/04 15:54	TMB	75-35-4		
trans-1,2-Dichloroethene	ND	ug/kg	5.0	1.0	08/30/04 15:54	TMB	156-60-5		
1,1-Dichloroethane	ND	ug/kg	5.0	1.0	08/30/04 15:54	TMB	75-34-3		
2,2-Dichloropropane	ND	ug/kg	5.0	1.0	08/30/04 15:54	TMB	594-20-7		
cis-1,2-Dichloroethene	ND	ug/kg	5.0	1.0	08/30/04 15:54	TMB	156-59-2		
Chloroform	ND	ug/kg	5.0	1.0	08/30/04 15:54	TMB	67-66-3		
Bromochloromethane	ND	ug/kg	5.0	1.0	08/30/04 15:54	TMB	74-97-5		
1,1,1-Trichloroethane	ND	ug/kg	5.0	1.0	08/30/04 15:54	TMB	71-55-6		
Carbon tetrachloride	ND	ug/kg	5.0	1.0	08/30/04 15:54	TMB	56-23-5		
1,1-Dichloropropene	ND	ug/kg	5.0	1.0	08/30/04 15:54	TMB	563-58-6		
Benzene	ND	ug/kg	5.0	1.0	08/30/04 15:54	TMB	71-43-2		
1,2-Dichloroethane	ND	ug/kg	5.0	1.0	08/30/04 15:54	TMB	107-06-2		
Trichloroethene	ND	ug/kg	5.0	1.0	08/30/04 15:54	TMB	79-01-6		
1,2-Dichloropropane	ND	ug/kg	5.0	1.0	08/30/04 15:54	TMB	78-87-5		
Bromodichloromethane	ND	ug/kg	5.0	1.0	08/30/04 15:54	TMB	75-27-4		
Dibromomethane	ND	ug/kg	5.0	1.0	08/30/04 15:54	TMB	74-95-3		
Toluene	ND	ug/kg	5.0	1.0	08/30/04 15:54	TMB	108-88-3		
1,1,2-Trichloroethane	ND	ug/kg	5.0	1.0	08/30/04 15:54	TMB	79-00-5		
Tetrachloroethene	ND	ug/kg	5.0	1.0	08/30/04 15:54	TMB	127-18-4		
1,3-Dichloropropane	ND	ug/kg	5.0	1.0	08/30/04 15:54	TMB	142-28-9		
Dibromochloromethane	ND	ug/kg	5.0	1.0	08/30/04 15:54	TMB	124-48-1		
1,2-Dibromoethane (EDB)	ND	ug/kg	5.0	1.0	08/30/04 15:54	TMB	106-93-4		
Chlorobenzene	ND	ug/kg	5.0	1.0	08/30/04 15:54	TMB	108-90-7		
1,1,1,2-Tetrachloroethane	ND	ug/kg	5.0	1.0	08/30/04 15:54	TMB	630-20-6		
Ethylbenzene	ND	ug/kg	5.0	1.0	08/30/04 15:54	TMB	100-41-4		

REPORT OF LABORATORY ANALYSIS

This report shall not be reproduced, except in full,
without the written consent of Pace Analytical Services, Inc.

CERTIFIED IN ACCORDANCE nelac

Pace Analytical®
www.pacelabs.com

Pace Analytical Services, Inc.
7726 Moller Road
Indianapolis, IN 46268
Phone: 317.875.5894
Fax: 317.872.6189

Lab Project Number: 5038146
Client Project ID: Michigan Meadows / M01046

Lab Sample No: 503744989 Project Sample Number: 5038146-001 Date Collected: 08/25/04 10:06
Client Sample ID: MMW-4D (9-10') Matrix: Soil Date Received: 08/26/04 10:14

Parameters	Results	Units	Report Limit	DF	Analyzed	By	CAS No.	Qual	RegLmt
m&p-Xylene	ND	ug/kg	5.0	1.0	08/30/04 15:54	TMB			
o-Xylene	ND	ug/kg	5.0	1.0	08/30/04 15:54	TMB	95-47-6		
Styrene	ND	ug/kg	5.0	1.0	08/30/04 15:54	TMB	100-42-5		
Bromoform	ND	ug/kg	5.0	1.0	08/30/04 15:54	TMB	75-25-2		
Isopropylbenzene (Cumene)	ND	ug/kg	5.0	1.0	08/30/04 15:54	TMB	98-82-8		
1,1,2,2-Tetrachloroethane	ND	ug/kg	5.0	1.0	08/30/04 15:54	TMB	79-34-5		
Bromobenzene	ND	ug/kg	5.0	1.0	08/30/04 15:54	TMB	108-86-1		
1,2,3-Trichloropropane	ND	ug/kg	5.0	1.0	08/30/04 15:54	TMB	96-18-4		
n-Propylbenzene	ND	ug/kg	5.0	1.0	08/30/04 15:54	TMB	103-65-1		
2-Chlorotoluene	ND	ug/kg	5.0	1.0	08/30/04 15:54	TMB	95-49-8		
1,3,5-Trimethylbenzene	ND	ug/kg	5.0	1.0	08/30/04 15:54	TMB	108-67-8		
4-Chlorotoluene	ND	ug/kg	5.0	1.0	08/30/04 15:54	TMB	106-43-4		
1,2,4-Trimethylbenzene	ND	ug/kg	5.0	1.0	08/30/04 15:54	TMB	95-63-6		
sec-Butylbenzene	ND	ug/kg	5.0	1.0	08/30/04 15:54	TMB	135-98-8		
tert-Butylbenzene	ND	ug/kg	5.0	1.0	08/30/04 15:54	TMB	98-06-6		
p-Isopropyltoluene	ND	ug/kg	5.0	1.0	08/30/04 15:54	TMB	99-87-6		
1,3-Dichlorobenzene	ND	ug/kg	5.0	1.0	08/30/04 15:54	TMB	541-73-1		
1,4-Dichlorobenzene	ND	ug/kg	5.0	1.0	08/30/04 15:54	TMB	106-46-7		
n-Butylbenzene	ND	ug/kg	5.0	1.0	08/30/04 15:54	TMB	104-51-8		
1,2-Dichlorobenzene	ND	ug/kg	5.0	1.0	08/30/04 15:54	TMB	95-50-1		
1,2-Dibromo-3-chloropropane	ND	ug/kg	5.0	1.0	08/30/04 15:54	TMB	96-12-8		
1,2,4-Trichlorobenzene	ND	ug/kg	5.0	1.0	08/30/04 15:54	TMB	120-82-1		
Hexachloro-1,3-butadiene	ND	ug/kg	5.0	1.0	08/30/04 15:54	TMB	87-68-3		
Naphthalene	ND	ug/kg	5.0	1.0	08/30/04 15:54	TMB	91-20-3		
1,2,3-Trichlorobenzene	ND	ug/kg	5.0	1.0	08/30/04 15:54	TMB	87-61-6		
trans-1,3-Dichloropropene	ND	ug/kg	5.0	1.0	08/30/04 15:54	TMB	10061-02-6		
cis-1,3-Dichloropropene	ND	ug/kg	5.0	1.0	08/30/04 15:54	TMB	10061-01-5		
2-Chloroethylvinyl ether	ND	ug/kg	50.	1.0	08/30/04 15:54	TMB	110-75-8		
Acetone	ND	ug/kg	100	1.0	08/30/04 15:54	TMB	67-64-1		
2-Butanone (MEK)	ND	ug/kg	10.	1.0	08/30/04 15:54	TMB	78-93-3		
4-Methyl-2-pentanone (MIBK)	ND	ug/kg	10.	1.0	08/30/04 15:54	TMB	108-10-1		
Carbon disulfide	ND	ug/kg	10.	1.0	08/30/04 15:54	TMB	75-15-0		
Acrolein	ND	ug/kg	100	1.0	08/30/04 15:54	TMB	107-02-8		
Acrylonitrile	ND	ug/kg	100	1.0	08/30/04 15:54	TMB	107-13-1		
2-Hexanone	ND	ug/kg	100	1.0	08/30/04 15:54	TMB	591-78-6		
Vinyl acetate	ND	ug/kg	100	1.0	08/30/04 15:54	TMB	108-05-4		
Iodomethane	ND	ug/kg	100	1.0	08/30/04 15:54	TMB	74-88-4		
Methyl-tert-butyl ether	ND	ug/kg	5.0	1.0	08/30/04 15:54	TMB	1634-04-4		
Ethyl methacrylate	ND	ug/kg	100	1.0	08/30/04 15:54	TMB	97-63-2		

REPORT OF LABORATORY ANALYSIS
This report shall not be reproduced, except in full,
without the written consent of Pace Analytical Services, Inc.

Pace Analytical®
www.pacelabs.com

Pace Analytical Services, Inc.
7726 Moller Road
Indianapolis, IN 46268
Phone: 317.875.5894
Fax: 317.872.6189

Lab Project Number: 5038146
Client Project ID: Michigan Meadows / M01046

Lab Sample No: 503744989 Project Sample Number: 5038146-001 Date Collected: 08/25/04 10:06
Client Sample ID: MMW-4D (9-10') Matrix: Soil Date Received: 08/26/04 10:14

Parameters	Results	Units	Report Limit	DF	Analyzed	By	CAS No.	Qual	RegLmt
trans-1,4-Dichloro-2-butene	ND	ug/kg	100	1.0	08/30/04 15:54	TMB	110-57-6		
Dibromofluoromethane (S)	101	%		1.0	08/30/04 15:54	TMB	1868-53-7		
Toluene-d8 (S)	104	%		1.0	08/30/04 15:54	TMB	2037-26-5		
4-Bromofluorobenzene (S)	98	%		1.0	08/30/04 15:54	TMB	460-00-4		

REPORT OF LABORATORY ANALYSIS
This report shall not be reproduced, except in full,
without the written consent of Pace Analytical Services, Inc.

Pace Analytical®
www.pacelabs.com

Pace Analytical Services, Inc.
7726 Moller Road
Indianapolis, IN 46268
Phone: 317.875.5894
Fax: 317.872.6189

Lab Project Number: 5038146
Client Project ID: Michigan Meadows / M01046

PARAMETER FOOTNOTES

Dilution factor shown represents the factor applied to the reported result and reporting limit due to changes in sample preparation, dilution of the extract, or moisture content

ND	Not detected at or above adjusted reporting limit
NC	Not Calculable
J	Estimated concentration above the adjusted method detection limit and below the adjusted reporting limit
MDL	Adjusted Method Detection Limit
(S)	Surrogate

REPORT OF LABORATORY ANALYSIS
This report shall not be reproduced, except in full,
without the written consent of Pace Analytical Services, Inc.

CREDITED IN ACCORDANCE WITH nelac

Pace Analytical®
www.pacelabs.com

Pace Analytical Services, Inc.
7726 Moller Road
Indianapolis, IN 46268
Phone: 317.875.5894
Fax: 317.872.6189

QUALITY CONTROL DATA

Lab Project Number: 5038146
Client Project ID: Michigan Meadows / M01046

QC Batch: 76291
QC Batch Method: EPA 5030
Associated Lab Samples: 503744989

Analysis Method: EPA 8260
Analysis Description: GC/MS VOCs by 8260

METHOD BLANK: 503757676
Associated Lab Samples: 503744989

Parameter	Units	Blank Result	Reporting Limit	Footnotes
Dichlorodifluoromethane	ug/kg	ND	5.0	
Chloromethane	ug/kg	ND	5.0	
Vinyl chloride	ug/kg	ND	2.0	
Bromomethane	ug/kg	ND	5.0	
Chloroethane	ug/kg	ND	5.0	
Trichlorofluoromethane	ug/kg	ND	5.0	
Methylene chloride	ug/kg	ND	20.	
1,1-Dichloroethene	ug/kg	ND	5.0	
trans-1,2-Dichloroethene	ug/kg	ND	5.0	
1,1-Dichloroethane	ug/kg	ND	5.0	
2,2-Dichloropropane	ug/kg	ND	5.0	
cis-1,2-Dichloroethene	ug/kg	ND	5.0	
Chloroform	ug/kg	ND	5.0	
Bromochloromethane	ug/kg	ND	5.0	
1,1,1-Trichloroethane	ug/kg	ND	5.0	
Carbon tetrachloride	ug/kg	ND	5.0	
1,1-Dichloropropene	ug/kg	ND	5.0	
Benzene	ug/kg	ND	5.0	
1,2-Dichloroethane	ug/kg	ND	5.0	
Trichloroethene	ug/kg	ND	5.0	
1,2-Dichloropropane	ug/kg	ND	5.0	
Bromodichloromethane	ug/kg	ND	5.0	
Dibromomethane	ug/kg	ND	5.0	
Toluene	ug/kg	ND	5.0	
1,1,2-Trichloroethane	ug/kg	ND	5.0	
Tetrachloroethene	ug/kg	ND	5.0	
1,3-Dichloropropane	ug/kg	ND	5.0	
Dibromochloromethane	ug/kg	ND	5.0	
1,2-Dibromoethane (EDB)	ug/kg	ND	5.0	
Chlorobenzene	ug/kg	ND	5.0	
1,1,1,2-Tetrachloroethane	ug/kg	ND	5.0	

REPORT OF LABORATORY ANALYSIS
This report shall not be reproduced, except in full,
without the written consent of Pace Analytical Services, Inc.

CREDITED IN ACCORDANCE nelac

Pace Analytical®
www.pacelabs.com

Pace Analytical Services, Inc.
7726 Moller Road
Indianapolis, IN 46268
Phone: 317.875.5894
Fax: 317.872.6189

QUALITY CONTROL DATA

Lab Project Number: 5038146
Client Project ID: Michigan Meadows / M01046

METHOD BLANK: 503757676
Associated Lab Samples: 503744989

Parameter	Units	Blank Result	Reporting Limit	Footnotes
Ethylbenzene	ug/kg	ND	5.0	
m&p-Xylene	ug/kg	ND	5.0	
o-Xylene	ug/kg	ND	5.0	
Styrene	ug/kg	ND	5.0	
Bromoform	ug/kg	ND	5.0	
Isopropylbenzene (Cumene)	ug/kg	ND	5.0	
1,1,2,2-Tetrachloroethane	ug/kg	ND	5.0	
Bromobenzene	ug/kg	ND	5.0	
1,2,3-Trichloropropane	ug/kg	ND	5.0	
n-Propylbenzene	ug/kg	ND	5.0	
2-Chlorotoluene	ug/kg	ND	5.0	
1,3,5-Trimethylbenzene	ug/kg	ND	5.0	
4-Chlorotoluene	ug/kg	ND	5.0	
1,2,4-Trimethylbenzene	ug/kg	ND	5.0	
sec-Butylbenzene	ug/kg	ND	5.0	
tert-Butylbenzene	ug/kg	ND	5.0	
p-Isopropyltoluene	ug/kg	ND	5.0	
1,3-Dichlorobenzene	ug/kg	ND	5.0	
1,4-Dichlorobenzene	ug/kg	ND	5.0	
n-Butylbenzene	ug/kg	ND	5.0	
1,2-Dichlorobenzene	ug/kg	ND	5.0	
1,2-Dibromo-3-chloropropane	ug/kg	ND	5.0	
1,2,4-Trichlorobenzene	ug/kg	ND	5.0	
Hexachloro-1,3-butadiene	ug/kg	ND	5.0	
Naphthalene	ug/kg	ND	5.0	
1,2,3-Trichlorobenzene	ug/kg	ND	5.0	
trans-1,3-Dichloropropene	ug/kg	ND	5.0	
cis-1,3-Dichloropropene	ug/kg	ND	5.0	
2-Chloroethylvinyl ether	ug/kg	ND	50.	
Acetone	ug/kg	ND	100	
2-Butanone (MEK)	ug/kg	ND	10.	
4-Methyl-2-pentanone (MIBK)	ug/kg	ND	10.	
Carbon disulfide	ug/kg	ND	10.	
Acrolein	ug/kg	ND	100	
Acrylonitrile	ug/kg	ND	100	
2-Hexanone	ug/kg	ND	100	

REPORT OF LABORATORY ANALYSIS
This report shall not be reproduced, except in full,
without the written consent of Pace Analytical Services, Inc.

Pace Analytical®
www.pacelabs.com

Pace Analytical Services, Inc.
7726 Moller Road
Indianapolis, IN 46268
Phone: 317.875.5894
Fax: 317.872.6189

QUALITY CONTROL DATA

Lab Project Number: 5038146
Client Project ID: Michigan Meadows / M01046

METHOD BLANK: 503757676
Associated Lab Samples: 503744989

Parameter	Units	Blank Result	Reporting Limit	Footnotes
Vinyl acetate	ug/kg	ND	100	
Iodomethane	ug/kg	ND	100	
Methyl-tert-butyl ether	ug/kg	ND	5.0	
Ethyl methacrylate	ug/kg	ND	100	
trans-1,4-Dichloro-2-butene	ug/kg	ND	100	
Dibromofluoromethane (S)	%	102		
Toluene-d8 (S)	%	98		
4-Bromofluorobenzene (S)	%	97		

LABORATORY CONTROL SAMPLE: 503757684

Parameter	Units	Spike Conc.	LCS Result	LCS % Rec	Footnotes
Dichlorodifluoromethane	ug/kg	50.00	30.66	61	
Chloromethane	ug/kg	50.00	36.90	74	
Vinyl chloride	ug/kg	50.00	42.74	86	
Bromomethane	ug/kg	50.00	35.85	72	
Chloroethane	ug/kg	50.00	47.07	94	
Trichlorofluoromethane	ug/kg	50.00	52.36	105	
Methylene chloride	ug/kg	50.00	63.04	126	
1,1-Dichloroethene	ug/kg	50.00	58.06	116	
trans-1,2-Dichloroethene	ug/kg	50.00	55.16	110	
1,1-Dichloroethane	ug/kg	50.00	53.60	107	
2,2-Dichloropropane	ug/kg	50.00	53.55	107	
cis-1,2-Dichloroethene	ug/kg	50.00	53.73	107	
Chloroform	ug/kg	50.00	53.22	106	
Bromochloromethane	ug/kg	50.00	53.03	106	
1,1,1-Trichloroethane	ug/kg	50.00	54.92	110	
Carbon tetrachloride	ug/kg	50.00	54.29	109	
1,1-Dichloropropene	ug/kg	50.00	54.89	110	
Benzene	ug/kg	50.00	51.99	104	
1,2-Dichloroethane	ug/kg	50.00	52.31	105	
Trichloroethene	ug/kg	50.00	55.09	110	
1,2-Dichloropropane	ug/kg	50.00	49.61	99	
Bromodichloromethane	ug/kg	50.00	52.72	105	

REPORT OF LABORATORY ANALYSIS
This report shall not be reproduced, except in full,
without the written consent of Pace Analytical Services, Inc.

CREDITED IN ACCORDANCE nelac

Pace Analytical®
www.pacelabs.com

Pace Analytical Services, Inc.
7726 Moller Road
Indianapolis, IN 46268
Phone: 317.875.5894
Fax: 317.872.6189

QUALITY CONTROL DATA

Lab Project Number: 5038146
Client Project ID: Michigan Meadows / M01046

LABORATORY CONTROL SAMPLE: 503757684

Parameter	Units	Spike Conc.	LCS Result	LCS % Rec	Footnotes
Dibromomethane	ug/kg	50.00	50.26	101	
Toluene	ug/kg	50.00	52.86	106	
1,1,2-Trichloroethane	ug/kg	50.00	52.72	105	
Tetrachloroethene	ug/kg	50.00	45.30	91	
1,3-Dichloropropane	ug/kg	50.00	50.29	101	
Dibromochloromethane	ug/kg	50.00	50.62	101	
1,2-Dibromoethane (EDB)	ug/kg	50.00	52.20	104	
Chlorobenzene	ug/kg	50.00	51.72	103	
1,1,1,2-Tetrachloroethane	ug/kg	50.00	51.38	103	
Ethylbenzene	ug/kg	50.00	51.93	104	
m&p-Xylene	ug/kg	100.00	104.1	104	
o-Xylene	ug/kg	50.00	51.92	104	
Styrene	ug/kg	50.00	50.07	100	
Bromoform	ug/kg	50.00	47.69	95	
Isopropylbenzene (Cumene)	ug/kg	50.00	49.85	100	
1,1,2,2-Tetrachloroethane	ug/kg	50.00	46.57	93	
Bromobenzene	ug/kg	50.00	49.06	98	
1,2,3-Trichloropropane	ug/kg	50.00	38.55	77	
n-Propylbenzene	ug/kg	50.00	50.63	101	
2-Chlorotoluene	ug/kg	50.00	51.09	102	
1,3,5-Trimethylbenzene	ug/kg	50.00	50.63	101	
4-Chlorotoluene	ug/kg	50.00	51.00	102	
1,2,4-Trimethylbenzene	ug/kg	50.00	48.70	97	
sec-Butylbenzene	ug/kg	50.00	51.40	103	
tert-Butylbenzene	ug/kg	50.00	47.20	94	
p-Isopropyltoluene	ug/kg	50.00	48.63	97	
1,3-Dichlorobenzene	ug/kg	50.00	50.30	101	
1,4-Dichlorobenzene	ug/kg	50.00	49.53	99	
n-Butylbenzene	ug/kg	50.00	47.30	95	
1,2-Dichlorobenzene	ug/kg	50.00	49.14	98	
1,2-Dibromo-3-chloropropane	ug/kg	50.00	48.18	96	
1,2,4-Trichlorobenzene	ug/kg	50.00	46.43	93	
Hexachloro-1,3-butadiene	ug/kg	50.00	50.93	102	
Naphthalene	ug/kg	50.00	41.68	83	
1,2,3-Trichlorobenzene	ug/kg	50.00	46.12	92	
trans-1,3-Dichloropropene	ug/kg	50.00	49.70	99	
cis-1,3-Dichloropropene	ug/kg	50.00	50.83	102	

REPORT OF LABORATORY ANALYSIS

This report shall not be reproduced, except in full,
without the written consent of Pace Analytical Services, Inc.

CREDITED IN ACCORDANCE nelac

Pace Analytical®
www.pacelabs.com

Pace Analytical Services, Inc.
7726 Moller Road
Indianapolis, IN 46268
Phone: 317.875.5894
Fax: 317.872.6189

QUALITY CONTROL DATA

Lab Project Number: 5038146
Client Project ID: Michigan Meadows / M01046

LABORATORY CONTROL SAMPLE: 503757684

Parameter	Units	Spike Conc.	LCS Result	LCS % Rec	Footnotes
Methyl-tert-butyl ether	ug/kg	100.00	83.33	83	
Dibromofluoromethane (S)				102	
Toluene-d8 (S)				105	
4-Bromofluorobenzene (S)				102	

MATRIX SPIKE & MATRIX SPIKE DUPLICATE: 503757692 503757700

Parameter	Units	503751885 Result	Spike Conc.	MS Result	MSD Result	MS % Rec	MSD % Rec	RPD	Footnotes
1,1-Dichloroethene	ug/kg	0	56.47	51.96	63.41	92	112	20	
Benzene	ug/kg	0	56.47	43.50	50.75	77	90	15	
Trichloroethene	ug/kg	0	56.47	46.46	51.88	82	92	11	
Toluene	ug/kg	0	56.47	43.43	46.39	77	82	7	
Chlorobenzene	ug/kg	0	56.47	39.95	40.21	71	71	1	
Dibromofluoromethane (S)						101	103		
Toluene-d8 (S)						103	103		
4-Bromofluorobenzene (S)						98	98		

REPORT OF LABORATORY ANALYSIS

This report shall not be reproduced, except in full,
without the written consent of Pace Analytical Services, Inc.

CREDITED IN ACCORDANCE nelac

Pace Analytical®
www.pacelabs.com

Pace Analytical Services, Inc.
7726 Moller Road
Indianapolis, IN 46268
Phone: 317.875.5894
Fax: 317.872.6189

QUALITY CONTROL DATA

Lab Project Number: 5038146
Client Project ID: Michigan Meadows / M01046

QC Batch: 76554
QC Batch Method: SM 2540G
Associated Lab Samples: 503744989

Analysis Method: SM 2540G
Analysis Description: Percent Moisture

SAMPLE DUPLICATE: 503768459

Parameter	Units	503750598 Result	DUP Result	RPD	Footnotes
Percent Moisture	%	6.600	6.800	4	

REPORT OF LABORATORY ANALYSIS
This report shall not be reproduced, except in full,
without the written consent of Pace Analytical Services, Inc.

Pace Analytical®
www.pacelabs.com

Pace Analytical Services, Inc.
7726 Moller Road
Indianapolis, IN 46268
Phone: 317.875.5894
Fax: 317.872.6189

Lab Project Number: 5038146
Client Project ID: Michigan Meadows / M01046

QUALITY CONTROL DATA PARAMETER FOOTNOTES

Consistent with EPA guidelines, unrounded concentrations are displayed and have been used to calculate % Rec and RPD values.

LCS(D)	Laboratory Control Sample (Duplicate)
MS(D)	Matrix Spike (Duplicate)
DUP	Sample Duplicate
ND	Not detected at or above adjusted reporting limit
NC	Not Calculable
J	Estimated concentration above the adjusted method detection limit and below the adjusted reporting limit
MDL	Adjusted Method Detection Limit
RPD	Relative Percent Difference
(S)	Surrogate

REPORT OF LABORATORY ANALYSIS
This report shall not be reproduced, except in full,
without the written consent of Pace Analytical Services, Inc.

Accredited in accordance with nelac

Pace Analytical®
www.pacelabs.com

The Chain-of-Custody is a LEGAL DOCUMENT. All relevant fields must be completed accurately.

823601

Page: 1 of 1

Required Client Information: Section A

Company: Mundell & Associates
Address: 429 E. Vermont St
Indianapolis, IN 46202
Phone: 317-630-9060 Fax: 317-630-9065

Required Client Information: Section B

Report To: John Mundell
Copy To: Leena Lothe
Invoice To: Barb Whaley
P.O.:
Project Name: Michigan Meadows
Project Number: M01046

Client Information (Check quote/contract):
Requested Due Date:
TAT: 2 weeks

* Turn around times less than 14 days subject to laboratory and contractual obligations and may result in a Rush Turnaround Surcharge.
Turn Around Time (TAT) in calendar days.

To Be Completed by Pace Analytical and Client Section C

Quote Reference:
Project Manager:
Project #: 5038146 1303-3
Profile #:

Section D Required Client Information:

SAMPLE ID
One character per box.
(A–Z, 0–9 / .–)
Sample IDs MUST BE UNIQUE

Valid Matrix Codes

MATRIX	CODE
WATER	WT
SOIL	SL
OIL	OL
WIPE	WP
AIR	AR
TISSUE	TS
OTHER	OT

Requested Analysis: VOCs 8260 / % moisture

ITEM #	SAMPLE ID	MATRIX CODE	DATE COLLECTED (mm / dd / yy)	TIME COLLECTED (hh:mm a/p)	# Containers	Unpreserved	H_2SO_4	HNO_3	HCl	NaOH	$Na_2S_2O_3$	Methanol	Other	VOCs 8260	% moisture	Remarks / Lab ID
1	MMW-4D(9-10)	SL	08/25/04	10:06a	1	✓								✓		503744989
2																
3																
4																
5																
6																
7																
8																
9																
10																
11																
12																

SITE LOCATION
☐ NC ☐ SC ☐ GA
☐ Other

REGULATORY AGENCY
☐ NPDES ☐ GROUND WATER ☐ DRINKING WATER
☐ UST ☐ RCRA ☐ Other

RELINQUISHED BY / AFFILIATION	DATE	TIME	ACCEPTED BY / AFFILIATION	DATE	TIME
J. Hanson	8/26/04	10:14a	Tyson Bertoni	8-26-04	1016

SAMPLE CONDITION

Temp in °C	4
Received on Ice	Y/N
Sealed Cooler	Y/N
Samples Intact	Y/N

SAMPLE NOTES

Additional Comments: Pace Ind. WI

ORIGINAL

SAMPLER NAME AND SIGNATURE

PRINT Name of SAMPLER: LEENA LOTHE
SIGNATURE of SAMPLER: LALothe
DATE Signed: (MM / DD / YY) 08/25/04

SEE REVERSE SIDE FOR INSTRUCTIONS

Form COC01 Rev. 0903

Pace Analytical®
www.pacelabs.com

Pace Analytical Services, Inc.
7726 Moller Road
Indianapolis, IN 46268
Phone: 317.875.5894
Fax: 317.872.6189

RECEIVED
SEP 0 2 2004

September 01, 2004

Mr. John Mundell
Mundell & Associates, Inc.
429 East Vermont Street
Suite 200
Indianapolis, IN 46202

RE: Lab Project Number: 5038057
Client Project ID: Michigan Meadows / M01046

Dear Mr. Mundell:

Enclosed are the analytical results for sample(s) received by the laboratory on August 24, 2004. Results reported herein conform to the most current NELAC standards, where applicable, unless otherwise narrated in the body of the report.

If you have any questions concerning this report please feel free to contact me.

Sincerely,

Mick Mayse

Mick Mayse
mmayse@pacelabs.com
Project Manager

Enclosures

REPORT OF LABORATORY ANALYSIS

This report shall not be reproduced, except in full,
without the written consent of Pace Analytical Services, Inc.

Pace Analytical®
www.pacelabs.com

Pace Analytical Services, Inc.
7726 Moller Road
Indianapolis, IN 46268
Phone: 317.875.5894
Fax: 317.872.6189

Lab Project Number: 5038057
Client Project ID: Michigan Meadows / M01046

Solid results are reported on a wet weight basis

Lab Sample No: 503733172 | Project Sample Number: 5038057-001 | Date Collected: 08/23/04 12:15
Client Sample ID: MMW-6D | Matrix: Soil | Date Received: 08/24/04 10:15

Parameters	Results	Units	Report Limit	DF	Analyzed	By	CAS No.	Qual	RegLmt
Wet Chemistry									
Percent Moisture	Method: SM 2540G								
Percent Moisture	8.6	%		1.0	08/27/04	ART2			
GC/MS Volatiles									
GC/MS VOCs by 8260	Prep/Method: EPA 5030 / EPA 8260								
Dichlorodifluoromethane	ND	ug/kg	5.0	1.0	08/25/04 10:40	TMB	75-71-8		
Chloromethane	ND	ug/kg	5.0	1.0	08/25/04 10:40	TMB	74-87-3		
Vinyl chloride	ND	ug/kg	2.0	1.0	08/25/04 10:40	TMB	75-01-4		
Bromomethane	ND	ug/kg	5.0	1.0	08/25/04 10:40	TMB	74-83-9		
Chloroethane	ND	ug/kg	5.0	1.0	08/25/04 10:40	TMB	75-00-3		
Trichlorofluoromethane	ND	ug/kg	5.0	1.0	08/25/04 10:40	TMB	75-69-4		
Methylene chloride	ND	ug/kg	20.	1.0	08/25/04 10:40	TMB	75-09-2		
1,1-Dichloroethene	ND	ug/kg	5.0	1.0	08/25/04 10:40	TMB	75-35-4		
trans-1,2-Dichloroethene	ND	ug/kg	5.0	1.0	08/25/04 10:40	TMB	156-60-5		
1,1-Dichloroethane	ND	ug/kg	5.0	1.0	08/25/04 10:40	TMB	75-34-3		
2,2-Dichloropropane	ND	ug/kg	5.0	1.0	08/25/04 10:40	TMB	594-20-7		
cis-1,2-Dichloroethene	ND	ug/kg	5.0	1.0	08/25/04 10:40	TMB	156-59-2		
Chloroform	ND	ug/kg	5.0	1.0	08/25/04 10:40	TMB	67-66-3		
Bromochloromethane	ND	ug/kg	5.0	1.0	08/25/04 10:40	TMB	74-97-5		
1,1,1-Trichloroethane	ND	ug/kg	5.0	1.0	08/25/04 10:40	TMB	71-55-6		
Carbon tetrachloride	ND	ug/kg	5.0	1.0	08/25/04 10:40	TMB	56-23-5		
1,1-Dichloropropene	ND	ug/kg	5.0	1.0	08/25/04 10:40	TMB	563-58-6		
Benzene	ND	ug/kg	5.0	1.0	08/25/04 10:40	TMB	71-43-2		
1,2-Dichloroethane	ND	ug/kg	5.0	1.0	08/25/04 10:40	TMB	107-06-2		
Trichloroethene	ND	ug/kg	5.0	1.0	08/25/04 10:40	TMB	79-01-6		
1,2-Dichloropropane	ND	ug/kg	5.0	1.0	08/25/04 10:40	TMB	78-87-5		
Bromodichloromethane	ND	ug/kg	5.0	1.0	08/25/04 10:40	TMB	75-27-4		
Dibromomethane	ND	ug/kg	5.0	1.0	08/25/04 10:40	TMB	74-95-3		
Toluene	ND	ug/kg	5.0	1.0	08/25/04 10:40	TMB	108-88-3		
1,1,2-Trichloroethane	ND	ug/kg	5.0	1.0	08/25/04 10:40	TMB	79-00-5		
Tetrachloroethene	ND	ug/kg	5.0	1.0	08/25/04 10:40	TMB	127-18-4		
1,3-Dichloropropane	ND	ug/kg	5.0	1.0	08/25/04 10:40	TMB	142-28-9		
Dibromochloromethane	ND	ug/kg	5.0	1.0	08/25/04 10:40	TMB	124-48-1		
1,2-Dibromoethane (EDB)	ND	ug/kg	5.0	1.0	08/25/04 10:40	TMB	106-93-4		
Chlorobenzene	ND	ug/kg	5.0	1.0	08/25/04 10:40	TMB	108-90-7		
1,1,1,2-Tetrachloroethane	ND	ug/kg	5.0	1.0	08/25/04 10:40	TMB	630-20-6		
Ethylbenzene	ND	ug/kg	5.0	1.0	08/25/04 10:40	TMB	100-41-4		

REPORT OF LABORATORY ANALYSIS

This report shall not be reproduced, except in full,
without the written consent of Pace Analytical Services, Inc.

Pace Analytical®
www.pacelabs.com

Pace Analytical Services, Inc.
7726 Moller Road
Indianapolis, IN 46268
Phone: 317.875.5894
Fax: 317.872.6189

Lab Project Number: 5038057
Client Project ID: Michigan Meadows / M01046

Lab Sample No: 503733172 | Project Sample Number: 5038057-001 | Date Collected: 08/23/04 12:15
Client Sample ID: MMW-6D | Matrix: Soil | Date Received: 08/24/04 10:15

Parameters	Results	Units	Report Limit	DF	Analyzed	By	CAS No.	Qual	RegLmt
m&p-Xylene	ND	ug/kg	5.0	1.0	08/25/04 10:40	TMB			
o-Xylene	ND	ug/kg	5.0	1.0	08/25/04 10:40	TMB	95-47-6		
Styrene	ND	ug/kg	5.0	1.0	08/25/04 10:40	TMB	100-42-5		
Bromoform	ND	ug/kg	5.0	1.0	08/25/04 10:40	TMB	75-25-2		
Isopropylbenzene (Cumene)	ND	ug/kg	5.0	1.0	08/25/04 10:40	TMB	98-82-8		
1,1,2,2-Tetrachloroethane	ND	ug/kg	5.0	1.0	08/25/04 10:40	TMB	79-34-5		
Bromobenzene	ND	ug/kg	5.0	1.0	08/25/04 10:40	TMB	108-86-1		
1,2,3-Trichloropropane	ND	ug/kg	5.0	1.0	08/25/04 10:40	TMB	96-18-4		
n-Propylbenzene	ND	ug/kg	5.0	1.0	08/25/04 10:40	TMB	103-65-1		
2-Chlorotoluene	ND	ug/kg	5.0	1.0	08/25/04 10:40	TMB	95-49-8		
1,3,5-Trimethylbenzene	ND	ug/kg	5.0	1.0	08/25/04 10:40	TMB	108-67-8		
4-Chlorotoluene	ND	ug/kg	5.0	1.0	08/25/04 10:40	TMB	106-43-4		
1,2,4-Trimethylbenzene	ND	ug/kg	5.0	1.0	08/25/04 10:40	TMB	95-63-6		
sec-Butylbenzene	ND	ug/kg	5.0	1.0	08/25/04 10:40	TMB	135-98-8		
tert-Butylbenzene	ND	ug/kg	5.0	1.0	08/25/04 10:40	TMB	98-06-6		
p-Isopropyltoluene	ND	ug/kg	5.0	1.0	08/25/04 10:40	TMB	99-87-6		
1,3-Dichlorobenzene	ND	ug/kg	5.0	1.0	08/25/04 10:40	TMB	541-73-1		
1,4-Dichlorobenzene	ND	ug/kg	5.0	1.0	08/25/04 10:40	TMB	106-46-7		
n-Butylbenzene	ND	ug/kg	5.0	1.0	08/25/04 10:40	TMB	104-51-8		
1,2-Dichlorobenzene	ND	ug/kg	5.0	1.0	08/25/04 10:40	TMB	95-50-1		
1,2-Dibromo-3-chloropropane	ND	ug/kg	5.0	1.0	08/25/04 10:40	TMB	96-12-8		
1,2,4-Trichlorobenzene	ND	ug/kg	5.0	1.0	08/25/04 10:40	TMB	120-82-1		
Hexachloro-1,3-butadiene	ND	ug/kg	5.0	1.0	08/25/04 10:40	TMB	87-68-3		
Naphthalene	ND	ug/kg	5.0	1.0	08/25/04 10:40	TMB	91-20-3		
1,2,3-Trichlorobenzene	ND	ug/kg	5.0	1.0	08/25/04 10:40	TMB	87-61-6		
trans-1,3-Dichloropropene	ND	ug/kg	5.0	1.0	08/25/04 10:40	TMB	10061-02-6		
cis-1,3-Dichloropropene	ND	ug/kg	5.0	1.0	08/25/04 10:40	TMB	10061-01-5		
2-Chloroethylvinyl ether	ND	ug/kg	50.	1.0	08/25/04 10:40	TMB	110-75-8		
Acetone	ND	ug/kg	100	1.0	08/25/04 10:40	TMB	67-64-1		
2-Butanone (MEK)	ND	ug/kg	10.	1.0	08/25/04 10:40	TMB	78-93-3		
4-Methyl-2-pentanone (MIBK)	ND	ug/kg	10.	1.0	08/25/04 10:40	TMB	108-10-1		
Carbon disulfide	ND	ug/kg	10.	1.0	08/25/04 10:40	TMB	75-15-0		
Acrolein	ND	ug/kg	100	1.0	08/25/04 10:40	TMB	107-02-8		
Acrylonitrile	ND	ug/kg	100	1.0	08/25/04 10:40	TMB	107-13-1		
2-Hexanone	ND	ug/kg	100	1.0	08/25/04 10:40	TMB	591-78-6		
Vinyl acetate	ND	ug/kg	100	1.0	08/25/04 10:40	TMB	108-05-4		
Iodomethane	ND	ug/kg	100	1.0	08/25/04 10:40	TMB	74-88-4		
Methyl-tert-butyl ether	ND	ug/kg	5.0	1.0	08/25/04 10:40	TMB	1634-04-4		
Ethyl methacrylate	ND	ug/kg	100	1.0	08/25/04 10:40	TMB	97-63-2		

REPORT OF LABORATORY ANALYSIS

This report shall not be reproduced, except in full,
without the written consent of Pace Analytical Services, Inc.

Pace Analytical®
www.pacelabs.com

Pace Analytical Services, Inc.
7726 Moller Road
Indianapolis, IN 46268
Phone: 317.875.5894
Fax: 317.872.6189

Lab Project Number: 5038057
Client Project ID: Michigan Meadows / M01046

Lab Sample No: 503733172 Project Sample Number: 5038057-001 Date Collected: 08/23/04 12:15
Client Sample ID: MMW-6D Matrix: Soil Date Received: 08/24/04 10:15

Parameters	Results	Units	Report Limit	DF	Analyzed	By	CAS No.	Qual	RegLmt
trans-1,4-Dichloro-2-butene	ND	ug/kg	100	1.0	08/25/04 10:40	TMB	110-57-6		
Dibromofluoromethane (S)	103	%		1.0	08/25/04 10:40	TMB	1868-53-7		
Toluene-d8 (S)	100	%		1.0	08/25/04 10:40	TMB	2037-26-5		
4-Bromofluorobenzene (S)	87	%		1.0	08/25/04 10:40	TMB	460-00-4		

REPORT OF LABORATORY ANALYSIS
This report shall not be reproduced, except in full,
without the written consent of Pace Analytical Services, Inc.

Pace Analytical®
www.pacelabs.com

Pace Analytical Services, Inc.
7726 Moller Road
Indianapolis, IN 46268
Phone: 317.875.5894
Fax: 317.872.6189

Lab Project Number: 5038057
Client Project ID: Michigan Meadows / M01046

PARAMETER FOOTNOTES

Dilution factor shown represents the factor applied to the reported result and reporting limit due to changes in sample preparation, dilution of the extract, or moisture content

ND	Not detected at or above adjusted reporting limit
NC	Not Calculable
J	Estimated concentration above the adjusted method detection limit and below the adjusted reporting limit
MDL	Adjusted Method Detection Limit
(S)	Surrogate

REPORT OF LABORATORY ANALYSIS
This report shall not be reproduced, except in full,
without the written consent of Pace Analytical Services, Inc.

Pace Analytical®
www.pacelabs.com

Pace Analytical Services, Inc.
7726 Moller Road
Indianapolis, IN 46268
Phone: 317.875.5894
Fax: 317.872.6189

QUALITY CONTROL DATA

Lab Project Number: 5038057
Client Project ID: Michigan Meadows / M01046

QC Batch: 75899
QC Batch Method: EPA 5030
Associated Lab Samples: 503733172

Analysis Method: EPA 8260
Analysis Description: GC/MS VOCs by 8260

METHOD BLANK: 503737199
Associated Lab Samples: 503733172

Parameter	Units	Blank Result	Reporting Limit	Footnotes
Dichlorodifluoromethane	ug/kg	ND	5.0	
Chloromethane	ug/kg	ND	5.0	
Vinyl chloride	ug/kg	ND	2.0	
Bromomethane	ug/kg	ND	5.0	
Chloroethane	ug/kg	ND	5.0	
Trichlorofluoromethane	ug/kg	ND	5.0	
Methylene chloride	ug/kg	ND	20.	
1,1-Dichloroethene	ug/kg	ND	5.0	
trans-1,2-Dichloroethene	ug/kg	ND	5.0	
1,1-Dichloroethane	ug/kg	ND	5.0	
2,2-Dichloropropane	ug/kg	ND	5.0	
cis-1,2-Dichloroethene	ug/kg	ND	5.0	
Chloroform	ug/kg	ND	5.0	
Bromochloromethane	ug/kg	ND	5.0	
1,1,1-Trichloroethane	ug/kg	ND	5.0	
Carbon tetrachloride	ug/kg	ND	5.0	
1,1-Dichloropropene	ug/kg	ND	5.0	
Benzene	ug/kg	ND	5.0	
1,2-Dichloroethane	ug/kg	ND	5.0	
Trichloroethene	ug/kg	ND	5.0	
1,2-Dichloropropane	ug/kg	ND	5.0	
Bromodichloromethane	ug/kg	ND	5.0	
Dibromomethane	ug/kg	ND	5.0	
Toluene	ug/kg	ND	5.0	
1,1,2-Trichloroethane	ug/kg	ND	5.0	
Tetrachloroethene	ug/kg	ND	5.0	
1,3-Dichloropropane	ug/kg	ND	5.0	
Dibromochloromethane	ug/kg	ND	5.0	
1,2-Dibromoethane (EDB)	ug/kg	ND	5.0	
Chlorobenzene	ug/kg	ND	5.0	
1,1,1,2-Tetrachloroethane	ug/kg	ND	5.0	

REPORT OF LABORATORY ANALYSIS
This report shall not be reproduced, except in full,
without the written consent of Pace Analytical Services, Inc.

Pace Analytical®
www.pacelabs.com

Pace Analytical Services, Inc.
7726 Moller Road
Indianapolis, IN 46268
Phone: 317.875.5894
Fax: 317.872.6189

QUALITY CONTROL DATA

Lab Project Number: 5038057
Client Project ID: Michigan Meadows / M01046

METHOD BLANK: 503737199
Associated Lab Samples: 503733172

Parameter	Units	Blank Result	Reporting Limit	Footnotes
Ethylbenzene	ug/kg	ND	5.0	
m&p-Xylene	ug/kg	ND	5.0	
o-Xylene	ug/kg	ND	5.0	
Styrene	ug/kg	ND	5.0	
Bromoform	ug/kg	ND	5.0	
Isopropylbenzene (Cumene)	ug/kg	ND	5.0	
1,1,2,2-Tetrachloroethane	ug/kg	ND	5.0	
Bromobenzene	ug/kg	ND	5.0	
1,2,3-Trichloropropane	ug/kg	ND	5.0	
n-Propylbenzene	ug/kg	ND	5.0	
2-Chlorotoluene	ug/kg	ND	5.0	
1,3,5-Trimethylbenzene	ug/kg	ND	5.0	
4-Chlorotoluene	ug/kg	ND	5.0	
1,2,4-Trimethylbenzene	ug/kg	ND	5.0	
sec-Butylbenzene	ug/kg	ND	5.0	
tert-Butylbenzene	ug/kg	ND	5.0	
p-Isopropyltoluene	ug/kg	ND	5.0	
1,3-Dichlorobenzene	ug/kg	ND	5.0	
1,4-Dichlorobenzene	ug/kg	ND	5.0	
n-Butylbenzene	ug/kg	ND	5.0	
1,2-Dichlorobenzene	ug/kg	ND	5.0	
1,2-Dibromo-3-chloropropane	ug/kg	ND	5.0	
1,2,4-Trichlorobenzene	ug/kg	ND	5.0	
Hexachloro-1,3-butadiene	ug/kg	ND	5.0	
Naphthalene	ug/kg	ND	5.0	
1,2,3-Trichlorobenzene	ug/kg	ND	5.0	
trans-1,3-Dichloropropene	ug/kg	ND	5.0	
cis-1,3-Dichloropropene	ug/kg	ND	5.0	
2-Chloroethylvinyl ether	ug/kg	ND	50.	
Acetone	ug/kg	ND	100	
2-Butanone (MEK)	ug/kg	ND	10.	
4-Methyl-2-pentanone (MIBK)	ug/kg	ND	10.	
Carbon disulfide	ug/kg	ND	10.	
Acrolein	ug/kg	ND	100	
Acrylonitrile	ug/kg	ND	100	
2-Hexanone	ug/kg	ND	100	

REPORT OF LABORATORY ANALYSIS
This report shall not be reproduced, except in full,
without the written consent of Pace Analytical Services, Inc.

Pace Analytical®
www.pacelabs.com

Pace Analytical Services, Inc.
7726 Moller Road
Indianapolis, IN 46268
Phone: 317.875.5894
Fax: 317.872.6189

QUALITY CONTROL DATA

Lab Project Number: 5038057
Client Project ID: Michigan Meadows / M01046

METHOD BLANK: 503737199
Associated Lab Samples: 503733172

Parameter	Units	Blank Result	Reporting Limit	Footnotes
Vinyl acetate	ug/kg	ND	100	
Iodomethane	ug/kg	ND	100	
Methyl-tert-butyl ether	ug/kg	ND	5.0	
Ethyl methacrylate	ug/kg	ND	100	
trans-1,4-Dichloro-2-butene	ug/kg	ND	100	
Dibromofluoromethane (S)	%	102		
Toluene-d8 (S)	%	98		
4-Bromofluorobenzene (S)	%	93		

LABORATORY CONTROL SAMPLE: 503737207

Parameter	Units	Spike Conc.	LCS Result	LCS % Rec	Footnotes
Dichlorodifluoromethane	ug/kg	50.00	44.32	89	
Chloromethane	ug/kg	50.00	48.13	96	
Vinyl chloride	ug/kg	50.00	52.58	105	
Bromomethane	ug/kg	50.00	49.49	99	
Chloroethane	ug/kg	50.00	57.39	115	
Trichlorofluoromethane	ug/kg	50.00	56.30	113	
Methylene chloride	ug/kg	50.00	54.13	108	
1,1-Dichloroethene	ug/kg	50.00	57.59	115	
trans-1,2-Dichloroethene	ug/kg	50.00	55.37	111	
1,1-Dichloroethane	ug/kg	50.00	55.92	112	
2,2-Dichloropropane	ug/kg	50.00	50.58	101	
cis-1,2-Dichloroethene	ug/kg	50.00	53.99	108	
Chloroform	ug/kg	50.00	55.87	112	
Bromochloromethane	ug/kg	50.00	62.60	125	
1,1,1-Trichloroethane	ug/kg	50.00	55.05	110	
Carbon tetrachloride	ug/kg	50.00	54.30	109	
1,1-Dichloropropene	ug/kg	50.00	54.64	109	
Benzene	ug/kg	50.00	55.15	110	
1,2-Dichloroethane	ug/kg	50.00	56.47	113	
Trichloroethene	ug/kg	50.00	55.84	112	
1,2-Dichloropropane	ug/kg	50.00	53.90	108	
Bromodichloromethane	ug/kg	50.00	53.37	107	

REPORT OF LABORATORY ANALYSIS
This report shall not be reproduced, except in full,
without the written consent of Pace Analytical Services, Inc.

Pace Analytical®
www.pacelabs.com

Pace Analytical Services, Inc.
7726 Moller Road
Indianapolis, IN 46268
Phone: 317.875.5894
Fax: 317.872.6189

QUALITY CONTROL DATA

Lab Project Number: 5038057
Client Project ID: Michigan Meadows / M01046

LABORATORY CONTROL SAMPLE: 503737207

Parameter	Units	Spike Conc.	LCS Result	LCS % Rec	Footnotes
Dibromomethane	ug/kg	50.00	53.40	107	
Toluene	ug/kg	50.00	55.51	111	
1,1,2-Trichloroethane	ug/kg	50.00	55.44	111	
Tetrachloroethene	ug/kg	50.00	44.22	88	
1,3-Dichloropropane	ug/kg	50.00	53.84	108	
Dibromochloromethane	ug/kg	50.00	47.54	95	
1,2-Dibromoethane (EDB)	ug/kg	50.00	53.07	106	
Chlorobenzene	ug/kg	50.00	53.36	107	
1,1,1,2-Tetrachloroethane	ug/kg	50.00	51.72	103	
Ethylbenzene	ug/kg	50.00	53.08	106	
m&p-Xylene	ug/kg	100.00	107.0	107	
o-Xylene	ug/kg	50.00	53.26	107	
Styrene	ug/kg	50.00	51.84	104	
Bromoform	ug/kg	50.00	46.08	92	
Isopropylbenzene (Cumene)	ug/kg	50.00	50.64	101	
1,1,2,2-Tetrachloroethane	ug/kg	50.00	49.90	100	
Bromobenzene	ug/kg	50.00	50.47	101	
1,2,3-Trichloropropane	ug/kg	50.00	40.41	81	
n-Propylbenzene	ug/kg	50.00	53.08	106	
2-Chlorotoluene	ug/kg	50.00	53.07	106	
1,3,5-Trimethylbenzene	ug/kg	50.00	51.98	104	
4-Chlorotoluene	ug/kg	50.00	51.95	104	
1,2,4-Trimethylbenzene	ug/kg	50.00	51.92	104	
sec-Butylbenzene	ug/kg	50.00	54.10	108	
tert-Butylbenzene	ug/kg	50.00	49.03	98	
p-Isopropyltoluene	ug/kg	50.00	50.27	101	
1,3-Dichlorobenzene	ug/kg	50.00	51.40	103	
1,4-Dichlorobenzene	ug/kg	50.00	50.23	100	
n-Butylbenzene	ug/kg	50.00	50.89	102	
1,2-Dichlorobenzene	ug/kg	50.00	52.02	104	
1,2-Dibromo-3-chloropropane	ug/kg	50.00	57.73	115	
1,2,4-Trichlorobenzene	ug/kg	50.00	45.77	92	
Hexachloro-1,3-butadiene	ug/kg	50.00	50.46	101	
Naphthalene	ug/kg	50.00	46.23	92	
1,2,3-Trichlorobenzene	ug/kg	50.00	47.95	96	
trans-1,3-Dichloropropene	ug/kg	50.00	49.04	98	
cis-1,3-Dichloropropene	ug/kg	50.00	48.54	97	

REPORT OF LABORATORY ANALYSIS

This report shall not be reproduced, except in full,
without the written consent of Pace Analytical Services, Inc.

Pace Analytical®
www.pacelabs.com

Pace Analytical Services, Inc.
7726 Moller Road
Indianapolis, IN 46268
Phone: 317.875.5894
Fax: 317.872.6189

QUALITY CONTROL DATA

Lab Project Number: 5038057
Client Project ID: Michigan Meadows / M01046

LABORATORY CONTROL SAMPLE: 503737207

Parameter	Units	Spike Conc.	LCS Result	LCS % Rec	Footnotes
Methyl-tert-butyl ether	ug/kg	100.00	115.2	115	
Dibromofluoromethane (S)				100	
Toluene-d8 (S)				100	
4-Bromofluorobenzene (S)				100	

MATRIX SPIKE & MATRIX SPIKE DUPLICATE: 503737215 503737223

Parameter	Units	503722530 Result	Spike Conc.	MS Result	MSD Result	MS % Rec	MSD % Rec	RPD	Footnotes
1,1-Dichloroethene	ug/kg	0	50.00	63.91	57.41	128	115	11	
Benzene	ug/kg	0	50.00	47.27	40.81	94	82	15	
Trichloroethene	ug/kg	0	50.00	74.87	62.83	150	126	18	
Toluene	ug/kg	0	50.00	42.85	34.77	86	70	21	
Chlorobenzene	ug/kg	0	50.00	31.26	23.11	62	46	30	
Dibromofluoromethane (S)						99	101		
Toluene-d8 (S)						104	103		
4-Bromofluorobenzene (S)						98	98		1

REPORT OF LABORATORY ANALYSIS

This report shall not be reproduced, except in full,
without the written consent of Pace Analytical Services, Inc.

Accredited in accordance with nelac

Pace Analytical®
www.pacelabs.com

Pace Analytical Services, Inc.
7726 Moller Road
Indianapolis, IN 46268
Phone: 317.875.5894
Fax: 317.872.6189

Lab Project Number: 5039120
Client Project ID: Michigan Meadows

Lab Sample No: 503866030 Project Sample Number: 5039120-003 Date Collected: 09/30/04 10:50
Client Sample ID: MSW-3 Matrix: Water Date Received: 09/30/04 15:31

Parameters	Results	Units	Report Limit	DF	Analyzed	By	CAS No.	Qual	RegLmt
1,1,2,2-Tetrachloroethane	ND	ug/l	5.0	1.0	10/06/04 09:04	TMB	79-34-5		
Bromobenzene	ND	ug/l	5.0	1.0	10/06/04 09:04	TMB	108-86-1		
1,2,3-Trichloropropane	ND	ug/l	5.0	1.0	10/06/04 09:04	TMB	96-18-4		
n-Propylbenzene	ND	ug/l	5.0	1.0	10/06/04 09:04	TMB	103-65-1		
2-Chlorotoluene	ND	ug/l	5.0	1.0	10/06/04 09:04	TMB	95-49-8		
1,3,5-Trimethylbenzene	ND	ug/l	5.0	1.0	10/06/04 09:04	TMB	108-67-8		
4-Chlorotoluene	ND	ug/l	5.0	1.0	10/06/04 09:04	TMB	106-43-4		
1,2,4-Trimethylbenzene	ND	ug/l	5.0	1.0	10/06/04 09:04	TMB	95-63-6		
sec-Butylbenzene	ND	ug/l	5.0	1.0	10/06/04 09:04	TMB	135-98-8		
tert-Butylbenzene	ND	ug/l	5.0	1.0	10/06/04 09:04	TMB	98-06-6		
p-Isopropyltoluene	ND	ug/l	5.0	1.0	10/06/04 09:04	TMB	99-87-6		
1,3-Dichlorobenzene	ND	ug/l	5.0	1.0	10/06/04 09:04	TMB	541-73-1		
1,4-Dichlorobenzene	ND	ug/l	5.0	1.0	10/06/04 09:04	TMB	106-46-7		
n-Butylbenzene	ND	ug/l	5.0	1.0	10/06/04 09:04	TMB	104-51-8		
1,2-Dichlorobenzene	ND	ug/l	5.0	1.0	10/06/04 09:04	TMB	95-50-1		
1,2-Dibromo-3-chloropropane	ND	ug/l	5.0	1.0	10/06/04 09:04	TMB	96-12-8		
1,2,4-Trichlorobenzene	ND	ug/l	5.0	1.0	10/06/04 09:04	TMB	120-82-1		
Hexachloro-1,3-butadiene	ND	ug/l	5.0	1.0	10/06/04 09:04	TMB	87-68-3		
Naphthalene	ND	ug/l	5.0	1.0	10/06/04 09:04	TMB	91-20-3		
1,2,3-Trichlorobenzene	ND	ug/l	5.0	1.0	10/06/04 09:04	TMB	87-61-6		
trans-1,3-Dichloropropene	ND	ug/l	5.0	1.0	10/06/04 09:04	TMB	10061-02-6		
cis-1,3-Dichloropropene	ND	ug/l	5.0	1.0	10/06/04 09:04	TMB	10061-01-5		
2-Chloroethylvinyl ether	ND	ug/l	10.	1.0	10/06/04 09:04	TMB	110-75-8		
Acetone	ND	ug/l	25.	1.0	10/06/04 09:04	TMB	67-64-1		
2-Butanone (MEK)	ND	ug/l	10.	1.0	10/06/04 09:04	TMB	78-93-3		
4-Methyl-2-pentanone (MIBK)	ND	ug/l	10.	1.0	10/06/04 09:04	TMB	108-10-1		
Acrolein	ND	ug/l	50.	1.0	10/06/04 09:04	TMB	107-02-8		
Acrylonitrile	ND	ug/l	50.	1.0	10/06/04 09:04	TMB	107-13-1		
2-Hexanone	ND	ug/l	10.	1.0	10/06/04 09:04	TMB	591-78-6		
Vinyl acetate	ND	ug/l	10.	1.0	10/06/04 09:04	TMB	108-05-4		
Iodomethane	ND	ug/l	10.	1.0	10/06/04 09:04	TMB	74-88-4		
Methyl-tert-butyl ether	ND	ug/l	5.0	1.0	10/06/04 09:04	TMB	1634-04-4		
Carbon disulfide	ND	ug/l	5.0	1.0	10/06/04 09:04	TMB	75-15-0		
trans-1,4-Dichloro-2-butene	ND	ug/l	100	1.0	10/06/04 09:04	TMB	110-57-6		
Ethyl methacrylate	ND	ug/l	100	1.0	10/06/04 09:04	TMB	97-63-2		
Xylene (Total)	ND	ug/l	10.	1.0	10/06/04 09:04	TMB	1330-20-7		
Dibromofluoromethane (S)	113	%		1.0	10/06/04 09:04	TMB	1868-53-7		
Toluene-d8 (S)	90	%		1.0	10/06/04 09:04	TMB	2037-26-5		
4-Bromofluorobenzene (S)	93	%		1.0	10/06/04 09:04	TMB	460-00-4		

REPORT OF LABORATORY ANALYSIS
This report shall not be reproduced, except in full,
without the written consent of Pace Analytical Services, Inc.

Pace Analytical®
www.pacelabs.com

Pace Analytical Services, Inc.
7726 Moller Road
Indianapolis, IN 46268
Phone: 317.875.5894
Fax: 317.872.6189

Lab Project Number: 5039120
Client Project ID: Michigan Meadows

PARAMETER FOOTNOTES

Dilution factor shown represents the factor applied to the reported result and reporting limit due to changes in sample preparation, dilution of the extract, or moisture content

ND	Not detected at or above adjusted reporting limit
NC	Not Calculable
J	Estimated concentration above the adjusted method detection limit and below the adjusted reporting limit
MDL	Adjusted Method Detection Limit
(S)	Surrogate

REPORT OF LABORATORY ANALYSIS
This report shall not be reproduced, except in full,
without the written consent of Pace Analytical Services, Inc.

CREDITED IN ACCORDANCE nelac

Pace Analytical®
www.pacelabs.com

Pace Analytical Services, Inc.
7726 Moller Road
Indianapolis, IN 46268
Phone: 317.875.5894
Fax: 317.872.6189

QUALITY CONTROL DATA

Lab Project Number: 5038057
Client Project ID: Michigan Meadows / M01046

QC Batch: 75997
QC Batch Method: SM 2540G
Associated Lab Samples: 503733172

Analysis Method: SM 2540G
Analysis Description: Percent Moisture

SAMPLE DUPLICATE: 503743866

Parameter	Units	503718322 Result	DUP Result	RPD	Footnotes
Percent Moisture	%	3.500	3.900	12	

REPORT OF LABORATORY ANALYSIS
This report shall not be reproduced, except in full,
without the written consent of Pace Analytical Services, Inc.

Pace Analytical®
www.pacelabs.com

Pace Analytical Services, Inc.
7726 Moller Road
Indianapolis, IN 46268
Phone: 317.875.5894
Fax: 317.872.6189

Lab Project Number: 5038057
Client Project ID: Michigan Meadows / M01046

QUALITY CONTROL DATA PARAMETER FOOTNOTES

Consistent with EPA guidelines, unrounded concentrations are displayed and have been used to calculate % Rec and RPD values.

LCS(D)	Laboratory Control Sample (Duplicate)
MS(D)	Matrix Spike (Duplicate)
DUP	Sample Duplicate
ND	Not detected at or above adjusted reporting limit
NC	Not Calculable
J	Estimated concentration above the adjusted method detection limit and below the adjusted reporting limit
MDL	Adjusted Method Detection Limit
RPD	Relative Percent Difference
(S)	Surrogate
[1]	Matrix (MS) and or surrogate spike recovery (S) was affected by the sample matrix. Refer to the batch QC recoveries blank and LCS to demonstrate that the analytical system was operating in control.

REPORT OF LABORATORY ANALYSIS
This report shall not be reproduced, except in full,
without the written consent of Pace Analytical Services, Inc.

CREDITED IN ACCORDANCE nelac

Pace Analytical®
www.pacelabs.com

The Chain-of-Custody is a LEGAL DOCUMENT. All relevant fields must be completed accurately.

Page: 1 of 1

823606

Section A — Required Client Information:

Company: Mundell & Associates
Address: 429 E. Vermont St
Indianapolis, IN 46202
Phone: 317-630-9060 Fax: 317-630-9065

Section B — Required Client Information:

Report To: John Mundell
Copy To: Leena Lothe
Invoice To: Barb Whaley
P.O.
Project Name: Michigan Meadows
Project Number: M01046

Client Information (Check quote/contract):
Requested Due Date:
TAT: 2 weeks

* Turn around times less than 14 days subject to laboratory and contractual obligations and may result in a Rush Turnaround Surcharge.
Turn Around Time (TAT) in calendar days.

Section C — To Be Completed by Pace Analytical and Client

Quote Reference:
Project Manager: Mick Mayse
Project #: 5038057
Profile #:
Requested Analysis:

Section D — Required Client Information:

SAMPLE ID
One character per box.
(A–Z, 0–9 / .–)
Sample IDs MUST BE UNIQUE

Valid Matrix Codes

MATRIX	CODE
WATER	WT
SOIL	SL
OIL	OL
WIPE	WP
AIR	AR
TISSUE	TS
OTHER	OT

ITEM #	SAMPLE ID	MATRIX CODE	DATE COLLECTED (mm / dd / yy)	TIME COLLECTED (hh:mm a/p)	# Containers	Unpreserved	H_2SO_4	HNO_3	HCl	NaOH	$Na_2S_2O_3$	Methanol	Other	VOCs 8260	Remarks / Lab ID
1	MMW-6D	SL	08/23/04	12:15p	1	✓								✓	503733172
2															
3															
4															
5															
6															
7															
8															
9															
10															
11															
12															

SITE LOCATION
☐ NC ☐ SC ☐ GA
☐ Other_____

REGULATORY AGENCY
☐ NPDES ☐ GROUND WATER ☐ DRINKING WATER
☐ UST ☐ RCRA ☐ Other_____

RELINQUISHED BY / AFFILIATION	DATE	TIME	ACCEPTED BY / AFFILIATION	DATE	TIME
Y. Vernon	8/24/04	10:15a	Tyron [signature]	8/24	1015

SAMPLE CONDITION

Temp in °C	5
Received on Ice	Y N
Sealed Cooler	Y N
Samples Intact	Y N

SAMPLE NOTES
10 KTS

Additional Comments:
ORIGINAL

Pace del- WX

SAMPLER NAME AND SIGNATURE
PRINT Name of SAMPLER: LEENA LOTHE
SIGNATURE of SAMPLER: [signature]
DATE Signed: (MM / DD / YY) 08/[illegible]/04

SEE REVERSE SIDE FOR INSTRUCTIONS

Form COC01 Rev. 0903

Pace Analytical®
www.pacelabs.com

Pace Analytical Services, Inc.
7726 Moller Road
Indianapolis, IN 46268
Phone: 317.875.5894
Fax: 317.872.6189

August 31, 2004

Mr. John Mundell
Mundell & Associates, Inc.
429 East Vermont Street
Suite 200
Indianapolis, IN 46202

RE: Lab Project Number: 5038108
Client Project ID: Michigan Meadows / M01046

Dear Mr. Mundell:

Enclosed are the analytical results for sample(s) received by the laboratory on August 25, 2004. Results reported herein conform to the most current NELAC standards, where applicable, unless otherwise narrated in the body of the report.

If you have any questions concerning this report please feel free to contact me.

Sincerely,

Mick Mayse

Mick Mayse
mmayse@pacelabs.com
Project Manager

Enclosures

REPORT OF LABORATORY ANALYSIS

This report shall not be reproduced, except in full,
without the written consent of Pace Analytical Services, Inc.

Pace Analytical®
www.pacelabs.com

Pace Analytical Services, Inc.
7726 Moller Road
Indianapolis, IN 46268
Phone: 317.875.5894
Fax: 317.872.6189

Lab Project Number: 5038108
Client Project ID: Michigan Meadows / M01046

Solid results are reported on a wet-weight basis

Lab Sample No: 503740110 Project Sample Number: 5038108-001 Date Collected: 08/24/04 09:00
Client Sample ID: MMW-7S(15.5-16.5) Matrix: Soil Date Received: 08/25/04 13:35

Parameters	Results	Units	Report Limit	DF	Analyzed	By	CAS No.	Qual	RegLmt
Wet Chemistry									
Percent Moisture	Method: SM 2540G								
Percent Moisture	11.0	%		1.0	08/30/04	LLB			
GC/MS Volatiles									
GC/MS VOCs by 8260	Prep/Method: EPA 5030 / EPA 8260								
Dichlorodifluoromethane	ND	ug/kg	5.0	1.0	08/29/04 00:11	TMB	75-71-8		
Chloromethane	ND	ug/kg	5.0	1.0	08/29/04 00:11	TMB	74-87-3		
Vinyl chloride	ND	ug/kg	2.0	1.0	08/29/04 00:11	TMB	75-01-4		
Bromomethane	ND	ug/kg	5.0	1.0	08/29/04 00:11	TMB	74-83-9		
Chloroethane	ND	ug/kg	5.0	1.0	08/29/04 00:11	TMB	75-00-3		
Trichlorofluoromethane	ND	ug/kg	5.0	1.0	08/29/04 00:11	TMB	75-69-4		
Methylene chloride	ND	ug/kg	20.	1.0	08/29/04 00:11	TMB	75-09-2		
1,1-Dichloroethene	ND	ug/kg	5.0	1.0	08/29/04 00:11	TMB	75-35-4		
trans-1,2-Dichloroethene	ND	ug/kg	5.0	1.0	08/29/04 00:11	TMB	156-60-5		
1,1-Dichloroethane	ND	ug/kg	5.0	1.0	08/29/04 00:11	TMB	75-34-3		
2,2-Dichloropropane	ND	ug/kg	5.0	1.0	08/29/04 00:11	TMB	594-20-7		
cis-1,2-Dichloroethene	28.	ug/kg	5.0	1.0	08/29/04 00:11	TMB	156-59-2		
Chloroform	ND	ug/kg	5.0	1.0	08/29/04 00:11	TMB	67-66-3		
Bromochloromethane	ND	ug/kg	5.0	1.0	08/29/04 00:11	TMB	74-97-5		
1,1,1-Trichloroethane	ND	ug/kg	5.0	1.0	08/29/04 00:11	TMB	71-55-6		
Carbon tetrachloride	ND	ug/kg	5.0	1.0	08/29/04 00:11	TMB	56-23-5		
1,1-Dichloropropene	ND	ug/kg	5.0	1.0	08/29/04 00:11	TMB	563-58-6		
Benzene	ND	ug/kg	5.0	1.0	08/29/04 00:11	TMB	71-43-2		
1,2-Dichloroethane	ND	ug/kg	5.0	1.0	08/29/04 00:11	TMB	107-06-2		
Trichloroethene	ND	ug/kg	5.0	1.0	08/29/04 00:11	TMB	79-01-6		
1,2-Dichloropropane	ND	ug/kg	5.0	1.0	08/29/04 00:11	TMB	78-87-5		
Bromodichloromethane	ND	ug/kg	5.0	1.0	08/29/04 00:11	TMB	75-27-4		
Dibromomethane	ND	ug/kg	5.0	1.0	08/29/04 00:11	TMB	74-95-3		
Toluene	ND	ug/kg	5.0	1.0	08/29/04 00:11	TMB	108-88-3		
1,1,2-Trichloroethane	ND	ug/kg	5.0	1.0	08/29/04 00:11	TMB	79-00-5		
Tetrachloroethene	ND	ug/kg	5.0	1.0	08/29/04 00:11	TMB	127-18-4		
1,3-Dichloropropane	ND	ug/kg	5.0	1.0	08/29/04 00:11	TMB	142-28-9		
Dibromochloromethane	ND	ug/kg	5.0	1.0	08/29/04 00:11	TMB	124-48-1		
1,2-Dibromoethane (EDB)	ND	ug/kg	5.0	1.0	08/29/04 00:11	TMB	106-93-4		
Chlorobenzene	ND	ug/kg	5.0	1.0	08/29/04 00:11	TMB	108-90-7		
1,1,1,2-Tetrachloroethane	ND	ug/kg	5.0	1.0	08/29/04 00:11	TMB	630-20-6		
Ethylbenzene	ND	ug/kg	5.0	1.0	08/29/04 00:11	TMB	100-41-4		

REPORT OF LABORATORY ANALYSIS
This report shall not be reproduced, except in full,
without the written consent of Pace Analytical Services, Inc.

Pace Analytical®
www.pacelabs.com

Pace Analytical Services, Inc.
7726 Moller Road
Indianapolis, IN 46268
Phone: 317.875.5894
Fax: 317.872.6189

Lab Project Number: 5038108
Client Project ID: Michigan Meadows / M01046

Lab Sample No: 503740110 Project Sample Number: 5038108-001 Date Collected: 08/24/04 09:00
Client Sample ID: MMW-7S(15.5-16.5) Matrix: Soil Date Received: 08/25/04 13:35

Parameters	Results	Units	Report Limit	DF	Analyzed	By	CAS No.	Qual	RegLmt
m&p-Xylene	ND	ug/kg	5.0	1.0	08/29/04 00:11	TMB			
o-Xylene	ND	ug/kg	5.0	1.0	08/29/04 00:11	TMB	95-47-6		
Styrene	ND	ug/kg	5.0	1.0	08/29/04 00:11	TMB	100-42-5		
Bromoform	ND	ug/kg	5.0	1.0	08/29/04 00:11	TMB	75-25-2		
Isopropylbenzene (Cumene)	ND	ug/kg	5.0	1.0	08/29/04 00:11	TMB	98-82-8		
1,1,2,2-Tetrachloroethane	ND	ug/kg	5.0	1.0	08/29/04 00:11	TMB	79-34-5		
Bromobenzene	ND	ug/kg	5.0	1.0	08/29/04 00:11	TMB	108-86-1		
1,2,3-Trichloropropane	ND	ug/kg	5.0	1.0	08/29/04 00:11	TMB	96-18-4		
n-Propylbenzene	ND	ug/kg	5.0	1.0	08/29/04 00:11	TMB	103-65-1		
2-Chlorotoluene	ND	ug/kg	5.0	1.0	08/29/04 00:11	TMB	95-49-8		
1,3,5-Trimethylbenzene	ND	ug/kg	5.0	1.0	08/29/04 00:11	TMB	108-67-8		
4-Chlorotoluene	ND	ug/kg	5.0	1.0	08/29/04 00:11	TMB	106-43-4		
1,2,4-Trimethylbenzene	ND	ug/kg	5.0	1.0	08/29/04 00:11	TMB	95-63-6		
sec-Butylbenzene	ND	ug/kg	5.0	1.0	08/29/04 00:11	TMB	135-98-8		
tert-Butylbenzene	ND	ug/kg	5.0	1.0	08/29/04 00:11	TMB	98-06-6		
p-Isopropyltoluene	ND	ug/kg	5.0	1.0	08/29/04 00:11	TMB	99-87-6		
1,3-Dichlorobenzene	ND	ug/kg	5.0	1.0	08/29/04 00:11	TMB	541-73-1		
1,4-Dichlorobenzene	ND	ug/kg	5.0	1.0	08/29/04 00:11	TMB	106-46-7		
n-Butylbenzene	ND	ug/kg	5.0	1.0	08/29/04 00:11	TMB	104-51-8		
1,2-Dichlorobenzene	ND	ug/kg	5.0	1.0	08/29/04 00:11	TMB	95-50-1		
1,2-Dibromo-3-chloropropane	ND	ug/kg	5.0	1.0	08/29/04 00:11	TMB	96-12-8		
1,2,4-Trichlorobenzene	ND	ug/kg	5.0	1.0	08/29/04 00:11	TMB	120-82-1		
Hexachloro-1,3-butadiene	ND	ug/kg	5.0	1.0	08/29/04 00:11	TMB	87-68-3		
Naphthalene	ND	ug/kg	5.0	1.0	08/29/04 00:11	TMB	91-20-3		
1,2,3-Trichlorobenzene	ND	ug/kg	5.0	1.0	08/29/04 00:11	TMB	87-61-6		
trans-1,3-Dichloropropene	ND	ug/kg	5.0	1.0	08/29/04 00:11	TMB	10061-02-6		
cis-1,3-Dichloropropene	ND	ug/kg	5.0	1.0	08/29/04 00:11	TMB	10061-01-5		
2-Chloroethylvinyl ether	ND	ug/kg	50.	1.0	08/29/04 00:11	TMB	110-75-8		
Acetone	ND	ug/kg	100	1.0	08/29/04 00:11	TMB	67-64-1		
2-Butanone (MEK)	ND	ug/kg	10.	1.0	08/29/04 00:11	TMB	78-93-3		
4-Methyl-2-pentanone (MIBK)	ND	ug/kg	10.	1.0	08/29/04 00:11	TMB	108-10-1		
Carbon disulfide	ND	ug/kg	10.	1.0	08/29/04 00:11	TMB	75-15-0		
Acrolein	ND	ug/kg	100	1.0	08/29/04 00:11	TMB	107-02-8		
Acrylonitrile	ND	ug/kg	100	1.0	08/29/04 00:11	TMB	107-13-1		
2-Hexanone	ND	ug/kg	100	1.0	08/29/04 00:11	TMB	591-78-6		
Vinyl acetate	ND	ug/kg	100	1.0	08/29/04 00:11	TMB	108-05-4		
Iodomethane	ND	ug/kg	100	1.0	08/29/04 00:11	TMB	74-88-4		
Methyl-tert-butyl ether	ND	ug/kg	5.0	1.0	08/29/04 00:11	TMB	1634-04-4		
Ethyl methacrylate	ND	ug/kg	100	1.0	08/29/04 00:11	TMB	97-63-2		

REPORT OF LABORATORY ANALYSIS
This report shall not be reproduced, except in full,
without the written consent of Pace Analytical Services, Inc.

Pace Analytical®
www.pacelabs.com

Pace Analytical Services, Inc.
7726 Moller Road
Indianapolis, IN 46268
Phone: 317.875.5894
Fax: 317.872.6189

Lab Project Number: 5038108
Client Project ID: Michigan Meadows / M01046

Lab Sample No: 503740110 Project Sample Number: 5038108-001 Date Collected: 08/24/04 09:00
Client Sample ID: MMW-7S(15.5-16.5) Matrix: Soil Date Received: 08/25/04 13:35

Parameters	Results	Units	Report Limit	DF	Analyzed	By	CAS No.	Qual	RegLmt
trans-1,4-Dichloro-2-butene	ND	ug/kg	100	1.0	08/29/04 00:11	TMB	110-57-6		
Dibromofluoromethane (S)	97	%		1.0	08/29/04 00:11	TMB	1868-53-7		
Toluene-d8 (S)	102	%		1.0	08/29/04 00:11	TMB	2037-26-5		
4-Bromofluorobenzene (S)	99	%		1.0	08/29/04 00:11	TMB	460-00-4		

REPORT OF LABORATORY ANALYSIS
This report shall not be reproduced, except in full,
without the written consent of Pace Analytical Services, Inc.

Accredited in accordance with nelac

Pace Analytical®
www.pacelabs.com

Pace Analytical Services, Inc.
7726 Moller Road
Indianapolis, IN 46268
Phone: 317.875.5894
Fax: 317.872.6189

Lab Project Number: 5038108
Client Project ID: Michigan Meadows / M01046

Lab Sample No: 503740128 | Project Sample Number: 5038108-002 | Date Collected: 08/24/04 11:45
Client Sample ID: MMW-5D(11) | Matrix: Soil | Date Received: 08/25/04 13:35

Parameters	Results	Units	Report Limit	DF	Analyzed	By	CAS No.	Qual	RegLmt
Wet Chemistry									
Percent Moisture	Method: SM 2540G								
Percent Moisture	6.6	%		1.0	08/30/04	LLB			
GC/MS Volatiles									
GC/MS VOCs by 8260	Prep/Method: EPA 5030 / EPA 8260								
Dichlorodifluoromethane	ND	ug/kg	5.0	1.0	08/29/04 00:42	TMB	75-71-8		
Chloromethane	ND	ug/kg	5.0	1.0	08/29/04 00:42	TMB	74-87-3		
Vinyl chloride	ND	ug/kg	2.0	1.0	08/29/04 00:42	TMB	75-01-4		
Bromomethane	ND	ug/kg	5.0	1.0	08/29/04 00:42	TMB	74-83-9		
Chloroethane	ND	ug/kg	5.0	1.0	08/29/04 00:42	TMB	75-00-3		
Trichlorofluoromethane	ND	ug/kg	5.0	1.0	08/29/04 00:42	TMB	75-69-4		
Methylene chloride	ND	ug/kg	20.	1.0	08/29/04 00:42	TMB	75-09-2		
1,1-Dichloroethene	ND	ug/kg	5.0	1.0	08/29/04 00:42	TMB	75-35-4		
trans-1,2-Dichloroethene	ND	ug/kg	5.0	1.0	08/29/04 00:42	TMB	156-60-5		
1,1-Dichloroethane	ND	ug/kg	5.0	1.0	08/29/04 00:42	TMB	75-34-3		
2,2-Dichloropropane	ND	ug/kg	5.0	1.0	08/29/04 00:42	TMB	594-20-7		
cis-1,2-Dichloroethene	ND	ug/kg	5.0	1.0	08/29/04 00:42	TMB	156-59-2		
Chloroform	ND	ug/kg	5.0	1.0	08/29/04 00:42	TMB	67-66-3		
Bromochloromethane	ND	ug/kg	5.0	1.0	08/29/04 00:42	TMB	74-97-5		
1,1,1-Trichloroethane	ND	ug/kg	5.0	1.0	08/29/04 00:42	TMB	71-55-6		
Carbon tetrachloride	ND	ug/kg	5.0	1.0	08/29/04 00:42	TMB	56-23-5		
1,1-Dichloropropene	ND	ug/kg	5.0	1.0	08/29/04 00:42	TMB	563-58-6		
Benzene	ND	ug/kg	5.0	1.0	08/29/04 00:42	TMB	71-43-2		
1,2-Dichloroethane	ND	ug/kg	5.0	1.0	08/29/04 00:42	TMB	107-06-2		
Trichloroethene	ND	ug/kg	5.0	1.0	08/29/04 00:42	TMB	79-01-6		
1,2-Dichloropropane	ND	ug/kg	5.0	1.0	08/29/04 00:42	TMB	78-87-5		
Bromodichloromethane	ND	ug/kg	5.0	1.0	08/29/04 00:42	TMB	75-27-4		
Dibromomethane	ND	ug/kg	5.0	1.0	08/29/04 00:42	TMB	74-95-3		
Toluene	ND	ug/kg	5.0	1.0	08/29/04 00:42	TMB	108-88-3		
1,1,2-Trichloroethane	ND	ug/kg	5.0	1.0	08/29/04 00:42	TMB	79-00-5		
Tetrachloroethene	ND	ug/kg	5.0	1.0	08/29/04 00:42	TMB	127-18-4		
1,3-Dichloropropane	ND	ug/kg	5.0	1.0	08/29/04 00:42	TMB	142-28-9		
Dibromochloromethane	ND	ug/kg	5.0	1.0	08/29/04 00:42	TMB	124-48-1		
1,2-Dibromoethane (EDB)	ND	ug/kg	5.0	1.0	08/29/04 00:42	TMB	106-93-4		
Chlorobenzene	ND	ug/kg	5.0	1.0	08/29/04 00:42	TMB	108-90-7		
1,1,1,2-Tetrachloroethane	ND	ug/kg	5.0	1.0	08/29/04 00:42	TMB	630-20-6		
Ethylbenzene	ND	ug/kg	5.0	1.0	08/29/04 00:42	TMB	100-41-4		
m&p-Xylene	ND	ug/kg	5.0	1.0	08/29/04 00:42	TMB			

REPORT OF LABORATORY ANALYSIS
This report shall not be reproduced, except in full,
without the written consent of Pace Analytical Services, Inc.

CREDITED IN ACCORDANCE WITH nelac

Pace Analytical®
www.pacelabs.com

Pace Analytical Services, Inc.
7726 Moller Road
Indianapolis, IN 46268
Phone: 317.875.5894
Fax: 317.872.6189

Lab Project Number: 5038108
Client Project ID: Michigan Meadows / M01046

Lab Sample No: 503740128 Project Sample Number: 5038108-002 Date Collected: 08/24/04 11:45
Client Sample ID: MMW-5D(11) Matrix: Soil Date Received: 08/25/04 13:35

Parameters	Results	Units	Report Limit	DF	Analyzed	By	CAS No.	Qual	RegLmt
o-Xylene	ND	ug/kg	5.0	1.0	08/29/04 00:42	TMB	95-47-6		
Styrene	ND	ug/kg	5.0	1.0	08/29/04 00:42	TMB	100-42-5		
Bromoform	ND	ug/kg	5.0	1.0	08/29/04 00:42	TMB	75-25-2		
Isopropylbenzene (Cumene)	ND	ug/kg	5.0	1.0	08/29/04 00:42	TMB	98-82-8		
1,1,2,2-Tetrachloroethane	ND	ug/kg	5.0	1.0	08/29/04 00:42	TMB	79-34-5		
Bromobenzene	ND	ug/kg	5.0	1.0	08/29/04 00:42	TMB	108-86-1		
1,2,3-Trichloropropane	ND	ug/kg	5.0	1.0	08/29/04 00:42	TMB	96-18-4		
n-Propylbenzene	ND	ug/kg	5.0	1.0	08/29/04 00:42	TMB	103-65-1		
2-Chlorotoluene	ND	ug/kg	5.0	1.0	08/29/04 00:42	TMB	95-49-8		
1,3,5-Trimethylbenzene	ND	ug/kg	5.0	1.0	08/29/04 00:42	TMB	108-67-8		
4-Chlorotoluene	ND	ug/kg	5.0	1.0	08/29/04 00:42	TMB	106-43-4		
1,2,4-Trimethylbenzene	ND	ug/kg	5.0	1.0	08/29/04 00:42	TMB	95-63-6		
sec-Butylbenzene	ND	ug/kg	5.0	1.0	08/29/04 00:42	TMB	135-98-8		
tert-Butylbenzene	ND	ug/kg	5.0	1.0	08/29/04 00:42	TMB	98-06-6		
p-Isopropyltoluene	ND	ug/kg	5.0	1.0	08/29/04 00:42	TMB	99-87-6		
1,3-Dichlorobenzene	ND	ug/kg	5.0	1.0	08/29/04 00:42	TMB	541-73-1		
1,4-Dichlorobenzene	ND	ug/kg	5.0	1.0	08/29/04 00:42	TMB	106-46-7		
n-Butylbenzene	ND	ug/kg	5.0	1.0	08/29/04 00:42	TMB	104-51-8		
1,2-Dichlorobenzene	ND	ug/kg	5.0	1.0	08/29/04 00:42	TMB	95-50-1		
1,2-Dibromo-3-chloropropane	ND	ug/kg	5.0	1.0	08/29/04 00:42	TMB	96-12-8		
1,2,4-Trichlorobenzene	ND	ug/kg	5.0	1.0	08/29/04 00:42	TMB	120-82-1		
Hexachloro-1,3-butadiene	ND	ug/kg	5.0	1.0	08/29/04 00:42	TMB	87-68-3		
Naphthalene	ND	ug/kg	5.0	1.0	08/29/04 00:42	TMB	91-20-3		
1,2,3-Trichlorobenzene	ND	ug/kg	5.0	1.0	08/29/04 00:42	TMB	87-61-6		
trans-1,3-Dichloropropene	ND	ug/kg	5.0	1.0	08/29/04 00:42	TMB	10061-02-6		
cis-1,3-Dichloropropene	ND	ug/kg	5.0	1.0	08/29/04 00:42	TMB	10061-01-5		
2-Chloroethylvinyl ether	ND	ug/kg	50.	1.0	08/29/04 00:42	TMB	110-75-8		
Acetone	ND	ug/kg	100	1.0	08/29/04 00:42	TMB	67-64-1		
2-Butanone (MEK)	ND	ug/kg	10.	1.0	08/29/04 00:42	TMB	78-93-3		
4-Methyl-2-pentanone (MIBK)	ND	ug/kg	10.	1.0	08/29/04 00:42	TMB	108-10-1		
Carbon disulfide	ND	ug/kg	10.	1.0	08/29/04 00:42	TMB	75-15-0		
Acrolein	ND	ug/kg	100	1.0	08/29/04 00:42	TMB	107-02-8		
Acrylonitrile	ND	ug/kg	100	1.0	08/29/04 00:42	TMB	107-13-1		
2-Hexanone	ND	ug/kg	100	1.0	08/29/04 00:42	TMB	591-78-6		
Vinyl acetate	ND	ug/kg	100	1.0	08/29/04 00:42	TMB	108-05-4		
Iodomethane	ND	ug/kg	100	1.0	08/29/04 00:42	TMB	74-88-4		
Methyl-tert-butyl ether	ND	ug/kg	5.0	1.0	08/29/04 00:42	TMB	1634-04-4		
Ethyl methacrylate	ND	ug/kg	100	1.0	08/29/04 00:42	TMB	97-63-2		
trans-1,4-Dichloro-2-butene	ND	ug/kg	100	1.0	08/29/04 00:42	TMB	110-57-6		

REPORT OF LABORATORY ANALYSIS
This report shall not be reproduced, except in full,
without the written consent of Pace Analytical Services, Inc.

CREDITED IN ACCORDANCE nelac

Pace Analytical®
www.pacelabs.com

Pace Analytical Services, Inc.
7726 Moller Road
Indianapolis, IN 46268
Phone: 317.875.5894
Fax: 317.872.6189

Lab Project Number: 5038108
Client Project ID: Michigan Meadows / M01046

Lab Sample No: 503740128 Project Sample Number: 5038108-002 Date Collected: 08/24/04 11:45
Client Sample ID: MMW-5D(11) Matrix: Soil Date Received: 08/25/04 13:35

Parameters	Results	Units	Report Limit	DF	Analyzed	By	CAS No.	Qual	RegLmt
Dibromofluoromethane (S)	97	%		1.0	08/29/04 00:42	TMB	1868-53-7		
Toluene-d8 (S)	103	%		1.0	08/29/04 00:42	TMB	2037-26-5		
4-Bromofluorobenzene (S)	97	%		1.0	08/29/04 00:42	TMB	460-00-4		

REPORT OF LABORATORY ANALYSIS
This report shall not be reproduced, except in full,
without the written consent of Pace Analytical Services, Inc.

Pace Analytical®
www.pacelabs.com

Pace Analytical Services, Inc.
7726 Moller Road
Indianapolis, IN 46268
Phone: 317.875.5894
Fax: 317.872.6189

Lab Project Number: 5038108
Client Project ID: Michigan Meadows / M01046

PARAMETER FOOTNOTES

Dilution factor shown represents the factor applied to the reported result and reporting limit due to changes in sample preparation, dilution of the extract, or moisture content

ND	Not detected at or above adjusted reporting limit
NC	Not Calculable
J	Estimated concentration above the adjusted method detection limit and below the adjusted reporting limit
MDL	Adjusted Method Detection Limit
(S)	Surrogate

REPORT OF LABORATORY ANALYSIS
This report shall not be reproduced, except in full,
without the written consent of Pace Analytical Services, Inc.

ACCREDITED IN ACCORDANCE WITH nelac

Pace Analytical®
www.pacelabs.com

Pace Analytical Services, Inc.
7726 Moller Road
Indianapolis, IN 46268
Phone: 317.875.5894
Fax: 317.872.6189

QUALITY CONTROL DATA

Lab Project Number: 5038108
Client Project ID: Michigan Meadows / M01046

QC Batch: 76138 Analysis Method: EPA 8260
QC Batch Method: EPA 5030 Analysis Description: GC/MS VOCs by 8260
Associated Lab Samples: 503740110 503740128

METHOD BLANK: 503752446
Associated Lab Samples: 503740110 503740128

Parameter	Units	Blank Result	Reporting Limit	Footnotes
Dichlorodifluoromethane	ug/kg	ND	5.0	
Chloromethane	ug/kg	ND	5.0	
Vinyl chloride	ug/kg	ND	2.0	
Bromomethane	ug/kg	ND	5.0	
Chloroethane	ug/kg	ND	5.0	
Trichlorofluoromethane	ug/kg	ND	5.0	
Methylene chloride	ug/kg	ND	20.	
1,1-Dichloroethene	ug/kg	ND	5.0	
trans-1,2-Dichloroethene	ug/kg	ND	5.0	
1,1-Dichloroethane	ug/kg	ND	5.0	
2,2-Dichloropropane	ug/kg	ND	5.0	
cis-1,2-Dichloroethene	ug/kg	ND	5.0	
Chloroform	ug/kg	ND	5.0	
Bromochloromethane	ug/kg	ND	5.0	
1,1,1-Trichloroethane	ug/kg	ND	5.0	
Carbon tetrachloride	ug/kg	ND	5.0	
1,1-Dichloropropene	ug/kg	ND	5.0	
Benzene	ug/kg	ND	5.0	
1,2-Dichloroethane	ug/kg	ND	5.0	
Trichloroethene	ug/kg	ND	5.0	
1,2-Dichloropropane	ug/kg	ND	5.0	
Bromodichloromethane	ug/kg	ND	5.0	
Dibromomethane	ug/kg	ND	5.0	
Toluene	ug/kg	ND	5.0	
1,1,2-Trichloroethane	ug/kg	ND	5.0	
Tetrachloroethene	ug/kg	ND	5.0	
1,3-Dichloropropane	ug/kg	ND	5.0	
Dibromochloromethane	ug/kg	ND	5.0	
1,2-Dibromoethane (EDB)	ug/kg	ND	5.0	
Chlorobenzene	ug/kg	ND	5.0	
1,1,1,2-Tetrachloroethane	ug/kg	ND	5.0	

REPORT OF LABORATORY ANALYSIS
This report shall not be reproduced, except in full,
without the written consent of Pace Analytical Services, Inc.

Accredited in accordance nelac

Pace Analytical®
www.pacelabs.com

Pace Analytical Services, Inc.
7726 Moller Road
Indianapolis, IN 46268
Phone: 317.875.5894
Fax: 317.872.6189

QUALITY CONTROL DATA

Lab Project Number: 5038108
Client Project ID: Michigan Meadows / M01046

METHOD BLANK: 503752446
Associated Lab Samples: 503740110 503740128

Parameter	Units	Blank Result	Reporting Limit	Footnotes
Ethylbenzene	ug/kg	ND	5.0	
m&p-Xylene	ug/kg	ND	5.0	
o-Xylene	ug/kg	ND	5.0	
Styrene	ug/kg	ND	5.0	
Bromoform	ug/kg	ND	5.0	
Isopropylbenzene (Cumene)	ug/kg	ND	5.0	
1,1,2,2-Tetrachloroethane	ug/kg	ND	5.0	
Bromobenzene	ug/kg	ND	5.0	
1,2,3-Trichloropropane	ug/kg	ND	5.0	
n-Propylbenzene	ug/kg	ND	5.0	
2-Chlorotoluene	ug/kg	ND	5.0	
1,3,5-Trimethylbenzene	ug/kg	ND	5.0	
4-Chlorotoluene	ug/kg	ND	5.0	
1,2,4-Trimethylbenzene	ug/kg	ND	5.0	
sec-Butylbenzene	ug/kg	ND	5.0	
tert-Butylbenzene	ug/kg	ND	5.0	
p-Isopropyltoluene	ug/kg	ND	5.0	
1,3-Dichlorobenzene	ug/kg	ND	5.0	
1,4-Dichlorobenzene	ug/kg	ND	5.0	
n-Butylbenzene	ug/kg	ND	5.0	
1,2-Dichlorobenzene	ug/kg	ND	5.0	
1,2-Dibromo-3-chloropropane	ug/kg	ND	5.0	
1,2,4-Trichlorobenzene	ug/kg	ND	5.0	
Hexachloro-1,3-butadiene	ug/kg	ND	5.0	
Naphthalene	ug/kg	ND	5.0	
1,2,3-Trichlorobenzene	ug/kg	ND	5.0	
trans-1,3-Dichloropropene	ug/kg	ND	5.0	
cis-1,3-Dichloropropene	ug/kg	ND	5.0	
2-Chloroethylvinyl ether	ug/kg	ND	50.	
Acetone	ug/kg	ND	100	
2-Butanone (MEK)	ug/kg	ND	10.	
4-Methyl-2-pentanone (MIBK)	ug/kg	ND	10.	
Carbon disulfide	ug/kg	ND	10.	
Acrolein	ug/kg	ND	100	
Acrylonitrile	ug/kg	ND	100	
2-Hexanone	ug/kg	ND	100	

REPORT OF LABORATORY ANALYSIS
This report shall not be reproduced, except in full,
without the written consent of Pace Analytical Services, Inc.

CREDITED IN ACCORDANCE WI nelac

Pace Analytical®
www.pacelabs.com

Pace Analytical Services, Inc.
7726 Moller Road
Indianapolis, IN 46268
Phone: 317.875.5894
Fax: 317.872.6189

QUALITY CONTROL DATA

Lab Project Number: 5038108
Client Project ID: Michigan Meadows / M01046

METHOD BLANK: 503752446
Associated Lab Samples: 503740110 503740128

Parameter	Units	Blank Result	Reporting Limit	Footnotes
Vinyl acetate	ug/kg	ND	100	
Iodomethane	ug/kg	ND	100	
Methyl-tert-butyl ether	ug/kg	ND	5.0	
Ethyl methacrylate	ug/kg	ND	100	
trans-1,4-Dichloro-2-butene	ug/kg	ND	100	
Dibromofluoromethane (S)	%	100		
Toluene-d8 (S)	%	99		
4-Bromofluorobenzene (S)	%	101		

LABORATORY CONTROL SAMPLE: 503752453

Parameter	Units	Spike Conc.	LCS Result	LCS % Rec	Footnotes
Dichlorodifluoromethane	ug/kg	50.00	26.83	54	
Chloromethane	ug/kg	50.00	34.83	70	
Vinyl chloride	ug/kg	50.00	37.42	75	
Bromomethane	ug/kg	50.00	30.85	62	
Chloroethane	ug/kg	50.00	43.90	88	
Trichlorofluoromethane	ug/kg	50.00	46.84	94	
Methylene chloride	ug/kg	50.00	52.31	105	
1,1-Dichloroethene	ug/kg	50.00	55.63	111	
trans-1,2-Dichloroethene	ug/kg	50.00	53.82	108	
1,1-Dichloroethane	ug/kg	50.00	52.15	104	
2,2-Dichloropropane	ug/kg	50.00	50.09	100	
cis-1,2-Dichloroethene	ug/kg	50.00	53.19	106	
Chloroform	ug/kg	50.00	50.88	102	
Bromochloromethane	ug/kg	50.00	51.19	102	
1,1,1-Trichloroethane	ug/kg	50.00	51.59	103	
Carbon tetrachloride	ug/kg	50.00	51.65	103	
1,1-Dichloropropene	ug/kg	50.00	52.13	104	
Benzene	ug/kg	50.00	51.30	103	
1,2-Dichloroethane	ug/kg	50.00	51.70	103	
Trichloroethene	ug/kg	50.00	53.21	106	
1,2-Dichloropropane	ug/kg	50.00	51.03	102	
Bromodichloromethane	ug/kg	50.00	52.68	105	

REPORT OF LABORATORY ANALYSIS
This report shall not be reproduced, except in full,
without the written consent of Pace Analytical Services, Inc.

CREDITED IN ACCORDANCE nelac

Pace Analytical®
www.pacelabs.com

Pace Analytical Services, Inc.
7726 Moller Road
Indianapolis, IN 46268
Phone: 317.875.5894
Fax: 317.872.6189

QUALITY CONTROL DATA

Lab Project Number: 5038108
Client Project ID: Michigan Meadows / M01046

LABORATORY CONTROL SAMPLE: 503752453

Parameter	Units	Spike Conc.	LCS Result	LCS % Rec	Footnotes
Dibromomethane	ug/kg	50.00	50.08	100	
Toluene	ug/kg	50.00	51.11	102	
1,1,2-Trichloroethane	ug/kg	50.00	51.02	102	
Tetrachloroethene	ug/kg	50.00	42.00	84	
1,3-Dichloropropane	ug/kg	50.00	49.73	100	
Dibromochloromethane	ug/kg	50.00	49.36	99	
1,2-Dibromoethane (EDB)	ug/kg	50.00	52.76	106	
Chlorobenzene	ug/kg	50.00	50.64	101	
1,1,1,2-Tetrachloroethane	ug/kg	50.00	49.75	100	
Ethylbenzene	ug/kg	50.00	49.52	99	
m&p-Xylene	ug/kg	100.00	99.99	100	
o-Xylene	ug/kg	50.00	50.95	102	
Styrene	ug/kg	50.00	48.84	98	
Bromoform	ug/kg	50.00	50.57	101	
Isopropylbenzene (Cumene)	ug/kg	50.00	47.93	96	
1,1,2,2-Tetrachloroethane	ug/kg	50.00	49.79	100	
Bromobenzene	ug/kg	50.00	48.89	98	
1,2,3-Trichloropropane	ug/kg	50.00	40.73	82	
n-Propylbenzene	ug/kg	50.00	50.81	102	
2-Chlorotoluene	ug/kg	50.00	50.65	101	
1,3,5-Trimethylbenzene	ug/kg	50.00	50.22	100	
4-Chlorotoluene	ug/kg	50.00	50.99	102	
1,2,4-Trimethylbenzene	ug/kg	50.00	49.68	99	
sec-Butylbenzene	ug/kg	50.00	52.80	106	
tert-Butylbenzene	ug/kg	50.00	47.98	96	
p-Isopropyltoluene	ug/kg	50.00	49.90	100	
1,3-Dichlorobenzene	ug/kg	50.00	50.56	101	
1,4-Dichlorobenzene	ug/kg	50.00	51.00	102	
n-Butylbenzene	ug/kg	50.00	50.10	100	
1,2-Dichlorobenzene	ug/kg	50.00	52.35	105	
1,2-Dibromo-3-chloropropane	ug/kg	50.00	60.82	122	
1,2,4-Trichlorobenzene	ug/kg	50.00	54.30	109	
Hexachloro-1,3-butadiene	ug/kg	50.00	53.73	107	
Naphthalene	ug/kg	50.00	62.52	125	
1,2,3-Trichlorobenzene	ug/kg	50.00	57.99	116	
trans-1,3-Dichloropropene	ug/kg	50.00	48.95	98	
cis-1,3-Dichloropropene	ug/kg	50.00	50.59	101	

REPORT OF LABORATORY ANALYSIS
This report shall not be reproduced, except in full,
without the written consent of Pace Analytical Services, Inc.

CREDITED IN ACCORDANCE WITH nelac

Pace Analytical®
www.pacelabs.com

Pace Analytical Services, Inc.
7726 Moller Road
Indianapolis, IN 46268
Phone: 317.875.5894
Fax: 317.872.6189

QUALITY CONTROL DATA

Lab Project Number: 5038108
Client Project ID: Michigan Meadows / M01046

LABORATORY CONTROL SAMPLE: 503752453

Parameter	Units	Spike Conc.	LCS Result	LCS % Rec	Footnotes
Methyl-tert-butyl ether	ug/kg	100.00	124.2	124	
Dibromofluoromethane (S)				99	
Toluene-d8 (S)				100	
4-Bromofluorobenzene (S)				100	

REPORT OF LABORATORY ANALYSIS
This report shall not be reproduced, except in full,
without the written consent of Pace Analytical Services, Inc.

CREDITED IN ACCORDANCE WITH nelac

Pace Analytical®
www.pacelabs.com

Pace Analytical Services, Inc.
7726 Moller Road
Indianapolis, IN 46268
Phone: 317.875.5894
Fax: 317.872.6189

QUALITY CONTROL DATA

Lab Project Number: 5038108
Client Project ID: Michigan Meadows / M01046

QC Batch: 76096 Analysis Method: SM 2540G
QC Batch Method: SM 2540G Analysis Description: Percent Moisture
Associated Lab Samples: 503740110 503740128

SAMPLE DUPLICATE: 503749566

Parameter	Units	503744195 Result	DUP Result	RPD	Footnotes
Percent Moisture	%	7.700	7.500	4	

REPORT OF LABORATORY ANALYSIS
This report shall not be reproduced, except in full,
without the written consent of Pace Analytical Services, Inc.

Pace Analytical®
www.pacelabs.com

Pace Analytical Services, Inc.
7726 Moller Road
Indianapolis, IN 46268
Phone: 317.875.5894
Fax: 317.872.6189

Lab Project Number: 5038108
Client Project ID: Michigan Meadows / M01046

QUALITY CONTROL DATA PARAMETER FOOTNOTES

Consistent with EPA guidelines, unrounded concentrations are displayed and have been used to calculate % Rec and RPD values.

LCS(D)	Laboratory Control Sample (Duplicate)
MS(D)	Matrix Spike (Duplicate)
DUP	Sample Duplicate
ND	Not detected at or above adjusted reporting limit
NC	Not Calculable
J	Estimated concentration above the adjusted method detection limit and below the adjusted reporting limit
MDL	Adjusted Method Detection Limit
RPD	Relative Percent Difference
(S)	Surrogate

REPORT OF LABORATORY ANALYSIS
This report shall not be reproduced, except in full,
without the written consent of Pace Analytical Services, Inc.

CREDITED IN ACCORDANCE WITH nelac

Pace Analytical®
www.pacelabs.com

CHAIN OF CUSTODY / Analytical Request Document

The Chain-of-Custody is a LEGAL DOCUMENT. All relevant fields must be completed accurately.

823607

Page: 1 of 1

Section A — Required Client Information:

Company: Mundell & Associates
Address: 429 E. Vermont St, Indianapolis, IN 46202
Phone: 317-630-9060 Fax: 317-630-9065

Section B — Required Client Information:

Report To: John Mundell
Copy To: Leena Lothe
Invoice To: Barb Whaley
P.O.:
Project Name: ~~M01046~~ Michigan Meadows
Project Number: M01046

Client Information (Check quote/contract):
Requested Due Date:
*TAT: 2 weeks

* Turn around times less than 14 days subject to laboratory and contractual obligations and may result in a Rush Turnaround Surcharge.
Turn Around Time (TAT) in calendar days.

Section C — To Be Completed by Pace Analytical and Client

Quote Reference:
Project Manager:
Project #: 5038108 (1411-4)
Profile #:
Requested Analysis:

Section D — Required Client Information:

SAMPLE ID
One character per box. (A–Z, 0–9 / .–)
Sample IDs MUST BE UNIQUE

Valid Matrix Codes

MATRIX	CODE
WATER	WT
SOIL	SL
OIL	OL
WIPE	WP
AIR	AR
TISSUE	TS
OTHER	OT

ITEM #	SAMPLE ID	MATRIX CODE	DATE COLLECTED (mm / dd / yy)	TIME COLLECTED (hh:mm a/p)	# Containers	Unpreserved	H_2SO_4	HNO_3	HCl	NaOH	$Na_2S_2O_3$	Methanol	Other	VOCs 8260	Remarks / Lab ID
1	MMW-7S(5-5-16.5)	SL	08/24/04	9:00a	1	✓								✓	50374011
2	MMW-5D(1)	SL	08/24/04	11:45a	1	✓								✓	128
3															
4															
5															
6															
7															
8															
9															
10															
11															
12															2 ok K)

SITE LOCATION: ☐ NC ☐ SC ☐ GA ☐ Other

REGULATORY AGENCY: ☐ NPDES ☐ GROUND WATER ☐ DRINKING WATER ☐ UST ☐ RCRA ☐ Other

RELINQUISHED BY / AFFILIATION	DATE	TIME	ACCEPTED BY / AFFILIATION	DATE	TIME
J. Unmoun	8/25/04	1:06p	Tyson Benfit	8/25/04	1306
			Kellen Jordan	8/25/04	1235

SAMPLE CONDITION

Temp in °C	10
Received on Ice	Y/N
Sealed Cooler	Y/N
Samples Intact	Y/N

SAMPLE NOTES

~~[illegible]~~ KS 8/25/04

SAMPLER NAME AND SIGNATURE

PRINT Name of SAMPLER: LEENA LOTHE
SIGNATURE of SAMPLER: LLothe
DATE Signed: (MM / DD / YY) 08/2[illegible]/04

Additional Comments: Pace del. WI

ORIGINAL

SEE REVERSE SIDE FOR INSTRUCTIONS

Form COC01 Rev. 0903

Pace Analytical®
www.pacelabs.com

Pace Analytical Services, Inc.
7726 Moller Road
Indianapolis, IN 46268
Phone: 317.875.5894
Fax: 317.872.6189

September 22, 2004

Mr. John Mundell
Mundell & Associates, Inc.
429 East Vermont Street
Suite 200
Indianapolis, IN 46202

RE: Lab Project Number: 5038537
Client Project ID: Michigan Meadows/M01046

Dear Mr. Mundell:

Enclosed are the analytical results for sample(s) received by the laboratory on September 10, 2004. Results reported herein conform to the most current NELAC standards, where applicable, unless otherwise narrated in the body of the report.

If you have any questions concerning this report please feel free to contact me.

Sincerely,

Mick Mayse

Mick Mayse
mmayse@pacelabs.com
Project Manager

Enclosures

REPORT OF LABORATORY ANALYSIS

This report shall not be reproduced, except in full,
without the written consent of Pace Analytical Services, Inc.

Pace Analytical®
www.pacelabs.com

Pace Analytical Services, Inc.
7726 Moller Road
Indianapolis, IN 46268
Phone: 317.875.5894
Fax: 317.872.6189

Lab Project Number: 5038537
Client Project ID: Michigan Meadows/M01046

Lab Sample No: 503795726 | Project Sample Number: 5038537-001 | Date Collected: 09/10/04 10:23
Client Sample ID: MMW-1S | Matrix: Water | Date Received: 09/10/04 17:22

Parameters	Results	Units	Report Limit	DF	Analyzed	By	CAS No.	Qual	RegLmt
GC/MS Volatiles									
GC/MS VOCs by 8260	Method: EPA 8260								
Dichlorodifluoromethane	ND	ug/l	5.0	1.0	09/15/04 00:38	TMB	75-71-8		
Chloromethane	ND	ug/l	5.0	1.0	09/15/04 00:38	TMB	74-87-3		
Vinyl chloride	4.1	ug/l	2.0	1.0	09/15/04 00:38	TMB	75-01-4		
Bromomethane	ND	ug/l	5.0	1.0	09/15/04 00:38	TMB	74-83-9		
Chloroethane	ND	ug/l	5.0	1.0	09/15/04 00:38	TMB	75-00-3		
Trichlorofluoromethane	ND	ug/l	5.0	1.0	09/15/04 00:38	TMB	75-69-4		
Methylene chloride	ND	ug/l	5.0	1.0	09/15/04 00:38	TMB	75-09-2		
1,1-Dichloroethene	ND	ug/l	5.0	1.0	09/15/04 00:38	TMB	75-35-4		
trans-1,2-Dichloroethene	ND	ug/l	5.0	1.0	09/15/04 00:38	TMB	156-60-5		
1,1-Dichloroethane	ND	ug/l	5.0	1.0	09/15/04 00:38	TMB	75-34-3		
2,2-Dichloropropane	ND	ug/l	5.0	1.0	09/15/04 00:38	TMB	594-20-7		
cis-1,2-Dichloroethene	ND	ug/l	5.0	1.0	09/15/04 00:38	TMB	156-59-2		
Chloroform	ND	ug/l	5.0	1.0	09/15/04 00:38	TMB	67-66-3		
Bromochloromethane	ND	ug/l	5.0	1.0	09/15/04 00:38	TMB	74-97-5		
1,1,1-Trichloroethane	ND	ug/l	5.0	1.0	09/15/04 00:38	TMB	71-55-6		
Carbon tetrachloride	ND	ug/l	5.0	1.0	09/15/04 00:38	TMB	56-23-5		
1,1-Dichloropropene	ND	ug/l	5.0	1.0	09/15/04 00:38	TMB	563-58-6		
Benzene	ND	ug/l	5.0	1.0	09/15/04 00:38	TMB	71-43-2		
1,2-Dichloroethane	ND	ug/l	5.0	1.0	09/15/04 00:38	TMB	107-06-2		
Trichloroethene	ND	ug/l	5.0	1.0	09/15/04 00:38	TMB	79-01-6		
1,2-Dichloropropane	ND	ug/l	5.0	1.0	09/15/04 00:38	TMB	78-87-5		
Bromodichloromethane	ND	ug/l	5.0	1.0	09/15/04 00:38	TMB	75-27-4		
Dibromomethane	ND	ug/l	5.0	1.0	09/15/04 00:38	TMB	74-95-3		
Toluene	ND	ug/l	5.0	1.0	09/15/04 00:38	TMB	108-88-3		
1,1,2-Trichloroethane	ND	ug/l	5.0	1.0	09/15/04 00:38	TMB	79-00-5		
Tetrachloroethene	ND	ug/l	5.0	1.0	09/15/04 00:38	TMB	127-18-4		
1,3-Dichloropropane	ND	ug/l	5.0	1.0	09/15/04 00:38	TMB	142-28-9		
Dibromochloromethane	ND	ug/l	5.0	1.0	09/15/04 00:38	TMB	124-48-1		
1,2-Dibromoethane (EDB)	ND	ug/l	5.0	1.0	09/15/04 00:38	TMB	106-93-4		
Chlorobenzene	ND	ug/l	5.0	1.0	09/15/04 00:38	TMB	108-90-7		
1,1,1,2-Tetrachloroethane	ND	ug/l	5.0	1.0	09/15/04 00:38	TMB	630-20-6		
Ethylbenzene	ND	ug/l	5.0	1.0	09/15/04 00:38	TMB	100-41-4		
m&p-Xylene	ND	ug/l	5.0	1.0	09/15/04 00:38	TMB			
o-Xylene	ND	ug/l	5.0	1.0	09/15/04 00:38	TMB	95-47-6		
Styrene	ND	ug/l	5.0	1.0	09/15/04 00:38	TMB	100-42-5		
Bromoform	ND	ug/l	5.0	1.0	09/15/04 00:38	TMB	75-25-2		
Isopropylbenzene (Cumene)	ND	ug/l	5.0	1.0	09/15/04 00:38	TMB	98-82-8		

REPORT OF LABORATORY ANALYSIS
This report shall not be reproduced, except in full,
without the written consent of Pace Analytical Services, Inc.

CREDITED IN ACCORDANCE WITH nelac

Pace Analytical®
www.pacelabs.com

Pace Analytical Services, Inc.
7726 Moller Road
Indianapolis, IN 46268
Phone: 317.875.5894
Fax: 317.872.6189

Lab Project Number: 5038537
Client Project ID: Michigan Meadows/M01046

Lab Sample No: 503795726 Project Sample Number: 5038537-001 Date Collected: 09/10/04 10:23
Client Sample ID: MMW-1S Matrix: Water Date Received: 09/10/04 17:22

Parameters	Results	Units	Report Limit	DF	Analyzed	By	CAS No.	Qual	RegLmt
1,1,2,2-Tetrachloroethane	ND	ug/l	5.0	1.0	09/15/04 00:38	TMB	79-34-5		
Bromobenzene	ND	ug/l	5.0	1.0	09/15/04 00:38	TMB	108-86-1		
1,2,3-Trichloropropane	ND	ug/l	5.0	1.0	09/15/04 00:38	TMB	96-18-4		
n-Propylbenzene	ND	ug/l	5.0	1.0	09/15/04 00:38	TMB	103-65-1		
2-Chlorotoluene	ND	ug/l	5.0	1.0	09/15/04 00:38	TMB	95-49-8		
1,3,5-Trimethylbenzene	ND	ug/l	5.0	1.0	09/15/04 00:38	TMB	108-67-8		
4-Chlorotoluene	ND	ug/l	5.0	1.0	09/15/04 00:38	TMB	106-43-4		
1,2,4-Trimethylbenzene	ND	ug/l	5.0	1.0	09/15/04 00:38	TMB	95-63-6		
sec-Butylbenzene	ND	ug/l	5.0	1.0	09/15/04 00:38	TMB	135-98-8		
tert-Butylbenzene	ND	ug/l	5.0	1.0	09/15/04 00:38	TMB	98-06-6		
p-Isopropyltoluene	ND	ug/l	5.0	1.0	09/15/04 00:38	TMB	99-87-6		
1,3-Dichlorobenzene	ND	ug/l	5.0	1.0	09/15/04 00:38	TMB	541-73-1		
1,4-Dichlorobenzene	ND	ug/l	5.0	1.0	09/15/04 00:38	TMB	106-46-7		
n-Butylbenzene	ND	ug/l	5.0	1.0	09/15/04 00:38	TMB	104-51-8		
1,2-Dichlorobenzene	ND	ug/l	5.0	1.0	09/15/04 00:38	TMB	95-50-1		
1,2-Dibromo-3-chloropropane	ND	ug/l	5.0	1.0	09/15/04 00:38	TMB	96-12-8		
1,2,4-Trichlorobenzene	ND	ug/l	5.0	1.0	09/15/04 00:38	TMB	120-82-1		
Hexachloro-1,3-butadiene	ND	ug/l	5.0	1.0	09/15/04 00:38	TMB	87-68-3		
Naphthalene	ND	ug/l	5.0	1.0	09/15/04 00:38	TMB	91-20-3		
1,2,3-Trichlorobenzene	ND	ug/l	5.0	1.0	09/15/04 00:38	TMB	87-61-6		
trans-1,3-Dichloropropene	ND	ug/l	5.0	1.0	09/15/04 00:38	TMB	10061-02-6		
cis-1,3-Dichloropropene	ND	ug/l	5.0	1.0	09/15/04 00:38	TMB	10061-01-5		
2-Chloroethylvinyl ether	ND	ug/l	10.	1.0	09/15/04 00:38	TMB	110-75-8		
Acetone	ND	ug/l	25.	1.0	09/15/04 00:38	TMB	67-64-1		
2-Butanone (MEK)	ND	ug/l	10.	1.0	09/15/04 00:38	TMB	78-93-3		
4-Methyl-2-pentanone (MIBK)	ND	ug/l	10.	1.0	09/15/04 00:38	TMB	108-10-1		
Acrolein	ND	ug/l	50.	1.0	09/15/04 00:38	TMB	107-02-8		
Acrylonitrile	ND	ug/l	50.	1.0	09/15/04 00:38	TMB	107-13-1		
2-Hexanone	ND	ug/l	10.	1.0	09/15/04 00:38	TMB	591-78-6		
Vinyl acetate	ND	ug/l	10.	1.0	09/15/04 00:38	TMB	108-05-4		
Iodomethane	ND	ug/l	10.	1.0	09/15/04 00:38	TMB	74-88-4		
Methyl-tert-butyl ether	ND	ug/l	5.0	1.0	09/15/04 00:38	TMB	1634-04-4		
Carbon disulfide	ND	ug/l	5.0	1.0	09/15/04 00:38	TMB	75-15-0		
trans-1,4-Dichloro-2-butene	ND	ug/l	100	1.0	09/15/04 00:38	TMB	110-57-6		
Ethyl methacrylate	ND	ug/l	100	1.0	09/15/04 00:38	TMB	97-63-2		
Xylene (Total)	ND	ug/l	10.	1.0	09/15/04 00:38	TMB	1330-20-7		
Dibromofluoromethane (S)	100	%		1.0	09/15/04 00:38	TMB	1868-53-7		
Toluene-d8 (S)	108	%		1.0	09/15/04 00:38	TMB	2037-26-5		
4-Bromofluorobenzene (S)	102	%		1.0	09/15/04 00:38	TMB	460-00-4		

REPORT OF LABORATORY ANALYSIS
This report shall not be reproduced, except in full,
without the written consent of Pace Analytical Services, Inc.

Pace Analytical®
www.pacelabs.com

Pace Analytical Services, Inc.
7726 Moller Road
Indianapolis, IN 46268
Phone: 317.875.5894
Fax: 317.872.6189

Lab Project Number: 5038537
Client Project ID: Michigan Meadows/M01046

Lab Sample No: 503795734 Project Sample Number: 5038537-002 Date Collected: 09/10/04 11:00
Client Sample ID: MMW-2S Matrix: Water Date Received: 09/10/04 17:22

Parameters	Results	Units	Report Limit	DF	Analyzed	By	CAS No.	Qual	RegLmt
GC/MS Volatiles									
GC/MS VOCs by 8260	Method: EPA 8260								
Dichlorodifluoromethane	ND	ug/l	5.0	1.0	09/15/04 01:10	TMB	75-71-8		
Chloromethane	ND	ug/l	5.0	1.0	09/15/04 01:10	TMB	74-87-3		
Vinyl chloride	ND	ug/l	2.0	1.0	09/15/04 01:10	TMB	75-01-4		
Bromomethane	ND	ug/l	5.0	1.0	09/15/04 01:10	TMB	74-83-9		
Chloroethane	ND	ug/l	5.0	1.0	09/15/04 01:10	TMB	75-00-3		
Trichlorofluoromethane	ND	ug/l	5.0	1.0	09/15/04 01:10	TMB	75-69-4		
Methylene chloride	ND	ug/l	5.0	1.0	09/15/04 01:10	TMB	75-09-2		
1,1-Dichloroethene	ND	ug/l	5.0	1.0	09/15/04 01:10	TMB	75-35-4		
trans-1,2-Dichloroethene	ND	ug/l	5.0	1.0	09/15/04 01:10	TMB	156-60-5		
1,1-Dichloroethane	ND	ug/l	5.0	1.0	09/15/04 01:10	TMB	75-34-3		
2,2-Dichloropropane	ND	ug/l	5.0	1.0	09/15/04 01:10	TMB	594-20-7		
cis-1,2-Dichloroethene	ND	ug/l	5.0	1.0	09/15/04 01:10	TMB	156-59-2		
Chloroform	ND	ug/l	5.0	1.0	09/15/04 01:10	TMB	67-66-3		
Bromochloromethane	ND	ug/l	5.0	1.0	09/15/04 01:10	TMB	74-97-5		
1,1,1-Trichloroethane	ND	ug/l	5.0	1.0	09/15/04 01:10	TMB	71-55-6		
Carbon tetrachloride	ND	ug/l	5.0	1.0	09/15/04 01:10	TMB	56-23-5		
1,1-Dichloropropene	ND	ug/l	5.0	1.0	09/15/04 01:10	TMB	563-58-6		
Benzene	ND	ug/l	5.0	1.0	09/15/04 01:10	TMB	71-43-2		
1,2-Dichloroethane	ND	ug/l	5.0	1.0	09/15/04 01:10	TMB	107-06-2		
Trichloroethene	ND	ug/l	5.0	1.0	09/15/04 01:10	TMB	79-01-6		
1,2-Dichloropropane	ND	ug/l	5.0	1.0	09/15/04 01:10	TMB	78-87-5		
Bromodichloromethane	ND	ug/l	5.0	1.0	09/15/04 01:10	TMB	75-27-4		
Dibromomethane	ND	ug/l	5.0	1.0	09/15/04 01:10	TMB	74-95-3		
Toluene	ND	ug/l	5.0	1.0	09/15/04 01:10	TMB	108-88-3		
1,1,2-Trichloroethane	ND	ug/l	5.0	1.0	09/15/04 01:10	TMB	79-00-5		
Tetrachloroethene	ND	ug/l	5.0	1.0	09/15/04 01:10	TMB	127-18-4		
1,3-Dichloropropane	ND	ug/l	5.0	1.0	09/15/04 01:10	TMB	142-28-9		
Dibromochloromethane	ND	ug/l	5.0	1.0	09/15/04 01:10	TMB	124-48-1		
1,2-Dibromoethane (EDB)	ND	ug/l	5.0	1.0	09/15/04 01:10	TMB	106-93-4		
Chlorobenzene	ND	ug/l	5.0	1.0	09/15/04 01:10	TMB	108-90-7		
1,1,1,2-Tetrachloroethane	ND	ug/l	5.0	1.0	09/15/04 01:10	TMB	630-20-6		
Ethylbenzene	ND	ug/l	5.0	1.0	09/15/04 01:10	TMB	100-41-4		
m&p-Xylene	ND	ug/l	5.0	1.0	09/15/04 01:10	TMB			
o-Xylene	ND	ug/l	5.0	1.0	09/15/04 01:10	TMB	95-47-6		
Styrene	ND	ug/l	5.0	1.0	09/15/04 01:10	TMB	100-42-5		
Bromoform	ND	ug/l	5.0	1.0	09/15/04 01:10	TMB	75-25-2		
Isopropylbenzene (Cumene)	ND	ug/l	5.0	1.0	09/15/04 01:10	TMB	98-82-8		

REPORT OF LABORATORY ANALYSIS
This report shall not be reproduced, except in full,
without the written consent of Pace Analytical Services, Inc.

Pace Analytical®
www.pacelabs.com

Pace Analytical Services, Inc.
7726 Moller Road
Indianapolis, IN 46268
Phone: 317.875.5894
Fax: 317.872.6189

Lab Project Number: 5038537
Client Project ID: Michigan Meadows/M01046

Lab Sample No: 503795734 Project Sample Number: 5038537-002 Date Collected: 09/10/04 11:00
Client Sample ID: MMW-2S Matrix: Water Date Received: 09/10/04 17:22

Parameters	Results	Units	Report Limit	DF	Analyzed	By	CAS No.	Qual	RegLmt
1,1,2,2-Tetrachloroethane	ND	ug/l	5.0	1.0	09/15/04 01:10	TMB	79-34-5		
Bromobenzene	ND	ug/l	5.0	1.0	09/15/04 01:10	TMB	108-86-1		
1,2,3-Trichloropropane	ND	ug/l	5.0	1.0	09/15/04 01:10	TMB	96-18-4		
n-Propylbenzene	ND	ug/l	5.0	1.0	09/15/04 01:10	TMB	103-65-1		
2-Chlorotoluene	ND	ug/l	5.0	1.0	09/15/04 01:10	TMB	95-49-8		
1,3,5-Trimethylbenzene	ND	ug/l	5.0	1.0	09/15/04 01:10	TMB	108-67-8		
4-Chlorotoluene	ND	ug/l	5.0	1.0	09/15/04 01:10	TMB	106-43-4		
1,2,4-Trimethylbenzene	ND	ug/l	5.0	1.0	09/15/04 01:10	TMB	95-63-6		
sec-Butylbenzene	ND	ug/l	5.0	1.0	09/15/04 01:10	TMB	135-98-8		
tert-Butylbenzene	ND	ug/l	5.0	1.0	09/15/04 01:10	TMB	98-06-6		
p-Isopropyltoluene	ND	ug/l	5.0	1.0	09/15/04 01:10	TMB	99-87-6		
1,3-Dichlorobenzene	ND	ug/l	5.0	1.0	09/15/04 01:10	TMB	541-73-1		
1,4-Dichlorobenzene	ND	ug/l	5.0	1.0	09/15/04 01:10	TMB	106-46-7		
n-Butylbenzene	ND	ug/l	5.0	1.0	09/15/04 01:10	TMB	104-51-8		
1,2-Dichlorobenzene	ND	ug/l	5.0	1.0	09/15/04 01:10	TMB	95-50-1		
1,2-Dibromo-3-chloropropane	ND	ug/l	5.0	1.0	09/15/04 01:10	TMB	96-12-8		
1,2,4-Trichlorobenzene	ND	ug/l	5.0	1.0	09/15/04 01:10	TMB	120-82-1		
Hexachloro-1,3-butadiene	ND	ug/l	5.0	1.0	09/15/04 01:10	TMB	87-68-3		
Naphthalene	ND	ug/l	5.0	1.0	09/15/04 01:10	TMB	91-20-3		
1,2,3-Trichlorobenzene	ND	ug/l	5.0	1.0	09/15/04 01:10	TMB	87-61-6		
trans-1,3-Dichloropropene	ND	ug/l	5.0	1.0	09/15/04 01:10	TMB	10061-02-6		
cis-1,3-Dichloropropene	ND	ug/l	5.0	1.0	09/15/04 01:10	TMB	10061-01-5		
2-Chloroethylvinyl ether	ND	ug/l	10.	1.0	09/15/04 01:10	TMB	110-75-8		
Acetone	ND	ug/l	25.	1.0	09/15/04 01:10	TMB	67-64-1		
2-Butanone (MEK)	ND	ug/l	10.	1.0	09/15/04 01:10	TMB	78-93-3		
4-Methyl-2-pentanone (MIBK)	ND	ug/l	10.	1.0	09/15/04 01:10	TMB	108-10-1		
Acrolein	ND	ug/l	50.	1.0	09/15/04 01:10	TMB	107-02-8		
Acrylonitrile	ND	ug/l	50.	1.0	09/15/04 01:10	TMB	107-13-1		
2-Hexanone	ND	ug/l	10.	1.0	09/15/04 01:10	TMB	591-78-6		
Vinyl acetate	ND	ug/l	10.	1.0	09/15/04 01:10	TMB	108-05-4		
Iodomethane	ND	ug/l	10.	1.0	09/15/04 01:10	TMB	74-88-4		
Methyl-tert-butyl ether	ND	ug/l	5.0	1.0	09/15/04 01:10	TMB	1634-04-4		
Carbon disulfide	ND	ug/l	5.0	1.0	09/15/04 01:10	TMB	75-15-0		
trans-1,4-Dichloro-2-butene	ND	ug/l	100	1.0	09/15/04 01:10	TMB	110-57-6		
Ethyl methacrylate	ND	ug/l	100	1.0	09/15/04 01:10	TMB	97-63-2		
Xylene (Total)	ND	ug/l	10.	1.0	09/15/04 01:10	TMB	1330-20-7		
Dibromofluoromethane (S)	101	%		1.0	09/15/04 01:10	TMB	1868-53-7		
Toluene-d8 (S)	106	%		1.0	09/15/04 01:10	TMB	2037-26-5		
4-Bromofluorobenzene (S)	102	%		1.0	09/15/04 01:10	TMB	460-00-4		

REPORT OF LABORATORY ANALYSIS
This report shall not be reproduced, except in full,
without the written consent of Pace Analytical Services, Inc.

Pace Analytical®
www.pacelabs.com

Pace Analytical Services, Inc.
7726 Moller Road
Indianapolis, IN 46268
Phone: 317.875.5894
Fax: 317.872.6189

Lab Project Number: 5038537
Client Project ID: Michigan Meadows/M01046

Lab Sample No: 503795742 Project Sample Number: 5038537-003 Date Collected: 09/10/04 16:20
Client Sample ID: MMW-3S Matrix: Water Date Received: 09/10/04 17:22

Parameters	Results	Units	Report Limit	DF	Analyzed	By	CAS No.	Qual	RegLmt
GC/MS Volatiles									
GC/MS VOCs by 8260	Method: EPA 8260								
Dichlorodifluoromethane	ND	ug/l	5.0	1.0	09/15/04 02:44	TMB	75-71-8		
Chloromethane	ND	ug/l	5.0	1.0	09/15/04 02:44	TMB	74-87-3		
Vinyl chloride	ND	ug/l	2.0	1.0	09/15/04 02:44	TMB	75-01-4		
Bromomethane	ND	ug/l	5.0	1.0	09/15/04 02:44	TMB	74-83-9		
Chloroethane	ND	ug/l	5.0	1.0	09/15/04 02:44	TMB	75-00-3		
Trichlorofluoromethane	ND	ug/l	5.0	1.0	09/15/04 02:44	TMB	75-69-4		
Methylene chloride	ND	ug/l	5.0	1.0	09/15/04 02:44	TMB	75-09-2		
1,1-Dichloroethene	ND	ug/l	5.0	1.0	09/15/04 02:44	TMB	75-35-4		
trans-1,2-Dichloroethene	ND	ug/l	5.0	1.0	09/15/04 02:44	TMB	156-60-5		
1,1-Dichloroethane	ND	ug/l	5.0	1.0	09/15/04 02:44	TMB	75-34-3		
2,2-Dichloropropane	ND	ug/l	5.0	1.0	09/15/04 02:44	TMB	594-20-7		
cis-1,2-Dichloroethene	ND	ug/l	5.0	1.0	09/15/04 02:44	TMB	156-59-2		
Chloroform	ND	ug/l	5.0	1.0	09/15/04 02:44	TMB	67-66-3		
Bromochloromethane	ND	ug/l	5.0	1.0	09/15/04 02:44	TMB	74-97-5		
1,1,1-Trichloroethane	ND	ug/l	5.0	1.0	09/15/04 02:44	TMB	71-55-6		
Carbon tetrachloride	ND	ug/l	5.0	1.0	09/15/04 02:44	TMB	56-23-5		
1,1-Dichloropropene	ND	ug/l	5.0	1.0	09/15/04 02:44	TMB	563-58-6		
Benzene	ND	ug/l	5.0	1.0	09/15/04 02:44	TMB	71-43-2		
1,2-Dichloroethane	ND	ug/l	5.0	1.0	09/15/04 02:44	TMB	107-06-2		
Trichloroethene	5.2	ug/l	5.0	1.0	09/15/04 02:44	TMB	79-01-6		
1,2-Dichloropropane	ND	ug/l	5.0	1.0	09/15/04 02:44	TMB	78-87-5		
Bromodichloromethane	ND	ug/l	5.0	1.0	09/15/04 02:44	TMB	75-27-4		
Dibromomethane	ND	ug/l	5.0	1.0	09/15/04 02:44	TMB	74-95-3		
Toluene	ND	ug/l	5.0	1.0	09/15/04 02:44	TMB	108-88-3		
1,1,2-Trichloroethane	ND	ug/l	5.0	1.0	09/15/04 02:44	TMB	79-00-5		
Tetrachloroethene	ND	ug/l	5.0	1.0	09/15/04 02:44	TMB	127-18-4		
1,3-Dichloropropane	ND	ug/l	5.0	1.0	09/15/04 02:44	TMB	142-28-9		
Dibromochloromethane	ND	ug/l	5.0	1.0	09/15/04 02:44	TMB	124-48-1		
1,2-Dibromoethane (EDB)	ND	ug/l	5.0	1.0	09/15/04 02:44	TMB	106-93-4		
Chlorobenzene	ND	ug/l	5.0	1.0	09/15/04 02:44	TMB	108-90-7		
1,1,1,2-Tetrachloroethane	ND	ug/l	5.0	1.0	09/15/04 02:44	TMB	630-20-6		
Ethylbenzene	ND	ug/l	5.0	1.0	09/15/04 02:44	TMB	100-41-4		
m&p-Xylene	ND	ug/l	5.0	1.0	09/15/04 02:44	TMB			
o-Xylene	ND	ug/l	5.0	1.0	09/15/04 02:44	TMB	95-47-6		
Styrene	ND	ug/l	5.0	1.0	09/15/04 02:44	TMB	100-42-5		
Bromoform	ND	ug/l	5.0	1.0	09/15/04 02:44	TMB	75-25-2		
Isopropylbenzene (Cumene)	ND	ug/l	5.0	1.0	09/15/04 02:44	TMB	98-82-8		

REPORT OF LABORATORY ANALYSIS
This report shall not be reproduced, except in full,
without the written consent of Pace Analytical Services, Inc.

CREDITED IN ACCORDANCE WITH nelac

Pace Analytical®
www.pacelabs.com

Pace Analytical Services, Inc.
7726 Moller Road
Indianapolis, IN 46268
Phone: 317.875.5894
Fax: 317.872.6189

Lab Project Number: 5038537
Client Project ID: Michigan Meadows/M01046

Lab Sample No: 503795742 Project Sample Number: 5038537-003 Date Collected: 09/10/04 16:20
Client Sample ID: MMW-3S Matrix: Water Date Received: 09/10/04 17:22

Parameters	Results	Units	Report Limit	DF	Analyzed	By	CAS No.	Qual	RegLmt
1,1,2,2-Tetrachloroethane	ND	ug/l	5.0	1.0	09/15/04 02:44	TMB	79-34-5		
Bromobenzene	ND	ug/l	5.0	1.0	09/15/04 02:44	TMB	108-86-1		
1,2,3-Trichloropropane	ND	ug/l	5.0	1.0	09/15/04 02:44	TMB	96-18-4		
n-Propylbenzene	ND	ug/l	5.0	1.0	09/15/04 02:44	TMB	103-65-1		
2-Chlorotoluene	ND	ug/l	5.0	1.0	09/15/04 02:44	TMB	95-49-8		
1,3,5-Trimethylbenzene	ND	ug/l	5.0	1.0	09/15/04 02:44	TMB	108-67-8		
4-Chlorotoluene	ND	ug/l	5.0	1.0	09/15/04 02:44	TMB	106-43-4		
1,2,4-Trimethylbenzene	ND	ug/l	5.0	1.0	09/15/04 02:44	TMB	95-63-6		
sec-Butylbenzene	ND	ug/l	5.0	1.0	09/15/04 02:44	TMB	135-98-8		
tert-Butylbenzene	ND	ug/l	5.0	1.0	09/15/04 02:44	TMB	98-06-6		
p-Isopropyltoluene	ND	ug/l	5.0	1.0	09/15/04 02:44	TMB	99-87-6		
1,3-Dichlorobenzene	ND	ug/l	5.0	1.0	09/15/04 02:44	TMB	541-73-1		
1,4-Dichlorobenzene	ND	ug/l	5.0	1.0	09/15/04 02:44	TMB	106-46-7		
n-Butylbenzene	ND	ug/l	5.0	1.0	09/15/04 02:44	TMB	104-51-8		
1,2-Dichlorobenzene	ND	ug/l	5.0	1.0	09/15/04 02:44	TMB	95-50-1		
1,2-Dibromo-3-chloropropane	ND	ug/l	5.0	1.0	09/15/04 02:44	TMB	96-12-8		
1,2,4-Trichlorobenzene	ND	ug/l	5.0	1.0	09/15/04 02:44	TMB	120-82-1		
Hexachloro-1,3-butadiene	ND	ug/l	5.0	1.0	09/15/04 02:44	TMB	87-68-3		
Naphthalene	ND	ug/l	5.0	1.0	09/15/04 02:44	TMB	91-20-3		
1,2,3-Trichlorobenzene	ND	ug/l	5.0	1.0	09/15/04 02:44	TMB	87-61-6		
trans-1,3-Dichloropropene	ND	ug/l	5.0	1.0	09/15/04 02:44	TMB	10061-02-6		
cis-1,3-Dichloropropene	ND	ug/l	5.0	1.0	09/15/04 02:44	TMB	10061-01-5		
2-Chloroethylvinyl ether	ND	ug/l	10.	1.0	09/15/04 02:44	TMB	110-75-8		
Acetone	ND	ug/l	25.	1.0	09/15/04 02:44	TMB	67-64-1		
2-Butanone (MEK)	ND	ug/l	10.	1.0	09/15/04 02:44	TMB	78-93-3		
4-Methyl-2-pentanone (MIBK)	ND	ug/l	10.	1.0	09/15/04 02:44	TMB	108-10-1		
Acrolein	ND	ug/l	50.	1.0	09/15/04 02:44	TMB	107-02-8		
Acrylonitrile	ND	ug/l	50.	1.0	09/15/04 02:44	TMB	107-13-1		
2-Hexanone	ND	ug/l	10.	1.0	09/15/04 02:44	TMB	591-78-6		
Vinyl acetate	ND	ug/l	10.	1.0	09/15/04 02:44	TMB	108-05-4		
Iodomethane	ND	ug/l	10.	1.0	09/15/04 02:44	TMB	74-88-4		
Methyl-tert-butyl ether	ND	ug/l	5.0	1.0	09/15/04 02:44	TMB	1634-04-4		
Carbon disulfide	ND	ug/l	5.0	1.0	09/15/04 02:44	TMB	75-15-0		
trans-1,4-Dichloro-2-butene	ND	ug/l	100	1.0	09/15/04 02:44	TMB	110-57-6		
Ethyl methacrylate	ND	ug/l	100	1.0	09/15/04 02:44	TMB	97-63-2		
Xylene (Total)	ND	ug/l	10.	1.0	09/15/04 02:44	TMB	1330-20-7		
Dibromofluoromethane (S)	101	%		1.0	09/15/04 02:44	TMB	1868-53-7		
Toluene-d8 (S)	106	%		1.0	09/15/04 02:44	TMB	2037-26-5		
4-Bromofluorobenzene (S)	103	%		1.0	09/15/04 02:44	TMB	460-00-4		

REPORT OF LABORATORY ANALYSIS
This report shall not be reproduced, except in full,
without the written consent of Pace Analytical Services, Inc.

Pace Analytical®
www.pacelabs.com

Pace Analytical Services, Inc.
7726 Moller Road
Indianapolis, IN 46268
Phone: 317.875.5894
Fax: 317.872.6189

Lab Project Number: 5038537
Client Project ID: Michigan Meadows/M01046

Lab Sample No: 503795759 Project Sample Number: 5038537-004 Date Collected: 09/10/04 15:10
Client Sample ID: MMW-4D Matrix: Water Date Received: 09/10/04 17:22

Parameters	Results	Units	Report Limit	DF	Analyzed	By	CAS No.	Qual	RegLmt
GC/MS Volatiles									
GC/MS VOCs by 8260	Method: EPA 8260								
Dichlorodifluoromethane	ND	ug/l	5.0	1.0	09/15/04 03:16	TMB	75-71-8		
Chloromethane	ND	ug/l	5.0	1.0	09/15/04 03:16	TMB	74-87-3		
Vinyl chloride	200	ug/l	2.0	1.0	09/15/04 03:16	TMB	75-01-4		
Bromomethane	ND	ug/l	5.0	1.0	09/15/04 03:16	TMB	74-83-9		
Chloroethane	ND	ug/l	5.0	1.0	09/15/04 03:16	TMB	75-00-3		
Trichlorofluoromethane	ND	ug/l	5.0	1.0	09/15/04 03:16	TMB	75-69-4		
Methylene chloride	ND	ug/l	5.0	1.0	09/15/04 03:16	TMB	75-09-2		
1,1-Dichloroethene	ND	ug/l	5.0	1.0	09/15/04 03:16	TMB	75-35-4		
trans-1,2-Dichloroethene	ND	ug/l	5.0	1.0	09/15/04 03:16	TMB	156-60-5		
1,1-Dichloroethane	ND	ug/l	5.0	1.0	09/15/04 03:16	TMB	75-34-3		
2,2-Dichloropropane	ND	ug/l	5.0	1.0	09/15/04 03:16	TMB	594-20-7		
cis-1,2-Dichloroethene	980	ug/l	120	25.0	09/15/04 18:20	TMB	156-59-2		
Chloroform	ND	ug/l	5.0	1.0	09/15/04 03:16	TMB	67-66-3		
Bromochloromethane	ND	ug/l	5.0	1.0	09/15/04 03:16	TMB	74-97-5		
1,1,1-Trichloroethane	ND	ug/l	5.0	1.0	09/15/04 03:16	TMB	71-55-6		
Carbon tetrachloride	ND	ug/l	5.0	1.0	09/15/04 03:16	TMB	56-23-5		
1,1-Dichloropropene	ND	ug/l	5.0	1.0	09/15/04 03:16	TMB	563-58-6		
Benzene	ND	ug/l	5.0	1.0	09/15/04 03:16	TMB	71-43-2		
1,2-Dichloroethane	ND	ug/l	5.0	1.0	09/15/04 03:16	TMB	107-06-2		
Trichloroethene	ND	ug/l	5.0	1.0	09/15/04 03:16	TMB	79-01-6		
1,2-Dichloropropane	ND	ug/l	5.0	1.0	09/15/04 03:16	TMB	78-87-5		
Bromodichloromethane	ND	ug/l	5.0	1.0	09/15/04 03:16	TMB	75-27-4		
Dibromomethane	ND	ug/l	5.0	1.0	09/15/04 03:16	TMB	74-95-3		
Toluene	ND	ug/l	5.0	1.0	09/15/04 03:16	TMB	108-88-3		
1,1,2-Trichloroethane	ND	ug/l	5.0	1.0	09/15/04 03:16	TMB	79-00-5		
Tetrachloroethene	ND	ug/l	5.0	1.0	09/15/04 03:16	TMB	127-18-4		
1,3-Dichloropropane	ND	ug/l	5.0	1.0	09/15/04 03:16	TMB	142-28-9		
Dibromochloromethane	ND	ug/l	5.0	1.0	09/15/04 03:16	TMB	124-48-1		
1,2-Dibromoethane (EDB)	ND	ug/l	5.0	1.0	09/15/04 03:16	TMB	106-93-4		
Chlorobenzene	ND	ug/l	5.0	1.0	09/15/04 03:16	TMB	108-90-7		
1,1,1,2-Tetrachloroethane	ND	ug/l	5.0	1.0	09/15/04 03:16	TMB	630-20-6		
Ethylbenzene	ND	ug/l	5.0	1.0	09/15/04 03:16	TMB	100-41-4		
m&p-Xylene	ND	ug/l	5.0	1.0	09/15/04 03:16	TMB			
o-Xylene	ND	ug/l	5.0	1.0	09/15/04 03:16	TMB	95-47-6		
Styrene	ND	ug/l	5.0	1.0	09/15/04 03:16	TMB	100-42-5		
Bromoform	ND	ug/l	5.0	1.0	09/15/04 03:16	TMB	75-25-2		
Isopropylbenzene (Cumene)	ND	ug/l	5.0	1.0	09/15/04 03:16	TMB	98-82-8		

REPORT OF LABORATORY ANALYSIS
This report shall not be reproduced, except in full,
without the written consent of Pace Analytical Services, Inc.

CREDITED IN ACCORDANCE WITH nelac

Pace Analytical®
www.pacelabs.com

Pace Analytical Services, Inc.
7726 Moller Road
Indianapolis, IN 46268
Phone: 317.875.5894
Fax: 317.872.6189

Lab Project Number: 5038537
Client Project ID: Michigan Meadows/M01046

Lab Sample No: 503795759 | Project Sample Number: 5038537-004 | Date Collected: 09/10/04 15:10
Client Sample ID: MMW-4D | Matrix: Water | Date Received: 09/10/04 17:22

Parameters	Results	Units	Report Limit	DF	Analyzed	By	CAS No.	Qual	RegLmt
1,1,2,2-Tetrachloroethane	ND	ug/l	5.0	1.0	09/15/04 03:16	TMB	79-34-5		
Bromobenzene	ND	ug/l	5.0	1.0	09/15/04 03:16	TMB	108-86-1		
1,2,3-Trichloropropane	ND	ug/l	5.0	1.0	09/15/04 03:16	TMB	96-18-4		
n-Propylbenzene	ND	ug/l	5.0	1.0	09/15/04 03:16	TMB	103-65-1		
2-Chlorotoluene	ND	ug/l	5.0	1.0	09/15/04 03:16	TMB	95-49-8		
1,3,5-Trimethylbenzene	ND	ug/l	5.0	1.0	09/15/04 03:16	TMB	108-67-8		
4-Chlorotoluene	ND	ug/l	5.0	1.0	09/15/04 03:16	TMB	106-43-4		
1,2,4-Trimethylbenzene	ND	ug/l	5.0	1.0	09/15/04 03:16	TMB	95-63-6		
sec-Butylbenzene	ND	ug/l	5.0	1.0	09/15/04 03:16	TMB	135-98-8		
tert-Butylbenzene	ND	ug/l	5.0	1.0	09/15/04 03:16	TMB	98-06-6		
p-Isopropyltoluene	ND	ug/l	5.0	1.0	09/15/04 03:16	TMB	99-87-6		
1,3-Dichlorobenzene	ND	ug/l	5.0	1.0	09/15/04 03:16	TMB	541-73-1		
1,4-Dichlorobenzene	ND	ug/l	5.0	1.0	09/15/04 03:16	TMB	106-46-7		
n-Butylbenzene	ND	ug/l	5.0	1.0	09/15/04 03:16	TMB	104-51-8		
1,2-Dichlorobenzene	ND	ug/l	5.0	1.0	09/15/04 03:16	TMB	95-50-1		
1,2-Dibromo-3-chloropropane	ND	ug/l	5.0	1.0	09/15/04 03:16	TMB	96-12-8		
1,2,4-Trichlorobenzene	ND	ug/l	5.0	1.0	09/15/04 03:16	TMB	120-82-1		
Hexachloro-1,3-butadiene	ND	ug/l	5.0	1.0	09/15/04 03:16	TMB	87-68-3		
Naphthalene	ND	ug/l	5.0	1.0	09/15/04 03:16	TMB	91-20-3		
1,2,3-Trichlorobenzene	ND	ug/l	5.0	1.0	09/15/04 03:16	TMB	87-61-6		
trans-1,3-Dichloropropene	ND	ug/l	5.0	1.0	09/15/04 03:16	TMB	10061-02-6		
cis-1,3-Dichloropropene	ND	ug/l	5.0	1.0	09/15/04 03:16	TMB	10061-01-5		
2-Chloroethylvinyl ether	ND	ug/l	10.	1.0	09/15/04 03:16	TMB	110-75-8		
Acetone	ND	ug/l	25.	1.0	09/15/04 03:16	TMB	67-64-1		
2-Butanone (MEK)	ND	ug/l	10.	1.0	09/15/04 03:16	TMB	78-93-3		
4-Methyl-2-pentanone (MIBK)	ND	ug/l	10.	1.0	09/15/04 03:16	TMB	108-10-1		
Acrolein	ND	ug/l	50.	1.0	09/15/04 03:16	TMB	107-02-8		
Acrylonitrile	ND	ug/l	50.	1.0	09/15/04 03:16	TMB	107-13-1		
2-Hexanone	ND	ug/l	10.	1.0	09/15/04 03:16	TMB	591-78-6		
Vinyl acetate	ND	ug/l	10.	1.0	09/15/04 03:16	TMB	108-05-4		
Iodomethane	ND	ug/l	10.	1.0	09/15/04 03:16	TMB	74-88-4		
Methyl-tert-butyl ether	ND	ug/l	5.0	1.0	09/15/04 03:16	TMB	1634-04-4		
Carbon disulfide	ND	ug/l	5.0	1.0	09/15/04 03:16	TMB	75-15-0		
trans-1,4-Dichloro-2-butene	ND	ug/l	100	1.0	09/15/04 03:16	TMB	110-57-6		
Ethyl methacrylate	ND	ug/l	100	1.0	09/15/04 03:16	TMB	97-63-2		
Xylene (Total)	ND	ug/l	10.	1.0	09/15/04 03:16	TMB	1330-20-7		
Dibromofluoromethane (S)	103	%		1.0	09/15/04 03:16	TMB	1868-53-7		
Toluene-d8 (S)	108	%		1.0	09/15/04 03:16	TMB	2037-26-5		
4-Bromofluorobenzene (S)	102	%		1.0	09/15/04 03:16	TMB	460-00-4		

REPORT OF LABORATORY ANALYSIS
This report shall not be reproduced, except in full,
without the written consent of Pace Analytical Services, Inc.

CREDITED IN ACCORDANCE WITH nelac

Pace Analytical®
www.pacelabs.com

Pace Analytical Services, Inc.
7726 Moller Road
Indianapolis, IN 46268
Phone: 317.875.5894
Fax: 317.872.6189

Lab Project Number: 5038537
Client Project ID: Michigan Meadows/M01046

Lab Sample No: 503795767 | Project Sample Number: 5038537-005 | Date Collected: 09/10/04 14:10
Client Sample ID: MMW-5D | Matrix: Water | Date Received: 09/10/04 17:22

Parameters	Results	Units	Report Limit	DF	Analyzed	By	CAS No.	Qual	RegLmt
GC/MS Volatiles									
GC/MS VOCs by 8260	Method: EPA 8260								
Dichlorodifluoromethane	ND	ug/l	5.0	1.0	09/15/04 03:47	TMB	75-71-8		
Chloromethane	ND	ug/l	5.0	1.0	09/15/04 03:47	TMB	74-87-3		
Vinyl chloride	270	ug/l	100	50.0	09/15/04 18:52	TMB	75-01-4		
Bromomethane	ND	ug/l	5.0	1.0	09/15/04 03:47	TMB	74-83-9		
Chloroethane	ND	ug/l	5.0	1.0	09/15/04 03:47	TMB	75-00-3		
Trichlorofluoromethane	ND	ug/l	5.0	1.0	09/15/04 03:47	TMB	75-69-4		
Methylene chloride	ND	ug/l	5.0	1.0	09/15/04 03:47	TMB	75-09-2		
1,1-Dichloroethene	ND	ug/l	5.0	1.0	09/15/04 03:47	TMB	75-35-4		
trans-1,2-Dichloroethene	13.	ug/l	5.0	1.0	09/15/04 03:47	TMB	156-60-5		
1,1-Dichloroethane	ND	ug/l	5.0	1.0	09/15/04 03:47	TMB	75-34-3		
2,2-Dichloropropane	ND	ug/l	5.0	1.0	09/15/04 03:47	TMB	594-20-7		
cis-1,2-Dichloroethene	3400	ug/l	250	50.0	09/15/04 18:52	TMB	156-59-2		
Chloroform	ND	ug/l	5.0	1.0	09/15/04 03:47	TMB	67-66-3		
Bromochloromethane	ND	ug/l	5.0	1.0	09/15/04 03:47	TMB	74-97-5		
1,1,1-Trichloroethane	ND	ug/l	5.0	1.0	09/15/04 03:47	TMB	71-55-6		
Carbon tetrachloride	ND	ug/l	5.0	1.0	09/15/04 03:47	TMB	56-23-5		
1,1-Dichloropropene	ND	ug/l	5.0	1.0	09/15/04 03:47	TMB	563-58-6		
Benzene	ND	ug/l	5.0	1.0	09/15/04 03:47	TMB	71-43-2		
1,2-Dichloroethane	ND	ug/l	5.0	1.0	09/15/04 03:47	TMB	107-06-2		
Trichloroethene	ND	ug/l	5.0	1.0	09/15/04 03:47	TMB	79-01-6		
1,2-Dichloropropane	ND	ug/l	5.0	1.0	09/15/04 03:47	TMB	78-87-5		
Bromodichloromethane	ND	ug/l	5.0	1.0	09/15/04 03:47	TMB	75-27-4		
Dibromomethane	ND	ug/l	5.0	1.0	09/15/04 03:47	TMB	74-95-3		
Toluene	ND	ug/l	5.0	1.0	09/15/04 03:47	TMB	108-88-3		
1,1,2-Trichloroethane	ND	ug/l	5.0	1.0	09/15/04 03:47	TMB	79-00-5		
Tetrachloroethene	ND	ug/l	5.0	1.0	09/15/04 03:47	TMB	127-18-4		
1,3-Dichloropropane	ND	ug/l	5.0	1.0	09/15/04 03:47	TMB	142-28-9		
Dibromochloromethane	ND	ug/l	5.0	1.0	09/15/04 03:47	TMB	124-48-1		
1,2-Dibromoethane (EDB)	ND	ug/l	5.0	1.0	09/15/04 03:47	TMB	106-93-4		
Chlorobenzene	ND	ug/l	5.0	1.0	09/15/04 03:47	TMB	108-90-7		
1,1,1,2-Tetrachloroethane	ND	ug/l	5.0	1.0	09/15/04 03:47	TMB	630-20-6		
Ethylbenzene	ND	ug/l	5.0	1.0	09/15/04 03:47	TMB	100-41-4		
m&p-Xylene	ND	ug/l	5.0	1.0	09/15/04 03:47	TMB			
o-Xylene	ND	ug/l	5.0	1.0	09/15/04 03:47	TMB	95-47-6		
Styrene	ND	ug/l	5.0	1.0	09/15/04 03:47	TMB	100-42-5		
Bromoform	ND	ug/l	5.0	1.0	09/15/04 03:47	TMB	75-25-2		
Isopropylbenzene (Cumene)	ND	ug/l	5.0	1.0	09/15/04 03:47	TMB	98-82-8		

REPORT OF LABORATORY ANALYSIS
This report shall not be reproduced, except in full,
without the written consent of Pace Analytical Services, Inc.

Pace Analytical®
www.pacelabs.com

Pace Analytical Services, Inc.
7726 Moller Road
Indianapolis, IN 46268
Phone: 317.875.5894
Fax: 317.872.6189

Lab Project Number: 5038537
Client Project ID: Michigan Meadows/M01046

Lab Sample No: 503795767 Project Sample Number: 5038537-005 Date Collected: 09/10/04 14:10
Client Sample ID: MMW-5D Matrix: Water Date Received: 09/10/04 17:22

Parameters	Results	Units	Report Limit	DF	Analyzed	By	CAS No.	Qual	RegLmt
1,1,2,2-Tetrachloroethane	ND	ug/l	5.0	1.0	09/15/04 03:47	TMB	79-34-5		
Bromobenzene	ND	ug/l	5.0	1.0	09/15/04 03:47	TMB	108-86-1		
1,2,3-Trichloropropane	ND	ug/l	5.0	1.0	09/15/04 03:47	TMB	96-18-4		
n-Propylbenzene	ND	ug/l	5.0	1.0	09/15/04 03:47	TMB	103-65-1		
2-Chlorotoluene	ND	ug/l	5.0	1.0	09/15/04 03:47	TMB	95-49-8		
1,3,5-Trimethylbenzene	ND	ug/l	5.0	1.0	09/15/04 03:47	TMB	108-67-8		
4-Chlorotoluene	ND	ug/l	5.0	1.0	09/15/04 03:47	TMB	106-43-4		
1,2,4-Trimethylbenzene	ND	ug/l	5.0	1.0	09/15/04 03:47	TMB	95-63-6		
sec-Butylbenzene	ND	ug/l	5.0	1.0	09/15/04 03:47	TMB	135-98-8		
tert-Butylbenzene	ND	ug/l	5.0	1.0	09/15/04 03:47	TMB	98-06-6		
p-Isopropyltoluene	ND	ug/l	5.0	1.0	09/15/04 03:47	TMB	99-87-6		
1,3-Dichlorobenzene	ND	ug/l	5.0	1.0	09/15/04 03:47	TMB	541-73-1		
1,4-Dichlorobenzene	ND	ug/l	5.0	1.0	09/15/04 03:47	TMB	106-46-7		
n-Butylbenzene	ND	ug/l	5.0	1.0	09/15/04 03:47	TMB	104-51-8		
1,2-Dichlorobenzene	ND	ug/l	5.0	1.0	09/15/04 03:47	TMB	95-50-1		
1,2-Dibromo-3-chloropropane	ND	ug/l	5.0	1.0	09/15/04 03:47	TMB	96-12-8		
1,2,4-Trichlorobenzene	ND	ug/l	5.0	1.0	09/15/04 03:47	TMB	120-82-1		
Hexachloro-1,3-butadiene	ND	ug/l	5.0	1.0	09/15/04 03:47	TMB	87-68-3		
Naphthalene	ND	ug/l	5.0	1.0	09/15/04 03:47	TMB	91-20-3		
1,2,3-Trichlorobenzene	ND	ug/l	5.0	1.0	09/15/04 03:47	TMB	87-61-6		
trans-1,3-Dichloropropene	ND	ug/l	5.0	1.0	09/15/04 03:47	TMB	10061-02-6		
cis-1,3-Dichloropropene	ND	ug/l	5.0	1.0	09/15/04 03:47	TMB	10061-01-5		
2-Chloroethylvinyl ether	ND	ug/l	10.	1.0	09/15/04 03:47	TMB	110-75-8		
Acetone	ND	ug/l	25.	1.0	09/15/04 03:47	TMB	67-64-1		
2-Butanone (MEK)	ND	ug/l	10.	1.0	09/15/04 03:47	TMB	78-93-3		
4-Methyl-2-pentanone (MIBK)	ND	ug/l	10.	1.0	09/15/04 03:47	TMB	108-10-1		
Acrolein	ND	ug/l	50.	1.0	09/15/04 03:47	TMB	107-02-8		
Acrylonitrile	ND	ug/l	50.	1.0	09/15/04 03:47	TMB	107-13-1		
2-Hexanone	ND	ug/l	10.	1.0	09/15/04 03:47	TMB	591-78-6		
Vinyl acetate	ND	ug/l	10.	1.0	09/15/04 03:47	TMB	108-05-4		
Iodomethane	ND	ug/l	10.	1.0	09/15/04 03:47	TMB	74-88-4		
Methyl-tert-butyl ether	ND	ug/l	5.0	1.0	09/15/04 03:47	TMB	1634-04-4		
Carbon disulfide	ND	ug/l	5.0	1.0	09/15/04 03:47	TMB	75-15-0		
trans-1,4-Dichloro-2-butene	ND	ug/l	100	1.0	09/15/04 03:47	TMB	110-57-6		
Ethyl methacrylate	ND	ug/l	100	1.0	09/15/04 03:47	TMB	97-63-2		
Xylene (Total)	ND	ug/l	10.	1.0	09/15/04 03:47	TMB	1330-20-7		
Dibromofluoromethane (S)	102	%		1.0	09/15/04 03:47	TMB	1868-53-7		
Toluene-d8 (S)	107	%		1.0	09/15/04 03:47	TMB	2037-26-5		
4-Bromofluorobenzene (S)	102	%		1.0	09/15/04 03:47	TMB	460-00-4		

REPORT OF LABORATORY ANALYSIS
This report shall not be reproduced, except in full,
without the written consent of Pace Analytical Services, Inc.

Pace Analytical®
www.pacelabs.com

Pace Analytical Services, Inc.
7726 Moller Road
Indianapolis, IN 46268
Phone: 317.875.5894
Fax: 317.872.6189

Lab Project Number: 5038537
Client Project ID: Michigan Meadows/M01046

Lab Sample No: 503795775 Project Sample Number: 5038537-006 Date Collected: 09/10/04 13:25
Client Sample ID: MMW-6D Matrix: Water Date Received: 09/10/04 17:22

Parameters	Results	Units	Report Limit	DF	Analyzed	By	CAS No.	Qual	RegLmt
GC/MS Volatiles									
GC/MS VOCs by 8260	Method: EPA 8260								
Dichlorodifluoromethane	ND	ug/l	5.0	1.0	09/15/04 04:18	TMB	75-71-8		
Chloromethane	ND	ug/l	5.0	1.0	09/15/04 04:18	TMB	74-87-3		
Vinyl chloride	400	ug/l	50.	25.0	09/15/04 19:23	TMB	75-01-4		
Bromomethane	ND	ug/l	5.0	1.0	09/15/04 04:18	TMB	74-83-9		
Chloroethane	ND	ug/l	5.0	1.0	09/15/04 04:18	TMB	75-00-3		
Trichlorofluoromethane	ND	ug/l	5.0	1.0	09/15/04 04:18	TMB	75-69-4		
Methylene chloride	ND	ug/l	5.0	1.0	09/15/04 04:18	TMB	75-09-2		
1,1-Dichloroethene	ND	ug/l	5.0	1.0	09/15/04 04:18	TMB	75-35-4		
trans-1,2-Dichloroethene	ND	ug/l	5.0	1.0	09/15/04 04:18	TMB	156-60-5		
1,1-Dichloroethane	ND	ug/l	5.0	1.0	09/15/04 04:18	TMB	75-34-3		
2,2-Dichloropropane	ND	ug/l	5.0	1.0	09/15/04 04:18	TMB	594-20-7		
cis-1,2-Dichloroethene	540	ug/l	120	25.0	09/15/04 19:23	TMB	156-59-2		
Chloroform	ND	ug/l	5.0	1.0	09/15/04 04:18	TMB	67-66-3		
Bromochloromethane	ND	ug/l	5.0	1.0	09/15/04 04:18	TMB	74-97-5		
1,1,1-Trichloroethane	ND	ug/l	5.0	1.0	09/15/04 04:18	TMB	71-55-6		
Carbon tetrachloride	ND	ug/l	5.0	1.0	09/15/04 04:18	TMB	56-23-5		
1,1-Dichloropropene	ND	ug/l	5.0	1.0	09/15/04 04:18	TMB	563-58-6		
Benzene	ND	ug/l	5.0	1.0	09/15/04 04:18	TMB	71-43-2		
1,2-Dichloroethane	ND	ug/l	5.0	1.0	09/15/04 04:18	TMB	107-06-2		
Trichloroethene	ND	ug/l	5.0	1.0	09/15/04 04:18	TMB	79-01-6		
1,2-Dichloropropane	ND	ug/l	5.0	1.0	09/15/04 04:18	TMB	78-87-5		
Bromodichloromethane	ND	ug/l	5.0	1.0	09/15/04 04:18	TMB	75-27-4		
Dibromomethane	ND	ug/l	5.0	1.0	09/15/04 04:18	TMB	74-95-3		
Toluene	ND	ug/l	5.0	1.0	09/15/04 04:18	TMB	108-88-3		
1,1,2-Trichloroethane	ND	ug/l	5.0	1.0	09/15/04 04:18	TMB	79-00-5		
Tetrachloroethene	ND	ug/l	5.0	1.0	09/15/04 04:18	TMB	127-18-4		
1,3-Dichloropropane	ND	ug/l	5.0	1.0	09/15/04 04:18	TMB	142-28-9		
Dibromochloromethane	ND	ug/l	5.0	1.0	09/15/04 04:18	TMB	124-48-1		
1,2-Dibromoethane (EDB)	ND	ug/l	5.0	1.0	09/15/04 04:18	TMB	106-93-4		
Chlorobenzene	ND	ug/l	5.0	1.0	09/15/04 04:18	TMB	108-90-7		
1,1,1,2-Tetrachloroethane	ND	ug/l	5.0	1.0	09/15/04 04:18	TMB	630-20-6		
Ethylbenzene	ND	ug/l	5.0	1.0	09/15/04 04:18	TMB	100-41-4		
m&p-Xylene	ND	ug/l	5.0	1.0	09/15/04 04:18	TMB			
o-Xylene	ND	ug/l	5.0	1.0	09/15/04 04:18	TMB	95-47-6		
Styrene	ND	ug/l	5.0	1.0	09/15/04 04:18	TMB	100-42-5		
Bromoform	ND	ug/l	5.0	1.0	09/15/04 04:18	TMB	75-25-2		
Isopropylbenzene (Cumene)	ND	ug/l	5.0	1.0	09/15/04 04:18	TMB	98-82-8		

REPORT OF LABORATORY ANALYSIS
This report shall not be reproduced, except in full,
without the written consent of Pace Analytical Services, Inc.

CREDITED IN ACCORDANCE WITH nelac

Pace Analytical®
www.pacelabs.com

Pace Analytical Services, Inc.
7726 Moller Road
Indianapolis, IN 46268
Phone: 317.875.5894
Fax: 317.872.6189

Lab Project Number: 5038537
Client Project ID: Michigan Meadows/M01046

Lab Sample No: 503795775 Project Sample Number: 5038537-006 Date Collected: 09/10/04 13:25
Client Sample ID: MMW-6D Matrix: Water Date Received: 09/10/04 17:22

Parameters	Results	Units	Report Limit	DF	Analyzed	By	CAS No.	Qual	RegLmt
1,1,2,2-Tetrachloroethane	ND	ug/l	5.0	1.0	09/15/04 04:18	TMB	79-34-5		
Bromobenzene	ND	ug/l	5.0	1.0	09/15/04 04:18	TMB	108-86-1		
1,2,3-Trichloropropane	ND	ug/l	5.0	1.0	09/15/04 04:18	TMB	96-18-4		
n-Propylbenzene	ND	ug/l	5.0	1.0	09/15/04 04:18	TMB	103-65-1		
2-Chlorotoluene	ND	ug/l	5.0	1.0	09/15/04 04:18	TMB	95-49-8		
1,3,5-Trimethylbenzene	ND	ug/l	5.0	1.0	09/15/04 04:18	TMB	108-67-8		
4-Chlorotoluene	ND	ug/l	5.0	1.0	09/15/04 04:18	TMB	106-43-4		
1,2,4-Trimethylbenzene	ND	ug/l	5.0	1.0	09/15/04 04:18	TMB	95-63-6		
sec-Butylbenzene	ND	ug/l	5.0	1.0	09/15/04 04:18	TMB	135-98-8		
tert-Butylbenzene	ND	ug/l	5.0	1.0	09/15/04 04:18	TMB	98-06-6		
p-Isopropyltoluene	ND	ug/l	5.0	1.0	09/15/04 04:18	TMB	99-87-6		
1,3-Dichlorobenzene	ND	ug/l	5.0	1.0	09/15/04 04:18	TMB	541-73-1		
1,4-Dichlorobenzene	ND	ug/l	5.0	1.0	09/15/04 04:18	TMB	106-46-7		
n-Butylbenzene	ND	ug/l	5.0	1.0	09/15/04 04:18	TMB	104-51-8		
1,2-Dichlorobenzene	ND	ug/l	5.0	1.0	09/15/04 04:18	TMB	95-50-1		
1,2-Dibromo-3-chloropropane	ND	ug/l	5.0	1.0	09/15/04 04:18	TMB	96-12-8		
1,2,4-Trichlorobenzene	ND	ug/l	5.0	1.0	09/15/04 04:18	TMB	120-82-1		
Hexachloro-1,3-butadiene	ND	ug/l	5.0	1.0	09/15/04 04:18	TMB	87-68-3		
Naphthalene	ND	ug/l	5.0	1.0	09/15/04 04:18	TMB	91-20-3		
1,2,3-Trichlorobenzene	ND	ug/l	5.0	1.0	09/15/04 04:18	TMB	87-61-6		
trans-1,3-Dichloropropene	ND	ug/l	5.0	1.0	09/15/04 04:18	TMB	10061-02-6		
cis-1,3-Dichloropropene	ND	ug/l	5.0	1.0	09/15/04 04:18	TMB	10061-01-5		
2-Chloroethylvinyl ether	ND	ug/l	10.	1.0	09/15/04 04:18	TMB	110-75-8		
Acetone	ND	ug/l	25.	1.0	09/15/04 04:18	TMB	67-64-1		
2-Butanone (MEK)	ND	ug/l	10.	1.0	09/15/04 04:18	TMB	78-93-3		
4-Methyl-2-pentanone (MIBK)	ND	ug/l	10.	1.0	09/15/04 04:18	TMB	108-10-1		
Acrolein	ND	ug/l	50.	1.0	09/15/04 04:18	TMB	107-02-8		
Acrylonitrile	ND	ug/l	50.	1.0	09/15/04 04:18	TMB	107-13-1		
2-Hexanone	ND	ug/l	10.	1.0	09/15/04 04:18	TMB	591-78-6		
Vinyl acetate	ND	ug/l	10.	1.0	09/15/04 04:18	TMB	108-05-4		
Iodomethane	ND	ug/l	10.	1.0	09/15/04 04:18	TMB	74-88-4		
Methyl-tert-butyl ether	ND	ug/l	5.0	1.0	09/15/04 04:18	TMB	1634-04-4		
Carbon disulfide	ND	ug/l	5.0	1.0	09/15/04 04:18	TMB	75-15-0		
trans-1,4-Dichloro-2-butene	ND	ug/l	100	1.0	09/15/04 04:18	TMB	110-57-6		
Ethyl methacrylate	ND	ug/l	100	1.0	09/15/04 04:18	TMB	97-63-2		
Xylene (Total)	ND	ug/l	10.	1.0	09/15/04 04:18	TMB	1330-20-7		
Dibromofluoromethane (S)	99	%		1.0	09/15/04 04:18	TMB	1868-53-7		
Toluene-d8 (S)	105	%		1.0	09/15/04 04:18	TMB	2037-26-5		
4-Bromofluorobenzene (S)	105	%		1.0	09/15/04 04:18	TMB	460-00-4		

REPORT OF LABORATORY ANALYSIS
This report shall not be reproduced, except in full,
without the written consent of Pace Analytical Services, Inc.

Pace Analytical®
www.pacelabs.com

Pace Analytical Services, Inc.
7726 Moller Road
Indianapolis, IN 46268
Phone: 317.875.5894
Fax: 317.872.6189

Lab Project Number: 5038537
Client Project ID: Michigan Meadows/M01046

Lab Sample No: 503795783 Project Sample Number: 5038537-007 Date Collected: 09/10/04 12:15
Client Sample ID: MMW-7S Matrix: Water Date Received: 09/10/04 17:22

Parameters	Results	Units	Report Limit	DF	Analyzed	By	CAS No.	Qual	RegLmt
GC/MS Volatiles									
GC/MS VOCs by 8260	Method: EPA 8260								
Dichlorodifluoromethane	ND	ug/l	5.0	1.0	09/15/04 04:50	TMB	75-71-8		
Chloromethane	ND	ug/l	5.0	1.0	09/15/04 04:50	TMB	74-87-3		
Vinyl chloride	ND	ug/l	2.0	1.0	09/15/04 04:50	TMB	75-01-4		
Bromomethane	ND	ug/l	5.0	1.0	09/15/04 04:50	TMB	74-83-9		
Chloroethane	ND	ug/l	5.0	1.0	09/15/04 04:50	TMB	75-00-3		
Trichlorofluoromethane	ND	ug/l	5.0	1.0	09/15/04 04:50	TMB	75-69-4		
Methylene chloride	ND	ug/l	5.0	1.0	09/15/04 04:50	TMB	75-09-2		
1,1-Dichloroethene	ND	ug/l	5.0	1.0	09/15/04 04:50	TMB	75-35-4		
trans-1,2-Dichloroethene	ND	ug/l	5.0	1.0	09/15/04 04:50	TMB	156-60-5		
1,1-Dichloroethane	ND	ug/l	5.0	1.0	09/15/04 04:50	TMB	75-34-3		
2,2-Dichloropropane	ND	ug/l	5.0	1.0	09/15/04 04:50	TMB	594-20-7		
cis-1,2-Dichloroethene	8.5	ug/l	5.0	1.0	09/15/04 04:50	TMB	156-59-2		
Chloroform	ND	ug/l	5.0	1.0	09/15/04 04:50	TMB	67-66-3		
Bromochloromethane	ND	ug/l	5.0	1.0	09/15/04 04:50	TMB	74-97-5		
1,1,1-Trichloroethane	ND	ug/l	5.0	1.0	09/15/04 04:50	TMB	71-55-6		
Carbon tetrachloride	ND	ug/l	5.0	1.0	09/15/04 04:50	TMB	56-23-5		
1,1-Dichloropropene	ND	ug/l	5.0	1.0	09/15/04 04:50	TMB	563-58-6		
Benzene	ND	ug/l	5.0	1.0	09/15/04 04:50	TMB	71-43-2		
1,2-Dichloroethane	ND	ug/l	5.0	1.0	09/15/04 04:50	TMB	107-06-2		
Trichloroethene	ND	ug/l	5.0	1.0	09/15/04 04:50	TMB	79-01-6		
1,2-Dichloropropane	ND	ug/l	5.0	1.0	09/15/04 04:50	TMB	78-87-5		
Bromodichloromethane	ND	ug/l	5.0	1.0	09/15/04 04:50	TMB	75-27-4		
Dibromomethane	ND	ug/l	5.0	1.0	09/15/04 04:50	TMB	74-95-3		
Toluene	ND	ug/l	5.0	1.0	09/15/04 04:50	TMB	108-88-3		
1,1,2-Trichloroethane	ND	ug/l	5.0	1.0	09/15/04 04:50	TMB	79-00-5		
Tetrachloroethene	ND	ug/l	5.0	1.0	09/15/04 04:50	TMB	127-18-4		
1,3-Dichloropropane	ND	ug/l	5.0	1.0	09/15/04 04:50	TMB	142-28-9		
Dibromochloromethane	ND	ug/l	5.0	1.0	09/15/04 04:50	TMB	124-48-1		
1,2-Dibromoethane (EDB)	ND	ug/l	5.0	1.0	09/15/04 04:50	TMB	106-93-4		
Chlorobenzene	ND	ug/l	5.0	1.0	09/15/04 04:50	TMB	108-90-7		
1,1,1,2-Tetrachloroethane	ND	ug/l	5.0	1.0	09/15/04 04:50	TMB	630-20-6		
Ethylbenzene	ND	ug/l	5.0	1.0	09/15/04 04:50	TMB	100-41-4		
m&p-Xylene	ND	ug/l	5.0	1.0	09/15/04 04:50	TMB			
o-Xylene	ND	ug/l	5.0	1.0	09/15/04 04:50	TMB	95-47-6		
Styrene	ND	ug/l	5.0	1.0	09/15/04 04:50	TMB	100-42-5		
Bromoform	ND	ug/l	5.0	1.0	09/15/04 04:50	TMB	75-25-2		
Isopropylbenzene (Cumene)	ND	ug/l	5.0	1.0	09/15/04 04:50	TMB	98-82-8		

REPORT OF LABORATORY ANALYSIS
This report shall not be reproduced, except in full,
without the written consent of Pace Analytical Services, Inc.

Pace Analytical®
www.pacelabs.com

Pace Analytical Services, Inc.
7726 Moller Road
Indianapolis, IN 46268
Phone: 317.875.5894
Fax: 317.872.6189

Lab Project Number: 5038537
Client Project ID: Michigan Meadows/M01046

Lab Sample No: 503795783 | Project Sample Number: 5038537-007 | Date Collected: 09/10/04 12:15
Client Sample ID: MMW-7S | Matrix: Water | Date Received: 09/10/04 17:22

Parameters	Results	Units	Report Limit	DF	Analyzed	By	CAS No.	Qual	RegLmt
1,1,2,2-Tetrachloroethane	ND	ug/l	5.0	1.0	09/15/04 04:50	TMB	79-34-5		
Bromobenzene	ND	ug/l	5.0	1.0	09/15/04 04:50	TMB	108-86-1		
1,2,3-Trichloropropane	ND	ug/l	5.0	1.0	09/15/04 04:50	TMB	96-18-4		
n-Propylbenzene	ND	ug/l	5.0	1.0	09/15/04 04:50	TMB	103-65-1		
2-Chlorotoluene	ND	ug/l	5.0	1.0	09/15/04 04:50	TMB	95-49-8		
1,3,5-Trimethylbenzene	ND	ug/l	5.0	1.0	09/15/04 04:50	TMB	108-67-8		
4-Chlorotoluene	ND	ug/l	5.0	1.0	09/15/04 04:50	TMB	106-43-4		
1,2,4-Trimethylbenzene	ND	ug/l	5.0	1.0	09/15/04 04:50	TMB	95-63-6		
sec-Butylbenzene	ND	ug/l	5.0	1.0	09/15/04 04:50	TMB	135-98-8		
tert-Butylbenzene	ND	ug/l	5.0	1.0	09/15/04 04:50	TMB	98-06-6		
p-Isopropyltoluene	ND	ug/l	5.0	1.0	09/15/04 04:50	TMB	99-87-6		
1,3-Dichlorobenzene	ND	ug/l	5.0	1.0	09/15/04 04:50	TMB	541-73-1		
1,4-Dichlorobenzene	ND	ug/l	5.0	1.0	09/15/04 04:50	TMB	106-46-7		
n-Butylbenzene	ND	ug/l	5.0	1.0	09/15/04 04:50	TMB	104-51-8		
1,2-Dichlorobenzene	ND	ug/l	5.0	1.0	09/15/04 04:50	TMB	95-50-1		
1,2-Dibromo-3-chloropropane	ND	ug/l	5.0	1.0	09/15/04 04:50	TMB	96-12-8		
1,2,4-Trichlorobenzene	ND	ug/l	5.0	1.0	09/15/04 04:50	TMB	120-82-1		
Hexachloro-1,3-butadiene	ND	ug/l	5.0	1.0	09/15/04 04:50	TMB	87-68-3		
Naphthalene	ND	ug/l	5.0	1.0	09/15/04 04:50	TMB	91-20-3		
1,2,3-Trichlorobenzene	ND	ug/l	5.0	1.0	09/15/04 04:50	TMB	87-61-6		
trans-1,3-Dichloropropene	ND	ug/l	5.0	1.0	09/15/04 04:50	TMB	10061-02-6		
cis-1,3-Dichloropropene	ND	ug/l	5.0	1.0	09/15/04 04:50	TMB	10061-01-5		
2-Chloroethylvinyl ether	ND	ug/l	10.	1.0	09/15/04 04:50	TMB	110-75-8		
Acetone	ND	ug/l	25.	1.0	09/15/04 04:50	TMB	67-64-1		
2-Butanone (MEK)	ND	ug/l	10.	1.0	09/15/04 04:50	TMB	78-93-3		
4-Methyl-2-pentanone (MIBK)	ND	ug/l	10.	1.0	09/15/04 04:50	TMB	108-10-1		
Acrolein	ND	ug/l	50.	1.0	09/15/04 04:50	TMB	107-02-8		
Acrylonitrile	ND	ug/l	50.	1.0	09/15/04 04:50	TMB	107-13-1		
2-Hexanone	ND	ug/l	10.	1.0	09/15/04 04:50	TMB	591-78-6		
Vinyl acetate	ND	ug/l	10.	1.0	09/15/04 04:50	TMB	108-05-4		
Iodomethane	ND	ug/l	10.	1.0	09/15/04 04:50	TMB	74-88-4		
Methyl-tert-butyl ether	ND	ug/l	5.0	1.0	09/15/04 04:50	TMB	1634-04-4		
Carbon disulfide	ND	ug/l	5.0	1.0	09/15/04 04:50	TMB	75-15-0		
trans-1,4-Dichloro-2-butene	ND	ug/l	100	1.0	09/15/04 04:50	TMB	110-57-6		
Ethyl methacrylate	ND	ug/l	100	1.0	09/15/04 04:50	TMB	97-63-2		
Xylene (Total)	ND	ug/l	10.	1.0	09/15/04 04:50	TMB	1330-20-7		
Dibromofluoromethane (S)	99	%		1.0	09/15/04 04:50	TMB	1868-53-7		
Toluene-d8 (S)	106	%		1.0	09/15/04 04:50	TMB	2037-26-5		
4-Bromofluorobenzene (S)	101	%		1.0	09/15/04 04:50	TMB	460-00-4		

REPORT OF LABORATORY ANALYSIS

This report shall not be reproduced, except in full,
without the written consent of Pace Analytical Services, Inc.

Accredited in accordance nelac

Pace Analytical®
www.pacelabs.com

Pace Analytical Services, Inc.
7726 Moller Road
Indianapolis, IN 46268
Phone: 317.875.5894
Fax: 317.872.6189

Lab Project Number: 5038537
Client Project ID: Michigan Meadows/M01046

Lab Sample No: 503795791 Project Sample Number: 5038537-008 Date Collected: 09/10/04 11:30
Client Sample ID: TB-01 Matrix: Water Date Received: 09/10/04 17:22

Parameters	Results	Units	Report Limit	DF	Analyzed	By	CAS No.	Qual	RegLmt
GC/MS Volatiles									
GC/MS VOCs by 8260	Method: EPA 8260								
Dichlorodifluoromethane	ND	ug/l	5.0	1.0	09/15/04 05:21	TMB	75-71-8		
Chloromethane	ND	ug/l	5.0	1.0	09/15/04 05:21	TMB	74-87-3		
Vinyl chloride	ND	ug/l	2.0	1.0	09/15/04 05:21	TMB	75-01-4		
Bromomethane	ND	ug/l	5.0	1.0	09/15/04 05:21	TMB	74-83-9		
Chloroethane	ND	ug/l	5.0	1.0	09/15/04 05:21	TMB	75-00-3		
Trichlorofluoromethane	ND	ug/l	5.0	1.0	09/15/04 05:21	TMB	75-69-4		
Methylene chloride	ND	ug/l	5.0	1.0	09/15/04 05:21	TMB	75-09-2		
1,1-Dichloroethene	ND	ug/l	5.0	1.0	09/15/04 05:21	TMB	75-35-4		
trans-1,2-Dichloroethene	ND	ug/l	5.0	1.0	09/15/04 05:21	TMB	156-60-5		
1,1-Dichloroethane	ND	ug/l	5.0	1.0	09/15/04 05:21	TMB	75-34-3		
2,2-Dichloropropane	ND	ug/l	5.0	1.0	09/15/04 05:21	TMB	594-20-7		
cis-1,2-Dichloroethene	ND	ug/l	5.0	1.0	09/15/04 05:21	TMB	156-59-2		
Chloroform	ND	ug/l	5.0	1.0	09/15/04 05:21	TMB	67-66-3		
Bromochloromethane	ND	ug/l	5.0	1.0	09/15/04 05:21	TMB	74-97-5		
1,1,1-Trichloroethane	ND	ug/l	5.0	1.0	09/15/04 05:21	TMB	71-55-6		
Carbon tetrachloride	ND	ug/l	5.0	1.0	09/15/04 05:21	TMB	56-23-5		
1,1-Dichloropropene	ND	ug/l	5.0	1.0	09/15/04 05:21	TMB	563-58-6		
Benzene	ND	ug/l	5.0	1.0	09/15/04 05:21	TMB	71-43-2		
1,2-Dichloroethane	ND	ug/l	5.0	1.0	09/15/04 05:21	TMB	107-06-2		
Trichloroethene	ND	ug/l	5.0	1.0	09/15/04 05:21	TMB	79-01-6		
1,2-Dichloropropane	ND	ug/l	5.0	1.0	09/15/04 05:21	TMB	78-87-5		
Bromodichloromethane	ND	ug/l	5.0	1.0	09/15/04 05:21	TMB	75-27-4		
Dibromomethane	ND	ug/l	5.0	1.0	09/15/04 05:21	TMB	74-95-3		
Toluene	ND	ug/l	5.0	1.0	09/15/04 05:21	TMB	108-88-3		
1,1,2-Trichloroethane	ND	ug/l	5.0	1.0	09/15/04 05:21	TMB	79-00-5		
Tetrachloroethene	ND	ug/l	5.0	1.0	09/15/04 05:21	TMB	127-18-4		
1,3-Dichloropropane	ND	ug/l	5.0	1.0	09/15/04 05:21	TMB	142-28-9		
Dibromochloromethane	ND	ug/l	5.0	1.0	09/15/04 05:21	TMB	124-48-1		
1,2-Dibromoethane (EDB)	ND	ug/l	5.0	1.0	09/15/04 05:21	TMB	106-93-4		
Chlorobenzene	ND	ug/l	5.0	1.0	09/15/04 05:21	TMB	108-90-7		
1,1,1,2-Tetrachloroethane	ND	ug/l	5.0	1.0	09/15/04 05:21	TMB	630-20-6		
Ethylbenzene	ND	ug/l	5.0	1.0	09/15/04 05:21	TMB	100-41-4		
m&p-Xylene	ND	ug/l	5.0	1.0	09/15/04 05:21	TMB			
o-Xylene	ND	ug/l	5.0	1.0	09/15/04 05:21	TMB	95-47-6		
Styrene	ND	ug/l	5.0	1.0	09/15/04 05:21	TMB	100-42-5		
Bromoform	ND	ug/l	5.0	1.0	09/15/04 05:21	TMB	75-25-2		
Isopropylbenzene (Cumene)	ND	ug/l	5.0	1.0	09/15/04 05:21	TMB	98-82-8		

REPORT OF LABORATORY ANALYSIS
This report shall not be reproduced, except in full,
without the written consent of Pace Analytical Services, Inc.

CREDITED IN ACCORDANCE WITH nelac

Pace Analytical®
www.pacelabs.com

Pace Analytical Services, Inc.
7726 Moller Road
Indianapolis, IN 46268
Phone: 317.875.5894
Fax: 317.872.6189

Lab Project Number: 5038537
Client Project ID: Michigan Meadows/M01046

Lab Sample No: 503795791 Project Sample Number: 5038537-008 Date Collected: 09/10/04 11:30
Client Sample ID: TB-01 Matrix: Water Date Received: 09/10/04 17:22

Parameters	Results	Units	Report Limit	DF	Analyzed	By	CAS No.	Qual	RegLmt
1,1,2,2-Tetrachloroethane	ND	ug/l	5.0	1.0	09/15/04 05:21	TMB	79-34-5		
Bromobenzene	ND	ug/l	5.0	1.0	09/15/04 05:21	TMB	108-86-1		
1,2,3-Trichloropropane	ND	ug/l	5.0	1.0	09/15/04 05:21	TMB	96-18-4		
n-Propylbenzene	ND	ug/l	5.0	1.0	09/15/04 05:21	TMB	103-65-1		
2-Chlorotoluene	ND	ug/l	5.0	1.0	09/15/04 05:21	TMB	95-49-8		
1,3,5-Trimethylbenzene	ND	ug/l	5.0	1.0	09/15/04 05:21	TMB	108-67-8		
4-Chlorotoluene	ND	ug/l	5.0	1.0	09/15/04 05:21	TMB	106-43-4		
1,2,4-Trimethylbenzene	ND	ug/l	5.0	1.0	09/15/04 05:21	TMB	95-63-6		
sec-Butylbenzene	ND	ug/l	5.0	1.0	09/15/04 05:21	TMB	135-98-8		
tert-Butylbenzene	ND	ug/l	5.0	1.0	09/15/04 05:21	TMB	98-06-6		
p-Isopropyltoluene	ND	ug/l	5.0	1.0	09/15/04 05:21	TMB	99-87-6		
1,3-Dichlorobenzene	ND	ug/l	5.0	1.0	09/15/04 05:21	TMB	541-73-1		
1,4-Dichlorobenzene	ND	ug/l	5.0	1.0	09/15/04 05:21	TMB	106-46-7		
n-Butylbenzene	ND	ug/l	5.0	1.0	09/15/04 05:21	TMB	104-51-8		
1,2-Dichlorobenzene	ND	ug/l	5.0	1.0	09/15/04 05:21	TMB	95-50-1		
1,2-Dibromo-3-chloropropane	ND	ug/l	5.0	1.0	09/15/04 05:21	TMB	96-12-8		
1,2,4-Trichlorobenzene	ND	ug/l	5.0	1.0	09/15/04 05:21	TMB	120-82-1		
Hexachloro-1,3-butadiene	ND	ug/l	5.0	1.0	09/15/04 05:21	TMB	87-68-3		
Naphthalene	ND	ug/l	5.0	1.0	09/15/04 05:21	TMB	91-20-3		
1,2,3-Trichlorobenzene	ND	ug/l	5.0	1.0	09/15/04 05:21	TMB	87-61-6		
trans-1,3-Dichloropropene	ND	ug/l	5.0	1.0	09/15/04 05:21	TMB	10061-02-6		
cis-1,3-Dichloropropene	ND	ug/l	5.0	1.0	09/15/04 05:21	TMB	10061-01-5		
2-Chloroethylvinyl ether	ND	ug/l	10.	1.0	09/15/04 05:21	TMB	110-75-8		
Acetone	ND	ug/l	25.	1.0	09/15/04 05:21	TMB	67-64-1		
2-Butanone (MEK)	ND	ug/l	10.	1.0	09/15/04 05:21	TMB	78-93-3		
4-Methyl-2-pentanone (MIBK)	ND	ug/l	10.	1.0	09/15/04 05:21	TMB	108-10-1		
Acrolein	ND	ug/l	50.	1.0	09/15/04 05:21	TMB	107-02-8		
Acrylonitrile	ND	ug/l	50.	1.0	09/15/04 05:21	TMB	107-13-1		
2-Hexanone	ND	ug/l	10.	1.0	09/15/04 05:21	TMB	591-78-6		
Vinyl acetate	ND	ug/l	10.	1.0	09/15/04 05:21	TMB	108-05-4		
Iodomethane	ND	ug/l	10.	1.0	09/15/04 05:21	TMB	74-88-4		
Methyl-tert-butyl ether	ND	ug/l	5.0	1.0	09/15/04 05:21	TMB	1634-04-4		
Carbon disulfide	ND	ug/l	5.0	1.0	09/15/04 05:21	TMB	75-15-0		
trans-1,4-Dichloro-2-butene	ND	ug/l	100	1.0	09/15/04 05:21	TMB	110-57-6		
Ethyl methacrylate	ND	ug/l	100	1.0	09/15/04 05:21	TMB	97-63-2		
Xylene (Total)	ND	ug/l	10.	1.0	09/15/04 05:21	TMB	1330-20-7		
Dibromofluoromethane (S)	103	%		1.0	09/15/04 05:21	TMB	1868-53-7		
Toluene-d8 (S)	105	%		1.0	09/15/04 05:21	TMB	2037-26-5		
4-Bromofluorobenzene (S)	105	%		1.0	09/15/04 05:21	TMB	460-00-4		

REPORT OF LABORATORY ANALYSIS
This report shall not be reproduced, except in full,
without the written consent of Pace Analytical Services, Inc.

Pace Analytical®
www.pacelabs.com

Pace Analytical Services, Inc.
7726 Moller Road
Indianapolis, IN 46268
Phone: 317.875.5894
Fax: 317.872.6189

Lab Project Number: 5038537
Client Project ID: Michigan Meadows/M01046

Lab Sample No: 503795809 Project Sample Number: 5038537-009 Date Collected: 09/10/04 15:15
Client Sample ID: DUP (MMW-4D) Matrix: Water Date Received: 09/10/04 17:22

Parameters	Results	Units	Report Limit	DF	Analyzed	By	CAS No.	Qual	RegLmt
GC/MS Volatiles									
GC/MS VOCs by 8260	Method: EPA 8260								
Dichlorodifluoromethane	ND	ug/l	5.0	1.0	09/15/04 05:52	TMB	75-71-8		
Chloromethane	ND	ug/l	5.0	1.0	09/15/04 05:52	TMB	74-87-3		
Vinyl chloride	200	ug/l	2.0	1.0	09/15/04 05:52	TMB	75-01-4		
Bromomethane	ND	ug/l	5.0	1.0	09/15/04 05:52	TMB	74-83-9		
Chloroethane	ND	ug/l	5.0	1.0	09/15/04 05:52	TMB	75-00-3		
Trichlorofluoromethane	ND	ug/l	5.0	1.0	09/15/04 05:52	TMB	75-69-4		
Methylene chloride	ND	ug/l	5.0	1.0	09/15/04 05:52	TMB	75-09-2		
1,1-Dichloroethene	ND	ug/l	5.0	1.0	09/15/04 05:52	TMB	75-35-4		
trans-1,2-Dichloroethene	ND	ug/l	5.0	1.0	09/15/04 05:52	TMB	156-60-5		
1,1-Dichloroethane	ND	ug/l	5.0	1.0	09/15/04 05:52	TMB	75-34-3		
2,2-Dichloropropane	ND	ug/l	5.0	1.0	09/15/04 05:52	TMB	594-20-7		
cis-1,2-Dichloroethene	1100	ug/l	120	25.0	09/15/04 19:55	TMB	156-59-2		
Chloroform	ND	ug/l	5.0	1.0	09/15/04 05:52	TMB	67-66-3		
Bromochloromethane	ND	ug/l	5.0	1.0	09/15/04 05:52	TMB	74-97-5		
1,1,1-Trichloroethane	ND	ug/l	5.0	1.0	09/15/04 05:52	TMB	71-55-6		
Carbon tetrachloride	ND	ug/l	5.0	1.0	09/15/04 05:52	TMB	56-23-5		
1,1-Dichloropropene	ND	ug/l	5.0	1.0	09/15/04 05:52	TMB	563-58-6		
Benzene	ND	ug/l	5.0	1.0	09/15/04 05:52	TMB	71-43-2		
1,2-Dichloroethane	ND	ug/l	5.0	1.0	09/15/04 05:52	TMB	107-06-2		
Trichloroethene	ND	ug/l	5.0	1.0	09/15/04 05:52	TMB	79-01-6		
1,2-Dichloropropane	ND	ug/l	5.0	1.0	09/15/04 05:52	TMB	78-87-5		
Bromodichloromethane	ND	ug/l	5.0	1.0	09/15/04 05:52	TMB	75-27-4		
Dibromomethane	ND	ug/l	5.0	1.0	09/15/04 05:52	TMB	74-95-3		
Toluene	ND	ug/l	5.0	1.0	09/15/04 05:52	TMB	108-88-3		
1,1,2-Trichloroethane	ND	ug/l	5.0	1.0	09/15/04 05:52	TMB	79-00-5		
Tetrachloroethene	ND	ug/l	5.0	1.0	09/15/04 05:52	TMB	127-18-4		
1,3-Dichloropropane	ND	ug/l	5.0	1.0	09/15/04 05:52	TMB	142-28-9		
Dibromochloromethane	ND	ug/l	5.0	1.0	09/15/04 05:52	TMB	124-48-1		
1,2-Dibromoethane (EDB)	ND	ug/l	5.0	1.0	09/15/04 05:52	TMB	106-93-4		
Chlorobenzene	ND	ug/l	5.0	1.0	09/15/04 05:52	TMB	108-90-7		
1,1,1,2-Tetrachloroethane	ND	ug/l	5.0	1.0	09/15/04 05:52	TMB	630-20-6		
Ethylbenzene	ND	ug/l	5.0	1.0	09/15/04 05:52	TMB	100-41-4		
m&p-Xylene	ND	ug/l	5.0	1.0	09/15/04 05:52	TMB			
o-Xylene	ND	ug/l	5.0	1.0	09/15/04 05:52	TMB	95-47-6		
Styrene	ND	ug/l	5.0	1.0	09/15/04 05:52	TMB	100-42-5		
Bromoform	ND	ug/l	5.0	1.0	09/15/04 05:52	TMB	75-25-2		
Isopropylbenzene (Cumene)	ND	ug/l	5.0	1.0	09/15/04 05:52	TMB	98-82-8		

REPORT OF LABORATORY ANALYSIS
This report shall not be reproduced, except in full,
without the written consent of Pace Analytical Services, Inc.

CREDITED IN ACCORDANCE nelac

Pace Analytical®
www.pacelabs.com

Pace Analytical Services, Inc.
7726 Moller Road
Indianapolis, IN. 46268
Phone: 317.875.5894
Fax: 317.872.6189

Lab Project Number: 5038537
Client Project ID: Michigan Meadows/M01046

Lab Sample No: 503795809 Project Sample Number: 5038537-009 Date Collected: 09/10/04 15:15
Client Sample ID: DUP (MMW-4D) Matrix: Water Date Received: 09/10/04 17:22

Parameters	Results	Units	Report Limit	DF	Analyzed	By	CAS No.	Qual	RegLmt
1,1,2,2-Tetrachloroethane	ND	ug/l	5.0	1.0	09/15/04 05:52	TMB	79-34-5		
Bromobenzene	ND	ug/l	5.0	1.0	09/15/04 05:52	TMB	108-86-1		
1,2,3-Trichloropropane	ND	ug/l	5.0	1.0	09/15/04 05:52	TMB	96-18-4		
n-Propylbenzene	ND	ug/l	5.0	1.0	09/15/04 05:52	TMB	103-65-1		
2-Chlorotoluene	ND	ug/l	5.0	1.0	09/15/04 05:52	TMB	95-49-8		
1,3,5-Trimethylbenzene	ND	ug/l	5.0	1.0	09/15/04 05:52	TMB	108-67-8		
4-Chlorotoluene	ND	ug/l	5.0	1.0	09/15/04 05:52	TMB	106-43-4		
1,2,4-Trimethylbenzene	ND	ug/l	5.0	1.0	09/15/04 05:52	TMB	95-63-6		
sec-Butylbenzene	ND	ug/l	5.0	1.0	09/15/04 05:52	TMB	135-98-8		
tert-Butylbenzene	ND	ug/l	5.0	1.0	09/15/04 05:52	TMB	98-06-6		
p-Isopropyltoluene	ND	ug/l	5.0	1.0	09/15/04 05:52	TMB	99-87-6		
1,3-Dichlorobenzene	ND	ug/l	5.0	1.0	09/15/04 05:52	TMB	541-73-1		
1,4-Dichlorobenzene	ND	ug/l	5.0	1.0	09/15/04 05:52	TMB	106-46-7		
n-Butylbenzene	ND	ug/l	5.0	1.0	09/15/04 05:52	TMB	104-51-8		
1,2-Dichlorobenzene	ND	ug/l	5.0	1.0	09/15/04 05:52	TMB	95-50-1		
1,2-Dibromo-3-chloropropane	ND	ug/l	5.0	1.0	09/15/04 05:52	TMB	96-12-8		
1,2,4-Trichlorobenzene	ND	ug/l	5.0	1.0	09/15/04 05:52	TMB	120-82-1		
Hexachloro-1,3-butadiene	ND	ug/l	5.0	1.0	09/15/04 05:52	TMB	87-68-3		
Naphthalene	ND	ug/l	5.0	1.0	09/15/04 05:52	TMB	91-20-3		
1,2,3-Trichlorobenzene	ND	ug/l	5.0	1.0	09/15/04 05:52	TMB	87-61-6		
trans-1,3-Dichloropropene	ND	ug/l	5.0	1.0	09/15/04 05:52	TMB	10061-02-6		
cis-1,3-Dichloropropene	ND	ug/l	5.0	1.0	09/15/04 05:52	TMB	10061-01-5		
2-Chloroethylvinyl ether	ND	ug/l	10.	1.0	09/15/04 05:52	TMB	110-75-8		
Acetone	ND	ug/l	25.	1.0	09/15/04 05:52	TMB	67-64-1		
2-Butanone (MEK)	ND	ug/l	10.	1.0	09/15/04 05:52	TMB	78-93-3		
4-Methyl-2-pentanone (MIBK)	ND	ug/l	10.	1.0	09/15/04 05:52	TMB	108-10-1		
Acrolein	ND	ug/l	50.	1.0	09/15/04 05:52	TMB	107-02-8		
Acrylonitrile	ND	ug/l	50.	1.0	09/15/04 05:52	TMB	107-13-1		
2-Hexanone	ND	ug/l	10.	1.0	09/15/04 05:52	TMB	591-78-6		
Vinyl acetate	ND	ug/l	10.	1.0	09/15/04 05:52	TMB	108-05-4		
Iodomethane	ND	ug/l	10.	1.0	09/15/04 05:52	TMB	74-88-4		
Methyl-tert-butyl ether	ND	ug/l	5.0	1.0	09/15/04 05:52	TMB	1634-04-4		
Carbon disulfide	ND	ug/l	5.0	1.0	09/15/04 05:52	TMB	75-15-0		
trans-1,4-Dichloro-2-butene	ND	ug/l	100	1.0	09/15/04 05:52	TMB	110-57-6		
Ethyl methacrylate	ND	ug/l	100	1.0	09/15/04 05:52	TMB	97-63-2		
Xylene (Total)	ND	ug/l	10.	1.0	09/15/04 05:52	TMB	1330-20-7		
Dibromofluoromethane (S)	107	%		1.0	09/15/04 05:52	TMB	1868-53-7		
Toluene-d8 (S)	103	%		1.0	09/15/04 05:52	TMB	2037-26-5		
4-Bromofluorobenzene (S)	103	%		1.0	09/15/04 05:52	TMB	460-00-4		

REPORT OF LABORATORY ANALYSIS
This report shall not be reproduced, except in full,
without the written consent of Pace Analytical Services, Inc.

Pace Analytical®
www.pacelabs.com

Pace Analytical Services, Inc.
7726 Moller Road
Indianapolis, IN 46268
Phone: 317.875.5894
Fax: 317.872.6189

Lab Project Number: 5038537
Client Project ID: Michigan Meadows/M01046

PARAMETER FOOTNOTES

Dilution factor shown represents the factor applied to the reported result and reporting limit due to changes in sample preparation, dilution of the extract, or moisture content

ND	Not detected at or above adjusted reporting limit
NC	Not Calculable
J	Estimated concentration above the adjusted method detection limit and below the adjusted reporting limit
MDL	Adjusted Method Detection Limit
(S)	Surrogate

REPORT OF LABORATORY ANALYSIS
This report shall not be reproduced, except in full,
without the written consent of Pace Analytical Services, Inc.

CREDITED IN ACCORDANCE nelac

Pace Analytical®
www.pacelabs.com

Pace Analytical Services, Inc.
7726 Moller Road
Indianapolis, IN 46268
Phone: 317.875.5894
Fax: 317.872.6189

QUALITY CONTROL DATA

Lab Project Number: 5038537
Client Project ID: Michigan Meadows/M01046

QC Batch: 77212 Analysis Method: EPA 8260
QC Batch Method: EPA 8260 Analysis Description: GC/MS VOCs by 8260
Associated Lab Samples: 503795726 503795734 503795742 503795759 503795767 503795775 503795783 503795791 503795809

METHOD BLANK: 503803165
Associated Lab Samples: 503795726 503795734 503795742 503795759 503795767 503795775 503795783 503795791 503795809

Parameter	Units	Blank Result	Reporting Limit	Footnotes
Dichlorodifluoromethane	ug/l	ND	5.0	
Chloromethane	ug/l	ND	5.0	
Vinyl chloride	ug/l	ND	2.0	
Bromomethane	ug/l	ND	5.0	
Chloroethane	ug/l	ND	5.0	
Trichlorofluoromethane	ug/l	ND	5.0	
Methylene chloride	ug/l	ND	5.0	
1,1-Dichloroethene	ug/l	ND	5.0	
trans-1,2-Dichloroethene	ug/l	ND	5.0	
1,1-Dichloroethane	ug/l	ND	5.0	
2,2-Dichloropropane	ug/l	ND	5.0	
cis-1,2-Dichloroethene	ug/l	ND	5.0	
Chloroform	ug/l	ND	5.0	
Bromochloromethane	ug/l	ND	5.0	
1,1,1-Trichloroethane	ug/l	ND	5.0	
Carbon tetrachloride	ug/l	ND	5.0	
1,1-Dichloropropene	ug/l	ND	5.0	
Benzene	ug/l	ND	5.0	
1,2-Dichloroethane	ug/l	ND	5.0	
Trichloroethene	ug/l	ND	5.0	
1,2-Dichloropropane	ug/l	ND	5.0	
Bromodichloromethane	ug/l	ND	5.0	
Dibromomethane	ug/l	ND	5.0	
Toluene	ug/l	ND	5.0	
1,1,2-Trichloroethane	ug/l	ND	5.0	
Tetrachloroethene	ug/l	ND	5.0	
1,3-Dichloropropane	ug/l	ND	5.0	
Dibromochloromethane	ug/l	ND	5.0	
1,2-Dibromoethane (EDB)	ug/l	ND	5.0	

REPORT OF LABORATORY ANALYSIS
This report shall not be reproduced, except in full,
without the written consent of Pace Analytical Services, Inc.

Pace Analytical®
www.pacelabs.com

Pace Analytical Services, Inc.
7726 Moller Road
Indianapolis, IN 46268
Phone: 317.875.5894
Fax: 317.872.6189

QUALITY CONTROL DATA

Lab Project Number: 5038537
Client Project ID: Michigan Meadows/M01046

METHOD BLANK: 503803165
Associated Lab Samples: 503795726 503795734 503795742 503795759 503795767 503795775 503795783 503795791 503795809

Parameter	Units	Blank Result	Reporting Limit	Footnotes
Chlorobenzene	ug/l	ND	5.0	
1,1,1,2-Tetrachloroethane	ug/l	ND	5.0	
Ethylbenzene	ug/l	ND	5.0	
m&p-Xylene	ug/l	ND	5.0	
o-Xylene	ug/l	ND	5.0	
Styrene	ug/l	ND	5.0	
Bromoform	ug/l	ND	5.0	
Isopropylbenzene (Cumene)	ug/l	ND	5.0	
1,1,2,2-Tetrachloroethane	ug/l	ND	5.0	
Bromobenzene	ug/l	ND	5.0	
1,2,3-Trichloropropane	ug/l	ND	5.0	
n-Propylbenzene	ug/l	ND	5.0	
2-Chlorotoluene	ug/l	ND	5.0	
1,3,5-Trimethylbenzene	ug/l	ND	5.0	
4-Chlorotoluene	ug/l	ND	5.0	
1,2,4-Trimethylbenzene	ug/l	ND	5.0	
sec-Butylbenzene	ug/l	ND	5.0	
tert-Butylbenzene	ug/l	ND	5.0	
p-Isopropyltoluene	ug/l	ND	5.0	
1,3-Dichlorobenzene	ug/l	ND	5.0	
1,4-Dichlorobenzene	ug/l	ND	5.0	
n-Butylbenzene	ug/l	ND	5.0	
1,2-Dichlorobenzene	ug/l	ND	5.0	
1,2-Dibromo-3-chloropropane	ug/l	ND	5.0	
1,2,4-Trichlorobenzene	ug/l	ND	5.0	
Hexachloro-1,3-butadiene	ug/l	ND	5.0	
Naphthalene	ug/l	ND	5.0	
1,2,3-Trichlorobenzene	ug/l	ND	5.0	
trans-1,3-Dichloropropene	ug/l	ND	5.0	
cis-1,3-Dichloropropene	ug/l	ND	5.0	
2-Chloroethylvinyl ether	ug/l	ND	10.	
Acetone	ug/l	ND	25.	
2-Butanone (MEK)	ug/l	ND	10.	
4-Methyl-2-pentanone (MIBK)	ug/l	ND	10.	
Acrolein	ug/l	ND	50.	

REPORT OF LABORATORY ANALYSIS
This report shall not be reproduced, except in full,
without the written consent of Pace Analytical Services, Inc.

CREDITED IN ACCORDANCE WI nelac

Pace Analytical®
www.pacelabs.com

Pace Analytical Services, Inc.
7726 Moller Road
Indianapolis, IN 46268
Phone: 317.875.5894
Fax: 317.872.6189

QUALITY CONTROL DATA

Lab Project Number: 5038537
Client Project ID: Michigan Meadows/M01046

METHOD BLANK: 503803165
Associated Lab Samples: 503795726 503795734 503795742 503795759 503795767 503795775 503795783 503795791 503795809

Parameter	Units	Blank Result	Reporting Limit	Footnotes
Acrylonitrile	ug/l	ND	50.	
2-Hexanone	ug/l	ND	10.	
Vinyl acetate	ug/l	ND	10.	
Iodomethane	ug/l	ND	10.	
Methyl-tert-butyl ether	ug/l	ND	5.0	
Carbon disulfide	ug/l	ND	5.0	
trans-1,4-Dichloro-2-butene	ug/l	ND	100	
Ethyl methacrylate	ug/l	ND	100	
Xylene (Total)	ug/l	ND	10.	
Dibromofluoromethane (S)	%	103		
Toluene-d8 (S)	%	107		
4-Bromofluorobenzene (S)	%	102		

LABORATORY CONTROL SAMPLE: 503803173

Parameter	Units	Spike Conc.	LCS Result	LCS % Rec	Footnotes
Dichlorodifluoromethane	ug/l	50.00	55.81	112	
Chloromethane	ug/l	50.00	49.00	98	
Vinyl chloride	ug/l	50.00	57.10	114	
Bromomethane	ug/l	50.00	51.45	103	
Chloroethane	ug/l	50.00	57.73	115	
Trichlorofluoromethane	ug/l	50.00	53.59	107	
Methylene chloride	ug/l	50.00	57.36	115	
1,1-Dichloroethene	ug/l	50.00	58.15	116	
trans-1,2-Dichloroethene	ug/l	50.00	52.94	106	
1,1-Dichloroethane	ug/l	50.00	53.49	107	
2,2-Dichloropropane	ug/l	50.00	59.44	119	
cis-1,2-Dichloroethene	ug/l	50.00	53.47	107	
Chloroform	ug/l	50.00	51.07	102	
Bromochloromethane	ug/l	50.00	58.70	117	
1,1,1-Trichloroethane	ug/l	50.00	52.86	106	
Carbon tetrachloride	ug/l	50.00	51.97	104	
1,1-Dichloropropene	ug/l	50.00	54.32	109	

REPORT OF LABORATORY ANALYSIS
This report shall not be reproduced, except in full,
without the written consent of Pace Analytical Services, Inc.

CREDITED IN ACCORDANCE WITH nelac

Pace Analytical®
www.pacelabs.com

Pace Analytical Services, Inc.
7726 Moller Road
Indianapolis, IN 46268
Phone: 317.875.5894
Fax: 317.872.6189

QUALITY CONTROL DATA

Lab Project Number: 5038537
Client Project ID: Michigan Meadows/M01046

LABORATORY CONTROL SAMPLE: 503803173

Parameter	Units	Spike Conc.	LCS Result	LCS % Rec	Footnotes
Benzene	ug/l	50.00	55.93	112	
1,2-Dichloroethane	ug/l	50.00	46.61	93	
Trichloroethene	ug/l	50.00	54.51	109	
1,2-Dichloropropane	ug/l	50.00	51.95	104	
Bromodichloromethane	ug/l	50.00	51.09	102	
Dibromomethane	ug/l	50.00	49.89	100	
Toluene	ug/l	50.00	57.66	115	
1,1,2-Trichloroethane	ug/l	50.00	54.71	109	
Tetrachloroethene	ug/l	50.00	41.48	83	
1,3-Dichloropropane	ug/l	50.00	55.11	110	
Dibromochloromethane	ug/l	50.00	51.65	103	
1,2-Dibromoethane (EDB)	ug/l	50.00	54.84	110	
Chlorobenzene	ug/l	50.00	54.80	110	
1,1,1,2-Tetrachloroethane	ug/l	50.00	52.15	104	
Ethylbenzene	ug/l	50.00	54.48	109	
m&p-Xylene	ug/l	100.00	113.3	113	
o-Xylene	ug/l	50.00	56.35	113	
Styrene	ug/l	50.00	56.33	113	
Bromoform	ug/l	50.00	48.98	98	
Isopropylbenzene (Cumene)	ug/l	50.00	50.07	100	
1,1,2,2-Tetrachloroethane	ug/l	50.00	50.36	101	
Bromobenzene	ug/l	50.00	52.77	106	
1,2,3-Trichloropropane	ug/l	50.00	43.44	87	
n-Propylbenzene	ug/l	50.00	54.53	109	
2-Chlorotoluene	ug/l	50.00	54.70	109	
1,3,5-Trimethylbenzene	ug/l	50.00	56.03	112	
4-Chlorotoluene	ug/l	50.00	56.17	112	
1,2,4-Trimethylbenzene	ug/l	50.00	55.24	110	
sec-Butylbenzene	ug/l	50.00	56.13	112	
tert-Butylbenzene	ug/l	50.00	53.23	106	
p-Isopropyltoluene	ug/l	50.00	52.95	106	
1,3-Dichlorobenzene	ug/l	50.00	55.18	110	
1,4-Dichlorobenzene	ug/l	50.00	51.95	104	
n-Butylbenzene	ug/l	50.00	51.92	104	
1,2-Dichlorobenzene	ug/l	50.00	53.27	107	
1,2-Dibromo-3-chloropropane	ug/l	50.00	50.18	100	
1,2,4-Trichlorobenzene	ug/l	50.00	48.89	98	

REPORT OF LABORATORY ANALYSIS
This report shall not be reproduced, except in full,
without the written consent of Pace Analytical Services, Inc.

CREDITED IN ACCORDANCE WITH nelac

Pace Analytical®
www.pacelabs.com

Pace Analytical Services, Inc.
7726 Moller Road
Indianapolis, IN 46268
Phone: 317.875.5894
Fax: 317.872.6189

QUALITY CONTROL DATA

Lab Project Number: 5038537
Client Project ID: Michigan Meadows/M01046

LABORATORY CONTROL SAMPLE: 503803173

Parameter	Units	Spike Conc.	LCS Result	LCS % Rec	Footnotes
Hexachloro-1,3-butadiene	ug/l	50.00	52.33	105	
Naphthalene	ug/l	50.00	51.82	104	
1,2,3-Trichlorobenzene	ug/l	50.00	51.91	104	
trans-1,3-Dichloropropene	ug/l	50.00	55.11	110	
cis-1,3-Dichloropropene	ug/l	50.00	55.22	110	
Methyl-tert-butyl ether	ug/l	100.00	103.5	103	
Xylene (Total)	ug/l	150.00	169.6	113	
Dibromofluoromethane (S)				98	
Toluene-d8 (S)				108	
4-Bromofluorobenzene (S)				103	

MATRIX SPIKE & MATRIX SPIKE DUPLICATE: 503803181 503803199

Parameter	Units	503795734 Result	Spike Conc.	MS Result	MSD Result	MS % Rec	MSD % Rec	RPD	Footnotes
1,1-Dichloroethene	ug/l	0	50.00	51.9B	58.77	104	118	12	
Benzene	ug/l	0	50.00	49.18	55.59	98	111	12	
Trichloroethene	ug/l	0	50.00	47.48	54.08	95	108	13	
Toluene	ug/l	0	50.00	50.74	58.83	102	118	15	
Chlorobenzene	ug/l	0	50.00	48.49	55.94	97	112	14	
Dibromofluoromethane (S)						101	100		
Toluene-d8 (S)						106	107		
4-Bromofluorobenzene (S)						102	102		

REPORT OF LABORATORY ANALYSIS
This report shall not be reproduced, except in full,
without the written consent of Pace Analytical Services, Inc.

CREDITED IN ACCORDANCE WITH nelac

Pace Analytical®
www.pacelabs.com

Pace Analytical Services, Inc.
7726 Moller Road
Indianapolis, IN 46268
Phone: 317.875.5894
Fax: 317.872.6189

Lab Project Number: 5038537
Client Project ID: Michigan Meadows/M01046

QUALITY CONTROL DATA PARAMETER FOOTNOTES

Consistent with EPA guidelines, unrounded concentrations are displayed and have been used to calculate % Rec and RPD values.

LCS(D)	Laboratory Control Sample (Duplicate)
MS(D)	Matrix Spike (Duplicate)
DUP	Sample Duplicate
ND	Not detected at or above adjusted reporting limit
NC	Not Calculable
J	Estimated concentration above the adjusted method detection limit and below the adjusted reporting limit
MDL	Adjusted Method Detection Limit
RPD	Relative Percent Difference
(S)	Surrogate

REPORT OF LABORATORY ANALYSIS
This report shall not be reproduced, except in full,
without the written consent of Pace Analytical Services, Inc.

Accredited in accordance with nelac

Reference 99 Page 177

Pace Analytical®
www.pacelabs.com

CHAIN OF CUSTODY / Analytical Request Document

The Chain-of-Custody is a LEGAL DOCUMENT. All relevant fields must be completed accurately.

823603

Page: 1 of 1

Section A — Required Client Information:

Company: Mundell & Associates
Address: 429 E. Vermont St, Indianapolis, IN 46202
Phone: 630-9060 Fax: 630-9065

Section B — Required Client Information:

Report To: John Mundell
Copy To: Leena Lothe
Invoice To: Barb Whaley
P.O.
Project Name: Michigan Meadows
Project Number: M01046

Client Information (Check quote/contract):
Requested Due Date: *TAT: 2 weeks

* Turn around times less than 14 days subject to laboratory and contractual obligations and may result in a Rush Turnaround Surcharge.
Turn Around Time (TAT) in calendar days.

Section C — To Be Completed by Pace Analytical and Client

Quote Reference:
Project Manager:
Project #: 5038537
Profile #:
Requested Analysis: VOCs 8260

Section D — Required Client Information:

Valid Matrix Codes:

MATRIX	CODE
WATER	WT
SOIL	SL
OIL	OL
WIPE	WP
AIR	AR
TISSUE	TS
OTHER	OT

ITEM #	SAMPLE ID (One character per box. (A–Z, 0–9 / .–) Sample IDs MUST BE UNIQUE)	MATRIX CODE	DATE COLLECTED (mm / dd / yy)	TIME COLLECTED (hh:mm a/p)	# Containers	Unpreserved	H_2SO_4	HNO_3	HCl	NaOH	$Na_2S_2O_3$	Methanol	Other	Remarks / Lab ID
1	MMW-1S	WT	09/10/04	10:23a	3				✓					503795726
2	MMW-2S			11:00a										734
3	MMW-3S			4:20p										742
4	MMW-4D			3:10p										759
5	MMW-5D			2:10p										767
6	MMW-6D			1:25p										775
7	MMW-7S			12:15p										783
8	MS (MMW-2S)			11:20a										(734)
9	MSD (MMW-2S)			11:25a										(734)
10	TB-01			11:30~2										791
11	DUP (MMW-4D)			3:15a	3									809
12														33 OK KS

SITE LOCATION	REGULATORY AGENCY
☐ NC ☐ SC ☐ GA	☐ NPDES ☐ GROUND WATER ☐ DRINKING WATER
☐ Other_____	☐ UST ☐ RCRA ☐ Other_____

RELINQUISHED BY / AFFILIATION	DATE	TIME	ACCEPTED BY / AFFILIATION	DATE	TIME
LLothe	9/10/04	5:22p	[illegible]	9/10/04	5:22

SAMPLE CONDITION

Temp in °C	6
Received on Ice	(Y)/N
Sealed Cooler	Y/(N)
Samples Intact	(Y)/N

SAMPLE NOTES
Mundell delivered

Additional Comments:

SAMPLER NAME AND SIGNATURE
PRINT Name of SAMPLER: LEENA LOTHE
SIGNATURE of SAMPLER: LLothe
DATE Signed: (MM / DD / YY) 09/10/04

ORIGINAL

SEE REVERSE SIDE FOR INSTRUCTIONS

Form COC01 Rev. 0903

Pace Analytical®
www.pacelabs.com

Pace Analytical Services, Inc.
7726 Moller Road
Indianapolis, IN 46268
Phone: 317.875.5894
Fax: 317.872.6189

October 06, 2004

Mr. John Mundell
Mundell & Associates, Inc.
429 East Vermont Street
Suite 200
Indianapolis, IN 46202

RE: Lab Project Number: 5039120
Client Project ID: Michigan Meadows

Dear Mr. Mundell:

Enclosed are the analytical results for sample(s) received by the laboratory on September 30, 2004. Results reported herein conform to the most current NELAC standards, where applicable, unless otherwise narrated in the body of the report.

If you have any questions concerning this report please feel free to contact me.

Sincerely,

Mick Mayse

Mick Mayse
mmayse@pacelabs.com
Project Manager

Enclosures

REPORT OF LABORATORY ANALYSIS

This report shall not be reproduced, except in full,
without the written consent of Pace Analytical Services, Inc.

Pace Analytical™
www.pacelabs.com

Pace Analytical Services, Inc.
7726 Moller Road
Indianapolis, IN 46268
Phone: 317.875.5894
Fax: 317.872.6189

October 12, 2004

Case Narrative- Project Review
Project 5039120 (Mundell & Associates, Inc.)

Sample Receiving

No discrepancies were noted concerning sample receipt or sample transfer.

GC/MS Volatiles- Method 8260

The spike and spike duplicate information listed on page 12 for sample 503862435 is considered batch quality control data because it was not run on a sample from this project. Therefore this spike recovery information should not be used to evaluate sample data from this project. There was no project-specific sample spiked for this analysis. All other quality control indicators for this project (method blank and LCS results) are within laboratory acceptance limits.

I have reviewed the data from this project and all other discrepancies are sufficiently covered in the footnotes in the sample results section and the quality control section of the final report.

Tim Harrison
Quality Manager
Pace Analytical Services

The review of this project and the associated case narrative are part of a 10% review process for final reports. This process is completed by the Quality Manager as part of Pace Analytical's certification requirements.

Pace Analytical®
www.pacelabs.com

Pace Analytical Services, Inc.
7726 Moller Road
Indianapolis, IN 46268
Phone: 317.875.5894
Fax: 317.872.6189

Lab Project Number: 5039120
Client Project ID: Michigan Meadows

Lab Sample No: 503866014 | Project Sample Number: 5039120-001 | Date Collected: 09/30/04 10:30
Client Sample ID: MSW-1 | Matrix: Water | Date Received: 09/30/04 15:31

Parameters	Results	Units	Report Limit	DF	Analyzed	By	CAS No.	Qual	RegLmt
GC/MS Volatiles									
GC/MS VOCs by 8260	Method: EPA 8260								
Dichlorodifluoromethane	ND	ug/l	5.0	1.0	10/06/04 08:02	TMB	75-71-8		
Chloromethane	ND	ug/l	5.0	1.0	10/06/04 08:02	TMB	74-87-3		
Vinyl chloride	ND	ug/l	2.0	1.0	10/06/04 08:02	TMB	75-01-4		
Bromomethane	ND	ug/l	5.0	1.0	10/06/04 08:02	TMB	74-83-9		
Chloroethane	ND	ug/l	5.0	1.0	10/06/04 08:02	TMB	75-00-3		
Trichlorofluoromethane	ND	ug/l	5.0	1.0	10/06/04 08:02	TMB	75-69-4		
Methylene chloride	ND	ug/l	5.0	1.0	10/06/04 08:02	TMB	75-09-2		
1,1-Dichloroethene	ND	ug/l	5.0	1.0	10/06/04 08:02	TMB	75-35-4		
trans-1,2-Dichloroethene	ND	ug/l	5.0	1.0	10/06/04 08:02	TMB	156-60-5		
1,1-Dichloroethane	ND	ug/l	5.0	1.0	10/06/04 08:02	TMB	75-34-3		
2,2-Dichloropropane	ND	ug/l	5.0	1.0	10/06/04 08:02	TMB	594-20-7		
cis-1,2-Dichloroethene	ND	ug/l	5.0	1.0	10/06/04 08:02	TMB	156-59-2		
Chloroform	ND	ug/l	5.0	1.0	10/06/04 08:02	TMB	67-66-3		
Bromochloromethane	ND	ug/l	5.0	1.0	10/06/04 08:02	TMB	74-97-5		
1,1,1-Trichloroethane	ND	ug/l	5.0	1.0	10/06/04 08:02	TMB	71-55-6		
Carbon tetrachloride	ND	ug/l	5.0	1.0	10/06/04 08:02	TMB	56-23-5		
1,1-Dichloropropene	ND	ug/l	5.0	1.0	10/06/04 08:02	TMB	563-58-6		
Benzene	ND	ug/l	5.0	1.0	10/06/04 08:02	TMB	71-43-2		
1,2-Dichloroethane	ND	ug/l	5.0	1.0	10/06/04 08:02	TMB	107-06-2		
Trichloroethene	ND	ug/l	5.0	1.0	10/06/04 08:02	TMB	79-01-6		
1,2-Dichloropropane	ND	ug/l	5.0	1.0	10/06/04 08:02	TMB	78-87-5		
Bromodichloromethane	ND	ug/l	5.0	1.0	10/06/04 08:02	TMB	75-27-4		
Dibromomethane	ND	ug/l	5.0	1.0	10/06/04 08:02	TMB	74-95-3		
Toluene	ND	ug/l	5.0	1.0	10/06/04 08:02	TMB	108-88-3		
1,1,2-Trichloroethane	ND	ug/l	5.0	1.0	10/06/04 08:02	TMB	79-00-5		
Tetrachloroethene	ND	ug/l	5.0	1.0	10/06/04 08:02	TMB	127-18-4		
1,3-Dichloropropane	ND	ug/l	5.0	1.0	10/06/04 08:02	TMB	142-28-9		
Dibromochloromethane	ND	ug/l	5.0	1.0	10/06/04 08:02	TMB	124-48-1		
1,2-Dibromoethane (EDB)	ND	ug/l	5.0	1.0	10/06/04 08:02	TMB	106-93-4		
Chlorobenzene	ND	ug/l	5.0	1.0	10/06/04 08:02	TMB	108-90-7		
1,1,1,2-Tetrachloroethane	ND	ug/l	5.0	1.0	10/06/04 08:02	TMB	630-20-6		
Ethylbenzene	ND	ug/l	5.0	1.0	10/06/04 08:02	TMB	100-41-4		
m&p-Xylene	ND	ug/l	5.0	1.0	10/06/04 08:02	TMB			
o-Xylene	ND	ug/l	5.0	1.0	10/06/04 08:02	TMB	95-47-6		
Styrene	ND	ug/l	5.0	1.0	10/06/04 08:02	TMB	100-42-5		
Bromoform	ND	ug/l	5.0	1.0	10/06/04 08:02	TMB	75-25-2		
Isopropylbenzene (Cumene)	ND	ug/l	5.0	1.0	10/06/04 08:02	TMB	98-82-8		

REPORT OF LABORATORY ANALYSIS
This report shall not be reproduced, except in full,
without the written consent of Pace Analytical Services, Inc.

Pace Analytical®
www.pacelabs.com

Pace Analytical Services, Inc.
7726 Moller Road
Indianapolis, IN 46268
Phone: 317.875.5894
Fax: 317.872.6189

Lab Project Number: 5039120
Client Project ID: Michigan Meadows

Lab Sample No: 503866014 Project Sample Number: 5039120-001 Date Collected: 09/30/04 10:30
Client Sample ID: MSW-1 Matrix: Water Date Received: 09/30/04 15:31

Parameters	Results	Units	Report Limit	DF	Analyzed	By	CAS No.	Qual	RegLmt
1,1,2,2-Tetrachloroethane	ND	ug/l	5.0	1.0	10/06/04 08:02	TMB	79-34-5		
Bromobenzene	ND	ug/l	5.0	1.0	10/06/04 08:02	TMB	108-86-1		
1,2,3-Trichloropropane	ND	ug/l	5.0	1.0	10/06/04 08:02	TMB	96-18-4		
n-Propylbenzene	ND	ug/l	5.0	1.0	10/06/04 08:02	TMB	103-65-1		
2-Chlorotoluene	ND	ug/l	5.0	1.0	10/06/04 08:02	TMB	95-49-8		
1,3,5-Trimethylbenzene	ND	ug/l	5.0	1.0	10/06/04 08:02	TMB	108-67-8		
4-Chlorotoluene	ND	ug/l	5.0	1.0	10/06/04 08:02	TMB	106-43-4		
1,2,4-Trimethylbenzene	ND	ug/l	5.0	1.0	10/06/04 08:02	TMB	95-63-6		
sec-Butylbenzene	ND	ug/l	5.0	1.0	10/06/04 08:02	TMB	135-98-8		
tert-Butylbenzene	ND	ug/l	5.0	1.0	10/06/04 08:02	TMB	98-06-6		
p-Isopropyltoluene	ND	ug/l	5.0	1.0	10/06/04 08:02	TMB	99-87-6		
1,3-Dichlorobenzene	ND	ug/l	5.0	1.0	10/06/04 08:02	TMB	541-73-1		
1,4-Dichlorobenzene	ND	ug/l	5.0	1.0	10/06/04 08:02	TMB	106-46-7		
n-Butylbenzene	ND	ug/l	5.0	1.0	10/06/04 08:02	TMB	104-51-8		
1,2-Dichlorobenzene	ND	ug/l	5.0	1.0	10/06/04 08:02	TMB	95-50-1		
1,2-Dibromo-3-chloropropane	ND	ug/l	5.0	1.0	10/06/04 08:02	TMB	96-12-8		
1,2,4-Trichlorobenzene	ND	ug/l	5.0	1.0	10/06/04 08:02	TMB	120-82-1		
Hexachloro-1,3-butadiene	ND	ug/l	5.0	1.0	10/06/04 08:02	TMB	87-68-3		
Naphthalene	ND	ug/l	5.0	1.0	10/06/04 08:02	TMB	91-20-3		
1,2,3-Trichlorobenzene	ND	ug/l	5.0	1.0	10/06/04 08:02	TMB	87-61-6		
trans-1,3-Dichloropropene	ND	ug/l	5.0	1.0	10/06/04 08:02	TMB	10061-02-6		
cis-1,3-Dichloropropene	ND	ug/l	5.0	1.0	10/06/04 08:02	TMB	10061-01-5		
2-Chloroethylvinyl ether	ND	ug/l	10.	1.0	10/06/04 08:02	TMB	110-75-8		
Acetone	ND	ug/l	25.	1.0	10/06/04 08:02	TMB	67-64-1		
2-Butanone (MEK)	ND	ug/l	10.	1.0	10/06/04 08:02	TMB	78-93-3		
4-Methyl-2-pentanone (MIBK)	ND	ug/l	10.	1.0	10/06/04 08:02	TMB	108-10-1		
Acrolein	ND	ug/l	50.	1.0	10/06/04 08:02	TMB	107-02-8		
Acrylonitrile	ND	ug/l	50.	1.0	10/06/04 08:02	TMB	107-13-1		
2-Hexanone	ND	ug/l	10.	1.0	10/06/04 08:02	TMB	591-78-6		
Vinyl acetate	ND	ug/l	10.	1.0	10/06/04 08:02	TMB	108-05-4		
Iodomethane	ND	ug/l	10.	1.0	10/06/04 08:02	TMB	74-88-4		
Methyl-tert-butyl ether	ND	ug/l	5.0	1.0	10/06/04 08:02	TMB	1634-04-4		
Carbon disulfide	ND	ug/l	5.0	1.0	10/06/04 08:02	TMB	75-15-0		
trans-1,4-Dichloro-2-butene	ND	ug/l	100	1.0	10/06/04 08:02	TMB	110-57-6		
Ethyl methacrylate	ND	ug/l	100	1.0	10/06/04 08:02	TMB	97-63-2		
Xylene (Total)	ND	ug/l	10.	1.0	10/06/04 08:02	TMB	1330-20-7		
Dibromofluoromethane (S)	100	%		1.0	10/06/04 08:02	TMB	1868-53-7		
Toluene-d8 (S)	94	%		1.0	10/06/04 08:02	TMB	2037-26-5		
4-Bromofluorobenzene (S)	95	%		1.0	10/06/04 08:02	TMB	460-00-4		

REPORT OF LABORATORY ANALYSIS
This report shall not be reproduced, except in full,
without the written consent of Pace Analytical Services, Inc.

Pace Analytical®
www.pacelabs.com

Pace Analytical Services, Inc.
7726 Moller Road
Indianapolis, IN 46268
Phone: 317.875.5894
Fax: 317.872.6189

Lab Project Number: 5039120
Client Project ID: Michigan Meadows

Lab Sample No: 503866022 | Project Sample Number: 5039120-002 | Date Collected: 09/30/04 10:28
Client Sample ID: MSW-2 | Matrix: Water | Date Received: 09/30/04 15:31

Parameters	Results	Units	Report Limit	DF	Analyzed	By	CAS No.	Qual	RegLmt
GC/MS Volatiles									
GC/MS VOCs by 8260	Method: EPA 8260								
Dichlorodifluoromethane	ND	ug/l	5.0	1.0	10/06/04 08:33	TMB	75-71-8		
Chloromethane	ND	ug/l	5.0	1.0	10/06/04 08:33	TMB	74-87-3		
Vinyl chloride	ND	ug/l	2.0	1.0	10/06/04 08:33	TMB	75-01-4		
Bromomethane	ND	ug/l	5.0	1.0	10/06/04 08:33	TMB	74-83-9		
Chloroethane	ND	ug/l	5.0	1.0	10/06/04 08:33	TMB	75-00-3		
Trichlorofluoromethane	ND	ug/l	5.0	1.0	10/06/04 08:33	TMB	75-69-4		
Methylene chloride	ND	ug/l	5.0	1.0	10/06/04 08:33	TMB	75-09-2		
1.1-Dichloroethene	ND	ug/l	5.0	1.0	10/06/04 08:33	TMB	75-35-4		
trans-1.2-Dichloroethene	ND	ug/l	5.0	1.0	10/06/04 08:33	TMB	156-60-5		
1.1-Dichloroethane	ND	ug/l	5.0	1.0	10/06/04 08:33	TMB	75-34-3		
2.2-Dichloropropane	ND	ug/l	5.0	1.0	10/06/04 08:33	TMB	594-20-7		
cis-1.2-Dichloroethene	12.	ug/l	5.0	1.0	10/06/04 08:33	TMB	156-59-2		
Chloroform	ND	ug/l	5.0	1.0	10/06/04 08:33	TMB	67-66-3		
Bromochloromethane	ND	ug/l	5.0	1.0	10/06/04 08:33	TMB	74-97-5		
1.1.1-Trichloroethane	ND	ug/l	5.0	1.0	10/06/04 08:33	TMB	71-55-6		
Carbon tetrachloride	ND	ug/l	5.0	1.0	10/06/04 08:33	TMB	56-23-5		
1.1-Dichloropropene	ND	ug/l	5.0	1.0	10/06/04 08:33	TMB	563-58-6		
Benzene	ND	ug/l	5.0	1.0	10/06/04 08:33	TMB	71-43-2		
1.2-Dichloroethane	ND	ug/l	5.0	1.0	10/06/04 08:33	TMB	107-06-2		
Trichloroethene	ND	ug/l	5.0	1.0	10/06/04 08:33	TMB	79-01-6		
1.2-Dichloropropane	ND	ug/l	5.0	1.0	10/06/04 08:33	TMB	78-87-5		
Bromodichloromethane	ND	ug/l	5.0	1.0	10/06/04 08:33	TMB	75-27-4		
Dibromomethane	ND	ug/l	5.0	1.0	10/06/04 08:33	TMB	74-95-3		
Toluene	ND	ug/l	5.0	1.0	10/06/04 08:33	TMB	108-88-3		
1.1.2-Trichloroethane	ND	ug/l	5.0	1.0	10/06/04 08:33	TMB	79-00-5		
Tetrachloroethene	ND	ug/l	5.0	1.0	10/06/04 08:33	TMB	127-18-4		
1.3-Dichloropropane	ND	ug/l	5.0	1.0	10/06/04 08:33	TMB	142-28-9		
Dibromochloromethane	ND	ug/l	5.0	1.0	10/06/04 08:33	TMB	124-48-1		
1.2-Dibromoethane (EDB)	ND	ug/l	5.0	1.0	10/06/04 08:33	TMB	106-93-4		
Chlorobenzene	ND	ug/l	5.0	1.0	10/06/04 08:33	TMB	108-90-7		
1.1.1.2-Tetrachloroethane	ND	ug/l	5.0	1.0	10/06/04 08:33	TMB	630-20-6		
Ethylbenzene	ND	ug/l	5.0	1.0	10/06/04 08:33	TMB	100-41-4		
m&p-Xylene	ND	ug/l	5.0	1.0	10/06/04 08:33	TMB			
o-Xylene	ND	ug/l	5.0	1.0	10/06/04 08:33	TMB	95-47-6		
Styrene	ND	ug/l	5.0	1.0	10/06/04 08:33	TMB	100-42-5		
Bromoform	ND	ug/l	5.0	1.0	10/06/04 08:33	TMB	75-25-2		
Isopropylbenzene (Cumene)	ND	ug/l	5.0	1.0	10/06/04 08:33	TMB	98-82-8		

REPORT OF LABORATORY ANALYSIS

This report shall not be reproduced, except in full,
without the written consent of Pace Analytical Services, Inc.

Pace Analytical®
www.pacelabs.com

Pace Analytical Services, Inc.
7726 Moller Road
Indianapolis, IN 46268
Phone: 317.875.5894
Fax: 317.872.6189

Lab Project Number: 5039120
Client Project ID: Michigan Meadows

Lab Sample No: 503866022 Project Sample Number: 5039120-002 Date Collected: 09/30/04 10:28
Client Sample ID: MSW-2 Matrix: Water Date Received: 09/30/04 15:31

Parameters	Results	Units	Report Limit	DF	Analyzed	By	CAS No.	Qual	RegLmt
1,1,2,2-Tetrachloroethane	ND	ug/l	5.0	1.0	10/06/04 08:33	TMB	79-34-5		
Bromobenzene	ND	ug/l	5.0	1.0	10/06/04 08:33	TMB	108-86-1		
1,2,3-Trichloropropane	ND	ug/l	5.0	1.0	10/06/04 08:33	TMB	96-18-4		
n-Propylbenzene	ND	ug/l	5.0	1.0	10/06/04 08:33	TMB	103-65-1		
2-Chlorotoluene	ND	ug/l	5.0	1.0	10/06/04 08:33	TMB	95-49-8		
1,3,5-Trimethylbenzene	ND	ug/l	5.0	1.0	10/06/04 08:33	TMB	108-67-8		
4-Chlorotoluene	ND	ug/l	5.0	1.0	10/06/04 08:33	TMB	106-43-4		
1,2,4-Trimethylbenzene	ND	ug/l	5.0	1.0	10/06/04 08:33	TMB	95-63-6		
sec-Butylbenzene	ND	ug/l	5.0	1.0	10/06/04 08:33	TMB	135-98-8		
tert-Butylbenzene	ND	ug/l	5.0	1.0	10/06/04 08:33	TMB	98-06-6		
p-Isopropyltoluene	ND	ug/l	5.0	1.0	10/06/04 08:33	TMB	99-87-6		
1,3-Dichlorobenzene	ND	ug/l	5.0	1.0	10/06/04 08:33	TMB	541-73-1		
1,4-Dichlorobenzene	ND	ug/l	5.0	1.0	10/06/04 08:33	TMB	106-46-7		
n-Butylbenzene	ND	ug/l	5.0	1.0	10/06/04 08:33	TMB	104-51-8		
1,2-Dichlorobenzene	ND	ug/l	5.0	1.0	10/06/04 08:33	TMB	95-50-1		
1,2-Dibromo-3-chloropropane	ND	ug/l	5.0	1.0	10/06/04 08:33	TMB	96-12-8		
1,2,4-Trichlorobenzene	ND	ug/l	5.0	1.0	10/06/04 08:33	TMB	120-82-1		
Hexachloro-1,3-butadiene	ND	ug/l	5.0	1.0	10/06/04 08:33	TMB	87-68-3		
Naphthalene	ND	ug/l	5.0	1.0	10/06/04 08:33	TMB	91-20-3		
1,2,3-Trichlorobenzene	ND	ug/l	5.0	1.0	10/06/04 08:33	TMB	87-61-6		
trans-1,3-Dichloropropene	ND	ug/l	5.0	1.0	10/06/04 08:33	TMB	10061-02-6		
cis-1,3-Dichloropropene	ND	ug/l	5.0	1.0	10/06/04 08:33	TMB	10061-01-5		
2-Chloroethylvinyl ether	ND	ug/l	10.	1.0	10/06/04 08:33	TMB	110-75-8		
Acetone	ND	ug/l	25.	1.0	10/06/04 08:33	TMB	67-64-1		
2-Butanone (MEK)	ND	ug/l	10.	1.0	10/06/04 08:33	TMB	78-93-3		
4-Methyl-2-pentanone (MIBK)	ND	ug/l	10.	1.0	10/06/04 08:33	TMB	108-10-1		
Acrolein	ND	ug/l	50.	1.0	10/06/04 08:33	TMB	107-02-8		
Acrylonitrile	ND	ug/l	50.	1.0	10/06/04 08:33	TMB	107-13-1		
2-Hexanone	ND	ug/l	10.	1.0	10/06/04 08:33	TMB	591-78-6		
Vinyl acetate	ND	ug/l	10.	1.0	10/06/04 08:33	TMB	108-05-4		
Iodomethane	ND	ug/l	10.	1.0	10/06/04 08:33	TMB	74-88-4		
Methyl-tert-butyl ether	ND	ug/l	5.0	1.0	10/06/04 08:33	TMB	1634-04-4		
Carbon disulfide	ND	ug/l	5.0	1.0	10/06/04 08:33	TMB	75-15-0		
trans-1,4-Dichloro-2-butene	ND	ug/l	100	1.0	10/06/04 08:33	TMB	110-57-6		
Ethyl methacrylate	ND	ug/l	100	1.0	10/06/04 08:33	TMB	97-63-2		
Xylene (Total)	ND	ug/l	10.	1.0	10/06/04 08:33	TMB	1330-20-7		
Dibromofluoromethane (S)	113	%		1.0	10/06/04 08:33	TMB	1868-53-7		
Toluene-d8 (S)	88	%		1.0	10/06/04 08:33	TMB	2037-26-5		
4-Bromofluorobenzene (S)	97	%		1.0	10/06/04 08:33	TMB	460-00-4		

REPORT OF LABORATORY ANALYSIS
This report shall not be reproduced, except in full,
without the written consent of Pace Analytical Services, Inc.

Pace Analytical®
www.pacelabs.com

Pace Analytical Services, Inc.
7726 Moller Road
Indianapolis, IN 46268
Phone: 317.875.5894
Fax: 317.872.6189

Lab Project Number: 5039120
Client Project ID: Michigan Meadows

Lab Sample No: 503866030 | Project Sample Number: 5039120-003 | Date Collected: 09/30/04 10:50
Client Sample ID: MSW-3 | Matrix: Water | Date Received: 09/30/04 15:31

Parameters	Results	Units	Report Limit	DF	Analyzed	By	CAS No.	Qual	RegLmt
GC/MS Volatiles									
GC/MS VOCs by 8260	Method: EPA 8260								
Dichlorodifluoromethane	ND	ug/l	5.0	1.0	10/06/04 09:04	TMB	75-71-8		
Chloromethane	ND	ug/l	5.0	1.0	10/06/04 09:04	TMB	74-87-3		
Vinyl chloride	ND	ug/l	2.0	1.0	10/06/04 09:04	TMB	75-01-4		
Bromomethane	ND	ug/l	5.0	1.0	10/06/04 09:04	TMB	74-83-9		
Chloroethane	ND	ug/l	5.0	1.0	10/06/04 09:04	TMB	75-00-3		
Trichlorofluoromethane	ND	ug/l	5.0	1.0	10/06/04 09:04	TMB	75-69-4		
Methylene chloride	ND	ug/l	5.0	1.0	10/06/04 09:04	TMB	75-09-2		
1,1-Dichloroethene	ND	ug/l	5.0	1.0	10/06/04 09:04	TMB	75-35-4		
trans-1,2-Dichloroethene	ND	ug/l	5.0	1.0	10/06/04 09:04	TMB	156-60-5		
1,1-Dichloroethane	ND	ug/l	5.0	1.0	10/06/04 09:04	TMB	75-34-3		
2,2-Dichloropropane	ND	ug/l	5.0	1.0	10/06/04 09:04	TMB	594-20-7		
cis-1,2-Dichloroethene	9.6	ug/l	5.0	1.0	10/06/04 09:04	TMB	156-59-2		
Chloroform	ND	ug/l	5.0	1.0	10/06/04 09:04	TMB	67-66-3		
Bromochloromethane	ND	ug/l	5.0	1.0	10/06/04 09:04	TMB	74-97-5		
1,1,1-Trichloroethane	ND	ug/l	5.0	1.0	10/06/04 09:04	TMB	71-55-6		
Carbon tetrachloride	ND	ug/l	5.0	1.0	10/06/04 09:04	TMB	56-23-5		
1,1-Dichloropropene	ND	ug/l	5.0	1.0	10/06/04 09:04	TMB	563-58-6		
Benzene	ND	ug/l	5.0	1.0	10/06/04 09:04	TMB	71-43-2		
1,2-Dichloroethane	ND	ug/l	5.0	1.0	10/06/04 09:04	TMB	107-06-2		
Trichloroethene	ND	ug/l	5.0	1.0	10/06/04 09:04	TMB	79-01-6		
1,2-Dichloropropane	ND	ug/l	5.0	1.0	10/06/04 09:04	TMB	78-87-5		
Bromodichloromethane	ND	ug/l	5.0	1.0	10/06/04 09:04	TMB	75-27-4		
Dibromomethane	ND	ug/l	5.0	1.0	10/06/04 09:04	TMB	74-95-3		
Toluene	ND	ug/l	5.0	1.0	10/06/04 09:04	TMB	108-88-3		
1,1,2-Trichloroethane	ND	ug/l	5.0	1.0	10/06/04 09:04	TMB	79-00-5		
Tetrachloroethene	ND	ug/l	5.0	1.0	10/06/04 09:04	TMB	127-18-4		
1,3-Dichloropropane	ND	ug/l	5.0	1.0	10/06/04 09:04	TMB	142-28-9		
Dibromochloromethane	ND	ug/l	5.0	1.0	10/06/04 09:04	TMB	124-48-1		
1,2-Dibromoethane (EDB)	ND	ug/l	5.0	1.0	10/06/04 09:04	TMB	106-93-4		
Chlorobenzene	ND	ug/l	5.0	1.0	10/06/04 09:04	TMB	108-90-7		
1,1,1,2-Tetrachloroethane	ND	ug/l	5.0	1.0	10/06/04 09:04	TMB	630-20-6		
Ethylbenzene	ND	ug/l	5.0	1.0	10/06/04 09:04	TMB	100-41-4		
m&p-Xylene	ND	ug/l	5.0	1.0	10/06/04 09:04	TMB			
o-Xylene	ND	ug/l	5.0	1.0	10/06/04 09:04	TMB	95-47-6		
Styrene	ND	ug/l	5.0	1.0	10/06/04 09:04	TMB	100-42-5		
Bromoform	ND	ug/l	5.0	1.0	10/06/04 09:04	TMB	75-25-2		
Isopropylbenzene (Cumene)	ND	ug/l	5.0	1.0	10/06/04 09:04	TMB	98-82-8		

REPORT OF LABORATORY ANALYSIS

This report shall not be reproduced, except in full,
without the written consent of Pace Analytical Services, Inc.

CREDITED IN ACCORDANCE WITH nelac

Pace Analytical®
www.pacelabs.com

Pace Analytical Services, Inc.
7726 Moller Road
Indianapolis, IN 46268
Phone: 317.875.5894
Fax: 317.872.6189

QUALITY CONTROL DATA

Lab Project Number: 5039120
Client Project ID: Michigan Meadows

QC Batch: 78531 Analysis Method: EPA 8260
QC Batch Method: EPA 8260 Analysis Description: GC/MS VOCs by 8260
Associated Lab Samples: 503866014 503866022 503866030

METHOD BLANK: 503881872
Associated Lab Samples: 503866014 503866022 503866030

Parameter	Units	Blank Result	Reporting Limit	Footnotes
Dichlorodifluoromethane	ug/l	ND	5.0	
Chloromethane	ug/l	ND	5.0	
Vinyl chloride	ug/l	ND	2.0	
Bromomethane	ug/l	ND	5.0	
Chloroethane	ug/l	ND	5.0	
Trichlorofluoromethane	ug/l	ND	5.0	
Methylene chloride	ug/l	ND	5.0	
1,1-Dichloroethene	ug/l	ND	5.0	
trans-1,2-Dichloroethene	ug/l	ND	5.0	
1,1-Dichloroethane	ug/l	ND	5.0	
2,2-Dichloropropane	ug/l	ND	5.0	
cis-1,2-Dichloroethene	ug/l	ND	5.0	
Chloroform	ug/l	ND	5.0	
Bromochloromethane	ug/l	ND	5.0	
1,1,1-Trichloroethane	ug/l	ND	5.0	
Carbon tetrachloride	ug/l	ND	5.0	
1,1-Dichloropropene	ug/l	ND	5.0	
Benzene	ug/l	ND	5.0	
1,2-Dichloroethane	ug/l	ND	5.0	
Trichloroethene	ug/l	ND	5.0	
1,2-Dichloropropane	ug/l	ND	5.0	
Bromodichloromethane	ug/l	ND	5.0	
Dibromomethane	ug/l	ND	5.0	
Toluene	ug/l	ND	5.0	
1,1,2-Trichloroethane	ug/l	ND	5.0	
Tetrachloroethene	ug/l	ND	5.0	
1,3-Dichloropropane	ug/l	ND	5.0	
Dibromochloromethane	ug/l	ND	5.0	
1,2-Dibromoethane (EDB)	ug/l	ND	5.0	
Chlorobenzene	ug/l	ND	5.0	
1,1,1,2-Tetrachloroethane	ug/l	ND	5.0	

REPORT OF LABORATORY ANALYSIS
This report shall not be reproduced, except in full,
without the written consent of Pace Analytical Services, Inc.

Pace Analytical®
www.pacelabs.com

Pace Analytical Services, Inc.
7726 Moller Road
Indianapolis, IN 46268
Phone: 317.875.5894
Fax: 317.872.6189

QUALITY CONTROL DATA

Lab Project Number: 5039120
Client Project ID: Michigan Meadows

METHOD BLANK: 503881872
Associated Lab Samples: 503866014 503866022 503866030

Parameter	Units	Blank Result	Reporting Limit	Footnotes
Iodomethane	ug/l	ND	10.	
Methyl-tert-butyl ether	ug/l	ND	5.0	
Carbon disulfide	ug/l	ND	5.0	
trans-1,4-Dichloro-2-butene	ug/l	ND	100	
Ethyl methacrylate	ug/l	ND	100	
Xylene (Total)	ug/l	ND	10.	
Dibromofluoromethane (S)	%	113		
Toluene-d8 (S)	%	91		
4-Bromofluorobenzene (S)	%	91		

LABORATORY CONTROL SAMPLE: 503881880

Parameter	Units	Spike Conc.	LCS Result	LCS % Rec	Footnotes
Dichlorodifluoromethane	ug/l	50.00	40.03	80	
Chloromethane	ug/l	50.00	41.78	84	
Vinyl chloride	ug/l	50.00	38.73	78	
Bromomethane	ug/l	50.00	22.92	46	
Chloroethane	ug/l	50.00	39.54	79	
Trichlorofluoromethane	ug/l	50.00	58.24	116	
Methylene chloride	ug/l	50.00	32.40	65	
1,1-Dichloroethene	ug/l	50.00	45.28	91	
trans-1,2-Dichloroethene	ug/l	50.00	48.34	97	
1,1-Dichloroethane	ug/l	50.00	55.30	111	
2,2-Dichloropropane	ug/l	50.00	57.09	114	
cis-1,2-Dichloroethene	ug/l	50.00	45.16	90	
Chloroform	ug/l	50.00	56.48	113	
Bromochloromethane	ug/l	50.00	60.29	121	
1,1,1-Trichloroethane	ug/l	50.00	60.59	121	
Carbon tetrachloride	ug/l	50.00	59.19	118	
1,1-Dichloropropene	ug/l	50.00	53.49	107	
Benzene	ug/l	50.00	47.30	95	
1,2-Dichloroethane	ug/l	50.00	63.71	127	
Trichloroethene	ug/l	50.00	54.82	110	
1,2-Dichloropropane	ug/l	50.00	50.49	101	

REPORT OF LABORATORY ANALYSIS
This report shall not be reproduced, except in full,
without the written consent of Pace Analytical Services, Inc.

Pace Analytical®
www.pacelabs.com

Pace Analytical Services, Inc.
7726 Moller Road
Indianapolis, IN 46268
Phone: 317.875.5894
Fax: 317.872.6189

QUALITY CONTROL DATA

Lab Project Number: 5039120
Client Project ID: Michigan Meadows

METHOD BLANK: 503881872
Associated Lab Samples: 503866014 503866022 503866030

Parameter	Units	Blank Result	Reporting Limit	Footnotes
Ethylbenzene	ug/l	ND	5.0	
m&p-Xylene	ug/l	ND	5.0	
o-Xylene	ug/l	ND	5.0	
Styrene	ug/l	ND	5.0	
Bromoform	ug/l	ND	5.0	
Isopropylbenzene (Cumene)	ug/l	ND	5.0	
1,1,2,2-Tetrachloroethane	ug/l	ND	5.0	
Bromobenzene	ug/l	ND	5.0	
1,2,3-Trichloropropane	ug/l	ND	5.0	
n-Propylbenzene	ug/l	ND	5.0	
2-Chlorotoluene	ug/l	ND	5.0	
1,3,5-Trimethylbenzene	ug/l	ND	5.0	
4-Chlorotoluene	ug/l	ND	5.0	
1,2,4-Trimethylbenzene	ug/l	ND	5.0	
sec-Butylbenzene	ug/l	ND	5.0	
tert-Butylbenzene	ug/l	ND	5.0	
p-Isopropyltoluene	ug/l	ND	5.0	
1,3-Dichlorobenzene	ug/l	ND	5.0	
1,4-Dichlorobenzene	ug/l	ND	5.0	
n-Butylbenzene	ug/l	ND	5.0	
1,2-Dichlorobenzene	ug/l	ND	5.0	
1,2-Dibromo-3-chloropropane	ug/l	ND	5.0	
1,2,4-Trichlorobenzene	ug/l	ND	5.0	
Hexachloro-1,3-butadiene	ug/l	ND	5.0	
Naphthalene	ug/l	ND	5.0	
1,2,3-Trichlorobenzene	ug/l	ND	5.0	
trans-1,3-Dichloropropene	ug/l	ND	5.0	
cis-1,3-Dichloropropene	ug/l	ND	5.0	
2-Chloroethylvinyl ether	ug/l	ND	10.	
Acetone	ug/l	ND	25.	
2-Butanone (MEK)	ug/l	ND	10.	
4-Methyl-2-pentanone (MIBK)	ug/l	ND	10.	
Acrolein	ug/l	ND	50.	
Acrylonitrile	ug/l	ND	50.	
2-Hexanone	ug/l	ND	10.	
Vinyl acetate	ug/l	ND	10.	

REPORT OF LABORATORY ANALYSIS
This report shall not be reproduced, except in full,
without the written consent of Pace Analytical Services, Inc.

Pace Analytical®
www.pacelabs.com

Pace Analytical Services, Inc.
7726 Moller Road
Indianapolis, IN 46268
Phone: 317.875.5894
Fax: 317.872.6189

QUALITY CONTROL DATA

Lab Project Number: 5039120
Client Project ID: Michigan Meadows

LABORATORY CONTROL SAMPLE: 503881880

Parameter	Units	Spike Conc.	LCS Result	LCS % Rec	Footnotes
Bromodichloromethane	ug/l	50.00	58.27	117	
Dibromomethane	ug/l	50.00	54.97	110	
Toluene	ug/l	50.00	44.50	89	
1,1,2-Trichloroethane	ug/l	50.00	46.42	93	
Tetrachloroethene	ug/l	50.00	37.07	74	
1,3-Dichloropropane	ug/l	50.00	47.40	95	
Dibromochloromethane	ug/l	50.00	42.02	84	
1,2-Dibromoethane (EDB)	ug/l	50.00	46.88	94	
Chlorobenzene	ug/l	50.00	46.95	94	
1,1,1,2-Tetrachloroethane	ug/l	50.00	46.89	94	
Ethylbenzene	ug/l	50.00	50.43	101	
m&p-Xylene	ug/l	100.00	101.5	102	
o-Xylene	ug/l	50.00	51.40	103	
Styrene	ug/l	50.00	49.36	99	
Bromoform	ug/l	50.00	37.36	75	
Isopropylbenzene (Cumene)	ug/l	50.00	47.16	94	
1,1,2,2-Tetrachloroethane	ug/l	50.00	46.11	92	
Bromobenzene	ug/l	50.00	51.48	103	
1,2,3-Trichloropropane	ug/l	50.00	41.44	83	
n-Propylbenzene	ug/l	50.00	46.88	94	
2-Chlorotoluene	ug/l	50.00	47.75	96	
1,3,5-Trimethylbenzene	ug/l	50.00	47.48	95	
4-Chlorotoluene	ug/l	50.00	46.69	93	
1,2,4-Trimethylbenzene	ug/l	50.00	47.21	94	
sec-Butylbenzene	ug/l	50.00	49.15	98	
tert-Butylbenzene	ug/l	50.00	45.29	91	
p-Isopropyltoluene	ug/l	50.00	45.30	91	
1,3-Dichlorobenzene	ug/l	50.00	46.40	93	
1,4-Dichlorobenzene	ug/l	50.00	45.84	92	
n-Butylbenzene	ug/l	50.00	44.35	89	
1,2-Dichlorobenzene	ug/l	50.00	45.84	92	
1,2-Dibromo-3-chloropropane	ug/l	50.00	44.88	90	
1,2,4-Trichlorobenzene	ug/l	50.00	39.87	80	
Hexachloro-1,3-butadiene	ug/l	50.00	44.31	89	
Naphthalene	ug/l	50.00	42.84	86	
1,2,3-Trichlorobenzene	ug/l	50.00	41.26	82	
trans-1,3-Dichloropropene	ug/l	50.00	42.86	86	

REPORT OF LABORATORY ANALYSIS
This report shall not be reproduced, except in full,
without the written consent of Pace Analytical Services, Inc.

Pace Analytical®
www.pacelabs.com

Pace Analytical Services, Inc.
7726 Moller Road
Indianapolis, IN 46268
Phone: 317.875.5894
Fax: 317.872.6189

QUALITY CONTROL DATA

Lab Project Number: 5039120
Client Project ID: Michigan Meadows

LABORATORY CONTROL SAMPLE: 503881880

Parameter	Units	Spike Conc.	LCS Result	LCS % Rec	Footnotes
cis-1,3-Dichloropropene	ug/l	50.00	41.45	83	
Methyl-tert-butyl ether	ug/l	100.00	100.3	100	
Xylene (Total)	ug/l	150.00	152.9	102	
Dibromofluoromethane (S)				110	
Toluene-d8 (S)				88	
4-Bromofluorobenzene (S)				106	

MATRIX SPIKE & MATRIX SPIKE DUPLICATE: 503881898 503881906

Parameter	Units	503862435 Result	Spike Conc.	MS Result	MSD Result	MS % Rec	MSD % Rec	RPD	Footnotes
1,1-Dichloroethene	ug/l	0	50.00	44.83	44.65	90	89	0	
Benzene	ug/l	0	50.00	45.16	47.62	90	95	5	
Trichloroethene	ug/l	0	50.00	48.03	56.14	96	112	16	
Toluene	ug/l	0	50.00	37.41	43.56	75	87	15	
Chlorobenzene	ug/l	0	50.00	37.28	44.81	75	90	18	
Dibromofluoromethane (S)						111	107		
Toluene-d8 (S)						91	88		
4-Bromofluorobenzene (S)						108	105		

REPORT OF LABORATORY ANALYSIS
This report shall not be reproduced, except in full,
without the written consent of Pace Analytical Services, Inc.

Pace Analytical®
www.pacelabs.com

Pace Analytical Services, Inc.
7726 Moller Road
Indianapolis, IN 46268
Phone: 317.875.5894
Fax: 317.872.6189

Lab Project Number: 5039120
Client Project ID: Michigan Meadows

QUALITY CONTROL DATA PARAMETER FOOTNOTES

Consistent with EPA guidelines, unrounded concentrations are displayed and have been used to calculate % Rec and RPD values.

LCS(D)	Laboratory Control Sample (Duplicate)
MS(D)	Matrix Spike (Duplicate)
DUP	Sample Duplicate
ND	Not detected at or above adjusted reporting limit
NC	Not Calculable
J	Estimated concentration above the adjusted method detection limit and below the adjusted reporting limit
MDL	Adjusted Method Detection Limit
RPD	Relative Percent Difference
(S)	Surrogate

REPORT OF LABORATORY ANALYSIS
This report shall not be reproduced, except in full,
without the written consent of Pace Analytical Services, Inc.

Pace Analytical®
www.pacelabs.com

CHAIN OF CUSTODY / Analytical Request Document

The Chain-of-Custody is a LEGAL DOCUMENT. All relevant fields must be completed accurately.

776769

Page: 1 of 1

Section A — Required Client Information:

Company: Mundell & Associates
Address: 429 E. Vermont St.
Indianapolis, IN 46202
Phone: 630-9060 Fax: 630-9065

Section B — Required Client Information:

Report To: John Mundell
Copy To: Leena Lothe
Invoice To: Barb Whaley
P.O.:
Project Name: Michigan Meadows
Project Number: M01046

Client Information (Check quote/contract):
Requested Due Date:
*TAT: 2 weeks

* Turn around times less than 14 days subject to laboratory and contractual obligations and may result in a Rush Turnaround Surcharge.
Turn Around Time (TAT) in calendar days.

Section C — To Be Completed by Pace Analytical and Client

Quote Reference:
Project Manager:
Project #: 5039120
Profile #:
Requested Analysis: VOCs 8260

Section D — Required Client Information:

SAMPLE ID
One character per box.
(A–Z, 0–9 / .–)
Sample IDs MUST BE UNIQUE

Valid Matrix Codes

MATRIX	CODE
WATER	WT
SOIL	SL
OIL	OL
WIPE	WP
AIR	AR
TISSUE	TS
OTHER	OT

ITEM #	SAMPLE ID	MATRIX CODE	DATE COLLECTED (mm / dd / yy)	TIME COLLECTED (hh:mm a/p)	# Containers	Unpreserved	H_2SO_4	HNO_3	HCl	NaOH	$Na_2S_2O_3$	Methanol	Other	VOCs 8260	Remarks / Lab ID
1	MSW-1	WT	9/30/04	10:30a	3				X					X	503866014
2	MSW-2	↓	↓	10:28a	↓				↓					↓	022
3	MSW-3	↓	↓	10:50a	↓				↓					↓	030
4															
5															
6															
7															
8															
9															
10															
11															
12															OK KJ

SHIPMENT METHOD	AIRBILL NO.	SHIPPING DATE	NO. OF COOLERS

ITEM NUMBER	RELINQUISHED BY / AFFILIATION	DATE	TIME	ACCEPTED BY / AFFILIATION	DATE	TIME
	LL/Mundell	9/30/04	3:31	Kelly Jordan	9/30/04	3:31
		9/30/04	3:31			

SAMPLE CONDITION

Temp in °C	3
Received on Ice	Y/N
Sealed Cooler	Y/N
Samples Intact	Y/N

Additional Comments:

SAMPLE NOTES

SAMPLER NAME AND SIGNATURE

PRINT Name of SAMPLER: LEENA LOTHE
SIGNATURE of SAMPLER: LLothe
DATE Signed: (MM / DD / YY) 9/30/04

ORIGINAL

SEE REVERSE SIDE FOR INSTRUCTIONS

Form COC01 Rev 0402

Amended Laboratory Certificates of Analysis (September 2004) & MMW-1S Re-Sampling Certificates of Analysis (March 2005)

Pace Analytical®
www.pacelabs.com

Pace Analytical Services, Inc.
7726 Moller Road
Indianapolis, IN 46268
Phone: 317.875.5894
Fax: 317.872.6189

RECEIVED
MAR 24 2005

March 22, 2005

Mr. John Mundell
Mundell & Associates, Inc.
429 East Vermont Street
Suite 200
Indianapolis, IN 46202

RE: Lab Project Number: 5038537
Client Project ID: Michigan Meadows/M01046

Dear Mr. Mundell:

Enclosed are the analytical results for sample(s) received by the laboratory on September 10, 2004. Results reported herein conform to the most current NELAC standards, where applicable, unless otherwise narrated in the body of the report.

If you have any questions concerning this report please feel free to contact me.

Sincerely,

Mick Mayse

Mick Mayse
mmayse@pacelabs.com
Project Manager

Enclosures

REVISED
3/23/05
MM

REPORT OF LABORATORY ANALYSIS

This report shall not be reproduced, except in full,
without the written consent of Pace Analytical Services, Inc.

Pace Analytical®
www.pacelabs.com

Pace Analytical Services, Inc.
7726 Moller Road
Indianapolis, IN 46268
Phone: 317.875.5894
Fax: 317.872.6189

Case Narrative

Pace Project# 5038537

Date: 03/23/05

Pace External Client: Mundell & Associates Inc.

Client Project ID: Michigan Meadows

Analysis: 8260 Volatiles

Lab Finding:

On sample MWW-1S (503795726), the Tetrachloroethene compound was evaluated down to the Method Detection Limit (MDL) per client request. Since there was a hit for this compound below the routine detection limit of 5.0 ug/l but above the method detection limit, the compound has a j-flag qualifier on the analytical report.

Mick Mayse

Mick Mayse
Pace Analytical Project Manager

REPORT OF LABORATORY ANALYSIS
This report shall not be reproduced, except in full,
without the written consent of Pace Analytical Services, Inc.

Pace Analytical®
www.pacelabs.com

Pace Analytical Services, Inc.
7726 Moller Road
Indianapolis, IN 46268
Phone: 317.875.5894
Fax: 317.872.6189

Lab Project Number: 5038537
Client Project ID: Michigan Meadows/M01046

Lab Sample No: 503795726 | Project Sample Number: 5038537-001 | Date Collected: 09/10/04 10:23
Client Sample ID: MMW-1S | Matrix: Water | Date Received: 09/10/04 17:22

Parameters	Results	Units	Report Limit	DF	Analyzed	By	CAS No.	Qual	RegLmt
GC/MS Volatiles									
GC/MS VOCs by 8260	Method: EPA 8260								
Dichlorodifluoromethane	ND	ug/l	5.0	1.0	09/15/04 00:38	TMB	75-71-8		
Chloromethane	ND	ug/l	5.0	1.0	09/15/04 00:38	TMB	74-87-3		
Vinyl chloride	4.1	ug/l	2.0	1.0	09/15/04 00:38	TMB	75-01-4		
Bromomethane	ND	ug/l	5.0	1.0	09/15/04 00:38	TMB	74-83-9		
Chloroethane	ND	ug/l	5.0	1.0	09/15/04 00:38	TMB	75-00-3		
Trichlorofluoromethane	ND	ug/l	5.0	1.0	09/15/04 00:38	TMB	75-69-4		
Methylene chloride	ND	ug/l	5.0	1.0	09/15/04 00:38	TMB	75-09-2		
1,1-Dichloroethene	ND	ug/l	5.0	1.0	09/15/04 00:38	TMB	75-35-4		
trans-1,2-Dichloroethene	ND	ug/l	5.0	1.0	09/15/04 00:38	TMB	156-60-5		
1,1-Dichloroethane	ND	ug/l	5.0	1.0	09/15/04 00:38	TMB	75-34-3		
2.2-Dichloropropane	ND	ug/l	5.0	1.0	09/15/04 00:38	TMB	594-20-7		
cis-1,2-Dichloroethene	ND	ug/l	5.0	1.0	09/15/04 00:38	TMB	156-59-2		
Chloroform	ND	ug/l	5.0	1.0	09/15/04 00:38	TMB	67-66-3		
Bromochloromethane	ND	ug/l	5.0	1.0	09/15/04 00:38	TMB	74-97-5		
1,1,1-Trichloroethane	ND	ug/l	5.0	1.0	09/15/04 00:38	TMB	71-55-6		
Carbon tetrachloride	ND	ug/l	5.0	1.0	09/15/04 00:38	TMB	56-23-5		
1,1-Dichloropropene	ND	ug/l	5.0	1.0	09/15/04 00:38	TMB	563-58-6		
Benzene	ND	ug/l	5.0	1.0	09/15/04 00:38	TMB	71-43-2		
1,2-Dichloroethane	ND	ug/l	5.0	1.0	09/15/04 00:38	TMB	107-06-2		
Trichloroethene	ND	ug/l	5.0	1.0	09/15/04 00:38	TMB	79-01-6		
1,2-Dichloropropane	ND	ug/l	5.0	1.0	09/15/04 00:38	TMB	78-87-5		
Bromodichloromethane	ND	ug/l	5.0	1.0	09/15/04 00:38	TMB	75-27-4		
Dibromomethane	ND	ug/l	5.0	1.0	09/15/04 00:38	TMB	74-95-3		
Toluene	ND	ug/l	5.0	1.0	09/15/04 00:38	TMB	108-88-3		
1,1,2-Trichloroethane	ND	ug/l	5.0	1.0	09/15/04 00:38	TMB	79-00-5		
Tetrachloroethene	3.1 J	ug/l	5.0	1.0	09/15/04 00:38	TMB	127-18-4	1	
1,3-Dichloropropane	ND	ug/l	5.0	1.0	09/15/04 00:38	TMB	142-28-9		
Dibromochloromethane	ND	ug/l	5.0	1.0	09/15/04 00:38	TMB	124-48-1		
1,2-Dibromoethane (EDB)	ND	ug/l	5.0	1.0	09/15/04 00:38	TMB	106-93-4		
Chlorobenzene	ND	ug/l	5.0	1.0	09/15/04 00:38	TMB	108-90-7		
1,1,1,2-Tetrachloroethane	ND	ug/l	5.0	1.0	09/15/04 00:38	TMB	630-20-6		
Ethylbenzene	ND	ug/l	5.0	1.0	09/15/04 00:38	TMB	100-41-4		
m&p-Xylene	ND	ug/l	5.0	1.0	09/15/04 00:38	TMB			
o-Xylene	ND	ug/l	5.0	1.0	09/15/04 00:38	TMB	95-47-6		
Styrene	ND	ug/l	5.0	1.0	09/15/04 00:38	TMB	100-42-5		
Bromoform	ND	ug/l	5.0	1.0	09/15/04 00:38	TMB	75-25-2		
Isopropylbenzene (Cumene)	ND	ug/l	5.0	1.0	09/15/04 00:38	TMB	98-82-8		

REPORT OF LABORATORY ANALYSIS
This report shall not be reproduced, except in full,
without the written consent of Pace Analytical Services, Inc.

Pace Analytical®
www.pacelabs.com

Pace Analytical Services, Inc.
7726 Moller Road
Indianapolis, IN 46268
Phone: 317.875.5894
Fax: 317.872.6189

Lab Project Number: 5038537
Client Project ID: Michigan Meadows/M01046

Lab Sample No: 503795726 Project Sample Number: 5038537-001 Date Collected: 09/10/04 10:23
Client Sample ID: MMW-1S Matrix: Water Date Received: 09/10/04 17:22

Parameters	Results	Units	Report Limit	DF	Analyzed	By	CAS No.	Qual	RegLmt
1,1,2,2-Tetrachloroethane	ND	ug/l	5.0	1.0	09/15/04 00:38	TMB	79-34-5		
Bromobenzene	ND	ug/l	5.0	1.0	09/15/04 00:38	TMB	108-86-1		
1,2,3-Trichloropropane	ND	ug/l	5.0	1.0	09/15/04 00:38	TMB	96-18-4		
n-Propylbenzene	ND	ug/l	5.0	1.0	09/15/04 00:38	TMB	103-65-1		
2-Chlorotoluene	ND	ug/l	5.0	1.0	09/15/04 00:38	TMB	95-49-8		
1,3,5-Trimethylbenzene	ND	ug/l	5.0	1.0	09/15/04 00:38	TMB	108-67-8		
4-Chlorotoluene	ND	ug/l	5.0	1.0	09/15/04 00:38	TMB	106-43-4		
1,2,4-Trimethylbenzene	ND	ug/l	5.0	1.0	09/15/04 00:38	TMB	95-63-6		
sec-Butylbenzene	ND	ug/l	5.0	1.0	09/15/04 00:38	TMB	135-98-8		
tert-Butylbenzene	ND	ug/l	5.0	1.0	09/15/04 00:38	TMB	98-06-6		
p-Isopropyltoluene	ND	ug/l	5.0	1.0	09/15/04 00:38	TMB	99-87-6		
1,3-Dichlorobenzene	ND	ug/l	5.0	1.0	09/15/04 00:38	TMB	541-73-1		
1,4-Dichlorobenzene	ND	ug/l	5.0	1.0	09/15/04 00:38	TMB	106-46-7		
n-Butylbenzene	ND	ug/l	5.0	1.0	09/15/04 00:38	TMB	104-51-8		
1,2-Dichlorobenzene	ND	ug/l	5.0	1.0	09/15/04 00:38	TMB	95-50-1		
1,2-Dibromo-3-chloropropane	ND	ug/l	5.0	1.0	09/15/04 00:38	TMB	96-12-8		
1,2,4-Trichlorobenzene	ND	ug/l	5.0	1.0	09/15/04 00:38	TMB	120-82-1		
Hexachloro-1,3-butadiene	ND	ug/l	5.0	1.0	09/15/04 00:38	TMB	87-68-3		
Naphthalene	ND	ug/l	5.0	1.0	09/15/04 00:38	TMB	91-20-3		
1,2,3-Trichlorobenzene	ND	ug/l	5.0	1.0	09/15/04 00:38	TMB	87-61-6		
trans-1,3-Dichloropropene	ND	ug/l	5.0	1.0	09/15/04 00:38	TMB	10061-02-6		
cis-1,3-Dichloropropene	ND	ug/l	5.0	1.0	09/15/04 00:38	TMB	10061-01-5		
2-Chloroethylvinyl ether	ND	ug/l	10.	1.0	09/15/04 00:38	TMB	110-75-8		
Acetone	ND	ug/l	25.	1.0	09/15/04 00:38	TMB	67-64-1		
2-Butanone (MEK)	ND	ug/l	10.	1.0	09/15/04 00:38	TMB	78-93-3		
4-Methyl-2-pentanone (MIBK)	ND	ug/l	10.	1.0	09/15/04 00:38	TMB	108-10-1		
Acrolein	ND	ug/l	50.	1.0	09/15/04 00:38	TMB	107-02-8		
Acrylonitrile	ND	ug/l	50.	1.0	09/15/04 00:38	TMB	107-13-1		
2-Hexanone	ND	ug/l	10.	1.0	09/15/04 00:38	TMB	591-78-6		
Vinyl acetate	ND	ug/l	10.	1.0	09/15/04 00:38	TMB	108-05-4		
Iodomethane	ND	ug/l	10.	1.0	09/15/04 00:38	TMB	74-88-4		
Methyl-tert-butyl ether	ND	ug/l	5.0	1.0	09/15/04 00:38	TMB	1634-04-4		
Carbon disulfide	ND	ug/l	5.0	1.0	09/15/04 00:38	TMB	75-15-0		
trans-1,4-Dichloro-2-butene	ND	ug/l	100	1.0	09/15/04 00:38	TMB	110-57-6		
Ethyl methacrylate	ND	ug/l	100	1.0	09/15/04 00:38	TMB	97-63-2		
Xylene (Total)	ND	ug/l	10.	1.0	09/15/04 00:38	TMB	1330-20-7		
Dibromofluoromethane (S)	100	%		1.0	09/15/04 00:38	TMB	1868-53-7		
Toluene-d8 (S)	108	%		1.0	09/15/04 00:38	TMB	2037-26-5		
4-Bromofluorobenzene (S)	102	%		1.0	09/15/04 00:38	TMB	460-00-4	2	

REPORT OF LABORATORY ANALYSIS
This report shall not be reproduced, except in full,
without the written consent of Pace Analytical Services, Inc.

Pace Analytical®
www.pacelabs.com

Pace Analytical Services, Inc.
7726 Moller Road
Indianapolis, IN 46268
Phone: 317.875.5894
Fax: 317.872.6189

Lab Project Number: 5038537
Client Project ID: Michigan Meadows/M01046

Lab Sample No: 503795734 Project Sample Number: 5038537-002 Date Collected: 09/10/04 11:00
Client Sample ID: MMW-2S Matrix: Water Date Received: 09/10/04 17:22

Parameters	Results	Units	Report Limit	DF	Analyzed	By	CAS No.	Qual	RegLmt
GC/MS Volatiles									
GC/MS VOCs by 8260	Method: EPA 8260								
Dichlorodifluoromethane	ND	ug/l	5.0	1.0	09/15/04 01:10	TMB	75-71-8		
Chloromethane	ND	ug/l	5.0	1.0	09/15/04 01:10	TMB	74-87-3		
Vinyl chloride	ND	ug/l	2.0	1.0	09/15/04 01:10	TMB	75-01-4		
Bromomethane	ND	ug/l	5.0	1.0	09/15/04 01:10	TMB	74-83-9		
Chloroethane	ND	ug/l	5.0	1.0	09/15/04 01:10	TMB	75-00-3		
Trichlorofluoromethane	ND	ug/l	5.0	1.0	09/15/04 01:10	TMB	75-69-4		
Methylene chloride	ND	ug/l	5.0	1.0	09/15/04 01:10	TMB	75-09-2		
1,1-Dichloroethene	ND	ug/l	5.0	1.0	09/15/04 01:10	TMB	75-35-4		
trans-1,2-Dichloroethene	ND	ug/l	5.0	1.0	09/15/04 01:10	TMB	156-60-5		
1,1-Dichloroethane	ND	ug/l	5.0	1.0	09/15/04 01:10	TMB	75-34-3		
2,2-Dichloropropane	ND	ug/l	5.0	1.0	09/15/04 01:10	TMB	594-20-7		
cis-1,2-Dichloroethene	ND	ug/l	5.0	1.0	09/15/04 01:10	TMB	156-59-2		
Chloroform	ND	ug/l	5.0	1.0	09/15/04 01:10	TMB	67-66-3		
Bromochloromethane	ND	ug/l	5.0	1.0	09/15/04 01:10	TMB	74-97-5		
1,1,1-Trichloroethane	ND	ug/l	5.0	1.0	09/15/04 01:10	TMB	71-55-6		
Carbon tetrachloride	ND	ug/l	5.0	1.0	09/15/04 01:10	TMB	56-23-5		
1,1-Dichloropropene	ND	ug/l	5.0	1.0	09/15/04 01:10	TMB	563-58-6		
Benzene	ND	ug/l	5.0	1.0	09/15/04 01:10	TMB	71-43-2		
1,2-Dichloroethane	ND	ug/l	5.0	1.0	09/15/04 01:10	TMB	107-06-2		
Trichloroethene	ND	ug/l	5.0	1.0	09/15/04 01:10	TMB	79-01-6		
1,2-Dichloropropane	ND	ug/l	5.0	1.0	09/15/04 01:10	TMB	78-87-5		
Bromodichloromethane	ND	ug/l	5.0	1.0	09/15/04 01:10	TMB	75-27-4		
Dibromomethane	ND	ug/l	5.0	1.0	09/15/04 01:10	TMB	74-95-3		
Toluene	ND	ug/l	5.0	1.0	09/15/04 01:10	TMB	108-88-3		
1,1,2-Trichloroethane	ND	ug/l	5.0	1.0	09/15/04 01:10	TMB	79-00-5		
Tetrachloroethene	ND	ug/l	5.0	1.0	09/15/04 01:10	TMB	127-18-4		
1,3-Dichloropropane	ND	ug/l	5.0	1.0	09/15/04 01:10	TMB	142-28-9		
Dibromochloromethane	ND	ug/l	5.0	1.0	09/15/04 01:10	TMB	124-48-1		
1,2-Dibromoethane (EDB)	ND	ug/l	5.0	1.0	09/15/04 01:10	TMB	106-93-4		
Chlorobenzene	ND	ug/l	5.0	1.0	09/15/04 01:10	TMB	108-90-7		
1,1,1,2-Tetrachloroethane	ND	ug/l	5.0	1.0	09/15/04 01:10	TMB	630-20-6		
Ethylbenzene	ND	ug/l	5.0	1.0	09/15/04 01:10	TMB	100-41-4		
m&p-Xylene	ND	ug/l	5.0	1.0	09/15/04 01:10	TMB			
o-Xylene	ND	ug/l	5.0	1.0	09/15/04 01:10	TMB	95-47-6		
Styrene	ND	ug/l	5.0	1.0	09/15/04 01:10	TMB	100-42-5		
Bromoform	ND	ug/l	5.0	1.0	09/15/04 01:10	TMB	75-25-2		
Isopropylbenzene (Cumene)	ND	ug/l	5.0	1.0	09/15/04 01:10	TMB	98-82-8		

REPORT OF LABORATORY ANALYSIS
This report shall not be reproduced, except in full,
without the written consent of Pace Analytical Services, Inc.

Pace Analytical®
www.pacelabs.com

Pace Analytical Services, Inc.
7726 Moller Road
Indianapolis, IN 46268
Phone: 317.875.5894
Fax: 317.872.6189

Lab Project Number: 5038537
Client Project ID: Michigan Meadows/M01046

Lab Sample No: 503795734 | Project Sample Number: 5038537-002 | Date Collected: 09/10/04 11:00
Client Sample ID: MMW-2S | Matrix: Water | Date Received: 09/10/04 17:22

Parameters	Results	Units	Report Limit	DF	Analyzed	By	CAS No.	Qual	RegLmt
1,1,2,2-Tetrachloroethane	ND	ug/l	5.0	1.0	09/15/04 01:10	TMB	79-34-5		
Bromobenzene	ND	ug/l	5.0	1.0	09/15/04 01:10	TMB	108-86-1		
1,2,3-Trichloropropane	ND	ug/l	5.0	1.0	09/15/04 01:10	TMB	96-18-4		
n-Propylbenzene	ND	ug/l	5.0	1.0	09/15/04 01:10	TMB	103-65-1		
2-Chlorotoluene	ND	ug/l	5.0	1.0	09/15/04 01:10	TMB	95-49-8		
1,3,5-Trimethylbenzene	ND	ug/l	5.0	1.0	09/15/04 01:10	TMB	108-67-8		
4-Chlorotoluene	ND	ug/l	5.0	1.0	09/15/04 01:10	TMB	106-43-4		
1,2,4-Trimethylbenzene	ND	ug/l	5.0	1.0	09/15/04 01:10	TMB	95-63-6		
sec-Butylbenzene	ND	ug/l	5.0	1.0	09/15/04 01:10	TMB	135-98-8		
tert-Butylbenzene	ND	ug/l	5.0	1.0	09/15/04 01:10	TMB	98-06-6		
p-Isopropyltoluene	ND	ug/l	5.0	1.0	09/15/04 01:10	TMB	99-87-6		
1,3-Dichlorobenzene	ND	ug/l	5.0	1.0	09/15/04 01:10	TMB	541-73-1		
1,4-Dichlorobenzene	ND	ug/l	5.0	1.0	09/15/04 01:10	TMB	106-46-7		
n-Butylbenzene	ND	ug/l	5.0	1.0	09/15/04 01:10	TMB	104-51-8		
1,2-Dichlorobenzene	ND	ug/l	5.0	1.0	09/15/04 01:10	TMB	95-50-1		
1,2-Dibromo-3-chloropropane	ND	ug/l	5.0	1.0	09/15/04 01:10	TMB	96-12-8		
1,2,4-Trichlorobenzene	ND	ug/l	5.0	1.0	09/15/04 01:10	TMB	120-82-1		
Hexachloro-1,3-butadiene	ND	ug/l	5.0	1.0	09/15/04 01:10	TMB	87-68-3		
Naphthalene	ND	ug/l	5.0	1.0	09/15/04 01:10	TMB	91-20-3		
1,2,3-Trichlorobenzene	ND	ug/l	5.0	1.0	09/15/04 01:10	TMB	87-61-6		
trans-1,3-Dichloropropene	ND	ug/l	5.0	1.0	09/15/04 01:10	TMB	10061-02-6		
cis-1,3-Dichloropropene	ND	ug/l	5.0	1.0	09/15/04 01:10	TMB	10061-01-5		
2-Chloroethylvinyl ether	ND	ug/l	10.	1.0	09/15/04 01:10	TMB	110-75-8		
Acetone	ND	ug/l	25.	1.0	09/15/04 01:10	TMB	67-64-1		
2-Butanone (MEK)	ND	ug/l	10.	1.0	09/15/04 01:10	TMB	78-93-3		
4-Methyl-2-pentanone (MIBK)	ND	ug/l	10.	1.0	09/15/04 01:10	TMB	108-10-1		
Acrolein	ND	ug/l	50.	1.0	09/15/04 01:10	TMB	107-02-8		
Acrylonitrile	ND	ug/l	50.	1.0	09/15/04 01:10	TMB	107-13-1		
2-Hexanone	ND	ug/l	10.	1.0	09/15/04 01:10	TMB	591-78-6		
Vinyl acetate	ND	ug/l	10.	1.0	09/15/04 01:10	TMB	108-05-4		
Iodomethane	ND	ug/l	10.	1.0	09/15/04 01:10	TMB	74-88-4		
Methyl-tert-butyl ether	ND	ug/l	5.0	1.0	09/15/04 01:10	TMB	1634-04-4		
Carbon disulfide	ND	ug/l	5.0	1.0	09/15/04 01:10	TMB	75-15-0		
trans-1,4-Dichloro-2-butene	ND	ug/l	100	1.0	09/15/04 01:10	TMB	110-57-6		
Ethyl methacrylate	ND	ug/l	100	1.0	09/15/04 01:10	TMB	97-63-2		
Xylene (Total)	ND	ug/l	10.	1.0	09/15/04 01:10	TMB	1330-20-7		
Dibromofluoromethane (S)	101	%		1.0	09/15/04 01:10	TMB	1868-53-7		
Toluene-d8 (S)	106	%		1.0	09/15/04 01:10	TMB	2037-26-5		
4-Bromofluorobenzene (S)	102	%		1.0	09/15/04 01:10	TMB	460-00-4		

REPORT OF LABORATORY ANALYSIS
This report shall not be reproduced, except in full,
without the written consent of Pace Analytical Services, Inc.

Pace Analytical®
www.pacelabs.com

Pace Analytical Services, Inc.
7726 Moller Road
Indianapolis, IN 46268
Phone: 317.875.5894
Fax: 317.872.6189

Lab Project Number: 5038537
Client Project ID: Michigan Meadows/M01046

Lab Sample No: 503795742 | Project Sample Number: 5038537-003 | Date Collected: 09/10/04 16:20
Client Sample ID: MMW-3S | Matrix: Water | Date Received: 09/10/04 17:22

Parameters	Results	Units	Report Limit	DF	Analyzed	By	CAS No.	Qual	RegLmt
GC/MS Volatiles									
GC/MS VOCs by 8260	Method: EPA 8260								
Dichlorodifluoromethane	ND	ug/l	5.0	1.0	09/15/04 02:44	TMB	75-71-8		
Chloromethane	ND	ug/l	5.0	1.0	09/15/04 02:44	TMB	74-87-3		
Vinyl chloride	ND	ug/l	2.0	1.0	09/15/04 02:44	TMB	75-01-4		
Bromomethane	ND	ug/l	5.0	1.0	09/15/04 02:44	TMB	74-83-9		
Chloroethane	ND	ug/l	5.0	1.0	09/15/04 02:44	TMB	75-00-3		
Trichlorofluoromethane	ND	ug/l	5.0	1.0	09/15/04 02:44	TMB	75-69-4		
Methylene chloride	ND	ug/l	5.0	1.0	09/15/04 02:44	TMB	75-09-2		
1,1-Dichloroethene	ND	ug/l	5.0	1.0	09/15/04 02:44	TMB	75-35-4		
trans-1,2-Dichloroethene	ND	ug/l	5.0	1.0	09/15/04 02:44	TMB	156-60-5		
1,1-Dichloroethane	ND	ug/l	5.0	1.0	09/15/04 02:44	TMB	75-34-3		
2,2-Dichloropropane	ND	ug/l	5.0	1.0	09/15/04 02:44	TMB	594-20-7		
cis-1,2-Dichloroethene	ND	ug/l	5.0	1.0	09/15/04 02:44	TMB	156-59-2		
Chloroform	ND	ug/l	5.0	1.0	09/15/04 02:44	TMB	67-66-3		
Bromochloromethane	ND	ug/l	5.0	1.0	09/15/04 02:44	TMB	74-97-5		
1,1,1-Trichloroethane	ND	ug/l	5.0	1.0	09/15/04 02:44	TMB	71-55-6		
Carbon tetrachloride	ND	ug/l	5.0	1.0	09/15/04 02:44	TMB	56-23-5		
1,1-Dichloropropene	ND	ug/l	5.0	1.0	09/15/04 02:44	TMB	563-58-6		
Benzene	ND	ug/l	5.0	1.0	09/15/04 02:44	TMB	71-43-2		
1,2-Dichloroethane	ND	ug/l	5.0	1.0	09/15/04 02:44	TMB	107-06-2		
Trichloroethene	5.2	ug/l	5.0	1.0	09/15/04 02:44	TMB	79-01-6		
1,2-Dichloropropane	ND	ug/l	5.0	1.0	09/15/04 02:44	TMB	78-87-5		
Bromodichloromethane	ND	ug/l	5.0	1.0	09/15/04 02:44	TMB	75-27-4		
Dibromomethane	ND	ug/l	5.0	1.0	09/15/04 02:44	TMB	74-95-3		
Toluene	ND	ug/l	5.0	1.0	09/15/04 02:44	TMB	108-88-3		
1,1,2-Trichloroethane	ND	ug/l	5.0	1.0	09/15/04 02:44	TMB	79-00-5		
Tetrachloroethene	ND	ug/l	5.0	1.0	09/15/04 02:44	TMB	127-18-4		
1,3-Dichloropropane	ND	ug/l	5.0	1.0	09/15/04 02:44	TMB	142-28-9		
Dibromochloromethane	ND	ug/l	5.0	1.0	09/15/04 02:44	TMB	124-48-1		
1,2-Dibromoethane (EDB)	ND	ug/l	5.0	1.0	09/15/04 02:44	TMB	106-93-4		
Chlorobenzene	ND	ug/l	5.0	1.0	09/15/04 02:44	TMB	108-90-7		
1,1,1,2-Tetrachloroethane	ND	ug/l	5.0	1.0	09/15/04 02:44	TMB	630-20-6		
Ethylbenzene	ND	ug/l	5.0	1.0	09/15/04 02:44	TMB	100-41-4		
m&p-Xylene	ND	ug/l	5.0	1.0	09/15/04 02:44	TMB			
o-Xylene	ND	ug/l	5.0	1.0	09/15/04 02:44	TMB	95-47-6		
Styrene	ND	ug/l	5.0	1.0	09/15/04 02:44	TMB	100-42-5		
Bromoform	ND	ug/l	5.0	1.0	09/15/04 02:44	TMB	75-25-2		
Isopropylbenzene (Cumene)	ND	ug/l	5.0	1.0	09/15/04 02:44	TMB	98-82-8		

REPORT OF LABORATORY ANALYSIS
This report shall not be reproduced, except in full,
without the written consent of Pace Analytical Services, Inc.

Pace Analytical®
www.pacelabs.com

Pace Analytical Services, Inc.
7726 Moller Road
Indianapolis, IN 46268
Phone: 317.875.5894
Fax: 317.872.6189

Lab Project Number: 5038537
Client Project ID: Michigan Meadows/M01046

Lab Sample No: 503795742 Project Sample Number: 5038537-003 Date Collected: 09/10/04 16:20
Client Sample ID: MMW-3S Matrix: Water Date Received: 09/10/04 17:22

Parameters	Results	Units	Report Limit	DF	Analyzed	By	CAS No.	Qual	RegLmt
1,1,2,2-Tetrachloroethane	ND	ug/l	5.0	1.0	09/15/04 02:44	TMB	79-34-5		
Bromobenzene	ND	ug/l	5.0	1.0	09/15/04 02:44	TMB	108-86-1		
1,2,3-Trichloropropane	ND	ug/l	5.0	1.0	09/15/04 02:44	TMB	96-18-4		
n-Propylbenzene	ND	ug/l	5.0	1.0	09/15/04 02:44	TMB	103-65-1		
2-Chlorotoluene	ND	ug/l	5.0	1.0	09/15/04 02:44	TMB	95-49-8		
1,3,5-Trimethylbenzene	ND	ug/l	5.0	1.0	09/15/04 02:44	TMB	108-67-8		
4-Chlorotoluene	ND	ug/l	5.0	1.0	09/15/04 02:44	TMB	106-43-4		
1,2,4-Trimethylbenzene	ND	ug/l	5.0	1.0	09/15/04 02:44	TMB	95-63-6		
sec-Butylbenzene	ND	ug/l	5.0	1.0	09/15/04 02:44	TMB	135-98-8		
tert-Butylbenzene	ND	ug/l	5.0	1.0	09/15/04 02:44	TMB	98-06-6		
p-Isopropyltoluene	ND	ug/l	5.0	1.0	09/15/04 02:44	TMB	99-87-6		
1,3-Dichlorobenzene	ND	ug/l	5.0	1.0	09/15/04 02:44	TMB	541-73-1		
1,4-Dichlorobenzene	ND	ug/l	5.0	1.0	09/15/04 02:44	TMB	106-46-7		
n-Butylbenzene	ND	ug/l	5.0	1.0	09/15/04 02:44	TMB	104-51-8		
1,2-Dichlorobenzene	ND	ug/l	5.0	1.0	09/15/04 02:44	TMB	95-50-1		
1,2-Dibromo-3-chloropropane	ND	ug/l	5.0	1.0	09/15/04 02:44	TMB	96-12-8		
1,2,4-Trichlorobenzene	ND	ug/l	5.0	1.0	09/15/04 02:44	TMB	120-82-1		
Hexachloro-1,3-butadiene	ND	ug/l	5.0	1.0	09/15/04 02:44	TMB	87-68-3		
Naphthalene	ND	ug/l	5.0	1.0	09/15/04 02:44	TMB	91-20-3		
1,2,3-Trichlorobenzene	ND	ug/l	5.0	1.0	09/15/04 02:44	TMB	87-61-6		
trans-1,3-Dichloropropene	ND	ug/l	5.0	1.0	09/15/04 02:44	TMB	10061-02-6		
cis-1,3-Dichloropropene	ND	ug/l	5.0	1.0	09/15/04 02:44	TMB	10061-01-5		
2-Chloroethylvinyl ether	ND	ug/l	10.	1.0	09/15/04 02:44	TMB	110-75-8		
Acetone	ND	ug/l	25.	1.0	09/15/04 02:44	TMB	67-64-1		
2-Butanone (MEK)	ND	ug/l	10.	1.0	09/15/04 02:44	TMB	78-93-3		
4-Methyl-2-pentanone (MIBK)	ND	ug/l	10.	1.0	09/15/04 02:44	TMB	108-10-1		
Acrolein	ND	ug/l	50.	1.0	09/15/04 02:44	TMB	107-02-8		
Acrylonitrile	ND	ug/l	50.	1.0	09/15/04 02:44	TMB	107-13-1		
2-Hexanone	ND	ug/l	10.	1.0	09/15/04 02:44	TMB	591-78-6		
Vinyl acetate	ND	ug/l	10.	1.0	09/15/04 02:44	TMB	108-05-4		
Iodomethane	ND	ug/l	10.	1.0	09/15/04 02:44	TMB	74-88-4		
Methyl-tert-butyl ether	ND	ug/l	5.0	1.0	09/15/04 02:44	TMB	1634-04-4		
Carbon disulfide	ND	ug/l	5.0	1.0	09/15/04 02:44	TMB	75-15-0		
trans-1,4-Dichloro-2-butene	ND	ug/l	100	1.0	09/15/04 02:44	TMB	110-57-6		
Ethyl methacrylate	ND	ug/l	100	1.0	09/15/04 02:44	TMB	97-63-2		
Xylene (Total)	ND	ug/l	10.	1.0	09/15/04 02:44	TMB	1330-20-7		
Dibromofluoromethane (S)	101	%		1.0	09/15/04 02:44	TMB	1868-53-7		
Toluene-d8 (S)	106	%		1.0	09/15/04 02:44	TMB	2037-26-5		
4-Bromofluorobenzene (S)	103	%		1.0	09/15/04 02:44	TMB	460-00-4		

REPORT OF LABORATORY ANALYSIS
This report shall not be reproduced, except in full,
without the written consent of Pace Analytical Services, Inc.

Pace Analytical®
www.pacelabs.com

Pace Analytical Services, Inc.
7726 Moller Road
Indianapolis, IN 46268
Phone: 317.875.5894
Fax: 317.872.6189

Lab Project Number: 5038537
Client Project ID: Michigan Meadows/M01046

Lab Sample No: 503795759 Project Sample Number: 5038537-004 Date Collected: 09/10/04 15:10
Client Sample ID: MMW-4D Matrix: Water Date Received: 09/10/04 17:22

Parameters	Results	Units	Report Limit	DF	Analyzed	By	CAS No.	Qual	RegLmt
GC/MS Volatiles									
GC/MS VOCs by 8260	Method: EPA 8260								
Dichlorodifluoromethane	ND	ug/l	5.0	1.0	09/15/04 03:16	TMB	75-71-8		
Chloromethane	ND	ug/l	5.0	1.0	09/15/04 03:16	TMB	74-87-3		
Vinyl chloride	200	ug/l	2.0	1.0	09/15/04 03:16	TMB	75-01-4		
Bromomethane	ND	ug/l	5.0	1.0	09/15/04 03:16	TMB	74-83-9		
Chloroethane	ND	ug/l	5.0	1.0	09/15/04 03:16	TMB	75-00-3		
Trichlorofluoromethane	ND	ug/l	5.0	1.0	09/15/04 03:16	TMB	75-69-4		
Methylene chloride	ND	ug/l	5.0	1.0	09/15/04 03:16	TMB	75-09-2		
1,1-Dichloroethene	ND	ug/l	5.0	1.0	09/15/04 03:16	TMB	75-35-4		
trans-1,2-Dichloroethene	ND	ug/l	5.0	1.0	09/15/04 03:16	TMB	156-60-5		
1,1-Dichloroethane	ND	ug/l	5.0	1.0	09/15/04 03:16	TMB	75-34-3		
2,2-Dichloropropane	ND	ug/l	5.0	1.0	09/15/04 03:16	TMB	594-20-7		
cis-1,2-Dichloroethene	980	ug/l	120	25.0	09/15/04 18:20	TMB	156-59-2		
Chloroform	ND	ug/l	5.0	1.0	09/15/04 03:16	TMB	67-66-3		
Bromochloromethane	ND	ug/l	5.0	1.0	09/15/04 03:16	TMB	74-97-5		
1,1,1-Trichloroethane	ND	ug/l	5.0	1.0	09/15/04 03:16	TMB	71-55-6		
Carbon tetrachloride	ND	ug/l	5.0	1.0	09/15/04 03:16	TMB	56-23-5		
1,1-Dichloropropene	ND	ug/l	5.0	1.0	09/15/04 03:16	TMB	563-58-6		
Benzene	ND	ug/l	5.0	1.0	09/15/04 03:16	TMB	71-43-2		
1,2-Dichloroethane	ND	ug/l	5.0	1.0	09/15/04 03:16	TMB	107-06-2		
Trichloroethene	ND	ug/l	5.0	1.0	09/15/04 03:16	TMB	79-01-6		
1,2-Dichloropropane	ND	ug/l	5.0	1.0	09/15/04 03:16	TMB	78-87-5		
Bromodichloromethane	ND	ug/l	5.0	1.0	09/15/04 03:16	TMB	75-27-4		
Dibromomethane	ND	ug/l	5.0	1.0	09/15/04 03:16	TMB	74-95-3		
Toluene	ND	ug/l	5.0	1.0	09/15/04 03:16	TMB	108-88-3		
1,1,2-Trichloroethane	ND	ug/l	5.0	1.0	09/15/04 03:16	TMB	79-00-5		
Tetrachloroethene	ND	ug/l	5.0	1.0	09/15/04 03:16	TMB	127-18-4		
1,3-Dichloropropane	ND	ug/l	5.0	1.0	09/15/04 03:16	TMB	142-28-9		
Dibromochloromethane	ND	ug/l	5.0	1.0	09/15/04 03:16	TMB	124-48-1		
1,2-Dibromoethane (EDB)	ND	ug/l	5.0	1.0	09/15/04 03:16	TMB	106-93-4		
Chlorobenzene	ND	ug/l	5.0	1.0	09/15/04 03:16	TMB	108-90-7		
1,1,1,2-Tetrachloroethane	ND	ug/l	5.0	1.0	09/15/04 03:16	TMB	630-20-6		
Ethylbenzene	ND	ug/l	5.0	1.0	09/15/04 03:16	TMB	100-41-4		
m&p-Xylene	ND	ug/l	5.0	1.0	09/15/04 03:16	TMB			
o-Xylene	ND	ug/l	5.0	1.0	09/15/04 03:16	TMB	95-47-6		
Styrene	ND	ug/l	5.0	1.0	09/15/04 03:16	TMB	100-42-5		
Bromoform	ND	ug/l	5.0	1.0	09/15/04 03:16	TMB	75-25-2		
Isopropylbenzene (Cumene)	ND	ug/l	5.0	1.0	09/15/04 03:16	TMB	98-82-8		

REPORT OF LABORATORY ANALYSIS
This report shall not be reproduced, except in full,
without the written consent of Pace Analytical Services, Inc.

Pace Analytical®
www.pacelabs.com

Pace Analytical Services, Inc.
7726 Moller Road
Indianapolis, IN 46268
Phone: 317.875.5894
Fax: 317.872.6189

Lab Project Number: 5038537
Client Project ID: Michigan Meadows/M01046

Lab Sample No: 503795759 | Project Sample Number: 5038537-004 | Date Collected: 09/10/04 15:10
Client Sample ID: MMW-4D | Matrix: Water | Date Received: 09/10/04 17:22

Parameters	Results	Units	Report Limit	DF	Analyzed	By	CAS No.	Qual	RegLmt
1,1,2,2-Tetrachloroethane	ND	ug/l	5.0	1.0	09/15/04 03:16	TMB	79-34-5		
Bromobenzene	ND	ug/l	5.0	1.0	09/15/04 03:16	TMB	108-86-1		
1,2,3-Trichloropropane	ND	ug/l	5.0	1.0	09/15/04 03:16	TMB	96-18-4		
n-Propylbenzene	ND	ug/l	5.0	1.0	09/15/04 03:16	TMB	103-65-1		
2-Chlorotoluene	ND	ug/l	5.0	1.0	09/15/04 03:16	TMB	95-49-8		
1,3,5-Trimethylbenzene	ND	ug/l	5.0	1.0	09/15/04 03:16	TMB	108-67-8		
4-Chlorotoluene	ND	ug/l	5.0	1.0	09/15/04 03:16	TMB	106-43-4		
1,2,4-Trimethylbenzene	ND	ug/l	5.0	1.0	09/15/04 03:16	TMB	95-63-6		
sec-Butylbenzene	ND	ug/l	5.0	1.0	09/15/04 03:16	TMB	135-98-8		
tert-Butylbenzene	ND	ug/l	5.0	1.0	09/15/04 03:16	TMB	98-06-6		
p-Isopropyltoluene	ND	ug/l	5.0	1.0	09/15/04 03:16	TMB	99-87-6		
1,3-Dichlorobenzene	ND	ug/l	5.0	1.0	09/15/04 03:16	TMB	541-73-1		
1,4-Dichlorobenzene	ND	ug/l	5.0	1.0	09/15/04 03:16	TMB	106-46-7		
n-Butylbenzene	ND	ug/l	5.0	1.0	09/15/04 03:16	TMB	104-51-8		
1,2-Dichlorobenzene	ND	ug/l	5.0	1.0	09/15/04 03:16	TMB	95-50-1		
1,2-Dibromo-3-chloropropane	ND	ug/l	5.0	1.0	09/15/04 03:16	TMB	96-12-8		
1,2,4-Trichlorobenzene	ND	ug/l	5.0	1.0	09/15/04 03:16	TMB	120-82-1		
Hexachloro-1,3-butadiene	ND	ug/l	5.0	1.0	09/15/04 03:16	TMB	87-68-3		
Naphthalene	ND	ug/l	5.0	1.0	09/15/04 03:16	TMB	91-20-3		
1,2,3-Trichlorobenzene	ND	ug/l	5.0	1.0	09/15/04 03:16	TMB	87-61-6		
trans-1,3-Dichloropropene	ND	ug/l	5.0	1.0	09/15/04 03:16	TMB	10061-02-6		
cis-1,3-Oichloropropene	ND	ug/l	5.0	1.0	09/15/04 03:16	TMB	10061-01-5		
2-Chloroethylvinyl ether	ND	ug/l	10.	1.0	09/15/04 03:16	TMB	110-75-8		
Acetone	ND	ug/l	25.	1.0	09/15/04 03:16	TMB	67-64-1		
2-Butanone (MEK)	ND	ug/l	10.	1.0	09/15/04 03:16	TMB	78-93-3		
4-Methyl-2-pentanone (MIBK)	ND	ug/l	10.	1.0	09/15/04 03:16	TMB	108-10-1		
Acrolein	ND	ug/l	50.	1.0	09/15/04 03:16	TMB	107-02-8		
Acrylonitrile	ND	ug/l	50.	1.0	09/15/04 03:16	TMB	107-13-1		
2-Hexanone	ND	ug/l	10.	1.0	09/15/04 03:16	TMB	591-78-6		
Vinyl acetate	ND	ug/l	10.	1.0	09/15/04 03:16	TMB	108-05-4		
Iodomethane	ND	ug/l	10.	1.0	09/15/04 03:16	TMB	74-88-4		
Methyl-tert-butyl ether	ND	ug/l	5.0	1.0	09/15/04 03:16	TMB	1634-04-4		
Carbon disulfide	ND	ug/l	5.0	1.0	09/15/04 03:16	TMB	75-15-0		
trans-1,4-Dichloro-2-butene	ND	ug/l	100	1.0	09/15/04 03:16	TMB	110-57-6		
Ethyl methacrylate	ND	ug/l	100	1.0	09/15/04 03:16	TMB	97-63-2		
Xylene (Total)	ND	ug/l	10.	1.0	09/15/04 03:16	TMB	1330-20-7		
Dibromofluoromethane (S)	103	%		1.0	09/15/04 03:16	TMB	1868-53-7		
Toluene-d8 (S)	108	%		1.0	09/15/04 03:16	TMB	2037-26-5		
4-Bromofluorobenzene (S)	102	%		1.0	09/15/04 03:16	TMB	460-00-4		

REPORT OF LABORATORY ANALYSIS
This report shall not be reproduced, except in full,
without the written consent of Pace Analytical Services, Inc.

Pace Analytical®
www.pacelabs.com

Pace Analytical Services, Inc.
7726 Moller Road
Indianapolis, IN 46268
Phone: 317.875.5894
Fax: 317.872.6189

Lab Project Number: 5038537
Client Project ID: Michigan Meadows/M01046

Lab Sample No: 503795767 | Project Sample Number: 5038537-005 | Date Collected: 09/10/04 14:10
Client Sample ID: MMW-5D | Matrix: Water | Date Received: 09/10/04 17:22

Parameters	Results	Units	Report Limit	DF	Analyzed	By	CAS No.	Qual	RegLmt
GC/MS Volatiles									
GC/MS VOCs by 8260	Method: EPA 8260								
Dichlorodifluoromethane	ND	ug/l	5.0	1.0	09/15/04 03:47	TMB	75-71-8		
Chloromethane	ND	ug/l	5.0	1.0	09/15/04 03:47	TMB	74-87-3		
Vinyl chloride	270	ug/l	100	50.0	09/15/04 18:52	TMB	75-01-4		
Bromomethane	ND	ug/l	5.0	1.0	09/15/04 03:47	TMB	74-83-9		
Chloroethane	ND	ug/l	5.0	1.0	09/15/04 03:47	TMB	75-00-3		
Trichlorofluoromethane	ND	ug/l	5.0	1.0	09/15/04 03:47	TMB	75-69-4		
Methylene chloride	ND	ug/l	5.0	1.0	09/15/04 03:47	TMB	75-09-2		
1,1-Dichloroethene	ND	ug/l	5.0	1.0	09/15/04 03:47	TMB	75-35-4		
trans-1,2-Dichloroethene	13.	ug/l	5.0	1.0	09/15/04 03:47	TMB	156-60-5		
1,1-Dichloroethane	ND	ug/l	5.0	1.0	09/15/04 03:47	TMB	75-34-3		
2,2-Dichloropropane	ND	ug/l	5.0	1.0	09/15/04 03:47	TMB	594-20-7		
cis-1,2-Dichloroethene	3400	ug/l	250	50.0	09/15/04 18:52	TMB	156-59-2		
Chloroform	ND	ug/l	5.0	1.0	09/15/04 03:47	TMB	67-66-3		
Bromochloromethane	ND	ug/l	5.0	1.0	09/15/04 03:47	TMB	74-97-5		
1,1,1-Trichloroethane	ND	ug/l	5.0	1.0	09/15/04 03:47	TMB	71-55-6		
Carbon tetrachloride	ND	ug/l	5.0	1.0	09/15/04 03:47	TMB	56-23-5		
1,1-Dichloropropene	ND	ug/l	5.0	1.0	09/15/04 03:47	TMB	563-58-6		
Benzene	ND	ug/l	5.0	1.0	09/15/04 03:47	TMB	71-43-2		
1,2-Dichloroethane	ND	ug/l	5.0	1.0	09/15/04 03:47	TMB	107-06-2		
Trichloroethene	ND	ug/l	5.0	1.0	09/15/04 03:47	TMB	79-01-6		
1,2-Dichloropropane	ND	ug/l	5.0	1.0	09/15/04 03:47	TMB	78-87-5		
Bromodichloromethane	ND	ug/l	5.0	1.0	09/15/04 03:47	TMB	75-27-4		
Dibromomethane	ND	ug/l	5.0	1.0	09/15/04 03:47	TMB	74-95-3		
Toluene	ND	ug/l	5.0	1.0	09/15/04 03:47	TMB	108-88-3		
1,1,2-Trichloroethane	ND	ug/l	5.0	1.0	09/15/04 03:47	TMB	79-00-5		
Tetrachloroethene	ND	ug/l	5.0	1.0	09/15/04 03:47	TMB	127-18-4		
1,3-Dichloropropane	ND	ug/l	5.0	1.0	09/15/04 03:47	TMB	142-28-9		
Dibromochloromethane	ND	ug/l	5.0	1.0	09/15/04 03:47	TMB	124-48-1		
1,2-Dibromoethane (EDB)	ND	ug/l	5.0	1.0	09/15/04 03:47	TMB	106-93-4		
Chlorobenzene	ND	ug/l	5.0	1.0	09/15/04 03:47	TMB	108-90-7		
1,1,1,2-Tetrachloroethane	ND	ug/l	5.0	1.0	09/15/04 03:47	TMB	630-20-6		
Ethylbenzene	ND	ug/l	5.0	1.0	09/15/04 03:47	TMB	100-41-4		
m&p-Xylene	ND	ug/l	5.0	1.0	09/15/04 03:47	TMB			
o-Xylene	ND	ug/l	5.0	1.0	09/15/04 03:47	TMB	95-47-6		
Styrene	ND	ug/l	5.0	1.0	09/15/04 03:47	TMB	100-42-5		
Bromoform	ND	ug/l	5.0	1.0	09/15/04 03:47	TMB	75-25-2		
Isopropylbenzene (Cumene)	ND	ug/l	5.0	1.0	09/15/04 03:47	TMB	98-82-8		

REPORT OF LABORATORY ANALYSIS
This report shall not be reproduced, except in full,
without the written consent of Pace Analytical Services, Inc.

Pace Analytical®
www.pacelabs.com

Pace Analytical Services, Inc.
7726 Moller Road
Indianapolis, IN 46268
Phone: 317.875.5894
Fax: 317.872.6189

Lab Project Number: 5038537
Client Project ID: Michigan Meadows/M01046

Lab Sample No: 503795767 Project Sample Number: 5038537-005 Date Collected: 09/10/04 14:10
Client Sample ID: MMW-5D Matrix: Water Date Received: 09/10/04 17:22

Parameters	Results	Units	Report Limit	DF	Analyzed	By	CAS No.	Qual	RegLmt
1,1,2,2-Tetrachloroethane	ND	ug/l	5.0	1.0	09/15/04 03:47	TMB	79-34-5		
Bromobenzene	ND	ug/l	5.0	1.0	09/15/04 03:47	TMB	108-86-1		
1,2,3-Trichloropropane	ND	ug/l	5.0	1.0	09/15/04 03:47	TMB	96-18-4		
n-Propylbenzene	ND	ug/l	5.0	1.0	09/15/04 03:47	TMB	103-65-1		
2-Chlorotoluene	ND	ug/l	5.0	1.0	09/15/04 03:47	TMB	95-49-8		
1,3,5-Trimethylbenzene	ND	ug/l	5.0	1.0	09/15/04 03:47	TMB	108-67-8		
4-Chlorotoluene	ND	ug/l	5.0	1.0	09/15/04 03:47	TMB	106-43-4		
1,2,4-Trimethylbenzene	ND	ug/l	5.0	1.0	09/15/04 03:47	TMB	95-63-6		
sec-Butylbenzene	ND	ug/l	5.0	1.0	09/15/04 03:47	TMB	135-98-8		
tert-Butylbenzene	ND	ug/l	5.0	1.0	09/15/04 03:47	TMB	98-06-6		
p-Isopropyltoluene	ND	ug/l	5.0	1.0	09/15/04 03:47	TMB	99-87-6		
1,3-Dichlorobenzene	ND	ug/l	5.0	1.0	09/15/04 03:47	TMB	541-73-1		
1,4-Dichlorobenzene	ND	ug/l	5.0	1.0	09/15/04 03:47	TMB	106-46-7		
n-Butylbenzene	ND	ug/l	5.0	1.0	09/15/04 03:47	TMB	104-51-8		
1,2-Dichlorobenzene	ND	ug/l	5.0	1.0	09/15/04 03:47	TMB	95-50-1		
1,2-Dibromo-3-chloropropane	ND	ug/l	5.0	1.0	09/15/04 03:47	TMB	96-12-8		
1,2,4-Trichlorobenzene	ND	ug/l	5.0	1.0	09/15/04 03:47	TMB	120-82-1		
Hexachloro-1,3-butadiene	ND	ug/l	5.0	1.0	09/15/04 03:47	TMB	87-68-3		
Naphthalene	ND	ug/l	5.0	1.0	09/15/04 03:47	TMB	91-20-3		
1,2,3-Trichlorobenzene	ND	ug/l	5.0	1.0	09/15/04 03:47	TMB	87-61-6		
trans-1,3-Dichloropropene	ND	ug/l	5.0	1.0	09/15/04 03:47	TMB	10061-02-6		
cis-1,3-Dichloropropene	ND	ug/l	5.0	1.0	09/15/04 03:47	TMB	10061-01-5		
2-Chloroethylvinyl ether	ND	ug/l	10.	1.0	09/15/04 03:47	TMB	110-75-8		
Acetone	ND	ug/l	25.	1.0	09/15/04 03:47	TMB	67-64-1		
2-Butanone (MEK)	ND	ug/l	10.	1.0	09/15/04 03:47	TMB	78-93-3		
4-Methyl-2-pentanone (MIBK)	ND	ug/l	10.	1.0	09/15/04 03:47	TMB	108-10-1		
Acrolein	ND	ug/l	50.	1.0	09/15/04 03:47	TMB	107-02-8		
Acrylonitrile	ND	ug/l	50.	1.0	09/15/04 03:47	TMB	107-13-1		
2-Hexanone	ND	ug/l	10.	1.0	09/15/04 03:47	TMB	591-78-6		
Vinyl acetate	ND	ug/l	10.	1.0	09/15/04 03:47	TMB	108-05-4		
Iodomethane	ND	ug/l	10.	1.0	09/15/04 03:47	TMB	74-88-4		
Methyl-tert-butyl ether	ND	ug/l	5.0	1.0	09/15/04 03:47	TMB	1634-04-4		
Carbon disulfide	ND	ug/l	5.0	1.0	09/15/04 03:47	TMB	75-15-0		
trans-1,4-Dichloro-2-butene	ND	ug/l	100	1.0	09/15/04 03:47	TMB	110-57-6		
Ethyl methacrylate	ND	ug/l	100	1.0	09/15/04 03:47	TMB	97-63-2		
Xylene (Total)	ND	ug/l	10.	1.0	09/15/04 03:47	TMB	1330-20-7		
Dibromofluoromethane (S)	102	%		1.0	09/15/04 03:47	TMB	1868-53-7		
Toluene-d8 (S)	107	%		1.0	09/15/04 03:47	TMB	2037-26-5		
4-Bromofluorobenzene (S)	102	%		1.0	09/15/04 03:47	TMB	460-00-4		

REPORT OF LABORATORY ANALYSIS
This report shall not be reproduced, except in full,
without the written consent of Pace Analytical Services, Inc.

Pace Analytical®
www.pacelabs.com

Pace Analytical Services, Inc.
7726 Moller Road
Indianapolis, IN 46268
Phone: 317.875.5894
Fax: 317.872.6189

Lab Project Number: 5038537
Client Project ID: Michigan Meadows/M01046

Lab Sample No: 503795775 | Project Sample Number: 5038537-006 | Date Collected: 09/10/04 13:25
Client Sample ID: MMW-6D | Matrix: Water | Date Received: 09/10/04 17:22

Parameters	Results	Units	Report Limit	DF	Analyzed	By	CAS No.	Qual	RegLmt
GC/MS Volatiles									
GC/MS VOCs by 8260	Method: EPA 8260								
Dichlorodifluoromethane	ND	ug/l	5.0	1.0	09/15/04 04:18	TMB	75-71-8		
Chloromethane	ND	ug/l	5.0	1.0	09/15/04 04:18	TMB	74-87-3		
Vinyl chloride	400	ug/l	50.	25.0	09/15/04 19:23	TMB	75-01-4		
Bromomethane	ND	ug/l	5.0	1.0	09/15/04 04:18	TMB	74-83-9		
Chloroethane	ND	ug/l	5.0	1.0	09/15/04 04:18	TMB	75-00-3		
Trichlorofluoromethane	ND	ug/l	5.0	1.0	09/15/04 04:18	TMB	75-69-4		
Methylene chloride	ND	ug/l	5.0	1.0	09/15/04 04:18	TMB	75-09-2		
1,1-Dichloroethene	ND	ug/l	5.0	1.0	09/15/04 04:18	TMB	75-35-4		
trans-1,2-Dichloroethene	ND	ug/l	5.0	1.0	09/15/04 04:18	TMB	156-60-5		
1,1-Dichloroethane	ND	ug/l	5.0	1.0	09/15/04 04:18	TMB	75-34-3		
2,2-Dichloropropane	ND	ug/l	5.0	1.0	09/15/04 04:18	TMB	594-20-7		
cis-1,2-Dichloroethene	540	ug/l	120	25.0	09/15/04 19:23	TMB	156-59-2		
Chloroform	ND	ug/l	5.0	1.0	09/15/04 04:18	TMB	67-66-3		
Bromochloromethane	ND	ug/l	5.0	1.0	09/15/04 04:18	TMB	74-97-5		
1,1,1-Trichloroethane	ND	ug/l	5.0	1.0	09/15/04 04:18	TMB	71-55-6		
Carbon tetrachloride	ND	ug/l	5.0	1.0	09/15/04 04:18	TMB	56-23-5		
1,1-Dichloropropene	ND	ug/l	5.0	1.0	09/15/04 04:18	TMB	563-58-6		
Benzene	ND	ug/l	5.0	1.0	09/15/04 04:18	TMB	71-43-2		
1,2-Dichloroethane	ND	ug/l	5.0	1.0	09/15/04 04:18	TMB	107-06-2		
Trichloroethene	ND	ug/l	5.0	1.0	09/15/04 04:18	TMB	79-01-6		
1,2-Dichloropropane	ND	ug/l	5.0	1.0	09/15/04 04:18	TMB	78-87-5		
Bromodichloromethane	ND	ug/l	5.0	1.0	09/15/04 04:18	TMB	75-27-4		
Dibromomethane	ND	ug/l	5.0	1.0	09/15/04 04:18	TMB	74-95-3		
Toluene	ND	ug/l	5.0	1.0	09/15/04 04:18	TMB	108-88-3		
1,1,2-Trichloroethane	ND	ug/l	5.0	1.0	09/15/04 04:18	TMB	79-00-5		
Tetrachloroethene	ND	ug/l	5.0	1.0	09/15/04 04:18	TMB	127-18-4		
1,3-Dichloropropane	ND	ug/l	5.0	1.0	09/15/04 04:18	TMB	142-28-9		
Dibromochloromethane	ND	ug/l	5.0	1.0	09/15/04 04:18	TMB	124-48-1		
1,2-Dibromoethane (EDB)	ND	ug/l	5.0	1.0	09/15/04 04:18	TMB	106-93-4		
Chlorobenzene	ND	ug/l	5.0	1.0	09/15/04 04:18	TMB	108-90-7		
1,1,1,2-Tetrachloroethane	ND	ug/l	5.0	1.0	09/15/04 04:18	TMB	630-20-6		
Ethylbenzene	ND	ug/l	5.0	1.0	09/15/04 04:18	TMB	100-41-4		
m&p-Xylene	ND	ug/l	5.0	1.0	09/15/04 04:18	TMB			
o-Xylene	ND	ug/l	5.0	1.0	09/15/04 04:18	TMB	95-47-6		
Styrene	ND	ug/l	5.0	1.0	09/15/04 04:18	TMB	100-42-5		
Bromoform	ND	ug/l	5.0	1.0	09/15/04 04:18	TMB	75-25-2		
Isopropylbenzene (Cumene)	ND	ug/l	5.0	1.0	09/15/04 04:18	TMB	98-82-8		

REPORT OF LABORATORY ANALYSIS
This report shall not be reproduced, except in full,
without the written consent of Pace Analytical Services, Inc.

Pace Analytical®
www.pacelabs.com

Pace Analytical Services, Inc.
7726 Moller Road
Indianapolis, IN 46268
Phone: 317.875.5894
Fax: 317.872.6189

Lab Project Number: 5038537
Client Project ID: Michigan Meadows/M01046

Lab Sample No: 503795775 Project Sample Number: 5038537-006 Date Collected: 09/10/04 13:25
Client Sample ID: MMW-6D Matrix: Water Date Received: 09/10/04 17:22

Parameters	Results	Units	Report Limit	DF	Analyzed	By	CAS No.	Qual	RegLmt
1,1,2,2-Tetrachloroethane	ND	ug/l	5.0	1.0	09/15/04 04:18	TMB	79-34-5		
Bromobenzene	ND	ug/l	5.0	1.0	09/15/04 04:18	TMB	108-86-1		
1,2,3-Trichloropropane	ND	ug/l	5.0	1.0	09/15/04 04:18	TMB	96-18-4		
n-Propylbenzene	ND	ug/l	5.0	1.0	09/15/04 04:18	TMB	103-65-1		
2-Chlorotoluene	ND	ug/l	5.0	1.0	09/15/04 04:18	TMB	95-49-8		
1,3,5-Trimethylbenzene	ND	ug/l	5.0	1.0	09/15/04 04:18	TMB	108-67-8		
4-Chlorotoluene	ND	ug/l	5.0	1.0	09/15/04 04:18	TMB	106-43-4		
1,2,4-Trimethylbenzene	ND	ug/l	5.0	1.0	09/15/04 04:18	TMB	95-63-6		
sec-Butylbenzene	ND	ug/l	5.0	1.0	09/15/04 04:18	TMB	135-98-8		
tert-Butylbenzene	ND	ug/l	5.0	1.0	09/15/04 04:18	TMB	98-06-6		
p-Isopropyltoluene	ND	ug/l	5.0	1.0	09/15/04 04:18	TMB	99-87-6		
1,3-Dichlorobenzene	ND	ug/l	5.0	1.0	09/15/04 04:18	TMB	541-73-1		
1,4-Dichlorobenzene	ND	ug/l	5.0	1.0	09/15/04 04:18	TMB	106-46-7		
n-Butylbenzene	ND	ug/l	5.0	1.0	09/15/04 04:18	TMB	104-51-8		
1,2-Dichlorobenzene	ND	ug/l	5.0	1.0	09/15/04 04:18	TMB	95-50-1		
1,2-Dibromo-3-chloropropane	ND	ug/l	5.0	1.0	09/15/04 04:18	TMB	96-12-8		
1,2,4-Trichlorobenzene	ND	ug/l	5.0	1.0	09/15/04 04:18	TMB	120-82-1		
Hexachloro-1,3-butadiene	ND	ug/l	5.0	1.0	09/15/04 04:18	TMB	87-68-3		
Naphthalene	ND	ug/l	5.0	1.0	09/15/04 04:18	TMB	91-20-3		
1,2,3-Trichlorobenzene	ND	ug/l	5.0	1.0	09/15/04 04:18	TMB	87-61-6		
trans-1,3-Dichloropropene	ND	ug/l	5.0	1.0	09/15/04 04:18	TMB	10061-02-6		
cis-1,3-Dichloropropene	ND	ug/l	5.0	1.0	09/15/04 04:18	TMB	10061-01-5		
2-Chloroethylvinyl ether	ND	ug/l	10.	1.0	09/15/04 04:18	TMB	110-75-8		
Acetone	ND	ug/l	25.	1.0	09/15/04 04:18	TMB	67-64-1		
2-Butanone (MEK)	ND	ug/l	10.	1.0	09/15/04 04:18	TMB	78-93-3		
4-Methyl-2-pentanone (MIBK)	ND	ug/l	10.	1.0	09/15/04 04:18	TMB	108-10-1		
Acrolein	ND	ug/l	50.	1.0	09/15/04 04:18	TMB	107-02-8		
Acrylonitrile	ND	ug/l	50.	1.0	09/15/04 04:18	TMB	107-13-1		
2-Hexanone	ND	ug/l	10.	1.0	09/15/04 04:18	TMB	591-78-6		
Vinyl acetate	ND	ug/l	10.	1.0	09/15/04 04:18	TMB	108-05-4		
Iodomethane	ND	ug/l	10.	1.0	09/15/04 04:18	TMB	74-88-4		
Methyl-tert-butyl ether	ND	ug/l	5.0	1.0	09/15/04 04:18	TMB	1634-04-4		
Carbon disulfide	ND	ug/l	5.0	1.0	09/15/04 04:18	TMB	75-15-0		
trans-1,4-Dichloro-2-butene	ND	ug/l	100	1.0	09/15/04 04:18	TMB	110-57-6		
Ethyl methacrylate	ND	ug/l	100	1.0	09/15/04 04:18	TMB	97-63-2		
Xylene (Total)	ND	ug/l	10.	1.0	09/15/04 04:18	TMB	1330-20-7		
Dibromofluoromethane (S)	99	%		1.0	09/15/04 04:18	TMB	1868-53-7		
Toluene-d8 (S)	105	%		1.0	09/15/04 04:18	TMB	2037-26-5		
4-Bromofluorobenzene (S)	105	%		1.0	09/15/04 04:18	TMB	460-00-4		

REPORT OF LABORATORY ANALYSIS
This report shall not be reproduced, except in full,
without the written consent of Pace Analytical Services, Inc.

Pace Analytical®
www.pacelabs.com

Pace Analytical Services, Inc.
7726 Moller Road
Indianapolis, IN 46268
Phone: 317.875.5894
Fax: 317.872.6189

Lab Project Number: 5038537
Client Project ID: Michigan Meadows/M01046

Lab Sample No: 503795783 Project Sample Number: 5038537-007 Date Collected: 09/10/04 12:15
Client Sample ID: MMW-7S Matrix: Water Date Received: 09/10/04 17:22

Parameters	Results	Units	Report Limit	DF	Analyzed	By	CAS No.	Qual	RegLmt
GC/MS Volatiles									
GC/MS VOCs by 8260	Method: EPA 8260								
Dichlorodifluoromethane	ND	ug/l	5.0	1.0	09/15/04 04:50	TMB	75-71-8		
Chloromethane	ND	ug/l	5.0	1.0	09/15/04 04:50	TMB	74-87-3		
Vinyl chloride	ND	ug/l	2.0	1.0	09/15/04 04:50	TMB	75-01-4		
Bromomethane	ND	ug/l	5.0	1.0	09/15/04 04:50	TMB	74-83-9		
Chloroethane	ND	ug/l	5.0	1.0	09/15/04 04:50	TMB	75-00-3		
Trichlorofluoromethane	ND	ug/l	5.0	1.0	09/15/04 04:50	TMB	75-69-4		
Methylene chloride	ND	ug/l	5.0	1.0	09/15/04 04:50	TMB	75-09-2		
1,1-Dichloroethene	ND	ug/l	5.0	1.0	09/15/04 04:50	TMB	75-35-4		
trans-1,2-Dichloroethene	ND	ug/l	5.0	1.0	09/15/04 04:50	TMB	156-60-5		
1,1-Dichloroethane	ND	ug/l	5.0	1.0	09/15/04 04:50	TMB	75-34-3		
2,2-Dichloropropane	ND	ug/l	5.0	1.0	09/15/04 04:50	TMB	594-20-7		
cis-1,2-Dichloroethene	8.5	ug/l	5.0	1.0	09/15/04 04:50	TMB	156-59-2		
Chloroform	ND	ug/l	5.0	1.0	09/15/04 04:50	TMB	67-66-3		
Bromochloromethane	ND	ug/l	5.0	1.0	09/15/04 04:50	TMB	74-97-5		
1,1,1-Trichloroethane	ND	ug/l	5.0	1.0	09/15/04 04:50	TMB	71-55-6		
Carbon tetrachloride	ND	ug/l	5.0	1.0	09/15/04 04:50	TMB	56-23-5		
1,1-Dichloropropene	ND	ug/l	5.0	1.0	09/15/04 04:50	TMB	563-58-6		
Benzene	ND	ug/l	5.0	1.0	09/15/04 04:50	TMB	71-43-2		
1,2-Dichloroethane	ND	ug/l	5.0	1.0	09/15/04 04:50	TMB	107-06-2		
Trichloroethene	ND	ug/l	5.0	1.0	09/15/04 04:50	TMB	79-01-6		
1,2-Dichloropropane	ND	ug/l	5.0	1.0	09/15/04 04:50	TMB	78-87-5		
Bromodichloromethane	ND	ug/l	5.0	1.0	09/15/04 04:50	TMB	75-27-4		
Dibromomethane	ND	ug/l	5.0	1.0	09/15/04 04:50	TMB	74-95-3		
Toluene	ND	ug/l	5.0	1.0	09/15/04 04:50	TMB	108-88-3		
1,1,2-Trichloroethane	ND	ug/l	5.0	1.0	09/15/04 04:50	TMB	79-00-5		
Tetrachloroethene	ND	ug/l	5.0	1.0	09/15/04 04:50	TMB	127-18-4		
1,3-Dichloropropane	ND	ug/l	5.0	1.0	09/15/04 04:50	TMB	142-28-9		
Dibromochloromethane	ND	ug/l	5.0	1.0	09/15/04 04:50	TMB	124-48-1		
1,2-Dibromoethane (EDB)	ND	ug/l	5.0	1.0	09/15/04 04:50	TMB	106-93-4		
Chlorobenzene	ND	ug/l	5.0	1.0	09/15/04 04:50	TMB	108-90-7		
1,1,1,2-Tetrachloroethane	ND	ug/l	5.0	1.0	09/15/04 04:50	TMB	630-20-6		
Ethylbenzene	ND	ug/l	5.0	1.0	09/15/04 04:50	TMB	100-41-4		
m&p-Xylene	ND	ug/l	5.0	1.0	09/15/04 04:50	TMB			
o-Xylene	ND	ug/l	5.0	1.0	09/15/04 04:50	TMB	95-47-6		
Styrene	ND	ug/l	5.0	1.0	09/15/04 04:50	TMB	100-42-5		
Bromoform	ND	ug/l	5.0	1.0	09/15/04 04:50	TMB	75-25-2		
Isopropylbenzene (Cumene)	ND	ug/l	5.0	1.0	09/15/04 04:50	TMB	98-82-8		

REPORT OF LABORATORY ANALYSIS
This report shall not be reproduced, except in full,
without the written consent of Pace Analytical Services, Inc.

Pace Analytical®
www.pacelabs.com

Pace Analytical Services, Inc.
7726 Moller Road
Indianapolis, IN 46268
Phone: 317.875.5894
Fax: 317.872.6189

Lab Project Number: 5038537
Client Project ID: Michigan Meadows/M01046

Lab Sample No: 503795783 | Project Sample Number: 5038537-007 | Date Collected: 09/10/04 12:15
Client Sample ID: MMW-7S | Matrix: Water | Date Received: 09/10/04 17:22

Parameters	Results	Units	Report Limit	DF	Analyzed	By	CAS No.	Qual	RegLmt
1,1,2,2-Tetrachloroethane	ND	ug/l	5.0	1.0	09/15/04 04:50	TMB	79-34-5		
Bromobenzene	ND	ug/l	5.0	1.0	09/15/04 04:50	TMB	108-86-1		
1,2,3-Trichloropropane	ND	ug/l	5.0	1.0	09/15/04 04:50	TMB	96-18-4		
n-Propylbenzene	ND	ug/l	5.0	1.0	09/15/04 04:50	TMB	103-65-1		
2-Chlorotoluene	ND	ug/l	5.0	1.0	09/15/04 04:50	TMB	95-49-8		
1,3,5-Trimethylbenzene	ND	ug/l	5.0	1.0	09/15/04 04:50	TMB	108-67-8		
4-Chlorotoluene	ND	ug/l	5.0	1.0	09/15/04 04:50	TMB	106-43-4		
1,2,4-Trimethylbenzene	ND	ug/l	5.0	1.0	09/15/04 04:50	TMB	95-63-6		
sec-Butylbenzene	ND	ug/l	5.0	1.0	09/15/04 04:50	TMB	135-98-8		
tert-Butylbenzene	ND	ug/l	5.0	1.0	09/15/04 04:50	TMB	98-06-6		
p-Isopropyltoluene	ND	ug/l	5.0	1.0	09/15/04 04:50	TMB	99-87-6		
1,3-Dichlorobenzene	ND	ug/l	5.0	1.0	09/15/04 04:50	TMB	541-73-1		
1,4-Dichlorobenzene	ND	ug/l	5.0	1.0	09/15/04 04:50	TMB	106-46-7		
n-Butylbenzene	ND	ug/l	5.0	1.0	09/15/04 04:50	TMB	104-51-8		
1,2-Dichlorobenzene	ND	ug/l	5.0	1.0	09/15/04 04:50	TMB	95-50-1		
1,2-Dibromo-3-chloropropane	ND	ug/l	5.0	1.0	09/15/04 04:50	TMB	96-12-8		
1,2,4-Trichlorobenzene	ND	ug/l	5.0	1.0	09/15/04 04:50	TMB	120-82-1		
Hexachloro-1,3-butadiene	ND	ug/l	5.0	1.0	09/15/04 04:50	TMB	87-68-3		
Naphthalene	ND	ug/l	5.0	1.0	09/15/04 04:50	TMB	91-20-3		
1,2,3-Trichlorobenzene	ND	ug/l	5.0	1.0	09/15/04 04:50	TMB	87-61-6		
trans-1,3-Dichloropropene	ND	ug/l	5.0	1.0	09/15/04 04:50	TMB	10061-02-6		
cis-1,3-Dichloropropene	ND	ug/l	5.0	1.0	09/15/04 04:50	TMB	10061-01-5		
2-Chloroethylvinyl ether	ND	ug/l	10.	1.0	09/15/04 04:50	TMB	110-75-8		
Acetone	ND	ug/l	25.	1.0	09/15/04 04:50	TMB	67-64-1		
2-Butanone (MEK)	ND	ug/l	10.	1.0	09/15/04 04:50	TMB	78-93-3		
4-Methyl-2-pentanone (MIBK)	ND	ug/l	10.	1.0	09/15/04 04:50	TMB	108-10-1		
Acrolein	ND	ug/l	50.	1.0	09/15/04 04:50	TMB	107-02-8		
Acrylonitrile	ND	ug/l	50.	1.0	09/15/04 04:50	TMB	107-13-1		
2-Hexanone	ND	ug/l	10.	1.0	09/15/04 04:50	TMB	591-78-6		
Vinyl acetate	ND	ug/l	10.	1.0	09/15/04 04:50	TMB	108-05-4		
Iodomethane	ND	ug/l	10.	1.0	09/15/04 04:50	TMB	74-88-4		
Methyl-tert-butyl ether	ND	ug/l	5.0	1.0	09/15/04 04:50	TMB	1634-04-4		
Carbon disulfide	ND	ug/l	5.0	1.0	09/15/04 04:50	TMB	75-15-0		
trans-1,4-Dichloro-2-butene	ND	ug/l	100	1.0	09/15/04 04:50	TMB	110-57-6		
Ethyl methacrylate	ND	ug/l	100	1.0	09/15/04 04:50	TMB	97-63-2		
Xylene (Total)	ND	ug/l	10.	1.0	09/15/04 04:50	TMB	1330-20-7		
Dibromofluoromethane (S)	99	%		1.0	09/15/04 04:50	TMB	1868-53-7		
Toluene-d8 (S)	106	%		1.0	09/15/04 04:50	TMB	2037-26-5		
4-Bromofluorobenzene (S)	101	%		1.0	09/15/04 04:50	TMB	460-00-4		

REPORT OF LABORATORY ANALYSIS
This report shall not be reproduced, except in full,
without the written consent of Pace Analytical Services, Inc.

Pace Analytical®
www.pacelabs.com

Pace Analytical Services, Inc.
7726 Moller Road
Indianapolis, IN 46268
Phone: 317.875.5894
Fax: 317.872.6189

Lab Project Number: 5038537
Client Project ID: Michigan Meadows/M01046

Lab Sample No: 503795791 | Project Sample Number: 5038537-008 | Date Collected: 09/10/04 11:30
Client Sample ID: TB-01 | Matrix: Water | Date Received: 09/10/04 17:22

Parameters	Results	Units	Report Limit	DF	Analyzed	By	CAS No.	Qual	RegLmt
GC/MS Volatiles									
GC/MS VOCs by 8260	Method: EPA 8260								
Dichlorodifluoromethane	ND	ug/l	5.0	1.0	09/15/04 05:21	TMB	75-71-8		
Chloromethane	ND	ug/l	5.0	1.0	09/15/04 05:21	TMB	74-87-3		
Vinyl chloride	ND	ug/l	2.0	1.0	09/15/04 05:21	TMB	75-01-4		
Bromomethane	ND	ug/l	5.0	1.0	09/15/04 05:21	TMB	74-83-9		
Chloroethane	ND	ug/l	5.0	1.0	09/15/04 05:21	TMB	75-00-3		
Trichlorofluoromethane	ND	ug/l	5.0	1.0	09/15/04 05:21	TMB	75-69-4		
Methylene chloride	ND	ug/l	5.0	1.0	09/15/04 05:21	TMB	75-09-2		
1,1-Dichloroethene	ND	ug/l	5.0	1.0	09/15/04 05:21	TMB	75-35-4		
trans-1,2-Dichloroethene	ND	ug/l	5.0	1.0	09/15/04 05:21	TMB	156-60-5		
1,1-Dichloroethane	ND	ug/l	5.0	1.0	09/15/04 05:21	TMB	75-34-3		
2,2-Dichloropropane	ND	ug/l	5.0	1.0	09/15/04 05:21	TMB	594-20-7		
cis-1,2-Dichloroethene	ND	ug/l	5.0	1.0	09/15/04 05:21	TMB	156-59-2		
Chloroform	ND	ug/l	5.0	1.0	09/15/04 05:21	TMB	67-66-3		
Bromochloromethane	ND	ug/l	5.0	1.0	09/15/04 05:21	TMB	74-97-5		
1,1,1-Trichloroethane	ND	ug/l	5.0	1.0	09/15/04 05:21	TMB	71-55-6		
Carbon tetrachloride	ND	ug/l	5.0	1.0	09/15/04 05:21	TMB	56-23-5		
1,1-Dichloropropene	ND	ug/l	5.0	1.0	09/15/04 05:21	TMB	563-58-6		
Benzene	ND	ug/l	5.0	1.0	09/15/04 05:21	TMB	71-43-2		
1,2-Dichloroethane	ND	ug/l	5.0	1.0	09/15/04 05:21	TMB	107-06-2		
Trichloroethene	ND	ug/l	5.0	1.0	09/15/04 05:21	TMB	79-01-6		
1,2-Dichloropropane	ND	ug/l	5.0	1.0	09/15/04 05:21	TMB	78-87-5		
Bromodichloromethane	ND	ug/l	5.0	1.0	09/15/04 05:21	TMB	75-27-4		
Dibromomethane	ND	ug/l	5.0	1.0	09/15/04 05:21	TMB	74-95-3		
Toluene	ND	ug/l	5.0	1.0	09/15/04 05:21	TMB	108-88-3		
1,1,2-Trichloroethane	ND	ug/l	5.0	1.0	09/15/04 05:21	TMB	79-00-5		
Tetrachloroethene	ND	ug/l	5.0	1.0	09/15/04 05:21	TMB	127-18-4		
1,3-Dichloropropane	ND	ug/l	5.0	1.0	09/15/04 05:21	TMB	142-28-9		
Dibromochloromethane	ND	ug/l	5.0	1.0	09/15/04 05:21	TMB	124-48-1		
1,2-Dibromoethane (EDB)	ND	ug/l	5.0	1.0	09/15/04 05:21	TMB	106-93-4		
Chlorobenzene	ND	ug/l	5.0	1.0	09/15/04 05:21	TMB	108-90-7		
1,1,1,2-Tetrachloroethane	ND	ug/l	5.0	1.0	09/15/04 05:21	TMB	630-20-6		
Ethylbenzene	ND	ug/l	5.0	1.0	09/15/04 05:21	TMB	100-41-4		
m&p-Xylene	ND	ug/l	5.0	1.0	09/15/04 05:21	TMB			
o-Xylene	ND	ug/l	5.0	1.0	09/15/04 05:21	TMB	95-47-6		
Styrene	ND	ug/l	5.0	1.0	09/15/04 05:21	TMB	100-42-5		
Bromoform	ND	ug/l	5.0	1.0	09/15/04 05:21	TMB	75-25-2		
Isopropylbenzene (Cumene)	ND	ug/l	5.0	1.0	09/15/04 05:21	TMB	98-82-8		

REPORT OF LABORATORY ANALYSIS
This report shall not be reproduced, except in full,
without the written consent of Pace Analytical Services, Inc.

Pace Analytical®
www.pacelabs.com

Pace Analytical Services, Inc.
7726 Moller Road
Indianapolis, IN 46268
Phone: 317.875.5894
Fax: 317.872.6189

Lab Project Number: 5038537
Client Project ID: Michigan Meadows/M01046

Lab Sample No: 503795791 Project Sample Number: 5038537-008 Date Collected: 09/10/04 11:30
Client Sample ID: TB-01 Matrix: Water Date Received: 09/10/04 17:22

Parameters	Results	Units	Report Limit	DF	Analyzed	By	CAS No.	Qual	RegLmt
1,1,2,2-Tetrachloroethane	ND	ug/l	5.0	1.0	09/15/04 05:21	TMB	79-34-5		
Bromobenzene	ND	ug/l	5.0	1.0	09/15/04 05:21	TMB	108-86-1		
1,2,3-Trichloropropane	ND	ug/l	5.0	1.0	09/15/04 05:21	TMB	96-18-4		
n-Propylbenzene	ND	ug/l	5.0	1.0	09/15/04 05:21	TMB	103-65-1		
2-Chlorotoluene	ND	ug/l	5.0	1.0	09/15/04 05:21	TMB	95-49-8		
1,3,5-Trimethylbenzene	ND	ug/l	5.0	1.0	09/15/04 05:21	TMB	108-67-8		
4-Chlorotoluene	ND	ug/l	5.0	1.0	09/15/04 05:21	TMB	106-43-4		
1,2,4-Trimethylbenzene	ND	ug/l	5.0	1.0	09/15/04 05:21	TMB	95-63-6		
sec-Butylbenzene	ND	ug/l	5.0	1.0	09/15/04 05:21	TMB	135-98-8		
tert-Butylbenzene	ND	ug/l	5.0	1.0	09/15/04 05:21	TMB	98-06-6		
p-Isopropyltoluene	ND	ug/l	5.0	1.0	09/15/04 05:21	TMB	99-87-6		
1,3-Dichlorobenzene	ND	ug/l	5.0	1.0	09/15/04 05:21	TMB	541-73-1		
1,4-Dichlorobenzene	ND	ug/l	5.0	1.0	09/15/04 05:21	TMB	106-46-7		
n-Butylbenzene	ND	ug/l	5.0	1.0	09/15/04 05:21	TMB	104-51-8		
1,2-Dichlorobenzene	ND	ug/l	5.0	1.0	09/15/04 05:21	TMB	95-50-1		
1,2-Dibromo-3-chloropropane	ND	ug/l	5.0	1.0	09/15/04 05:21	TMB	96-12-8		
1,2,4-Trichlorobenzene	ND	ug/l	5.0	1.0	09/15/04 05:21	TMB	120-82-1		
Hexachloro-1,3-butadiene	ND	ug/l	5.0	1.0	09/15/04 05:21	TMB	87-68-3		
Naphthalene	ND	ug/l	5.0	1.0	09/15/04 05:21	TMB	91-20-3		
1,2,3-Trichlorobenzene	ND	ug/l	5.0	1.0	09/15/04 05:21	TMB	87-61-6		
trans-1,3-Dichloropropene	ND	ug/l	5.0	1.0	09/15/04 05:21	TMB	10061-02-6		
cis-1,3-Dichloropropene	ND	ug/l	5.0	1.0	09/15/04 05:21	TMB	10061-01-5		
2-Chloroethylvinyl ether	ND	ug/l	10.	1.0	09/15/04 05:21	TMB	110-75-8		
Acetone	ND	ug/l	25.	1.0	09/15/04 05:21	TMB	67-64-1		
2-Butanone (MEK)	ND	ug/l	10.	1.0	09/15/04 05:21	TMB	78-93-3		
4-Methyl-2-pentanone (MIBK)	ND	ug/l	10.	1.0	09/15/04 05:21	TMB	108-10-1		
Acrolein	ND	ug/l	50.	1.0	09/15/04 05:21	TMB	107-02-8		
Acrylonitrile	ND	ug/l	50.	1.0	09/15/04 05:21	TMB	107-13-1		
2-Hexanone	ND	ug/l	10.	1.0	09/15/04 05:21	TMB	591-78-6		
Vinyl acetate	ND	ug/l	10.	1.0	09/15/04 05:21	TMB	108-05-4		
Iodomethane	ND	ug/l	10.	1.0	09/15/04 05:21	TMB	74-88-4		
Methyl-tert-butyl ether	ND	ug/l	5.0	1.0	09/15/04 05:21	TMB	1634-04-4		
Carbon disulfide	ND	ug/l	5.0	1.0	09/15/04 05:21	TMB	75-15-0		
trans-1,4-Dichloro-2-butene	ND	ug/l	100	1.0	09/15/04 05:21	TMB	110-57-6		
Ethyl methacrylate	ND	ug/l	100	1.0	09/15/04 05:21	TMB	97-63-2		
Xylene (Total)	ND	ug/l	10.	1.0	09/15/04 05:21	TMB	1330-20-7		
Dibromofluoromethane (S)	103	%		1.0	09/15/04 05:21	TMB	1868-53-7		
Toluene-d8 (S)	105	%		1.0	09/15/04 05:21	TMB	2037-26-5		
4-Bromofluorobenzene (S)	105	%		1.0	09/15/04 05:21	TMB	460-00-4		

REPORT OF LABORATORY ANALYSIS
This report shall not be reproduced, except in full,
without the written consent of Pace Analytical Services, Inc.

Pace Analytical®
www.pacelabs.com

Pace Analytical Services, Inc.
7726 Moller Road
Indianapolis, IN 46268
Phone: 317.875.5894
Fax: 317.872.6189

Lab Project Number: 5038537
Client Project ID: Michigan Meadows/M01046

Lab Sample No: 503795809 | Project Sample Number: 5038537-009 | Date Collected: 09/10/04 15:15
Client Sample ID: DUP (MMW-4D) | Matrix: Water | Date Received: 09/10/04 17:22

Parameters	Results	Units	Report Limit	DF	Analyzed	By	CAS No.	Qual	RegLmt
GC/MS Volatiles									
GC/MS VOCs by 8260	Method: EPA 8260								
Dichlorodifluoromethane	ND	ug/l	5.0	1.0	09/15/04 05:52	TMB	75-71-8		
Chloromethane	ND	ug/l	5.0	1.0	09/15/04 05:52	TMB	74-87-3		
Vinyl chloride	200	ug/l	2.0	1.0	09/15/04 05:52	TMB	75-01-4		
Bromomethane	ND	ug/l	5.0	1.0	09/15/04 05:52	TMB	74-83-9		
Chloroethane	ND	ug/l	5.0	1.0	09/15/04 05:52	TMB	75-00-3		
Trichlorofluoromethane	ND	ug/l	5.0	1.0	09/15/04 05:52	TMB	75-69-4		
Methylene chloride	ND	ug/l	5.0	1.0	09/15/04 05:52	TMB	75-09-2		
1,1-Dichloroethene	ND	ug/l	5.0	1.0	09/15/04 05:52	TMB	75-35-4		
trans-1,2-Dichloroethene	ND	ug/l	5.0	1.0	09/15/04 05:52	TMB	156-60-5		
1,1-Dichloroethane	ND	ug/l	5.0	1.0	09/15/04 05:52	TMB	75-34-3		
2,2-Dichloropropane	ND	ug/l	5.0	1.0	09/15/04 05:52	TMB	594-20-7		
cis-1,2-Dichloroethene	1100	ug/l	120	25.0	09/15/04 19:55	TMB	156-59-2		
Chloroform	ND	ug/l	5.0	1.0	09/15/04 05:52	TMB	67-66-3		
Bromochloromethane	ND	ug/l	5.0	1.0	09/15/04 05:52	TMB	74-97-5		
1,1,1-Trichloroethane	ND	ug/l	5.0	1.0	09/15/04 05:52	TMB	71-55-6		
Carbon tetrachloride	ND	ug/l	5.0	1.0	09/15/04 05:52	TMB	56-23-5		
1,1-Dichloropropene	ND	ug/l	5.0	1.0	09/15/04 05:52	TMB	563-58-6		
Benzene	ND	ug/l	5.0	1.0	09/15/04 05:52	TMB	71-43-2		
1,2-Dichloroethane	ND	ug/l	5.0	1.0	09/15/04 05:52	TMB	107-06-2		
Trichloroethene	ND	ug/l	5.0	1.0	09/15/04 05:52	TMB	79-01-6		
1,2-Dichloropropane	ND	ug/l	5.0	1.0	09/15/04 05:52	TMB	78-87-5		
Bromodichloromethane	ND	ug/l	5.0	1.0	09/15/04 05:52	TMB	75-27-4		
Dibromomethane	ND	ug/l	5.0	1.0	09/15/04 05:52	TMB	74-95-3		
Toluene	ND	ug/l	5.0	1.0	09/15/04 05:52	TMB	108-88-3		
1,1,2-Trichloroethane	ND	ug/l	5.0	1.0	09/15/04 05:52	TMB	79-00-5		
Tetrachloroethene	ND	ug/l	5.0	1.0	09/15/04 05:52	TMB	127-18-4		
1,3-Dichloropropane	ND	ug/l	5.0	1.0	09/15/04 05:52	TMB	142-28-9		
Dibromochloromethane	ND	ug/l	5.0	1.0	09/15/04 05:52	TMB	124-48-1		
1,2-Dibromoethane (EDB)	ND	ug/l	5.0	1.0	09/15/04 05:52	TMB	106-93-4		
Chlorobenzene	ND	ug/l	5.0	1.0	09/15/04 05:52	TMB	108-90-7		
1,1,1,2-Tetrachloroethane	ND	ug/l	5.0	1.0	09/15/04 05:52	TMB	630-20-6		
Ethylbenzene	ND	ug/l	5.0	1.0	09/15/04 05:52	TMB	100-41-4		
m&p-Xylene	ND	ug/l	5.0	1.0	09/15/04 05:52	TMB			
o-Xylene	ND	ug/l	5.0	1.0	09/15/04 05:52	TMB	95-47-6		
Styrene	ND	ug/l	5.0	1.0	09/15/04 05:52	TMB	100-42-5		
Bromoform	ND	ug/l	5.0	1.0	09/15/04 05:52	TMB	75-25-2		
Isopropylbenzene (Cumene)	ND	ug/l	5.0	1.0	09/15/04 05:52	TMB	98-82-8		

REPORT OF LABORATORY ANALYSIS
This report shall not be reproduced, except in full,
without the written consent of Pace Analytical Services, Inc.

Pace Analytical®
www.pacelabs.com

Pace Analytical Services, Inc.
7726 Moller Road
Indianapolis, IN 46268
Phone: 317.875.5894
Fax: 317.872.6189

Lab Project Number: 5038537
Client Project ID: Michigan Meadows/M01046

Lab Sample No: 503795809 Project Sample Number: 5038537-009 Date Collected: 09/10/04 15:15
Client Sample ID: DUP (MMW-4D) Matrix: Water Date Received: 09/10/04 17:22

Parameters	Results	Units	Report Limit	DF	Analyzed	By	CAS No.	Qual	RegLmt
1,1,2,2-Tetrachloroethane	ND	ug/l	5.0	1.0	09/15/04 05:52	TMB	79-34-5		
Bromobenzene	ND	ug/l	5.0	1.0	09/15/04 05:52	TMB	108-86-1		
1,2,3-Trichloropropane	ND	ug/l	5.0	1.0	09/15/04 05:52	TMB	96-18-4		
n-Propylbenzene	ND	ug/l	5.0	1.0	09/15/04 05:52	TMB	103-65-1		
2-Chlorotoluene	ND	ug/l	5.0	1.0	09/15/04 05:52	TMB	95-49-8		
1,3,5-Trimethylbenzene	ND	ug/l	5.0	1.0	09/15/04 05:52	TMB	108-67-8		
4-Chlorotoluene	ND	ug/l	5.0	1.0	09/15/04 05:52	TMB	106-43-4		
1,2,4-Trimethylbenzene	ND	ug/l	5.0	1.0	09/15/04 05:52	TMB	95-63-6		
sec-Butylbenzene	ND	ug/l	5.0	1.0	09/15/04 05:52	TMB	135-98-8		
tert-Butylbenzene	ND	ug/l	5.0	1.0	09/15/04 05:52	TMB	98-06-6		
p-Isopropyltoluene	ND	ug/l	5.0	1.0	09/15/04 05:52	TMB	99-87-6		
1,3-Dichlorobenzene	ND	ug/l	5.0	1.0	09/15/04 05:52	TMB	541-73-1		
1,4-Dichlorobenzene	ND	ug/l	5.0	1.0	09/15/04 05:52	TMB	106-46-7		
n-Butylbenzene	ND	ug/l	5.0	1.0	09/15/04 05:52	TMB	104-51-8		
1,2-Dichlorobenzene	ND	ug/l	5.0	1.0	09/15/04 05:52	TMB	95-50-1		
1,2-Dibromo-3-chloropropane	ND	ug/l	5.0	1.0	09/15/04 05:52	TMB	96-12-8		
1,2,4-Trichlorobenzene	ND	ug/l	5.0	1.0	09/15/04 05:52	TMB	120-82-1		
Hexachloro-1,3-butadiene	ND	ug/l	5.0	1.0	09/15/04 05:52	TMB	87-68-3		
Naphthalene	ND	ug/l	5.0	1.0	09/15/04 05:52	TMB	91-20-3		
1,2,3-Trichlorobenzene	ND	ug/l	5.0	1.0	09/15/04 05:52	TMB	87-61-6		
trans-1,3-Dichloropropene	ND	ug/l	5.0	1.0	09/15/04 05:52	TMB	10061-02-6		
cis-1,3-Dichloropropene	ND	ug/l	5.0	1.0	09/15/04 05:52	TMB	10061-01-5		
2-Chloroethylvinyl ether	ND	ug/l	10.	1.0	09/15/04 05:52	TMB	110-75-8		
Acetone	ND	ug/l	25.	1.0	09/15/04 05:52	TMB	67-64-1		
2-Butanone (MEK)	ND	ug/l	10.	1.0	09/15/04 05:52	TMB	78-93-3		
4-Methyl-2-pentanone (MIBK)	ND	ug/l	10.	1.0	09/15/04 05:52	TMB	108-10-1		
Acrolein	ND	ug/l	50.	1.0	09/15/04 05:52	TMB	107-02-8		
Acrylonitrile	ND	ug/l	50.	1.0	09/15/04 05:52	TMB	107-13-1		
2-Hexanone	ND	ug/l	10.	1.0	09/15/04 05:52	TMB	591-78-6		
Vinyl acetate	ND	ug/l	10.	1.0	09/15/04 05:52	TMB	108-05-4		
Iodomethane	ND	ug/l	10.	1.0	09/15/04 05:52	TMB	74-88-4		
Methyl-tert-butyl ether	ND	ug/l	5.0	1.0	09/15/04 05:52	TMB	1634-04-4		
Carbon disulfide	ND	ug/l	5.0	1.0	09/15/04 05:52	TMB	75-15-0		
trans-1,4-Dichloro-2-butene	ND	ug/l	100	1.0	09/15/04 05:52	TMB	110-57-6		
Ethyl methacrylate	ND	ug/l	100	1.0	09/15/04 05:52	TMB	97-63-2		
Xylene (Total)	ND	ug/l	10.	1.0	09/15/04 05:52	TMB	1330-20-7		
Dibromofluoromethane (S)	107	%		1.0	09/15/04 05:52	TMB	1868-53-7		
Toluene-d8 (S)	103	%		1.0	09/15/04 05:52	TMB	2037-26-5		
4-Bromofluorobenzene (S)	103	%		1.0	09/15/04 05:52	TMB	460-00-4		

REPORT OF LABORATORY ANALYSIS
This report shall not be reproduced, except in full,
without the written consent of Pace Analytical Services, Inc.

Pace Analytical®
www.pacelabs.com

Pace Analytical Services, Inc.
7726 Moller Road
Indianapolis, IN 46268
Phone: 317.875.5894
Fax: 317.872.6189

Lab Project Number: 5038537
Client Project ID: Michigan Meadows/M01046

PARAMETER FOOTNOTES

Dilution factor shown represents the factor applied to the reported result and reporting limit due to changes in sample preparation, dilution of the extract, or moisture content

ND	Not detected at or above adjusted reporting limit
NC	Not Calculable
J	Estimated concentration above the adjusted method detection limit and below the adjusted reporting limit
MDL	Adjusted Method Detection Limit
(S)	Surrogate
[1]	Detected but below the PRL; therefore, result is an estimated concentration (CLP J-Flag).
[2]	Report revised 3/22/05.

REPORT OF LABORATORY ANALYSIS
This report shall not be reproduced, except in full,
without the written consent of Pace Analytical Services, Inc.

Pace Analytical®
www.pacelabs.com

Pace Analytical Services, Inc.
7726 Moller Road
Indianapolis, IN 46268
Phone: 317.875.5894
Fax: 317.872.6189

QUALITY CONTROL DATA

Lab Project Number: 5038537
Client Project ID: Michigan Meadows/M01046

QC Batch: 77212 Analysis Method: EPA 8260
QC Batch Method: EPA 8260 Analysis Description: GC/MS VOCs by 8260
Associated Lab Samples: 503795726 503795734 503795742 503795759 503795767 503795775 503795783 503795791 503795809

METHOD BLANK: 503803165
Associated Lab Samples: 503795726 503795734 503795742 503795759 503795767 503795775 503795783 503795791 503795809

Parameter	Units	Blank Result	Reporting Limit	Footnotes
Dichlorodifluoromethane	ug/l	ND	5.0	
Chloromethane	ug/l	ND	5.0	
Vinyl chloride	ug/l	ND	2.0	
Bromomethane	ug/l	ND	5.0	
Chloroethane	ug/l	ND	5.0	
Trichlorofluoromethane	ug/l	ND	5.0	
Methylene chloride	ug/l	ND	5.0	
1,1-Dichloroethene	ug/l	ND	5.0	
trans-1,2-Dichloroethene	ug/l	ND	5.0	
1,1-Dichloroethane	ug/l	ND	5.0	
2,2-Dichloropropane	ug/l	ND	5.0	
cis-1,2-Dichloroethene	ug/l	ND	5.0	
Chloroform	ug/l	ND	5.0	
Bromochloromethane	ug/l	ND	5.0	
1,1,1-Trichloroethane	ug/l	ND	5.0	
Carbon tetrachloride	ug/l	ND	5.0	
1,1-Dichloropropene	ug/l	ND	5.0	
Benzene	ug/l	ND	5.0	
1,2-Dichloroethane	ug/l	ND	5.0	
Trichloroethene	ug/l	ND	5.0	
1,2-Dichloropropane	ug/l	ND	5.0	
Bromodichloromethane	ug/l	ND	5.0	
Dibromomethane	ug/l	ND	5.0	
Toluene	ug/l	ND	5.0	
1,1,2-Trichloroethane	ug/l	ND	5.0	
Tetrachloroethene	ug/l	ND	5.0	
1,3-Dichloropropane	ug/l	ND	5.0	
Dibromochloromethane	ug/l	ND	5.0	
1,2-Dibromoethane (EDB)	ug/l	ND	5.0	

REPORT OF LABORATORY ANALYSIS
This report shall not be reproduced, except in full,
without the written consent of Pace Analytical Services, Inc.

Pace Analytical®
www.pacelabs.com

Pace Analytical Services, Inc.
7726 Moller Road
Indianapolis, IN 46268
Phone: 317.875.5894
Fax: 317.872.6189

QUALITY CONTROL DATA

Lab Project Number: 5038537
Client Project ID: Michigan Meadows/M01046

METHOD BLANK: 503803165
Associated Lab Samples: 503795726 503795734 503795742 503795759 503795767 503795775 503795783 503795791 503795809

Parameter	Units	Blank Result	Reporting Limit	Footnotes
Chlorobenzene	ug/l	ND	5.0	
1,1,1,2-Tetrachloroethane	ug/l	ND	5.0	
Ethylbenzene	ug/l	ND	5.0	
m&p-Xylene	ug/l	ND	5.0	
o-Xylene	ug/l	ND	5.0	
Styrene	ug/l	ND	5.0	
Bromoform	ug/l	ND	5.0	
Isopropylbenzene (Cumene)	ug/l	ND	5.0	
1,1,2,2-Tetrachloroethane	ug/l	ND	5.0	
Bromobenzene	ug/l	ND	5.0	
1,2,3-Trichloropropane	ug/l	ND	5.0	
n-Propylbenzene	ug/l	ND	5.0	
2-Chlorotoluene	ug/l	ND	5.0	
1,3,5-Trimethylbenzene	ug/l	ND	5.0	
4-Chlorotoluene	ug/l	ND	5.0	
1,2,4-Trimethylbenzene	ug/l	ND	5.0	
sec-Butylbenzene	ug/l	ND	5.0	
tert-Butylbenzene	ug/l	ND	5.0	
p-Isopropyltoluene	ug/l	ND	5.0	
1,3-Dichlorobenzene	ug/l	ND	5.0	
1,4-Dichlorobenzene	ug/l	ND	5.0	
n-Butylbenzene	ug/l	ND	5.0	
1,2-Dichlorobenzene	ug/l	ND	5.0	
1,2-Dibromo-3-chloropropane	ug/l	ND	5.0	
1,2,4-Trichlorobenzene	ug/l	ND	5.0	
Hexachloro-1,3-butadiene	ug/l	ND	5.0	
Naphthalene	ug/l	ND	5.0	
1,2,3-Trichlorobenzene	ug/l	ND	5.0	
trans-1,3-Dichloropropene	ug/l	ND	5.0	
cis-1,3-Dichloropropene	ug/l	ND	5.0	
2-Chloroethylvinyl ether	ug/l	ND	10.	
Acetone	ug/l	ND	25.	
2-Butanone (MEK)	ug/l	ND	10.	
4-Methyl-2-pentanone (MIBK)	ug/l	ND	10.	
Acrolein	ug/l	ND	50.	

REPORT OF LABORATORY ANALYSIS
This report shall not be reproduced, except in full,
without the written consent of Pace Analytical Services, Inc.

Pace Analytical®
www.pacelabs.com

Pace Analytical Services, Inc.
7726 Moller Road
Indianapolis, IN 46268
Phone: 317.875.5894
Fax: 317.872.6189

QUALITY CONTROL DATA

Lab Project Number: 5038537
Client Project ID: Michigan Meadows/M01046

METHOD BLANK: 503803165
Associated Lab Samples: 503795726 503795734 503795742 503795759 503795767 503795775 503795783 503795791 503795809

Parameter	Units	Blank Result	Reporting Limit	Footnotes
Acrylonitrile	ug/l	ND	50.	
2-Hexanone	ug/l	ND	10.	
Vinyl acetate	ug/l	ND	10.	
Iodomethane	ug/l	ND	10.	
Methyl-tert-butyl ether	ug/l	ND	5.0	
Carbon disulfide	ug/l	ND	5.0	
trans-1,4-Dichloro-2-butene	ug/l	ND	100	
Ethyl methacrylate	ug/l	ND	100	
Xylene (Total)	ug/l	ND	10.	
Dibromofluoromethane (S)	%	103		
Toluene-d8 (S)	%	107		
4-Bromofluorobenzene (S)	%	102		

LABORATORY CONTROL SAMPLE: 503803173

Parameter	Units	Spike Conc.	LCS Result	LCS % Rec	Footnotes
Dichlorodifluoromethane	ug/l	50.00	55.81	112	
Chloromethane	ug/l	50.00	49.00	98	
Vinyl chloride	ug/l	50.00	57.10	114	
Bromomethane	ug/l	50.00	51.45	103	
Chloroethane	ug/l	50.00	57.73	115	
Trichlorofluoromethane	ug/l	50.00	53.59	107	
Methylene chloride	ug/l	50.00	57.36	115	
1,1-Dichloroethene	ug/l	50.00	58.15	116	
trans-1,2-Dichloroethene	ug/l	50.00	52.94	106	
1,1-Dichloroethane	ug/l	50.00	53.49	107	
2,2-Dichloropropane	ug/l	50.00	59.44	119	
cis-1,2-Dichloroethene	ug/l	50.00	53.47	107	
Chloroform	ug/l	50.00	51.07	102	
Bromochloromethane	ug/l	50.00	58.70	117	
1,1,1-Trichloroethane	ug/l	50.00	52.86	106	
Carbon tetrachloride	ug/l	50.00	51.97	104	
1,1-Dichloropropene	ug/l	50.00	54.32	109	

REPORT OF LABORATORY ANALYSIS
This report shall not be reproduced, except in full,
without the written consent of Pace Analytical Services, Inc.

Pace Analytical®
www.pacelabs.com

Pace Analytical Services, Inc.
7726 Moller Road
Indianapolis, IN 46268
Phone: 317.875.5894
Fax: 317.872.6189

QUALITY CONTROL DATA

Lab Project Number: 5038537
Client Project ID: Michigan Meadows/M01046

LABORATORY CONTROL SAMPLE: 503803173

Parameter	Units	Spike Conc.	LCS Result	LCS % Rec	Footnotes
Benzene	ug/l	50.00	55.93	112	
1,2-Dichloroethane	ug/l	50.00	46.61	93	
Trichloroethene	ug/l	50.00	54.51	109	
1,2-Dichloropropane	ug/l	50.00	51.95	104	
Bromodichloromethane	ug/l	50.00	51.09	102	
Dibromomethane	ug/l	50.00	49.89	100	
Toluene	ug/l	50.00	57.66	115	
1,1,2-Trichloroethane	ug/l	50.00	54.71	109	
Tetrachloroethene	ug/l	50.00	41.48	83	
1,3-Dichloropropane	ug/l	50.00	55.11	110	
Dibromochloromethane	ug/l	50.00	51.65	103	
1,2-Dibromoethane (EDB)	ug/l	50.00	54.84	110	
Chlorobenzene	ug/l	50.00	54.80	110	
1,1,1,2-Tetrachloroethane	ug/l	50.00	52.15	104	
Ethylbenzene	ug/l	50.00	54.48	109	
m&p-Xylene	ug/l	100.00	113.3	113	
o-Xylene	ug/l	50.00	56.35	113	
Styrene	ug/l	50.00	56.33	113	
Bromoform	ug/l	50.00	48.98	98	
Isopropylbenzene (Cumene)	ug/l	50.00	50.07	100	
1,1,2,2-Tetrachloroethane	ug/l	50.00	50.36	101	
Bromobenzene	ug/l	50.00	52.77	106	
1,2,3-Trichloropropane	ug/l	50.00	43.44	87	
n-Propylbenzene	ug/l	50.00	54.53	109	
2-Chlorotoluene	ug/l	50.00	54.70	109	
1,3,5-Trimethylbenzene	ug/l	50.00	56.03	112	
4-Chlorotoluene	ug/l	50.00	56.17	112	
1,2,4-Trimethylbenzene	ug/l	50.00	55.24	110	
sec-Butylbenzene	ug/l	50.00	56.13	112	
tert-Butylbenzene	ug/l	50.00	53.23	106	
p-Isopropyltoluene	ug/l	50.00	52.95	106	
1,3-Dichlorobenzene	ug/l	50.00	55.18	110	
1,4-Dichlorobenzene	ug/l	50.00	51.95	104	
n-Butylbenzene	ug/l	50.00	51.92	104	
1,2-Dichlorobenzene	ug/l	50.00	53.27	107	
1,2-Dibromo-3-chloropropane	ug/l	50.00	50.18	100	
1,2,4-Trichlorobenzene	ug/l	50.00	48.89	98	

REPORT OF LABORATORY ANALYSIS
This report shall not be reproduced, except in full,
without the written consent of Pace Analytical Services, Inc.

Pace Analytical®
www.pacelabs.com

Pace Analytical Services, Inc.
7726 Moller Road
Indianapolis, IN 46268
Phone: 317.875.5894
Fax: 317.872.6189

QUALITY CONTROL DATA

Lab Project Number: 5038537
Client Project ID: Michigan Meadows/M01046

LABORATORY CONTROL SAMPLE: 503803173

Parameter	Units	Spike Conc.	LCS Result	LCS % Rec	Footnotes
Hexachloro-1,3-butadiene	ug/l	50.00	52.33	105	
Naphthalene	ug/l	50.00	51.82	104	
1,2,3-Trichlorobenzene	ug/l	50.00	51.91	104	
trans-1,3-Dichloropropene	ug/l	50.00	55.11	110	
cis-1,3-Dichloropropene	ug/l	50.00	55.22	110	
Methyl-tert-butyl ether	ug/l	100.00	103.5	103	
Xylene (Total)	ug/l	150.00	169.6	113	
Dibromofluoromethane (S)				98	
Toluene-d8 (S)				108	
4-Bromofluorobenzene (S)				103	

MATRIX SPIKE & MATRIX SPIKE DUPLICATE: 503803181 503803199

Parameter	Units	503795734 Result	Spike Conc.	MS Result	MSD Result	MS % Rec	MSD % Rec	RPD	Footnotes
1,1-Dichloroethene	ug/l	0	50.00	51.98	58.77	104	118	12	
Benzene	ug/l	0	50.00	49.18	55.59	98	111	12	
Trichloroethene	ug/l	0	50.00	47.48	54.08	95	108	13	
Toluene	ug/l	0	50.00	50.74	58.83	102	118	15	
Chlorobenzene	ug/l	0	50.00	48.49	55.94	97	112	14	
Dibromofluoromethane (S)						101	100		
Toluene-d8 (S)						106	107		
4-Bromofluorobenzene (S)						102	102		

REPORT OF LABORATORY ANALYSIS
This report shall not be reproduced, except in full,
without the written consent of Pace Analytical Services, Inc.

Pace Analytical®
www.pacelabs.com

Pace Analytical Services, Inc.
7726 Moller Road
Indianapolis, IN 46268
Phone: 317.875.5894
Fax: 317.872.6189

Lab Project Number: 5038537
Client Project ID: Michigan Meadows/M01046

QUALITY CONTROL DATA PARAMETER FOOTNOTES

Consistent with EPA guidelines, unrounded concentrations are displayed and have been used to calculate % Rec and RPD values.

LCS(D)	Laboratory Control Sample (Duplicate)
MS(D)	Matrix Spike (Duplicate)
DUP	Sample Duplicate
ND	Not detected at or above adjusted reporting limit
NC	Not Calculable
J	Estimated concentration above the adjusted method detection limit and below the adjusted reporting limit
MDL	Adjusted Method Detection Limit
RPD	Relative Percent Difference
(S)	Surrogate

REPORT OF LABORATORY ANALYSIS
This report shall not be reproduced, except in full,
without the written consent of Pace Analytical Services, Inc.

Pace Analytical®
www.pacelabs.com

CHAIN-OF-CUSTODY / Analytical Request Document

The Chain-of-Custody is a LEGAL DOCUMENT. All relevant fields must be completed accurately.

823603

Page: 1 of 1

To Be Completed by Pace Analytical and Client

Section A — Required Client Information:

Company: Mundell & Associates
Address: 429 E. Vermont St
Indianapolis, IN 46202
Phone: 630-9066 Fax: 630-9065

Section B — Required Client Information:

Report To: John Mundell
Copy To: Leena Lothe
Invoice To: Barb Whaley
P.O.:
Project Name: Mungan Meadows
Project Number: M01046

Client Information (Check quote/contract):
Requested Due Date: *TAT: 2 weeks

* Turn around times less than 14 days subject to laboratory and contractual obligations and may result in a Rush Turnaround Surcharge.
Turn Around Time (TAT) in calendar days.

Section C — To Be Completed by Pace Analytical and Client

Quote Reference:
Project Manager:
Project #: 5038537
Profile #:
Requested Analysis: VOCs 8260

Section D — Required Client Information:

Valid Matrix Codes: MATRIX / CODE — WATER WT, SOIL SL, OIL OL, WIPE WP, AIR AR, TISSUE TS, OTHER OT

ITEM #	SAMPLE ID (One character per box. (A–Z, 0–9 / .–) Sample IDs MUST BE UNIQUE)	MATRIX CODE	DATE COLLECTED mm/dd/yy	TIME COLLECTED hh:mm a/p	# Containers	Unpreserved	H_2SO_4	HNO_3	HCl	NaOH	$Na_2S_2O_3$	Methanol	Other	VOCs 8260	Remarks / Lab ID
1	MMW-1S	WT	09/10/04	10:23a	3				✓					✓	503795726
2	MMW-2S			11:00a											734
3	MMW-3S			4:20p											742
4	MMW-4D			3:10p											759
5	MMW-5D			2:10p											767
6	MMW-6D			1:25p											775
7	MMW-7S			12:15p											783
8	MS (MMW-2S)			11:20a											(734)
9	MSD (MMW-2S)			11:25a											(734)
10	TB-01			11:30	2										791
11	DUP (MMW-4D)			3:15a	3										809
12															33 OK KS

SITE LOCATION: ☐ NC ☐ SC ☐ GA ☐ Other

REGULATORY AGENCY: ☐ NPDES ☐ GROUND WATER ☐ DRINKING WATER ☐ UST ☐ RCRA ☐ Other

RELINQUISHED BY / AFFILIATION	DATE	TIME	ACCEPTED BY / AFFILIATION	DATE	TIME
[signature]	9/10/04	5:22p	[signature]	9/10/04	522

SAMPLE CONDITION

Temp in °C	6
Received on Ice	(Y)N
Sealed Cooler	Y(N)
Samples Intact	(Y)N

Additional Comments:

SAMPLE NOTES: Mundell delivered

SAMPLER NAME AND SIGNATURE

PRINT Name of SAMPLER: LEENA LOTHE
SIGNATURE of SAMPLER: [signature]
DATE Signed: (MM / DD / YY) 09/10/04

ORIGINAL

SEE REVERSE SIDE FOR INSTRUCTIONS

Form COC01 Rev. 0903

Pace Analytical®
www.pacelabs.com

CHAIN-OF-CUSTODY / Analytical Request Document

The Chain-of-Custody is a LEGAL DOCUMENT. All relevant fields must be completed accurately.

823603

Page: 1 of 1

Section A — Required Client Information:

Company: Mundell & Associates
Address: 429 E. Vermont St
Indianapolis, IN 46202
Phone: 630-9066 Fax: 630-9065

Section B — Required Client Information:

Report To: John Mundell
Copy To: Leena Lothe
Invoice To: Barb Whaley
P.O.:
Project Name: Mungan Meadows
Project Number: M01046

Client Information (Check quote/contract):
Requested Due Date: *TAT: 2 weeks

* Turn around times less than 14 days subject to laboratory and contractual obligations and may result in a Rush Turnaround Surcharge.
Turn Around Time (TAT) in calendar days.

Section C — To Be Completed by Pace Analytical and Client

Quote Reference:
Project Manager:
Project #: 5038537
Profile #:
Requested Analysis: VOCs 8260

Section D — Required Client Information:

Valid Matrix Codes: WATER WT, SOIL SL, OIL OL, WIPE WP, AIR AR, TISSUE TS, OTHER OT

ITEM #	SAMPLE ID (One character per box. (A–Z, 0–9 / .–) Sample IDs MUST BE UNIQUE)	MATRIX CODE	DATE COLLECTED (mm / dd / yy)	TIME COLLECTED (hh:mm a/p)	# Containers	Unpreserved	H_2SO_4	HNO_3	HCl	NaOH	$Na_2S_2O_3$	Methanol	Other	VOCs 8260	Remarks / Lab ID
1	MMW-1S	WT	09/10/04	10:22a	3				✓					✓	503795726
2	MMW-2S			11:00a											734
3	MMW-3S			4:20p											742
4	MMW-4D			3:10p											759
5	MMW-5D			2:10p											767
6	MMW-6D			1:25p											775
7	MMW-7S			12:15p											783
8	MS (MMW-2S)			11:20a											(734)
9	MSD (MMW-2S)			11:25a											(734)
10	TB-01			11:30	2										791
11	DUP (MMW-4D)			3:15a	3										809
12															33 oks

SITE LOCATION: ☐ NC ☐ SC ☐ GA ☐ Other

REGULATORY AGENCY: ☐ NPDES ☐ GROUND WATER ☐ DRINKING WATER ☐ UST ☐ RCRA ☐ Other

RELINQUISHED BY / AFFILIATION	DATE	TIME	ACCEPTED BY / AFFILIATION	DATE	TIME
[signature]	9/10/04	5:22p	[signature]	9/10/04	522

SAMPLE CONDITION

Temp in °C	6
Received on Ice	(Y)N
Sealed Cooler	Y(N)
Samples Intact	(Y)N

Additional Comments:

SAMPLE NOTES: Mundell delivered

SAMPLER NAME AND SIGNATURE

PRINT Name of SAMPLER: LEENA LOTHE
SIGNATURE of SAMPLER: [signature]
DATE Signed: (MM / DD / YY) 09/10/04

ORIGINAL

SEE REVERSE SIDE FOR INSTRUCTIONS

Form COC01 Rev. 0903

Pace Analytical®
www.pacelabs.com

Pace Analytical Services, Inc.
7726 Moller Road
Indianapolis, IN 46268
Phone: 317.875.5894
Fax: 317.872.6189

RECEIVED
MAR 18 2005

March 16, 2005

Ms. Leena Lothe
Mundell & Associates, Inc.
429 East Vermont Street
Suite 200
Indianapolis, IN 46202

RE: Lab Project Number: 5042638
Client Project ID: Michigan Meadows/M01046

Dear Ms. Lothe:

Enclosed are the analytical results for sample(s) received by the laboratory on March 16, 2005. Results reported herein conform to the most current NELAC standards, where applicable, unless otherwise narrated in the body of the report.

If you have any questions concerning this report please feel free to contact me.

Sincerely,

Mick Mayse

Mick Mayse
mmayse@pacelabs.com
Project Manager

Enclosures

REPORT OF LABORATORY ANALYSIS

This report shall not be reproduced, except in full,
without the written consent of Pace Analytical Services, Inc.

Pace Analytical®
www.pacelabs.com

Pace Analytical Services, Inc.
7726 Moller Road
Indianapolis, IN 46268
Phone: 317.875.5894
Fax: 317.872.6189

SAMPLE SUMMARY

Lab Project Number: 5042638
Client Project ID: Michigan Meadows/M01046

Project Sample Number	Sample Number	Client Sample ID	Matrix	Date Collected	Date Received
5042638-001	504314840	MMW-1S	Water	03/15/05 15:30	03/16/05 11:16

REPORT OF LABORATORY ANALYSIS
This report shall not be reproduced, except in full,
without the written consent of Pace Analytical Services, Inc.

Pace Analytical®
www.pacelabs.com

Pace Analytical Services, Inc.
7726 Moller Road
Indianapolis, IN 46268
Phone: 317.875.5894
Fax: 317.872.6189

SAMPLE ANALYTE COUNT

Lab Project Number: 5042638
Client Project ID: Michigan Meadows/M01046

Project Sample Number	Sample No	Client Sample ID	Analysis Code	Analysis Description	Analytes Reported
5042638-001	504314840	MMW-1S	8260 WE50	GC/MS VOCs by 8260	76

REPORT OF LABORATORY ANALYSIS
This report shall not be reproduced, except in full,
without the written consent of Pace Analytical Services, Inc.

Pace Analytical®
www.pacelabs.com

Pace Analytical Services, Inc.
7726 Moller Road
Indianapolis, IN 46268
Phone: 317.875.5894
Fax: 317.872.6189

Lab Project Number: 5042638
Client Project ID: Michigan Meadows/M01046

Lab Sample No: 504314840 | Project Sample Number: 5042638-001 | Date Collected: 03/15/05 15:30
Client Sample ID: MMW-1S | Matrix: Water | Date Received: 03/16/05 11:16

Parameters	Results	Units	Report Limit	DF	Analyzed	By	CAS No.	Qual	RegLmt
GC/MS Volatiles									
GC/MS VOCs by 8260	Method: EPA 8260								
Dichlorodifluoromethane	ND	ug/l	5.0	1.0	03/16/05 13:05	JLF	75-71-8		
Chloromethane	ND	ug/l	5.0	1.0	03/16/05 13:05	JLF	74-87-3		
Vinyl chloride	ND	ug/l	2.0	1.0	03/16/05 13:05	JLF	75-01-4		
Bromomethane	ND	ug/l	5.0	1.0	03/16/05 13:05	JLF	74-83-9		
Chloroethane	ND	ug/l	5.0	1.0	03/16/05 13:05	JLF	75-00-3		
Trichlorofluoromethane	ND	ug/l	5.0	1.0	03/16/05 13:05	JLF	75-69-4		
Methylene chloride	ND	ug/l	5.0	1.0	03/16/05 13:05	JLF	75-09-2		
1,1-Dichloroethene	ND	ug/l	5.0	1.0	03/16/05 13:05	JLF	75-35-4		
trans-1,2-Dichloroethene	ND	ug/l	5.0	1.0	03/16/05 13:05	JLF	156-60-5		
1,1-Dichloroethane	ND	ug/l	5.0	1.0	03/16/05 13:05	JLF	75-34-3		
2,2-Dichloropropane	ND	ug/l	5.0	1.0	03/16/05 13:05	JLF	594-20-7		
cis-1,2-Dichloroethene	ND	ug/l	5.0	1.0	03/16/05 13:05	JLF	156-59-2		
Chloroform	ND	ug/l	5.0	1.0	03/16/05 13:05	JLF	67-66-3		
Bromochloromethane	ND	ug/l	5.0	1.0	03/16/05 13:05	JLF	74-97-5		
1,1,1-Trichloroethane	ND	ug/l	5.0	1.0	03/16/05 13:05	JLF	71-55-6		
Carbon tetrachloride	ND	ug/l	5.0	1.0	03/16/05 13:05	JLF	56-23-5		
1,1-Dichloropropene	ND	ug/l	5.0	1.0	03/16/05 13:05	JLF	563-58-6		
Benzene	ND	ug/l	5.0	1.0	03/16/05 13:05	JLF	71-43-2		
1,2-Dichloroethane	ND	ug/l	5.0	1.0	03/16/05 13:05	JLF	107-06-2		
Trichloroethene	10.	ug/l	5.0	1.0	03/16/05 13:05	JLF	79-01-6		
1,2-Dichloropropane	ND	ug/l	5.0	1.0	03/16/05 13:05	JLF	78-87-5		
Bromodichloromethane	ND	ug/l	5.0	1.0	03/16/05 13:05	JLF	75-27-4		
Dibromomethane	ND	ug/l	5.0	1.0	03/16/05 13:05	JLF	74-95-3		
Toluene	ND	ug/l	5.0	1.0	03/16/05 13:05	JLF	108-88-3		
1,1,2-Trichloroethane	ND	ug/l	5.0	1.0	03/16/05 13:05	JLF	79-00-5		
Tetrachloroethene	150	ug/l	5.0	1.0	03/16/05 13:05	JLF	127-18-4		
1,3-Dichloropropane	ND	ug/l	5.0	1.0	03/16/05 13:05	JLF	142-28-9		
Dibromochloromethane	ND	ug/l	5.0	1.0	03/16/05 13:05	JLF	124-48-1		
1,2-Dibromoethane (EDB)	ND	ug/l	5.0	1.0	03/16/05 13:05	JLF	106-93-4		
Chlorobenzene	ND	ug/l	5.0	1.0	03/16/05 13:05	JLF	108-90-7		
1,1,1,2-Tetrachloroethane	ND	ug/l	5.0	1.0	03/16/05 13:05	JLF	630-20-6		
Ethylbenzene	ND	ug/l	5.0	1.0	03/16/05 13:05	JLF	100-41-4		
m&p-Xylene	ND	ug/l	5.0	1.0	03/16/05 13:05	JLF			
o-Xylene	ND	ug/l	5.0	1.0	03/16/05 13:05	JLF	95-47-6		
Styrene	ND	ug/l	5.0	1.0	03/16/05 13:05	JLF	100-42-5		
Bromoform	ND	ug/l	5.0	1.0	03/16/05 13:05	JLF	75-25-2		
Isopropylbenzene (Cumene)	ND	ug/l	5.0	1.0	03/16/05 13:05	JLF	98-82-8		

REPORT OF LABORATORY ANALYSIS
This report shall not be reproduced, except in full,
without the written consent of Pace Analytical Services, Inc.

Pace Analytical®
www.pacelabs.com

Pace Analytical Services, Inc.
7726 Moller Road
Indianapolis, IN 46268
Phone: 317.875.5894
Fax: 317.872.6189

Lab Project Number: 5042638
Client Project ID: Michigan Meadows/M01046

Lab Sample No: 504314840 Project Sample Number: 5042638-001 Date Collected: 03/15/05 15:30
Client Sample ID: MMW-1S Matrix: Water Date Received: 03/16/05 11:16

Parameters	Results	Units	Report Limit	DF	Analyzed	By	CAS No.	Qual	RegLmt
1,1,2,2-Tetrachloroethane	ND	ug/l	5.0	1.0	03/16/05 13:05	JLF	79-34-5		
Bromobenzene	ND	ug/l	5.0	1.0	03/16/05 13:05	JLF	108-86-1		
1,2,3-Trichloropropane	ND	ug/l	5.0	1.0	03/16/05 13:05	JLF	96-18-4		
n-Propylbenzene	ND	ug/l	5.0	1.0	03/16/05 13:05	JLF	103-65-1		
2-Chlorotoluene	ND	ug/l	5.0	1.0	03/16/05 13:05	JLF	95-49-8		
1,3,5-Trimethylbenzene	ND	ug/l	5.0	1.0	03/16/05 13:05	JLF	108-67-8		
4-Chlorotoluene	ND	ug/l	5.0	1.0	03/16/05 13:05	JLF	106-43-4		
1,2,4-Trimethylbenzene	ND	ug/l	5.0	1.0	03/16/05 13:05	JLF	95-63-6		
sec-Butylbenzene	ND	ug/l	5.0	1.0	03/16/05 13:05	JLF	135-98-8		
tert-Butylbenzene	ND	ug/l	5.0	1.0	03/16/05 13:05	JLF	98-06-6		
p-Isopropyltoluene	ND	ug/l	5.0	1.0	03/16/05 13:05	JLF	99-87-6		
1,3-Dichlorobenzene	ND	ug/l	5.0	1.0	03/16/05 13:05	JLF	541-73-1		
1,4-Dichlorobenzene	ND	ug/l	5.0	1.0	03/16/05 13:05	JLF	106-46-7		
n-Butylbenzene	ND	ug/l	5.0	1.0	03/16/05 13:05	JLF	104-51-8		
1,2-Dichlorobenzene	ND	ug/l	5.0	1.0	03/16/05 13:05	JLF	95-50-1		
1,2-Dibromo-3-chloropropane	ND	ug/l	5.0	1.0	03/16/05 13:05	JLF	96-12-8		
1,2,4-Trichlorobenzene	ND	ug/l	5.0	1.0	03/16/05 13:05	JLF	120-82-1		
Hexachloro-1,3-butadiene	ND	ug/l	5.0	1.0	03/16/05 13:05	JLF	87-68-3		
Naphthalene	ND	ug/l	5.0	1.0	03/16/05 13:05	JLF	91-20-3		
1,2,3-Trichlorobenzene	ND	ug/l	5.0	1.0	03/16/05 13:05	JLF	87-61-6		
trans-1,3-Dichloropropene	ND	ug/l	5.0	1.0	03/16/05 13:05	JLF	10061-02-6		
cis-1,3-Dichloropropene	ND	ug/l	5.0	1.0	03/16/05 13:05	JLF	10061-01-5		
2-Chloroethylvinyl ether	ND	ug/l	10.	1.0	03/16/05 13:05	JLF	110-75-8		
Acetone	ND	ug/l	25.	1.0	03/16/05 13:05	JLF	67-64-1		
2-Butanone (MEK)	ND	ug/l	10.	1.0	03/16/05 13:05	JLF	78-93-3		
4-Methyl-2-pentanone (MIBK)	ND	ug/l	10.	1.0	03/16/05 13:05	JLF	108-10-1		
Acrolein	ND	ug/l	50.	1.0	03/16/05 13:05	JLF	107-02-8		
Acrylonitrile	ND	ug/l	50.	1.0	03/16/05 13:05	JLF	107-13-1		
2-Hexanone	ND	ug/l	10.	1.0	03/16/05 13:05	JLF	591-78-6		
Vinyl acetate	ND	ug/l	10.	1.0	03/16/05 13:05	JLF	108-05-4		
Iodomethane	ND	ug/l	10.	1.0	03/16/05 13:05	JLF	74-88-4		
Methyl-tert-butyl ether	ND	ug/l	5.0	1.0	03/16/05 13:05	JLF	1634-04-4		
Carbon disulfide	ND	ug/l	5.0	1.0	03/16/05 13:05	JLF	75-15-0		
trans-1,4-Dichloro-2-butene	ND	ug/l	100	1.0	03/16/05 13:05	JLF	110-57-6		
Ethyl methacrylate	ND	ug/l	100	1.0	03/16/05 13:05	JLF	97-63-2		
Xylene (Total)	ND	ug/l	10.	1.0	03/16/05 13:05	JLF	1330-20-7		
Dibromofluoromethane (S)	99	%		1.0	03/16/05 13:05	JLF	1868-53-7		
Toluene-d8 (S)	100	%		1.0	03/16/05 13:05	JLF	2037-26-5		
4-Bromofluorobenzene (S)	97	%		1.0	03/16/05 13:05	JLF	460-00-4		

REPORT OF LABORATORY ANALYSIS
This report shall not be reproduced, except in full,
without the written consent of Pace Analytical Services, Inc.

Pace Analytical®
www.pacelabs.com

Pace Analytical Services, Inc.
7726 Moller Road
Indianapolis, IN 46268
Phone: 317.875.5894
Fax: 317.872.6189

Lab Project Number: 5042638
Client Project ID: Michigan Meadows/M01046

PARAMETER FOOTNOTES

Dilution factor shown represents the factor applied to the reported result and reporting limit due to changes in sample preparation, dilution of the extract, or moisture content

ND	Not detected at or above adjusted reporting limit
NC	Not Calculable
J	Estimated concentration above the adjusted method detection limit and below the adjusted reporting limit
MDL	Adjusted Method Detection Limit
(S)	Surrogate

REPORT OF LABORATORY ANALYSIS
This report shall not be reproduced, except in full,
without the written consent of Pace Analytical Services, Inc.

Pace Analytical®
www.pacelabs.com

Pace Analytical Services, Inc.
7726 Moller Road
Indianapolis, IN 46268
Phone: 317.875.5894
Fax: 317.872.6189

QUALITY CONTROL DATA

Lab Project Number: 5042638
Client Project ID: Michigan Meadows/M01046

QC Batch: 87208
QC Batch Method: EPA 8260
Analysis Method: EPA 8260
Analysis Description: GC/MS VOCs by 8260
Associated Lab Samples: 504314840

METHOD BLANK: 504315169
Associated Lab Samples: 504314840

Parameter	Units	Blank Result	Reporting Limit	Footnotes
Dichlorodifluoromethane	ug/l	ND	5.0	
Chloromethane	ug/l	ND	5.0	
Vinyl chloride	ug/l	ND	2.0	
Bromomethane	ug/l	ND	5.0	
Chloroethane	ug/l	ND	5.0	
Trichlorofluoromethane	ug/l	ND	5.0	
Methylene chloride	ug/l	ND	5.0	
1,1-Dichloroethene	ug/l	ND	5.0	
trans-1,2-Dichloroethene	ug/l	ND	5.0	
1,1-Dichloroethane	ug/l	ND	5.0	
2,2-Dichloropropane	ug/l	ND	5.0	
cis-1,2-Dichloroethene	ug/l	ND	5.0	
Chloroform	ug/l	ND	5.0	
Bromochloromethane	ug/l	ND	5.0	
1,1,1-Trichloroethane	ug/l	ND	5.0	
Carbon tetrachloride	ug/l	ND	5.0	
1,1-Dichloropropene	ug/l	ND	5.0	
Benzene	ug/l	ND	5.0	
1,2-Dichloroethane	ug/l	ND	5.0	
Trichloroethene	ug/l	ND	5.0	
1,2-Dichloropropane	ug/l	ND	5.0	
Bromodichloromethane	ug/l	ND	5.0	
Dibromomethane	ug/l	ND	5.0	
Toluene	ug/l	ND	5.0	
1,1,2-Trichloroethane	ug/l	ND	5.0	
Tetrachloroethene	ug/l	ND	5.0	
1,3-Dichloropropane	ug/l	ND	5.0	
Dibromochloromethane	ug/l	ND	5.0	
1,2-Dibromoethane (EDB)	ug/l	ND	5.0	
Chlorobenzene	ug/l	ND	5.0	
1,1,1,2-Tetrachloroethane	ug/l	ND	5.0	

REPORT OF LABORATORY ANALYSIS
This report shall not be reproduced, except in full,
without the written consent of Pace Analytical Services, Inc.

Pace Analytical®
www.pacelabs.com

Pace Analytical Services, Inc.
7726 Moller Road
Indianapolis, IN 46268
Phone: 317.875.5894
Fax: 317.872.6189

QUALITY CONTROL DATA

Lab Project Number: 5042638
Client Project ID: Michigan Meadows/M01046

METHOD BLANK: 504315169
Associated Lab Samples: 504314840

Parameter	Units	Blank Result	Reporting Limit	Footnotes
Ethylbenzene	ug/l	ND	5.0	
m&p-Xylene	ug/l	ND	5.0	
o-Xylene	ug/l	ND	5.0	
Styrene	ug/l	ND	5.0	
Bromoform	ug/l	ND	5.0	
Isopropylbenzene (Cumene)	ug/l	ND	5.0	
1,1,2,2-Tetrachloroethane	ug/l	ND	5.0	
Bromobenzene	ug/l	ND	5.0	
1,2,3-Trichloropropane	ug/l	ND	5.0	
n-Propylbenzene	ug/l	ND	5.0	
2-Chlorotoluene	ug/l	ND	5.0	
1,3,5-Trimethylbenzene	ug/l	ND	5.0	
4-Chlorotoluene	ug/l	ND	5.0	
1,2,4-Trimethylbenzene	ug/l	ND	5.0	
sec-Butylbenzene	ug/l	ND	5.0	
tert-Butylbenzene	ug/l	ND	5.0	
p-Isopropyltoluene	ug/l	ND	5.0	
1,3-Dichlorobenzene	ug/l	ND	5.0	
1,4-Dichlorobenzene	ug/l	ND	5.0	
n-Butylbenzene	ug/l	ND	5.0	
1,2-Dichlorobenzene	ug/l	ND	5.0	
1,2-Dibromo-3-chloropropane	ug/l	ND	5.0	
1,2,4-Trichlorobenzene	ug/l	ND	5.0	
Hexachloro-1,3-butadiene	ug/l	ND	5.0	
Naphthalene	ug/l	ND	5.0	
1,2,3-Trichlorobenzene	ug/l	ND	5.0	
trans-1,3-Dichloropropene	ug/l	ND	5.0	
cis-1,3-Dichloropropene	ug/l	ND	5.0	
2-Chloroethylvinyl ether	ug/l	ND	10.	
Acetone	ug/l	ND	25.	
2-Butanone (MEK)	ug/l	ND	10.	
4-Methyl-2-pentanone (MIBK)	ug/l	ND	10.	
Acrolein	ug/l	ND	50.	
Acrylonitrile	ug/l	ND	50.	
2-Hexanone	ug/l	ND	10.	
Vinyl acetate	ug/l	ND	10.	

REPORT OF LABORATORY ANALYSIS

This report shall not be reproduced, except in full,
without the written consent of Pace Analytical Services, Inc.

Pace Analytical®
www.pacelabs.com

Pace Analytical Services, Inc.
7726 Moller Road
Indianapolis, IN 46268
Phone: 317.875.5894
Fax: 317.872.6189

QUALITY CONTROL DATA

Lab Project Number: 5042638
Client Project ID: Michigan Meadows/M01046

METHOD BLANK: 504315169
Associated Lab Samples: 504314840

Parameter	Units	Blank Result	Reporting Limit	Footnotes
Iodomethane	ug/l	ND	10.	
Methyl-tert-butyl ether	ug/l	ND	5.0	
Carbon disulfide	ug/l	ND	5.0	
trans-1,4-Dichloro-2-butene	ug/l	ND	100	
Ethyl methacrylate	ug/l	ND	100	
Xylene (Total)	ug/l	ND	10.	
Dibromofluoromethane (S)	%	99		
Toluene-d8 (S)	%	99		
4-Bromofluorobenzene (S)	%	99		

LABORATORY CONTROL SAMPLE: 504315177

Parameter	Units	Spike Conc.	LCS Result	LCS % Rec	% Rec Limits	Footnotes
Dichlorodifluoromethane	ug/l	50.00	39.13	78	50-139	
Chloromethane	ug/l	50.00	37.40	75	34-128	
Vinyl chloride	ug/l	50.00	45.32	91	53-134	
Bromomethane	ug/l	50.00	28.24	56	50-139	
Chloroethane	ug/l	50.00	60.13	120	51-147	
Trichlorofluoromethane	ug/l	50.00	52.11	104	54-153	
Methylene chloride	ug/l	50.00	48.56	97	54-146	
1,1-Dichloroethene	ug/l	50.00	53.18	106	67-144	
trans-1,2-Dichloroethene	ug/l	50.00	49.27	98	74-134	
1,1-Dichloroethane	ug/l	50.00	51.35	103	72-134	
2,2-Dichloropropane	ug/l	50.00	49.92	100	63-136	
cis-1,2-Dichloroethene	ug/l	50.00	47.12	94	75-126	
Chloroform	ug/l	50.00	51.86	104	74-129	
Bromochloromethane	ug/l	50.00	49.54	99	59-153	
1,1,1-Trichloroethane	ug/l	50.00	48.55	97	72-134	
Carbon tetrachloride	ug/l	50.00	48.80	98	68-139	
1,1-Dichloropropene	ug/l	50.00	49.53	99	72-131	
Benzene	ug/l	50.00	50.28	101	75-126	
1,2-Dichloroethane	ug/l	50.00	49.32	99	67-135	
Trichloroethene	ug/l	50.00	49.40	99	72-128	
1,2-Dichloropropane	ug/l	50.00	50.33	101	72-125	

REPORT OF LABORATORY ANALYSIS
This report shall not be reproduced, except in full,
without the written consent of Pace Analytical Services, Inc.

Pace Analytical®
www.pacelabs.com

Pace Analytical Services, Inc.
7726 Moller Road
Indianapolis, IN 46268
Phone: 317.875.5894
Fax: 317.872.6189

QUALITY CONTROL DATA

Lab Project Number: 5042638
Client Project ID: Michigan Meadows/M01046

LABORATORY CONTROL SAMPLE: 504315177

Parameter	Units	Spike Conc.	LCS Result	LCS % Rec	% Rec Limits	Footnotes
Bromodichloromethane	ug/l	50.00	55.13	110	72-132	
Dibromomethane	ug/l	50.00	47.25	94	71-131	
Toluene	ug/l	50.00	48.19	96	73-125	
1,1,2-Trichloroethane	ug/l	50.00	49.51	99	70-130	
Tetrachloroethene	ug/l	50.00	43.41	87	38-119	
1,3-Dichloropropane	ug/l	50.00	49.51	99	70-127	
Dibromochloromethane	ug/l	50.00	44.57	89	67-126	
1,2-Dibromoethane (EDB)	ug/l	50.00	46.10	92	70-127	
Chlorobenzene	ug/l	50.00	49.90	100	75-123	
1,1,1,2-Tetrachloroethane	ug/l	50.00	46.15	92	73-124	
Ethylbenzene	ug/l	50.00	50.25	100	73-123	
m&p-Xylene	ug/l	100.00	99.15	99	71-125	
o-Xylene	ug/l	50.00	49.88	100	72-124	
Styrene	ug/l	50.00	49.31	99	70-126	
Bromoform	ug/l	50.00	43.87	88	63-125	
Isopropylbenzene (Cumene)	ug/l	50.00	47.58	95	67-126	
1,1,2,2-Tetrachloroethane	ug/l	50.00	47.65	95	64-131	
Bromobenzene	ug/l	50.00	47.21	94	70-122	
1,2,3-Trichloropropane	ug/l	50.00	30.63	61	43-117	
n-Propylbenzene	ug/l	50.00	52.51	105	69-131	
2-Chlorotoluene	ug/l	50.00	51.17	102	70-129	
1,3,5-Trimethylbenzene	ug/l	50.00	51.52	103	68-132	
4-Chlorotoluene	ug/l	50.00	47.82	96	71-128	
1,2,4-Trimethylbenzene	ug/l	50.00	49.68	99	67-129	
sec-Butylbenzene	ug/l	50.00	52.20	104	69-135	
tert-Butylbenzene	ug/l	50.00	44.55	89	62-128	
p-Isopropyltoluene	ug/l	50.00	50.40	101	66-128	
1,3-Dichlorobenzene	ug/l	50.00	48.82	98	71-124	
1,4-Dichlorobenzene	ug/l	50.00	49.80	100	70-123	
n-Butylbenzene	ug/l	50.00	50.16	100	62-132	
1,2-Dichlorobenzene	ug/l	50.00	50.14	100	75-124	
1,2-Dibromo-3-chloropropane	ug/l	50.00	48.00	96	53-131	
1,2,4-Trichlorobenzene	ug/l	50.00	44.43	89	48-135	
Hexachloro-1,3-butadiene	ug/l	50.00	45.09	90	62-134	
Naphthalene	ug/l	50.00	40.53	81	35-145	
1,2,3-Trichlorobenzene	ug/l	50.00	44.42	89	49-136	
trans-1,3-Dichloropropene	ug/l	50.00	48.92	98	68-127	

REPORT OF LABORATORY ANALYSIS
This report shall not be reproduced, except in full,
without the written consent of Pace Analytical Services, Inc.

Pace Analytical®
www.pacelabs.com

Pace Analytical Services, Inc.
7726 Moller Road
Indianapolis, IN 46268
Phone: 317.875.5894
Fax: 317.872.6189

QUALITY CONTROL DATA

Lab Project Number: 5042638
Client Project ID: Michigan Meadows/M01046

LABORATORY CONTROL SAMPLE: 504315177

Parameter	Units	Spike Conc.	LCS Result	LCS % Rec	% Rec Limits	Footnotes
cis-1,3-Dichloropropene	ug/l	50.00	53.37	107	65-128	
Methyl-tert-butyl ether	ug/l	100.00	91.71	92	64-140	
Xylene (Total)	ug/l	150.00	149.0	99	71-127	
Dibromofluoromethane (S)				100	82-122	
Toluene-d8 (S)				99	86-120	
4-Bromofluorobenzene (S)				99	73-120	

REPORT OF LABORATORY ANALYSIS
This report shall not be reproduced, except in full,
without the written consent of Pace Analytical Services, Inc.

Pace Analytical®
www.pacelabs.com

Pace Analytical Services, Inc.
7726 Moller Road
Indianapolis, IN 46268
Phone: 317.875.5894
Fax: 317.872.6189

Lab Project Number: 5042638
Client Project ID: Michigan Meadows/M01046

QUALITY CONTROL DATA PARAMETER FOOTNOTES

Consistent with EPA guidelines, unrounded concentrations are displayed and have been used to calculate % Rec and RPD values.

LCS(D)	Laboratory Control Sample (Duplicate)
MS(D)	Matrix Spike (Duplicate)
DUP	Sample Duplicate
ND	Not detected at or above adjusted reporting limit
NC	Not Calculable
J	Estimated concentration above the adjusted method detection limit and below the adjusted reporting limit
MDL	Adjusted Method Detection Limit
RPD	Relative Percent Difference
(S)	Surrogate

REPORT OF LABORATORY ANALYSIS
This report shall not be reproduced, except in full,
without the written consent of Pace Analytical Services, Inc.

Pace Analytical®
www.pacelabs.com

CHAIN-OF-CUSTODY / Analytical Request Document

The Chain-of-Custody is a LEGAL DOCUMENT. All relevant fields must be completed accurately.

822273

Page: 1 of 1

Required Client Information: Section A

Company: Mundell & Associates
Address: 429 E. Vermont St
Indianapolis, 46202
Phone: 630-9060 Fax: 630-9065

Required Client Information: Section B

Report To: Leena Lothe
Copy To: John Mundell
Invoice To: Barb Whaley
P.O.:
Project Name: Michigan Meadows
Project Number: MOP046

Client Information (Check quote/contract):
Requested Due Date:
*TAT: (RUSH) 24 hrs

* Turn around times less than 14 days subject to laboratory and contractual obligations and may result in a Rush Turnaround Surcharge.
Turn Around Time (TAT) in calendar days.

To Be Completed by Pace Analytical and Client: Section C

Quote Reference:
Project Manager:
Project #: 5042638
Profile #:
Requested Analysis: VOCs 8260

Section D Required Client Information:

Valid Matrix Codes

MATRIX	CODE
WATER	WT
SOIL	SL
OIL	OL
WIPE	WP
AIR	AR
TISSUE	TS
OTHER	OT

ITEM #	SAMPLE ID (One character per box. (A–Z, 0–9 / .–) Sample IDs MUST BE UNIQUE)	MATRIX CODE	DATE COLLECTED (mm / dd / yy)	TIME COLLECTED (hh: mm a/p)	# Containers	Unpreserved	H_2SO_4	HNO_3	HCl	NaOH	$Na_2S_2O_3$	Methanol	Other	VOCs 8260	Remarks / Lab ID
1	MMW-1S	WT	3/15/05	3:30p	3				✓					✓	504314840
2															
3															
4															
5															
6															
7															
8															
9															
10															
11															
12															

SITE LOCATION: ☐ NC ☐ SC ☐ GA ☐ Other

REGULATORY AGENCY: ☐ NPDES ☐ GROUND WATER ☐ DRINKING WATER ☐ UST ☐ RCRA ☐ Other

RELINQUISHED BY / AFFILIATION	DATE	TIME	ACCEPTED BY / AFFILIATION	DATE	TIME
LLothe			Tyson	3/16/05	1118

SAMPLE CONDITION

Temp in °C	4
Received on Ice	(Y)/N
Sealed Cooler	Y/(N)
Samples Intact	(Y)/N

SAMPLE NOTES: Chain 3/3 Intact

Additional Comments: Pace Lab. WT

SAMPLER NAME AND SIGNATURE

PRINT Name of SAMPLER: LEENA LOTHE
SIGNATURE of SAMPLER: LLothe
DATE Signed: (MM / DD / YY) 03/15/05

ORIGINAL

Reference 99 Page 234

APPENDIX E

Little Eagle Creek Stream Gage Data - USGS

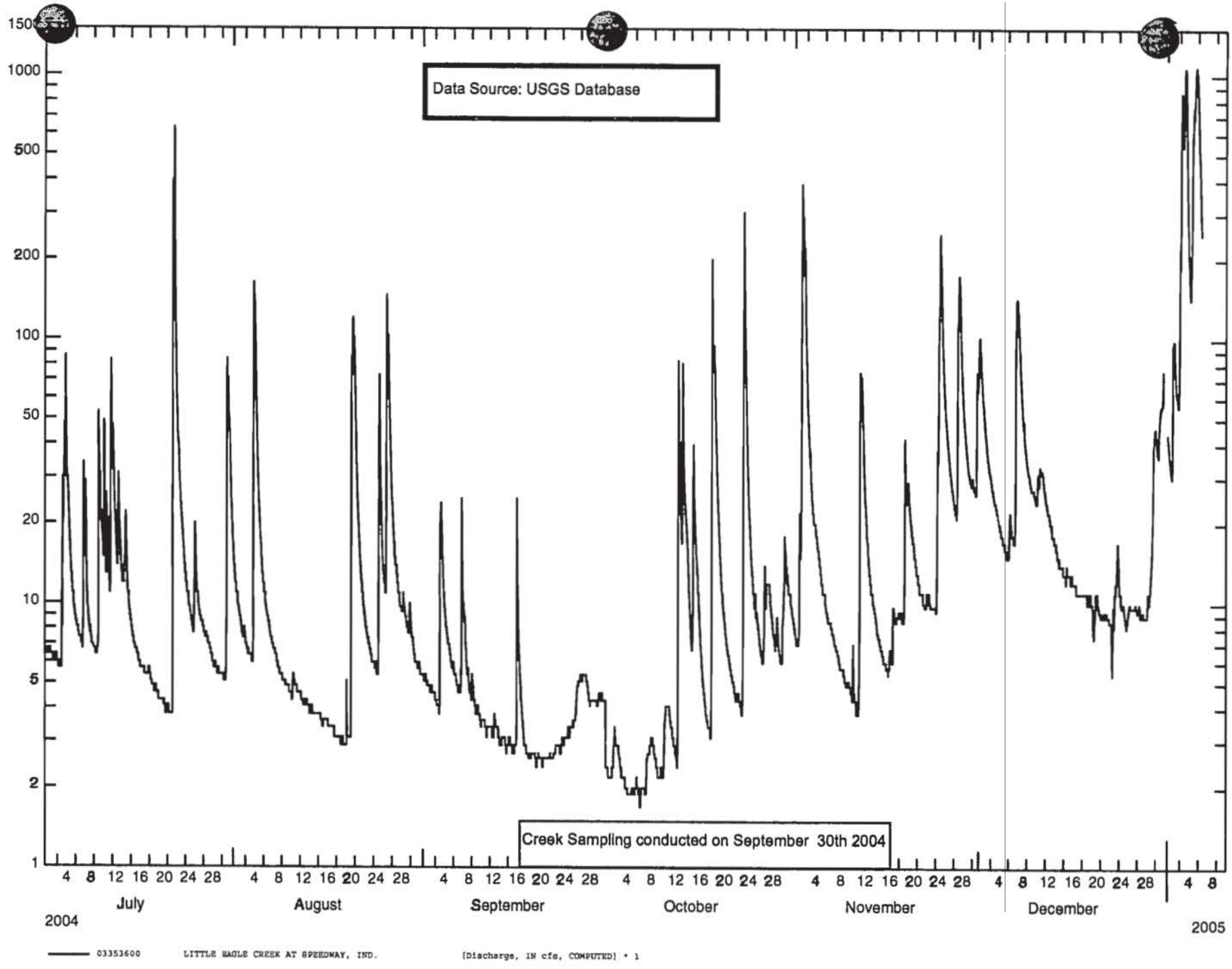
Data Source: USGS Database
Creek Sampling conducted on September 30th 2004
1500
1000
500
200
100
50
20
10
5
2
1
4 8 12 16 20 24 28
July
August
September
October
November
December
2004
2005
03353600 LITTLE EAGLE CREEK AT SPEEDWAY, IND. [Discharge, IN cfs, COMPUTED] * 1