Flat Files Drawer

21 - L - 5

Created: July 2008

CITY OF KALAMAZOO

IN COOPERATION WITH

MICHIGAN DEPARTMENT OF TRANSPORTATION

AND

FEDERAL HIGHWAY ADMINISTRATION

FEDERAL BRIDGE REPLACEMENT PROJECT No. BRO 39(121)

AND

MICHIGAN CRITICAL BRIDGE PROJECT No. MCS 39007

DUTTON STREET BRIDGE OVER PORTAGE CREEK

JOB NUMBER 35103A

PARTS 01 & 02

B. P. R. DIV. NO.	STATE	PROJECT NO.	FISCAL YEAR	SHEET NO.	TOTAL SHEETS
STREET	CITY	COUNTY	TWP.	SHEET NO.	TOTAL SHEETS

DESIGN SPEED = 25 MPH
ADT (1992) = 1,000
ADT (2012) = 1,500

GENERAL NOTES :

DESIGN OF THIS STRUCTURE IS BASED ON CURRENT AASHTO STANDARD SPECIFICATIONS FOR HIGHWAY BRIDGES HS20 LOADING. LIVE LOAD PLUS IMPACT DEFLECTION DOES NOT EXCEED 1/1000 OF SPAN LENGTH. THE WORKING STRESS METHOD OF DESIGN WAS USED FOR THIS STRUCTURE.

EXCEPT WHERE OTHERWISE INDICATED ON THESE PLANS, OR IN THE PROPOSAL AND SUPPLEMENTAL SPECIFICATIONS CONTAINED HEREIN, ALL MATERIALS AND WORKMANSHIP SHALL BE IN ACCORDANCE WITH THE MICHIGAN DEPARTMENT OF TRANSPORTATION STANDARD SPECIFICATIONS FOR CONSTRUCTION 1990 EDITION.

ALL EXPOSED CONCRETE CORNERS SHOWN SQUARE ON THE PLANS SHALL BE BEVELED WITH 3/4" TRIANGULAR MOLDINGS EXCEPT AS OTHERWISE NOTED.

THE DESIGN OF THE STRUCTURAL MEMBERS IS BASED ON MATERIAL OF THE FOLLOWING GRADES AND STRESSES :

CONCRETE : GRADE 35S	f'c = 3,000 psi
CONCRETE : GRADE 45D	f'c = 4,000 psi
STEEL REINFORCEMENT	fy = 60,000 psi
STRUCTURAL STEEL : A36	fy = 36,000 psi
PRECAST CONCRETE	f'c = 5,000 psi

UTILITIES

MICHIGAN BELL TELEPHONE
2919 MILLCORK STREET
KALAMAZOO, MICH. 49001

CONSUMERS POWER COMPANY
GAS AND ELECTRIC
REGION ENGINEERING SUPERINTENDENT
2500 EAST CORK STREET
KALAMAZOO, MICH. 49001

CABLEVISION OF MICHIGAN
7851 S. WESTNEDGE AVE.
PORTAGE, MICH. 49002

CITY OF KALAMAZOO
DEPARTMENT OF PUBLIC UTILITIES
415 STOCKBRIDGE
KALAMAZOO, MICH. 49001
WATER AND SEWER
(616)385-8149

INDEX OF DRAWINGS

1	TITLE SHEET
2	PLAN OF SITE
3	GENERAL PLAN OF STRUCTURE
4	LOG OF BORINGS
5	PILE DETAILS
6-8	ABUT. A & B DETAILS
9	SUPERSTRUCTURE DETAILS & SLAB & SCREEED
10-11	SUPERSTRUCTURE, SIDEWALK & RAILING DETAILS
12	STEEL REINFORCEMENT
13	QUANTITY SHEET

VICINITY MAP

THIS PROJECT

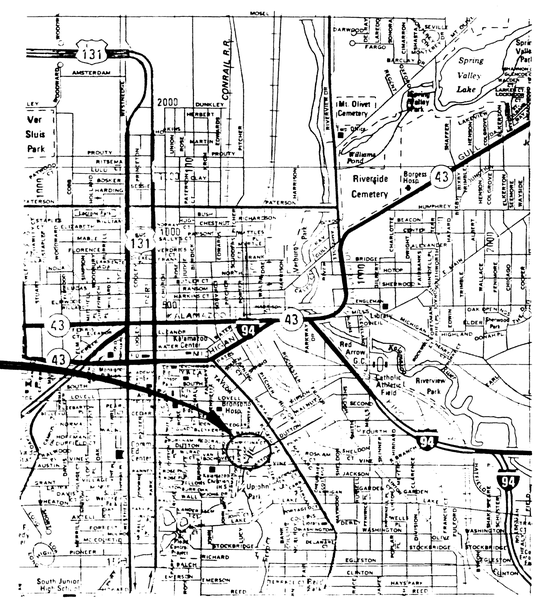

72 HOURS
(EXCLUDING WEEKENDS & HOLIDAYS)
BEFORE YOU DIG
CALL MISS DIG
1-800-482-7171
(TOLL FREE)

MICHIGAN DEPARTMENT OF TRANSPORTATION STANDARD PLANS NOT TO BE PRINTED	
TITLE	SHEET NO.
DRAINAGE STRUCTURES	I-1E
CONCRETE CURB & CONCRETE CURB & GUTTER	II-30D
UTILITY TRENCHES	IV-83G
SOIL EROSION & SEDIMENTATION CONTROL MEASURES	V-96D
TYPE II & III BARRICADES & LIGHTED ARROWS	VI-125H
MOLDING, BEVEL, LIGHT STD., ANCHOR BOLT ASSY., & NAME PLATE DETAILS	XI-103D
BRIDGE RAILING SOLID PARPET TYPE	X-18D

CONTRACT FOR BRIDGE & APPROACH RENOVATION

CITY OF KALAMAZOO

APPROVED BY _____ DATE
JAMES GALLOGY,
MANAGER, PUBLIC WORKS DEPT.

PREPARED UNDER SUPERVISION OF

BY : Alan Halbrier 29715
REGISTERED PROFESSIONAL ENGINEER REGISTRATION No.

WW Engineering & Science
A Summit Company
5555 Glenwood Hills Parkway, SE P.O. Box 874 Grand Rapids, MI 49588-0874 (616) 942-9600

BI of 39-7-46

CITY OF KALAMAZOO

2/-L-5

FED. ITEM NO. PB 1054 MCS 39007

JOB NO. 35103A BRO 39(121)

BI of 39-7-46

(C) 1/13

BENCH MARK DATA

BM#1 ELEV. 760.62
RAILROAD SPIKE IN "W" SIDE TELEPHONE POLE 19' RIGHT OF ℄ DUTTON

BM#2 ELEV. 760.71
RAILROAD SPIKE IN "E" SIDE 10" POWER POLE 19' LEFT OF ℄ DUTTON

BM#3 ELEV. 761.97
RAILROAD SPIKE IN "SW" SIDE POWER, LIGHT, TELE., POLE N. SIDE DUTTON ±150' E. OF JASPER. .80' ABOVE GROUND.

BM#4 ELEV. 762.04
BOTTOM N.W. CORNER CONCRETE STEP TO HOUSE #410 S. SIDE DUTTON. .55' ABOVE GROUND

WITNESSES

PK @ STA. 14+10.05

NAIL IN E. SIDE P. POLE	S 15' E	26.72'
TOP ℄ HYDRANT	N 25' E	33.50'
N.E'LY COR. TO BRICK GARAGE	DUE E.	51.47'
NAIL IN S. SIDE P. POLE	N 75' E	85.17'

PK @ STA. 12+12.25

NAIL IN N'LY SIDE 22" MAPLE	N 80' W	67.65'
NAIL IN E'LY SIDE P. POLE .	DUE N.	46.45'
NW COR. BRICK FND. TO HSE. #419		45.82'
S.E'LY COR. TO BASEMENT #412		70.26'

PK @ STA. 10+00

TOP ℄ HYD. @ E'LY COR JASPER & DUTTON	39.07'
NAIL IN S.E'LY SIDE P. POLE @ S'LY COR JASPER & DUTTON	30.70'
℄ MOST E'LY FENCE POST @ N'LY COR JASPER & DUTTON	45.16'
NAIL IN E'LY SIDE 10" MAPLE @ N'LY COR JASPER & DUTTON	51.86'

UTILITIES

MICHIGAN BELL TELEPHONE COMPANY
2919 MILLCORK STREET
KALAMAZOO, MICH. 49001

CITY OF KALAMAZOO
DEPARTMENT OF PUBLIC UTILITIES
415 STOCKBRIDGE AVE.
KALAMAZOO, MICH. 49001
WATER AND SEWER – (616)385–8149

CONSUMERS POWER COMPANY
REGION ENGINEERING SUPERINTENDENT
2500 E. CORK STREET
KALAMAZOO, MICH. 49001

CABLEVISION OF MICHIGAN
7851 S. WESTNEDGE AVE.
PORTAGE, MICH. 49003

EXISTING STRUCTURE

THE EXISTING STRUCTURE IS A ONE SPAN CONCRETE ENCASED STEEL BEAM TYPE. TOTAL LENGTH IS 25' LONG AND 60' WIDE

PROPOSED CURVE @ ℄

Δ = 39°28'20" RT.	P.C. 11+47.67
R = 180'	P.I. 12+12.25
T = 64.58'	P.T. 12+71.67
L = 124.00'	
E = 11.23'	
M = 10.57'	

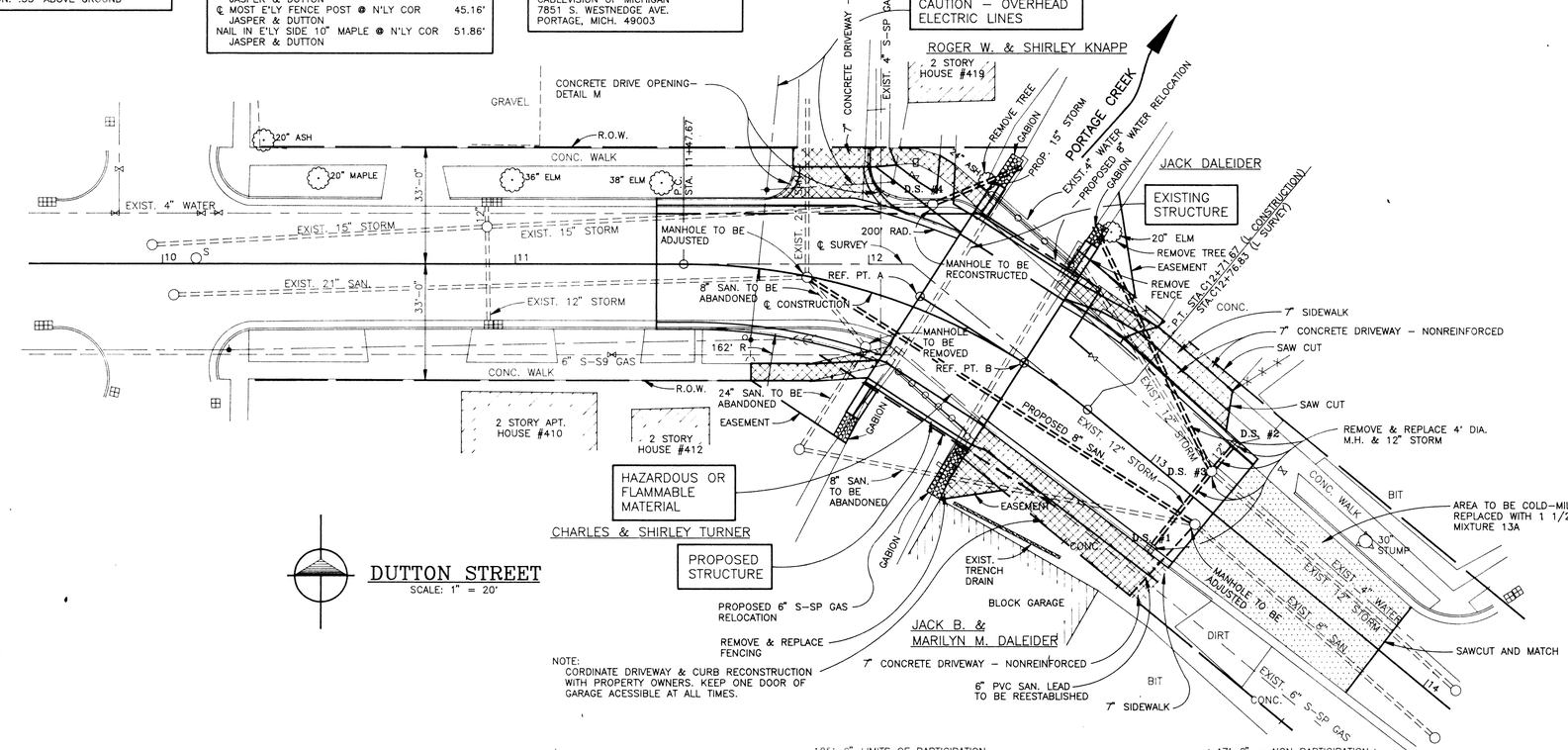

DUTTON STREET
SCALE: 1" = 20'

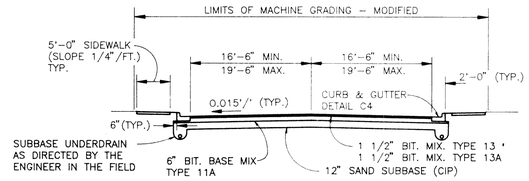

TYPICAL BITUMINOUS APPROACH SECTION

BIT. SURFACING SCHEDULE
TOP 1 1/2" = 165#/SYD., BIT MIX. TYPE 13A
LEVELING 1 1/2" = 165#/SYD., BIT. MIX. TYPE 13
BASE 6" 660#/SYD. BIT. BASE MIX. TYPE 11A
ASPHALT PENETRATION GRADE 85–100

LEGEND

REMOVALS –

TRAFFIC COUNTS

ADT (1992) 1000
ADT (2012) 1500
DESIGN SPEED 25 MPH
POSTED SPEED 25 MPH

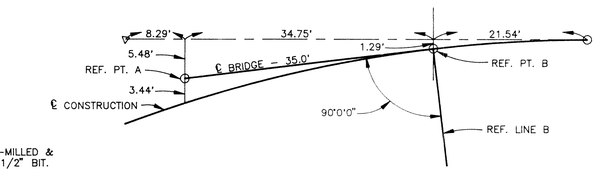

ALIGNMENT DIAGRAM

STORM SEWER SCHEDULE

	DS#	TYPE/COVER	STATION	OUTLET EL.	LENGTH, SIZE, & CLASS	INLET EL. TO DS
STORM SEWER	1	4'ø DS. COVER K GUT. EL. 758.98	13+15, 18' RT.	757.47	28' 12" C76–III TR. DET. A	757.19, TO D.S. #3
	2	4'ø DS. COVER K GUT. EL. 758.98	13+15, 18' LT.	757.29	10' 12" C76–III TR. DET. A	757.19 TO D.S. #3
	3	4'ø DS. COVER A T/C EL. 759.11	13+15, 9' LT.	757.19	78' 12" C76–III TR. DET. A	757.0 TO CREEK
	4	4'ø DS. COVER A T/C EL. 761.79	12+15, 18' LT.	754.12	27' 15" C76–III TR. DET. A	754.12 TO CREEK

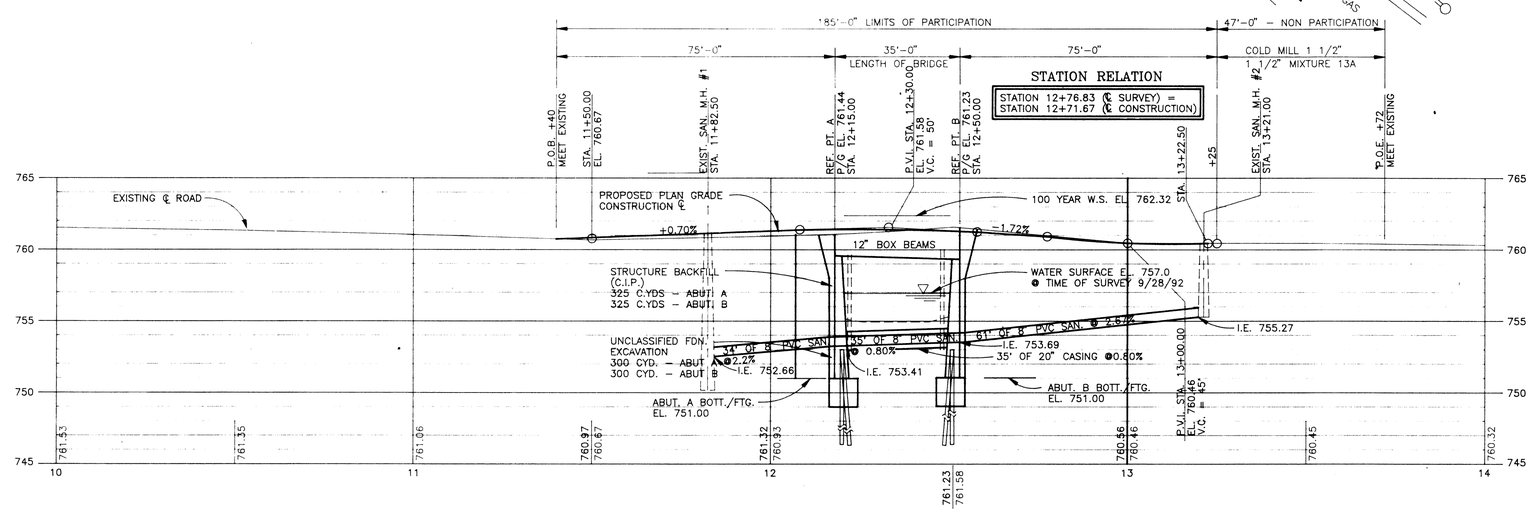

PROFILE
SCALE: HORIZ. 1" = 20'
VERT. 1" = 5'

GENERAL NOTES:

A. THE WORK COVERED BY THESE PLANS INCLUDES REMOVAL OF THE EXISTING STRUCTURE, CONSTRUCTION OF THE PROPOSED BRIDGE, PLACING STRUCTURE BACKFILL AND SLOPE PROTECTION, AND CONSTRUCTION OF APPROACHES TO THE LIMITS SHOWN.

B. THE CONTRACTOR SHALL LOCATE ALL ACTIVE UNDERGROUND UTILITIES PRIOR TO STARTING WORK AND SHALL CONDUCT HIS OPERATIONS IN SUCH A MANNER AS TO ENSURE THAT THOSE UTILITIES NOT REQUIRING RELOCATION WILL NOT BE DISTURBED.

C. DATUM REFERS TO NGVD DATUM.

D. WATER LEVEL IS SUBJECT TO CHANGE. THE CONTRACTOR IS RESPONSIBLE FOR MAKING HIS OWN DETERMINATION OF WATER LEVELS THAT WILL EXIST DURING CONSTRUCTION.

E. FOR PROTECTION OF UNDERGROUND UTILITIES, THE CONTRACTOR SHALL DIAL 800–482–7171 A MINIMUM OF 3 WORKING DAYS PRIOR TO EXCAVATING IN THE VICINITY OF UTILITY LINES. ALL "MISS DIG" PARTICIPATING MEMBERS WILL THUS BE ROUTINELY NOTIFIED. THIS DOES NOT RELIEVE THE CONTRACTOR OF THE RESPONSIBILITY OF NOTIFYING UTILITY OWNERS WHO MAY NOT BE A PART OF THE "MISS DIG" ALERT SYSTEM.

F. THE EXISTING STRUCTURE SHALL BE CHECKED AT THE TIME OF STARTING CONSTRUCTION TO SEE THAT ITS RELATIONSHIP TO THE PROPOSED WORK IS AS SHOWN ON THESE PLANS AND ANY DIFFERENCES REQUIRING CHANGES IN THE NEW WORK SHALL BE REPORTED TO THE ENGINEER.

240
63478–2
WGJ050693

REVISIONS	DR BY / CHD BY
DR BY W.G.J. DATE 1/93	CHD BY T.J.T. DATE 2/93
REVISED IN ACCORDANCE WITH CONSTRUCTION RECORDS	BY DATE

WW Engineering & Science
A Summit Company
5555 Glenwood Hills Parkway, SE • P.O. Box 874 • Grand Rapids, MI 49588–0874 • (616) 942–9600

CITY OF KALAMAZOO
DUTTON STREET BRIDGE
OVER PORTAGE CREEK
GENERAL PLAN OF SITE
B1 of 39–7–46

DATE 12/92
PROJECT NO. 63478
SHEET NO. 2/13

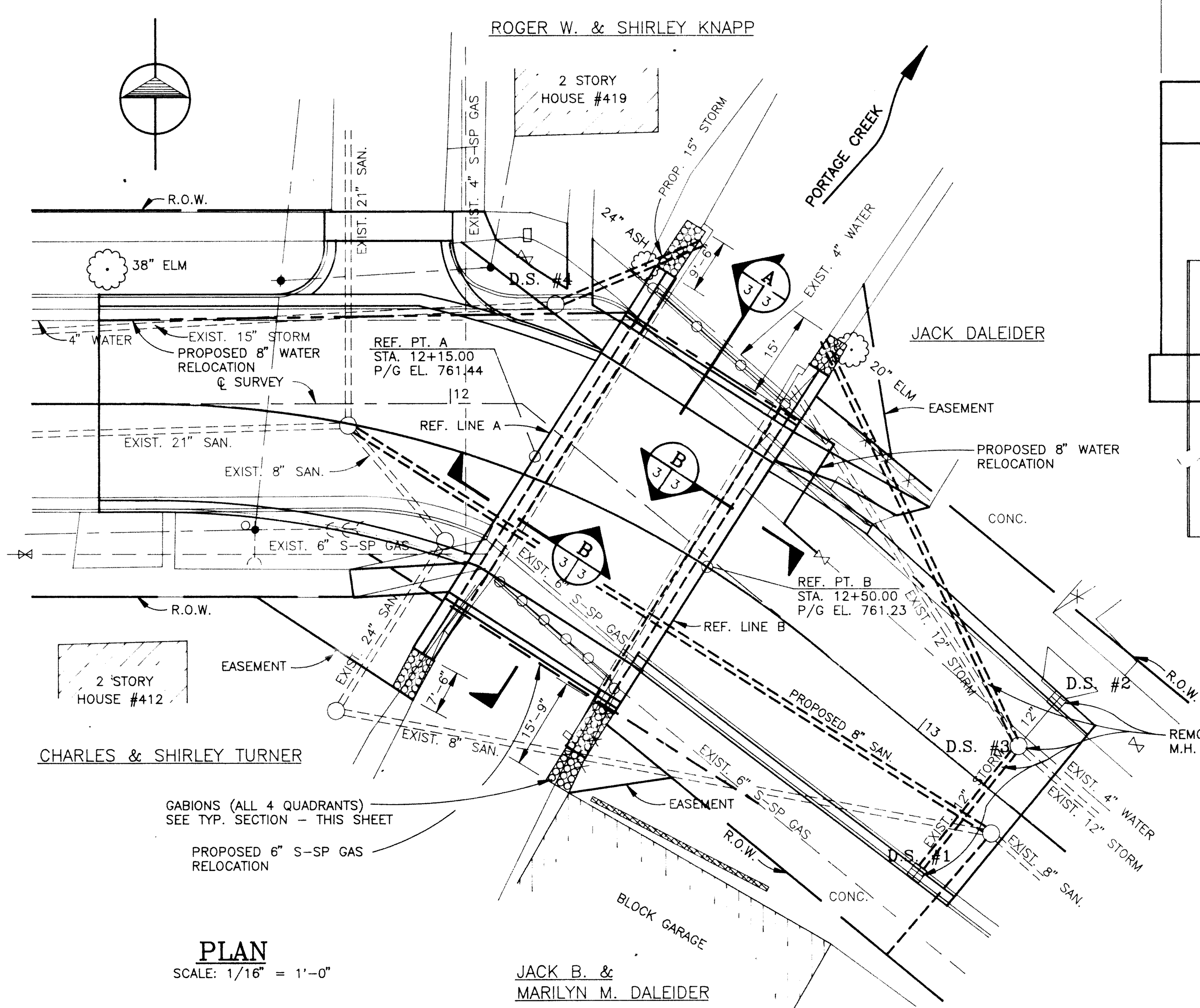

PLAN
SCALE: 1/16" = 1'-0"

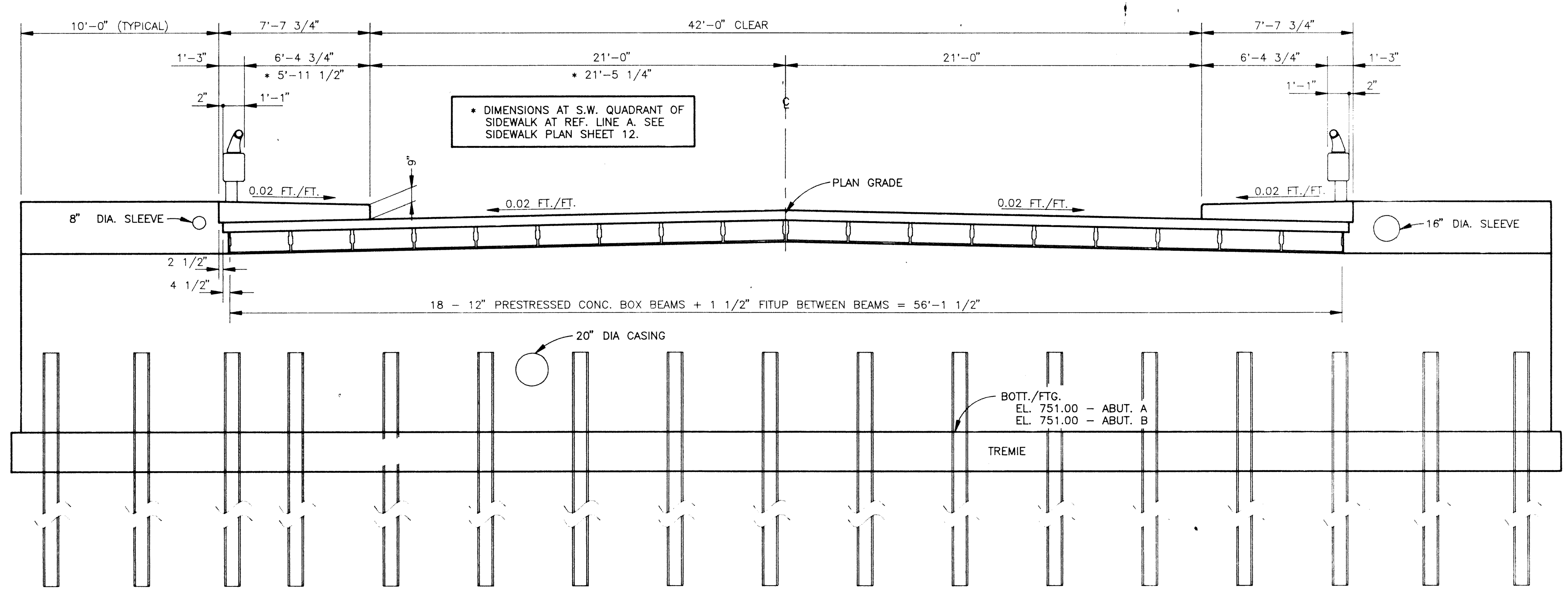

A 2/2 SECTION
SCALE: 1/4" = 1'-0"

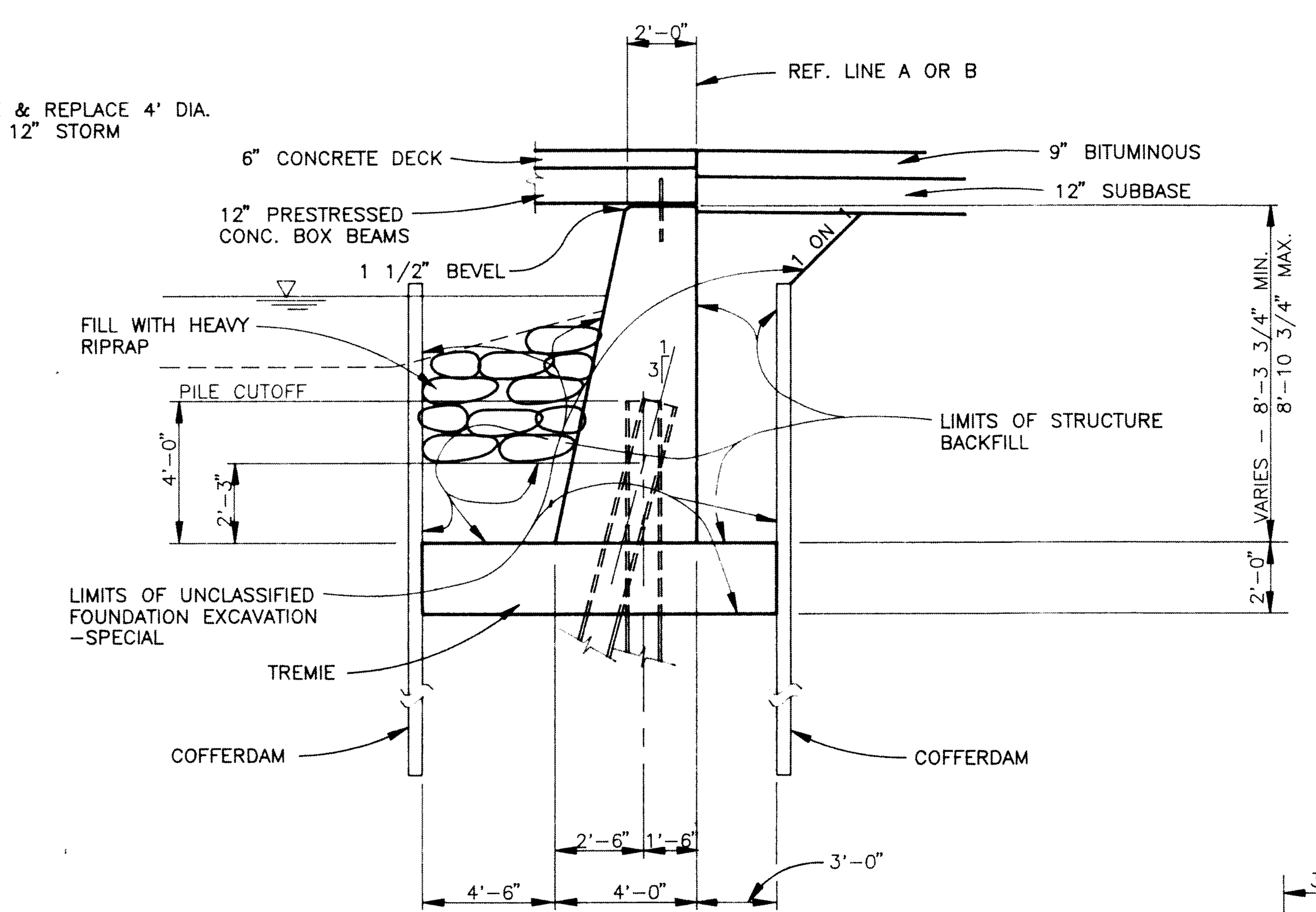

B 2/2 SECTION
SCALE: 1/4" = 1'-0"

** FOR INFORMATION ONLY, INCLUDED IN MACHINE GRADING MODIFIED:

SUBBASE (CIP)	50 CYD
EARTH EXCAVATION	50 CYD
EMBANKMENT	100 CYD

MISC. QUANTITIES

	ITEM	AMOUNT
	REMOVING TREE, 19"-36"	2 EA.
	REMOVING AND DISPOSING OF HAZARDOUS MATERIALS	1 BAMT.
	PCB TESTS	4 EA.
	HAULING AND DISPOSING - TYPE II LANDFILL	250 CYD.
	REMOVING PAVEMENT	710 SYD.
	REMOVING CURB & GUTTER	295 LFT.
	REMOVING SIDEWALK	120 CYD
	REMOVING MASONRY AND CONCRETE STRUCTURES	10 CYD
	REMOVING FENCE	60 LFT
	REMOVING DRAINAGE STRUCTURE	4 EA.
	ABANDONING DRAINAGE STRUCTURE	1 EA.
**	MACHINE GRADING - MODIFIED	2 STA
	SILT FENCE	100 LFT
	FILTER BAG	6 EA.
	COLD-MILLING BITUMINOUS SURFACE	250 SYD
	BITUMINOUS MIX. TYPE 11A BASE	226 TON
	BITUMINOUS MIX. TYPE 13 LEVELING	57 TON
	BITUMINOUS MIX. TYPE 13A TOP	88 TON
	CLASS C76-III, SEWER 12", DETAIL A	120 LFT
	CLASS C76-III, SEWER 15", DETAIL A	30 LFT
	DRAINAGE STRUCTURE, 4' DIAMETER	4 EA.
	DRAINAGE STRUCTURE COVERS	1750 LBS
	ADJUSTING DRAINAGE STRUCTURE COVERS	3 EA.
	RECONSTRUCTING DRAINAGE STRUCTURE	10 LFT
	RIPRAP, HEAVY	100 SYD
	SUBBASE UNDERDRAIN, 6"	280 LFT
	CONCRETE DRIVEWAY-NONREINFORCED 7"	32 CYD
	CONCRETE DRIVE OPENING-DETAIL M	20 LFT.
	CONCRETE CURB & GUTTER, DETAIL C4	330 LFT
	4" CONCRETE SIDEWALK	600 SFT
	CONCRETE SIDEWALK, 7"	150 SFT
	PROTECTIVE FENCE	300 LFT
	CHAIN LINK FENCE, 84"	50 LFT
	BARRICADE, TYPE II, LIGHTED, FURNISHED	20 EA.
	BARRICADE, TYPE II, LIGHTED, OPERATED	18 EA.
	BARRICADE, TYPE III, LIGHTED, FURNISHED	6 EA.
	BARRICADE, TYPE III, LIGHTED, OPERATED	4 EA.
	SIGN, TYPE B TEMPORARY	159 SFT
	MULCH MODIFIED	100 SYD
	DUCTILE IRON WATERMAIN, 8" TRENCH DETAIL G	120 LFT
***	DUCTILE IRON WATERMAIN, 8" BRIDGE CROSSING	35 LFT
	STEEL CASING PIPE, JACKED IN PLACE, 20"	45 LFT
	8-INCH PVC WASTEWATER SEWER, TRENCH DET. A	130 LFT
	STRUCTURE BACKFILL	650 CYD
	UNCLASSIFIED FOUNDATION EXCAVATION-SPECIAL	600 CYD
	ABANDON UTILITIES, 8"-24" DIA.	175 LFT.
	GABION SLOPE PROTECTION	40 CYD
	6" PVC SANITARY LEAD	1 LSUM
	COFFERDAMS - MODIFIED	1 LSUM
	REMOVAL OF STRUCTURES - MODIFIED	1 LSUM
	MOBILIZATION	1 LSUM

*** INCLUDES PIPE HANGER ASSEMBLIES

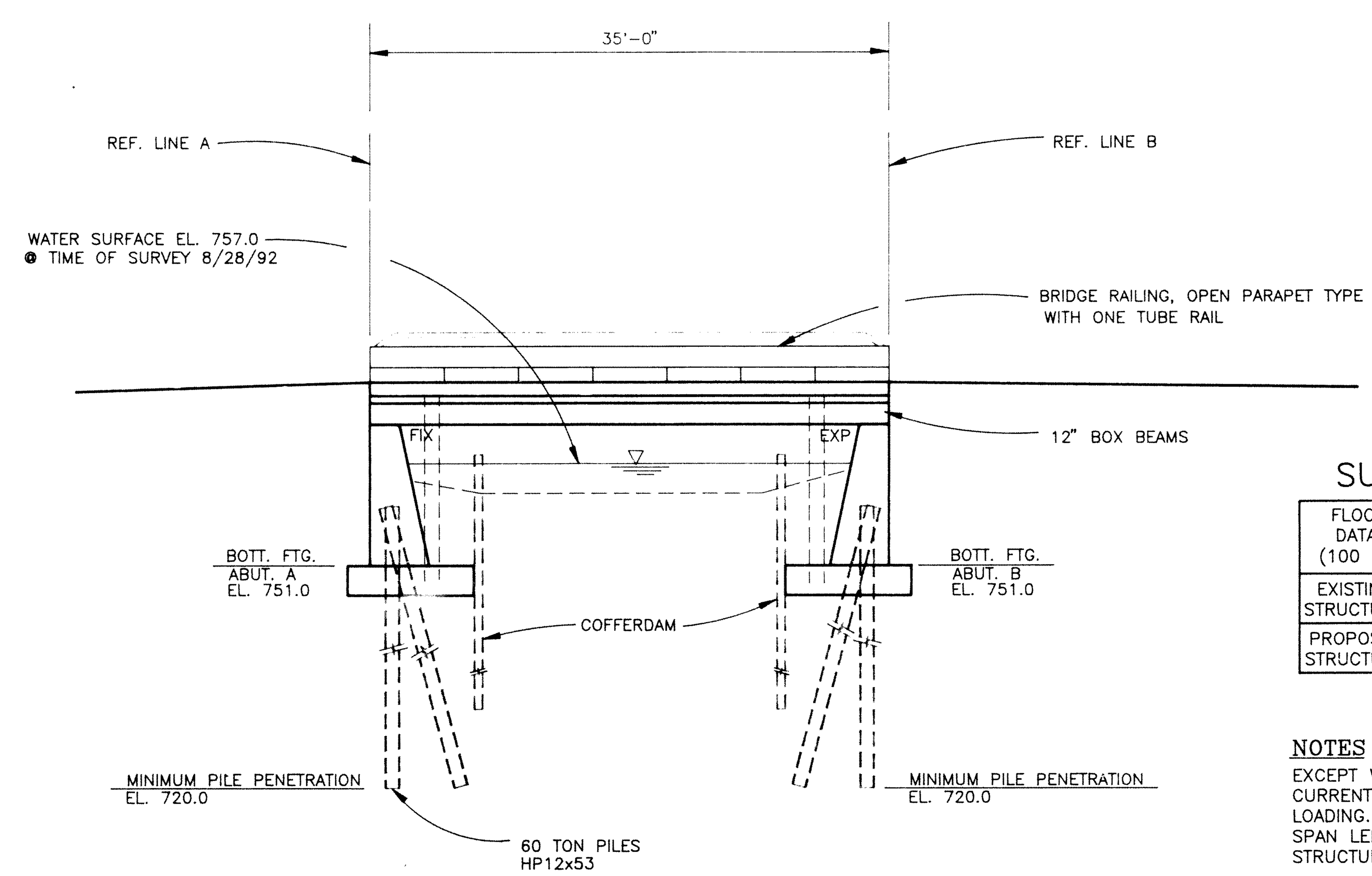

ELEVATION
SHOWN NORMAL TO SUBSTRUCTURE
SCALE 1/8" = 1'-0"

SUMMARY OF HYDRAULIC ANALYSIS

FLOOD DATA (100 YR)	DISCHARGE IN CFS	WATER SURFACE ELEV.	WATERWAY AREA PROVIDED IN SQ. FT.	VELOCITY IN CONSTRICTED CHANNEL IN FPS
EXISTING STRUCTURE	550	762.32	106	5.2
PROPOSED STRUCTURE	550	762.32	118	4.7

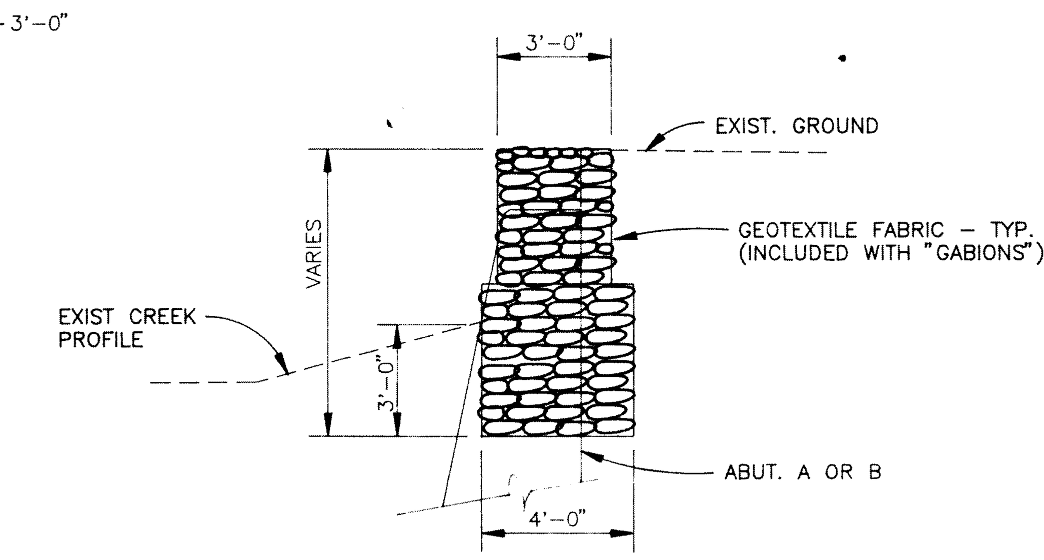

TYPICAL GABION SECTION
SCALE: 1/4" = 1'-0"

NOTES

EXCEPT WHERE NOTED THE DESIGN OF THIS STRUCTURE IS BASED ON CURRENT AASHTO STANDARD SPECIFICATIONS FOR HIGHWAY BRIDGES HS20 LOADING. LIVE LOAD PLUS IMPACT DEFLECTION DOES NOT EXCEED 1/1000 OF SPAN LENGTH. THE WORKING STRESS METHOD OF DESIGN WAS USED FOR THIS STRUCTURE.

THE DRAINAGE AREA CONTRIBUTORY TO THIS CROSSING IS 24.5 SQ. MILES.

REVISIONS		DR BY / CHD BY	
DR BY W.G.J.	DATE 12/92	CHD BY T.J.T.	DATE 3/93
REVISED IN ACCORDANCE WITH CONSTRUCTION RECORDS		BY	DATE

WW Engineering & Science
A Summit Company
5555 Glenwood Hills Parkway, SE • P.O. Box 874 • Grand Rapids, MI 49588-0874 • (616) 942-9600

CITY OF KALAMAZOO
DUTTON STREET BRIDGE
OVER PORTAGE CREEK
GENERAL PLAN OF STRUCTURE
B1 of 39-7-46

192
WGJ050693
63478-3

DATE 12/92
PROJECT NO. 63478
SHEET NO. 3/13

BORING #1

DUTTON ST. ABUT. B
COMPLETED 12/7/92
SCALE: 1" = 5'

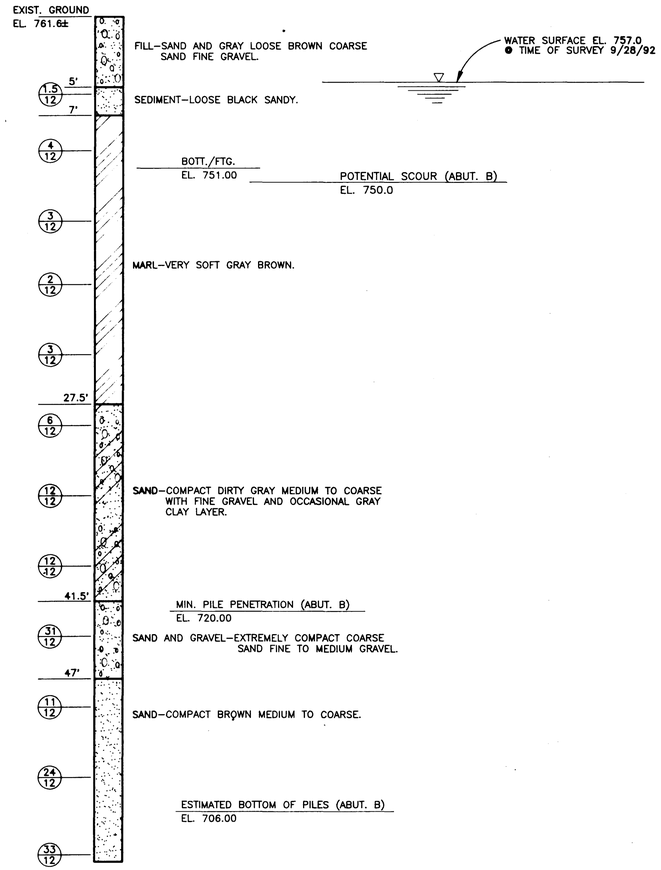

BORING DEPTH = 60.0'

BORING #2

DUTTON ST. ABUT. A
COMPLETED 12/7/92
SCALE: 1" = 5'

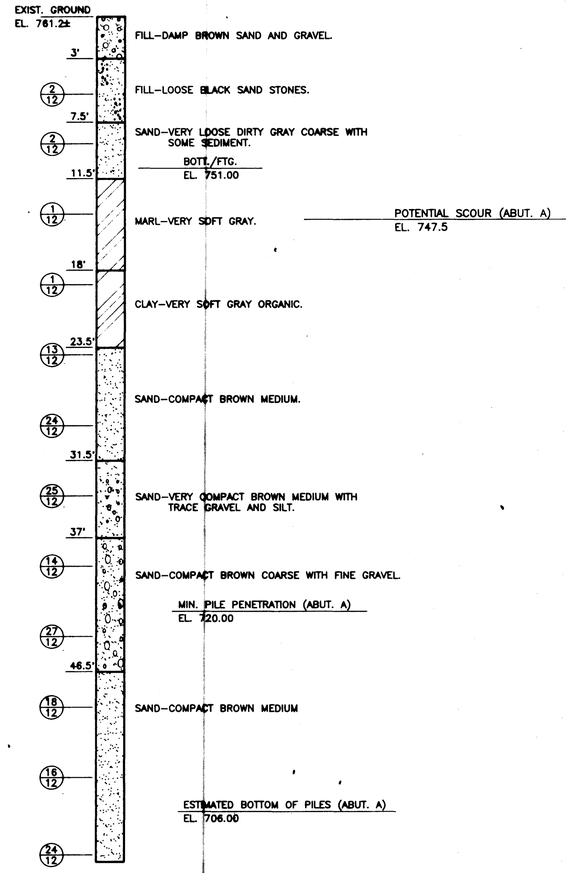

BORING DEPTH = 60.0'

SOIL PATTERNS LEGEND

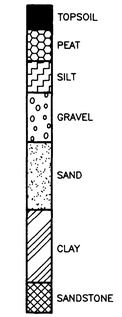

NOTES :

NUMBERS IN CIRCLES DENOTE NUMBER OF BLOWS REQUIRED TO DRIVE A 2" SPLIT SPOON SAMPLER 3 SUCCESSIVE 6" INCREMENTS USING A 140# HAMMER FALLING 30". WHERE THE SAMPLER IS DRIVEN DISTANCES OTHER THAN 18", THE DISTANCE IS SHOWN IN THE CIRCLE WITH THE NUMBER OF BLOWS IN THE FORM OF A FRACTION.

31/4 No. OF BLOWS / DISTANCE DRIVEN (INCHES)

CONSISTENCY WAS DETERMINED BY INSPECTION OF SAMPLES AND SUBSTANTIATED BY SOILS RESISTANCE TO DRILLING TOOLS.

THE SOIL BORING LOGS REPRESENT POINT INFORMATION. PRESENTATION OF THIS INFORMATION IN NO WAY IMPLIES THAT SUBSURFACE CONDITIONS ARE THE SAME AT LOCATIONS OTHER THAN THE EXACT LOCATION OF THE BORING.

▽ WATER LEVEL MAY BE INFLUENCED BY RESIDUAL BORING WATER.

EXISTING ABUTMENTS COULD HAVE BEEN SUPPORTED ON PILING. IT IS NOT KNOWN AT THIS TIME WHETHER PILING WAS USED.

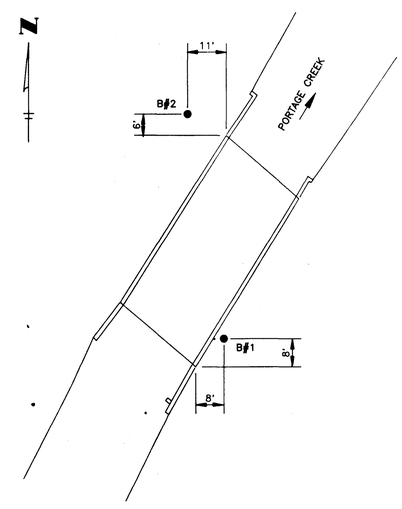

BORING LOCATION SKETCH

NOT TO SCALE

REVISIONS	DR BY / CHD BY
DR BY W.G.J. DATE 10/92	CHD BY T.J.T. DATE 3/93
REVISED IN ACCORDANCE WITH CONSTRUCTION RECORDS	BY DATE

WW Engineering & Science
A Summit Company
5555 Glenwood Hills Parkway, SE • P.O. Box 874 • Grand Rapids, MI 49588-0874 • (616) 942-9600

CITY OF KALAMAZOO
DUTTON STREET BRIDGE
OVER PORTAGE CREEK
LOG OF BORINGS
B1 of 39-7-46

1:60
63478-4
WGJ051093

DATE 1/93
PROJECT NO. 63478
SHEET NO. 4/13

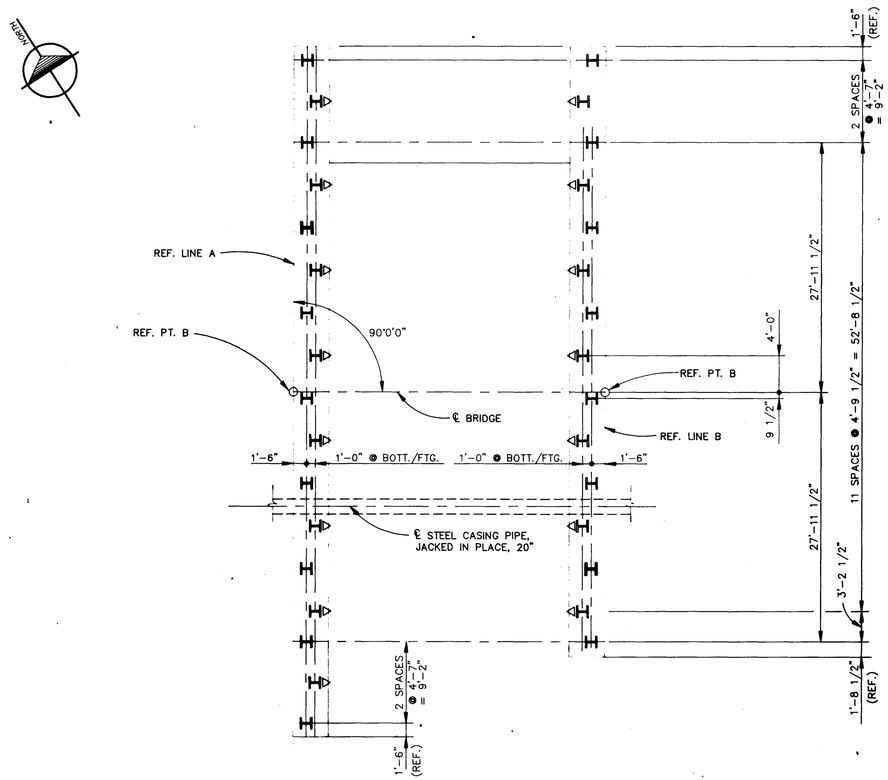

ABUT. A ABUT. B

PLAN OF PILE LAYOUT

SCALE 1/8" = 1'-0"

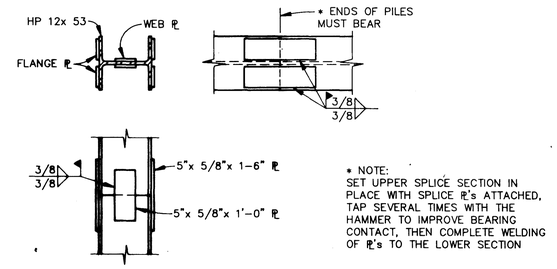

* NOTE:
SET UPPER SPLICE SECTION IN PLACE WITH SPLICE ℞'s ATTACHED, TAP SEVERAL TIMES WITH THE HAMMER TO IMPROVE BEARING CONTACT, THEN COMPLETE WELDING OF ℞'s TO THE LOWER SECTION

H PILE SPLICE DETAIL

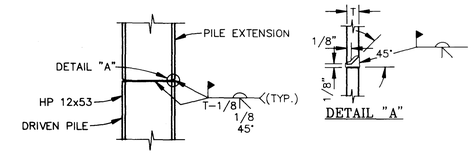

BUTT WELD SPLICE DETAIL

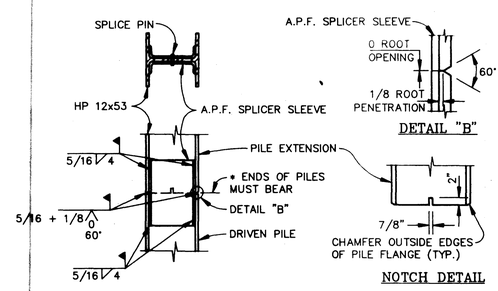

ALTERNATE SPLICE DETAIL

(A.P.F.= ASSOCIATED PIPE & FITTING COMPANY)

LEGEND

- DENOTES VERTICAL PILE
- DENOTES BATTERED PILE
- DENOTES TEST PILE

STEEL PILES 12HP53, 60 TON						
LOCATION	TYPE OF PILE	TOTAL NUMBER REQUIRED	ESTIMATED LENGTH FURNISHED & DRIVEN	TOTAL	TOTAL PILE SPLICE	CUT-OFF ELEV.
ABUT. A	I	8	8 @ 49'= 392.0'	392.0'		755.0
	◁H	8	8 @ 49'= 392.0'	392.0'		755.0
	I	1	1 @ 49'= 49.0'	49.0'		755.0
ABUT. B	I	7	7 @ 49'= 343.0'	343.0'		755.0
	◁H	7	7 @ 49'= 343.0'	343.0'		755.0
	I	1	1 @ 49'= 49.0'	49.0'		755.0
TOTAL				1568.0'	37	

MISC. QUANTITIES		
ITEM	UNIT	AMOUNT
FURNISHING EQUIPMENT FOR DRIVING PILES	LSUM	1
STEEL PILES, FURN. & DRIVEN, 12"	L. FT.	1568
TEST PILES, STEEL, 12"	EACH	2
SPLICES, STEEL PILES, 12"	EACH	37

NOTES:

ABUTMENT AND PIER PILES SHALL BE DRIVEN TO A MINIMUM BEARING CAPACITY OF 60 TONS.

PILE PENETRATIONS HAVE BEEN DETERMINED BY USE OF STATIC FORMULA. DESIGN CAPACITY WITH POTENTIAL SCOUR IS 60 TONS PER PILE.

STEEL PILES SHALL BE HP12x53.

MINIMUM PENETRATION MUST BE ATTAINED REGARDLESS OF PENETRATION CRITERIA FROM SECTION 5.02.06 b OF THE MDOT STANDARD SPECIFICATIONS. METHODS USED TO ADVANCE PILES BEYOND ABSOLUTE REFUSAL TO ATTAIN PENETRATION WILL NOT BE CONSIDERED AS EXTRA WORK, BUT WILL BE INCLUDED IN THE PAY ITEM "FURNISHING EQUIPMENT FOR DRIVING PILES".

48
WGJ050693
63478-5

REVISIONS	DR. BY	CHD. BY
DR. BY W.G.J. DATE 1/93	CHD. BY A.L.H.	DATE 2/93
REVISED IN ACCORDANCE WITH CONSTRUCTION RECORDS	BY	DATE

WW Engineering & Science
A Summit Company
5555 Glenwood Hills Parkway, SE • P.O. Box 874 • Grand Rapids, MI 49588-0874 (616) 942-9600

CITY OF KALAMAZOO
DUTTON STREET BRIDGE
OVER PORTAGE CREEK
PILE PLAN & DETAILS
B1 of 39-7-46

DATE 1/93
PROJECT NO. 63478
SHEET NO. 5/13

5-7-12

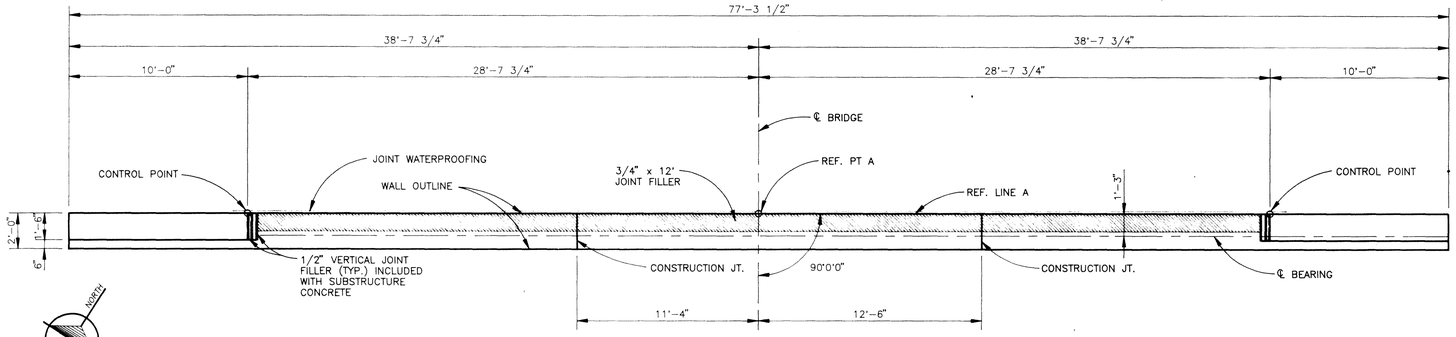

PLAN OF TOP – ABUT. A

SCALE: 1/4" = 1'-0"

MISC. QUANTITIES			
ITEM	UNIT	ABUT. A	ABUT. B
CONCRETE GRADE 35T	CYD.	68.5	60.8
PIPE SLEEVE, 16"	EA.	1	1
JOINT WATERPROOFING	SFT	201	160

SUBSTRUCTURE CONCRETE QUANTITIES		
POUR	ABUT. A	ABUT. B
A	25.9	25.3
B	23.3	22.7
C	24.8	15.9
D	1.4	.2
E	1.4	1.4
TOTAL SUBSTRUCTURE CONCRETE 142.3 CU. YDS. (ABUT. A & B)		

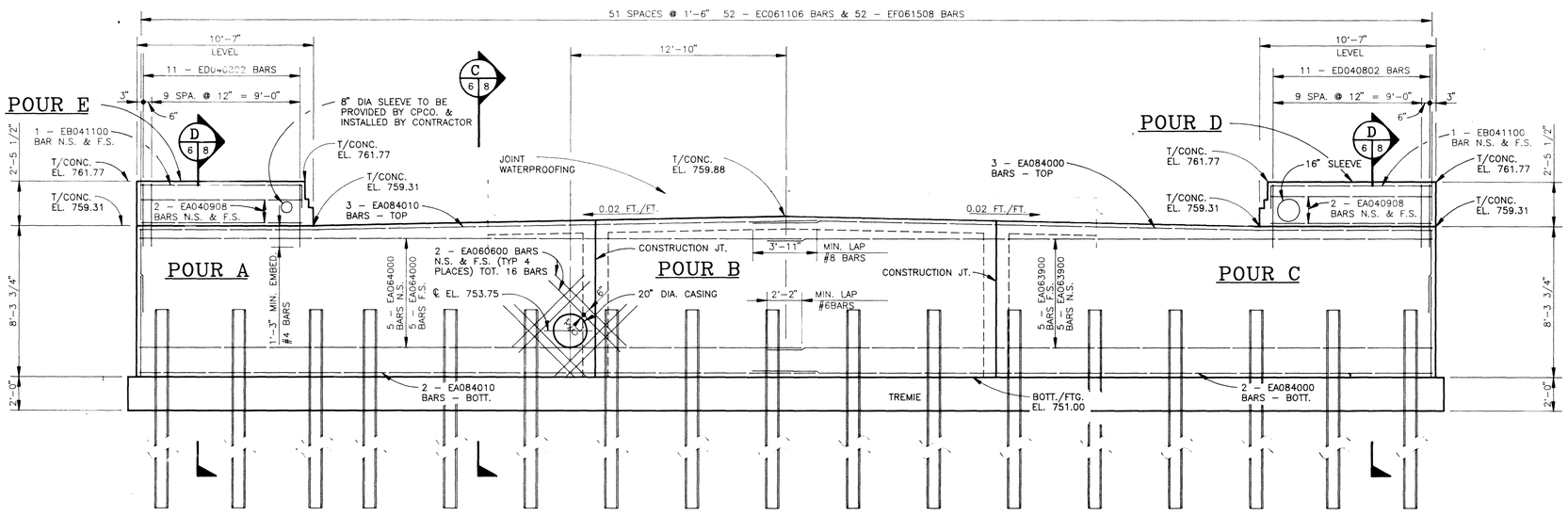

ELEVATION

SCALE: 1/4" = 1'-0"

ALPHABETICAL DESIGNATION OF POURS IS NOT TO BE CONSTRUED AS A POUR SEQUENCE.

FOR BEVEL AND MOLDING DETAILS, SEE STANDARD X1-103.

FOR PILE LAYOUT & DETAILS SEE SHEET 5.

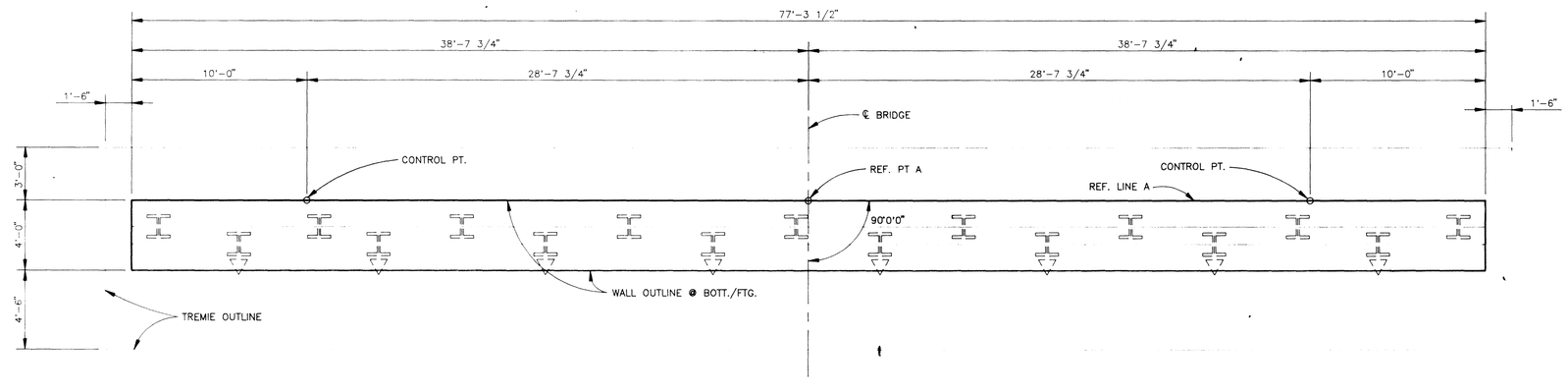

PLAN OF BOTTOM – ABUT. A

SCALE: 1/4" = 1'-0"

REVISIONS	DR BY / CHD BY
DR BY W.G.J. DATE 1/93	CHD BY T.J.T. DATE 3/93
REVISED IN ACCORDANCE WITH CONSTRUCTION RECORDS	BY DATE

WW Engineering & Science
A Summit Company
5555 Glenwood Hills Parkway, SE • P.O. Box 874 • Grand Rapids, MI 49588-0874 • (616) 942-9600

CITY OF KALAMAZOO
DUTTON STREET BRIDGE OVER PORTAGE CREEK
ABUT. A DETAILS
B1 of 39-7-46

63478-6
48
WGU050693

DATE 1/93
PROJECT NO. 63478
SHEET NO. 6/13

21.1.5

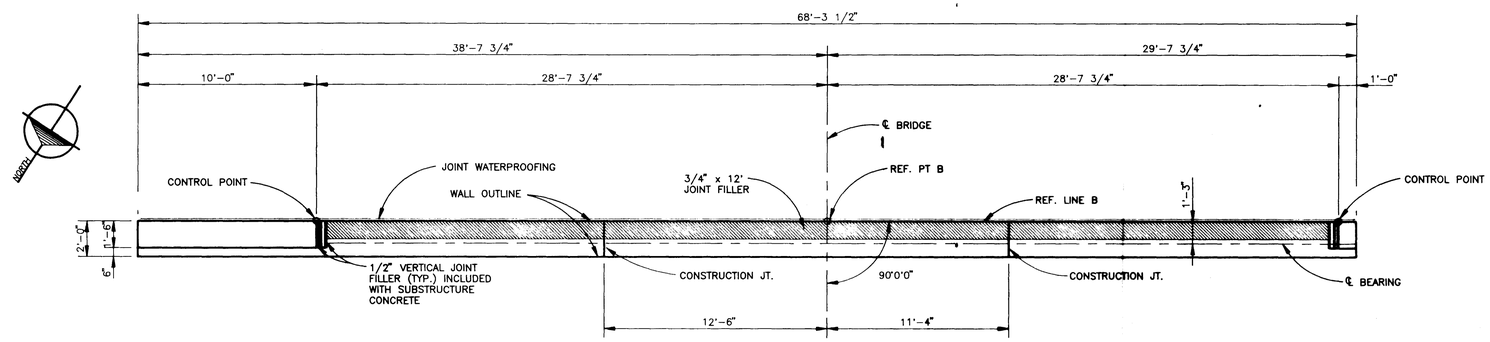

PLAN OF TOP – ABUT. B

SCALE: 1/4" = 1'-0"

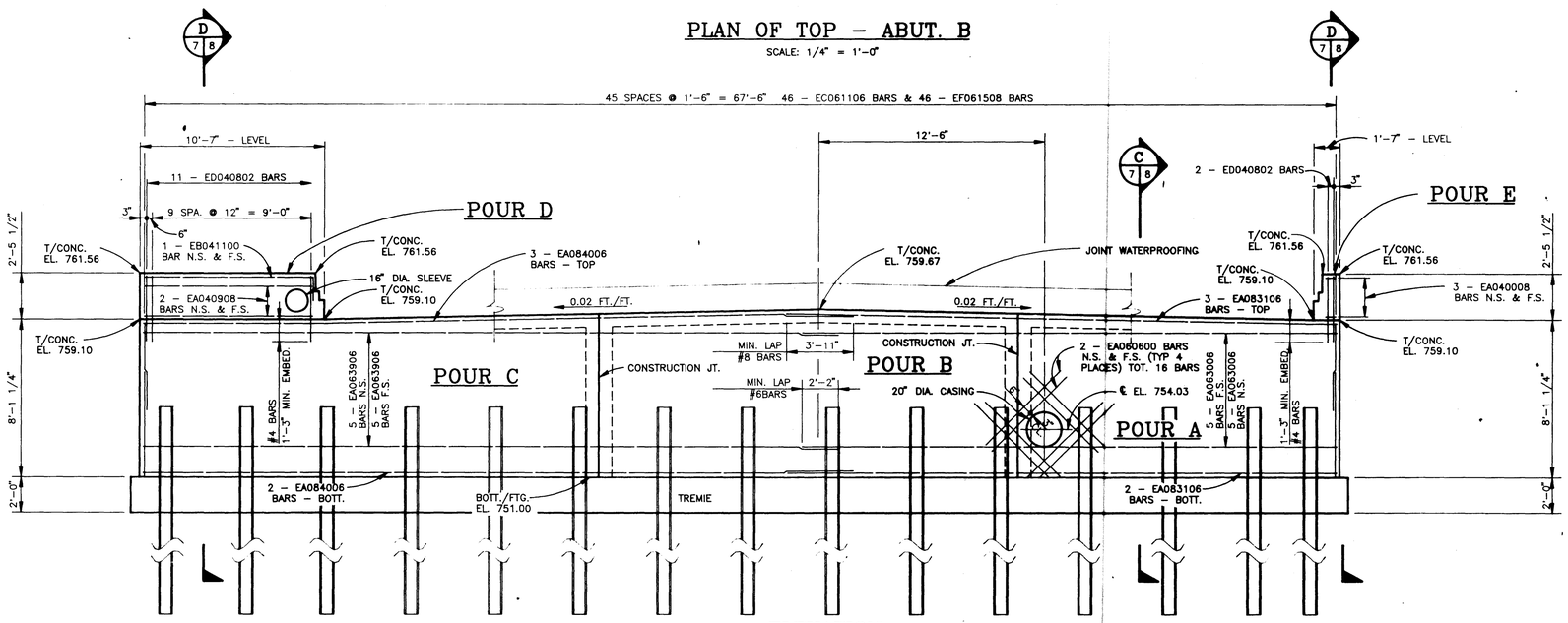

ELEVATION

SCALE: 1/4" = 1'-0"

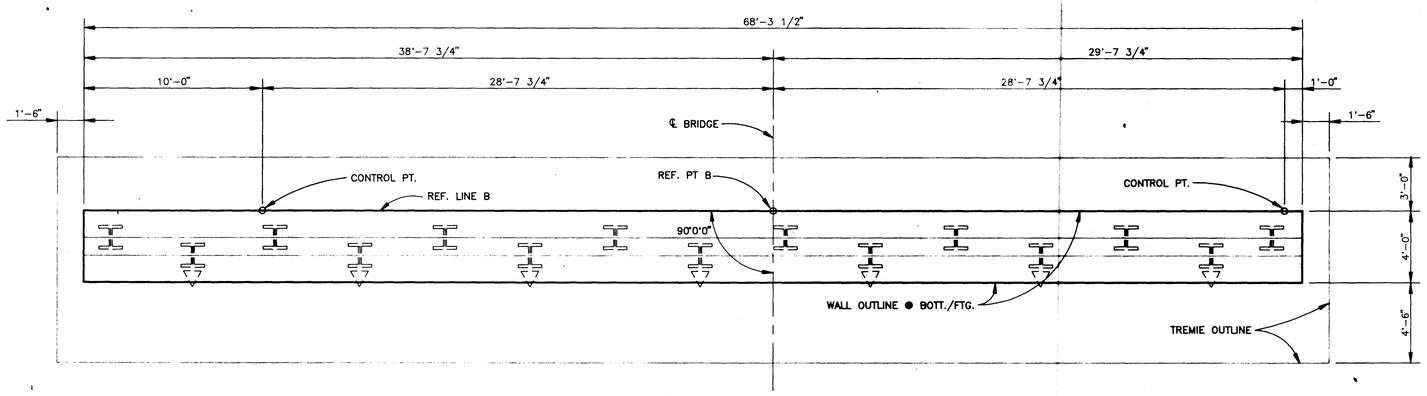

PLAN OF BOTTOM – ABUT. B

SCALE: 1/4" = 1'-0"

REVISIONS	DR BY / CHD BY
DR BY W.G.J. DATE 1/93	CHD BY T.J.T. DATE 3/93
REVISED IN ACCORDANCE WITH CONSTRUCTION RECORDS	BY DATE

WW Engineering & Science
A Summit Company
5555 Glenwood Hills Parkway, SE • P.O. Box 874 • Grand Rapids, MI 49588-0874 • (616) 942-9600

CITY OF KALAMAZOO
DUTTON STREET BRIDGE OVER PORTAGE CREEK
ABUT. B DETAILS
B1 of 39-7-46

63478-7
48
WGJ050693

DATE 1/93
PROJECT NO. 63478
SHEET NO. 7/13

5-7-12

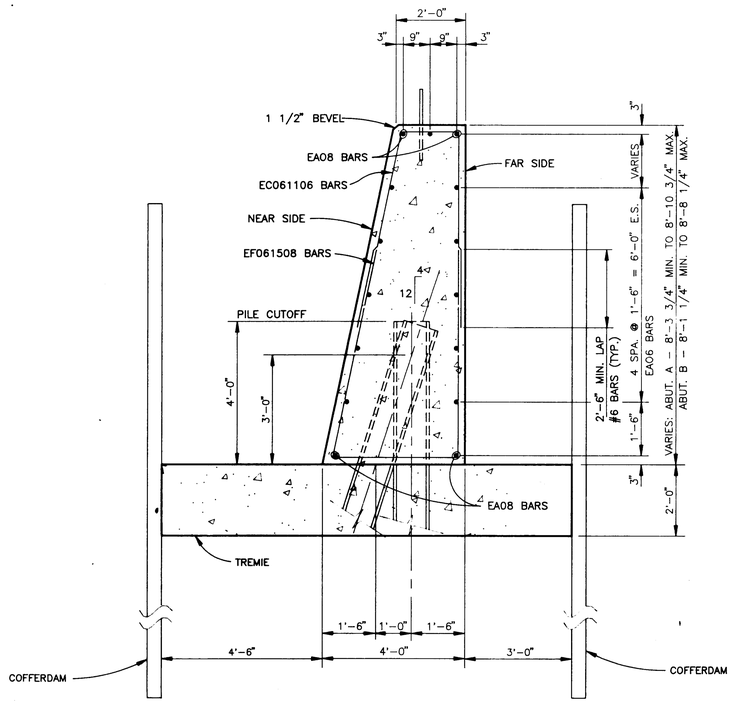

C 8&7/8 SECTION – TYP. ABUT. A & B

SCALE: 1/2" = 1'-0"

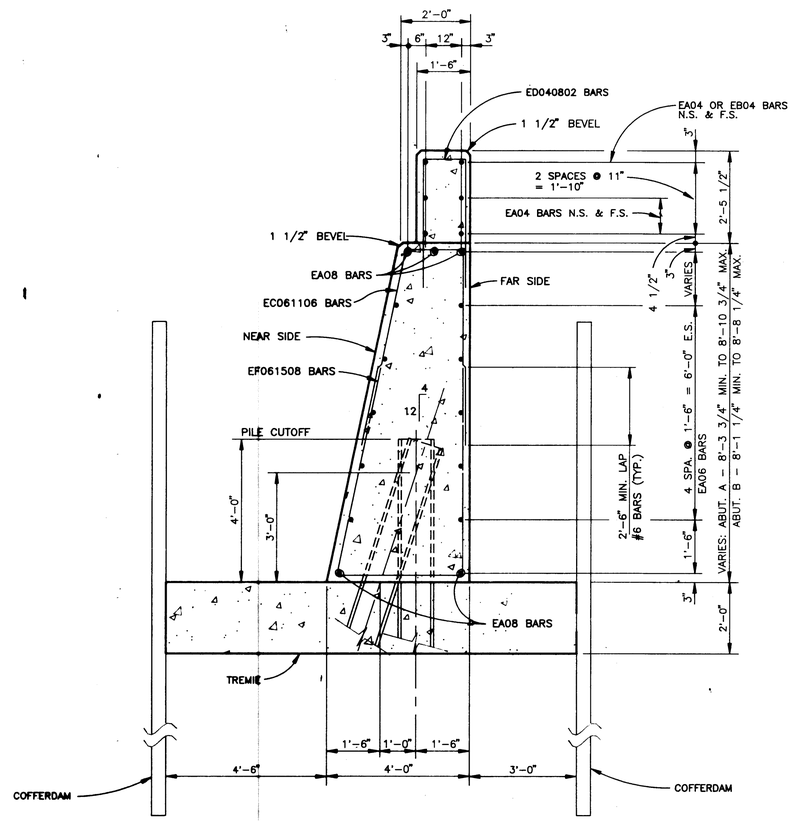

D 8&7/8 SECTION – TYP. ABUT. A & B

SCALE: 1/2" = 1'-0"

NOTES :

THE METAL BULKHEAD MAY BE USED AS ALTERNATE CONST. JT. @ CONTRACTOR'S EXPENSE.

CARE IS TO BE USED IN CASTING CONCRETE AROUND BULKHEAD TO PREVENT DISLOCATION OR MISALIGNMENT OF THE BULKHEAD.

CUT HOLES IN METAL BULKHEAD FOR REINFORCING STEEL.

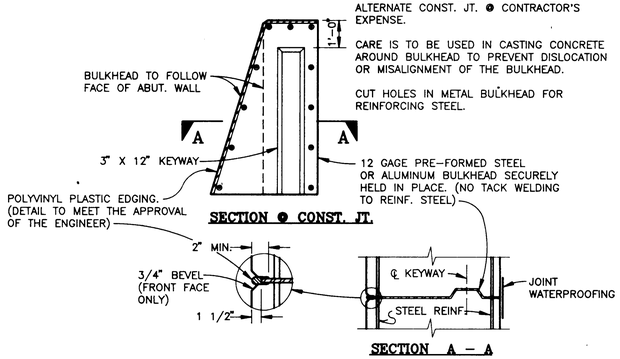

ALTERNATE CONSTRUCTION JT. (METAL BULKHEAD)

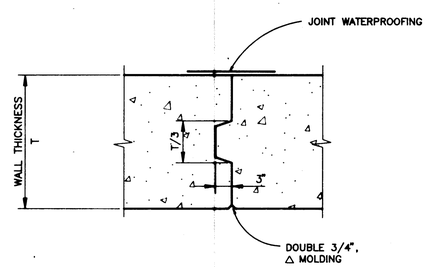

CONSTRUCTION JOINT DETAIL

NOTES:

JWP DENOTES JOINT WATERPROOFING

NS DENOTES NEAR SIDE

FS DENOTES FAR SIDE

ES DENOTES EACH SIDE

REVISIONS	DR BY / CHD BY
DR BY W.G.J. DATE 1/93	CHD BY T.J.T. DATE 3/93
REVISED IN ACCORDANCE WITH CONSTRUCTION RECORDS	BY DATE

WW Engineering & Science
A Summit Company
5555 Glenwood Hills Parkway, SE • P.O. Box 874 • Grand Rapids, MI 49588-0874 • (616) 942-9600

CITY OF KALAMAZOO
DUTTON STREET BRIDGE
OVER PORTAGE CREEK
ABUT. A & B DETAILS
B1 of 39-7-46

36
63478-8
WGJ050893

DATE 1/93
PROJECT NO. 63478
SHEET NO. 8/13

5-7-12

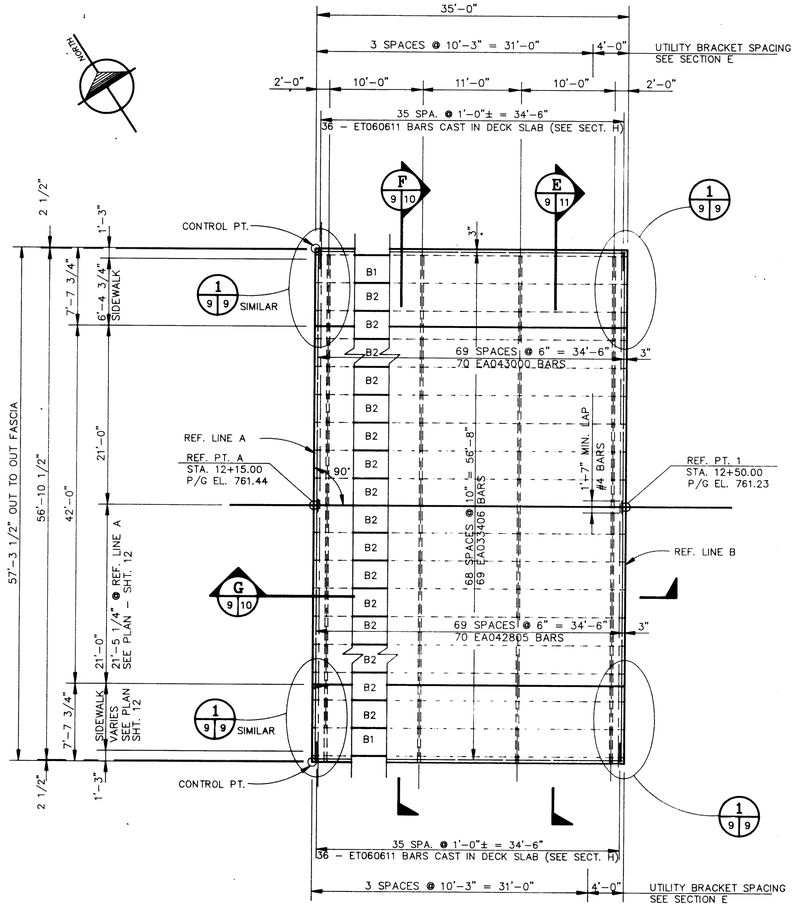

PLAN OF SLAB

SCALE 1/8" = 1'-0"

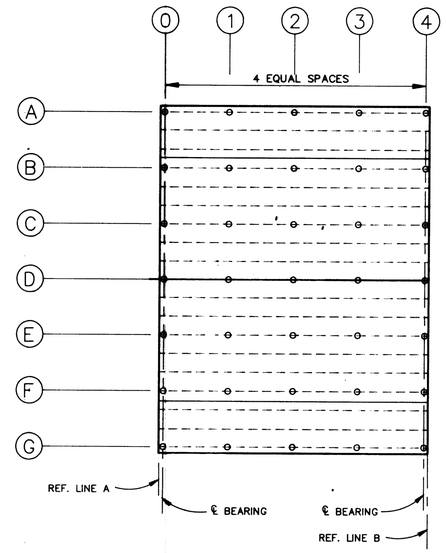

PLAN OF SLAB

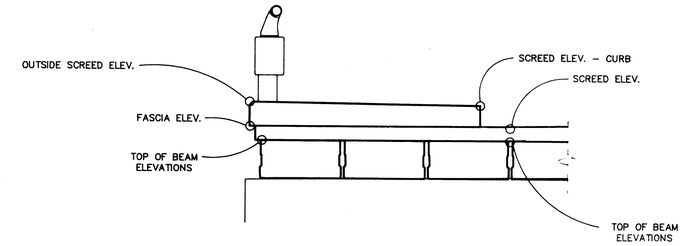

TYPICAL FASCIA SECTION

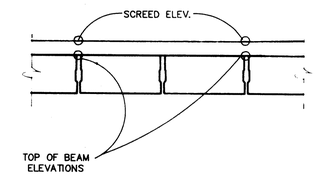

TYPICAL INTERIOR SECTION

	0	1	2	3	4
A	760.41	760.44	760.42	760.34	760.21
B	760.59	760.62	760.60	760.52	760.39
C	760.77	760.80	760.78	760.70	760.57
D	760.95	760.98	760.96	760.88	760.75
E	760.77	760.80	760.78	760.70	760.57
F	760.59	760.62	760.60	760.52	760.39
G	760.41	760.44	760.42	760.34	760.21

SPAN 1

TOP OF BEAM ELEVATIONS

	0	1	2	3	4
A	760.91	760.94	760.92	760.84	760.71
B	761.09	761.12	761.10	761.02	760.89
C	761.27	761.30	761.28	761.20	761.07
D	761.45	761.48	761.46	761.38	761.25
E	761.27	761.30	761.28	761,20	761.07
F	761.09	761.12	761.10	761.02	760.89
G	760.91	760.94	760.92	760.84	760.71

SPAN 1

SCREED ELEVATIONS - DECK

MISC. QUANTITIES	
ITEM	AMOUNT
PRESTRESSED CONCRETE DECK, 12"	2400 SFT
POST TENSIONING	1 LSUM
SUPERSTRUCTURE CONCRETE	70 CYD
FORMING, FINISHING & CURING	1 LSUM
SUPERSTRUCTURE CONCRETE	
ELASTOMERIC BEARING, 3/4"	80 SFT
GALVANIZED STRUCTURAL STEEL,	100 LBS.
FABRICATION & ERECTION	

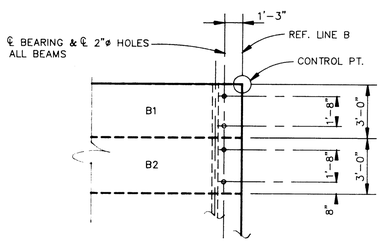

DETAIL 1/9 9

SCALE: 1/4" = 1'-0"

	0	1	2	3	4
FASCIA - LEFT	760.88	760.91	760.89	760.80	760.68
OUTSIDE - LEFT	761.94	761.96	761.95	761.86	761.73
CURB - LEFT	761.78	761.81	761.79	761.71	761.58
CURB - RIGHT	761.78	761.81	761.79	761.71	761.58
OUTSIDE - RIGHT	761.94	761.96	761.95	761.86	761.73
FASCIA - RIGHT	760.88	760.91	760.89	760.80	760.68

SPAN 1

SCREED ELEVATIONS - SIDEWALK

NOTES

TOP OF BEAM ELEVATIONS ARE AT RIGHT ANGLES TO THE BEAM CENTERLINE AND ARE BASED ON THE CONDITION THAT THE CONCRETE BEAMS ARE COMPLETELY ERECTED WITH NO OTHER LOADS APPLIED. THESE ELEVATIONS INCLUDE ALLOWANCE FOR VERTICAL CURVE AND DEFLECTION DUE TO STEEL REINFORCEMENT, CONCRETE SLAB, SIDEWALK AND RAILINGS.

THE ESTIMATED LONG-TERM BEAM CAMBER IS 1.2". THIS CAMBER IS DUE TO PRESTRESS, DEAD LOAD OF BEAM, AND CREEP.

SCREED ELEVATIONS ARE BASED ON THE CONDITION THAT NO SLAB CONCRETE HAS BEEN CAST AND STEEL REINFORCEMENT IS IN PLACE.

TRANSVERSE FINISHING SHALL BE PARALLEL TO REFERENCE LINES.

96
WGJ050693
63478-9

REVISIONS	DR BY / CHD BY
DR BY W.G.J. DATE 1/93 CHD BY T.J.T. DATE 3/93	
REVISED IN ACCORDANCE WITH CONSTRUCTION RECORDS BY DATE	

WW Engineering & Science
A Summit Company
5555 Glenwood Hills Parkway, SE • P.O. Box 874 • Grand Rapids, MI 49588-0874 (616) 942-9600

CITY OF KALAMAZOO
DUTTON STREET BRIDGE
OVER PORTAGE CREEK
SUPERSTRUCTURE DETAILS,
SLAB & SCREED DETAILS
B1 of 39-7-46

DATE 1/93
PROJECT NO. 63478
SHEET NO. 9/13

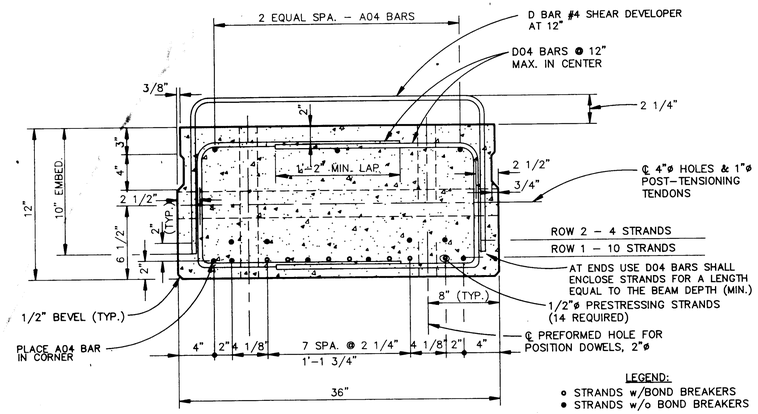

TYP. 12" BEAM SECTION

INITIAL PRESTRESS FORCE = 406,180#
ULTIMATE PRESTRESS FORCE = 356,880#
BEAM WEIGHT = 435#/FT.

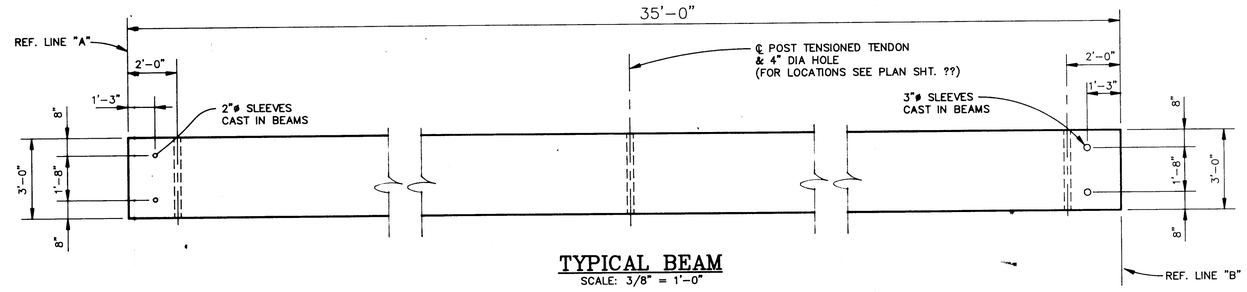

TYPICAL BEAM

SCALE: 3/8" = 1'-0"

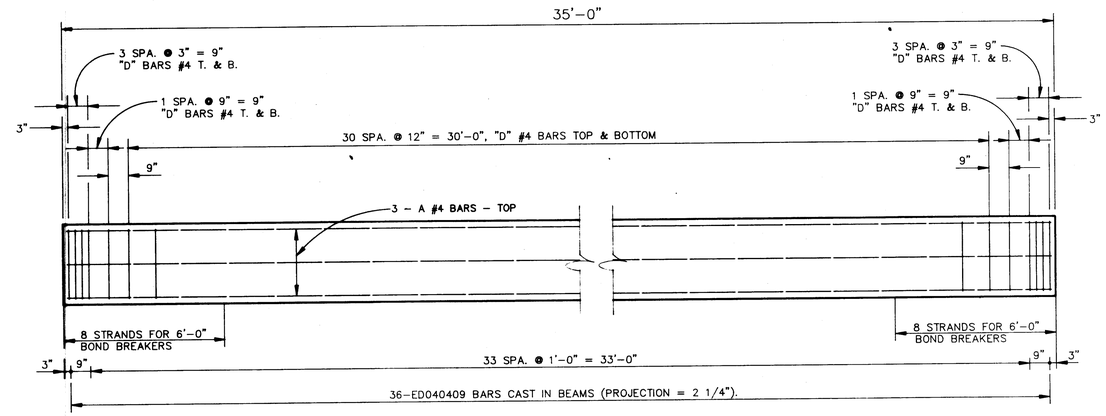

TOP & BOTTOM BARS

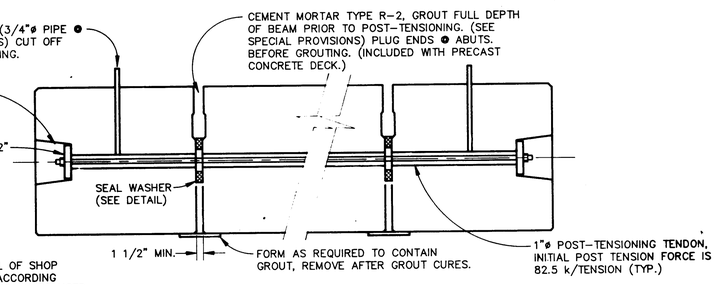

• SUBJECT TO FINAL APPROVAL OF SHOP DRAWINGS. ℙ SIZE MAY VARY ACCORDING TO SYSTEM OF POST–TENSIONING TO BE USED.

F (9 | 10) SECTION

N.T.S.

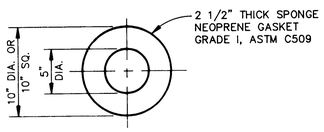

SEAL WASHER DETAIL

SCALE: 1 1/2" = 1'-0"

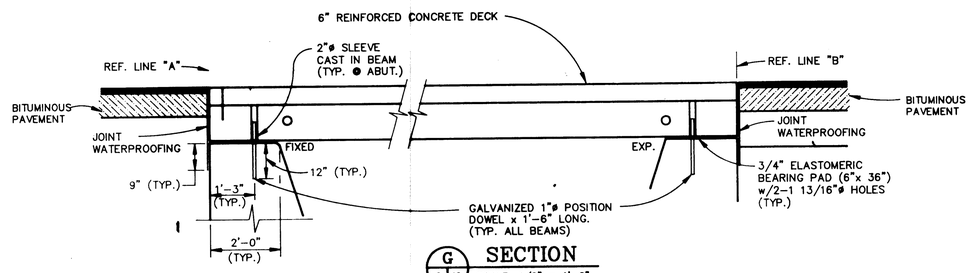

G (9 | 10) SECTION

SCALE: 1/2" = 1'-0"

NOTE
FILL EXPANSION DOWEL HOLES WITH HOT POURED JOINT SEALANT (INCLUDED WITH 12" PRESTRESSED CONCRETE DECK).

FILL FIXED DOWEL HOLES WITH TYPE H–1 GROUT (INCLUDED WITH 12" PRESTRESSED CONCRETE DECK).

POSITION DOWEL INSTALLATION:
DRILL HOLES FOR DOWELS AFTER BEAMS HAVE BEEN ERECTED & POST–TENSIONED. AT FIXED BEARINGS, PLACE DOWELS AND FILL WITH TYPE H–1 GROUT TO TOP OF BEAM. AT EXP. BEARINGS, PLACE DOWELS AND FILL WITH HOT–POURED RUBBER ASPHALT TO 3" ABOVE DOWEL. FILL REMAINDER OF HOLE WITH TYPE H–1 GROUT TO TOP OF BEAM.

NOTES:

ELASTOMER FOR ELASTOMERIC BEARING PADS SHALL BE NOMINAL 50 DUROMETER HARDNESS FOR LAMINATED BEARINGS AND 70 DUROMETER HARDNESS FOR PLAIN BEARINGS.

PRESTRESSING STRANDS SHALL BE 1/2" DIAMETER WITH AN AREA OF 0.153 SQUARE INCHES AND SHALL BE GRADE 270 IN ACCORDANCE WITH ASTM A416 AND SUPPLEMENT. LOW RELAXATION STRANDS SHALL BE USED AS SHOWN IN THE DETAILS AND GIVEN AN INITIAL PRESTRESS OF 31,000 LBS. EACH.

WHEN BOND BREAKERS ARE REQUIRED, THEY SHALL BE USED ON THE STRANDS IN THE BOTTOM ROWS AND PLACED SYMMETRICALLY ABOUT THE CENTERLINE OF THE BEAM. PLACING BOND BREAKERS ON PERIPHERAL STRANDS SHALL BE AVOIDED. THE NUMBER, LOCATION, AND LENGTH OF THE BOND BREAKERS SHALL BE AS SHOWN IN THE DETAILS. LENGTH SHOWN IS FROM END OF BEAM TO END OF BREAKER. THEY SHALL CONSIST OF TWO TUBES (ONE INSIDE THE OTHER) WITH OVERLAP TURNED IN OPPOSITE DIRECTIONS.

THE COMPRESSIVE STRENGTH OF THE CONCRETE AT THE TIME OF PRESTRESSING FORCE RELEASE SHALL NOT BE LESS THAN 4500 psi.

TOTAL ESTIMATED CHANGE OF LENGTH OF BOTTOM FLANGE AT TRANSFER OF PRESTRESS FORCE IS 1/16".

LIFTING OF BEAM SHALL BE BY EQUAL LOADS TO EACH PAIR OF LIFTING DEVICES.

THE COMPRESSIVE STRENGTH OF THE CONCRETE SHALL NOT BE LESS THE 5000 psi AT 28 DAYS.

THE APPROXIMATE WEIGHT OF EACH 12" BEAM IS 8 TONS.

THE INITIAL FORCE IN THE TRANSVERSE POST–TENSIONING TENDONS SHALL BE 82,500# EACH AT 28 DAYS.

48
WGJ050693
63478–10

REVISIONS	DR BY / CHD BY
DR BY W.G.J. DATE 1/93 CHD BY T.J.T. DATE 3/93	
REVISED IN ACCORDANCE WITH CONSTRUCTION RECORDS BY DATE	

WW Engineering & Science
A Summit Company
5555 Glenwood Hills Parkway, SE •P.O. Box 874 •Grand Rapids, MI 49588–0874 (616) 942–9600

CITY OF KALAMAZOO
DUTTON STREET BRIDGE
OVER PORTAGE CREEK
SUPERSTRUCTURE DETAILS
B1 of 39–7–46

DATE 1/93
PROJECT NO. 63478
SHEET NO. 10/13

5·7·12

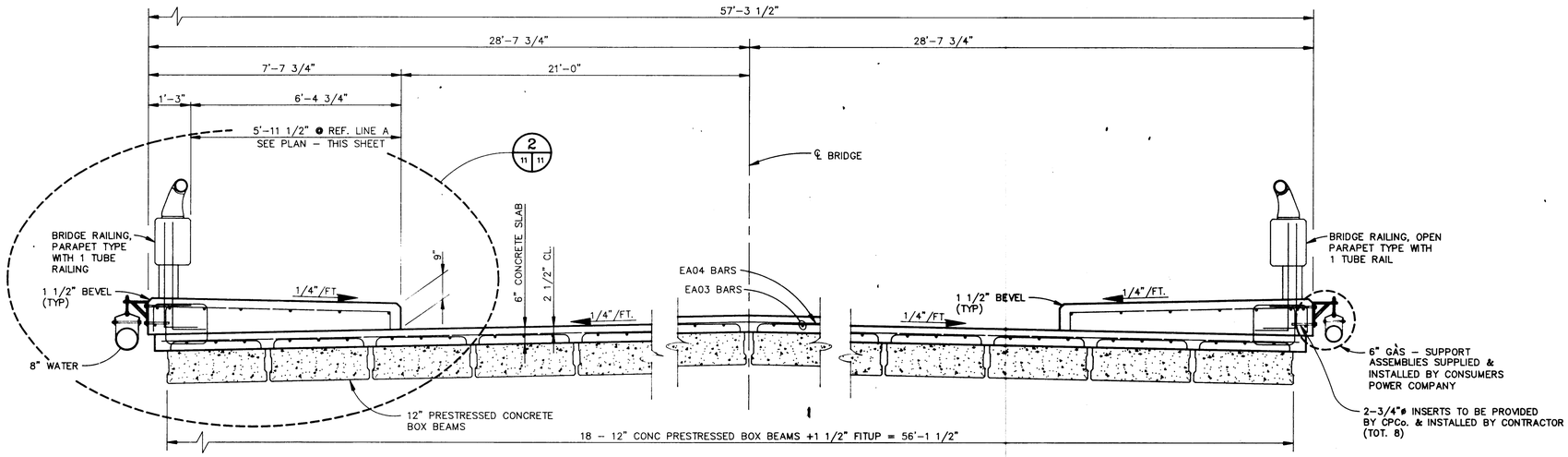

E 9 11 SECTION
SCALE: 1/2" = 1'-0"

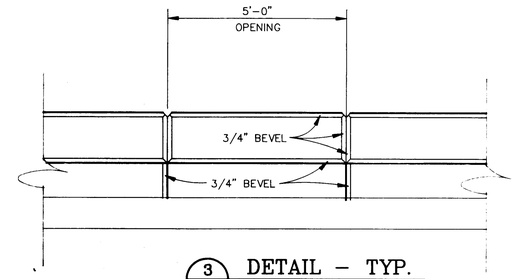

3 11 11 DETAIL - TYP.
SCALE: 1/2" = 1'-0"

MISC. QUANTITIES	
ITEM	AMOUNT
BRIDGE RAILING, OPEN PARAPET TYPE	70 LFT.
STRUCTURE NAMEPLATE	1 EA.

NOTE: CONTACT DENNIS PAULSON OF CPCo A MINIMUM ONE WEEK PRIOR TO SIDEWALK PLACEMENT FOR COORDINATION OF MATERIALS & 6" GAS LOCATION.

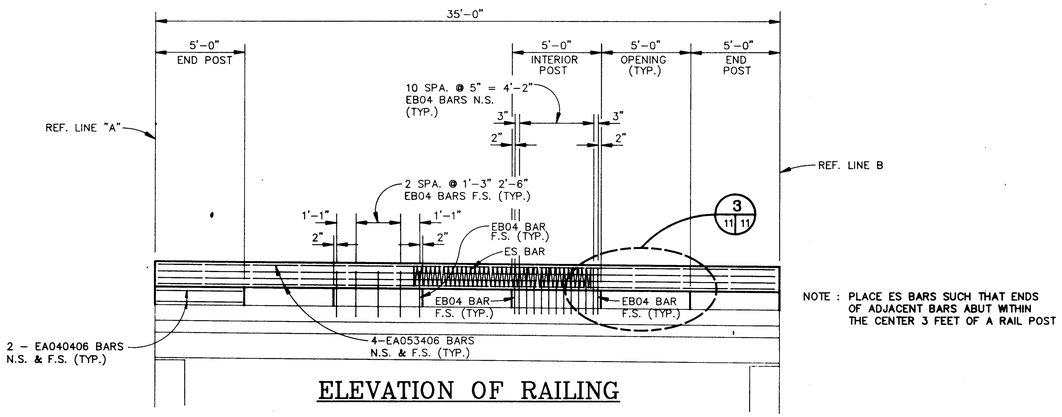

NOTE : PLACE ES BARS SUCH THAT ENDS OF ADJACENT BARS ABUT WITHIN THE CENTER 3 FEET OF A RAIL POST

ELEVATION OF RAILING

(SECTION TAKEN AT INSIDE FACE OF RAIL)

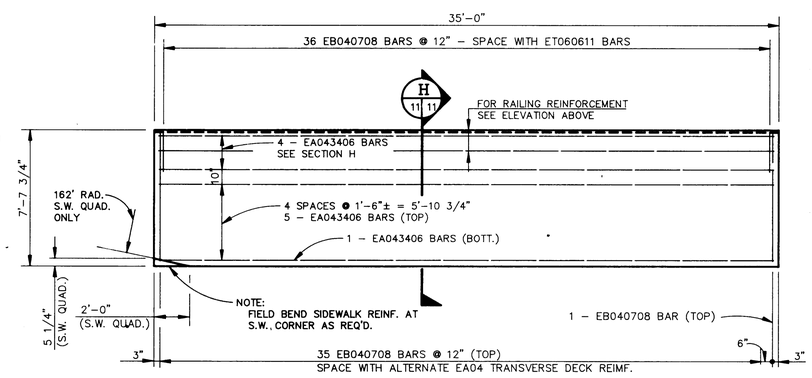

PLAN - NORTH SIDEWALK & RAILING - AS SHOWN
PLAN - SOUTH SIDEWALK & RAILING - MIRROR IMAGE

SCALE : 1/4" = 1'-0"

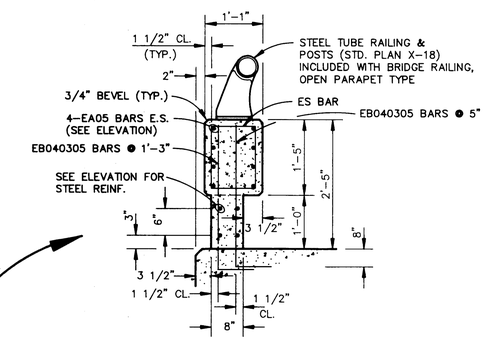

TYP. RAILING DETAIL

SCALE : 3/4" = 1'-0"

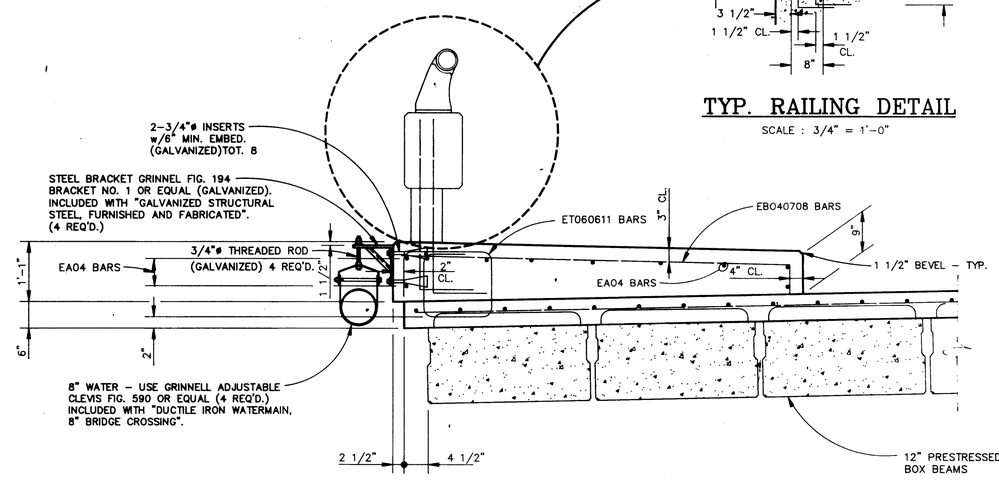

2 11 11 DETAIL
SCALE: 3/4" = 1'-0"

H 11 11 SECTION
SCALE: 3/4" = 1'-0"

NOTES:

ANCHORAGE FOR GUARDRAIL, NAMEPLATE MOUNTING, MOLDING AND BEVEL DETAILS SEE STANDARD PLAN X-18

BRIDGE RAILING CONCRETE SHALL BE GRADE 45D

48
WGJ050793
63478-11

REVISIONS	DR BY / CHD BY
DR BY W.G.J. DATE 1/93 CHD BY T.J.T. DATE 3/93	
REVISED IN ACCORDANCE WITH CONSTRUCTION RECORDS BY DATE	

WW Engineering & Science
A Summit Company
5555 Glenwood Hills Parkway, SE •P.O. Box 874 •Grand Rapids, MI 49588-0874 (616) 942-9600

CITY OF KALAMAZOO
DUTTON STREET BRIDGE
OVER PORTAGE CREEK
SUPERSTRUCTURE, SIDEWALK & RAILING DETAILS
B1 of 39-7-46

DATE 1/93
PROJECT NO. 63478
SHEET NO. 11/13

ABUTMENT "A"

BAR	a	b	c	d	e	f	g	h	j	k	NO. REQ'D	TOTAL WT.
EA040908	9'-8"										8	52
EA063900	39'-0"										10	586
EA064000	40'-0"										10	601
EA084000	40'-0"										5	534
EA084010	40'-10"										5	545
EB041100	9'-8"	1'-4"									4	29
EC061106	1'-1"	1'-6"	0"	4'-11"	4'-11"	4'-11"	5'-1"				52	898
ED040802	3'-7"	1'-0"	3'-7"								22	120
EF061508	3'-6"	6'-0"	6'-2"	–	6'-0"	1'-4"					52	1224
							SUB-TOTAL EPOXY					4,589

ABUTMENT "B"

BAR	a	b	c	d	e	f	g	h	j	k	NO. REQ'D	TOTAL WT.
EA040008	0'-8"										6	4
EA040908	9'-8"										4	26
EA063006	30'-6"										10	458
EA063906	39'-6"										10	593
EA083106	31'-6"										5	421
EA084006	40'-6"										5	541
EB041100	9'-8"	1'-4"									2	15
ED040802	3'-7"	3'-7"	3'-7"								13	71
EF061508	3'-6"	6'-0"	6'-2"	–	6'-0"	1'-4"					45	1058
EC061106	1'-1"	1'-6"	0	4'-11"	4'-11"	4'-11"	5'-1"				45	777
							SUB-TOTAL EPOXY					3,964

SUPERSTRUCTURE

BAR	a	b	c	d	e	f	g	NO. REQ'D	TOTAL WT.
EA033406	34'-6"							69	895
EA042805	28'-5"							70	1329
EA043000	30'-0"							70	1403
EA043406	34'-6"							20	461
EA040406	4'-6"							32	96
EA053406	34'-6"							16	576
EB040708	7'-2"	0'-6"						72	369
EB040305	2'-11"	0'-6"						140	319
ET060611	1'-4"	1'-1 1/2"	1'-7 1/2"	0'-8"				72	748
ES BAR	34'-6"							2	66
						SUB-TOTAL EPOXY			6,262

BAR	a	b	c	d	e	f	g	h	j	k	NO. REQ'D	TOTAL WT.

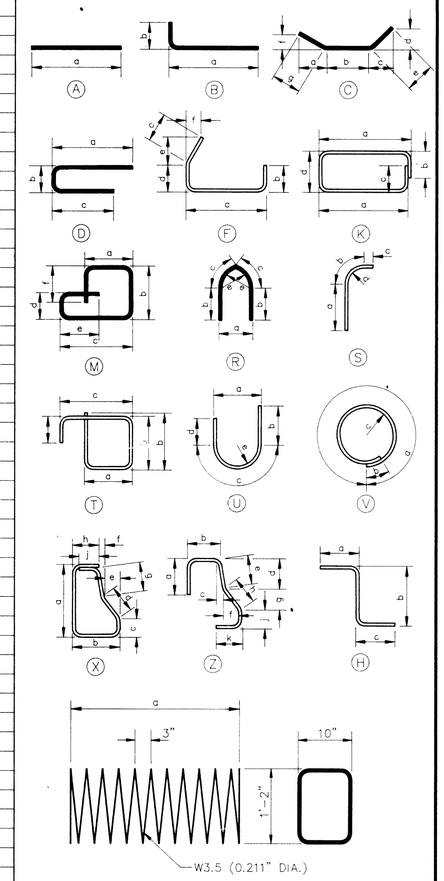

ES BAR

1 L.F.T.= 0.96 LBS.

EPOXY COATED

BAR SIZE

BAR LENGTH (FT.)

BAR LENGTH (IN.)

EA064700

BAR SHAPE

BAR NUMBERS:

NOTE : ALL BENDS IN REINFORCEING STEEL TO BE MADE ABOUT A PIN OF THE MINIMUM DIAMETER ALLOWED BY THE STANDARD SPECIFICATIONS.

TOLERANCES IN CUTTING AND BENDING BARS ARE AS ESTABLISHED IN MANUAL OF STANDARD PRACTICE OF THE CONCRETE REINFORCING STEEL INSTITUTE AND DETAILING MANUAL OF THE AMERICAN CONCRETE INSTITUTE.

WHERE FIELD CUTTING OF EPOXY BARS IS REQUIRED, THE CONTRACTOR SHALL REPAIR THE EPOXY COATING AT THE CUT END AS PROVIDED FOR IN STANDARD SPECIFICATION 8.05.03 (INCIDENTAL TO STEEL REINFORCEMENT EPOXY COATED).

STEEL REINFORCEMENT	0	#
STEEL REINFORCEMENT, EPOXY COATED	14,815	#

WGJ050793 1 : 1 63478-12

REVISIONS	DR BY / CHD BY
DR BY W.G.J. DATE 1/93 CHD BY T.J.T. DATE 3/93	
REVISED IN ACCORDANCE WITH CONSTRUCTION RECORDS BY DATE	

WW Engineering & Science
A Summit Company
5555 Glenwood Hills Parkway, SE • P.O. Box 874 • Grand Rapids, MI 49588-0874 (616) 942-9600

CITY OF KALAMAZOO
DUTTON STREET BRIDGE
OVER PORTAGE CREEK

STEEL REINFORCEMENT DETAILS

B1 of 39-7-46

DATE 1/93

PROJECT NO. 63478

SHEET NO. 12/13

5-7-12

ITEM		UNIT	CONTR. QUANT.	FINAL QUANT.	NON-PARTIC.	UNIT PRICE	FINAL COST
PART No. 1 – APPROACHES							
REMOVING TREE, 19"–36"	2030002	EA.	2				
REMOVING AND DISPOSING OF HAZARDOUS MATERIALS	2067001	BAMT.	1				
PCB TESTS	2067002	EA.	4				
HAULING & DISPOSAL, TYPE II LANDFILL	2067004	CYD.	250				
REMOVING PAVEMENT	2070002	SYD.	710				
REMOVING CURB & GUTTER	2070005	LFT.	295				
REMOVING SIDEWALK	2070006	SYD.	120				
REMOVING MASONRY AND CONCRETE STRUCTURES	2070007	CYD.	10				
REMOVING FENCE	2070012	LFT.	60				
REMOVING DRAINAGE STRUCTURE	2070015	EA.	4				
ABANDONING DRAINAGE STRUCTURE	2070016	EA.	1				
MACHINE GRADING – MODIFIED	2087010	STA.	2.0				
SILT FENCE	2130015	LFT.	100				
FILTER BAG	2130017	EA.	6				
COLD-MILLING BITUMINOUS SURFACE	4000005	SYD.	250		250		
BITUMINOUS MIX TYPE 11A BASE	4000041	TON	226				
BITUMINOUS MIX TYPE 13 LEVELING	4000042	TON	57				
BITUMINOUS MIX. TYPE 13A TOP	4000043	TON	88		31		
CLASS C76-III SEWER, 12" TRENCH DETAIL A	5130314	LFT.	120				
CLASS C76-III SEWER, 15" TRENCH DETAIL A	5130315	LFT.	30				
DRAINAGE STRUCTURE, 4" DIAMETER	5140001	EA.	4				
DRAINAGE STRUCTURE COVERS	5140042	LBS.	1750				
ADJUSTING DRAINAGE STRUCTURE COVERS	5140045	EA.	3				
RECONSTRUCTING DRAINAGE STRUCTURE	5140047	LFT.	10				
RIPRAP, HEAVY	6010015	SYD.	100				
SUBBASE UNDERDRAIN, 6"	6020051	LFT.	280				
CONCRETE DRIVEWAY-NONREINFORCED, 7"	6080002	CYD.	32				
CONCRETE CURB AND GUTTER, DETAIL C4	6090025	LFT.	330				
CONCRETE DRIVE OPENING-DETAIL M	6090070	LFT.	20				
4" CONCRETE SIDEWALK	6110002	SFT.	600				
7" NON-REINFORCED SIDEWALK	6110004	SFT.	150				
PROTECTIVE FENCE	6210007	LFT.	300				
CHAIN LINK FENCE, 84"	6210014	LFT.	50				
BARRICADE, TYPE II, LIGHTED, FURNISHED	6310026	EA	20				
BARRICADE, TYPE II, LIGHTED, OPERATED	6310027	EA.	18				
BARRICADE, TYPE III, LIGHTED, FURNISHED	6310036	EA	6				
BARRICADE, TYPE III, LIGHTED, OPERATED	6310037	EA.	4				
SIGN, TYPE B TEMPORARY	6310057	SFT.	179				
MULCH MODIFED	6537001	SYD.	100				
DUCTILE IRON WATERMAIN, 8" TRENCH DETAIL G	6807000	LFT.	120				
DUCTILE IRON WATERMAIN, 8", BRIDGE CROSSING	6807001	LFT.	35				
STEEL CASING PIPE, JACKED IN PLACE, 20"	6807002	LFT	45		45		
8" PVC WASTEWATER SEWER, TRENCH DETAIL A	6807003	LFT.	130		130		
ABANDON UTILITIES, 8"–24" DIA.	6807004	LFT.	175				
6" PVC SANITARY LEAD	6807005	LSUM	1				
REMOVAL OF STRUCTURES – MODIFIED	2067005	LSUM	1				
MOBILIZATION	6230001	LSUM	1				
TOTAL							

ITEM		UNIT	CONTR. QUANT.	FINAL QUANT.	NON-PARTIC.	UNIT PRICE	FINAL COST
PART No.2 – BRIDGE							
STRUCTURE BACKFILL (CIP)	2090005	CYD	650				
UNCLASSIFIED FOUNDATION EXCAVATION – SPECIAL	2097003	CYD	600				
STEEL PILES, FURNISHED AND DRIVEN, 12"	5020030	LFT	1568				
TEST PILE, STEEL, 12"	5020031	EA	2				
SPLICE, STEEL PILE	5020032	EA	37				
FURNISHING EQUIPMENT FOR DRIVING PILES	5020100	LSUM	1				
CONCRETE GRADE 35T	5030003	CYD	129.3				
SUBSTRUCTURE CONCRETE	5030023	CYD	142.3				
SUPERSTRUCTURE CONCRETE	5030024	CYD	70				
FORMING, FINISHING AND CURING SUPERSTRUCTURE CONCRETE	5030027	LSUM	1				
STEEL REINFORCEMENT, EPOXY COATED	5030031	LBS	14,707				
PIPE SLEEVE, 16"	5030104	EA.	2				
STRUCTURE NAME PLATE	5030250	EA.	1				
ELASTOMERIC BEARING, 3/4"	5040060	SFT	80		2		
GALVANIZED STRUCTURAL STEEL, FABRICATION AND ERECTION	5047001	LBS.	100		1		
PRESTRESSED CONCRETE DECK, 12"	5050004	SFT	2400				
JOINT WATERPROOFING	5060001	SFT	361				
BRIDGE RAILING, OPEN PARAPET TYPE	5080031	LFT	70				
GABION SLOPE PROTECTION	6017000	CYD.	40				
COFFERDAMS – MODIFIED	20970001	LSUM	1				
POST TENSIONING	5050008	LSUM	1				
TOTAL							

21-7-5

1 : 1
WGJ050793
63478-13

REVISIONS	DR BY	CHD BY
DR BY W.G.J. DATE 1/93	CHD BY T.J.T.	DATE 2/93
REVISED IN ACCORDANCE WITH CONSTRUCTION RECORDS	BY	DATE

WW Engineering & Science
A Summit Company
5555 Glenwood Hills Parkway, SE • P.O. Box 874 Grand Rapids, MI 49588-0874 (616) 942-9600

CITY OF KALAMAZOO
DUTTON STREET BRIDGE
OVER PORTAGE CREEK
QUANTITY SHEET

B1 of 39-7-46

DATE 1/93
PROJECT NO. 63478
SHEET NO. 13/13