PERMITTEE NAME/ADDRESS (Include Facility Name/Location if Different)
NAME Koppers Industries, Inc.
ADDRESS 7540 NW St. Helens Rd.
Portland, OR 97210

FACILITY NW Terminal
LOCATION Multnomah Co.

NATIONAL POLLUTANT DISCHARGE ELIMINATION SYSTEM (NPDES)
DISCHARGE MONITORING REPORT (DMR)

PERMIT NUMBER (2-16)	DISCHARGE NUMBER (17-19)
101003	001

3077-J
47430

MONITORING PERIOD	YEAR	MO	DAY		YEAR	MO	DAY
FROM	99	01	01	TO	99	01	31
	(20-21)	(22-23)	(24-25)		(26-27)	(28-29)	(30-31)

Form Approved.
OMB No. 2040-0004
Approval expires 05-31-98

NOTE: Read instructions before completing this form.

PARAMETER (32-37)		(3 Card Only) QUANTITY OR LOADING (46-53) AVERAGE	(54-61) MAXIMUM	UNITS	(4 Card Only) QUANTITY OR CONCENTRATION (38-45) MINIMUM	(46-53) AVERAGE	(54-61) MAXIMUM	UNITS	NO. EX (62-63)	FREQUENCY OF ANALYSIS (64-68)	SAMPLE TYPE (69-70)
Flow	SAMPLE MEASUREMENT	28,387		GPD					0	N/A	EST.
	PERMIT REQUIREMENT										
Temp	SAMPLE MEASUREMENT				8.5	9.9	12.2	C°	0	1/7	GRAB
	PERMIT REQUIREMENT				N/A	N/A	N/A				
pH	SAMPLE MEASUREMENT				7.0	7.2	7.4	SU	0	1/7	GRAB
	PERMIT REQUIREMENT				6.0		9.0				
Oil & Grease	SAMPLE MEASUREMENT				3.3	4.1	4.6	Mg/L	0	1/7	GRAB
	PERMIT REQUIREMENT				0	10	15				
Phenols	SAMPLE MEASUREMENT				ND	ND	ND	Mg/L	0	1/30	GRAB
	PERMIT REQUIREMENT				0	.5	.7				
	SAMPLE MEASUREMENT										
	PERMIT REQUIREMENT										
	SAMPLE MEASUREMENT										
	PERMIT REQUIREMENT										

NAME/TITLE PRINCIPAL EXECUTIVE OFFICER			TELEPHONE		DATE		
R.D. Collins, VP	I CERTIFY UNDER PENALTY OF LAW THAT I HAVE PERSONALLY EXAMINED AND AM FAMILIAR WITH THE INFORMATION SUBMITTED HEREIN; AND BASED ON MY INQUIRY OF THOSE INDIVIDUALS IMMEDIATELY RESPONSIBLE FOR OBTAINING THE INFORMATION, I BELIEVE THE SUBMITTED INFORMATION IS TRUE, ACCURATE AND COMPLETE. I AM AWARE THAT THERE ARE SIGNIFICANT PENALTIES FOR SUBMITTING FALSE INFORMATION, INCLUDING THE POSSIBILITY OF FINE AND IMPRISONMENT. SEE 18 U.S.C. § 1001 AND 33 U.S.C. § 1319. (Penalties under these statutes may include fines up to $10,000 and or maximum imprisonment of between 6 months and 5 years.)	Amos S. Kamerer, Plt. MGR	503	286 3681	99	02	02
TYPED OR PRINTED		SIGNATURE OF PRINCIPAL EXECUTIVE OFFICER OR AUTHORIZED AGENT	AREA CODE	NUMBER	YEAR	MO	DAY

COMMENTS AND EXPLANATION OF ANY VIOLATIONS (Reference all attachments here)

PAH First Quarter Results Are Attached

cc: J. HOLTROP-CITY OF PORTLAND, T.I. SELF-KII

Koppers015024

MONTHLY NPDES DISCHARGE REPORT WORK SHEET

MONTH _____ YEAR _____

FLOW

250,000 Days of Emergency Pumping

	WWT-1	WWT-2	WWT-3	WWT-4	WWT-5	WWT-6	TOTAL OF TANKS	#DAYS IN MONTH	TOTAL ALL	G.P.D. DISCHARGE
GLS. PER TANK	45,000	45,000	45,000	45,000	20,000	20,000				
# OF PUMPINGS	1111	1111	1111	1111	1111	1111				
GALS.PUMPED	180,000	180,000	180,000	180,000	80,000	80,000		31	880,000	28,387

SAMPLE CONCENTRATION LEVELS

	WWT-1		WWT-2		WWT-3		WWT-4		WWT-5		WWT-6		LIMITS min	LIMITS AVG.	LIMITS max	MIN.	AVG.	MAX.	UNIT
TEMPERATURES	8.7	8.5	9.1	8.9	10.8	12.2	10.9	11.5	8.8	8.5	10.5	10.2				8.5	9.9	12.2	°F
PH	7.2	7.4	7.2	7.3	7.2	7.2	7.1	7.0	7.1	7.1	7.3	7.2	6.0		9.0	7.0	7.2	7.4	SU
OIL & GREASES	4.5	3.3	4.1	4.6									0	10	15	3.3	4.1	4.6	MG/L
PHENOLS	ND												0	.5	.7	ND			MG/L

QUARTERLY PAH TESTING

DATE SAMPLE TAKEN 1 \ 4 \ 99

RESULTS 690.8
(MUST BE LESS THAN 1000)

Koppers015025

CERTIFICATE OF ANALYSIS

CLIENT: KOPPERS INDUSTRIES. INC.
7540 NW ST. HELENS ROAD
PORTLAND OR 97210-3663

PHONE: (503) 286-368
FAX: (503) 285-2831

DATE SUBMITTED: 01/25/99

PROJECT NAME: WWTks 1-3-5

CI SAMPLE #	CLIENTS ID#	DATE	TIME	DESCRIPTION
990162-001		01/25/99	0900	Wastewater Grab from WWTks 1-3-5

REPORT DATE: 01/26/99 REPORT NUMBER: 990162 PAGE: 1 OF 1

SAMPLE	ANALYSIS	PARAMETER	RESULT	UNIT	DETECTION LIMIT	ANALYST
Wastewater Grab from WWTks 1-3-5						
990162-001	O&G, TOTAL. GRAV EPA 413.1/9070	TOTAL OIL & GREASE	4.6	PPM	2	Gordon L.

REVIEWED BY:
Richard D. Reid - Laboratory Director

7.14 pH

8.8°c

1-25-99

7.06 PH

@

8.5 °c

1-27-99

1-28-99 W.W.

7.31 pH

10.5 °C

WWTKS
1-29-99
7.16 PH
10.2°C

COLUMBIA INSPECTION, INC.

CHAIN OF CUSTODY RECORD

Laboratory • Inspection • Tank Calibration

Environmental • Petroleum • OR Certified Water Analysis

☑ 7133 N. Lombard, Portland, OR 97203 Ph: (503) 286-9464 Fax: (503) 285-7831

☐ 4901 E. 20th Street, Fife, WA 98424 Ph: (253) 922-8781 Fax: (253) 922-8957

☐ 613 Escobar Street, Martinez, CA 94553 Ph: (510) 229-0360 Fax: (510) 229-2821

☐ 790 Basin Street, Unit #2, San Pedro, CA 90731 Ph: (310) 833-1557 Fax: (310) 833-1585

Customer Name: Koppers Ind Inc

Attention: Amos Kameker

Address: 7540 NW St Helens Rd Portland OR 97210

Phone: (503) 2863681

FAX: (503) 2852831

Sampler: TJ Turner ☐ Submitted

Project Name:

Project Number:

P.O. Number:

Testing Priority: ☐ Standard ☑ Rush

Notification Method(s): ☐ Telephone ☐ FAX ☐ Mail

Due Date: ASAP

Analyses To Be Performed: Oil - Grease

Sample id#	Sample Description	Sample Matrix	Sample Date	Sample Time	Oil - Grease
	WW THS 1-3-5		1-25-99	0900	X

Relinquished By:	Received By:	Date/Time
Signature: TJ Turner	Signature: [illegible]	1/25/99 1110
Printed Name: TJ TURNER	Printed Name:	
Relinquished By:	Received By:	Date/Time
Signature:	Signature:	
Printed Name:	Printed Name:	

FOR LABORATORY USE ONLY

Inspection Job Number: _____ ☐ Visa _____

Laboratory Project Number: _____ ☐ Cash/Check # _____

Overtime authorized ☐ Yes ☐ No Amount Paid: $_____

White Copy - Laboratory Yellow Copy - Client Copy

Page ____ of ____

CI Form 100 (COC) Rev B

Koppers015031

CERTIFICATE OF ANALYSIS

CLIENT: KOPPERS INDUSTRIES, INC.
7540 NW ST. HELENS ROAD
PORTLAND OR 97210-3663

PHONE: (503) 286-3681
FAX: (503) 285-2831

DATE SUBMITTED: 01/18/99

PROJECT NAME: WWTks 1,2,3

CI SAMPLE #	CLIENTS ID#	DATE	TIME	DESCRIPTION
990105-001		01/18/99	0900	Wastewater Grab - WWTks 1,2,3

REPORT DATE: 01/19/99 REPORT NUMBER: 990105 PAGE: 1 OF 1

SAMPLE	ANALYSIS	PARAMETER	RESULT	UNIT	DETECTION LIMIT	ANALYST
Wastewater Grab - WWTks 1,2,3						
990105-001	O&G, TOTAL, GRAV EPA 413.1/9070	TOTAL OIL & GREASE	4.1	PPM	2	Dick R.

REVIEWED BY: Richard D. Reid - Laboratory Director

for 1-18-99

7.16 ph

@

10.8°c

for 1-18-99

7.16 ph

@

10.8°c

121.8	26	122.35	33
121.9		122.46	
121.9	31	122.6	38
122.0		122.7	
122.1	31	122.8	30
122.2		122.9	
		123.02	25
		123.03	

7.10 PH

@

10.9 °C

1-20-99

6.99 pH

@

11.5°C

1-20-99

COLUMBIA INSPECTION, INC.

CHAIN OF CUSTODY RECORD

Laboratory • Inspection • Tank Calibration

Environmental • Petroleum • OR Certified Water Analysis

☑ 7133 N. Lombard, Portland, OR 97203 Ph: (503) 286-9464 Fax: (503) 285-7831

☐ 4901 E. 20th Street, Fife, WA 98424 Ph: (253) 922-8781 Fax: (253) 922-8957

☐ 613 Escobar Street, Martinez, CA 94553 Ph: (510) 229-0360 Fax: (510) 229-2821

☐ 790 Basin Street, Unit #2, San Pedro, CA 90731 Ph: (310) 833-1557 Fax: (310) 833-1585

Customer Name: Koppers Ind Inc

Attention: Amos Komerer

Address: 2540 NW ST Helens Rd
Portland, OR 97210

Phone: (503) 286 3681

FAX: (503) 285 2831

Sampler: TJ Turner ☐ Submitted

Project Name:

Project Number:

P.O. Number:

Testing Priority / Notification Method(s)

☐ Standard ☐ Telephone

☑ Rush ☐ FAX

Due Date ASAP ☐ Mail

Analyses To Be Performed: 01-Gross

Sample id#	Sample Description	Sample Matrix	Sample Date	Sample Time	01-Gross
	WWTKS 1-2-3		1-18-99	0900	X

Relinquished By:	Received By:	Date/Time
Signature:	Signature:	1/18/99 0920
Printed Name: TJ Turner	Printed Name:	
Relinquished By:	Received By:	Date/Time
Signature:	Signature:	
Printed Name:	Printed Name:	

FOR LABORATORY USE ONLY

Inspection Job Number: _____ ☐ Visa _____

Laboratory Project Number: _____ ☐ Cash/Check # _____

Overtime authorized ☐ Yes ☐ No Amount Paid: $_____

White Copy - Laboratory Yellow Copy - Client Copy

Page ____ of ____

CI Form 100 (COC) Rev B

Koppers015038

CERTIFICATE OF ANALYSIS

CLIENT: KOPPERS INDUSTRIES, INC.
7540 NW ST. HELENS ROAD
PORTLAND OR 97210-3663

PHONE: (503) 286-3681
FAX: (503) 285-2831

DATE SUBMITTED: 01/11/99

PROJECT NAME: WASTE WATER ANALYSIS

CI SAMPLE #	CLIENTS ID#	DATE	TIME	DESCRIPTION
990062-001		01/11/99	1000	WASTE WATER TANKS 2, 4, & 6 GRAB SAMPLE

REPORT DATE: 01/11/99 REPORT NUMBER: 990062 PAGE: 1 OF 1

SAMPLE	ANALYSIS	PARAMETER	RESULT	UNIT	DETECTION LIMIT	ANALYST
WASTE WATER TANKS 2, 4, & 6 GRAB SAMPLE						
990062-001	O&G, TOTAL, GRAV EPA 413.1/9070	TOTAL OIL & GREASE	3.3	PPM	2	Gordon I.

REVIEWED BY: _____
Martin Little - Laboratory Manager

1-11-99

7.37 P.H.

@

8.5 °c

1-13-99

7.2 PH

9.1°C.

WWTRS

1.14.99

7.3 PH

8.9°C

WWTKS

COLUMBIA INSPECTION, INC.

CHAIN OF CUSTODY RECORD

Laboratory • Inspection • Tank Calibration

Environmental • Petroleum • OR Certified Water Analysis

☐ 7133 N. Lombard, Portland, OR 97203 Ph: (503) 286-9464 Fax: (503) 285-7831

☐ 4901 E. 20th Street, Fife, WA 98424 Ph: (253) 922-8781 Fax: (253) 922-8957

☐ 613 Escobar Street, Martinez, CA 94553 Ph: (510) 229-0360 Fax: (510) 229-2821

☐ 790 Basin Street, Unit #2, San Pedro, CA 90731 Ph: (310) 833-1557 Fax: (310) 833-1585

Customer Name: Koppers Ind Inc

Attention: Amos Kamerer

Address: 7540 NW ST Helens Rd
Portland OR 97210

Phone: (503) 286 3681

FAX: (503) 285 2831

Sampler: TJ Turner ☐ Submitted

Project Name:

Project Number:

P.O. Number:

Testing Priority: ☐ Standard ☐ Rush

Notification Method(s): ☐ Telephone ☐ FAX ☐ Mail

Due Date: ASAP

Analyses To Be Performed: Oil - Grease

Sample id#	Sample Description	Sample Matrix	Sample Date	Sample Time	Oil - Grease
	WWTP 2-4-6		1-11-99	1000	X

Relinquished By:	Received By:	Date/Time
Signature: TJ Turner	Signature:	1/11/99 1200
Printed Name: TJ Turner	Printed Name:	
Relinquished By: Signature:	Received By: Signature:	Date/Time
Printed Name:	Printed Name:	

FOR LABORATORY USE ONLY

Inspection Job Number: _____ ☐ Visa _____

Laboratory Project Number: _____ ☐ Cash/Check # _____

Overtime authorized ☐ Yes ☐ No Amount Paid: $ _____

White Copy - Laboratory Yellow Copy - Client Copy

Page ____ of ____

CI Form 100 (COC) Rev B

Koppers015043

CERTIFICATE OF ANALYSIS

CLIENT: KOPPERS INDUSTRIES, INC.
7540 NW ST. HELENS ROAD
PORTLAND OR 97210-3663

PHONE: (503) 286-3681
FAX: (503) 285-2831

DATE SUBMITTED: 01/04/99

PROJECT NAME: WASTE WATER ANALYSIS

CI SAMPLE #	CLIENTS ID#	DATE	TIME	DESCRIPTION
990010-001		01/04/99	1515	WASTE WATER TANK GRAB SAMPLE
990010-001		01/04/99	1515	WASTE WATER TANK GRAB SAMPLE
990010-001		01/04/99	1515	WASTE WATER TANK GRAB SAMPLE

REPORT DATE: 01/06/99 REPORT NUMBER: 990010 PAGE: 1 OF 1

SAMPLE	ANALYSIS	PARAMETER	RESULT	UNIT	DETECTION LIMIT	ANALYST
WASTE WATER TANK GRAB SAMPLE						
990010-001	O&G, TOTAL, GRAV EPA 413.1/9070	TOTAL OIL & GREASE	4.5	PPM	2	Gordon L.
	PHENOLS, TOTAL EPA 420.1	TOTAL RECOVERABLE PHENOLICS	ND	PPM	0.05	Abigail K.
	PNAH 2 EPA 625 (SIM)	ACENAPHTHENE	33	ug/L	0.05	Jacob I.
		ACENAPHTHYLENE	41	ug/L	0.05	
		ANTHRACENE	7.9	ug/L	0.05	
		BENZO(A)ANTHRACENE	9.4	ug/L	0.05	
		BENZO(A)PYRENE	8.4	ug/L	0.2	
		BENZO(B)FLUORANTHENE	9.2	ug/L	0.2	
		BENZO(GHI)PERYLENE	4.7	ug/L	0.5	
		BENZO(K)FLUORANTHENE	9.2	ug/L	0.2	
		CHRYSENE	9.4	ug/L	0.05	
		DIBENZO(AH)ANTHRACENE	ND	ug/L	0.3	
		FLUORANTHENE	18	ug/L	0.05	
		FLUORENE	25	ug/L	0.05	
		INDENO(1,2,3-CD)PYRENE	7.6	ug/L	0.4	
		NAPHTHALENE	480	ug/L	0.05	
		PHENANTHRENE	12	ug/L	0.05	
		PYRENE	16	ug/L	0.05	
			690.8			
		SURROGATE	119%	% RECOVERY 50%-150%		

REVIEWED BY: Martin Little
Martin Little - Laboratory Manager

8.7°C H20

@

7.22 P.H.

WWTKS
1-7-98

COLUMBIA INSPECTION, INC.

CHAIN OF CUSTODY RECORD

Laboratory • Inspection • Tank Calibration

Environmental • Petroleum • OR Certified Water Analysis

- ☑ 7133 N. Lombard, Portland, OR 97203 — Ph: (503) 286-9464 Fax: (503) 285-7831
- ☐ 4901 E. 20th Street, Fife, WA 98424 — Ph: (253) 922-8781 Fax: (253) 922-8957
- ☐ 613 Escobar Street, Martinez, CA 94553 — Ph: (510) 229-0360 Fax: (510) 229-2821
- ☐ 790 Basin Street, Unit #2, San Pedro, CA 90731 — Ph: (310) 833-1557 Fax: (310) 833-1585

Customer Name: Koppers Ind Inc.
Attention: Amos Kamenek
Address: 7540 NW St Helens Rd. Portland, Or 97210
Phone: (503) 286 3681
FAX: (503) 285 2831
Sampler: TJ Turner ☐ Submitted

Project Name:
Project Number:
P.O. Number:
Testing Priority: ☐ Standard ☑ Rush
Notification Method(s): ☐ Telephone ☐ FAX ☐ Mail
Due Date: ASAP

Analyses To Be Performed

Sample id#	Sample Description	Sample Matrix	Sample Date	Sample Time	Oil-Grease	Phenols	PAH
	WWTKS		1-4-99		X	X	X

Relinquished By:	Received By:	Date/Time
Signature: TJ Turner	Signature: Rachel O'Neil	1/4/99 15:15
Printed Name: TJ Turner	Printed Name:	
Relinquished By:	Received By:	Date/Time
Signature:	Signature:	
Printed Name:	Printed Name:	

FOR LABORATORY USE ONLY

Inspection Job Number: _____ ☐ Visa _____
Laboratory Project Number: _____ ☐ Cash/Check # _____
Overtime authorized ☐ Yes ☐ No Amount Paid: $ _____

White Copy - Laboratory Yellow Copy - Client Copy

Page ____ of ____

CI Form 100 (COC) Rev B

Koppers015046

Koppers Industries, Inc.

NPDES Monthly Stormwater Discharge Log

Month December Year 1999

Day of Month	No Discharge	Sample Taken Oil & Grease	Sample Taken Phenolics	Discharging 1-3-5	Discharging 2-4-6	Emergency Discharge
1	✓	✓	✓			
2	✓	✓	✓	✓	✓	
3	✓					
4	✓					
5	✓					
6	✓					
7	✓	✓				
8	✓			✓	✓	
9						
10	✓					
11	✓					
12	✓					
13	✓					
14	✓		✓			
15	✓					
16	✓	✓				
17				✓	✓	
18	✓					
19	✓					
20	✓					
21	✓					
22	✓					
23	✓					
24	✓					
25	✓					
26	✓					
27	✓					
28	✓					
29	✓					
30	✓					
31	✓					

Koppers Industries, Inc.

NPDES Monthly Stormwater Discharge Log

Month November Year 1999

Day of Month	No Discharge	Sample Taken Oil & Grease	Sample Taken Phenolics	Discharging 1-3-5	Discharging 2-4-6	Emergency Discharge
1	✓					
2	✓					
3	✓					
4	✓					
5	✓					
6	✓					
7	✓					
8	✓	✓	✓			
9	✓					
10				✓	✓	
11				✓	✓	
12	✓					
13	✓					
14	✓					
15	✓					
16	✓	✓				
17	✓	✓				
18	✓			✓	✓	
19						
20	✓		✓			
21	✓					
22	✓	✓				
23	✓			✓	✓	
24				✓	✓	
25				✓	✓	
26	✓					
27	✓					
28	✓					
29	✓					
30	✓					
31	✓					

Koppers Industries, Inc.

NPDES Monthly Stormwater Discharge Log

Month October Year 1999

Day of Month	No Discharge	Sample Taken Oil & Grease	Sample Taken Phenolics	Discharging 1-3-5	Discharging 2-4-6	Emergency Discharge
1	/					
2	/					
3	/					
4	/					
5	/					
6	/					
7	/					
8	/					
9	/					
10	/					
11	/					
12	/	/	/			
13	/	/	/			
14	/					
15	/					
16	/					
17				/	/	
18				/	/	
19	/					
20	/					
21	/					
22	/					
23	/					
24	/					
25	/					
26	/					
27	/	/				
28				/	/	
29	/					
30	/					
31	/					

Koppers Industries, Inc.

NPDES Monthly Stormwater Discharge Log

Month September Year 1999

Day of Month	No Discharge	Sample Taken Oil & Grease	Sample Taken Phenolics	Discharging 1-3-5	Discharging 2-4-6	Emergency Discharge
1	/		/			
2	/	/	/		/	
3				/	/	
4	/					
5	/					
6	/					
7	/					
8	/	/				
9	/	/				
10	/	/				
11	/	/				
12	/	/				
13	/	/				
14	/	/				
15	/	/				
16	/					
17	/	/				
18	/	/				
19	/	/				
20	/	/				
21	/					
22	/					
23	/	/				
24	/	/				
25	/	/				
26	/	/				
27	/	/	/			
28	/	/				
29	/	/	/			
30	/					
31						

Due To not receiving WW Park analysis by end of business day 9-30-99. We will have To resample WW Tanks for month of October for new analysis 10-4-99

Koppers015050

Koppers Industries, Inc.

NPDES Monthly Stormwater Discharge Log

Month August Year 1999

Day of Month	No Discharge	Sample Taken Oil & Grease	Sample Taken Phenolics	Discharging 1-3-5	Discharging 2-4-6	Emergency Discharge
1	✓					
2	✓					
3	✓					
4	✓					
5	✓					
6	✓					
7	✓					
8	✓					
9	✓					
10	✓	✓	✓			
11	✓					
12	✓					
13	✓			✓	✓	
14	✓					
15	✓					
16	✓					
17	✓					
18	✓					
19	✓					
20	✓					
21	✓					
22	✓					
23	✓					
24	✓					
25	✓					
26	✓					
27	✓					
28	✓					
29	✓					
30	✓					
31	✓					

Koppers Industries, Inc.

NPDES Monthly Stormwater Discharge Log

Month July Year 1999

Day of Month	No Discharge	Sample Taken Oil & Grease	Sample Taken Phenolics	Discharging 1-3-5	Discharging 2-4-6	Emergency Discharge
1	✓					
2	✓					
3	✓					
4	✓					
5	✓					
6	✓					
7	✓					
8	✓					
9	✓					
10	✓					
11	✓					
12	✓					
13	✓					
14	✓					
15	✓					
16	✓					
17	✓					
18	✓					
19	✓					
20	✓					
21	✓					
22	✓					
23	✓					
24	✓					
25	✓					
26	✓					
27	✓	✓	✓			
28	✓					
29	✓					
30				✓	✓	
31	✓					

Koppers Industries, Inc.

NPDES Monthly Stormwater Discharge Log

Month JUNE Year 1999

Day of Month	No Discharge	Sample Taken Oil & Grease	Sample Taken Phenolics	Discharging 1-3-5	Discharging 2-4-6	Emergency Discharge
1	✓					
2	✓					
3	✓					
4	✓					
5	✓					
6	✓	✓	✓			
7	✓					
8	✓				✓	
9				✓		
10				✓	✓	
11	✓					
12	✓					
13	✓					
14	✓					
15	✓					
16	✓					
17	✓					
18	✓					
19	✓					
20	✓					
21	✓	✓				
22	✓	✓				
23	✓					
24				✓	✓	
25	✓					
26	✓					
27	✓					
28	✓					
29	✓					
30	✓					
31						

Koppers Industries, Inc.

NPDES Monthly Stormwater Discharge Log

Month May Year 1999

Day of Month	No Discharge	Sample Taken Oil & Grease	Sample Taken Phenolics	Discharging 1-3-5	Discharging 2-4-6	Emergency Discharge
1	✓					
2	✓					
3	✓					
4	✓	✓	✓			
5	✓					
6				✓	✓	
7				✓	✓	
8	✓					
9	✓					
10	✓					
11	✓					
12		✓				
13				✓	✓	
14	✓					
15	✓					
16	✓					
17	✓	✓				
18				✓	✓	
19				✓	✓	
20	✓					
21	✓					
22	✓					
23	✓					
24	✓					
25	✓					
26	✓	✓				
27				✓	✓	
28	✓	✓				
29	✓	✓				
30	✓	✓				
31	✓	✓				

Koppers Industries, Inc.

NPDES Monthly Stormwater Discharge Log

Month April Year 1999

Day of Month	No Discharge	Sample Taken Oil & Grease	Sample Taken Phenolics	Discharging 1-3-5	Discharging 2-4-6	Emergency Discharge
1	✓					
2	✓					
3	✓					
4	✓	✓	✓			
5	✓	✓	✓			
6	✓					
7				✓	✓	
8				✓	✓	
9	✓			✓	✓	
10	✓					
11	✓					
12	✓	✓				
13				✓	✓	
14				✓	✓	
15	✓					
16	✓					
17	✓					
18	✓					
19	✓					
20	✓					
21	✓					
22	✓					
23	✓					
24	✓		✓			
25	✓					
26		✓				
27	✓					
28	✓					
29				✓	✓	
30				✓	✓	
31						

Koppers Industries, Inc.

NPDES Monthly Stormwater Discharge Log

Month March Year 1999

Day of Month	No Discharge	Sample Taken Oil & Grease	Sample Taken Phenolics	Discharging 1-3-5	Discharging 2-4-6	Emergency Discharge
1	✓	✓	✓			
2				✓	✓	
3				✓	✓	
4				✓	✓	
5	✓					
6	✓					
7	✓	✓				
8	✓	✓				
9				✓	✓	
10				✓	✓	
11	✓					
12				✓	✓	
13	✓					
14	✓					
15	✓	✓				
16				✓	✓	
17				✓	✓	
18				✓	✓	
19	✓					
20	✓					
21	✓		✓			
22	✓	✓				
23	✓			✓	✓	
24	✓					
25	✓			✓		
26	✓		✓		✓	✓
27	✓	✓		✓		✓
28	✓			✓		✓
29	✓	✓		✓	✓	✓
30				✓	✓	
31				✓	✓	

Koppers Industries, Inc.

NPDES Monthly Stormwater Discharge Log

Month February Year 1999

Day of Month	No Discharge	Sample Taken Oil & Grease	Sample Taken Phenolics	Discharging 1-3-5	Discharging 2-4-6	Emergency Discharge
1						
2						
3						
4						
5						
6						
7						
8						
9						
10						
11						
12						
13						
14						
15						
16						
17						
18						
19						
20						
21						
22						
23						
24						
25						
26						
27						
28						
29						
30						
31						

Koppers Industries, Inc.

NPDES Monthly Stormwater Discharge Log

Month January Year 1999

Day of Month	No Discharge	Sample Taken Oil & Grease	Sample Taken Phenolics	Discharging 1-3-5	Discharging 2-4-6	Emergency Discharge
1	✓					
2	✓					
3	✓					
4	✓					
5	✓	✓	✓			
6	✓					
7				✓	✓	
8	✓			✓	✓	
9	✓					
10	✓	✓				
11	✓	✓				
12	✓					
13				✓	✓	
14				✓	✓	
15	✓					
16	✓					
17	✓					
18		✓		✓		
19				✓	✓	
20				✓	✓	
21				✓	✓	
22	✓					
23	✓					
24	✓					
25	✓	✓				
26				✓	✓	
27				✓	✓	
28	✓			✓	✓	
29	✓					
30	✓					
31						

PERMITTEE NAME/ADDRESS (Include Facility Name/Location if different)

NAME: KOPPERS INDUSTRIES INC

ADDRESS: 7540 NW ST HELENS RD
PORTLAND OR 97210

FACILITY: N W PLANT

LOCATION: MULTNOMAH COUNTY

NATIONAL POLLUTANT DISCHARGE ELIMINATION SYSTEM (NPDES)

DISCHARGE MONITORING REPORT (DMR)

Form Approved
OMB No. 2040-0004
Expires 3-31-88

(2-16) PERMIT NUMBER: OR-100077-9

(17-19) DISCHARGE NUMBER:

3077-J
47430

MONITORING PERIOD	YEAR	MO	DAY		YEAR	MO	DAY
FROM	90	12	1	TO	91	1	1
	(20-21)	(22-23)	(24-25)		(26-27)	(28-29)	(30-31)

NOTE: Read instructions before completing this form.

PARAMETER (32-37)		(3 Card Only) QUANTITY OR LOADING (46-53) AVERAGE	(54-61) MAXIMUM	UNITS	(4 Card Only) QUALITY OR CONCENTRATION (38-45) MINIMUM	(46-53) AVERAGE	(54-61) MAXIMUM	UNITS	NO. EX (62-63)	FREQUENCY OF ANALYSIS (64-68)	SAMPLE TYPE (69-70)
FLOW	SAMPLE MEASUREMENT	5806							N/A	4/31	EST
	PERMIT REQUIREMENT		N/A	GPD							
TEMP	SAMPLE MEASUREMENT				38	40	43		0	4/31	GRAB
	PERMIT REQUIREMENT						110	°F			
PH	SAMPLE MEASUREMENT				6.2	6.525	6.8		0	4/31	GRAB
	PERMIT REQUIREMENT				6.0		9.0	SU			
OIL & GREASE	SAMPLE MEASUREMENT				0.5	0.7	0.8	MG/L	0	4/31	GRAB
	PERMIT REQUIREMENT					10	15				
PHENOLS	SAMPLE MEASUREMENT				0.18	0.2025 ~~XXXXXX~~	0.22	MG/L	0	4/31	GRAB
	PERMIT REQUIREMENT					0.5	0.7	(PPM)			
	SAMPLE MEASUREMENT										
	PERMIT REQUIREMENT										
	SAMPLE MEASUREMENT										
	PERMIT REQUIREMENT										

NAME/TITLE PRINCIPAL EXECUTIVE OFFICER

JOHN A OXFORD
PLANT MANAGER

TYPED OR PRINTED

I CERTIFY UNDER PENALTY OF LAW THAT I HAVE PERSONALLY EXAMINED AND AM FAMILIAR WITH THE INFORMATION SUBMITTED HEREIN; AND BASED ON MY INQUIRY OF THOSE INDIVIDUALS IMMEDIATELY RESPONSIBLE FOR OBTAINING THE INFORMATION, I BELIEVE THE SUBMITTED INFORMATION IS TRUE, ACCURATE AND COMPLETE. I AM AWARE THAT THERE ARE SIGNIFICANT PENALTIES FOR SUBMITTING FALSE INFORMATION, INCLUDING THE POSSIBILITY OF FINE AND IMPRISONMENT. SEE 18 U.S.C § 1001 AND 33 U.S.C § 1319. *(Penalties under these statutes may include fines up to $10,000 and or maximum imprisonment of between 6 months and 5 years.)*

SIGNATURE OF PRINCIPAL EXECUTIVE OFFICER OR AUTHORIZED AGENT: John A Oxford

TELEPHONE: AREA CODE 503 NUMBER 286-3681

DATE: YEAR 91 MO 1 DAY 15

COMMENT AND EXPLANATION OF ANY VIOLATIONS *(Reference all attachments here)*

Koppers015059

EPA Form 3320-1 (Rev. 10-79) PREVIOUS EDITION TO BE USED UNTIL SUPPLY IS EXHAUSTED. (REPLACES EPA FORM T-40 WHICH MAY NOT BE USED.)

GENERAL INSTRUCTIONS

1. If form has been partially completed by preprinting, disregard instructions directed at entry of that information already preprinted.
2. Enter "PERMITTEE NAME/MAILING ADDRESS (and facility name/location, if different)," "PERMIT NUMBER," and "DISCHARGE NUMBER" where indicated. (A separate form is required for each discharge.)
3. Enter dates beginning and ending "MONITORING PERIOD" covered by form where indicated.
4. Enter each "PARAMETER" as specified in monitoring requirements of permit.
5. Enter "SAMPLE MEASUREMENT" data for each parameter under "QUANTITY" and "QUALITY" in units specified in permit. "AVERAGE" is normally arithmetic average (geometric average for bacterial parameters) of all sample measurements for each parameter obtained during "MONITORING PERIOD." "MAXIMUM" and "MINIMUM" are normally extreme high and low measurements obtained during "MONITORING PERIOD." (NOTE: to municipals with secondary treatment requirement, enter 30-day average of sample measurements under "AVERAGE" and enter maximum 7-day average of sample measurements obtained during monitoring period under "MAXIMUM".
6. Enter "PERMIT REQUIREMENT" for each parameter under "QUANTITY" and "QUALITY" as specified in permit.
7. Under "NO. EX" enter number of sample measurements during monitoring period that exceed maximum (and/or minimum or 7-day average as appropriate) permit requirement for each parameter. If none, enter "0".
8. Enter "FREQUENCY OF ANALYSIS" both as "SAMPLE MEASUREMENT" (actual frequency of sampling and analysis used during monitoring period) and as "PERMIT REQUIREMENT" specified in permit. (e.g., Enter "CONT." for continuous monitoring. "1/7" for one day per week. "1/30" for one day per month. "1/90" for one day per quarter, etc.)
9. Enter "SAMPLE TYPE" both as "SAMPLE MEASUREMENT" (actual sample type used during monitoring period) and as "PERMIT REQUIREMENT." (e.g., Enter "GRAB" for individual sample. "24HC" for 24-hour composite. "N/A" for continuous monitoring, etc.)

(FOLD HERE FIRST)

10. WHERE VIOLATIONS OF PERMIT REQUIREMENTS ARE REPORTED, ATTACH A BRIEF EXPLANATION TO DESCRIBE CAUSE AND CORRECTIVE ACTIONS TAKEN. REFERENCE EACH VIOLATION BY DATE.
11. If "no discharge" occurs during monitoring period, enter "NO DISCHARGE" across form in place of data entry.
12. Enter "NAME/TITLE OF PRINCIPAL EXECUTIVE OFFICER" with "SIGNATURE OF PRINCIPAL EXECUTIVE OFFICER OR AUTHORIZED AGENT," "TELEPHONE NUMBER" and "DATE" at bottom of form.
13. Mail signed Report to Office(s) by date(s) specified in permit. Retain copy for your records.
14. More detailed instructions for use of this DISCHARGE MONITORING REPORT (DMR) form may be obtained from Office(s) specified in permit.

LEGAL NOTICE

This report is required by law (33 U.S.C. 1318; 40 C.F.R. 125.27). Failure to report or failure to report truthfully can result in civil penalties not to exceed $10,000 per day of violation; or in criminal penalties not to exceed $25,000 per day of violation, or by imprisonment for not more than one year, or by both.

FOLD HERE SECOND

PLACE STAMP HERE

FOLD HERE THIRD

STAPLE HERE

Koppers015060

PERMITTEE NAME/ADDRESS (Include Facility Name/Location if different)
NAME: Koppers Industries Inc
ADDRESS: 7500 N.W. St Helens Rd
Portland OR 97210

FACILITY: N.W. Plant
LOCATION: Multnomah County

NATIONAL POLLUTANT DISCHARGE ELIMINATION SYSTEM (NPDES)
DISCHARGE MONITORING REPORT (DMR)

Form Approved
OMB No. 2040-0004
Expires 3-31-88

PERMIT NUMBER (2-16)	DISCHARGE NUMBER (17-19)
OR-1000 77-9	

3077-8
47430

MONITORING PERIOD	YEAR	MO	DAY		YEAR	MO	DAY
FROM	90	12	1	TO	91	1	1
	(20-21)	(22-23)	(24-25)		(26-27)	(28-29)	(30-31)

NOTE: Read instructions before completing this form.

PARAMETER (32-37)		(3 Card Only) QUANTITY OR LOADING (46-53) AVERAGE	(54-61) MAXIMUM	UNITS	(4 Card Only) QUALITY OR CONCENTRATION (38-45) MINIMUM	(46-53) AVERAGE	(54-61) MAXIMUM	UNITS	NO. EX (62-63)	FREQUENCY OF ANALYSIS (64-68)	SAMPLE TYPE (69-70)
Flow.	SAMPLE MEASUREMENT	5806							N/A	4/31	Est
	PERMIT REQUIREMENT		N/A	MGD							
Temp	SAMPLE MEASUREMENT				38	40	43	C	0	4/31	Grab
	PERMIT REQUIREMENT						110	F			
Ph.	SAMPLE MEASUREMENT				6.2	6.525	6.8		0	4/31	Grab
	PERMIT REQUIREMENT				6.0		9.0	SU.			
Oil & Grease	SAMPLE MEASUREMENT				0.5	0.7	0.8	mg/l	0	4/31	Grab
	PERMIT REQUIREMENT					1.0	15				
Phenols.	SAMPLE MEASUREMENT				0.18	0.4275	0.22	mg/l	0	4/31	Grab
	PERMIT REQUIREMENT					0.5	0.7	(PPM)			
	SAMPLE MEASUREMENT										
	PERMIT REQUIREMENT										
	SAMPLE MEASUREMENT										
	PERMIT REQUIREMENT										

NAME/TITLE PRINCIPAL EXECUTIVE OFFICER: John Offner
TYPED OR PRINTED

I CERTIFY UNDER PENALTY OF LAW THAT I HAVE PERSONALLY EXAMINED AND AM FAMILIAR WITH THE INFORMATION SUBMITTED HEREIN, AND BASED ON MY INQUIRY OF THOSE INDIVIDUALS IMMEDIATELY RESPONSIBLE FOR OBTAINING THE INFORMATION, I BELIEVE THE SUBMITTED INFORMATION IS TRUE, ACCURATE AND COMPLETE. I AM AWARE THAT THERE ARE SIGNIFICANT PENALTIES FOR SUBMITTING FALSE INFORMATION, INCLUDING THE POSSIBILITY OF FINE AND IMPRISONMENT. SEE 18 U.S.C § 1001 AND 33 USC § 1319. *(Penalties under these statutes may include fines up to $10,000 and or maximum imprisonment of between 6 months and 5 years.)*

SIGNATURE OF PRINCIPAL EXECUTIVE OFFICER OR AUTHORIZED AGENT

TELEPHONE		DATE		
503	286-3681	91	1	15
AREA CODE	NUMBER	YEAR	MO	DAY

COMMENT AND EXPLANATION OF ANY VIOLATIONS *(Reference all attachments here)*

Koppers015061

	WW1	WW2	WW3	WW4
Flow.	45,000	45,000	45,000	45000
			180,000 ÷ 31 = 5806	
Temp.	41	43	38	38 = 160 ÷ 4 = 40
Ph.	6.7	6.4	6.8	6.2 = 26.1 ÷ 4 = 6.525
Oil + Grease.	0.8	0.7	0.8	0.5 = 2.8 ÷ 4 = 0.7
Phenol.	0.22	0.22	0.19	0.18 = 1.81 ÷ 4 = 0.2025

1-4-91
W-W-T-2
Ph 6.4

---

water
Temp. 43° F

1-4-91

W-W-T-1

Ph 6.7

water

Temp. 41°F

COFFEY LABORATORIES INC.
12423 N.E. WHITAKER WAY
PORTLAND, OREGON 97230

CHAIN OF CUSTODY

(503) 254-1794
FAX (503) 254-1452

Koppers015065

PROJECT #:

PROJECT NAME:

PAGE 1 OF 1 PAGE(S)
PLEASE PRINT OR TYPE

FOR LABORATORY USE ONLY
JOB#: A910104-AM2
CUSTABBR: Koppers

COMPANY NAME: Koppers Ind.
REPORT ATTENTION: John Oxford

SAMPLES COLLECTED BY: Geo Hoffman

FIELD IDENTIFICATION: ONE LINE PER SAMPLE CONTAINER	LAB LOC	LAB ID	COLLECTION DATE	COLLECTION TIME	MEDIA	ANALYSES REQUESTED	ANALYSIS REMARKS:
W-W- T-1			1-4-91	2:40PM	Water	oil + Grease	
W-W- T-1			"	"		Phenols	
W-W- T-2			"	"		oil + Grease	
W-W- T-2			"	"	↓	Phenols	

RELINQUISHED BY: DATE/TIME

RELINQUISHED BY: DATE/TIME

LAB USE:

RELINQUISHED BY: Geo Hoffman DATE/TIME 1-4-91 435

RECEIVED BY LAB: [illegible] DATE/TIME 1-4-91 435

SAMPLE REMARKS:

EXPRESS UPS MAIL CXX GREY TAXI LAB

WHITE COPY - COFFEY LABORATORIES

PINK COPY - CLIENT'S COPY

SHADED AREA FOR LABORATORY USE ONLY
CHAIN OF CUSTODY INSTRUCTIONS ON BACK OF PINK COPY

(1/90)

COFFEY LABORATORIES, INC.
12423 N.E. WHITAKER WAY
PORTLAND, OR 97230
PHONE: (503) 254-1794
FAX: (503) 254-1452

CHAIN OF CUSTODY INFORMATION / INSTRUCTION SHEET

PROJECT NUMBER -- Applies only to samples submitted by the company. This data is provided at the companies discretion.

PROJECT NAME -- Your company's project name. This data is provided at the company's discretion.

COMPANY NAME -- Name of the Company or individual requesting the analysis from Coffey Laboratories, Inc.

REPORT ATTENTION -- Name of the person who receives the laboratory report.

SAMPLE COLLECTED BY -- The person who took the sample signs this box and gives his/her title.

FIELD ID -- A short description of the sample point (For example; "Effluent from sand filter"). This description will appear on the report. Use one line per sample bottle.

COLLECTION DATE -- The date on which the sample(s) was/were collected.

COLLECTION TIME -- The time at which the sample(s) was/were collected.

MEDIA -- This is a description of the sample matrix.

ANALYSIS REQUESTED -- Make one column for each parameter or group of parameters associated to a bottle.

FOR LAB USE ONLY -- Do not mark in this area (Laboratory location & ID). All shaded areas are for laboratory use only. Please do not write in these areas.

REMARKS -- Record any comments about each sample on the same line as the sample description, e.g., "Wastewater contains VOCs".

RELINQUISHED BY -- The sampler signs this box when he/she gives the sample to someone else, and then fills in the date and time they left his possession.

RECEIVED BY -- The person who receives the samples signs here and fills in the date and time received. The date and time should be the same as the last one unless the samples were shipped.

SAMPLE REMARKS -- Record any comments regarding the sample(s) as a whole or information pertinent to the sample.

SAMPLES SHIPPED VIA -- How the samples are being shipped to the laboratory, e.g., "UPS".

(12/06/89)

COFFEY LABORATORIES, INC.
12423 N.E. WHITAKER WAY
PORTLAND, OR 97230
PHONE: (503) 254-1794
FAX: (503) 254-1452

January 15, 1991
Log # A910104-AM2

Koppers Industry
7540 NW St. Helens Rd.
Portland, OR 97210-3663
Attention: John Oxford

Sample Collected: 1/4/91, 1440 hrs
Sample Received: 1/4/91

ANALYSIS	METHOD	DETECTION LIMIT	W-W-T-1 RESULTS	W-W-T-2 RESULTS
Oil & Grease	EPA 413.2	0.5	0.8	0.7
Total Phenols	EPA 420.1	0.05	0.22	0.22

Results expressed as mg/L unless otherwise noted.

Sincerely,

Victor A. Perry,
Quality Assurance

Sincerely,

Renee Chauvin,
Technical Director

RJC/mlh

This report is for the sole and exclusive use of the client. Samples are retained a maximum of 15 days from the report date, or until the maximum holding time expires.

1-10-91
W-W- T-4
ph 6.2

water
Temp. 38°F

1-10-91

W-W-T-3

Ph 6.8

water

Temp. 38°F

COFFEY LABORATORIES INC.

12423 N.E. WHITAKER WAY
PORTLAND, OREGON 97230

CHAIN OF CUSTODY

(503) 254-1794
FAX (503) 254-1452

PROJECT #:

PROJECT NAME:

PAGE_____ OF_____ PAGE(S)
PLEASE PRINT OR TYPE

FOR LABORATORY USE ONLY
JOB#: A9110110-AL-2
CUSTABBR: Koppers

COMPANY NAME: Koppers Ind.
REPORT ATTENTION: John Oxford

SAMPLES COLLECTED BY: Joe Hallman

FIELD IDENTIFICATION: ONE LINE PER SAMPLE CONTAINER	LAB LOC	LAB ID	COLLECTION DATE	COLLECTION TIME	MEDIA	ANALYSES REQUESTED	ANALYSIS REMARKS:
[illegible] - T-3			[illegible]	2:[illegible]		oil + Grease	
[illegible] - T-3			"	"		Phenols	
[illegible] - T-4			"	"		oil + Grease	
[illegible] - T-4			"	"		Phenols	

RELINQUISHED BY: _____ DATE/TIME

RELINQUISHED BY: _____ DATE/TIME

RELINQUISHED BY: _____ DATE/TIME

RECEIVED BY LAB: Mary A. Cotter DATE/TIME 11/15/91 1635

LAB USE:

SAMPLE REMARKS:

EXPRESS UPS MAIL CXX GREY TAXI LAB

WHITE COPY - COFFEY LABORATORIES

PINK COPY - CLIENT'S COPY

SHADED AREA FOR LABORATORY USE ONLY
CHAIN OF CUSTODY INSTRUCTIONS ON BACK OF PINK COPY

(1/90)

Koppers015070

COFFEY LA[illegible]TORIES, INC.
12423 N[illegible] A[illegible]KER WAY
PORTL[illegible] [illegible]7230
PHONE: (50[illegible] [illegible]-1794
FAX: (503) 254-[illegible]52

CHAIN OF CUSTODY INFORMATION / INS[illegible]UCTION SHEET

PROJECT NUMBER -- Applies only to samples submitted by the company. [illegible]is data is provided at the compa[illegible] discretion.

PROJECT NAME -- Your company's project name. This data is provided at [illegible]ompany's discretion.

COMPANY NAME -- Name of the Company or individual requesting the analysis [illegible] Coffey Laboratories, Inc.

REPORT ATTENTION -- Name of the person who receives the laboratory report.

SAMPLE COLLECTED BY -- The person who took the sample signs this box and gives [illegible]her title.

FIELD ID -- A short description of the sample point (For example; "Effluent from sand filter"). T[illegible] [illegible]escription will appear on the report. Use one line per sample bottle.

COLLECTION DATE -- The date on which the sample(s) was/were collected.

COLLECTION TIME -- The time at which the sample(s) was/were collected.

MEDIA -- This is a description of the sample matrix.

ANALYSIS REQUESTED -- Make one column for each parameter or group of parameters associated to a bottle.

FOR LAB USE ONLY -- Do not mark in this area (Laboratory location & ID). All shaded areas are for laboratory use only. Please do not write in these areas.

REMARKS -- Record any comments about each sample on the same line as the sample description, e.g., "Wastewater contains VOCs".

RELINQUISHED BY -- The sampler signs this box when he/she gives the sample to someone else, and then fills in the date and time they left his possession.

RECEIVED BY -- The person who receives the samples signs here and fills in the date and time received. The date and time should be the same as the last one unless the samples were shipped.

SAMPLE REMARKS -- Record any comments regarding the sample(s) as a whole or information pertinent to the sample.

SAMPLES SHIPPED VIA -- How the samples are being shipped to the laboratory, e.g., "UPS".

(12/06/89)

COFFEY LABORATORIES, INC.
12423 N.E. WHITAKER WAY
PORTLAND, OR 97230
PHONE: (503) 254-1794
FAX: (503) 254-1452

January 21, 1991
Log # A910110-AL2

Koppers Industry
7540 NW St. Helens Rd.
Portland, OR 97210-3663
Attention: John Oxford

Sample Collected: 1/10/91, 1445 hrs
Sample Received: 1/10/91

ANALYSIS	METHOD	DETECTION LIMIT	W-W-T-3 RESULTS	W-W-T-4 RESULTS
Oil & Grease	EPA 413.2	0.5	0.8	0.5
Total Phenols	EPA 420.1	0.05	0.19	0.18

Results expressed as mg/L unless otherwise noted.

Sincerely,

Victor A. Perry,
Quality Assurance

Sincerely,

Renee Chauvin,
Technical Director

RJC/mlh

This report is for the sole and exclusive use of the client. Samples are retained a maximum of 15 days from the report date, or until the maximum holding time expires.

RECEIVED
JAN 24 1991
KOPPERS INDS., INC.
PORTLAND, OR

PERMITTEE NAME/ADDRESS (Include Facility Name/Location if different)

NAME: KOPPERS INDUSTRIES INC

ADDRESS: 7540 NW ST HELENS RD
PORTLAND OR 97210

FACILITY: N W PLANT

LOCATION: MULTNOMAH COUNTY

NATIONAL POLLUTANT DISCHARGE ELIMINATION SYSTEM (NPDES)

DISCHARGE MONITORING REPORT (DMR)

Form Approved
OMB No. 2040-0004
Expires 3-31-88

PERMIT NUMBER (2-16)	DISCHARGE NUMBER (17-19)
OR-100077-9	

3077-J
47430

MONITORING PERIOD	YEAR	MO	DAY		YEAR	MO	DAY
FROM	90	11	1	TO	90	12	1
	(20-21)	(22-23)	(24-25)		(26-27)	(28-29)	(30-31)

NOTE: Read instructions before completing this form.

PARAMETER (32-37)		(3 Card Only) QUANTITY OR LOADING (46-53) AVERAGE	(54-61) MAXIMUM	UNITS	(4 Card Only) QUALITY OR CONCENTRATION (38-45) MINIMUM	(46-53) AVERAGE	(54-61) MAXIMUM	UNITS	NO. EX (62-63)	FREQUENCY OF ANALYSIS (64-68)	SAMPLE TYPE (69-70)
FLOW	SAMPLE MEASUREMENT	3000							N/A	2/30	EST
	PERMIT REQUIREMENT		N/A	GPD							
TEMP	SAMPLE MEASUREMENT				44	44	44	°F	0	2/30	GRAB
	PERMIT REQUIREMENT						110				
PH	SAMPLE MEASUREMENT				6.6	6.7	6.8		0	2/30	GRAB
	PERMIT REQUIREMENT				6.0		9.0	SU			
Z OIL & GREASE	SAMPLE MEASUREMENT				0.4	0.55	0.7	MG/L	0	2/30	GRAB
	PERMIT REQUIREMENT					10	15				
PHENOLS	SAMPLE MEASUREMENT				0.14	0.15	0.16	MG/L	0	2/30	GRAB
	PERMIT REQUIREMENT					0.5	0.7	(PPM)			
	SAMPLE MEASUREMENT										
	PERMIT REQUIREMENT										
	SAMPLE MEASUREMENT										
	PERMIT REQUIREMENT										

NAME/TITLE PRINCIPAL EXECUTIVE OFFICER

JOHN A ~~XXXX~~ OXFORD
PLANT MGR

TYPED OR PRINTED

I CERTIFY UNDER PENALTY OF LAW THAT I HAVE PERSONALLY EXAMINED AND AM FAMILIAR WITH THE INFORMATION SUBMITTED HEREIN; AND BASED ON MY INQUIRY OF THOSE INDIVIDUALS IMMEDIATELY RESPONSIBLE FOR OBTAINING THE INFORMATION, I BELIEVE THE SUBMITTED INFORMATION IS TRUE, ACCURATE AND COMPLETE. I AM AWARE THAT THERE ARE SIGNIFICANT PENALTIES FOR SUBMITTING FALSE INFORMATION, INCLUDING THE POSSIBILITY OF FINE AND IMPRISONMENT. SEE 18 U.S.C. § 1001 AND 33 U.S.C. § 1319. *(Penalties under these statutes may include fines up to $10,000 and/or maximum imprisonment of between 6 months and 5 years.)*

John A Oxford

SIGNATURE OF PRINCIPAL EXECUTIVE OFFICER OR AUTHORIZED AGENT

TELEPHONE		DATE		
AREA CODE	NUMBER	YEAR	MO	DAY
503	286 3681	90	12	15

COMMENT AND EXPLANATION OF ANY VIOLATIONS (*Reference all attachments here*)

Koppers015073

GENERAL INSTRUCTIONS

1. If form has been partially completed by preprinting, disregard instructions directed at entry of that information already preprinted.
2. Enter "PERMITTEE NAME/MAILING ADDRESS (and facility name/location, if different), " "PERMIT NUMBER," and "DISCHARGE NUMBER" where indicated. (A separate form is required for each discharge.)
3. Enter dates beginning and ending "MONITORING PERIOD" covered by form where indicated.
4. Enter each "PARAMETER" as specified in monitoring requirements of permit.
5. Enter "SAMPLE MEASUREMENT" data for each parameter under "QUANTITY" and "QUALITY" in units specified in permit. "AVERAGE" is normally arithmetic average (geometric average for bacterial parameters) of all sample measurements for each parameter obtained during "MONITORING PERIOD." "MAXIMUM" and "MINIMUM" are normally extreme high and low measurements obtained during "MONITORING PERIOD." (NOTE: to municipals with secondary treatment requirement, enter 30-day average of sample measurements under "AVERAGE" and enter maximum 7-day average of sample measurements obtained during monitoring period under "MAXIMUM".
6. Enter "PERMIT REQUIREMENT" for each parameter under "QUANTITY" and "QUALITY" as specified in permit.
7. Under "NO. EX" enter number of sample measurements during monitoring period that exceed maximum (and/or minimum or 7-day average as appropriate) permit requirement for each parameter. If none, enter "0".
8. Enter "FREQUENCY OF ANALYSIS" both as "SAMPLE MEASUREMENT" (actual frequency of sampling and analysis used during monitoring period) and as "PERMIT REQUIREMENT" specified in permit. (e.g., Enter "CONT." for continuous monitoring. "1/7" for one day per week. "1/30" for one day per month. "1/90" for one day per quarter, etc.)
9. Enter "SAMPLE TYPE" both as "SAMPLE MEASUREMENT" (actual sample type used during monitoring period) and as "PERMIT REQUIREMENT." (e.g., Enter "GRAB" for individual sample. "24HC" for 24-hour composite. "N/A" for continuous monitoring, etc.)

(FOLD HERE FIRST)

10. WHERE VIOLATIONS OF PERMIT REQUIREMENTS ARE REPORTED, ATTACH A BRIEF EXPLANATION TO DESCRIBE CAUSE AND CORRECTIVE ACTIONS TAKEN. REFERENCE EACH VIOLATION BY DATE.
11. If "no discharge" occurs during monitoring period, enter "NO DISCHARGE" across form in place of data entry.
12. Enter "NAME/TITLE OF PRINCIPAL EXECUTIVE OFFICER" with "SIGNATURE OF PRINCIPAL EXECUTIVE OFFICER OR AUTHORIZED AGENT." "TELEPHONE NUMBER" and "DATE" at bottom of form.
13. Mail signed Report to Office(s) by date(s) specified in permit. Retain copy for your records.
14. More detailed instructions for use of this DISCHARGE MONITORING REPORT (DMR) form may be obtained from Office(s) specified in permit.

LEGAL NOTICE

This report is required by law (33 U.S.C. 1318; 40 C.F.R. 125.27). Failure to report or failure to report truthfully can result in civil penalties not to exceed $10,000 per day of violation; or in criminal penalties not to exceed $25,000 per day of violation, or by imprisonment for not more than one year, or by both.

FOLD HERE SECOND

PLACE STAMP HERE

FOLD HERE THIRD

STAPLE HERE

PERMITTEE NAME/ADDRESS (Include Facility Name/Location if different)
NAME Rapids Industries Inc.
ADDRESS 7540 N.W. St. Helens Rd.
Portland OR 97210

FACILITY N.W. Plant
LOCATION Multnomah County

NATIONAL POLLUTANT DISCHARGE ELIMINATION SYSTEM (NPDES)
DISCHARGE MONITORING REPORT (DMR)

Form Approved
OMB No. 2040-0004
Expires 3-31-88

PERMIT NUMBER (2-16)	DISCHARGE NUMBER (17-19)
OR-100077-9	

3077-5
47430

MONITORING PERIOD	YEAR	MO	DAY		YEAR	MO	DAY
FROM	90	11	1	TO	90	12	1
	(20-21)	(22-23)	(24-25)		(26-27)	(28-29)	(30-31)

NOTE: Read instructions before completing this form.

PARAMETER (32-37)		(3 Card Only) QUANTITY OR LOADING (46-53) AVERAGE	(54-61) MAXIMUM	UNITS	(4 Card Only) QUALITY OR CONCENTRATION (38-45) MINIMUM	(46-53) AVERAGE	(54-61) MAXIMUM	UNITS	NO. EX (62-63)	FREQUENCY OF ANALYSIS (64-68)	SAMPLE TYPE (69-70)
Flow	SAMPLE MEASUREMENT	3000							N/A	2/30	Est.
	PERMIT REQUIREMENT		N/A	GPD							
Temp.	SAMPLE MEASUREMENT				44	44	44	°F	0	2/30	GRAB
	PERMIT REQUIREMENT						110				
Ph.	SAMPLE MEASUREMENT				6.6	6.7	6.8		0	2/30	GRAB
	PERMIT REQUIREMENT				6.0		9.0	SU			
Oil + Grease	SAMPLE MEASUREMENT				0.4	0.55	0.7	mg/L	0	2/30	GRAB
	PERMIT REQUIREMENT				[redacted]	10	15				
Phenols.	SAMPLE MEASUREMENT				0.14	0.15	0.16	mg/L	0	2/30	GRAB
	PERMIT REQUIREMENT					0.5	0.7	(PPM)			
	SAMPLE MEASUREMENT										
	PERMIT REQUIREMENT										
	SAMPLE MEASUREMENT										
	PERMIT REQUIREMENT										

NAME/TITLE PRINCIPAL EXECUTIVE OFFICER
John A Oxford
Plant Engr.
TYPED OR PRINTED

I CERTIFY UNDER PENALTY OF LAW THAT I HAVE PERSONALLY EXAMINED AND AM FAMILIAR WITH THE INFORMATION SUBMITTED HEREIN; AND BASED ON MY INQUIRY OF THOSE INDIVIDUALS IMMEDIATELY RESPONSIBLE FOR OBTAINING THE INFORMATION, I BELIEVE THE SUBMITTED INFORMATION IS TRUE, ACCURATE AND COMPLETE. I AM AWARE THAT THERE ARE SIGNIFICANT PENALTIES FOR SUBMITTING FALSE INFORMATION, INCLUDING THE POSSIBILITY OF FINE AND IMPRISONMENT SEE 18 U.S.C § 1001 AND 33 U.S.C § 1319. *(Penalties under these statutes may include fines up to $10,000 and or maximum imprisonment of between 6 months and 5 years.)*

SIGNATURE OF PRINCIPAL EXECUTIVE OFFICER OR AUTHORIZED AGENT

TELEPHONE		DATE		
503	286-3641			
AREA CODE	NUMBER	YEAR	MO	DAY

COMMENT AND EXPLANATION OF ANY VIOLATIONS *(Reference all attachments here)*

Koppers015075

	WW 3	WW 4
	45,000	45 000 - 90000 ÷ 30 3000
Flow	3000	
Temp.	44°	44° = 88 ÷ 2 = 44
Ph.	6.8	6.6 = 13.4 ÷ 2 = 6.7
oil & Grease	0.4	0.7 = 1.1 ÷ 2 = 0.55
Phenols	0.14	0.16 = 0.3 ÷ 2 = 0.15

12-5-90

W-W-T-3

Ph 6.8

water Temp.

44°F

12-5-90
W-W-T-4
Ph 6.6

water Temp.
44°

COFFEY LABORATORIES, INC.
12423 N.E. WHITAKER WAY
PORTLAND, OR 97230
PHONE: (503) 254-1794
FAX: (503) 254-1452

December 12, 1990
Log # A901205-AY2

Koppers Industry
7540 NW St. Helens Rd.
Portland, OR 97210-3663
Attention: John Oxford

Sample(s) Collected: 12/5/90, 1300 hrs
Sample(s) Received: 12/5/90

ANALYSIS	METHOD	DETECTION LIMIT	W-W-T-3 RESULTS	W-W-T-4 RESULTS
Oil & Grease	EPA 413.2	0.4	0.4	0.7
Phenols	EPA 420.1	0.05	0.14	0.16

Results expressed as mg/L unless otherwise noted.

Sincerely,

Victor A. Perry,
Quality Assurance

Sincerely,

Renee Chauvin,
Technical Director

RJC/mlh

This report is for the sole and exclusive use of the client. Samples are retained a maximum of 15 days from the report date, or until the maximum holding time expires.

RECEIVED
DEC 17 1990
KOPPERS INDS., INC.
PORTLAND, OR

COFFEY LABORATORIES INC.
12423 N.E. WHITAKER WAY
PORTLAND, OREGON 97230

CHAIN OF CUSTODY

(503) 254-1794
FAX (503) 254-1452

Koppers015080

PROJECT #:

PROJECT NAME:

PAGE____ OF ____ PAGE(S)
PLEASE PRINT OR TYPE

FOR LABORATORY USE ONLY
JOB#: A901205-AY2
CUSTABBR: Koppers

COMPANY NAME: Koppers IND.
REPORT ATTENTION: John Oxford

SAMPLES COLLECTED BY: George Hoffman

FIELD IDENTIFICATION: ONE LINE PER SAMPLE CONTAINER	LAB LOC	LAB ID	COLLECTION DATE	COLLECTION TIME	MEDIA	ANALYSES REQUESTED	ANALYSIS REMARKS:
W-W-T-3			12-5-90	1:00		oil & Grease	
W-W-T-3			"	1:00		Phenols	
W-W-T-4			"	1:00		oil + Grease	
W-W-T-4			"	1:00		Phenols	

RELINQUISHED BY: ____ DATE/TIME

RELINQUISHED BY: ____ DATE/TIME

LAB USE:

RELINQUISHED BY: George Hoffman DATE/TIME 12-5-90

RECEIVED BY LAB: John Lalgue DATE/TIME 12/5/90 1630

SAMPLE REMARKS:

EXPRESS UPS MAIL CXX GREY TAXI LAB

WHITE COPY - COFFEY LABORATORIES

PINK COPY - CLIENT'S COPY

SHADED AREA FOR LABORATORY USE ONLY
CHAIN OF CUSTODY INSTRUCTIONS ON BACK OF PINK COPY

(1/90)

COFFEY LABORATORIES, INC.
12423 N.E. WHITAKER WAY
PORTLAND, OR 97230
PHONE: (503) 254-1794
FAX: (503) 254-1452

CHAIN OF CUSTODY INFORMATION / INSTRUCTION SHEET

PROJECT NUMBER -- Applies only to samples submitted by the company. This data is provided at the companies discretion.

PROJECT NAME -- Your company's project name. This data is provided at the company's discretion.

COMPANY NAME -- Name of the Company or individual requesting the analysis from Coffey Laboratories, Inc.

REPORT ATTENTION -- Name of the person who receives the laboratory report.

SAMPLE COLLECTED BY -- The person who took the sample signs this box and gives his/her title.

FIELD ID -- A short description of the sample point (For example; "Effluent from sand filter"). This description will appear on the report. Use one line per sample bottle.

COLLECTION DATE -- The date on which the sample(s) was/were collected.

COLLECTION TIME -- The time at which the sample(s) was/were collected.

MEDIA -- This is a description of the sample matrix.

ANALYSIS REQUESTED -- Make one column for each parameter or group of parameters associated to a bottle.

FOR LAB USE ONLY -- Do not mark in this area (Laboratory location & ID). All shaded areas are for laboratory use only. Please do not write in these areas.

REMARKS -- Record any comments about each sample on the same line as the sample description, e.g., "Wastewater contains VOCs".

RELINQUISHED BY -- The sampler signs this box when he/she gives the sample to someone else, and then fills in the date and time they left his possession.

RECEIVED BY -- The person who receives the samples signs here and fills in the date and time received. The date and time should be the same as the last one unless the samples were shipped.

SAMPLE REMARKS -- Record any comments regarding the sample(s) as a whole or information pertinent to the sample.

SAMPLES SHIPPED VIA -- How the samples are being shipped to the laboratory, e.g., "UPS".

(12/06/89)

PERMITTEE NAME/ADDRESS (Include Facility Name/Location if different)

NAME KOPPERS INDUSTRIES, INC

ADDRESS 7540 N.W. ST. HELENS ROAD

PORTLAND, OR 97210

FACILITY N.W. PLANT

LOCATION MULTNOMAH COUNTY

NATIONAL POLLUTANT DISCHARGE ELIMINATION SYSTEM (NPDES)

DISCHARGE MONITORING REPORT (DMR)

(2-16) PERMIT NUMBER: OR100077-9

(17-19) DISCHARGE NUMBER: 001

Form Approved
OMB No. 2040-0004
Expires 3-31-88

30773
47400

MONITORING PERIOD

	YEAR	MO	DAY		YEAR	MO	DAY
FROM	90	10	1	TO	90	11	1
	(20-21)	(22-23)	(24-25)		(26-27)	(28-29)	(30-31)

NOTE: Read instructions before completing this form.

PARAMETER (32-37)		(3 Card Only) QUANTITY OR LOADING (46-53) AVERAGE	(54-61) MAXIMUM	UNITS	(4 Card Only) QUALITY OR CONCENTRATION (38-45) MINIMUM	(46-53) AVERAGE	(54-61) MAXIMUM	UNITS	NO. EX. (62-63)	FREQUENCY OF ANALYSIS (64-68)	SAMPLE TYPE (69-70)
FLOW	SAMPLE MEASUREMENT	3000							N/A	30/30	EST
	PERMIT REQUIREMENT		N/A	GPD							
TEMP	SAMPLE MEASUREMENT				55	59	62		0	4/30	GRAB
	PERMIT REQUIREMENT						100°	°/F			
P.H.	SAMPLE MEASUREMENT				6.1	6.43	6.9		0	4/30	GRAB
	PERMIT REQUIREMENT				6.0		9.0	S.U.			
OIL & GREASE	SAMPLE MEASUREMENT				0.3	0.48	0.8	MG/L	0	4/30	GRAB
	PERMIT REQUIREMENT					10	15				
PHENOLS	SAMPLE MEASUREMENT				.05	.04	.11	MG/L	0	4/30	GRAB
	PERMIT REQUIREMENT					0.5	0.7				
	SAMPLE MEASUREMENT										
	PERMIT REQUIREMENT										
	SAMPLE MEASUREMENT										
	PERMIT REQUIREMENT										

NAME/TITLE PRINCIPAL EXECUTIVE OFFICER

JOHN A. OXFORD
PLANT MANAGER

TYPED OR PRINTED

I CERTIFY UNDER PENALTY OF LAW THAT I HAVE PERSONALLY EXAMINED AND AM FAMILIAR WITH THE INFORMATION SUBMITTED HEREIN; AND BASED ON MY INQUIRY OF THOSE INDIVIDUALS IMMEDIATELY RESPONSIBLE FOR OBTAINING THE INFORMATION, I BELIEVE THE SUBMITTED INFORMATION IS TRUE, ACCURATE AND COMPLETE. I AM AWARE THAT THERE ARE SIGNIFICANT PENALTIES FOR SUBMITTING FALSE INFORMATION, INCLUDING THE POSSIBILITY OF FINE AND IMPRISONMENT. SEE 18 U.S.C. § 1001 AND 33 U.S.C. § 1319. (Penalties under these statutes may include fines up to $10,000 and/or maximum imprisonment of between 6 months and 5 years.)

SIGNATURE OF PRINCIPAL EXECUTIVE OFFICER OR AUTHORIZED AGENT

TELEPHONE		DATE		
503	286-3681	90	11	21
AREA CODE	NUMBER	YEAR	MO	DAY

COMMENT AND EXPLANATION OF ANY VIOLATIONS (Reference all attachments here)

KOPPERS INDUSTRIES INC
7540 NW ST HELENS RD
PORTLAND OREGON 97210
OREGON DEPT OF ENVIRONMENTAL QUALITY
WATER QUALITY DIVISION

Koppers015082

GENERAL INSTRUCTIONS

1. If form has been partially completed by preprinting, disregard instructions directed at entry of that information already preprinted.
2. Enter "PERMITTEE NAME/MAILING ADDRESS (and facility name/location, if different)," "PERMIT NUMBER," and "DISCHARGE NUMBER" where indicated. (A separate form is required for each discharge.)
3. Enter dates beginning and ending "MONITORING PERIOD" covered by form where indicated.
4. Enter each "PARAMETER" as specified in monitoring requirements of permit.
5. Enter "SAMPLE MEASUREMENT" data for each parameter under "QUANTITY" and "QUALITY" in units specified in permit. "AVERAGE" is normally arithmetic average (geometric average for bacterial parameters) of all sample measurements for each parameter obtained during "MONITORING PERIOD." "MAXIMUM" and "MINIMUM" are normally extreme high and low measurements obtained during "MONITORING PERIOD." (NOTE: to municipals with secondary treatment requirement, enter 30-day average of sample measurements under "AVERAGE" and enter maximum 7-day average of sample measurements obtained during monitoring period under "MAXIMUM".
6. Enter "PERMIT REQUIREMENT" for each parameter under "QUANTITY" and "QUALITY" as specified in permit.
7. Under "NO. EX" enter number of sample measurements during monitoring period that exceed maximum (and/or minimum or 7-day average as appropriate) permit requirement for each parameter. If none, enter "0".
8. Enter "FREQUENCY OF ANALYSIS" both as "SAMPLE MEASUREMENT" (actual frequency of sampling and analysis used during monitoring period) and as "PERMIT REQUIREMENT" specified in permit. (e.g., Enter "CONT." for continuous monitoring. "1/7" for one day per week. "1/30" for one day per month. "1/90" for one day per quarter, etc.)
9. Enter "SAMPLE TYPE" both as "SAMPLE MEASUREMENT" (actual sample type used during monitoring period) and as "PERMIT REQUIREMENT." (e.g., Enter "GRAB" for individual sample. "24HC" for 24-hour composite. "N/A" for continuous monitoring, etc.)

(FOLD HERE FIRST)

10. WHERE VIOLATIONS OF PERMIT REQUIREMENTS ARE REPORTED, ATTACH A BRIEF EXPLANATION TO DESCRIBE CAUSE AND CORRECTIVE ACTIONS TAKEN. REFERENCE EACH VIOLATION BY DATE.
11. If "no discharge" occurs during monitoring period, enter "NO DISCHARGE" across form in place of data entry.
12. Enter "NAME/TITLE OF PRINCIPAL EXECUTIVE OFFICER" with "SIGNATURE OF PRINCIPAL EXECUTIVE OFFICER OR AUTHORIZED AGENT," "TELEPHONE NUMBER" and "DATE" at bottom of form.
13. Mail signed Report to Office(s) by date(s) specified in permit. Retain copy for your records.
14. More detailed instructions for use of this DISCHARGE MONITORING REPORT (DMR) form may be obtained from Office(s) specified in permit.

LEGAL NOTICE

This report is required by law (33 U.S.C. 1318; 40 C.F.R. 125.27). Failure to report or failure to report truthfully can result in civil penalties not to exceed $10,000 per day of violation; or in criminal penalties not to exceed $25,000 per day of violation, or by imprisonment for not more than one year, or by both.

FOLD HERE SECOND

PLACE STAMP HERE

FOLD HERE THIRD

STAPLE HERE

PERMITTEE NAME/ADDRESS (Include Facility Name/Location if different)
NAME
ADDRESS U.S.

FACILITY W.W. Plant
LOCATION Multnomah County

NATIONAL POLLUTANT DISCHARGE ELIMINATION SYSTEM (NPDES) MONITORING REPORT (DMR)

Form Approved
OMB No. 2040-0004
Expires 3-31-88

PERMIT NUMBER (2-16)	DISCHARGE NUMBER (17-19)
OR 100077-9	001

MONITORING PERIOD	YEAR	MO	DAY		YEAR	MO	DAY
FROM	90	10	1	TO	90	11	1
	(20-21)	(22-23)	(24-25)		(26-27)	(28-29)	(30-31)

30775
47430

NOTE: Read instructions before completing this form.

PARAMETER (32-37)		(3 Card Only) (46-53) QUANTITY OR LOADING (54-61) AVERAGE	MAXIMUM	UNITS	(4 Card Only) (38-45) QUALITY OR CONCENTRATION (46-53) MINIMUM	AVERAGE	(54-61) MAXIMUM	UNITS	NO. EX (62-63)	FREQUENCY OF ANALYSIS (64-68)	SAMPLE TYPE (69-70)
FLOW	SAMPLE MEASUREMENT	3000		GPD					N/A	30/30	EST.
	PERMIT REQUIREMENT		N/A								
TEMP	SAMPLE MEASUREMENT				55	59	62	°F	0	4/30	GRAB
	PERMIT REQUIREMENT						110°				
P.H.	SAMPLE MEASUREMENT				6.1	6.43	6.9	S.U.	0	4/30	GRAB
	PERMIT REQUIREMENT				6.0		9.0				
OIL & GREASE	SAMPLE MEASUREMENT				0.3	0.48	0.8	mg/L	0	4/30	GRAB
	PERMIT REQUIREMENT					10	15				
PHENOLS	SAMPLE MEASUREMENT				.05	.04	.11	mg/L	0	4/30	GRAB
	PERMIT REQUIREMENT					0.5	0.7				
	SAMPLE MEASUREMENT										
	PERMIT REQUIREMENT										
	SAMPLE MEASUREMENT										
	PERMIT REQUIREMENT										

NAME/TITLE PRINCIPAL EXECUTIVE OFFICER
JOHN A OXFORD
PLANT MGR.
TYPED OR PRINTED

I CERTIFY UNDER PENALTY OF LAW THAT I HAVE PERSONALLY EXAMINED AND AM FAMILIAR WITH THE INFORMATION SUBMITTED HEREIN; AND BASED ON MY INQUIRY OF THOSE INDIVIDUALS IMMEDIATELY RESPONSIBLE FOR OBTAINING THE INFORMATION, I BELIEVE THE SUBMITTED INFORMATION IS TRUE, ACCURATE AND COMPLETE. I AM AWARE THAT THERE ARE SIGNIFICANT PENALTIES FOR SUBMITTING FALSE INFORMATION, INCLUDING THE POSSIBILITY OF FINE AND IMPRISONMENT. SEE 18 U.S.C § 1001 AND 33 U.S.C § 1319. *(Penalties under these statutes may include fines up to $10,000 and/or maximum imprisonment of between 6 months and 5 years.)*

SIGNATURE OF PRINCIPAL EXECUTIVE OFFICER OR AUTHORIZED AGENT

TELEPHONE		DATE		
503	286-3681	90	11	21
AREA CODE	NUMBER	YEAR	MO	DAY

COMMENT AND EXPLANATION OF ANY VIOLATIONS *(Reference all attachments here)*

Koppers015084

Attachment II.

CERTIFICATION STATEMENT

"I certify under penalty of law that this document and all attachments were prepared under my direction or supervision in acordance with a system designed to assure that qualified personnel properly gather and evaluate the information submitted. Based on my inquiry of the person or persons who manage the system, or those persons directly responsible for gathering the information, the information submitted is, to the best of my knowledge and belief, true, accurate and complete. I am aware that there are signifiant penalties for submitting false information, including the possibility of fine and imprisonment for knowing violations."

John A O'Hard
Plant Mgr.

10-30-90
W-W-T-1
Ph 6.1

water
Temp. 55°F

10-30-90

W-W-T-2

Ph 6.1

water

Temp. 56°F

COFFEY LABORATORIES INC.

12423 N.E. WHITAKER WAY
PORTLAND, OREGON 97230

CHAIN OF CUSTODY

(503) 254-1794
FAX (503) 254-1452

PROJECT #:

PROJECT NAME:

PAGE ____ OF ____ PAGE(S)
PLEASE PRINT OR TYPE

FOR LABORATORY USE ONLY

JOB#: A901030-AB2

CUSTABBR: Koppers

COMPANY NAME: Koppers Industry
REPORT ATTENTION: John Oxford

SAMPLES COLLECTED BY: Doug Hoffman

FIELD IDENTIFICATION: ONE LINE PER SAMPLE CONTAINER	LAB LOC	LAB ID	COLLECTION DATE	COLLECTION TIME	MEDIA	ANALYSES REQUESTED	ANALYSIS REMARKS:
W-W-T-1			10-30-90	1:40PM		Oil + Grease	
W-W-T-1			"	"		Phenols	
W-W-T-2			"	"		Oil + Grease	
W-W-T-2			"	"		Phenols	

RELINQUISHED BY: _____ DATE/TIME

RELINQUISHED BY: _____ DATE/TIME

LAB USE

RELINQUISHED BY: Doug Hoffman DATE/TIME 10-30-90

RECEIVED BY LAB: John Ludgin DATE/TIME 10/30/90 1530

SAMPLE REMARKS:

EXPRESS UPS MAIL CXX GREY TAXI LAB

WHITE COPY - COFFEY LABORATORIES

PINK COPY - CLIENT'S COPY

SHADED AREA FOR LABORATORY USE ONLY
CHAIN OF CUSTODY INSTRUCTIONS ON BACK OF PINK COPY

(1/90)

Koppers015088

COFFEY LABORATORIES, INC.
12423 N.E. WHITAKER WAY
PORTLAND, OR 97230
PHONE: (503) 254-1794
FAX: (503) 254-1452

CHAIN OF CUSTODY INFORMATION / INSTRUCTION SHEET

PROJECT NUMBER -- Applies only to samples submitted by the company. This data is provided at the companies discretion.

PROJECT NAME -- Your company's project name. This data is provided at the company's discretion.

COMPANY NAME -- Name of the Company or individual requesting the analysis from Coffey Laboratories, Inc.

REPORT ATTENTION -- Name of the person who receives the laboratory report.

SAMPLE COLLECTED BY -- The person who took the sample signs this box and gives his/her title.

FIELD ID -- A short description of the sample point (For example; "Effluent from sand filter"). This description will appear on the report. Use one line per sample bottle.

COLLECTION DATE -- The date on which the sample(s) was/were collected.

COLLECTION TIME -- The time at which the sample(s) was/were collected.

MEDIA -- This is a description of the sample matrix.

ANALYSIS REQUESTED -- Make one column for each parameter or group of parameters associated to a bottle.

FOR LAB USE ONLY -- Do not mark in this area (Laboratory location & ID). All shaded areas are for laboratory use only. Please do not write in these areas.

REMARKS -- Record any comments about each sample on the same line as the sample description, e.g., "Wastewater contains VOCs".

RELINQUISHED BY -- The sampler signs this box when he/she gives the sample to someone else, and then fills in the date and time they left his possession.

RECEIVED BY -- The person who receives the samples signs here and fills in the date and time received. The date and time should be the same as the last one unless the samples were shipped.

SAMPLE REMARKS -- Record any comments regarding the sample(s) as a whole or information pertinent to the sample.

SAMPLES SHIPPED VIA -- How the samples are being shipped to the laboratory, e.g., "UPS".

(12/06/89)

RECEIVED

NOV 20 1990

KOPPERS INDS., INC.
PORTLAND, OR

COFFEY LABORATORIES, INC.
12423 N.E. WHITAKER WAY
PORTLAND, OR 97230
PHONE: (503) 254-1794
FAX: (503) 254-1452

November 15, 1990
Log # A901030-AB2

Koppers Industry
7540 NW St. Helens Rd.
Portland, OR 97210-3663
Attention: John Oxford

Sample Collected: 10/30/90, 1340 hrs
Sample Received: 10/30/90

ANALYSIS	METHOD	DETECTION LIMIT	W-W-T-1 RESULTS	W-W-T-2 RESULTS
Oil & Grease	EPA 413.2	0.2	0.8	0.3
Total Phenols	EPA 420.1	0.05	ND	ND

ND means none detected at or above the detection limit listed.

Results expressed as mg/L unless otherwise noted.

Sincerely,

Victor A. Perry,
Quality Assurance

Sincerely,

Renee Chauvin,
Technical Director

RJC/mlh

This report is for the sole and exclusive use of the client. Samples are retained a maximum of 15 days from the report date, or until the maximum holding time expires.

10-5-90

W-W-T-3

Ph 6.9

water Temp.

62° F

10-5-90

W-W-T-4

Ph 6.6

water Temp.

62° F

COFFEY LABORATORIES INC.
12423 N.E. WHITAKER WAY
PORTLAND, OREGON 97230

CHAIN OF CUSTODY

(503) 254-1794
FAX (503) 254-1452

PROJECT #:

PROJECT NAME:

PAGE_____ OF_____ PAGE(S)
PLEASE PRINT OR TYPE

FOR LABORATORY USE ONLY

JOB#:

CUSTABBR:

COMPANY NAME: Koppers IND.
REPORT ATTENTION: John Oxford

SAMPLES COLLECTED BY: Geo. Hoffman

FIELD IDENTIFICATION: ONE LINE PER SAMPLE CONTAINER	LAB LOC	LAB ID	COLLECTION DATE	COLLECTION TIME	MEDIA	ANALYSES REQUESTED	ANALYSIS REMARKS:
W-W - T-3			10-5-90	9:45AM		oil & Grease	
W-W - T-3			"	"		Phenols	
W-W - T-4			"	"		oil & Grease	
W-W - T-4			"	"		Phenols	

RELINQUISHED BY: _____ DATE/TIME

RELINQUISHED BY: _____ DATE/TIME

LAB USE:

RELINQUISHED BY: George Hoffman DATE/TIME 10-5-90

RECEIVED BY LAB: Cheryl Martin DATE/TIME 10/5/96 3:50

SAMPLE REMARKS:

EXPRESS UPS MAIL CXX GREY TAXI LAB

WHITE COPY - COFFEY LABORATORIES

PINK COPY - CLIENT'S COPY

SHADED AREA FOR LABORATORY USE ONLY
CHAIN OF CUSTODY INSTRUCTIONS ON BACK OF PINK COPY

(1/90)

Koppers015093

COFFEY LABORATORIES, INC.
12423 N.E. WHITAKER WAY
PORTLAND, OR 97230
PHONE: (503) 254-1794
FAX: (503) 254-1452

CHAIN OF CUSTODY INFORMATION / INSTRUCTION SHEET

PROJECT NUMBER -- Applies only to samples submitted by the company. This data is provided at the companies discretion.

PROJECT NAME -- Your company's project name. This data is provided at the company's discretion.

COMPANY NAME -- Name of the Company or individual requesting the analysis from Coffey Laboratories, Inc.

REPORT ATTENTION -- Name of the person who receives the laboratory report.

SAMPLE COLLECTED BY -- The person who took the sample signs this box and gives his/her title.

FIELD ID -- A short description of the sample point (For example; "Effluent from sand filter"). This description will appear on the report. Use one line per sample bottle.

COLLECTION DATE -- The date on which the sample(s) was/were collected.

COLLECTION TIME -- The time at which the sample(s) was/were collected.

MEDIA -- This is a description of the sample matrix.

ANALYSIS REQUESTED -- Make one column for each parameter or group of parameters associated to a bottle.

FOR LAB USE ONLY -- Do not mark in this area (Laboratory location & ID). All shaded areas are for laboratory use only. Please do not write in these areas.

REMARKS -- Record any comments about each sample on the same line as the sample description, e.g., "Wastewater contains VOCs".

RELINQUISHED BY -- The sampler signs this box when he/she gives the sample to someone else, and then fills in the date and time they left his possession.

RECEIVED BY -- The person who receives the samples signs here and fills in the date and time received. The date and time should be the same as the last one unless the samples were shipped.

SAMPLE REMARKS -- Record any comments regarding the sample(s) as a whole or information pertinent to the sample.

SAMPLES SHIPPED VIA -- How the samples are being shipped to the laboratory, e.g., "UPS".

(12/06/89)

COFFEY LABORATORIES, INC.
12423 N.E. WHITAKER WAY
PORTLAND, OR 97230
PHONE: (503) 254-1794
FAX: (503) 254-1452

October 22, 1990
Log #A901005-AT2
PO: Verbal John

Koppers Industry
7540 NW St. Helens Road
Portland, OR 97210-3663
Attention: John Oxford

Samples Collected: 10/05/90, 0945 hrs.
Samples Received: 10/05/90

PARAMETER	METHOD	DETECTION LIMITS	W-W-T-3 RESULTS	W-W-T-4 RESULTS
Oil & Grease	EPA 413.2	0.2	0.4	0.4
Total Phenols	EPA 420.1	0.05	0.11	0.05

Results expressed as mg/L unless otherwise noted.

Sincerely,

Victor A. Perry,
Quality Assurance

Sincerely,

Renee Chauvin,
Technical Director

RJC/lws

This report is for the sole and exclusive use of the client.
Samples are retained a maximum of 15 days from the report date, or until the maximum holding time expires.

RECEIVED
OCT 25 1990
KOPPERS INDS., INC.
PORTLAND, OR

PERMITTEE NAME/ADDRESS (*Include Facility Name/Location if different*)

NAME: KOPPERS INDUSTRIES INC

ADDRESS: 7540 NW ST HELENS RD
PORTLAND OR 97210

FACILITY: N.W. PLANT

LOCATION: MULTNOMAH COUNTY

NATIONAL POLLUTANT DISCHARGE ELIMINATION SYSTEM (*NPDES*)
DISCHARGE MONITORING REPORT (*DMR*)

Form Approved.
OMB No. 2040-0004
Approval expires 9-30-85

(2-16) PERMIT NUMBER: OR-100077-9

(17-19) DISCHARGE NUMBER:

3077-J
47430

MONITORING PERIOD	YEAR	MO	DAY		YEAR	MO	DAY
FROM	90	9	1	TO	90	10	1
	(20-21)	(22-23)	(24-25)		(26-27)	(28-29)	(30-31)

NOTE: Read instructions before completing this form.

PARAMETER (32-37)		(3 Card Only) QUANTITY OR LOADING (46-53) AVERAGE	(54-61) MAXIMUM	UNITS	(4 Card Only) QUALITY OR CONCENTRATION (38-45) MINIMUM	(46-53) AVERAGE	(54-61) MAXIMUM	UNITS	NO. EX (62-63)	FREQUENCY OF ANALYSIS (64-68)	SAMPLE TYPE (69-70)
FLOW	SAMPLE MEASUREMENT	NO FLOW									
	PERMIT REQUIREMENT										
TEMP	SAMPLE MEASUREMENT				NO FLOW						
	PERMIT REQUIREMENT										
P.H.	SAMPLE MEASUREMENT				NO FLOW						
	PERMIT REQUIREMENT										
OIL & GREASE	SAMPLE MEASUREMENT				NO FLOW						
	PERMIT REQUIREMENT										
PHENOLS	SAMPLE MEASUREMENT				NO FLOW						
	PERMIT REQUIREMENT										
	SAMPLE MEASUREMENT										
	PERMIT REQUIREMENT										
	SAMPLE MEASUREMENT										
	PERMIT REQUIREMENT										

NAME/TITLE PRINCIPAL EXECUTIVE OFFICER
JOHN A OXFORD
PLANT MANAGER
TYPED OR PRINTED

I CERTIFY UNDER PENALTY OF LAW THAT I HAVE PERSONALLY EXAMINED AND AM FAMILIAR WITH THE INFORMATION SUBMITTED HEREIN; AND BASED ON MY INQUIRY OF THOSE INDIVIDUALS IMMEDIATELY RESPONSIBLE FOR OBTAINING THE INFORMATION, I BELIEVE THE SUBMITTED INFORMATION IS TRUE, ACCURATE AND COMPLETE. I AM AWARE THAT THERE ARE SIGNIFICANT PENALTIES FOR SUBMITTING FALSE INFORMATION, INCLUDING THE POSSIBILITY OF FINE AND IMPRISONMENT. SEE 18 U.S.C. § 1001 AND 33 U.S.C. § 1319. (*Penalties under these statutes may include fines up to $10,000 and/or maximum imprisonment of between 6 months and 5 years.*)

SIGNATURE OF PRINCIPAL EXECUTIVE OFFICER OR AUTHORIZED AGENT: John A Oxford

TELEPHONE		DATE		
503	286-3681	90	10	12
AREA CODE	NUMBER	YEAR	MO	DAY

COMMENT AND EXPLANATION OF ANY VIOLATIONS (*Reference all attachments here*)

Koppers015096

GENERAL INSTRUCTIONS

1. If form has been partially completed by preprinting, disregard instructions directed at entry of that information already preprinted.
2. Enter "PERMITTEE NAME/MAILING ADDRESS (and facility name/location, if different)," "PERMIT NUMBER," and "DISCHARGE NUMBER" where indicated. (A separate form is required for each discharge.)
3. Enter dates beginning and ending "MONITORING PERIOD" covered by form where indicated.
4. Enter each "PARAMETER" as specified in monitoring requirements of permit.
5. Enter "SAMPLE MEASUREMENT" data for each parameter under "QUANTITY" and "QUALITY" in units specified in permit. "AVERAGE" is normally arithmetic average (geometric average for bacterial parameters) of all sample measurements for each parameter obtained during "MONITORING PERIOD." "MAXIMUM" and "MINIMUM" are normally extreme high and low measurements obtained during "MONITORING PERIOD." (NOTE to municipals with secondary treatment requirement, enter 30-day average of sample measurements under "AVERAGE" and enter maximum 7-day average of sample measurements obtained during monitoring period under "MAXIMUM".
6. Enter "PERMIT REQUIREMENT" for each parameter under "QUANTITY" and "QUALITY" as specified in permit.
7. Under "NO. EX" enter number of sample measurements during monitoring period that exceed maximum (and/or minimum or 7-day average as appropriate) permit requirement for each parameter. If none, enter "0".
8. Enter "FREQUENCY OF ANALYSIS" both as "SAMPLE MEASUREMENT" (actual frequency of sampling and analysis used during monitoring period) and as "PERMIT REQUIREMENT" specified in permit. (e.g., Enter "CONT." for continuous monitoring, "1/7" for one day per week, "1/30" for one day per month, "1/90" for one day per quarter, etc.)
9. Enter "SAMPLE TYPE" both as "SAMPLE MEASUREMENT" (actual sample type used during monitoring period) and as "PERMIT REQUIREMENT." (e.g., Enter "GRAB" for individual sample, "24HC" for 24-hour composite, "N/A" for continuous monitoring, etc.)

(FOLD HERE FIRST)

10. WHERE VIOLATIONS OF PERMIT REQUIREMENTS ARE REPORTED, ATTACH A BRIEF EXPLANATION TO DESCRIBE CAUSE AND CORRECTIVE ACTIONS TAKEN. REFERENCE EACH VIOLATION BY DATE.
11. If "no discharge" occurs during monitoring period, enter "NO DISCHARGE" across form in place of data entry.
12. Enter "NAME/TITLE OF PRINCIPAL EXECUTIVE OFFICER" with "SIGNATURE OF PRINCIPAL EXECUTIVE OFFICER OR AUTHORIZED AGENT," "TELEPHONE NUMBER" and "DATE" at bottom of form.
13. Mail signed Report to Office(s) by date(s) specified in permit. Retain copy for your records.
14. More detailed instructions for use of this DISCHARGE MONITORING REPORT (DMR) form may be obtained from Office(s) specified in permit.

LEGAL NOTICE

This report is required by law (33 U.S.C. 1318; 40 C.F.R. 125.27). Failure to report or failure to report truthfully can result in civil penalties not to exceed $10,000 per day of violation; or in criminal penalties not to exceed $25,000 per day of violation, or by imprisonment for not more than one year, or by both.

FOLD HERE SECOND

PLACE STAMP HERE

FOLD HERE THIRD

STAPLE HERE

Koppers015097

PERMITTEE NAME/ADDRESS (*Include Facility Name/Location if different*)

NAME KOPPERS INDUSTRIES INC

ADDRESS 7540 NW ST HELENS RD
PORTLAND OR 97210

FACILITY N W PLANT

LOCATION MULTNOMAH COUNTY

NATIONAL POLLUTANT DISCHARGE ELIMINATION SYSTEM (*NPDES*)
DISCHARGE MONITORING REPORT (*DMR*)

Form Approved.
OMB No. 2040-0004
Approval expires 9-30-85

(2-16) PERMIT NUMBER	(17-19) DISCHARGE NUMBER
OR-100077-9	

MONITORING PERIOD	YEAR	MO	DAY	TO	YEAR	MO	DAY
FROM	90	8	1		90	9	1
	(20-21)	(22-23)	(24-25)		(26-27)	(28-29)	(30-31)

3077-J
47430

NOTE: Read instructions before completing this form.

PARAMETER (32-37)		(3 Card Only) QUANTITY OR LOADING (46-53) AVERAGE	(54-61) MAXIMUM	UNITS	(4 Card Only) QUALITY OR CONCENTRATION (38-45) MINIMUM	(46-53) AVERAGE	(54-61) MAXIMUM	UNITS	NO. EX (62-63)	FREQUENCY OF ANALYSIS (64-68)	SAMPLE TYPE (69-70)
FLOW	SAMPLE MEASUREMENT	NO FLOW									
	PERMIT REQUIREMENT										
TEMP	SAMPLE MEASUREMENT				NO FLOW						
	PERMIT REQUIREMENT										
P.H.	SAMPLE MEASUREMENT				NO FLOW						
	PERMIT REQUIREMENT										
OIL & GREASE	SAMPLE MEASUREMENT				NO FLOW						
	PERMIT REQUIREMENT										
PHENOLS	SAMPLE MEASUREMENT				NO FLOW						
	PERMIT REQUIREMENT										
	SAMPLE MEASUREMENT										
	PERMIT REQUIREMENT										
	SAMPLE MEASUREMENT										
	PERMIT REQUIREMENT										

NAME/TITLE PRINCIPAL EXECUTIVE OFFICER			TELEPHONE		DATE		
JOHN A OXFORD PLANT MANAGER	I CERTIFY UNDER PENALTY OF LAW THAT I HAVE PERSONALLY EXAMINED AND AM FAMILIAR WITH THE INFORMATION SUBMITTED HEREIN; AND BASED ON MY INQUIRY OF THOSE INDIVIDUALS IMMEDIATELY RESPONSIBLE FOR OBTAINING THE INFORMATION, I BELIEVE THE SUBMITTED INFORMATION IS TRUE, ACCURATE AND COMPLETE. I AM AWARE THAT THERE ARE SIGNIFICANT PENALTIES FOR SUBMITTING FALSE INFORMATION, INCLUDING THE POSSIBILITY OF FINE AND IMPRISONMENT. SEE 18 U.S.C § 1001 AND 33 U.S.C § 1319. *(Penalties under these statutes may include fines up to $10,000 and/or maximum imprisonment of between 6 months and 5 years.)*	J A Oxford	503	286-3681	90	9	13
TYPED OR PRINTED		SIGNATURE OF PRINCIPAL EXECUTIVE OFFICER OR AUTHORIZED AGENT	AREA CODE	NUMBER	YEAR	MO	DAY

COMMENT AND EXPLANATION OF ANY VIOLATIONS (*Reference all attachments here*)

Koppers015098

GENERAL INSTRUCTIONS

1. If form has been partially completed by preprinting, disregard instructions directed at entry of that information already preprinted.
2. Enter "PERMITTEE NAME/MAILING ADDRESS (and facility name/location, if different)," "PERMIT NUMBER," and "DISCHARGE NUMBER" where indicated. (A separate form is required for each discharge.)
3. Enter dates beginning and ending "MONITORING PERIOD" covered by form where indicated.
4. Enter each "PARAMETER" as specified in monitoring requirements of permit.
5. Enter "SAMPLE MEASUREMENT" data for each parameter under "QUANTITY" and "QUALITY" in units specified in permit. "AVERAGE" is normally arithmetic average (geometric average for bacterial parameters) of all sample measurements for each parameter obtained during "MONITORING PERIOD." "MAXIMUM" and "MINIMUM" are normally extreme high and low measurements obtained during "MONITORING PERIOD." (NOTE to municipals with secondary treatment requirement, enter 30-day average of sample measurements under "AVERAGE" and enter maximum 7-day average of sample measurements obtained during monitoring period under "MAXIMUM".
6. Enter "PERMIT REQUIREMENT" for each parameter under "QUANTITY" and "QUALITY" as specified in permit.
7. Under "NO. EX" enter number of sample measurements during monitoring period that exceed maximum (and/or minimum or 7-day average as appropriate) permit requirement for each parameter. If none, enter "0".
8. Enter "FREQUENCY OF ANALYSIS" both as "SAMPLE MEASUREMENT" (actual frequency of sampling and analysis used during monitoring period) and as "PERMIT REQUIREMENT" specified in permit. (e.g., Enter "CONT." for continuous monitoring, "1/7" for one day per week, "1/30" for one day per month, "1/90" for one day per quarter, etc.)
9. Enter "SAMPLE TYPE" both as "SAMPLE MEASUREMENT" (actual sample type used during monitoring period) and as "PERMIT REQUIREMENT." (e.g., Enter "GRAB" for individual sample, "24HC" for 24-hour composite, "N/A" for continuous monitoring, etc.)

FOLD HERE FIRST

10. WHERE VIOLATIONS OF PERMIT REQUIREMENTS ARE REPORTED, ATTACH A BRIEF EXPLANATION TO DESCRIBE CAUSE AND CORRECTIVE ACTIONS TAKEN. REFERENCE EACH VIOLATION BY DATE.
11. If "no discharge" occurs during monitoring period, enter "NO DISCHARGE" across form in place of data entry.
12. Enter "NAME/TITLE OF PRINCIPAL EXECUTIVE OFFICER" with "SIGNATURE OF PRINCIPAL EXECUTIVE OFFICER OR AUTHORIZED AGENT," "TELEPHONE NUMBER" and "DATE" at bottom of form.
13. Mail signed Report to Office(s) by date(s) specified in permit. Retain copy for your records.
14. More detailed instructions for use of this DISCHARGE MONITORING REPORT (DMR) form may be obtained from Office(s) specified in permit.

LEGAL NOTICE

This report is required by law (33 U.S.C. 1318; 40 C.F.R. 125.27). Failure to report or failure to report truthfully can result in civil penalties not to exceed $10,000 per day of violation; or in criminal penalties not to exceed $25,000 per day of violation, or by imprisonment for not more than one year, or by both.

FOLD HERE SECOND

PLACE STAMP HERE

FOLD HERE THIRD

STAPLE HERE

PERMITTEE NAME/ADDRESS (*Include Facility Name/Location if different*)

NAME KOPPERS INDUSTRIES INC

ADDRESS 7540 NW ST HELENS RD
PORTLAND OR 97210

FACILITY N W PLANT

LOCATION MULTNOMAH COUNTY

NATIONAL POLLUTANT DISCHARGE ELIMINATION SYSTEM (*NPDES*)
DISCHARGE MONITORING REPORT (*DMR*)

Form Approved.
OMB No. 2040-0004
Approval expires 9-30-85

(2-16) OR-100077-9 — PERMIT NUMBER

(17-19) — DISCHARGE NUMBER

MONITORING PERIOD	YEAR	MO	DAY		YEAR	MO	DAY
FROM	90	7	1	TO	90	8	1
	(20-21)	(22-23)	(24-25)		(26-27)	(28-29)	(30-31)

30773
47430

NOTE: Read instructions before completing this form.

PARAMETER (32-37)		(3 Card Only) QUANTITY OR LOADING (46-53) AVERAGE	(54-61) MAXIMUM	UNITS	(4 Card Only) QUALITY OR CONCENTRATION (38-45) MINIMUM	(46-53) AVERAGE	(54-61) MAXIMUM	UNITS	NO. EX (62-63)	FREQUENCY OF ANALYSIS (64-68)	SAMPLE TYPE (69-70)
FLOW	SAMPLE MEASUREMENT	NO FLOW									
	PERMIT REQUIREMENT										
TEMP	SAMPLE MEASUREMENT				NO FLOW						
	PERMIT REQUIREMENT										
P.H.	SAMPLE MEASUREMENT				NO FLOW						
	PERMIT REQUIREMENT										
OIL & GREASE	SAMPLE MEASUREMENT				NO FLOW						
	PERMIT REQUIREMENT										
PHENOLS	SAMPLE MEASUREMENT				NO FLOW						
	PERMIT REQUIREMENT										
	SAMPLE MEASUREMENT										
	PERMIT REQUIREMENT										
	SAMPLE MEASUREMENT										
	PERMIT REQUIREMENT										

NAME/TITLE PRINCIPAL EXECUTIVE OFFICER
JOHN A OXFORD
PLANT MANAGER
TYPED OR PRINTED

I CERTIFY UNDER PENALTY OF LAW THAT I HAVE PERSONALLY EXAMINED AND AM FAMILIAR WITH THE INFORMATION SUBMITTED HEREIN; AND BASED ON MY INQUIRY OF THOSE INDIVIDUALS IMMEDIATELY RESPONSIBLE FOR OBTAINING THE INFORMATION, I BELIEVE THE SUBMITTED INFORMATION IS TRUE, ACCURATE AND COMPLETE. I AM AWARE THAT THERE ARE SIGNIFICANT PENALTIES FOR SUBMITTING FALSE INFORMATION, INCLUDING THE POSSIBILITY OF FINE AND IMPRISONMENT. SEE 18 U.S.C. § 1001 AND 33 U.S.C. § 1319. *(Penalties under these statutes may include fines up to $10,000 and/or maximum imprisonment of between 6 months and 5 years.)*

SIGNATURE OF PRINCIPAL EXECUTIVE OFFICER OR AUTHORIZED AGENT

TELEPHONE: AREA CODE 503 — NUMBER 286-3681

DATE: YEAR 90 — MO 8 — DAY 10

COMMENT AND EXPLANATION OF ANY VIOLATIONS (*Reference all attachments here*)

Koppers015100

GENERAL INSTRUCTIONS

1. If form has been partially completed by preprinting, disregard instructions directed at entry of that information already preprinted.
2. Enter "PERMITTEE NAME/MAILING ADDRESS (and facility name/location, if different)," "PERMIT NUMBER," and "DISCHARGE NUMBER" where indicated. (A separate form is required for each discharge.)
3. Enter dates beginning and ending "MONITORING PERIOD" covered by form where indicated.
4. Enter each "PARAMETER" as specified in monitoring requirements of permit.
5. Enter "SAMPLE MEASUREMENT" data for each parameter under "QUANTITY" and "QUALITY" in units specified in permit. "AVERAGE" is normally arithmetic average (geometric average for bacterial parameters) of all sample measurements for each parameter obtained during "MONITORING PERIOD." "MAXIMUM" and "MINIMUM" are normally extreme high and low measurements obtained during "MONITORING PERIOD." (NOTE to municipals with secondary treatment requirement, enter 30-day average of sample measurements under "AVERAGE" and enter maximum 7-day average of sample measurements obtained during monitoring period under "MAXIMUM".
6. Enter "PERMIT REQUIREMENT" for each parameter under "QUANTITY" and "QUALITY" as specified in permit.
7. Under "NO. EX" enter number of sample measurements during monitoring period that exceed maximum (and/or minimum or 7-day average as appropriate) permit requirement for each parameter. If none, enter "0".
8. Enter "FREQUENCY OF ANALYSIS" both as "SAMPLE MEASUREMENT" (actual frequency of sampling and analysis used during monitoring period) and as "PERMIT REQUIREMENT" specified in permit. (e.g., Enter "CONT." for continuous monitoring, "1/7" for one day per week, "1/30" for one day per month, "1/90" for one day per quarter, etc.)
9. Enter "SAMPLE TYPE" both as "SAMPLE MEASUREMENT" (actual sample type used during monitoring period) and as "PERMIT REQUIREMENT." (e.g., Enter "GRAB" for individual sample, "24HC" for 24-hour composite, "N/A" for continuous monitoring, etc.)

FOLD HERE FIRST

---

10. WHERE VIOLATIONS OF PERMIT REQUIREMENTS ARE REPORTED, ATTACH A BRIEF EXPLANATION TO DESCRIBE CAUSE AND CORRECTIVE ACTIONS TAKEN. REFERENCE EACH VIOLATION BY DATE.
11. If "no discharge" occurs during monitoring period, enter "NO DISCHARGE" across form in place of data entry.
12. Enter "NAME/TITLE OF PRINCIPAL EXECUTIVE OFFICER" with "SIGNATURE OF PRINCIPAL EXECUTIVE OFFICER OR AUTHORIZED AGENT," "TELEPHONE NUMBER" and "DATE" at bottom of form.
13. Mail signed Report to Office(s) by date(s) specified in permit. Retain copy for your records.
14. More detailed instructions for use of this DISCHARGE MONITORING REPORT (DMR) form may be obtained from Office(s) specified in permit.

LEGAL NOTICE

This report is required by law (33 U.S.C. 1318; 40 C.F.R. 125.27). Failure to report or failure to report truthfully can result in civil penalties not to exceed $10,000 per day of violation; or in criminal penalties not to exceed $25,000 per day of violation; or by imprisonment for not more than one year, or by both.

FOLD HERE SECOND

PLACE STAMP HERE

FOLD HERE THIRD

STAPLE HERE

PERMITTEE NAME/ADDRESS (Include Facility Name/Location if different)

NAME Koppers Industries Inc

ADDRESS 7540 N.W. St Helens Rd

Portland Or 97210

FACILITY N.W. Plant

LOCATION Multnomah County

NATIONAL POLLUTANT DISCHARGE ELIMINATION SYSTEM (NPDES)

DISCHARGE MONITORING REPORT (DMR)

Form Approved.
OMB No. 2040-0004
Approval expires 9-30-85

(2-16) PERMIT NUMBER: OR-100077-9

(17-19) DISCHARGE NUMBER:

MONITORING PERIOD	YEAR	MO	DAY		YEAR	MO	DAY
FROM	90	7	1	TO	90	8	1
	(20-21)	(22-23)	(24-25)		(26-27)	(28-29)	(30-31)

30775
47430

NOTE: Read instructions before completing this form.

PARAMETER (32-37)		(3 Card Only) QUANTITY OR LOADING (46-53) AVERAGE	(54-61) MAXIMUM	UNITS	(4 Card Only) QUALITY OR CONCENTRATION (38-45) MINIMUM	(46-53) AVERAGE	(54-61) MAXIMUM	UNITS	NO. EX (62-63)	FREQUENCY OF ANALYSIS (64-68)	SAMPLE TYPE (69-70)
Flow	SAMPLE MEASUREMENT	no flow									
	PERMIT REQUIREMENT										
Temp	SAMPLE MEASUREMENT				no flow						
	PERMIT REQUIREMENT										
P.H.	SAMPLE MEASUREMENT				no flow						
	PERMIT REQUIREMENT										
oil + grease	SAMPLE MEASUREMENT				no flow						
	PERMIT REQUIREMENT										
Phenols	SAMPLE MEASUREMENT				no flow						
	PERMIT REQUIREMENT										
	SAMPLE MEASUREMENT										
	PERMIT REQUIREMENT										
	SAMPLE MEASUREMENT										
	PERMIT REQUIREMENT										

NAME/TITLE PRINCIPAL EXECUTIVE OFFICER

JOHNA OXFORD
PLANT MANAGER

TYPED OR PRINTED

I CERTIFY UNDER PENALTY OF LAW THAT I HAVE PERSONALLY EXAMINED AND AM FAMILIAR WITH THE INFORMATION SUBMITTED HEREIN AND BASED ON MY INQUIRY OF THOSE INDIVIDUALS IMMEDIATELY RESPONSIBLE FOR OBTAINING THE INFORMATION. I BELIEVE THE SUBMITTED INFORMATION IS TRUE, ACCURATE AND COMPLETE. I AM AWARE THAT THERE ARE SIGNIFICANT PENALTIES FOR SUBMITTING FALSE INFORMATION, INCLUDING THE POSSIBILITY OF FINE AND IMPRISONMENT. SEE 18 USC § 1001 AND 33 USC § 1319. *(Penalties under these statutes may include fines up to $10,000 and or maximum imprisonment of between 6 months and 5 years.)*

SIGNATURE OF PRINCIPAL EXECUTIVE OFFICER OR AUTHORIZED AGENT

TELEPHONE		DATE		
503	286-3681	90	8	10
AREA CODE	NUMBER	YEAR	MO	DAY

COMMENT AND EXPLANATION OF ANY VIOLATIONS *(Reference all attachments here)*

Koppers015102

PERMITTEE NAME/ADDRESS (Include Facility Name/Location if different)

NAME KOPPERS INDUSTRIES INC

ADDRESS 7540 NW ST HELENS RD

PORTLAND OR 97210

FACILITY N.W. PLANT

LOCATION MULTNOMAH COUNTY

NATIONAL POLLUTANT DISCHARGE ELIMINATION SYSTEM (NPDES)

DISCHARGE MONITORING REPORT (DMR)

Form Approved.
OMB No. 2040-0004
Approval expires 9-30-85

(2-16) PERMIT NUMBER: OR-100077-9

(17-19) DISCHARGE NUMBER:

3077-J
47430

MONITORING PERIOD	YEAR	MO	DAY		YEAR	MO	DAY
FROM	90	6	1	TO	90	7	1
	(20-21)	(22-23)	(24-25)		(26-27)	(28-29)	(30-31)

NOTE: Read instructions before completing this form.

PARAMETER (32-37)		(3 Card Only) QUANTITY OR LOADING (46-53) AVERAGE	(54-61) MAXIMUM	UNITS	(4 Card Only) QUALITY OR CONCENTRATION (38-45) MINIMUM	(46-53) AVERAGE	(54-61) MAXIMUM	UNITS	NO. EX (62-63)	FREQUENCY OF ANALYSIS (64-68)	SAMPLE TYPE (69-70)
FLOW	SAMPLE MEASUREMENT	3000							N/A	2/30	EST
	PERMIT REQUIREMENT			GPD							
TEMP	SAMPLE MEASUREMENT				69	69	69	°F	0	2/30	GRAB
	PERMIT REQUIREMENT						110				
PH	SAMPLE MEASUREMENT				6.4	6.50	6.6		0	2/30	GRAB
	PERMIT REQUIREMENT				6.0		9.0	SU			
OIL & GREASE	SAMPLE MEASUREMENT				0.4	0.4	0.4	MG/L	0	2/30	GRAB
	PERMIT REQUIREMENT				0	10	15				
PHENOLS	SAMPLE MEASUREMENT				0.14	0.1550	0.17	MG/L	0	2/30	GRAB
	PERMIT REQUIREMENT					0.5	0.7	(PPM)			
	SAMPLE MEASUREMENT										
	PERMIT REQUIREMENT										
	SAMPLE MEASUREMENT										
	PERMIT REQUIREMENT										

NAME/TITLE PRINCIPAL EXECUTIVE OFFICER

XXXXXX JOHN A OXFORD
PLANT MANAGER

TYPED OR PRINTED

I CERTIFY UNDER PENALTY OF LAW THAT I HAVE PERSONALLY EXAMINED AND AM FAMILIAR WITH THE INFORMATION SUBMITTED HEREIN; AND BASED ON MY INQUIRY OF THOSE INDIVIDUALS IMMEDIATELY RESPONSIBLE FOR OBTAINING THE INFORMATION, I BELIEVE THE SUBMITTED INFORMATION IS TRUE, ACCURATE AND COMPLETE. I AM AWARE THAT THERE ARE SIGNIFICANT PENALTIES FOR SUBMITTING FALSE INFORMATION, INCLUDING THE POSSIBILITY OF FINE AND IMPRISONMENT. SEE 18 U.S.C. § 1001 AND 33 U.S.C. § 1319. (Penalties under these statutes may include fines up to $10,000 and/or maximum imprisonment of between 6 months and 5 years.)

John A Oxford

SIGNATURE OF PRINCIPAL EXECUTIVE OFFICER OR AUTHORIZED AGENT

TELEPHONE		DATE		
503	286-3681	90	7	12
AREA CODE	NUMBER	YEAR	MO	DAY

COMMENT AND EXPLANATION OF ANY VIOLATIONS (Reference all attachments here)

Koppers015103

GENERAL INSTRUCTIONS

1. If form has been partially completed by preprinting, disregard instructions directed at entry of that information already preprinted.
2. Enter "PERMITTEE NAME/MAILING ADDRESS (and facility name/location, if different)," "PERMIT NUMBER," and "DISCHARGE NUMBER" where indicated. (A separate form is required for each discharge.)
3. Enter dates beginning and ending "MONITORING PERIOD" covered by form where indicated.
4. Enter each "PARAMETER" as specified in monitoring requirements of permit.
5. Enter "SAMPLE MEASUREMENT" data for each parameter under "QUANTITY" and "QUALITY" in units specified in permit. "AVERAGE" is normally arithmetic average (geometric average for bacterial parameters) of all sample measurements for each parameter obtained during "MONITORING PERIOD." "MAXIMUM" and "MINIMUM" are normally extreme high and low measurements obtained during "MONITORING PERIOD." (NOTE to municipals with secondary treatment requirement, enter 30-day average of sample measurements under "AVERAGE" and enter maximum 7-day average of sample measurements obtained during monitoring period under "MAXIMUM".
6. Enter "PERMIT REQUIREMENT" for each parameter under "QUANTITY" and "QUALITY" as specified in permit.
7. Under "NO. EX" enter number of sample measurements during monitoring period that exceed maximum (and/or minimum or 7-day average as appropriate) permit requirement for each parameter. If none, enter "0".
8. Enter "FREQUENCY OF ANALYSIS" both as "SAMPLE MEASUREMENT" (actual frequency of sampling and analysis used during monitoring period) and as "PERMIT REQUIREMENT" specified in permit. (e.g., Enter "CONT." for continuous monitoring, "1/7" for one day per week, "1/30" for one day per month, "1/90" for one day per quarter, etc.)
9. Enter "SAMPLE TYPE" both as "SAMPLE MEASUREMENT" (actual sample type used during monitoring period) and as "PERMIT REQUIREMENT." (e.g., Enter "GRAB" for individual sample, "24HC" for 24-hour composite, "N/A" for continuous monitoring, etc.)

(FOLD HERE FIRST)

10. WHERE VIOLATIONS OF PERMIT REQUIREMENTS ARE REPORTED, ATTACH A BRIEF EXPLANATION TO DESCRIBE CAUSE AND CORRECTIVE ACTIONS TAKEN. REFERENCE EACH VIOLATION BY DATE.
11. If "no discharge" occurs during monitoring period, enter "NO DISCHARGE" across form in place of data entry.
12. Enter "NAME/TITLE OF PRINCIPAL EXECUTIVE OFFICER" with "SIGNATURE OF PRINCIPAL EXECUTIVE OFFICER OR AUTHORIZED AGENT," "TELEPHONE NUMBER," and "DATE" at bottom of form.
13. Mail signed Report to Office(s) by date(s) specified in permit. Retain copy for your records.
14. More detailed instructions for use of this DISCHARGE MONITORING REPORT (DMR) form may be obtained from Office(s) specified in permit.

LEGAL NOTICE

This report is required by law (33 U.S.C. 1318; 40 C.F.R. 125.27). Failure to report or failure to report truthfully can result in civil penalties not to exceed $10,000 per day of violation; or in criminal penalties not to exceed $25,000 per day of violation, or by imprisonment for not more than one year, or by both.

NATIONAL POLLUTANT DISCHARGE ELIMINATION SYSTEM (NPDES)
DISCHARGE MONITORING REPORT (DMR)

PERMITTEE NAME/ADDRESS (including Facility Name/Location if different)
NAME
ADDRESS
FACILITY
LOCATION

PERMIT NUMBER
MONITORING PERIOD
FROM YEAR MO DAY TO YEAR MO DAY

PARAMETER	QUANTITY AVERAGE	QUANTITY MAXIMUM	UNITS	QUALITY AVERAGE	QUALITY MAXIMUM	UNITS	NO. EX.	FREQUENCY OF ANALYSIS	SAMPLE TYPE
	SAMPLE MEASUREMENT / PERMIT REQUIREMENT	SAMPLE MEASUREMENT / PERMIT REQUIREMENT		SAMPLE MEASUREMENT / PERMIT REQUIREMENT	SAMPLE MEASUREMENT / PERMIT REQUIREMENT			SAMPLE MEASUREMENT / PERMIT REQUIREMENT	SAMPLE MEASUREMENT / PERMIT REQUIREMENT

FOLD HERE SECOND

FOLD HERE THIRD

STAPLE HERE

NAME/TITLE PRINCIPAL EXECUTIVE OFFICER

I CERTIFY UNDER PENALTY OF LAW THAT I HAVE PERSONALLY EXAMINED AND AM FAMILIAR WITH THE INFORMATION SUBMITTED IN THIS DOCUMENT AND ALL ATTACHMENTS AND THAT, BASED ON MY INQUIRY OF THOSE INDIVIDUALS IMMEDIATELY RESPONSIBLE FOR OBTAINING THE INFORMATION, I BELIEVE THE SUBMITTED INFORMATION IS TRUE, ACCURATE, AND COMPLETE. I AM AWARE THAT THERE ARE SIGNIFICANT PENALTIES FOR SUBMITTING FALSE INFORMATION, INCLUDING THE POSSIBILITY OF FINE AND IMPRISONMENT. (See 18 U.S.C. 1001 and 33 U.S.C. 1319 and 40 CFR 122.22(k))

SIGNATURE OF PRINCIPAL EXECUTIVE OFFICER OR AUTHORIZED AGENT

TELEPHONE

DATE

PLACE STAMP HERE

EPA Form 3320-1 (Rev. 12-01) PREVIOUS EDITION IS OBSOLETE AND MAY NOT BE USED

Koppers015104

COFFEY LABORATORIES, INC.
12423 N.E. WHITAKER WAY
PORTLAND, OR 97230
PHONE: (503) 254-1794
FAX: (503) 254-1452

June 26, 1990
Log #A900615-AC2

Koppers Industry
7540 SW St. Helens Road
Portland, OR 97210-3663
Attention: John Oxford

Samples Collected: 06/15/90, 1425 hrs.
Samples Received: 06/15/90

ANALYSIS	METHOD	DETECTION LIMIT	W-W-T-1 RESULTS	W-W-T-2 RESULTS
Oil & Grease	EPA 413.2	0.2	0.4	0.4
Total Phenols	EPA 420.1	0.05	0.17	0.14

Results expressed as degrees mg/L unless otherwise noted.

Sincerely,

Victor A. Perry,
Quality Assurance

Sincerely,

Renee Chauvin,
Technical Director

RJC/daj

This report is for the sole and exclusive use of the client. Samples are retained a maximum of 15 days from the report date, or until the maximum holding time expires.

RECEIVED
JUL 2 1990
KOPPERS INDS., INC.
PORTLAND, OR

6-15-90
W-W-T-1
Ph 6.4

water Temp. 69

6-15-90

w-w- T-2

Ph 6.6

water Temp- 69

COFFEY LABORATORIES INC.

12423 N.E. WHITAKER WAY
PORTLAND, OREGON 97230

CHAIN OF CUSTODY

(503) 254-1794
FAX (503) 254-1452

PROJECT #:

PROJECT NAME:

PAGE_____ OF_____ PAGE(S)
PLEASE PRINT OR TYPE

FOR LABORATORY USE ONLY

JOB#: A900615-AC2

CUSTABBR: Koppers

COMPANY NAME: Koppers Ind.
REPORT ATTENTION: John Oxford

SAMPLES COLLECTED BY: A. Hoffman

FIELD IDENTIFICATION: ONE LINE PER SAMPLE CONTAINER	LAB LOC	LAB ID	COLLECTION DATE	COLLECTION TIME	MEDIA	ANALYSES REQUESTED	ANALYSIS REMARKS:
W-W-T-1		1	6-15-90	2:25PM		oil + Grease	
W-W-T-1			"	"		Phenols	
W-W-T-2		2	"	"		oil + Grease	
W-W-T-2			"	"		Phenols	

RELINQUISHED BY: A. Hoffman DATE/TIME 6-15-90

RELINQUISHED BY: _____ DATE/TIME

LAB USE:

RELINQUISHED BY: _____ DATE/TIME

RECEIVED BY LAB: Eatherin DATE/TIME 6/15/90 1620

SAMPLE REMARKS:

EXPRESS UPS MAIL CXX GREY TAXI LAB

WHITE COPY - COFFEY LABORATORIES

PINK COPY - CLIENT'S COPY

SHADED AREA FOR LABORATORY USE ONLY
CHAIN OF CUSTODY INSTRUCTIONS ON BACK OF PINK COPY

(1/90)

Koppers015108

COFFEY LABORATORIES, INC.
12423 N.E. WHITAKER WAY
PORTLAND, OR 97230
PHONE: (503) 254-1794
FAX: (503) 254-1452

CHAIN OF CUSTODY INFORMATION / INSTRUCTION SHEET

PROJECT NUMBER -- Applies only to samples submitted by the company. This data is provided at the companies discretion.

PROJECT NAME -- Your company's project name. This data is provided at the company's discretion.

COMPANY NAME -- Name of the Company or individual requesting the analysis from Coffey Laboratories, Inc.

REPORT ATTENTION -- Name of the person who receives the laboratory report.

SAMPLE COLLECTED BY -- The person who took the sample signs this box and gives his/her title.

FIELD ID -- A short description of the sample point (For example; "Effluent from sand filter"). This description will appear on the report. Use one line per sample bottle.

COLLECTION DATE -- The date on which the sample(s) was/were collected.

COLLECTION TIME -- The time at which the sample(s) was/were collected.

MEDIA -- This is a description of the sample matrix.

ANALYSIS REQUESTED -- Make one column for each parameter or group of parameters associated to a bottle.

FOR LAB USE ONLY -- Do not mark in this area (Laboratory location & ID). All shaded areas are for laboratory use only. Please do not write in these areas.

REMARKS -- Record any comments about each sample on the same line as the sample description, e.g., "Wastewater contains VOCs".

RELINQUISHED BY -- The sampler signs this box when he/she gives the sample to someone else, and then fills in the date and time they left his possession.

RECEIVED BY -- The person who receives the samples signs here and fills in the date and time received. The date and time should be the same as the last one unless the samples were shipped.

SAMPLE REMARKS -- Record any comments regarding the sample(s) as a whole or information pertinent to the sample.

SAMPLES SHIPPED VIA -- How the samples are being shipped to the laboratory, e.g., "UPS".

(12/06/89)

5-25-90
w-w- T-4
Ph 6.8

water
Temp. 60

PERMITTEE NAME/ADDRESS (Include Facility Name/Location if different)

NAME: Koppers Industries Inc.
ADDRESS: 4540 N.W. St. Helens Rd.
Portland Or. 97210

FACILITY: N.W. Plant
LOCATION: Multnomah County

NATIONAL POLLUTANT DISCHARGE ELIMINATION SYSTEM (NPDES)
DISCHARGE MONITORING REPORT (DMR)

Form Approved.
OMB No. 2040-0004
Approval expires 9-30-85

(2-16) PERMIT NUMBER: OR-100077-9

(17-19) DISCHARGE NUMBER:

3077-J
47430

MONITORING PERIOD	YEAR	MO	DAY		YEAR	MO	DAY
FROM	90	6	1	TO	90	7	1
	(20-21)	(22-23)	(24-25)		(26-27)	(28-29)	(30-31)

NOTE: Read instructions before completing this form.

PARAMETER (32-37)		(3 Card Only) QUANTITY OR LOADING (46-53) AVERAGE	(54-61) MAXIMUM	UNITS	(4 Card Only) QUALITY OR CONCENTRATION (38-45) MINIMUM	(46-53) AVERAGE	(54-61) MAXIMUM	UNITS	NO. EX (62-63)	FREQUENCY OF ANALYSIS (64-68)	SAMPLE TYPE (69-70)
Flow	SAMPLE MEASUREMENT	3000							N/A	2/30	Est.
	PERMIT REQUIREMENT			GPD							
Temp	SAMPLE MEASUREMENT				69	69	69	°F	0	2/30	GRAB
	PERMIT REQUIREMENT										
Ph	SAMPLE MEASUREMENT				6.4	6.50	6.6		0	2/30	GRAB
	PERMIT REQUIREMENT				6.0		9.0	SU			
Oil & Grease	SAMPLE MEASUREMENT				0.4	0.4	0.4	mg/L	0	2/30	GRAB
	PERMIT REQUIREMENT				0.3		0.9				
Phenols	SAMPLE MEASUREMENT				0.14	0.1550	0.17	mg/L	0	2/30	GRAB
	PERMIT REQUIREMENT					0.05	0.7	(PPM)			
	SAMPLE MEASUREMENT										
	PERMIT REQUIREMENT										
	SAMPLE MEASUREMENT										
	PERMIT REQUIREMENT										

NAME/TITLE PRINCIPAL EXECUTIVE OFFICER: John A Oxford, Plant Manager

TYPED OR PRINTED

I CERTIFY UNDER PENALTY OF LAW THAT I HAVE PERSONALLY EXAMINED AND AM FAMILIAR WITH THE INFORMATION SUBMITTED HEREIN, AND BASED ON MY INQUIRY OF THOSE INDIVIDUALS IMMEDIATELY RESPONSIBLE FOR OBTAINING THE INFORMATION, I BELIEVE THE SUBMITTED INFORMATION IS TRUE, ACCURATE AND COMPLETE. I AM AWARE THAT THERE ARE SIGNIFICANT PENALTIES FOR SUBMITTING FALSE INFORMATION, INCLUDING THE POSSIBILITY OF FINE AND IMPRISONMENT. SEE 18 USC § 1001 AND 33 USC § 1319. (Penalties under these statutes may include fines up to $10,000 and/or maximum imprisonment of between 6 months and 5 years.)

SIGNATURE OF PRINCIPAL EXECUTIVE OFFICER OR AUTHORIZED AGENT

TELEPHONE		DATE		
AREA CODE	NUMBER	YEAR	MO	DAY
503	286-3681	90	7	12

COMMENT AND EXPLANATION OF ANY VIOLATIONS (Reference all attachments here)

Koppers015111

	WWW 1	WWW 2		
	45000	45000	90000 ÷ 30 =	3000
Flow.	3000			
Temp.	69	69	= 138 ÷ 2 =	69
Ph.	6.4	6.6	= 13.0 ÷ 2	6.50
Oil + grease	0.4	0.4	= 0.8 ÷ 2	0.4
Phenols.	0.17	0.14	= 0.31 ÷ 2	0.1550

PERMITTEE NAME/ADDRESS (*Include Facility Name/Location if different*)

NAME KOPPERS ~~INDUSTRIES~~ INDUSTRIES INC

ADDRESS 7540 NW ST HELENS RD
PORTLAND OR 97210

FACILITY N W PLANT

LOCATION MULTNOMAH COUNTY

NATIONAL POLLUTANT DISCHARGE ELIMINATION SYSTEM (*NPDES*)
DISCHARGE MONITORING REPORT (*DMR*)

Form Approved.
OMB No. 2040-0004
Approval expires 9-30-85

(2-16) OR-100077-9 — PERMIT NUMBER

(17-19) — DISCHARGE NUMBER

3077-J / 47430

MONITORING PERIOD	YEAR	MO	DAY		YEAR	MO	DAY
FROM	90	5	1	TO	90	6	1
	(20-21)	(22-23)	(24-25)		(26-27)	(28-29)	(30-31)

NOTE: Read instructions before completing this form.

PARAMETER (32-37)		(3 Card Only) QUANTITY OR LOADING (46-53) AVERAGE	(54-61) MAXIMUM	UNITS	(4 Card Only) QUALITY OR CONCENTRATION (38-45) MINIMUM	(46-53) AVERAGE	(54-61) MAXIMUM	UNITS	NO. EX (62-63)	FREQUENCY OF ANALYSIS (64-68)	SAMPLE TYPE (69-70)
FLOW	SAMPLE MEASUREMENT	5806							N/A	4/31	EST
	PERMIT REQUIREMENT			GPD							
TEMP	SAMPLE MEASUREMENT				60	60.5	61	°F	0	4/31	GRAB
	PERMIT REQUIREMENT										
PH	SAMPLE MEASUREMENT				6.7	6.75	6.8		0	4/31	GRAB
	PERMIT REQUIREMENT				6.0		9.0	SU			
OIL & GREASE	SAMPLE MEASUREMENT				0.3	0.65	0.9	MG/L	0	4/31	GRAB
	PERMIT REQUIREMENT					10	15				
PHENOLS	SAMPLE MEASUREMENT				0.16	0.2025	0.25	MG/L	0	4/31	GRAB
	PERMIT REQUIREMENT					0.5	0.7	(PPM)			
	SAMPLE MEASUREMENT										
	PERMIT REQUIREMENT										
	SAMPLE MEASUREMENT										
	PERMIT REQUIREMENT										

NAME/TITLE PRINCIPAL EXECUTIVE OFFICER			TELEPHONE		DATE		
JOHN A OXFORD PLANT ~~MMXX~~ MANAGER	I CERTIFY UNDER PENALTY OF LAW THAT I HAVE PERSONALLY EXAMINED AND AM FAMILIAR WITH THE INFORMATION SUBMITTED HEREIN; AND BASED ON MY INQUIRY OF THOSE INDIVIDUALS IMMEDIATELY RESPONSIBLE FOR OBTAINING THE INFORMATION, I BELIEVE THE SUBMITTED INFORMATION IS TRUE, ACCURATE AND COMPLETE. I AM AWARE THAT THERE ARE SIGNIFICANT PENALTIES FOR SUBMITTING FALSE INFORMATION, INCLUDING THE POSSIBILITY OF FINE AND IMPRISONMENT. SEE 18 U.S.C. § 1001 AND 33 U.S.C. § 1319. (*Penalties under these statutes may include fines up to $10,000 and/or maximum imprisonment of between 6 months and 5 years.*)	John A Oxford	503	286-3681	90	6	12
TYPED OR PRINTED		SIGNATURE OF PRINCIPAL EXECUTIVE OFFICER OR AUTHORIZED AGENT	AREA CODE	NUMBER	YEAR	MO	DAY

COMMENT AND EXPLANATION OF ANY VIOLATIONS (*Reference all attachments here*)

Koppers015113

GENERAL INSTRUCTIONS

1. If form has been partially completed by preprinting, disregard instructions directed at entry of that information already preprinted.
2. Enter "PERMITTEE NAME/MAILING ADDRESS (and facility name/location, if different)," "PERMIT NUMBER," and "DISCHARGE NUMBER" where indicated. (A separate form is required for each discharge.)
3. Enter dates beginning and ending "MONITORING PERIOD" covered by form where indicated.
4. Enter each "PARAMETER" as specified in monitoring requirements of permit.
5. Enter "SAMPLE MEASUREMENT" data for each parameter under "QUANTITY" and "QUALITY" in units specified in permit. "AVERAGE" is normally arithmetic average (geometric average for bacterial parameters) of all sample measurements for each parameter obtained during "MONITORING PERIOD." "MAXIMUM" and "MINIMUM" are normally extreme high and low measurements obtained during "MONITORING PERIOD." (NOTE to municipals with secondary treatment requirement, enter 30-day average of sample measurements under "AVERAGE" and enter maximum 7-day average of sample measurements obtained during monitoring period under "MAXIMUM".
6. Enter "PERMIT REQUIREMENT" for each parameter under "QUANTITY" and "QUALITY" as specified in permit.
7. Under "NO. EX" enter number of sample measurements during monitoring period that exceed maximum (and/or minimum or 7-day average as appropriate) permit requirement for each parameter. If none, enter "0".
8. Enter "FREQUENCY OF ANALYSIS" both as "SAMPLE MEASUREMENT" (actual frequency of sampling and analysis used during monitoring period) and as "PERMIT REQUIREMENT" specified in permit. (e.g., Enter "CONT." for continuous monitoring, "1/7" for one day per week, "1/30" for one day per month, "1/90" for one day per quarter, etc.)
9. Enter "SAMPLE TYPE" both as "SAMPLE MEASUREMENT" (actual sample type used during monitoring period) and as "PERMIT REQUIREMENT." (e.g., Enter "GRAB" for individual sample, "24HC" for 24-hour composite, "N/A" for continuous monitoring, etc.)

FOLD HERE FIRST

10. WHERE VIOLATIONS OF PERMIT REQUIREMENTS ARE REPORTED, ATTACH A BRIEF EXPLANATION TO DESCRIBE CAUSE AND CORRECTIVE ACTIONS TAKEN. REFERENCE EACH VIOLATION BY DATE.
11. If "no discharge" occurs during monitoring period, enter "NO DISCHARGE" across form in place of data entry.
12. Enter "NAME/TITLE OF PRINCIPAL EXECUTIVE OFFICER" with "SIGNATURE OF PRINCIPAL EXECUTIVE OFFICER OR AUTHORIZED AGENT," "TELEPHONE NUMBER" and "DATE" at bottom of form.
13. Mail signed Report to Office(s) by date(s) specified in permit. Retain copy for your records.
14. More detailed instructions for use of this DISCHARGE MONITORING REPORT (DMR) form may be obtained from Office(s) specified in permit.

LEGAL NOTICE

This report is required by law (33 U.S.C. 1318; 40 C.F.R. 125.27). Failure to report or failure to report truthfully can result in civil penalties not to exceed $10,000 per day of violation; or in criminal penalties not to exceed $25,000 per day of violation, or by imprisonment for not more than one year, or by both.

FOLD HERE SECOND

PLACE STAMP HERE

FOLD HERE THIRD

STAPLE HERE

5-8-90
W-W-T-2
Water Temp - 61

Ph 6.7

5-8-90

W-W-T-1

water Temp. 61

Ph. 6.8

COFFEY LABORATORIES INC.
12423 N.E. WHITAKER WAY
PORTLAND, OREGON 97230

CHAIN OF CUSTODY
(503) 254-1794
FAX (503) 254-1452

PROJECT #:

PROJECT NAME:

PAGE ____ OF ____ PAGE(S)
PLEASE PRINT OR TYPE

FOR LABORATORY USE ONLY

COMPANY NAME: Koppers Ind.
REPORT ATTENTION: John Oxford

JOB#: A9105 08-AU2
CUSTABBR: Koppers

SAMPLES COLLECTED BY: George Hoffman

FIELD IDENTIFICATION: ONE LINE PER SAMPLE CONTAINER	LAB LOG ID	COLLECTION DATE	COLLECTION TIME	MEDIA	ANALYSES REQUESTED	ANALYSIS REMARKS:
W-W-T-1		5-8-90	2:50	WW	Oil + Grease	
W-W-T-1		"	"		Phenols	
W-W-T-2		"	"		Oil + Grease	
W-W-T-2		"	"		Phenols	

RELINQUISHED BY: George Hoffman DATE/TIME 5-8-90
RELINQUISHED BY: DATE/TIME
RELINQUISHED BY: DATE/TIME
RECEIVED BY LAB: [illegible] 5/8/90 1545 DATE/TIME
LAB USE:

SAMPLE REMARKS:

EXPRESS UPS MAIL CXX GREY TAXI LAB

WHITE COPY - COFFEY LABORATORIES
PINK COPY - CLIENT'S COPY

SHADED AREA FOR LABORATORY USE ONLY
CHAIN OF CUSTODY INSTRUCTIONS ON BACK OF PINK COPY

(1/90)

Koppers015117

COFFEY LABORATORIES, INC.
12423 N.E. WHITAKER WAY
PORTLAND, OR 97230
PHONE: (503) 254-1794
FAX: (503) 254-1452

CHAIN OF CUSTODY INFORMATION / INSTRUCTION SHEET

PROJECT NUMBER -- Applies only to samples submitted by the company. This data is provided at the companies discretion.

PROJECT NAME -- Your company's project name. This data is provided at the company's discretion.

COMPANY NAME -- Name of the Company or individual requesting the analysis from Coffey Laboratories, Inc.

REPORT ATTENTION -- Name of the person who receives the laboratory report.

SAMPLE COLLECTED BY -- The person who took the sample signs this box and gives his/her title.

FIELD ID -- A short description of the sample point (For example; "Effluent from sand filter"). This description will appear on the report. Use one line per sample bottle.

COLLECTION DATE -- The date on which the sample(s) was/were collected.

COLLECTION TIME -- The time at which the sample(s) was/were collected.

MEDIA -- This is a description of the sample matrix.

ANALYSIS REQUESTED -- Make one column for each parameter or group of parameters associated to a bottle.

FOR LAB USE ONLY -- Do not mark in this area (Laboratory location & ID). All shaded areas are for laboratory use only. Please do not write in these areas.

REMARKS -- Record any comments about each sample on the same line as the sample description, e.g., "Wastewater contains VOCs".

RELINQUISHED BY -- The sampler signs this box when he/she gives the sample to someone else, and then fills in the date and time they left his possession.

RECEIVED BY -- The person who receives the samples signs here and fills in the date and time received. The date and time should be the same as the last one unless the samples were shipped.

SAMPLE REMARKS -- Record any comments regarding the sample(s) as a whole or information pertinent to the sample.

SAMPLES SHIPPED VIA -- How the samples are being shipped to the laboratory, e.g., "UPS".

(12/06/89)

COFFEY LABORATORIES, INC.
12423 N.E. WHITAKER WAY
PORTLAND, OR 97230
PHONE: (503) 254-1794
FAX: (503) 254-1452

Sent to John

May 17, 1990
Log # A900508-AU2

Koppers Co., Inc.
7540 NW St. Helens Rd.
Portland, OR 97210-3663
Attention: John Oxford

Sample Collected: 5/8/90, 1450 hrs
Sample Received: 5/8/90
Sample ID: #1 W-W-T-1
#2 W-W-T-2

ANALYSIS	METHOD	DETECTION LIMIT	SAMPLE #1	SAMPLE #2
Oil & Grease	EPA 413.2	0.2	0.3	0.5
Total Phenols	EPA 420.1	0.05	0.22	0.25

Results expressed as mg/L unless otherwise noted.

Sincerely,

Victor A. Perry,
Quality Assurance

Sincerely,

Renee Chauvin,
Technical Director

RJC/mlh

This report is for the sole and exclusive use of the client. Samples are retained a maximum of 15 days from the report date, or until the maximum holding time expires.

RECEIVED
MAY 22 1990
KOPPERS INDS., INC.
PORTLAND, OR

5-25-90

W-W-T-3

Ph 6.7

water

Temp 60

NOTES 6/11/90

	#3	#4
Oil + Grease	0.9	0.9
Phenols.	0.16	0.18

COFFEY LABORATORIES INC.
12423 N.E. WHITAKER WAY
PORTLAND, OREGON 97230

CHAIN OF CUSTODY
(503) 254-1794
FAX (503) 254-1452

PROJECT #:	PROJECT NAME:	PAGE____ OF ____ PAGE(S) PLEASE PRINT OR TYPE	FOR LABORATORY USE ONLY
COMPANY NAME: [illegible] Inc. REPORT ATTENTION: John Oxford			JOB#: A200525-AP2
SAMPLES COLLECTED BY:			CUSTABBR:

FIELD IDENTIFICATION: ONE LINE PER SAMPLE CONTAINER	LAB LOC	LAB ID	COLLECTION DATE	COLLECTION TIME	MEDIA	ANALYSES REQUESTED	ANALYSIS REMARKS:
W-W-1 - T-3			5-25-00	3:00 PM		oil & Grease	
W-W-2 - T-3			"	"		Phenols	
W-W-1 - T-4			"	"		oil & Grease	
W-W-2 - T-4			"	"		Phenols	

RELINQUISHED BY: George Hoffman	DATE/TIME 5-25-00	RELINQUISHED BY:	DATE/TIME	LAB USE:
RELINQUISHED BY:	DATE/TIME	RECEIVED BY LAB: Beverly Clement	DATE/TIME 5/25/00 4:30	
SAMPLE REMARKS:				EXPRESS UPS MAIL CXX GREY TAXI LAB

WHITE COPY - COFFEY LABORATORIES

PINK COPY - CLIENT'S COPY

SHADED AREA FOR LABORATORY USE ONLY

CHAIN OF CUSTODY INSTRUCTIONS ON BACK OF PINK COPY

(1/90)

Koppers015122

COFFEY LABORATORIES, INC.
12423 N.E. WHITAKER WAY
PORTLAND, OR 97230
PHONE: (503) 254-1794
FAX: (503) 254-1452

CHAIN OF CUSTODY INFORMATION / INSTRUCTION SHEET

PROJECT NUMBER -- Applies only to samples submitted by the company. This data is provided at the companies discretion.

PROJECT NAME -- Your company's project name. This data is provided at the company's discretion.

COMPANY NAME -- Name of the Company or individual requesting the analysis from Coffey Laboratories, Inc.

REPORT ATTENTION -- Name of the person who receives the laboratory report.

SAMPLE COLLECTED BY -- The person who took the sample signs this box and gives his/her title.

FIELD ID -- A short description of the sample point (For example; "Effluent from sand filter"). This description will appear on the report. Use one line per sample bottle.

COLLECTION DATE -- The date on which the sample(s) was/were collected.

COLLECTION TIME -- The time at which the sample(s) was/were collected.

MEDIA -- This is a description of the sample matrix.

ANALYSIS REQUESTED -- Make one column for each parameter or group of parameters associated to a bottle.

FOR LAB USE ONLY -- Do not mark in this area (Laboratory location & ID). All shaded areas are for laboratory use only. Please do not write in these areas.

REMARKS -- Record any comments about each sample on the same line as the sample description, e.g., "Wastewater contains VOCs".

RELINQUISHED BY -- The sampler signs this box when he/she gives the sample to someone else, and then fills in the date and time they left his possession.

RECEIVED BY -- The person who receives the samples signs here and fills in the date and time received. The date and time should be the same as the last one unless the samples were shipped.

SAMPLE REMARKS -- Record any comments regarding the sample(s) as a whole or information pertinent to the sample.

SAMPLES SHIPPED VIA -- How the samples are being shipped to the laboratory, e.g., "UPS".

(12/06/89)

PERMITTEE NAME/ADDRESS (*Include Facility Name/Location if different*)

NAME: Koppers Inc. Inc.

ADDRESS: 70 [illegible] North Water Rd
Portland Or. 97211

FACILITY: Tie Plant

LOCATION: Multnomah County

NATIONAL POLLUTANT DISCHARGE ELIMINATION SYSTEM (*NPDES*)
DISCHARGE MONITORING REPORT (*DMR*)

Form Approved.
OMB No. 2040-0004
Approval expires 9-30-85

(2-16) PERMIT NUMBER: OR-100077-9

(17-19) DISCHARGE NUMBER:

MONITORING PERIOD	YEAR	MO	DAY		YEAR	MO	DAY
FROM	90	5	1	TO	90	6	1
	(20-21)	(22-23)	(24-25)		(26-27)	(28-29)	(30-31)

3077-J
47430

NOTE: Read instructions before completing this form.

PARAMETER (32-37)		(3 Card Only) QUANTITY OR LOADING (46-53) AVERAGE	(54-61) MAXIMUM	UNITS	(4 Card Only) QUALITY OR CONCENTRATION (38-45) MINIMUM	(46-53) AVERAGE	(54-61) MAXIMUM	UNITS	NO. EX (62-63)	FREQUENCY OF ANALYSIS (64-68)	SAMPLE TYPE (69-70)
Flow	SAMPLE MEASUREMENT	5806							N/P	4/31	Est
	PERMIT REQUIREMENT		N/A	GPD							
Temp	SAMPLE MEASUREMENT				60	60.3	61	°F	0	4/31	GRAB
	PERMIT REQUIREMENT										
Ph.	SAMPLE MEASUREMENT				6.7	6.75	6.8		0	4/31	GRAB
	PERMIT REQUIREMENT				6.0		9.0	SU			
Oil + Grease	SAMPLE MEASUREMENT				0.3	0.65	0.9	mg/L	0	4/31	GRAB
	PERMIT REQUIREMENT					10	15				
Phenols	SAMPLE MEASUREMENT				0.16	0.20	0.25	mg/L	0	4/31	GRAB
	PERMIT REQUIREMENT					0.5	0.7	(PPM)			
	SAMPLE MEASUREMENT										
	PERMIT REQUIREMENT										
	SAMPLE MEASUREMENT										
	PERMIT REQUIREMENT										

NAME/TITLE PRINCIPAL EXECUTIVE OFFICER

TYPED OR PRINTED

I CERTIFY UNDER PENALTY OF LAW THAT I HAVE PERSONALLY EXAMINED AND AM FAMILIAR WITH THE INFORMATION SUBMITTED HEREIN; AND BASED ON MY INQUIRY OF THOSE INDIVIDUALS IMMEDIATELY RESPONSIBLE FOR OBTAINING THE INFORMATION, I BELIEVE THE SUBMITTED INFORMATION IS TRUE, ACCURATE AND COMPLETE. I AM AWARE THAT THERE ARE SIGNIFICANT PENALTIES FOR SUBMITTING FALSE INFORMATION, INCLUDING THE POSSIBILITY OF FINE AND IMPRISONMENT. SEE 18 U.S.C. § 1001 AND 33 U.S.C. § 1319. (*Penalties under these statutes may include fines up to $10,000 and/or maximum imprisonment of between 6 months and 5 years.*)

SIGNATURE OF PRINCIPAL EXECUTIVE OFFICER OR AUTHORIZED AGENT

TELEPHONE: AREA CODE | NUMBER

DATE: YEAR | MO | DAY

COMMENT AND EXPLANATION OF ANY VIOLATIONS (*Reference all attachments here*)

EPA Form 3320-1 (Rev. 10-79) PREVIOUS EDITION TO BE USED UNTIL SUPPLY IS EXHAUSTED (REPLACES EPA FORM T-40 WHICH MAY NOT BE USED.)

PAGE OF

Koppers015124

6/10 Report.

	WW1	WW2	WW3	WW4
	45000	45000	45000	45000 = 180000 ÷ 31 = 5806
flow.	5806 NA GPD			NA 4/31 Est.
Temp.	61	61	60	60 = 242 ÷ 4 = 60.5
Ph.	6.8	6.7	6.7	6.8 = 27.0 ÷ 4 = 6.75
Oil + Grease.	0.3	0.5	0.9	0.9 = 2.6 ÷ 4 = 0.65
Phenols.	0.22	0.25	0.16	0.18 = 0.81 ÷ 4 = 0.2025

COFFEY LABORATORIES, INC.
12423 N.E. WHITAKER WAY
PORTLAND, OR 97230
PHONE: (503) 254-1794
FAX: (503) 254-1452

June 11, 1990
Log #A900525-AP2

Koppers Industry
7540 NW St. Helens Road
Portland, OR 97210-3663
Attention: John Oxford

Samples Collected: 05/25/90, 1510 hrs.
Samples Received: 05/25/90

ANALYSIS	METHOD	DETECTION LIMIT	W-W-T-3 RESULTS	~~WW-T-4~~ RESULTS
Oil & Grease	EPA 413.2	0.2	0.9	0.9
Total Phenols	EPA 420.1	0.05	0.16	0.18

Results expressed as mg/L unless otherwise noted.

Sincerely,

Victor A. Perry,
Quality Assurance

Sincerely,

Renee Chauvin,
Technical Director

RJC/daj

This report is for the sole and exclusive use of the client. Samples are retained a maximum of 15 days from the report date, or until the maximum holding time expires.

RECEIVED
JUN 14 1990
KOPPERS INDS., INC.
PORTLAND, OR

KOPPERS INDUSTRIES

Koppers Industries, Inc.
7540 N.W. Saint Helens Road
Portland, OR 97210-3663

Telephone: (503) 286-3681
FAX: (503) 285-2831

May 21, 1990

DEQ-Northwest Region
811 SW 6th Ave.
Portland Oregon 97204

Dear Sir:

Attached is a correct DEQ Report that covers the period of Apr 1, 1990 to May 1, 1990.

We are enclosing a photo copy of the original sent to you with the typing errors circled in red.

We are very sorry for any inconvenience this may have caused.

Yours Truly.

John A Oxford

John A. Oxford
Plant Manager

CC:BS

JAO:mn

PERMITTEE NAME/ADDRESS (*Include Facility Name/Location if different*)

NAME KOPPERS INDUSTRIES INC

ADDRESS 7540 NW ST HELENS RD

PORTLAND OR 97210

FACILITY NW PLANT

LOCATION MULTNOMAH COUNTY

NATIONAL POLLUTANT DISCHARGE ELIMINATION SYSTEM (*NPDES*)

DISCHARGE MONITORING REPORT (*DMR*)

Form Approved.
OMB No. 2040-0004
Approval expires 9-30-85

(2-16) OR-100077-9 PERMIT NUMBER

(17-19) DISCHARGE NUMBER

CORRECTED REPORT

X 3077-J

47430

MONITORING PERIOD	YEAR	MO	DAY		YEAR	MO	DAY
FROM	90	4	1	TO	90	5	1
	(20-21)	(22-23)	(24-25)		(26-27)	(28-29)	(30-31)

NOTE: Read instructions before completing this form.

PARAMETER (32-37)		(3 Card Only) QUANTITY OR LOADING (46-53) AVERAGE	(54-61) MAXIMUM	UNITS	(4 Card Only) QUALITY OR CONCENTRATION (38-45) MINIMUM	(46-53) AVERAGE	(54-61) MAXIMUM	UNITS	NO. EX (62-63)	FREQUENCY OF ANALYSIS (64-68)	SAMPLE TYPE (69-70)
FLOW	SAMPLE MEASUREMENT	3000							N/A	2/30	EST
	PERMIT REQUIREMENT		N/A								
TEMP	SAMPLE MEASUREMENT				56	56	56	°/F	0	2/30	GRAB
	PERMIT REQUIREMENT										
PH	SAMPLE MEASUREMENT				6.8	6.85	6.9		0	2/30	GRAB
	PERMIT REQUIREMENT				6.0		9.0	SU			
OIL & GREASE	SAMPLE MEASUREMENT				0.8	0.85	0.9	MG/L	0	2/30	GRAB
	PERMIT REQUIREMENT					10	15				
PHENOLS	SAMPLE MEASUREMENT				0.31	0.325	0.34	MG/L	0	2/30	GRAB
	PERMIT REQUIREMENT					0.5	0.7	(PPM)			
	SAMPLE MEASUREMENT										
	PERMIT REQUIREMENT										
	SAMPLE MEASUREMENT										
	PERMIT REQUIREMENT										

NAME/TITLE PRINCIPAL EXECUTIVE OFFICER

JOHN A OXFORD
PLANT MANAGER

TYPED OR PRINTED

I CERTIFY UNDER PENALTY OF LAW THAT I HAVE PERSONALLY EXAMINED AND AM FAMILIAR WITH THE INFORMATION SUBMITTED HEREIN; AND BASED ON MY INQUIRY OF THOSE INDIVIDUALS IMMEDIATELY RESPONSIBLE FOR OBTAINING THE INFORMATION, I BELIEVE THE SUBMITTED INFORMATION IS TRUE, ACCURATE AND COMPLETE. I AM AWARE THAT THERE ARE SIGNIFICANT PENALTIES FOR SUBMITTING FALSE INFORMATION, INCLUDING THE POSSIBILITY OF FINE AND IMPRISONMENT. SEE 18 U.S.C § 1001 AND 33 U.S.C § 1319. (*Penalties under these statutes may include fines up to $10,000 and/or maximum imprisonment of between 6 months and 5 years.*)

John A Oxford

SIGNATURE OF PRINCIPAL EXECUTIVE OFFICER OR AUTHORIZED AGENT

TELEPHONE		DATE		
503	286-3681	90	5	21
AREA CODE	NUMBER	YEAR	MO	DAY

COMMENT AND EXPLANATION OF ANY VIOLATIONS (*Reference all attachments here*)

Koppers015128

GENERAL INSTRUCTIONS

1. If form has been partially completed by preprinting, disregard instructions directed at entry of that information already preprinted.
2. Enter "PERMITTEE NAME/MAILING ADDRESS (and facility name/location, if different)," "PERMIT NUMBER," and "DISCHARGE NUMBER" where indicated. (A separate form is required for each discharge.)
3. Enter dates beginning and ending "MONITORING PERIOD" covered by form where indicated.
4. Enter each "PARAMETER" as specified in monitoring requirements of permit.
5. Enter "SAMPLE MEASUREMENT" data for each parameter under "QUANTITY" and "QUALITY" in units specified in permit. "AVERAGE" is normally arithmetic average (geometric average for bacterial parameters) of all sample measurements for each parameter obtained during "MONITORING PERIOD." "MAXIMUM" and "MINIMUM" are normally extreme high and low measurements obtained during "MONITORING PERIOD." (NOTE to municipals with secondary treatment requirement, enter 30-day average of sample measurements under "AVERAGE" and enter maximum 7-day average of sample measurements obtained during monitoring period under "MAXIMUM".
6. Enter "PERMIT REQUIREMENT" for each parameter under "QUANTITY" and "QUALITY" as specified in permit.
7. Under "NO. EX" enter number of sample measurements during monitoring period that exceed maximum (and/or minimum or 7-day average as appropriate) permit requirement for each parameter. If none, enter "0".
8. Enter "FREQUENCY OF ANALYSIS" both as "SAMPLE MEASUREMENT" (actual frequency of sampling and analysis used during monitoring period) and as "PERMIT REQUIREMENT" specified in permit. (e.g., Enter "CONT." for continuous monitoring, "1/7" for one day per week, "1/30" for one day per month, "1/90" for one day per quarter, etc.)
9. Enter "SAMPLE TYPE" both as "SAMPLE MEASUREMENT" (actual sample type used during monitoring period) and as "PERMIT REQUIREMENT." (e.g., Enter "GRAB" for individual sample, "24HC" for 24-hour composite, "N/A" for continuous monitoring, etc.)

FOLD HERE FIRST

---

10. WHERE VIOLATIONS OF PERMIT REQUIREMENTS ARE REPORTED, ATTACH A BRIEF EXPLANATION TO DESCRIBE CAUSE AND CORRECTIVE ACTIONS TAKEN. REFERENCE EACH VIOLATION BY DATE.
11. If "no discharge" occurs during monitoring period, enter "NO DISCHARGE" across form in place of data entry.
12. Enter "NAME/TITLE OF PRINCIPAL EXECUTIVE OFFICER" with "SIGNATURE OF PRINCIPAL EXECUTIVE OFFICER OR AUTHORIZED AGENT," "TELEPHONE NUMBER" and "DATE" at bottom of form.
13. Mail signed Report to Office(s) by date(s) specified in permit. Retain copy for your records.
14. More detailed instructions for use of this DISCHARGE MONITORING REPORT (DMR) form may be obtained from Office(s) specified in permit.

LEGAL NOTICE

This report is required by law (33 U.S.C. 1318; 40 C.F.R. 125.27). Failure to report or failure to report truthfully can result in civil penalties not to exceed $10,000 per day of violation; or in criminal penalties not to exceed $25,000 per day of violation, or by imprisonment for not more than one year, or by both.

FOLD HERE SECOND

PLACE STAMP HERE

FOLD HERE THIRD

STAPLE HERE

PERMITTEE NAME/ADDRESS (*Include Facility Name/Location if different*)

NAME KOPPERS INDUSTRIES INC

ADDRESS 7540 NW ST HELENS RD
PORTLAND OR 97210

FACILITY NW PLANT

LOCATION MULTNOMAH COUNTY

NATIONAL POLLUTANT DISCHARGE ELIMINATION SYSTEM (*NPDES*)
DISCHARGE MONITORING REPORT (*DMR*)

Form Approved.
OMB No. 2040-0004
Approval expires 9-30-85

(2-16) OR-100077-9 PERMIT NUMBER

(17-19) DISCHARGE NUMBER

MONITORING PERIOD	YEAR	MO	DAY		YEAR	MO	DAY
FROM	90	4	1	TO	90	5	1
	(20-21)	(22-23)	(24-25)		(26-27)	(28-29)	(30-31)

3077-3
47430

NOTE: Read instructions before completing this form.

PARAMETER (32-37)		(3 Card Only) QUANTITY OR LOADING (46-53) AVERAGE	(54-61) MAXIMUM	UNITS	(4 Card Only) QUALITY OR CONCENTRATION (38-45) MINIMUM	(46-53) AVERAGE	(54-61) MAXIMUM	UNITS	NO. EX (62-63)	FREQUENCY OF ANALYSIS (64-68)	SAMPLE TYPE (69-70)
FLOW	SAMPLE MEASUREMENT	3000							N/A	2/30	EST
	PERMIT REQUIREMENT		N/A	GPD							
TEMP	SAMPLE MEASUREMENT				56	56	56	°/F	0	2/30	GRAB
	PERMIT REQUIREMENT						110				
PH	SAMPLE MEASUREMENT				6.8	6.85	6.9		0	2/30	GRAB
	PERMIT REQUIREMENT				6.0		9.0	SU			
OIL & GREASE	SAMPLE MEASUREMENT				0.8	0.85	0.9	MG/L	0	2/20	GRAB
	PERMIT REQUIREMENT					10	15				
~~PHENOLS~~ PHENOLS	SAMPLE MEASUREMENT				0.05	0.18	0.31	MGLE	0	2/30	GRAB
	PERMIT REQUIREMENT					0.5	0.7	(PPM)			
	SAMPLE MEASUREMENT										
	PERMIT REQUIREMENT										
	SAMPLE MEASUREMENT										
	PERMIT REQUIREMENT										

NAME/TITLE PRINCIPAL EXECUTIVE OFFICER

JOHN A OXFORD
PLANT MANAGER

TYPED OR PRINTED

I CERTIFY UNDER PENALTY OF LAW THAT I HAVE PERSONALLY EXAMINED AND AM FAMILIAR WITH THE INFORMATION SUBMITTED HEREIN; AND, BASED ON MY INQUIRY OF THOSE INDIVIDUALS IMMEDIATELY RESPONSIBLE FOR OBTAINING THE INFORMATION, I BELIEVE THE SUBMITTED INFORMATION IS TRUE, ACCURATE AND COMPLETE. I AM AWARE THAT THERE ARE SIGNIFICANT PENALTIES FOR SUBMITTING FALSE INFORMATION, INCLUDING THE POSSIBILITY OF FINE AND IMPRISONMENT. SEE 18 U.S.C § 1001 AND 33 U.S.C § 1319. *(Penalties under these statutes may include fines up to $10,000 and/or maximum imprisonment of between 6 months and 5 years.)*

John A Oxford

SIGNATURE OF PRINCIPAL EXECUTIVE OFFICER OR AUTHORIZED AGENT

TELEPHONE		DATE		
503	286-3681	90	5	15
AREA CODE	NUMBER	YEAR	MO	DAY

COMMENT AND EXPLANATION OF ANY VIOLATIONS (*Reference all attachments here*)

Koppers015130

GENERAL INSTRUCTIONS

1. If form has been partially completed by preprinting, disregard instructions directed at entry of that information already preprinted.
2. Enter "PERMITTEE NAME/MAILING ADDRESS (and facility name/location, if different)," "PERMIT NUMBER," and "DISCHARGE NUMBER" where indicated. (A separate form is required for each discharge.)
3. Enter dates beginning and ending "MONITORING PERIOD" covered by form where indicated.
4. Enter each "PARAMETER" as specified in monitoring requirements of permit.
5. Enter "SAMPLE MEASUREMENT" data for each parameter under "QUANTITY" and "QUALITY" in units specified in permit. "AVERAGE" is normally arithmetic average (geometric average for bacterial parameters) of all sample measurements for each parameter obtained during "MONITORING PERIOD." "MAXIMUM" and "MINIMUM" are normally extreme high and low measurements obtained during "MONITORING PERIOD." (NOTE to municipals with secondary treatment requirement, enter 30-day average of sample measurements under "AVERAGE" and enter maximum 7-day average of sample measurements obtained during monitoring period under "MAXIMUM".
6. Enter "PERMIT REQUIREMENT" for each parameter under "QUANTITY" and "QUALITY" as specified in permit.
7. Under "NO. EX" enter number of sample measurements during monitoring period that exceed maximum (and/or minimum or 7-day average as appropriate) permit requirement for each parameter. If none, enter "0".
8. Enter "FREQUENCY OF ANALYSIS" both as "SAMPLE MEASUREMENT" (actual frequency of sampling and analysis used during monitoring period) and as "PERMIT REQUIREMENT" specified in permit. (e.g., Enter "CONT." for continuous monitoring, "1/7" for one day per week, "1/30" for one day per month, "1/90" for one day per quarter, etc.)
9. Enter "SAMPLE TYPE" both as "SAMPLE MEASUREMENT" (actual sample type used during monitoring period) and as "PERMIT REQUIREMENT." (e.g., Enter "GRAB" for individual sample, "24HC" for 24-hour composite, "N/A" for continuous monitoring, etc.)

FOLD HERE FIRST

10. WHERE VIOLATIONS OF PERMIT REQUIREMENTS ARE REPORTED, ATTACH A BRIEF EXPLANATION TO DESCRIBE CAUSE AND CORRECTIVE ACTIONS TAKEN. REFERENCE EACH VIOLATION BY DATE.
11. If "no discharge" occurs during monitoring period, enter "NO DISCHARGE" across form in place of data entry.
12. Enter "NAME/TITLE OF PRINCIPAL EXECUTIVE OFFICER" with "SIGNATURE OF PRINCIPAL EXECUTIVE OFFICER OR AUTHORIZED AGENT," "TELEPHONE NUMBER" and "DATE" at bottom of form.
13. Mail signed Report to Office(s) by date(s) specified in permit. Retain copy for your records.
14. More detailed instructions for use of this DISCHARGE MONITORING REPORT (DMR) form may be obtained from Office(s) specified in permit.

LEGAL NOTICE

This report is required by law (33 U.S.C. 1318; 40 C.F.R. 125.27). Failure to report or failure to report truthfully can result in civil penalties not to exceed $10,000 per day of violation; or in criminal penalties not to exceed $25,000 per day of violation, or by imprisonment for not more than one year, or by both.

FOLD HERE SECOND

PLACE STAMP HERE

FOLD HERE THIRD

STAPLE HERE

PERMITTEE NAME/ADDRESS (Include Facility Name/Location if different)

NAME: Koppers Wpd Inc

ADDRESS: 25 No N.W. St Helens Rd
Portland Or 97210

FACILITY: N.W. Plant

LOCATION: Multnomah County

NATIONAL POLLUTANT DISCHARGE ELIMINATION SYSTEM (NPDES)
DISCHARGE MONITORING REPORT (DMR)

Form Approved.
OMB No. 2040-0004
Approval expires 9-30-85

(2-16) PERMIT NUMBER: OR-100077-9

(17-19) DISCHARGE NUMBER:

3077-J
47430

MONITORING PERIOD	YEAR	MO	DAY		YEAR	MO	DAY
FROM	90	4	1	TO	90	5	1
	(20-21)	(22-23)	(24-25)		(26-27)	(28-29)	(30-31)

NOTE: Read instructions before completing this form.

PARAMETER (32-37)		(3 Card Only) QUANTITY OR LOADING (46-53) AVERAGE	(54-61) MAXIMUM	UNITS	(4 Card Only) QUALITY OR CONCENTRATION (38-45) MINIMUM	(46-53) AVERAGE	(54-61) MAXIMUM	UNITS	NO. EX (62-63)	FREQUENCY OF ANALYSIS (64-68)	SAMPLE TYPE (69-70)
Flow	SAMPLE MEASUREMENT	3000							N/A	2/30	Est.
	PERMIT REQUIREMENT		N/A	GPD							
Temp	SAMPLE MEASUREMENT				56	56	56	°F	0	2/30	GRAB
	PERMIT REQUIREMENT						110				
PH	SAMPLE MEASUREMENT				6.8	6.85	6.9	SU	0	2/30	GRAB
	PERMIT REQUIREMENT				6.0		9.0				
Oil + Grease	SAMPLE MEASUREMENT				0.8	0.85	0.9	mg/L	0	2/30	GRAB
	PERMIT REQUIREMENT					10	15				
Phenols	SAMPLE MEASUREMENT				0.31	0.325	0.34	mg/L	0	2/30	GRAB
	PERMIT REQUIREMENT					0.5	0.7	(PPM)			
	SAMPLE MEASUREMENT										
	PERMIT REQUIREMENT										
	SAMPLE MEASUREMENT										
	PERMIT REQUIREMENT										

NAME/TITLE PRINCIPAL EXECUTIVE OFFICER: JOHN A. OXFORD, PLANT MGR

TYPED OR PRINTED

I CERTIFY UNDER PENALTY OF LAW THAT I HAVE PERSONALLY EXAMINED AND AM FAMILIAR WITH THE INFORMATION SUBMITTED HEREIN, AND BASED ON MY INQUIRY OF THOSE INDIVIDUALS IMMEDIATELY RESPONSIBLE FOR OBTAINING THE INFORMATION, I BELIEVE THE SUBMITTED INFORMATION IS TRUE, ACCURATE AND COMPLETE. I AM AWARE THAT THERE ARE SIGNIFICANT PENALTIES FOR SUBMITTING FALSE INFORMATION, INCLUDING THE POSSIBILITY OF FINE AND IMPRISONMENT. SEE 18 U.S.C. § 1001 AND 33 U.S.C. § 1319. *(Penalties under these statutes may include fines up to $10,000 and/or maximum imprisonment of between 6 months and 5 years.)*

SIGNATURE OF PRINCIPAL EXECUTIVE OFFICER OR AUTHORIZED AGENT

TELEPHONE		DATE		
AREA CODE	NUMBER	YEAR	MO	DAY
503	286-3181	90	5	15

COMMENT AND EXPLANATION OF ANY VIOLATIONS (*Reference all attachments here*)

Koppers015132

COFFEY LABORATORIES INC.

12423 N.E. WHITAKER WAY
PORTLAND, OREGON 97230

CHAIN OF CUSTODY

(503) 254-1794
FAX (503) 254-1452

PROJECT #:

PROJECT NAME:

PAGE 1 OF 1 PAGE(S)
PLEASE PRINT OR TYPE

FOR LABORATORY USE ONLY

JOB#: ASW427-03

CUSTABBR: Koppers

COMPANY NAME:
REPORT ATTENTION: Koppers

SAMPLES COLLECTED BY: John D OXFORD

FIELD IDENTIFICATION: ONE LINE PER SAMPLE CONTAINER	LAB LOC	LAB ID	COLLECTION DATE	COLLECTION TIME	MEDIA	ANALYSES REQUESTED	ANALYSIS REMARKS:
W-W T-3			4-27	11AM	WW	OIL + GREASE	
W-W T-3			4-27	"		PHENOLS	
W W T-4			4-27	"		OIL + GREASE	
W W T-4			4-27	"		PHENOLS	
OUTFALL DEQ SPLIT		3	4-26	10:30AM		OIL & GREASE & PHENOLS	
Outfall sample no good, not run by lab							
New form of DEQ resampled			5-3-90			JRO 5-3-90	

RELINQUISHED BY:	DATE/TIME	RELINQUISHED BY:	DATE/TIME 4/27/90
RELINQUISHED BY: John D. Oxford	DATE/TIME 4/27/90	RECEIVED BY LAB: AEN 4/27/90 1330	DATE/TIME

LAB USE:

SAMPLE REMARKS:

EXPRESS UPS MAIL CXX GREY TAXI LAB

WHITE COPY - COFFEY LABORATORIES

PINK COPY - CLIENT'S COPY

SHADED AREA FOR LABORATORY USE ONLY

CHAIN OF CUSTODY INSTRUCTIONS ON BACK OF PINK COPY

(1/90)

Koppers015133

COFFEY LABORATORIES, INC.
12423 N.E. WHITAKER WAY
PORTLAND, OR 97230
PHONE: (503) 254-1794
FAX: (503) 254-1452

CHAIN OF CUSTODY INFORMATION / INSTRUCTION SHEET

PROJECT NUMBER -- Applies only to samples submitted by the company. This data is provided at the companies discretion.

PROJECT NAME -- Your company's project name. This data is provided at the company's discretion.

COMPANY NAME -- Name of the Company or individual requesting the analysis from Coffey Laboratories, Inc.

REPORT ATTENTION -- Name of the person who receives the laboratory report.

SAMPLE COLLECTED BY -- The person who took the sample signs this box and gives his/her title.

FIELD ID -- A short description of the sample point (For example; "Effluent from sand filter"). This description will appear on the report. Use one line per sample bottle.

COLLECTION DATE -- The date on which the sample(s) was/were collected.

COLLECTION TIME -- The time at which the sample(s) was/were collected.

MEDIA -- This is a description of the sample matrix.

ANALYSIS REQUESTED -- Make one column for each parameter or group of parameters associated to a bottle.

FOR LAB USE ONLY -- Do not mark in this area (Laboratory location & ID). All shaded areas are for laboratory use only. Please do not write in these areas.

REMARKS -- Record any comments about each sample on the same line as the sample description, e.g., "Wastewater contains VOCs".

RELINQUISHED BY -- The sampler signs this box when he/she gives the sample to someone else, and then fills in the date and time they left his possession.

RECEIVED BY -- The person who receives the samples signs here and fills in the date and time received. The date and time should be the same as the last one unless the samples were shipped.

SAMPLE REMARKS -- Record any comments regarding the sample(s) as a whole or information pertinent to the sample.

SAMPLES SHIPPED VIA -- How the samples are being shipped to the laboratory, e.g., "UPS".

(12/06/89)

4-27-90

WW T-3

Temp: 56°F

PH = 6.8

4-27-90

WWT-4

Temp = 56°F

PH = 6.9

Outfall 4-26-90

Temp 54°

P.H. 6.7

DEQ Split
Sample

COFFEY LABORATORIES, INC.
12423 N.E. WHITAKER WAY
PORTLAND, OR 97230
PHONE: (503) 254-1794
FAX: (503) 254-1452

May 14, 1990
Log #A900427-03
PO: Verbal John

Koppers Co., Inc.
7540 NW St. Helens Rd.
Portland, OR 97210-3663
Attention: John Oxford

Samples Received: 04/27/90
Sample ID: #1 - W-W-T-3 04/27/90 1100 hrs.
#2 - W-W-T-4 04/27/90 1100 hrs.
#3 - Outfall - DEQ Split 04/26/90 1030 hrs.
05/02/90 1225 hrs.

PARAMETER	METHOD	DETECTION LIMITS	#1	#2	#3	UNITS
Oil & Grease	EPA 413.2	0.2	0.8	0.9	0.7*	mg/L
Total Phenols	EPA 420.1	0.05	0.34	0.31	0.36*	mg/L

*This sample was incorrectly collected and preserved by DEQ personnel and these data can only be considered as approximate results

Sincerely,

Victoria A. Perry,
Quality Assurance

Sincerely,

Renee Chauvin,
Technical Director

RJC/lws

This report is for the sole and exclusive use of the client. Samples are retained a maximum of 15 days from the report date, or until the maximum holding time expires.

5/15/report

	WWT #1	WWT #2	
	45 000	45 000	= 90 000

90 000 ÷ 30 = 3000 gals.

Flow	3000		N/A 2/30 Cal.
		N/A	
Temp.	56	56	= 112 ÷ 2 = 56
P.H.	6.8	6.9	= 13.7 ÷ 2 = 6.85
Oil + grease	0.8	0.9	= 1.7 ÷ 2 = 0.85
Phenols	0.05	0.31	= 0.36 ÷ 2 = 0.18
	0.34	0.31	= 0.65 ÷ 2 = 0.325

PERMITTEE NAME/ADDRESS (Include Facility Name/Location if different)

NAME KOPPERS INDUSTRIES, INC

ADDRESS 7540 N.W. ST. HELENS RD.
PORTLAND, OR 97210

FACILITY N.W. PLANT

LOCATION MULTNOMAH, COUNTRY

NATIONAL POLLUTANT DISCHARGE ELIMINATION SYSTEM (NPDES)
DISCHARGE MONITORING REPORT (DMR)

Form Approved.
OMB No. 2040-0004
Approval expires 9-30-85

(2-16) PERMIT NUMBER: 2-100077-9

(17-19) DISCHARGE NUMBER:

3077-J
47430

MONITORING PERIOD	YEAR	MO	DAY		YEAR	MO	DAY
FROM	90	3	1	TO	90	4	1
	(20-21)	(22-23)	(24-25)		(26-27)	(28-29)	(30-31)

NOTE: Read instructions before completing this form.

PARAMETER (32-37)		(3 Card Only) QUANTITY OR LOADING (46-53) AVERAGE	(54-61) MAXIMUM	UNITS	(4 Card Only) QUALITY OR CONCENTRATION (38-45) MINIMUM	(46-53) AVERAGE	(54-61) MAXIMUM	UNITS	NO. EX (62-63)	FREQUENCY OF ANALYSIS (64-68)	SAMPLE TYPE (69-70)
FLOW	SAMPLE MEASUREMENT	2903							N/A	2/31	EST
	PERMIT REQUIREMENT										
TEMP	SAMPLE MEASUREMENT				54	54	54	Op	0	2/31	GRAB
	PERMIT REQUIREMENT						100				
P.H	SAMPLE MEASUREMENT				6.7	6.7	6.7	SU	0	2/31	GRAB
	PERMIT REQUIREMENT				6.0		9.0				
OIL & GREASE	SAMPLE MEASUREMENT				1.0	1.2	1.4	MG/L	0	2/31	GRAB
	PERMIT REQUIREMENT					10	15				
PHENOLS	SAMPLE MEASUREMENT				.20	.22	.24	MG/L	0	2/31	GRAB
	PERMIT REQUIREMENT							PPM			
	SAMPLE MEASUREMENT										
	PERMIT REQUIREMENT										
	SAMPLE MEASUREMENT										
	PERMIT REQUIREMENT										

NAME/TITLE PRINCIPAL EXECUTIVE OFFICER

JOHN A. OXFORD
PLANT MANAGER

TYPED OR PRINTED

I CERTIFY UNDER PENALTY OF LAW THAT I HAVE PERSONALLY EXAMINED AND AM FAMILIAR WITH THE INFORMATION SUBMITTED HEREIN; AND BASED ON MY INQUIRY OF THOSE INDIVIDUALS IMMEDIATELY RESPONSIBLE FOR OBTAINING THE INFORMATION, I BELIEVE THE SUBMITTED INFORMATION IS TRUE, ACCURATE AND COMPLETE. I AM AWARE THAT THERE ARE SIGNIFICANT PENALTIES FOR SUBMITTING FALSE INFORMATION, INCLUDING THE POSSIBILITY OF FINE AND IMPRISONMENT. SEE 18 U.S.C. § 1001 AND 33 U.S.C. § 1319. *(Penalties under these statutes may include fines up to $10,000 and/or maximum imprisonment of between 6 months and 5 years.)*

John A. Oxford

SIGNATURE OF PRINCIPAL EXECUTIVE OFFICER OR AUTHORIZED AGENT

TELEPHONE		DATE		
503	286-3681	90	4	27
AREA CODE	NUMBER	YEAR	MO	DAY

COMMENT AND EXPLANATION OF ANY VIOLATIONS (*Reference all attachments here*)

Koppers015140

GENERAL INSTRUCTIONS

1. If form has been partially completed by preprinting, disregard instructions directed at entry of that information already preprinted.
2. Enter "PERMITTEE NAME/MAILING ADDRESS (and facility name/location, if different)," "PERMIT NUMBER," and "DISCHARGE NUMBER" where indicated. (A separate form is required for each discharge.)
3. Enter dates beginning and ending "MONITORING PERIOD" covered by form where indicated.
4. Enter each "PARAMETER" as specified in monitoring requirements of permit.
5. Enter "SAMPLE MEASUREMENT" data for each parameter under "QUANTITY" and "QUALITY" in units specified in permit. "AVERAGE" is normally arithmetic average (geometric average for bacterial parameters) of all sample measurements for each parameter obtained during "MONITORING PERIOD." "MAXIMUM" and "MINIMUM" are normally extreme high and low measurements obtained during "MONITORING PERIOD." (NOTE to municipals with secondary treatment requirement, enter 30-day average of sample measurements under "AVERAGE" and enter maximum 7-day average of sample measurements obtained during monitoring period under "MAXIMUM".
6. Enter "PERMIT REQUIREMENT" for each parameter under "QUANTITY" and "QUALITY" as specified in permit.
7. Under "NO. EX" enter number of sample measurements during monitoring period that exceed maximum (and/or minimum or 7-day average as appropriate) permit requirement for each parameter. If none, enter "0".
8. Enter "FREQUENCY OF ANALYSIS" both as "SAMPLE MEASUREMENT" (actual frequency of sampling and analysis used during monitoring period) and as "PERMIT REQUIREMENT" specified in permit. (e.g., Enter "CONT." for continuous monitoring, "1/7" for one day per week, "1/30" for one day per month, "1/90" for one day per quarter, etc.)
9. Enter "SAMPLE TYPE" both as "SAMPLE MEASUREMENT" (actual sample type used during monitoring period) and as "PERMIT REQUIREMENT." (e.g., Enter "GRAB" for individual sample, "24HC" for 24-hour composite, "N/A" for continuous monitoring, etc.)

(FOLD HERE FIRST)

---

10. WHERE VIOLATIONS OF PERMIT REQUIREMENTS ARE REPORTED, ATTACH A BRIEF EXPLANATION TO DESCRIBE CAUSE AND CORRECTIVE ACTIONS TAKEN. REFERENCE EACH VIOLATION BY DATE.
11. If "no discharge" occurs during monitoring period, enter "NO DISCHARGE" across form in place of data entry.
12. Enter "NAME/TITLE OF PRINCIPAL EXECUTIVE OFFICER" with "SIGNATURE OF PRINCIPAL EXECUTIVE OFFICER OR AUTHORIZED AGENT," "TELEPHONE NUMBER" and "DATE" at bottom of form.
13. Mail signed Report to Office(s) by date(s) specified in permit. Retain copy for your records.
14. More detailed instructions for use of this DISCHARGE MONITORING REPORT (DMR) form may be obtained from Office(s) specified in permit.

LEGAL NOTICE

This report is required by law (33 U.S.C. 1318; 40 C.F.R. 125.27). Failure to report or failure to report truthfully can result in civil penalties not to exceed $10,000 per day of violation; or in criminal penalties not to exceed $25,000 per day of violation; or by imprisonment for not more than one year, or by both.

FOLD HERE SECOND

PLACE STAMP HERE

FOLD HERE THIRD

STAPLE HERE

WW #1 WW#2

45,000 45,000 = 90,000 gal

90,000 ÷ 31 days. = 2903 GPD.

Flow - 2903

	#1	#2	
Temp	54	54	= 54°
P.H.	6.7	6.7	= 6.7
O&G	1.4	1.0	= 1.2
Phenol	.24	.20	= .22

J.A.O

TO AND FROM
ARIZONA - CALIFORNIA - NEVADA - OREGON - WASHINGTON
FASTEST LTL SERVICE

WILLIG

Call
(503) 286-2685

PORTLAND

DELIVERY BY NOON

COFFEY LABORATORIES, INC.
12423 N.E. WHITAKER WAY
PORTLAND, OR 97230
PHONE: (503) 254-1794
FAX: (503) 254-1452

George

March 14, 1990
Log # A900305-AC2

Koppers Co., Inc.
7540 NW St. Helens Rd.
Portland, OR 97210-3663
Attention: John Oxford

Sample Collected: 3/5/90, 1430 hrs
Sample Received: 3/5/90
Sample ID: #1 W-W-T-1
#2 W-W-T-2

ANALYSIS	METHOD	DETECTION LIMIT	SAMPLE #1	SAMPLE #2
Oil & Grease	EPA 413.2	0.2	1.4	1.0
Total Phenols	EPA 420.1	0.05	0.24	0.20

Results expressed as mg/L unless otherwise noted.

Sincerely,

Victor A. Perry,
Quality Assurance

Sincerely,

Renee Chauvin,
Technical Director

RJC/mlh

This report is for the sole and exclusive use of the client. Samples are retained a maximum of 15 days from the report date, or until the maximum holding time expires.

RECEIVED
MAR 15 1990
KOPPERS INDS., INC.
PORTLAND, OR

3-5-90
w-w-T-1
Ph 6.7

water Temp
54° F

3-5-90

W-W- T-2

Ph 6.7

water Temp.

54°F

COFFEY LABORATORIES INC.

12423 N.E. WHITAKER WAY
PORTLAND, OREGON 97230

CHAIN OF CUSTODY

(503) 254-1794
FAX (503) 254-1452

PROJECT #:

PROJECT NAME:

PAGE_____ OF_____ PAGE(S)
PLEASE PRINT OR TYPE

FOR LABORATORY USE ONLY

JOB#: A9W305-RC2

CUSTABBR: Koppers

COMPANY NAME:
REPORT ATTENTION: Koppers

SAMPLES COLLECTED BY:
George Hoffman

FIELD IDENTIFICATION: ONE LINE PER SAMPLE CONTAINER	LAB LOC	LAB ID	COLLECTION DATE	COLLECTION TIME	MEDIA	ANALYSES REQUESTED	ANALYSIS REMARKS:
W-W-T-1		1h	3-5-90	2:30PM	W.W	Oil & Grease	
W-W-T-1		1i	"	"		Phenols	
W-W-T-2		2h	"	"		Oil + Grease	
W-W-T-2		2i	"	"		Phenols	

RELINQUISHED BY: DATE/TIME

RELINQUISHED BY: DATE/TIME

LAB USE:

RELINQUISHED BY: George Hoffman DATE/TIME 3-5-90

RECEIVED BY LAB: AEN 3/5/90 1540 DATE/TIME

SAMPLE REMARKS:

EXPRESS UPS MAIL CXX GREY TAXI LAB

WHITE COPY - COFFEY LABORATORIES

PINK COPY - CLIENT'S COPY

SHADED AREA FOR LABORATORY USE ONLY

CHAIN OF CUSTODY INSTRUCTIONS ON BACK OF PINK COPY

(1/90)

Koppers015146

COFFEY LABORATORIES, INC.
12423 N.E. WHITAKER WAY
PORTLAND, OR 97230
PHONE: (503) 254-1794
FAX: (503) 254-1452

CHAIN OF CUSTODY INFORMATION / INSTRUCTION SHEET

PROJECT NUMBER -- Applies only to samples submitted by the company. This data is provided at the companies discretion.

PROJECT NAME -- Your company's project name. This data is provided at the company's discretion.

COMPANY NAME -- Name of the Company or individual requesting the analysis from Coffey Laboratories, Inc.

REPORT ATTENTION -- Name of the person who receives the laboratory report.

SAMPLE COLLECTED BY -- The person who took the sample signs this box and gives his/her title.

FIELD ID -- A short description of the sample point (For example; "Effluent from sand filter"). This description will appear on the report. Use one line per sample bottle.

COLLECTION DATE -- The date on which the sample(s) was/were collected.

COLLECTION TIME -- The time at which the sample(s) was/were collected.

MEDIA -- This is a description of the sample matrix.

ANALYSIS REQUESTED -- Make one column for each parameter or group of parameters associated to a bottle.

FOR LAB USE ONLY -- Do not mark in this area (Laboratory location & ID). All shaded areas are for laboratory use only. Please do not write in these areas.

REMARKS -- Record any comments about each sample on the same line as the sample description, e.g., "Wastewater contains VOCs".

RELINQUISHED BY -- The sampler signs this box when he/she gives the sample to someone else, and then fills in the date and time they left his possession.

RECEIVED BY -- The person who receives the samples signs here and fills in the date and time received. The date and time should be the same as the last one unless the samples were shipped.

SAMPLE REMARKS -- Record any comments regarding the sample(s) as a whole or information pertinent to the sample.

SAMPLES SHIPPED VIA -- How the samples are being shipped to the laboratory, e.g., "UPS".

(12/06/89)

PERMITTEE NAME/ADDRESS (*Include Facility Name/Location if different*)

NAME KOPPERS INDUSTRIES INC

ADDRESS 7540 NEW NW ST HELENS RD

PORTLAND OR 97210

FACILITY

LOCATION MULTNOMAH COUNTY

NATIONAL POLLUTANT DISCHARGE ELIMINATION SYSTEM (*NPDES*)
DISCHARGE MONITORING REPORT (*DMR*)

Form Approved.
OMB No. 2040-0004
Approval expires 9-30-85

(2-16) PERMIT NUMBER: 2-100007-9

(17-19) DISCHARGE NUMBER:

3077-J
47430

MONITORING PERIOD	YEAR	MO	DAY		YEAR	MO	DAY
FROM	90	2	1	TO	90	3	1
	(20-21)	(22-23)	(24-25)		(26-27)	(28-29)	(30-31)

NOTE: Read instructions before completing this form.

PARAMETER (32-37)		(3 Card Only) QUANTITY OR LOADING (46-53) AVERAGE	(54-61) MAXIMUM	UNITS	(4 Card Only) QUALITY OR CONCENTRATION (38-45) MINIMUM	(46-53) AVERAGE	(54-61) MAXIMUM	UNITS	NO. EX (62-63)	FREQUENCY OF ANALYSIS (64-68)	SAMPLE TYPE (69-70)
FLOW	SAMPLE MEASUREMENT	5429							N/A	6/28	EST
	PERMIT REQUIREMENT										
TEMP	SAMPLE MEASUREMENT				40	42	44	O F	0	6/28	GRAB
	PERMIT REQUIREMENT						100				
PH	SAMPLE MEASUREMENT				6.4	6.55	6.7	SU	0	6/28	GRAB
	PERMIT REQUIREMENT				6.0		0.0				
OIL & GREASE	SAMPLE MEASUREMENT				0.4	0.55	0.8	MG/L	0	6/28	GRAB
	PERMIT REQUIREMENT					XX 10	15				
PHENOLS	SAMPLE MEASUREMENT				0.12	0.155	0.19	MG/L (PPM)	0	6/28	GRAB
	PERMIT REQUIREMENT					0.5	0.7				
	SAMPLE MEASUREMENT										
	PERMIT REQUIREMENT										
	SAMPLE MEASUREMENT										
	PERMIT REQUIREMENT										

NAME/TITLE PRINCIPAL EXECUTIVE OFFICER

JOHN A. OXFORD
PLANT MANAGER

TYPED OR PRINTED

I CERTIFY UNDER PENALTY OF LAW THAT I HAVE PERSONALLY EXAMINED AND AM FAMILIAR WITH THE INFORMATION SUBMITTED HEREIN; AND BASED ON MY INQUIRY OF THOSE INDIVIDUALS IMMEDIATELY RESPONSIBLE FOR OBTAINING THE INFORMATION, I BELIEVE THE SUBMITTED INFORMATION IS TRUE, ACCURATE AND COMPLETE. I AM AWARE THAT THERE ARE SIGNIFICANT PENALTIES FOR SUBMITTING FALSE INFORMATION, INCLUDING THE POSSIBILITY OF FINE AND IMPRISONMENT. SEE 18 U.S.C. § 1001 AND 33 U.S.C. § 1319. *(Penalties under these statutes may include fines up to $10,000 and or maximum imprisonment of between 6 months and 5 years.)*

John A Oxford

SIGNATURE OF PRINCIPAL EXECUTIVE OFFICER OR AUTHORIZED AGENT

TELEPHONE: AREA CODE 503 NUMBER 286-3681

DATE: YEAR 90 MO 3 DAY 12

COMMENT AND EXPLANATION OF ANY VIOLATIONS (*Reference all attachments here*)

Koppers015148

GENERAL INSTRUCTIONS

1. If form has been partially completed by preprinting, disregard instructions directed at entry of that information already preprinted.
2. Enter "PERMITTEE NAME/MAILING ADDRESS (and facility name/location, if different)," "PERMIT NUMBER," and "DISCHARGE NUMBER" where indicated. (A separate form is required for each discharge.)
3. Enter dates beginning and ending "MONITORING PERIOD" covered by form where indicated.
4. Enter each "PARAMETER" as specified in monitoring requirements of permit.
5. Enter "SAMPLE MEASUREMENT" data for each parameter under "QUANTITY" and "QUALITY" in units specified in permit. "AVERAGE" is normally arithmetic average (geometric average for bacterial parameters) of all sample measurements for each parameter obtained during "MONITORING PERIOD." "MAXIMUM" and "MINIMUM" are normally extreme high and low measurements obtained during "MONITORING PERIOD." (NOTE to municipals with secondary treatment requirement, enter 30-day average of sample measurements under "AVERAGE" and enter maximum 7-day average of sample measurements obtained during monitoring period under "MAXIMUM".
6. Enter "PERMIT REQUIREMENT" for each parameter under "QUANTITY" and "QUALITY" as specified in permit.
7. Under "NO. EX" enter number of sample measurements during monitoring period that exceed maximum (and/or minimum or 7-day average as appropriate) permit requirement for each parameter. If none, enter "0".
8. Enter "FREQUENCY OF ANALYSIS" both as "SAMPLE MEASUREMENT" (actual frequency of sampling and analysis used during monitoring period) and as "PERMIT REQUIREMENT" specified in permit. (e.g., Enter "CONT." for continuous monitoring, "1/7" for one day per week, "1/30" for one day per month, "1/90" for one day per quarter, etc.)
9. Enter "SAMPLE TYPE" both as "SAMPLE MEASUREMENT" (actual sample type used during monitoring period) and as "PERMIT REQUIREMENT." (e.g., Enter "GRAB" for individual sample, "24HC" for 24-hour composite, "N/A" for continuous monitoring, etc.)

(FOLD HERE FIRST)

10. WHERE VIOLATIONS OF PERMIT REQUIREMENTS ARE REPORTED, ATTACH A BRIEF EXPLANATION TO DESCRIBE CAUSE AND CORRECTIVE ACTIONS TAKEN. REFERENCE EACH VIOLATION BY DATE.
11. If "no discharge" occurs during monitoring period, enter "NO DISCHARGE" across form in place of data entry.
12. Enter "NAME/TITLE OF PRINCIPAL EXECUTIVE OFFICER" with "SIGNATURE OF PRINCIPAL EXECUTIVE OFFICER OR AUTHORIZED AGENT," "TELEPHONE NUMBER" and "DATE" at bottom of form.
13. Mail signed Report to Office(s) by date(s) specified in permit. Retain copy for your records.
14. More detailed instructions for use of this DISCHARGE MONITORING REPORT (DMR) form may be obtained from Office(s) specified in permit.

LEGAL NOTICE

This report is required by law (33 U.S.C. 1318; 40 C.F.R. 125.27). Failure to report or failure to report truthfully can result in civil penalties not to exceed $10,000 per day of violation; or in criminal penalties not to exceed $25,000 per day of violation, or by imprisonment for not more than one year, or by both.

FOLD HERE SECOND

PLACE STAMP HERE

FOLD HERE THIRD

STAPLE HERE

	WW#1	WW2	WW3	WW4
	4500	45000	45000	45000 = 180000 ÷ 28 = 6429
flow -	6429			
Temp -	40	40	44	44 = 168 ÷ 4 42
Ph -	6.5	6.7	6.4	6.6 = 26.2 ÷ 4 = 6.55
oil + grease -	ND	0.4	0.8	0.5 = 2.2 ÷ 4 = 0.55
Phenols =	0.16	0.12	0.15	0.19 = 0.62 ÷ 4 = 0.155

2-8-90

W.W. T-3

Ph 6.4

water Temp.

44

2-8-90

w-w T=4

Ph 6.6

water Temp.

44

COFFEY LABORATORIES INC.

12423 N.E. WHITAKER WAY
PORTLAND, OREGON 97230

CHAIN OF CUSTODY

(503) 254-1794
FAX (503) 254-1452

PROJECT #:	PROJECT NAME:	PAGE 1 OF 1 PAGE(S) PLEASE PRINT OR TYPE.	FOR LABORATORY USE ONLY
COMPANY NAME: Koppers			JOB#: A900208-BD2
REPORT ATTENTION:			CUSTABBR: Koppers P.O.:

FIELD IDENTIFICATION: ONE LINE PER SAMPLE CONTAINER	LAB LOC ID	DATE	TIME	MEDIA	ANALYSES REQUESTED	REMARKS:
W-W T-3	1h	2-8-90	2:45PM		oil + Grease	
W-W T-3	1i	"	"		Phenols	
W-W-T-4	2h	"	"		oil + Grease	
W-W-T-4	2i	"	"		Phenols	

SAMPLES COLLECTED BY:	DATE/TIME	RELINQUISHED BY:	DATE/TIME	LAB USE:
George Hoffman	2-8-90 2:45PM			
RELINQUISHED BY: George Hoffman	DATE/TIME 2/8 1645	RECIEVED BY LAB: KJD	DATE TIME 2/8 1645	
SAMPLE REMARKS:		EPA NPDES RCRA GEN		EXPRESS UPS MAIL CXX

WHITE COPY - COFFEY LABORATORIES

PINK COPY - CLIENT'S COPY

COFFEY LABORATORIES, INC.
12423 N.E. WHITAKER WAY
PORTLAND, OR 97230
PHONE: (503) 254-1794
FAX: (503) 254-1452

February 15, 1990
Log # A900208-BD2

Koppers Co., Inc.
7540 NW St. Helens Rd.
Portland, OR 97210-33663
Attention: John Oxford

Sample Collected: 2/8/90, 1445 hrs
Sample Received: 2/8/90
Sample ID: #1 WWT-3
#2 WWT-4

ANALYSIS	METHOD	DETECTION LIMIT	SAMPLE #1	SAMPLE #2
Oil & Grease	EPA 413.2	0.2	0.8	0.5
Total Phenols	EPA 420.1	0.05	0.15	0.19

Results expressed as mg/L unless otherwise noted.

Sincerely,

Victor A. Perry,
Quality Assurance

Sincerely,

Renee Chauvin,
Technical Director

RJC/mlh

This report is for the sole and exclusive use of the client. Samples are retained a maximum of 15 days from the report date, or until the maximum holding time expires.

FEB 20

2-16-90

w-w-T-2

Ph 6.7

---

water Temp.

40°F

2-16-90

w-w-T-1

Ph 6.5

water Temp.

40°F

COFFEY LABORATORIES INC.

12423 N.E. WHITAKER WAY
PORTLAND, OREGON 97230

CHAIN OF CUSTODY

(503) 254-1794
FAX (503) 254-1452

PROJECT #:

PROJECT NAME:

PAGE _____ OF ____ PAGE(S)
PLEASE PRINT OR TYPE.

FOR LABORATORY USE ONLY

COMPANY NAME:

REPORT ATTENTION:

JOB#: A900216-V2

CUSTABBR: Koppers

P.O.: _____

FIELD IDENTIFICATION: ONE LINE PER SAMPLE CONTAINER	LAB LOC	ID	DATE	TIME	MEDIA	ANALYSES REQUESTED	REMARKS:
W-W-T-1		1h	2-16-90	3:20PM	WW	Oil & Grease	
W-W-T-1		1i	"	"		Phenols	
W-W-T-2		2h	"	"		Oil & Grease	
W-W-T-2		2i	"	"		Phenols	

SAMPLES COLLECTED BY: George Hoffman DATE/TIME 2-16-90 3:20PM

RELINQUISHED BY: DATE/TIME

LAB USE:

RELINQUISHED BY: George Hoffman DATE/TIME

RECIEVED BY LAB: ABW 2/16/90 DATE TIME 1630

SAMPLE REMARKS:

EPA NPDES RCRA GEN

EXPRESS UPS MAIL CXX

WHITE COPY - COFFEY LABORATORIES

PINK COPY - CLIENT'S COPY

Koppers015157

COFFEY LABORATORIES, INC.
12423 N.E. WHITAKER WAY
PORTLAND, OR 97230
PHONE: (503) 254-1794
FAX: (503) 254-1452

February 22, 1990
Log # A900216-V2

Koppers Co., Inc.
7540 NW St. Helens Rd.
Portland, OR 97210-3663
Attention: John Oxford

Sample Collected: 2/16/90, 1520 hrs
Sample Received: 2/16/90
Sample ID: #1 WWT1
#2 WWT2

ANALYSIS	METHOD	DETECTION LIMIT	SAMPLE #1	SAMPLE #2
Oil & Grease	EPA 413.2	0.2	ND	0.4
Total Phenols	EPA 420.1	0.05	0.16	0.12

ND means none detected at or above the detection limit listed.

Results expressed as mg/L unless otherwise noted.

Sincerely,

Victor A. Perry,
Quality Assurance

Sincerely,

Renee Chauvin,
Technical Director

RJC/mlh

This report is for the sole and exclusive use of the client. Samples are retained a maximum of 15 days from the report date, or until the maximum holding time expires.

FEB 26

PERMITTEE NAME/ADDRESS (*Include Facility Name/Location if different*)

NAME Koppers Industries Inc.

ADDRESS 7540 N.W. St Helens Road
Portland OR 97211

FACILITY Multnomah County

LOCATION

NATIONAL POLLUTANT DISCHARGE ELIMINATION SYSTEM (*NPDES*)
DISCHARGE MONITORING REPORT (*DMR*)

Form Approved.
OMB No. 2040-0004
Approval expires 9-30-85

(2-16): 2-100007-9 — PERMIT NUMBER

(17-19): DISCHARGE NUMBER

MONITORING PERIOD						
	YEAR	MO	DAY		YEAR	MO	DAY
FROM	90	2	1	TO	90	3	1
	(20-21)	(22-23)	(24-25)		(26-27)	(28-29)	(30-31)

3077-5
47430

NOTE: Read instructions before completing this form.

PARAMETER (32-37)		(3 Card Only) QUANTITY OR LOADING (46-53) AVERAGE	(54-61) MAXIMUM	UNITS	(4 Card Only) QUALITY OR CONCENTRATION (38-45) MINIMUM	(46-53) AVERAGE	(54-61) MAXIMUM	UNITS	NO. EX (62-63)	FREQUENCY OF ANALYSIS (64-68)	SAMPLE TYPE (69-70)
Flow.	SAMPLE MEASUREMENT	6429							N/A	6/28	Est
	PERMIT REQUIREMENT		NA								
Temp.	SAMPLE MEASUREMENT				40	42	44	°F	0	6/28	GRAB
	PERMIT REQUIREMENT						100				
Ph.	SAMPLE MEASUREMENT				6.4	6.55	6.7	SU.	0	6/28	GRAB
	PERMIT REQUIREMENT				6.0		9.0				
Oil + grease	SAMPLE MEASUREMENT				0.4	0.55	0.8	mg/l	0	6/28	GRAB
	PERMIT REQUIREMENT					10	15				
Phenols.	SAMPLE MEASUREMENT				0.12	0.155	0.19	mg/l	0	6/28	GRAB
	PERMIT REQUIREMENT					0.5	0.7	(PPM)			
	SAMPLE MEASUREMENT										
	PERMIT REQUIREMENT										
	SAMPLE MEASUREMENT										
	PERMIT REQUIREMENT										

NAME/TITLE PRINCIPAL EXECUTIVE OFFICER
JOHN A OXFORD
PLANT MANAGER
TYPED OR PRINTED

I CERTIFY UNDER PENALTY OF LAW THAT I HAVE PERSONALLY EXAMINED AND AM FAMILIAR WITH THE INFORMATION SUBMITTED HEREIN AND BASED ON MY INQUIRY OF THOSE INDIVIDUALS IMMEDIATELY RESPONSIBLE FOR OBTAINING THE INFORMATION, I BELIEVE THE SUBMITTED INFORMATION IS TRUE, ACCURATE AND COMPLETE. I AM AWARE THAT THERE ARE SIGNIFICANT PENALTIES FOR SUBMITTING FALSE INFORMATION, INCLUDING THE POSSIBILITY OF FINE AND IMPRISONMENT. SEE 18 USC § 1001 AND 33 USC § 1319. (*Penalties under these statutes may include fines up to $10,000 and/or maximum imprisonment of between 6 months and 5 years.*)

SIGNATURE OF PRINCIPAL EXECUTIVE OFFICER OR AUTHORIZED AGENT

TELEPHONE: AREA CODE, NUMBER

DATE: YEAR, MO, DAY

COMMENT AND EXPLANATION OF ANY VIOLATIONS (*Reference all attachments here*)

Koppers015159

PERMITTEE NAME/ADDRESS (*Include Facility Name/Location if different*)

NAME ~~KOPPERS INDUSTRIES INC~~

ADDRESS 7540 NW ST HELENS RD

PORTLAND OR 97210

FACILITY

LOCATION MULTNOMAH COUNTY

NATIONAL POLLUTANT DISCHARGE ELIMINATION SYSTEM (*NPDES*)

DISCHARGE MONITORING REPORT (*DMR*)

Form Approved.
OMB No. 2040-0004
Approval expires 9-30-85

(2-16) 2-100077-9 PERMIT NUMBER

(17-19) DISCHARGE NUMBER

3077 47430

MONITORING PERIOD	YEAR	MO	DAY		YEAR	MO	DAY
FROM	90	1	1	TO	90	2	1
	(20-21)	(22-23)	(24-25)		(26-27)	(28-29)	(30-31)

NOTE: Read instructions before completing this form.

PARAMETER (32-37)		(3 Card Only) QUANTITY OR LOADING (46-53) AVERAGE	(54-61) MAXIMUM	UNITS	(4 Card Only) QUALITY OR CONCENTRATION (38-45) MINIMUM	(46-53) AVERAGE	(54-61) MAXIMUM	UNITS	NO. EX (62-63)	FREQUENCY OF ANALYSIS (64-68)	SAMPLE TYPE (69-70)
FLOW	SAMPLE MEASUREMENT	11,613							N/A	6/31	EST
	PERMIT REQUIREMENT		N/A								
TEMP	SAMPLE MEASUREMENT				~~XX~~ 43	48.75	56	°F	0	6/31	GRAB
	PERMIT REQUIREMENT						100				
PH	SAMPLE MEASUREMENT				6.3	6.6	7.0	SU	0	6/31	GRAB
	PERMIT REQUIREMENT				6.0		9.0				
OIL & GREASE	SAMPLE MEASUREMENT				0.6	0.926	1.4	MG/L	0	6/31	GRAB
	PERMIT REQUIREMENT					10	15				
PHENOLS	SAMPLE MEASUREMENT					0.235 ~~XXX~~		MG/L (PPM)	0	6/31	GRAB
	PERMIT REQUIREMENT					0.5	0.7				
	SAMPLE MEASUREMENT										
	PERMIT REQUIREMENT										
	SAMPLE MEASUREMENT										
	PERMIT REQUIREMENT										

NAME/TITLE PRINCIPAL EXECUTIVE OFFICER			TELEPHONE		DATE		
JOHN A. OXFORD PLANT MANAGER	I CERTIFY UNDER PENALTY OF LAW THAT I HAVE PERSONALLY EXAMINED AND AM FAMILIAR WITH THE INFORMATION SUBMITTED HEREIN; AND BASED ON MY INQUIRY OF THOSE INDIVIDUALS IMMEDIATELY RESPONSIBLE FOR OBTAINING THE INFORMATION, I BELIEVE THE SUBMITTED INFORMATION IS TRUE, ACCURATE AND COMPLETE. I AM AWARE THAT THERE ARE SIGNIFICANT PENALTIES FOR SUBMITTING FALSE INFORMATION, INCLUDING THE POSSIBILITY OF FINE AND IMPRISONMENT. SEE 18 U.S.C § 1001 AND 33 U.S.C § 1319. *(Penalties under these statutes may include fines up to $10,000 and/or maximum imprisonment of between 6 months and 5 years.)*	John A. Oxford	503	286-3681	90	2	14
TYPED OR PRINTED		SIGNATURE OF PRINCIPAL EXECUTIVE OFFICER OR AUTHORIZED AGENT	AREA CODE	NUMBER	YEAR	MO	DAY

COMMENT AND EXPLANATION OF ANY VIOLATIONS (*Reference all attachments here*)

Koppers015160

GENERAL INSTRUCTIONS

1. If form has been partially completed by preprinting, disregard instructions directed at entry of that information already preprinted.
2. Enter "PERMITTEE NAME/MAILING ADDRESS (and facility name/location, if different)," "PERMIT NUMBER," and "DISCHARGE NUMBER" where indicated. (A separate form is required for each discharge.)
3. Enter dates beginning and ending "MONITORING PERIOD" covered by form where indicated.
4. Enter each "PARAMETER" as specified in monitoring requirements of permit.
5. Enter "SAMPLE MEASUREMENT" data for each parameter under "QUANTITY" and "QUALITY" in units specified in permit. "AVERAGE" is normally arithmetic average (geometric average for bacterial parameters) of all sample measurements for each parameter obtained during "MONITORING PERIOD." "MAXIMUM" and "MINIMUM" are normally extreme high and low measurements obtained during "MONITORING PERIOD." (NOTE to municipals with secondary treatment requirement, enter 30-day average of sample measurements under "AVERAGE" and enter maximum 7-day average of sample measurements obtained during monitoring period under "MAXIMUM".
6. Enter "PERMIT REQUIREMENT" for each parameter under "QUANTITY" and "QUALITY" as specified in permit.
7. Under "NO. EX" enter number of sample measurements during monitoring period that exceed maximum (and/or minimum or 7-day average, as appropriate) permit requirement for each parameter. If none, enter "0".
8. Enter "FREQUENCY OF ANALYSIS" both as "SAMPLE MEASUREMENT" (actual frequency of sampling and analysis used during monitoring period) and as "PERMIT REQUIREMENT" specified in permit. (e.g., Enter "CONT." for continuous monitoring, "1/7" for one day per week, "1/30" for one day per month, "1/90" for one day per quarter, etc.)
9. Enter "SAMPLE TYPE" both as "SAMPLE MEASUREMENT" (actual sample type used during monitoring period) and as "PERMIT REQUIREMENT" (e.g., Enter "GRAB" for individual sample, "24HC" for 24-hour composite, "N/A" for continuous monitoring, etc.)

(FOLD HERE FIRST)

10. WHERE VIOLATIONS OF PERMIT REQUIREMENTS ARE REPORTED, ATTACH A BRIEF EXPLANATION TO DESCRIBE CAUSE AND CORRECTIVE ACTIONS TAKEN. REFERENCE EACH VIOLATION BY DATE.
11. If "no discharge" occurs during monitoring period, enter "NO DISCHARGE" across form in place of data entry.
12. Enter "NAME/TITLE OF PRINCIPAL EXECUTIVE OFFICER" with "SIGNATURE OF PRINCIPAL EXECUTIVE OFFICER OR AUTHORIZED AGENT," "TELEPHONE NUMBER" and "DATE" at bottom of form.
13. Mail signed Report to Office(s) by date(s) specified in permit. Retain copy for your records.
14. More detailed instructions for use of this DISCHARGE MONITORING REPORT (DMR) form may be obtained from Office(s) specified in permit.

LEGAL NOTICE

This report is required by law (33 U.S.C. 1318; 40 C.F.R. 125.27). Failure to report or failure to report truthfully can result in civil penalties not to exceed $10,000 per day of violation; or in criminal penalties not to exceed $25,000 per day of violation, or by imprisonment for not more than one year, or by both.

FOLD HERE SECOND

FOLD HERE THIRD

STAPLE HERE

PLACE STAMP HERE

Koppers015161

PERMITTEE NAME/ADDRESS (*Include Facility Name/Location if different*)

NAME KOPPERS INDUSTRIES INC

ADDRESS 7540 NW ST HELENS RD
PORTLAND OR 97210

FACILITY

LOCATION MULTNOMAH COUNTY

NATIONAL POLLUTANT DISCHARGE ELIMINATION SYSTEM (*NPDES*)
DISCHARGE MONITORING REPORT (*DMR*)

Form Approved.
OMB No. 2040-0004
Approval expires 9-30-85

(2-16) PERMIT NUMBER: 2-100077-9

(17-19) DISCHARGE NUMBER:

MONITORING PERIOD	YEAR	MO	DAY		YEAR	MO	DAY
FROM	90	1	1	TO	90	2	1
	(20-21)	(22-23)	(24-25)		(26-27)	(28-29)	(30-31)

3077 J
47430

NOTE: Read instructions before completing this form.

PARAMETER (32-37)		(3 Card Only) QUANTITY OR LOADING (46-53) AVERAGE	(54-61) MAXIMUM	UNITS	(4 Card Only) QUALITY OR CONCENTRATION (38-45) MINIMUM	(46-53) AVERAGE	(54-61) MAXIMUM	UNITS	NO. EX (62-63)	FREQUENCY OF ANALYSIS (64-68)	SAMPLE TYPE (69-70)
FLOW	SAMPLE MEASUREMENT	11,613							N/A	6/31	EST
	PERMIT REQUIREMENT		N/A								
TEMP	SAMPLE MEASUREMENT				43	48.75	56	°F	0	6/31	GRAB
	PERMIT REQUIREMENT						100°				
PH	SAMPLE MEASUREMENT				6.3	6.6	7.0	SU	0	6/31	GRAB
	PERMIT REQUIREMENT				6.0		9.0				
OIL & GREASE	SAMPLE MEASUREMENT				0.6	0.926	1.4	MG/L	0	6/31	GRAB
	PERMIT REQUIREMENT					10	15				
PHENOLS	SAMPLE MEASUREMENT					0.235		MGLE (PPM)	0	0/31	GRAB
	PERMIT REQUIREMENT					0.5	0.7				
	SAMPLE MEASUREMENT										
	PERMIT REQUIREMENT										
	SAMPLE MEASUREMENT										
	PERMIT REQUIREMENT										

NAME/TITLE PRINCIPAL EXECUTIVE OFFICER

JOHN A OXFORD
PLANT MANAGER

TYPED OR PRINTED

I CERTIFY UNDER PENALTY OF LAW THAT I HAVE PERSONALLY EXAMINED AND AM FAMILIAR WITH THE INFORMATION SUBMITTED HEREIN AND BASED ON MY INQUIRY OF THOSE INDIVIDUALS IMMEDIATELY RESPONSIBLE FOR OBTAINING THE INFORMATION I BELIEVE THE SUBMITTED INFORMATION IS TRUE, ACCURATE AND COMPLETE I AM AWARE THAT THERE ARE SIGNIFICANT PENALTIES FOR SUBMITTING FALSE INFORMATION, INCLUDING THE POSSIBILITY OF FINE AND IMPRISONMENT SEE 18 USC § 1001 AND 33 USC § 1319 (*Penalties under these statutes may include fines up to $10,000 and or maximum imprisonment of between 6 months and 5 years.*)

SIGNATURE OF PRINCIPAL EXECUTIVE OFFICER OR AUTHORIZED AGENT

TELEPHONE: AREA CODE 503 NUMBER 286-3681

DATE: YEAR 90 MO 2 DAY 14

COMMENT AND EXPLANATION OF ANY VIOLATIONS (*Reference all attachments here*)

Koppers015162

1-4-90
W-W-T-3
Ph 6.3
water
Temp. 52°F

1-4-90
w.w. T-4
PH 6.3
water
Temp 52°F

REQUEST FOR ANALYSIS

PLEASE FILL IN THE REQUESTED INFORMATION COMPLETELY

MAIL CONFIRMATION:

THIS SECTION FOR LABORATORY USE ONLY
LABORATORY LOG#: A900104-A#2
CUSTABBR: Koppers NEW:
DUE DATE: 18 P P D
VERBALS RESULTS: YES NO STD
TYPING DUE DATE: 1/6
PAYMENT CODE: 3
PAYMENT BY: CASH: CHECK: #
DELIVERY BY: UPS DATE/TIME: 1/4 1700

LABORATORY REPORT INFORMATION:

COMPANY NAME: Koppers Co., Inc.
MAILING ADDRESS: 7540 NW St. Helens Rd.
CITY, STATE, ZIP: Portland OR 97210-3663
REPORT ATTENTION: John Oxford PHONE: 503-286-3681

S/E REPORT ATTENTION:

DO YOU NEED VERBAL RESULTS? YES / NO PHONE VERBAL RESULTS TO:
PICK-UP / DELIVERY ADDRESS:

BILLING INFORMATION:

BILLING NAME: Koppers Co., Inc.
BILLING ADDRESS: 7540 NW St. Helens Rd.
CITY, STATE, ZIP: Portland OR 97210-3663
BILLING ATTENTION: John Oxford PHONE: 503-286-3681
BILLING COMMENTS: -0-

PO INFORMATION

DO YOU HAVE A QUOTE NUMBER FOR THIS JOB? YES / NO QUOTE #:

DOES YOUR COMPANY USE PO# ? YES / NO IF NO PLEASE INITAL HERE:
STANDING PO#: VERBAL JOHN (10%G/Phenols-$38)
JOB RELEASE P.O.:

COMMENT FIELD:

-0-

PAYMENT AUTHORIZATION:

RUSH SURCHARGE (2 x standard price) INITIAL HERE :
PRIORITY SURCHARGE (1.5 x standard price) INITIAL HERE :
STANDARD SURCHARGE (standard price) INITIAL HERE : XX

VERIFICATION OF REPORT INFORMATION, BILLING INFORMATION AND SURCHARGE AUTHORIZATION:

Signature George Hoffman Date: 1/4 Time: 1700

COFFEY LABORATORIES INC.

12423 N.E. WHITAKER WAY
PORTLAND, OREGON 97230

CHAIN OF CUSTODY

(503) 254-1794
FAX (503) 254-1452

PROJECT #:

PROJECT NAME:

PAGE 1 OF 1 PAGE(S)
PLEASE PRINT OR TYPE.

FOR LABORATORY USE ONLY

COMPANY NAME:

REPORT ATTENTION:

JOB#: A900104-A-H2

CUSTABBR: Koppers

P.O.:

FIELD IDENTIFICATION: ONE LINE PER SAMPLE CONTAINER	LAB LOC	LAB ID	DATE	TIME	MEDIA	ANALYSES REQUESTED	REMARKS:
W-W-T-3			1-4-90	3:20 PM		oil + Grease	
W-W-T-3			1-4-90	3:20		Phenols	
W-W-T-4			1-4-90	3:20		oil + Grease	
W-W-T-4			1-4-90	3:20		Phenols	

SAMPLES COLLECTED BY: Doug Hoffman DATE/TIME 1-4-90 3:30

RELINQUISHED BY: Doug Hoffman DATE/TIME 1-4-90 1700

RELINQUISHED BY: DATE/TIME

RECIEVED BY LAB: KJD DATE TIME 1/4 1700

LAB USE:

SAMPLE REMARKS:

EPA NPDES RCRA GEN

EXPRESS UPS MAIL CXX

WHITE COPY - COFFEY LABORATORIES

PINK COPY - CLIENT'S COPY

Koppers015166

COFFEY LABORATORIES, INC.
12423 N.E. WHITAKER WAY
PORTLAND, OR 97230
PHONE: (503) 254-1794
FAX: (503) 254-1452

January 17, 1990
Log # A900104-AH2
PO # Verbal John

Koppers Co., Inc.
7540 NW St. Helens Rd.
Portland, OR 97210-3663
Attention: John Oxford

Sample Collected: 01/04/90 1520 hrs.
Sample Received: 01/04/90
Sample ID: #1 - W-W-T3
#2 - W-W-T4

ANALYSIS	METHOD	DETECTION LIMIT	SAMPLE #1	SAMPLE #2
Oil & Grease	EPA 413.2	0.2	0.73	0.68
Total Phenols	EPA 420.1	0.05	0.40	0.47

Results expressed as mg/L unless otherwise noted.

Sincerely,

Victor A. Perry,
Quality Assurance

Sincerely,

Renee Chauvin
Technical Director

SMC/lws

This report is for the sole and exclusive use of the client. Samples are retained a maximum of 15 days from the report date, or until the maximum holding time expires.

1-9-90

W-W-[illegible]

PH 6.5

water

Temp. 56° F

1-9-90

W-W-T-R.

Ph 6.5

water

Temp 56°F

REQUEST FOR ANALYSIS

PLEASE FILL IN THE REQUESTED INFORMATION COMPLETELY

MAIL CONFIRMATION:

THIS SECTION FOR LABORATORY USE ONLY
LABORATORY LOG#: A900109-AL2
CUSTABER: Koppers NEW: ____
DUE DATE: ____ R P C
VERBALS RESULTS: YES NO
TYPING DUE DATE: ____
PAYMENT CODE: 3
PAYMENT BY: CASH: ____ CHECK: ____ #: ____
DELIVERY BY: ____ DATE/TIME/: ____

LABORATORY REPORT INFORMATION:

COMPANY NAME: Koppers Co., Inc.
MAILING ADDRESS: 7540 NW St. Helens Rd.
CITY, STATE, ZIP: Portland OR 97210-3663
REPORT ATTENTION: John Oxford PHONE: 503-286-3681

S/E REPORT ATTENTION: ____

DO YOU NEED VERBAL RESULTS? YES / NO PHONE VERBAL RESULTS TO: ____
PICK-UP / DELIVERY ADDRESS: ____

BILLING INFORMATION:

BILLING NAME: Koppers Co., Inc.
BILLING ADDRESS: 7540 NW St. Helens Rd.
CITY, STATE, ZIP: Portland OR 97210-3663
BILLLING ATTENTION: John Oxford PHONE: 503-286-3681
BILLING COMMENTS: -0-

PO INFORMATION

DO YOU HAVE A QUOTE NUMBER FOR THIS JOB? YES / NO QUOTE #: ____

DOES YOUR COMPANY USE PO# ? YES / NO IF NO PLEASE INITAL HERE: ____
STANDING PO#: VERBAL JOHN (O&G/Phenols-s35)
JOB RELEASE P.O.: ____

COMMENT FIELD:

-0-

PAYMENT AUTHORIZATION:

RUSH SURCHARGE (2 x standard price) INITIAL HERE : ____
PRIORITY SURCHARGE (1.5 x standard price) INITIAL HERE : ____
STANDARD SURCHARGE (standard price) INITIAL HERE : ____

VERIFICATION OF REPORT INFORMATION, BILLING INFORMATION AND SURCHARGE AUTHORIZATION:

Signature ____ Date: ____ Time: ____

COFFEY LABORATORIES INC.

12423 N.E. WHITAKER WAY
PORTLAND, OREGON 97230

CHAIN OF CUSTODY

(503) 254-1794
FAX (503) 254-1452

PROJECT #:

PROJECT NAME:

PAGE _____ OF _____ PAGE(S)
PLEASE PRINT OR TYPE.

FOR LABORATORY USE ONLY

COMPANY NAME:

REPORT ATTENTION:

JOB#: A900109-AL2

CUSTABBR: _____

P.O.: _____

FIELD IDENTIFICATION: ONE LINE PER SAMPLE CONTAINER	LAB LOC	ID	DATE	TIME	MEDIA	ANALYSES REQUESTED	REMARKS:
W-W-T-1			1-9-90	3:00PM		Oil + Grease	
W-W-T-1			"	"		Phenols	
W-W-T-2			"	"		Oil + Grease	
W-W-T-2			"	"		Phenols	

SAMPLES COLLECTED BY:	DATE/TIME	RELINQUISHED BY:	DATE/TIME	LAB USE:
George Huffman	1-9-90 3:00PM			
RELINQUISHED BY: George Huffman	DATE/TIME 1-9-90 3:00PM	RECIEVED BY LAB: [signature]	DATE TIME 1/9/90	
SAMPLE REMARKS:		EPA NPDES RCRA GEN		EXPRESS UPS MAIL CXX

WHITE COPY - COFFEY LABORATORIES

PINK COPY - CLIENT'S COPY

Koppers015171

COFFEY LABORATORIES, INC.
12423 N.E. WHITAKER WAY
PORTLAND, OR 97230
PHONE: (503) 254-1794
FAX: (503) 254-1452

January 24, 1990
Log # A900109-AL2
PO # Verbal John

Koppers Co., Inc.
7540 NW St. Helens Rd.
Portland, OR 97210-3663
Attention: John Oxford

Sample Collected: 01/09/90 1500 hrs.
Sample Received: 01/09/90
Sample ID: #1 - W-W-T-1
#2 - W-W-T-2

ANALYSIS	METHOD	DETECTION LIMIT	SAMPLE #1	SAMPLE #2
Oil & Grease	EPA 413.2	0.2	1.0	0.6
Total Phenols	EPA 420.1	0.05	0.08	0.07

Results expressed as mg/L unless otherwise noted.

Sincerely,

Victor A. Perry,
Quality Assurance

Sincerely,

Renee Chauvin
Technical Director

SMC/lws

This report is for the sole and exclusive use of the client. Samples are retained a maximum of 15 days from the report date, or until the maximum holding time expires.

JAN 25 1989

1-19-90

W-W-T-3

Ph 6.9

Water Temp. 43°F

1-19-90

W-W-T-4

Ph 7.0

water Temp 44°F

REQUEST FOR ANALYSIS

PLEASE FILL IN THE REQUESTED INFORMATION COMPLETELY

MAIL CONFIRMATION:

THIS SECTION FOR LABORATORY USE ONLY
LABORATORY LOG#: A9019- V2
CUSTABER: Koppers NEW: ____
DUE DATE: +8 A B C
VERBALS RESULTS: YES NO
TYPING DUE DATE: +10
PAYMENT CODE: 3
PAYMENT BY: CASH: ____ CHECK: ____ #: ____
DELIVERY BY: ____ DATE/TIME : ____

LABORATORY REPORT INFORMATION:

COMPANY NAME: Koppers Co., Inc.
MAILING ADDRESS: 7540 NW St. Helens Rd.
CITY, STATE, ZIP: Portland OR 97210-3663
REPORT ATTENTION: John Oxford PHONE: 503-286-3681

S/E REPORT ATTENTION: ____

DO YOU NEED VERBAL RESULTS? YES / NO PHONE VERBAL RESULTS TO: ____
PICK-UP / DELIVERY ADDRESS: ____

BILLING INFORMATION:

BILLING NAME: Koppers Co., Inc.
BILLING ADDRESS: 7540 NW St. Helens Rd.
CITY, STATE, ZIP: Portland OR 97210-3663
BILLING ATTENTION: John Oxford PHONE: 503-286-3681
BILLING COMMENTS: -0-

PO INFORMATION

DO YOU HAVE A QUOTE NUMBER FOR THIS JOB? YES / NO QUOTE #: ____

DOES YOUR COMPANY USE PO# ? YES / NO IF NO PLEASE INITAL HERE: ____
STANDING PO#: VERBAL JOHN (O&G/Phenols-$35)
JOB RELEASE P.O.: ____

COMMENT FIELD:

-0-

PAYMENT AUTHORIZATION:

RUSH SURCHARGE (2 x standard price) INITIAL HERE : ____
PRIORITY SURCHARGE (1.5 x standard price) INITIAL HERE : ____
STANDARD SURCHARGE (standard price) INITIAL HERE : ____

VERIFICATION OF REPORT INFORMATION, BILLING INFORMATION AND SURCHARGE AUTHORIZATION:

Signature George Hoffman Date: 1-19-90 Time: 3:25 PM

COFFEY LABORATORIES INC.

12423 N.E. WHITAKER WAY
PORTLAND, OREGON 97230

CHAIN OF CUSTODY

(503) 254-1794
FAX (503) 254-1452

PROJECT #:	PROJECT NAME:	PAGE _____ OF ____ PAGE(S) PLEASE PRINT OR TYPE.	FOR LABORATORY USE ONLY
COMPANY NAME:			JOB#: A90119-V2
REPORT ATTENTION:			CUSTABBR:
			P.O.:

FIELD IDENTIFICATION: ONE LINE PER SAMPLE CONTAINER	LAB LOC	LAB ID	DATE	TIME	MEDIA	ANALYSES REQUESTED	REMARKS:
W-W-T-3		1h	1-19-90	3:00PM	WW	Oil + Grease	
W-W-T-3		1i	"	"		Phenols	
W-W-T-4		2h	"	"		Oil + Grease	
W-W-T-4		2i	"	"		Phenols	

SAMPLES COLLECTED BY:	DATE/TIME	RELINQUISHED BY:	DATE/TIME	LAB USE:
George Hoffman	1-19-90 3:00PM			
RELINQUISHED BY: George Hoffman	DATE/TIME 1-19-90	RECIEVED BY LAB: RCN 1/19/90	DATE TIME 1515	
SAMPLE REMARKS:		EPA NPDES RCRA GEN		EXPRESS UPS MAIL CXX

WHITE COPY - COFFEY LABORATORIES

PINK COPY - CLIENT'S COPY

Koppers015176

COFFEY LABORATORIES, INC.
12423 N.E. WHITAKER WAY
PORTLAND, OR 97230
PHONE: (503) 254-1794
FAX: (503) 254-1452

January 31, 1990
Log # A9000119-V2
PO # Verbal John

Koppers Co., Inc
7540 NW St. Helens Rd.
Portland, OR 97210-3663
Attention: John Oxford

Sample Collected: 1/19/90, 1500 hrs
Sample Received: 1/19/90
Sample ID: #1 WWT-3
#2 WWT-4

ANALYSIS	METHOD	DETECTION LIMIT	SAMPLE #1	SAMPLE #2
Oil & Grease	EPA 413.2	0.2	0.7	0.9
Total Phenols	EPa 420.1	0.05	0.18	0.20

Results expressed as mg/L unless otherwise noted.

Sincerely,

Victor A. Perry,
Quality Assurance

Sincerely,

Renee Chauvin,
Technical Director

RJC/mlh

This report is for the sole and exclusive use of the client. Samples are retained a maximum of 15 days from the report date, or until the maximum holding time expires.

FEB 5

10-23-90
W-W-T-1

Ph 6.6

water
Temp. 44°F

1-23-90
w-~~[illegible]~~-T-2
ph 6.7

water
Temp - 43°F

REQUEST FOR ANALYSIS

PLEASE FILL IN THE REQUESTED INFORMATION COMPLETELY

MAIL CONFIRMATION:

THIS SECTION FOR LABORATORY USE ONLY
LABORATORY LOG#: A900122-22
CUSTABER: Koppers NEW:
DUE DATE: 48 P P C
VERBALS RESULTS: YES NO
TYPING DUE DATE: 1/10
PAYMENT CODE: 3
PAYMENT BY: CASH: CHECK: #:
DELIVERY BY: DATE/TIME :

LABORATORY REPORT INFORMATION:

COMPANY NAME: Koppers Co., Inc.
MAILING ADDRESS: 7540 NW St. Helens Rd.
CITY, STATE, ZIP: Portland OR 97210-3663
REPORT ATTENTION: John Oxford PHONE: 503-286-3681

B/E REPORT ATTENTION:

DO YOU NEED VERBAL RESULTS? YES / NO PHONE VERBAL RESULTS TO:
PICK-UP / DELIVERY ADDRESS:

BILLING INFORMATION:

BILLING NAME: Koppers Co., Inc.
BILLING ADDRESS: 7540 NW St. Helens Rd.
CITY, STATE, ZIP: Portland OR 97210-3663
BILLLING ATTENTION: John Oxford PHONE: 503-286-3681
BILLING COMMENTS: -0-

PO INFORMATION

DO YOU HAVE A QUOTE NUMBER FOR THIS JOB? YES / NO QUOTE #:

DOES YOUR COMPANY USE PO# ? YES / NO IF NO PLEASE INITAL HERE:
STANDING PO#: VERBAL JOHN (O&G/Phenols-$75)
JOB RELEASE P.O.:

COMMENT FIELD:

-0-

PAYMENT AUTHORIZATION:

RUSH SURCHARGE (2 x standard price) INITIAL HERE :
PRIORITY SURCHARGE (1.5 x standard price) INITIAL HERE :
STANDARD SURCHARGE (standard price) INITIAL HERE : GH

VERIFICATION OF REPORT INFORMATION, BILLING INFORMATION AND SURCHARGE AUTHORIZATION:

Signature George Hoffman Date: 1-22-90 Time: 4:43 P.M.

COFFEY LABORATORIES INC.

12423 N.E. WHITAKER WAY
PORTLAND, OREGON 97230

CHAIN OF CUSTODY

(503) 254-1794
FAX (503) 254-1452

PROJECT #:

PROJECT NAME:

PAGE _____ OF ____ PAGE(S)
PLEASE PRINT OR TYPE.

FOR LABORATORY USE ONLY

COMPANY NAME: Koppers

REPORT ATTENTION:

JOB#: A90122-22

CUSTABBR: _____

P.O.: _____

FIELD IDENTIFICATION: ONE LINE PER SAMPLE CONTAINER	LAB LOC	ID	DATE	TIME	MEDIA	ANALYSES REQUESTED	REMARKS:
W-W-T-1		1h	1-22-90	3:30PM	WW	oil & Grease	
W-W-T-1		1i	"	"		Phenols	
W-W-T-2		2h	"	"		oil & Grease	
W-W-T-2		2i	"	"		Phenols	

SAMPLES COLLECTED BY: Gregg Hoffman DATE/TIME 1-22-90 3:30PM

RELINQUISHED BY: DATE/TIME

LAB USE:

RELINQUISHED BY: Gregg Hoffman DATE/TIME 1-22-90 3:30 PM

RECIEVED BY LAB: ABH 1/22/90 DATE TIME 1645

SAMPLE REMARKS:

EPA NPDES RCRA GEN

EXPRESS UPS MAIL CXX

WHITE COPY - COFFEY LABORATORIES

PINK COPY - CLIENT'S COPY

Koppers015181

	#1	#2
oil + grease	1.4	1.4
Phenols.	0.24	0.24

TO AND FROM
ARIZONA - CALIFORNIA - NEVADA - OREGON - WASHINGTON
FASTEST LTL SERVICE

WILLIG

Call
(503) 286-2685

PORTLAND

DELIVERY BY NOON

George

COFFEY LABORATORIES, INC.
12423 N.E. WHITAKER WAY
PORTLAND, OR 97230
PHONE: (503) 254-1794
FAX: (503) 254-1452

February 2, 1989
Log #A900122-Z2
PO # Verbal John

Koppers Co, Inc.
7540 NW St. Helens Road
Portland, OR 97210-3663
Attention: John Oxford

Samples Collected: 01/22/90 1530 hrs.
Samples Received: 01/22/90
Sample ID: #1 - WW-T1
#2 - WW-T2

PARAMETER	METHOD	DETECTION LIMITS	#1	#2	UNITS
Oil & Grease	EPA 413.2	0.2	1.4	1.4	mg/L
Total Phenols	EPA 420.1	0.05	0.24	0.24	mg/L

Sincerely,

Victor A. Perry,
Quality Assurance

Sincerely,

Renee Chauvin,
Technical Director

RJC/lws

This report is for the sole and exclusive use of the client. Samples are retained a maximum of 15 days from the report date, or until the maximum holding time expires.

FEB 9 1989

	Tank # 3	Tank # 4	Tank # 1	Tank # 2	Tank # 3	Tank # 4	Tank # 1	Tank # 2
Flow.	45,000	45000	45,000	45000	45000	45000	45000	45000

360,000 ÷ 31 = 11,613

Temp	52	52	56	56	43	44	44	443 = 390 ÷ 8 = 48.75
Ph.	6.3	6.3	6.5	6.5	6.9	7.0	6.6	6.7 = 52.8 ÷ 8 = 6.6
oil + grease	0.73	0.68	1.0	0.6	0.7	0.9	1.4	1.4 = 7.41 ÷ 8 = 1.926
Phenols	0.40	0.47	0.08	0.07	0.18	0.20	0.24	0.24 = 1.88 ÷ 8 = 1.235

April 26, 1991
Log # A910410-AO
PO # Verbal John

Attention: John Oxford
Koppers Industry
7540 NW St. Helens Rd.
Portland, OR 97210-3663

Sample(s) Collected: 4/10/91
Sample(s) Received: 4/10/91

Analysis Performed: Polynuclear Aromatic Hydrocarbons in water, by EPA Method 610,capillary GC/FID.

ANALYTE	DETECTION LIMIT	LABORATORY BLANK	W-W-T-3 RESULTS
Acenaphthene	3	ND	22
Acenaphthylene	3	ND	ND
Anthracene	5	ND	ND
Benzo(a)anthracene	3	ND	ND
Benzo(b)fluoranthene	3	ND	ND
Benzo(k)fluoranthene	3	ND	ND
Benzo(g,h,i)perylene	3	ND	ND
Benzo (a)pyrene	3	ND	ND
Chrysene	3	ND	ND
Dibenzo(ah)anthracene	3	ND	ND
Fluoranthene	3	ND	ND
Fluorene	3	ND	12
Indeno(1,2,3-cd)pyrene	5	ND	ND
Naphthalene	9	ND	ND
Phenanthrene	4	ND	ND
Pyrene	3	ND	ND

Results expressed as ug/L unless otherwise noted.

ND means none detected at or above the detection limit listed.

Sincerely,

Victor A. Perry,
Quality Assurance

Sincerely,

Renee Chauvin,
Technical Director

RJC/mlh

This report is for the sole and exclusive use of the client. Samples are retained a maximum of 15 days from the report date, or until the maximum holding time expires.

RECEIVED
APR 30 1991
KOPPERS INDS., INC.
PORTLAND, OR

COFFEY LABORATORIES, INC.
12423 N.E. Whitaker Way • Portland, OR • 97230 • (503) 254-1794 • FAX (503) 254-1452

12-4-89

w.w. T-2

Ph 6.7

water

Temp. 49

12-4-89
w-w-T-1
Ph 6.9
water
Temp. 49

PERMITTEE NAME/ADDRESS (*Include Facility Name/Location if different*)

NAME KOPPERS INDUSTRIES INC

ADDRESS 7540 NW ST HELENS RD
PORTLAND OR 97210

FACILITY

LOCATION MULTNOMAH COUNTY

NATIONAL POLLUTANT DISCHARGE ELIMINATION SYSTEM (*NPDES*)
DISCHARGE MONITORING REPORT (*DMR*)

Form Approved.
OMB No. 2040-0004
Approval expires 9-30-85

(2-16) PERMIT NUMBER: 2-100077-9

(17-19) DISCHARGE NUMBER:

MONITORING PERIOD	YEAR	MO	DAY		YEAR	MO	DAY
FROM	89	12	1	TO	90	1	1
	(20-21)	(22-23)	(24-25)		(26-27)	(28-29)	(30-31)

3077 J
47430

NOTE: Read instructions before completing this form.

PARAMETER (32-37)		(3 Card Only) QUANTITY OR LOADING (46-53) AVERAGE	(54-61) MAXIMUM	UNITS	(4 Card Only) QUALITY OR CONCENTRATION (38-45) MINIMUM	(46-53) AVERAGE	(54-61) MAXIMUM	UNITS	NO. EX (62-63)	FREQUENCY OF ANALYSIS (64-68)	SAMPLE TYPE (69-70)
Flow	SAMPLE MEASUREMENT	3000							N/A	6/30	EST
	PERMIT REQUIREMENT		N/A								
TEMP	SAMPLE MEASUREMENT				49	49	49		0	6/30	GRAB
	PERMIT REQUIREMENT						110	°F			
PH	SAMPLE MEASUREMENT				6.7	6.8	6.9		0	6/30	GRAB
	PERMIT REQUIREMENT				6.0		9.0	SU			
OIL & GREASE	SAMPLE MEASUREMENT				NOTHING DETECTED			MG/L	0	6/30	GRAB
	PERMIT REQUIREMENT					10	15				
PHENOLS	SAMPLE MEASUREMENT				NOTHING DETECTED			MG/L (PPM)	0	6/30	GRAB
	PERMIT REQUIREMENT					0.5	0.7				
	SAMPLE MEASUREMENT										
	PERMIT REQUIREMENT										
	SAMPLE MEASUREMENT										
	PERMIT REQUIREMENT										

NAME/TITLE PRINCIPAL EXECUTIVE OFFICER
JOHN A OXFORD
PLANT MANAGER
TYPED OR PRINTED

I CERTIFY UNDER PENALTY OF LAW THAT I HAVE PERSONALLY EXAMINED AND AM FAMILIAR WITH THE INFORMATION SUBMITTED HEREIN; AND BASED ON MY INQUIRY OF THOSE INDIVIDUALS IMMEDIATELY RESPONSIBLE FOR OBTAINING THE INFORMATION, I BELIEVE THE SUBMITTED INFORMATION IS TRUE, ACCURATE AND COMPLETE. I AM AWARE THAT THERE ARE SIGNIFICANT PENALTIES FOR SUBMITTING FALSE INFORMATION, INCLUDING THE POSSIBILITY OF FINE AND IMPRISONMENT. SEE 18 U.S.C § 1001 AND 33 U.S.C § 1319. (*Penalties under these statutes may include fines up to $10,000 and or maximum imprisonment of between 6 months and 5 years.*)

John A Oxford
SIGNATURE OF PRINCIPAL EXECUTIVE OFFICER OR AUTHORIZED AGENT

TELEPHONE		DATE		
503	286-3681	90	1	15
AREA CODE	NUMBER	YEAR	MO	DAY

COMMENT AND EXPLANATION OF ANY VIOLATIONS (*Reference all attachments here*)

Koppers015188

GENERAL INSTRUCTIONS

1. If form has been partially completed by preprinting, disregard instructions directed at entry of that information already preprinted.
2. Enter "PERMITTEE NAME/MAILING ADDRESS (and facility name/location, if different)," "PERMIT NUMBER," and "DISCHARGE NUMBER" where indicated. (A separate form is required for each discharge.)
3. Enter dates beginning and ending "MONITORING PERIOD" covered by form where indicated.
4. Enter each "PARAMETER" as specified in monitoring requirements of permit.
5. Enter "SAMPLE MEASUREMENT" data for each parameter under "QUANTITY" and "QUALITY" in units specified in permit. "AVERAGE" is normally arithmetic average (geometric average for bacterial parameters) of all sample measurements for each parameter obtained during "MONITORING PERIOD." "MAXIMUM" and "MINIMUM" are normally extreme high and low measurements obtained during "MONITORING PERIOD." (NOTE to municipals with secondary treatment requirement, enter 30-day average of sample measurements under "AVERAGE" and enter maximum 7-day average of sample measurements obtained during monitoring period under "MAXIMUM".
6. Enter "PERMIT REQUIREMENT" for each parameter under "QUANTITY" and "QUALITY" as specified in permit.
7. Under "NO. EX" enter number of sample measurements during monitoring period that exceed maximum (and/or minimum or 7-day average as appropriate) permit requirement for each parameter. If none, enter "0".
8. Enter "FREQUENCY OF ANALYSIS" both as "SAMPLE MEASUREMENT" (actual frequency of sampling and analysis used during monitoring period) and as "PERMIT REQUIREMENT" specified in permit. (e.g., Enter "CONT." for continuous monitoring, "1/7" for one day per week, "1/30" for one day per month, "1/90" for one day per quarter, etc.)
9. Enter "SAMPLE TYPE" both as "SAMPLE MEASUREMENT" (actual sample type used during monitoring period) and as "PERMIT REQUIREMENT." (e.g., Enter "GRAB" for individual sample, "24HC" for 24-hour composite, "N/A" for continuous monitoring, etc.)

(FOLD HERE FIRST)

10. WHERE VIOLATIONS OF PERMIT REQUIREMENTS ARE REPORTED, ATTACH A BRIEF EXPLANATION TO DESCRIBE CAUSE AND CORRECTIVE ACTIONS TAKEN. REFERENCE EACH VIOLATION BY DATE.
11. If "no discharge" occurs during monitoring period, enter "NO DISCHARGE" across form in place of data entry.
12. Enter "NAME/TITLE OF PRINCIPAL EXECUTIVE OFFICER" with "SIGNATURE OF PRINCIPAL EXECUTIVE OFFICER OR AUTHORIZED AGENT," "TELEPHONE NUMBER" and "DATE" at bottom of form.
13. Mail signed Report to Office(s) by date(s) specified in permit. Retain copy for your records.
14. More detailed instructions for use of this DISCHARGE MONITORING REPORT (DMR) form may be obtained from Office(s) specified in permit.

LEGAL NOTICE

This report is required by law (33 U.S.C. 1318; 40 C.F.R. 125.27). Failure to report or failure to report truthfully can result in civil penalties not to exceed $10,000 per day of violation; or in criminal penalties not to exceed $25,000 per day of violation, or by imprisonment for not more than one year, or by both.

FOLD HERE SECOND

PLACE STAMP HERE

FOLD HERE THIRD

STAPLE HERE

COFFEY LABORATORIES INC.

12423 N.E. WHITAKER WAY
PORTLAND, OREGON 97230

CHAIN OF CUSTODY

(503) 254-1794
FAX (503) 254-1452

PROJECT #:

PROJECT NAME:

PAGE _____ OF _____ PAGE(S)
PLEASE PRINT OR TYPE.

FOR LABORATORY USE ONLY

COMPANY NAME:

REPORT ATTENTION:

JOB#: _____

CUSTABBR: _____

P.O.: A891204-AC2

FIELD IDENTIFICATION: ONE LINE PER SAMPLE CONTAINER	LAB LOC	ID	DATE	TIME	MEDIA	ANALYSES REQUESTED	REMARKS:
W-W-T-1			12-4-89	3:00PM		Oil + Grease	
W-W-T-1			"	"		Phenols	
W-W-T-2			"	"		Oil + Grease	
W-W-T-2			"	"		Phenols	

SAMPLES COLLECTED BY: G. Hoffman	DATE/TIME 12-4-89 3:00PM	RELINQUISHED BY: DATE/TIME	LAB USE:
RELINQUISHED BY: G. Hoffman	DATE/TIME 12-4-89	RECIEVED BY LAB: AEW 14	DATE TIME 1420
SAMPLE REMARKS:		EPA NPDES RCRA GEN	EXPRESS UPS MAIL CXX

WHITE COPY - COFFEY LABORATORIES

PINK COPY - CLIENT'S COPY

Koppers015190

COFFEY LABORATORIES, INC.
12423 N.E. WHITAKER WAY
PORTLAND, OR 97230
PHONE: (503) 254-1794
FAX: (503) 254-1452

December 15, 1989
Log # A891204-AC2
PO # Verbal John

Koppers Co., Inc.
7540 NW St. Helens Rd.
Portland, OR 97210-3663
Attention: John Oxford

Sample Collected: 12/4/89, 1500 hrs
Sample Received: 12/4/89
Sample ID: #1 W-W-T1
#2 W-W-T2

ANALYSIS	METHOD	DETECTION LIMIT	SAMPLE #1	SAMPLE #2
Oil & Grease	EPA 413.2	0.3	ND	ND
Total Phenols	EPA 420.1	0.05	ND	ND

ND means none detected at or above the detection limit listed.

Results expressed as mg/L unless otherwise noted.

Sincerely,

Victor A. Perry,
Quality Assurance

Sincerely,

Susan M. Coffey,
President

SMC/mlh

This report is for the sole and exclusive use of the client. Samples are retained a maximum of 15 days from the report date, or until the maximum holding time expires.

DEC 20

	WWT1	WWT2	WWT2
flow	45000	45,000 = 90,000 ÷ 30 = 3000	
Temp	49	49 = 98 ÷ 2 = 49	
Ph.	6.9	6.7 = 13.6 ÷ 2	6.8
oil & grease	N/D	N/D	
Phenols.	N/D	N/A	

11-13-89

W-W- T-4

Ph 6.4

Water Temp- 54

11-13-89

W-W- T-3

PH 6.3

Water Temp- 54

PERMITTEE NAME/ADDRESS (Include Facility Name/Location if different)

NAME Koppers Industries Inc.

ADDRESS 7540 N.W. Helvetia Rd
Portland Or 97210

FACILITY

LOCATION Multnomah County

NATIONAL POLLUTANT DISCHARGE ELIMINATION SYSTEM (NPDES)
DISCHARGE MONITORING REPORT (DMR)

Form Approved
OMB No. 2040-0004
Expires 2-29-84

(2-16) PERMIT NUMBER: OR-100077-9

(17-19) DISCHARGE NUMBER:

3077 I
47430

MONITORING PERIOD	YEAR	MO	DAY		YEAR	MO	DAY
FROM	89	11	1	TO	89	12	1
	(20-21)	(22-23)	(24-25)		(26-27)	(28-29)	(30-31)

NOTE: Read Instructions before completing this form.

PARAMETER (32-37)		(3 Card Only) QUANTITY OR LOADING (46-53) AVERAGE	(54-61) MAXIMUM	UNITS	(4 Card Only) QUALITY OR CONCENTRATION (38-45) MINIMUM	(46-53) AVERAGE	(54-61) MAXIMUM	UNITS	NO. EX (62-63)	FREQUENCY OF ANALYSIS (64-68)	SAMPLE TYPE (69-70)
Flow.	SAMPLE MEASUREMENT	3000							N/R	6/30	Est
	PERMIT REQUIREMENT		N/R								
Temp.	SAMPLE MEASUREMENT				54	54	54		0	6/30	GRAB
	PERMIT REQUIREMENT						110	°F			
Ph	SAMPLE MEASUREMENT				6.3	6.35	6.4		0	6/30	GRAB
	PERMIT REQUIREMENT				6.0		9.0	SU			
oil + grease	SAMPLE MEASUREMENT				0	0.1	0.2		0	6/30	GRAB
	PERMIT REQUIREMENT					10	15	mg/L			
Phenols	SAMPLE MEASUREMENT				0.09	0.105	0.12		0	6/30	GRAB
	PERMIT REQUIREMENT					0.5	0.7	mg/L (PPM)			
	SAMPLE MEASUREMENT										
	PERMIT REQUIREMENT										
	SAMPLE MEASUREMENT										
	PERMIT REQUIREMENT										

NAME/TITLE PRINCIPAL EXECUTIVE OFFICER: John A. Alford, Plant Manager

TYPED OR PRINTED

I CERTIFY UNDER PENALTY OF LAW THAT I HAVE PERSONALLY EXAMINED AND AM FAMILIAR WITH THE INFORMATION SUBMITTED HEREIN; AND BASED ON MY INQUIRY OF THOSE INDIVIDUALS IMMEDIATELY RESPONSIBLE FOR OBTAINING THE INFORMATION, I BELIEVE THE SUBMITTED INFORMATION IS TRUE, ACCURATE AND COMPLETE. I AM AWARE THAT THERE ARE SIGNIFICANT PENALTIES FOR SUBMITTING FALSE INFORMATION, INCLUDING THE POSSIBILITY OF FINE AND IMPRISONMENT SEE 18 U.S.C § 1001 AND 33 U.S.C § 1319. *(Penalties under these statutes may include fines up to $10,000 and/or maximum imprisonment of between 6 months and 5 years.)*

SIGNATURE OF PRINCIPAL EXECUTIVE OFFICER OR AUTHORIZED AGENT

TELEPHONE		DATE		
503	286-3681	89	12	13
AREA CODE	NUMBER	YEAR	MO	DAY

COMMENT AND EXPLANATION OF ANY VIOLATIONS *(Reference all attachments here)*

Koppers015195

PERMITTEE NAME/ADDRESS (*Include Facility Name/Location if different*)

NAME KOPPERS INDUSTRIES INC

ADDRESS 7540 NW ST HELENS RD

PORTLAND OR ~~9888~~ 97210

FACILITY

LOCATION MULTNOMAH COUNTY

NATIONAL POLLUTANT DISCHARGE ELIMINATION SYSTEM (*NPDES*)

DISCHARGE MONITORING REPORT (*DMR*)

Form Approved. OMB No. 2040-0004 Approval expires 9-30-85

(2-16) PERMIT NUMBER: 2-100077-9

(17-19) DISCHARGE NUMBER:

MONITORING PERIOD	YEAR	MO	DAY		YEAR	MO	DAY
FROM	89	11	1	TO	89	12	11
	(20-21)	(22-23)	(24-25)		(26-27)	(28-29)	(30-31)

3077J

47430

NOTE: Read instructions before completing this form.

PARAMETER (32-37)		(3 Card Only) (46-53) QUANTITY OR LOADING (54-61) AVERAGE	MAXIMUM	UNITS	(4 Card Only) (38-45) QUALITY OR CONCENTRATION (46-53) MINIMUM	AVERAGE	MAXIMUM	UNITS	NO. EX (62-63)	FREQUENCY OF ANALYSIS (64-68)	SAMPLE TYPE (69-70)
FLOW	SAMPLE MEASUREMENT	3000							N/A	6/30	EST
	PERMIT REQUIREMENT		N/A								
TEMP	SAMPLE MEASUREMENT				54	54	54		0	6/30	GRAB
	PERMIT REQUIREMENT						110	°F			
PH	SAMPLE MEASUREMENT				6.3	6.35	6.4		0	6/30	GRAB
	PERMIT REQUIREMENT				6.0		9.0	SU			
OIL & GREASE	SAMPLE MEASUREMENT				0	0.1	0.2	MG/L	0	6/30	GRAB
	PERMIT REQUIREMENT					10	15				
PHENOLS	SAMPLE MEASUREMENT				0.09	0.105	0.12		0	6/30	GRAB
	PERMIT REQUIREMENT					0.5	0.7	MGLL/(PPM)			
	SAMPLE MEASUREMENT										
	PERMIT REQUIREMENT										
	SAMPLE MEASUREMENT										
	PERMIT REQUIREMENT										

NAME/TITLE PRINCIPAL EXECUTIVE OFFICER

JOHN A OXFORD

PLANT MANAGER

TYPED OR PRINTED

I CERTIFY UNDER PENALTY OF LAW THAT I HAVE PERSONALLY EXAMINED AND AM FAMILIAR WITH THE INFORMATION SUBMITTED HEREIN; AND BASED ON MY INQUIRY OF THOSE INDIVIDUALS IMMEDIATELY RESPONSIBLE FOR OBTAINING THE INFORMATION, I BELIEVE THE SUBMITTED INFORMATION IS TRUE, ACCURATE AND COMPLETE. I AM AWARE THAT THERE ARE SIGNIFICANT PENALTIES FOR SUBMITTING FALSE INFORMATION, INCLUDING THE POSSIBILITY OF FINE AND IMPRISONMENT. SEE 18 U.S.C § 1001 AND 33 U.S.C § 1319. (*Penalties under these statutes may include fines up to $10,000 and/or maximum imprisonment of between 6 months and 5 years.*)

John A Oxford

SIGNATURE OF PRINCIPAL EXECUTIVE OFFICER OR AUTHORIZED AGENT

TELEPHONE: AREA CODE 503 NUMBER 286-3681

DATE: YEAR 89 MO 12 DAY 13

COMMENT AND EXPLANATION OF ANY VIOLATIONS (*Reference all attachments here*)

Koppers015196

GENERAL INSTRUCTIONS

1. If form has been partially completed by preprinting, disregard instructions directed at entry of that information already preprinted.
2. Enter "PERMITTEE NAME/MAILING ADDRESS (and facility name/location, if different)," "PERMIT NUMBER" and "DISCHARGE NUMBER" where indicated. (A separate form is required for each discharge.)
3. Enter dates beginning and ending "MONITORING PERIOD" covered by form where indicated.
4. Enter each "PARAMETER" as specified in monitoring requirements of permit.
5. Enter "SAMPLE MEASUREMENT" data for each parameter under "QUANTITY" and "QUALITY" in units specified in permit. "AVERAGE" is normally arithmetic average (geometric average for bacterial parameters) of all sample measurements for each parameter obtained during "MONITORING PERIOD." "MAXIMUM" and "MINIMUM" are normally extreme high and low measurements obtained during "MONITORING PERIOD." (NOTE to municipals with secondary treatment requirement, enter 30-day average of sample measurements under "AVERAGE" and enter maximum 7-day average of sample measurements obtained during monitoring period under "MAXIMUM".
6. Enter "PERMIT REQUIREMENT" for each parameter under "QUANTITY" and "QUALITY" as specified in permit.
7. Under "NO. EX" enter number of sample measurements during monitoring period that exceed maximum (and/or minimum or 7-day average, as appropriate) permit requirement for each parameter. If none, enter "0".
8. Enter "FREQUENCY OF ANALYSIS" both as "SAMPLE MEASUREMENT" (actual frequency of sampling and analysis used during monitoring period) and as "PERMIT REQUIREMENT" specified in permit. (e.g., Enter "CONT." for continuous monitoring, "1/7" for one day per week, "1/30" for one day per month, "1/90" for one day per quarter, etc.)
9. Enter "SAMPLE TYPE" both as "SAMPLE MEASUREMENT" (actual sample type used during monitoring period) and as "PERMIT REQUIREMENT" (e.g., Enter "GRAB" for individual sample, "24HC" for 24-hour composite, "N/A" for continuous monitoring, etc.)

FOLD HERE FIRST

10. WHERE VIOLATIONS OF PERMIT REQUIREMENTS ARE REPORTED, ATTACH A BRIEF EXPLANATION TO DESCRIBE CAUSE AND CORRECTIVE ACTIONS TAKEN, REFERENCE EACH VIOLATION BY DATE.
11. If "no discharge" occurs during monitoring period, enter "NO DISCHARGE" across form in place of data entry.
12. Enter "NAME/TITLE OF PRINCIPAL EXECUTIVE OFFICER" with "SIGNATURE OF PRINCIPAL EXECUTIVE OFFICER OR AUTHORIZED AGENT," "TELEPHONE NUMBER" and "DATE" at bottom of form.
13. Mail signed Report to Office(s) by date(s) specified in permit. Retain copy for your records.
14. More detailed instructions for use of this DISCHARGE MONITORING REPORT (DMR) form may be obtained from Office(s) specified in permit.

LEGAL NOTICE

This report is required by law (33 U.S.C. 1318; 40 C.F.R. 125.27). Failure to report or failure to report truthfully can result in civil penalties not to exceed $10,000 per day of violation; or in criminal penalties not to exceed $25,000 per day of violation, or by imprisonment for not more than one year, or by both.

FOLD HERE SECOND

PLACE STAMP HERE

FOLD HERE THIRD

STAPLE HERE

	WW 3	WW 4
flow	45000	45000 = 90000 ÷ 3 = 30000
temp	54	54 = 108 ÷ 2 = 54
Ph.	6.3	6.4 = 12.7 ÷ 2 = 6.35
oil + grease	ND	0.2 = 0.2 ÷ 2 = 0.1
Phenols	0.12	0.09 = 0.21 ÷ 2 = 0.105

COFFEY LABORATORIES, INC.
4914 N.E. 122nd Ave.
Portland, OR 97230
Phone: (503) 254-1794

THIS SECTION FOR LABORATORY USE ONLY

LABORATORY LOG # A891113-RZ
CUSTABBR: Koppers NEW
DUE DATE +8 R P C
VERBAL RESULTS NO STD

(1)PREPAID? CASH CK#
(2)PAY FOR REL $ PRT PM$
(3)NET 30 DAY ✓ (4)PROF. COURTE

PLEASE FILL IN THE REQUESTED INFORMATION COMPLETELY

LABORATORY REPORT INFORMATION:

COMPANY (or private party) NAME KOPPERS INDUSTRIES INC

MAILING ADDRESS: 7540 NW ST HELENS RD

CITY, STATE, ZIP PORTLAND OREGON 97210-3663

REPORT TO ATTENTION OF: JOHN OXFORD PHONE (503) 286-3681

DO YOU NEED VERBAL RESULTS? NO CALL PHONE ( ) -

SEND EXTRA COPY OF REPORT TO: ATTN: JOHN

MAILING ADDRESS:

EXTRA COPY of REPORT is: For ALL jobs ___, or For this job ONLY ___.

Pickup or Delivery address:

BILLING INFORMATION:

DO YOU HAVE A PRICE QUOTE FOR THIS JOB? QUOTE # 35.00

BILLING ADDRESS: SAME AS ABOVE

CITY, STATE, ZIP

BILLING TO ATTENTION OF: PHONE ( ) -

SEND EXTRA COPY OF BILL TO: ATTN:

MAILING ADDRESS:

EXTRA BILLING REQUEST IS: For ALL jobs ___, or For this job ONLY ___.

DOES YOUR COMPANY USE PO#S ? YES ___ NO x IF NO PO# IS REQUIRED, INITAL HERE

PO# FOR THIS JOB

PAYMENT AUTHORIZATION FOR:

RUSH SURCHARGE (2 X Std. PRICE) SIGN HERE

PRIORITY SURCHARGE (1.5 X Std. PRICE) SIGN HERE

(CONTINUED ON THE BACK SIDE OF THIS PAPER)

IT IS IMPORTANT TO GIVE US THE FOLLOWING INFORMATION ABOUT YOUR SAMPLES!
*** PLEASE INDICATE THIS INFORMATION IN THE SPECIAL INSTRUCTIONS COLUMN. ***

IF YOUR SAMPLE IS MULTI-PHASED,	IF YOUR SAMPLE IS WET,	IF SAMPLE IS LIQUID & HAS SEDIMENT or PARTICULATE,	DO YOU NEED:
SHALL WE: _Test Each Phase separately? _Test only ONE Phase? Which Phase? _Mix All Phases by Shaking? _Dry Sample & Test Residue?	SHALL WE: X__Test As Received? ___Dry Sample First? ___Ash Sample First?	SHALL WE: _X_Test Filtrate Only? ___Mix Sample by Shaking? ___Test Particulate Only?	__Special DETECTION LIMITS? _____ppb or _____ppm X__Special METHODS? TELL US What Method Number or What Method name. FOR PHENOL STANDARD METHOD 22C CHLOROFORM EXTRACTION FOR OIL & GREASE METHOD 137

FIELD IDENTITY	COLLECTION DATE	COLLECTION TIME	MEDIA	# of UNITS	ANALYSIS REQUESTED	SPECIAL INSTRUCTIONS	SAMPLER
W-W-T-3	11-13-89	2-4:50pm	WW	1	Oil + Grease		
W-W-T-3	"	"		1	Phenols		
W-W-T-4	"	"			Oil + Grease		
W-W-T-4	"	"			Phenols		

ITIONAL REMARKS: _____

PLE INTEGRITY COMMENTS: _____

PLE CUSTODY RELINQUISHED BY: D Hoffman DATE: 11-13-89 TIME: 1630 am (pm)

PLE RECEIVED FOR COFFEY LABS BY: KTK 11/13

Koppers015200

COFFEY LABORATORIES, INC.
12423 N.E. WHITAKER WAY
PORTLAND, OR 97230
PHONE: (503) 254-1794
FAX: (503) 254-1452

November 29, 1989
Log # A891113-R2

Koppers Co., Inc.
7540 NW St. Helens Rd.
Portland, OR 97210-3663
Attention: John Oxford

Sample Collected: 11/13/89, 1445 hrs
Sample Received: 11/13/89
Sample ID: #1 W-W-T-3
#2 W-W-T-4

ANALYSIS	METHOD	DETECTION LIMIT	SAMPLE #1	SAMPLE #2
Oil & Grease	EPA 413.2	0.2	ND	0.2
Total Phenols	EPA 420.1	0.05	0.12	0.09

ND means none detected at or above the detection limit listed.

Results expressed as mg/L unless otherwise noted.

Sincerely,

Victor A. Perry,
Quality Assurance

Sincerely,

Susan M. Coffey,
President

SMC/mlh

This report is for the sole and exclusive use of the client. Samples are retained a maximum of 15 days from the report date, or until the maximum holding time expires.

PERMITTEE NAME/ADDRESS (*Include Facility Name/Location if different*)

NAME: Koppers Industries Inc

ADDRESS: 7540 NW ST HELENS RD
PORTLAND OR 97210

FACILITY:

LOCATION: MULTNOMAH COUNTY

NATIONAL POLLUTANT DISCHARGE ELIMINATION SYSTEM (*NPDES*)
DISCHARGE MONITORING REPORT (*DMR*)

Form Approved
OMB No. 2040-0004
Expires 2-29-84

(2-16) PERMIT NUMBER: OR-100077-9

(17-19) DISCHARGE NUMBER:

MONITORING PERIOD	YEAR	MO	DAY		YEAR	MO	DAY
FROM	89	10	1	TO	89	11	1
	(20-21)	(22-23)	(24-25)		(26-27)	(28-29)	(30-31)

3077 J
47430

NOTE: Read instructions before completing this form.

PARAMETER (32-37)		(3 Card Only) QUANTITY OR LOADING (46-53) AVERAGE	(54-61) MAXIMUM	UNITS	(4 Card Only) QUALITY OR CONCENTRATION (38-45) MINIMUM	(46-53) AVERAGE	(54-61) MAXIMUM	UNITS	NO. EX (62-63)	FREQUENCY OF ANALYSIS (64-68)	SAMPLE TYPE (69-70)
FLOW	SAMPLE MEASUREMENT	2903							N/A	6/31	EST
	PERMIT REQUIREMENT		N/A								
TEMP	SAMPLE MEASUREMENT				58	58	58		0	6/31	GRAB
	PERMIT REQUIREMENT						110	°F			
PH	SAMPLE MEASUREMENT				6.4	6.4	6.4		0	6/31	GRAB
	PERMIT REQUIREMENT				XXX6.0		9.0	SU			
OIL & GREASE	SAMPLE MEASUREMENT				0.45	0.485	0.52		0	6/31	GRAB
	PERMIT REQUIREMENT					10	15	MG/G			
PHENOLS	SAMPLE MEASUREMENT				0.08	0.09	0.10		1	6/31	GRAB
	PERMIT REQUIREMENT					0.5 XXX	0.7	MGLL (PPM)			
	SAMPLE MEASUREMENT										
	PERMIT REQUIREMENT										
	SAMPLE MEASUREMENT										
	PERMIT REQUIREMENT										

NAME/TITLE PRINCIPAL EXECUTIVE OFFICER			TELEPHONE		DATE		
JOHN A OXFORD PLANT MANAGER	I CERTIFY UNDER PENALTY OF LAW THAT I HAVE PERSONALLY EXAMINED AND AM FAMILIAR WITH THE INFORMATION SUBMITTED HEREIN; AND BASED ON MY INQUIRY OF THOSE INDIVIDUALS IMMEDIATELY RESPONSIBLE FOR OBTAINING THE INFORMATION, I BELIEVE THE SUBMITTED INFORMATION IS TRUE, ACCURATE AND COMPLETE. I AM AWARE THAT THERE ARE SIGNIFICANT PENALTIES FOR SUBMITTING FALSE INFORMATION, INCLUDING THE POSSIBILITY OF FINE AND IMPRISONMENT. SEE 18 U.S.C. § 1001 AND 33 U.S.C § 1319. *(Penalties under these statutes may include fines up to $10,000 and/or maximum imprisonment of between 6 months and 5 years.)*	John A Oxford	503	286-3681	89	11	08
TYPED OR PRINTED		SIGNATURE OF PRINCIPAL EXECUTIVE OFFICER OR AUTHORIZED AGENT	AREA CODE	NUMBER	YEAR	MO	DAY

COMMENT AND EXPLANATION OF ANY VIOLATIONS (*Reference all attachments here*)

Koppers015202

GENERAL INSTRUCTIONS

1. If form has been partially completed by preprinting, disregard instructions directed at entry of that information already preprinted.
2. Enter "PERMITTEE NAME/MAILING ADDRESS (and facility name/location, if different)", "PERMIT NUMBER," and "DISCHARGE NUMBER" where indicated. (A separate form is required for each discharge.)
3. Enter dates beginning and ending "MONITORING PERIOD" covered by form where indicated.
4. Enter each "PARAMETER" as specified in monitoring requirements of permit.
5. Enter "SAMPLE MEASUREMENT" data for each parameter under "QUANTITY" and "QUALITY" in units specified in permit. "AVERAGE" is normally arithmetic average (geometric average for bacterial parameters) of all sample measurements for each parameter obtained during "MONITORING PERIOD." "MAXIMUM" and "MINIMUM" are normally extreme high and low measurements obtained during "MONITORING PERIOD." (NOTE: to municipals with secondary treatment requirement, enter 30-day average of sample measurements under "AVERAGE" and enter maximum 7-day average of sample measurements obtained during monitoring period under "MAXIMUM".
6. Enter "PERMIT REQUIREMENT" for each parameter under "QUANTITY" and "QUALITY" as specified in permit.
7. Under "NO. EX" enter number of sample measurements during monitoring period that exceed maximum (and/or minimum or 7-day average, as appropriate) permit requirement for each parameter. If none, enter "0".
8. Enter "FREQUENCY OF ANALYSIS" both as "SAMPLE MEASUREMENT" (actual frequency of sampling and analysis used during monitoring period) and as "PERMIT REQUIREMENT" specified in permit (e.g., Enter "CONT." for continuous monitoring, "1/7" for one day per week, "1/30" for one day per month, "1/90" for one day per quarter, etc.).
9. Enter "SAMPLE TYPE" both as "SAMPLE MEASUREMENT" (actual sample type used during monitoring period) and as "PERMIT REQUIREMENT," (e.g., Enter "GRAB" for individual sample, "24HC" for 24-hour composite, "N/A" for continuous monitoring, etc.).

(FOLD HERE FIRST)

10. WHERE VIOLATIONS OF PERMIT REQUIREMENTS ARE REPORTED, ATTACH A BRIEF EXPLANATION TO DESCRIBE CAUSE AND CORRECTIVE ACTIONS TAKEN, REFERENCE EACH VIOLATION BY DATE.
11. If "no discharge" occurs during monitoring period, enter "NO DISCHARGE" across form in place of data entry.
12. Enter "NAME/TITLE OF PRINCIPAL EXECUTIVE OFFICER" with "SIGNATURE OF PRINCIPAL EXECUTIVE OFFICER OR AUTHORIZED AGENT," "TELEPHONE NUMBER," and "DATE" at bottom of form.
13. Mail signed Report to Office(s) by date(s) specified in permit. Retain copy for your records.
14. More detailed instructions for use of this DISCHARGE MONITORING REPORT (DMR) form may be obtained from Office(s) specified in permit.

LEGAL NOTICE

This report is required by law (33 U.S.C. 1318; 40 C.F.R. 125.27). Failure to report or failure to report truthfully can result in civil penalties not to exceed $10,000 per day of violation; or in criminal penalties not to exceed $25,000 per day of violation, or by imprisonment for not more than one year, or by both.

FOLD HERE SECOND

PLACE STAMP HERE

FOLD HERE THIRD

STAPLE HERE

Koppers015203

PERMITTEE NAME/ADDRESS (Include Facility Name/Location if different)

NAME Koppers Industries Inc.

ADDRESS 7540 NW St Helens Rd
Portland Or 97210

FACILITY

LOCATION Multnomah County

NATIONAL POLLUTANT DISCHARGE ELIMINATION SYSTEM (NPDES)
DISCHARGE MONITORING REPORT (DMR)

Form Approved
OMB No. 2040-0004
Expires 2-29-84

(2-16) PERMIT NUMBER	(17-19) DISCHARGE NUMBER
OR-100077-9	

MONITORING PERIOD	YEAR	MO	DAY		YEAR	MO	DAY
FROM	89	10	1	TO	89	11	1
	(20-21)	(22-23)	(24-25)		(26-27)	(28-29)	(30-31)

3077 J
47430

NOTE: Read instructions before completing this form.

PARAMETER (32-37)		(3 Card Only) QUANTITY OR LOADING (46-53) AVERAGE	(54-61) MAXIMUM	UNITS	(4 Card Only) QUALITY OR CONCENTRATION (38-45) MINIMUM	(46-53) AVERAGE	(54-61) MAXIMUM	UNITS	NO. EX (62-63)	FREQUENCY OF ANALYSIS (64-68)	SAMPLE TYPE (69-70)
Flow.	SAMPLE MEASUREMENT	2903							0/N	6/31	Est.
	PERMIT REQUIREMENT		N/R	GPD							
Temp.	SAMPLE MEASUREMENT				58	58	58	°F	0	6/31	Grab.
	PERMIT REQUIREMENT						110				
Ph.	SAMPLE MEASUREMENT				6.4	6.4	6.4		0	6/31	grab
	PERMIT REQUIREMENT				6.0		9.0	SU			
oil + grease.	SAMPLE MEASUREMENT				0.45	0.485	0.52		0	6/31	grab.
	PERMIT REQUIREMENT					10	15	mg/L			
Phenols	SAMPLE MEASUREMENT				0.08	0.09	0.10		1	6/31	grab.
	PERMIT REQUIREMENT					0.5	0.7	mg/L (ppm)			
	SAMPLE MEASUREMENT										
	PERMIT REQUIREMENT										
	SAMPLE MEASUREMENT										
	PERMIT REQUIREMENT										

NAME/TITLE PRINCIPAL EXECUTIVE OFFICER

TYPED OR PRINTED

I CERTIFY UNDER PENALTY OF LAW THAT I HAVE PERSONALLY EXAMINED AND AM FAMILIAR WITH THE INFORMATION SUBMITTED HEREIN; AND BASED ON MY INQUIRY OF THOSE INDIVIDUALS IMMEDIATELY RESPONSIBLE FOR OBTAINING THE INFORMATION, I BELIEVE THE SUBMITTED INFORMATION IS TRUE, ACCURATE AND COMPLETE. I AM AWARE THAT THERE ARE SIGNIFICANT PENALTIES FOR SUBMITTING FALSE INFORMATION, INCLUDING THE POSSIBILITY OF FINE AND IMPRISONMENT. SEE 18 U.S.C. § 1001 AND 33 U.S.C. § 1319. *(Penalties under these statutes may include fines up to $10,000 and/or maximum imprisonment of between 6 months and 5 years.)*

SIGNATURE OF PRINCIPAL EXECUTIVE OFFICER OR AUTHORIZED AGENT

TELEPHONE		DATE		
AREA CODE	NUMBER	YEAR	MO	DAY

COMMENT AND EXPLANATION OF ANY VIOLATIONS *(Reference all attachments here)*

Koppers015204

	WWT1	WWT2
flow	45000	45000 = 90000 ÷ 31 = 2903
Temp	58	58 = 116 ÷ 2 = 58
Ph	6.4	6.4 = 12.8 ÷ 2 = 6.4
oil & grease	0.45	0.52 = 0.97 = 0.485
Phenols.	0.10	0.08 = 0.18 = 0.09

10-25-89

w-w. T-1

water Temp. 58

Ph. 6.4

10-25-89

W-W-T-2

Water Temp-58

Ph. 6-4

COFFEY LABORATORIES, INC.
4914 N.E. 122nd Ave.
Portland, OR 97230
Phone: (503) 254-1794

THIS SECTION FOR LABORATORY USE ONL

LABORATORY LOG # A891025-4C2
CUSTABBR: Koppers NEW
DUE DATE TB R P C
VERBAL RESULTS NO STD
(1)PREPAID? CASH CK#
(2)PAY FOR REL $ ✓ PRT PH$
(3)NET 30 DAY ✓ (4)PROF. COURT

PLEASE FILL IN THE REQUESTED INFORMATION COMPLETELY

LABORATORY REPORT INFORMATION:

COMPANY (or private party) NAME KOPPERS INDUSTRIES INC

MAILING ADDRESS: 7540 NW ST HELENS RD

CITY, STATE, ZIP PORTLAND OREGON 97210-3663

REPORT TO ATTENTION OF: JOHN OXFORD PHONE (503) 286-3681

DO YOU NEED VERBAL RESULTS? YES CALL John Oxford PHONE ( ) 286-3681

SEND EXTRA COPY OF REPORT TO: ATTN:

MAILING ADDRESS:

EXTRA COPY of REPORT is: For ALL jobs ___, or For this job ONLY ___.

Pickup or Delivery address:

BILLING INFORMATION:

DO YOU HAVE A PRICE QUOTE FOR THIS JOB? QUOTE # 35.00

BILLING ADDRESS: SAME AS ABOVE

CITY, STATE, ZIP

BILLING TO ATTENTION OF: PHONE ( ) -

SEND EXTRA COPY OF BILL TO: ATTN:

MAILING ADDRESS:

EXTRA BILLING REQUEST IS: For ALL Jobs ___, or For this job ONLY ___.

DOES YOUR COMPANY USE PO#S ? YES ___ NO X IF NO PO# IS REQUIRED, INITAL HERE

PO# FOR THIS JOB

PAYMENT AUTHORIZATION FOR:

RUSH SURCHARGE (2 X Std. PRICE) SIGN HERE

PRIORITY SURCHARGE (1.5 X Std. PRICE) SIGN HERE

(CONTINUED ON THE BACK SIDE OF THIS PAPER)

[illegible] TO GIVE US THE FOLLOWING INFORMATION ABOUT YOUR SAMPLES!

*** PLEASE INDICATE THIS INFORMATION IN THE SPECIAL INSTRUCTIONS COLUMN. ***

YOUR SAMPLE IS MULTI-PHASED,	IF YOUR SAMPLE IS WET,	IF SAMPLE IS LIQUID & HAS SEDIMENT or PARTICULATE,	DO YOU NEED:
ALL WE: _Test Each Phase separately? _Test only ONE Phase? Which Phase? _Mix All Phases by Shaking? _Dry Sample & Test Residue?	SHALL WE: X__Test As Received? ___Dry Sample First? ___Ash Sample First?	SHALL WE: X Test Filtrate Only? ___Mix Sample by Shaking? ___Test Particulate Only?	__Special DETECTION LIMITS? _____ppb or _____ppm X_Special METHODS? TELL US What Method Number or What Method name. FOR PHENOL STANDARD METHOD - 22C CHLOROFORM EXTRACTION FOR OIL & GREASE METHOD 137

FIELD IDENTITY	COLLECTION DATE	COLLECTION TIME	MEDIA	# of UNITS	ANALYSIS REQUESTED	SPECIAL INSTRUCTIONS	SAMPLER
N-W-T-1	10-25-89	2:45	WW	1	Oil & Grease		
N-W-T-1	10-25-89	2:45			Phenols		
N-W-T-2	10-25-89	2:45			Oil & Grease		
N-W-T-2	10-25-89	2:45			Phenols		

IONAL REMARKS: _____

E INTEGRITY COMMENTS: _____

LE CUSTODY RELINQUISHED BY: D. Hoffman DATE: 10-25-89 TIME: 1530 am pm

LE RECEIVED FOR COFFEY LABS BY: KJD DATE: 10/25 TIME: 1530 am pm

Koppers015209

COFFEY LABORATORIES, INC.
12423 N.E. WHITAKER WAY
PORTLAND, OR 97230
PHONE: (503) 254-1794
FAX: (503) 254-1452

NOV 14 1989

November 7, 1989
Log # A891025-AC2

Koppers Co., Inc.
7540 NW St. Helens Rd.
Portland, OR 97210-3663
Attention: John Oxford

Sample Collected: 10/25/89, 1445 hrs
Sample Received: 10/25/89
Sample ID: #1 WWT-1
#2 WWT-2

ANALYSIS	METHOD	DETECTION LIMIT	SAMPLE #1	SAMPLE #2
Oil & Grease	EPA 413.2	0.2	0.45	0.52
Total Phenols	EPA 420.1	0.05	0.10	0.08

Results expressed as mg/L unless otherwise noted.

Sincerely,

Victor A. Perry

Victor A. Perry,
Quality Assurance

Sincerely,

Susan M. Coffey

Susan M. Coffey,
President

SMC/mlh

This report is for the sole and exclusive use of the client. Samples are retained a maximum of 15 days from the report date, or until the maximum holding time expires.

PERMITTEE NAME/ADDRESS (Include Facility Name/Location if different)

NAME KOPPERS INDUSTRIES INC

ADDRESS 7540 NW ST HELENS RD
PORTLAND OR 97210

FACILITY XXXXXXXXXXXXXXXXXX

LOCATION MULTNOMAH COUNTY

NATIONAL POLLUTANT DISCHARGE ELIMINATION SYSTEM (NPDES)
DISCHARGE MONITORING REPORT (DMR)

Form Approved
OMB No. 2040-0004
Expires 2-29-84

(2-16) PERMIT NUMBER: OR-100077-9

(17-19) DISCHARGE NUMBER:

3077 J
47430

MONITORING PERIOD	YEAR	MO	DAY		YEAR	MO	DAY
FROM	89	9	1	TO	89	10	1
	(20-21)	(22-23)	(24-25)		(26-27)	(28-29)	(30-31)

NOTE: Read instructions before completing this form.

PARAMETER (32-37)		(3 Card Only) QUANTITY OR LOADING (46-53) AVERAGE	(54-61) MAXIMUM	UNITS	(4 Card Only) QUALITY OR CONCENTRATION (38-45) MINIMUM	(46-53) AVERAGE	(54-61) MAXIMUM	UNITS	NO. EX (62-63)	FREQUENCY OF ANALYSIS (64-68)	SAMPLE TYPE (69-70)
FLOW	SAMPLE MEASUREMENT	3000							N/A	6/30	EST
	PERMIT REQUIREMENT		n/a	GPD							
TEMP	SAMPLE MEASUREMENT				65	65	65	°F	0	6/30	GRAB
	PERMIT REQUIREMENT						110				
PH	SAMPLE MEASUREMENT				6.7		6.8		0	6/30	GRAB
	PERMIT REQUIREMENT				6.0	6.75	9.0	SU			
OIL & GREASE	SAMPLE MEASUREMENT				0.37	0.41	0.45	MG/L	0	6/30	GRAB
	PERMIT REQUIREMENT					10	15				
PHENOLS	SAMPLE MEASUREMENT				0.07	0.13	0.19	MG/L	1	6/30	GRAB
	PERMIT REQUIREMENT				0.	0.5	0.7	(PPM)			
	SAMPLE MEASUREMENT										
	PERMIT REQUIREMENT										
	SAMPLE MEASUREMENT										
	PERMIT REQUIREMENT										

NAME/TITLE PRINCIPAL EXECUTIVE OFFICER
JOHN A OXFORD
PLANT MANAGER

TYPED OR PRINTED

I CERTIFY UNDER PENALTY OF LAW THAT I HAVE PERSONALLY EXAMINED AND AM FAMILIAR WITH THE INFORMATION SUBMITTED HEREIN; AND BASED ON MY INQUIRY OF THOSE INDIVIDUALS IMMEDIATELY RESPONSIBLE FOR OBTAINING THE INFORMATION, I BELIEVE THE SUBMITTED INFORMATION IS TRUE, ACCURATE AND COMPLETE. I AM AWARE THAT THERE ARE SIGNIFICANT PENALTIES FOR SUBMITTING FALSE INFORMATION, INCLUDING THE POSSIBILITY OF FINE AND IMPRISONMENT. SEE 18 U.S.C. § 1001 AND 33 U.S.C § 1319. *(Penalties under these statutes may include fines up to $10,000 and/or maximum imprisonment of between 6 months and 5 years.)*

SIGNATURE OF PRINCIPAL EXECUTIVE OFFICER OR AUTHORIZED AGENT

TELEPHONE		DATE		
503	286-3681	89	10	11
AREA CODE	NUMBER	YEAR	MO	DAY

COMMENT AND EXPLANATION OF ANY VIOLATIONS *(Reference all attachments here)*

Koppers015211

GENERAL INSTRUCTIONS

1. If form has been partially completed by preprinting, disregard instructions directed at entry of that information already preprinted.
2. Enter "PERMITTEE NAME/MAILING ADDRESS (and facility name/location, if different)," "PERMIT NUMBER," and "DISCHARGE NUMBER" where indicated. (A separate form is required for each discharge.)
3. Enter dates beginning and ending "MONITORING PERIOD" covered by form where indicated.
4. Enter each "PARAMETER" as specified in monitoring requirements of permit.
5. Enter "SAMPLE MEASUREMENT" data for each parameter under "QUANTITY" and "QUALITY" in units specified in permit. "AVERAGE" is normally arithmetic average (geometric average for bacterial parameters) of all sample measurements for each parameter obtained during "MONITORING PERIOD." "MAXIMUM" and "MINIMUM" are normally extreme high and low measurements obtained during "MONITORING PERIOD." (NOTE to municipals with secondary treatment requirement, enter 30-day average of sample measurements under "AVERAGE" and enter maximum 7-day average of sample measurements obtained during monitoring period under "MAXIMUM".
6. Enter "PERMIT REQUIREMENT" for each parameter under "QUANTITY" and "QUALITY" as specified in permit.
7. Under "NO. EX" enter number of sample measurements during monitoring period that exceed maximum (and/or minimum or 7-day average as appropriate) permit requirement for each parameter. If none, enter "0".
8. Enter "FREQUENCY OF ANALYSIS" both as "SAMPLE MEASUREMENT" (actual frequency of sampling and analysis used during monitoring period) and as "PERMIT REQUIREMENT" specified in permit. (e.g., Enter "CONT." for continuous monitoring, "1/7" for one day per week, "1/30" for one day per month, "1/90" for one day per quarter, etc.)
9. Enter "SAMPLE TYPE" both as "SAMPLE MEASUREMENT" (actual sample type used during monitoring period) and as "PERMIT REQUIREMENT" (e.g., Enter "GRAB" for individual sample, "24HC" for 24-hour composite, "N/A" for continuous monitoring, etc.)

(FOLD HERE FIRST)

10. WHERE VIOLATIONS OF PERMIT REQUIREMENTS ARE REPORTED, ATTACH A BRIEF EXPLANATION TO DESCRIBE CAUSE AND CORRECTIVE ACTIONS TAKEN. REFERENCE EACH VIOLATION BY DATE.
11. If "no discharge" occurs during monitoring period, enter "NO DISCHARGE" across form in place of data entry.
12. Enter "NAME/TITLE OF PRINCIPAL EXECUTIVE OFFICER" with "SIGNATURE OF PRINCIPAL EXECUTIVE OFFICER OR AUTHORIZED AGENT," "TELEPHONE NUMBER" and "DATE" at bottom of form.
13. Mail signed Report to Office(s) by date(s) specified in permit. Retain copy for your records.
14. More detailed instructions for use of this DISCHARGE MONITORING REPORT (DMR) form may be obtained from Office(s) specified in permit.

LEGAL NOTICE

This report is required by law (33 U.S.C. 1318; 40 C.F.R. 125.27). Failure to report or failure to report truthfully can result in civil penalties not to exceed $10,000 per day of violation; or in criminal penalties not to exceed $25,000 per day of violation, or by imprisonment for not more than one year, or by both.

FOLD HERE SECOND

FOLD HERE THIRD

STAPLE HERE

PLACE STAMP HERE

Kopper015212

	Tank #1	Tank #2
flow	45000	45000 = 90000 ÷ 30 = 3000
Temp	65	65 = 130 = 65
Ph	6.7	6.8 = 6.75
oil + grease	0.37	0.45 = 0.41
Phenols	0.19	0.07 = 0.13

COFFEY LABORATORIES, INC.
12423 N.E. WHITAKER WAY
PORTLAND, OR 97230
PHONE: (503) 254-1794
FAX: (503) 254-1452

September 11, 1989
Log # A890901-AU2

Koppers Co., Inc.
7540 NW St. Helens Rd.
Portland, OR 97210-3663
Attention: John Oxford

Sample Collected: 9/1/89, 0330 hrs
Sample Received: 9/1/89
Sample ID: #1 W-W-T-3
#2 W-W-T-4

ANALYSIS	METHOD	DETECTION LIMIT	SAMPLE #1	SAMPLE #2
Oil & Grease	EPA 413.2	0.2	0.37	0.45
Total Phenols	EPA 420.1	0.05	0.19	0.07

Results expressed as mg/L unless otherwise noted.

Sincerely,

Victor A. Perry,
Quality Assurance

Sincerely,

Susan M. Coffey,
President

SMC/mlh

This report is for the sole and exclusive use of the client. Samples are retained a maximum of 15 days from the report date, or until the maximum holding time expires.

9-1-89

w. w. T-4

Ph 6.8

water Temp.

65°F

9-1-89
W-W-T-3
Ph 6.7
Water Temp.
65°F

IT IS IMPORTANT TO GIVE US THE FOLLOWING INFORMATION ABOUT YOUR SAMPLES!
*** PLEASE INDICATE THIS INFORMATION IN THE SPECIAL INSTRUCTIONS COLUMN. ***

IF YOUR SAMPLE IS MULTI-PHASED,

SHALL WE:
__Test Each Phase separately?
__Test only ONE Phase? Which Phase?
X_Mix All Phases by Shaking?
__Dry Sample & Test Residue?

IF YOUR SAMPLE IS WET,

SHALL WE:
X__Test As Received?
___Dry Sample First?
___Ash Sample First?

IF SAMPLE IS LIQUID & HAS SEDIMENT or PARTICULATE,

SHALL WE:
_X_Test Filtrate Only?
___Mix Sample by Shaking?
___Test Particulate Only?

DO YOU NEED:
__Special DETECTION LIMITS?

_____ppb or _____ppm

X_Special METHODS?
TELL US What Method Number or What Method name.
FOR PHENOL STANDARD METHOD 22C
CHLOROFORM EXTRACTION FOR OIL & GREASE METHOD 137

FIELD IDENTITY	COLLECTION DATE	COLLECTION TIME	MEDIA	# of UNITS	ANALYSIS REQUESTED	SPECIAL INSTRUCTIONS	SAMPLER
W-W-T-3	9/1/89	3:30			oil + Grease		
W-W-T-3	9/1/89	3:30			Phenols		
W-W-T-4	9/1/89	3:30			oil + Grease		
W-W-T-4	9/1/89	3:30			Phenols		

TIONAL REMARKS: _____

PLE INTEGRITY COMMENTS: _____

PLE CUSTODY RELINQUISHED BY: George Hoffman DATE: 9-1-89 TIME: _____ am pm

PLE RECEIVED FOR COFFEY LABS BY: AEH DATE: 9/1 TIME: 430 am pm

Koppers015217

COFFEY LABORATORIES, INC.
4914 N.E. 122nd Ave.
Portland, OR 97230
Phone: (503) 254-1794

THIS SECTION FOR LABORATORY USE ONLY
LABORATORY LOG # A890901-AU2
CUSTABBR: Koppers NEW
DUE DATE +10 R P C
VERBAL RESULTS NO. Std
(1)PREPAID? CASH ____ CK# ____
(2)PAY FOR REL $ ____ PRT PM$ ____
(3)NET 30 DAY ✓ (4)PROF. COURTE

PLEASE FILL IN THE REQUESTED INFORMATION COMPLETELY

LABORATORY REPORT INFORMATION:

COMPANY (or private party) NAME KOPPERS INDUSTRIES INC

MAILING ADDRESS: 7540 NW ST HELENS RD

CITY, STATE, ZIP PORTLAND OREGON 97210-3663

REPORT TO ATTENTION OF: JOHN OXFORD PHONE (503) 286-3681

DO YOU NEED VERBAL RESULTS? NO CALL ____ PHONE ( ) ____-____

SEND EXTRA COPY OF REPORT TO: ____ ATTN: JOHN

MAILING ADDRESS: ____

EXTRA COPY of REPORT is: For ALL jobs ____, or For this job ONLY ____.

Pickup or Delivery address: ____

BILLING INFORMATION:

DO YOU HAVE A PRICE QUOTE FOR THIS JOB? QUOTE # 35.00

BILLING ADDRESS: SAME AS ABOVE

CITY, STATE, ZIP ____

BILLING TO ATTENTION OF: ____ PHONE ( ) ____-____

SEND EXTRA COPY OF BILL TO: ____ ATTN: ____

MAILING ADDRESS: ____

EXTRA BILLING REQUEST IS: For ALL jobs ____, or For this job ONLY ____.

DOES YOUR COMPANY USE PO#S ? YES ____ NO x IF NO PO# IS REQUIRED, INITAL HERE ____

PO# FOR THIS JOB ____

PAYMENT AUTHORIZATION FOR:

RUSH SURCHARGE (2 X Std. PRICE) SIGN HERE ____

PRIORITY SURCHARGE (1.5 X Std. PRICE) SIGN HERE ____

(CONTINUED ON THE BACK SIDE OF THIS PAPER)

PERMITTEE NAME/ADDRESS (Include Facility Name/Location if different)

NAME Koppers Industries Inc.

ADDRESS 7540 N.W. St Helens Rd

Portland OR 97210

FACILITY

LOCATION Multnomah County

NATIONAL POLLUTANT DISCHARGE ELIMINATION SYSTEM (NPDES)

DISCHARGE MONITORING REPORT (DMR)

Form Approved
OMB No. 2040-0004
Expires 2-29-84

(2-16) PERMIT NUMBER: OR-100077-9

(17-19) DISCHARGE NUMBER:

MONITORING PERIOD	YEAR	MO	DAY		YEAR	MO	DAY
FROM	89	9	1	TO	89	10	1
	(20-21)	(22-23)	(24-25)		(26-27)	(28-29)	(30-31)

3077 5
47430

NOTE: Read instructions before completing this form.

PARAMETER (32-37)		(3 Card Only) QUANTITY OR LOADING (46-53) AVERAGE	(54-61) MAXIMUM	UNITS	(4 Card Only) QUALITY OR CONCENTRATION (38-45) MINIMUM	(46-53) AVERAGE	(54-61) MAXIMUM	UNITS	NO. EX (62-63)	FREQUENCY OF ANALYSIS (64-68)	SAMPLE TYPE (69-70)
Flow	SAMPLE MEASUREMENT	3000							N/A	6/30	Est.
	PERMIT REQUIREMENT		N/A	GPD							
Temp	SAMPLE MEASUREMENT				65	65	65	°F	0	6/30	grab.
	PERMIT REQUIREMENT										
pH.	SAMPLE MEASUREMENT				6.7		6.8	SU	0	6/30	grab.
	PERMIT REQUIREMENT				6.0	6.75	9.0				
oil & grease.	SAMPLE MEASUREMENT				0.37	0.41	0.45	mg/L	0	6/30	grab.
	PERMIT REQUIREMENT					10	15				
phenols.	SAMPLE MEASUREMENT				0.07	0.13	0.19	mg/L	1	6/30	grab.
	PERMIT REQUIREMENT					0.5	0.7	(PPM)			
	SAMPLE MEASUREMENT										
	PERMIT REQUIREMENT										
	SAMPLE MEASUREMENT										
	PERMIT REQUIREMENT										

NAME/TITLE PRINCIPAL EXECUTIVE OFFICER

TYPED OR PRINTED

I CERTIFY UNDER PENALTY OF LAW THAT I HAVE PERSONALLY EXAMINED AND AM FAMILIAR WITH THE INFORMATION SUBMITTED HEREIN; AND BASED ON MY INQUIRY OF THOSE INDIVIDUALS IMMEDIATELY RESPONSIBLE FOR OBTAINING THE INFORMATION, I BELIEVE THE SUBMITTED INFORMATION IS TRUE, ACCURATE AND COMPLETE. I AM AWARE THAT THERE ARE SIGNIFICANT PENALTIES FOR SUBMITTING FALSE INFORMATION, INCLUDING THE POSSIBILITY OF FINE AND IMPRISONMENT. SEE 18 U.S.C § 1001 AND 33 U.S.C § 1319. *(Penalties under these statutes may include fines up to $10,000 and/or maximum imprisonment of between 6 months and 5 years.)*

SIGNATURE OF PRINCIPAL EXECUTIVE OFFICER OR AUTHORIZED AGENT

TELEPHONE: AREA CODE / NUMBER

DATE: YEAR / MO / DAY

COMMENT AND EXPLANATION OF ANY VIOLATIONS (*Reference all attachments here*)

Koppers015219

PERMITTEE NAME/ADDRESS (*Include Facility Name/Location if different*)

NAME KOPPERS INDUSTRIES INC

ADDRESS 7540 NW ST HELENS RD
PORTLAND OREGON 97210

FACILITY

LOCATION MULTNOMAH COUNTY

NATIONAL POLLUTANT DISCHARGE ELIMINATION SYSTEM (*NPDES*)
DISCHARGE MONITORING REPORT (*DMR*)

(2-16) OR-100077-9 PERMIT NUMBER

(17-19) DISCHARGE NUMBER

MONITORING PERIOD	YEAR	MO	DAY		YEAR	MO	DAY
FROM	89	7	1	TO	89	8	1
	(20-21)	(22-23)	(24-25)		(26-27)	(28-29)	(30-31)

30773
47430

Form Approved
OMB No. 2040-0004
Expires 2-29-84

NOTE: Read instructions before completing this form.

PARAMETER (32-37)		(3 Card Only) QUANTITY OR LOADING (46-53) AVERAGE	(54-61) MAXIMUM	UNITS	(4 Card Only) QUALITY OR CONCENTRATION (38-45) MINIMUM	(46-53) AVERAGE	(54-61) MAXIMUM	UNITS	NO. EX (62-63)	FREQUENCY OF ANALYSIS (64-68)	SAMPLE TYPE (69-70)
FLOW	SAMPLE MEASUREMENT	2903							N/A	6/31	EST
	PERMIT REQUIREMENT		NA	GPD							
TEMP	SAMPLE MEASUREMENT				69	69	69	°F	C	6/31	GRAB
	PERMIT REQUIREMENT										
PH	SAMPLE MEASUREMENT				6.4	6.55	6.7		C	6/31	GRAB
	PERMIT REQUIREMENT				6.0		XX 9.0	SU			
OIL & GREASE	SAMPLE MEASUREMENT				1.2	1.2	1.4	MG/L	C	6/31	GRAB
	PERMIT REQUIREMENT					1.0	1.5				
PHENOLS	SAMPLE MEASUREMENT				0.26	0.27	0.28	MG/L	1	6/31	GRAB
	PERMIT REQUIREMENT					0.5	0.7	(PPM)			
	SAMPLE MEASUREMENT										
	PERMIT REQUIREMENT										
	SAMPLE MEASUREMENT										
	PERMIT REQUIREMENT										

NAME/TITLE PRINCIPAL EXECUTIVE OFFICER			TELEPHONE		DATE		
PLANT MANAGER JOHN A OXFORD	I CERTIFY UNDER PENALTY OF LAW THAT I HAVE PERSONALLY EXAMINED AND AM FAMILIAR WITH THE INFORMATION SUBMITTED HEREIN; AND BASED ON MY INQUIRY OF THOSE INDIVIDUALS IMMEDIATELY RESPONSIBLE FOR OBTAINING THE INFORMATION, I BELIEVE THE SUBMITTED INFORMATION IS TRUE, ACCURATE AND COMPLETE. I AM AWARE THAT THERE ARE SIGNIFICANT PENALTIES FOR SUBMITTING FALSE INFORMATION, INCLUDING THE POSSIBILITY OF FINE AND IMPRISONMENT. SEE 18 U.S.C. § 1001 AND 33 U.S.C § 1319. (*Penalties under these statutes may include fines up to $10,000 and/or maximum imprisonment of between 6 months and 5 years.*)		503	236-3681	89	8	14
TYPED OR PRINTED		SIGNATURE OF PRINCIPAL EXECUTIVE OFFICER OR AUTHORIZED AGENT	AREA CODE	NUMBER	YEAR	MO	DAY

COMMENT AND EXPLANATION OF ANY VIOLATIONS (*Reference all attachments here*)

Koppers015220

GENERAL INSTRUCTIONS

1. If form has been partially completed by preprinting, disregard instructions directed at entry of that information already preprinted.
2. Enter "PERMITTEE NAME/MAILING ADDRESS (and facility name/location, if different)," "PERMIT NUMBER," and "DISCHARGE NUMBER" where indicated. (A separate form is required for each discharge.)
3. Enter dates, beginning and ending "MONITORING PERIOD" covered by form where indicated.
4. Enter each "PARAMETER" as specified in monitoring requirements of permit.
5. Enter "SAMPLE MEASUREMENT" data for each parameter under "QUANTITY" and "QUALITY" in units specified in permit. "AVERAGE" is normally arithmetic average (geometric average for bacterial parameters) of all sample measurements for each parameter obtained during "MONITORING PERIOD." "MAXIMUM" and "MINIMUM" are normally extreme high and low measurements obtained during "MONITORING PERIOD." (NOTE to municipals with secondary treatment requirement, enter 30-day average of sample measurements under "AVERAGE" and enter maximum 7-day average of sample measurements obtained during monitoring period under "MAXIMUM".
6. Enter "PERMIT REQUIREMENT" for each parameter under "QUANTITY" and "QUALITY" as specified in permit.
7. Under "NO. EX" enter number of sample measurements during monitoring period that exceed maximum (and/or minimum or 7-day average as appropriate) permit requirement for each parameter. If none, enter "0".
8. Enter "FREQUENCY OF ANALYSIS" both as "SAMPLE MEASUREMENT" (actual frequency of sampling and analysis used during monitoring period) and as "PERMIT REQUIREMENT" specified in permit. (e.g., Enter "CONT." for continuous monitoring, "1/7" for one day per week, "1/30" for one day per month, "1/90" for one day per quarter, etc.)
9. Enter "SAMPLE TYPE" both as "SAMPLE MEASUREMENT" (actual sample type used during monitoring period) and as "PERMIT REQUIREMENT." (e.g., Enter "GRAB" for individual sample, "24HC" for 24-hour composite, "N/A" for continuous monitoring, etc.)

(FOLD HERE FIRST)

10. WHERE VIOLATIONS OF PERMIT REQUIREMENTS ARE REPORTED, ATTACH A BRIEF EXPLANATION TO DESCRIBE CAUSE AND CORRECTIVE ACTIONS TAKEN. REFERENCE EACH VIOLATION BY DATE.
11. If "no discharge" occurs during monitoring period, enter "NO DISCHARGE" across form in place of data entry.
12. Enter "NAME/TITLE OF PRINCIPAL EXECUTIVE OFFICER" with "SIGNATURE OF PRINCIPAL EXECUTIVE OFFICER OR AUTHORIZED AGENT," "TELEPHONE NUMBER" and "DATE" at bottom of form.
13. Mail signed Report to Office(s) by date(s) specified in permit. Retain copy for your records.
14. More detailed instructions for use of this DISCHARGE MONITORING REPORT (DMR) form may be obtained from Office(s) specified in permit.

LEGAL NOTICE

This report is required by law (33 U.S.C. 1318; 40 C.F.R. 125.27). Failure to report or failure to report truthfully can result in civil penalties not to exceed $10,000 per day of violation; or in criminal penalties not to exceed $25,000 per day of violation, or by imprisonment for not more than one year, or by both.

FOLD HERE SECOND

PLACE STAMP HERE

FOLD HERE THIRD

STAPLE HERE

	Tank I	Tank 2
Flow.	45 000	45000 = 90000 ÷ 31 = 2903
Temp.	69	69 = 138 ÷ 2 = 69
Ph.	6.7	6.4 = 13.1 ÷ 2 = 6.55
alk + qus.	1.0	1.4 = 2.4 ÷ 2 = 1.2
Phenol.	0.28	0.26 = 0.54 ÷ 2 = 0.27

Koppers015222

PERMITTEE NAME/ADDRESS (Include Facility Name/Location if different)

NAME KOPPERS INDUSTRIES

ADDRESS 7540 NW ST HELENS RD
PORTLAND OR 97210

FACILITY

LOCATION MULTNOMAH COUNTY

NATIONAL POLLUTANT DISCHARGE ELIMINATION SYSTEM (NPDES)
DISCHARGE MONITORING REPORT (DMR)

Form Approved
OMB No. 2040-0004
Expires 2-29-84

(2-16) PERMIT NUMBER: OR-100077-9

(17-19) DISCHARGE NUMBER:

3077 J
47438

MONITORING PERIOD	YEAR	MO	DAY		YEAR	MO	DAY
FROM	89	7	1	TO	89	8	1
	(20-21)	(22-23)	(24-25)		(26-27)	(28-29)	(30-31)

NOTE: Read instructions before completing this form.

PARAMETER (32-37)		(3 Card Only) QUANTITY OR LOADING (46-53) AVERAGE	(54-61) MAXIMUM	UNITS	(4 Card Only) QUALITY OR CONCENTRATION (38-45) MINIMUM	(46-53) AVERAGE	(54-61) MAXIMUM	UNITS	NO. EX (62-63)	FREQUENCY OF ANALYSIS (64-68)	SAMPLE TYPE (69-70)
FLOW	SAMPLE MEASUREMENT	2.903							N/R	6/31	EST
	PERMIT REQUIREMENT		NA	GPD							
TEMP	SAMPLE MEASUREMENT				69	69	69	°F	0	6/31	GRAB
	PERMIT REQUIREMENT										
P.H.	SAMPLE MEASUREMENT				6.4	6.55	6.7		0	6/31	GRAB
	PERMIT REQUIREMENT				6.0		9.0	SU			
Oil & grease	SAMPLE MEASUREMENT				1.0	1.2	1.4	mg/L	0	6/31	GRAB
	PERMIT REQUIREMENT					10	15				
Phenols	SAMPLE MEASUREMENT				0.26	0.27	0.28	mg/L	1	6/31	GRAB
	PERMIT REQUIREMENT					0.5	0.7	(PPM)			
	SAMPLE MEASUREMENT										
	PERMIT REQUIREMENT										
	SAMPLE MEASUREMENT										
	PERMIT REQUIREMENT										

NAME/TITLE PRINCIPAL EXECUTIVE OFFICER
John A Oyler
TYPED OR PRINTED

I CERTIFY UNDER PENALTY OF LAW THAT I HAVE PERSONALLY EXAMINED AND AM FAMILIAR WITH THE INFORMATION SUBMITTED HEREIN; AND BASED ON MY INQUIRY OF THOSE INDIVIDUALS IMMEDIATELY RESPONSIBLE FOR OBTAINING THE INFORMATION, I BELIEVE THE SUBMITTED INFORMATION IS TRUE, ACCURATE AND COMPLETE. I AM AWARE THAT THERE ARE SIGNIFICANT PENALTIES FOR SUBMITTING FALSE INFORMATION, INCLUDING THE POSSIBILITY OF FINE AND IMPRISONMENT. SEE 18 U.S.C. § 1001 AND 33 U.S.C. § 1319. *(Penalties under these statutes may include fines up to $10,000 and/or maximum imprisonment of between 6 months and 5 years.)*

SIGNATURE OF PRINCIPAL EXECUTIVE OFFICER OR AUTHORIZED AGENT

TELEPHONE		DATE		
503	286 3681	89	8	14
AREA CODE	NUMBER	YEAR	MO	DAY

COMMENT AND EXPLANATION OF ANY VIOLATIONS (*Reference all attachments here*)

Koppers015223

Form 3320-1 (Rev. 10-79) PREVIOUS EDITION TO BE USED UNTIL SUPPLY IS EXHAUSTED (REPLACES EPA FORM T-40 WHICH MAY NOT BE USED.)

COFFEY LABORATORIES, INC.
12423 N.E. WHITAKER WAY
PORTLAND, OR 97230
PHONE: (503) 254-1794
FAX: (503) 254-1452

July 3, 1989
Log #A890615-W2
PO # Verbal John

Koppers Co. Inc.
7540 NW St. Helens Road
Portland, OR 97210-3663
Attention: John Oxford

Samples Collected: 06/15/89 1330 hrs.
Samples Received: 06/15/89

Analysis Requested: Oil & Grease in water by EPA Method 413.2, freon-extractable.

SAMPLE ID	SAMPLE RESULTS
W-W-T-1	1.0
W-W-T-2	1.4
Laboratory Blank	0.5

Detection Limit: 0.2 mg/L

Analysis Requested: Total Phenols by EPA Method 413.2

SAMPLE ID	SAMPLE RESULTS
W-W-T-1	0.28
W-W-T-2	0.26
Laboratory Blank	ND

Detection Limit: 0.05 mg/L

Results expressed as mg/L unless otherwise noted.

ND means none detected at or above the detection limit listed.

Sincerely,

Victor A. Perry,
Quality Assurance

Sincerely,

Susan M. Coffey,
President

JUL 6 1989

SMC/lws

This report is for the sole and exclusive use of the client. Samples are retained a maximum of 15 days from the report date, or until the maximum holding time expires.

6-15-89

W-W-T-1

water Temp 69°

Ph 6.4

6-15-89

W-W: T-2

water Temp- 69°

Ph 6-7

COFFEY LABORATORIES, INC.
4914 N.E. 122nd Ave.
Portland, OR 97230
Phone: (503) 254-1794

THIS SECTION FOR LABORATORY USE ONLY

LABORATORY LOG # A8906/5-W2
CUSTABBR: KOPPERS NEW ____
DUE DATE +8 R P C
VERBAL RESULTS YES

(1)PREPAID? CASH ____ CK# ____
(2)PAY FOR REL $ ____ PRT PM1$ ____
(3)NET 30 DAY ✓ (4)PROF. COURTE

PLEASE FILL IN THE REQUESTED INFORMATION COMPLETELY

LABORATORY REPORT INFORMATION:

COMPANY (or private party) NAME KOPPERS INDUSTRIES INC

MAILING ADDRESS: 7540 NW ST HELENS RD

CITY, STATE, ZIP PORTLAND OREGON 97210-3663

REPORT TO ATTENTION OF: JOHN OXFORD PHONE (503) 286-3681

DO YOU NEED VERBAL RESULTS? NO CALL ____ PHONE ( ) ____-____

SEND EXTRA COPY OF REPORT TO: ____ ATTN: JOHN

MAILING ADDRESS: ____

EXTRA COPY of REPORT is: For ALL jobs ____, or For this job ONLY ____.

Pickup or Delivery address: ____

BILLING INFORMATION:

DO YOU HAVE A PRICE QUOTE FOR THIS JOB? QUOTE # 35.00

BILLING ADDRESS: SAME AS ABOVE

CITY, STATE, ZIP ____

BILLING TO ATTENTION OF: ____ PHONE ( ) ____-____

SEND EXTRA COPY OF BILL TO: ____ ATTN: ____

MAILING ADDRESS: ____

EXTRA BILLING REQUEST IS: For ALL jobs ____, or For this job ONLY ____.

DOES YOUR COMPANY USE PO#S ? YES ____ NO X IF NO PO# IS REQUIRED, INITAL HERE ____

PO# FOR THIS JOB ____

PAYMENT AUTHORIZATION FOR:

RUSH SURCHARGE (2 X Std. PRICE) SIGN HERE ____

PRIORITY SURCHARGE (1.5 X Std. PRICE) SIGN HERE ____

(CONTINUED ON THE BACK SIDE OF THIS PAPER)

• IT IS IMPORTANT TO GIVE US THE FOLLOWING INFORMATION ABOUT YOUR SAMPLES!
*** PLEASE INDICATE THIS INFORMATION IN THE SPECIAL INSTRUCTIONS COLUMN. ***

IF YOUR SAMPLE IS MULTI-PHASED,	IF YOUR SAMPLE IS WET,	IF SAMPLE IS LIQUID & HAS SEDIMENT or PARTICULATE,	DO YOU NEED:
SHALL WE: ___Test Each Phase separately? ___Test only ONE Phase? Which Phase? X_Mix All Phases by Shaking? ___Dry Sample & Test Residue?	SHALL WE: X__Test As Received? ___Dry Sample First? ___Ash Sample First?	SHALL WE: _X_Test Filtrate Only? ___Mix Sample by Shaking? ___Test Particulate Only?	__Special DETECTION LIMITS? _____ppb or _____ppm X_Special METHODS? TELL US What Method Number or What Method name. FOR PHENOL STANDARD METHOD 22C CHLOROFORM EXTRACTION FOR OIL & GREASE METHOD 137

FIELD IDENTITY	COLLECTION DATE	COLLECTION TIME	MEDIA	# of UNITS	ANALYSIS REQUESTED	SPECIAL INSTRUCTIONS	SAMPLER
W-W-T-1	6-15-89	1:30pm			oil & Grease		
W-W-T-1	"	"			Phenols		
W-W-T-2	"	"			oil & Grease		
W-W-T-2	"	"			Phenols		

ADDITIONAL REMARKS: _____

SAMPLE INTEGRITY COMMENTS: _____

SAMPLE CUSTODY RELINQUISHED BY: G. Hoffman DATE: 6-15-89 TIME: _____ am pm

SAMPLE RECEIVED FOR COFFEY LABS BY: K.J.D. DATE: 6-15-89 TIME: 3:39 am (pm)

Koppers015228

PERMITTEE NAME/ADDRESS (Include Facility Name/Location if different)

NAME: KOPPERS INDUSTRIES, INC.

ADDRESS: 7540 N.W. ST. HELENS RD.
PORTLAND, OREGON 97210

FACILITY LOCATION: MULTNOMAH COUNTY

NATIONAL POLLUTANT DISCHARGE ELIMINATION SYSTEM (NPDES)
DISCHARGE MONITORING REPORT (DMR)

Form Approved
OMB No. 2040-0004
Expires 2-29-84

(2-16) PERMIT NUMBER	(17-19) DISCHARGE NUMBER
OR-100077-9	3077-J
	47430

MONITORING PERIOD	YEAR	MO	DAY		YEAR	MO	DAY
FROM	89	6	1	TO	89	7	1
	(20-21)	(22-23)	(24-25)		(26-27)	(28-29)	(30-31)

NOTE: Read instructions before completing this form.

PARAMETER (32-37)		(3 Card Only) QUANTITY OR LOADING (46-53) AVERAGE	(54-61) MAXIMUM	UNITS	(4 Card Only) QUALITY OR CONCENTRATION (38-45) MINIMUM	(46-53) AVERAGE	(54-61) MAXIMUM	UNITS	NO. EX (62-63)	FREQUENCY OF ANALYSIS (64-68)	SAMPLE TYPE (69-70)
FLOW	SAMPLE MEASUREMENT	3000							N/A	2/30	est
	PERMIT REQUIREMENT		NA	GPD							
TEMP.	SAMPLE MEASUREMENT				58	58	58	°F	0	2/30	grab
	PERMIT REQUIREMENT										
P.H.	SAMPLE MEASUREMENT				6.6	6.65	6.7	SU	0	2/30	grab
	PERMIT REQUIREMENT				6.0		9.0				
OIL & GREASE	SAMPLE MEASUREMENT				0.9	0.9	0.9	MG/L		2/30	grab
	PERMIT REQUIREMENT					10	15				
PHENOLS	SAMPLE MEASUREMENT				0.21	0.235	0.26	MG/L		2/30	grab
	PERMIT REQUIREMENT					0.5	0.7	PPM			
	SAMPLE MEASUREMENT										
	PERMIT REQUIREMENT										
	SAMPLE MEASUREMENT										
	PERMIT REQUIREMENT										

NAME/TITLE PRINCIPAL EXECUTIVE OFFICER

PLANT MANAGER
JOHN D. OXFORD

TYPED OR PRINTED

I CERTIFY UNDER PENALTY OF LAW THAT I HAVE PERSONALLY EXAMINED AND AM FAMILIAR WITH THE INFORMATION SUBMITTED HEREIN; AND BASED ON MY INQUIRY OF THOSE INDIVIDUALS IMMEDIATELY RESPONSIBLE FOR OBTAINING THE INFORMATION, I BELIEVE THE SUBMITTED INFORMATION IS TRUE, ACCURATE AND COMPLETE. I AM AWARE THAT THERE ARE SIGNIFICANT PENALTIES FOR SUBMITTING FALSE INFORMATION, INCLUDING THE POSSIBILITY OF FINE AND IMPRISONMENT. SEE 18 U.S.C. § 1001 AND 33 U.S.C § 1319. *(Penalties under these statutes may include fines up to $10,000 and/or maximum imprisonment of between 6 months and 5 years.)*

John D. Oxford

SIGNATURE OF PRINCIPAL EXECUTIVE OFFICER OR AUTHORIZED AGENT

TELEPHONE		DATE		
503	286-3681	89	7	15
AREA CODE	NUMBER	YEAR	MO	DAY

COMMENT AND EXPLANATION OF ANY VIOLATIONS *(Reference all attachments here)*

Koppers015229

GENERAL INSTRUCTIONS

1. *If form has been partially completed by preprinting, disregard instructions directed at entry of that information already preprinted.*
2. Enter "PERMITTEE NAME/MAILING ADDRESS (and facility name/location, if different)," "PERMIT NUMBER," and "DISCHARGE NUMBER" where indicated. (A separate form is required for each discharge.).
3. Enter dates beginning and ending "MONITORING PERIOD" covered by form where indicated.
4. Enter each "PARAMETER" as specified in monitoring requirements of permit.
5. Enter "SAMPLE MEASUREMENT" data for each parameter under "QUANTITY" and "QUALITY" in units specified in permit. "AVERAGE" is normally arithmetic average (geometric average for bacterial parameters) of all sample measurements for each parameter obtained during "MONITORING PERIOD." "MAXIMUM" and "MINIMUM" are normally extreme high and low measurements obtained during "MONITORING PERIOD." (NOTE to municipals with secondary treatment requirement, enter 30-day average of sample measurements under "AVERAGE" and enter maximum 7-day average of sample measurements obtained during monitoring period under "MAXIMUM".
6. Enter "PERMIT REQUIREMENT" for each parameter under "QUANTITY" and "QUALITY" as specified in permit.
7. Under "NO. EX" enter number of sample measurements during monitoring period that exceed maximum (and/or minimum or 7-day average as appropriate) permit requirement for each parameter. If none, enter "0".
8. Enter "FREQUENCY OF ANALYSIS" both as "SAMPLE MEASUREMENT" (actual frequency of sampling and analysis used during monitoring period); and as "PERMIT REQUIREMENT" specified in permit. (e.g., Enter "CONT." for continuous monitoring, "1/7" for one day per week, "1/30" for one day per month, "1/90" for one day per quarter, etc.)
9. Enter "SAMPLE TYPE" both as "SAMPLE MEASUREMENT" (actual sample type used during monitoring period) and as "PERMIT REQUIREMENT." (e.g., Enter "GRAB" for individual sample, "24HC" for 24-hour composite, "N/A" for continuous monitoring, etc.)

(FOLD HERE FIRST)

---

10. WHERE VIOLATIONS OF PERMIT REQUIREMENTS ARE REPORTED, ATTACH A BRIEF EXPLANATION TO DESCRIBE CAUSE AND CORRECTIVE ACTIONS TAKEN. REFERENCE EACH VIOLATION BY DATE.
11. If "no discharge" occurs during monitoring period, enter "NO DISCHARGE" across form in place of data entry.
12. Enter "NAME/TITLE OF PRINCIPAL EXECUTIVE OFFICER" with "SIGNATURE OF PRINCIPAL EXECUTIVE OFFICER OR AUTHORIZED AGENT," "TELEPHONE NUMBER" and "DATE" at bottom of form.
13. Mail signed Report to Office(s) by date(s) specified in permit. Retain copy for your records.
14. More detailed instructions for use of this DISCHARGE MONITORING REPORT (DMR) form may be obtained from Office(s) specified in permit.

LEGAL NOTICE

This report is required by law (33 U.S.C. 1318; 40 C.F.R. 125.27). Failure to report or failure to report truthfully can result in civil penalties not to exceed $10,000 per day of violation; or in criminal penalties not to exceed $25,000 per day of violation, or by imprisonment for not more than one year, or by both.

FOLD HERE SECOND

PLACE (STAMP) HERE

FOLD HERE THIRD

STAPLE HERE

PERMITTEE NAME/ADDRESS (*Include Facility Name/Location if different*)

NAME

ADDRESS Ws

FACILITY

LOCATION Multnomah County

NATIONAL POLLUTANT DISCHARGE ELIMINATION SYSTEM (*NPDES*)
DISCHARGE MONITORING REPORT (*DMR*)

Form Approved
OMB No. 2040-0004
Expires 2-29-84

(2-16) OR-100077-9 PERMIT NUMBER

(17-19) DISCHARGE NUMBER

3077-J

47430

MONITORING PERIOD	YEAR	MO	DAY		YEAR	MO	DAY
FROM	89	6	1	TO	89	7	1
	(20-21)	(22-23)	(24-25)		(26-27)	(28-29)	(30-31)

NOTE: Read instructions before completing this form.

PARAMETER (32-37)		(3 Card Only) QUANTITY OR LOADING (46-53) AVERAGE	(54-61) MAXIMUM	UNITS	(4 Card Only) QUALITY OR CONCENTRATION (38-45) MINIMUM	(46-53) AVERAGE	(54-61) MAXIMUM	UNITS	NO. EX (62-63)	FREQUENCY OF ANALYSIS (64-68)	SAMPLE TYPE (69-70)
Flow	SAMPLE MEASUREMENT	3000							N/A	2/30	Est
	PERMIT REQUIREMENT		N/A	GPD							
Temp.	SAMPLE MEASUREMENT				58	58	58	°F	0	2/30	grab
	PERMIT REQUIREMENT										
P.H.	SAMPLE MEASUREMENT				6.6	6.65	6.7		0	2/30	grab
	PERMIT REQUIREMENT				6.0		9.0	SU			
Oil & grease	SAMPLE MEASUREMENT				0.9	0.9	0.9	mg/L		2/30	grab
	PERMIT REQUIREMENT					10	15				
Phenols	SAMPLE MEASUREMENT				0.21	0.235	0.26	mg/L		2/30	grab
	PERMIT REQUIREMENT					0.5	0.7	ppm			
	SAMPLE MEASUREMENT										
	PERMIT REQUIREMENT										
	SAMPLE MEASUREMENT										
	PERMIT REQUIREMENT										

NAME/TITLE PRINCIPAL EXECUTIVE OFFICER

Plant mgr.
John a Offord

TYPED OR PRINTED

I CERTIFY UNDER PENALTY OF LAW THAT I HAVE PERSONALLY EXAMINED AND AM FAMILIAR WITH THE INFORMATION SUBMITTED HEREIN; AND BASED ON MY INQUIRY OF THOSE INDIVIDUALS IMMEDIATELY RESPONSIBLE FOR OBTAINING THE INFORMATION, I BELIEVE THE SUBMITTED INFORMATION IS TRUE, ACCURATE AND COMPLETE. I AM AWARE THAT THERE ARE SIGNIFICANT PENALTIES FOR SUBMITTING FALSE INFORMATION, INCLUDING THE POSSIBILITY OF FINE AND IMPRISONMENT. SEE 18 U.S.C. § 1001 AND 33 U.S.C § 1319. (*Penalties under these statutes may include fines up to $10,000 and/or maximum imprisonment of between 6 months and 5 years.*)

SIGNATURE OF PRINCIPAL EXECUTIVE OFFICER OR AUTHORIZED AGENT

TELEPHONE		DATE		
503	2863681	89	7	15
AREA CODE	NUMBER	YEAR	MO	DAY

COMMENT AND EXPLANATION OF ANY VIOLATIONS (*Reference all attachments here*)

EPA Form 3320-1 (Rev. 10-79) PREVIOUS EDITION TO BE USED UNTIL SUPPLY IS EXHAUSTED (REPLACES EPA FORM T-40 WHICH MAY NOT BE USED.)

Koppers015231

7-15-89

T-3		average	T-4	
45000 gal		3000	45000 gal	
58	Temp	58	58	Temp
6.7	P.H	6.65	6.6	P.H.
0.9		Oils Grease 0.9	0.9	
0.26		Phenol 0.235	0.21	

TO AND FROM
ARIZONA - CALIFORNIA - NEVADA - OREGON - WASHINGTON
FASTEST LTL SERVICE

WILLIG

Call
(503) 286-2685

PORTLAND

DELIVERY BY NOON

5-24-89

W-W-T-3

PH 6.7

water
Temp. 58°F

5-24-89

w-w-T-4

Ph 6.6

water
Temp - 58°F

COFFEY LABORATORIES, INC.
12423 N.E. WHITAKER WAY
PORTLAND, OR 97230
PHONE: (503) 254-1794
FAX: (503) 254-1452

June 5, 1989
Log #A890524-AB2
PO # Verbal John

Koppers, Co., Inc.
7540 NW St. Helens Road
Portland, OR. 97210-3663
Attention: John Oxford

Sample Collected: 05/24/89, 1515 hrs.
Sample Received: 05/24/89

ANALYSIS	METHOD	DETECTION LIMITS	W-W-T-3 RESULTS	W-W-T-4 RESULTS
Oil & Grease	EPA 413.2	0.2	0.9	0.9
Total Phenols	EPA 420.1	0.2	0.26	0.21

Results expressed as mg/L unless otherwise noted.

Sincerely,

Victor A. Perry,
Quality Assurance

Sincerely,

Susan M. Coffey,
President

SMC/daj

This report is for the sole and exclusive use of the client. Samples are retained a maximum of 15 days from the report date, or until the maximum holding time expires.

JUN 12 1989

COFFEY LABORATORIES, INC.
4914 N.E. 122nd Ave.
Portland, OR 97230
Phone: (503) 254-1794

Lab Log# A890524-AB2
Custabbr Koppers New
Duedate +8 R P C
Verbal Results NO

CLIENT REPORT INFORMATION

Company KOPPERS COMPANY INC.
Address1 7540 N.W. ST HELENS RD
Address2
City PORTLAND, State OREGON Zip 97210-3663
Attention JOHN OXFORD Phone 286-3681

CLIENT BILLING INFORMATION

Company SAME PO VERBAL JOHN
Address1 Quote# $35.00
Address2 1) Prepay
Cash
City Check#
2) Pay for Rel
State Zipcode Part Pay
3) Net 30
Attention Phone 4) Prof Courtesy

IMPORTANT INFORMATION ABOUT YOUR SAMPLE

COMMENTS:

WHO COLLECTED YOUR SAMPLE:
Client Name
Coffey Lab
3rd Part

DO YOU HAVE SPECIAL ANALYSIS INSTRUCTIONS
Minimum Detection Limits ACTUAL RESULTS FOR PHENOL STANDARD METHOD 22C CHLOROFORM EXTRACTION
Specific Methods FOR OIL & GREASE STANDARD METHOD 137
Other Instructions

IF YOUR SAMPLE IS MULTI PHASED SHALL WE:
- ___ Test Each Phase Separately
- ___ Test One Phase Only? Which Phase?
- X Mix All Phases By Shaking
- ___ Dry Sample and Test Residue

IF YOUR SAMPLE IS WET SHALL WE:
- X Test As Received
- ___ Dry Sample First
- ___ Ash Sample Fist

IF SAMPLE IS LIQUID AND CONTAINS SEDIMENT OR PARTICULATE SHALL WE:
- X Test Filtrate Only
- ___ Mix Sample by Shaking
- ___ Test Particulate Only

Who do we call if we have questons JOHN OXFORD Phone 503-286-3681

Continued on the Back Side of This Paper

Lab Loc	Lab ID	Field ID	Collection Date	Collection Time	Media	Presv	B	Size	Analysis	MDL	Lab Asn	D C	Due Date	Lab Tsk	Unit Cost
									Oil & Grease						
		W-W-T-3	5-24	3:15 PM					Phenols						
		W-W-T-3	5-24	3:15 PM					Oil & Grease						
		W-W-T-4	5-24	3:15 PM					Phenols						
		W-W-T-4	5-24	3:15 PM											

SAMPLE INTEGRITY COMMENTS:

Sample Custody Relinquished By	Date	Time	Received for Coffey Laboratories By
L. Hoffman	5-24-89		AEH 5/24/89

Koppers015237

PERMITTEE NAME/ADDRESS (*Include Facility Name/Location if different*)

NAME KOPPERS INDUSTRIES INC.

ADDRESS 7540 NW ST HELENS RD
PORTLAND OREGON 97210-3663

FACILITY

LOCATION MULTONOMAH COUNTY

NATIONAL POLLUTANT DISCHARGE ELIMINATION SYSTEM (*NPDES*)
DISCHARGE MONITORING REPORT (*DMR*)

Form Approved
OMB No. 2040-0004
Expires 2-29-84

(2-16) PERMIT NUMBER: OR-100077-9

(17-19) DISCHARGE NUMBER:

MONITORING PERIOD	YEAR	MO	DAY		YEAR	MO	DAY
FROM	89	5	1	TO	89	6	1
	(20-21)	(22-23)	(24-25)		(26-27)	(28-29)	(30-31)

3077J
47430

NOTE: Read instructions before completing this form.

PARAMETER (32-37)		(3 Card Only) QUANTITY OR LOADING (46-53) AVERAGE	(54-61) MAXIMUM	UNITS	(4 Card Only) QUALITY OR CONCENTRATION (38-45) MINIMUM	(46-53) AVERAGE	(54-61) MAXIMUM	UNITS	NO. EX (62-63)	FREQUENCY OF ANALYSIS (64-68)	SAMPLE TYPE (69-70)
FLOW	SAMPLE MEASUREMENT	NO FLOW									
	PERMIT REQUIREMENT										
TEMPERATURE	SAMPLE MEASUREMENT	NO FLOW									
	PERMIT REQUIREMENT										
PH	SAMPLE MEASUREMENT				NO FLOW						
	PERMIT REQUIREMENT										
OIL & GREASE	SAMPLE MEASUREMENT				NO FLOW						
	PERMIT REQUIREMENT										
PHENOLS	SAMPLE MEASUREMENT				NO FLOW						
	PERMIT REQUIREMENT										
	SAMPLE MEASUREMENT										
	PERMIT REQUIREMENT										
	SAMPLE MEASUREMENT										
	PERMIT REQUIREMENT										

NAME/TITLE PRINCIPAL EXECUTIVE OFFICER
JOHN A. OXFORD
PLANT MANAGER
TYPED OR PRINTED

I CERTIFY UNDER PENALTY OF LAW THAT I HAVE PERSONALLY EXAMINED AND AM FAMILIAR WITH THE INFORMATION SUBMITTED HEREIN; AND BASED ON MY INQUIRY OF THOSE INDIVIDUALS IMMEDIATELY RESPONSIBLE FOR OBTAINING THE INFORMATION, I BELIEVE THE SUBMITTED INFORMATION IS TRUE, ACCURATE AND COMPLETE. I AM AWARE THAT THERE ARE SIGNIFICANT PENALTIES FOR SUBMITTING FALSE INFORMATION, INCLUDING THE POSSIBILITY OF FINE AND IMPRISONMENT. SEE 18 U.S.C. § 1001 AND 33 U.S.C. § 1319. (*Penalties under these statutes may include fines up to $10,000 and/or maximum imprisonment of between 6 months and 5 years.*)

John A Oxford
SIGNATURE OF PRINCIPAL EXECUTIVE OFFICER OR AUTHORIZED AGENT

TELEPHONE		DATE		
503	286-3681	89	6	15
AREA CODE	NUMBER	YEAR	MO	DAY

COMMENT AND EXPLANATION OF ANY VIOLATIONS (*Reference all attachments here*)

Koppers015238

GENERAL INSTRUCTIONS

1. If form has been partially completed by preprinting, disregard instructions directed at entry of that information already preprinted.
2. Enter "PERMITTEE NAME/MAILING ADDRESS (and facility name/location, if different)," "PERMIT NUMBER" and "DISCHARGE NUMBER" where indicated. (A separate form is required for each discharge.)
3. Enter dates beginning and ending "MONITORING PERIOD" covered by form where indicated.
4. Enter each "PARAMETER" as specified in monitoring requirements of permit.
5. Enter "SAMPLE MEASUREMENT" data for each parameter under "QUANTITY" and "QUALITY" in units specified in permit. "AVERAGE" is normally arithmetic average (geometric average for bacterial parameters) of all sample measurements for each parameter obtained during "MONITORING PERIOD." "MAXIMUM" and "MINIMUM" are normally extreme high and low measurements obtained during "MONITORING PERIOD." (NOTE to municipals with secondary treatment requirement, enter 30-day average of sample measurements under "AVERAGE" and enter maximum 7-day average of sample measurements obtained during monitoring period under "MAXIMUM".)
6. Enter "PERMIT REQUIREMENT" for each parameter under "QUANTITY" and "QUALITY" as specified in permit.
7. Under "NO. EX" enter number of sample measurements during monitoring period that exceed maximum (and/or minimum or 7-day average, as appropriate) permit requirement for each parameter. If none, enter "0".
8. Enter "FREQUENCY OF ANALYSIS" both as "SAMPLE MEASUREMENT" (actual frequency of sampling and analysis used during monitoring period) and as "PERMIT REQUIREMENT" specified in permit. (e.g., Enter "CONT." for continuous monitoring, "1/7" for one day per week, "1/30" for one day per month, "1/90" for one day per quarter, etc.)
9. Enter "SAMPLE TYPE" both as "SAMPLE MEASUREMENT" (actual sample type used during monitoring period) and as "PERMIT REQUIREMENT" (e.g., Enter "GRAB" for individual sample, "24HC" for 24-hour composite, "N/A" for continuous monitoring, etc.)

(FOLD HERE FIRST)

10. WHERE VIOLATIONS OF PERMIT REQUIREMENTS ARE REPORTED, ATTACH A BRIEF EXPLANATION TO DESCRIBE CAUSE AND CORRECTIVE ACTIONS TAKEN, REFERENCE EACH VIOLATION BY DATE.
11. If "no discharge" occurs during monitoring period, enter "NO DISCHARGE" across form in place of data entry.
12. Enter "NAME/TITLE OF PRINCIPAL EXECUTIVE OFFICER" with "SIGNATURE OF PRINCIPAL EXECUTIVE OFFICER OR AUTHORIZED AGENT," "TELEPHONE NUMBER" and "DATE" at bottom of form.
13. Mail signed Report to Office(s) by date(s) specified in permit. Retain copy for your records.
14. More detailed instructions for use of this DISCHARGE MONITORING REPORT (DMR) form may be obtained from Office(s) specified in permit.

LEGAL NOTICE

This report is required by law (33 U.S.C. 1318; 40 C.F.R. 125.27). Failure to report or failure to report truthfully can result in civil penalties not to exceed $10,000 per day of violation; or in criminal penalties not to exceed $25,000 per day of violation, or by imprisonment for not more than one year, or by both.

FOLD HERE SECOND

PLACE STAMP HERE

FOLD HERE THIRD

STAPLE HERE

PERMITTEE NAME/ADDRESS (*Include Facility Name/Location if different*)

NAME: KOPPERS INDUSTRIES INC.

ADDRESS: 7540 NW ST HELENS RD
PORTLAND OR 97210-3653

FACILITY:

LOCATION: MULTONOMAH COUNTY

NATIONAL POLLUTANT DISCHARGE ELIMINATION SYSTEM (*NPDES*)
DISCHARGE MONITORING REPORT (*DMR*)

Form Approved
OMB No. 2040-0004
Expires 2-29-84

(2-16) PERMIT NUMBER: OR100077-9

(17-19) DISCHARGE NUMBER:

MONITORING PERIOD	YEAR	MO	DAY		YEAR	MO	DAY
FROM	89	4	1	TO	89	5	1
	(20-21)	(22-23)	(24-25)		(26-27)	(28-29)	(30-31)

30771
47430

NOTE: Read instructions before completing this form.

PARAMETER (32-37)		(3 Card Only) QUANTITY OR LOADING (46-53) AVERAGE	(54-61) MAXIMUM	UNITS	(4 Card Only) QUALITY OR CONCENTRATION (38-45) MINIMUM	(46-53) AVERAGE	(54-61) MAXIMUM	UNITS	NO. EX (62-63)	FREQUENCY OF ANALYSIS (64-68)	SAMPLE TYPE (69-70)
FLOW	SAMPLE MEASUREMENT	NO FLOW									
	PERMIT REQUIREMENT										
TEMPERATURE	SAMPLE MEASUREMENT	NO FLOW									
	PERMIT REQUIREMENT										
PH	SAMPLE MEASUREMENT				NO FLOW						
	PERMIT REQUIREMENT										
OIL & GREASE	SAMPLE MEASUREMENT				NO FLOW						
	PERMIT REQUIREMENT										
PHENOLS	SAMPLE MEASUREMENT				NO FLOW						
	PERMIT REQUIREMENT										
	SAMPLE MEASUREMENT										
	PERMIT REQUIREMENT										
	SAMPLE MEASUREMENT										
	PERMIT REQUIREMENT										

NAME/TITLE PRINCIPAL EXECUTIVE OFFICER
JOHN A OXFORD
PLANT MANAGER
TYPED OR PRINTED

I CERTIFY UNDER PENALTY OF LAW THAT I HAVE PERSONALLY EXAMINED AND AM FAMILIAR WITH THE INFORMATION SUBMITTED HEREIN; AND BASED ON MY INQUIRY OF THOSE INDIVIDUALS IMMEDIATELY RESPONSIBLE FOR OBTAINING THE INFORMATION, I BELIEVE THE SUBMITTED INFORMATION IS TRUE, ACCURATE AND COMPLETE. I AM AWARE THAT THERE ARE SIGNIFICANT PENALTIES FOR SUBMITTING FALSE INFORMATION, INCLUDING THE POSSIBILITY OF FINE AND IMPRISONMENT. SEE 18 U.S.C. § 1001 AND 33 U.S.C § 1319. *(Penalties under these statutes may include fines up to $10,000 and/or maximum imprisonment of between 6 months and 5 years.)*

SIGNATURE OF PRINCIPAL EXECUTIVE OFFICER OR AUTHORIZED AGENT

TELEPHONE		DATE		
503	286-3681	89	5	15
AREA CODE	NUMBER	YEAR	MO	DAY

COMMENT AND EXPLANATION OF ANY VIOLATIONS (*Reference all attachments here*)

Koppers015240

GENERAL INSTRUCTIONS

1. If form has been partially completed by preprinting, disregard instructions directed at entry of that information already preprinted.
2. Enter "PERMITTEE NAME/MAILING ADDRESS (and facility name/location, if different)," "PERMIT NUMBER," and "DISCHARGE NUMBER" where indicated. (A separate form is required for each discharge.)
3. Enter dates beginning and ending "MONITORING PERIOD" covered by form where indicated.
4. Enter each "PARAMETER" as specified in monitoring requirements of permit.
5. Enter "SAMPLE MEASUREMENT" data for each parameter under "QUANTITY" and "QUALITY" in units specified in permit. "AVERAGE" is normally arithmetic average (geometric average for bacterial parameters) of all sample measurements for each parameter obtained during "MONITORING PERIOD." "MAXIMUM" and "MINIMUM" are normally extreme high and low measurements obtained during "MONITORING PERIOD." (NOTE to municipals with secondary treatment requirement, enter 30-day average of sample measurements under "AVERAGE" and enter maximum 7-day average of sample measurements obtained during monitoring period under "MAXIMUM".
6. Enter "PERMIT REQUIREMENT" for each parameter under "QUANTITY" and "QUALITY" as specified in permit.
7. Under "NO. EX" enter number of sample measurements during monitoring period that exceed maximum (and/or minimum or 7-day average as appropriate) permit requirement for each parameter. If none, enter "0".
8. Enter "FREQUENCY OF ANALYSIS" both as "SAMPLE MEASUREMENT" (actual frequency of sampling and analysis used during monitoring period) and as "PERMIT REQUIREMENT" specified in permit. (e.g., Enter "CONT." for continuous monitoring, "1/7" for one day per week, "1/30" for one day per month, "1/90" for one day, per quarter, etc.)
9. Enter "SAMPLE TYPE" both as "SAMPLE MEASUREMENT" (actual sample type used during monitoring period) and as "PERMIT REQUIREMENT" (e.g., Enter "GRAB" for individual sample, "24HC" for 24-hour composite, "N/A" for continuous monitoring, etc.)

(FOLD HERE FIRST)

10. WHERE VIOLATIONS OF PERMIT REQUIREMENTS ARE REPORTED, ATTACH A BRIEF EXPLANATION TO DESCRIBE CAUSE AND CORRECTIVE ACTIONS TAKEN. REFERENCE EACH VIOLATION BY DATE.
11. If "no discharge" occurs during monitoring period, enter "NO DISCHARGE" across form in place of data entry.
12. Enter "NAME/TITLE OF PRINCIPAL EXECUTIVE OFFICER" with "SIGNATURE OF PRINCIPAL EXECUTIVE OFFICER OR AUTHORIZED AGENT," "TELEPHONE NUMBER" and "DATE" at bottom of form.
13. Mail signed Report to Office(s) by date(s) specified in permit. Retain copy for your records.
14. More detailed instructions for use of this DISCHARGE MONITORING REPORT (DMR) form may be obtained from Office(s) specified in permit.

LEGAL NOTICE

This report is required by law (33 U.S.C. 1318; 40 C.F.R. 125.27). Failure to report or failure to report truthfully can result in civil penalties not to exceed $10,000 per day of violation; or in criminal penalties not to exceed $25,000 per day of violation, or by imprisonment for not more than one year, or by both.

FOLD HERE SECOND

PLACE STAMP HERE

FOLD HERE THIRD

STAPLE HERE

PERMITTEE NAME/ADDRESS (*Include Facility Name/Location if different*)

NAME KOPPERS INDUSTRIES INC.

ADDRESS 7545 N. ST. JOHNS RD

PORTLAND OR 97210-3633

FACILITY

LOCATION MULTNOMAH COUNTY

NATIONAL POLLUTANT DISCHARGE ELIMINATION SYSTEM (*NPDES*)
DISCHARGE MONITORING REPORT (*DMR*)

Form Approved
OMB No. 2040-0004
Expires 2-29-84

(2-16) PERMIT NUMBER: OR 100077-0

(17-19) DISCHARGE NUMBER:

MONITORING PERIOD	YEAR	MO	DAY		YEAR	MO	DAY
FROM	89	3	1	TO	89	4	1
	(20-21)	(22-23)	(24-25)		(26-27)	(28-29)	(30-31)

30773
87430

NOTE: Read instructions before completing this form.

PARAMETER (32-37)		(3 Card Only) QUANTITY OR LOADING (46-53) AVERAGE	(54-61) MAXIMUM	UNITS	(4 Card Only) QUALITY OR CONCENTRATION (38-45) MINIMUM	(46-53) AVERAGE	(54-61) MAXIMUM	UNITS	NO. EX (62-63)	FREQUENCY OF ANALYSIS (64-68)	SAMPLE TYPE (69-70)
FLOW	SAMPLE MEASUREMENT	8710							N/A	6/31	EST
	PERMIT REQUIREMENT		NA	GPD							
TEMP	SAMPLE MEASUREMENT				44	49.83	54	°F	0	6/31	GRAB
	PERMIT REQUIREMENT										
PH	SAMPLE MEASUREMENT				6.4	6.56	6.7		0	6/31	GRAB
	PERMIT REQUIREMENT				6.0		9.0	SU			
OIL & GREASE	SAMPLE MEASUREMENT				0.6	0.43	0.7	MG/L	0	6/31	GRAB
	PERMIT REQUIREMENT					10	15				
PHENOLS	SAMPLE MEASUREMENT				0.18	0.27	0.39	MG/L	1	6/31	GRAB
	PERMIT REQUIREMENT					0.5	0.7	(PPM)			
	SAMPLE MEASUREMENT										
	PERMIT REQUIREMENT										
	SAMPLE MEASUREMENT										
	PERMIT REQUIREMENT										

NAME/TITLE PRINCIPAL EXECUTIVE OFFICER			TELEPHONE		DATE		
JOHN A OXFORD PLANT MANAGER	I CERTIFY UNDER PENALTY OF LAW THAT I HAVE PERSONALLY EXAMINED AND AM FAMILIAR WITH THE INFORMATION SUBMITTED HEREIN; AND BASED ON MY INQUIRY OF THOSE INDIVIDUALS IMMEDIATELY RESPONSIBLE FOR OBTAINING THE INFORMATION, I BELIEVE THE SUBMITTED INFORMATION IS TRUE, ACCURATE AND COMPLETE. I AM AWARE THAT THERE ARE SIGNIFICANT PENALTIES FOR SUBMITTING FALSE INFORMATION, INCLUDING THE POSSIBILITY OF FINE AND IMPRISONMENT. SEE 18 U.S.C. § 1001 AND 33 U.S.C. § 1319. *(Penalties under these statutes may include fines up to $10,000 and/or maximum imprisonment of between 6 months and 5 years.)*	John A Oxford SIGNATURE OF PRINCIPAL EXECUTIVE OFFICER OR AUTHORIZED AGENT	503 AREA CODE	286-3681 NUMBER	89 YEAR	4 MO	14 DAY
TYPED OR PRINTED							

COMMENT AND EXPLANATION OF ANY VIOLATIONS (*Reference all attachments here*)

Koppers015242

GENERAL INSTRUCTIONS

1. If form has been partially completed by preprinting, disregard instructions directed at entry of that information already preprinted.
2. Enter "PERMITTEE NAME/MAILING ADDRESS (and facility name/location, if different)," "PERMIT NUMBER," and "DISCHARGE NUMBER" where indicated. (A separate form is required for each discharge.)
3. Enter dates beginning and ending "MONITORING PERIOD" covered by form where indicated.
4. Enter each "PARAMETER" as specified in monitoring requirements of permit.
5. Enter "SAMPLE MEASUREMENT" data for each parameter under "QUANTITY" and "QUALITY" in units specified in permit. "AVERAGE" is normally arithmetic average (geometric average for bacterial parameters) of all sample measurements for each parameter obtained during "MONITORING PERIOD." "MAXIMUM" and "MINIMUM" are normally extreme high and low measurements obtained during "MONITORING PERIOD." (NOTE to municipals with secondary treatment requirement, enter 30-day average of sample measurements under "AVERAGE" and enter maximum 7-day average of sample measurements obtained during monitoring period under "MAXIMUM".
6. Enter "PERMIT REQUIREMENT" for each parameter under "QUANTITY" and "QUALITY" as specified in permit.
7. Under "NO. EX" enter number of sample measurements during monitoring period that exceed maximum (and/or minimum or 7-day average as appropriate) permit requirement for each parameter. If none, enter "0".
8. Enter "FREQUENCY OF ANALYSIS" both as "SAMPLE MEASUREMENT" (actual frequency of sampling and analysis used during monitoring period) and as "PERMIT REQUIREMENT" specified in permit. (e.g., Enter "CONT." for continuous monitoring, "1/7" for one day per week, "1/30" for one day per month, "1/90" for one day per quarter, etc.)
9. Enter "SAMPLE TYPE" both as "SAMPLE MEASUREMENT" (actual sample type used during monitoring period) and as "PERMIT REQUIREMENT." (e.g., Enter "GRAB" for individual sample, "24HC" for 24-hour composite, "N/A" for continuous monitoring, etc.)

(FOLD HERE FIRST)

10. WHERE VIOLATIONS OF PERMIT REQUIREMENTS ARE REPORTED, ATTACH A BRIEF EXPLANATION TO DESCRIBE CAUSE AND CORRECTIVE ACTIONS TAKEN. REFERENCE EACH VIOLATION BY DATE.
11. If "no discharge" occurs during monitoring period, enter "NO DISCHARGE" across form in place of data entry.
12. Enter "NAME/TITLE OF PRINCIPAL EXECUTIVE OFFICER" with "SIGNATURE OF PRINCIPAL EXECUTIVE OFFICER OR AUTHORIZED AGENT," "TELEPHONE NUMBER" and "DATE" at bottom of form.
13. Mail signed Report to Office(s) by date(s) specified in permit. Retain copy for your records.
14. More detailed instructions for use of this DISCHARGE MONITORING REPORT (DMR) form may be obtained from Office(s) specified in permit.

LEGAL NOTICE

This report is required by law (33 U.S.C. 1318; 40 C.F.R. 125.27). Failure to report or failure to report truthfully can result in civil penalties not to exceed $10,000 per day of violation; or in criminal penalties not to exceed $25,000 per day of violation, or by imprisonment for not more than one year, or by both.

FOLD HERE SECOND

PLACE STAMP HERE

FOLD HERE THIRD

STAPLE HERE

PERMITTEE NAME/ADDRESS (Include Facility Name/Location if different)

NAME Koppers Industries Inc

ADDRESS 7676 Grant Helena Rd

Gallatin MO 64640-3663

FACILITY

LOCATION Multiscot County

NATIONAL POLLUTANT DISCHARGE ELIMINATION SYSTEM (NPDES)

DISCHARGE MONITORING REPORT (DMR)

OMB No. 2040-0004
Expires 2-29-84

(2-16) PERMIT NUMBER	(17-19) DISCHARGE NUMBER
MO-1000 774-5	

MONITORING PERIOD	YEAR	MO	DAY		YEAR	MO	DAY
FROM	89	3	1	TO	89	4	1
	(20-21)	(22-23)	(24-25)		(26-27)	(28-29)	(30-31)

3.225
47430

NOTE: Read instructions before completing this form.

PARAMETER (32-37)		(3 Card Only) QUANTITY OR LOADING (46-53) AVERAGE	(54-61) MAXIMUM	UNITS	(4 Card Only) QUALITY OR CONCENTRATION (38-45) MINIMUM	(46-53) AVERAGE	(54-61) MAXIMUM	UNITS	NO. EX (62-63)	FREQUENCY OF ANALYSIS (64-68)	SAMPLE TYPE (69-70)
Flow	SAMPLE MEASUREMENT	8710							N/A	6/31	Est.
	PERMIT REQUIREMENT		N/A	GPD							
Temp	SAMPLE MEASUREMENT				44	49.83	54	°F	0	6/31	GRAB
	PERMIT REQUIREMENT										
Ph.	SAMPLE MEASUREMENT				6.4	6.56	6.7		1	6/31	GRAB
	PERMIT REQUIREMENT				6.0		9.0	SU			
Oil & Grease	SAMPLE MEASUREMENT				0.6	0.43	0.7	mg/L	0	6/31	GRAB
	PERMIT REQUIREMENT					10	15				
Phenols	SAMPLE MEASUREMENT				0.18	0.27	0.34	mg/L	1	6/31	grab
	PERMIT REQUIREMENT					0.5	0.7	(PPM)			
	SAMPLE MEASUREMENT										
	PERMIT REQUIREMENT										
	SAMPLE MEASUREMENT										
	PERMIT REQUIREMENT										

NAME/TITLE PRINCIPAL EXECUTIVE OFFICER

Karl Mo.
John A Oldfield

TYPED OR PRINTED

I CERTIFY UNDER PENALTY OF LAW THAT I HAVE PERSONALLY EXAMINED AND AM FAMILIAR WITH THE INFORMATION SUBMITTED HEREIN; AND BASED ON MY INQUIRY OF THOSE INDIVIDUALS IMMEDIATELY RESPONSIBLE FOR OBTAINING THE INFORMATION, I BELIEVE THE SUBMITTED INFORMATION IS TRUE, ACCURATE AND COMPLETE. I AM AWARE THAT THERE ARE SIGNIFICANT PENALTIES FOR SUBMITTING FALSE INFORMATION, INCLUDING THE POSSIBILITY OF FINE AND IMPRISONMENT. SEE 18 U.S.C. § 1001 AND 33 U.S.C. § 1319. (Penalties under these statutes may include fines up to $10,000 and/or maximum imprisonment of between 6 months and 5 years.)

SIGNATURE OF PRINCIPAL EXECUTIVE OFFICER OR AUTHORIZED AGENT

TELEPHONE AREA CODE	NUMBER	DATE YEAR	MO	DAY
503	286-3601	89	4	14

COMMENT AND EXPLANATION OF ANY VIOLATIONS (Reference all attachments here)

Koppers015244

4 Tank pumped 6 X 45 000 = 270 000 ÷ 31
8710

	WW1	WW2	WW3	WW4		
Temp	45 54	44 54	50	52 =	299 ÷ 6	49.83
PH	6.6 6.4	6.7 6.5	6.6	6.6 =	39.4 ÷ 6	6.56
oil & Grease	0.6 0	0.6 0	0.7	0.7 =	2.6 ÷ 6 =	0.43
Phenols	0.27 0.39	0.27 0.33	0.18	0.18	= 1.62 ÷ 6	0.27

COFFEY LABORATORIES, INC.
4914 N.E. 122nd Ave.
Portland, OR 97230
Phone: (503) 254-1794

April 10, 1989
Log #A890330-W
PO # Verbal John

Koppers Co., Inc.
7540 NW St. Helens Rd.
Portland, OR. 97210-3663
Attention: John Oxford

Sample Collected: 03/29/89, 1330 hrs.
Sample Received: 03/30/89
Sample ID: #1=W-W-T-1, #2=W-W-T-2

ANALYSIS	METHOD	DETECTION LIMIT	#1 RESULTS	#2 RESULTS
Oil & Grease	EPA 413.2	0.3	ND	ND
Total Phenols	EPA 420.1	0.05	0.39	0.33

Results expressed as mg/L unless otherwise noted.

ND means none detected at or above the detection limit listed.

Sincerely,

Victor A. Perry,
Quality Assurance

Sincerely,

Susan M. Coffey,
President

SMC/daj

This report is for the sole and exclusive use of the client. Samples are retained a maximum of 15 days from the report date, or until the maximum holding time expires.

APR 13 1989

3-30-89

W-W — T-2

water Temp - 54°F

Ph 6.5

3-30-89

W-W T-1

water Temp. 54°F

Ph 6.4

COFFEY LABORATORIES, INC.
4914 N.E. 122nd Ave.
Portland, OR 97230
Phone: (503) 254-1794

Lab Log# A890330-W2
Custabbr _____ New ___
Duedate +8 R P C
Verbal Results _____

CLIENT REPORT INFORMATION

Company KOPPERS COMPANY INC.
Address1 7540 N.W. ST HELENS RD
Address2 _____
City PORTLAND, State OREGON Zip 97210-3663
Attention JOHN OXFORD Phone 286-3681

CLIENT BILLING INFORMATION

Company SAME PO VERBAL JOHN
Address1 _____ Quote# $35.00
Address2 _____ 1) Prepay _____
Cash _____
City _____ Check# _____
2) Pay for Rel _____
State _____ Zipcode _____ Part Pay _____
3) Net 30 _____
Attention _____ Phone _____ 4) Prof Courtesy _____

IMPORTANT INFORMATION ABOUT YOUR SAMPLE

COMMENTS: _____

WHO COLLECTED YOUR SAMPLE:
Client Name _____
Coffey Lab _____
3rd Part _____

DO YOU HAVE SPECIAL ANALYSIS INSTRUCTIONS
Minimum Detection Limits ACTUAL RESULTS FOR PHENOL STANDARD METHOD 22C CHLOROFORM EXTRACTIO
Specific Methods FOR OIL & GREASE STANDARD METHOD 137
Other Instructions _____

IF YOUR SAMPLE IS MULTI PHASED SHALL WE:
____ Test Each Phase Separately
____ Test One Phase Only? Which Phase?
X Mix All Phases By Shaking
____ Dry Sample and Test Residue

IF YOUR SAMPLE IS WET SHALL WE:
X Test As Received
____ Dry Sample First
____ Ash Sample Fist

IF SAMPLE IS LIQUID AND CONTAINS SEDIMENT OR PARTICULATE SHALL WE:
X Test Filtrate Only
____ Mix Sample by Shaking
____ Test Particulate Only

Who do we call if we have questons JOHN OXFORD Phone 503-286-3681

Continued on the Back Side of This Paper

Lab Loc	Lab ID	Field ID	Collection Date	Collection Time	Media	Presv	B	Size	Analysis	MDL	Lab Asn	D C	Due Date	Lab Tsk	Unit Cost
		W-W-T-1	3-29	1:30 pm					Oil & grease						
		W-W-T-1	"	"					Phenols						
		W-W-T-2	"	"					oil & grease						
		W-W-T-2	"	"					Phenols						

SAMPLE INTEGRITY COMMENTS:

Relinquished by	Date	Time	Received for Coffey Laboratories By		
George Hofmann	3/30-89		S K M Savino	3/30	1620

Koppers015250

COFFEY LABORATORIES, INC.
4914 N.E. 122nd Ave.
Portland, OR 97230
Phone: (503) 254-1794

March 3, 1989
Log # A890217-Z2

Koppers Co., Inc
7540 NW St. Helens Rd
Portland, OR 97210-3663
Attention: John Oxford

Sample Collected: 2/17/89, 0940 hrs
Sample Received: 2/17/89

ANALYSIS	METHOD	DETECTION LIMIT	WWT-1 RESULTS	WWT-2 RESULTS
Total Phenols	EPA 420.1	0.05	0.18	0.18
Oil & Grease	EPA 413.2	0.2	0.6	0.6

Results expressed as mg/L unless otherwise noted.

Sincerely,

Victor A. Perry,
Quality Assurance

Sincerely,

Susan M. Coffey,
President

SMC/mlh

This report is for the sole and exclusive use of the client. Samples are retained a maximum of 15 days from the report date, or until the maximum holding time expires.

MAR 9 1989

2-17-89

W-W-T-2

water Temp. 44

Ph 6.6

2-17-89

w-w-T-1

water Temp-45

Ph. 6.6

COFFEY LABORATORIES, INC.
4914 N.E. 122nd Ave.
Portland, OR 97230
Phone: (503) 254-1794

Lab Log# A890217-ZZ

Custabbr _____ New ___

Duedate _____ R P C

Verbal Results _____

CLIENT REPORT INFORMATION

Company KOPPERS COMPANY INC.

Address1 7540 N.W. ST HELENS RD

Address2 _____

City PORTLAND, State OREGON Zip 97210-3663

Attention JOHN OXFORD Phone 286-3681

CLIENT BILLING INFORMATION

Company SAME PO VERBAL JOHN

Address1 _____ Quote# $35.00

Address2 _____ 1) Prepay _____
Cash _____
Check# _____

City _____ 2) Pay for Rel _____
Part Pay _____

State _____ Zipcode _____ 3) Net 30 _____

Attention _____ Phone _____ 4) Prof Courtesy _____

IMPORTANT INFORMATION ABOUT YOUR SAMPLE

COMMENTS: _____

WHO COLLECTED YOUR SAMPLE:

Client Name _____

Coffey Lab _____

3rd Part _____

DO YOU HAVE SPECIAL ANALYSIS INSTRUCTIONS

Minimum Detection Limits ACTUAL RESULTS FOR PHENOL STANDARD METHOD 22C CHLOROFORM EXTRACTIO

Specific Methods FOR OIL & GREASE STANDARD METHOD 137

Other Instructions _____

IF YOUR SAMPLE IS MULTI PHASED SHALL WE:
- ___ Test Each Phase Separately
- ___ Test One Phase Only? Which Phase?
- X Mix All Phases By Shaking
- ___ Dry Sample and Test Residue

IF YOUR SAMPLE IS WET SHALL WE:
- X Test As Received
- ___ Dry Sample First
- ___ Ash Sample Fist

IF SAMPLE IS LIQUID AND CONTAINS SEDIMENT OR PARTICULATE SHALL WE:
- X Test Filtrate Only
- ___ Mix Sample by Shaking
- ___ Test Particulate Only

Who do we call if we have questons JOHN OXFORD Phone 503-286-3681

Continued on the Back Side of This Paper

Lab Loc	Lab ID	Field ID	Collection Date	Collection Time	Media	Presv	B	Size	Analysis	MDL	Lab Asn	D C	Due Date	Lab Tsk	Unit Cost
		W-W-T-1	2-17-89	9:40					Oil & Grease						
		W-W-T-1	"	"					Phenols						
		W-W-T-2	"	"					Oil & Grease						
		W-W-T-2	"	"					Phenols						

SAMPLE INTEGRITY COMMENTS:

S. Hoffman — 2/17-89 — \ — Ted Williams 2/17/89 15:22

Sample Custody Relinquished by — Date — Time — Received for Coffey Laboratories By

Koppers015255

COFFEY LABORATORIES, INC.
4914 N.E. 122nd Ave.
Portland, OR 97230
Phone: (503) 254-1794

March 17, 1989
Log#A890310-Y2
PO# Verbal John

Koppers Company, Inc.
7540 NW St. Helens Road
Portland, OR 97210-3663
Attention: John Oxford

Sample Collected: 03/10/89 1420 hrs.
Sample Received: 03/10/89

ANALYSIS	METHOD	DETECTION LIMIT	W-W-T-3	W-W-T-4
Total Phenols	EPA 420.1	0.05	0.27	0.27
Oil & Grease	EPA 413.2	0.2	0.7	0.7

Results expressed as mg/L unless otherwise noted.

Sincerely,

Victor A. Perry,
Quality Assurance

Sincerely,

Susan M. Coffey,
President

SMC/lws

This report is for the sole and exclusive use of the client. Samples are retained a maximum of 15 days from the report date, or until the maximum holding time expires.

3-10-89

W. W. T. 4

water Temp. 52°F

Ph. 6.7

3-10-89

W-W-T-3

water Temp. 50°F

PH. 6.6

COFFEY LABORATORIES, INC.
4914 N.E. 122nd Ave.
Portland, OR 97230
Phone: (503) 254-1794

Lab Log# A890310-YZ
Custabbr _____ New __
Duedate _____ R P C
Verbal Results _____

CLIENT REPORT INFORMATION

Company KOPPERS COMPANY INC.
Address1 7540 N.W. ST HELENS RD
Address2 _____
City PORTLAND, State OREGON Zip 97210-3663
Attention JOHN OXFORD Phone 286-3681

CLIENT BILLING INFORMATION

Company SAME PO VERBAL JOHN
Address1 _____ Quote# $35.00
Address2 _____ 1) Prepay _____
Cash _____
City _____ Check# _____
2) Pay for Rel _____
State _____ Zipcode _____ Part Pay _____
3) Net 30 _____
Attention _____ Phone _____ 4) Prof Courtesy _____

IMPORTANT INFORMATION ABOUT YOUR SAMPLE

COMMENTS: _____

WHO COLLECTED YOUR SAMPLE: DO YOU HAVE SPECIAL ANALYSIS INSTRUCTIONS

Client Name _____ Minimum Detection Limits ACTUAL RESULTS FOR PHENOL STANDARD METHOD 22C CHLOROFORM EXTRACTION
Coffey Lab _____ Specific Methods FOR OIL & GREASE STANDARD METHOD 137
3rd Part _____ Other Instructions _____

IF YOUR SAMPLE IS MULTI PHASED SHALL WE:
____ Test Each Phase Separately
____ Test One Phase Only? Which Phase?
X Mix All Phases By Shaking
____ Dry Sample and Test Residue

IF YOUR SAMPLE IS WET SHALL WE:
X Test As Received
____ Dry Sample First
____ Ash Sample Fist

IF SAMPLE IS LIQUID AND CONTAINS SEDIMENT OR PARTICULATE SHALL WE:
X Test Filtrate Only
____ Mix Sample by Shaking
____ Test Particulate Only

Who do we call if we have questons JOHN OXFORD Phone 503-286-3681

Continued on the Back Side of This Paper

Lab Loc	Lab ID	Field ID	Collection Date	Collection Time	Media	Presv	B	Size	Analysis	MDL	Lab Asn	D C	Due Date	Lab Tsk	Unit Cost
		W-W-T-3	3-10-89	2:30 PM					Oil & Grease						
		W-W-T-3	"	"					Phenols						
		W-W-T-4	"	"					Oil & Grease						
		W-W-T-4	"	"					Phenols						

SAMPLE INTEGRITY COMMENTS:

S. Hoffman — 3/10-89 — — Ted Williams — 3/10/89 — 16:20

Sample Custody Relinquished by — Date — Time — Received for Coffey Laboratories By

Koppers015260

PERMITTEE NAME/ADDRESS (*Include Facility Name/Location if different*)

NAME KOPPERS INDUSTRIES, INC.

ADDRESS 5540 SW ST HELENS RD

PORTLAND OREGON 97210-5663

FACILITY

LOCATION MULTNOMAH COUNTY

NATIONAL POLLUTANT DISCHARGE ELIMINATION SYSTEM (*NPDES*)
DISCHARGE MONITORING REPORT (*DMR*)

Form Approved
OMB No. 2040-0004
Expires 2-29-84

(2-16) PERMIT NUMBER	(17-19) DISCHARGE NUMBER
OR-1000077-9	

3077J
47430

MONITORING PERIOD	YEAR	MO	DAY		YEAR	MO	DAY
FROM	89	2	1	TO	89	3	1
	(20-21)	(22-23)	(24-25)		(26-27)	(28-29)	(30-31)

NOTE: Read instructions before completing this form.

PARAMETER (32-37)		(3 Card Only) QUANTITY OR LOADING (46-53) AVERAGE	(54-61) MAXIMUM	UNITS	(4 Card Only) QUALITY OR CONCENTRATION (38-45) MINIMUM	(46-53) AVERAGE	(54-61) MAXIMUM	UNITS	NO. EX (62-63)	FREQUENCY OF ANALYSIS (64-68)	SAMPLE TYPE (69-70)
RAW FLOW	SAMPLE MEASUREMENT	3214							N/A	2/28	EST
	PERMIT REQUIREMENT		N/A	GPD							
TEMP	SAMPLE MEASUREMENT				42	42	42	°F	0	2/28	GRAB
	PERMIT REQUIREMENT										
PH	SAMPLE MEASUREMENT				6.7	6.75	6.8		0	2/28	GRAB
	PERMIT REQUIREMENT				6.0		9.0	SU			
OIL & GREASE	SAMPLE MEASUREMENT				0.5	0.55	0.6	MG/L	0	2/28	GRAB
	PERMIT REQUIREMENT					10	15				
PHENOLS	SAMPLE MEASUREMENT				0.15	0.18	0.21	MG/L	0	2/28	GRAB
	PERMIT REQUIREMENT					0.5	0.7	PPM			
	SAMPLE MEASUREMENT										
	PERMIT REQUIREMENT										
	SAMPLE MEASUREMENT										
	PERMIT REQUIREMENT										

NAME/TITLE PRINCIPAL EXECUTIVE OFFICER			TELEPHONE		DATE		
JOHN A OXFORD PLANT MANAGER	I CERTIFY UNDER PENALTY OF LAW THAT I HAVE PERSONALLY EXAMINED AND AM FAMILIAR WITH THE INFORMATION SUBMITTED HEREIN; AND BASED ON MY INQUIRY OF THOSE INDIVIDUALS IMMEDIATELY RESPONSIBLE FOR OBTAINING THE INFORMATION, I BELIEVE THE SUBMITTED INFORMATION IS TRUE, ACCURATE AND COMPLETE. I AM AWARE THAT THERE ARE SIGNIFICANT PENALTIES FOR SUBMITTING FALSE INFORMATION, INCLUDING THE POSSIBILITY OF FINE AND IMPRISONMENT. SEE 18 U.S.C. § 1001 AND 33 U.S.C. § 1319. *(Penalties under these statutes may include fines up to $10,000 and/or maximum imprisonment of between 6 months and 5 years.)*	John A Oxford SIGNATURE OF PRINCIPAL EXECUTIVE OFFICER OR AUTHORIZED AGENT	503	286-3681	89	03	14
TYPED OR PRINTED			AREA CODE	NUMBER	YEAR	MO.	DAY

COMMENT AND EXPLANATION OF ANY VIOLATIONS (*Reference all attachments here*)

Koppers015261

GENERAL INSTRUCTIONS

1. If form has been partially completed by preprinting, disregard instructions directed at entry of that information already preprinted.
2. Enter "PERMITTEE NAME/MAILING ADDRESS (and facility name/location, if different)," "PERMIT NUMBER," and "DISCHARGE NUMBER" where indicated. (A separate form is required for each discharge.)
3. Enter dates beginning and ending "MONITORING PERIOD" covered by form where indicated.
4. Enter each "PARAMETER" as specified in monitoring requirements of permit.
5. Enter "SAMPLE MEASUREMENT" data for each parameter under "QUANTITY" and "QUALITY" in units specified in permit. "AVERAGE" is normally arithmetic average (geometric average for bacterial parameters) of all sample measurements for each parameter obtained during "MONITORING PERIOD." "MAXIMUM" and "MINIMUM" are normally extreme high and low measurements obtained during "MONITORING PERIOD." (NOTE: to municipals with secondary treatment requirement, enter 30-day average of sample measurements under "AVERAGE" and enter maximum 7-day average of sample measurements obtained during monitoring period under "MAXIMUM".
6. Enter "PERMIT REQUIREMENT" for each parameter under "QUANTITY" and "QUALITY" as specified in permit.
7. Under "NO. EX" enter number of sample measurements during monitoring period that exceed maximum (and/or minimum or 7-day average as appropriate) permit requirement for each parameter. If none, enter "0".
8. Enter "FREQUENCY OF ANALYSIS" both as "SAMPLE MEASUREMENT" (actual frequency of sampling and analysis used during monitoring period) and as "PERMIT REQUIREMENT" specified in permit. (e.g., Enter "CONT." for continuous monitoring, "1/7" for one day per week, "1/30" for one day per month, "1/90" for one day per quarter, etc.)
9. Enter "SAMPLE TYPE" both as "SAMPLE MEASUREMENT" (actual sample type used during monitoring period) and as "PERMIT REQUIREMENT." (e.g., Enter "GRAB" for individual sample, "24HC" for 24-hour composite, "N/A" for continuous monitoring, etc.)

(FOLD HERE FIRST)

10. WHERE VIOLATIONS OF PERMIT REQUIREMENTS ARE REPORTED, ATTACH A BRIEF EXPLANATION TO DESCRIBE CAUSE AND CORRECTIVE ACTIONS TAKEN. REFERENCE EACH VIOLATION BY DATE.
11. If "no discharge" occurs during monitoring period, enter "NO DISCHARGE" across form in place of data entry.
12. Enter "NAME/TITLE OF PRINCIPAL EXECUTIVE OFFICER" with "SIGNATURE OF PRINCIPAL EXECUTIVE OFFICER OR AUTHORIZED AGENT," "TELEPHONE NUMBER" and "DATE" at bottom of form.
13. Mail signed Report to Office(s) by date(s) specified in permit. Retain copy for your records.
14. More detailed instructions for use of this DISCHARGE MONITORING REPORT (DMR) form may be obtained from Office(s) specified in permit.

LEGAL NOTICE

This report is required by law (33 U.S.C. 1318; 40 C.F.R. 125.27). Failure to report or failure to report truthfully can result in civil penalties not to exceed $10,000 per day of violation; or in criminal penalties not to exceed $25,000 per day of violation, or by imprisonment for not more than one year, or by both.

FOLD HERE SECOND

PLACE STAMP HERE

FOLD HERE THIRD

STAPLE HERE

2 tank Pumped 2 x 45000 = 90000 ÷ 28 =

3214

	WW 3	WW 4
Temp	42	42 = 84 ÷ 2 = 42
PH.	6.7	6.8 = 13.50 ÷ 2 6.75
oil + grease.	0.6	0.5 = 1.10 ÷ 2 0.55
Phenols.	0.15	0.21 = 0.36 ÷ 2 0.18

FEB 28 1989

COFFEY LABORATORIES, INC.
4914 N.E. 122nd Ave.
Portland, OR 97230
Phone: (503) 254-1794

February 23, 1989
Log # A890213-N2

Koppers Col., Inc.
7540 NW St. Helens Rd.
Portland, OR 97210-3663
Attention: John Oxford

Sample Collected: 2/13/89, 1500 hrs
Sample Received: 2/13/89

ANALYSIS	METHOD	DETECTION LIMIT	WWT3 RESULTS	WWT4 RESULTS
Oil & Grease	EPA 413.2	0.2	0.6	0.5
Total Phenols	EPA 420.1	0.05	0.15	0.21

Results expressed as mg/L unless otherwise noted.

Sincerely,

Victor A. Perry,
Quality Assurance

Sincerely,

Susan M. Coffey,
President

SMC/mlh

This report is for the sole and exclusive use of the client. Samples are retained a maximum of 15 days from the report date, or until the maximum holding time expires.

2-13-89

w-w- T-4

water Temp- 42

Ph 6.8

2-13-89

w-w- T-3

water- Temp. 42

Ph. 6.7

COFFEY LABORATORIES, INC.
4914 N.E. 122nd Ave.
Portland, OR 97230
Phone: (503) 254-1794

LABORATORY USE ONLY

LABORATORY LOG # A890213-N2
CUSTABBR: _____ NEW _____
DUE DATE +8 R P C
VERBAL RESULTS _____

(1)PREPAID? CASH _____ CK# _____
(2)PAY FOR REL $ ✓ PRT PM$ _____
(3)NET 30 DAY ✓ (4)PROF. COURTESY

PLEASE FILL IN THE REQUESTED INFORMATION COMPLETELY

LABORATORY REPORT INFORMATION:

COMPANY (or private party) NAME KOPPERS INDUSTRIES INC.

MAILING ADDRESS: 7540 N.W. ST. HELENS RD

CITY, STATE, ZIP PORTLAND OREGON 97210-3663

REPORT TO ATTENTION OF: JOHN OXFORD PHONE (503) 286 - 3681

DO YOU NEED VERBAL RESULTS? _____ CALL _____ PHONE ( ) ____ - _____

SEND EXTRA COPY OF REPORT TO: _____ ATTN: _____

MAILING ADDRESS: _____

EXTRA COPY of REPORT is: For ALL jobs ____, or For this job ONLY ___.

Pickup or Delivery address: _____

BILLING INFORMATION:

DO YOU HAVE A PRICE QUOTE FOR THIS JOB? QUOTE # 35.00

BILLING ADDRESS: 7540 N.W. ST. HELENS RD

CITY, STATE, ZIP PORTLAND OREGON 97210-3663

BILLING TO ATTENTION OF: JOHN OXFORD PHONE (503) 286 - 3681

SEND EXTRA COPY OF BILL TO: _____ ATTN: _____

MAILING ADDRESS: _____

EXTRA BILLING REQUEST IS: For ALL jobs ___, or For this job ONLY ___.

DOES YOUR COMPANY USE PO#S ? YES ___ NO x IF NO PO# IS REQUIRED, INITAL HERE _____

PO# FOR THIS JOB _____

PAYMENT AUTHORIZATION FOR:

RUSH SURCHARGE (2 X Std. PRICE) SIGN HERE _____

PRIORITY SURCHARGE (1.5 X Std. PRICE) SIGN HERE _____

(CONTINUED ON THE BACK SIDE OF THIS PAPER)

IT IS IMPORTANT TO GIVE US THE FOLLOWING INFORMATION ABOUT YOUR SAMPLES!
*** PLEASE INDICATE THIS INFORMATION IN THE SPECIAL INSTRUCTIONS COLUMN. ***

IF YOUR SAMPLE IS MULTI-PHASED,

SHALL WE:
___Test Each Phase separately?
___Test only ONE Phase? Which Phase?
___Mix All Phases by Shaking?
___Dry Sample & Test Residue?

IF YOUR SAMPLE IS WET,

SHALL WE:
___Test As Received?
___Dry Sample First?
___Ash Sample First?

IF SAMPLE IS LIQUID & HAS SEDIMENT or PARTICULATE,

SHALL WE:
___Test Filtrate Only?
___Mix Sample by Shaking?
___Test Particulate Only?

DO YOU NEED:
__Special DETECTION LIMITS?

_____ppb or _____ppm

__Special METHODS?
TELL US What Method Number or What Method name.

FIELD IDENTITY	COLLECTION DATE	COLLECTION TIME	MEDIA	# of UNITS	ANALYSIS REQUESTED	SPECIAL INSTRUCTIONS	SAMPLER
W-W- T-3	2-13-89	3:00 PM			oil & Grease		
W-W- T-3	"	"			Phenols		
W-W- T-4	"	"			oil & Grease		
W-W- T-4	"	"			Phenols		

ADDITIONAL REMARKS: _____

SAMPLE INTEGRITY COMMENTS: _____

SAMPLE CUSTODY RELINQUISHED BY: G Hoffman DATE: 2-13-89 TIME: _____ am pm

SAMPLE RECEIVED FOR COFFEY LABS BY: SKMSavino DATE: 2/13/89 TIME: 1620 am pm

Koppers015268

PERMITTEE NAME/ADDRESS (Include Facility Name/Location if different)

NAME Koppers Industries Inc.

ADDRESS 7540 N.W. St Helens Rd

Portland Oregon 97210-3663

FACILITY

LOCATION Multnomah County

NATIONAL POLLUTANT DISCHARGE ELIMINATION SYSTEM (NPDES)

DISCHARGE MONITORING REPORT (DMR)

Form Approved
OMB No. 2040-0004
Expires 2-29-84

(2-16) PERMIT NUMBER	(17-19) DISCHARGE NUMBER
OR-1000077-9	

MONITORING PERIOD	YEAR	MO	DAY		YEAR	MO	DAY
FROM	89	2	1	TO	89	3	1
	(20-21)	(22-23)	(24-25)		(26-27)	(28-29)	(30-31)

3077 J
47430

NOTE: Read instructions before completing this form.

PARAMETER (32-37)		(3 Card Only) QUANTITY OR LOADING (46-53) AVERAGE	(54-61) MAXIMUM	UNITS	(4 Card Only) QUALITY OR CONCENTRATION (38-45) MINIMUM	(46-53) AVERAGE	(54-61) MAXIMUM	UNITS	NO. EX (62-63)	FREQUENCY OF ANALYSIS (64-68)	SAMPLE TYPE (69-70)
Flow.	SAMPLE MEASUREMENT	3214							N/A	2/28	Est
	PERMIT REQUIREMENT		NA	GPD.							
Temp.	SAMPLE MEASUREMENT				42	42	42	°F	0	2/28	GRAB
	PERMIT REQUIREMENT						115				
Ph	SAMPLE MEASUREMENT				6.7	6.75	6.8		0	2/28	GRAB
	PERMIT REQUIREMENT				6.0		9.0	SU			
oil + grease.	SAMPLE MEASUREMENT				0.5	0.55	0.6	mg/l	0	2/28	GRAB
	PERMIT REQUIREMENT					10	15	L.			
P heptl	SAMPLE MEASUREMENT				0.15	0.18	0.21	mg/L	0	2/28	GRAB
	PERMIT REQUIREMENT					0.5	0.7	PPm.			
	SAMPLE MEASUREMENT										
	PERMIT REQUIREMENT										
	SAMPLE MEASUREMENT										
	PERMIT REQUIREMENT										

NAME/TITLE PRINCIPAL EXECUTIVE OFFICER

TYPED OR PRINTED

I CERTIFY UNDER PENALTY OF LAW THAT I HAVE PERSONALLY EXAMINED AND AM FAMILIAR WITH THE INFORMATION SUBMITTED HEREIN; AND BASED ON MY INQUIRY OF THOSE INDIVIDUALS IMMEDIATELY RESPONSIBLE FOR OBTAINING THE INFORMATION, I BELIEVE THE SUBMITTED INFORMATION IS TRUE, ACCURATE AND COMPLETE. I AM AWARE THAT THERE ARE SIGNIFICANT PENALTIES FOR SUBMITTING FALSE INFORMATION, INCLUDING THE POSSIBILITY OF FINE AND IMPRISONMENT. SEE 18 U.S.C § 1001 AND 33 U.S.C § 1319. *(Penalties under these statutes may include fines up to $10,000 and/or maximum imprisonment of between 6 months and 5 years.)*

SIGNATURE OF PRINCIPAL EXECUTIVE OFFICER OR AUTHORIZED AGENT

TELEPHONE		DATE		
AREA CODE	NUMBER	YEAR	MO	DAY

COMMENT AND EXPLANATION OF ANY VIOLATIONS *(Reference all attachments here)*

Koppers015269

PERMITTEE NAME/ADDRESS (Include Facility Name/Location if different)

NAME KOPPERS COMPANY INC.

ADDRESS 7540 N.W. ST. HELENS RD
PORTLAND OREGON 97210-3663

FACILITY

LOCATION MULTONAMAH COUNTY

NATIONAL POLLUTANT DISCHARGE ELIMINATION SYSTEM (NPDES)
DISCHARGE MONITORING REPORT (DMR)

Form Approved
OMB No. 2040-0004
Expires 2-29-84

(2-16) PERMIT NUMBER	(17-19) DISCHARGE NUMBER
OR-1000077-9	

3077J
47430

MONITORING PERIOD	YEAR	MO	DAY		YEAR	MO	DAY
FROM	89	1	1	TO	89	2	1
	(20-21)	(22-23)	(24-25)		(26-27)	(28-29)	(30-31)

NOTE: Read instructions before completing this form.

PARAMETER (32-37)		(3 Card Only) QUANTITY OR LOADING (46-53) AVERAGE	(54-61) MAXIMUM	UNITS	(4 Card Only) QUALITY OR CONCENTRATION (38-45) MINIMUM	(46-53) AVERAGE	(54-61) MAXIMUM	UNITS	NO. EX (62-63)	FREQUENCY OF ANALYSIS (64-68)	SAMPLE TYPE (69-70)
FLOW	SAMPLE MEASUREMENT	8710							N/A	E/31	EST
	PERMIT REQUIREMENT		NA	GPD ~~GWD~~							
TEMP	SAMPLE MEASUREMENT				46	48	52	°F	0	6/31	GRAB
	PERMIT REQUIREMENT						110				
PH	SAMPLE MEASUREMENT				6.5	6.65	6.8	SU	0	6/31	GRAB
	PERMIT REQUIREMENT				6.0		9.0				
OIL & GREAST	SAMPLE MEASUREMENT				0.6	0.8	1.0	MG/L	0	6/31	GRAB
	PERMIT REQUIREMENT					10	15				
PHENOLS	SAMPLE MEASUREMENT				0.13	0.213	0.29	MG/L PPM	0	6/31	GRAB
	PERMIT REQUIREMENT					0.5	0.7				
	SAMPLE MEASUREMENT										
	PERMIT REQUIREMENT										
	SAMPLE MEASUREMENT										
	PERMIT REQUIREMENT										

NAME/TITLE PRINCIPAL EXECUTIVE OFFICER
JOHN A OXFORD
MAN PLANT MANAGER
TYPED OR PRINTED

I CERTIFY UNDER PENALTY OF LAW THAT I HAVE PERSONALLY EXAMINED AND AM FAMILIAR WITH THE INFORMATION SUBMITTED HEREIN; AND BASED ON MY INQUIRY OF THOSE INDIVIDUALS IMMEDIATELY RESPONSIBLE FOR OBTAINING THE INFORMATION, I BELIEVE THE SUBMITTED INFORMATION IS TRUE, ACCURATE AND COMPLETE. I AM AWARE THAT THERE ARE SIGNIFICANT PENALTIES FOR SUBMITTING FALSE INFORMATION, INCLUDING THE POSSIBILITY OF FINE AND IMPRISONMENT. SEE 18 U.S.C. § 1001 AND 33 U.S.C. § 1319. *(Penalties under these statutes may include fines up to $10,000 and/or maximum imprisonment of between 6 months and 5 years.)*

SIGNATURE OF PRINCIPAL EXECUTIVE OFFICER OR AUTHORIZED AGENT

TELEPHONE		DATE		
503	286-3681	2	13	89
AREA CODE	NUMBER	YEAR	MO	DAY

COMMENT AND EXPLANATION OF ANY VIOLATIONS *(Reference all attachments here)*

Koppers015270

GENERAL INSTRUCTIONS

1. If form has been partially completed by preprinting, disregard instructions directed at entry of that information already preprinted.
2. Enter "PERMITTEE NAME/MAILING ADDRESS (and facility name/location, if different)," "PERMIT NUMBER," and "DISCHARGE NUMBER" where indicated. (A separate form is required for each discharge.)
3. Enter dates beginning and ending "MONITORING PERIOD" covered by form where indicated.
4. Enter each "PARAMETER" as specified in monitoring requirements of permit.
5. Enter "SAMPLE MEASUREMENT" data for each parameter under "QUANTITY" and "QUALITY" in units specified in permit. "AVERAGE" is normally arithmetic average (geometric average for bacterial parameters) of all sample measurements for each parameter obtained during "MONITORING PERIOD." "MAXIMUM" and "MINIMUM" are normally extreme high and low measurements obtained during "MONITORING PERIOD." (NOTE to municipals with secondary treatment requirement, enter 30-day average of sample measurements under "AVERAGE" and enter maximum 7-day average of sample measurements obtained during monitoring period under "MAXIMUM".
6. Enter "PERMIT REQUIREMENT" for each parameter under "QUANTITY" and "QUALITY" as specified in permit.
7. Under "NO. EX" enter number of sample measurements during monitoring period that exceed maximum (and/or minimum or 7-day average as appropriate) permit requirement for each parameter. If none, enter "0".
8. Enter "FREQUENCY OF ANALYSIS" both as "SAMPLE MEASUREMENT" (actual frequency of sampling and analysis used during monitoring period) and as "PERMIT REQUIREMENT" specified in permit. (e.g., Enter "CONT." for continuous monitoring, "1/7" for one day per week, "1/30" for one day per month, "1/90" for one day per quarter, etc.)
9. Enter "SAMPLE TYPE" both as "SAMPLE MEASUREMENT" (actual sample type used during monitoring period) and as "PERMIT REQUIREMENT." (e.g., Enter "GRAB" for individual sample, "24HC" for 24-hour composite, "N/A" for continuous monitoring, etc.)

(FOLD HERE FIRST)

---

10. WHERE VIOLATIONS OF PERMIT REQUIREMENTS ARE REPORTED, ATTACH A BRIEF EXPLANATION TO DESCRIBE CAUSE AND CORRECTIVE ACTIONS TAKEN. REFERENCE EACH VIOLATION BY DATE.
11. If "no discharge" occurs during monitoring period, enter "NO DISCHARGE" across form in place of data entry.
12. Enter "NAME/TITLE OF PRINCIPAL EXECUTIVE OFFICER" with "SIGNATURE OF PRINCIPAL EXECUTIVE OFFICER OR AUTHORIZED AGENT," "TELEPHONE NUMBER" and "DATE" at bottom of form.
13. Mail signed Report to Office(s) by date(s) specified in permit. Retain copy for your records.
14. More detailed instructions for use of this DISCHARGE MONITORING REPORT (DMR) form may be obtained from Office(s) specified in permit.

LEGAL NOTICE

This report is required by law (33 U.S.C. 1318; 40 C.F.R. 125.27). Failure to report or failure to report truthfully can result in civil penalties not to exceed $10,000 per day of violation; or in criminal penalties not to exceed $25,000 per day of violation, or by imprisonment for not more than one year, or by both.

FOLD HERE SECOND

PLACE STAMP HERE

FOLD HERE THIRD

STAPLE HERE

PERMITTEE NAME/ADDRESS (Include Facility Name/Location if different)

NAME: Koppers Industries Inc.

ADDRESS: 4400 N.W. St Helens Road
Portland Oregon 97210-3663

FACILITY:

LOCATION: Multnomah County

NATIONAL POLLUTANT DISCHARGE ELIMINATION SYSTEM

DISCHARGE MONITORING REPORT (DMR)

OMB No. 2040-0004
Expires 2-29-84

(2-16) PERMIT NUMBER: OR-100077-9

(17-19) DISCHARGE NUMBER:

3077 J
47430

MONITORING PERIOD	YEAR	MO	DAY		YEAR	MO	DAY
FROM	89	1	1	TO	89	2	1
	(20-21)	(22-23)	(24-25)		(26-27)	(28-29)	(30-31)

NOTE: Read instructions before completing this form.

PARAMETER (32-37)		(3 Card Only) QUANTITY OR LOADING (46-53) AVERAGE	(54-61) MAXIMUM	UNITS	(4 Card Only) QUALITY OR CONCENTRATION (38-45) MINIMUM	(46-53) AVERAGE	(54-61) MAXIMUM	UNITS	NO. EX. (62-63)	FREQUENCY OF ANALYSIS (64-68)	SAMPLE TYPE (69-70)
Flow	SAMPLE MEASUREMENT	8710							N/A	6/30	Est.
	PERMIT REQUIREMENT		N/A	GWP							
Temp	SAMPLE MEASUREMENT				46	48	52		0	6/30	grab.
	PERMIT REQUIREMENT						110	°F			
Ph	SAMPLE MEASUREMENT				6.5	6.65	6.8		0	6/30	grab.
	PERMIT REQUIREMENT				6.0		9.0	SU			
Oil & Grease	SAMPLE MEASUREMENT				0.6	0.8	1.0	mg/L	0	6/30	grab
	PERMIT REQUIREMENT					10	15				
Phenols	SAMPLE MEASUREMENT				0.13	0.213	0.29	mg/L	1	6/30	grab.
	PERMIT REQUIREMENT					0.5	0.7	ppm.			
	SAMPLE MEASUREMENT										
	PERMIT REQUIREMENT										
	SAMPLE MEASUREMENT										
	PERMIT REQUIREMENT										

NAME/TITLE PRINCIPAL EXECUTIVE OFFICER

TYPED OR PRINTED

I CERTIFY UNDER PENALTY OF LAW THAT I HAVE PERSONALLY EXAMINED AND AM FAMILIAR WITH THE INFORMATION SUBMITTED HEREIN; AND BASED ON MY INQUIRY OF THOSE INDIVIDUALS IMMEDIATELY RESPONSIBLE FOR OBTAINING THE INFORMATION, I BELIEVE THE SUBMITTED INFORMATION IS TRUE, ACCURATE AND COMPLETE. I AM AWARE THAT THERE ARE SIGNIFICANT PENALTIES FOR SUBMITTING FALSE INFORMATION, INCLUDING THE POSSIBILITY OF FINE AND IMPRISONMENT. SEE 18 U.S.C. § 1001 AND 33 U.S.C. § 1319. (Penalties under these statutes may include fines up to $10,000 and/or maximum imprisonment of between 6 months and 5 years.)

SIGNATURE OF PRINCIPAL EXECUTIVE OFFICER OR AUTHORIZED AGENT

TELEPHONE: AREA CODE | NUMBER

DATE: YEAR | MO | DAY

COMMENT AND EXPLANATION OF ANY VIOLATIONS (Reference all attachments here)

Koppers015272

6 tanks Pumped 6 X 45 000 = 270 000 ÷ 31 = 8710

Temp.		WW1		WW2		WW3		WW4		WW1	WW2			
		52		51		50		49		46	46	293÷6		
												= 48		
Ph.	6.7	6.6	6.8	6.7	6.8	6.6	= 39.9 ÷ 6 = 6.65							
oil + grease	1.0	1.0	0.6	0.9	0.7	0.7	= 4.9 ÷ 6 = 0.8							
Phenols	0.26	0.29	0.14	0.20	0.26	0.13	= 1.28 ÷ 6 = 0.213							

Koppers015273

COFFEY LABORATORIES, INC.
4914 N.E. 122nd Ave.
Portland, OR 97230
Phone: (503) 254-1794

THIS SECTION FOR LABORATORY USE ONLY

LABORATORY LOG # A890103-W4
CUSTABBR: _____ NEW _____
DUE DATE 1-8 R P C
VERBAL RESULTS _____

(1)PREPAID? CASH _____ CK# _____
(2)PAY FOR REL $ ✓ PRT PM$ _____
(3)NET 30 DAY ✓ (4)PROF. COURTES

PLEASE FILL IN THE REQUESTED INFORMATION COMPLETELY

LABORATORY REPORT INFORMATION:

COMPANY (or private party) NAME Koppers Co.

MAILING ADDRESS: NW St Helens Rd

CITY, STATE, ZIP Portland

REPORT TO ATTENTION OF: John Oxford PHONE ( ) -

DO YOU NEED VERBAL RESULTS? _____ CALL _____ PHONE ( ) -

SEND EXTRA COPY OF REPORT TO: _____ ATTN: _____

MAILING ADDRESS: _____

EXTRA COPY of REPORT is: For ALL jobs ____, or For this job ONLY ___.

Pickup or Delivery address: _____

BILLING INFORMATION:

DO YOU HAVE A PRICE QUOTE FOR THIS JOB? QUOTE # _____

BILLING ADDRESS: _____

CITY, STATE, ZIP _____

BILLING TO ATTENTION OF: _____ PHONE ( ) -

SEND EXTRA COPY OF BILL TO: _____ ATTN: _____

MAILING ADDRESS: _____

EXTRA BILLING REQUEST IS: For ALL jobs ___, or For this job ONLY ___.

DOES YOUR COMPANY USE PO#S ? YES ___ NO___ IF NO PO# IS REQUIRED, INITAL HERE _____

PO# FOR THIS JOB _____

PAYMENT AUTHORIZATION FOR:

RUSH SURCHARGE (2 X Std. PRICE) SIGN HERE _____

PRIORITY SURCHARGE (1.5 X Std. PRICE) SIGN HERE _____

(CONTINUED ON THE BACK SIDE OF THIS PAPER)

IT IS IMPORTANT TO GIVE US THE FOLLOWING INFORMATION ABOUT YOUR SAMPLES!
*** PLEASE INDICATE THIS INFORMATION IN THE SPECIAL INSTRUCTIONS COLUMN. ***

F YOUR SAMPLE IS MULTI-PHASED,	IF YOUR SAMPLE IS WET,	IF SAMPLE IS LIQUID & HAS SEDIMENT or PARTICULATE,	DO YOU NEED:
HALL WE: _Test Each Phase separately? _Test only ONE Phase? Which Phase? _Mix All Phases by Shaking? _Dry Sample & Test Residue?	SHALL WE: ___Test As Received? ___Dry Sample First? ___Ash Sample First?	SHALL WE: ___Test Filtrate Only? ___Mix Sample by Shaking? ___Test Particulate Only?	__Special DETECTION LIMITS? _____ppb or _____ppm __Special METHODS? TELL US What Method Number or What Method name.

FIELD IDENTITY	COLLECTION DATE	TIME	MEDIA	# of UNITS	ANALYSIS REQUESTED	SPECIAL INSTRUCTIONS	SAMPLER
V-W-T-1	1-3-89	2:30pm			Oil & Grease		
V-W-T-1	"	"			Phenols		
V-W-T-2	"	"			Oil & Grease		
V-W-T-2	"	"			Phenols		
V-W-T-3	"	"			Oil & Grease		
V-W-T-3	"	"			Phenols		
V-W-T-4	"	"			Oil & Grease		
V-W-T-4	"	"			Phenols		

TIONAL REMARKS: _____

LE INTEGRITY COMMENTS: _____

LE CUSTODY RELINQUISHED BY: Brian Hofman DATE: 1-3-89 TIME: _____ am pm

MPLE RECEIVED FOR COFFEY LABS BY: JKM Savino DATE: 1/3/89 TIME: 1615 am (pm)

Koppers015275

COFFEY LABORATORIES, INC.
4914 N.E. 122nd Ave.
Portland, OR 97230
Phone: (503) 254-1794

January 9, 1989
Log #A890103-W4
PO# Verbal John

Koppers Co., Inc.
7540 NW St. Helens Road
Portland, OR 97229
Attention: John Oxford

Sample Collected: 01/03/89 1430 hrs.
Sample Received: 01/03/88

ANALYSIS	METHOD	WWT1	WWT2	WWT3	WWT4	UNITS
Oil & Grease	EPA 413.2	1.0	1.0	0.6	0.9	mg/L
Total Phenols	EPA 420.1	0.26	0.29	0.14	0.20	mg/L

Sincerely,

Victor A. Perry,
Quality Assurance

Sincerely,

Susan M. Coffey
President

SMC/lws

This report is for the sole and exclusive use of the client. Samples are retained a maximum of 15 days from the report date, or until the maximum holding time expires.

JAN 12 1989

1-3-89

W-W-T-1 water Temp. 52°F Ph. 6.7

W-W- T-2 Water Temp. 50°F Ph. 6.6

W-W- T-3 Water Temp. 50°F Ph. 6.8

W-W- T-4 Water Temp. 49°F Ph. 6.7

1-16-89
w-w- T-2
Temp- 46
Ph 6-6

1-16-89
W-W-T-1
Temp 46
Ph 6.5

COFFEY LABORATORIES, INC.
4914 N.E. 122nd Ave.
Portland, OR 97230
Phone: (503) 254-1794

January 27, 1989
Log # A890116-L2

Koppers Co., Inc
7540 NW St. Helens Rd.
Portland, OR 97210-3663
Attention: John Oxford

Sample Collected: 1/16/89, 1330 hrs
Sample Received: 1/16/89

ANALYSIS	METHOD	W-W-T-1 RESULTS	W-W-T-2 RESULTS
Oil & Grease	EPA 413.2	0.7	0.7
Total Phenols	EPA 420.1	0.26	0.13

Results expressed as mg/L unless otherwise noted.

Sincerely,

Victor A. Perry,
Quality Assurance

Sincerely,

Susan M. Coffey,
President

SMC/mlh

This report is for the sole and exclusive use of the client. Samples are retained a maximum of 15 days from the report date, or until the maximum holding time expires.

COFFEY LABORATORIES, INC.
4914 N.E. 122nd Ave.
Portland, OR 97230
Phone: (503) 254-1794

THIS SECTION FOR LABORATORY USE ONLY
LABORATORY LOG #: A890116-L2
CUSTABBR: NEW
DUE DATE: R P C
VERBAL RESULTS:
(1) PREPAID? CASH: CK#
(2) PAY FOR REL $: PRT PM$
(3) NET 30 DAY: ✓ (4) PROF. COURTE

PLEASE FILL IN THE REQUESTED INFORMATION COMPLETELY

LABORATORY REPORT INFORMATION:

COMPANY (or private party) NAME: KOPPERS INDUSTRIES INC.

MAILING ADDRESS: 7540 N.W. ST. HELENS RD

CITY, STATE, ZIP: PORTLAND OR 97210-3663

REPORT TO ATTENTION OF: JOHN OXFORD PHONE (503) 286-3681

DO YOU NEED VERBAL RESULTS? ____ CALL ____ PHONE ( ) ____-____

SEND EXTRA COPY OF REPORT TO: ____ ATTN: ____

MAILING ADDRESS: ____

EXTRA COPY of REPORT is: For ALL jobs ___, or For this job ONLY ___.

Pickup or Delivery address: ____

BILLING INFORMATION:

DO YOU HAVE A PRICE QUOTE FOR THIS JOB? QUOTE # $35.00

BILLING ADDRESS: 7540 N.W. ST. HELENS RD

CITY, STATE, ZIP: PORTLAND OREGON 97210-3663

BILLING TO ATTENTION OF: JOHN OXFORD PHONE (503) 286-3681

SEND EXTRA COPY OF BILL TO: ____ ATTN: ____

MAILING ADDRESS: ____

EXTRA BILLING REQUEST IS: For ALL jobs ___, or For this job ONLY ___.

DOES YOUR COMPANY USE PO#S ? YES ___ NO X IF NO PO# IS REQUIRED, INITAL HERE JO

PO# FOR THIS JOB ____

PAYMENT AUTHORIZATION FOR:

RUSH SURCHARGE (2 X Std. PRICE) SIGN HERE ____

PRIORITY SURCHARGE (1.5 X Std. PRICE) SIGN HERE ____

(CONTINUED ON THE BACK SIDE OF THIS PAPER)

IT IS IMPORTANT TO GIVE US THE FOLLOWING INFORMATION ABOUT YOUR SAMPLES!
*** PLEASE INDICATE THIS INFORMATION IN THE SPECIAL INSTRUCTIONS COLUMN. ***

IF YOUR SAMPLE IS MULTI-PHASED,	IF YOUR SAMPLE IS WET,	IF SAMPLE IS LIQUID & HAS SEDIMENT or PARTICULATE,	DO YOU NEED:
SHALL WE: ___Test Each Phase separately? ___Test only ONE Phase? Which Phase? ___Mix All Phases by Shaking? ___Dry Sample & Test Residue?	SHALL WE: ___Test As Received? ___Dry Sample First? ___Ash Sample First?	SHALL WE: ___Test Filtrate Only? ___Mix Sample by Shaking? ___Test Particulate Only?	__Special DETECTION LIMITS? _____ppb or _____ppm ___Special METHODS? TELL US What Method Number or What Method name.

FIELD IDENTITY	COLLECTION DATE	COLLECTION TIME	MEDIA	# of UNITS	ANALYSIS REQUESTED	SPECIAL INSTRUCTIONS	SAMPLER
W-W-T-1	1-16-89	1:30 PM			Oil & Grease		
W-W-T-1	"	"			Phenols		
W-W-T-2	"	"			Oil & Grease		
W-W-T-2	"	"			Phenols		

ADDITIONAL REMARKS: _____

SAMPLE INTEGRITY COMMENTS: _____

SAMPLE CUSTODY RELINQUISHED BY: S. Hoffman DATE: 1-16-89 TIME: _____ am pm

SAMPLE RECEIVED FOR COFFEY LABS BY: SKN Savino DATE: 1/16/89 TIME: 1350 am pm

Koppers015282

PERMITTEE NAME/ADDRESS *(Include Facility Name/Location if different)*

NAME KOPPERS INDUSTRIES, INC.
ADDRESS 7540 NW ST HELENS ROAD
PORTLAND, OR 97210

FACILITY NORTHWEST PLANT DEQ #47430
LOCATION MULTNOMAH COUNTY

NATIONAL POLLUTANT DISCHARGE ELIMINATION SYSTEM *(NPDES)*
DISCHARGE MONITORING REPORT *(DMR)*

(2-16) PERMIT NUMBER	(17-19) DISCHARGE NUMBER
101003	12

3077-J
47430

Form Approved.
OMB No. 2040-0004.
Approval expires 6-30-91.

MONITORING PERIOD	YEAR	MO	DAY		YEAR	MO	DAY
FROM	94	12	01	TO	94	12	31
	(20-21)	(22-23)	(24-25)		(26-27)	(28-29)	(30-31)

NOTE: Read instructions before completing this form.

PARAMETER (32-37)		(3 Card Only) QUANTITY OR LOADING (46-53) AVERAGE	(54-61) MAXIMUM	UNITS	(4 Card Only) QUALITY OR CONCENTRATION (38-45) MINIMUM	(46-53) AVERAGE	(54-61) MAXIMUM	UNITS	NO. EX (62-63)	FREQUENCY OF ANALYSIS (64-68)	SAMPLE TYPE (69-70)
FLOW	SAMPLE MEASUREMENT	16,452		GPD					N/A	13/31	EST.
	PERMIT REQUIREMENT	N/A	N/A								
TEMPERATURE	SAMPLE MEASUREMENT				46	48	52	°F	0	13/31	GRAB
	PERMIT REQUIREMENT						110				
pH	SAMPLE MEASUREMENT				6.4	6.6	6.7	SU	0	13/31	GRAB
	PERMIT REQUIREMENT				6.0		9.0				
OIL & GREASE	SAMPLE MEASUREMENT				N.D.	3.0	6.0	mg/L	0	13/31	GRAB
	PERMIT REQUIREMENT				N/A	10	15				
PHENOLS	SAMPLE MEASUREMENT				.07	.10	.19	mg/L	0	13/31	GRAB
	PERMIT REQUIREMENT				N/A	.5	.7				
	SAMPLE MEASUREMENT										
	PERMIT REQUIREMENT										
	SAMPLE MEASUREMENT										
	PERMIT REQUIREMENT										

NAME/TITLE PRINCIPAL EXECUTIVE OFFICER

R. D. COLLINS, V.P.
TYPED OR PRINTED

I CERTIFY UNDER PENALTY OF LAW THAT I HAVE PERSONALLY EXAMINED AND AM FAMILIAR WITH THE INFORMATION SUBMITTED HEREIN; AND BASED ON MY INQUIRY OF THOSE INDIVIDUALS IMMEDIATELY RESPONSIBLE FOR OBTAINING THE INFORMATION, I BELIEVE THE SUBMITTED INFORMATION IS TRUE, ACCURATE AND COMPLETE. I AM AWARE THAT THERE ARE SIGNIFICANT PENALTIES FOR SUBMITTING FALSE INFORMATION, INCLUDING THE POSSIBILITY OF FINE AND IMPRISONMENT. SEE 18 USC § 1001 AND 33 USC § 1319. *(Penalties under these statutes may include fines up to $10,000 and/or maximum imprisonment of between 6 months and 5 years.)*

A. B. KAMERER, PLANT MGR
SIGNATURE OF PRINCIPAL EXECUTIVE OFFICER OR AUTHORIZED AGENT

TELEPHONE		DATE		
503	286-3681	95	01	04
AREA CODE	NUMBER	YEAR	MO	DAY

COMMENT AND EXPLANATION OF ANY VIOLATIONS *(Reference all attachments here)*

Koppers015283

MONTHLY NPDES DISCHARGE REPORT WORK SHEET

MONTH Dec. YEAR 94

FLOW

	WWT-1	WWT-2	WWT-3	WWT-4	WWT-5	WWT-6	TOTAL	#DAYS IN MONTH	G.P.D. DISCHARGE
GLS. PER TANK	45,000	45,000	45,000	45,000	20,000	20,000			
# OF PUMPINGS	111	111	11	11	111		13		
GALS.PUMPED	135,000	135,000	90,000	90,000	60,000		510,000	31	16,452

SAMPLE CONCENTRATION LEVELS

																					AVG.	MIN.	MAX.	UNIT
TEMPERATURES	48	49	46	46	46	46	46	48	48	48	52	50	50								48	46	52	OF
PH	6.6	6.5	6.5	6.7	6.6	6.5	6.6	6.6	6.6	6.7	6.6	6.6	6.4								6.6	6.4	6.7	SU
OIL & GREASES	4.0	4.	4.0	6.	4.	5.	5.	ND	ND	3.	4.	ND	ND								3	ND	6.0	MG/L
PHENOLS	.11	.12	.07	.07	.19	.12	.07	.08	.08	.12	.09	.09	.12								.10	.07	.19	MG/L

QUARTERLY PAH TESTING

DATE SAMPLE TAKEN ____________ RESULTS _____
(MUST BE LESS THAN 1000)

Koppers015284

11-30-94

	TEMP	PH
GW 3	48	6.6
GW 4	49	6.5

COFFEY LABORATORIES, INC.
CHAIN OF CUSTODY AGREEMENT

PORTLAND BRANCH
12423 NE Whitaker Way
Portland, OR 97230
(503) 254-1794 FAX: (503) 254-1452

PENDLETON BRANCH
287 SE First
Pendleton, OR 97801
(503) 276-0385

Rerpd 12/1

Report Attention: Amos Kamiever
Company Name: Koppers Ind
Address: 7540 NW St Helens RD, Portland Oregon 97210-3663
Phone: (503) 286 3681 FAX: (503) 285-2831

Report Instructions:

Project Name:
Project Number:
PO Number:

Sample Turnaround	Reporting Request
☐ Standard	☐ FAX (T-35)
☐ Priority (1.5x Std. Fee)	☐ Verbals (T-1157)
☒ Rush (2x Std. Fee)	☐ Extra Report Copy (T-1402) (Fees Associated)
☐ Emergency (3x Std. Fee)	Initials:

FOR LABORATORY USE ONLY Page ___ of ___
Job Number: WLC 941130-AZ2
Custabbr: Koppers ☐NEW
☐VISA ☐M/C Expires:
Card #:
Cash / Check: $ #:
Billing Code: 1 2 3 4
QC LEVEL: 1 2 3 4
FEDX BUS COURIER UPS LAB ~~CLIENT~~ MAIL

Sample ID	Loc.	ID	Collection Date	Collection Time	Media	Analysis Requested	Test/Profile
wwt-3			11/30/94	1150	WW	Oil & Grease	
wwt 4						"	
wwt 3						Phenols .11	
wwt 4						.12	

Sample Comments:

Sampled by: (Please Print)	Relinquished by: (Please Sign)	Date	Time	Received by: (Sign)	Date	Time
Brad Harwood	Brad Harwood	11-30-94	4:00	[illegible]	11-30-94	4:15
	[illegible]	11 30 94	4:45			
				LAB [illegible]	11/30/94	1640

White Copy - Laboratory Copy *Yellow Copy - Client Copy*

SHADED AREAS FOR LABORATORY USE ONLY

SUBMISSION OF SAMPLES WITH TESTING REQUIREMENTS TO CLI WILL BE UNDERSTOOD TO BE AN AGREEMENT FOR SERVICES IN ACCORDANCE WITH THE CONDITIONS LISTED ON THE BACK OF THE CLIENT COPY.

Koppers015286

COFFEY LABORATORIES, INC.
CHAIN OF CUSTODY INSTRUCTIONS/CONDITIONS SHEET

INSTRUCTIONS

FOR LAB USE ONLY -	**All shaded areas are for laboratory use only. Please Do Not Write in These Areas.**
REPORT ATTENTION -	Name of the person who receives the laboratory report.
COMPANY NAME -	Name of the company or individual requesting the analysis.
REPORT ADDRESS -	Address of the company or individual requesting the analysis. (Address where report should be mailed)
REPORT INSTRUCTIONS -	A brief description of any special mail instructions, or address information pertaining to extra report copies.
PROJECT NAME -	Applies to customer project name. This data is provided at the customer's discretion.
PROJECT NUMBER -	Applies only to samples submitted by the customer. This data is provided at the customer's discretion.
FIELD ID -	A short description of the sample point (e.g., "Effluent from sand filter"). This description will appear on the report.
COLLECTION DATE -	The date on which the sample(s) was/were collected.
COLLECTION TIME -	The time at which the sample(s) was/were collected.
MEDIA -	This is a description of the sample media (e.g., drinking water, waste water, soil, etc.)
ANALYSIS REQUESTED -	Use one line for each analysis or group of analyses associated to a specific bottle.
SAMPLE COLLECTED BY -	The person who collected the sample(s) signs here.
RELINQUISHED BY -	The sampler signs this box when he/she gives the sample to someone else, and then fills in the date/time the sample left his/her possession.
RECEIVED BY -	The person who receives the sample(s) signs here and fills in the date/time received. The date and time should be same as "Relinquished by" unless the sample(s) was/were shipped.
JOB OR SAMPLE REMARKS -	General sample or job remarks.

CONDITIONS

PRICING AND CHARGES

Prices to be charged for work performed for CLIENT are those currently published in the Coffey Laboratories, Inc. (CLI) standard pricebook. CLIENT must notify CLI of price quotation at the time of the transfer of sample(s) to CLI. All submissions of samples with testing requirements to CLI will be understood to be an agreement for services. Any cancellation of testing requirements will result in charges being assessed on all testing completed prior to the notice of cancellation.

DELIVERY AND LIABILITY LIMITATIONS

CLI will analyze samples provided by CLIENT as requested by CLIENT in accordance with the procedures documented in the CLI Quality Assurance Plan (QAP). The maximum total liability assumed by CLI for work performed for CLIENT will in all cases be limited to the cost of the analysis. The specific format of the deliverable goods will be defined by CLIENT to CLI upon transfer of the samples to CLI. This warranty supersedes all other warranties.

CONFIDENTIALITY

CLI will use its best efforts to treat all information regarding work performed for CLIENT as proprietary and confidential to the maximum extent allowed by law. NO CLIENT information will be released without the written consent of the CLIENT billed for the work.

APPLICABLE LAW

Legal matters arising from work performed by CLI for CLIENT will be construed and interpreted in accordance with the laws for the state of Oregon.

Report Date: December 2, 1994
Job Number: 941130AZ
PO Number: None Provided
Project No: None Provided
Project Name: None Provided

Attention: Amos Kamerer
Koppers Industry
7540 NW St. Helens Rd.
Portland, OR 97210-3663

Analytical Narrative

The samples were received on 11/30/94 by Coffey Laboratories, Inc. (CLI) Sample Reception personnel under strict chain of custody protocol. The following information was provided at the time of sample reception:

Laboratory Sample ID	Field Identification	Matrix	Collection Date	Collection Time
941130AZ-1	WWT 3	Waste Water	11/30/94	1150
941130AZ-2	WWT 4	Waste Water	11/30/94	1150

The recommended holding time for each batch of analyses was in accordance with the data quality objectives as specified in the CLI Quality Assurance Plan unless otherwise noted.

Acceptable precision and accuracy were achieved for all analyses associated with this work order as demonstrated by the recoveries of the quality control samples analyzed concurrently with each batch.

The data submitted in this report is for the sole and exclusive use of the above-named client. All samples associated with the work order will be retained a maximum of 15 days from the report date or until the maximum holding time expires. All results pertain only to samples submitted.

Thank you for allowing Coffey Laboratories to be of service to you. If you have questions or need further assistance, please do not hesitate to call our Customer Services Department.

Sincerely,

Rona A. Klueh
Technical Director

RAK/atc

COFFEY LABORATORIES, INC.
12423 N.E. Whitaker Way • Portland, OR • 97230 • (503) 254-1794 • FAX (503) 254-1452

Analytical Data

Koppers Industry

Job Number: 941130AZ

Lab Sample ID: 941130AZ-1
Field ID: WWT 3
Date/Time: 11/30/94 1150
Matrix: Waste Water

EPA Category: Conventional Parameters

Parameter	Method	Detection Limit	Analytical Result	Units	Analysis Date	Analyst
Oil & Grease	EPA 413.1	3.	4.	mg/L	12/01/94	JAG
Total Phenols	EPA 420.1	0.05	0.11	mg/L	12/01/94	SVS

COFFEY LABORATORIES, INC.
12423 N.E. Whitaker Way • Portland, OR • 97230 • (503) 254-1794 • FAX (503) 254-1452

Analytical Data

Koppers Industry

Job Number: 941130AZ

Lab Sample ID: 941130AZ-2
Field ID: WWT 4
Date/Time: 11/30/94 1150
Matrix: Waste Water

EPA Category: Conventional Parameters

Parameter	Method	Detection Limit	Analytical Result	Units	Analysis Date	Analyst
Oil & Grease	EPA 413.1	3.	4.	mg/L	12/01/94	JAG
Total Phenols	EPA 420.1	0.05	0.12	mg/L	12/01/94	SVS

COFFEY LABORATORIES, INC.
12423 N.E. Whitaker Way • Portland, OR • 97230 • (503) 254-1794 • FAX (503) 254-1452

RECEIVED
DEC - 7 1994
KOPPERS INDS., INC.
PORTLAND, OR

12-12-94

KOPPERS

7540 N.W. St. Helens Rd.
Portland, Oregon 97210
(503) 286-3681

WWTS

	C	T F	P.H
1	8	46	6.5
2		46	6.7
3		46	6.6
		46	
4		46	6.5
5			6.6

JOHN A. OXFORD

COFFEY LABORATORIES, INC.
CHAIN OF CUSTODY AGREEMENT

PORTLAND BRANCH
12423 NE Whitaker Way
Portland, OR 97230
(503) 254-1794 FAX: (503) 254-1452

Dumped 12/13

PENDLETON BRANCH
287 SE First
Pendleton, OR 97801
(503) 276-0385

Report Attention: Amos Kamer
Company Name: Koppers Ind
Address: 7540 NW St Helens RD
Portland Ore 97210-3663
Phone: (503) 286-3691 FAX: (503) 285-2831

Report Instructions:

Project Name:
Project Number:
PO Number:

Sample Turnaround	Reporting Request
☐ Standard	☐ FAX (T-35)
☐ Priority (1.5x Std. Fee)	☐ Verbals (T-1157)
☑ Rush (2x Std. Fee)	☐ Extra Report Copy (T-1402) (Fees Associated)
☐ Emergency (3x Std. Fee)	Initials:

FOR LABORATORY USE ONLY Page ___ of ___
Job Number: WF 941212-RCS
Custabbr: Koppers ☐NEW
☐VISA ☐M/C Expires:
Card #:
Cash / Check: $ #:
Billing Code: 1 2 3 4
QC LEVEL: 1 2 3 4
FEDX BUS COURIER UPS LAB CLIENT MAIL

Sample ID	Loc.	ID	Collection Date	Collection Time	Media	Analysis Requested	Test/Profile
WW 1						Oil & Grease	
" 2						"	
" 3						"	
" 4						"	
" 5						"	
WW 1						Phenols	
" 2						"	
" 3						"	
" 4						"	
" 5						"	

Sample Comments:

Sampled by: (Please Print)	Relinquished by: (Please Sign)	Date	Time	Received by: (Sign)	Date	Time
Harold R Beckles		12-12-94	11:25			
				LAB	12/12/94	1210

White Copy - Laboratory Copy *Yellow Copy - Client Copy*

SHADED AREAS FOR LABORATORY USE ONLY

SUBMISSION OF SAMPLES WITH TESTING REQUIREMENTS TO CLI WILL BE UNDERSTOOD TO BE AN AGREEMENT FOR SERVICES IN ACCORDANCE WITH THE CONDITIONS LISTED ON THE BACK OF THE CLIENT COPY.

Koppers015293

COFFEY LABORATORIES, INC.

CHAIN OF CUSTODY INSTRUCTIONS/CONDITIONS SHEET

INSTRUCTIONS

FOR LAB USE ONLY -	**All shaded areas are for laboratory use only. Please Do Not Write in These Areas.**
REPORT ATTENTION -	Name of the person who receives the laboratory report.
COMPANY NAME -	Name of the company or individual requesting the analysis.
REPORT ADDRESS -	Address of the company or individual requesting the analysis. (Address where report should be mailed)
REPORT INSTRUCTIONS -	A brief description of any special mail instructions, or address information pertaining to extra report copies.
PROJECT NAME -	Applies to customer project name. This data is provided at the customer's discretion.
PROJECT NUMBER -	Applies only to samples submitted by the customer. This data is provided at the customer's discretion.
FIELD ID -	A short description of the sample point (e.g., "Effluent from sand filter"). This description will appear on the report.
COLLECTION DATE -	The date on which the sample(s) was/were collected.
COLLECTION TIME -	The time at which the sample(s) was/were collected.
MEDIA -	This is a description of the sample media (e.g., drinking water, waste water, soil, etc.)
ANALYSIS REQUESTED -	Use one line for each analysis or group of analyses associated to a specific bottle.
SAMPLE COLLECTED BY -	The person who collected the sample(s) signs here.
RELINQUISHED BY -	The sampler signs this box when he/she gives the sample to someone else, and then fills in the date/time the sample left his/her possession.
RECEIVED BY -	The person who receives the sample(s) signs here and fills in the date/time received. The date and time should be same as "Relinquished by" unless the sample(s) was/were shipped.
JOB OR SAMPLE REMARKS -	General sample or job remarks.

CONDITIONS

PRICING AND CHARGES

Prices to be charged for work performed for CLIENT are those currently published in the Coffey Laboratories, Inc. (CLI) standard pricebook. CLIENT must notify CLI of price quotation at the time of the transfer of sample(s) to CLI. All submissions of samples with testing requirements to CLI will be understood to be an agreement for services. Any cancellation of testing requirements will result in charges being assessed on all testing completed prior to the notice of cancellation.

DELIVERY AND LIABILITY LIMITATIONS

CLI will analyze samples provided by CLIENT as requested by CLIENT in accordance with the procedures documented in the CLI Quality Assurance Plan (QAP). The maximum total liability assumed by CLI for work performed for CLIENT will in all cases be limited to the cost of the analysis. The specific format of the deliverable goods will be defined by CLIENT to CLI upon transfer of the samples to CLI. This warranty supersedes all other warranties.

CONFIDENTIALITY

CLI will use its best efforts to treat all information regarding work performed for CLIENT as proprietary and confidential to the maximum extent allowed by law. NO CLIENT information will be released without the written consent of the CLIENT billed for the work.

APPLICABLE LAW

Legal matters arising from work performed by CLI for CLIENT will be construed and interpreted in accordance with the laws for the state of Oregon.

Report Date: December 14, 1994
Job Number: 941212R
PO Number: Amos Kamerer
Project No: None Provided
Project Name: None Provided

Attention: Amos Kamerer
Koppers Industry
7540 NW St. Helens Rd.
Portland, OR 97210-3663

Analytical Narrative

The samples were received on 12/12/94 by Coffey Laboratories, Inc. (CLI) Sample Reception personnel under strict chain of custody protocol. The following information was provided at the time of sample reception:

Laboratory Sample ID	Field Identification	Matrix	Collection Date	Collection Time
941212R-1	WW 1	Waste Water	12/12/94	1115
941212R-2	WW 2	Waste Water	12/12/94	1115
941212R-3	WW 3	Waste Water	12/12/94	1130
941212R-4	WW 4	Waste Water	12/12/94	1115
941212R-5	WW 5	Waste Water	12/12/94	1115

The recommended holding time for each batch of analyses was in accordance with the data quality objectives as specified in the CLI Quality Assurance Plan unless otherwise noted.

Acceptable precision and accuracy were achieved for all analyses associated with this work order as demonstrated by the recoveries of the quality control samples analyzed concurrently with each batch.

The data submitted in this report is for the sole and exclusive use of the above-named client. All samples associated with the work order will be retained a maximum of 15 days from the report date or until the maximum holding time expires. All results pertain only to samples submitted.

Thank you for allowing Coffey Laboratories to be of service to you. If you have questions or need further assistance, please do not hesitate to call our Customer Services Department.

Sincerely,

Rona A. Klueh
Technical Director

RAK/atc

COFFEY LABORATORIES, INC.
12423 N.E. Whitaker Way • Portland, OR • 97230 • (503) 254-1794 • FAX (503) 254-1452

Analytical Data

Koppers Industry

Job Number: 941212R

Lab Sample ID: 941212R-1
Field ID: WW 1
Date/Time: 12/12/94 1115
Matrix: Waste Water

EPA Category: Conventional Parameters

Parameter	Method	Detection Limit	Analytical Result	Units	Analysis Date	Analyst
Oil & Grease	EPA 413.1	3.	4.	mg/L	12/13/94	WKK
Total Phenols	EPA 420.1	0.05	0.07	mg/L	12/12/94	SVS

COFFEY LABORATORIES, INC.
12423 N.E. Whitaker Way • Portland, OR • 97230 • (503) 254-1794 • FAX (503) 254-1452

Analytical Data

Koppers Industry

Job Number: 941212R

Lab Sample ID: 941212R-2
Field ID: WW 2
Date/Time: 12/12/94 1115
Matrix: Waste Water

EPA Category: Conventional Parameters

Parameter	Method	Detection Limit	Analytical Result	Units	Analysis Date	Analyst
Oil & Grease	EPA 413.1	3.	6.	mg/L	12/13/94	WKK
Total Phenols	EPA 420.1	0.05	0.07	mg/L	12/12/94	SVS

COFFEY LABORATORIES, INC.
12423 N.E. Whitaker Way • Portland, OR • 97230 • (503) 254-1794 • FAX (503) 254-1452

Analytical Data

Koppers Industry

Job Number: 941212R

Lab Sample ID: 941212R-3
Field ID: WW 3
Date/Time: 12/12/94 1130
Matrix: Waste Water

EPA Category: Conventional Parameters

Parameter	Method	Detection Limit	Analytical Result	Units	Analysis Date	Analyst
Oil & Grease	EPA 413.1	3.	4.	mg/L	12/13/94	WKK
Total Phenols	EPA 420.1	0.05	0.19	mg/L	12/12/94	SVS

COFFEY LABORATORIES, INC.
12423 N.E. Whitaker Way • Portland, OR • 97230 • (503) 254-1794 • FAX (503) 254-1452

Analytical Data

Koppers Industry

Job Number: 941212R

Lab Sample ID: 941212R-4
Field ID: WW 4
Date/Time: 12/12/94 1115
Matrix: Waste Water

EPA Category: Conventional Parameters

Parameter	Method	Detection Limit	Analytical Result	Units	Analysis Date	Analyst
Oil & Grease	EPA 413.1	3.	5.	mg/L	12/13/94	WKK
Total Phenols	EPA 420.1	0.05	0.12	mg/L	12/12/94	SVS

COFFEY LABORATORIES, INC.
12423 N.E. Whitaker Way • Portland, OR • 97230 • (503) 254-1794 • FAX (503) 254-1452

Analytical Data

Koppers Industry

Job Number: 941212R

Lab Sample ID: 941212R-5
Field ID: WW 5
Date/Time: 12/12/94 1115
Matrix: Waste Water

EPA Category: Conventional Parameters

Parameter	Method	Detection Limit	Analytical Result	Units	Analysis Date	Analyst
Oil & Grease	EPA 413.1	3.	5.	mg/L	12/13/94	WKK
Total Phenols	EPA 420.1	0.05	0.07	mg/L	12/12/94	SVS

COFFEY LABORATORIES, INC.
12423 N.E. Whitaker Way • Portland, OR • 97230 • (503) 254-1794 • FAX (503) 254-1452

RECEIVED

DEC 15 1994

KOPPERS INDS., INC.
PORTLAND, OR

12-7-94

	Temp	PH
WWT 1	48	6.6
WWT 2	48	6.6
WWT 5	48	6.7

COFFEY LABORATORIES, INC.
CHAIN OF CUSTODY AGREEMENT

PORTLAND BRANCH
12423 NE Whitaker Way
Portland, OR 97230
(503) 254-1794 FAX: (503) 254-1452

PENDLETON BRANCH
287 SE First
Pendleton, OR 97801
(503) 276-0385

Pumped 12/8

Report Attention: Amos Kamerer
Company Name: Koppers Ind
Address: 7540 NW St. Helens RD
Portland, OR, 97210-3663
Phone: (503) 286-3681 FAX: (503) 285-2831

Report Instructions:

Project Name:
Project Number:
PO Number:

Sample Turnaround
- ☐ Standard
- ☐ Priority (1.5x Std. Fee)
- ☒ Rush (2x Std. Fee)
- ☐ Emergency (3x Std. Fee)

Reporting Request
- ☐ FAX (T-35)
- ☐ Verbals (T-1157)
- ☐ Extra Report Copy (T-1402) (Fees Associated)

Initials:

FOR LABORATORY USE ONLY Page ___ of ___
Job Number: LAC 941201-A63
Custabbr: Koppers ☐NEW
☐VISA ☐M/C Expires:
Card #:
Cash / Check: $ #:
Billing Code: 1 2 3 4
QC LEVEL: 1 2 3 4
FEDX BUS COURIER UPS LAB CLIENT MAIL

Sample ID	Loc.	ID	Collection Date	Time	Media	Analysis Requested	Test/Profile
WWT 1			12-7-94	3:00 pm		Oil & Grease	
WWT 2			12-7-94	"		"	
WWT 5			12-7-94	"		"	
WWT 1			12-7-94	3:00 pm		Phenols	
WWT 2			12-7-94	"		"	
WWT 5			12-7-94	"		"	

Sample Comments:

Sampled by: (Please Print)	Relinquished by: (Please Sign)	Date	Time	Received by: (Sign)	Date	Time
Brad Harwood	Brad Harwood	12-7-94	3:00	Harold R. Beckler	12-7-94	3:00
	Harold R. Beckler					
				LAB	12/7/94	1110

White Copy - Laboratory Copy *Yellow Copy - Client Copy*

SHADED AREAS FOR LABORATORY USE ONLY

SUBMISSION OF SAMPLES WITH TESTING REQUIREMENTS TO CLI WILL BE UNDERSTOOD TO BE AN AGREEMENT FOR SERVICES IN ACCORDANCE WITH THE CONDITIONS LISTED ON THE BACK OF THE CLIENT COPY.

Koppers015303

COFFEY LABORATORIES, INC.

CHAIN OF CUSTODY INSTRUCTIONS/CONDITIONS SHEET

INSTRUCTIONS

FOR LAB USE ONLY -	**All shaded areas are for laboratory use only. <u>Please Do Not Write in These Areas.</u>**
REPORT ATTENTION -	Name of the person who receives the laboratory report.
COMPANY NAME -	Name of the company or individual requesting the analysis.
REPORT ADDRESS -	Address of the company or individual requesting the analysis. (Address where report should be mailed)
REPORT INSTRUCTIONS -	A brief description of any special mail instructions, or address information pertaining to extra report copies.
PROJECT NAME -	Applies to customer project name. This data is provided at the customer's discretion.
PROJECT NUMBER -	Applies only to samples submitted by the customer. This data is provided at the customer's discretion.
FIELD ID -	A short description of the sample point (e.g., "Effluent from sand filter"). This description will appear on the report.
COLLECTION DATE -	The date on which the sample(s) was/were collected.
COLLECTION TIME -	The time at which the sample(s) was/were collected.
MEDIA -	This is a description of the sample media (e.g., drinking water, waste water, soil, etc.)
ANALYSIS REQUESTED -	Use one line for each analysis or group of analyses associated to a specific bottle.
SAMPLE COLLECTED BY -	The person who collected the sample(s) signs here.
RELINQUISHED BY -	The sampler signs this box when he/she gives the sample to someone else, and then fills in the date/time the sample left his/her possession.
RECEIVED BY -	The person who receives the sample(s) signs here and fills in the date/time received. The date and time should be same as "Relinquished by" unless the sample(s) was/were shipped.
JOB OR SAMPLE REMARKS -	General sample or job remarks.

CONDITIONS

PRICING AND CHARGES

Prices to be charged for work performed for CLIENT are those currently published in the Coffey Laboratories, Inc. (CLI) standard pricebook. CLIENT must notify CLI of price quotation at the time of the transfer of sample(s) to CLI. All submissions of samples with testing requirements to CLI will be understood to be an agreement for services. Any cancellation of testing requirements will result in charges being assessed on all testing completed prior to the notice of cancellation.

DELIVERY AND LIABILITY LIMITATIONS

CLI will analyze samples provided by CLIENT as requested by CLIENT in accordance with the procedures documented in the CLI Quality Assurance Plan (QAP). The maximum total liability assumed by CLI for work performed for CLIENT will in all cases be limited to the cost of the analysis. The specific format of the deliverable goods will be defined by CLIENT to CLI upon transfer of the samples to CLI. This warranty supersedes all other warranties.

CONFIDENTIALITY

CLI will use its best efforts to treat all information regarding work performed for CLIENT as proprietary and confidential to the maximum extent allowed by law. NO CLIENT information will be released without the written consent of the CLIENT billed for the work.

APPLICABLE LAW

Legal matters arising from work performed by CLI for CLIENT will be construed and interpreted in accordance with the laws for the state of Oregon.

Report Date: December 12, 1994
Job Number: 941207AQ
PO Number: None Provided
Project No: None Provided
Project Name: None Provided

Attention: Amos Kamerer
Koppers Industry
7540 NW St. Helens Rd.
Portland, OR 97210-3663

Analytical Narrative

The samples were received on 12/07/94 by Coffey Laboratories, Inc. (CLI) Sample Reception personnel under strict chain of custody protocol. The following information was provided at the time of sample reception:

Laboratory Sample ID	Field Identification	Matrix	Collection Date	Collection Time
941207AQ-1	WWT 1	Waste Water	12/07/94	1500
941207AQ-2	WWT 2	Waste Water	12/07/94	1500
941207AQ-3	WWT 5	Waste Water	12/07/94	1500

The recommended holding time for each batch of analyses was in accordance with the data quality objectives as specified in the CLI Quality Assurance Plan unless otherwise noted.

Acceptable precision and accuracy were achieved for all analyses associated with this work order as demonstrated by the recoveries of the quality control samples analyzed concurrently with each batch.

The data submitted in this report is for the sole and exclusive use of the above-named client. All samples associated with the work order will be retained a maximum of 15 days from the report date or until the maximum holding time expires. All results pertain only to samples submitted.

Thank you for allowing Coffey Laboratories to be of service to you. If you have questions or need further assistance, please do not hesitate to call our Customer Services Department.

Sincerely,

Rona A. Klueh
Technical Director

RAK/atc

COFFEY LABORATORIES, INC.
12423 N.E. Whitaker Way • Portland, OR • 97230 • (503) 254-1794 • FAX (503) 254-1452

Analytical Data

Koppers Industry

Job Number: 941207AQ

Lab Sample ID: 941207AQ-1
Field ID: WWT 1
Date/Time: 12/07/94 1500
Matrix: Waste Water

EPA Category: Conventional Parameters

Parameter	Method	Detection Limit	Analytical Result	Units	Analysis Date	Analyst
Oil & Grease	EPA 413.1	3.	ND	mg/L	12/09/94	WKK
Total Phenols	EPA 420.1	0.05	0.08	mg/L	12/08/94	SVS

ND means none detected at or above the detection limit listed.

COFFEY LABORATORIES, INC.
12423 N.E. Whitaker Way • Portland, OR • 97230 • (503) 254-1794 • FAX (503) 254-1452

Analytical Data

Koppers Industry

Job Number: 941207AQ

Lab Sample ID: 941207AQ-2
Field ID: WWT 2
Date/Time: 12/07/94 1500
Matrix: Waste Water

EPA Category: Conventional Parameters

Parameter	Method	Detection Limit	Analytical Result	Units	Analysis Date	Analyst
Oil & Grease	EPA 413.1	3.	ND	mg/L	12/09/94	WKK
Total Phenols	EPA 420.1	0.05	0.08	mg/L	12/08/94	SVS

ND means none detected at or above the detection limit listed.

COFFEY LABORATORIES, INC.
12423 N.E. Whitaker Way • Portland, OR • 97230 • (503) 254-1794 • FAX (503) 254-1452

Analytical Data

Koppers Industry

Job Number: 941207AQ

Lab Sample ID: 941207AQ-3
Field ID: WWT 5
Date/Time: 12/07/94 1500
Matrix: Waste Water

EPA Category: Conventional Parameters

Parameter	Method	Detection Limit	Analytical Result	Units	Analysis Date	Analyst
Oil & Grease	EPA 413.1	3.	3.	mg/L	12/09/94	WKK
Total Phenols	EPA 420.1	0.05	0.12	mg/L	12/08/94	SVS

COFFEY LABORATORIES, INC.
12423 N.E. Whitaker Way • Portland, OR • 97230 • (503) 254-1794 • FAX (503) 254-1452

RECEIVED

DEC 14 1994

KOPPERS INDS., INC.
PORTLAND, OR

12-19-94

	Temp.	PH
T 1	52°F	6.6
T 2	50°	6.6
T 5	50°F	6.4

COFFEY LABORATORIES, INC.
CHAIN OF CUSTODY AGREEMENT

PORTLAND BRANCH
12423 NE Whitaker Way
Portland, OR 97230
(503) 254-1794 FAX: (503) 254-1452

PENDLETON BRANCH
287 SE First
Pendleton, OR 97801
(503) 276-0385

pumped 12/20

Report Attention: Amos Kammerer
Company Name: Koppers Ind.
Address: 2540 NW St. Helens Rd.
Portland OR. 97210-3663
Phone: (503) 286-3681 FAX: (503) 285-2831

Report Instructions:

Project Name:
Project Number:
PO Number:

Sample Turnaround	Reporting Request
☐ Standard	☐ FAX (T-35)
☐ Priority (1.5x Std. Fee)	☐ Verbals (T-1157)
☒ Rush (2x Std. Fee)	☐ Extra Report Copy (T-1402) (Fees Associated)
☐ Emergency (3x Std. Fee)	Initials:

FOR LABORATORY USE ONLY Page ___ of ___
Job Number: WCK 94 1219-AC3
Custabbr: Koppers ☐NEW
☐VISA ☐M/C Expires:
Card #:
Cash / Check: $ #:
Billing Code: 1 2 3 4
QC LEVEL: 1 2 3 4
FEDX BUS COURIER UPS LAB CLIENT MAIL

Sample ID	Loc.	ID	Collection Date	Collection Time	Media	Analysis Requested		Test/Profile
WWT 1			12-17-94	9 AM		Oil & Grease		
WWT 2			"	9 AM		"		
WWT 5			"	9 AM		"		
WWT 1			12-17-94	9 AM		Phenols	0.09	
WWT 2			"	9 AM		"	.09	
WWT 5			"	9 AM		"	.12	

Sample Comments:

Sampled by: (Please Print)	Relinquished by: (Please Sign)	Date	Time	Received by: (Sign)	Date	Time
Brad Harwood	Brad Harwood	12-17-94	3:15 AM	Chris Soto	12-17-94	3:15
	Chris Soto	12-17-94	3:48			
				LAB	12/17/94	1550

White Copy - Laboratory Copy Yellow Copy - Client Copy

SHADED AREAS FOR LABORATORY USE ONLY

SUBMISSION OF SAMPLES WITH TESTING REQUIREMENTS TO CLI WILL BE UNDERSTOOD TO BE AN AGREEMENT FOR SERVICES IN ACCORDANCE WITH THE CONDITIONS LISTED ON THE BACK OF THE CLIENT COPY.

Koppers015311

COFFEY LABORATORIES, INC.
CHAIN OF CUSTODY INSTRUCTIONS/CONDITIONS SHEET

INSTRUCTIONS

FOR LAB USE ONLY -	**All shaded areas are for laboratory use only. Please Do Not Write in These Areas.**
REPORT ATTENTION -	Name of the person who receives the laboratory report.
COMPANY NAME -	Name of the company or individual requesting the analysis.
REPORT ADDRESS -	Address of the company or individual requesting the analysis. (Address where report should be mailed)
REPORT INSTRUCTIONS -	A brief description of any special mail instructions, or address information pertaining to extra report copies.
PROJECT NAME -	Applies to customer project name. This data is provided at the customer's discretion.
PROJECT NUMBER -	Applies only to samples submitted by the customer. This data is provided at the customer's discretion.
FIELD ID -	A short description of the sample point (e.g., "Effluent from sand filter"). This description will appear on the report.
COLLECTION DATE -	The date on which the sample(s) was/were collected.
COLLECTION TIME -	The time at which the sample(s) was/were collected.
MEDIA -	This is a description of the sample media (e.g., drinking water, waste water, soil, etc.)
ANALYSIS REQUESTED -	Use one line for each analysis or group of analyses associated to a specific bottle.
SAMPLE COLLECTED BY -	The person who collected the sample(s) signs here.
RELINQUISHED BY -	The sampler signs this box when he/she gives the sample to someone else, and then fills in the date/time the sample left his/her possession.
RECEIVED BY -	The person who receives the sample(s) signs here and fills in the date/time received. The date and time should be same as "Relinquished by" unless the sample(s) was/were shipped.
JOB OR SAMPLE REMARKS -	General sample or job remarks.

CONDITIONS

PRICING AND CHARGES
Prices to be charged for work performed for CLIENT are those currently published in the Coffey Laboratories, Inc. (CLI) standard pricebook. CLIENT must notify CLI of price quotation at the time of the transfer of sample(s) to CLI. All submissions of samples with testing requirements to CLI will be understood to be an agreement for services. Any cancellation of testing requirements will result in charges being assessed on all testing completed prior to the notice of cancellation.

DELIVERY AND LIABILITY LIMITATIONS
CLI will analyze samples provided by CLIENT as requested by CLIENT in accordance with the procedures documented in the CLI Quality Assurance Plan (QAP). The maximum total liability assumed by CLI for work performed for CLIENT will in all cases be limited to the cost of the analysis. The specific format of the deliverable goods will be defined by CLIENT to CLI upon transfer of the samples to CLI. This warranty supersedes all other warranties.

CONFIDENTIALITY
CLI will use its best efforts to treat all information regarding work performed for CLIENT as proprietary and confidential to the maximum extent allowed by law. NO CLIENT information will be released without the written consent of the CLIENT billed for the work.

APPLICABLE LAW
Legal matters arising from work performed by CLI for CLIENT will be construed and interpreted in accordance with the laws for the state of Oregon.

Report Date: December 27, 1994
Job Number: 941219AF
PO Number: Amos Kamerer
Project No: None Provided
Project Name: None Provided

Attention: Amos Kamerer
Koppers Industry
7540 NW St. Helens Rd.
Portland, OR 97210-3663

Analytical Narrative

The samples were received on 12/19/94 by Coffey Laboratories, Inc. (CLI) Sample Reception personnel under strict chain of custody protocol. The following information was provided at the time of sample reception:

Laboratory Sample ID	Field Identification	Matrix	Collection Date	Collection Time
941219AF-1	WWT 1	Waste Water	12/19/94	0900
941219AF-2	WWT 2	Waste Water	12/19/94	0900
941219AF-3	WWT 5	Waste Water	12/19/94	0900

The recommended holding time for each batch of analyses was in accordance with the data quality objectives as specified in the CLI Quality Assurance Plan unless otherwise noted.

Acceptable precision and accuracy were achieved for all analyses associated with this work order as demonstrated by the recoveries of the quality control samples analyzed concurrently with each batch.

The data submitted in this report is for the sole and exclusive use of the above-named client. All samples associated with the work order will be retained a maximum of 15 days from the report date or until the maximum holding time expires. All results pertain only to samples submitted.

Thank you for allowing Coffey Laboratories to be of service to you. If you have questions or need further assistance, please do not hesitate to call our Customer Services Department.

Sincerely,

Susan M. Coffey
President

SMC/atc

COFFEY LABORATORIES, INC.
12423 N.E. Whitaker Way • Portland, OR • 97230 • (503) 254-1794 • FAX (503) 254-1452

Analytical Data

Koppers Industry

Job Number: 941219AF

Lab Sample ID: 941219AF-1
Field ID: WWT 1
Date/Time: 12/19/94 0900
Matrix: Waste Water

EPA Category: Conventional Parameters

Parameter	Method	Detection Limit	Analytical Result	Units	Analysis Date	Analyst
Oil & Grease	EPA 413.1	3.	4.	mg/L	12/21/94	WKK
Total Phenols	EPA 420.1	0.05	0.09	mg/L	12/20/94	SVS

COFFEY LABORATORIES, INC.
12423 N.E. Whitaker Way • Portland, OR • 97230 • (503) 254-1794 • FAX (503) 254-1452

Analytical Data

Koppers Industry

Job Number: 941219AF

Lab Sample ID: 941219AF-2
Field ID: WWT 2
Date/Time: 12/19/94 0900
Matrix: Waste Water

EPA Category: Conventional Parameters

Parameter	Method	Detection Limit	Analytical Result	Units	Analysis Date	Analyst
Oil & Grease	EPA 413.1	3.	ND	mg/L	12/21/94	WKK
Total Phenols	EPA 420.1	0.05	0.09	mg/L	12/20/94	SVS

ND means none detected at or above the detection limit listed.

COFFEY LABORATORIES, INC.
12423 N.E. Whitaker Way • Portland, OR • 97230 • (503) 254-1794 • FAX (503) 254-1452

Analytical Data

Koppers Industry

Job Number: 941219AF

Lab Sample ID: 941219AF-3
Field ID: WWT 5
Date/Time: 12/19/94 0900
Matrix: Waste Water

EPA Category: Conventional Parameters

Parameter	Method	Detection Limit	Analytical Result	Units	Analysis Date	Analyst
Oil & Grease	EPA 413.1	3.	ND	mg/L	12/21/94	WKK
Total Phenols	EPA 420.1	0.05	0.12	mg/L	12/20/94	SVS

ND means none detected at or above the detection limit listed.

COFFEY LABORATORIES, INC.
12423 N.E. Whitaker Way • Portland, OR • 97230 • (503) 254-1794 • FAX (503) 254-1452

RECEIVED

DEC 28 1994

KOPPERS INDS., INC.
PORTLAND, OR

KOPPERS INDUSTRIES

Koppers Industries, Inc.
7540 N.W. St. Helens Road
Portland, OR 97210-3663

Telephone: 503-286-3681
Fax: 503-285-2831

December 27, 1994

Amos S. Kamerer, Plant Manager
Koppers Industries, Inc.
7540 NW St Helens Road
Portland, OR 97210

Dear Sir:

Chris Jobe came in at 4 p.m. on December 26, 1994 to start up plant operations. At 5 p.m. he called me explaining that all waste water tanks were full and the lower tank farm was filling with water.

With rain still falling, and imminent danger to pumps and equipment, I instructed Chris to do a complete walk around the lower tank farm area. Upon completion of this walk, if no adverse conditions were found, Chris was to commence pumping the rain water to the river.

Sincerely,

T. J. Turner
General Foreman

KOPPERS INDUSTRIES

Koppers Industries, Inc.
7540 N.W. St. Helens Road
Portland, OR 97210-3663

Telephone: 503-286-3681
Fax: 503-285-2831

22 December, 1994

Amos S. Kamerer, Plant Manager
Koppers Industries, Inc.
7540 NW St Helens Road
Portland, OR 97210

Dear Sir:

On December 19, 1994 I came in at 6:30 a.m. to start plant operations. Upon doing a full-plant walk-through inspection, I found the lower tank farm flooding, all waste water tanks overflowing, and rain still falling.

If this situation continues, we are in danger of losing pumps and equipment, and a possible shut-down of operations. I started pumping the overflow of rainwater directly to the plant outfall. We at this time also sampled all waste water tanks and requested rush analysis.

Sincerely,

T. J. Turner
General Foreman

PERMITTEE NAME/ADDRESS (Include Facility Name/Location if different)
NAME KOPPERS INDUSTRIES, INC.
ADDRESS 7540 NW ST HELENS ROAD
PORTLAND, OR 97210

FACILITY NORTHWEST PLANT DEQ #47430
LOCATION MULTNOMAH COUNTY

NATIONAL POLLUTANT DISCHARGE ELIMINATION SYSTEM (NPDES)
DISCHARGE MONITORING REPORT (DMR)

PERMIT NUMBER (2-16)	DISCHARGE NUMBER (17-19)
101003	0011

3077-J
47430

Form Approved.
OMB No. 2040-0004.
Approval expires 6-30-91.

MONITORING PERIOD	YEAR	MO	DAY		YEAR	MO	DAY
FROM	94	11	01	TO	94	11	30
	(20-21)	(22-23)	(24-25)		(26-27)	(28-29)	(30-31)

NOTE: Read instructions before completing this form.

PARAMETER (32-37)		(3 Card Only) QUANTITY OR LOADING (46-53) AVERAGE	(54-61) MAXIMUM	UNITS	(4 Card Only) QUALITY OR CONCENTRATION (38-45) MINIMUM	(46-53) AVERAGE	(54-61) MAXIMUM	UNITS	NO. EX (62-63)	FREQUENCY OF ANALYSIS (64-68)	SAMPLE TYPE (69-70)
FLOW	SAMPLE MEASUREMENT	16,333		GPD					N/A	12/30	EST.
	PERMIT REQUIREMENT	N/A	N/A								
TEMPERATURE	SAMPLE MEASUREMENT				43	48	50	°F	0	12/30	GRAB ~~EST.~~
	PERMIT REQUIREMENT						110				
pH	SAMPLE MEASUREMENT				6.4	6.6	6.7	SU	0	12/30	GRAB
	PERMIT REQUIREMENT				6.0		9.0				
OIL & GREASE	SAMPLE MEASUREMENT				N.D.	.67	4.0	mg/L	0	12/30	GRAB
	PERMIT REQUIREMENT				N/A	10	15				
PHENOLS	SAMPLE MEASUREMENT				N.D.	.10	.17	mg/L	0	12/30	GRAB
	PERMIT REQUIREMENT				N/A	.5	.7				
	SAMPLE MEASUREMENT										
	PERMIT REQUIREMENT										
	SAMPLE MEASUREMENT										
	PERMIT REQUIREMENT										

NAME/TITLE PRINCIPAL EXECUTIVE OFFICER: R. D. COLLINS, V.P.
TYPED OR PRINTED

I CERTIFY UNDER PENALTY OF LAW THAT I HAVE PERSONALLY EXAMINED AND AM FAMILIAR WITH THE INFORMATION SUBMITTED HEREIN; AND BASED ON MY INQUIRY OF THOSE INDIVIDUALS IMMEDIATELY RESPONSIBLE FOR OBTAINING THE INFORMATION, I BELIEVE THE SUBMITTED INFORMATION IS TRUE, ACCURATE AND COMPLETE. I AM AWARE THAT THERE ARE SIGNIFICANT PENALTIES FOR SUBMITTING FALSE INFORMATION, INCLUDING THE POSSIBILITY OF FINE AND IMPRISONMENT. SEE 18 USC § 1001 AND 33 USC § 1319. (Penalties under these statutes may include fines up to $10,000 and/or maximum imprisonment of between 6 months and 5 years.)

A. S. KAMERER, PLANT MGR
SIGNATURE OF PRINCIPAL EXECUTIVE OFFICER OR AUTHORIZED AGENT

TELEPHONE AREA CODE	NUMBER	DATE YEAR	MO	DAY
503	286-3681	94	12	02

COMMENT AND EXPLANATION OF ANY VIOLATIONS (Reference all attachments here)

PAH TEST RESULTS TAKEN THIS MONTH ARE ATTACHED.

cc: W. E. SWEARINGEN

Koppers015320

MONTHLY NPDES DISCHARGE REPORT WORK SHEET

MONTH NOV. YEAR 94

FLOW

	WWT-1	WWT-2	WWT-3	WWT-4	WWT-5	WWT-6	TOTAL	#DAYS IN MONTH	G.P.D. DISCHARGE
GLS. PER TANK	45,000	45,000	45,000	45,000	20,000	20,000			
# OF PUMPINGS	111	111	11	11	11				
GALS.PUMPED	135,000	135,000	90,000	90,000	40,000		490,000	30	16,333

SAMPLE CONCENTRATION LEVELS

													AVG.	MIN.	MAX.	UNIT
TEMPERATURES	48	48	50	50	50	50	43	43	44	48	48	48	48	43	50	OF
PH	6.5	6.4	6.7	6.6	6.7	6.7	6.6	6.5	6.5	6.5	6.5	6.7	6.6	6.4	6.7	SU
OIL & GREASES	ND	ND	ND	ND	ND	4.	ND	ND	ND	ND	ND	4.	.67	ND	4.0	MG/L
PHENOLS	.17	.12	.16	.17	.08	.07	.09	.08	ND	.06	.07	.10	.10	ND	.17	MG/L

QUARTERLY PAH TESTING

DATE SAMPLE TAKEN 11 \ 16 \ 94 RESULTS 222

(MUST BE LESS THAN 1000)

Koppers015321

WWT 3
TEMP 48
PH 6.5

WWT 4
TEMP 48°
PH 6.4

11-8-94

COFFEY LABORATORIES, INC.
CHAIN OF CUSTODY AGREEMENT

PORTLAND BRANCH
12423 NE Whitaker Way
Portland, OR 97230
(503) 254-1794 FAX: (503) 254-1452

Pomped 11/10 - 11/14

PENDLETON BRANCH
287 SE First
Pendleton, OR 97801
(503) 276-0385

Report Attention: AMOS KAMERER
Company Name: KOPPERS IND INC
Address: 7540 NW ST. HELENS ROAD
PORTLAND ORE 97210-3663
Phone: (503) 286-3681 FAX: (503) 285-2831
Report Instructions:

Project Name:
Project Number:
PO Number:

Sample Turnaround	Reporting Request
☐ Standard	☐ FAX (T-35)
☑ Priority (1.5x Std. Fee)	☐ Verbals (T-1157)
☐ Rush (2x Std. Fee)	☐ Extra Report Copy (T-1402) (Fees Associated)
☐ Emergency (3x Std. Fee)	Initials:

FOR LABORATORY USE ONLY Page of
Job Number: W194108-89
Custabbr: KOPPERS ☐NEW
☐VISA ☐M/C Expires:
Card #:
Cash / Check: $ #:
Billing Code: 1 2 3 4
QC LEVEL: 1 2 3 4
FEDX BUS COURIER UPS LAB CLIENT MAIL

Sample ID	Loc.	ID	Collection Date	Collection Time	Media	Analysis Requested	Test/Profile
WWT 3			11-8-94	3:30pm		OIL & GREASE	
WWT 4						"	
WWT 3						PHENOLS	
WWT 4						"	

Sample Comments:

Sampled by: (Please Print)	Relinquished by: (Please Sign)	Date	Time	Received by: (Sign)	Date	Time
TED HARE	[signature]	11-8-94	4:35pm			
				LAB [signature]	11/8/94	1625

White Copy - Laboratory Copy *Yellow Copy - Client Copy*

SHADED AREAS FOR LABORATORY USE ONLY

SUBMISSION OF SAMPLES WITH TESTING REQUIREMENTS TO CLI WILL BE UNDERSTOOD TO BE AN AGREEMENT FOR SERVICES IN ACCORDANCE WITH THE CONDITIONS LISTED ON THE BACK OF THE CLIENT COPY.

Koppers015323

COFFEY LABORATORIES, INC.

CHAIN OF CUSTODY INSTRUCTIONS/CONDITIONS SHEET

INSTRUCTIONS

FOR LAB USE ONLY -	**All shaded areas are for laboratory use only. Please Do Not Write in These Areas.**
REPORT ATTENTION -	Name of the person who receives the laboratory report.
COMPANY NAME -	Name of the company or individual requesting the analysis.
REPORT ADDRESS -	Address of the company or individual requesting the analysis. (Address where report should be mailed)
REPORT INSTRUCTIONS -	A brief description of any special mail instructions, or address information pertaining to extra report copies.
PROJECT NAME -	Applies to customer project name. This data is provided at the customer's discretion.
PROJECT NUMBER -	Applies only to samples submitted by the customer. This data is provided at the customer's discretion.
FIELD ID -	A short description of the sample point (e.g., "Effluent from sand filter"). This description will appear on the report.
COLLECTION DATE -	The date on which the sample(s) was/were collected.
COLLECTION TIME -	The time at which the sample(s) was/were collected.
MEDIA -	This is a description of the sample media (e.g., drinking water, waste water, soil, etc.)
ANALYSIS REQUESTED -	Use one line for each analysis or group of analyses associated to a specific bottle.
SAMPLE COLLECTED BY -	The person who collected the sample(s) signs here.
RELINQUISHED BY -	The sampler signs this box when he/she gives the sample to someone else, and then fills in the date/time the sample left his/her possession.
RECEIVED BY -	The person who receives the sample(s) signs here and fills in the date/time received. The date and time should be same as "Relinquished by" unless the sample(s) was/were shipped.
JOB OR SAMPLE REMARKS -	General sample or job remarks.

CONDITIONS

PRICING AND CHARGES

Prices to be charged for work performed for CLIENT are those currently published in the Coffey Laboratories, Inc. (CLI) standard pricebook. CLIENT must notify CLI of price quotation at the time of the transfer of sample(s) to CLI. All submissions of samples with testing requirements to CLI will be understood to be an agreement for services. Any cancellation of testing requirements will result in charges being assessed on all testing completed prior to the notice of cancellation.

DELIVERY AND LIABILITY LIMITATIONS

CLI will analyze samples provided by CLIENT as requested by CLIENT in accordance with the procedures documented in the CLI Quality Assurance Plan (QAP). The maximum total liability assumed by CLI for work performed for CLIENT will in all cases be limited to the cost of the analysis. The specific format of the deliverable goods will be defined by CLIENT to CLI upon transfer of the samples to CLI. This warranty supersedes all other warranties.

CONFIDENTIALITY

CLI will use its best efforts to treat all information regarding work performed for CLIENT as proprietary and confidential to the maximum extent allowed by law. NO CLIENT information will be released without the written consent of the CLIENT billed for the work.

APPLICABLE LAW

Legal matters arising from work performed by CLI for CLIENT will be construed and interpreted in accordance with the laws for the state of Oregon.

Report Date: November 10, 1994
Job Number: 941108BB
PO Number: Amos Kamerer
Project No: None Provided
Project Name: None Provided

Attention: Amos Kamerer
Koppers Industry
7540 NW St. Helens Rd.
Portland, OR 97210-3663

Analytical Narrative

The samples were received on 11/08/94 by Coffey Laboratories, Inc. (CLI) Sample Reception personnel under strict chain of custody protocol. The following information was provided at the time of sample reception:

Laboratory Sample ID	Field Identification	Matrix	Collection Date	Collection Time
941108BB-1	WWT 3	Waste Water	11/08/94	1530
941108BB-2	WWT 4	Waste Water	11/08/94	1530

The recommended holding time for each batch of analyses was in accordance with the data quality objectives as specified in the CLI Quality Assurance Plan unless otherwise noted.

Acceptable precision and accuracy were achieved for all analyses associated with this work order as demonstrated by the recoveries of the quality control samples analyzed concurrently with each batch.

The data submitted in this report is for the sole and exclusive use of the above-named client. All samples associated with the work order will be retained a maximum of 15 days from the report date or until the maximum holding time expires. All results pertain only to samples submitted.

Thank you for allowing Coffey Laboratories to be of service to you. If you have questions or need further assistance, please do not hesitate to call our Customer Services Department.

Sincerely,

Rona A. Klueh
Technical Director

RAK/atc

RECEIVED
NOV 14 1994
KOPPERS INDS., INC.
PORTLAND, OR

COFFEY LABORATORIES, INC.
12423 N.E. Whitaker Way • Portland, OR • 97230 • (503) 254-1794 • FAX (503) 254-1452

Analytical Data

Koppers Industry

Job Number: 941108BB

Lab Sample ID: 941108BB-1
Field ID: WWT 3
Date/Time: 11/08/94 1530
Matrix: Waste Water

EPA Category: Conventional Parameters

Parameter	Method	Detection Limit	Analytical Result	Units	Analysis Date	Analyst
Oil & Grease	EPA 413.1	3.	ND	mg/L	11/09/94	WKK
Total Phenols	EPA 420.1	0.05	0.17	mg/L	11/09/94	SVS

ND means none detected at or above the detection limit listed.

RECEIVED
NOV 14 1994
KOPPERS INDS., INC.
PORTLAND, OR

COFFEY LABORATORIES, INC.
12423 N.E. Whitaker Way • Portland, OR • 97230 • (503) 254-1794 • FAX (503) 254-1452

Analytical Data

Koppers Industry

Job Number: 941108BB

Lab Sample ID: 941108BB-2
Field ID: WWT 4
Date/Time: 11/08/94 1530
Matrix: Waste Water

EPA Category: Conventional Parameters

Parameter	Method	Detection Limit	Analytical Result	Units	Analysis Date	Analyst
Oil & Grease	EPA 413.1	3.	ND	mg/L	11/09/94	WKK
Total Phenols	EPA 420.1	0.05	0.12	mg/L	11/09/94	SVS

ND means none detected at or above the detection limit listed.

RECEIVED
NOV 1 1994
KOPPERS INDS., INC.
PORTLAND, OR

COFFEY LABORATORIES, INC.
12423 N.E. Whitaker Way • Portland, OR • 97230 • (503) 254-1794 • FAX (503) 254-1452

WWT 1 PN OIL Phen.
GRSE
6.7 ND .17
F 50°

WWT 2 6.6 ND .16
F 50°

TANKS OK Pumped
11-14-94 11/16/94
Cust Sig
8:00am

COFFEY LABORATORIES, INC.
CHAIN OF CUSTODY AGREEMENT

PORTLAND BRANCH
12423 NE Whitaker Way
Portland, OR 97230
(503) 254-1794 FAX: (503) 254-1452

PENDLETON BRANCH
287 SE First
Pendleton, OR 97801
(503) 276-0385

Pumped 11/16

Report Attention: AMOS Kameyer
Company Name: Koppers Ind.
Address: 7540 NW St. Helen RD.
Portland OR. 97210-3663
Phone: (503) 286-3681 FAX: (503) 285-2831

Report Instructions:

Project Name:
Project Number:
PO Number:

Sample Turnaround
- ☐ Standard
- ☒ Priority (1.5x Std. Fee)
- ☐ Rush (2x Std. Fee)
- ☐ Emergency (3x Std. Fee)

Reporting Request
- ☐ FAX (T-35)
- ☐ Verbals (T-1157)
- ☐ Extra Report Copy (T-1402) (Fees Associated)

Initials:

FOR LABORATORY USE ONLY Page ___ of ___
Job Number: 1304/114-2
Custabbr: Koppers ☐NEW
☐VISA ☐M/C Expires:
Card #:
Cash / Check: $ #:
Billing Code: 1 2 3 4
QC LEVEL: 1 2 3 4
FEDX BUS COURIER UPS LAB CLIENT MAIL

Sample ID	Loc.	ID	Collection Date	Time	Media	Analysis Requested	Test/Profile
WWT #1			11-14-94	10:30 A		Oil & Grease	
WWT "			11-14-94	10:30 A		PHenols	
WWT #2			11-14-94	10:30 A		Oil & Grease	
WWT "			11-14-94	10:30 A		PHenols	

Sample Comments:

Sampled by: (Please Print)	Relinquished by: (Please Sign)	Date	Time	Received by: (Sign)	Date	Time
Brad Harwood	N.B. Harwood	11-14-94	2:30 P			
				LAB		

White Copy - Laboratory Copy *Yellow Copy - Client Copy*

SHADED AREAS FOR LABORATORY USE ONLY

SUBMISSION OF SAMPLES WITH TESTING REQUIREMENTS TO CLI WILL BE UNDERSTOOD TO BE AN AGREEMENT FOR SERVICES IN ACCORDANCE WITH THE CONDITIONS LISTED ON THE BACK OF THE CLIENT COPY.

Koppers015329

COFFEY LABORATORIES, INC.

CHAIN OF CUSTODY INSTRUCTIONS/CONDITIONS SHEET

INSTRUCTIONS

FOR LAB USE ONLY -	**All shaded areas are for laboratory use only. Please Do Not Write in These Areas.**
REPORT ATTENTION -	Name of the person who receives the laboratory report.
COMPANY NAME -	Name of the company or individual requesting the analysis.
REPORT ADDRESS -	Address of the company or individual requesting the analysis. (Address where report should be mailed)
REPORT INSTRUCTIONS -	A brief description of any special mail instructions, or address information pertaining to extra report copies.
PROJECT NAME -	Applies to customer project name. This data is provided at the customer's discretion.
PROJECT NUMBER -	Applies only to samples submitted by the customer. This data is provided at the customer's discretion.
FIELD ID -	A short description of the sample point (e.g., "Effluent from sand filter"). This description will appear on the report.
COLLECTION DATE -	The date on which the sample(s) was/were collected.
COLLECTION TIME -	The time at which the sample(s) was/were collected.
MEDIA -	This is a description of the sample media (e.g., drinking water, waste water, soil, etc.)
ANALYSIS REQUESTED -	Use one line for each analysis or group of analyses associated to a specific bottle.
SAMPLE COLLECTED BY -	The person who collected the sample(s) signs here.
RELINQUISHED BY -	The sampler signs this box when he/she gives the sample to someone else, and then fills in the date/time the sample left his/her possession.
RECEIVED BY -	The person who receives the sample(s) signs here and fills in the date/time received. The date and time should be same as "Relinquished by" unless the sample(s) was/were shipped.
JOB OR SAMPLE REMARKS -	General sample or job remarks.

CONDITIONS

PRICING AND CHARGES

Prices to be charged for work performed for CLIENT are those currently published in the Coffey Laboratories, Inc. (CLI) standard pricebook. CLIENT must notify CLI of price quotation at the time of the transfer of sample(s) to CLI. All submissions of samples with testing requirements to CLI will be understood to be an agreement for services. Any cancellation of testing requirements will result in charges being assessed on all testing completed prior to the notice of cancellation.

DELIVERY AND LIABILITY LIMITATIONS

CLI will analyze samples provided by CLIENT as requested by CLIENT in accordance with the procedures documented in the CLI Quality Assurance Plan (QAP). The maximum total liability assumed by CLI for work performed for CLIENT will in all cases be limited to the cost of the analysis. The specific format of the deliverable goods will be defined by CLIENT to CLI upon transfer of the samples to CLI. This warranty supersedes all other warranties.

CONFIDENTIALITY

CLI will use its best efforts to treat all information regarding work performed for CLIENT as proprietary and confidential to the maximum extent allowed by law. NO CLIENT information will be released without the written consent of the CLIENT billed for the work.

APPLICABLE LAW

Legal matters arising from work performed by CLI for CLIENT will be construed and interpreted in accordance with the laws for the state of Oregon.

Report Date: November 18, 1994
Job Number: 941114Z
PO Number: Amos Kamerer
Project No: None Provided
Project Name: None Provided

Attention: Amos Kamerer
Koppers Industry
7540 NW St. Helens Rd.
Portland, OR 97210-3663

Analytical Narrative

The samples were received on 11/14/94 by Coffey Laboratories, Inc. (CLI) Sample Reception personnel under strict chain of custody protocol. The following information was provided at the time of sample reception:

Laboratory Sample ID	Field Identification	Matrix	Collection Date	Collection Time
941114Z-1	WWT 1	Waste Water	11/14/94	1030
941114Z-2	WWT 2	Waste Water	11/14/94	1030

The recommended holding time for each batch of analyses was in accordance with the data quality objectives as specified in the CLI Quality Assurance Plan unless otherwise noted.

Acceptable precision and accuracy were achieved for all analyses associated with this work order as demonstrated by the recoveries of the quality control samples analyzed concurrently with each batch.

The data submitted in this report is for the sole and exclusive use of the above-named client. All samples associated with the work order will be retained a maximum of 15 days from the report date or until the maximum holding time expires. All results pertain only to samples submitted.

Thank you for allowing Coffey Laboratories to be of service to you. If you have questions or need further assistance, please do not hesitate to call our Customer Services Department.

Sincerely,

Rona A. Klueh
Technical Director

RAK/atc

RECEIVED
NOV 21 1994
KOPPERS INDS., INC.
PORTLAND, OR

COFFEY LABORATORIES, INC.
12423 N.E. Whitaker Way • Portland, OR • 97230 • (503) 254-1794 • FAX (503) 254-1452

Analytical Data

Koppers Industry

Job Number: 941114Z

Lab Sample ID: 941114Z-1
Field ID: WWT 1
Date/Time: 11/14/94 1030
Matrix: Waste Water

EPA Category: Conventional Parameters

Parameter	Method	Detection Limit	Analytical Result	Units	Analysis Date	Analyst
Oil & Grease	EPA 413.1	3.	ND	mg/L	11/15/94	JAG
Total Phenols	EPA 420.1	0.05	0.16	mg/L	11/16/94	RGR

ND means none detected at or above the detection limit listed.

RECEIVED
NOV 21 1994
KOPPERS INDS., INC.
PORTLAND, OR

COFFEY LABORATORIES, INC.
12423 N.E. Whitaker Way • Portland, OR • 97230 • (503) 254-1794 • FAX (503) 254-1452

Analytical Data

Koppers Industry

Job Number: 941114Z

Lab Sample ID: 941114Z-1
Field ID: WWT 1
Date/Time: 11/14/94 1030
Matrix: Waste Water

EPA Category: Conventional Parameters

Parameter	Method	Detection Limit	Analytical Result	Units	Analysis Date	Analyst
Oil & Grease	EPA 413.1	3.	ND	mg/L	11/15/94	JAG
Total Phenols	EPA 420.1	0.05	0.16	mg/L	11/16/94	RGR

ND means none detected at or above the detection limit listed.

RECEIVED
NOV 21 1994
KOPPERS INDS., INC.
PORTLAND, OR

COFFEY LABORATORIES, INC.
12423 N.E. Whitaker Way • Portland, OR • 97230 • (503) 254-1794 • FAX (503) 254-1452

	T	PH
WWK 4	50°	6.7
WWK 3	50°	6.7

11-16-94

COFFEY LABORATORIES, INC.
CHAIN OF CUSTODY AGREEMENT

PORTLAND BRANCH
12423 NE Whitaker Way
Portland, OR 97230
(503) 254-1794 FAX: (503) 254-1452

PENDLETON BRANCH
287 SE First
Pendleton, OR 97801
(503) 276-0385

pumped 11/17

Report Attention: AMOS KAMERER
Company Name: Koppers IND INC
Address: 7540 NW ST HELENS RD
PORTLAND ORE 97210-3663
Phone: (503) 286 3681 FAX: ( )

Report Instructions:

Project Name:
Project Number:
PO Number:

Sample Turnaround	Reporting Request
☐ Standard	☐ FAX (T-35)
☐ Priority (1.5x Std. Fee)	☐ Verbals (T-1157)
☑ Rush (2x Std. Fee)	☐ Extra Report Copy (T-1402) (Fees Associated)
☐ Emergency (3x Std. Fee)	Initials:

FOR LABORATORY USE ONLY Page ___ of ___
Job Number: V6-94-1116-I
Custabbr: ☐NEW
☐VISA ☐M/C Expires:
Card #:
Cash / Check: $ #:
Billing Code: 1 2 3 4
QC LEVEL: 1 2 3 4
FEDX BUS COURIER UPS LAB CLIENT MAIL

Sample ID	Loc.	ID	Collection Date	Collection Time	Media	Analysis Requested	Test/Profile
WWT 3			11-16-94	10:30		OIL & GREASE	
WWT 4						"	
WWT 3						PHENOLS	
WWT 4						"	
WWT 4						PAH	

Sample Comments:

Sampled by: (Please Print)	Relinquished by: (Please Sign)	Date	Time	Received by: (Sign)	Date	Time
BRAD HARWOOD	Brad Harwood	11-16-94	11 34 A			
				LAB [illegible]		

White Copy - Laboratory Copy *Yellow Copy - Client Copy*

SHADED AREAS FOR LABORATORY USE ONLY

SUBMISSION OF SAMPLES WITH TESTING REQUIREMENTS TO CLI WILL BE UNDERSTOOD TO BE AN AGREEMENT FOR SERVICES IN ACCORDANCE WITH THE CONDITIONS LISTED ON THE BACK OF THE CLIENT COPY.

Koppers015335

COFFEY LABORATORIES, INC.

CHAIN OF CUSTODY INSTRUCTIONS/CONDITIONS SHEET

INSTRUCTIONS

FOR LAB USE ONLY -	**All shaded areas are for laboratory use only. Please Do Not Write in These Areas.**
REPORT ATTENTION -	Name of the person who receives the laboratory report.
COMPANY NAME -	Name of the company or individual requesting the analysis.
REPORT ADDRESS -	Address of the company or individual requesting the analysis. (Address where report should be mailed)
REPORT INSTRUCTIONS -	A brief description of any special mail instructions, or address information pertaining to extra report copies.
PROJECT NAME -	Applies to customer project name. This data is provided at the customer's discretion.
PROJECT NUMBER -	Applies only to samples submitted by the customer. This data is provided at the customer's discretion.
FIELD ID -	A short description of the sample point (e.g., "Effluent from sand filter"). This description will appear on the report.
COLLECTION DATE -	The date on which the sample(s) was/were collected.
COLLECTION TIME -	The time at which the sample(s) was/were collected.
MEDIA -	This is a description of the sample media (e.g., drinking water, waste water, soil, etc.)
ANALYSIS REQUESTED -	Use one line for each analysis or group of analyses associated to a specific bottle.
SAMPLE COLLECTED BY -	The person who collected the sample(s) signs here.
RELINQUISHED BY -	The sampler signs this box when he/she gives the sample to someone else, and then fills in the date/time the sample left his/her possession.
RECEIVED BY -	The person who receives the sample(s) signs here and fills in the date/time received. The date and time should be same as "Relinquished by" unless the sample(s) was/were shipped.
JOB OR SAMPLE REMARKS -	General sample or job remarks.

CONDITIONS

PRICING AND CHARGES

Prices to be charged for work performed for CLIENT are those currently published in the Coffey Laboratories, Inc. (CLI) standard pricebook. CLIENT must notify CLI of price quotation at the time of the transfer of sample(s) to CLI. All submissions of samples with testing requirements to CLI will be understood to be an agreement for services. Any cancellation of testing requirements will result in charges being assessed on all testing completed prior to the notice of cancellation.

DELIVERY AND LIABILITY LIMITATIONS

CLI will analyze samples provided by CLIENT as requested by CLIENT in accordance with the procedures documented in the CLI Quality Assurance Plan (QAP). The maximum total liability assumed by CLI for work performed for CLIENT will in all cases be limited to the cost of the analysis. The specific format of the deliverable goods will be defined by CLIENT to CLI upon transfer of the samples to CLI. This warranty supersedes all other warranties.

CONFIDENTIALITY

CLI will use its best efforts to treat all information regarding work performed for CLIENT as proprietary and confidential to the maximum extent allowed by law. NO CLIENT information will be released without the written consent of the CLIENT billed for the work.

APPLICABLE LAW

Legal matters arising from work performed by CLI for CLIENT will be construed and interpreted in accordance with the laws for the state of Oregon.

Report Date: November 18, 1994
Job Number: 941116I
PO Number: verbal - Kamerer
Project No: None Provided
Project Name: None Provided

Attention: Amos Kamerer
Koppers Industry
7540 NW St. Helens Rd.
Portland, OR 97210-3663

Analytical Narrative

The samples were received on 11/16/94 by Coffey Laboratories, Inc. (CLI) Sample Reception personnel under strict chain of custody protocol. The following information was provided at the time of sample reception:

Laboratory Sample ID	Field Identification	Matrix	Collection Date	Collection Time
941116I-1	WWT 3	Waste Water	11/16/94	1030
941116I-2	WWT 4	Waste Water	11/16/94	1030

The recommended holding time for each batch of analyses was in accordance with the data quality objectives as specified in the CLI Quality Assurance Plan unless otherwise noted.

Acceptable precision and accuracy were achieved for all analyses associated with this work order as demonstrated by the recoveries of the quality control samples analyzed concurrently with each batch.

The data submitted in this report is for the sole and exclusive use of the above-named client. All samples associated with the work order will be retained a maximum of 15 days from the report date or until the maximum holding time expires. All results pertain only to samples submitted.

Thank you for allowing Coffey Laboratories to be of service to you. If you have questions or need further assistance, please do not hesitate to call our Customer Services Department.

Sincerely,

Rona A. Klueh
Technical Director

RAK/atc

RECEIVED
NOV 21 1994
KOPPERS INDS., INC.
PORTLAND, OR

COFFEY LABORATORIES, INC.
12423 N.E. Whitaker Way • Portland, OR • 97230 • (503) 254-1794 • FAX (503) 254-1452

Analytical Data

Koppers Industry

Job Number: 941116I

Lab Sample ID: 941116I-1
Field ID: WWT 3
Date/Time: 11/16/94 1030
Matrix: Waste Water

EPA Category: Conventional Parameters

Parameter	Method	Detection Limit	Analytical Result	Units	Analysis Date	Analyst
Oil & Grease	EPA 413.1	3.	ND	mg/L	11/16/94	WKK
Total Phenols	EPA 420.1	0.05	0.08	mg/L	11/16/94	RGR

ND means none detected at or above the detection limit listed.

RECEIVED
NOV 21 1994
KOPPERS INDS., INC.
PORTLAND, OR

COFFEY LABORATORIES, INC.
12423 N.E. Whitaker Way • Portland, OR • 97230 • (503) 254-1794 • FAX (503) 254-1452

Analytical Data

Koppers Industry

Job Number: 941116I

Lab Sample ID: 941116I-2
Field ID: WWT 4
Date/Time: 11/16/94 1030
Matrix: Waste Water

EPA Category: Conventional Parameters

Parameter	Method	Detection Limit	Analytical Result	Units	Analysis Date	Analyst
Oil & Grease	EPA 413.1	3.	4.	mg/L	11/16/94	WKK
Total Phenols	EPA 420.1	0.05	0.07	mg/L	11/16/94	RGR

Analysis Performed: Polynuclear Aromatic Hydrocarbons in waste water, by EPA Method 8310, HPLC.

Compound	Detection Limit	Laboratory Blank	Sample Results
Acenaphthene	75	ND	ND
Acenaphthylene	50	ND	ND
Anthracene	15	ND	ND
Benzo(a)anthracene	1.0	ND	17
Benzo(b)fluoranthene	1.0	ND	17
Benzo(k)fluoranthene	1.0	ND	15
Benzo(g,h,i)perylene	3.0	ND	26
Benzo(a)pyrene	1.0	ND	32
Chrysene	1.5	ND	19
Dibenzo(a,h)anthracene	2.5	ND	ND
Fluoranthene	10	ND	29
Fluorene	10	ND	ND
Indeno(1,2,3-c,d)pyrene	2.5	ND	30
Naphthalene	50	ND	ND
Phenanthrene	10	ND	37
Pyrene	20	ND	ND

Results expressed as μg/L unless otherwise noted.

ND means none detected at or above the detection limit listed.

RECEIVED
NOV 21 1994
KOPPERS INDS., INC.
PORTLAND, OR

COFFEY LABORATORIES, INC.
12423 N.E. Whitaker Way • Portland, OR • 97230 • (503) 254-1794 • FAX (503) 254-1452

	Temp	PH.
WWT 1	43°	6.6
WWT 2	43°	6.5

11-21-94

	T	PH
WWTS	44	6.5

11-17-94

COFFEY LABORATORIES, INC.
CHAIN OF CUSTODY AGREEMENT

PORTLAND BRANCH
12423 NE Whitaker Way
Portland, OR 97230
(503) 254-1794 FAX: (503) 254-1452

Pumped 11/23

PENDLETON BRANCH
287 SE First
Pendleton, OR 97801
(503) 276-0385

Report Attention: Amos Kamerer
Company Name: Koppers Ind.
Address: 7540 NW St. Helens RD.
Portland OR 97210-3663
Phone: (503) 286-3681 FAX: (503) 285-2831

Report Instructions:

Project Name:
Project Number:
PO Number:

Sample Turnaround	Reporting Request
☐ Standard	☐ FAX (T-35)
☐ Priority (1.5x Std. Fee)	☐ Verbals (T-1157)
☒ Rush (2x Std. Fee)	☐ Extra Report Copy (T-1402) (Fees Associated)
☐ Emergency (3x Std. Fee)	Initials:

FOR LABORATORY USE ONLY Page ___ of ___
Job Number: WK 941124 K
Custabbr: Koppers ☐NEW
☐VISA ☐M/C Expires:
Card #:
Cash / Check: $ #:
Billing Code: 1 2 3 4
QC LEVEL: 1 2 3 4
FEDX BUS COURIER UPS LAB CLIENT MAIL

Sample ID	Loc.	ID	Collection Date	Time	Media	Analysis Requested		Test/Profile
WWT 1			11-21-94	10 AM		oil & Grease	NO	
WWT 2						"	NO	
WWT 5			11-17-94	3 PM		"	NO	
WWT 1						Phenols	.09	
WWT 2						"	.08	
WWT 5			11-17-94	3 PM		"	NO	

Sample Comments:

Sampled by: (Please Print)	Relinquished by: (Please Sign)	Date	Time	Received by: (Sign)	Date	Time
Brad Harwood	Brad Harwood	11-21-94	11:35 AM			
				LAB	11/21/94	1130

White Copy - Laboratory Copy *Yellow Copy - Client Copy*

SHADED AREAS FOR LABORATORY USE ONLY

SUBMISSION OF SAMPLES WITH TESTING REQUIREMENTS TO CLI WILL BE UNDERSTOOD TO BE AN AGREEMENT FOR SERVICES IN ACCORDANCE WITH THE CONDITIONS LISTED ON THE BACK OF THE CLIENT COPY.

Koppers015342

COFFEY LABORATORIES, INC.
CHAIN OF CUSTODY INSTRUCTIONS/CONDITIONS SHEET

INSTRUCTIONS

FOR LAB USE ONLY -	**All shaded areas are for laboratory use only. Please Do Not Write in These Areas.**
REPORT ATTENTION -	Name of the person who receives the laboratory report.
COMPANY NAME -	Name of the company or individual requesting the analysis.
REPORT ADDRESS -	Address of the company or individual requesting the analysis. (Address where report should be mailed)
REPORT INSTRUCTIONS -	A brief description of any special mail instructions, or address information pertaining to extra report copies.
PROJECT NAME -	Applies to customer project name. This data is provided at the customer's discretion.
PROJECT NUMBER -	Applies only to samples submitted by the customer. This data is provided at the customer's discretion.
FIELD ID -	A short description of the sample point (e.g., "Effluent from sand filter"). This description will appear on the report.
COLLECTION DATE -	The date on which the sample(s) was/were collected.
COLLECTION TIME -	The time at which the sample(s) was/were collected.
MEDIA -	This is a description of the sample media (e.g., drinking water, waste water, soil, etc.)
ANALYSIS REQUESTED -	Use one line for each analysis or group of analyses associated to a specific bottle.
SAMPLE COLLECTED BY -	The person who collected the sample(s) signs here.
RELINQUISHED BY -	The sampler signs this box when he/she gives the sample to someone else, and then fills in the date/time the sample left his/her possession.
RECEIVED BY -	The person who receives the sample(s) signs here and fills in the date/time received. The date and time should be same as "Relinquished by" unless the sample(s) was/were shipped.
JOB OR SAMPLE REMARKS -	General sample or job remarks.

CONDITIONS

PRICING AND CHARGES

Prices to be charged for work performed for CLIENT are those currently published in the Coffey Laboratories, Inc. (CLI) standard pricebook. CLIENT must notify CLI of price quotation at the time of the transfer of sample(s) to CLI. All submissions of samples with testing requirements to CLI will be understood to be an agreement for services. Any cancellation of testing requirements will result in charges being assessed on all testing completed prior to the notice of cancellation.

DELIVERY AND LIABILITY LIMITATIONS

CLI will analyze samples provided by CLIENT as requested by CLIENT in accordance with the procedures documented in the CLI Quality Assurance Plan (QAP). The maximum total liability assumed by CLI for work performed for CLIENT will in all cases be limited to the cost of the analysis. The specific format of the deliverable goods will be defined by CLIENT to CLI upon transfer of the samples to CLI. This warranty supersedes all other warranties.

CONFIDENTIALITY

CLI will use its best efforts to treat all information regarding work performed for CLIENT as proprietary and confidential to the maximum extent allowed by law. NO CLIENT information will be released without the written consent of the CLIENT billed for the work.

APPLICABLE LAW

Legal matters arising from work performed by CLI for CLIENT will be construed and interpreted in accordance with the laws for the state of Oregon.

Report Date: November 23, 1994
Job Number: 941121K
PO Number: Amos Kamerer
Project No: None Provided
Project Name: None Provided

Attention: Amos Kamerer
Koppers Industry
7540 NW St. Helens Rd.
Portland, OR 97210-3663

Analytical Narrative

The samples were received on 11/21/94 by Coffey Laboratories, Inc. (CLI) Sample Reception personnel under strict chain of custody protocol. The following information was provided at the time of sample reception:

Laboratory Sample ID	Field Identification	Matrix	Collection Date	Collection Time
941121K-1	WWT 1	Waste Water	11/21/94	1000
941121K-2	WWT 2	Waste Water	11/21/94	1000
941121K-3	WWT 5	Waste Water	11/17/94	1510

The recommended holding time for each batch of analyses was in accordance with the data quality objectives as specified in the CLI Quality Assurance Plan unless otherwise noted.

Acceptable precision and accuracy were achieved for all analyses associated with this work order as demonstrated by the recoveries of the quality control samples analyzed concurrently with each batch.

The data submitted in this report is for the sole and exclusive use of the above-named client. All samples associated with the work order will be retained a maximum of 15 days from the report date or until the maximum holding time expires. All results pertain only to samples submitted.

Thank you for allowing Coffey Laboratories to be of service to you. If you have questions or need further assistance, please do not hesitate to call our Customer Services Department.

Sincerely,

Rona A. Klueh
Technical Director

RAK/atc

RECEIVED
NOV 28 1994
KOPPERS INDS., INC.
PORTLAND OR

COFFEY LABORATORIES, INC.
12423 N.E. Whitaker Way • Portland, OR • 97230 • (503) 254-1794 • FAX (503) 254-1452

Analytical Data

Koppers Industry

Job Number: 941121K

Lab Sample ID: 941121K-1
Field ID: WWT 1
Date/Time: 11/21/94 1000
Matrix: Waste Water

EPA Category: Conventional Parameters

Parameter	Method	Detection Limit	Analytical Result	Units	Analysis Date	Analyst
Oil & Grease	EPA 413.1	3.	ND	mg/L	11/22/94	WKK
Total Phenols	EPA 420.1	0.05	0.09	mg/L	11/22/94	SVS

ND means none detected at or above the detection limit listed.

COFFEY LABORATORIES, INC.
12423 N.E. Whitaker Way • Portland, OR • 97230 • (503) 254-1794 • FAX (503) 254-1452

Analytical Data

Koppers Industry

Job Number: 941121K

Lab Sample ID: 941121K-2
Field ID: WWT 2
Date/Time: 11/21/94 1000
Matrix: Waste Water

EPA Category: Conventional Parameters

Parameter	Method	Detection Limit	Analytical Result	Units	Analysis Date	Analyst
Oil & Grease	EPA 413.1	3.	ND	mg/L	11/22/94	WKK
Total Phenols	EPA 420.1	0.05	0.08	mg/L	11/22/94	SVS

ND means none detected at or above the detection limit listed.

COFFEY LABORATORIES, INC.
12423 N.E. Whitaker Way • Portland, OR • 97230 • (503) 254-1794 • FAX (503) 254-1452

Analytical Data

Koppers Industry

Job Number: 941121K

Lab Sample ID: 941121K-3
Field ID: WWT 5
Date/Time: 11/17/94 1510
Matrix: Waste Water

EPA Category: Conventional Parameters

Parameter	Method	Detection Limit	Analytical Result	Units	Analysis Date	Analyst
Oil & Grease	EPA 413.1	3.	ND	mg/L	11/22/94	WKK
Total Phenols	EPA 420.1	0.05	ND	mg/L	11/22/94	SVS

ND means none detected at or above the detection limit listed.

COFFEY LABORATORIES, INC.
12423 N.E. Whitaker Way • Portland, OR • 97230 • (503) 254-1794 • FAX (503) 254-1452

	T	PH
T 5	48	6.5
T 2	48	6.5
T 1	48	6.7

11-29-94

COFFEY LABORATORIES, INC.
CHAIN OF CUSTODY AGREEMENT

PORTLAND BRANCH
12423 NE Whitaker Way
Portland, OR 97230
(503) 254-1794 FAX: (503) 254-1452

PENDLETON BRANCH
287 SE First
Pendleton, OR 97801
(503) 276-0385

pumped 11/29

Report Attention: Amos Kamerer
Company Name: Koppers Ind Inc.
Address: 7540 NW St. Helens RD.
Portland OR 97210-3663
Phone: (503) 286-3681 FAX: (503) 285-2831

Report Instructions:

Project Name:
Project Number:
PO Number:

Sample Turnaround	Reporting Request
☐ Standard	☐ FAX (T-35)
☐ Priority (1.5x Std. Fee)	☐ Verbals (T-1157)
☑ Rush (2x Std. Fee)	☐ Extra Report Copy (T-1402) (Fees Associated)
☐ Emergency (3x Std. Fee)	Initials:

FOR LABORATORY USE ONLY Page ___ of ___
Job Number: Lab 941129-AR3
Custabbr: Koppers ☐NEW
☐VISA ☐M/C Expires:
Card #:
Cash / Check: $ #:
Billing Code: 1 2 3 4
QC LEVEL: 1 2 3 4
FEDX BUS COURIER UPS LAB CLIENT MAIL

Sample ID	Loc.	ID	Collection Date	Collection Time	Media	Analysis Requested	Test/Profile
WWT #1			11-28-94	12 00 pm		Oil + Grease	
WWT #2			11-28-94	12 00 pm		"	
WWT #5			11-28-94	12 00 pm		"	
WWT #1			11-28-94	12 00 pm		Phenols .06	
WWT #2			11-28-94	12 00 pm		" .07	
WWT #5			11-28-94	12 00 pm		" .10	

Sample Comments:

Sampled by: (Please Print)	Relinquished by: (Please Sign)	Date	Time	Received by: (Sign)	Date	Time
Brad Harwood	[signature]	11/28/94	3:57 PM			
				LAB [signature]	11/28/94	1600

White Copy - Laboratory Copy *Yellow Copy - Client Copy*

SHADED AREAS FOR LABORATORY USE ONLY

SUBMISSION OF SAMPLES WITH TESTING REQUIREMENTS TO CLI WILL BE UNDERSTOOD TO BE AN AGREEMENT FOR SERVICES IN ACCORDANCE WITH THE CONDITIONS LISTED ON THE BACK OF THE CLIENT COPY.

Koppers015349

COFFEY LABORATORIES, INC.
CHAIN OF CUSTODY INSTRUCTIONS/CONDITIONS SHEET

INSTRUCTIONS

FOR LAB USE ONLY -	**All shaded areas are for laboratory use only. Please Do Not Write in These Areas.**
REPORT ATTENTION -	Name of the person who receives the laboratory report.
COMPANY NAME -	Name of the company or individual requesting the analysis.
REPORT ADDRESS -	Address of the company or individual requesting the analysis. (Address where report should be mailed)
REPORT INSTRUCTIONS -	A brief description of any special mail instructions, or address information pertaining to extra report copies.
PROJECT NAME -	Applies to customer project name. This data is provided at the customer's discretion.
PROJECT NUMBER -	Applies only to samples submitted by the customer. This data is provided at the customer's discretion.
FIELD ID -	A short description of the sample point (e.g., "Effluent from sand filter"). This description will appear on the report.
COLLECTION DATE -	The date on which the sample(s) was/were collected.
COLLECTION TIME -	The time at which the sample(s) was/were collected.
MEDIA -	This is a description of the sample media (e.g., drinking water, waste water, soil, etc.)
ANALYSIS REQUESTED -	Use one line for each analysis or group of analyses associated to a specific bottle.
SAMPLE COLLECTED BY -	The person who collected the sample(s) signs here.
RELINQUISHED BY -	The sampler signs this box when he/she gives the sample to someone else, and then fills in the date/time the sample left his/her possession.
RECEIVED BY -	The person who receives the sample(s) signs here and fills in the date/time received. The date and time should be same as "Relinquished by" unless the sample(s) was/were shipped.
JOB OR SAMPLE REMARKS -	General sample or job remarks.

CONDITIONS

PRICING AND CHARGES

Prices to be charged for work performed for CLIENT are those currently published in the Coffey Laboratories, Inc. (CLI) standard pricebook. CLIENT must notify CLI of price quotation at the time of the transfer of sample(s) to CLI. All submissions of samples with testing requirements to CLI will be understood to be an agreement for services. Any cancellation of testing requirements will result in charges being assessed on all testing completed prior to the notice of cancellation.

DELIVERY AND LIABILITY LIMITATIONS

CLI will analyze samples provided by CLIENT as requested by CLIENT in accordance with the procedures documented in the CLI Quality Assurance Plan (QAP). The maximum total liability assumed by CLI for work performed for CLIENT will in all cases be limited to the cost of the analysis. The specific format of the deliverable goods will be defined by CLIENT to CLI upon transfer of the samples to CLI. This warranty supersedes all other warranties.

CONFIDENTIALITY

CLI will use its best efforts to treat all information regarding work performed for CLIENT as proprietary and confidential to the maximum extent allowed by law. NO CLIENT information will be released without the written consent of the CLIENT billed for the work.

APPLICABLE LAW

Legal matters arising from work performed by CLI for CLIENT will be construed and interpreted in accordance with the laws for the state of Oregon.

Report Date: November 30, 1994
Job Number: 941128AR
PO Number: Amos Kamerer
Project No: None Provided
Project Name: None Provided

Attention: Amos Kamerer
Koppers Industry
7540 NW St. Helens Rd.
Portland, OR 97210-3663

Analytical Narrative

The samples were received on 11/28/94 by Coffey Laboratories, Inc. (CLI) Sample Reception personnel under strict chain of custody protocol. The following information was provided at the time of sample reception:

Laboratory Sample ID	Field Identification	Matrix	Collection Date	Collection Time
941128AR-1	WWT 1	Waste Water	11/28/94	1200
941128AR-2	WWT 2	Waste Water	11/28/94	1200
941128AR-3	WWT 5	Waste Water	11/28/94	1200

The recommended holding time for each batch of analyses was in accordance with the data quality objectives as specified in the CLI Quality Assurance Plan unless otherwise noted.

Acceptable precision and accuracy were achieved for all analyses associated with this work order as demonstrated by the recoveries of the quality control samples analyzed concurrently with each batch.

The data submitted in this report is for the sole and exclusive use of the above-named client. All samples associated with the work order will be retained a maximum of 15 days from the report date or until the maximum holding time expires. All results pertain only to samples submitted.

Thank you for allowing Coffey Laboratories to be of service to you. If you have questions or need further assistance, please do not hesitate to call our Customer Services Department.

Sincerely,

Rona A. Klueh
Technical Director

RAK/atc

COFFEY LABORATORIES, INC.
12423 N.E. Whitaker Way • Portland, OR • 97230 • (503) 254-1794 • FAX (503) 254-1452

RECEIVED

DEC - 5 1994

KOPPERS INDS., INC.
PORTLAND, OR

Analytical Data

Koppers Industry

Job Number: 941128AR

Lab Sample ID: 941128AR-1
Field ID: WWT 1
Date/Time: 11/28/94 1200
Matrix: Waste Water

EPA Category: Conventional Parameters

Parameter	Method	Detection Limit	Analytical Result	Units	Analysis Date	Analyst
Oil & Grease	EPA 413.1	3.	ND	mg/L	11/30/94	WKK
Total Phenols	EPA 420.1	0.05	0.06	mg/L	11/29/94	SVS

ND means none detected at or above the detection limit listed.

COFFEY LABORATORIES, INC.
12423 N.E. Whitaker Way • Portland, OR • 97230 • (503) 254-1794 • FAX (503) 254-1452

RECEIVED

DEC - 5 1994

KOPPERS INDS., INC.
PORTLAND, OR

Analytical Data

Koppers Industry

Job Number: 941128AR

Lab Sample ID: 941128AR-2
Field ID: WWT 2
Date/Time: 11/28/94 1200
Matrix: Waste Water

EPA Category: Conventional Parameters

Parameter	Method	Detection Limit	Analytical Result	Units	Analysis Date	Analyst
Oil & Grease	EPA 413.1	3.	ND	mg/L	11/30/94	WKK
Total Phenols	EPA 420.1	0.05	0.07	mg/L	11/29/94	SVS

ND means none detected at or above the detection limit listed.

COFFEY LABORATORIES, INC.
12423 N.E. Whitaker Way • Portland, OR • 97230 • (503) 254-1794 • FAX (503) 254-1452

RECEIVED

DEC - 5 1994

KOPPERS INDS., INC.
PORTLAND, OR

Analytical Data

Koppers Industry

Job Number: 941128AR

Lab Sample ID: 941128AR-3
Field ID: WWT 5
Date/Time: 11/28/94 1200
Matrix: Waste Water

EPA Category: Conventional Parameters

Parameter	Method	Detection Limit	Analytical Result	Units	Analysis Date	Analyst
Oil & Grease	EPA 413.1	3.	4.	mg/L	11/30/94	WKK
Total Phenols	EPA 420.1	0.05	0.10	mg/L	11/29/94	SVS

COFFEY LABORATORIES, INC.
12423 N.E. Whitaker Way • Portland, OR • 97230 • (503) 254-1794 • FAX (503) 254-1452

RECEIVED

DEC - 5 1994

KOPPERS INDS., INC.
PORTLAND, OR

PERMITTEE NAME/ADDRESS (Include Facility Name/Location if different)
NAME KOPPERS INDUSTRIES, INC.
ADDRESS 7540 NW ST HELENS ROAD
PORTLAND, OR 97210

FACILITY NORTHWEST PLANT DEQ #47430
LOCATION MULTNOMAH COUNTY

NATIONAL POLLUTANT DISCHARGE ELIMINATION SYSTEM (NPDES)
DISCHARGE MONITORING REPORT (DMR)

PERMIT NUMBER (2-16)	DISCHARGE NUMBER (17-19)
101003	0010

3077-J
47430

Form Approved.
OMB No. 2040-0004.
Approval expires 6-30-91.

MONITORING PERIOD	YEAR	MO	DAY		YEAR	MO	DAY
FROM	94	10	01	TO	94	10	31
	(20-21)	(22-23)	(24-25)		(26-27)	(28-29)	(30-31)

NOTE: Read instructions before completing this form.

PARAMETER (32-37)		(3 Card Only) QUANTITY OR LOADING (46-53) AVERAGE	(54-61) MAXIMUM	UNITS	(4 Card Only) QUALITY OR CONCENTRATION (38-45) MINIMUM	(46-53) AVERAGE	(54-61) MAXIMUM	UNITS	NO. EX (62-63)	FREQUENCY OF ANALYSIS (64-68)	SAMPLE TYPE (69-70)
FLOW	SAMPLE MEASUREMENT	8710		GPD					N/A	6/31	EST.
	PERMIT REQUIREMENT	N/A	N/A								
TEMPERATURE	SAMPLE MEASUREMENT				52	55	58	°F	0	6/31	GRAB
	PERMIT REQUIREMENT						110				
pH	SAMPLE MEASUREMENT				6.5	6.7	6.8	SU	0	6/31	GRAB
	PERMIT REQUIREMENT				6.0		9.0				
OIL & GREASES	SAMPLE MEASUREMENT				N.D.	N.D.	N.D.	mg/L	0	6/31	GRAB
	PERMIT REQUIREMENT				N/A	10	15				
PHENOLS	SAMPLE MEASUREMENT				N.D.	N.D.	N.D.	mg/L	0	6/31	GRAB
	PERMIT REQUIREMENT				N/A	.5	.7				
	SAMPLE MEASUREMENT										
	PERMIT REQUIREMENT										
	SAMPLE MEASUREMENT										
	PERMIT REQUIREMENT										

NAME/TITLE PRINCIPAL EXECUTIVE OFFICER: J. R. BATCHELDER, VP.
TYPED OR PRINTED

I CERTIFY UNDER PENALTY OF LAW THAT I HAVE PERSONALLY EXAMINED AND AM FAMILIAR WITH THE INFORMATION SUBMITTED HEREIN, AND BASED ON MY INQUIRY OF THOSE INDIVIDUALS IMMEDIATELY RESPONSIBLE FOR OBTAINING THE INFORMATION, I BELIEVE THE SUBMITTED INFORMATION IS TRUE, ACCURATE AND COMPLETE. I AM AWARE THAT THERE ARE SIGNIFICANT PENALTIES FOR SUBMITTING FALSE INFORMATION, INCLUDING THE POSSIBILITY OF FINE AND IMPRISONMENT. SEE 18 USC § 1001 AND 33 USC § 1319. (Penalties under these statutes may include fines up to $10,000 and/or maximum imprisonment of between 6 months and 5 years.)

A. S. KAMERER, PLANT MGR
SIGNATURE OF PRINCIPAL EXECUTIVE OFFICER OR AUTHORIZED AGENT

TELEPHONE AREA CODE	NUMBER	DATE YEAR	MO	DAY
503	286-3681	94	11	02

COMMENT AND EXPLANATION OF ANY VIOLATIONS (Reference all attachments here)

OUR 4TH QUARTER PAH TEST RESULTS ARE ATTACHED.

CC: W. E. SWEARINGEN

Koppers015359

KOPPERS INDUSTRIES

Koppers Industries, Inc.
7540 N.W. Saint Helens Road
Portland, OR 97210-3663

Telephone: (503) 286-3681
FAX: (503) 285-2831

Oct. 27, 1994

To: Amos S. Kamerer

From: T.J. Turner

On 10/27/94 at 8:00 a.m. I entered the plant and inspected the lower tank farm to find 12 to 18 inches of standing water. All four of our water collection tanks are full and overflowing. For the last 24 hours we have had a record rainfall of over 4.2 inches and the rain is still falling.

If this process continues without change, we will suffer sever economic losses due to the rising water table in the lower tank farm. These damages to include loss of pumps, motors and related systems.

It is now after 10:00 a.m., weather conditions are unchanged. The water table in the lower tank farm is still rising. It is now cresting the top of the sump and encroaching on the pumping systems.

If the water reaches these pumps we will lose the ability to pump water all together, thus endangering all of our systems in the lower tank farm. Effectively shutting down the plant entirely.

The past performance of the lab tests on our waste water tanks have shown no excess amount of oils and greases or phenols. No results in excess of our NPDES permits. Based on these facts as well as the fact that this water appears to be no more than collected rain water and we now face imminent severe economic losses I have decided to turn back on the sump pumps as a last resort. I do this after exhausting all other courses of action.

I have assigned a man to monitor the situation hourly until we are out of danger.

Respectfully,

T.J. Turner
General Foreman

NOTES

1) Direct discharge ended on 11/2/94 at noon

2) During this period we tested A 4 tanks and the results were "None Detected" for both the Phenols and the Oil & Greases, thus I do not feel that the above direct discharge would have violated our permit levels.

11/2/94

MONTHLY NPDES DISCHARGE REPORT WORK SHEET

MONTH October 10 YEAR 94

FLOW

	WWT-1	WWT-2	WWT-3	WWT-4	WWT-5	WWT-6	TOTAL	#DAYS IN MONTH	G.P.D. DISCHARGE
GLS. PER TANK	45,000	45,000	45,000	45,000	20,000	20,000			
# OF PUMPINGS	1	1	2	2	—	—			
GALS.PUMPED	45,000	45,000	90,000	90,000			270,000	31	8710

SAMPLE CONCENTRATION LEVELS

																					AVG.	MIN.	MAX.	UNIT
TEMPERATURES	58	56	52	52	56	55															55	52	58	OF
PH	6.7	6.8	6.7	6.5	6.7	6.7															6.7	6.5	6.8	SU
OIL & GREASES	ND	ND	ND	ND	ND	ND															ND	ND	ND	MG/L
PHENOLS	ND	ND	ND	ND	ND	ND															ND	ND	ND	MG/L

QUARTERLY PAH TESTING

DATE SAMPLE TAKEN 10 \ 21 \ 94 RESULTS 24.1

(MUST BE LESS THAN 1000)

Koppers015361

T-4

58° Temp

6.7 PH

pumped 10/21

COFFEY LABORATORIES, INC.
CHAIN OF CUSTODY AGREEMENT

PORTLAND BRANCH
12423 NE Whitaker Way
Portland, OR 97230
(503) 254-1794 FAX: (503) 254-1452

PENDLETON BRANCH
287 SE First
Pendleton, OR 97801
(503) 276-0385

Report Attention:
Company Name: Koppers Co. Inc.
Address: 1740 NW St Helens Rd.
Portland
Phone: ( ) 286-8136 FAX: ( )

Report Instructions:

Project Name:
Project Number:
PO Number:

Sample Turnaround	Reporting Request
☐ Standard	☐ FAX (T-35)
☐ Priority (1.5x Std. Fee)	☐ Verbals (T-1157)
☐ Rush (2x Std. Fee)	☐ Extra Report Copy (T-1402) (Fees Associated)
☐ Emergency (3x Std. Fee)	Initials:

FOR LABORATORY USE ONLY Page 1 of 1
Job Number: NC94-1014-H
Custabbr: KOPPERS ☐NEW
☐VISA ☐M/C Expires:
Card #:
Cash / Check: $ #:
Billing Code: 1 2 3 4
QC LEVEL: 1 2 3 4
FEDX BUS COURIER UPS LAB (CLIENT) MAIL

Sample ID	Loc.	ID	Collection Date	Collection Time	Media	Analysis Requested	Test/Profile
W-W T-4			10-14-94	8:30	WW	Oil / Grease / Phenol	

Sample Comments:

Sampled by: (Please Print)	Relinquished by: (Please Sign)	Date	Time	Received by: (Sign)	Date	Time
	Robert A. Beckler	10-14-94	9:40			
				LAB [illegible]	10/14	0940

White Copy - Laboratory Copy *Yellow Copy - Client Copy*

SHADED AREAS FOR LABORATORY USE ONLY

SUBMISSION OF SAMPLES WITH TESTING REQUIREMENTS TO CLI WILL BE UNDERSTOOD TO BE AN AGREEMENT FOR SERVICES IN ACCORDANCE WITH THE CONDITIONS LISTED ON THE BACK OF THE CLIENT COPY.

Koppers015363

COFFEY LABORATORIES, INC.

CHAIN OF CUSTODY INSTRUCTIONS/CONDITIONS SHEET

INSTRUCTIONS

FOR LAB USE ONLY -	**All shaded areas are for laboratory use only. Please Do Not Write in These Areas.**
REPORT ATTENTION -	Name of the person who receives the laboratory report.
COMPANY NAME -	Name of the company or individual requesting the analysis.
REPORT ADDRESS -	Address of the company or individual requesting the analysis. (Address where report should be mailed)
REPORT INSTRUCTIONS -	A brief description of any special mail instructions, or address information pertaining to extra report copies.
PROJECT NAME -	Applies to customer project name. This data is provided at the customer's discretion.
PROJECT NUMBER -	Applies only to samples submitted by the customer. This data is provided at the customer's discretion.
FIELD ID -	A short description of the sample point (e.g., "Effluent from sand filter"). This description will appear on the report.
COLLECTION DATE -	The date on which the sample(s) was/were collected.
COLLECTION TIME -	The time at which the sample(s) was/were collected.
MEDIA -	This is a description of the sample media (e.g., drinking water, waste water, soil, etc.)
ANALYSIS REQUESTED -	Use one line for each analysis or group of analyses associated to a specific bottle.
SAMPLE COLLECTED BY -	The person who collected the sample(s) signs here.
RELINQUISHED BY -	The sampler signs this box when he/she gives the sample to someone else, and then fills in the date/time the sample left his/her possession.
RECEIVED BY -	The person who receives the sample(s) signs here and fills in the date/time received. The date and time should be same as "Relinquished by" unless the sample(s) was/were shipped.
JOB OR SAMPLE REMARKS -	General sample or job remarks.

CONDITIONS

PRICING AND CHARGES -
Prices to be charged for work performed for CLIENT are those currently published in the Coffey Laboratories, Inc. (CLI) standard pricebook. CLIENT must notify CLI of price quotation at the time of the transfer of sample(s) to CLI. All submissions of samples with testing requirements to CLI will be understood to be an agreement for services. Any cancellation of testing requirements will result in charges being assessed on all testing completed prior to the notice of cancellation.

DELIVERY AND LIABILITY LIMITATIONS
CLI will analyze samples provided by CLIENT as requested by CLIENT in accordance with the procedures documented in the CLI Quality Assurance Plan (QAP). The maximum total liability assumed by CLI for work performed for CLIENT will in all cases be limited to the cost of the analysis. The specific format of the deliverable goods will be defined by CLIENT to CLI upon transfer of the samples to CLI. This warranty supersedes all other warranties.

CONFIDENTIALITY
CLI will use its best efforts to treat all information regarding work performed for CLIENT as proprietary and confidential to the maximum extent allowed by law. NO CLIENT information will be released without the written consent of the CLIENT billed for the work.

APPLICABLE LAW
Legal matters arising from work performed by CLI for CLIENT will be construed and interpreted in accordance with the laws for the state of Oregon.

Report Date: October 20, 1994
Job Number: 941014H
PO Number: Verbal - John
Project No: None Provided
Project Name: None Provided

Attention: Amos Kamerer
Koppers Industry
7540 NW St. Helens Rd.
Portland, OR 97210-3663

Analytical Narrative

The sample was received on 10/14/94 by Coffey Laboratories, Inc. (CLI) Sample Reception personnel under strict chain of custody protocol. The following information was provided at the time of sample reception:

Laboratory Sample ID	Field Identification	Matrix	Collection Date	Collection Time
941014H-1	WW T-4	Waste Water	10/14/94	0830

The recommended holding time for each batch of analyses was in accordance with the data quality objectives as specified in the CLI Quality Assurance Plan unless otherwise noted.

Acceptable precision and accuracy were achieved for all analyses associated with this work order as demonstrated by the recoveries of the quality control samples analyzed concurrently with each batch.

The data submitted in this report is for the sole and exclusive use of the above-named client. All samples associated with the work order will be retained a maximum of 15 days from the report date or until the maximum holding time expires. All results pertain only to samples submitted.

Thank you for allowing Coffey Laboratories to be of service to you. If you have questions or need further assistance, please do not hesitate to call our Customer Services Department.

Sincerely,

Rona A. Klueh
Technical Director

RAK/atc

COFFEY LABORATORIES, INC.
12423 N.E. Whitaker Way • Portland, OR • 97230 • (503) 254-1794 • FAX (503) 254-1452

RECEIVED
OCT 26 1994
KOPPERS INDS., INC.
PORTLAND, OR

Analytical Data

Koppers Industry

Job Number: 941014H

Lab Sample ID: 941014H-1
Field ID: WW T-4
Date/Time: 10/14/94 0830
Matrix: Waste Water

EPA Category: Conventional Parameters

Parameter	Method	Detection Limit	Analytical Result	Units	Analysis Date	Analyst
Oil & Grease	EPA 413.1	3.	ND	mg/L	10/19/94	WKK
Total Phenols	EPA 420.1	0.05	ND	mg/L	10/17/94	RGR

ND means none detected at or above the detection limit listed.

COFFEY LABORATORIES, INC.
12423 N.E. Whitaker Way • Portland, OR • 97230 • (503) 254-1794 • FAX (503) 254-1452

RECEIVED

OCT 28 1994

KOPPERS INDS., INC.
PORTLAND, OR

T-3

56° TEMP

6.8 P.H.

Pumped 10/27

COFFEY LABORATORIES, INC.
CHAIN OF CUSTODY AGREEMENT

PORTLAND BRANCH
12423 NE Whitaker Way
Portland, OR 97230
(503) 254-1794 FAX: (503) 254-1452

PENDLETON BRANCH
287 SE First
Pendleton, OR 97801
(503) 276-0385

Report Attention: AMOS KAMERER
Company Name: KOPPERS IND. INC.
Address: 7540 NW. ST HELENS RD
PORTLAND ORE 97210-3663
Phone: (503) 286 3681 FAX: (503) 285 2831

Report Instructions:

Project Name:
Project Number:
PO Number:

Sample Turnaround
- ☐ Standard
- ☒ Priority (1.5x Std. Fee)
- ☐ Rush (2x Std. Fee)
- ☐ Emergency (3x Std. Fee)

Reporting Request
- ☐ FAX (T-35)
- ☐ Verbals (T-1157)
- ☐ Extra Report Copy (T-1402) (Fees Associated)

Initials:

FOR LABORATORY USE ONLY Page ___ of ___
Job Number: NG94 1021-TC
Custabbr: KOPPERS ☐NEW
☐VISA ☐M/C Expires:
Card #:
Cash / Check: $ #:
Billing Code: 1 2 3 4
QC LEVEL: 1 2 3 4
FEDX BUS COURIER UPS LAB CLIENT MAIL

Sample ID	Loc.	ID	Collection Date	Collection Time	Media	Analysis Requested	Test/Profile
WWT 3			10-21	3:30PM		OIL & GREASES	ND
WWT 3			|	|		PHENOLS	ND
WWT 3						PAH	
						BENZO A,H 1.77	
						" FLUORANTHENE 6.6	
						" K 1.85	

Sample Comments:

Sampled by: (Please Print)	Relinquished by: (Please Sign)	Date	Time	Received by: (Sign)	Date	Time
TED HARE	Edward Y Hare	10/21/94	4:25			
				LAB [signature]	10/21	1625

White Copy - Laboratory Copy *Yellow Copy - Client Copy*

SHADED AREAS FOR LABORATORY USE ONLY

SUBMISSION OF SAMPLES WITH TESTING REQUIREMENTS TO CLI WILL BE UNDERSTOOD TO BE AN AGREEMENT FOR SERVICES IN ACCORDANCE WITH THE CONDITIONS LISTED ON THE BACK OF THE CLIENT COPY.

Koppers015370

COFFEY LABORATORIES, INC.
CHAIN OF CUSTODY INSTRUCTIONS/CONDITIONS SHEET

INSTRUCTIONS

FOR LAB USE ONLY -	**All shaded areas are for laboratory use only. Please Do Not Write in These Areas.**
REPORT ATTENTION -	Name of the person who receives the laboratory report.
COMPANY NAME -	Name of the company or individual requesting the analysis.
REPORT ADDRESS -	Address of the company or individual requesting the analysis. (Address where report should be mailed)
REPORT INSTRUCTIONS -	A brief description of any special mail instructions, or address information pertaining to extra report copies.
PROJECT NAME -	Applies to customer project name. This data is provided at the customer's discretion.
PROJECT NUMBER -	Applies only to samples submitted by the customer. This data is provided at the customer's discretion.
FIELD ID -	A short description of the sample point (e.g., "Effluent from sand filter"). This description will appear on the report.
COLLECTION DATE -	The date on which the sample(s) was/were collected.
COLLECTION TIME -	The time at which the sample(s) was/were collected.
MEDIA -	This is a description of the sample media (e.g., drinking water, waste water, soil, etc.)
ANALYSIS REQUESTED -	Use one line for each analysis or group of analyses associated to a specific bottle.
SAMPLE COLLECTED BY -	The person who collected the sample(s) signs here.
RELINQUISHED BY -	The sampler signs this box when he/she gives the sample to someone else, and then fills in the date/time the sample left his/her possession.
RECEIVED BY -	The person who receives the sample(s) signs here and fills in the date/time received. The date and time should be same as "Relinquished by" unless the sample(s) was/were shipped.
JOB OR SAMPLE REMARKS -	General sample or job remarks.

CONDITIONS

PRICING AND CHARGES

Prices to be charged for work performed for CLIENT are those currently published in the Coffey Laboratories, Inc. (CLI) standard pricebook. CLIENT must notify CLI of price quotation at the time of the transfer of sample(s) to CLI. All submissions of samples with testing requirements to CLI will be understood to be an agreement for services. Any cancellation of testing requirements will result in charges being assessed on all testing completed prior to the notice of cancellation.

DELIVERY AND LIABILITY LIMITATIONS

CLI will analyze samples provided by CLIENT as requested by CLIENT in accordance with the procedures documented in the CLI Quality Assurance Plan (QAP). The maximum total liability assumed by CLI for work performed for CLIENT will in all cases be limited to the cost of the analysis. The specific format of the deliverable goods will be defined by CLIENT to CLI upon transfer of the samples to CLI. This warranty supersedes all other warranties.

CONFIDENTIALITY

CLI will use its best efforts to treat all information regarding work performed for CLIENT as proprietary and confidential to the maximum extent allowed by law. NO CLIENT information will be released without the written consent of the CLIENT billed for the work.

APPLICABLE LAW

Legal matters arising from work performed by CLI for CLIENT will be construed and interpreted in accordance with the laws for the state of Oregon.

Report Date: October 26, 1994
Job Number: 941021BE
PO Number: Amos Kamerer
Project No: None Provided
Project Name: None Provided

Attention: Amos Kamerer
Koppers Industry
7540 NW St. Helens Rd.
Portland, OR 97210-3663

Analytical Narrative

The sample was received on 10/21/94 by Coffey Laboratories, Inc. (CLI) Sample Reception personnel under strict chain of custody protocol. The following information was provided at the time of sample reception:

Laboratory Sample ID	Field Identification	Matrix	Collection Date	Collection Time
941021BE-1	WWT3	Waste Water	10/21/94	1530

The recommended holding time for each batch of analyses was in accordance with the data quality objectives as specified in the CLI Quality Assurance Plan unless otherwise noted.

Acceptable precision and accuracy were achieved for all analyses associated with this work order as demonstrated by the recoveries of the quality control samples analyzed concurrently with each batch.

The data submitted in this report is for the sole and exclusive use of the above-named client. All samples associated with the work order will be retained a maximum of 15 days from the report date or until the maximum holding time expires. All results pertain only to samples submitted.

Thank you for allowing Coffey Laboratories to be of service to you. If you have questions or need further assistance, please do not hesitate to call our Customer Services Department.

Sincerely,

Rona A. Klueh
Technical Director

RAK/atc

COFFEY LABORATORIES, INC.
12423 N.E. Whitaker Way • Portland, OR • 97230 • (503) 254-1794 • FAX (503) 254-1452

Analytical Data

Koppers Industry

Job Number: 941021BE

Lab Sample ID: 941021BE-1
Field ID: WWT3
Date/Time: 10/21/94 1530
Matrix: Waste Water

EPA Category: Conventional Parameters

Parameter	Method	Detection Limit	Analytical Result	Units	Analysis Date	Analyst
Oil & Grease	EPA 413.1	3.	ND	mg/L	10/24/94	JAG
Total Phenols	EPA 420.1	0.05	ND	mg/L	10/24/94	SVS

ND means none detected at or above the detection limit listed.

COFFEY LABORATORIES, INC.
12423 N.E. Whitaker Way • Portland, OR • 97230 • (503) 254-1794 • FAX (503) 254-1452

Analytical Data

Koppers Industry

Job Number: 941021BE

Lab Sample ID: 941021BE-1
Field ID: WWT3
Date/Time: 10/21/94 1530
Matrix: Waste Water

Analysis Performed: Polynuclear Aromatic Hydrocarbons in water, by EPA Method 8310, HPLC.

Compound	Detection Limit	Laboratory Blank	Sample Results
Acenaphthene	15	ND	ND
Acenaphthylene	15	ND	ND
Anthracene	5.0	ND	ND
Benzo(a)anthracene	0.3	ND	1.8
Benzo(b)fluoranthene	0.4	ND	5.6
Benzo(k)fluoranthene	0.3	ND	1.8
Benzo(g,h,i)perylene	0.5	ND	2.6
Benzo(a)pyrene	0.4	ND	1.9
Chrysene	1.0	ND	1.5
Dibenzo(a,h)anthracene	0.5	ND	ND
Fluoranthene	0.8	ND	0.9
Fluorene	6.0	ND	ND
Indeno(1,2,3-c,d)pyrene	0.75	ND	1.0
Naphthalene	15	ND	ND
Phenanthrene	5.0	ND	ND
Pyrene	5.0	ND	7.0
			24

Results expressed as μg/L unless otherwise noted.

ND means none detected at or above the detection limit listed.

COFFEY LABORATORIES, INC.
12423 N.E. Whitaker Way • Portland, OR • 97230 • (503) 254-1794 • FAX (503) 254-1452

10-28-94

T-3

TEMP 52

PH 6.7

T-4

TEMP 52

PH 6.5

Pumped 10/31

T- 2 10/28/94

TEMP 56

PH 6.7

T-1

Temp 55

PH 6.7

COFFEY LABORATORIES, INC.
CHAIN OF CUSTODY AGREEMENT

PORTLAND BRANCH
12423 NE Whitaker Way
Portland, OR 97230
(503) 254-1794 FAX: (503) 254-1452

PENDLETON BRANCH
287 SE First
Pendleton, OR 97801
(503) 276-0385

Report Attention: AMOS KAMFREE
Company Name: KOPPERS INDUSTRIES INC
Address: 7540 NW ST. HELENS ROAD
PORTLAND OREGON 97210-3663
Phone: (503) 286 3681 FAX: (503) 285-2831

Report Instructions:

Project Name:
Project Number:
PO Number:

Sample Turnaround
- ☐ Standard
- ☐ Priority (1.5x Std. Fee)
- ☐ Rush (2x Std. Fee)
- ☒ Emergency (3x Std. Fee)

Reporting Request
- ☐ FAX (T-35)
- ☐ Verbals (T-1157)
- ☐ Extra Report Copy (T-1402) (Fees Associated)

Initials:

FOR LABORATORY USE ONLY Page ___ of ___
Job Number: WG94/028-J
Custabbr: ☐NEW
☐VISA ☐M/C Expires:
Card #:
Cash / Check $ #:
Billing Code: 1 2 3 4
QC LEVEL: 1 2 3 4
FEDX BUS COURIER UPS LAB (CLIENT) MAIL

Sample ID	Loc.	ID	Collection Date	Collection Time	Media	Analysis Requested	Test/Profile
WWT 1			10-28-94	9:30AM		OIL & GREASES	
WWT 2							
WWT 3							
WWT 4							
WWT 1						PHENOLS	
WWT 2							
WWT 3							
WWT 4							

Sample Comments:

Sampled by: (Please Print)	Relinquished by: (Please Sign)	Date	Time	Received by: (Sign)	Date	Time
TED HARE	Ted Hare	10/28/94	10:40			
				LAB Crystal Burkholder	10/28/94	1040

White Copy - Laboratory Copy Yellow Copy - Client Copy

SHADED AREAS FOR LABORATORY USE ONLY

SUBMISSION OF SAMPLES WITH TESTING REQUIREMENTS TO CLI WILL BE UNDERSTOOD TO BE AN AGREEMENT FOR SERVICES IN ACCORDANCE WITH THE CONDITIONS LISTED ON THE BACK OF THE CLIENT COPY.

Koppers015377

COFFEY LABORATORIES, INC.

CHAIN OF CUSTODY INSTRUCTIONS/CONDITIONS SHEET

INSTRUCTIONS

FOR LAB USE ONLY - All shaded areas are for laboratory use only. **Please Do Not Write in These Areas.**

REPORT ATTENTION - Name of the person who receives the laboratory report.

COMPANY NAME - Name of the company or individual requesting the analysis.

REPORT ADDRESS - Address of the company or individual requesting the analysis. (Address where report should be mailed)

REPORT INSTRUCTIONS - A brief description of any special mail instructions, or address information pertaining to extra report copies.

PROJECT NAME - Applies to customer project name. This data is provided at the customer's discretion.

PROJECT NUMBER - Applies only to samples submitted by the customer. This data is provided at the customer's discretion.

FIELD ID - A short description of the sample point (e.g., "Effluent from sand filter"). This description will appear on the report.

COLLECTION DATE - The date on which the sample(s) was/were collected.

COLLECTION TIME - The time at which the sample(s) was/were collected.

MEDIA - This is a description of the sample media (e.g., drinking water, waste water, soil, etc.)

ANALYSIS REQUESTED - Use one line for each analysis or group of analyses associated to a specific bottle.

SAMPLE COLLECTED BY - The person who collected the sample(s) signs here.

RELINQUISHED BY - The sampler signs this box when he/she gives the sample to someone else, and then fills in the date/time the sample left his/her possession.

RECEIVED BY - The person who receives the sample(s) signs here and fills in the date/time received. The date and time should be same as "Relinquished by" unless the sample(s) was/were shipped.

JOB OR SAMPLE REMARKS - General sample or job remarks.

CONDITIONS

PRICING AND CHARGES

Prices to be charged for work performed for CLIENT are those currently published in the Coffey Laboratories, Inc. (CLI) standard pricebook. CLIENT must notify CLI of price quotation at the time of the transfer of sample(s) to CLI. All submissions of samples with testing requirements to CLI will be understood to be an agreement for services. Any cancellation of testing requirements will result in charges being assessed on all testing completed prior to the notice of cancellation.

DELIVERY AND LIABILITY LIMITATIONS

CLI will analyze samples provided by CLIENT as requested by CLIENT in accordance with the procedures documented in the CLI Quality Assurance Plan (QAP). The maximum total liability assumed by CLI for work performed for CLIENT will in all cases be limited to the cost of the analysis. The specific format of the deliverable goods will be defined by CLIENT to CLI upon transfer of the samples to CLI. This warranty supersedes all other warranties.

CONFIDENTIALITY

CLI will use its best efforts to treat all information regarding work performed for CLIENT as proprietary and confidential to the maximum extent allowed by law. NO CLIENT information will be released without the written consent of the CLIENT billed for the work.

APPLICABLE LAW

Legal matters arising from work performed by CLI for CLIENT will be construed and interpreted in accordance with the laws for the state of Oregon.

Kopper501537B

DOC ID: O:\Clom\Port.BRN\OFFSUPP.SEC\Forms\Fax.LOG
Revision #: 1.03
Revision Date: 09/06/94

FACSIMILE TRANSMITTAL LOG

TO: Company Name: Koppers Date: 10/28/94

Attention: Amos Kamerer

FAX #: (____) _____ Confirmation #: (____) _____

# of Pages (Including Cover Sheets): 1

TELECOPIER PHONE #: (503) 254-1452 **CONFIRMATION PHONE #: (503) 254-1794**

THIS COMMUNICATION CONSISTS OF PRIVILEGED AND CONFIDENTIAL INFORMATION INTENDED ONLY FOR THE USE OF THE INDIVIDUAL OR ENTITY NAMED ABOVE. IF THE READER OF THIS MESSAGE IS NOT THE INTENDED RECIPIENT, OR THE EMPLOYEE OR AGENT RESPONSIBLE TO DELIVER IT TO THE INTENDED RECIPIENT, YOU ARE HEREBY NOTIFIED THAT ANY DISSEMINATION, DISTRIBUTION OR COPYING OF THIS COMMUNICATION IS STRICTLY PROHIBITED. IF YOU HAVE RECEIVED THIS COMMUNICATION IN ERROR, PLEASE IMMEDIATELY NOTIFY US BY TELEPHONE AND RETURN THE ORIGINAL MESSAGE TO US AT THE BELOW ADDRESS VIA THE U.S. POSTAL SERVICE. THANK YOU.

OK

COMMENTS: Draft Phenol Results

ND All four Samples WWT 1 = ND (Det. Lim = 0.05 mg/L)

ND WWT 2 = ND

ND WWT 3 = ND

ND WWT 4 = ND

No phenol was detected in any of the Samples.

Units mg/L

Thanks, Harvey Jacky

COFFEY LABORATORIES, INC.
12423 N.E. Whitaker Way
Portland, OR 97230

Phone: (503) 254-1794
Fax: (503) 254-1452

Harvey Jacky
Customer Services

Report Date: October 31, 1994
Job Number: 941028J
PO Number: Amos Kamerer
Project No: None Provided
Project Name: None Provided

Attention: Amos Kamerer
Koppers Industry
7540 NW St. Helens Rd.
Portland, OR 97210-3663

Analytical Narrative

The samples were received on 10/28/94 by Coffey Laboratories, Inc. (CLI) Sample Reception personnel under strict chain of custody protocol. The following information was provided at the time of sample reception:

Laboratory Sample ID	Field Identification	Matrix	Collection Date	Collection Time
941028J-1	WWT 1	Waste Water	10/28/94	0930
941028J-2	WWT 2	Waste Water	10/28/94	0930
941028J-3	WWT 3	Waste Water	10/28/94	0930
941028J-4	WWT 4	Waste Water	10/28/94	0930

The recommended holding time for each batch of analyses was in accordance with the data quality objectives as specified in the CLI Quality Assurance Plan unless otherwise noted.

Acceptable precision and accuracy were achieved for all analyses associated with this work order as demonstrated by the recoveries of the quality control samples analyzed concurrently with each batch.

The data submitted in this report is for the sole and exclusive use of the above-named client. All samples associated with the work order will be retained a maximum of 15 days from the report date or until the maximum holding time expires. All results pertain only to samples submitted.

Thank you for allowing Coffey Laboratories to be of service to you. If you have questions or need further assistance, please do not hesitate to call our Customer Services Department.

Sincerely,

Rona A. Klueh
Technical Director

RAK/atc

COFFEY LABORATORIES, INC.
12423 N.E. Whitaker Way • Portland, OR • 97230 • (503) 254-1794 • FAX (503) 254-1452

Analytical Data

Koppers Industry

Job Number: 941028J

Lab Sample ID: 941028J-1
Field ID: WWT 1
Date/Time: 10/28/94 0930
Matrix: Waste Water

EPA Category: Conventional Parameters

Parameter	Method	Detection Limit	Analytical Result	Units	Analysis Date	Analyst
Oil & Grease	EPA 413.1	3.	ND	mg/L	10/29/94	WKK
Total Phenols	EPA 420.1	0.05	ND	mg/L	10/28/94	SVS

ND means none detected at or above the detection limit listed.

COFFEY LABORATORIES, INC.
12423 N.E. Whitaker Way • Portland, OR • 97230 • (503) 254-1794 • FAX (503) 254-1452

Analytical Data

Koppers Industry

Job Number: 941028J

Lab Sample ID: 941028J-2
Field ID: WWT 2
Date/Time: 10/28/94 0930
Matrix: Waste Water

EPA Category: Conventional Parameters

Parameter	Method	Detection Limit	Analytical Result	Units	Analysis Date	Analyst
Oil & Grease	EPA 413.1	3.	ND	mg/L	10/29/94	WKK
Total Phenols	EPA 420.1	0.05	ND	mg/L	10/28/94	SVS

ND means none detected at or above the detection limit listed.

COFFEY LABORATORIES, INC.
12423 N.E. Whitaker Way • Portland, OR • 97230 • (503) 254-1794 • FAX (503) 254-1452

Analytical Data

Koppers Industry

Job Number: 941028J

Lab Sample ID: 941028J-3
Field ID: WWT 3
Date/Time: 10/28/94 0930
Matrix: Waste Water

EPA Category: Conventional Parameters

Parameter	Method	Detection Limit	Analytical Result	Units	Analysis Date	Analyst
Oil & Grease	EPA 413.1	3.	ND	mg/L	10/29/94	WKK
Total Phenols	EPA 420.1	0.05	ND	mg/L	10/28/94	SVS

ND means none detected at or above the detection limit listed.

COFFEY LABORATORIES, INC.
12423 N.E. Whitaker Way • Portland, OR • 97230 • (503) 254-1794 • FAX (503) 254-1452

Analytical Data

Koppers Industry

Job Number: 941028J

Lab Sample ID: 941028J-4
Field ID: WWT 4
Date/Time: 10/28/94 0930
Matrix: Waste Water

EPA Category: Conventional Parameters

Parameter	Method	Detection Limit	Analytical Result	Units	Analysis Date	Analyst
Oil & Grease	EPA 413.1	3.	ND	mg/L	10/29/94	WKK
Total Phenols	EPA 420.1	0.05	ND	mg/L	10/28/94	SVS

ND means none detected at or above the detection limit listed.

COFFEY LABORATORIES, INC.
12423 N.E. Whitaker Way • Portland, OR • 97230 • (503) 254-1794 • FAX (503) 254-1452

RECEIVED

NOV - 3 1994

KOPPERS INDS., INC.
PORTLAND, OR

PERMITTEE NAME/ADDRESS (Include Facility Name/Location if different)
NAME KOPPERS INDUSTRIES, INC.
ADDRESS 7540 NW ST HELENS ROAD
PORTLAND, OR 97210

FACILITY NORTHWEST PLANT DEQ #47430
LOCATION MULTNOMAH COUNTY

NATIONAL POLLUTANT DISCHARGE ELIMINATION SYSTEM (NPDES)
DISCHARGE MONITORING REPORT (DMR)

(2-16) PERMIT NUMBER	(17-19) DISCHARGE NUMBER
101003	0009

3077-J
47430

Form Approved.
OMB No. 2040-0004.
Approval expires 6-30-91.

MONITORING PERIOD

FROM YEAR	MO	DAY	TO YEAR	MO	DAY
94	09	01	94	09	30
(20-21)	(22-23)	(24-25)	(26-27)	(28-29)	(30-31)

NOTE: Read instructions before completing this form.

PARAMETER (32-37)		(3 Card Only) QUANTITY OR LOADING (46-53) AVERAGE	(54-61) MAXIMUM	UNITS	(4 Card Only) QUALITY OR CONCENTRATION (38-45) MINIMUM	(46-53) AVERAGE	(54-61) MAXIMUM	UNITS	NO. EX (62-63)	FREQUENCY OF ANALYSIS (64-68)	SAMPLE TYPE (69-70)
FLOW	SAMPLE MEASUREMENT	3000		GPD					N/A	1/30	EST.
	PERMIT REQUIREMENT	N/A	N/A								
TEMPERATURE	SAMPLE MEASUREMENT				72	73.5	75	°F	0	1/30	GRAB
	PERMIT REQUIREMENT						110				
pH	SAMPLE MEASUREMENT				6.8	~~6.84~~ 6.85	6.9	SU	0	1/30	GRAB
	PERMIT REQUIREMENT				6.0		9.0				
OIL & GREASES	SAMPLE MEASUREMENT				N.D.	3	6	mg/L	0	1/30	GRAB
	PERMIT REQUIREMENT				N/A	10	15				
PHENOLS	SAMPLE MEASUREMENT				N.D.	.025	.05	mg/L	0	1/30	GRAB
	PERMIT REQUIREMENT				N/A	.5	.7				
	SAMPLE MEASUREMENT										
	PERMIT REQUIREMENT										
	SAMPLE MEASUREMENT										
	PERMIT REQUIREMENT										

NAME/TITLE PRINCIPAL EXECUTIVE OFFICER: J. R. BATCHELDER, V.P.
TYPED OR PRINTED

I CERTIFY UNDER PENALTY OF LAW THAT I HAVE PERSONALLY EXAMINED AND AM FAMILIAR WITH THE INFORMATION SUBMITTED HEREIN; AND BASED ON MY INQUIRY OF THOSE INDIVIDUALS IMMEDIATELY RESPONSIBLE FOR OBTAINING THE INFORMATION, I BELIEVE THE SUBMITTED INFORMATION IS TRUE, ACCURATE AND COMPLETE. I AM AWARE THAT THERE ARE SIGNIFICANT PENALTIES FOR SUBMITTING FALSE INFORMATION, INCLUDING THE POSSIBILITY OF FINE AND IMPRISONMENT. SEE 18 USC § 1001 AND 33 USC § 1319. (Penalties under these statutes may include fines up to $10,000 and/or maximum imprisonment of between 6 months and 5 years.)

A. S. KAMERER, PLANT MGR
SIGNATURE OF PRINCIPAL EXECUTIVE OFFICER OR AUTHORIZED AGENT

TELEPHONE AREA CODE	NUMBER	DATE YEAR	MO	DAY
503	286-3681	94	10	21

COMMENT AND EXPLANATION OF ANY VIOLATIONS (Reference all attachments here)

Koppers015386

CC: W. E. SWEARINGEN

MONTHLY NPDES DISCHARGE REPORT WORK SHEET

MONTH 09 YEAR 94

FLOW

	WWT-1	WWT-2	WWT-3	WWT-4	WWT-5	WWT-6	TOTAL	#DAYS IN MONTH	G.P.D. DISCHARGE
GLS. PER TANK	45,000	45,000	45,000	45,000	20,000	20,000			
# OF PUMPINGS	1	1							
GALS.PUMPED	45,000	45,000					90,000	30	3,000

SAMPLE CONCENTRATION LEVELS

																					AVG.	MIN.	MAX.	UNIT
TEMPERATURES	75	72																			73.5	72	75	OF
PH	6.8	6.9																			6.85	6.8	6.9	SU
OIL & GREASES	ND	6																			3.	ND	6.	MG/L
PHENOLS	ND	.05																			.025	ND	.05	MG/L

QUARTERLY PAH TESTING

DATE SAMPLE TAKEN _________ RESULTS _____

(MUST BE LESS THAN 1000)

Koppers015387

WWT I

Pumped 9/13/94

TEMP 75°

PH 6.8

WWT II

TEMP 72°

PH 6.9

COFFEY LABORATORIES, INC.
CHAIN OF CUSTODY AGREEMENT

PORTLAND BRANCH
12423 NE Whitaker Way
Portland, OR 97230
(503) 254-1794 FAX: (503) 254-1452

PENDLETON BRANCH
287 SE First
Pendleton, OR 97801
(503) 276-0385

Report Attention: AMOS KAMERER
Company Name: KOPPERS IND. INC
Address: 7540 NW ST HELENS RD
PORTLAND ORE 97210-3663
Phone: (503) 286 3681 FAX: (503) 285-2831

Report Instructions:

Project Name:
Project Number:
PO Number:

Sample Turnaround
- ☐ Standard
- ☑ Priority (1.5x Std. Fee)
- ☐ Rush (2x Std. Fee)
- ☐ Emergency (3x Std. Fee)

Reporting Request
- ☐ FAX (T-35)
- ☐ Verbals (T-1157)
- ☐ Extra Report Copy (T-1402) (Fees Associated)

Initials:

FOR LABORATORY USE ONLY — Page 1 of 1
Job Number: WL9409-01 AZ
Custabbr: KOPPERS ☐NEW
☐VISA ☐M/C Expires:
Card #:
Cash / Check: $ #:
Billing Code: 1 2 3 4
QC LEVEL: 1 2 3 4
FEDX BUS COURIER UPS LAB CLIENT MAIL

Sample ID	Loc.	ID	Collection Date	Collection Time	Media	Analysis Requested	Test/Profile
WWT I			9-7-94	2:45		OIL & GREASES	ND
WWT II			"	"		" "	60
WW T I			"	"		PHENOLS	ND
WW T II			"	"		" "	.05

Sample Comments:

Sampled by: (Please Print)	Relinquished by: (Please Sign)	Date	Time	Received by: (Sign)	Date	Time
T HAGE	Ted Hage	9-7-94	3:30pm			
				LAB [signature]	9/7/94	1550

White Copy - Laboratory Copy *Yellow Copy - Client Copy*

SHADED AREAS FOR LABORATORY USE ONLY

SUBMISSION OF SAMPLES WITH TESTING REQUIREMENTS TO CLI WILL BE UNDERSTOOD TO BE AN AGREEMENT FOR SERVICES IN ACCORDANCE WITH THE CONDITIONS LISTED ON THE BACK OF THE CLIENT COPY.

Koppers015389

COFFEY LABORATORIES, INC.

CHAIN OF CUSTODY INSTRUCTIONS/CONDITIONS SHEET

INSTRUCTIONS

FOR LAB USE ONLY -	**All shaded areas are for laboratory use only. Please Do Not Write in These Areas.**
REPORT ATTENTION -	Name of the person who receives the laboratory report.
COMPANY NAME -	Name of the company or individual requesting the analysis.
REPORT ADDRESS -	Address of the company or individual requesting the analysis. (Address where report should be mailed)
REPORT INSTRUCTIONS -	A brief description of any special mail instructions, or address information pertaining to extra report copies.
PROJECT NAME -	Applies to customer project name. This data is provided at the customer's discretion.
PROJECT NUMBER -	Applies only to samples submitted by the customer. This data is provided at the customer's discretion.
FIELD ID -	A short description of the sample point (e.g., "Effluent from sand filter"). This description will appear on the report.
COLLECTION DATE -	The date on which the sample(s) was/were collected.
COLLECTION TIME -	The time at which the sample(s) was/were collected.
MEDIA -	This is a description of the sample media (e.g., drinking water, waste water, soil, etc.)
ANALYSIS REQUESTED -	Use one line for each analysis or group of analyses associated to a specific bottle.
SAMPLE COLLECTED BY -	The person who collected the sample(s) signs here.
RELINQUISHED BY -	The sampler signs this box when he/she gives the sample to someone else, and then fills in the date/time the sample left his/her possession.
RECEIVED BY -	The person who receives the sample(s) signs here and fills in the date/time received. The date and time should be same as "Relinquished by" unless the sample(s) was/were shipped.

JOB OR SAMPLE REMARKS - General sample or job remarks.

CONDITIONS

PRICING AND CHARGES

Prices to be charged for work performed for CLIENT are those currently published in the Coffey Laboratories, Inc. (CLI) standard pricebook. CLIENT must notify CLI of price quotation at the time of the transfer of sample(s) to CLI. All submissions of samples with testing requirements to CLI will be understood to be an agreement for services. Any cancellation of testing requirements will result in charges being assessed on all testing completed prior to the notice of cancellation.

DELIVERY AND LIABILITY LIMITATIONS

CLI will analyze samples provided by CLIENT as requested by CLIENT in accordance with the procedures documented in the CLI Quality Assurance Plan (QAP). The maximum total liability assumed by CLI for work performed for CLIENT will in all cases be limited to the cost of the analysis. The specific format of the deliverable goods will be defined by CLIENT to CLI upon transfer of the samples to CLI. This warranty supersedes all other warranties.

CONFIDENTIALITY

CLI will use its best efforts to treat all information regarding work performed for CLIENT as proprietary and confidential to the maximum extent allowed by law. NO CLIENT information will be released without the written consent of the CLIENT billed for the work.

APPLICABLE LAW

Legal matters arising from work performed by CLI for CLIENT will be construed and interpreted in accordance with the laws for the state of Oregon.

Report Date: September 12, 1994
Job Number: 940907AZ
PO Number: Verbal-Amos Kamerer
Project No: None Provided
Project Name: None Provided

Attention: Amos Kamerer
Koppers Industry
7540 NW St. Helens Rd.
Portland, OR 97210-3663

Analytical Narrative

The samples were received on 09/07/94 by Coffey Laboratories, Inc. (CLI) Sample Reception personnel under strict chain of custody protocol. The following information was provided at the time of sample reception:

Laboratory Sample ID	Field Identification	Matrix	Collection Date	Collection Time
940907AZ-1	WWT I	Waste Water	09/07/94	1445
940907AZ-2	WWT II	Waste Water	09/07/94	1445

The recommended holding time for each batch of analyses was in accordance with the data quality objectives as specified in the CLI Quality Assurance Plan unless otherwise noted.

Acceptable precision and accuracy were achieved for all analyses associated with this work order as demonstrated by the recoveries of the quality control samples analyzed concurrently with each batch.

The data submitted in this report is for the sole and exclusive use of the above-named client. All samples associated with the work order will be retained a maximum of 15 days from the report date or until the maximum holding time expires. All results pertain only to samples submitted.

Thank you for allowing Coffey Laboratories to be of service to you. If you have questions or need further assistance, please do not hesitate to call our Customer Services Department.

Sincerely,

Rona A. Klueh
Technical Director

RAK/atc

COFFEY LABORATORIES, INC.
12423 N.E. Whitaker Way • Portland, OR • 97230 • (503) 254-1794 • FAX (503) 254-1452

RECEIVED

SEP 1 1994

KOPPERS INDS., INC.
PORTLAND, OR

Analytical Data

Koppers Industry

Job Number: 940907AZ

Lab Sample ID: 940907AZ-1
Field ID: WWT I
Date/Time: 09/07/94 1445
Matrix: Waste Water

EPA Category: Conventional Parameters

Parameter	Method	Detection Limit	Analytical Result	Units	Analysis Date	Analyst
Oil & Grease	EPA 413.1	3.	ND	mg/L	09/09/94	WKK
Total Phenols	EPA 420.1	0.05	ND	mg/L	09/09/94	SVS

ND means none detected at or above the detection limit listed.

COFFEY LABORATORIES, INC.
12423 N.E. Whitaker Way • Portland, OR • 97230 • (503) 254-1794 • FAX (503) 254-1452

RECEIVED

SEP 1' 1994

KOPPERS INDS., INC.
PORTLAND, OR

Analytical Data

Koppers Industry

Job Number: 940907AZ

Lab Sample ID: 940907AZ-2
Field ID: WWT II
Date/Time: 09/07/94 1445
Matrix: Waste Water

EPA Category: Conventional Parameters

Parameter	Method	Detection Limit	Analytical Result	Units	Analysis Date	Analyst
Oil & Grease	EPA 413.1	3.	6.	mg/L	09/09/94	WKK
Total Phenols	EPA 420.1	0.05	0.05	mg/L	09/09/94	SVS

COFFEY LABORATORIES, INC.
12423 N.E. Whitaker Way • Portland, OR • 97230 • (503) 254-1794 • FAX (503) 254-1452

RECEIVED

SEP 1 1994

KOPPERS INDS., INC.
PORTLAND, OR

PERMITTEE NAME/ADDRESS (Include Facility Name/Location if different)
NAME KOPPERS INDUSTRIES, INC.
ADDRESS 7540 NW ST HELENS ROAD
PORTLAND, OR 97210

FACILITY NORTHWEST PLANT DEQ #47430
LOCATION MULTNOMAH COUNTY

NATIONAL POLLUTANT DISCHARGE ELIMINATION SYSTEM (NPDES)
DISCHARGE MONITORING REPORT (DMR)

(2-16) PERMIT NUMBER	(17-19) DISCHARGE NUMBER
101003	0007

3077-J
47430

Form Approved.
OMB No. 2040-0004.
Approval expires 6-30-91.

MONITORING PERIOD	YEAR	MO	DAY		YEAR	MO	DAY
FROM	94	07	01	TO	94	07	31
	(20-21)	(22-23)	(24-25)		(26-27)	(28-29)	(30-31)

NOTE: Read instructions before completing this form.

PARAMETER (32-37)		(3 Card Only) QUANTITY OR LOADING (46-53) AVERAGE	(54-61) MAXIMUM	UNITS	(4 Card Only) QUALITY OR CONCENTRATION (38-45) MINIMUM	(46-53) AVERAGE	(54-61) MAXIMUM	UNITS	NO. EX (62-63)	FREQUENCY OF ANALYSIS (64-68)	SAMPLE TYPE (69-70)
FLOW	SAMPLE MEASUREMENT	1452		GPD					N/A	1/31	EST.
	PERMIT REQUIREMENT	N/A	N/A								
TEMPERATURE	SAMPLE MEASUREMENT				70	70	71	°F	0	1/31	GRAB
	PERMIT REQUIREMENT						110				
pH	SAMPLE MEASUREMENT				6.9	7.0	7.1	SU	0	1/31	GRAB
	PERMIT REQUIREMENT				6.0		6.9				
OIL & GREASES	SAMPLE MEASUREMENT				N.D.	N.D.	N.D.	mg/L	0	1/31	GRAB
	PERMIT REQUIREMENT				N/A	10	15				
PHENOLS	SAMPLE MEASUREMENT				.08	.12	.15	mg/L	0	1/31	GRAB
	PERMIT REQUIREMENT				N/A	.5	.7				
	SAMPLE MEASUREMENT										
	PERMIT REQUIREMENT										
	SAMPLE MEASUREMENT										
	PERMIT REQUIREMENT										

NAME/TITLE PRINCIPAL EXECUTIVE OFFICER

J. R. BATCHELDER, V.P.
TYPED OR PRINTED

I CERTIFY UNDER PENALTY OF LAW THAT I HAVE PERSONALLY EXAMINED AND AM FAMILIAR WITH THE INFORMATION SUBMITTED HEREIN; AND BASED ON MY INQUIRY OF THOSE INDIVIDUALS IMMEDIATELY RESPONSIBLE FOR OBTAINING THE INFORMATION, I BELIEVE THE SUBMITTED INFORMATION IS TRUE, ACCURATE, AND COMPLETE. I AM AWARE THAT THERE ARE SIGNIFICANT PENALTIES FOR SUBMITTING FALSE INFORMATION, INCLUDING THE POSSIBILITY OF FINE AND IMPRISONMENT. SEE 18 USC § 1001 AND 33 USC § 1319. *(Penalties under these statutes may include fines up to $10,000 and/or maximum imprisonment of between 6 months and 5 years.)*

A. S. KAMERER, PLANT MGR
SIGNATURE OF PRINCIPAL EXECUTIVE OFFICER OR AUTHORIZED AGENT

TELEPHONE		DATE		
503	286-3681	94	08	02
AREA CODE	NUMBER	YEAR	MO	DAY

COMMENT AND EXPLANATION OF ANY VIOLATIONS *(Reference all attachments here)*

CC: W. E. SWEARINGEN

Koppers015397

Report Date: July 11, 1994
Job Number: 940701AP
PO Number: Amos Kamerer
Project No: None Provided
Project Name: None Provided

Attention: Amos Kamerer
Koppers Industry
7540 NW St. Helens Rd.
Portland, OR 97210-3663

Analytical Narrative

The samples were received on 07/01/94 by Coffey Laboratories, Inc. (CLI) Sample Reception personnel under strict chain of custody protocol. The following information was provided at the time of sample reception:

Laboratory Sample ID	Field Identification	Matrix	Collection Date	Collection Time
940701AP-1	WWT-3	Waste Water	07/01/94	1430
940701AP-2	WWT-4	Waste Water	07/01/94	1430

The recommended holding time for each batch of analyses was in accordance with the data quality objectives as specified in the CLI Quality Assurance Plan unless otherwise noted.

Acceptable precision and accuracy were achieved for all analyses associated with this work order as demonstrated by the recoveries of the quality control samples analyzed concurrently with each batch.

The data submitted in this report is for the sole and exclusive use of the above-named client. All samples associated with the work order will be retained a maximum of 15 days from the report date or until the maximum holding time expires. All results pertain only to samples submitted.

Thank you for allowing Coffey Laboratories to be of service to you. If you have questions or need further assistance, please do not hesitate to call our Customer Services Department.

Sincerely,

Rona A. Klueh
Technical Director

RAK/atc

COFFEY LABORATORIES, INC.
12423 N.E. Whitaker Way • Portland, OR • 97230 • (503) 254-1794 • FAX (503) 254-1452

Analytical Data

Koppers Industry

Job Number: 940701AP

Lab Sample ID: 940701AP-1
Field ID: WWT-3
Date/Time: 07/01/94 1430
Matrix: Waste Water

EPA Category: Conventional Parameters

Parameter	Method	Detection Limit	Analytical Result	Units	Analysis Date	Analyst
Oil & Grease	EPA 413.1	3.	ND	mg/L	07/06/94	DHN
Total Phenols	EPA 420.1	0.05	0.15	mg/L	07/08/94	RGR

ND means none detected at or above the detection limit listed.

COFFEY LABORATORIES, INC.
12423 N.E. Whitaker Way • Portland, OR • 97230 • (503) 254-1794 • FAX (503) 254-1452

Analytical Data

Koppers Industry

Job Number: 940701AP

Lab Sample ID: 940701AP-2
Field ID: WWT-4
Date/Time: 07/01/94 1430
Matrix: Waste Water

EPA Category: Conventional Parameters

Parameter	Method	Detection Limit	Analytical Result	Units	Analysis Date	Analyst
Oil & Grease	EPA 413.1	3.	ND	mg/L	07/06/94	DHN
Total Phenols	EPA 420.1	0.05	0.08	mg/L	07/08/94	RGR

ND means none detected at or above the detection limit listed.

COFFEY LABORATORIES, INC.
12423 N.E. Whitaker Way • Portland, OR • 97230 • (503) 254-1794 • FAX (503) 254-1452

RECEIVED

JUL 14 1994

KOPPERS INDS., INC.
PORTLAND, OR

WWT 3 7-1-94
pH 6.9
Temp 71° F
WWT 4
pH 7.1
Temp 70° F

COFFEY LABORATORIES, INC.
CHAIN OF CUSTODY AGREEMENT

PORTLAND BRANCH
12423 NE Whitaker Way
Portland, OR 97230
(503) 254-1794 FAX: (503) 254-1452

Pumped 7/12

PENDLETON BRANCH
287 SE First
Pendleton, OR 97801
(503) 276-0385

Report Attention: AMOS KAMERER
Company Name: KOPPERS IND INC
Address: 7540 NW ST HELENS ROAD
PORTLAND, OR 97210-3663
Phone: (503) 286-3681 FAX: (503) 285-2831

Report Instructions:

Project Name:
Project Number:
PO Number:

Sample Turnaround	Reporting Request
☑ Standard	☐ FAX (T-35)
☐ Priority (1.5x Std. Fee)	☐ Verbals (T-1157)
☐ Rush (2x Std. Fee)	☐ Extra Report Copy (T-1402) (Fees Associated)
☐ Emergency (3x Std. Fee)	Initials:

FOR LABORATORY USE ONLY Page 1 of 1
Job Number: WCT-941071-AP 2
Custabbr: ☐NEW
☐VISA ☐M/C Expires:
Card #:
Cash / Check: $ #:
Billing Code: 1 2 3 4
QC LEVEL: 1 2 3 4
FEDX BUS COURIER UPS LAB CLIENT MAIL

Sample ID	Loc.	ID	Collection Date	Collection Time	Media	Analysis Requested		Test/Profile
WWT 3			7-1-94	2309		OIL & GREASES	ND	
WWT 4						"	ND	
WWT 3						PHENOLS	0.05	
WWT 4						"	0.08	

Sample Comments:

Sampled by: (Please Print)	Relinquished by: (Please Sign)	Date	Time	Received by: (Sign)	Date	Time
TED HARE	Edward Hare	7-1-94	400			
				LAB Dennis Kt	7/1/94	1600

White Copy - Laboratory Copy *Yellow Copy - Client Copy*

SHADED AREAS FOR LABORATORY USE ONLY

SUBMISSION OF SAMPLES WITH TESTING REQUIREMENTS TO CLI WILL BE UNDERSTOOD TO BE AN AGREEMENT FOR SERVICES IN ACCORDANCE WITH THE CONDITIONS LISTED ON THE BACK OF THE CLIENT COPY.

Koppers015403

COFFEY LABORATORIES, INC.

CHAIN OF CUSTODY INSTRUCTIONS/CONDITIONS SHEET

INSTRUCTIONS

FOR LAB USE ONLY -	**All shaded areas are for laboratory use only. Please Do Not Write in These Areas.**
REPORT ATTENTION -	Name of the person who receives the laboratory report.
COMPANY NAME -	Name of the company or individual requesting the analysis.
REPORT ADDRESS -	Address of the company or individual requesting the analysis. (Address where report should be mailed)
REPORT INSTRUCTIONS -	A brief description of any special mail instructions, or address information pertaining to extra report copies.
PROJECT NAME -	Applies to customer project name. This data is provided at the customer's discretion.
PROJECT NUMBER -	Applies only to samples submitted by the customer. This data is provided at the customer's discretion.
FIELD ID -	A short description of the sample point (e.g., "Effluent from sand filter"). This description will appear on the report.
COLLECTION DATE -	The date on which the sample(s) was/were collected.
COLLECTION TIME -	The time at which the sample(s) was/were collected.
MEDIA -	This is a description of the sample media (e.g., drinking water, waste water, soil, etc.)
ANALYSIS REQUESTED -	Use one line for each analysis or group of analyses associated to a specific bottle.
SAMPLE COLLECTED BY -	The person who collected the sample(s) signs here.
RELINQUISHED BY -	The sampler signs this box when he/she gives the sample to someone else, and then fills in the date/time the sample left his/her possession.
RECEIVED BY -	The person who receives the sample(s) signs here and fills in the date/time received. The date and time should be same as "Relinquished by" unless the sample(s) was/were shipped.
JOB OR SAMPLE REMARKS -	General sample or job remarks.

CONDITIONS

PRICING AND CHARGES

Prices to be charged for work performed for CLIENT are those currently published in the Coffey Laboratories, Inc. (CLI) standard pricebook. CLIENT must notify CLI of price quotation at the time of the transfer of sample(s) to CLI. All submissions of samples with testing requirements to CLI will be understood to be an agreement for services. Any cancellation of testing requirements will result in charges being assessed on all testing completed prior to the notice of cancellation.

DELIVERY AND LIABILITY LIMITATIONS

CLI will analyze samples provided by CLIENT as requested by CLIENT in accordance with the procedures documented in the CLI Quality Assurance Plan (QAP). The maximum total liability assumed by CLI for work performed for CLIENT will in all cases be limited to the cost of the analysis. The specific format of the deliverable goods will be defined by CLIENT to CLI upon transfer of the samples to CLI. This warranty supersedes all other warranties.

CONFIDENTIALITY

CLI will use its best efforts to treat all information regarding work performed for CLIENT as proprietary and confidential to the maximum extent allowed by law. NO CLIENT information will be released without the written consent of the CLIENT billed for the work.

APPLICABLE LAW

Legal matters arising from work performed by CLI for CLIENT will be construed and interpreted in accordance with the laws for the state of Oregon.

PERMITTEE NAME/ADDRESS (Include Facility Name/Location if different)
NAME KOPPERS INDUSTRIES, INC.
ADDRESS 7540 NW ST HELENS ROAD
PORTLAND, OR 97210

FACILITY NORTHWEST PLANT DEQ #47430
LOCATION MULTNOMAH COUNTY

NATIONAL POLLUTANT DISCHARGE ELIMINATION SYSTEM (NPDES)
DISCHARGE MONITORING REPORT (DMR)

(2-16) PERMIT NUMBER	(17-19) DISCHARGE NUMBER
101003	0006

3077-J
47430

Form Approved.
OMB No. 2040-0004.
Approval expires 6-30-91.

MONITORING PERIOD	YEAR	MO	DAY		YEAR	MO	DAY
FROM	94	06	01	TO	94	06	30
	(20-21)	(22-23)	(24-25)		(26-27)	(28-29)	(30-31)

NOTE: Read instructions before completing this form.

PARAMETER (32-37)		(3 Card Only) QUANTITY OR LOADING (46-53) AVERAGE	(54-61) MAXIMUM	UNITS	(4 Card Only) QUALITY OR CONCENTRATION (38-45) MINIMUM	(46-53) AVERAGE	(54-61) MAXIMUM	UNITS	NO. EX (62-63)	FREQUENCY OF ANALYSIS (64-68)	SAMPLE TYPE (69-70)
FLOW	SAMPLE MEASUREMENT	6,000		GPD					N/A	4/30	EST.
	PERMIT REQUIREMENT	N/A	N/A								
TEMPERATURE	SAMPLE MEASUREMENT				58	60	62	F	0	4/30	GRAB
	PERMIT REQUIREMENT						110				
pH	SAMPLE MEASUREMENT				6.8	6.9	7.0	SU	0	4/30	GRAB
	PERMIT REQUIREMENT				6.0		9.0				
OIL & GREASES	SAMPLE MEASUREMENT				N.D.	1.8	4	mg/L	0	4/30	GRAB
	PERMIT REQUIREMENT				N/A	10	15				
PHENOLS	SAMPLE MEASUREMENT				N.D.	.05	.11	mg/L	0	4/30	GRAB
	PERMIT REQUIREMENT				N/A	.5	.7				
	SAMPLE MEASUREMENT										
	PERMIT REQUIREMENT										
	SAMPLE MEASUREMENT										
	PERMIT REQUIREMENT										

NAME/TITLE PRINCIPAL EXECUTIVE OFFICER			TELEPHONE		DATE		
J. R. BATCHELDER, V.P.	I CERTIFY UNDER PENALTY OF LAW THAT I HAVE PERSONALLY EXAMINED AND AM FAMILIAR WITH THE INFORMATION SUBMITTED HEREIN, AND BASED ON MY INQUIRY OF THOSE INDIVIDUALS IMMEDIATELY RESPONSIBLE FOR OBTAINING THE INFORMATION, I BELIEVE THE SUBMITTED INFORMATION IS TRUE, ACCURATE AND COMPLETE. I AM AWARE THAT THERE ARE SIGNIFICANT PENALTIES FOR SUBMITTING FALSE INFORMATION, INCLUDING THE POSSIBILITY OF FINE AND IMPRISONMENT. SEE 18 USC § 1001 AND 33 USC § 1319 (Penalties under these statutes may include fines up to $10,000 and or maximum imprisonment of between 6 months and 5 years.)	A. S. KAMERER, PLANT MGR	503	286-3681	94	07	01
TYPED OR PRINTED		SIGNATURE OF PRINCIPAL EXECUTIVE OFFICER OR AUTHORIZED AGENT	AREA CODE	NUMBER	YEAR	MO	DAY

COMMENT AND EXPLANATION OF ANY VIOLATIONS (Reference all attachments here)

A COPY OF THE SECOND QUARTER PAH RESULTS IS ATTACHED

Koppers015405

Analytical Data

Koppers Industry

Job Number: 940607AY

Lab Sample ID: 940607AY-2
Field ID: WWT-4
Date/Time: 06/07/94 1500
Matrix: Waste Water

EPA Category: Conventional Parameters

Parameter	Method	Detection Limit	Analytical Result	Units	Analysis Date	Analyst
Oil & Grease	EPA 413.1	3.	4.	mg/L	06/09/94	DHN
Total Phenols	EPA 420.1	0.05	ND	mg/L	06/10/94	SVS

ND means none detected at or above the detection limit listed.

Analysis Performed: Polynuclear Aromatic Hydrocarbons in Waste Water, by EPA Method 8310, HPLC.

Compound	Detection Limit	Laboratory Blank	Sample Results	Sample Duplicate
Acenaphthene	150	ND	ND	ND
Acenaphthylene	150	ND	ND	ND
Anthracene	60	ND	ND	ND
Benzo(a)anthracene	10	ND	23	19
Benzo(b)fluoranthene	10	ND	26	27
Benzo(k)fluoranthene	15	ND	22	24
Benzo(g,h,i)perylene	20	ND	27	33
Benzo(a)pyrene	15	ND	43	43
Chrysene	10	ND	25	25
Dibenzo(a,h)anthracene	10	ND	ND	ND
Fluoranthene	75	ND	ND	ND
Fluorene	25	ND	ND	ND
Indeno(1,2,3-c,d)pyrene	15	ND	40	39
Naphthalene	150	ND	ND	ND
Phenanthrene	25	ND	ND	ND
Pyrene	80	ND	ND	ND
			206	

Results expressed as µg/L unless otherwise noted.

ND means none detected at or above the detection limit listed.

COFFEY LABORATORIES, INC.
12423 N.E. Whitaker Way • Portland, OR • 97230 • (503) 254-1794 • FAX (503) 254-1452

RECEIVED

JUN 27 1994

KOPPERS INDS., INC.
PORTLAND, OR

Dial Dependability... Koppers Creosote

5 0 3 2 8 6 3 6 8 1

Flow

4 x 45,000 ÷ 30 = 6,000 gals.

Temp

62, 62, 59, 58 = 60

PH

7.0, 6.9, 6.9, 6.8 = 6.9

Oil & Grease

3., 4, ND, ND = 1.8

Phenols

.05, ND, .11, .05 = .05

Koppers Company, Inc. • Tar and Wood Products Sector • 1601 Koppers Building • Pittsburgh, PA 15219

Report Date: June 27, 1994
Job Number: 940617R
PO Number: Verbal-Kamerer
Project No: None Provided
Project Name: None Provided

Attention: Amos Kamerer
Koppers Industry
7540 NW St. Helens Rd.
Portland, OR 97210-3663

Pumped 6/27

Analytical Narrative

The samples were received on 06/17/94 by Coffey Laboratories, Inc. (CLI) Sample Reception personnel under strict chain of custody protocol. The following information was provided at the time of sample reception:

Laboratory Sample ID	Field Identification	Matrix	Collection Date	Collection Time
940617R-1	WWT I	Waste Water	06/17/94	1000
940617R-2	WWT II	Waste Water	06/17/94	1000

The recommended holding time for each batch of analyses was in accordance with the data quality objectives as specified in the CLI Quality Assurance Plan unless otherwise noted.

Acceptable precision and accuracy were achieved for all analyses associated with this work order as demonstrated by the recoveries of the quality control samples analyzed concurrently with each batch.

The data submitted in this report is for the sole and exclusive use of the above-named client. All samples associated with the work order will be retained a maximum of 15 days from the report date or until the maximum holding time expires. All results pertain only to samples submitted.

Thank you for allowing Coffey Laboratories to be of service to you. If you have questions or need further assistance, please do not hesitate to call our Customer Services Department.

Sincerely,

Rona Klueh

Rona A. Klueh
Technical Director

RAK/atc

COFFEY LABORATORIES, INC.
12423 N.E. Whitaker Way • Portland, OR • 97230 • (503) 254-1794 • FAX (503) 254-1452

Analytical Data

Koppers Industry

Job Number: 940617R

Lab Sample ID: 940617R-1
Field ID: WWT I
Date/Time: 06/17/94 1000
Matrix: Waste Water

EPA Category: Conventional Parameters

Parameter	Method	Detection Limit	Analytical Result	Units	Analysis Date	Analyst
Oil & Grease	EPA 413.1	3.	ND	mg/L	06/22/94	DHN
Total Phenols	EPA 420.1	0.05	0.11	mg/L	06/24/94	RGR

COFFEY LABORATORIES, INC.
12423 N.E. Whitaker Way • Portland, OR • 97230 • (503) 254-1794 • FAX (503) 254-1452

Analytical Data

Koppers Industry

Job Number: 940617R

Lab Sample ID: 940617R-2
Field ID: WWT II
Date/Time: 06/17/94 1000
Matrix: Waste Water

EPA Category: Conventional Parameters

Parameter	Method	Detection Limit	Analytical Result	Units	Analysis Date	Analyst
Oil & Grease	EPA 413.1	3.	ND	mg/L	06/22/94	DHN
Total Phenols	EPA 420.1	0.05	0.05	mg/L	06/24/94	RGR

COFFEY LABORATORIES, INC.
12423 N.E. Whitaker Way • Portland, OR • 97230 • (503) 254-1794 • FAX (503) 254-1452

RECEIVED

JUN 23 1994

KOPPERS INDS., INC.
PORTLAND, OR

6-17-94

WWT I

TEMP 59

PH 6.9

WWT II

TEMP 58

PH 6.8

COFFEY LABORATORIES, INC.
CHAIN OF CUSTODY AGREEMENT

PORTLAND BRANCH
12423 NE Whitaker Way
Portland, OR 97230
(503) 254-1794 FAX: (503) 254-1452

PENDLETON BRANCH
287 SE First
Pendleton, OR 97801
(503) 276-0385

Report Attention: AMOS KAMERER
Company Name: KOPPERS IND INC
Address: 7540 N.W. ST HELENS RD.
PORTLAND ORE 97210-3662
Phone: (503) 286-3681 FAX: (503) 285-2831

Report Instructions:

Project Name:
Project Number:
PO Number:

Sample Turnaround	Reporting Request
☑ Standard	☐ FAX (T-35)
☐ Priority (1.5x Std. Fee)	☐ Verbals (T-1157)
☐ Rush (2x Std. Fee)	☐ Extra Report Copy (T-1402) (Fees Associated)
☐ Emergency (3x Std. Fee)	Initials:

FOR LABORATORY USE ONLY Page ___ of ___
Job Number: WG4404017R2
Custabbr: KOPPERS ☐NEW
☐VISA ☐M/C Expires:
Card #:
Cash / Check: $ #:
Billing Code: 1 2 3 4
QC LEVEL: 1 2 3 4
FEDX BUS COURIER UPS LAB CLIENT MAIL

Sample ID	Loc.	ID	Collection Date	Collection Time	Media	Analysis Requested	Test/Profile
WWT I			6-17-94	10 AM		OIL & GREASE	ND
WWT II						"	ND
WWT I						PHENOLS	
WWT II						"	

Sample Comments:

Sampled by: (Please Print)	Relinquished by: (Please Sign)	Date	Time	Received by: (Sign)	Date	Time
TED HARE	R.S. Beckh	6/17/94	1:34			
				LAB [illegible]	6/17/94	1325

White Copy - Laboratory Copy *Yellow Copy - Client Copy*

SHADED AREAS FOR LABORATORY USE ONLY

SUBMISSION OF SAMPLES WITH TESTING REQUIREMENTS TO CLI WILL BE UNDERSTOOD TO BE AN AGREEMENT FOR SERVICES IN ACCORDANCE WITH THE CONDITIONS LISTED ON THE BACK OF THE CLIENT COPY.

Koppers015414

COFFEY LABORATORIES, INC.
CHAIN OF CUSTODY INSTRUCTIONS/CONDITIONS SHEET

INSTRUCTIONS

FOR LAB USE ONLY -	**All shaded areas are for laboratory use only. Please Do Not Write in These Areas.**
REPORT ATTENTION -	Name of the person who receives the laboratory report.
COMPANY NAME -	Name of the company or individual requesting the analysis.
REPORT ADDRESS -	Address of the company or individual requesting the analysis. (Address where report should be mailed)
REPORT INSTRUCTIONS -	A brief description of any special mail instructions, or address information pertaining to extra report copies.
PROJECT NAME -	Applies to customer project name. This data is provided at the customer's discretion.
PROJECT NUMBER -	Applies only to samples submitted by the customer. This data is provided at the customer's discretion.
FIELD ID -	A short description of the sample point (e.g., "Effluent from sand filter"). This description will appear on the report.
COLLECTION DATE -	The date on which the sample(s) was/were collected.
COLLECTION TIME -	The time at which the sample(s) was/were collected.
MEDIA -	This is a description of the sample media (e.g., drinking water, waste water, soil, etc.)
ANALYSIS REQUESTED -	Use one line for each analysis or group of analyses associated to a specific bottle.
SAMPLE COLLECTED BY -	The person who collected the sample(s) signs here.
RELINQUISHED BY -	The sampler signs this box when he/she gives the sample to someone else, and then fills in the date/time the sample left his/her possession.
RECEIVED BY -	The person who receives the sample(s) signs here and fills in the date/time received. The date and time should be same as "Relinquished by" unless the sample(s) was/were shipped.
JOB OR SAMPLE REMARKS -	General sample or job remarks.

CONDITIONS

PRICING AND CHARGES

Prices to be charged for work performed for CLIENT are those currently published in the Coffey Laboratories, Inc. (CLI) standard pricebook. CLIENT must notify CLI of price quotation at the time of the transfer of sample(s) to CLI. All submissions of samples with testing requirements to CLI will be understood to be an agreement for services. Any cancellation of testing requirements will result in charges being assessed on all testing completed prior to the notice of cancellation.

DELIVERY AND LIABILITY LIMITATIONS

CLI will analyze samples provided by CLIENT as requested by CLIENT in accordance with the procedures documented in the CLI Quality Assurance Plan (QAP). The maximum total liability assumed by CLI for work performed for CLIENT will in all cases be limited to the cost of the analysis. The specific format of the deliverable goods will be defined by CLIENT to CLI upon transfer of the samples to CLI. This warranty supersedes all other warranties.

CONFIDENTIALITY

CLI will use its best efforts to treat all information regarding work performed for CLIENT as proprietary and confidential to the maximum extent allowed by law. NO CLIENT information will be released without the written consent of the CLIENT billed for the work.

APPLICABLE LAW

Legal matters arising from work performed by CLI for CLIENT will be construed and interpreted in accordance with the laws for the state of Oregon.

Report Date: June 16, 1994
Job Number: 940607AY
PO Number: Verbal-Kamerer
Project No: None Provided
Project Name: None Provided

Attention: Amos Kamerer
Koppers Industry
7540 NW St. Helens Rd.
Portland, OR 97210-3663

Pumped 4/14

Analytical Narrative

The samples were received on 06/07/94 by Coffey Laboratories, Inc. (CLI) Sample Reception personnel under strict chain of custody protocol. The following information was provided at the time of sample reception:

Laboratory Sample ID	Field Identification	Matrix	Collection Date	Collection Time
940607AY-1	WWT-3	Waste Water	06/07/94	1500
940607AY-2	WWT-4	Waste Water	06/07/94	1500

The recommended holding time for each batch of analyses was in accordance with the data quality objectives as specified in the CLI Quality Assurance Plan unless otherwise noted.

Acceptable precision and accuracy were achieved for all analyses associated with this work order as demonstrated by the recoveries of the quality control samples analyzed concurrently with each batch.

The data submitted in this report is for the sole and exclusive use of the above-named client. All samples associated with the work order will be retained a maximum of 15 days from the report date or until the maximum holding time expires. All results pertain only to samples submitted.

Thank you for allowing Coffey Laboratories to be of service to you. If you have questions or need further assistance, please do not hesitate to call our Customer Services Department.

Sincerely,

Rona Klueh

Rona A. Klueh
Technical Director

RAK/daj

COFFEY LABORATORIES, INC.
12423 N.E. Whitaker Way • Portland, OR • 97230 • (503) 254-1794 • FAX (503) 254-1452

Analytical Data

Koppers Industry

Job Number: 940607AY

Lab Sample ID: 940607AY-1
Field ID: WWT-3
Date/Time: 06/07/94 1500
Matrix: Waste Water

EPA Category: Conventional Parameters

Parameter	Method	Detection Limit	Analytical Result	Units	Analysis Date	Analyst
Oil & Grease	EPA 413.1	3.	3.	mg/L	06/09/94	DHN
Total Phenols	EPA 420.1	0.05	0.05	mg/L	06/10/94	SVS

COFFEY LABORATORIES, INC.
12423 N.E. Whitaker Way • Portland, OR • 97230 • (503) 254-1794 • FAX (503) 254-1452

WWT 3 6-7-94

TEMP 62

PH 7.0

WWT4

TEMP 62

PH 6.9

COFFEY LABORATORIES, INC.
CHAIN OF CUSTODY AGREEMENT

PORTLAND BRANCH
12423 NE Whitaker Way
Portland, OR 97230
(503) 254-1794 FAX: (503) 254-1452

PENDLETON BRANCH
287 SE First
Pendleton, OR 97801
(503) 276-0385

Report Attention: AMOS KAMERER
Company Name: KOPPERS INDUSTRIES INC
Address: 7540 NW ST HELENS ROAD
PORTLAND OREGON 97210-3663
Phone: (503) 286-3681 FAX: (503) 285-2831

Report Instructions:

Project Name:
Project Number:
PO Number:

Sample Turnaround	Reporting Request
☑ Standard	☐ FAX (T-35)
☐ Priority (1.5x Std. Fee)	☐ Verbals (T-1157)
☐ Rush (2x Std. Fee)	☐ Extra Report Copy (T-1402) (Fees Associated)
☐ Emergency (3x Std. Fee)	Initials:

FOR LABORATORY USE ONLY Page ___ of ___
Job Number: LX940607-AY2
Custabbr: KOPP ☐NEW
☐VISA ☐M/C Expires:
Card #:
Cash / Check: $ #:
Billing Code: 1 2 3 4
QC LEVEL: 1 2 3 4
FEDX BUS COURIER UPS LAB CLIENT MAIL

Sample ID	Loc.	ID	Collection Date	Collection Time	Media	Analysis Requested	Test/Profile
WW T-3			6-7-94	3:00pm		OIL & GREASE	
WW T-4						OIL & GREASE	
WW T-3						PHENOLS	.05
WW T-4						PHENOLS	ND
WW T 4						PAH	

Sample Comments:

Sampled by: (Please Print)	Relinquished by: (Please Sign)	Date	Time	Received by: (Sign)	Date	Time
TED HARE	George Hoffman	6-7-94	4:33			
				LAB [signature]	6/7/94	1635

White Copy - Laboratory Copy *Yellow Copy - Client Copy*

SHADED AREAS FOR LABORATORY USE ONLY

SUBMISSION OF SAMPLES WITH TESTING REQUIREMENTS TO CLI WILL BE UNDERSTOOD TO BE AN AGREEMENT FOR SERVICES IN ACCORDANCE WITH THE CONDITIONS LISTED ON THE BACK OF THE CLIENT COPY.

Dick Reed - Harvey Jacky "Standard" contract 5 days

Koppers015419

COFFEY LABORATORIES, INC.

CHAIN OF CUSTODY INSTRUCTIONS/CONDITIONS SHEET

INSTRUCTIONS

FOR LAB USE ONLY -	**All shaded areas are for laboratory use only. Please Do Not Write in These Areas.**
REPORT ATTENTION -	Name of the person who receives the laboratory report.
COMPANY NAME -	Name of the company or individual requesting the analysis.
REPORT ADDRESS -	Address of the company or individual requesting the analysis. (Address where report should be mailed)
REPORT INSTRUCTIONS -	A brief description of any special mail instructions, or address information pertaining to extra report copies.
PROJECT NAME -	Applies to customer project name. This data is provided at the customer's discretion.
PROJECT NUMBER -	Applies only to samples submitted by the customer. This data is provided at the customer's discretion.
FIELD ID -	A short description of the sample point (e.g., "Effluent from sand filter"). This description will appear on the report.
COLLECTION DATE -	The date on which the sample(s) was/were collected.
COLLECTION TIME -	The time at which the sample(s) was/were collected.
MEDIA -	This is a description of the sample media (e.g., drinking water, waste water, soil, etc.)
ANALYSIS REQUESTED -	Use one line for each analysis or group of analyses associated to a specific bottle.
SAMPLE COLLECTED BY -	The person who collected the sample(s) signs here.
RELINQUISHED BY -	The sampler signs this box when he/she gives the sample to someone else, and then fills in the date/time the sample left his/her possession.
RECEIVED BY -	The person who receives the sample(s) signs here and fills in the date/time received. The date and time should be same as "Relinquished by" unless the sample(s) was/were shipped.
JOB OR SAMPLE REMARKS -	General sample or job remarks.

CONDITIONS

PRICING AND CHARGES

Prices to be charged for work performed for CLIENT are those currently published in the Coffey Laboratories, Inc. (CLI) standard pricebook. CLIENT must notify CLI of price quotation at the time of the transfer of sample(s) to CLI. All submissions of samples with testing requirements to CLI will be understood to be an agreement for services. Any cancellation of testing requirements will result in charges being assessed on all testing completed prior to the notice of cancellation.

DELIVERY AND LIABILITY LIMITATIONS

CLI will analyze samples provided by CLIENT as requested by CLIENT in accordance with the procedures documented in the CLI Quality Assurance Plan (QAP). The maximum total liability assumed by CLI for work performed for CLIENT will in all cases be limited to the cost of the analysis. The specific format of the deliverable goods will be defined by CLIENT to CLI upon transfer of the samples to CLI. This warranty supersedes all other warranties.

CONFIDENTIALITY

CLI will use its best efforts to treat all information regarding work performed for CLIENT as proprietary and confidential to the maximum extent allowed by law. NO CLIENT information will be released without the written consent of the CLIENT billed for the work.

APPLICABLE LAW

Legal matters arising from work performed by CLI for CLIENT will be construed and interpreted in accordance with the laws for the state of Oregon.

PERMITTEE NAME/ADDRESS (Include Facility Name/Location if different)
NAME KOPPERS INDUSTRIES, INC.
ADDRESS 7540 NW ST HELENS ROAD
PORTLAND, OR 97210

FACILITY NORTHWEST PLANT DEQ # 47430
LOCATION MULTNOMAH COUNTY

NATIONAL POLLUTANT DISCHARGE ELIMINATION SYSTEM (NPDES)
DISCHARGE MONITORING REPORT (DMR)

(2-16) 101003 (17-19)

~~OR-100077-9~~	0005
PERMIT NUMBER	DISCHARGE NUMBER

3077-J
47430

Form Approved.
OMB No. 2040-0004.
Approval expires 6-30-91.

MONITORING PERIOD

	YEAR	MO	DAY		YEAR	MO	DAY
FROM	94	05	01	TO	94	05	31
	(20-21)	(22-23)	(24-25)		(26-27)	(28-29)	(30-31)

NOTE: Read instructions before completing this form.

PARAMETER (32-37)		(3 Card Only) QUANTITY OR LOADING (46-53) AVERAGE	(54-61) MAXIMUM	UNITS	(4 Card Only) QUALITY OR CONCENTRATION (38-45) MINIMUM	(46-53) AVERAGE	(54-61) MAXIMUM	UNITS	NO. EX (62-63)	FREQUENCY OF ANALYSIS (64-68)	SAMPLE TYPE (69-70)
FLOW	SAMPLE MEASUREMENT	5,806		GPD					N/A	4/31	EST.
	PERMIT REQUIREMENT	N/A	N/A								
TEMPERATURE	SAMPLE MEASUREMENT				64	64.5	66	°F	0	4/31	GRAB
	PERMIT REQUIREMENT						110				
pH	SAMPLE MEASUREMENT				6.5	6.5	6.6	SU	0	4/31	GRAB
	PERMIT REQUIREMENT				6.0		9.0				
OIL & GREASES	SAMPLE MEASUREMENT				N.D.	N.D.	N.D.	mg/L	0	4/31	GRAB
	PERMIT REQUIREMENT				N/A	10	15				
PHENOLS	SAMPLE MEASUREMENT				N.D.	.06	.10	mg/L	0	4/31	GRAB
	PERMIT REQUIREMENT				N/A	.5	.7				
	SAMPLE MEASUREMENT										
	PERMIT REQUIREMENT										
	SAMPLE MEASUREMENT										
	PERMIT REQUIREMENT										

NAME/TITLE PRINCIPAL EXECUTIVE OFFICER: J. R. BATCHELDER, V.P.
TYPED OR PRINTED

I CERTIFY UNDER PENALTY OF LAW THAT I HAVE PERSONALLY EXAMINED AND AM FAMILIAR WITH THE INFORMATION SUBMITTED HEREIN; AND BASED ON MY INQUIRY OF THOSE INDIVIDUALS IMMEDIATELY RESPONSIBLE FOR OBTAINING THE INFORMATION, I BELIEVE THE SUBMITTED INFORMATION IS TRUE, ACCURATE, AND COMPLETE. I AM AWARE THAT THERE ARE SIGNIFICANT PENALTIES FOR SUBMITTING FALSE INFORMATION, INCLUDING THE POSSIBILITY OF FINE AND IMPRISONMENT. SEE 18 USC § 1001 AND 33 USC § 1319. (Penalties under these statutes may include fines up to $10,000 and/or maximum imprisonment of between 6 months and 5 years.)

A. S. KAMERER, PLANT MGR
SIGNATURE OF PRINCIPAL EXECUTIVE OFFICER OR AUTHORIZED AGENT

TELEPHONE		DATE		
503	286-3681	94	06	01
AREA CODE	NUMBER	YEAR	MO	DAY

COMMENT AND EXPLANATION OF ANY VIOLATIONS (Reference all attachments here)

CC: W. E. SWEARINGEN

Koppers015421

INTER-OFFICE MEMO

DATE _____

TO _____

Flow	1/11 =	4 × 45,000 ÷ 31 = 5806
T	64, 64, 66, 64 =	64.5
pH	6.6, 6.5, 6.5, 6.6 =	6.5
O+G	NO, NO, NO, NO =	NO
Phen	.10, .05, NO, .10 =	.06

BY _____

GBC®

GREIF BROS. CONTAINERS

Pumped 5/3

Report Date: May 2, 1994
Job Number: 940425BH
PO Number: VERBAL JOHN (O&G/Phenols)
Project No: None Provided
Project Name: None Provided

Attention: Amos Kamerer
Koppers Industry
7540 NW St. Helens Rd.
Portland, OR 97210-3663

Analytical Narrative

The samples were received on 04/25/94 by Coffey Laboratories, Inc. (CLI) Sample Reception personnel under strict chain of custody protocol. The following information was provided at the time of sample reception:

Laboratory Sample ID	Field Identification	Matrix	Collection Date	Collection Time
940425BH-1	WWT-3	Waste Water	04/25/94	1300
940425BH-2	WWT-4	Waste Water	04/25/94	1300

The recommended holding time for each batch of analyses was in accordance with the data quality objectives as specified in the CLI Quality Assurance Plan unless otherwise noted.

Acceptable precision and accuracy were achieved for all analyses associated with this work order as demonstrated by the recoveries of the quality control samples analyzed concurrently with each batch.

The data submitted in this report is for the sole and exclusive use of the above-named client. All samples associated with the work order will be retained a maximum of 15 days from the report date or until the maximum holding time expires. All results pertain only to samples submitted.

Sincerely,

Susan M. Coffey
President

SMC/gle

COFFEY LABORATORIES, INC.
12423 N.E. Whitaker Way • Portland, OR • 97230 • (503) 254-1794 • FAX (503) 254-1452

Analytical Data

Koppers Industry

Job Number: 940425BH

Lab Sample ID: 940425BH-1
Field ID: WWT-3
Date/Time: 04/25/94 1300
Matrix: Waste Water

EPA Category: Conventional Parameters

Parameter	Method	Detection Limit	Analytical Result	Units
Total Phenols	EPA 420.1	0.05	0.10	mg/L
Oil & Grease	EPA 413.1	3	ND	mg/L

Lab Sample ID: 940425BH-2
Field ID: WWT-4
Date/Time: 04/25/94 1300
Matrix: Waste Water

EPA Category: Conventional Parameters

Parameter	Method	Detection Limit	Analytical Result	Units
Total Phenols	EPA 420.1	0.05	0.05	mg/L
Oil & Grease	EPA 413.1	3	ND	mg/L

ND means none detected at or above the detection limit listed.

COFFEY LABORATORIES, INC.

12423 N.E. Whitaker Way • Portland, OR • 97230 • (503) 254-1794 • FAX (503) 254-1452

RECEIVED
MAY 05 1994
KOPPERS INDS., INC.
PORTLAND, OR

WWT 3 4-25-94

PH 6.6

TEMP 64°

WWT 4

PH 6.5

TEMP 64°

COFFEY LABORATORIES, INC.
CHAIN OF CUSTODY AGREEMENT

PORTLAND BRANCH
12423 NE Whitaker Way
Portland, OR 97230
(503) 254-1794 FAX: (503) 254-1452

PENDLETON BRANCH
287 SE First
Pendleton, OR 97801
(503) 276-0385

Report Attention: AMOS KAMERER
Company Name: KOPPERS IND. INC.
Address: 7540 N.W. ST. HELENS ROAD
PORTLAND, OREGON 97210-3663
Phone: (503) 286-3681 FAX: (503) 285-2831

Report Instructions:

Project Name:
Project Number:
PO Number:

Sample Turnaround
- [x] Standard
- [ ] Priority (1.5x Std. Fee)
- [ ] Rush (2x Std. Fee)
- [ ] Emergency (3x Std. Fee)

Reporting Request
- [ ] FAX (T-35)
- [ ] Verbals (T-1157)
- [ ] Extra Report Copy (T-1402) (Fees Associated)

Initials:

FOR LABORATORY USE ONLY Page 1 of 1
Job Number: 1404425-842
Custabbr: KOPPERS ☐NEW
☐VISA ☐M/C Expires:
Card #:
Cash / Check: $ #:
Billing Code: 1 2 3 4
QC LEVEL: 1 2 3 4
FEDX BUS COURIER UPS LAB CLIENT MAIL

Sample ID	Loc.	ID	Collection Date	Collection Time	Media	Analysis Requested	Test/Profile
WWT 3			4-25-94	1:00pm		PHENOLS	.10
WWT 3						OIL & GREASE	ND
WWT 4						PHENOLS	.05
WWT 4						OIL & GREASE	ND

Sample Comments:

Sampled by: (Please Print)	Relinquished by: (Please Sign)	Date	Time	Received by: (Sign)	Date	Time
TED HARE	Ted Hare	4-25	4:40			
				LAB [signature]	4/26/94	1604

White Copy - Laboratory Copy *Yellow Copy - Client Copy*

SHADED AREAS FOR LABORATORY USE ONLY

SUBMISSION OF SAMPLES WITH TESTING REQUIREMENTS TO CLI WILL BE UNDERSTOOD TO BE AN AGREEMENT FOR SERVICES IN ACCORDANCE WITH THE CONDITIONS LISTED ON THE BACK OF THE CLIENT COPY.

Koppers015427

COFFEY LABORATORIES, INC.
CHAIN OF CUSTODY INSTRUCTIONS/CONDITIONS SHEET

INSTRUCTIONS

FOR LAB USE ONLY -	**All shaded areas are for laboratory use only. Please Do Not Write in These Areas.**
REPORT ATTENTION -	Name of the person who receives the laboratory report.
COMPANY NAME -	Name of the company or individual requesting the analysis.
REPORT ADDRESS -	Address of the company or individual requesting the analysis. (Address where report should be mailed)
REPORT INSTRUCTIONS -	A brief description of any special mail instructions, or address information pertaining to extra report copies.
PROJECT NAME -	Applies to customer project name. This data is provided at the customer's discretion.
PROJECT NUMBER -	Applies only to samples submitted by the customer. This data is provided at the customer's discretion.
FIELD ID -	A short description of the sample point (e.g., "Effluent from sand filter"). This description will appear on the report.
COLLECTION DATE -	The date on which the sample(s) was/were collected.
COLLECTION TIME -	The time at which the sample(s) was/were collected.
MEDIA -	This is a description of the sample media (e.g., drinking water, waste water, soil, etc.)
ANALYSIS REQUESTED -	Use one line for each analysis or group of analyses associated to a specific bottle.
SAMPLE COLLECTED BY -	The person who collected the sample(s) signs here.
RELINQUISHED BY -	The sampler signs this box when he/she gives the sample to someone else, and then fills in the date/time the sample left his/her possession.
RECEIVED BY -	The person who receives the sample(s) signs here and fills in the date/time received. The date and time should be same as "Relinquished by" unless the sample(s) was/were shipped.
JOB OR SAMPLE REMARKS -	General sample or job remarks.

CONDITIONS

PRICING AND CHARGES

Prices to be charged for work performed for CLIENT are those currently published in the Coffey Laboratories, Inc. (CLI) standard pricebook. CLIENT must notify CLI of price quotation at the time of the transfer of sample(s) to CLI. All submissions of samples with testing requirements to CLI will be understood to be an agreement for services. Any cancellation of testing requirements will result in charges being assessed on all testing completed prior to the notice of cancellation.

DELIVERY AND LIABILITY LIMITATIONS

CLI will analyze samples provided by CLIENT as requested by CLIENT in accordance with the procedures documented in the CLI Quality Assurance Plan (QAP). The maximum total liability assumed by CLI for work performed for CLIENT will in all cases be limited to the cost of the analysis. The specific format of the deliverable goods will be defined by CLIENT to CLI upon transfer of the samples to CLI. This warranty supersedes all other warranties.

CONFIDENTIALITY

CLI will use its best efforts to treat all information regarding work performed for CLIENT as proprietary and confidential to the maximum extent allowed by law. NO CLIENT information will be released without the written consent of the CLIENT billed for the work.

APPLICABLE LAW

Legal matters arising from work performed by CLI for CLIENT will be construed and interpreted in accordance with the laws for the state of Oregon.

Report Date: May 27, 1994
Job Number: 940520BC
PO Number: VERBAL JOHN (O&G/Phenols
Project No: None Provided
Project Name: None Provided

Attention: Amos Kamerer
Koppers Industry
7540 NW St. Helens Rd.
Portland, OR 97210-3663

Pumped 5/27/94

Analytical Narrative

The samples were received on 05/20/94 by Coffey Laboratories, Inc. (CLI) Sample Reception personnel under strict chain of custody protocol. The following information was provided at the time of sample reception:

Laboratory Sample ID	Field Identification	Matrix	Collection Date	Collection Time
940520BC-1	WWT I	Waste Water	05/20/94	1500
940520BC-2	WWT II	Waste Water	05/20/94	1500

The recommended holding time for each batch of analyses was in accordance with the data quality objectives as specified in the CLI Quality Assurance Plan unless otherwise noted.

Acceptable precision and accuracy were achieved for all analyses associated with this work order as demonstrated by the recoveries of the quality control samples analyzed concurrently with each batch.

The data submitted in this report is for the sole and exclusive use of the above-named client. All samples associated with the work order will be retained a maximum of 15 days from the report date or until the maximum holding time expires. All results pertain only to samples submitted.

Thank you for allowing Coffey Laboratories to be of service to you. If you have questions or need further assistance, please do not hesitate to call our Customer Services Department.

Sincerely,

Rona A. Klueh
Technical Director

RAK/daj

COFFEY LABORATORIES, INC.
12423 N.E. Whitaker Way • Portland, OR • 97230 • (503) 254-1794 • FAX (503) 254-1452

Analytical Data

Koppers Industry

Job Number: 940520BC

Lab Sample ID: 940520BC-1
Field ID: WWT I
Date/Time: 05/20/94 1500
Matrix: Waste Water

EPA Category: Conventional Parameters

Parameter	Method	Detection Limit	Analytical Result	Units
Oil & Grease	EPA 413.1	3	ND	mg/L
Total Phenols	EPA 420.1	0.05	ND	mg/L

ND means none detected at or above the detection limit listed.

COFFEY LABORATORIES, INC.
12423 N.E. Whitaker Way • Portland, OR • 97230 • (503) 254-1794 • FAX (503) 254-1452

Analytical Data

Koppers Industry

Job Number: 940520BC

Lab Sample ID: 940520BC-2
Field ID: WWT II
Date/Time: 05/20/94 1500
Matrix: Waste Water

EPA Category: Conventional Parameters

Parameter	Method	Detection Limit	Analytical Result	Units
Oil & Grease	EPA 413.1	3	ND	mg/L
Total Phenols	EPA 420.1	0.05	0.10	mg/L

ND means none detected at or above the detection limit listed.

COFFEY LABORATORIES, INC.
12423 N.E. Whitaker Way • Portland, OR • 97230 • (503) 254-1794 • FAX (503) 254-1452

RECEIVED

JUN 01 1994

KOPPERS INDS., INC.
PORTLAND, OR

5-20-94

WWT 1

PH 6.5

TEMP 66° F

WWT 2

PH 6.6

Temp 64

COFFEY LABORATORIES, INC.
CHAIN OF CUSTODY AGREEMENT

PORTLAND BRANCH
12423 NE Whitaker Way
Portland, OR 97230
(503) 254-1794 FAX: (503) 254-1452

PENDLETON BRANCH
287 SE First
Pendleton, OR 97801
(503) 276-0385

Report Attention: AMOS KAMERER
Company Name: KOPPERS IND INC
Address: 7540 NW ST HELENS ROAD
PORTLAND ORE 97210
Phone: (503) 286-3681 FAX: (~~285~~) 285 2831

Report Instructions:

Project Name:
Project Number:
PO Number:

Sample Turnaround	Reporting Request
☑ Standard	☐ FAX (T-35)
☐ Priority (1.5x Std. Fee)	☐ Verbals (T-1157)
☐ Rush (2x Std. Fee)	☐ Extra Report Copy (T-1402) (Fees Associated)
☐ Emergency (3x Std. Fee)	Initials:

FOR LABORATORY USE ONLY Page ___ of ___
Job Number: WC MDS2W BC2
Custabbr: KOPPERS ☐NEW
☐VISA ☐M/C Expires:
Card #:
Cash / Check: $ #:
Billing Code: 1 2 3 4
QC LEVEL: 1 2 3 4
FEDX BUS COURIER UPS LAB CLIENT MAIL

Sample ID	Loc.	ID	Collection Date	Collection Time	Media	Analysis Requested	Test/Profile
WWT I			5-20	3:00		OIL & GREASE	ND
WWT II			5-20			"	ND
WWT I			5-20			PHENOL	
WWT II			5-20			PHENOL	

Sample Comments:

Sampled by: (Please Print)	Relinquished by: (Please Sign)	Date	Time	Received by: (Sign)	Date	Time
TED HARE	Ted Hare	5-20-94	4:40pm			
				LAB	5/20/94	1640

White Copy - Laboratory Copy *Yellow Copy - Client Copy*

SHADED AREAS FOR LABORATORY USE ONLY

SUBMISSION OF SAMPLES WITH TESTING REQUIREMENTS TO CLI WILL BE UNDERSTOOD TO BE AN AGREEMENT FOR SERVICES IN ACCORDANCE WITH THE CONDITIONS LISTED ON THE BACK OF THE CLIENT COPY.

Koppers015434

COFFEY LABORATORIES, INC.
CHAIN OF CUSTODY INSTRUCTIONS/CONDITIONS SHEET

INSTRUCTIONS

FOR LAB USE ONLY -	**All shaded areas are for laboratory use only. Please Do Not Write in These Areas.**
REPORT ATTENTION -	Name of the person who receives the laboratory report.
COMPANY NAME -	Name of the company or individual requesting the analysis.
REPORT ADDRESS -	Address of the company or individual requesting the analysis. (Address where report should be mailed)
REPORT INSTRUCTIONS -	A brief description of any special mail instructions, or address information pertaining to extra report copies.
PROJECT NAME -	Applies to customer project name. This data is provided at the customer's discretion.
PROJECT NUMBER -	Applies only to samples submitted by the customer. This data is provided at the customer's discretion.
FIELD ID -	A short description of the sample point (e.g., "Effluent from sand filter"). This description will appear on the report.
COLLECTION DATE -	The date on which the sample(s) was/were collected.
COLLECTION TIME -	The time at which the sample(s) was/were collected.
MEDIA -	This is a description of the sample media (e.g., drinking water, waste water, soil, etc.)
ANALYSIS REQUESTED -	Use one line for each analysis or group of analyses associated to a specific bottle.
SAMPLE COLLECTED BY -	The person who collected the sample(s) signs here.
RELINQUISHED BY -	The sampler signs this box when he/she gives the sample to someone else, and then fills in the date/time the sample left his/her possession.
RECEIVED BY -	The person who receives the sample(s) signs here and fills in the date/time received. The date and time should be same as "Relinquished by" unless the sample(s) was/were shipped.
JOB OR SAMPLE REMARKS -	General sample or job remarks.

CONDITIONS

PRICING AND CHARGES

Prices to be charged for work performed for CLIENT are those currently published in the Coffey Laboratories, Inc. (CLI) standard pricebook. CLIENT must notify CLI of price quotation at the time of the transfer of sample(s) to CLI. All submissions of samples with testing requirements to CLI will be understood to be an agreement for services. Any cancellation of testing requirements will result in charges being assessed on all testing completed prior to the notice of cancellation.

DELIVERY AND LIABILITY LIMITATIONS

CLI will analyze samples provided by CLIENT as requested by CLIENT in accordance with the procedures documented in the CLI Quality Assurance Plan (QAP). The maximum total liability assumed by CLI for work performed for CLIENT will in all cases be limited to the cost of the analysis. The specific format of the deliverable goods will be defined by CLIENT to CLI upon transfer of the samples to CLI. This warranty supersedes all other warranties.

CONFIDENTIALITY

CLI will use its best efforts to treat all information regarding work performed for CLIENT as proprietary and confidential to the maximum extent allowed by law. NO CLIENT information will be released without the written consent of the CLIENT billed for the work.

APPLICABLE LAW

Legal matters arising from work performed by CLI for CLIENT will be construed and interpreted in accordance with the laws for the state of Oregon.

PERMITTEE NAME/ADDRESS (Include Facility Name/Location if different)

NAME KOPPERS INDUSTRIES, INC.

ADDRESS 7540 NW ST HELENS ROAD
PORTLAND, OR 97210

FACILITY NORTHWEST PLANT

LOCATION MULTNOMAH COUNTY

NATIONAL POLLUTANT DISCHARGE ELIMINATION SYSTEM (NPDES)
DISCHARGE MONITORING REPORT (DMR)

(2-16) PERMIT NUMBER	(17-19) DISCHARGE NUMBER
OR-100077-9	0004

3077-J
47430

Form Approved.
OMB No. 2040-0004.
Approval expires 6-30-91.

MONITORING PERIOD

	YEAR	MO	DAY		YEAR	MO	DAY
FROM	94	04	01	TO	94	04	30
	(20-21)	(22-23)	(24-25)		(26-27)	(28-29)	(30-31)

NOTE: Read instructions before completing this form.

PARAMETER (32-37)		(3 Card Only) QUANTITY OR LOADING (46-53) AVERAGE	(54-61) MAXIMUM	UNITS	(4 Card Only) QUALITY OR CONCENTRATION (38-45) MINIMUM	(46-53) AVERAGE	(54-61) MAXIMUM	UNITS	NO. EX (62-63)	FREQUENCY OF ANALYSIS (64-68)	SAMPLE TYPE (69-70)
FLOW	SAMPLE MEASUREMENT	6,000							N/A	4/30	EST.
	PERMIT REQUIREMENT	N/A	N/A								
TEMPERATURE	SAMPLE MEASUREMENT				52	54	56		0	4/30	GRAB
	PERMIT REQUIREMENT				N/A	N/A	N/A				
pH	SAMPLE MEASUREMENT				6.5	6.6	6.8		0	4/30	GRAB
	PERMIT REQUIREMENT				6.0		9.0				
OIL & GREASES	SAMPLE MEASUREMENT				N.D.	3.5	8		0	4/30	GRAB
	PERMIT REQUIREMENT				N/A	10	15				
PHENOLS	SAMPLE MEASUREMENT				N.D.	.01	.05		0	4/30	GRAB
	PERMIT REQUIREMENT				N/A	.5	.7				
	SAMPLE MEASUREMENT										
	PERMIT REQUIREMENT										
	SAMPLE MEASUREMENT										
	PERMIT REQUIREMENT										

NAME/TITLE PRINCIPAL EXECUTIVE OFFICER

J. R. BATCHELDER, V.P.
TYPED OR PRINTED

I CERTIFY UNDER PENALTY OF LAW THAT I HAVE PERSONALLY EXAMINED AND AM FAMILIAR WITH THE INFORMATION SUBMITTED HEREIN, AND BASED ON MY INQUIRY OF THOSE INDIVIDUALS IMMEDIATELY RESPONSIBLE FOR OBTAINING THE INFORMATION, I BELIEVE THE SUBMITTED INFORMATION IS TRUE, ACCURATE AND COMPLETE. I AM AWARE THAT THERE ARE SIGNIFICANT PENALTIES FOR SUBMITTING FALSE INFORMATION, INCLUDING THE POSSIBILITY OF FINE AND IMPRISONMENT. SEE 18 USC § 1001 AND 33 USC § 1319 (Penalties under these statutes may include fines up to $10,000 and or maximum imprisonment of between 6 months and 5 years.)

A. KAMERER, Plant Mgr.
SIGNATURE OF PRINCIPAL EXECUTIVE OFFICER OR AUTHORIZED AGENT

TELEPHONE: AREA CODE 503 NUMBER 286-3681

DATE: YEAR 94 MO 05 DAY 10

COMMENT AND EXPLANATION OF ANY VIOLATIONS (Reference all attachments here)

Koppers015436

CC: W. E. SWEARINGEN

INTER-OFFICE MEMO

DATE _____

TO _____

Flow 1111 = 4 × 45,000 ÷ 30 = 6000/day

T

52, 52, 56, 56 = 54

PH

6.8, 6.7, 6.5, 6.5 = 6.6

~~OIG~~ PhCN

ND, ND, .05, ND = .01

~~PhCN~~ O. G.

ND, ND, 8, 6 = 3.5

BY _____

GBC® GREIF BROS. CONTAINERS

INTER-OFFICE MEMO

DATE _____

TO _____

BY _____

GBC®

GREIF BROS. CONTAINERS

Report Date: April 14, 1994
Job Number: 940412R
PO Number: VERBAL JOHN (O&G/Phenols)
Project No: None Provided
Project Name: None Provided

Pumped 4/13&14

Attention: Amos Kamerer
Koppers Industry
7540 NW St. Helens Rd.
Portland, OR 97210-3663

Analytical Narrative

The samples were received on 04/12/94 by Coffey Laboratories, Inc. (CLI) Sample Reception personnel under strict chain of custody protocol. The following information was provided at the time of sample reception:

Laboratory Sample ID	Field Identification	Matrix	Collection Date	Collection Time
940412R-1	W.W.T. #1	Waste Water	04/12/94	0845
940412R-2	W.W.T. #2	Waste Water	04/12/94	0845

The recommended holding time for each batch of analyses was in accordance with the data quality objectives as specified in the CLI Quality Assurance Plan unless otherwise noted.

Acceptable precision and accuracy were achieved for all analyses associated with this work order as demonstrated by the recoveries of the quality control samples analyzed concurrently with each batch.

The data submitted in this report is for the sole and exclusive use of the above-named client. All samples associated with the work order will be retained a maximum of 15 days from the report date, or until the maximum holding time expires.

Sincerely,

Susan M. Coffey

Susan M. Coffey
President

SMC/lws

COFFEY LABORATORIES, INC.
12423 N.E. Whitaker Way • Portland, OR • 97230 • (503) 254-1794 • FAX (503) 254-1452

Analytical Data

Koppers Industry

Job Number: 940412R
Page Number: 2

Lab Sample ID: 940412R-1
Field ID: W.W.T. #1
Date/Time: 04/12/94 0845
Matrix: Waste Water

EPA Category: Conventional Parameters

Parameter	Method	Detection Limit	Analytical Result	Units
Total Phenols	EPA 420.1	0.05	0.05	mg/L
Oil & Grease	EPA 413.1	3	8	mg/L

Lab Sample ID: 940412R-2
Field ID: W.W.T. #2
Date/Time: 04/12/94 0845
Matrix: Waste Water

EPA Category: Conventional Parameters

Parameter	Method	Detection Limit	Analytical Result	Units
Total Phenols	EPA 420.1	0.05	ND	mg/L
Oil & Grease	EPA 413.1	3	6	mg/L

ND means none detected at or above the detection limit listed.

COFFEY LABORATORIES, INC.
12423 N.E. Whitaker Way • Portland, OR • 97230 • (503) 254-1794 • FAX (503) 254-1452

RECEIVED

APR 21 1994

KOPPERS INDS., INC.
PORTLAND, OR

4-12-94

WWT 1

TEMP 56

PH 6.5

WWT 2

TEMP 56°

PH 6.5

COFFEY LABORATORIES, INC.
CHAIN OF CUSTODY AGREEMENT

PORTLAND BRANCH
12423 NE Whitaker Way
Portland, OR 97230
(503) 254-1794 FAX: (503) 254-1452

PENDLETON BRANCH
287 SE First
Pendleton, OR 97801
(503) 276-0385

Report Attention: AMOS KAMERER
Company Name: KOPPER IND. INC
Address: 7540 NW ST HELENS RD
PORTLAND OREGON 97210-3663
Phone: (503) 286 3681 FAX: (503) 285-2871

Report Instructions:

Project Name:
Project Number:
PO Number:

Sample Turnaround	Reporting Request
☐ Standard	☐ FAX (T-35)
☐ Priority (1.5x Std. Fee)	☐ Verbals (T-1157)
☒ Rush (2x Std. Fee)	☐ Extra Report Copy (T-1402) (Fees Associated)
☐ Emergency (3x Std. Fee)	Initials:

FOR LABORATORY USE ONLY Page ___ of ___
Job Number: 1794412-R2
Custabbr: KOPPER ☐NEW
☐VISA ☐M/C Expires:
Card #:
Cash / Check: $ #:
Billing Code: 1 2 3 4
QC LEVEL: 1 2 3 4
FEDX BUS COURIER UPS LAB CLIENT MAIL

Sample ID	Loc.	ID	Collection Date	Collection Time	Media	Analysis Requested	Test/Profile
WWT #1			4-17-94	8:45am		OIL & GREASE	6
WWT #1						PHENOLS	.05
WWT #2						OIL & GREASE	8
WWT #2						PHENOLS	N.D.

Sample Comments:

Sampled by: (Please Print)	Relinquished by: (Please Sign)	Date	Time	Received by: (Sign)	Date	Time
TED HARE	Ted Hare	4-17-94	12:09			
				LAB [illegible]	4/19/94	12:10

White Copy - Laboratory Copy *Yellow Copy - Client Copy*

SHADED AREAS FOR LABORATORY USE ONLY

SUBMISSION OF SAMPLES WITH TESTING REQUIREMENTS TO CLI WILL BE UNDERSTOOD TO BE AN AGREEMENT FOR SERVICES IN ACCORDANCE WITH THE CONDITIONS LISTED ON THE BACK OF THE CLIENT COPY.

Koppers015443

COFFEY LABORATORIES, INC.

CHAIN OF CUSTODY INSTRUCTIONS/CONDITIONS SHEET

INSTRUCTIONS

FOR LAB USE ONLY -	**All shaded areas are for laboratory use only. Please Do Not Write in These Areas.**
REPORT ATTENTION -	Name of the person who receives the laboratory report.
COMPANY NAME -	Name of the company or individual requesting the analysis.
REPORT ADDRESS -	Address of the company or individual requesting the analysis. (Address where report should be mailed)
REPORT INSTRUCTIONS -	A brief description of any special mail instructions, or address information pertaining to extra report copies.
PROJECT NAME -	Applies to customer project name. This data is provided at the customer's discretion.
PROJECT NUMBER -	Applies only to samples submitted by the customer. This data is provided at the customer's discretion.
FIELD ID -	A short description of the sample point (e.g., "Effluent from sand filter"). This description will appear on the report.
COLLECTION DATE -	The date on which the sample(s) was/were collected.
COLLECTION TIME -	The time at which the sample(s) was/were collected.
MEDIA -	This is a description of the sample media (e.g., drinking water, waste water, soil, etc.)
ANALYSIS REQUESTED -	Use one line for each analysis or group of analyses associated to a specific bottle.
SAMPLE COLLECTED BY -	The person who collected the sample(s) signs here.
RELINQUISHED BY -	The sampler signs this box when he/she gives the sample to someone else, and then fills in the date/time the sample left his/her possession.
RECEIVED BY -	The person who receives the sample(s) signs here and fills in the date/time received. The date and time should be same as "Relinquished by" unless the sample(s) was/were shipped.
JOB OR SAMPLE REMARKS -	General sample or job remarks.

CONDITIONS

PRICING AND CHARGES

Prices to be charged for work performed for CLIENT are those currently published in the Coffey Laboratories, Inc. (CLI) standard pricebook. CLIENT must notify CLI of price quotation at the time of the transfer of sample(s) to CLI. All submissions of samples with testing requirements to CLI will be understood to be an agreement for services. Any cancellation of testing requirements will result in charges being assessed on all testing completed prior to the notice of cancellation.

DELIVERY AND LIABILITY LIMITATIONS

CLI will analyze samples provided by CLIENT as requested by CLIENT in accordance with the procedures documented in the CLI Quality Assurance Plan (QAP). The maximum total liability assumed by CLI for work performed for CLIENT will in all cases be limited to the cost of the analysis. The specific format of the deliverable goods will be defined by CLIENT to CLI upon transfer of the samples to CLI. This warranty supersedes all other warranties.

CONFIDENTIALITY

CLI will use its best efforts to treat all information regarding work performed for CLIENT as proprietary and confidential to the maximum extent allowed by law. NO CLIENT information will be released without the written consent of the CLIENT billed for the work.

APPLICABLE LAW

Legal matters arising from work performed by CLI for CLIENT will be construed and interpreted in accordance with the laws for the state of Oregon.

Report Date: April 11, 1994
Job Number: 940407C
PO Number: VERBAL JOHN (O&G/Phenols)
Project No: None Provided
Project Name: None Provided

Attention: Amos Kamerer
Koppers Industry
7540 NW St. Helens Rd.
Portland, OR 97210-3663

Pumped 4/8 & 4/11

Analytical Narrative

The samples were received on 04/07/94 by Coffey Laboratories, Inc. (CLI) Sample Reception personnel under strict chain of custody protocol. The following information was provided at the time of sample reception:

Laboratory Sample ID	Field Identification	Matrix	Collection Date	Collection Time
940407C-1	WW Tank #3	Waste Water	04/07/94	0830
940407C-2	WW Tank #4	Waste Water	04/07/94	0830

The recommended holding time for each batch of analyses was in accordance with the data quality objectives as specified in the CLI Quality Assurance Plan unless otherwise noted.

Acceptable precision and accuracy were achieved for all analyses associated with this work order as demonstrated by the recoveries of the quality control samples analyzed concurrently with each batch.

The data submitted in this report is for the sole and exclusive use of the above-named client. All samples associated with the work order will be retained a maximum of 15 days from the report date, or until the maximum holding time expires.

Sincerely,

Susan M. Coffey
President

SMC/lws

COFFEY LABORATORIES, INC.
12423 N.E. Whitaker Way • Portland, OR • 97230 • (503) 254-1794 • FAX (503) 254-1452

RECEIVED

APR 13 1994

KOPPERS INDS., INC.
PORTLAND, OR

Analytical Data

Koppers Industry

Job Number: 940407C
Page Number: 2

Lab Sample ID: 940407C-1
Field ID: WW Tank #3
Date/Time: 04/07/94 0830
Matrix: Waste Water

EPA Category: Conventional Parameters

Parameter	Method	Detection Limit	Analytical Result	Units
Oil & Grease	EPA 413.1	3	ND	mg/L
Total Phenols	EPA 420.1	0.05	ND	mg/L

Lab Sample ID: 940407C-2
Field ID: WW Tank #4
Date/Time: 04/07/94 0830
Matrix: Waste Water

EPA Category: Conventional Parameters

Parameter	Method	Detection Limit	Analytical Result	Units
Oil & Grease	EPA 413.1	3	ND	mg/L
Total Phenols	EPA 420.1	0.05	ND	mg/L

ND means none detected at or above the detection limit listed.

COFFEY LABORATORIES, INC.
12423 N.E. Whitaker Way • Portland, OR • 97230 • (503) 254-1794 • FAX (503) 254-1452

WWT3 4-7-94

PH = 6.8

TEMP 52

WWT4 18
26

PH = 6.7

TEMP 52 2

COFFEY LABORATORIES, INC.
CHAIN OF CUSTODY AGREEMENT

PORTLAND BRANCH
12423 NE Whitaker Way
Portland, OR 97230
(503) 254-1794 FAX: (503) 254-1452

PENDLETON BRANCH
287 SE First
Pendleton, OR 97801
(503) 276-0385

Report Attention: Amos Kramer
Company Name: Koppers ind
Address: 7540 NW St Helens
Port. OR 97210-3663
Phone: (503) 286-3681 FAX: (503) 285-2831

Report Instructions:

Project Name:
Project Number:
PO Number:

Sample Turnaround	Reporting Request
☐ Standard	☐ FAX (T-35)
☐ Priority (1.5x Std. Fee)	☐ Verbals (T-1157)
☑ Rush (2x Std. Fee)	☐ Extra Report Copy (T-1402) (Fees Associated)
☐ Emergency (3x Std. Fee)	Initials:

FOR LABORATORY USE ONLY Page ___ of ___
Job Number: L26 [illegible] C2
Custabbr: Koppers ☐NEW
☐VISA ☐M/C Expires:
Card #:
Cash / Check: $ #:
Billing Code: 1 2 3 4
QC LEVEL: 1 2 3 4
FEDX BUS COURIER UPS LAB ~~CLIENT~~ MAIL

Sample ID	Loc.	ID	Collection Date	Collection Time	Media	Analysis Requested	Test/Profile
WW Tank #3			4-7-94	8:30		Oils Grease	
WW Tank #3						phenols	
WW Tank #4						Oils Grease	
WW Tank #4						phenols	

Sample Comments:

Sampled by: (Please Print)	Relinquished by: (Please Sign)	Date	Time	Received by: (Sign)	Date	Time
Chris Tabe	[signature]	4-7-94	16:25			
				LAB [signature]	4/7/94	1030

White Copy - Laboratory Copy *Yellow Copy - Client Copy*

SHADED AREAS FOR LABORATORY USE ONLY

SUBMISSION OF SAMPLES WITH TESTING REQUIREMENTS TO CLI WILL BE UNDERSTOOD TO BE AN AGREEMENT FOR SERVICES IN ACCORDANCE WITH THE CONDITIONS LISTED ON THE BACK OF THE CLIENT COPY.

Koppers015449

COFFEY LABORATORIES, INC.
CHAIN OF CUSTODY INSTRUCTIONS/CONDITIONS SHEET

INSTRUCTIONS

FOR LAB USE ONLY -	**All shaded areas are for laboratory use only. Please Do Not Write in These Areas.**
REPORT ATTENTION -	Name of the person who receives the laboratory report.
COMPANY NAME -	Name of the company or individual requesting the analysis.
REPORT ADDRESS -	Address of the company or individual requesting the analysis. (Address where report should be mailed)
REPORT INSTRUCTIONS -	A brief description of any special mail instructions, or address information pertaining to extra report copies.
PROJECT NAME -	Applies to customer project name. This data is provided at the customer's discretion.
PROJECT NUMBER -	Applies only to samples submitted by the customer. This data is provided at the customer's discretion.
FIELD ID -	A short description of the sample point (e.g., "Effluent from sand filter"). This description will appear on the report.
COLLECTION DATE -	The date on which the sample(s) was/were collected.
COLLECTION TIME -	The time at which the sample(s) was/were collected.
MEDIA -	This is a description of the sample media (e.g., drinking water, waste water, soil, etc.)
ANALYSIS REQUESTED -	Use one line for each analysis or group of analyses associated to a specific bottle.
SAMPLE COLLECTED BY -	The person who collected the sample(s) signs here.
RELINQUISHED BY -	The sampler signs this box when he/she gives the sample to someone else, and then fills in the date/time the sample left his/her possession.
RECEIVED BY -	The person who receives the sample(s) signs here and fills in the date/time received. The date and time should be same as "Relinquished by" unless the sample(s) was/were shipped.
JOB OR SAMPLE REMARKS -	General sample or job remarks.

CONDITIONS

PRICING AND CHARGES

Prices to be charged for work performed for CLIENT are those currently published in the Coffey Laboratories, Inc. (CLI) standard pricebook. CLIENT must notify CLI of price quotation at the time of the transfer of sample(s) to CLI. All submissions of samples with testing requirements to CLI will be understood to be an agreement for services. Any cancellation of testing requirements will result in charges being assessed on all testing completed prior to the notice of cancellation.

DELIVERY AND LIABILITY LIMITATIONS

CLI will analyze samples provided by CLIENT as requested by CLIENT in accordance with the procedures documented in the CLI Quality Assurance Plan (QAP). The maximum total liability assumed by CLI for work performed for CLIENT will in all cases be limited to the cost of the analysis. The specific format of the deliverable goods will be defined by CLIENT to CLI upon transfer of the samples to CLI. This warranty supersedes all other warranties.

CONFIDENTIALITY

CLI will use its best efforts to treat all information regarding work performed for CLIENT as proprietary and confidential to the maximum extent allowed by law. NO CLIENT information will be released without the written consent of the CLIENT billed for the work.

APPLICABLE LAW

Legal matters arising from work performed by CLI for CLIENT will be construed and interpreted in accordance with the laws for the state of Oregon.

PERMITTEE NAME/ADDRESS (Include Facility Name/Location if different)

NAME KOPPERS INDUSTRIES, INC.

ADDRESS 7540 NW ST HELENS ROAD
PORTLAND, OR 97210

FACILITY NORTHWEST PLANT

LOCATION MULTNOMAH COUNTY

NATIONAL POLLUTANT DISCHARGE ELIMINATION SYSTEM (NPDES)
DISCHARGE MONITORING REPORT (DMR)

(2-16) PERMIT NUMBER	(17-19) DISCHARGE NUMBER
OR-100077-9	0003

Form Approved.
OMB No. 2040-0004.
Approval expires 6-30-91.

3077-J
47430

MONITORING PERIOD	YEAR	MO	DAY		YEAR	MO	DAY
FROM	94	03	01	TO	94	03	31
	(20-21)	(22-23)	(24-25)		(26-27)	(28-29)	(30-31)

NOTE: Read instructions before completing this form.

PARAMETER (32-37)		(3 Card Only) QUANTITY OR LOADING (46-53) AVERAGE	(54-61) MAXIMUM	UNITS	(4 Card Only) QUALITY OR CONCENTRATION (38-45) MINIMUM	(46-53) AVERAGE	(54-61) MAXIMUM	UNITS	NO. EX (62-63)	FREQUENCY OF ANALYSIS (64-68)	SAMPLE TYPE (69-70)
FLOW	SAMPLE MEASUREMENT	17,419							N/A	12/31	EET
	PERMIT REQUIREMENT	N/A	N/A								
TEMPERATURE	SAMPLE MEASUREMENT				48	53	60		0	12/31	GRAB
	PERMIT REQUIREMENT				N/A	N/A	N/A				
PH	SAMPLE MEASUREMENT				6.5	6.6	6.8		0	12/31	GRAB
	PERMIT REQUIREMENT				6.0		9.0				
OIL & GREASES	SAMPLE MEASUREMENT				N.D.	3.5	14		0	12/31	GRAB
	PERMIT REQUIREMENT				N/A	10	15				
PHENOLS	SAMPLE MEASUREMENT				N.D.	.04	.08		0	12/31	GRAB
	PERMIT REQUIREMENT				N/A	.5	.7				
	SAMPLE MEASUREMENT										
	PERMIT REQUIREMENT										
	SAMPLE MEASUREMENT										
	PERMIT REQUIREMENT										

NAME/TITLE PRINCIPAL EXECUTIVE OFFICER			TELEPHONE		DATE		
J.R. BATCHELDER, V.P.	I CERTIFY UNDER PENALTY OF LAW THAT I HAVE PERSONALLY EXAMINED AND AM FAMILIAR WITH THE INFORMATION SUBMITTED HEREIN, AND BASED ON MY INQUIRY OF THOSE INDIVIDUALS IMMEDIATELY RESPONSIBLE FOR OBTAINING THE INFORMATION, I BELIEVE THE SUBMITTED INFORMATION IS TRUE, ACCURATE AND COMPLETE. I AM AWARE THAT THERE ARE SIGNIFICANT PENALTIES FOR SUBMITTING FALSE INFORMATION, INCLUDING THE POSSIBILITY OF FINE AND IMPRISONMENT. SEE 18 USC § 1001 AND 33 USC § 1319 (Penalties under these statutes may include fines up to $10,000 and/or maximum imprisonment of between 6 months and 5 years.)	W.S. KAMERER, PLANT MANAGER	503	286-3681	94	04	04
TYPED OR PRINTED		SIGNATURE OF PRINCIPAL EXECUTIVE OFFICER OR AUTHORIZED AGENT	AREA CODE	NUMBER	YEAR	MO	DAY

COMMENT AND EXPLANATION OF ANY VIOLATIONS (Reference all attachments here)

Koppers015451

CC: W.E. SWEARINGEN

SUNRISE EXPRESS, INC.

5419 N.E. 88TH ST. • VANCOUVER, WASHINGTON 98665
(206) 574-5971 • OUT OF STATE 1-800-999-5971
FAX 1-206-574-8062

~~IIII~~ ~~IIII~~ II = 12 X 45,000 ÷ 31 = 17,419 GALS.

F

T 51, 50, 54, 54, 54, 52, 54, 54, 54, 60, 48, 49 = 634 ÷ 12 = 53°

pH 6.5, 6.7, 6.6, 6.7, 6.6, 6.7, 6.6, 6.6, 6.5, 6.6, 6.7, 6.8 = 79.6 ÷ 12 = 6.6

OG ND, ND, 3, 3, 3, 3, 3, 3, 4, 14, 3, 3 = 3.5

PN .05, ND, .05, .05, .05, .05, .05, .05, ND, .08, .05, .05 = .04

Report Date: March 31, 1994
Job Number: 940329E
PO Number: VERBAL JOHN (O&G/Phenols
Project No: None Provided
Project Name: None Provided

Attention: Amos Kamerer
Koppers Industry
7540 NW St. Helens Rd.
Portland, OR 97210-3663

Analytical Narrative

The samples were received on 03/29/94 by Coffey Laboratories, Inc. (CLI) Sample Reception personnel under strict chain of custody protocol. The following information was provided at the time of sample reception:

Laboratory Sample ID	Field Identification	Matrix	Collection Date	Collection Time
940329E-1	WWT I	Waste Water	03/29/94	0845
940329E-2	WWT II	Waste Water	03/29/94	0845

The recommended holding time for each batch of analyses was in accordance with the data quality objectives as specified in the CLI Quality Assurance Plan unless otherwise noted.

Acceptable precision and accuracy were achieved for all analyses associated with this work order as demonstrated by the recoveries of the quality control samples analyzed concurrently with each batch.

The data submitted in this report is for the sole and exclusive use of the above-named client. All samples associated with the work order will be retained a maximum of 15 days from the report date, or until the maximum holding time expires.

Sincerely,

Susan M. Coffey
President

SMC/lws

COFFEY LABORATORIES, INC.
12423 N.E. Whitaker Way • Portland, OR • 97230 • (503) 254-1794 • FAX (503) 254-1452

RECEIVED

APR - 4 1994

KOPPERS INDS., INC.
PORTLAND, OR

Analytical Data

Koppers Industry

Job Number: 940329E
Page Number: 2

Lab Sample ID: 940329E-1
Field ID: WWT I
Date/Time: 03/29/94 0845
Matrix: Waste Water

EPA Category: Conventional Parameters

Parameter	Method	Detection Limit	Analytical Result	Units
Oil and Grease	EPA 413.1	3	4	mg/L
Total Phenols	EPA 420.1	0.05	0.08	mg/L

Lab Sample ID: 940329E-2
Field ID: WWT II
Date/Time: 03/29/94 0845
Matrix: Waste Water

EPA Category: Conventional Parameters

Parameter	Method	Detection Limit	Analytical Result	Units
Oil and Grease	EPA 413.1	3	14	mg/L
Total Phenols	EPA 420.1	0.05	ND	mg/L

COFFEY LABORATORIES, INC.
12423 N.E. Whitaker Way • Portland, OR • 97230 • (503) 254-1794 • FAX (503) 254-1452

RECEIVED

APR - 4 1994

KOPPERS INDS., INC.
PORTLAND, OR

WWT I 3-29-94

TEMP 54

PH 6.5

WWT II

TEMP 60

PH 6.6

Pumped 3/31/94

COFFEY LABORATORIES, INC.
CHAIN OF CUSTODY AGREEMENT

PORTLAND BRANCH
12423 NE Whitaker Way
Portland, OR 97230
(503) 254-1794 FAX: (503) 254-1452

PENDLETON BRANCH
287 SE First
Pendleton, OR 97801
(503) 276-0385

Report Attention: AMOS KAMERER
Company Name: KOPPERS
Address: 7540 ST HELENS RD
PORTLAND ORE
Phone: (503) 286-3681 FAX: ( )

Report Instructions:

Project Name:
Project Number:
PO Number:

Sample Turnaround	Reporting Request
☐ Standard	☐ FAX (T-35)
☐ Priority (1.5x Std. Fee)	☐ Verbals (T-1157)
☒ Rush (2x Std. Fee)	☐ Extra Report Copy (T-1402) (Fees Associated)
☐ Emergency (3x Std. Fee)	Initials:

FOR LABORATORY USE ONLY Page ___ of ___
Job Number: W9C329-E2
Custabbr: KOPPERS ☐NEW
☐VISA ☐M/C Expires:
Card #:
Cash / Check: $ #:
Billing Code: 1 2 3 4
QC LEVEL: 1 2 3 4
FEDX BUS COURIER UPS LAB CLIENT MAIL

Sample ID	Loc.	ID	Collection Date	Collection Time	Media	Analysis Requested	Test/Profile
WWT I			3-29	8:45		OIL & GREASE	
WWT I						PHENOLS	
WWT II						OIL & GREASE	
WWT II						PHENOLS	

Sample Comments:

Sampled by: (Please Print)	Relinquished by: (Please Sign)	Date	Time	Received by: (Sign)	Date	Time
T HARE	[signature]	3-29-94	10:35			
				LAB [signature]	3/29/94	1055

White Copy - Laboratory Copy *Yellow Copy - Client Copy*

SHADED AREAS FOR LABORATORY USE ONLY

SUBMISSION OF SAMPLES WITH TESTING REQUIREMENTS TO CLI WILL BE UNDERSTOOD TO BE AN AGREEMENT FOR SERVICES IN ACCORDANCE WITH THE CONDITIONS LISTED ON THE BACK OF THE CLIENT COPY.

Koppers015458

COFFEY LABORATORIES, INC.
CHAIN OF CUSTODY INSTRUCTIONS/CONDITIONS SHEET

INSTRUCTIONS

FOR LAB USE ONLY -	All shaded areas are for laboratory use only. Please Do Not Write in These Areas.
REPORT ATTENTION -	Name of the person who receives the laboratory report.
COMPANY NAME -	Name of the company or individual requesting the analysis.
REPORT ADDRESS -	Address of the company or individual requesting the analysis. (Address where report should be mailed)
REPORT INSTRUCTIONS -	A brief description of any special mail instructions, or address information pertaining to extra report copies.
PROJECT NAME -	Applies to customer project name. This data is provided at the customer's discretion.
PROJECT NUMBER -	Applies only to samples submitted by the customer. This data is provided at the customer's discretion.
FIELD ID -	A short description of the sample point (e.g., "Effluent from sand filter"). This description will appear on the report.
COLLECTION DATE -	The date on which the sample(s) was/were collected.
COLLECTION TIME -	The time at which the sample(s) was/were collected.
MEDIA -	This is a description of the sample media (e.g., drinking water, waste water, soil, etc.)
ANALYSIS REQUESTED -	Use one line for each analysis or group of analyses associated to a specific bottle.
SAMPLE COLLECTED BY -	The person who collected the sample(s) signs here.
RELINQUISHED BY -	The sampler signs this box when he/she gives the sample to someone else, and then fills in the date/time the sample left his/her possession.
RECEIVED BY -	The person who receives the sample(s) signs here and fills in the date/time received. The date and time should be same as "Relinquished by" unless the sample(s) was/were shipped.
JOB OR SAMPLE REMARKS -	General sample or job remarks.

CONDITIONS

PRICING AND CHARGES

Prices to be charged for work performed for CLIENT are those currently published in the Coffey Laboratories, Inc. (CLI) standard pricebook. CLIENT must notify CLI of price quotation at the time of the transfer of sample(s) to CLI. All submissions of samples with testing requirements to CLI will be understood to be an agreement for services. Any cancellation of testing requirements will result in charges being assessed on all testing completed prior to the notice of cancellation.

DELIVERY AND LIABILITY LIMITATIONS

CLI will analyze samples provided by CLIENT as requested by CLIENT in accordance with the procedures documented in the CLI Quality Assurance Plan (QAP). The maximum total liability assumed by CLI for work performed for CLIENT will in all cases be limited to the cost of the analysis. The specific format of the deliverable goods will be defined by CLIENT to CLI upon transfer of the samples to CLI. This warranty supersedes all other warranties.

CONFIDENTIALITY

CLI will use its best efforts to treat all information regarding work performed for CLIENT as proprietary and confidential to the maximum extent allowed by law. NO CLIENT information will be released without the written consent of the CLIENT billed for the work.

APPLICABLE LAW

Legal matters arising from work performed by CLI for CLIENT will be construed and interpreted in accordance with the laws for the state of Oregon.

Analysis Performed: Wastewater

Job No.: 940329E Custabbr: Koppers

Wastewater Analysis Form (3/29/94)

Parameter	Method	Det. Limit	WWT I	WWT II	Units
pH	EPA 150.1	---			S.U.
Flash Point	EPA 1010	---			°F
TSS	EPA 160.2	1			mg/L
BOD	EPA 405.1	1			mg/L
COD	EPA 410.4	1			mg/L
Oil & Grease	EPA 413.1	3	4	14	mg/L
Total Cyanide	EPA 335.2	0.02			mg/L
Free Cyanide	SM 412-H	0.02			mg/L
Ammonia	SM 417-A,D	0.01			mg/L
Fluoride	EPA 340.2	0.2			mg/L
Total Phenols	SM 420.1	0.05	0.08	ND	mg/L
Total Sulfides	SM 427-C	0.01			mg/L
Cadmium	*	0.05			mg/L
Chromium	*	0.05			mg/L
Copper	*	0.05			mg/L
Lead	*	0.1			mg/L
Mercury	EPA 7470				mg/L
Nickel	*	0.05			mg/L
Silver	*	0.05			mg/L
Zinc	*	0.05			mg/L
					mg/L
					mg/L
					mg/L
					mg/L
					mg/L

Add on:

EPA 601/602_____ EPA 624_____ EPA 625_____ QC_____

DOC ID: O:\Clom\Port.BRN\OPFSUPP.SEC\Forms\Fax.LOG
Revision #: 1.02
Revision Date: 03/09/93

FACSIMILE TRANSMITTAL LOG

TO: Company Name: Koppers

Date: 3/30/94

Attention: Amos, Ted

Phone #: (____) 285-2831

# of Pages (Including Cover Sheets): 2

TELECOPIER PHONE #: (503) 254-1452 **CONFIRMATION PHONE #: (503) 254-1794**

COMMENTS: Verbals for the samples from 3/29/94.

Call Dick Reid if you have questions

COFFEY LABORATORIES, INC.
12423 N.E. Whitaker Way • Portland, OR • 97230 • (503) 254-1794 • FAX (503) 254-1452

P01
COFFEY LAB

Report Date: March 28, 1994
Job Number: 9403220
PO Number: VERBAL JOHN (O&G/Phenols)
Project No: None Provided
Project Name: None Provided

Attention: Amos Kamerer
Koppers Industry
7540 NW St. Helens Rd.
Portland, OR 97210-3663

Rmpc'd 3/23

Analytical Narrative

The samples were received on 03/22/94 by Coffey Laboratories, Inc. (CLI) Sample Reception personnel under strict chain of custody protocol. The following information was provided at the time of sample reception:

Laboratory Sample ID	Field Identification	Collection Date	Collection Time
9403220-1	W.W. #3	03/22/94	0830
9403220-2	W.W. #4	03/22/94	0830

The recommended holding time for each batch of analyses was in accordance with the data quality objectives as specified in the CLI Quality Assurance Plan unless otherwise noted.

Acceptable precision and accuracy were achieved for all analyses associated with this work order as demonstrated by the recoveries of the quality control samples analyzed concurrently with each batch.

The data submitted in this report is for the sole and exclusive use of the above-named client. All samples associated with the work order will be retained a maximum of 15 days from the report date, or until the maximum holding time expires.

Sincerely,

Susan M. Coffey

Susan M. Coffey
President

SMC/daj

COFFEY LABORATORIES, INC.
12423 N.E. Whitaker Way • Portland, OR • 97230 • (503) 254-1794 • FAX (503) 254-1452

Koppers Industry

Job Number: 9403220
Page Number: 2

Lab Sample ID: 9403220-1
Field ID: W.W. #3 Date/Time: 03/22/94 0830
Matrix: Waste Water

Parameter	Method	Detection Limit	Analytical Result	Units
Total Oil & Grease	EPA 413.1	3	ND	mg/L
Total Phenols	EPA 420.1	0.05	0.06	mg/L

Lab Sample ID: 9403220-2
Field ID: W.W. #4 Date/Time: 03/22/94 0830
Matrix: Waste Water

Parameter	Method	Detection Limit	Analytical Result	Units
Total Oil & Grease	EPA 413.1	3	ND	mg/L
Total Phenols	EPA 420.1	0.05	0.08	mg/L

ND means none detected at or above the detection limit listed.

RECEIVED

MAR 31 1994

KOPPERS INDS., INC.
PORTLAND, OR

3-22-94

WW-3
Temp 49°
PH. 6.7

WW4
TEMP 48°
PH. 6.8

COFFEY LABORATORIES, INC.
CHAIN OF CUSTODY AGREEMENT

PORTLAND BRANCH
12423 NE Whitaker Way
Portland, OR 97230
(503) 254-1794 FAX: (503) 254-1452

PENDLETON BRANCH
287 SE First
Pendleton, OR 97801
(503) 276-0385

Report Attention: Amos Kamerer
Company Name: Koppers IND. INC.
Address: 7540 N.W. ST. HELENS RD.
PORTLAND OR 97210-3663
Phone: (503) 286-3681 FAX: ( )

Report Instructions:

Project Name:
Project Number:
PO Number:

Sample Turnaround	Reporting Request
☐ Standard	☐ FAX (T-35)
☐ Priority (1.5x Std. Fee)	☐ Verbals (T-1157)
☒ Rush (2x Std. Fee)	☐ Extra Report Copy (T-1402) (Fees Associated)
☐ Emergency (3x Std. Fee)	Initials:

FOR LABORATORY USE ONLY Page ___ of ___
Job Number: 1-36WB22-02
Custabbr: Koppers ☐NEW
☐VISA ☐M/C Expires:
Card #:
Cash / Check: $ #:
Billing Code: 1 2 3 4
QC LEVEL: 1 2 3 4
FEDX BUS COURIER UPS LAB CLIENT MAIL

Sample ID	Loc.	ID	Collection Date	Time	Media	Analysis Requested	Test/Profile
W.W. #3			3-22-94	830 AM		OILS & GREASE	
W.W. #3			3-22-94	830 AM		& PHENOLS	
W.W. #4			3-22-94	8:30		OILS & GREASE	
W.W. #4			3-22-94	8:30		& PHENOLS	

Sample Comments:

Sampled by: (Please Print)	Relinquished by: (Please Sign)	Date	Time	Received by: (Sign)	Date	Time
T. HARE	Randall B. Bailey	3-22-94	1:46			
				LAB	3/22/94	1145

White Copy - Laboratory Copy *Yellow Copy - Client Copy*

SHADED AREAS FOR LABORATORY USE ONLY

SUBMISSION OF SAMPLES WITH TESTING REQUIREMENTS TO CLI WILL BE UNDERSTOOD TO BE AN AGREEMENT FOR SERVICES IN ACCORDANCE WITH THE CONDITIONS LISTED ON THE BACK OF THE CLIENT COPY.

Koppers015466

COFFEY LABORATORIES, INC.
CHAIN OF CUSTODY INSTRUCTIONS/CONDITIONS SHEET

INSTRUCTIONS

FOR LAB USE ONLY -	**All shaded areas are for laboratory use only. Please Do Not Write in These Areas.**
REPORT ATTENTION -	Name of the person who receives the laboratory report.
COMPANY NAME -	Name of the company or individual requesting the analysis.
REPORT ADDRESS -	Address of the company or individual requesting the analysis. (Address where report should be mailed)
REPORT INSTRUCTIONS -	A brief description of any special mail instructions, or address information pertaining to extra report copies.
PROJECT NAME -	Applies to customer project name. This data is provided at the customer's discretion.
PROJECT NUMBER -	Applies only to samples submitted by the customer. This data is provided at the customer's discretion.
FIELD ID -	A short description of the sample point (e.g., "Effluent from sand filter"). This description will appear on the report.
COLLECTION DATE -	The date on which the sample(s) was/were collected.
COLLECTION TIME -	The time at which the sample(s) was/were collected.
MEDIA -	This is a description of the sample media (e.g., drinking water, waste water, soil, etc.)
ANALYSIS REQUESTED -	Use one line for each analysis or group of analyses associated to a specific bottle.
SAMPLE COLLECTED BY -	The person who collected the sample(s) signs here.
RELINQUISHED BY -	The sampler signs this box when he/she gives the sample to someone else, and then fills in the date/time the sample left his/her possession.
RECEIVED BY -	The person who receives the sample(s) signs here and fills in the date/time received. The date and time should be same as "Relinquished by" unless the sample(s) was/were shipped.
JOB OR SAMPLE REMARKS -	General sample or job remarks.

CONDITIONS

PRICING AND CHARGES

Prices to be charged for work performed for CLIENT are those currently published in the Coffey Laboratories, Inc. (CLI) standard pricebook. CLIENT must notify CLI of price quotation at the time of the transfer of sample(s) to CLI. All submissions of samples with testing requirements to CLI will be understood to be an agreement for services. Any cancellation of testing requirements will result in charges being assessed on all testing completed prior to the notice of cancellation.

DELIVERY AND LIABILITY LIMITATIONS

CLI will analyze samples provided by CLIENT as requested by CLIENT in accordance with the procedures documented in the CLI Quality Assurance Plan (QAP). The maximum total liability assumed by CLI for work performed for CLIENT will in all cases be limited to the cost of the analysis. The specific format of the deliverable goods will be defined by CLIENT to CLI upon transfer of the samples to CLI. This warranty supersedes all other warranties.

CONFIDENTIALITY

CLI will use its best efforts to treat all information regarding work performed for CLIENT as proprietary and confidential to the maximum extent allowed by law. NO CLIENT information will be released without the written consent of the CLIENT billed for the work.

APPLICABLE LAW

Legal matters arising from work performed by CLI for CLIENT will be construed and interpreted in accordance with the laws for the state of Oregon.

Report Date: March 22, 1994
Job Number: 940318AF
PO Number: VERBAL JOHN (O&G/Phenols)
Project No: None Provided
Project Name: None Provided

Pumped 3/22

Attention: Amos Kamerer / Ted Herri
Koppers Industry
7540 NW St. Helens Rd.
Portland, OR 97210-3663

Analytical Narrative

The samples were received on 03/18/94 by Coffey Laboratories, Inc. (CLI) Sample Reception personnel under strict chain of custody protocol. The following information was provided at the time of sample reception:

Laboratory Sample ID	Field Identification	Collection Date	Collection Time
940318AF-1	WW #1	03/18/94	1500
940318AF-2	WW #2	03/18/94	1500

The recommended holding time for each batch of analyses was in accordance with the data quality objectives as specified in the CLI Quality Assurance Plan unless otherwise noted.

Acceptable precision and accuracy were achieved for all analyses associated with this work order as demonstrated by the recoveries of the quality control samples analyzed concurrently with each batch.

The data submitted in this report is for the sole and exclusive use of the above-named client. All samples associated with the work order will be retained a maximum of 15 days from the report date, or until the maximum holding time expires.

Sincerely,

Susan M. Coffey

Susan M. Coffey
President

SMC/daj

COFFEY LABORATORIES, INC.
12423 N.E. Whitaker Way • Portland, OR • 97230 • (503) 254-1794 • FAX (503) 254-1452

Koppers Industry

Job Number: 940318AF
Page Number: 2

Lab Sample ID: 940318AF-1
Field ID: WW #1 Date/Time: 03/18/94 1500
Matrix: Waste Water

Parameter	Method	Detection Limit	Analytical Result	Units
Total Oil & Grease	EPA 413.1	3	ND	mg/L
Total Phenols	EPA 420.1	0.05	0.10	mg/L

Lab Sample ID: 940318AF-2
Field ID: WW #2 Date/Time: 03/18/94 1500
Matrix: Waste Water

Parameter	Method	Detection Limit	Analytical Result	Units
Total Oil & Grease	EPA 413.1	3	4	mg/L
Total Phenols	EPA 420.1	0.05	0.11	mg/L

ND means none detected at or above the detection limit listed.

COFFEY LABORATORIES, INC.
12423 N.E. Whitaker Way • Portland, OR • 97230 • (503) 254-1794 • FAX (503) 254-1452

RECEIVED

MAR 25 1994

KOPPERS INDS., INC.
PORTLAND, OR

3-18-9

WW-1
TEMP 54°
PH. 6.6

W.W.-2
Temp 54°
PH. 6.6

COFFEY LABORATORIES, INC.
CHAIN OF CUSTODY AGREEMENT

PORTLAND BRANCH
12423 NE Whitaker Way
Portland, OR 97230
(503) 254-1794 FAX: (503) 254-1452

PENDLETON BRANCH
287 SE First
Pendleton, OR 97801
(503) 276-0385

Report Attention: AMOS KAMERER
Company Name: KOPPERS IND. INC
Address: 7540 N.W. ST. HELENS RD.
PORTLAND OR. 97210-3663
Phone: (503) 286-3681 FAX: ( )

Report Instructions:

Project Name:
Project Number:
PO Number:

Sample Turnaround	Reporting Request
☐ Standard	☐ FAX (T-35)
☐ Priority (1.5x Std. Fee)	☐ Verbals (T-1157)
☒ Rush (2x Std. Fee)	☐ Extra Report Copy (T-1402) (Fees Associated)
☐ Emergency (3x Std. Fee)	Initials:

FOR LABORATORY USE ONLY Page ___ of ___
Job Number: LABRUBIN-AG2
Custabbr: KOPPERS ☐NEW
☐VISA ☐M/C Expires:
Card #:
Cash / Check: $ #:
Billing Code: 1 2 3 4
QC LEVEL: 1 2 3 4
FEDX BUS COURIER UPS LAB CLIENT MAIL

Sample ID	Loc.	ID	Collection Date / Time	Media	Analysis Requested	Test/Profile
W.W. # 1			3-18-94 300 PM.		OILS & GREASE	
W.W. # 1			3-18-94 3 PM.		PHENOLS	
W.W. # 2			3-18-94 300		OILS & GREASE	
W.W. # 2			3-18-94 300		PHENOLS	

Sample Comments:

Sampled by: (Please Print)	Relinquished by: (Please Sign)	Date	Time	Received by: (Sign)	Date	Time
Randy Bechler	Jack Hare	3-18-94	4:25			
				LAB [illegible]	3/18/94	1530

White Copy - Laboratory Copy *Yellow Copy - Client Copy*

SHADED AREAS FOR LABORATORY USE ONLY

SUBMISSION OF SAMPLES WITH TESTING REQUIREMENTS TO CLI WILL BE UNDERSTOOD TO BE AN AGREEMENT FOR SERVICES IN ACCORDANCE WITH THE CONDITIONS LISTED ON THE BACK OF THE CLIENT COPY.

Koppers015472

COFFEY LABORATORIES, INC.
CHAIN OF CUSTODY INSTRUCTIONS/CONDITIONS SHEET

INSTRUCTIONS

FOR LAB USE ONLY -	**All shaded areas are for laboratory use only. <u>Please Do Not Write in These Areas.</u>**
REPORT ATTENTION -	Name of the person who receives the laboratory report.
COMPANY NAME -	Name of the company or individual requesting the analysis.
REPORT ADDRESS -	Address of the company or individual requesting the analysis. (Address where report should be mailed)
REPORT INSTRUCTIONS -	A brief description of any special mail instructions, or address information pertaining to extra report copies.
PROJECT NAME -	Applies to customer project name. This data is provided at the customer's discretion.
PROJECT NUMBER -	Applies only to samples submitted by the customer. This data is provided at the customer's discretion.
FIELD ID -	A short description of the sample point (e.g., "Effluent from sand filter"). This description will appear on the report.
COLLECTION DATE -	The date on which the sample(s) was/were collected.
COLLECTION TIME -	The time at which the sample(s) was/were collected.
MEDIA -	This is a description of the sample media (e.g., drinking water, waste water, soil, etc.)
ANALYSIS REQUESTED -	Use one line for each analysis or group of analyses associated to a specific bottle.
SAMPLE COLLECTED BY -	The person who collected the sample(s) signs here.
RELINQUISHED BY -	The sampler signs this box when he/she gives the sample to someone else, and then fills in the date/time the sample left his/her possession.
RECEIVED BY -	The person who receives the sample(s) signs here and fills in the date/time received. The date and time should be same as "Relinquished by" unless the sample(s) was/were shipped.
JOB OR SAMPLE REMARKS -	General sample or job remarks.

CONDITIONS

PRICING AND CHARGES

Prices to be charged for work performed for CLIENT are those currently published in the Coffey Laboratories, Inc. (CLI) standard pricebook. CLIENT must notify CLI of price quotation at the time of the transfer of sample(s) to CLI. All submissions of samples with testing requirements to CLI will be understood to be an agreement for services. Any cancellation of testing requirements will result in charges being assessed on all testing completed prior to the notice of cancellation.

DELIVERY AND LIABILITY LIMITATIONS

CLI will analyze samples provided by CLIENT as requested by CLIENT in accordance with the procedures documented in the CLI Quality Assurance Plan (QAP). The maximum total liability assumed by CLI for work performed for CLIENT will in all cases be limited to the cost of the analysis. The specific format of the deliverable goods will be defined by CLIENT to CLI upon transfer of the samples to CLI. This warranty supersedes all other warranties.

CONFIDENTIALITY

CLI will use its best efforts to treat all information regarding work performed for CLIENT as proprietary and confidential to the maximum extent allowed by law. NO CLIENT information will be released without the written consent of the CLIENT billed for the work.

APPLICABLE LAW

Legal matters arising from work performed by CLI for CLIENT will be construed and interpreted in accordance with the laws for the state of Oregon.

COFFEY LABORATORIES, INC.
CHAIN OF CUSTODY AGREEMENT

PORTLAND BRANCH
12423 NE Whitaker Way
Portland, OR 97230
(503) 254-1794 FAX: (503) 254-1452

PENDLETON BRANCH
287 SE First
Pendleton, OR 97801
(503) 276-0385

Report Attention:
Company Name: Koppers
Address:
Phone:( ) FAX:( )
Report Instructions:

Project Name:
Project Number:
PO Number:

Sample Turnaround	Reporting Request
☐ Standard	☐ FAX (T-35)
☐ Priority (1.5x Std. Fee)	☒ Verbals (T-1157)
☒ Rush (2x Std. Fee)	☐ Extra Report Copy (T-1402) (Fees Associated)
☐ Emergency (3x Std. Fee)	Initials:

FOR LABORATORY USE ONLY Page ___ of ___
Job Number: W1K9463Z1-A1
Custabbr: Koppers ☐NEW
☐VISA ☐M/C Expires:
Card #:
Cash / Check: $ #:
Billing Code: 1 2 3 4
QC LEVEL: 1 2 3 4
FEDX BUS COURIER UPS LAB CLIENT MAIL

Sample ID	Loc.	ID	Collection Date	Collection Time	Media	Analysis Requested	Test/Profile
WW Tank 1			3/21/99	1630	WW	Bd 6	

Sample Comments:

Sampled by: (Please Print)	Relinquished by: (Please Sign)	Date	Time	Received by: (Sign)	Date	Time
T. H	T. Hare					
				LAB	3/21/99	1700

White Copy - Laboratory Copy *Yellow Copy - Client Copy*

SHADED AREAS FOR LABORATORY USE ONLY

SUBMISSION OF SAMPLES WITH TESTING REQUIREMENTS TO CLI WILL BE UNDERSTOOD TO BE AN AGREEMENT FOR SERVICES IN ACCORDANCE WITH THE CONDITIONS LISTED ON THE BACK OF THE CLIENT COPY.

Koppers015474

COFFEY LABORATORIES, INC.
CHAIN OF CUSTODY INSTRUCTIONS/CONDITIONS SHEET

INSTRUCTIONS

FOR LAB USE ONLY -	All shaded areas are for laboratory use only. Please Do Not Write in These Areas.
REPORT ATTENTION -	Name of the person who receives the laboratory report.
COMPANY NAME -	Name of the company or individual requesting the analysis.
REPORT ADDRESS -	Address of the company or individual requesting the analysis. (Address where report should be mailed)
REPORT INSTRUCTIONS -	A brief description of any special mail instructions, or address information pertaining to extra report copies.
PROJECT NAME -	Applies to customer project name. This data is provided at the customer's discretion.
PROJECT NUMBER -	Applies only to samples submitted by the customer. This data is provided at the customer's discretion.
FIELD ID -	A short description of the sample point (e.g., "Effluent from sand filter"). This description will appear on the report.
COLLECTION DATE -	The date on which the sample(s) was/were collected.
COLLECTION TIME -	The time at which the sample(s) was/were collected.
MEDIA -	This is a description of the sample media (e.g., drinking water, waste water, soil, etc.)
ANALYSIS REQUESTED -	Use one line for each analysis or group of analyses associated to a specific bottle.
SAMPLE COLLECTED BY -	The person who collected the sample(s) signs here.
RELINQUISHED BY -	The sampler signs this box when he/she gives the sample to someone else, and then fills in the date/time the sample left his/her possession.
RECEIVED BY -	The person who receives the sample(s) signs here and fills in the date/time received. The date and time should be same as "Relinquished by" unless the sample(s) was/were shipped.

JOB OR SAMPLE REMARKS - General sample or job remarks.

CONDITIONS

PRICING AND CHARGES

Prices to be charged for work performed for CLIENT are those currently published in the Coffey Laboratories, Inc. (CLI) standard pricebook. CLIENT must notify CLI of price quotation at the time of the transfer of sample(s) to CLI. All submissions of samples with testing requirements to CLI will be understood to be an agreement for services. Any cancellation of testing requirements will result in charges being assessed on all testing completed prior to the notice of cancellation.

DELIVERY AND LIABILITY LIMITATIONS

CLI will analyze samples provided by CLIENT as requested by CLIENT in accordance with the procedures documented in the CLI Quality Assurance Plan (QAP). The maximum total liability assumed by CLI for work performed for CLIENT will in all cases be limited to the cost of the analysis. The specific format of the deliverable goods will be defined by CLIENT to CLI upon transfer of the samples to CLI. This warranty supersedes all other warranties.

CONFIDENTIALITY

CLI will use its best efforts to treat all information regarding work performed for CLIENT as proprietary and confidential to the maximum extent allowed by law. NO CLIENT information will be released without the written consent of the CLIENT billed for the work.

APPLICABLE LAW

Legal matters arising from work performed by CLI for CLIENT will be construed and interpreted in accordance with the laws for the state of Oregon.

Report Date: March 17, 1994
Job Number: 940314E
PO Number: VERBAL JOHN (O&G/Phenols)
Project No: None Provided
Project Name: None Provided

Pumped 3/16.

Attention: Amos Kamerer
Koppers Industry
7540 NW St. Helens Rd.
Portland, OR 97210-3663

Analytical Narrative

The samples were received on 03/14/94 by Coffey Laboratories, Inc. (CLI) Sample Reception personnel under strict chain of custody protocol. The following information was provided at the time of sample reception:

Laboratory Sample ID	Field Identification	Collection Date	Collection Time
940314E-1	WW #3	03/14/94	1000
940314E-2	WW #4	03/14/94	1000

The recommended holding time for each batch of analyses was in accordance with the data quality objectives as specified in the CLI Quality Assurance Plan.

Acceptable precision and accuracy were achieved for all analyses associated with this work order as demonstrated by the recoveries of the quality control samples analyzed concurrently with each batch.

The data submitted in this report is for the sole and exclusive use of the above-named client. All samples associated with the work order will be retained a maximum of 15 days from the report date, or until the maximum holding time expires.

Sincerely,

Susan M. Coffey
President

SMC/lws

COFFEY LABORATORIES, INC.
12423 N.E. Whitaker Way • Portland, OR • 97230 • (503) 254-1794 • FAX (503) 254-1452

Analytical Data

Koppers Industry

Job Number: 940314E
Page Number:

Lab Sample ID: 940314E-1
Field ID: WW #3 Date/Time: 03/14/94 1000
Matrix: Waste Water

EPA Category: Conventional Parameters

Parameter	Method	Detection Limit	Analytical Result	Units
Oil & Grease	EPA 413.1	3	ND	mg/L
Total Phenols	EPA 420.1	0.05	0.14	mg/L

Lab Sample ID: 940314E-2
Field ID: WW #4 Date/Time: 03/14/94 1000
Matrix: Waste Water

EPA Category: Conventional Parameters

Parameter	Method	Detection Limit	Analytical Result	Units
Oil & Grease	EPA 413.1	3	ND	mg/L
Total Phenols	EPA 420.1	0.05	0.16	mg/L

COFFEY LABORATORIES, INC.
12423 N.E. Whitaker Way • Portland, OR • 97230 • (503) 254-1794 • FAX (503) 254-1452

RECEIVED
MAR 29 1994
KOPPERS INDS., INC.
PORTLAND, OR

W.W #3 3-14-94
Temp 54°
PH - 6.7

WW #4
Temp 52°
PH 6.6

COFFEY LABORATORIES, INC.
CHAIN OF CUSTODY AGREEMENT

PORTLAND BRANCH
12423 NE Whitaker Way
Portland, OR 97230
(503) 254-1794 FAX: (503) 254-1452

PENDLETON BRANCH
287 SE First
Pendleton, OR 97801
(503) 276-0385

Report Attention: Amos Komerer
Company Name: Koppers Ind
Address: 7540 NW St. Helens Rd
Portl. OR, 97210
Phone: (503) 286-3681 FAX: ( )

Report Instructions:

Project Name:
Project Number:
PO Number:

Sample Turnaround	Reporting Request
☐ Standard	☐ FAX (T-35)
☐ Priority (1.5x Std. Fee)	☐ Verbals (T-1157)
☒ Rush (2x Std. Fee)	☐ Extra Report Copy (T-1402) (Fees Associated)
☐ Emergency (3x Std. Fee)	Initials:

FOR LABORATORY USE ONLY Page ___ of ___
Job Number: WG940314-E2
Custabbr: Koppers ☐NEW
☐VISA ☐M/C Expires:
Card #:
Cash / Check: $ #:
Billing Code: 1 2 3 4
QC LEVEL: 1 2 3 4
FEDX BUS COURIER UPS LAB CLIENT MAIL

Sample ID	Loc.	ID	Collection Date	Time	Media	Analysis Requested	Test/Profile
WW #3			3/14/94	10:00		Oils Grease	ND
WW #3			3/14/94	10:00		Phenols	.14
WW #4			3/14/94	10:00		Oils Grease	ND
WW #4			3/14/94	10:00		Phenols	.16

Sample Comments:

Sampled by: (Please Print)	Relinquished by: (Please Sign)	Date	Time	Received by: (Sign)	Date	Time
Chris Stoo	Chris Stoo	3/14/94	10:53			
				LAB		

White Copy - Laboratory Copy *Yellow Copy - Client Copy*

SHADED AREAS FOR LABORATORY USE ONLY

SUBMISSION OF SAMPLES WITH TESTING REQUIREMENTS TO CLI WILL BE UNDERSTOOD TO BE AN AGREEMENT FOR SERVICES IN ACCORDANCE WITH THE CONDITIONS LISTED ON THE BACK OF THE CLIENT COPY.

Koppers015480

COFFEY LABORATORIES, INC.
CHAIN OF CUSTODY INSTRUCTIONS/CONDITIONS SHEET

INSTRUCTIONS

FOR LAB USE ONLY -	**All shaded areas are for laboratory use only. Please Do Not Write in These Areas.**
REPORT ATTENTION -	Name of the person who receives the laboratory report.
COMPANY NAME -	Name of the company or individual requesting the analysis.
REPORT ADDRESS -	Address of the company or individual requesting the analysis. (Address where report should be mailed)
REPORT INSTRUCTIONS -	A brief description of any special mail instructions, or address information pertaining to extra report copies.
PROJECT NAME -	Applies to customer project name. This data is provided at the customer's discretion.
PROJECT NUMBER -	Applies only to samples submitted by the customer. This data is provided at the customer's discretion.
FIELD ID -	A short description of the sample point (e.g., "Effluent from sand filter"). This description will appear on the report.
COLLECTION DATE -	The date on which the sample(s) was/were collected.
COLLECTION TIME -	The time at which the sample(s) was/were collected.
MEDIA -	This is a description of the sample media (e.g., drinking water, waste water, soil, etc.)
ANALYSIS REQUESTED -	Use one line for each analysis or group of analyses associated to a specific bottle.
SAMPLE COLLECTED BY -	The person who collected the sample(s) signs here.
RELINQUISHED BY -	The sampler signs this box when he/she gives the sample to someone else, and then fills in the date/time the sample left his/her possession.
RECEIVED BY -	The person who receives the sample(s) signs here and fills in the date/time received. The date and time should be same as "Relinquished by" unless the sample(s) was/were shipped.
JOB OR SAMPLE REMARKS -	General sample or job remarks.

CONDITIONS

PRICING AND CHARGES

Prices to be charged for work performed for CLIENT are those currently published in the Coffey Laboratories, Inc. (CLI) standard pricebook. CLIENT must notify CLI of price quotation at the time of the transfer of sample(s) to CLI. All submissions of samples with testing requirements to CLI will be understood to be an agreement for services. Any cancellation of testing requirements will result in charges being assessed on all testing completed prior to the notice of cancellation.

DELIVERY AND LIABILITY LIMITATIONS

CLI will analyze samples provided by CLIENT as requested by CLIENT in accordance with the procedures documented in the CLI Quality Assurance Plan (QAP). The maximum total liability assumed by CLI for work performed for CLIENT will in all cases be limited to the cost of the analysis. The specific format of the deliverable goods will be defined by CLIENT to CLI upon transfer of the samples to CLI. This warranty supersedes all other warranties.

CONFIDENTIALITY

CLI will use its best efforts to treat all information regarding work performed for CLIENT as proprietary and confidential to the maximum extent allowed by law. NO CLIENT information will be released without the written consent of the CLIENT billed for the work.

APPLICABLE LAW

Legal matters arising from work performed by CLI for CLIENT will be construed and interpreted in accordance with the laws for the State of Oregon.

Pumped 3/7 & 8

Report Date: March 8, 1994
Job Number: 940304F
PO Number: VERBAL JOHN (O&G/Phenols)
Project No: None Provided
Project Name: None Provided

Attention: Amos Kamerer
Koppers Industry
7540 NW St. Helens Rd.
Portland, OR 97210-3663

Analytical Data

Lab Sample ID: 940304F1
Field ID: WWT I Date/Time: 03/04/94 0830
Matrix: Waste Water

EPA Category: Conventional Parameters

Parameter	Method	Detection Limit	Analytical Result	Units
Oil & Grease	EPA 413.1	3	ND	mg/L
Total Phenols	EPA 420.1	0.05	0.15	mg/L

Lab Sample ID: 940304F2
Field ID: WWT II Date/Time: 03/04/94 0830
Matrix: Waste Water

EPA Category: Conventional Parameters

Parameter	Method	Detection Limit	Analytical Result	Units
Oil & Grease	EPA 413.1	3	9	mg/L
Total Phenols	EPA 420.1	0.05	0.15	mg/L

Sincerely,

Susan M. Coffey
President

SMC/lws

This report is for the sole and exclusive use of the above-named client. Samples are retained 15 days from the report date, or until holding time expires. Results pertain only to samples submitted.

COFFEY LABORATORIES, INC.
12423 N.E. Whitaker Way • Portland, OR • 97230 • (503) 254-1794 • FAX (503) 254-1452

RECEIVED
MAR 10 1994
KOPPERS INDS., INC.
PORTLAND, OR

WWT 1

TEMP 54

PH 6.7

3-4-94

WWT II

TEMP 54

PH 6.6

3-4-94

COFFEY LABORATORIES, INC.
CHAIN OF CUSTODY AGREEMENT

PORTLAND BRANCH
12423 NE Whitaker Way
Portland, OR 97230
(503) 254-1794 FAX: (503) 254-1452

PENDLETON BRANCH
287 SE First
Pendleton, OR 97801
(503) 276-0385

Report Attention: AMOS KAMFRER
Company Name: KOPPERS IND. INC.
Address: 7540 NW ST HELENS RD
PORTLAND ORE 97210-3663
Phone: (503) 286-3681 FAX: (503) 285-2831

Report Instructions:

Project Name:
Project Number:
PO Number:

Sample Turnaround	Reporting Request
☐ Standard	☐ FAX (T-35)
☐ Priority (1.5x Std. Fee)	☐ Verbals (T-1157)
☑ Rush (2x Std. Fee)	☐ Extra Report Copy (T-1402) (Fees Associated)
☐ Emergency (3x Std. Fee)	Initials:

FOR LABORATORY USE ONLY Page 1 of 1
Job Number: 940304-F
Custabbr: Koppers ☐NEW
☐VISA ☐M/C Expires:
Card #:
Cash / Check: $ #:
Billing Code: 1 2 3 4
QC LEVEL: 1 2 3 4
FEDX BUS COURIER UPS LAB CLIENT MAIL

Sample ID	Loc.	ID	Collection Date	Collection Time	Media	Analysis Requested	Test/Profile
WWT I			3-4-94	8:30am		Oil & Grease	ND
WWT I						Phenols	0.15
WWT II						Oil & Grease	8.6
WWT II						Phenols	0.15

Sample Comments:

Sampled by: (Please Print)	Relinquished by: (Please Sign)	Date	Time	Received by: (Sign)	Date	Time
TED HARE	[signature]	3-4-94	9:48			
				LAB [signature]	3-4-94	0948

White Copy - Laboratory Copy *Yellow Copy - Client Copy*

SHADED AREAS FOR LABORATORY USE ONLY

SUBMISSION OF SAMPLES WITH TESTING REQUIREMENTS TO CLI WILL BE UNDERSTOOD TO BE AN AGREEMENT FOR SERVICES IN ACCORDANCE WITH THE CONDITIONS LISTED ON THE BACK OF THE CLIENT COPY.

Koppers015486

COFFEY LABORATORIES, INC.

CHAIN OF CUSTODY INSTRUCTIONS/CONDITIONS SHEET

INSTRUCTIONS

FOR LAB USE ONLY -	**All shaded areas are for laboratory use only. Please Do Not Write in These Areas.**
REPORT ATTENTION -	Name of the person who receives the laboratory report.
COMPANY NAME -	Name of the company or individual requesting the analysis.
REPORT ADDRESS -	Address of the company or individual requesting the analysis. (Address where report should be mailed)
REPORT INSTRUCTIONS -	A brief description of any special mail instructions, or address information pertaining to extra report copies.
PROJECT NAME -	Applies to customer project name. This data is provided at the customer's discretion.
PROJECT NUMBER -	Applies only to samples submitted by the customer. This data is provided at the customer's discretion.
FIELD ID -	A short description of the sample point (e.g., "Effluent from sand filter"). This description will appear on the report.
COLLECTION DATE -	The date on which the sample(s) was/were collected.
COLLECTION TIME -	The time at which the sample(s) was/were collected.
MEDIA -	This is a description of the sample media (e.g., drinking water, waste water, soil, etc.)
ANALYSIS REQUESTED -	Use one line for each analysis or group of analyses associated to a specific bottle.
SAMPLE COLLECTED BY -	The person who collected the sample(s) signs here.
RELINQUISHED BY -	The sampler signs this box when he/she gives the sample to someone else, and then fills in the date/time the sample left his/her possession.
RECEIVED BY -	The person who receives the sample(s) signs here and fills in the date/time received. The date and time should be same as "Relinquished by" unless the sample(s) was/were shipped.
JOB OR SAMPLE REMARKS -	General sample or job remarks.

CONDITIONS

PRICING AND CHARGES

Prices to be charged for work performed for CLIENT are those currently published in the Coffey Laboratories, Inc. (CLI) standard pricebook. CLIENT must notify CLI of price quotation at the time of the transfer of sample(s) to CLI. All submissions of samples with testing requirements to CLI will be understood to be an agreement for services. Any cancellation of testing requirements will result in charges being assessed on all testing completed prior to the notice of cancellation.

DELIVERY AND LIABILITY LIMITATIONS

CLI will analyze samples provided by CLIENT as requested by CLIENT in accordance with the procedures documented in the CLI Quality Assurance Plan (QAP). The maximum total liability assumed by CLI for work performed for CLIENT will in all cases be limited to the cost of the analysis. The specific format of the deliverable goods will be defined by CLIENT to CLI upon transfer of the samples to CLI. This warranty supersedes all other warranties.

CONFIDENTIALITY

CLI will use its best efforts to treat all information regarding work performed for CLIENT as proprietary and confidential to the maximum extent allowed by law. NO CLIENT information will be released without the written consent of the CLIENT billed for the work.

APPLICABLE LAW

Legal matters arising from work performed by CLI for CLIENT will be construed and interpreted in accordance with the laws for the state of Oregon.

pumped 3/2 of 3

Report Date: March 2, 1994
Job#: WG-940228AF-2
PO#: VERBAL JOHN (O&G/Phenols
Project#: None Provided
Project: None Provided

Attention: Amos Kamerer
Koppers Industry
7540 NW St. Helens Rd.
Portland, OR 97210-3663

SAMPLE INFORMATION:
Date Samples Were Received By Laboratory: 02/28/94

Lab No.	Field Identification	Sample Matrix	Date	Time
1	WWT 3	Waste Water	02-28-94	1500
2	WWT 4	Waste Water	02-28-94	1500

ANALYTICAL RESULTS:

Parameter	Method	Detection Limits	WWT 3 Results	WWT 4 Results
Total Phenols	EPA 420.1	0.05	0.05	ND
Oil & Grease	EPA 413.1	3	ND	ND

Results expressed as mg/L unless otherwise noted.

ND means none detected at or above the detection limit listed.

Sincerely,

Susan M. Coffey
President

SMC/daj

This report is for the sole and exclusive use of the above-named client. Samples are retained 15 days from the report date, or until holding time expires. Results pertain only to samples submitted.

COFFEY LABORATORIES, INC.
12423 N.E. Whitaker Way • Portland, OR • 97230 • (503) 254-1794 • FAX (503) 254-1452

RECEIVED

MAR 0 4 1994

KOPPERS INDS., INC.
PORTLAND, OR

WWT4
2-28-94

PH 6.5

TEMP 51°

WWT3

2-28-94

pH

6.7

TEMP

50°

COFFEY LABORATORIES, INC.
CHAIN OF CUSTODY AGREEMENT

PORTLAND BRANCH
12423 NE Whitaker Way
Portland, OR 97230
(503) 254-1794 FAX: (503) 254-1452

PENDLETON BRANCH
287 SE First
Pendleton, OR 97801
(503) 276-0385

Report Attention: AMOS KAMERER
Company Name: KOPPERS INDUSTRIES INC
Address: 7540 N.W. ST HELENS RD
PORTLAND ORE 97210-3663
Phone: (503) 286 3681 FAX: (503) 285 2831

Report Instructions:

Project Name:
Project Number:
PO Number:

Sample Turnaround	Reporting Request
☐ Standard	☐ FAX (T-35)
☐ Priority (1.5x Std. Fee)	☐ Verbals (T-1157)
☑ Rush (2x Std. Fee)	☐ Extra Report Copy (T-1402) (Fees Associated)
☐ Emergency (3x Std. Fee)	Initials:

FOR LABORATORY USE ONLY Page ___ of ___
Job Number: LCG 940228-AEZ
Custabbr: KOPPERS ☐NEW
☐VISA ☐M/C Expires:
Card #:
Cash / Check: $ #:
Billing Code: 1 2 3 4
QC LEVEL: 1 2 3 4
FEDX BUS COURIER UPS LAB CLIENT MAIL

Sample ID	Loc.	ID	Collection Date	Time	Media	Analysis Requested	Test/Profile
WWT 3			2-28-94	3:00pm		OIL & GREASE	ND
WWT 3			2/28/94			PHENOLS	.05
WWT 4			2/28/94			OIL & GREASE	ND
WWT 4			2/28/94			PHENOLS	ND

Sample Comments:

Sampled by: (Please Print)	Relinquished by: (Please Sign)	Date	Time	Received by: (Sign)	Date	Time
TED HARE	Ted Hare	2-28-94	330			
				LAB	2/28/94	1550

White Copy - Laboratory Copy *Yellow Copy - Client Copy*

SHADED AREAS FOR LABORATORY USE ONLY

SUBMISSION OF SAMPLES WITH TESTING REQUIREMENTS TO CLI WILL BE UNDERSTOOD TO BE AN AGREEMENT FOR SERVICES IN ACCORDANCE WITH THE CONDITIONS LISTED ON THE BACK OF THE CLIENT COPY.

Koppers015492

COFFEY LABORATORIES, INC.
CHAIN OF CUSTODY INSTRUCTIONS/CONDITIONS SHEET

INSTRUCTIONS

FOR LAB USE ONLY -	All shaded areas are for laboratory use only. Please Do Not Write in These Areas.
REPORT ATTENTION -	Name of the person who receives the laboratory report.
COMPANY NAME -	Name of the company or individual requesting the analysis.
REPORT ADDRESS -	Address of the company or individual requesting the analysis. (Address where report should be mailed)
REPORT INSTRUCTIONS -	A brief description of any special mail instructions, or address information pertaining to extra report copies.
PROJECT NAME -	Applies to customer project name. This data is provided at the customer's discretion.
PROJECT NUMBER -	Applies only to samples submitted by the customer. This data is provided at the customer's discretion.
FIELD ID -	A short description of the sample point (e.g., "Effluent from sand filter"). This description will appear on the report.
COLLECTION DATE -	The date on which the sample(s) was/were collected.
COLLECTION TIME -	The time at which the sample(s) was/were collected.
MEDIA -	This is a description of the sample media (e.g., drinking water, waste water, soil, etc.)
ANALYSIS REQUESTED -	Use one line for each analysis or group of analyses associated to a specific bottle.
SAMPLE COLLECTED BY -	The person who collected the sample(s) signs here.
RELINQUISHED BY -	The sampler signs this box when he/she gives the sample to someone else, and then fills in the date/time the sample left his/her possession.
RECEIVED BY -	The person who receives the sample(s) signs here and fills in the date/time received. The date and time should be same as "Relinquished by" unless the sample(s) was/were shipped.
JOB OR SAMPLE REMARKS -	General sample or job remarks.

CONDITIONS

PRICING AND CHARGES

Prices to be charged for work performed for CLIENT are those currently published in the Coffey Laboratories, Inc. (CLI) standard pricebook. CLIENT must notify CLI of price quotation at the time of the transfer of sample(s) to CLI. All submissions of samples with testing requirements to CLI will be understood to be an agreement for services. Any cancellation of testing requirements will result in charges being assessed on all testing completed prior to the notice of cancellation.

DELIVERY AND LIABILITY LIMITATIONS

CLI will analyze samples provided by CLIENT as requested by CLIENT in accordance with the procedures documented in the CLI Quality Assurance Plan (QAP). The maximum total liability assumed by CLI for work performed for CLIENT will in all cases be limited to the cost of the analysis. The specific format of the deliverable goods will be defined by CLIENT to CLI upon transfer of the samples to CLI. This warranty supersedes all other warranties.

CONFIDENTIALITY

CLI will use its best efforts to treat all information regarding work performed for CLIENT as proprietary and confidential to the maximum extent allowed by law. NO CLIENT information will be released without the written consent of the CLIENT billed for the work.

APPLICABLE LAW

Legal matters arising from work performed by CLI for CLIENT will be construed and interpreted in accordance with the laws for the state of Oregon.

PERMITTEE NAME/ADDRESS (Include Facility Name/Location if different)
NAME KOPPERS INDUSTRIES INC.
ADDRESS 7540 N.W. ST. HELENS RD.
PORTLAND, OR 97210

FACILITY NORTHWEST PLANT
LOCATION MULTNOMAH COUNTY

NATIONAL POLLUTANT DISCHARGE ELIMINATION SYSTEM (NPDES)
DISCHARGE MONITORING REPORT (DMR)

PERMIT NUMBER (2-16)	DISCHARGE NUMBER (17-19)
OR-100077-9	0002

Form Approved.
OMB No. 2040-0004.
Approval expires 6-30-91.

3077-J
47430

MONITORING PERIOD	YEAR	MO	DAY		YEAR	MO	DAY
FROM	94	02	01	TO	94	02	28
	(20-21)	(22-23)	(24-25)		(26-27)	(28-29)	(30-31)

NOTE: Read instructions before completing this form.

PARAMETER (32-37)		(3 Card Only) QUANTITY OR LOADING (46-53) AVERAGE	(54-61) MAXIMUM	UNITS	(4 Card Only) QUALITY OR CONCENTRATION (38-45) MINIMUM	(46-53) AVERAGE	(54-61) MAXIMUM	UNITS	NO. EX (62-63)	FREQUENCY OF ANALYSIS (64-68)	SAMPLE TYPE (69-70)
FLOW	SAMPLE MEASUREMENT	19286		GPD					N/A	12/28	EST.
	PERMIT REQUIREMENT	N/A	N/A								
TEMPERATURE	SAMPLE MEASUREMENT				41	46	51		0	12/28	GRAB
	PERMIT REQUIREMENT				N/A						
PH	SAMPLE MEASUREMENT				6.6	6.7	6.8		0	12/28	GRAB
	PERMIT REQUIREMENT				6.0		9.0				
OIL & GREASES	SAMPLE MEASUREMENT				N.D.	1.3	9		0	12/28	GRAB
	PERMIT REQUIREMENT				N/A	10	15				
PHENOLS	SAMPLE MEASUREMENT				.07	.10	.17		0	12/28	GRAB
	PERMIT REQUIREMENT				N/A	.5	.7				
	SAMPLE MEASUREMENT										
	PERMIT REQUIREMENT										
	SAMPLE MEASUREMENT										
	PERMIT REQUIREMENT										

NAME/TITLE PRINCIPAL EXECUTIVE OFFICER			TELEPHONE	DATE		
J.R. BATCHELDER, V.P. ENVIRONMENTAL & TECHNICAL SVC.	I CERTIFY UNDER PENALTY OF LAW THAT I HAVE PERSONALLY EXAMINED AND AM FAMILIAR WITH THE INFORMATION SUBMITTED HEREIN, AND BASED ON MY INQUIRY OF THOSE INDIVIDUALS IMMEDIATELY RESPONSIBLE FOR OBTAINING THE INFORMATION, I BELIEVE THE SUBMITTED INFORMATION IS TRUE, ACCURATE AND COMPLETE. I AM AWARE THAT THERE ARE SIGNIFICANT PENALTIES FOR SUBMITTING FALSE INFORMATION, INCLUDING THE POSSIBILITY OF FINE AND IMPRISONMENT. SEE 18 USC § 1001 AND 33 USC § 1319. (Penalties under these statutes may include fines up to $10,000 and/or maximum imprisonment of between 6 months and 5 years.)	A. KAMERER, PLANT MANAGER	503-286-3681	94	03	07
TYPED OR PRINTED		SIGNATURE OF PRINCIPAL EXECUTIVE OFFICER OR AUTHORIZED AGENT	AREA CODE / NUMBER	YEAR	MO	DAY

COMMENT AND EXPLANATION OF ANY VIOLATIONS (Reference all attachments here)

Koppers015494

CC: W.E. SWEARINGEN

SUNRISE EXPRESS, INC.

5419 N.E. 88TH ST. • VANCOUVER, WASHINGTON 98665
(206) 574-5971 • OUT OF STATE 1-800-999-5971
FAX 1-206-574-8062

50, 51, 48, 43, 45, 44, 48, 48, 41, 41, 42, 41, ÷ 12 = 46

6.6, 6.8, 6.6, 6.7, 4.7, 4.7, 6.6, 6.8, 6.7, 6.6, 6.7, 6.8 " = 6.7

7, 9, ND, ND, ND, ND, ND, ND, ND, ND, ND, ND " = 1.3

.11, .11, .16, .17, .07, .07, .16, .14, .11, .10, ND, ND " = .10

45,000 X 12 ÷ 28 = 19,286 Bbls/day

pumped 2/4 + 2/7

Report Date: February 4, 1994
Job#: WG-940128AF-2
PO#: VERBAL JOHN (O&G/Phenols)
Project#: None Provided
Project: None Provided

Attention: Amos Kamerer
Koppers Industry
7540 NW St. Helens Rd.
Portland, OR 97210-3663

SAMPLE INFORMATION:
Date Samples Were Received By Laboratory: 01/28/94

Lab No.	Field Identification	Sample Matrix	Date	Time
1	W.W.T. 3	Waste Water	01-28-94	1345
2	W.W.T. 4	Waste Water	01-28-94	1345

ANALYTICAL RESULTS:

Parameter	Method	Detection Limits	W.W.T.3 Results	W.W.T.4 Results
Oil & Grease	EPA 413.1	3	7	9
Total Phenols	EPA 420.1	0.05	0.11	0.11

Results expressed as mg/L unless otherwise noted.

Sincerely,

Susan M. Coffey
President

SMC/lws

This report is for the sole and exclusive use of the above-named client. Samples are retained 15 days from the report date, or until holding time expires. Results pertain only to samples submitted.

COFFEY LABORATORIES, INC.
12423 N.E. Whitaker Way • Portland, OR • 97230 • (503) 254-1794 • FAX (503) 254-1452

WWT 3

TEMP 50°

P.H. 6.8

WWT 4

TEMP 51

P.H. 6.6

COFFEY LABORATORIES, INC.
CHAIN OF CUSTODY AGREEMENT

PORTLAND BRANCH
12423 NE Whitaker Way
Portland, OR 97230
(503) 254-1794 FAX: (503) 254-1452

PENDLETON BRANCH
287 SE First
Pendleton, OR 97801
(503) 276-0385

Report Attention: Amos Kamerer
Company Name: Koppers IND. INC.
Address: 7540 NW ST. HELENS RD.
Port. OR 97210-3663
Phone: (503) 286-3681 FAX: (503) 285-2831

Report Instructions:

Project Name:
Project Number:
PO Number:

Sample Turnaround	Reporting Request
[X] Standard	[ ] FAX (T-35)
[ ] Priority (1.5x Std. Fee)	[ ] Verbals (T-1157)
[ ] Rush (2x Std. Fee)	[ ] Extra Report Copy (T-1402) (Fees Associated)
[ ] Emergency (3x Std. Fee)	Initials:

FOR LABORATORY USE ONLY Page ___ of ___
Job Number: L.C. 940128-AC2
Custabbr: Koppers [ ] NEW
[ ] VISA [ ] M/C Expires:
Card #:
Cash / Check: $ #:
Billing Code: 1 2 3 4
QC LEVEL: 1 2 3 4
FEDX BUS COURIER UPS LAB CLIENT MAIL

Sample ID	Loc.	ID	Collection Date	Collection Time	Media	Analysis Requested	Test/Profile
W.W.T. 3			1/28/94	1345	yellow	PHENOLS	11
W.W.T 3			↓	↓	↓	OIL & GREASE	7
W.W.T. 4						PHENOLS	11
W.W.T. 4						OIL & GREASE	9

Sample Comments:

Sampled by: (Please Print)	Relinquished by: (Please Sign)	Date	Time	Received by: (Sign)	Date	Time
Randy Beehler	[signature]	1-28-94	3:00 PM.			
				LAB [signature]	1/28/94	1500

White Copy - Laboratory Copy *Yellow Copy - Client Copy*

SHADED AREAS FOR LABORATORY USE ONLY

SUBMISSION OF SAMPLES WITH TESTING REQUIREMENTS TO CLI WILL BE UNDERSTOOD TO BE AN AGREEMENT FOR SERVICES IN ACCORDANCE WITH THE CONDITIONS LISTED ON THE BACK OF THE CLIENT COPY.

Koppers015499

COFFEY LABORATORIES, INC.

CHAIN OF CUSTODY INSTRUCTIONS/CONDITIONS SHEET

INSTRUCTIONS

FOR LAB USE ONLY -	All shaded areas are for laboratory use only. Please Do Not Write in These Areas.
REPORT ATTENTION -	Name of the person who receives the laboratory report.
COMPANY NAME -	Name of the company or individual requesting the analysis.
REPORT ADDRESS -	Address of the company or individual requesting the analysis. (Address where report should be mailed)
REPORT INSTRUCTIONS -	A brief description of any special mail instructions, or address information pertaining to extra report copies.
PROJECT NAME -	Applies to customer project name. This data is provided at the customer's discretion.
PROJECT NUMBER -	Applies only to samples submitted by the customer. This data is provided at the customer's discretion.
FIELD ID -	A short description of the sample point (e.g., "Effluent from sand filter"). This description will appear on the report.
COLLECTION DATE -	The date on which the sample(s) was/were collected.
COLLECTION TIME -	The time at which the sample(s) was/were collected.
MEDIA -	This is a description of the sample media (e.g., drinking water, waste water, soil, etc.)
ANALYSIS REQUESTED -	Use one line for each analysis or group of analyses associated to a specific bottle.
SAMPLE COLLECTED BY -	The person who collected the sample(s) signs here.
RELINQUISHED BY -	The sampler signs this box when he/she gives the sample to someone else, and then fills in the date/time the sample left his/her possession.
RECEIVED BY -	The person who receives the sample(s) signs here and fills in the date/time received. The date and time should be same as "Relinquished by" unless the sample(s) was/were shipped.

JOB OR SAMPLE REMARKS - General sample or job remarks.

CONDITIONS

PRICING AND CHARGES

Prices to be charged for work performed for CLIENT are those currently published in the Coffey Laboratories, Inc. (CLI) standard pricebook. CLIENT must notify CLI of price quotation at the time of the transfer of sample(s) to CLI. All submissions of samples with testing requirements to CLI will be understood to be an agreement for services. Any cancellation of testing requirements will result in charges being assessed on all testing completed prior to the notice of cancellation.

DELIVERY AND LIABILITY LIMITATIONS

CLI will analyze samples provided by CLIENT as requested by CLIENT in accordance with the procedures documented in the CLI Quality Assurance Plan (QAP). The maximum total liability assumed by CLI for work performed for CLIENT will in all cases be limited to the cost of the analysis. The specific format of the deliverable goods will be defined by CLIENT to CLI upon transfer of the samples to CLI. This warranty supersedes all other warranties.

CONFIDENTIALITY

CLI will use its best efforts to treat all information regarding work performed for CLIENT as proprietary and confidential to the maximum extent allowed by law. NO CLIENT information will be released without the written consent of the CLIENT billed for the work.

APPLICABLE LAW

Legal matters arising from work performed by CLI for CLIENT will be construed and interpreted in accordance with the laws for the state of Oregon.

Pumped 2/17

Report Date: February 17, 1994
Job#: WG-940214AF-2
PO#: VERBAL JOHN
(O&G/Phenols)
Project#: None Provided
Project: None Provided

Attention: Amos Kamerer
Koppers Industry
7540 NW St. Helens Rd.
Portland, OR 97210-3663

SAMPLE INFORMATION:
Date Samples Were Received By Laboratory: 02/14/94

Lab No.	Field Identification	Sample Matrix	Date	Time
1	WWT I	Waste Water	02-14-94	1335
2	WWT II	Waste Water	02-14-94	1335

ANALYTICAL RESULTS:

Parameter	Method	Detection Limits	WWT I Results	WWT II Results
Oil & Grease	EPA 413.2	3	ND	ND
Total Phenols	EPA 420.1	0.05	0.16	0.17

Results expressed as mg/L unless otherwise noted.

ND means none detected at or above the detection limit listed.

Sincerely,

Victor A. Perry
Quality Assurance

VAP/daj

This report is for the sole and exclusive use of the above-named client. Samples are retained 15 days from the report date, or until holding time expires. Results pertain only to samples submitted.

COFFEY LABORATORIES, INC.
12423 N.E. Whitaker Way • Portland, OR • 97230 • (503) 254-1794 • FAX (503) 254-1452

RECEIVED
FEB 22 1994
KOPPERS INDS., INC.
PORTLAND, OR

WWT-1

TEMP 48

PH

6.7

2-14-94

WWT II

TEMP 48

PH 6.6

2-14-94

COFFEY LABORATORIES, INC.
CHAIN OF CUSTODY AGREEMENT

PORTLAND BRANCH
12423 NE Whitaker Way
Portland, OR 97230
(503) 254-1794 FAX: (503) 254-1452

PENDLETON BRANCH
287 SE First
Pendleton, OR 97801
(503) 276-0385

Report Attention: AMOS KAMPFER
Company Name: KOPPERS
Address: 7540 N.W. ST HELENS ROAD
PORTLAND OREE
Phone: (503) 2863681 FAX: (503) 285-2831

Report Instructions:

Project Name:
Project Number:
PO Number:

Sample Turnaround
- ☐ Standard
- ☐ Priority (1.5x Std. Fee)
- ☒ Rush (2x Std. Fee)
- ☐ Emergency (3x Std. Fee)

Reporting Request
- ☐ FAX (T-35)
- ☐ Verbals (T-1157)
- ☐ Extra Report Copy (T-1402) (Fees Associated)

Initials:

FOR LABORATORY USE ONLY Page ___ of ___
Job Number: W.C. 940214 A.C.
Custabbr: Koppers ☐NEW
☐VISA ☐M/C Expires:
Card #:
Cash / Check: $ #:
Billing Code: 1 2 3 4
QC LEVEL: 1 2 3 4
FEDX BUS COURIER UPS LAB CLIENT MAIL

Sample ID	Loc.	ID	Collection Date	Time	Media	Analysis Requested	Test/Profile
WWT I			2-14-94	1:35pm		OIL & GREASE	ND
WWT II			2-14-94	1:35pm		OIL & GREASE	ND
WWT I			2-14-94	1:35pm		PHENOLS	0.16
WWT II			2-14-94	1:35pm		PHENOLS	0.17

Sample Comments:

Sampled by: (Please Print)	Relinquished by: (Please Sign)	Date	Time	Received by: (Sign)	Date	Time
TED HARE	Ted Hare	2-14-94	4:30			
				LAB	2/14/94	1120

White Copy - Laboratory Copy *Yellow Copy - Client Copy*

SHADED AREAS FOR LABORATORY USE ONLY

SUBMISSION OF SAMPLES WITH TESTING REQUIREMENTS TO CLI WILL BE UNDERSTOOD TO BE AN AGREEMENT FOR SERVICES IN ACCORDANCE WITH THE CONDITIONS LISTED ON THE BACK OF THE CLIENT COPY.

Koppers015505

COFFEY LABORATORIES, INC.
CHAIN OF CUSTODY INSTRUCTIONS/CONDITIONS SHEET

INSTRUCTIONS

FOR LAB USE ONLY -	**All shaded areas are for laboratory use only. Please Do Not Write in These Areas.**
REPORT ATTENTION -	Name of the person who receives the laboratory report.
COMPANY NAME -	Name of the company or individual requesting the analysis.
REPORT ADDRESS -	Address of the company or individual requesting the analysis. (Address where report should be mailed)
REPORT INSTRUCTIONS -	A brief description of any special mail instructions, or address information pertaining to extra report copies.
PROJECT NAME -	Applies to customer project name. This data is provided at the customer's discretion.
PROJECT NUMBER -	Applies only to samples submitted by the customer. This data is provided at the customer's discretion.
FIELD ID -	A short description of the sample point (e.g., "Effluent from sand filter"). This description will appear on the report.
COLLECTION DATE -	The date on which the sample(s) was/were collected.
COLLECTION TIME -	The time at which the sample(s) was/were collected.
MEDIA -	This is a description of the sample media (e.g., drinking water, waste water, soil, etc.)
ANALYSIS REQUESTED -	Use one line for each analysis or group of analyses associated to a specific bottle.
SAMPLE COLLECTED BY -	The person who collected the sample(s) signs here.
RELINQUISHED BY -	The sampler signs this box when he/she gives the sample to someone else, and then fills in the date/time the sample left his/her possession.
RECEIVED BY -	The person who receives the sample(s) signs here and fills in the date/time received. The date and time should be same as "Relinquished by" unless the sample(s) was/were shipped.
JOB OR SAMPLE REMARKS -	General sample or job remarks.

CONDITIONS

PRICING AND CHARGES

Prices to be charged for work performed for CLIENT are those currently published in the Coffey Laboratories, Inc. (CLI) standard pricebook. CLIENT must notify CLI of price quotation at the time of the transfer of sample(s) to CLI. All submissions of samples with testing requirements to CLI will be understood to be an agreement for services. Any cancellation of testing requirements will result in charges being assessed on all testing completed prior to the notice of cancellation.

DELIVERY AND LIABILITY LIMITATIONS

CLI will analyze samples provided by CLIENT as requested by CLIENT in accordance with the procedures documented in the CLI Quality Assurance Plan (QAP). The maximum total liability assumed by CLI for work performed for CLIENT will in all cases be limited to the cost of the analysis. The specific format of the deliverable goods will be defined by CLIENT to CLI upon transfer of the samples to CLI. This warranty supersedes all other warranties.

CONFIDENTIALITY

CLI will use its best efforts to treat all information regarding work performed for CLIENT as proprietary and confidential to the maximum extent allowed by law. NO CLIENT information will be released without the written consent of the CLIENT billed for the work.

APPLICABLE LAW

Legal matters arising from work performed by CLI for CLIENT will be construed and interpreted in accordance with the laws for the state of Oregon.

Pumped 2/23

Report Date: February 23, 1994
Job#: WG-940221C-2
PO#: VERBAL JOHN (O&G/Phenols)
Project#: None Provided
Project: None Provided

Attention: Amos Kamerer
Koppers Industry
7540 NW St. Helens Rd.
Portland, OR 97210-3663

SAMPLE INFORMATION:
Date Samples Were Received By Laboratory: 02/21/94

Lab No.	Field Identification	Sample Matrix	Date	Time
1	WWT I	Waste Water	02-21-94	NP
2	WWT II	Waste Water	02-21-94	NP

ANALYTICAL RESULTS:

Parameter	Method	Detection Limits	WWT I Results	WWT II Results
Oil and Grease	EPA 413.1	3	ND	ND
Total Phenols	EPA 420.1	0.05	0.07	0.07

Results expressed as mg/L unless otherwise noted.

Sincerely,

Victor A. Perry
Quality Assurance

VAP/lws

This report is for the sole and exclusive use of the above-named client. Samples are retained 15 days from the report date, or until holding time expires. Results pertain only to samples submitted.

COFFEY LABORATORIES, INC.
12423 N.E. Whitaker Way • Portland, OR • 97230 • (503) 254-1794 • FAX (503) 254-1452

Koppers01550B

RECEIVED

FEB 25 1994

KOPPERS INDS., INC.
PORTLAND, OR

2-21-94
WWTP

TEMP 45

PH 6.7

2-21-94
WWTII

TEMP 44

PH 6.7

COFFEY LABORATORIES, INC.
CHAIN OF CUSTODY AGREEMENT

PORTLAND BRANCH
12423 NE Whitaker Way
Portland, OR 97230
(503) 254-1794 FAX: (503) 254-1452

PENDLETON BRANCH
287 SE First
Pendleton, OR 97801
(503) 276-0385

Report Attention: Amos Kamerer
Company Name: Koppers
Address: 7540 NW ST HELEN RD
PORTLAND ORE
Phone: (503) 286-3681 FAX: ( )
Report Instructions:

Project Name:
Project Number:
PO Number:

Sample Turnaround	Reporting Request
☐ Standard	☐ FAX (T-35)
☐ Priority (1.5x Std. Fee)	☐ Verbals (T-1157)
☑ Rush (2x Std. Fee)	☐ Extra Report Copy (T-1402) (Fees Associated)
☐ Emergency (3x Std. Fee)	Initials:

FOR LABORATORY USE ONLY Page ___ of ___
Job Number: GE940221-CZ
Custabbr: Koppers ☐NEW
☐VISA ☐M/C Expires:
Card #:
Cash / Check: $ #:
Billing Code: 1 2 3 4
QC LEVEL: 1 2 3 4
FEDX BUS COURIER UPS LAB CLIENT MAIL

Sample ID	Loc.	ID	Collection Date	/ Time	Media	Analysis Requested	Test/Profile
WWT I			2-21-94			OIL & GREASE	ND
WWT I			"			PHENOLS	0.7
WWT II			"			OIL GREASE	ND
WWT II			"			PHENOLS	0.7

Sample Comments:

Sampled by: (Please Print)	Relinquished by: (Please Sign)	Date	Time	Received by: (Sign)	Date	Time
TED HARE	Ted Hare	2-21-94	9:08			
				LAB		

White Copy - Laboratory Copy *Yellow Copy - Client Copy*

SHADED AREAS FOR LABORATORY USE ONLY

SUBMISSION OF SAMPLES WITH TESTING REQUIREMENTS TO CLI WILL BE UNDERSTOOD TO BE AN AGREEMENT FOR SERVICES IN ACCORDANCE WITH THE CONDITIONS LISTED ON THE BACK OF THE CLIENT COPY.

Koppers015511

COFFEY LABORATORIES, INC.
CHAIN OF CUSTODY INSTRUCTIONS/CONDITIONS SHEET

INSTRUCTIONS

FOR LAB USE ONLY -	**All shaded areas are for laboratory use only. Please Do Not Write in These Areas.**
REPORT ATTENTION -	Name of the person who receives the laboratory report.
COMPANY NAME -	Name of the company or individual requesting the analysis.
REPORT ADDRESS -	Address of the company or individual requesting the analysis. (Address where report should be mailed)
REPORT INSTRUCTIONS -	A brief description of any special mail instructions, or address information pertaining to extra report copies.
PROJECT NAME -	Applies to customer project name. This data is provided at the customer's discretion.
PROJECT NUMBER -	Applies only to samples submitted by the customer. This data is provided at the customer's discretion.
FIELD ID -	A short description of the sample point (e.g., "Effluent from sand filter"). This description will appear on the report.
COLLECTION DATE -	The date on which the sample(s) was/were collected.
COLLECTION TIME -	The time at which the sample(s) was/were collected.
MEDIA -	This is a description of the sample media (e.g., drinking water, waste water, soil, etc.)
ANALYSIS REQUESTED -	Use one line for each analysis or group of analyses associated to a specific bottle.
SAMPLE COLLECTED BY -	The person who collected the sample(s) signs here.
RELINQUISHED BY -	The sampler signs this box when he/she gives the sample to someone else, and then fills in the date/time the sample left his/her possession.
RECEIVED BY -	The person who receives the sample(s) signs here and fills in the date/time received. The date and time should be same as "Relinquished by" unless the sample(s) was/were shipped.
JOB OR SAMPLE REMARKS -	General sample or job remarks.

CONDITIONS

PRICING AND CHARGES
Prices to be charged for work performed for CLIENT are those currently published in the Coffey Laboratories, Inc. (CLI) standard pricebook. CLIENT must notify CLI of price quotation at the time of the transfer of sample(s) to CLI. All submissions of samples with testing requirements to CLI will be understood to be an agreement for services. Any cancellation of testing requirements will result in charges being assessed on all testing completed prior to the notice of cancellation.

DELIVERY AND LIABILITY LIMITATIONS
CLI will analyze samples provided by CLIENT as requested by CLIENT in accordance with the procedures documented in the CLI Quality Assurance Plan (QAP). The maximum total liability assumed by CLI for work performed for CLIENT will in all cases be limited to the cost of the analysis. The specific format of the deliverable goods will be defined by CLIENT to CLI upon transfer of the samples to CLI. This warranty supersedes all other warranties.

CONFIDENTIALITY
CLI will use its best efforts to treat all information regarding work performed for CLIENT as proprietary and confidential to the maximum extent allowed by law. NO CLIENT information will be released without the written consent of the CLIENT billed for the work.

APPLICABLE LAW
Legal matters arising from work performed by CLI for CLIENT will be construed and interpreted in accordance with the laws for the state of Oregon.

pumped 2/22

Report Date: February 23, 1994
Job#: WG-940218H-2
PO#: VERBAL JOHN (O&G/Phenols)
Project#: None Provided
Project: None Provided

Attention: Amos Kamerer
Koppers Industry
7540 NW St. Helens Rd.
Portland, OR 97210-3663

SAMPLE INFORMATION:
Date Samples Were Received By Laboratory: 02/18/94

Lab No.	Field Identification	Sample Matrix	Date	Time
1	WWT 3	Waste Water	02-18-94	0900
2	WWT 4	Waste Water	02-18-94	0900

ANALYTICAL RESULTS:

Parameter	Method	Detection Limits	WWT 3 Results	WWT 4 Results
Oil and Grease	EPA 413.1	3	ND	ND
Total Phenols	EPA 420.1	0.05	0.16	0.14

Results expressed as mg/L unless otherwise noted.

Sincerely,

Victor A. Perry
Quality Assurance

VAP/lws

This report is for the sole and exclusive use of the above-named client. Samples are retained 15 days from the report date, or until holding time expires. Results pertain only to samples submitted.

COFFEY LABORATORIES, INC.
12423 N.E. Whitaker Way • Portland, OR • 97230 • (503) 254-1794 • FAX (503) 254-1452

RECEIVED
FEB 28 1994
KOPPERS INDS., INC.
PORTLAND, OR

RECEIVED
KOPPERS INDS., INC.
PORTLAND, OR

Koppers015514

WWT3

TEMP 48° F

PH 6.8

2-18-94

WWT 4

TEMP 48°

PH 6.6

2-18-94

COFFEY LABORATORIES, INC.
CHAIN OF CUSTODY AGREEMENT

PORTLAND BRANCH
12423 NE Whitaker Way
Portland, OR 97230
(503) 254-1794 FAX: (503) 254-1452

PENDLETON BRANCH
287 SE First
Pendleton, OR 97801
(503) 276-0385

Report Attention: AMOS KAMERER
Company Name: KOPPERS
Address: 7540 N.W ST HELENS ROAD
PORTLAND OREGON 97210-3663
Phone: (503) 286-3681 FAX: (503) 285-2831

Report Instructions:

Project Name:
Project Number:
PO Number:

Sample Turnaround	Reporting Request
☐ Standard	☐ FAX (T-35)
☐ Priority (1.5x Std. Fee)	☐ Verbals (T-1157)
☑ Rush (2x Std. Fee)	☐ Extra Report Copy (T-1402) (Fees Associated)
☐ Emergency (3x Std. Fee)	Initials:

FOR LABORATORY USE ONLY Page ___ of ___
Job Number: CE940218-HZ
Custabbr: Koppers ☐NEW
☐VISA ☐M/C Expires:
Card #:
Cash / Check: $ #:
Billing Code: 1 2 3 4
QC LEVEL: 1 2 3 4
FEDX BUS COURIER UPS LAB CLIENT MAIL

Sample ID	Loc.	ID	Collection Date	Collection Time	Media	Analysis Requested	Test/Profile
WWT 3			2-18-94	9:00 AM		OIL & GREASE	N/D
WWT 3			2-18-94	900 AM		PHENOLS	.016
WWT 4			2-18-94	900 AM		OIL & GREASE	N/D
WWT 4			2-18-94	900 AM		PHENOLS	.014

Sample Comments:

Sampled by: (Please Print)	Relinquished by: (Please Sign)	Date	Time	Received by: (Sign)	Date	Time
JED HARE	Randall S Coffey	2-18-94	10:01			
				LAB Crystal Bushfield	2/18/94	

White Copy - Laboratory Copy *Yellow Copy - Client Copy*

SHADED AREAS FOR LABORATORY USE ONLY

SUBMISSION OF SAMPLES WITH TESTING REQUIREMENTS TO CLI WILL BE UNDERSTOOD TO BE AN AGREEMENT FOR SERVICES IN ACCORDANCE WITH THE CONDITIONS LISTED ON THE BACK OF THE CLIENT COPY.

Koppers015517

COFFEY LABORATORIES, INC.

CHAIN OF CUSTODY INSTRUCTIONS/CONDITIONS SHEET

INSTRUCTIONS

FOR LAB USE ONLY -	All shaded areas are for laboratory use only. Please Do Not Write in These Areas.
REPORT ATTENTION -	Name of the person who receives the laboratory report.
COMPANY NAME -	Name of the company or individual requesting the analysis.
REPORT ADDRESS -	Address of the company or individual requesting the analysis. (Address where report should be mailed)
REPORT INSTRUCTIONS -	A brief description of any special mail instructions, or address information pertaining to extra report copies.
PROJECT NAME -	Applies to customer project name. This data is provided at the customer's discretion.
PROJECT NUMBER -	Applies only to samples submitted by the customer. This data is provided at the customer's discretion.
FIELD ID -	A short description of the sample point (e.g., "Effluent from sand filter"). This description will appear on the report.
COLLECTION DATE -	The date on which the sample(s) was/were collected.
COLLECTION TIME -	The time at which the sample(s) was/were collected.
MEDIA -	This is a description of the sample media (e.g., drinking water, waste water, soil, etc.)
ANALYSIS REQUESTED -	Use one line for each analysis or group of analyses associated to a specific bottle.
SAMPLE COLLECTED BY -	The person who collected the sample(s) signs here.
RELINQUISHED BY -	The sampler signs this box when he/she gives the sample to someone else, and then fills in the date/time the sample left his/her possession.
RECEIVED BY -	The person who receives the sample(s) signs here and fills in the date/time received. The date and time should be same as "Relinquished by" unless the sample(s) was/were shipped.
JOB OR SAMPLE REMARKS -	General sample or job remarks.

CONDITIONS

PRICING AND CHARGES

Prices to be charged for work performed for CLIENT are those currently published in the Coffey Laboratories, Inc. (CLI) standard pricebook. CLIENT must notify CLI of price quotation at the time of the transfer of sample(s) to CLI. All submissions of samples with testing requirements to CLI will be understood to be an agreement for services. Any cancellation of testing requirements will result in charges being assessed on all testing completed prior to the notice of cancellation.

DELIVERY AND LIABILITY LIMITATIONS

CLI will analyze samples provided by CLIENT as requested by CLIENT in accordance with the procedures documented in the CLI Quality Assurance Plan (QAP). The maximum total liability assumed by CLI for work performed for CLIENT will in all cases be limited to the cost of the analysis. The specific format of the deliverable goods will be defined by CLIENT to CLI upon transfer of the samples to CLI. This warranty supersedes all other warranties.

CONFIDENTIALITY

CLI will use its best efforts to treat all information regarding work performed for CLIENT as proprietary and confidential to the maximum extent allowed by law. NO CLIENT information will be released without the written consent of the CLIENT billed for the work.

APPLICABLE LAW

Legal matters arising from work performed by CLI for CLIENT will be construed and interpreted in accordance with the laws for the state of Oregon.

Pumped 2/24+25

Report Date: February 28, 1994
Job#: WG-940224A-2
PO#: VERBAL JOHN (O&G/Phenols)
Project#: None Provided
Project: None Provided

Attention: Amos Kamerer
Koppers Industry
7540 NW St. Helens Rd.
Portland, OR 97210-3663

SAMPLE INFORMATION:
Date Samples Were Received By Laboratory: 02/24/94

Lab No.	Field Identification	Sample Matrix	Date	Time
1	WWT 3	Waste Water	02-24-94	0830
2	WWT 4	Waste Water	02-24-94	0830

ANALYTICAL RESULTS:

Parameter	Method	Detection Limits	WWT 3 Results	WWT 4 Results
Total Phenols	EPA 420.1	0.05	0.11	0.10
Oil & Grease	EPA 413.1	3	ND	ND

Results expressed as mg/L unless otherwise noted.

ND means none detected at or above the detection limit listed.

RECEIVED
MAR 02 1994
KOPPERS INDS., INC.
PORTLAND, OR

Sincerely,

Susan M. Coffey
President

SMC/daj

This report is for the sole and exclusive use of the above-named client. Samples are retained 15 days from the report date, or until holding time expires. Results pertain only to samples submitted.

COFFEY LABORATORIES, INC.
12423 N.E. Whitaker Way • Portland, OR • 97230 • (503) 254-1794 • FAX (503) 254-1452

2-24-94

Temp 41.

PH 6.7

WWT 4

WWT 3

TEMP 41

PH 6.6

2-24-94

COFFEY LABORATORIES, INC.
CHAIN OF CUSTODY AGREEMENT

PORTLAND BRANCH
12423 NE Whitaker Way
Portland, OR 97230
(503) 254-1794 FAX: (503) 254-1452

PENDLETON BRANCH
287 SE First
Pendleton, OR 97801
(503) 276-0385

Report Attention: AMOS KAMERER
Company Name: KOPPERS
Address: 7540 NW ST HELENS RD
PORTLAND ORE
Phone: (502) 286-3681 FAX: (503) 285-2831

Report Instructions:

Project Name:
Project Number:
PO Number:

Sample Turnaround	Reporting Request
☐ Standard	☐ FAX (T-35)
☐ Priority (1.5x Std. Fee)	☐ Verbals (T-1157)
☑ Rush (2x Std. Fee)	☐ Extra Report Copy (T-1402) (Fees Associated)
☐ Emergency (3x Std. Fee)	Initials:

FOR LABORATORY USE ONLY Page ___ of ___
Job Number: W940224-AZ
Custabbr: KOPPERS ☐NEW
☐VISA ☐M/C Expires:
Card #:
Cash / Check: $ #:
Billing Code: 1 2 3 4
QC LEVEL: 1 2 3 4
FEDX BUS COURIER UPS LAB (CLIENT) MAIL

Sample ID	Loc.	ID	Collection Date / Time	Media	Analysis Requested	Test/Profile
WWT3			2-24-94 8:30		OIL & GREASE	ND
WWT3			2-24-94 830		PHENOLS	0.11
WWT4			2-24-94 830		OIL & GREASE	ND
WWT4			2-24-94 830		PHENOLS	0.10

Sample Comments:

Sampled by: (Please Print)	Relinquished by: (Please Sign)	Date	Time	Received by: (Sign)	Date	Time
TED HARE	Ted Hare	2-24-94	9:10 pm			
				LAB		

White Copy - Laboratory Copy *Yellow Copy - Client Copy*

SHADED AREAS FOR LABORATORY USE ONLY

SUBMISSION OF SAMPLES WITH TESTING REQUIREMENTS TO CLI WILL BE UNDERSTOOD TO BE AN AGREEMENT FOR SERVICES IN ACCORDANCE WITH THE CONDITIONS LISTED ON THE BACK OF THE CLIENT COPY.

Koppers015522

COFFEY LABORATORIES, INC.
CHAIN OF CUSTODY INSTRUCTIONS/CONDITIONS SHEET

INSTRUCTIONS

FOR LAB USE ONLY -	All shaded areas are for laboratory use only. Please Do Not Write in These Areas.
REPORT ATTENTION -	Name of the person who receives the laboratory report.
COMPANY NAME -	Name of the company or individual requesting the analysis.
REPORT ADDRESS -	Address of the company or individual requesting the analysis. (Address where report should be mailed)
REPORT INSTRUCTIONS -	A brief description of any special mail instructions, or address information pertaining to extra report copies.
PROJECT NAME -	Applies to customer project name. This data is provided at the customer's discretion.
PROJECT NUMBER -	Applies only to samples submitted by the customer. This data is provided at the customer's discretion.
FIELD ID -	A short description of the sample point (e.g., "Effluent from sand filter"). This description will appear on the report.
COLLECTION DATE -	The date on which the sample(s) was/were collected.
COLLECTION TIME -	The time at which the sample(s) was/were collected.
MEDIA -	This is a description of the sample media (e.g., drinking water, waste water, soil, etc.)
ANALYSIS REQUESTED -	Use one line for each analysis or group of analyses associated to a specific bottle.
SAMPLE COLLECTED BY -	The person who collected the sample(s) signs here.
RELINQUISHED BY -	The sampler signs this box when he/she gives the sample to someone else, and then fills in the date/time the sample left his/her possession.
RECEIVED BY -	The person who receives the sample(s) signs here and fills in the date/time received. The date and time should be same as "Relinquished by" unless the sample(s) was/were shipped.
JOB OR SAMPLE REMARKS -	General sample or job remarks.

CONDITIONS

PRICING AND CHARGES

Prices to be charged for work performed for CLIENT are those currently published in the Coffey Laboratories, Inc. (CLI) standard pricebook. CLIENT must notify CLI of price quotation at the time of the transfer of sample(s) to CLI. All submissions of samples with testing requirements to CLI will be understood to be an agreement for services. Any cancellation of testing requirements will result in charges being assessed on all testing completed prior to the notice of cancellation.

DELIVERY AND LIABILITY LIMITATIONS

CLI will analyze samples provided by CLIENT as requested by CLIENT in accordance with the procedures documented in the CLI Quality Assurance Plan (QAP). The maximum total liability assumed by CLI for work performed for CLIENT will in all cases be limited to the cost of the analysis. The specific format of the deliverable goods will be defined by CLIENT to CLI upon transfer of the samples to CLI. This warranty supersedes all other warranties.

CONFIDENTIALITY

CLI will use its best efforts to treat all information regarding work performed for CLIENT as proprietary and confidential to the maximum extent allowed by law. NO CLIENT information will be released without the written consent of the CLIENT billed for the work.

APPLICABLE LAW

Legal matters arising from work performed by CLI for CLIENT will be construed and interpreted in accordance with the laws for the state of Oregon.

Pumped 2/25 + 28

Report Date: February 28, 1994
Job#: WG-940224K-2
PO#: VERBAL JOHN (O&G/Phenols)
Project#: None Provided
Project: None Provided

Attention: Amos Kamerer
Koppers Industry
7540 NW St. Helens Rd.
Portland, OR 97210-3663

SAMPLE INFORMATION:
Date Samples Were Received By Laboratory: 02/24/94

Lab No.	Field Identification	Sample Matrix	Date	Time
1	WWT I	Drinking Water	02-24-94	1015
2	WWT II	Drinking Water	02-24-94	1015

ANALYTICAL RESULTS:

Parameter	Method	Detection Limits	WWT I Results	WWT II Results
Total Phenols	EPA 420.1	0.05	ND	ND
Oil & Grease	EPA 413.1	3	ND	ND

Results expressed as mg/L unless otherwise noted.

ND means none detected at or above the detection limit listed.

Sincerely,

Susan M. Coffey
President

RECEIVED
MAR 02 1994
KOPPERS INDS., INC.
PORTLAND, OR

SMC/daj

This report is for the sole and exclusive use of the above-named client. Samples are retained 15 days from the report date, or until holding time expires. Results pertain only to samples submitted.

COFFEY LABORATORIES, INC.
12423 N.E. Whitaker Way • Portland, OR • 97230 • (503) 254-1794 • FAX (503) 254-1452

WWT2

PH 6.7

TEMP 42

WWT 1

PH 6.8

TEMP 41

COFFEY LABORATORIES, INC.
CHAIN OF CUSTODY AGREEMENT

PORTLAND BRANCH
12423 NE Whitaker Way
Portland, OR 97230
(503) 254-1794 FAX: (503) 254-1452

PENDLETON BRANCH
287 SE First
Pendleton, OR 97801
(503) 276-0385

Report Attention: AMOS KAMERER
Company Name: KOPPERS
Address: 7546 NW ST HELENS RD
PORTLAND ORE 97210-3663
Phone: (503) 280-3681 FAX: (503) 285-2831

Report Instructions:

Project Name:
Project Number:
PO Number:

Sample Turnaround	Reporting Request
☐ Standard	☐ FAX (T-35)
☐ Priority (1.5x Std. Fee)	☐ Verbals (T-1157)
☑ Rush (2x Std. Fee)	☐ Extra Report Copy (T-1402) (Fees Associated)
☐ Emergency (3x Std. Fee)	Initials:

FOR LABORATORY USE ONLY Page ___ of ___
Job Number: LJG 940224-K2
Custabbr: KOPPERS ☐NEW
☐VISA ☐M/C Expires:
Card #:
Cash / Check: $ #:
Billing Code: 1 2 3 4
QC LEVEL: 1 2 3 4
FEDX BUS COURIER UPS LAB CLIENT MAIL

Sample ID	Loc.	ID	Collection Date	Collection Time	Media	Analysis Requested	Test/Profile
WWT I			2-24-94	10:15am		OIL & GREASE	ND
WWT I			/	/		PHENOLS	ND
WWT II			/	/		OIL & GREASE	ND
WWT II			/	/		PHENOLS	ND

Sample Comments:

Sampled by: (Please Print)	Relinquished by: (Please Sign)	Date	Time	Received by: (Sign)	Date	Time
TED HARE	R. L. Bailey	2-24-94	11:31 Am.			
				LAB	2/24/94	1130

White Copy - Laboratory Copy *Yellow Copy - Client Copy*

SHADED AREAS FOR LABORATORY USE ONLY

SUBMISSION OF SAMPLES WITH TESTING REQUIREMENTS TO CLI WILL BE UNDERSTOOD TO BE AN AGREEMENT FOR SERVICES IN ACCORDANCE WITH THE CONDITIONS LISTED ON THE BACK OF THE CLIENT COPY.

Koppers015527

COFFEY LABORATORIES, INC.
CHAIN OF CUSTODY INSTRUCTIONS/CONDITIONS SHEET

INSTRUCTIONS

FOR LAB USE ONLY -	All shaded areas are for laboratory use only. Please Do Not Write in These Areas.
REPORT ATTENTION -	Name of the person who receives the laboratory report.
COMPANY NAME -	Name of the company or individual requesting the analysis.
REPORT ADDRESS -	Address of the company or individual requesting the analysis. (Address where report should be mailed)
REPORT INSTRUCTIONS -	A brief description of any special mail instructions, or address information pertaining to extra report copies.
PROJECT NAME -	Applies to customer project name. This data is provided at the customer's discretion.
PROJECT NUMBER -	Applies only to samples submitted by the customer. This data is provided at the customer's discretion.
FIELD ID -	A short description of the sample point (e.g., "Effluent from sand filter"). This description will appear on the report.
COLLECTION DATE -	The date on which the sample(s) was/were collected.
COLLECTION TIME -	The time at which the sample(s) was/were collected.
MEDIA -	This is a description of the sample media (e.g., drinking water, waste water, soil, etc.)
ANALYSIS REQUESTED -	Use one line for each analysis or group of analyses associated to a specific bottle.
SAMPLE COLLECTED BY -	The person who collected the sample(s) signs here.
RELINQUISHED BY -	The sampler signs this box when he/she gives the sample to someone else, and then fills in the date/time the sample left his/her possession.
RECEIVED BY -	The person who receives the sample(s) signs here and fills in the date/time received. The date and time should be same as "Relinquished by" unless the sample(s) was/were shipped.
JOB OR SAMPLE REMARKS -	General sample or job remarks.

CONDITIONS

PRICING AND CHARGES

Prices to be charged for work performed for CLIENT are those currently published in the Coffey Laboratories, Inc. (CLI) standard pricebook. CLIENT must notify CLI of price quotation at the time of the transfer of sample(s) to CLI. All submissions of samples with testing requirements to CLI will be understood to be an agreement for services. Any cancellation of testing requirements will result in charges being assessed on all testing completed prior to the notice of cancellation.

DELIVERY AND LIABILITY LIMITATIONS

CLI will analyze samples provided by CLIENT as requested by CLIENT in accordance with the procedures documented in the CLI Quality Assurance Plan (QAP). The maximum total liability assumed by CLI for work performed for CLIENT will in all cases be limited to the cost of the analysis. The specific format of the deliverable goods will be defined by CLIENT to CLI upon transfer of the samples to CLI. This warranty supersedes all other warranties.

CONFIDENTIALITY

CLI will use its best efforts to treat all information regarding work performed for CLIENT as proprietary and confidential to the maximum extent allowed by law. NO CLIENT information will be released without the written consent of the CLIENT billed for the work.

APPLICABLE LAW

Legal matters arising from work performed by CLI for CLIENT will be construed and interpreted in accordance with the laws for the state of Oregon.

To: Amos Kamerer

From: T.J. Turner

February 24, 1994

On 2/24/94 we have begun pumping W.W. Tanks 3 & 4 to the river. We received the results at 2:30 pm from Coffey Labs. We started pumping at 2:35 pm. We turned in samples of W.W. Tanks 1 & 2 at 11:30 am, we are still awaiting results.

We have not operated our sump pumps for most of the day, due to all wastewater tanks being full. It is now going on 3:00 pm. The rains have been constant with no let up in sight. We have 6 to 10 inches of standing water in the lower tank farm and it is rising.

If this process continues without change, we will suffer severe economic losses due to the rising water table in the lower tank farm. These damages to include loss of pumps, motors and related systems.

It is now after 4:00 pm, weather conditions are unchanged. The water table in the lower tank farm is still rising. It is now cresting the top of the sump and encroaching on the pumping systems.

If the water reaches these pumps we will lose the ability to pump water all together, thus endangering all of our systems in the lower tank farm. Effectively shutting down the plant entirely.

The past performance of the lab tests on our waste water tanks have shown no excess amount of oils and greases or phenols. No results in excess of our NPDES permits. Based on these facts as well as the fact that this water appears to be no more than collected rain water and we now face imminent severe economic losses I have decided to turn back on the sump pumps as a last resort. I do this after exhausting all other courses of action.

I have assigned a man to monitor the situation hourly until we are out of danger.

Respectfully,

T.J. Turner
General Foreman

PERMITTEE NAME/ADDRESS (Include Facility Name/Location if different)
NAME KOPPERS INDUSTRIES INC.
ADDRESS 7540 N.W. ST. HELENS RD.
PORTLAND, OR 97210

FACILITY NORTHWEST PLANT
LOCATION MULTNOMAH COUNTY

NATIONAL POLLUTANT DISCHARGE ELIMINATION SYSTEM (NPDES)
DISCHARGE MONITORING REPORT (DMR)

(2-16) PERMIT NUMBER	(17-19) DISCHARGE NUMBER
OR-100077-9	0001

3077-J
47430

Form Approved.
OMB No. 2040-0004.
Approval expires 6-30-91.

MONITORING PERIOD

FROM YEAR	MO	DAY	TO YEAR	MO	DAY
94	01	01	94	01	31
(20-21)	(22-23)	(24-25)	(26-27)	(28-29)	(30-31)

NOTE: Read instructions before completing this form.

PARAMETER (32-37)		(3 Card Only) QUANTITY OR LOADING (46-53) AVERAGE	(54-61) MAXIMUM	UNITS	(4 Card Only) QUALITY OR CONCENTRATION (38-45) MINIMUM	(46-53) AVERAGE	(54-61) MAXIMUM	UNITS	NO. EX (62-63)	FREQUENCY OF ANALYSIS (64-68)	SAMPLE TYPE (69-70)
FLOW	SAMPLE MEASUREMENT	11613		GAD					N/A	8/31	EST.
	PERMIT REQUIREMENT		N/A								
TEMPERATURE	SAMPLE MEASUREMENT				50	51	52		0	8/31	GRAB
	PERMIT REQUIREMENT						110				
PH	SAMPLE MEASUREMENT				6.3	6.6	6.8		0	8/31	GRAB
	PERMIT REQUIREMENT				6.0		9.0				
OIL & GREASES	SAMPLE MEASUREMENT				N.D.	4.4	14		0	8/31	GRAB
	PERMIT REQUIREMENT					10	15				
PHENOLS	SAMPLE MEASUREMENT				.05	.10	.15		0	8/31	GRAB
	PERMIT REQUIREMENT					.5	.7				
	SAMPLE MEASUREMENT										
	PERMIT REQUIREMENT										
	SAMPLE MEASUREMENT										
	PERMIT REQUIREMENT										

NAME/TITLE PRINCIPAL EXECUTIVE OFFICER
J.R. Batchelder, V.P. Environ. & Tech. Services
~~AMOS S. KAMERER~~
~~PLANT MANAGER~~
TYPED OR PRINTED

I CERTIFY UNDER PENALTY OF LAW THAT I HAVE PERSONALLY EXAMINED AND AM FAMILIAR WITH THE INFORMATION SUBMITTED HEREIN; AND BASED ON MY INQUIRY OF THOSE INDIVIDUALS IMMEDIATELY RESPONSIBLE FOR OBTAINING THE INFORMATION, I BELIEVE THE SUBMITTED INFORMATION IS TRUE, ACCURATE AND COMPLETE. I AM AWARE THAT THERE ARE SIGNIFICANT PENALTIES FOR SUBMITTING FALSE INFORMATION, INCLUDING THE POSSIBILITY OF FINE AND IMPRISONMENT. SEE 18 USC § 1001 AND 33 USC § 1319 (Penalties under these statutes may include fines up to $10,000 and/or maximum imprisonment of between 6 months and 5 years.)

SIGNATURE OF PRINCIPAL EXECUTIVE OFFICER OR AUTHORIZED AGENT

TELEPHONE AREA CODE	NUMBER	DATE YEAR	MO	DAY
503	286-3681	94	02	08

COMMENT AND EXPLANATION OF ANY VIOLATIONS (Reference all attachments here)
THE 1ST QUARTER PAH TEST RESULTS ARE ATTACHED

Koppers015530

SUNRISE EXPRESS, INC.

5419 N.E. 88TH ST. • VANCOUVER, WASHINGTON 98665
(206) 574-5971 • OUT OF STATE 1-800-999-5971
FAX 1-206-574-8062

51, 50, 52, 53, 51, 52, 50, 50 ÷ 8 = 51

6.4, 6.3, 6.8, 6.8, 6.4, 6.6, 6.5, 6.7 ÷ 8 = 6.6

5, 14, 7, NO, NO, NO, NO, 8 ÷ 8 = 4.4

.08, .08, .06, .05, .14, .15, .13, .11 ÷ 8 = .10

Flow

95,000 × 8 ÷ 31 = 11,613

Pumped 1/12/94

Koppers Industry

Job#: WG-940111K-2
Page 2

Parameter	Method	Detection Limits	WWT 3 Results	WWT 4 Results
Oil & Grease	EPA 413.1	3	ND	ND
Total Phenols	SM 420.1	0.05	0.14	0.15

Results expressed as mg/L unless otherwise noted.

SM means Standard Methods for the Examination of Water and Wastewater, 1985, 16th Edition.

ND means none detected at or above the detection limit listed.

Analysis Performed: Polynuclear Aromatic Hydrocarbons, by EPA Method 8310, Liquid Chromatography.

Compound	Detection Limit	Laboratory Blank	WWT 4 Results
Acenaphthene	100	ND	ND
Acenaphthylene	100	ND	ND
Anthracene	20	ND	ND
Benzo(a)anthracene	2.0	ND	ND
Benzo(b)fluoranthene	2.5	ND	2.7
Benzo(k)fluoranthene	2.5	ND	2.8
Benzo(g,h,i)perylene	6.0	ND	ND
Benzo(a)pyrene	2.5	ND	5.4
Chrysene	3.0	ND	ND
Dibenzo(a,h)anthracene	6.0	ND	ND
Fluoranthene	20	ND	ND
Fluorene	20	ND	ND
Indeno(1,2,3-c,d)pyrene	6.0	ND	ND
Naphthalene	100	ND	ND
Phenanthrene	20	ND	ND
Pyrene	20	ND	ND

Results expressed as μg/L unless otherwise noted.

ND means none detected at or above the detection limit listed.

COFFEY LABORATORIES, INC.
12423 N.E. Whitaker Way • Portland, OR • 97230 • (503) 254-1794 • FAX (503) 254-1452

Pumped 1/12/94

Report Date: January 13, 1994
Job#: WG-940111K-2
PO#: VERBAL JOHN (O&G/Phenols)
Project#: None Provided
Project: None Provided

Attention: Amos Kamerer
Koppers Industry
7540 NW St. Helens Rd.
Portland, OR 97210-3663

SAMPLE INFORMATION:
Date Samples Were Received By Laboratory: 01/11/94

Lab No.	Field Identification	Sample Matrix	Date	Time
1	WWT 3	Waste Water	01-11-94	1045
2	WWT 4	Waste Water	01-11-94	1045

ANALYTICAL RESULTS ARE ON THE FOLLOWING PAGE.

Sincerely,

Susan M. Coffey
President

SMC/daj

This report is for the sole and exclusive use of the above-named client. Samples are retained 15 days from the report date, or until holding time expires. Results pertain only to samples submitted.

COFFEY LABORATORIES, INC.
12423 N.E. Whitaker Way • Portland, OR • 97230 • (503) 254-1794 • FAX (503) 254-1452

1-11-94

WWT 3

PH 6.6

Temp 51°

1-11-94
WWT4

PH 6.4

Temp 52

COFFEY LABORATORIES, INC.
CHAIN OF CUSTODY AGREEMENT

PORTLAND BRANCH
12423 NE Whitaker Way
Portland, OR 97230
(503) 254-1794 FAX: (503) 254-1452

PENDLETON BRANCH
287 SE First
Pendleton, OR 97801
(503) 276-0385

Report Attention: AMOS KAMERER
Company Name: KOPPERS INDUSTRIES INC
Address: 7540 N.W. ST HELENS ROAD
PORTLAND, ORE. 97210-3663
Phone: (503) 286-3681 FAX: (503) 285-2831

Report Instructions:

Project Name:
Project Number:
PO Number:

Sample Turnaround	Reporting Request
☐ Standard	☐ FAX (T-35)
☐ Priority (1.5x Std. Fee)	☐ Verbals (T-1157)
☑ Rush (2x Std. Fee)	☐ Extra Report Copy (T-1402) (Fees Associated)
☐ Emergency (3x Std. Fee)	Initials:

FOR LABORATORY USE ONLY Page ___ of ___
Job Number: WG940111-K2
Custabbr: Koppers ☐NEW
☐VISA ☐M/C Expires:
Card #:
Cash / Check: $ #:
Billing Code: 1 2 3 4
QC LEVEL: 1 2 3 4
FEDX BUS COURIER UPS LAB CLIENT MAIL

Sample ID	Loc.	ID	Collection Date	Collection Time	Media	Analysis Requested	Test/Profile
WWT 3			1-11-94	10:45am		OIL & GREASE	N/D
WWT 3			1-11-94	10:45am		PHENOLS	0.14
WWT 4			1-11-94	10:45am		OIL & GREASE	N/D
WWT 4			1-11-94	10:45am		PHENOLS	0.15
WWT 4 (2 BOTTLES)			1-11-94	10:45am		PAH	

Sample Comments:

Sampled by: (Please Print)	Relinquished by: (Please Sign)	Date	Time	Received by: (Sign)	Date	Time
TED HARE	R.S. Beckley	1-11-93	11:46			
				LAB [illegible]	1/11/94	1150

White Copy - Laboratory Copy *Yellow Copy - Client Copy*

SHADED AREAS FOR LABORATORY USE ONLY

SUBMISSION OF SAMPLES WITH TESTING REQUIREMENTS TO CLI WILL BE UNDERSTOOD TO BE AN AGREEMENT FOR SERVICES IN ACCORDANCE WITH THE CONDITIONS LISTED ON THE BACK OF THE CLIENT COPY.

Koppers015536

COFFEY LABORATORIES, INC.
CHAIN OF CUSTODY INSTRUCTIONS/CONDITIONS SHEET

INSTRUCTIONS

FOR LAB USE ONLY -	All shaded areas are for laboratory use only. Please Do Not Write in These Areas.
REPORT ATTENTION -	Name of the person who receives the laboratory report.
COMPANY NAME -	Name of the company or individual requesting the analysis.
REPORT ADDRESS -	Address of the company or individual requesting the analysis. (Address where report should be mailed)
REPORT INSTRUCTIONS -	A brief description of any special mail instructions, or address information pertaining to extra report copies.
PROJECT NAME -	Applies to customer project name. This data is provided at the customer's discretion.
PROJECT NUMBER -	Applies only to samples submitted by the customer. This data is provided at the customer's discretion.
FIELD ID -	A short description of the sample point (e.g., "Effluent from sand filter"). This description will appear on the report.
COLLECTION DATE -	The date on which the sample(s) was/were collected.
COLLECTION TIME -	The time at which the sample(s) was/were collected.
MEDIA -	This is a description of the sample media (e.g., drinking water, waste water, soil, etc.)
ANALYSIS REQUESTED -	Use one line for each analysis or group of analyses associated to a specific bottle.
SAMPLE COLLECTED BY -	The person who collected the sample(s) signs here.
RELINQUISHED BY -	The sampler signs this box when he/she gives the sample to someone else, and then fills in the date/time the sample left his/her possession.
RECEIVED BY -	The person who receives the sample(s) signs here and fills in the date/time received. The date and time should be same as "Relinquished by" unless the sample(s) was/were shipped.
JOB OR SAMPLE REMARKS -	General sample or job remarks.

CONDITIONS

PRICING AND CHARGES

Prices to be charged for work performed for CLIENT are those currently published in the Coffey Laboratories, Inc. (CLI) standard pricebook. CLIENT must notify CLI of price quotation at the time of the transfer of sample(s) to CLI. All submissions of samples with testing requirements to CLI will be understood to be an agreement for services. Any cancellation of testing requirements will result in charges being assessed on all testing completed prior to the notice of cancellation.

DELIVERY AND LIABILITY LIMITATIONS

CLI will analyze samples provided by CLIENT as requested by CLIENT in accordance with the procedures documented in the CLI Quality Assurance Plan (QAP). The maximum total liability assumed by CLI for work performed for CLIENT will in all cases be limited to the cost of the analysis. The specific format of the deliverable goods will be defined by CLIENT to CLI upon transfer of the samples to CLI. This warranty supersedes all other warranties.

CONFIDENTIALITY

CLI will use its best efforts to treat all information regarding work performed for CLIENT as proprietary and confidential to the maximum extent allowed by law. NO CLIENT information will be released without the written consent of the CLIENT billed for the work.

APPLICABLE LAW

Legal matters arising from work performed by CLI for CLIENT will be construed and interpreted in accordance with the laws for the state of Oregon.

Pumped 1/27/94

Report Date: January 26, 1994
Job#: WG-940124A-2
PO#: None Provided
Project#: None Provided
Project: None Provided

Attention: Amos Kamerer
Koppers Industry
7540 NW St. Helens Rd.
Portland, OR 97210-3663

SAMPLE INFORMATION:
Date Samples Were Received By Laboratory: 01/24/94

Lab No.	Field Identification	Sample Matrix	Date	Time
1	WW TI	Waste Water	01-24-94	NP
2	WW TII	Waste Water	01-24-94	NP

ANALYTICAL RESULTS:

Parameter	Method	Detection Limits	WW TI Results	WW TII Results
Oil and Grease	EPA 413.1	3	ND	8
Total Phenols	EPA 420.1	0.05	0.13	0.11

Results expressed as mg/L unless otherwise noted.

Sincerely,

Susan M Coffey

Susan M. Coffey
President

SMC/lws

This report is for the sole and exclusive use of the above-named client. Samples are retained 15 days from the report date, or until holding time expires. Results pertain only to samples submitted.

COFFEY LABORATORIES, INC.
12423 N.E. Whitaker Way • Portland, OR • 97230 • (503) 254-1794 • FAX (503) 254-1452

RECEIVED
JAN 28 1994
KOPPERS INDS., INC.
PORTLAND, OR

1-24-94
WWT II

PH 6.7

TEMP 50

1-24-94
WWTI

PH 6.5

TEMP 50

COFFEY LABORATORIES, INC.
CHAIN OF CUSTODY AGREEMENT

PORTLAND BRANCH
12423 NE Whitaker Way
Portland, OR 97230
(503) 254-1794 FAX: (503) 254-1452

PENDLETON BRANCH
287 SE First
Pendleton, OR 97801
(503) 276-0385

Report Attention: Amos Kamerer
Company Name: Koppers Industries Inc.
Address: 7540 N.W. St Helens Road
Portland, Or 97210-3663
Phone: (503) 286 3681 FAX: (503) 285 2831

Report Instructions:

Project Name:
Project Number:
PO Number:

Sample Turnaround
- ☐ Standard
- ☐ Priority (1.5x Std. Fee)
- ☑ Rush (2x Std. Fee)
- ☐ Emergency (3x Std. Fee)

Reporting Request
- ☑ FAX (T-35)
- ☐ Verbals (T-1157)
- ☐ Extra Report Copy (T-1402) (Fees Associated)

Initials:

FOR LABORATORY USE ONLY Page of
Job Number: WC940124-A2
Custabbr: Koppers ☐NEW
☐VISA ☐M/C Expires:
Card #:
Cash / Check: $ #:
Billing Code: 1 2 3 4
QC LEVEL: 1 2 3 4
FEDX BUS COURIER UPS LAB CLIENT MAIL

Sample ID	Loc.	ID	Collection Date / Time	Media	Analysis Requested	Test/Profile
WW T I			1-24-94		PHENOLS	.13
WW T I			1-24-94		OIL & GREASE	20
WW T II			1-24-94		PHENOLS	.11
WW T II			1-24-94		OIL & GREASE	[illegible]

Sample Comments:

Sampled by: (Please Print)	Relinquished by: (Please Sign)	Date	Time	Received by: (Sign)	Date	Time
TED HAVE	Ted Have	1-24-94	9:10			
				LAB [illegible]	1/24/94	[illegible]

White Copy - Laboratory Copy *Yellow Copy - Client Copy*

SHADED AREAS FOR LABORATORY USE ONLY

SUBMISSION OF SAMPLES WITH TESTING REQUIREMENTS TO CLI WILL BE UNDERSTOOD TO BE AN AGREEMENT FOR SERVICES IN ACCORDANCE WITH THE CONDITIONS LISTED ON THE BACK OF THE CLIENT COPY.

Koppers015542

COFFEY LABORATORIES, INC.
CHAIN OF CUSTODY INSTRUCTIONS/CONDITIONS SHEET

INSTRUCTIONS

FOR LAB USE ONLY -	**All shaded areas are for laboratory use only. Please Do Not Write in These Areas.**
REPORT ATTENTION -	Name of the person who receives the laboratory report.
COMPANY NAME -	Name of the company or individual requesting the analysis.
REPORT ADDRESS -	Address of the company or individual requesting the analysis. (Address where report should be mailed)
REPORT INSTRUCTIONS -	A brief description of any special mail instructions, or address information pertaining to extra report copies.
PROJECT NAME -	Applies to customer project name. This data is provided at the customer's discretion.
PROJECT NUMBER -	Applies only to samples submitted by the customer. This data is provided at the customer's discretion.
FIELD ID -	A short description of the sample point (e.g., "Effluent from sand filter"). This description will appear on the report.
COLLECTION DATE -	The date on which the sample(s) was/were collected.
COLLECTION TIME -	The time at which the sample(s) was/were collected.
MEDIA -	This is a description of the sample media (e.g., drinking water, waste water, soil, etc.)
ANALYSIS REQUESTED -	Use one line for each analysis or group of analyses associated to a specific bottle.
SAMPLE COLLECTED BY -	The person who collected the sample(s) signs here.
RELINQUISHED BY -	The sampler signs this box when he/she gives the sample to someone else, and then fills in the date/time the sample left his/her possession.
RECEIVED BY -	The person who receives the sample(s) signs here and fills in the date/time received. The date and time should be same as "Relinquished by" unless the sample(s) was/were shipped.
JOB OR SAMPLE REMARKS -	General sample or job remarks.

CONDITIONS

PRICING AND CHARGES
Prices to be charged for work performed for CLIENT are those currently published in the Coffey Laboratories, Inc. (CLI) standard pricebook. CLIENT must notify CLI of price quotation at the time of the transfer of sample(s) to CLI. All submissions of samples with testing requirements to CLI will be understood to be an agreement for services. Any cancellation of testing requirements will result in charges being assessed on all testing completed prior to the notice of cancellation.

DELIVERY AND LIABILITY LIMITATIONS
CLI will analyze samples provided by CLIENT as requested by CLIENT in accordance with the procedures documented in the CLI Quality Assurance Plan (QAP). The maximum total liability assumed by CLI for work performed for CLIENT will in all cases be limited to the cost of the analysis. The specific format of the deliverable goods will be defined by CLIENT to CLI upon transfer of the samples to CLI. This warranty supersedes all other warranties.

CONFIDENTIALITY
CLI will use its best efforts to treat all information regarding work performed for CLIENT as proprietary and confidential to the maximum extent allowed by law. NO CLIENT information will be released without the written consent of the CLIENT billed for the work.

APPLICABLE LAW
Legal matters arising from work performed by CLI for CLIENT will be construed and interpreted in accordance with the laws for the state of Oregon.

Pumped 1/6/94

Report Date: January 9, 1994
Job#: WG-940105Q-2
PO#: VERBAL JOHN (O&G/Phenols)
Project#: None Provided
Project: None Provided

Attention: Amos Kamerer
Koppers Industry
7540 NW St. Helens Rd.
Portland, OR 97210-3663

SAMPLE INFORMATION:
Date Samples Were Received By Laboratory: 01/05/94

Lab No.	Field Identification	Sample Matrix	Date	Time
1	WWT 3	Waste Water	01-05-94	1045
2	WWT 4	Waste Water	01-05-94	1045

ANALYTICAL RESULTS:

Parameter	Method	Detection Limits	WWT 3 Results	WWT 4 Results
Oil & Grease	EPA 413.1	3	7	ND
Total Phenols	EPA 420.1	0.05	0.06	0.05

Results expressed as mg/L unless otherwise noted.

ND means none detected at or above the detection limit listed.

Sincerely,

Susan M. Coffey
President

SMC/daj

This report is for the sole and exclusive use of the above-named client. Samples are retained 15 days from the report date, or until holding time expires. Results pertain only to samples submitted.

COFFEY LABORATORIES, INC.
12423 N.E. Whitaker Way • Portland, OR • 97230 • (503) 254-1794 • FAX (503) 254-1452

RECEIVED
MAR 11 1994
KOPPERS INDS., INC.
PORTLAND, OR

1-5-94

WWT 3

Temp 52

PH 6.8

1-5-94

WWT 4

Temp 53

PH 6.8

COFFEY LABORATORIES, INC.
CHAIN OF CUSTODY AGREEMENT

PORTLAND BRANCH
12423 NE Whitaker Way
Portland, OR 97230
(503) 254-1794 FAX: (503) 254-1452

PENDLETON BRANCH
287 SE First
Pendleton, OR 97801
(503) 276-0385

Report Attention: AMOS KAMEAER
Company Name: KOPPER INDUSTRIES INC
Address: 7540 NW ST HELENS RD
PORTLAND ORE 97210-3663
Phone: (503) 286 3681 FAX: (503) 285 2831

Report Instructions:

Project Name:
Project Number:
PO Number:

Sample Turnaround
- ☐ Standard
- ☐ Priority (1.5x Std. Fee)
- ☑ Rush (2x Std. Fee)
- ☐ Emergency (3x Std. Fee)

Reporting Request
- ☑ FAX (T-35)
- ☐ Verbals (T-1157)
- ☐ Extra Report Copy (T-1402) (Fees Associated)

Initials:

FOR LABORATORY USE ONLY Page ___ of ___
Job Number: LKG-940105-02
Custabbr: KOPPERS ☐NEW
☐VISA ☐M/C Expires:
Card #:
Cash / Check: $ #:
Billing Code: 1 2 3 4
QC LEVEL: 1 2 3 4
FEDX BUS COURIER UPS LAB CLIENT MAIL

Sample ID	Loc.	ID	Collection Date	Collection Time	Media	Analysis Requested	Test/Profile
WWT 3			1-5-94	10:45		OIL & GREASE	
WWT 3			1-5-94	10:45		PHENOLS	
WWT 4			1-5-94	10:45		OIL & GREASE	
WWT 4			1-5-94	10:45		PHENOLS	

Sample Comments:

Sampled by: (Please Print)	Relinquished by: (Please Sign)	Date	Time	Received by: (Sign)	Date	Time
TED HARE	Ted Hare	1-5-94	11:45			
				LAB [signature]	1/5/94	1:50

White Copy - Laboratory Copy *Yellow Copy - Client Copy*

SHADED AREAS FOR LABORATORY USE ONLY

SUBMISSION OF SAMPLES WITH TESTING REQUIREMENTS TO CLI WILL BE UNDERSTOOD TO BE AN AGREEMENT FOR SERVICES IN ACCORDANCE WITH THE CONDITIONS LISTED ON THE BACK OF THE CLIENT COPY.

Koppers015548

COFFEY LABORATORIES, INC.
CHAIN OF CUSTODY INSTRUCTIONS/CONDITIONS SHEET

INSTRUCTIONS

FOR LAB USE ONLY -	**All shaded areas are for laboratory use only. Please Do Not Write in These Areas.**
REPORT ATTENTION -	Name of the person who receives the laboratory report.
COMPANY NAME -	Name of the company or individual requesting the analysis.
REPORT ADDRESS -	Address of the company or individual requesting the analysis. (Address where report should be mailed)
REPORT INSTRUCTIONS -	A brief description of any special mail instructions, or address information pertaining to extra report copies.
PROJECT NAME -	Applies to customer project name. This data is provided at the customer's discretion.
PROJECT NUMBER -	Applies only to samples submitted by the customer. This data is provided at the customer's discretion.
FIELD ID -	A short description of the sample point (e.g., "Effluent from sand filter"). This description will appear on the report.
COLLECTION DATE -	The date on which the sample(s) was/were collected.
COLLECTION TIME -	The time at which the sample(s) was/were collected.
MEDIA -	This is a description of the sample media (e.g., drinking water, waste water, soil, etc.)
ANALYSIS REQUESTED -	Use one line for each analysis or group of analyses associated to a specific bottle.
SAMPLE COLLECTED BY -	The person who collected the sample(s) signs here.
RELINQUISHED BY -	The sampler signs this box when he/she gives the sample to someone else, and then fills in the date/time the sample left his/her possession.
RECEIVED BY -	The person who receives the sample(s) signs here and fills in the date/time received. The date and time should be same as "Relinquished by" unless the sample(s) was/were shipped.
JOB OR SAMPLE REMARKS -	General sample or job remarks.

CONDITIONS

PRICING AND CHARGES

Prices to be charged for work performed for CLIENT are those currently published in the Coffey Laboratories, Inc. (CLI) standard pricebook. CLIENT must notify CLI of price quotation at the time of the transfer of sample(s) to CLI. All submissions of samples with testing requirements to CLI will be understood to be an agreement for services. Any cancellation of testing requirements will result in charges being assessed on all testing completed prior to the notice of cancellation.

DELIVERY AND LIABILITY LIMITATIONS

CLI will analyze samples provided by CLIENT as requested by CLIENT in accordance with the procedures documented in the CLI Quality Assurance Plan (QAP). The maximum total liability assumed by CLI for work performed for CLIENT will in all cases be limited to the cost of the analysis. The specific format of the deliverable goods will be defined by CLIENT to CLI upon transfer of the samples to CLI. This warranty supersedes all other warranties.

CONFIDENTIALITY

CLI will use its best efforts to treat all information regarding work performed for CLIENT as proprietary and confidential to the maximum extent allowed by law. NO CLIENT information will be released without the written consent of the CLIENT billed for the work.

APPLICABLE LAW

Legal matters arising from work performed by CLI for CLIENT will be construed and interpreted in accordance with the laws for the state of Oregon.

Pumped 1/6/94

Report Date: January 9, 1994
Job#: WG-940104E-2
PO#: None Provided
Project#: None Provided
Project: None Provided

Attention: Amos Kamerer
Koppers Industry
7540 NW St. Helens Rd.
Portland, OR 97210-3663

SAMPLE INFORMATION:
Date Samples Were Received By Laboratory: 01/04/94

Lab No.	Field Identification	Sample Matrix	Date	Time
1	WWT 1	Waste Water	01-04-94	0800
2	WWT 2	Waste Water	01-04-94	0800

ANALYTICAL RESULTS:

Parameter	Method	Detection Limits	WWT 1 Results	WWT 2 Results
Oil & Grease	EPA 413.1	3	5	14
Total Phenols	SM 420.1	0.05	0.08	0.08

Results expressed as mg/L unless otherwise noted.

SM means Standard Methods for the Examination of Water and Wastewater, 1985, 16th Edition.

Sincerely,

Susan M. Coffey

Susan M. Coffey
President

SMC/daj

This report is for the sole and exclusive use of the above-named client. Samples are retained 15 days from the report date, or until holding time expires. Results pertain only to samples submitted.

COFFEY LABORATORIES, INC.
12423 N.E. Whitaker Way • Portland, OR • 97230 • (503) 254-1794 • FAX (503) 254-1452

RECEIVED
JAN 12 1994
KOPPERS INDS., INC.
PORTLAND, OR

WWT 1

PH 6.4

TEMP 51°F

1-4-94

WWT 2

PH 6.3

Temp 50°F

1-4-94

COFFEY LABORATORIES, INC.
CHAIN OF CUSTODY AGREEMENT

PORTLAND BRANCH
12423 NE Whitaker Way
Portland, OR 97230
(503) 254-1794 FAX: (503) 254-1452

PENDLETON BRANCH
287 SE First
Pendleton, OR 97801
(503) 276-0385

Report Attention: AMOS KAMFREE
Company Name: KOPPERS IND. INC
Address: 7540 NW ST. HELENS RD
PORTLAND ORE. 97210-3663
Phone: (503) 286-3681 FAX: (503) 285-2831

Report Instructions:

Project Name:
Project Number:
PO Number:

Sample Turnaround
- ☐ Standard
- ☐ Priority (1.5x Std. Fee)
- ☒ Rush (2x Std. Fee)
- ☐ Emergency (3x Std. Fee)

Reporting Request
- ☒ FAX (T-35)
- ☒ Verbals (T-1157)
- ☐ Extra Report Copy (T-1402) (Fees Associated)

Initials:

FOR LABORATORY USE ONLY Page ___ of ___
Job Number: WG940104-E2
Custabbr: Koppers ☐NEW
☐VISA ☐M/C Expires:
Card #:
Cash / Check: $ #:
Billing Code: 1 2 3 4
QC LEVEL: 1 2 3 4
FEDX BUS COURIER UPS LAB CLIENT MAIL

Sample ID	Loc.	ID	Collection Date	Collection Time	Media	Analysis Requested	Test/Profile
WWT 1			1-4-94	800 AM		OIL & GREASE	
WWT 2			1-4-94	800 AM		OIL & GREASE	
WWT 1			1-4-94	800 AM		PHENOLS	
WWT 2			1-4-94	800 AM		PHENOLS	

Sample Comments:

Sampled by: (Please Print)	Relinquished by: (Please Sign)	Date	Time	Received by: (Sign)	Date	Time
TED HARE	Ted Hare	1-4-94	9:01 am			
				LAB Crystal Burkhold	1/4/94	910

White Copy - Laboratory Copy *Yellow Copy - Client Copy*

SHADED AREAS FOR LABORATORY USE ONLY

SUBMISSION OF SAMPLES WITH TESTING REQUIREMENTS TO CLI WILL BE UNDERSTOOD TO BE AN AGREEMENT FOR SERVICES IN ACCORDANCE WITH THE CONDITIONS LISTED ON THE BACK OF THE CLIENT COPY.

Koppers015554

COFFEY LABORATORIES, INC.
CHAIN OF CUSTODY INSTRUCTIONS/CONDITIONS SHEET

INSTRUCTIONS

FOR LAB USE ONLY -	**All shaded areas are for laboratory use only. Please Do Not Write in These Areas.**
REPORT ATTENTION -	Name of the person who receives the laboratory report.
COMPANY NAME -	Name of the company or individual requesting the analysis.
REPORT ADDRESS -	Address of the company or individual requesting the analysis. (Address where report should be mailed)
REPORT INSTRUCTIONS -	A brief description of any special mail instructions, or address information pertaining to extra report copies.
PROJECT NAME -	Applies to customer project name. This data is provided at the customer's discretion.
PROJECT NUMBER -	Applies only to samples submitted by the customer. This data is provided at the customer's discretion.
FIELD ID -	A short description of the sample point (e.g., "Effluent from sand filter"). This description will appear on the report.
COLLECTION DATE -	The date on which the sample(s) was/were collected.
COLLECTION TIME -	The time at which the sample(s) was/were collected.
MEDIA -	This is a description of the sample media (e.g., drinking water, waste water, soil, etc.)
ANALYSIS REQUESTED -	Use one line for each analysis or group of analyses associated to a specific bottle.
SAMPLE COLLECTED BY -	The person who collected the sample(s) signs here.
RELINQUISHED BY -	The sampler signs this box when he/she gives the sample to someone else, and then fills in the date/time the sample left his/her possession.
RECEIVED BY -	The person who receives the sample(s) signs here and fills in the date/time received. The date and time should be same as "Relinquished by" unless the sample(s) was/were shipped.
JOB OR SAMPLE REMARKS -	General sample or job remarks.

CONDITIONS

PRICING AND CHARGES

Prices to be charged for work performed for CLIENT are those currently published in the Coffey Laboratories, Inc. (CLI) standard pricebook. CLIENT must notify CLI of price quotation at the time of the transfer of sample(s) to CLI. All submissions of samples with testing requirements to CLI will be understood to be an agreement for services. Any cancellation of testing requirements will result in charges being assessed on all testing completed prior to the notice of cancellation.

DELIVERY AND LIABILITY LIMITATIONS

CLI will analyze samples provided by CLIENT as requested by CLIENT in accordance with the procedures documented in the CLI Quality Assurance Plan (QAP). The maximum total liability assumed by CLI for work performed for CLIENT will in all cases be limited to the cost of the analysis. The specific format of the deliverable goods will be defined by CLIENT to CLI upon transfer of the samples to CLI. This warranty supersedes all other warranties.

CONFIDENTIALITY

CLI will use its best efforts to treat all information regarding work performed for CLIENT as proprietary and confidential to the maximum extent allowed by law. NO CLIENT information will be released without the written consent of the CLIENT billed for the work.

APPLICABLE LAW

Legal matters arising from work performed by CLI for CLIENT will be construed and interpreted in accordance with the laws for the state of Oregon.

PERMITTEE NAME/ADDRESS (Include Facility Name/Location if different)

NAME: KOPPERS INDUSTRIES, INC.
ADDRESS: 7540 NW ST HELENS ROAD
PORTLAND, OR 97210

FACILITY: NORTHWEST PLANT
LOCATION: MULTNOMAH COUNTY

NATIONAL POLLUTANT DISCHARGE ELIMINATION SYSTEM (NPDES)
DISCHARGE MONITORING REPORT (DMR)

Form Approved
OMB No. 2040-0004
Expires 3-31-88

(2-16) PERMIT NUMBER: OR-100077-9

(17-19) DISCHARGE NUMBER: 0012

3077-J
47430

MONITORING PERIOD

	YEAR	MO	DAY		YEAR	MO	DAY
FROM	93	12	01	TO	93	12	31
	(20-21)	(22-23)	(24-25)		(26-27)	(28-29)	(30-31)

NOTE: Read instructions before completing this form.

PARAMETER (32-37) ~~45,000 X 10 ÷ 31 = 14,516~~		(3 Card Only) QUANTITY OR LOADING (46-53) AVERAGE	(54-61) MAXIMUM	UNITS	(4 Card Only) QUALITY OR CONCENTRATION (38-45) MINIMUM	(46-53) AVERAGE	(54-61) MAXIMUM	UNITS	NO. EX (62-63)	FREQUENCY OF ANALYSIS (64-68)	SAMPLE TYPE (69-70)
FLOW	SAMPLE MEASUREMENT	14,516		GAD					N/A	10/31	EST.
	PERMIT REQUIREMENT		N/A								
TEMPERATURE	SAMPLE MEASUREMENT				45	48	52		0	10/31	GRAB
	PERMIT REQUIREMENT						110				
pH	SAMPLE MEASUREMENT				6.7	7.0	7.2		0	10/31	GRAB
	PERMIT REQUIREMENT				6.0		9.0				
OIL & GREASES	SAMPLE MEASUREMENT				N.D.	4	10		0	10/31	GRAB
	PERMIT REQUIREMENT					10	15				
PHENOLS	SAMPLE MEASUREMENT				N.D.	.04	.08		0	10/31	GRAB
	PERMIT REQUIREMENT					.5	.7				
	SAMPLE MEASUREMENT										
	PERMIT REQUIREMENT										
	SAMPLE MEASUREMENT										
	PERMIT REQUIREMENT										

NAME/TITLE PRINCIPAL EXECUTIVE OFFICER

AMOS S. KAMERER
PLANT MANAGER
TYPED OR PRINTED

I CERTIFY UNDER PENALTY OF LAW THAT I HAVE PERSONALLY EXAMINED AND AM FAMILIAR WITH THE INFORMATION SUBMITTED HEREIN; AND BASED ON MY INQUIRY OF THOSE INDIVIDUALS IMMEDIATELY RESPONSIBLE FOR OBTAINING THE INFORMATION, I BELIEVE THE SUBMITTED INFORMATION IS TRUE, ACCURATE AND COMPLETE. I AM AWARE THAT THERE ARE SIGNIFICANT PENALTIES FOR SUBMITTING FALSE INFORMATION, INCLUDING THE POSSIBILITY OF FINE AND IMPRISONMENT. SEE 18 U.S.C. § 1001 AND 33 U.S.C. § 1319. *(Penalties under these statutes may include fines up to $10,000 and/or maximum imprisonment of between 6 months and 5 years.)*

SIGNATURE OF PRINCIPAL EXECUTIVE OFFICER OR AUTHORIZED AGENT

TELEPHONE: AREA CODE 503 — NUMBER 286-3681

DATE: YEAR 94 — MO 01 — DAY 07

COMMENT AND EXPLANATION OF ANY VIOLATIONS (*Reference all attachments here*)

THE 4TH QUARTER PAH TEST RESULTS ARE ATTACHED

CC: W.E. SWEARINGEN

Koppers015556

Job#: WG-931208B-2

Koppers Industry

Analysis Performed: Polynuclear Aromatic Hydrocarbons in Wastewater, by EPA Method 8310, Liquid Chromatography

Compound	Detection Limit	Laboratory Blank	WWT3 Results
Acenaphthene	40	ND	ND
Acenaphthylene	200	ND	ND
Anthracene	20	ND	ND
Benzo(a)anthracene	0.1	ND	14
Benzo(b)fluoranthene	2.0	ND	15
Benzo(k)fluoranthene	2.0	ND	ND
Benzo(g,h,i)perylene	5.0	ND	31
Benzo(a)pyrene	0.1	ND	29
Chrysene	5.0	ND	9.5
Dibenzo(a,h)anthracene	0.2	ND	ND
Fluoranthene	7.0	ND	21
Fluorene	40	ND	ND
Indeno(1,2,3-c,d)pyrene	100	ND	ND
Naphthalene	200	ND	ND
Phenanthrene	5.0	ND	7.1
Pyrene	5.0	ND	18

Results expressed as µg/L unless otherwise noted.

ND means none detected at or above the detection limit listed.

COFFEY LABORATORIES, INC.

12423 N.E. Whitaker Way • Portland, OR • 97230 • (503) 254-1794 • FAX (503) 254-1452

Report Date: December 6, 1993
Job#: WG-931201E-2
PO#: None Provided
Project#: None Provided
Project: None Provided

Attention: Amos Kamerer
Koppers Industry
7540 NW St. Helens Rd.
Portland, OR 97210-3663

SAMPLE INFORMATION:
Date Samples Were Received By Laboratory: 12/01/93

Lab No.	Field Identification	Sample Matrix	Date	Time
1	WWT 3	Waste Water	12-01-93	0845
2	WWT 4	Waste Water	12-01-93	0845

ANALYTICAL RESULTS:

Parameter	Method	Detection Limits	WWT 3 Results	WWT 4 Results
Total Phenols	EPA 420.1	0.05	ND	0.08
Oil & Grease	EPA 413.1	3	6	7

Results expressed as mg/L unless otherwise noted.

ND means none detected at or above the detection limit listed.

Sincerely,

Susan M. Coffey
President

SMC/lws

This report is for the sole and exclusive use of the above-named client. Samples are retained 15 days from the report date, or until holding time expires. Results pertain only to samples submitted.

COFFEY LABORATORIES, INC.
12423 N.E. Whitaker Way • Portland, OR • 97230 • (503) 254-1794 • FAX (503) 254-1452

RECEIVED
DEC 13 1993
KOPPERS INDS., INC.
PORTLAND, OR

Koppers015559

WWT 4

12-1-93

49°

PH 7.1

WWT 3

49°

12-1-93

PH 6.9

COFFEY LABORATORIES, INC.
CHAIN OF CUSTODY AGREEMENT

PORTLAND BRANCH
12423 NE Whitaker Way
Portland, OR 97230
(503) 254-1794 FAX: (503) 254-1452

PENDLETON BRANCH
287 SE First
Pendleton, OR 97801
(503) 276-0385

Report Attention: AMOS KAMERER
Company Name: KOPPER INDUSTRIES INC
Address: 7540 NW ST HELENS RD
PORTLAND, OR 97210-3663
Phone: (503) 286-3681 FAX: (503) 285-2831
Report Instructions:

Project Name:
Project Number:
PO Number:

Sample Turnaround	Reporting Request
☐ Standard	☒ FAX (T-35)
☐ Priority (1.5x Std. Fee)	☐ Verbals (T-1157)
☒ Rush (2x Std. Fee)	☐ Extra Report Copy (T-1402) (Fees Associated)
☐ Emergency (3x Std. Fee)	Initials:

FOR LABORATORY USE ONLY Page ___ of ___
Job Number: WG931201-E
Custabbr: Koppers ☐NEW
☐VISA ☐M/C Expires:
Card #:
Cash / Check: $ #:
Billing Code: 1 2 3 4
QC LEVEL: 1 2 3 4
FEDX BUS COURIER UPS LAB CLIENT MAIL

Sample ID	Loc.	ID	Collection Date	Time	Media	Analysis Requested	Test/Profile
WWT 3			12-1-93	8:45am		OIL : GREASE	
WWT 3			12-1-93	8:45am		~~GREASE~~ PHENOL	
WWT 4			12-1-93	8:45am		OIL : GREASE	
WWT 4			12-1-93	8:45am		PHENOL	

Sample Comments:

Sampled by: (Please Print)	Relinquished by: (Please Sign)	Date	Time	Received by: (Sign)	Date	Time
TED HARE	Ted Hare	12-1-93	10:00am			
				LAB Crystal Bustamante 12/10/93		

White Copy - Laboratory Copy *Yellow Copy - Client Copy*

SHADED AREAS FOR LABORATORY USE ONLY

SUBMISSION OF SAMPLES WITH TESTING REQUIREMENTS TO CLI WILL BE UNDERSTOOD TO BE AN AGREEMENT FOR SERVICES IN ACCORDANCE WITH THE CONDITIONS LISTED ON THE BACK OF THE CLIENT COPY.

Koppers015562

COFFEY LABORATORIES, INC.
CHAIN OF CUSTODY INSTRUCTIONS/CONDITIONS SHEET

INSTRUCTIONS

FOR LAB USE ONLY -	**All shaded areas are for laboratory use only. Please Do Not Write in These Areas.**
REPORT ATTENTION -	Name of the person who receives the laboratory report.
COMPANY NAME -	Name of the company or individual requesting the analysis.
REPORT ADDRESS -	Address of the company or individual requesting the analysis. (Address where report should be mailed)
REPORT INSTRUCTIONS -	A brief description of any special mail instructions, or address information pertaining to extra report copies.
PROJECT NAME -	Applies to customer project name. This data is provided at the customer's discretion.
PROJECT NUMBER -	Applies only to samples submitted by the customer. This data is provided at the customer's discretion.
FIELD ID -	A short description of the sample point (e.g., "Effluent from sand filter"). This description will appear on the report.
COLLECTION DATE	The date on which the sample(s) was/were collected.
COLLECTION TIME -	The time at which the sample(s) was/were collected.
MEDIA -	This is a description of the sample media (e.g., drinking water, waste water, soil, etc.)
ANALYSIS REQUESTED -	Use one line for each analysis or group of analyses associated to a specific bottle.
SAMPLE COLLECTED BY -	The person who collected the sample(s) signs here.
RELINQUISHED BY -	The sampler signs this box when he/she gives the sample to someone else, and then fills in the date/time the sample left his/her possession.
RECEIVED BY -	The person who receives the sample(s) signs here and fills in the date/time received. The date and time should be same as "Relinquished by" unless the sample(s) was/were shipped.
JOB OR SAMPLE REMARKS -	General sample or job remarks.

CONDITIONS

PRICING AND CHARGES

Prices to be charged for work performed for CLIENT are those currently published in the Coffey Laboratories, Inc. (CLI) standard pricebook. CLIENT must notify CLI of price quotation at the time of the transfer of sample(s) to CLI. All submissions of samples with testing requirements to CLI will be understood to be an agreement for services. Any cancellation of testing requirements will result in charges being assessed on all testing completed prior to the notice of cancellation.

DELIVERY AND LIABILITY LIMITATIONS

CLI will analyze samples provided by CLIENT as requested by CLIENT in accordance with the procedures documented in the CLI Quality Assurance Plan (QAP). The maximum total liability assumed by CLI for work performed for CLIENT will in all cases be limited to the cost of the analysis. The specific format of the deliverable goods will be defined by CLIENT to CLI upon transfer of the samples to CLI. This warranty supersedes all other warranties.

CONFIDENTIALITY

CLI will use its best efforts to treat all information regarding work performed for CLIENT as proprietary and confidential to the maximum extent allowed by law. NO CLIENT information will be released without the written consent of the CLIENT billed for the work

APPLICABLE LAW

Legal matters arising from work performed by CLI for CLIENT will be construed and interpreted in accordance with the laws for the state of Oregon.

Report Date: December 9, 1993
Job#: WG-931202C-2
PO#: None Provided
Project#: None Provided
Project: None Provided

Attention: Amos S. Kamerer
Koppers Industry
7540 NW St. Helens Rd.
Portland, OR 97210-3663

SAMPLE INFORMATION:
Date Samples Were Received By Laboratory: 12/02/93

Lab No.	Field Identification	Sample Matrix	Date	Time
1	WWT I	Waste Water	12-02-93	0815
2	WWT II	Waste Water	12-02-93	0815

ANALYTICAL RESULTS:

Parameters	Method	Detection Limits	WWT I Results	WWT II Results	Units
Total Phenols	EPA 420.1	0.05	ND	ND	mg/L
Oil & Grease	EPA 413.1	3	8	trace, < 3	mg/L

ND means none detected at or above the detection limit listed.

The less than "<" symbol means none detected at or above the indicated value and represents the detection limit for the method.

Sincerely,

Susan M. Coffey
President

SMC/lws

This report is for the sole and exclusive use of the above-named client. Samples are retained 15 days from the report date, or until the holding time expires. Results pertain only to samples submitted.

COFFEY LABORATORIES, INC.
12423 N.E. Whitaker Way • Portland, OR • 97230 • (503) 254-1794 • FAX (503) 254-1452

RECEIVED
DEC 13 1993
KOPPERS INDS., INC.
PORTLAND, OR

Koppers015565

12-2-93

WWT 1

TEMP 52°

PH 7.2

12-2-93

WWT II

TEMP 52°

PH 7.0

COFFEY LABORATORIES, INC.
CHAIN OF CUSTODY AGREEMENT

PORTLAND BRANCH
12423 NE Whitaker Way
Portland, OR 97230
(503) 254-1794 FAX: (503) 254-1452

PENDLETON BRANCH
287 SE First
Pendleton, OR 97801
(503) 276-0385

Report Attention: Amos S Kameree
Company Name: Koppers Industries Inc
Address: 7540 NW St Helens Rd
Portland Ore 97210-3663
Phone: (503) 286-3681 FAX: (503) 285-2831

Report Instructions:

Project Name:
Project Number:
PO Number:

Sample Turnaround
- ☐ Standard
- ☐ Priority (1.5x Std. Fee)
- ☒ Rush (2x Std. Fee)
- ☐ Emergency (3x Std. Fee)

Reporting Request
- ☒ FAX (T-35)
- ☐ Verbals (T-1157)
- ☐ Extra Report Copy (T-1402) (Fees Associated)

Initials:

FOR LABORATORY USE ONLY Page ___ of ___
Job Number: WL-931102-C2
Custabbr: Koppers ☐NEW
☐VISA ☐M/C Expires:
Card #:
Cash / Check: $ #:
Billing Code: 1 2 3 4
QC LEVEL: 1 2 3 4
FEDX BUS COURIER UPS LAB CLIENT MAIL

Sample ID	Loc.	ID	Collection Date	Collection Time	Media	Analysis Requested	Test/Profile
WWT I			12-2-93	8:15		Oil & Grease	
WWT [redacted] I			12-2-93	8:15		Phenolic	
WWT II			12-2-93	8:15		Oil & Grease	
WWT II			12-2-93	8:15		Phenols	

Sample Comments:

Sampled by: (Please Print)	Relinquished by: (Please Sign)	Date	Time	Received by: (Sign)	Date	Time
Ted Hare	Ted Hare	12-2-93	9:00			
				LAB [illegible]	12/2/93	9:00

White Copy - Laboratory Copy *Yellow Copy - Client Copy*

SHADED AREAS FOR LABORATORY USE ONLY

SUBMISSION OF SAMPLES WITH TESTING REQUIREMENTS TO CLI WILL BE UNDERSTOOD TO BE AN AGREEMENT FOR SERVICES IN ACCORDANCE WITH THE CONDITIONS LISTED ON THE BACK OF THE CLIENT COPY.

Koppers015568

COFFEY LABORATORIES, INC.
CHAIN OF CUSTODY INSTRUCTIONS/CONDITIONS SHEET

INSTRUCTIONS

FOR LAB USE ONLY -	**All shaded areas are for laboratory use only. Please Do Not Write in These Areas.**
REPORT ATTENTION -	Name of the person who receives the laboratory report.
COMPANY NAME -	Name of the company or individual requesting the analysis.
REPORT ADDRESS -	Address of the company or individual requesting the analysis. (Address where report should be mailed)
REPORT INSTRUCTIONS -	A brief description of any special mail instructions; or address information pertaining to extra report copies.
PROJECT NAME -	Applies to customer project name. This data is provided at the customer's discretion.
PROJECT NUMBER -	Applies only to samples submitted by the customer. This data is provided at the customer's discretion.
FIELD ID -	A short description of the sample point (e.g., "Effluent from sand filter"). This description will appear on the report.
COLLECTION DATE -	The date on which the sample(s) was/were collected.
COLLECTION TIME -	The time at which the sample(s) was/were collected.
MEDIA -	This is a description of the sample media (e.g., drinking water, waste water, soil, etc.).
ANALYSIS REQUESTED -	Use one line for each analysis or group of analyses associated to a specific bottle.
SAMPLE COLLECTED BY -	The person who collected the sample(s) signs here.
RELINQUISHED BY -	The sampler signs this box when he/she gives the sample to someone else, and then fills in the date/time the sample left his/her possession.
RECEIVED BY -	The person who receives the sample(s) signs here and fills in the date/time received. The date and time should be same as "Relinquished by" unless the sample(s) was/were shipped.
JOB OR SAMPLE REMARKS -	General sample or job remarks.

CONDITIONS

PRICING AND CHARGES

Prices to be charged for work performed for CLIENT are those currently published in the Coffey Laboratories, Inc. (CLI) standard pricebook. CLIENT must notify CLI of price quotation at the time of the transfer of sample(s) to CLI. All submissions of samples with testing requirements to CLI will be understood to be an agreement for services. Any cancellation of testing requirements will result in charges being assessed on all testing completed prior to the notice of cancellation.

DELIVERY AND LIABILITY LIMITATIONS

CLI will analyze samples provided by CLIENT as requested by CLIENT in accordance with the procedures documented in the CLI Quality Assurance Plan (QAP). The maximum total liability assumed by CLI for work performed for CLIENT will in all cases be limited to the cost of the analysis. The specific format of the deliverable goods will be defined by CLIENT to CLI upon transfer of the samples to CLI. This warranty supersedes all other warranties.

CONFIDENTIALITY

CLI will use its best efforts to treat all information regarding work performed for CLIENT as proprietary and confidential to the maximum extent allowed by law. NO CLIENT information will be released without the written consent of the CLIENT billed for the work.

APPLICABLE LAW

Legal matters arising from work performed by CLI for CLIENT will be construed and interpreted in accordance with the laws for the state of Oregon.

Report Date: December 13, 1993
Job#: WG-931208B-2
PO#: Verbal John
Project#: None Provided
Project: None Provided

Attention: Amos Kamerer
Koppers Industry
7540 NW St. Helens Rd.
Portland, OR 97210-3663

SAMPLE INFORMATION:
Date Samples Were Received By Laboratory: 12/08/93

Lab No.	Field Identification	Sample Matrix	Date	Time
1	WWT3	Waste Water	12-08-93	0850
2	WWT4	Waste Water	12-08-93	0850

ANALYTICAL RESULTS ARE ON THE FOLLOWING PAGE(S).

Sincerely,

Susan M. Coffey
President

SMC/lws

This report is for the sole and exclusive use of the above-named client. Samples are retained 15 days from the report date, or until holding time expires. Results pertain only to samples submitted.

Job#: WG-931208B-2

Koppers Industry

Parameter	Method	Detection Limits	WWT3	WWT4
Total Phenols	EPA 420.1	0.05	ND	ND
Oil and Grease	EPA 413.2	3	trace, < 3	trace, < 3

Results expressed as mg/L unless otherwise noted.

ND means none detected at or above the detection limit listed.

The less than "<" symbol means none detected at or above the indicated value and represents the detection limit for the method.

COFFEY LABORATORIES, INC.

12423 N.E. Whitaker Way • Portland, OR • 97230 • (503) 254-1794 • FAX (503) 254-1452

12/8/93

WWT 3

48°

PH 7.1

12/8/93

WWT4

49°

PH

7.0

COFFEY LABORATORIES, INC.
CHAIN OF CUSTODY AGREEMENT

PORTLAND BRANCH
12423 NE Whitaker Way
Portland, OR 97230
(503) 254-1794 FAX: (503) 254-1452

PENDLETON BRANCH
287 SE First
Pendleton, OR 97801
(503) 276-0385

Report Attention: AMOS KAMERER
Company Name: KOPPER INDUSTRIES INC
Address: 7540 N.W. ST HELENS ROAD
PORTLAND ORE. 97210-3663
Phone: (503) 286 3681 FAX: (503) 285-2831

Report Instructions:

Project Name:
Project Number:
PO Number:

Sample Turnaround	Reporting Request
☐ Standard	☑ FAX (T-35)
☐ Priority (1.5x Std. Fee)	☐ Verbals (T-1157)
☑ Rush (2x Std. Fee)	☐ Extra Report Copy (T-1402) (Fees Associated)
☐ Emergency (3x Std. Fee)	Initials:

FOR LABORATORY USE ONLY Page ___ of ___
Job Number: L6931208 B2
Custabbr: KOPPERS ☐NEW
☐VISA ☐M/C Expires:
Card #:
Cash / Check: $ #:
Billing Code: 1 2 3 4
QC LEVEL: 1 2 3 4
FEDX BUS COURIER UPS LAB CLIENT MAIL

Sample ID	Loc.	ID	Collection Date	Collection Time	Media	Analysis Requested	Test/Profile
WWT 3			12-8-93	8:50		OIL & GREASE	
WWT 3			12-8-93	8:50		PHENOLS	
WWT 3			12-8-93	8:50		PAH	
WWT 4			12-8-93	8:50		OIL & GREASE	
WWT 4			12-8-93	8:50		PHENOLS	

Sample Comments:

Sampled by: (Please Print)	Relinquished by: (Please Sign)	Date	Time	Received by: (Sign)	Date	Time
TED HARE	Ted Hare	12-8-93	9:45			
				LAB	12/10	1945

White Copy - Laboratory Copy *Yellow Copy - Client Copy*

SHADED AREAS FOR LABORATORY USE ONLY

SUBMISSION OF SAMPLES WITH TESTING REQUIREMENTS TO CLI WILL BE UNDERSTOOD TO BE AN AGREEMENT FOR SERVICES IN ACCORDANCE WITH THE CONDITIONS LISTED ON THE BACK OF THE CLIENT COPY.

Koppers015574

COFFEY LABORATORIES, INC.
CHAIN OF CUSTODY INSTRUCTIONS/CONDITIONS SHEET

INSTRUCTIONS

FOR LAB USE ONLY -	**All shaded areas are for laboratory use only! Please Do Not Write in These Areas.**
REPORT ATTENTION -	Name of the person who receives the laboratory report.
COMPANY NAME -	Name of the company or individual requesting the analysis.
REPORT ADDRESS -	Address of the company or individual requesting the analysis. (Address where report should be mailed)
REPORT INSTRUCTIONS -	A brief description of any special mail instructions, or address information pertaining to extra report copies.
PROJECT NAME -	Applies to customer project name. This data is provided at the customer's discretion.
PROJECT NUMBER -	Applies only to samples submitted by the customer. This data is provided at the customer's discretion.
FIELD ID -	A short description of the sample point (e.g., "Effluent from sand filter"). This description will appear on the report.
COLLECTION DATE -	The date on which the sample(s) was/were collected.
COLLECTION TIME -	The time at which the sample(s) was/were collected.
MEDIA -	This is a description of the sample media (e.g., drinking water, waste water, soil, etc.)
ANALYSIS REQUESTED -	Use one line for each analysis or group of analyses associated to a specific bottle.
SAMPLE COLLECTED BY -	The person who collected the sample(s) signs here.
RELINQUISHED BY -	The sampler signs this box when he/she gives the sample to someone else, and then fills in the date/time the sample left his/her possession.
RECEIVED BY -	The person who receives the sample(s) signs here and fills in the date/time received. The date and time should be same as "Relinquished by" unless the sample(s) was/were shipped.

JOB OR SAMPLE REMARKS - General sample or job remarks.

CONDITIONS

PRICING AND CHARGES

Prices to be charged for work performed for CLIENT are those currently published in the Coffey Laboratories, Inc. (CLI) standard pricebook. CLIENT must notify CLI of price quotation at the time of the transfer of sample(s) to CLI. All submissions of samples with testing requirements to CLI will be understood to be an agreement for services. Any cancellation of testing requirements will result in charges being assessed on all testing completed prior to the notice of cancellation.

DELIVERY AND LIABILITY LIMITATIONS

CLI will analyze samples provided by CLIENT as requested by CLIENT in accordance with the procedures documented in the CLI Quality Assurance Plan (QAP). The maximum total liability assumed by CLI for work performed for CLIENT will in all cases be limited to the cost of the analysis. The specific format of the deliverable goods will be defined by CLIENT to CLI upon transfer of the samples to CLI. This warranty supersedes all other warranties.

CONFIDENTIALITY

CLI will use its best efforts to treat all information regarding work performed for CLIENT as proprietary and confidential to the maximum extent allowed by law. NO CLIENT information will be released without the written consent of the CLIENT billed for the work.

APPLICABLE LAW

Legal matters arising from work performed by CLI for CLIENT will be construed and interpreted in accordance with the laws for the State of Oregon.

Report Date: December 20, 1993
Job#: WG-931215AS-2
PO#: VERBAL JOHN (O&G/Phenols)
Project#: None Provided
Project: None Provided

Attention: Amos Kamerer
Koppers Industry
7540 NW St. Helens Rd.
Portland, OR 97210-3663

SAMPLE INFORMATION:
Date Samples Were Received By Laboratory: 12/15/93

Lab No.	Field Identification	Sample Matrix	Date	Time
1	WWT 1	Waste Water	12-15-93	1400
2	WWT 2	Waste Water	12-15-93	1400

ANALYTICAL RESULTS:

Parameter	Method	Detection Limits	WWT 1 Results	WWT 2 Results
Oil & Grease	EPA 413.1	10	ND	ND
Total Phenols	SM 420.1	0.05	ND	ND

Results expressed as mg/L unless otherwise noted.

SM means Standard Methods for the Examination of Water and Wastewater, 1985, 16th Edition.

ND means none detected at or above the detection limit listed.

Sincerely,

Susan M. Coffey
President

SMC/daj

This report is for the sole and exclusive use of the above-named client. Samples are retained 15 days from the report date, or until holding time expires. Results pertain only to samples submitted.

COFFEY LABORATORIES, INC.
12423 N.E. Whitaker Way • Portland, OR • 97230 • (503) 254-1794 • FAX (503) 254-1452

RECEIVED

DEC 22 1993

KOPPERS INDS., INC.
PORTLAND, OR

WWT 1

47°

PH 6.9

12-15-93

WWT 2

47°

PH 6.9

12-15-93

COFFEY LABORATORIES, INC.
CHAIN OF CUSTODY AGREEMENT

PORTLAND BRANCH
12423 NE Whitaker Way
Portland, OR 97230
(503) 254-1794 FAX: (503) 254-1452

PENDLETON BRANCH
287 SE First
Pendleton, OR 97801
(503) 276-0385

Report Attention: AMOS KAMOREF
Company Name: KOPPERS IND. INC
Address: 7540 N.W. ST HELENS ROAD
PORTLAND, ORE 97210-3663
Phone: (503) 286 3681 FAX: (503) 285-2831
Report Instructions:

Project Name:
Project Number:
PO Number:

Sample Turnaround
- ☐ Standard
- ☐ Priority (1.5x Std. Fee)
- ☑ Rush (2x Std. Fee)
- ☐ Emergency (3x Std. Fee)

Reporting Request
- ☑ FAX (T-35)
- ☐ Verbals (T-1157)
- ☐ Extra Report Copy (T-1402) (Fees Associated)

Initials:

FOR LABORATORY USE ONLY Page ___ of ___
Job Number: WC-631215-AS2
Custabbr: KOPPERS ☐NEW
☐VISA ☐M/C Expires:
Card #:
Cash / Check: $ #:
Billing Code: 1 2 3 4
QC LEVEL: 1 2 3 4
FEDX BUS COURIER UPS LAB CLIENT MAIL

Sample ID	Loc.	ID	Collection Date	Collection Time	Media	Analysis Requested	Test/Profile
WWT 1			12-15-93	2:00		OIL & GREASE	
WWT 2			12-15-93	2:00		OIL & GREASE	
WWT 1			12-15-93	2:00		PHENOLS	
WWT 2			12-15-93	2:00		PHENOLS	

Sample Comments:

Sampled by: (Please Print)	Relinquished by: (Please Sign)	Date	Time	Received by: (Sign)	Date	Time
TED HARE	Ted Hare	12-15	4:25			
				LAB [illegible]	12/15/93	1125

White Copy - Laboratory Copy *Yellow Copy - Client Copy*

SHADED AREAS FOR LABORATORY USE ONLY

SUBMISSION OF SAMPLES WITH TESTING REQUIREMENTS TO CLI WILL BE UNDERSTOOD TO BE AN AGREEMENT FOR SERVICES IN ACCORDANCE WITH THE CONDITIONS LISTED ON THE BACK OF THE CLIENT COPY.

Koppers015580

COFFEY LABORATORIES, INC.
CHAIN OF CUSTODY INSTRUCTIONS/CONDITIONS SHEET

INSTRUCTIONS

FOR LAB USE ONLY -	**All shaded areas are for laboratory use only. Please Do Not Write in These Areas.**
REPORT ATTENTION -	Name of the person who receives the laboratory report.
COMPANY NAME -	Name of the company or individual requesting the analysis.
REPORT ADDRESS -	Address of the company or individual requesting the analysis. (Address where report should be mailed)
REPORT INSTRUCTIONS -	A brief description of any special mail instructions, or address information pertaining to extra report copies.
PROJECT NAME -	Applies to customer project name. This data is provided at the customer's discretion.
PROJECT NUMBER -	Applies only to samples submitted by the customer. This data is provided at the customer's discretion.
FIELD ID -	A short description of the sample point (e.g., "Effluent from sand filter"). This description will appear on the report.
COLLECTION DATE -	The date on which the sample(s) was/were collected.
COLLECTION TIME -	The time at which the sample(s) was/were collected.
MEDIA -	This is a description of the sample media (e.g., drinking water, waste water, soil, etc.)
ANALYSIS REQUESTED -	Use one line for each analysis or group of analyses associated to a specific bottle.
SAMPLE COLLECTED BY -	The person who collected the sample(s) signs here.
RELINQUISHED BY -	The sampler signs this box when he/she gives the sample to someone else, and then fills in the date/time the sample left his/her possession.
RECEIVED BY -	The person who receives the sample(s) signs here and fills in the date/time received. The date and time should be same as "Relinquished by" unless the sample(s) was/were shipped.
JOB OR SAMPLE REMARKS -	General sample or job remarks.

CONDITIONS

PRICING AND CHARGES

Prices to be charged for work performed for CLIENT are those currently published in the Coffey Laboratories, Inc. (CLI) standard pricebook. CLIENT must notify CLI of price quotation at the time of the transfer of sample(s) to CLI. All submissions of samples with testing requirements to CLI will be understood to be an agreement for services. Any cancellation of testing requirements will result in charges being assessed on all testing completed prior to the notice of cancellation.

DELIVERY AND LIABILITY LIMITATIONS

CLI will analyze samples provided by CLIENT as requested by CLIENT in accordance with the procedures documented in the CLI Quality Assurance Plan (QAP). The maximum total liability assumed by CLI for work performed for CLIENT will in all cases be limited to the cost of the analysis. The specific format of the deliverable goods will be defined by CLIENT to CLI upon transfer of the samples to CLI. This warranty supersedes all other warranties.

CONFIDENTIALITY

CLI will use its best efforts to treat all information regarding work performed for CLIENT as proprietary and confidential to the maximum extent allowed by law. NO CLIENT information will be released without the written consent of the CLIENT billed for the work.

APPLICABLE LAW

Legal matters arising from work performed by CLI for CLIENT will be construed and interpreted in accordance with the law for the state of Oregon.

WWT 3

TEMP 46

PH 6.8

WWT4

TEMP 45

PH 6.7

Report Date: December 23, 1993
Job#: WG-931217AH-2
PO#: VERBAL JOHN (O&G/Phenols)
Project#: None Provided
Project: None Provided

Attention: Amos Kamerer
Koppers Industry
7540 NW St. Helens Rd.
Portland, OR 97210-3663

SAMPLE INFORMATION:
Date Samples Were Received By Laboratory: 12/17/93

Lab No.	Field Identification	Sample Matrix	Date	Time
1	WWT 3	Waste Water	12-17-93	1430
2	WWT 4	Waste Water	12-17-93	1430

ANALYTICAL RESULTS:

Sample ID	Oil & Grease EPA 413.1	Total Phenols EPA 420.1
WW3	ND	0.11
WW4	ND	0.10
Detection Limits:	3	0.05

Results expressed as mg/L unless otherwise noted.

ND means none detected at or above the detection limit listed.

Sincerely,

Susan M. Coffey
President

SMC/lws

This report is for the sole and exclusive use of the above-named client. Samples are retained 15 days from the report date, or until holding time expires. Results pertain only to samples submitted.

COFFEY LABORATORIES, INC.
12423 N.E. Whitaker Way • Portland, OR • 97230 • (503) 254-1794 • FAX (503) 254-1452

RECEIVED
DEC 28 1993
KOPPERS INDS., INC.
PORTLAND, OR

COFFEY LABORATORIES, INC.
CHAIN OF CUSTODY AGREEMENT

PORTLAND BRANCH
12423 NE Whitaker Way
Portland, OR 97230
(503) 254-1794 FAX: (503) 254-1452

PENDLETON BRANCH
287 SE First
Pendleton, OR 97801
(503) 276-0385

Report Attention: AMOS KAMBERE
Company Name: KOPPERS IND. INC
Address: 7540 NW ST HELENS RD
PORTLAND ORE 97210-3663
Phone: (503) 286 3681 FAX: (503) 285-2831
Report Instructions:

Project Name:
Project Number:
PO Number:

Sample Turnaround
- [x] Standard
- [ ] Priority (1.5x Std. Fee)
- [x] Rush (2x Std. Fee)
- [ ] Emergency (3x Std. Fee)

Reporting Request
- [ ] FAX (T-35)
- [ ] Verbals (T-1157)
- [ ] Extra Report Copy (T-1402) (Fees Associated)

Initials:

FOR LABORATORY USE ONLY Page: ___ of ___
Job Number: 12C93125 A H2
Custabr: KOPPERS ☐NEW
☐VISA ☐M/C Expires:
Card #:
Cash / Check: $ #:
Billing Code: 1 2 3 4
QC LEVEL: 1 2 3 4
FEDX BUS COURIER UPS LAB ~~CLIENT~~ MAIL

Sample ID	Loc.	ID	Collection Date	Collection Time	Media	Analysis Requested	Test/Profile
WWT 3			12-17-93	2:30		PHENOLS	0.11
WWT 43			12-17-93	2:50		OIL & GREASE	ND
WWT 3 4			12-17-93	2:30		PHENOLS	0.10
WWT 4			12-17-93	2:30		OIL & GREASE	ND

Sample Comments:

Sampled by: (Please Print)	Relinquished by: (Please Sign)	Date	Time	Received by: (Sign)	Date	Time
TED HARE	T Hare	12-17-93	3:50			
				LAB	12/17/93	1550

White Copy - Laboratory Copy *Yellow Copy - Client Copy*

SHADED AREAS FOR LABORATORY USE ONLY

SUBMISSION OF SAMPLES WITH TESTING REQUIREMENTS TO CLI WILL BE UNDERSTOOD TO BE AN AGREEMENT FOR SERVICES IN ACCORDANCE WITH THE CONDITIONS LISTED ON THE BACK OF THE CLIENT COPY.

Koppers015586

COFFEY LABORATORIES, INC.
CHAIN OF CUSTODY INSTRUCTIONS/CONDITIONS SHEET

INSTRUCTIONS

FOR LAB USE ONLY - All shaded areas are for laboratory use only. Please Do Not Write in These Areas.

REPORT ATTENTION - Name of the person who receives the laboratory report.

COMPANY NAME - Name of the company or individual requesting the analysis.

REPORT ADDRESS - Address of the company or individual requesting the analysis. (Address where report should be mailed).

REPORT INSTRUCTIONS - A brief description of any special mail instructions, or address information pertaining to extra report copies.

PROJECT NAME - Applies to customer project name. This data is provided at the customer's discretion.

PROJECT NUMBER - Applies only to samples submitted by the customer. This data is provided at the customer's discretion.

FIELD ID - A short description of the sample point (e.g.; "Effluent from sand filter"). This description will appear on the report.

COLLECTION DATE - The date on which the sample(s) was/were collected.

COLLECTION TIME - The time at which the sample(s) was/were collected.

MEDIA - This is a description of the sample media (e.g., drinking water, waste water, soil, etc.)

ANALYSIS REQUESTED - Use one line for each analysis or group of analyses associated to a specific bottle.

SAMPLE COLLECTED BY - The person who collected the sample(s) signs here.

RELINQUISHED BY - The sampler signs this box when he/she gives the sample to someone else, and then fills in the date/time the sample left his/her possession.

RECEIVED BY - The person who receives the sample(s) signs here and fills in the date/time received. The date and time should be same as "Relinquished by" unless the sample(s) was/were shipped.

JOB OR SAMPLE REMARKS - General sample or job remarks.

CONDITIONS

PRICING AND CHARGES
Prices to be charged for work performed for CLIENT are those currently published in the Coffey Laboratories, Inc. (CLI) standard pricebook. CLIENT must notify CLI of price quotation at the time of the transfer of sample(s) to CLI. All submissions of samples with testing requirements to CLI will be understood to be an agreement for services. Any cancellation of testing requirements will result in charges being assessed on all testing completed prior to the notice of cancellation.

DELIVERY AND LIABILITY LIMITATIONS
CLI will analyze samples provided by CLIENT as requested by CLIENT in accordance with the procedures documented in the CLI Quality Assurance Plan (QAP). The maximum total liability assumed by CLI for work performed for CLIENT will in all cases be limited to the cost of the analysis. The specific format of the deliverable goods will be defined by CLIENT to CLI upon transfer of the samples to CLI. This warranty supersedes all other warranties.

CONFIDENTIALITY
CLI will use its best efforts to treat all information regarding work performed for CLIENT as proprietary and confidential to the maximum extent allowed by law. NO CLIENT information will be released without the written consent of the CLIENT billed for the work.

APPLICABLE LAW
Legal matters arising from work performed by CLI for CLIENT will be construed and interpreted in accordance with the laws for the state of Oregon.

Koppers01558 7

Report Date: December 14, 1993
Job#: WG-931210AT-2
PO#: VERBAL JOHN (O&G/Phenols)
Project#: None Provided
Project: None Provided

Resampled 12/15/93

Attention: Amos Kamerer
Koppers Industry
7540 NW St. Helens Rd.
Portland, OR 97210-3663

SAMPLE INFORMATION:
Date Samples Were Received By Laboratory: 12/10/93

Lab No.	Field Identification	Sample Matrix	Date	Time
1	WW T 1	Waste Water	12-10-93	1445
2	WW T 2	Waste Water	12-10-93	1445

ANALYTICAL RESULTS:

Parameter	Method	Detection Limits	WW T 1 Results	WW T 2 Results
Oil & Grease	EPA 413.1	3	52	49
Total Phenols	SM 420.1	0.05	0.05	ND

Results expressed as mg/L unless otherwise noted.

SM means Standard Methods for the Examination of Water and Wastewater, 1985, 16th Edition.

ND means none detected at or above the detection limit listed.

Sincerely,

Susan M. Coffey
President

SMC/daj

This report is for the sole and exclusive use of the above-named client. Samples are retained 15 days from the report date, or until holding time expires. Results pertain only to samples submitted.

COFFEY LABORATORIES, INC.
12423 N.E. Whitaker Way • Portland, OR • 97230 • (503) 254-1794 • FAX (503) 254-1452

RECEIVED
DEC 16 1993
KOPPERS INDS., INC.
PORTLAND, OR

Koppers015589

WWT 2

50

PH 7.0

WWT 1

49°

PH 7.1

COFFEY LABORATORIES, INC.
CHAIN OF CUSTODY AGREEMENT

PORTLAND BRANCH
12423 NE Whitaker Way
Portland, OR 97230
(503) 254-1794 FAX: (503) 254-1452

PENDLETON BRANCH
287 SE First
Pendleton, OR 97801
(503) 276-0385

Report Attention: AMOS KAMERER
Company Name: KOPPERS IND INC
Address: 7540 NW ST HELENS RD
PORTLAND, ORE 97210-3663
Phone: (503) 286 3681 FAX: (503) 285-2831

Report Instructions:

Project Name:
Project Number:
PO Number:

Sample Turnaround	Reporting Request
☐ Standard	☑ FAX (T-35)
☐ Priority (1.5x Std. Fee)	☐ Verbals (T-1157)
☑ Rush (2x Std. Fee)	☐ Extra Report Copy (T-1402) (Fees Associated)
☐ Emergency (3x Std. Fee)	Initials:

FOR LABORATORY USE ONLY Page 1 of 1
Job Number: K5931210-AT2
Custabbr: KOPPERS ☐NEW
☐VISA ☐M/C Expires:
Card #:
Cash / Check: $ #:
Billing Code: 1 2 3 4
QC LEVEL: 1 2 3 4
FEDX BUS COURIER UPS LAB CLIENT MAIL

Sample ID	Loc.	ID	Collection Date	Collection Time	Media	Analysis Requested	Test/Profile
WWT			12-10-93	2:45pm	NW	OIL & GREASE	
WWT 1			12-10-93	2:45pm		PHENOLS	
WWT 2			12-10-93	2:45pm		OIL & GREASE	
WWT 2			12-10-93	2:45pm		PHENOLS	

Sample Comments:

Sampled by: (Please Print)	Relinquished by: (Please Sign)	Date	Time	Received by: (Sign)	Date	Time
TED HARE	Edward T Hare	12-10-93	4:30pm			
				LAB	12/10/93	1630

White Copy - Laboratory Copy *Yellow Copy - Client Copy*

SHADED AREAS FOR LABORATORY USE ONLY

SUBMISSION OF SAMPLES WITH TESTING REQUIREMENTS TO CLI WILL BE UNDERSTOOD TO BE AN AGREEMENT FOR SERVICES IN ACCORDANCE WITH THE CONDITIONS LISTED ON THE BACK OF THE CLIENT COPY.

Koppers015592

COFFEY LABORATORIES, INC.
CHAIN OF CUSTODY INSTRUCTIONS/CONDITIONS SHEET

INSTRUCTIONS

FOR LAB USE ONLY -	**All shaded areas are for laboratory use only. Please Do Not Write in These Areas.**
REPORT ATTENTION -	Name of the person who receives the laboratory report.
COMPANY NAME -	Name of the company or individual requesting the analysis.
REPORT ADDRESS -	Address of the company or individual requesting the analysis. (Address where report should be mailed)
REPORT INSTRUCTIONS -	A brief description of any special mail instructions, or address information pertaining to extra report copies.
PROJECT NAME -	Applies to customer project name. This data is provided at the customer's discretion.
PROJECT NUMBER -	Applies only to samples submitted by the customer. This data is provided at the customer's discretion.
FIELD ID -	A short description of the sample point (e.g., "Effluent from sand filter"). This description will appear on the report.
COLLECTION DATE -	The date on which the sample(s) was/were collected.
COLLECTION TIME -	The time at which the sample(s) was/were collected.
MEDIA -	This is a description of the sample media (e.g., drinking water, waste water, soil, etc.)
ANALYSIS REQUESTED -	Use one line for each analysis or group of analyses associated to a specific bottle.
SAMPLE COLLECTED BY -	The person who collected the sample(s) signs here.
RELINQUISHED BY -	The sampler signs this box when he/she gives the sample to someone else, and then fills in the date/time the sample left his/her possession.
RECEIVED BY -	The person who receives the sample(s) signs here and fills in the date/time received. The date and time should be same as "Relinquished by" unless the sample(s) was/were shipped.
JOB OR SAMPLE REMARKS -	General sample or job remarks.

CONDITIONS

PRICING AND CHARGES

Prices to be charged for work performed for CLIENT are those currently published in the Coffey Laboratories, Inc. (CLI) standard pricebook. CLIENT must notify CLI of price quotation at the time of the transfer of sample(s) to CLI. All submissions of samples with testing requirements to CLI will be understood to be an agreement for services. Any cancellation of testing requirements will result in charges being assessed on all testing completed prior to the notice of cancellation.

DELIVERY AND LIABILITY LIMITATIONS

CLI will analyze samples provided by CLIENT as requested by CLIENT in accordance with the procedures documented in the CLI Quality Assurance Plan (QAP). The maximum total liability assumed by CLI for work performed for CLIENT will in all cases be limited to the cost of the analysis. The specific format of the deliverable goods will be defined by CLIENT to CLI upon transfer of the samples to CLI. This warranty supersedes all other warranties.

CONFIDENTIALITY

CLI will use its best efforts to treat all information regarding work performed for CLIENT as proprietary and confidential to the maximum extent allowed by law. NO CLIENT information will be released without the written consent of the CLIENT billed for the work.

APPLICABLE LAW

Legal matters arising from work performed by CLI for CLIENT will be construed and interpreted in accordance with the laws for the state of Oregon.

PERMITTEE NAME/ADDRESS (Include Facility Name/Location if different)
NAME KOPPERS INDUSTRIES INC.
ADDRESS 7540 N.W. ST. HELENS RD.
PORTLAND, OR 97210

FACILITY NORTHWEST PLANT
LOCATION MULTNOMAH COUNTY

NATIONAL POLLUTANT DISCHARGE ELIMINATION SYSTEM (NPDES)
DISCHARGE MONITORING REPORT (DMR)

Form Approved
OMB No. 2040-0004
Expires 3-31-88

PERMIT NUMBER (2-16)	DISCHARGE NUMBER (17-19)	
OR-100077-9	0011	3077-J
		47430

MONITORING PERIOD	YEAR	MO	DAY		YEAR	MO	DAY
FROM	93	11	01	TO	93	11	30
	(20-21)	(22-23)	(24-25)		(26-27)	(28-29)	(30-31)

NOTE: Read instructions before completing this form.

PARAMETER (32-37)		(3 Card Only) QUANTITY OR LOADING (46-53) AVERAGE	(54-61) MAXIMUM	UNITS	(4 Card Only) QUALITY OR CONCENTRATION (38-45) MINIMUM	(46-53) AVERAGE	(54-61) MAXIMUM	UNITS	NO. EX (62-63)	FREQUENCY OF ANALYSIS (64-68)	SAMPLE TYPE (69-70)
FLOW	SAMPLE MEASUREMENT	6,000							N/A	4/30	EST.
	PERMIT REQUIREMENT		N/A	GPD							
TEMPERATURE	SAMPLE MEASUREMENT				45	51.5	58	°F	0	4/30	GRAB
	PERMIT REQUIREMENT						110				
PH	SAMPLE MEASUREMENT				6.8	7.1	7.4	SU	0	4/30	GRAB
	PERMIT REQUIREMENT				6.0		9.0				
OIL & GREASES	SAMPLE MEASUREMENT				N.D.	2.5	5	MG/L	0	4/30	GRAB
	PERMIT REQUIREMENT					10	15				
PHENOLS	SAMPLE MEASUREMENT				N.D.	N.D.	N.D.	MG/L	0	4/30	GRAB
	PERMIT REQUIREMENT					.5	.7				
	SAMPLE MEASUREMENT										
	PERMIT REQUIREMENT										
	SAMPLE MEASUREMENT										
	PERMIT REQUIREMENT										

NAME/TITLE PRINCIPAL EXECUTIVE OFFICER

AMOS S. KAMERER
PLANT MANAGER

TYPED OR PRINTED

I CERTIFY UNDER PENALTY OF LAW THAT I HAVE PERSONALLY EXAMINED AND AM FAMILIAR WITH THE INFORMATION SUBMITTED HEREIN; AND BASED ON MY INQUIRY OF THOSE INDIVIDUALS IMMEDIATELY RESPONSIBLE FOR OBTAINING THE INFORMATION, I BELIEVE THE SUBMITTED INFORMATION IS TRUE, ACCURATE AND COMPLETE. I AM AWARE THAT THERE ARE SIGNIFICANT PENALTIES FOR SUBMITTING FALSE INFORMATION, INCLUDING THE POSSIBILITY OF FINE AND IMPRISONMENT. SEE 18 U.S.C. § 1001 AND 33 U.S.C. § 1319. *(Penalties under these statutes may include fines up to $10,000 and/or maximum imprisonment of between 6 months and 5 years.)*

SIGNATURE OF PRINCIPAL EXECUTIVE OFFICER OR AUTHORIZED AGENT

TELEPHONE		DATE		
503	286-3681	93	12	14
AREA CODE	NUMBER	YEAR	MO	DAY

COMMENT AND EXPLANATION OF ANY VIOLATIONS *(Reference all attachments here)*

Koppers015594

PERMITTEE NAME/ADDRESS (Include Facility Name/Location if different)
NAME FEF
ADDRESS —
—
—

FACILITY NORTHWEST PLANT
LOCATION MULTNOMAH COUNTY

NATIONAL POLLUTANT DISCHARGE ELIMINATION SYSTEM (NPDES)
DISCHARGE MONITORING REPORT (DMR)

Form Approved
OMB No. 2040-0004
Expires 3-31-88

(2-16) PERMIT NUMBER: OR-100077-9
(17-19) DISCHARGE NUMBER: 001

3077-J
47430

MONITORING PERIOD

	YEAR	MO	DAY		YEAR	MO	DAY
FROM	93	11	01	TO	93	11	30
	(20-21)	(22-23)	(24-25)		(26-27)	(28-29)	(30-31)

NOTE: Read instructions before completing this form.

PARAMETER (32-37)		(3 Card Only) QUANTITY OR LOADING (46-53) AVERAGE	(54-61) MAXIMUM	UNITS	(4 Card Only) QUALITY OR CONCENTRATION (38-45) MINIMUM	(46-53) AVERAGE	(54-61) MAXIMUM	UNITS	NO. EX (62-63)	FREQUENCY OF ANALYSIS (64-68)	SAMPLE TYPE (69-70)
45,000 x 4 ÷ 30 =											
FLOW	SAMPLE MEASUREMENT	6,000		GPD					N/A	4/30	EST.
	PERMIT REQUIREMENT		N/A								
TEMPERATURE	SAMPLE MEASUREMENT				45	52.5	58	°F	0	4/30	GRAB
	PERMIT REQUIREMENT						110				
PH	SAMPLE MEASUREMENT				6.8	7.1	7.4	SU	0	4/30	GRAB
	PERMIT REQUIREMENT				6.0		9.0				
OIL & GREASES	SAMPLE MEASUREMENT				N.D.	2.5	5	MG/L	0	4/30	GRAB
	PERMIT REQUIREMENT					10	15				
PHENOLS	SAMPLE MEASUREMENT				N.D.	N.D.	N.D.	MG/L	0	4/30	GRAB
	PERMIT REQUIREMENT					.5	.7				
	SAMPLE MEASUREMENT										
	PERMIT REQUIREMENT										
	SAMPLE MEASUREMENT										
	PERMIT REQUIREMENT										

NAME/TITLE PRINCIPAL EXECUTIVE OFFICER: ASK PM
TYPED OR PRINTED

I CERTIFY UNDER PENALTY OF LAW THAT I HAVE PERSONALLY EXAMINED AND AM FAMILIAR WITH THE INFORMATION SUBMITTED HEREIN; AND BASED ON MY INQUIRY OF THOSE INDIVIDUALS IMMEDIATELY RESPONSIBLE FOR OBTAINING THE INFORMATION, I BELIEVE THE SUBMITTED INFORMATION IS TRUE, ACCURATE AND COMPLETE. I AM AWARE THAT THERE ARE SIGNIFICANT PENALTIES FOR SUBMITTING FALSE INFORMATION, INCLUDING THE POSSIBILITY OF FINE AND IMPRISONMENT. SEE 18 U.S.C § 1001 AND 33 U.S.C § 1319. *(Penalties under these statutes may include fines up to $10,000 and or maximum imprisonment of between 6 months and 5 years.)*

SIGNATURE OF PRINCIPAL EXECUTIVE OFFICER OR AUTHORIZED AGENT

TELEPHONE: AREA CODE 503, NUMBER 286-3681

DATE: YEAR 93, MO 12, DAY 14

COMMENT AND EXPLANATION OF ANY VIOLATIONS *(Reference all attachments here)*

Koppers015595

Report Date: November 12, 1993
Job#: WG-931025AZ-2
PO#: VERBAL JOHN(O&G/Phenols)
Project#: None Provided
Project: None Provided

Attention: Amos S. Kamerer
Koppers Industry
7540 NW St. Helens Rd.
Portland, OR 97210-3663

SAMPLE INFORMATION:
Date Samples Were Received By Laboratory: 10/25/93

Lab No.	Field Identification	Sample Matrix	Date	Time
1	WWT 3	Waste Water	10-25-93	1300
2	WWT 4	Waste Water	10-25-93	1300

ANALYTICAL RESULTS:

Parameter	Method	Detection Limits	WWT 3 Results	WWT 4 Results
Oil & Grease	EPA 413.1	3	trace, < 3	trace, < 3
Total Phenols	EPA 420.1	0.05	ND	ND

Results expressed as mg/L unless otherwise noted.

ND means none detected at or above the detection limit listed.

The less than "<" symbol means none detected at or above the indicated value and represents the detection limit for the method.

Sincerely,

Susan M. Coffey
President

SMC/lws

This report is for the sole and exclusive use of the above-named client. Samples are retained 15 days from the report date, or until holding time expires. Results pertain only to samples submitted.

COFFEY LABORATORIES, INC.
12423 N.E. Whitaker Way • Portland, OR • 97230 • (503) 254-1794 • FAX (503) 254-1452

RECEIVED
NOV 16 1993
KOPPERS INDS., INC.
PORTLAND, OR

10-25-93

WWT 3

PH 7.4

WATER TEMP

58

10-25-93

W.W.T 4

PH 7.3

WATER TEMP

58

COFFEY LABORATORIES, INC.
CHAIN OF CUSTODY

Dick Reed

PORTLAND BRANCH
12423 NE Whitaker Way
Portland, OR 97230
(503) 254-1794 FAX: (502) 254-1452

PENDLETON BRANCH
287 SE First
Pendleton, OR 97801
(503) 276-0385

Report Attention: AMOS S KAMERER
Company Name: KOPPERS IND INC
Address: 7540 N.W. ST HELENS ROAD
PORTLAND, OREGON 97210-3663
Phone: (503) 286-3681 FAX: (503) 285-2831

Report Instructions:

Project Name:
Project Number:
PO Number:

Sample Turnaround	Reporting Request
☐ Standard	☐ FAX (T-35)
☐ Priority (1.5x Std. Fee)	☐ Verbals (T-1157)
☐ Rush (2x Std. Fee)	☐ Extra Report Copy (T-1402) (Fees Associated)
☐ Emergency (3x Std. Fee)	Initials:

FOR LABORATORY USE ONLY Page ___ of ___
Job Number: WG-931025-AZ2
Custabbr: Koppers ☐NEW
☐VISA ☐M/C Expires:
Card #:
Cash / Check: $ #:
Billing Code: 1 2 3 4
QC LEVEL: 1 2 3 4
FEDX BUS COURIER UPS LAB CLIENT

Sample ID	Loc.	ID	Collection Date	Collection Time	Media	Analysis Requested	Test/Profile
WWT 3			10-25-93	1:00pm	WW	OIL & GREASE	
WWT 3			10-25-93	1:00pm	WW	PHENOLS	
WWT 4			10-25-93	1:00pm	WW	OIL & GREASE	
WWT 4			10-25-93	1:00pm	WW	PHENOLS	

Sampled by: (Please Print)	Relinquished by: (Please Sign)	Date	Time	Received by: (Sign)	Date	Time
TED HARE	Ted Hare	10-25-93	4:15pm			
				LAB	10/25/93	1610

White Copy - Laboratory Copy *Yellow Copy - Client Copy*

SHADED AREAS FOR LABORATORY USE ONLY

Koppers015600

Report Date: December 1, 1993
Job#: WG-931122AO-2
PO#: VERBAL JOHN (O&G/Phenols)
Project#: None Provided
Project: None Provided

Attention: Amos S. Kamerer
Koppers Industries, Inc.
7540 NW St. Helens Rd.
Portland, OR 97210-3663

SAMPLE INFORMATION:
Date Samples Were Received By Laboratory: 11/22/93

Lab No.	Field Identification	Sample Matrix	Date	Time
1	WWT 1	Waste Water	11-22-93	1500
2	WWT 2	Waste Water	11-22-93	1500

ANALYTICAL RESULTS:

Parameter	Method	Detection Limits	WWT 1 Results	WWT 2 Results
Oil & Grease	EPA 413.1	3	ND	5
Total Phenols	SM 420.1	0.05	ND	ND

Results expressed as mg/L unless otherwise noted.

SM means Standard Methods for the Examination of Water and Wastewater, 1985, 16th Edition.

ND means none detected at or above the detection limit listed.

Sincerely,

Susan M. Coffey
President

SMC/daj

This report is for the sole and exclusive use of the above-named client. Samples are retained 15 days from the report date, or until holding time expires. Results pertain only to samples submitted.

COFFEY LABORATORIES, INC.
12423 N.E. Whitaker Way • Portland, OR • 97230 • (503) 254-1794 • FAX (503) 254-1452

RECEIVED
DEC 06 1993
KOPPERS INDS., INC.
PORTLAND, OR

WWT 2

PH
6.8

Temp
45°

WWT 1

PH

6.9

Temp 46°

COFFEY LABORATORIES, INC.
CHAIN OF CUSTODY AGREEMENT

PORTLAND BRANCH
12423 NE Whitaker Way
Portland, OR 97230
(503) 254-1794 FAX: (503) 254-1452

PENDLETON BRANCH
287 SE First
Pendleton, OR 97801
(503) 276-0385

Report Attention: AMOS S KAMERER
Company Name: KOPPERS INDUSTRIES INC.
Address: 7540 NW ST HELENS ROAD
PORTLAND OREGON 97210-3663
Phone: (503) 286-3681 FAX: (503) 285-2831

Report Instructions:

Project Name:
Project Number:
PO Number:

Sample Turnaround
- ☐ Standard
- ☐ Priority (1.5x Std. Fee)
- ☐ Rush (2x Std. Fee)
- ☐ Emergency (3x Std. Fee)

Reporting Request
- ☐ FAX (T-35)
- ☐ Verbals (T-1157)
- ☐ Extra Report Copy (T-1402) (Fees Associated)

Initials:

FOR LABORATORY USE ONLY Page ____ of ____
Job Number: [illegible]
Custabbr: KOPPERS ☐NEW
☐VISA ☐M/C Expires:
Card #:
Cash / Check: $ #:
Billing Code: 1 2 3 4
QC LEVEL: 1 2 3 4
FEDX BUS COURIER UPS LAB CLIENT MAIL

Sample ID	Loc.	ID	Collection Date	Time	Media	Analysis Requested	Test/Profile
WWT 1			11-22-93	3:00 Pm		OIL & GREASE	
WWT 1			11-22-93	300 Pm		PHENOL	
WWT 2			11-22-93	300 Pm		OIL & GREASE	
WWT 2			11-22-93	300 Pm		PHENOL	

Sample Comments:

Sampled by: (Please Print)	Relinquished by: (Please Sign)	Date	Time	Received by: (Sign)	Date	Time
EDWARD (TED) HARE	Ted Hare	11-22-93	4:30			
				LAB [illegible]	11/22/93	1135

White Copy - Laboratory Copy *Yellow Copy - Client Copy*

SHADED AREAS FOR LABORATORY USE ONLY

SUBMISSION OF SAMPLES WITH TESTING REQUIREMENTS TO CLI WILL BE UNDERSTOOD TO BE AN AGREEMENT FOR SERVICES IN ACCORDANCE WITH THE CONDITIONS LISTED ON THE BACK OF THE CLIENT COPY.

Koppers015605

COFFEY LABORATORIES, INC.
CHAIN OF CUSTODY INSTRUCTIONS/CONDITIONS SHEET

INSTRUCTIONS

FOR LAB USE ONLY -	**All shaded areas are for laboratory use only. Please Do Not Write in These Areas.**
REPORT ATTENTION -	Name of the person who receives the laboratory report.
COMPANY NAME -	Name of the company or individual requesting the analysis.
REPORT ADDRESS -	Address of the company or individual requesting the analysis. (Address where report should be mailed)
REPORT INSTRUCTIONS -	A brief description of any special mail instructions, or address information pertaining to extra report copies.
PROJECT NAME -	Applies to customer project name. This data is provided at the customer's discretion.
PROJECT NUMBER -	Applies only to samples submitted by the customer. This data is provided at the customer's discretion.
FIELD ID -	A short description of the sample point (e.g., "Effluent from sand filter"). This description will appear on the report.
COLLECTION DATE -	The date on which the sample(s) was/were collected.
COLLECTION TIME -	The time at which the sample(s) was/were collected.
MEDIA -	This is a description of the sample media (e.g., drinking water, waste water, soil, etc.)
ANALYSIS REQUESTED -	Use one line for each analysis or group of analyses associated to a specific bottle.
SAMPLE COLLECTED BY -	The person who collected the sample(s) signs here.
RELINQUISHED BY -	The sampler signs this box when he/she gives the sample to someone else, and then fills in the date/time the sample left his/her possession.
RECEIVED BY -	The person who receives the sample(s) signs here and fills in the date/time received. The date and time should be same as "Relinquished by" unless the sample(s) was/were shipped.
JOB OR SAMPLE REMARKS -	General sample or job remarks.

CONDITIONS

PRICING AND CHARGES

Prices to be charged for work performed for CLIENT are those currently published in the Coffey Laboratories, Inc. (CLI) standard pricebook. CLIENT must notify CLI of price quotation at the time of the transfer of sample(s) to CLI. All submissions of samples with testing requirements to CLI will be understood to be an agreement for services. Any cancellation of testing requirements will result in charges being assessed on all testing completed prior to the notice of cancellation.

DELIVERY AND LIABILITY LIMITATIONS

CLI will analyze samples provided by CLIENT as requested by CLIENT in accordance with the procedures documented in the CLI Quality Assurance Plan (QAP). The maximum total liability assumed by CLI for work performed for CLIENT will in all cases be limited to the cost of the analysis. The specific format of the deliverable goods will be defined by CLIENT to CLI upon transfer of the samples to CLI. This warranty supersedes all other warranties.

CONFIDENTIALITY

CLI will use its best efforts to treat all information regarding work performed for CLIENT as proprietary and confidential to the maximum extent allowed by law. NO CLIENT information will be released without the written consent of the CLIENT listed for the work.

APPLICABLE LAW

Legal matters arising from work performed by CLI for CLIENT will be construed and interpreted in accordance with the laws for the state of Oregon.

PERMITTEE NAME/ADDRESS (Include Facility Name/Location if different)

NAME KOPPERS INDUSTRIES INC.

ADDRESS 7540 N.W. ST. HELENS ROAD
PORTLAND, OR 97210

FACILITY NORTHWEST PLANT

LOCATION MULTNOMAH COUNTY

NATIONAL POLLUTANT DISCHARGE ELIMINATION SYSTEM (NPDES)
DISCHARGE MONITORING REPORT (DMR)

(2-16) PERMIT NUMBER: OR-100077-9

(17-19) DISCHARGE NUMBER: 0001

3077-J
47430

Form Approved
OMB No. 2040-0004
Expires 3-31-88

MONITORING PERIOD

	YEAR	MO	DAY		YEAR	MO	DAY
FROM	93	10	01	TO	93	10	31
	(20-21)	(22-23)	(24-25)		(26-27)	(28-29)	(30-31)

NOTE: Read instructions before completing this form.

PARAMETER (32-37)		(3 Card Only) QUANTITY OR LOADING (46-53) AVERAGE	(54-61) MAXIMUM	UNITS	(4 Card Only) QUALITY OR CONCENTRATION (38-45) MINIMUM	(46-53) AVERAGE	(54-61) MAXIMUM	UNITS	NO. EX (62-63)	FREQUENCY OF ANALYSIS (64-68)	SAMPLE TYPE (69-70)
FLOW ~~45/000 X 2 XXXXXX~~	SAMPLE MEASUREMENT	2903							N/A	2/31	EST.
	PERMIT REQUIREMENT		N/A								
TEMP	SAMPLE MEASUREMENT				63	63	63	°F	0	2/31	GRAB
	PERMIT REQUIREMENT										
pH	SAMPLE MEASUREMENT				7.1	7.2	7.3	SU	0	2/31	GRAB
	PERMIT REQUIREMENT				6.0		9.0				
OIL & GREASES	SAMPLE MEASUREMENT				ND	<1.5	<3.0	mg/L (ppm)	0	2/31	GRAB
	PERMIT REQUIREMENT										
PHENOLS	SAMPLE MEASUREMENT				ND	ND	ND	mg/L (ppm)	0	2/31	GRAB
	PERMIT REQUIREMENT					00.5	0.7				
	SAMPLE MEASUREMENT										
	PERMIT REQUIREMENT										
	SAMPLE MEASUREMENT										
	PERMIT REQUIREMENT										

NAME/TITLE PRINCIPAL EXECUTIVE OFFICER

A. S. KAMERER
PLANT MANAGER

TYPED OR PRINTED

I CERTIFY UNDER PENALTY OF LAW THAT I HAVE PERSONALLY EXAMINED AND AM FAMILIAR WITH THE INFORMATION SUBMITTED HEREIN; AND BASED ON MY INQUIRY OF THOSE INDIVIDUALS IMMEDIATELY RESPONSIBLE FOR OBTAINING THE INFORMATION, I BELIEVE THE SUBMITTED INFORMATION IS TRUE, ACCURATE AND COMPLETE. I AM AWARE THAT THERE ARE SIGNIFICANT PENALTIES FOR SUBMITTING FALSE INFORMATION, INCLUDING THE POSSIBILITY OF FINE AND IMPRISONMENT SEE 18 U.S.C § 1001 AND 33 U.S.C § 1319. *(Penalties under these statutes may include fines up to $10,000 and or maximum imprisonment of between 6 months and 5 years.)*

SIGNATURE OF PRINCIPAL EXECUTIVE OFFICER OR AUTHORIZED AGENT

TELEPHONE		DATE		
503	286-3681	93	11	08
AREA CODE	NUMBER	YEAR	MO	DAY

COMMENT AND EXPLANATION OF ANY VIOLATIONS *(Reference all attachments here)*

Koppers015607

Report Date: October 18, 1993
Job#: WG-930930BB-3
PO#: VERBAL JOHN (O&G/Phenols)
Project#: None Provided
Project: None Provided

Attention: Amos S. Kamerer
Koppers Industry
7540 NW St. Helens Rd.
Portland, OR 97210-3663

SAMPLE INFORMATION:
Date Samples Were Received By Laboratory: 09/30/93

Lab No.	Field Identification	Sample Matrix	Date	Time
1	WWT1	Waste Water	09-30-93	0845
2	WWT2	Waste Water	09-30-93	0845
3	Air Compressor Water	Waste Water	09-30-93	0845

ANALYTICAL RESULTS ARE ON THE FOLLOWING PAGE(S).

Sincerely,

Susan M. Coffey
President

SMC/lws

This report is for the sole and exclusive use of the above-named client. Samples are retained 15 days from the report date, or until holding time expires. Results pertain only to samples submitted.

COFFEY LABORATORIES, INC.
12423 N.E. Whitaker Way • Portland, OR • 97230 • (503) 254-1794 • FAX (503) 254-1452

Job#: WG-930930BB-3

Koppers Industry
Page 2

Sample Id		Oil & Grease EPA 413.1	Total Phenols EPA 420.1
1	WWT1	ND	ND
2	WWT2	3	ND
3	Air Compressor Water	trace, < 3	--
Detection Limits:		3	0.05

Results expressed as mg/L unless otherwise noted.

Analysis Performed: Polynuclear Aromatic Hydrocarbons, by EPA Method 8310, Liquid Chromatography.

Compound	Detection Limit	Laboratory Blank	WWT1 Results
Acenaphthene	10	ND	ND
Acenaphthylene	10	ND	ND
Anthracene	2.0	ND	ND
Benzo(a)anthracene	0.4	ND	ND
Benzo(b)fluoranthene	1.0	ND	ND
Benzo(k)fluoranthene	1.0	ND	ND
Benzo(g,h,i)perylene	1.0	ND	ND
Benzo(a)pyrene	1.0	ND	ND
Chrysene	0.4	ND	ND
Dibenzo(a,h)anthracene	1.0	ND	ND
Fluoranthene	2.0	ND	ND
Fluorene	2.0	ND	ND
Indeno(1,2,3-c,d)pyrene	1.0	ND	ND
Naphthalene	10	ND	ND
Phenanthrene	2.0	ND	ND
Pyrene	2.0	ND	ND

Results expressed as µg/L unless otherwise noted.

ND means none detected at or above the detection limit listed.

The less than "<" symbol means none detected at or above the indicated value and represents the detection limit for the method.

COFFEY LABORATORIES, INC.
12423 N.E. Whitaker Way • Portland, OR • 97230 • (503) 254-1794 • FAX (503) 254-1452

RECEIVED
MAY 21 1993
KOPPERS INDS., INC.
PORTLAND, OR

9-30-93

W-W-T 1

PH 7.3

WATER TEMP

63

9-30-93

W.W.T 2

P.H. 7.1

WATER TEMP
63

COFFEY LABORATORIES, INC.
CHAIN OF CUSTODY

Dick Reed

PORTLAND BRANCH
12423 NE Whitaker Way
Portland, OR 97230
(503) 254-1794 FAX: (502) 254-1452

PENDLETON BRANCH
287 SE First
Pendleton, OR 97801
(503) 276-0385

Report Attention: AMOS S KAMERER
Company Name: KOPPERS IND. INC
Address: 7540 N.W. ST HELENS ROAD
PORTLAND OREGON 97210-3663
Phone: (503) 286-3681 FAX: (503) 285-2831

Report Instructions:

Project Name:
Project Number:
PO Number:

Sample Turnaround	Reporting Request
☐ Standard	☐ FAX (T-35)
☐ Priority (1.5x Std. Fee)	☐ Verbals (T-1157)
☐ Rush (2x Std. Fee)	☐ Extra Report Copy (T-1402) (Fees Associated)
☐ Emergency (3x Std. Fee)	Initials:

FOR LABORATORY USE ONLY Page 1 of 1
Job Number: W093093O-BB3
Custabbr: KOPPERS ☐NEW
☐VISA ☐M/C Expires:
Card #:
Cash / Check: $ #:
Billing Code: 1 2 3 4
QC LEVEL: 1 2 3 4
FEDX BUS COURIER UPS LAB CLIENT

Sample ID	Loc.	ID	Collection Date	Collection Time	Media	Analysis Requested	Test/Profile
WWT 1			9-30-93	8:45 Am	WW	OIL & GREASE	
WWT 1			9-30-93	8:45 Am		PHENOLS	
WWT 1			9-30-93	8:45 Am		PAH	
WWT 2			9-30-93	8:45 Am		OIL & GREASE	
WWT 2			9-30-93	8:45 Am		PHENOLS	
AIR COMPRESSOR WATER			9-30-93	8:45 Am		OIL & GREASE	

Sampled by: (Please Print)	Relinquished by: (Please Sign)	Date	Time	Received by: (Sign)	Date	Time
TED HARE	Edward Y Hare	9-30	4:05 PM			
				LAB	9/30	1600

White Copy - Laboratory Copy *Yellow Copy - Client Copy*

SHADED AREAS FOR LABORATORY USE ONLY

Koppers015613

PERMITTEE NAME/ADDRESS (Include Facility Name/Location if different)

NAME KOPPERS INDUSTRIES INC.

ADDRESS 7540 N.W. ST. HELENS RD.
PORTLAND, OR 97210

FACILITY NORTHWEST PLANT

LOCATION MULTNOMAH COUNTY

NATIONAL POLLUTANT DISCHARGE ELIMINATION SYSTEM (NPDES)

DISCHARGE MONITORING REPORT (DMR)

Form Approved
OMB No. 2040-0004
Expires 3-31-88

PERMIT NUMBER (2-16)	DISCHARGE NUMBER (17-19)
OR-100077-9	0001

3077-J
47430

MONITORING PERIOD	YEAR	MO	DAY		YEAR	MO	DAY
FROM	93	09	01	TO	93	09	30
	(20-21)	(22-23)	(24-25)		(26-27)	(28-29)	(30-31)

NOTE: Read instructions before completing this form.

PARAMETER (32-37)		(3 Card Only) QUANTITY OR LOADING (46-53) AVERAGE	(54-61) MAXIMUM	UNITS	(4 Card Only) QUALITY OR CONCENTRATION (38-45) MINIMUM	(46-53) AVERAGE	(54-61) MAXIMUM	UNITS	NO. EX (62-63)	FREQUENCY OF ANALYSIS (64-68)	SAMPLE TYPE (69-70)
FLOW NO DISCHARGE	SAMPLE MEASUREMENT										
	PERMIT REQUIREMENT										
TEMP	SAMPLE MEASUREMENT										
	PERMIT REQUIREMENT										
PH	SAMPLE MEASUREMENT										
	PERMIT REQUIREMENT										
OIL & GREASES	SAMPLE MEASUREMENT										
	PERMIT REQUIREMENT										
PHENOLS	SAMPLE MEASUREMENT										
	PERMIT REQUIREMENT										
	SAMPLE MEASUREMENT										
	PERMIT REQUIREMENT										
	SAMPLE MEASUREMENT										
	PERMIT REQUIREMENT										

NAME/TITLE PRINCIPAL EXECUTIVE OFFICER			TELEPHONE		DATE		
AMOS. S. KAMERER PLANT MANAGER	I CERTIFY UNDER PENALTY OF LAW THAT I HAVE PERSONALLY EXAMINED AND AM FAMILIAR WITH THE INFORMATION SUBMITTED HEREIN; AND BASED ON MY INQUIRY OF THOSE INDIVIDUALS IMMEDIATELY RESPONSIBLE FOR OBTAINING THE INFORMATION, I BELIEVE THE SUBMITTED INFORMATION IS TRUE, ACCURATE AND COMPLETE. I AM AWARE THAT THERE ARE SIGNIFICANT PENALTIES FOR SUBMITTING FALSE INFORMATION, INCLUDING THE POSSIBILITY OF FINE AND IMPRISONMENT. SEE 18 U.S.C § 1001 AND 33 U.S.C § 1319. (Penalties under these statutes may include fines up to $10,000 and/or maximum imprisonment of between 6 months and 5 years.)	SIGNATURE OF PRINCIPAL EXECUTIVE OFFICER OR AUTHORIZED AGENT	503	286-3681	93	10	18
TYPED OR PRINTED			AREA CODE	NUMBER	YEAR	MO	DAY

COMMENT AND EXPLANATION OF ANY VIOLATIONS (Reference all attachments here)

AS WE HAD NO RAIN IN SEPTEMBER, WE DID NOT HAVE ANY DISCHARGE. WE DID COLLECT A SAMPLE ON 9/30/93 AND THE PAH RESULTS OF THAT SAMPLE ARE ATTACHED.

Koppers015614

PERMITTEE NAME/ADDRESS (Include Facility Name/Location if different)
NAME KOPPERS INDUSTRIES INC.
ADDRESS 7540 N.W. ST. HELENS RD.
PORTLAND, OR 97210

FACILITY NORTHWEST PLANT
LOCATION MULTNOMAH COUNTY

NATIONAL POLLUTANT DISCHARGE ELIMINATION SYSTEM (NPDES)
DISCHARGE MONITORING REPORT (DMR)

(2-16) PERMIT NUMBER	(17-19) DISCHARGE NUMBER	
OR-100077-9	0001	3077-EJ 47430

Form Approved
OMB No. 2040-0004
Expires 3-31-88

MONITORING PERIOD	YEAR	MO	DAY		YEAR	MO	DAY
FROM	93	08	01	TO	93	08	31
	(20-21)	(22-23)	(24-25)		(26-27)	(28-29)	(30-31)

NOTE: Read instructions before completing this form.

PARAMETER (32-37)		(3 Card Only) QUANTITY OR LOADING (46-53) AVERAGE	(54-61) MAXIMUM	UNITS	(4 Card Only) QUALITY OR CONCENTRATION (38-45) MINIMUM	(46-53) AVERAGE	(54-61) MAXIMUM	UNITS	NO. EX (62-63)	FREQUENCY OF ANALYSIS (64-68)	SAMPLE TYPE (69-70)
FLOW	SAMPLE MEASUREMENT	2903	--	GPD					N/A	2/31	EST
	PERMIT REQUIREMENT										
TEMP	SAMPLE MEASUREMENT				66	66.5	67	°F	0	2/31	GRAMB
	PERMIT REQUIREMENT										
PH	SAMPLE MEASUREMENT				6.6	6.6	6.7	SU	0	2/31	GRAB
	PERMIT REQUIREMENT				6.0		9.0				
OIL & GREASES	SAMPLE MEASUREMENT				NO	<1.5	<3.0	MG/L	0	2/31	GRAB
	PERMIT REQUIREMENT					10	15	(PPM)			
PHENOLS	SAMPLE MEASUREMENT				NO	NO	NO	MG/L	0	2/31	GRAB
	PERMIT REQUIREMENT					0.5	0.7	(PPM)			
	SAMPLE MEASUREMENT										
	PERMIT REQUIREMENT										
	SAMPLE MEASUREMENT										
	PERMIT REQUIREMENT										

NAME/TITLE PRINCIPAL EXECUTIVE OFFICER			TELEPHONE		DATE		
AMOS S. KAMERER PLANT MANAGER	I CERTIFY UNDER PENALTY OF LAW THAT I HAVE PERSONALLY EXAMINED AND AM FAMILIAR WITH THE INFORMATION SUBMITTED HEREIN; AND BASED ON MY INQUIRY OF THOSE INDIVIDUALS IMMEDIATELY RESPONSIBLE FOR OBTAINING THE INFORMATION, I BELIEVE THE SUBMITTED INFORMATION IS TRUE, ACCURATE AND COMPLETE. I AM AWARE THAT THERE ARE SIGNIFICANT PENALTIES FOR SUBMITTING FALSE INFORMATION, INCLUDING THE POSSIBILITY OF FINE AND IMPRISONMENT. SEE 18 USC § 1001 AND 33 USC § 1319. (Penalties under these statutes may include fines up to $10,000 and/or maximum imprisonment of between 6 months and 5 years.)	SIGNATURE OF PRINCIPAL EXECUTIVE OFFICER OR AUTHORIZED AGENT	503	286-3681	93	09	09
TYPED OR PRINTED			AREA CODE	NUMBER	YEAR	MO	DAY

COMMENT AND EXPLANATION OF ANY VIOLATIONS (Reference all attachments here)

NOTE TO GEORGE DAVIS: ATTACHED IS THE 6/22/93 PAH REPORT THAT WE DISCUSSED

Koppers015615

PERMITTEE NAME/ADDRESS (Include Facility Name/Location if different)

NAME KOPPERS INDUSTRIES INC.

ADDRESS 7540 NW ST HELENS RD.
PORTLAND, OR 97210

FACILITY NORTHWEST PLANT

LOCATION MULTNOMAH COUNTY

NATIONAL POLLUTANT DISCHARGE ELIMINATION SYSTEM (NPDES)
DISCHARGE MONITORING REPORT (DMR)

Form Approved
OMB No. 2040-0004
Expires 3-31-88

PERMIT NUMBER (2-16)	DISCHARGE NUMBER (17-19)	
OR-100077-9	0001	3077-J / 47430

MONITORING PERIOD	YEAR	MO	DAY		YEAR	MO	DAY
FROM	93	~~07~~ 08	01	TO	93	~~07~~ 08	31
	(20-21)	(22-23)	(24-25)		(26-27)	(28-29)	(30-31)

NOTE: Read instructions before completing this form.

PARAMETER (32-37)		(3 Card Only) QUANTITY OR LOADING (46-53) AVERAGE	(54-61) MAXIMUM	UNITS	(4 Card Only) QUALITY OR CONCENTRATION (38-45) MINIMUM	(46-53) AVERAGE	(54-61) MAXIMUM	UNITS	NO. EX (62-63)	FREQUENCY OF ANALYSIS (64-68)	SAMPLE TYPE (69-70)
45000 × 2 ÷ 31 FLOW	SAMPLE MEASUREMENT	2903	--	GPD					N/A	2/31	EST
	PERMIT REQUIREMENT		N/A								
TEMP	SAMPLE MEASUREMENT				66 ~~68~~	66.5 68	67 ~~68~~	°F	0	2/31	GRAB
	PERMIT REQUIREMENT										
PH	SAMPLE MEASUREMENT				6.8 ~~6.7~~	6.6 6.7	6.7 ~~6.7~~	SU	0	2/31	GRAB
	PERMIT REQUIREMENT				6.0		9.0	[redacted]	0	2/31	GRAB
OIL & GREASES	SAMPLE MEASUREMENT				ND ~~<0.7~~	<1.5 ~~<0.7~~	<3.0 ~~<0.7~~	MG/L	0	2/31	GRAB
	PERMIT REQUIREMENT					10	15	(PPM)			
PHENOLS	SAMPLE MEASUREMENT				~~0.08~~ ND	~~0.085~~ ND	~~0.09~~ ND	MG/L	0	2/31	GRAB
	PERMIT REQUIREMENT					0.5	0.7	(PPM)			
	SAMPLE MEASUREMENT										
	PERMIT REQUIREMENT										
	SAMPLE MEASUREMENT										
	PERMIT REQUIREMENT										

NAME/TITLE PRINCIPAL EXECUTIVE OFFICER			TELEPHONE		DATE		
AMOS S. KAMERER PLANT MANAGER	I CERTIFY UNDER PENALTY OF LAW THAT I HAVE PERSONALLY EXAMINED AND AM FAMILIAR WITH THE INFORMATION SUBMITTED HEREIN; AND BASED ON MY INQUIRY OF THOSE INDIVIDUALS IMMEDIATELY RESPONSIBLE FOR OBTAINING THE INFORMATION, I BELIEVE THE SUBMITTED INFORMATION IS TRUE, ACCURATE AND COMPLETE. I AM AWARE THAT THERE ARE SIGNIFICANT PENALTIES FOR SUBMITTING FALSE INFORMATION, INCLUDING THE POSSIBILITY OF FINE AND IMPRISONMENT. SEE 18 U.S.C. § 1001 AND 33 U.S.C. § 1319. (Penalties under these statutes may include fines up to $10,000 and or maximum imprisonment of between 6 months and 5 years.)	SIGNATURE OF PRINCIPAL EXECUTIVE OFFICER OR AUTHORIZED AGENT	503	286-3681	93	09 ~~08~~	09 ~~10~~
TYPED OR PRINTED			AREA CODE	NUMBER	YEAR	MO	DAY

COMMENT AND EXPLANATION OF ANY VIOLATIONS (Reference all attachments here)

Note to George Davis; Attached is the 6/22/93 PAH report that we discussed.

EPA Form 3320-1 (Rev. 10-79) PREVIOUS EDITION TO BE USED UNTIL SUPPLY IS EXHAUSTED. (REPLACES EPA FORM T-40 WHICH MAY NOT BE USED.)

PAGE OF

Koppers015616

Report Date: August 13, 1993
Job#: WG-930802AR-1
PO#: VERBAL JOHN (O&G/Phenols)
Project#: None Provided
Project: None Provided

Attention: John Oxford
Koppers Industry
7540 NW St. Helens Rd.
Portland, OR 97210

SAMPLE INFORMATION:
Date Samples Were Received By Laboratory: 08/02/93

Lab No.	Field Identification	Sample Matrix	Date	Time
1	W-W-T-3	Waste Water	08-02-93	1100
2	W-W-T-4	Waste Water	08-02-93	1100

ANALYTICAL RESULTS:

Parameters	Method	Detection Limits	W-W-T-3 Results	W-W-T-4 Results	Units
Total Phenols	EPA 420.1	0.05	ND	ND	mg/L
Oil & Grease	EPA 413.1	3.0	trace, < 3.0	ND	mg/L

ND means none detected at or above the detection limit listed.

The less than "<" symbol means none detected at or above the indicated value and represents the detection limit for the method.

Sincerely,

Susan M. Coffey
President

SMC/lws

This report is for the sole and exclusive use of the above-named client. Samples are retained 15 days from the report date, or until holding time expires. Results pertain only to samples submitted.

RECEIVED
AUG 18 1993
KOPPERS INDS., INC.
PORTLAND, OR

COFFEY LABORATORIES, INC.
12423 N.E. Whitaker Way • Portland, OR • 97230 • (503) 254-1794 • FAX (503) 254-1452

8-2-93

WW 4

PH 6.7

WATER TEMP 66

8/12/93 Dick Reid

8-2-93

WW 3

PH 6.6

WATER TEMP 67°F

COFFEY LABORATORIES, INC.
CHAIN OF CUSTODY

PORTLAND BRANCH
12423 NE Whitaker Way
Portland, OR 97230
(503) 254-1794 FAX: (502) 254-1452

PENDLETON BRANCH
287 SE First
Pendleton, OR 97801
(503) 276-0385

Report Attention: JOHN OXFORD
Company Name: KOPPERS INDUSTRIES INC
Address:
Phone:( ) FAX:( )
Report Instructions:

Project Name:
Project Number:
PO Number:

Sample Turnaround
- [x] Standard
- [ ] Priority (1.5x Std. Fee)
- [ ] Rush (2x Std. Fee)
- [ ] Emergency (3x Std. Fee)

Reporting Request
- [ ] FAX (T-35)
- [ ] Verbals (T-1157)
- [ ] Extra Report Copy (T-1402) (Fees Associated)

Initials:

FOR LABORATORY USE ONLY Page ___ of ___
Job Number: WCF 930802-AC
Custabbr: Koppers ☐NEW
☐VISA ☐M/C Expires:
Card #:
Cash / Check: $ #:
Billing Code: 1 2 3 4
QC LEVEL: 1 2 3 4
FEDX BUS COURIER UPS LAB CLIENT

Sample ID	Loc.	ID	Collection Date	Collection Time	Media	Analysis Requested	Test/Profile
WW T 3			8-2-93	11:00AM		OIL & GREASE	
WW T 3			8-2-93	11:00AM		PHENOL	
WW T 4			8-2-93	11:00AM		OIL & GREASE	
WW T 4			8-2-93	11:00AM		PHENOL	

Sampled by: (Please Print)	Relinquished by: (Please Sign)	Date	Time	Received by: (Sign)	Date	Time
TED HARE	Edward Y Hare	8-2-93	4:20pm			
				LAB	8/6/93	11:20

White Copy - Laboratory Copy *Yellow Copy - Client Copy*

SHADED AREAS FOR LABORATORY USE ONLY

Koppers015620

PERMITTEE NAME/ADDRESS (Include Facility Name/Location if different)

NAME KOPPERS INDUSTRIES INC.

ADDRESS 7540 NW ST HELENS RD.
PORTLAND, OR 97210

FACILITY NORTHWEST PLANT

LOCATION MULTNOMAH COUNTY

NATIONAL POLLUTANT DISCHARGE ELIMINATION SYSTEM (NPDES)

DISCHARGE MONITORING REPORT (DMR)

Form Approved
OMB No. 2040-0004
Expires 3-31-88

(2-16) OR-100077-9 — PERMIT NUMBER

(17-19) 0001 — DISCHARGE NUMBER

3077-J
47430

MONITORING PERIOD

FROM YEAR (20-21)	MO (22-23)	DAY (24-25)	TO YEAR (26-27)	MO (28-29)	DAY (30-31)
93	07	01	93	07	31

NOTE: Read instructions before completing this form.

PARAMETER (32-37)		(3 Card Only) (46-53) QUANTITY OR LOADING (54-61) AVERAGE	MAXIMUM	UNITS	(4 Card Only) (38-45) QUALITY OR CONCENTRATION (46-53) MINIMUM	AVERAGE (54-61)	MAXIMUM	UNITS	NO. EX (62-63)	FREQUENCY OF ANALYSIS (64-68)	SAMPLE TYPE (69-70)
FLOW	SAMPLE MEASUREMENT	2903	--	GPD					N/A	2/31	EST
	PERMIT REQUIREMENT		N/A								
TEMP	SAMPLE MEASUREMENT				68	68	68	°F	0	2/31	GRAB
	PERMIT REQUIREMENT										
PH	SAMPLE MEASUREMENT				6.7	6.7	6.7	SU	0	2/31	GRAB
	PERMIT REQUIREMENT				6.0		9.0	MG/L	0	2/31	GRAB
OIL & GREASES	SAMPLE MEASUREMENT				<0.7	<0.7	<0.7	MG/L	0	2/31	GRAB
	PERMIT REQUIREMENT					10	15				
PHENOLS	SAMPLE MEASUREMENT				0.08	0.085	0.09	MG/L	0	2/31	GRAB
	PERMIT REQUIREMENT					0.5	0.7	PPM			
	SAMPLE MEASUREMENT										
	PERMIT REQUIREMENT										
	SAMPLE MEASUREMENT										
	PERMIT REQUIREMENT										

NAME/TITLE PRINCIPAL EXECUTIVE OFFICER

AMOS S. KAMERER
PLANT MANAGER

TYPED OR PRINTED

I CERTIFY UNDER PENALTY OF LAW THAT I HAVE PERSONALLY EXAMINED AND AM FAMILIAR WITH THE INFORMATION SUBMITTED HEREIN; AND BASED ON MY INQUIRY OF THOSE INDIVIDUALS IMMEDIATELY RESPONSIBLE FOR OBTAINING THE INFORMATION, I BELIEVE THE SUBMITTED INFORMATION IS TRUE, ACCURATE AND COMPLETE. I AM AWARE THAT THERE ARE SIGNIFICANT PENALTIES FOR SUBMITTING FALSE INFORMATION, INCLUDING THE POSSIBILITY OF FINE AND IMPRISONMENT. SEE 18 U.S.C. § 1001 AND 33 U.S.C. § 1319. *(Penalties under these statutes may include fines up to $10,000 and/or maximum imprisonment of between 6 months and 5 years.)*

SIGNATURE OF PRINCIPAL EXECUTIVE OFFICER OR AUTHORIZED AGENT

TELEPHONE AREA CODE	NUMBER	DATE YEAR	MO	DAY
503	286-3681	93	08	18

COMMENT AND EXPLANATION OF ANY VIOLATIONS *(Reference all attachments here)*

Koppers015621

PERMITTEE NAME/ADDRESS (Include Facility Name/Location if different)

NAME

ADDRESS

FACILITY

LOCATION

(Off)

NATIONAL POLLUTANT DISCHARGE ELIMINATION SYSTEM (NPDES)

DISCHARGE MONITORING REPORT (DMR)

Form Approved
OMB No. 2040-0004
Expires 3-31-88

(2-16) OR-100077-9 — PERMIT NUMBER

(17-19) 0001 — DISCHARGE NUMBER

3077-J
47430

MONITORING PERIOD

FROM YEAR (20-21)	MO (22-23)	DAY (24-25)	TO YEAR (26-27)	MO (28-29)	DAY (30-31)
93	07	01	93	07	31

NOTE: Read instructions before completing this form.

PARAMETER (32-37)			(3 Card Only) (46-53) QUANTITY OR LOADING (54-61) AVERAGE	MAXIMUM	UNITS	(4 Card Only) (38-45) QUALITY OR CONCENTRATION (46-53) MINIMUM	(54-61) AVERAGE	MAXIMUM	UNITS	NO. EX (62-63)	FREQUENCY OF ANALYSIS (64-68)	SAMPLE TYPE (69-70)
CALCULATIONS 45,000 X 2 ÷ 31	Flow	SAMPLE MEASUREMENT	2903	—	GPD					N/A	2/31	EST.
		PERMIT REQUIREMENT		N/A								
	Temp	SAMPLE MEASUREMENT				68	68	68	°F	0	2/31	GRAB
		PERMIT REQUIREMENT										
	pH	SAMPLE MEASUREMENT				6.7	6.7	6.7	SU	0	2/31	GRAB
		PERMIT REQUIREMENT				6.0		9.0				
	Oil & Grease	SAMPLE MEASUREMENT				< 0.7	< 0.7	< 0.7	mg/L	0	2/31	GRAB
		PERMIT REQUIREMENT					10	15	(PPM)			
	phenols	SAMPLE MEASUREMENT				0.08	0.085	0.09	mg/L	0	2/31	GRAB
		PERMIT REQUIREMENT					0.5	0.7	(PPM)			
.09+.08 ÷ 2		SAMPLE MEASUREMENT										
		PERMIT REQUIREMENT										
		SAMPLE MEASUREMENT										
		PERMIT REQUIREMENT										

NAME/TITLE PRINCIPAL EXECUTIVE OFFICER: A. S. Kamenen, plant manager

TYPED OR PRINTED

I CERTIFY UNDER PENALTY OF LAW THAT I HAVE PERSONALLY EXAMINED AND AM FAMILIAR WITH THE INFORMATION SUBMITTED HEREIN; AND BASED ON MY INQUIRY OF THOSE INDIVIDUALS IMMEDIATELY RESPONSIBLE FOR OBTAINING THE INFORMATION, I BELIEVE THE SUBMITTED INFORMATION IS TRUE, ACCURATE AND COMPLETE. I AM AWARE THAT THERE ARE SIGNIFICANT PENALTIES FOR SUBMITTING FALSE INFORMATION, INCLUDING THE POSSIBILITY OF FINE AND IMPRISONMENT. SEE 18 U.S.C. § 1001 AND 33 U.S.C. § 1319. *(Penalties under these statutes may include fines up to $10,000 and or maximum imprisonment of between 6 months and 5 years.)*

SIGNATURE OF PRINCIPAL EXECUTIVE OFFICER OR AUTHORIZED AGENT

TELEPHONE AREA CODE	NUMBER	DATE YEAR	MO	DAY
503	286.3681	93	08	18

COMMENT AND EXPLANATION OF ANY VIOLATIONS *(Reference all attachments here)*

Koppers015622

Report Date: July 9, 1993
Job#: WG-930629N-2
PO#: VERBAL JOHN (O&G/Phenols)
Project#: None Provided
Project: None Provided

Attention: John Oxford
Koppers Industry
7540 NW St. Helens Rd.
Portland, OR 97210

SAMPLE INFORMATION:
Date Samples Were Received By Laboratory: 06/29/93

Lab No.	Field Identification	Sample Matrix	Date	Time
1	WW T1	Waste Water	06-29-93	0900
2	WW T2	Waste Water	06-29-93	0900

ANALYTICAL RESULTS:

Parameter	Method	Detection Limits	WW T1 Results	WW T2 Results
Oil & Grease	EPA 413.2	0.7	trace, < 0.7	trace, < 0.7
Total Phenols	EPA 420.1	0.05	0.09	0.08

Results expressed as mg/L unless otherwise noted.

The less than "<" symbol means none detected at or above the indicated value and represents the detection limit for the method.

Sincerely,

Susan M. Coffey
President

SMC/lws

This report is for the sole and exclusive use of the above-named client. Samples are retained 15 days from the report date, or until holding time expires. Results pertain only to samples submitted.

COFFEY LABORATORIES, INC.
12423 N.E. Whitaker Way • Portland, OR • 97230 • (503) 254-1794 • FAX (503) 254-1452

6-29-93

WW 2

P.H. 6.7

WATER TEMP 68°F

6-29-93

WW 1

P.H. 6.7

WATER TEMP

68°

COFFEY LABORATORIES INC.
12423 N.E. WHITAKER WAY, PORTLAND, OR 97230
(503) 254-1794 • FAX (503) 254-1452

CHAIN OF CUSTODY

COFFEY LABORATORIES - PENDLETON BRANCH
287 S.E. FIRST, PENDLETON, OR 97801
(503) 276-0385

PROJECT #:	PROJECT NAME:	P.O. #:	PAGE _____ of _____ PAGES PLEASE PRINT OR TYPE	FOR LABORATORY USE ONLY
COMPANY NAME: KOPPERS INDUSTRIES INC. REPORT ATTENTION: JOHN OXFORD				JOB #: WG 930624 NZ
SAMPLES COLLECTED BY: TED HARE				CUSTABBR: Koppers

FIELD IDENTIFICATION: ONE LINE PER SAMPLE CONTAINER	LAB LOC	LAB ID	COLLECTION DATE	COLLECTION TIME	MEDIA	ANALYSIS REQUESTED	ANALYSIS REMARKS
WW T 1			6-29-93	9:00 AM		OIL & GREASE	
WW T 1			"	"		PHENOL	
WW T 2			"	"		OIL & GREASE	
WW T 2			"	"		PHENOL	

RELINQUISHED BY:	DATE/TIME	RECEIVED BY:	DATE/TIME	LAB USE
RELINQUISHED BY: Edward Y Hare	DATE/TIME 9:00 AM 6-29-93	RECEIVED BY LAB: Nancy [illegible]	DATE/TIME 6/29/93 1080	

SAMPLE REMARKS:

LEVEL 1 2 3 4 | EXPRESS UPS MAIL CXX GREY TAXI LAB

WHITE COPY - COFFEY LABORATORIES

PINK COPY - CLIENTS COPY

SHADED AREA FOR LABORATORY USE ONLY

CHAIN OF CUSTODY INSTRUCTIONS ON BACK OF PINK COPY

(7/90)

Koppers015626

COFFEY LABORATORIES, INC.

CHAIN OF CUSTODY INFORMATION / INSTRUCTIONS SHEET

PROJECT NUMBER — Applies only to samples submitted by the company. This data is provided at the companies discretion.

PROJECT NAME — Your company's project name. This data is provided at the companies discretion.

COMPANY NAME — Name of the Company or individual requesting the analysis from Coffey Laboratories, Inc.

REPORT ATTENTION — Name of the person who receives the laboratory report.

SAMPLE COLLECTED BY — The person who took the sample signs this box and gives his/her title.

FIELD ID — A short description of the sample point (For example: "Effluent from sand filter"). This description will appear on the report. Use one line per sample bottle.

COLLECTION DATE — The date on which the sample(s) was/were collected.

COLLECTION TIME — The time at which the sample(s) was/were collected.

MEDIA — This is a description of the sample matrix.

ANALYSIS REQUESTED — Make one column for each parameter or group of parameters associated to a bottle.

FOR LAB USE ONLY — Do not mark in this area (Laboratory location & ID). All shaded areas are for laboratory use only. Please do not write in these areas.

REMARKS — Record any comments about each sample on the same line as the sample description, e.g., "Wastewater contains VOCs".

RELINQUISHED BY — The sampler signs this box when he/she gives the sample to someone else, and then fills in the date and time they left his possession.

RECEIVED BY — The person who receives the samples signs here and fills in the date and time received. The date and time should be the same as the last one unless the samples were shipped.

SAMPLE REMARKS — Record any comments regarding the sample(s) as a whole or information pertinent to the sample.

SAMPLES SHIPPED VIA — How the samples are being shipped to the laboratory, e.g., "UPS".

PERMITTEE NAME/ADDRESS (Include Facility Name/Location if different)

NAME: KOPPERS INDUSTRIES INC.
ADDRESS: 7540 NW ST HELENS RD.
PORTLAND, OR 97210

FACILITY: NORTHWEST PLAND
LOCATION: MULTNOMAH COUNTY

NATIONAL POLLUTANT DISCHARGE ELIMINATION SYSTEM (NPDES)
DISCHARGE MONITORING REPORT (DMR)

Form Approved
OMB No. 2040-0004
Expires 3-31-88

PERMIT NUMBER (2-16)	DISCHARGE NUMBER (17-19)
OR-100077-9	001

3077-J
47430

MONITORING PERIOD	YEAR	MO	DAY		YEAR	MO	DAY
FROM	93	6	1	TO	93	6	30
	(20-21)	(22-23)	(24-25)		(26-27)	(28-29)	(30-31)

NOTE: Read instructions before completing this form.

PARAMETER (32-37)		(3 Card Only) QUANTITY OR LOADING (46-53) AVERAGE	(54-61) MAXIMUM	UNITS	(4 Card Only) QUALITY OR CONCENTRATION (38-45) MINIMUM	(46-53) AVERAGE	(54-61) MAXIMUM	UNITS	NO. EX (62-63)	FREQUENCY OF ANALYSIS (64-68)	SAMPLE TYPE (69-70)
FLOW	SAMPLE MEASUREMENT	3000		GPO					M/A	2/30	EST.
	PERMIT REQUIREMENT		N/A								
TEMP	SAMPLE MEASUREMENT				64	64	64	OF	0	2/30	GRAB
	PERMIT REQUIREMENT										
PH	SAMPLE MEASUREMENT				6.3	6.4	6.5	SU	0	2/30	GRAB
	PERMIT REQUIREMENT				6.0		9.0				
OIL & GREASES	SAMPLE MEASUREMENT				ND	<1.5	<3.0	MG/L	0	2/30	GRAB
	PERMIT REQUIREMENT					10	15	(PPM)			
PHENOLS	SAMPLE MEASUREMENT				ND	ND	ND	(MG/L)	0	2/30	GRAB
	PERMIT REQUIREMENT					0.5	0.7	PPM			
	SAMPLE MEASUREMENT										
	PERMIT REQUIREMENT										
	SAMPLE MEASUREMENT										
	PERMIT REQUIREMENT										

NAME/TITLE PRINCIPAL EXECUTIVE OFFICER			TELEPHONE		DATE		
AMOS S. KAMERER PLANT MANAGER	I CERTIFY UNDER PENALTY OF LAW THAT I HAVE PERSONALLY EXAMINED AND AM FAMILIAR WITH THE INFORMATION SUBMITTED HEREIN; AND BASED ON MY INQUIRY OF THOSE INDIVIDUALS IMMEDIATELY RESPONSIBLE FOR OBTAINING THE INFORMATION, I BELIEVE THE SUBMITTED INFORMATION IS TRUE, ACCURATE AND COMPLETE. I AM AWARE THAT THERE ARE SIGNIFICANT PENALTIES FOR SUBMITTING FALSE INFORMATION, INCLUDING THE POSSIBILITY OF FINE AND IMPRISONMENT. SEE 18 U.S.C. § 1001 AND 33 U.S.C. § 1319. *(Penalties under these statutes may include fines up to $10,000 and/or maximum imprisonment of between 6 months and 5 years.)*		503	286-3681	93	08	18
TYPED OR PRINTED		SIGNATURE OF PRINCIPAL EXECUTIVE OFFICER OR AUTHORIZED AGENT	AREA CODE	NUMBER	YEAR	MO	DAY

COMMENT AND EXPLANATION OF ANY VIOLATIONS *(Reference all attachments here)*

Koppers015628

PERMITTEE NAME/ADDRESS (Include Facility Name/Location if different)

NAME

ADDRESS

FACILITY

LOCATION

Copy

NATIONAL POLLUTANT DISCHARGE ELIMINATION SYSTEM (NPDES)

DISCHARGE MONITORING REPORT (DMR)

Form Approved
OMB No. 2040-0004
Expires 3-31-88

(2-16) PERMIT NUMBER: OR-100077-9

(17-19) DISCHARGE NUMBER: 0001

3077-J

47430

MONITORING PERIOD

	YEAR	MO	DAY		YEAR	MO	DAY
FROM	93	06	01	TO	93	06	30
	(20-21)	(22-23)	(24-25)		(26-27)	(28-29)	(30-31)

NOTE: Read instructions before completing this form.

PARAMETER (32-37)			(3 Card Only) (46-53) QUANTITY OR LOADING (54-61) AVERAGE	MAXIMUM	UNITS	(4 Card Only) (38-45) QUALITY OR CONCENTRATION (46-53) MINIMUM	AVERAGE	MAXIMUM	UNITS	NO. EX (62-63)	FREQUENCY OF ANALYSIS (64-68)	SAMPLE TYPE (69-70)
Calculations 45,000 x 2 ÷ 30	Flow	SAMPLE MEASUREMENT	3000		GPD					N/A	2/30	EST.
		PERMIT REQUIREMENT		N/A								
	TEMP	SAMPLE MEASUREMENT				64	64	64	°F	0	2/30	GRAB
		PERMIT REQUIREMENT										
6.3 + 6.5 ÷ 2	pH	SAMPLE MEASUREMENT				6.3	6.4	6.5	SU	0	2/30	GRAB
		PERMIT REQUIREMENT				6.0		9.0				
0 + 3.0 ÷ 2	Oil & Grease	SAMPLE MEASUREMENT				ND	< 1.5	< 3.0	mg/L (ppm)	0	2/30	GRAB
		PERMIT REQUIREMENT					10	15				
	phenols	SAMPLE MEASUREMENT				ND	ND	ND	mg/L (ppm)	0	2/30	GRAB
		PERMIT REQUIREMENT					.05	0.7				
		SAMPLE MEASUREMENT										
		PERMIT REQUIREMENT										
		SAMPLE MEASUREMENT										
		PERMIT REQUIREMENT										

NAME/TITLE PRINCIPAL EXECUTIVE OFFICER: A. S. Kamenar, Plant Manager

TYPED OR PRINTED

I CERTIFY UNDER PENALTY OF LAW THAT I HAVE PERSONALLY EXAMINED AND AM FAMILIAR WITH THE INFORMATION SUBMITTED HEREIN; AND BASED ON MY INQUIRY OF THOSE INDIVIDUALS IMMEDIATELY RESPONSIBLE FOR OBTAINING THE INFORMATION, I BELIEVE THE SUBMITTED INFORMATION IS TRUE, ACCURATE AND COMPLETE. I AM AWARE THAT THERE ARE SIGNIFICANT PENALTIES FOR SUBMITTING FALSE INFORMATION, INCLUDING THE POSSIBILITY OF FINE AND IMPRISONMENT. SEE 18 U.S.C § 1001 AND 33 U.S.C § 1319. (Penalties under these statutes may include fines up to $10,000 and or maximum imprisonment of between 6 months and 5 years.)

SIGNATURE OF PRINCIPAL EXECUTIVE OFFICER OR AUTHORIZED AGENT

TELEPHONE: AREA CODE 503, NUMBER 286-3681

DATE: YEAR 93, MO 08, DAY 18

COMMENT AND EXPLANATION OF ANY VIOLATIONS (Reference all attachments here)

Koppers015629

5-28-93

W-W- T-4

Ph 6.3

water Temp

64

5-28-93

w-w T-3

Ph 6.5

---

water Temp

64

COFFEY LABORATORIES INC.
12423 N.E. WHITAKER WAY, PORTLAND, OR 97230
(503) 254-1794 • FAX (503) 254-1452

CHAIN OF CUSTODY

COFFEY LABORATORIES - PENDLETON BRANCH
287 S.E. FIRST, PENDLETON, OR 97801
(503) 276-0385

PROJECT #:	PROJECT NAME:	P.O. #:	PAGE _____ of _____ PAGES PLEASE PRINT OR TYPE	FOR LABORATORY USE ONLY

COMPANY NAME: Koppers IND
REPORT ATTENTION: John Oxford
JOB #: WG 930528-AT2
SAMPLES COLLECTED BY: Geo. Hoffman
CUSTABBR: Koppers

FIELD IDENTIFICATION: ONE LINE PER SAMPLE CONTAINER	LAB LOC	LAB ID	COLLECTION DATE	COLLECTION TIME	MEDIA	ANALYSIS REQUESTED	ANALYSIS REMARKS
W-W-T-3			5-28-93	1:30PM		Oil & Grease	
W-W T-3			"	"		Phenols	
W-W T-4			"	"		Oil & Grease	
W-W T-4			"	"		Phenols	
W-W-T-3			"	"		P.A.H.	

RELINQUISHED BY: _____ DATE/TIME
RECEIVED BY: _____ DATE/TIME
LAB USE:

RELINQUISHED BY: George Hoffman 5-28-93 DATE/TIME
RECEIVED BY LAB: [illegible] DATE/TIME 5/28/93 1015

SAMPLE REMARKS:
LEVEL 1 2 3 4
EXPRESS UPS MAIL CXX GREY TAXI LAB

WHITE COPY - COFFEY LABORATORIES
PINK COPY - CLIENTS COPY

SHADED AREA FOR LABORATORY USE ONLY
CHAIN OF CUSTODY INSTRUCTIONS ON BACK OF PINK COPY

(7/90)

Koppers015632

COFFEY LABORATORIES, INC.

CHAIN OF CUSTODY INFORMATION / INSTRUCTIONS SHEET

PROJECT NUMBER — Applies only to samples submitted by the company. This data is provided at the companies discretion.

PROJECT NAME — Your company's project name. This data is provided at the companies discretion.

COMPANY NAME — Name of the Company or individual requesting the analysis from Coffey Laboratories, Inc.

REPORT ATTENTION — Name of the person who receives the laboratory report.

SAMPLE COLLECTED BY — The person who took the sample signs this box and gives his/her title.

FIELD ID — A short description of the sample point (For example: "Effluent from sand filter"). This description will appear on the report. Use one line per sample bottle.

COLLECTION DATE — The date on which the sample(s) was/were collected.

COLLECTION TIME — The time at which the sample(s) was/were collected.

MEDIA — This is a description of the sample matrix.

ANALYSIS REQUESTED — Make one column for each parameter or group of parameters associated to a bottle.

FOR LAB USE ONLY — Do not mark in this area (Laboratory location & ID). All shaded areas are for laboratory use only. Please do not write in these areas.

REMARKS — Record any comments about each sample on the same line as the sample description, e.g., "Wastewater contains VOCs".

RELINQUISHED BY — The sampler signs this box when he/she gives the sample to someone else, and then fills in the date and time they left his possession.

RECEIVED BY — The person who receives the samples signs here and fills in the date and time received. The date and time should be the same as the last one unless the samples were shipped.

SAMPLE REMARKS — Record any comments regarding the sample(s) as a whole or information pertinent to the sample.

SAMPLES SHIPPED VIA — How the samples are being shipped to the laboratory, e.g., "UPS".

Doc ID: O:\Clam\Form\Reports\Work\WasteWat.WRK
Revision #: 1.03
Revision Date: 08/20/92

Analysis Performed: Wastewater

Job No.:_____ Custabbr:_____

Wastewater Analysis Form (5/28/93)

Parameter	Method	Det. Limit	WWT3	WWT4	Units
pH	EPA 150.1	---			S.U.
Flash Point	EPA 1010	---			°F
TSS	EPA 160.2	1			mg/L
BOD	EPA 405.1	1			mg/L
COD	EPA 410.4	1			mg/L
Oil & Grease	EPA 413.2	~~0.5~~ 0.7	trace<0.7	trace<0.7	mg/L
Total Cyanide	EPA 335.2	0.02			mg/L
Free Cyanide	SM 412-H	0.02			mg/L
Ammonia	SM 417-A,D	0.01			mg/L
Fluoride	EPA 340.2	0.2			mg/L
Total Phenols	SM 420.1	0.05	0.05	0.05	mg/L
Total Sulfides	SM 427-C	0.01			mg/L
Cadmium	*	0.05			mg/L
Chromium	*	0.05			mg/L
Copper	*	0.05			mg/L
Lead	*	0.1			mg/L
Mercury	EPA 7470				mg/L
Nickel	*	0.05			mg/L
Silver	*	0.05			mg/L
Zinc	*	0.05			mg/L
					mg/L
					mg/L
					mg/L
					mg/L
					mg/L

Add on:

EPA 601/602_____ EPA 624_____ EPA 625_____ QC_____

06. 17. 93 10:22AM *COFFEY LAB P02

Koppers Industry

Job#: WG-930528AT-2
Page 2

PARAMETER	METHOD	DETECTION LIMITS	W-W-T-3 RESULTS	W-W-T-4 RESULTS
Oil & Grease	EPA 413.2	0.7	Trace, <0.7	Trace. <0.7
Total Phenols	SM 420.1	0.05	0.05	0.05

Results expressed as mg/L unless otherwise noted.

SM means Standard Methods for the Examination of Water and Wastewater, 1985, 16th Edition.

The less than "<" symbol means none detected at or above the indicated value and represents the detection limit for the method.

ANALYSIS PERFORMED: Polynuclear Aromatic Hydrocarbons in waste water, by EPA Method 8310, Liquid Chromatography.

Compound	Detection Limit	Laboratory Blank	W-W-T-3 Results
Acenaphthene	200	ND	ND
Acenaphthylene	200	ND	ND
Anthracene	10	ND	ND
Benzo(a)anthracene	2.0	ND	19
Benzo(b)fluoranthene	10	ND	30
Benzo(k)fluoranthene	2.0	ND	24
Benzo(g,h,i)perylene	5.0	ND	31
Benzo(a)pyrene	2.0	ND	44
Chrysene	5.0	ND	20
Dibenzo(a,h)anthracene	20	ND	ND
Fluoranthene	20	ND	40
Fluorene	15	ND	ND
Indeno(1,2,3-c,d)pyrene	10	ND	20
Naphthalene	200	ND	ND
Phenanthrene	20	ND	ND
Pyrene	10	ND	23

Results expressed as µg/L unless otherwise noted.

ND means none detected at or above the detection limit listed.

COFFEY LABORATORIES, INC.
12423 N.E. Whitaker Way • Portland, OR • 97230 • (503) 254-1794 • FAX (503) 254-1452

08. 18. 93 11:37AM *COFFEY LAB P03

Report Date: June 17, 1993
Job#: WG-930528AT-2
PO#: VERBAL JOHN (O&G/Phenols)
Project#: None Provided
Project: None Provided

Attention: John Oxford
Koppers Industry
7540 NW St. Helens Rd.
Portland, OR 97210

SAMPLE INFORMATION:
Date Samples Were Received By Laboratory: 05/28/93

Lab No.	Field Identification	Sample Matrix	Date	Time
1	W-W-T-3	Waste Water	05-28-93	1330
2	W-W-T-4	Waste Water	05-28-93	1330

ANALYTICAL RESULTS ARE ON THE FOLLOWING PAGE.

Sincerely,

Susan M. Coffey
President

SMC/daj

This report is for the sole and exclusive use of the above-named client. Samples are retained 15 days from the report date, or until holding time expires. Results pertain only to samples submitted.

COFFEY LABORATORIES, INC.
12423 N.E. Whitaker Way • Portland, OR • 97230 • (503) 254-1794 • FAX (503) 254-1452

08. 18. 93 11:37AM *COFFEY LAB P02

PERMITTEE NAME/ADDRESS (Include Facility Name/Location if different)

NAME KOPPERS INDUSTRIES INC

ADDRESS ~~XXX~~ 7540 NW ST HELENS RD
PORTLAND OR 97210

FACILITY NORTHWEST PLANT

LOCATION MULTNOMAH COUNTY

NATIONAL POLLUTANT DISCHARGE ELIMINATION SYSTEM (NPDES)
DISCHARGE MONITORING REPORT (DMR)

Form Approved
OMB No. 2040-0004
Expires 3-31-88

PERMIT NUMBER (2-16)	DISCHARGE NUMBER (17-19)	
OR-100077-9	0001	3077-J 47430

MONITORING PERIOD	YEAR	MO	DAY		YEAR	MO	DAY
FROM	93	5	1	TO	93	5	31
	(20-21)	(22-23)	(24-25)		(26-27)	(28-29)	(30-31)

NOTE: Read instructions before completing this form.

PARAMETER (32-37)		(3 Card Only) QUANTITY OR LOADING (46-53) AVERAGE	(54-61) MAXIMUM	UNITS	(4 Card Only) QUALITY OR CONCENTRATION (38-45) MINIMUM	(46-53) AVERAGE	(54-61) MAXIMUM	UNITS	NO. EX (62-63)	FREQUENCY OF ANALYSIS (64-68)	SAMPLE TYPE (69-70)
FLOW	SAMPLE MEASUREMENT	5806							N/A	4/31	EST
	PERMIT REQUIREMENT		N/A	GPD							
TEMP	SAMPLE MEASUREMENT				62	62.25	64	°F	0	4/31	GRAB
	PERMIT REQUIREMENT						110		-		
PH	SAMPLE MEASUREMENT				6.3	6.725	7.1		0	4/31	GRAB
	PERMIT REQUIREMENT				6.0		9.0	SU			
OIL & GREASE	SAMPLE MEASUREMENT				<0.7	<0.7	<0.7		0	4/31	GRAB
	PERMIT REQUIREMENT					10	15	MG/L			
PHENOLS	SAMPLE MEASUREMENT				0.05	0.103	0.18		0	4/31	GRAB
	PERMIT REQUIREMENT					0.5	0.7	MG/L (PPM)			
	SAMPLE MEASUREMENT										
	PERMIT REQUIREMENT										
	SAMPLE MEASUREMENT										
	PERMIT REQUIREMENT										

NAME/TITLE PRINCIPAL EXECUTIVE OFFICER			TELEPHONE		DATE		
JOHN A OXFORD PLANT MANAGER	I CERTIFY UNDER PENALTY OF LAW THAT I HAVE PERSONALLY EXAMINED AND AM FAMILIAR WITH THE INFORMATION SUBMITTED HEREIN; AND BASED ON MY INQUIRY OF THOSE INDIVIDUALS IMMEDIATELY RESPONSIBLE FOR OBTAINING THE INFORMATION, I BELIEVE THE SUBMITTED INFORMATION IS TRUE, ACCURATE AND COMPLETE. I AM AWARE THAT THERE ARE SIGNIFICANT PENALTIES FOR SUBMITTING FALSE INFORMATION, INCLUDING THE POSSIBILITY OF FINE AND IMPRISONMENT SEE 18 U.S.C § 1001 AND 33 U.S.C § 1319. *(Penalties under these statutes may include fines up to $10,000 and or maximum imprisonment of between 6 months and 5 years.)*	John A Oxford	503	286-3681	93	6	18
TYPED OR PRINTED		SIGNATURE OF PRINCIPAL EXECUTIVE OFFICER OR AUTHORIZED AGENT	AREA CODE	NUMBER	YEAR	MO	DAY

COMMENT AND EXPLANATION OF ANY VIOLATIONS (*Reference all attachments here*)

Koppers015637

PERMITTEE NAME/ADDRESS (Include Facility Name/Location if different)

NAME: Koppers Industries Inc.

ADDRESS: 7540 NW St Helens Rd
Portland Or 97210

FACILITY: Northwest Plant

LOCATION: Multnomah County

NATIONAL POLLUTANT DISCHARGE ELIMINATION SYSTEM (NPDES)
DISCHARGE MONITORING REPORT (DMR)

Form Approved
OMB No. 2040-0004
Expires 3-31-88

(2-16) PERMIT NUMBER: OR-100077-9

(17-19) DISCHARGE NUMBER: 0001

3077-8
47430

MONITORING PERIOD	YEAR	MO	DAY		YEAR	MO	DAY
FROM	93	5	1	TO	93	5	31
	(20-21)	(22-23)	(24-25)		(26-27)	(28-29)	(30-31)

NOTE: Read instructions before completing this form.

PARAMETER (32-37)		(3 Card Only) QUANTITY OR LOADING (46-53) AVERAGE	(54-61) MAXIMUM	UNITS	(4 Card Only) QUALITY OR CONCENTRATION (38-45) MINIMUM	(46-53) AVERAGE	(54-61) MAXIMUM	UNITS	NO. EX (62-63)	FREQUENCY OF ANALYSIS (64-68)	SAMPLE TYPE (69-70)
flow	SAMPLE MEASUREMENT	5806							N/A	4/31	EST
	PERMIT REQUIREMENT		N/A	GPD							
Temp.	SAMPLE MEASUREMENT				60	62.25	64		0	4/31	grab
	PERMIT REQUIREMENT						110	°F			
Ph.	SAMPLE MEASUREMENT				6.3	6.725	7.1		0	4/31	grab
	PERMIT REQUIREMENT				6.0		9.0	SU			
oil & grease	SAMPLE MEASUREMENT				<0.7	<0.7	<0.7		0	4/31	GRAB
	PERMIT REQUIREMENT					10	15	mg/L			
Phenols	SAMPLE MEASUREMENT				0.105	0.103	0.18		0	4/31	GRAB
	PERMIT REQUIREMENT					0.5	0.7	mg/L (PPM)			
	SAMPLE MEASUREMENT										
	PERMIT REQUIREMENT										
	SAMPLE MEASUREMENT										
	PERMIT REQUIREMENT										

NAME/TITLE PRINCIPAL EXECUTIVE OFFICER			TELEPHONE		DATE		
John Alfred Plant mgr.	I CERTIFY UNDER PENALTY OF LAW THAT I HAVE PERSONALLY EXAMINED AND AM FAMILIAR WITH THE INFORMATION SUBMITTED HEREIN; AND BASED ON MY INQUIRY OF THOSE INDIVIDUALS IMMEDIATELY RESPONSIBLE FOR OBTAINING THE INFORMATION, I BELIEVE THE SUBMITTED INFORMATION IS TRUE, ACCURATE AND COMPLETE. I AM AWARE THAT THERE ARE SIGNIFICANT PENALTIES FOR SUBMITTING FALSE INFORMATION, INCLUDING THE POSSIBILITY OF FINE AND IMPRISONMENT. SEE 18 U.S.C. § 1001 AND 33 U.S.C § 1319. *(Penalties under these statutes may include fines up to $10,000 and/or maximum imprisonment of between 6 months and 5 years.)*	SIGNATURE OF PRINCIPAL EXECUTIVE OFFICER OR AUTHORIZED AGENT	AREA CODE	NUMBER	YEAR	MO	DAY
TYPED OR PRINTED							

COMMENT AND EXPLANATION OF ANY VIOLATIONS (*Reference all attachments here*)

Koppers015638

GENERAL INSTRUCTIONS

1. If form has been partially completed by preprinting, disregard instructions directed at entry of that information already preprinted.
2. Enter "PERMITTEE NAME/MAILING ADDRESS (and facility name/location, if different)," "PERMIT NUMBER," and "DISCHARGE NUMBER" where indicated. (A separate form is required for each discharge.)
3. Enter dates beginning and ending "MONITORING PERIOD" covered by form where indicated.
4. Enter each "PARAMETER" as specified in monitoring requirements of permit.
5. Enter "SAMPLE MEASUREMENT" data for each parameter under "QUANTITY" and "QUALITY" in units specified in permit. "AVERAGE" is normally arithmetic average (geometric average for bacterial parameters) of all sample measurements for each parameter obtained during "MONITORING PERIOD." "MAXIMUM" and "MINIMUM" are normally extreme high and low measurements obtained during "MONITORING PERIOD." (NOTE: to municipals with secondary treatment requirement, enter 30-day average of sample measurements under "AVERAGE" and enter maximum 7-day average of sample measurements obtained during monitoring period under "MAXIMUM".
6. Enter "PERMIT REQUIREMENT" for each parameter under "QUANTITY" and "QUALITY" as specified in permit.
7. Under "NO. EX" enter number of sample measurements during monitoring period that exceed maximum (and/or minimum or 7-day average as appropriate) permit requirement for each parameter. If none, enter "0".
8. Enter "FREQUENCY OF ANALYSIS" both as "SAMPLE MEASUREMENT" (actual frequency of sampling and analysis used during monitoring period) and as "PERMIT REQUIREMENT" specified in permit. (e.g., Enter "CONT." for continuous monitoring. "1/7" for one day per week. "1/30" for one day per month. "1/90" for one day per quarter, etc.)
9. Enter "SAMPLE TYPE" both as "SAMPLE MEASUREMENT" (actual sample type used during monitoring period) and as "PERMIT REQUIREMENT." (e.g., Enter "GRAB" for individual sample. "24HC" for 24-hour composite. "N/A" for continuous monitoring, etc.)

(FOLD HERE FIRST)

10. WHERE VIOLATIONS OF PERMIT REQUIREMENTS ARE REPORTED, ATTACH A BRIEF EXPLANATION TO DESCRIBE CAUSE AND CORRECTIVE ACTIONS TAKEN. REFERENCE EACH VIOLATION BY DATE.
11. If "no discharge" occurs during monitoring period, enter "NO DISCHARGE" across form in place of data entry.
12. Enter "NAME/TITLE OF PRINCIPAL EXECUTIVE OFFICER" with "SIGNATURE OF PRINCIPAL EXECUTIVE OFFICER OR AUTHORIZED AGENT," "TELEPHONE NUMBER" and "DATE" at bottom of form.
13. Mail signed Report to Office(s) by date(s) specified in permit. Retain copy for your records.
14. More detailed instructions for use of this DISCHARGE MONITORING REPORT (DMR) form may be obtained from Office(s) specified in permit.

LEGAL NOTICE

This report is required by law (33 U.S.C. 1318; 40 C.F.R. 125.27). Failure to report or failure to report truthfully can result in civil penalties not to exceed $10,000 per day of violation; or in criminal penalties not to exceed $25,000 per day of violation, or by imprisonment for not more than one year, or by both.

FOLD HERE SECOND

PLACE STAMP HERE

FOLD HERE THIRD

STAPLE HERE

Koppers015639

	TK1	Tank 2	Tank 3	Tank 4
flow.	45,000	45,000	45,000	45,000 = 180,000 ÷ 31 = 5806
Temp.	61	60	64	64 = 249 ÷ 4 62.25
Ph.	7.0	7.1	6.5	6.3 = 26.9 ÷ 4 = 6.725
oil + grease	<0.7	<0.7	<0.7	<0.7 = <2.8 ÷ 4 = <0.7
Phenols	0.13	0.18	0.05	0.05 = 0.41 ÷ 4 = 0.103

RECEIVED

MAY 17 1993

KOPPERS INDS., INC.
PORTLAND, OR

Report Date: May 11, 1993
Job#: WG-930503AP-2
PO#: VERBAL JOHN (O&G/Phenols)
Project#: None Provided
Project: None Provided

Attention: John Oxford
Koppers Industry
7540 NW St. Helens Rd.
Portland, OR 97210

SAMPLE INFORMATION:
Date Samples Were Received By Laboratory: 05/03/93

Lab No.	Field Identification	Sample Matrix	Date	Time
1	WWTK #1	Waste Water	05-03-93	0930
2	WWTK #2	Waste Water	05-03-93	0930

ANALYTICAL RESULTS:

PARAMETER	METHOD	DETECTION LIMITS	WWTK #1 RESULTS	WWTK #2 RESULTS
Total Phenols	EPA 420.1	0.05	0.13	0.18
Oil & Grease	EPA 413.2	0.7	trace, <0.7	trace, <0.7

Results expressed as mg/L unless otherwise noted.

The less than "<" symbol means none detected at or above the indicated value and represents the detection limit for the method.

Sincerely,

Susan M. Coffey
President

SMC/daj

This report is for the sole and exclusive use of the above-named client. Samples are retained 15 days from the report date, or until holding time expires. Results pertain only to samples submitted.

COFFEY LABORATORIES, INC.
12423 N.E. Whitaker Way • Portland, OR • 97230 • (503) 254-1794 • FAX (503) 254-1452

5-3-93

W.W. Tk

1

Temp = 61°F

P.H. = 7.0

JaO

5-3-93

WWTK #2

Temp = 60°F

PH = 7.1 JWO

COFFEY LABORATORIES INC.
12423 N.E. WHITAKER WAY, PORTLAND, OR 97230
(503) 254-1794 • FAX (503) 254-1452

COFFEY LABORATORIES - PENDLETON BRANCH
287 S.E. FIRST, PENDLETON, OR 97801
(503) 276-0385

CHAIN OF CUSTODY

PROJECT #:	PROJECT NAME:	P.O. #:	PAGE 1 of 1 PAGES PLEASE PRINT OR TYPE	FOR LABORATORY USE ONLY:

COMPANY NAME: KOPPERS IND, INC,
REPORT ATTENTION: J. OXFORD
JOB #: W930503-AP2
SAMPLES COLLECTED BY: R. BEEHLER
CUSTABBR: Koppers

FIELD IDENTIFICATION: ONE LINE PER SAMPLE CONTAINER	LAB LOC	LAB ID	COLLECTION DATE	COLLECTION TIME	MEDIA	ANALYSIS REQUESTED	ANALYSIS REMARKS
WW TK #1			5-3-93	9:30 Am	WW	Oil & grease	
WW TK #2			"	"		Phenols	
WW TK #1			"	"		Phenols	
WW TK #2			"	"		Oil & grease	

RELINQUISHED BY: R.B. Jackford	DATE/TIME 5-3-93	RECEIVED BY:	DATE/TIME
RELINQUISHED BY:	DATE/TIME	RECEIVED BY LAB: Danette Utly	DATE/TIME 5/3/93 1645

LAB USE:

SAMPLE REMARKS:

LEVEL 1 2 3 4

EXPRESS UPS MAIL CXX GREY TAXI LAB

WHITE COPY - COFFEY LABORATORIES

PINK COPY - CLIENTS COPY

SHADED AREA FOR LABORATORY USE ONLY

CHAIN OF CUSTODY INSTRUCTIONS ON BACK OF PINK COPY

(7/90)

Koppers015644

COFFEY LABORATORIES, INC.

CHAIN OF CUSTODY INFORMATION / INSTRUCTIONS SHEET

PROJECT NUMBER — Applies only to samples submitted by the company. This data is provided at the companies discretion.

PROJECT NAME — Your company's project name. This data is provided at the companies discretion.

COMPANY NAME — Name of the Company or individual requesting the analysis from Coffey Laboratories, Inc.

REPORT ATTENTION — Name of the person who receives the laboratory report.

SAMPLE COLLECTED BY — The person who took the sample signs this box and gives his/her title.

FIELD ID — A short description of the sample point (For example: "Effluent from sand filter"). This description will appear on the report. Use one line per sample bottle.

COLLECTION DATE — The date on which the sample(s) was/were collected.

COLLECTION TIME — The time at which the sample(s) was/were collected.

MEDIA — This is a description of the sample matrix.

ANALYSIS REQUESTED — Make one column for each parameter or group of parameters associated to a bottle.

FOR LAB USE ONLY — Do not mark in this area (Laboratory location & ID). All shaded areas are for laboratory use only. Please do not write in these areas.

REMARKS — Record any comments about each sample on the same line as the sample description, e.g., "Wastewater contains VOCs".

RELINQUISHED BY — The sampler signs this box when he/she gives the sample to someone else, and then fills in the date and time they left his possession.

RECEIVED BY — The person who receives the samples signs here and fills in the date and time received. The date and time should be the same as the last one unless the samples were shipped.

SAMPLE REMARKS — Record any comments regarding the sample(s) as a whole or information pertinent to the sample.

SAMPLES SHIPPED VIA — How the samples are being shipped to the laboratory, e.g., "UPS".

(7/90)

PERMITTEE NAME/ADDRESS (Include Facility Name/Location if different)

NAME KOPPERS INDUSTRIES INC
ADDRESS 7540 NW ST HELENS RD
PORTLAND OR 97210

FACILITY NORTHWEST PLANT
LOCATION MULTNOMAH COUNTY

NATIONAL POLLUTANT DISCHARGE ELIMINATION SYSTEM (NPDES)
DISCHARGE MONITORING REPORT (DMR)

Form Approved
OMB No. 2040-0004
Expires 3-31-88

(2-16) PERMIT NUMBER	(17-19) DISCHARGE NUMBER
OR0100077-9	0001

3077-J
47430

MONITORING PERIOD	YEAR	MO	DAY		YEAR	MO	DAY
FROM	93	4	1	TO	93	4	30
	(20-21)	(22-23)	(24-25)		(26-27)	(28-29)	(30-31)

NOTE: Read instructions before completing this form.

PARAMETER (32-37)		(3 Card Only) QUANTITY OR LOADING (46-53) AVERAGE	(54-61) MAXIMUM	UNITS	(4 Card Only) QUALITY OR CONCENTRATION (38-45) MINIMUM	(46-53) AVERAGE	(54-61) MAXIMUM	UNITS	NO. EX (62-63)	FREQUENCY OF ANALYSIS (64-68)	SAMPLE TYPE (69-70)
FLOW	SAMPLE MEASUREMENT	3000							NA	2/30	EST
	PERMIT REQUIREMENT		EST	GRD							
TEMP	SAMPLE MEASUREMENT				55	57	59	°F	0	2/30	GRAB
	PERMIT REQUIREMENT						100				
PH	SAMPLE MEASUREMENT				6.9	~~XXX~~ 6.9	6.9		0	2/30	GRAB
	PERMIT REQUIREMENT				6.0		9.0	SU			
OIL & GREASE	SAMPLE MEASUREMENT				0.8	0.85	0.9	MG/L	0	2/30	GRAB
	PERMIT REQUIREMENT					10	15				
PHENOLS	SAMPLE MEASUREMENT				0.14	0.14	0.14	MG/L	0	2/30	GRAB
	PERMIT REQUIREMENT					0.5	0.7	(PPM)			
	SAMPLE MEASUREMENT										
	PERMIT REQUIREMENT										
	SAMPLE MEASUREMENT										
	PERMIT REQUIREMENT										

NAME/TITLE PRINCIPAL EXECUTIVE OFFICER			TELEPHONE		DATE		
JOHN A. OXFORD PLANT MANAGER	I CERTIFY UNDER PENALTY OF LAW THAT I HAVE PERSONALLY EXAMINED AND AM FAMILIAR WITH THE INFORMATION SUBMITTED HEREIN; AND BASED ON MY INQUIRY OF THOSE INDIVIDUALS IMMEDIATELY RESPONSIBLE FOR OBTAINING THE INFORMATION, I BELIEVE THE SUBMITTED INFORMATION IS TRUE, ACCURATE AND COMPLETE. I AM AWARE THAT THERE ARE SIGNIFICANT PENALTIES FOR SUBMITTING FALSE INFORMATION, INCLUDING THE POSSIBILITY OF FINE AND IMPRISONMENT. SEE 18 U.S.C § 1001 AND 33 U.S.C § 1319. *(Penalties under these statutes may include fines up to $10,000 and/or maximum imprisonment of between 6 months and 5 years.)*	John A Oxford	503	286-3681	93	5	13
TYPED OR PRINTED		SIGNATURE OF PRINCIPAL EXECUTIVE OFFICER OR AUTHORIZED AGENT	AREA CODE	NUMBER	YEAR	MO	DAY

COMMENT AND EXPLANATION OF ANY VIOLATIONS *(Reference all attachments here)*

Koppers015646

GENERAL INSTRUCTIONS

1. If form has been partially completed by preprinting, disregard instructions directed at entry of that information already preprinted.
2. Enter "PERMITTEE NAME/MAILING ADDRESS (and facility name/location, if different)," "PERMIT NUMBER," and "DISCHARGE NUMBER" where indicated. (A separate form is required for each discharge.)
3. Enter dates beginning and ending "MONITORING PERIOD" covered by form where indicated.
4. Enter each "PARAMETER" as specified in monitoring requirements of permit.
5. Enter "SAMPLE MEASUREMENT" data for each parameter under "QUANTITY" and "QUALITY" in units specified in permit. "AVERAGE" is normally arithmetic average (geometric average for bacterial parameters) of all sample measurements for each parameter obtained during "MONITORING PERIOD." "MAXIMUM" and "MINIMUM" are normally extreme high and low measurements obtained during "MONITORING PERIOD." (NOTE: to municipals with secondary treatment requirement, enter 30-day average of sample measurements under "AVERAGE" and enter maximum 7-day average of sample measurements obtained during monitoring period under "MAXIMUM".
6. Enter "PERMIT REQUIREMENT" for each parameter under "QUANTITY" and "QUALITY" as specified in permit.
7. Under "NO. EX" enter number of sample measurements during monitoring period that exceed maximum (and/or minimum or 7-day average as appropriate) permit requirement for each parameter. If none, enter "0".
8. Enter "FREQUENCY OF ANALYSIS" both as "SAMPLE MEASUREMENT" (actual frequency of sampling and analysis used during monitoring period) and as "PERMIT REQUIREMENT" specified in permit. (e.g., Enter "CONT." for continuous monitoring. "1/7" for one day per week. "1/30" for one day per month. "1/90" for one day per quarter, etc.)
9. Enter "SAMPLE TYPE" both as "SAMPLE MEASUREMENT" (actual sample type used during monitoring period) and as "PERMIT REQUIREMENT." (e.g., Enter "GRAB" for individual sample. "24HC" for 24-hour composite. "N/A" for continuous monitoring, etc.)

(FOLD HERE FIRST)

10. WHERE VIOLATIONS OF PERMIT REQUIREMENTS ARE REPORTED, ATTACH A BRIEF EXPLANATION TO DESCRIBE CAUSE AND CORRECTIVE ACTIONS TAKEN, REFERENCE EACH VIOLATION BY DATE.
11. If "no discharge" occurs during monitoring period, enter "NO DISCHARGE" across form in place of data entry.
12. Enter "NAME/TITLE OF PRINCIPAL EXECUTIVE OFFICER" with "SIGNATURE OF PRINCIPAL EXECUTIVE OFFICER OR AUTHORIZED AGENT." "TELEPHONE NUMBER" and "DATE" at bottom of form.
13. Mail signed Report to Office(s) by date(s) specified in permit. Retain copy for your records.
14. More detailed instructions for use of this DISCHARGE MONITORING REPORT (DMR) form may be obtained from Office(s) specified in permit.

LEGAL NOTICE

This report is required by law (33 U.S.C. 1318: 40 C.F.R. 125.27). Failure to report or failure to report truthfully can result in civil penalties not to exceed $10,000 per day of violation; or in criminal penalties not to exceed $25,000 per day of violation, or by imprisonment for not more than one year, or by both.

FOLD HERE SECOND

FOLD HERE THIRD

STAPLE HERE

PLACE STAMP HERE

PERMITTEE NAME/ADDRESS (Include Facility Name/Location if different)

NAME: Koppers Industries Inc.

ADDRESS: 7540 N.W. St Helens Road, Portland, OR 97210

FACILITY: Northwest Plant

LOCATION: Multnomah County

NATIONAL POLLUTANT DISCHARGE ELIMINATION SYSTEM (NPDES)

DISCHARGE MONITORING REPORT (DMR)

Form Approved
OMB No. 2040-0004
Expires 3-31-88

PERMIT NUMBER (2-16)	DISCHARGE NUMBER (17-19)
OR-100077-9	001

3077-8
47430

MONITORING PERIOD	YEAR	MO	DAY		YEAR	MO	DAY
FROM	93	4	1	TO	93	4	30
	(20-21)	(22-23)	(24-25)		(26-27)	(28-29)	(30-31)

NOTE: Read instructions before completing this form.

PARAMETER (32-37)		(3 Card Only) QUANTITY OR LOADING (46-53) AVERAGE	(54-61) MAXIMUM	UNITS	(4 Card Only) QUALITY OR CONCENTRATION (38-45) MINIMUM	(46-53) AVERAGE	(54-61) MAXIMUM	UNITS	NO. EX (62-63)	FREQUENCY OF ANALYSIS (64-68)	SAMPLE TYPE (69-70)
Flow	SAMPLE MEASUREMENT	3000							N/R	2/30	Est.
	PERMIT REQUIREMENT		Est.	GRD							
Temp.	SAMPLE MEASUREMENT				55	57	59	°F	0	2/30	GRAB
	PERMIT REQUIREMENT						100				
Ph	SAMPLE MEASUREMENT				6.9	6.9	6.9		0	2/30	GRAB
	PERMIT REQUIREMENT				6.0		9.0	SU			
Oil + Grease	SAMPLE MEASUREMENT				0.8	0.85	0.9	mg/L	0	2/30	GRAB
	PERMIT REQUIREMENT					1.0	1.5				
Phenols	SAMPLE MEASUREMENT				0.14	0.14	0.14	mg/L	0	2/30	GRAB
	PERMIT REQUIREMENT					0.5	0.7	(PPM)			
	SAMPLE MEASUREMENT										
	PERMIT REQUIREMENT										
	SAMPLE MEASUREMENT										
	PERMIT REQUIREMENT										

NAME/TITLE PRINCIPAL EXECUTIVE OFFICER: JOHN A. OXFORD, PLANT MGR.

TYPED OR PRINTED

I CERTIFY UNDER PENALTY OF LAW THAT I HAVE PERSONALLY EXAMINED AND AM FAMILIAR WITH THE INFORMATION SUBMITTED HEREIN; AND BASED ON MY INQUIRY OF THOSE INDIVIDUALS IMMEDIATELY RESPONSIBLE FOR OBTAINING THE INFORMATION, I BELIEVE THE SUBMITTED INFORMATION IS TRUE, ACCURATE AND COMPLETE. I AM AWARE THAT THERE ARE SIGNIFICANT PENALTIES FOR SUBMITTING FALSE INFORMATION, INCLUDING THE POSSIBILITY OF FINE AND IMPRISONMENT. SEE 18 U.S.C § 1001 AND 33 U.S.C § 1319. *(Penalties under these statutes may include fines up to $10,000 and or maximum imprisonment of between 6 months and 5 years.)*

SIGNATURE OF PRINCIPAL EXECUTIVE OFFICER OR AUTHORIZED AGENT

TELEPHONE		DATE		
503	286-3681	93	5	13
AREA CODE	NUMBER	YEAR	MO	DAY

COMMENT AND EXPLANATION OF ANY VIOLATIONS *(Reference all attachments here)*

Koppers015648

aprie

	WW 3	WW4
flow	45000	45000 = 90,000 ÷ 30 = 3000
Temp	59	55 = 114 ÷ 2 = 57
Ph	6.9	6.9 = 13.8 ÷ 2 = 6.9
oil + Grease	0.9	0.8 = 1.7 ÷ 2 = 0.85
Phenols	0.14	0.14 = 0.28 ÷ 2 = 0.14

4-2-93
W-WT-3
PH 6.9

WATER TEMP
59

4-2-93
W-WT-3
PH 6.9

WATER TEMP 55°

COFFEY LABORATORIES INC.
12423 N.E. WHITAKER WAY, PORTLAND, OR 97230
(503) 254-1794 • FAX (503) 254-1452

CHAIN OF CUSTODY

COFFEY LABORATORIES - PENDLETON BRANCH
287 S.E. FIRST, PENDLETON, OR 97801
(503) 276-0385

PROJECT #:	PROJECT NAME:	P.O. #:	PAGE _____ of _____ PAGES PLEASE PRINT OR TYPE	FOR LABORATORY USE ONLY

COMPANY NAME: Koppers IND
REPORT ATTENTION: John OXFord
JOB #: W6930402-AK2
SAMPLES COLLECTED BY: Geo. HoFFman
CUSTABBR: Koppers

FIELD IDENTIFICATION: ONE LINE PER SAMPLE CONTAINER	LAB LOC	LAB ID	COLLECTION DATE	COLLECTION TIME	MEDIA	ANALYSIS REQUESTED	ANALYSIS REMARKS
W-W T-3			4-2-93	1:00PM		Oil & Grease	
W-W T-3			"	"		Phenols	
W-W T-4			"	"		Oil & Grease	
W-W T-4			"	"		Phenols	

RELINQUISHED BY: _____ DATE/TIME
RECEIVED BY: _____ DATE/TIME
LAB USE:

RELINQUISHED BY: George Hoffman DATE/TIME 4-2-93
RECEIVED BY LAB: Dorette Wh DATE/TIME 4/2/93 1530

SAMPLE REMARKS: 3:30PM
LEVEL 1 2 3 4
EXPRESS UPS MAIL CXX GREY TAXI LAB

WHITE COPY - COFFEY LABORATORIES
PINK COPY - CLIENTS COPY

SHADED AREA FOR LABORATORY USE ONLY
CHAIN OF CUSTODY INSTRUCTIONS ON BACK OF PINK COPY

(7/90)

Koppers015652

COFFEY LABORATORIES, INC.

CHAIN OF CUSTODY INFORMATION / INSTRUCTIONS SHEET

PROJECT NUMBER — *Applies only to samples submitted by the company. This data is provided at the companies discretion.*

PROJECT NAME — *Your company's project name. This data is provided at the companies discretion.*

COMPANY NAME — *Name of the Company or individual requesting the analysis from Coffey Laboratories, Inc.*

REPORT ATTENTION — *Name of the person who receives the laboratory report.*

SAMPLE COLLECTED BY — *The person who took the sample signs this box and gives his/her title.*

FIELD ID — *A short description of the sample point (For example: "Effluent from sand filter"). This description will appear on the report. Use one line per sample bottle.*

COLLECTION DATE — *The date on which the sample(s) was/were collected.*

COLLECTION TIME — *The time at which the sample(s) was/were collected.*

MEDIA — *This is a description of the sample matrix.*

ANALYSIS REQUESTED — *Make one column for each parameter or group of parameters associated to a bottle.*

FOR LAB USE ONLY — *Do not mark in this area (Laboratory location & iD). All shaded areas are for laboratory use only. Please do not write in these areas.*

REMARKS — *Record any comments about each sample on the same line as the sample description, e.g., "Wastewater contains VOCs".*

RELINQUISHED BY — *The sampler signs this box when he/she gives the sample to someone else, and then fills in the date and time they left his possession.*

RECEIVED BY — *The person who receives the samples signs here and fills in the date and time received. The date and time should be the same as the last one unless the samples were shipped.*

SAMPLE REMARKS — *Record any comments regarding the sample(s) as a whole or information pertinent to the sample.*

SAMPLES SHIPPED VIA — *How the samples are being shipped to the laboratory, e.g., "UPS".*

RECEIVED
APR 19 1993
KOPPERS INDS., INC.
PORTLAND, OR

Report Date: April 15, 1993
Job#: WG-930402AK-2
PO#: VERBAL JOHN
Project#: None Provided
Project: None Provided

Attention: John Oxford
Koppers Industry
7540 NW St. Helens Rd.
Portland, OR 97210

SAMPLE INFORMATION:
Date Samples Were Received By Laboratory: 04/02/93

Lab No.	Field Identification	Sample Matrix	Date	Time
1	W-W-T-3	Waste Water	04-02-93	1400
2	W-W-T-4	Waste Water	04-02-93	1400

ANALYTICAL RESULTS:

PARAMETER	METHOD	DETECTION LIMITS	W-W-T-3 RESULTS	W-W-T-4 RESULTS
Oil & Grease	EPA 413.2	0.5	0.9	0.8
Total Phenols	EPA 420.1	0.05	0.14	0.14

Results expressed as mg/L unless otherwise noted.

Sincerely,

Susan M. Coffey
President

SMC/mlh

This report is for the sole and exclusive use of the above-named client. Samples are retained 15 days from the report date, or until holding time expires. Results pertain only to samples submitted.

COFFEY LABORATORIES, INC.
12423 N.E. Whitaker Way • Portland, OR • 97230 • (503) 254-1794 • FAX (503) 254-1452

UNITED STATES POSTAL SERVICE

OFFICIAL BUSINESS

SENDER INSTRUCTIONS

Print your name, address, and ZIP Code in the space below.

- **Complete items 1, 2, 3, and 4 on the reverse.**
- **Attach to front of article if space permits, otherwise affix to back of article.**
- **Endorse article "Return Receipt Requested" adjacent to number.**

U.S.MAIL

PENALTY FOR PRIVATE USE, $300

RETURN TO

KOPPERS INDUSTRIES INC

(Name of Sender)

7540 NW ST HELENS RD

(No. and Street, Apt., Suite, P.O. Box or R.D. No.)

PORTLAND OR 97210

(City, State, and ZIP Code)

PS Form 3811, July 1983 447-845

DOMESTIC RETURN RECEIPT

SENDER: Complete items 1, 2, 3 and 4.

Put your address in the "RETURN TO" space on the reverse side. Failure to do this will prevent this card from being returned to you. The return receipt fee will provide you the name of the person delivered to and the date of delivery. For additional fees the following services are available. Consult postmaster for fees and check box(es) for service(s) requested.

1. ☒ Show to whom, date and address of delivery.
2. ☐ Restricted Delivery.

3. Article Addressed to:

MR. GEO DAVIS
D.E.Q. NORTHWEST REG. OFFICE
CROWN PLAZA BUILDING
1500 SW 1ST SUITE 750
PORTLAND OR 97201-5884

4. Type of Service:

☐ Registered ☐ Insured
☒ Certified ☐ COD
☐ Express Mail

Article Number: 426973214

Always obtain signature of addressee or agent and DATE DELIVERED.

5. Signature – Addressee

X R. K. Kosnik

6. Signature – Agent

X

7. Date of Delivery

4-15-93

8. Addressee's Address *(ONLY if requested and fee paid)*

PERMITTEE NAME/ADDRESS (Include Facility Name/Location if different)

NAME KOPPERS INDUSTRIES INC

ADDRESS 7540 NW ST HELENS RD
PORTLAND OR 97210

FACILITY NORTHWEST PLANT

LOCATION MULTNOMAH COUNTY

NATIONAL POLLUTANT DISCHARGE ELIMINATION SYSTEM (NPDES)

DISCHARGE MONITORING REPORT (DMR)

Form Approved
OMB No. 2040-0004
Expires 3-31-88

PERMIT NUMBER (2-16)	DISCHARGE NUMBER (17-19)
OR-100077-9	0001

3077-J
47430

MONITORING PERIOD	YEAR	MO	DAY		YEAR	MO	DAY
FROM	93	3	1	TO	93	3	31
	(20-21)	(22-23)	(24-25)		(26-27)	(28-29)	(30-31)

NOTE: Read instructions before completing this form.

PARAMETER (32-37)		(3 Card Only) QUANTITY OR LOADING (46-53) AVERAGE	(54-61) MAXIMUM	UNITS	(4 Card Only) QUALITY OR CONCENTRATION (38-45) MINIMUM	(46-53) AVERAGE	(54-61) MAXIMUM	UNITS	NO. EX (62-63)	FREQUENCY OF ANALYSIS (64-68)	SAMPLE TYPE (69-70)
FLOW	SAMPLE MEASUREMENT	2903							N/A	2/31	EST
	PERMIT REQUIREMENT		EST	GRD							
TEMP	SAMPLE MEASUREMENT				63	64	65	°F	0	2/31	GRAB
	PERMIT REQUIREMENT						100				
PH	SAMPLE MEASUREMENT				6.8	6.85	6.9		0	2/31	GRAB
	PERMIT REQUIREMENT				6.0		9.0	SU			
OIL & GREASE	SAMPLE MEASUREMENT				0	0.3	0.6	MG/L	0	2/31	GRAB
	PERMIT REQUIREMENT					10	15				
PHENOLS	SAMPLE MEASUREMENT				0	0.03	0.06	MG/L	0	2/31	GRAB
	PERMIT REQUIREMENT					0.5	0.7	(PPM)			
	SAMPLE MEASUREMENT										
	PERMIT REQUIREMENT										
	SAMPLE MEASUREMENT										
	PERMIT REQUIREMENT										

NAME/TITLE PRINCIPAL EXECUTIVE OFFICER

JOHN A OXFORD
PLANT MANAGER

TYPED OR PRINTED

I CERTIFY UNDER PENALTY OF LAW THAT I HAVE PERSONALLY EXAMINED AND AM FAMILIAR WITH THE INFORMATION SUBMITTED HEREIN; AND BASED ON MY INQUIRY OF THOSE INDIVIDUALS IMMEDIATELY RESPONSIBLE FOR OBTAINING THE INFORMATION, I BELIEVE THE SUBMITTED INFORMATION IS TRUE, ACCURATE AND COMPLETE. I AM AWARE THAT THERE ARE SIGNIFICANT PENALTIES FOR SUBMITTING FALSE INFORMATION, INCLUDING THE POSSIBILITY OF FINE AND IMPRISONMENT. SEE 18 U.S.C § 1001 AND 33 U.S.C § 1319. *(Penalties under these statutes may include fines up to $10,000 and/or maximum imprisonment of between 6 months and 5 years.)*

John A Oxford

SIGNATURE OF PRINCIPAL EXECUTIVE OFFICER OR AUTHORIZED AGENT

TELEPHONE AREA CODE	NUMBER	DATE YEAR	MO	DAY
503	286-3681	93	4	14

COMMENT AND EXPLANATION OF ANY VIOLATIONS *(Reference all attachments here)*

Koppers015657

GENERAL INSTRUCTIONS

1. If form has been partially completed by preprinting, disregard instructions directed at entry of that information already preprinted.
2. Enter "PERMITTEE NAME/MAILING ADDRESS (and facility name/location, if different)," "PERMIT NUMBER," and "DISCHARGE NUMBER" where indicated. (A separate form is required for each discharge.)
3. Enter dates beginning and ending "MONITORING PERIOD" covered by form where indicated.
4. Enter each "PARAMETER" as specified in monitoring requirements of permit.
5. Enter "SAMPLE MEASUREMENT" data for each parameter under "QUANTITY" and "QUALITY" in units specified in permit. "AVERAGE" is normally arithmetic average (geometric average for bacterial parameters) of all sample measurements for each parameter obtained during "MONITORING PERIOD." "MAXIMUM" and "MINIMUM" are normally extreme high and low measurements obtained during "MONITORING PERIOD." (NOTE: to municipals with secondary treatment requirement, enter 30-day average of sample measurements under "AVERAGE" and enter maximum 7-day average of sample measurements obtained during monitoring period under "MAXIMUM".
6. Enter "PERMIT REQUIREMENT" for each parameter under "QUANTITY" and "QUALITY" as specified in permit.
7. Under "NO. EX" enter number of sample measurements during monitoring period that exceed maximum (and/or minimum or 7-day average as appropriate) permit requirement for each parameter. If none, enter "0".
8. Enter "FREQUENCY OF ANALYSIS" both as "SAMPLE MEASUREMENT" (actual frequency of sampling and analysis used during monitoring period) and as "PERMIT REQUIREMENT" specified in permit. (e.g., Enter "CONT." for continuous monitoring. "1/7" for one day per week. "1/30" for one day per month. "1/90" for one day per quarter, etc.)
9. Enter "SAMPLE TYPE" both as "SAMPLE MEASUREMENT" (actual sample type used during monitoring period) and as "PERMIT REQUIREMENT." (e.g., Enter "GRAB" for individual sample. "24HC" for 24-hour composite. "N/A" for continuous monitoring, etc.)

(FOLD HERE FIRST)

10. WHERE VIOLATIONS OF PERMIT REQUIREMENTS ARE REPORTED, ATTACH A BRIEF EXPLANATION TO DESCRIBE CAUSE AND CORRECTIVE ACTIONS TAKEN. REFERENCE EACH VIOLATION BY DATE.
11. If "no discharge" occurs during monitoring period, enter "NO DISCHARGE" across form in place of data entry.
12. Enter "NAME/TITLE OF PRINCIPAL EXECUTIVE OFFICER" with "SIGNATURE OF PRINCIPAL EXECUTIVE OFFICER OR AUTHORIZED AGENT." "TELEPHONE NUMBER" and "DATE" at bottom of form.
13. Mail signed Report to Office(s) by date(s) specified in permit. Retain copy for your records.
14. More detailed instructions for use of this DISCHARGE MONITORING REPORT (DMR) form may be obtained from Office(s) specified in permit.

LEGAL NOTICE

This report is required by law (33 U.S.C. 1318; 40 C.F.R. 125.27). Failure to report or failure to report truthfully can result in civil penalties not to exceed $10,000 per day of violation; or in criminal penalties not to exceed $25,000 per day of violation, or by imprisonment for not more than one year, or by both.

FOLD HERE SECOND

PLACE STAMP HERE

FOLD HERE THIRD

STAPLE HERE

Transcd.

	WW1	WW2
flow.	45000	45000 = 90,000 ÷ 31 = 29030
Temp.	65	63 = 128 ÷ 2 = 64
P.h.	6.9	6.8 = 13.7 ÷ 2 = 6.85
oil + grease.	0	0.6 = 0.6 ÷ 2 = 0.3
Phenols.	0	0.06 = 0.06 ÷ 2 = 0.03

PERMITTEE NAME/ADDRESS (Include Facility Name/Location if different)
NAME KOPPERS INDUSTRIES INC
ADDRESS 3540 NW 46 HELENS RD
PORTLAND OR 97210

FACILITY NORTH WEST PLANT
LOCATION MULTNOMAH COUNTY

NATIONAL POLLUTANT DISCHARGE ELIMINATION SYSTEM (NPDES)
DISCHARGE MONITORING REPORT (DMR)

(2-16) PERMIT NUMBER	(17-19) DISCHARGE NUMBER
OR-100077-9	0001

3077-J
47430

MONITORING PERIOD	YEAR	MO	DAY		YEAR	MO	DAY
FROM	93	3	1	TO	93	3	31
	(20-21)	(22-23)	(24-25)		(26-27)	(28-29)	(30-31)

Form Approved
OMB No. 2040-0004
Expires 3-31-88

NOTE: Read instructions before completing this form.

PARAMETER (32-37)		(3 Card Only) (46-53) QUANTITY OR LOADING (54-61) AVERAGE	MAXIMUM	UNITS	(4 Card Only) (38-45) QUALITY OR CONCENTRATION (46-53) MINIMUM	AVERAGE	(54-61) MAXIMUM	UNITS	NO. EX (62-63)	FREQUENCY OF ANALYSIS (64-68)	SAMPLE TYPE (69-70)
Flow.	SAMPLE MEASUREMENT	2903							N/A	2/31	Est.
	PERMIT REQUIREMENT		Est.	GRD							
Temp.	SAMPLE MEASUREMENT				63	64	65	°F	0	2/31	GRAB
	PERMIT REQUIREMENT						110				
Ph.	SAMPLE MEASUREMENT				6.8	6.85	6.9		0	2/31	GRAB
	PERMIT REQUIREMENT				6.0		9.0	SU			
oil + grease	SAMPLE MEASUREMENT				0	0.3	0.6	mg/L	0	2/31	GRAB
	PERMIT REQUIREMENT					10	15				
Phenols	SAMPLE MEASUREMENT				0	0.03	0.06	mg/L	0	2/31	GRAB
	PERMIT REQUIREMENT					0.5	0.7	(PPM)			
	SAMPLE MEASUREMENT										
	PERMIT REQUIREMENT										
	SAMPLE MEASUREMENT										
	PERMIT REQUIREMENT										

NAME/TITLE PRINCIPAL EXECUTIVE OFFICER
JOHN OXFORD
PLANT MGR.
TYPED OR PRINTED

I CERTIFY UNDER PENALTY OF LAW THAT I HAVE PERSONALLY EXAMINED AND AM FAMILIAR WITH THE INFORMATION SUBMITTED HEREIN; AND BASED ON MY INQUIRY OF THOSE INDIVIDUALS IMMEDIATELY RESPONSIBLE FOR OBTAINING THE INFORMATION, I BELIEVE THE SUBMITTED INFORMATION IS TRUE, ACCURATE AND COMPLETE. I AM AWARE THAT THERE ARE SIGNIFICANT PENALTIES FOR SUBMITTING FALSE INFORMATION, INCLUDING THE POSSIBILITY OF FINE AND IMPRISONMENT. SEE 18 U.S.C. § 1001 AND 33 U.S.C § 1319. *(Penalties under these statutes may include fines up to $10,000 and or maximum imprisonment of between 6 months and 5 years.)*

SIGNATURE OF PRINCIPAL EXECUTIVE OFFICER OR AUTHORIZED AGENT

TELEPHONE		DATE		
503	286 3681	93	4	14
AREA CODE	NUMBER	YEAR	MO	DAY

COMMENT AND EXPLANATION OF ANY VIOLATIONS *(Reference all attachments here)*

Koppers015660

3-2-93

w-w-T-2

Ph 6.8

water

Temp.

17°C

63°F

3-2-93

W-W-T-1

Ph 6.9

water

Temp. 18°C

65°F

COFFEY LABORATORIES INC.
12423 N.E. WHITAKER WAY, PORTLAND, OR 97230
(503) 254-1794 • FAX (503) 254-1452

CHAIN OF CUSTODY

COFFEY LABORATORIES - PENDLETON BRANCH
287 S.E. FIRST, PENDLETON, OR 97801
(503) 276-0385

PROJECT #:	PROJECT NAME:	P.O. #:	PAGE _____ of _____ PAGES PLEASE PRINT OR TYPE	FOR LABORATORY USE ONLY
COMPANY NAME: Koppers Ind REPORT ATTENTION: John Oxford				JOB #: LOC 93-0302-1513
SAMPLES COLLECTED BY: Geo. Hoffman				CUSTABBR: Koppers

FIELD IDENTIFICATION: ONE LINE PER SAMPLE CONTAINER	LAB LOC	LAB ID	COLLECTION DATE	COLLECTION TIME	MEDIA	ANALYSIS REQUESTED	ANALYSIS REMARKS
W-W T-1			3-2-93	2:15PM		oil + Grease	
W-W T-1			"	"		Phenols	
W-W T 2			"	"		oil + Grease	
W-W T 2			"	"		Phenols	
P.A.H. T-1			"	"		P.A.H.	

RELINQUISHED BY:	DATE/TIME	RECEIVED BY:	DATE/TIME	LAB USE
RELINQUISHED BY: George Hoffman	DATE/TIME 3-2-93	RECEIVED BY LAB: [illegible]	DATE/TIME 3/2/93 1635	
SAMPLE REMARKS:		LEVEL 1 2 3 4	EXPRESS UPS MAIL CX GREY FAX LAB	

WHITE COPY - COFFEY LABORATORIES

PINK COPY - CLIENTS COPY

SHADED AREA FOR LABORATORY USE ONLY

CHAIN OF CUSTODY INSTRUCTIONS ON BACK OF PINK COPY

(7/90)

Koppers015663

COFFEY LABORATORIES INC.
12423 N.E. WHITAKER WAY, PORTLAND, OR 97230
(503) 254-1794 • FAX (503) 254-1452

CHAIN OF CUSTODY

COFFEY LABORATORIES - PENDLETON BRANCH
287 S.E. FIRST, PENDLETON, OR 97801
(503) 276-0385

PROJECT #:	PROJECT NAME:	P.O. #:	PAGE _____ of _____ PAGES PLEASE PRINT OR TYPE	FOR LABORATORY USE ONLY

COMPANY NAME: Koppers Ind
REPORT ATTENTION: John Oxford
JOB #: WG 936302-AYB
SAMPLES COLLECTED BY: Geo. Hoffman
CUSTABBR: Koppers

FIELD IDENTIFICATION: ONE LINE PER SAMPLE CONTAINER	LAB LOC	LAB ID	COLLECTION DATE	COLLECTION TIME	MEDIA	ANALYSIS REQUESTED	ANALYSIS REMARKS
W.W T-1			3-2-93	2:15 PM		oil + Grease	
W-W T-1			"	"		Phenols	
W-W T 2			"	"		oil + Grease	
W-W T 2			"	"		Phenols	
P.A.H. T-1			"	"		P.A.H.	

RELINQUISHED BY:	DATE/TIME	RECEIVED BY:	DATE/TIME	LAB USE:
RELINQUISHED BY: George Hoffman	DATE/TIME 3-2-93	RECEIVED BY LAB: [illegible]	DATE/TIME 3/2/93 1135	

SAMPLE REMARKS:

LEVEL 1 2 3 4 EXPRESS UPS MAIL CXX GREY TAXI LAB

WHITE COPY - COFFEY LABORATORIES

PINK COPY - CLIENTS COPY

SHADED AREA FOR LABORATORY USE ONLY
CHAIN OF CUSTODY INSTRUCTIONS ON BACK OF PINK COPY

(7/90)

Koppers015664

COFFEY LABORATORIES, INC.

CHAIN OF CUSTODY INFORMATION / INSTRUCTIONS SHEET

PROJECT NUMBER — *Applies only to samples submitted by the company. This data is provided at the companies discretion.*

PROJECT NAME — *Your company's project name. This data is provided at the companies discretion.*

COMPANY NAME — *Name of the Company or individual requesting the analysis from Coffey Laboratories, Inc.*

REPORT ATTENTION — *Name of the person who receives the laboratory report.*

SAMPLE COLLECTED BY — *The person who took the sample signs this box and gives his/her title.*

FIELD ID — *A short description of the sample point (For example: "Effluent from sand filter"). This description will appear on the report. Use one line per sample bottle.*

COLLECTION DATE — *The date on which the sample(s) was/were collected.*

COLLECTION TIME — *The time at which the sample(s) was/were collected.*

MEDIA — *This is a description of the sample matrix.*

ANALYSIS REQUESTED — *Make one column for each parameter or group of parameters associated to a bottle.*

FOR LAB USE ONLY — *Do not mark in this area (Laboratory location & ID). All shaded areas are for laboratory use only. Please do not write in these areas.*

REMARKS — *Record any comments about each sample on the same line as the sample description, e.g., "Wastewater contains VOCs".*

RELINQUISHED BY — *The sampler signs this box when he/she gives the sample to someone else, and then fills in the date and time they left his possession.*

RECEIVED BY — *The person who receives the samples signs here and fills in the date and time received. The date and time should be the same as the last one unless the samples were shipped.*

SAMPLE REMARKS — *Record any comments regarding the sample(s) as a whole or information pertinent to the sample.*

SAMPLES SHIPPED VIA — *How the samples are being shipped to the laboratory, e.g., "UPS".*

PERMITTEE NAME/ADDRESS (Include Facility Name/Location if different)
NAME KOPPERS INDUSTRIES INC.
ADDRESS 7540 N.W. ST. HELENS RD.
PORTLAND, OR 97210

FACILITY NORTHWEST PLANT
LOCATION MULTNOMAH COUNTY

NATIONAL POLLUTANT DISCHARGE ELIMINATION SYSTEM (NPDES)
DISCHARGE MONITORING REPORT (DMR)

(2-16) OR-100077-9 — PERMIT NUMBER
(17-19) 0001 — DISCHARGE NUMBER

Form Approved
OMB No. 2040-0004
Expires 3-31-88

3077-J

47430

MONITORING PERIOD	YEAR	MO	DAY		YEAR	MO	DAY
FROM	93	02	01	TO	93	02	28
	(20-21)	(22-23)	(24-25)		(26-27)	(28-29)	(30-31)

NOTE: Read instructions before completing this form.

PARAMETER (32-37)		(3 Card Only) (46-53) QUANTITY OR LOADING (54-61) AVERAGE	MAXIMUM	UNITS	(4 Card Only) (38-45) QUALITY OR CONCENTRATION (46-53) MINIMUM	AVERAGE	(54-61) MAXIMUM	UNITS	NO. EX (62-63)	FREQUENCY OF ANALYSIS (64-68)	SAMPLE TYPE (69-70)
FLOW	SAMPLE MEASUREMENT	NO FLOW									
	PERMIT REQUIREMENT										
TEMP	SAMPLE MEASUREMENT				NO FLOW						
	PERMIT REQUIREMENT										
PH	SAMPLE MEASUREMENT				NO FLOW						
	PERMIT REQUIREMENT										
OIL & GREASE	SAMPLE MEASUREMENT				NO FLOW						
	PERMIT REQUIREMENT										
PHENOLS	SAMPLE MEASUREMENT				NO FLOW						
	PERMIT REQUIREMENT										
	SAMPLE MEASUREMENT										
	PERMIT REQUIREMENT										
	SAMPLE MEASUREMENT										
	PERMIT REQUIREMENT										

NAME/TITLE PRINCIPAL EXECUTIVE OFFICER
JOHN A. OXFORD
PLANT MANAGER
TYPED OR PRINTED

I CERTIFY UNDER PENALTY OF LAW THAT I HAVE PERSONALLY EXAMINED AND AM FAMILIAR WITH THE INFORMATION SUBMITTED HEREIN; AND BASED ON MY INQUIRY OF THOSE INDIVIDUALS IMMEDIATELY RESPONSIBLE FOR OBTAINING THE INFORMATION, I BELIEVE THE SUBMITTED INFORMATION IS TRUE, ACCURATE AND COMPLETE. I AM AWARE THAT THERE ARE SIGNIFICANT PENALTIES FOR SUBMITTING FALSE INFORMATION, INCLUDING THE POSSIBILITY OF FINE AND IMPRISONMENT. SEE 18 U.S.C. § 1001 AND 33 U.S.C § 1319. *(Penalties under these statutes may include fines up to $10,000 and/or maximum imprisonment of between 6 months and 5 years.)*

John A Oxford
SIGNATURE OF PRINCIPAL EXECUTIVE OFFICER OR AUTHORIZED AGENT

TELEPHONE		DATE		
AREA CODE	NUMBER	YEAR	MO	DAY
503	286-3681	93	3	12

COMMENT AND EXPLANATION OF ANY VIOLATIONS *(Reference all attachments here)*

Koppers015666

GENERAL INSTRUCTIONS

1. If form has been partially completed by preprinting, disregard instructions directed at entry of that information already preprinted.
2. Enter "PERMITTEE NAME/MAILING ADDRESS (and facility name/location, if different)," "PERMIT NUMBER," and "DISCHARGE NUMBER" where indicated. (A separate form is required for each discharge.)
3. Enter dates beginning and ending "MONITORING PERIOD" covered by form where indicated.
4. Enter each "PARAMETER" as specified in monitoring requirements of permit.
5. Enter "SAMPLE MEASUREMENT" data for each parameter under "QUANTITY" and "QUALITY" in units specified in permit. "AVERAGE" is normally arithmetic average (geometric average for bacterial parameters) of all sample measurements for each parameter obtained during "MONITORING PERIOD." "MAXIMUM" and "MINIMUM" are normally extreme high and low measurements obtained during "MONITORING PERIOD." (NOTE: to municipals with secondary treatment requirement, enter 30-day average of sample measurements under "AVERAGE" and enter maximum 7-day average of sample measurements obtained during monitoring period under "MAXIMUM".
6. Enter "PERMIT REQUIREMENT" for each parameter under "QUANTITY" and "QUALITY" as specified in permit.
7. Under "NO. EX" enter number of sample measurements during monitoring period that exceed maximum (and/or minimum or 7-day average as appropriate) permit requirement for each parameter. If none, enter "0".
8. Enter "FREQUENCY OF ANALYSIS" both as "SAMPLE MEASUREMENT" (actual frequency of sampling and analysis used during monitoring period) and as "PERMIT REQUIREMENT" specified in permit. (e.g., Enter "CONT." for continuous monitoring. "1/7" for one day per week. "1/30" for one day per month. "1/90" for one day per quarter, etc.)
9. Enter "SAMPLE TYPE" both as "SAMPLE MEASUREMENT" (actual sample type used during monitoring period) and as "PERMIT REQUIREMENT." (e.g., Enter "GRAB" for individual sample. "24HC" for 24-hour composite. "N/A" for continuous monitoring, etc.)

(FOLD HERE FIRST)

10. WHERE VIOLATIONS OF PERMIT REQUIREMENTS ARE REPORTED, ATTACH A BRIEF EXPLANATION TO DESCRIBE CAUSE AND CORRECTIVE ACTIONS TAKEN. REFERENCE EACH VIOLATION BY DATE.
11. If "no discharge" occurs during monitoring period, enter "NO DISCHARGE" across form in place of data entry.
12. Enter "NAME/TITLE OF PRINCIPAL EXECUTIVE OFFICER" with "SIGNATURE OF PRINCIPAL EXECUTIVE OFFICER OR AUTHORIZED AGENT." "TELEPHONE NUMBER" and "DATE" at bottom of form.
13. Mail signed Report to Office(s) by date(s) specified in permit. Retain copy for your records.
14. More detailed instructions for use of this DISCHARGE MONITORING REPORT (DMR) form may be obtained from Office(s) specified in permit.

LEGAL NOTICE

This report is required by law (33 U.S.C. 1318; 40 C.F.R. 125.27). Failure to report or failure to report truthfully can result in civil penalties not to exceed $10,000 per day of violation; or in criminal penalties not to exceed $25,000 per day of violation, or by imprisonment for not more than one year, or by both.

FOLD HERE SECOND

PLACE STAMP HERE

FOLD HERE THIRD

STAPLE HERE

PERMITTEE NAME/ADDRESS (Include Facility Name/Location if different)

NAME ~~KOPPERS INDUSTRIES INC~~

ADDRESS ~~7540 NW ST HELENS RD~~
~~PORTLAND OR 97210~~

FACILITY ~~NORTHWEST PLANT~~

LOCATION MULTNOMAH COUNTY

NATIONAL POLLUTANT DISCHARGE ELIMINATION SYSTEM (NPDES)

DISCHARGE MONITORING REPORT (DMR)

Form Approved
OMB No. 2040-0004
Expires 3-31-88

(2-16) PERMIT NUMBER: OR-100077-9

(17-19) DISCHARGE NUMBER: 0001

3077-J

47430

MONITORING PERIOD	YEAR	MO	DAY		YEAR	MO	DAY
FROM	93	01	01	TO	93	01	31
	(20-21)	(22-23)	(24-25)		(26-27)	(28-29)	(30-31)

NOTE: Read instructions before completing this form.

PARAMETER (32-37)		(3 Card Only) QUANTITY OR LOADING (46-53) AVERAGE	(54-61) MAXIMUM	UNITS	(4 Card Only) QUALITY OR CONCENTRATION (38-45) MINIMUM	(46-53) AVERAGE	(54-61) MAXIMUM	UNITS	NO. EX (62-63)	FREQUENCY OF ANALYSIS (64-68)	SAMPLE TYPE (69-70)
FLOW	SAMPLE MEASUREMENT	NO FLOW									
	PERMIT REQUIREMENT										
TEMP	SAMPLE MEASUREMENT				NO FLOW						
	PERMIT REQUIREMENT										
PH	SAMPLE MEASUREMENT				NO FLOW						
	PERMIT REQUIREMENT										
OIL & GREASE	SAMPLE MEASUREMENT				NO FLOW						
	PERMIT REQUIREMENT										
PHENOLS	SAMPLE MEASUREMENT				NO FLOW						
	PERMIT REQUIREMENT										
	SAMPLE MEASUREMENT										
	PERMIT REQUIREMENT										
	SAMPLE MEASUREMENT										
	PERMIT REQUIREMENT										

NAME/TITLE PRINCIPAL EXECUTIVE OFFICER

JOHN A. OXFORD
PLANT MANAGER

TYPED OR PRINTED

I CERTIFY UNDER PENALTY OF LAW THAT I HAVE PERSONALLY EXAMINED AND AM FAMILIAR WITH THE INFORMATION SUBMITTED HEREIN; AND BASED ON MY INQUIRY OF THOSE INDIVIDUALS IMMEDIATELY RESPONSIBLE FOR OBTAINING THE INFORMATION, I BELIEVE THE SUBMITTED INFORMATION IS TRUE, ACCURATE AND COMPLETE. I AM AWARE THAT THERE ARE SIGNIFICANT PENALTIES FOR SUBMITTING FALSE INFORMATION, INCLUDING THE POSSIBILITY OF FINE AND IMPRISONMENT. SEE 18 U.S.C § 1001 AND 33 U.S.C § 1319. *(Penalties under these statutes may include fines up to $10,000 and or maximum imprisonment of between 6 months and 5 years.)*

SIGNATURE OF PRINCIPAL EXECUTIVE OFFICER OR AUTHORIZED AGENT

John A Oxford

TELEPHONE		DATE		
503	286-3681	93	2	12
AREA CODE	NUMBER	YEAR	MO	DAY

COMMENT AND EXPLANATION OF ANY VIOLATIONS *(Reference all attachments here)*

Koppers015668

GENERAL INSTRUCTIONS

1. If form has been partially completed by preprinting, disregard instructions directed at entry of that information already preprinted.
2. Enter "PERMITTEE NAME/MAILING ADDRESS (and facility name/location, if different)," "PERMIT NUMBER," and "DISCHARGE NUMBER," where indicated. (A separate form is required for each discharge.)
3. Enter dates beginning and ending "MONITORING PERIOD" covered by form where indicated.
4. Enter each "PARAMETER" as specified in monitoring requirements of permit.
5. Enter "SAMPLE MEASUREMENT" data for each parameter under "QUANTITY" and "QUALITY" in units specified in permit. "AVERAGE" is normally arithmetic average (geometric average for bacterial parameters) of all sample measurements for each parameter obtained during "MONITORING PERIOD." "MAXIMUM" and "MINIMUM" are normally extreme high and low measurements obtained during "MONITORING PERIOD." (NOTE: to municipals with secondary treatment requirement, enter 30-day average of sample measurements under "AVERAGE" and enter maximum 7-day average of sample measurements obtained during monitoring period under "MAXIMUM".
6. Enter "PERMIT REQUIREMENT" for each parameter under "QUANTITY" and "QUALITY" as specified in permit.
7. Under "NO. EX" enter number of sample measurements during monitoring period that exceed maximum (and/or minimum or 7-day average as appropriate) permit requirement for each parameter. If none, enter "0".
8. Enter "FREQUENCY OF ANALYSIS" both as "SAMPLE MEASUREMENT" (actual frequency of sampling and analysis used during monitoring period) and as "PERMIT REQUIREMENT" specified in permit. (e.g., Enter "CONT." for continuous monitoring. "1/7" for one day per week. "1/30" for one day per month. "1/90" for one day per quarter, etc.)
9. Enter "SAMPLE TYPE" both as "SAMPLE MEASUREMENT" (actual sample type used during monitoring period) and as "PERMIT REQUIREMENT." (e.g., Enter "GRAB" for individual sample. "24HC" for 24-hour composite. "N/A" for continuous monitoring, etc.)

(FOLD HERE FIRST)

10. WHERE VIOLATIONS OF PERMIT REQUIREMENTS ARE REPORTED, ATTACH A BRIEF EXPLANATION TO DESCRIBE CAUSE AND CORRECTIVE ACTIONS TAKEN. REFERENCE EACH VIOLATION BY DATE.
11. If "no discharge" occurs during monitoring period, enter "NO DISCHARGE" across form in place of data entry.
12. Enter "NAME/TITLE OF PRINCIPAL EXECUTIVE OFFICER" with "SIGNATURE OF PRINCIPAL EXECUTIVE OFFICER OR AUTHORIZED AGENT." "TELEPHONE NUMBER" and "DATE" at bottom of form.
13. Mail signed Report to Office(s) by date(s) specified in permit. Retain copy for your records.
14. More detailed instructions for use of this DISCHARGE MONITORING REPORT (DMR) form may be obtained from Office(s) specified in permit.

LEGAL NOTICE

This report is required by law (33 U.S.C. 1318; 40 C.F.R. 125.27). Failure to report or failure to report truthfully can result in civil penalties not to exceed $10,000 per day of violation; or in criminal penalties not to exceed $25,000 per day of violation, or by imprisonment for not more than one year, or by both.

FOLD HERE SECOND

PLACE STAMP HERE

FOLD HERE THIRD

STAPLE HERE

Koppers015669

PERMITTEE NAME/ADDRESS (Include Facility Name/Location if different)

NAME: Koppers Industries Inc.

ADDRESS: 7340 N.W. St Helens Rd
Portland OR 97210

FACILITY: N.W. Plant

LOCATION: Multnomah County

NATIONAL POLLUTANT DISCHARGE ELIMINATION SYSTEM (NPDES)

DISCHARGE MONITORING REPORT (DMR)

Form Approved
OMB No. 2040-0004
Expires 3-31-88

PERMIT NUMBER (2-16)	DISCHARGE NUMBER (17-19)
OR-100077-9	0001

3077-J
47438

MONITORING PERIOD

	YEAR	MO	DAY		YEAR	MO	DAY
FROM	93	1	01	TO	93	01	31
	(20-21)	(22-23)	(24-25)		(26-27)	(28-29)	(30-31)

NOTE: Read instructions before completing this form.

PARAMETER (32-37)		(3 Card Only) QUANTITY OR LOADING (46-53) AVERAGE	(54-61) MAXIMUM	UNITS	(4 Card Only) QUALITY OR CONCENTRATION (38-45) MINIMUM	(46-53) AVERAGE	(54-61) MAXIMUM	UNITS	NO. EX (62-63)	FREQUENCY OF ANALYSIS (64-68)	SAMPLE TYPE (69-70)
Flow	SAMPLE MEASUREMENT	No flow									
	PERMIT REQUIREMENT										
temp	SAMPLE MEASUREMENT				no flow						
	PERMIT REQUIREMENT										
Ph.	SAMPLE MEASUREMENT				no flow						
	PERMIT REQUIREMENT										
oil & grease	SAMPLE MEASUREMENT				no flow						
	PERMIT REQUIREMENT										
Phenols	SAMPLE MEASUREMENT				no flow						
	PERMIT REQUIREMENT										
	SAMPLE MEASUREMENT										
	PERMIT REQUIREMENT										
	SAMPLE MEASUREMENT										
	PERMIT REQUIREMENT										

NAME/TITLE PRINCIPAL EXECUTIVE OFFICER: John Dyford, Plant Mgr.

TYPED OR PRINTED

I CERTIFY UNDER PENALTY OF LAW THAT I HAVE PERSONALLY EXAMINED AND AM FAMILIAR WITH THE INFORMATION SUBMITTED HEREIN; AND BASED ON MY INQUIRY OF THOSE INDIVIDUALS IMMEDIATELY RESPONSIBLE FOR OBTAINING THE INFORMATION, I BELIEVE THE SUBMITTED INFORMATION IS TRUE, ACCURATE AND COMPLETE. I AM AWARE THAT THERE ARE SIGNIFICANT PENALTIES FOR SUBMITTING FALSE INFORMATION, INCLUDING THE POSSIBILITY OF FINE AND IMPRISONMENT. SEE 18 U.S.C. § 1001 AND 33 U.S.C § 1319. *(Penalties under these statutes may include fines up to $10,000 and/or maximum imprisonment of between 6 months and 5 years.)*

SIGNATURE OF PRINCIPAL EXECUTIVE OFFICER OR AUTHORIZED AGENT

TELEPHONE		DATE		
503 (AREA CODE)	286-3681 (NUMBER)	93 (YEAR)	2 (MO.)	17 (DAY)

COMMENT AND EXPLANATION OF ANY VIOLATIONS *(Reference all attachments here)*

Koppers015670

GENERAL INSTRUCTIONS

1. If form has been partially completed by preprinting, disregard instructions directed at entry of that information already preprinted.
2. Enter "PERMITTEE NAME/MAILING ADDRESS (and facility name/location, if different)," "PERMIT NUMBER," and "DISCHARGE NUMBER" where indicated. (A separate form is required for each discharge.)
3. Enter dates beginning and ending "MONITORING PERIOD" covered by form where indicated.
4. Enter each "PARAMETER" as specified in monitoring requirements of permit.
5. Enter "SAMPLE MEASUREMENT" data for each parameter under "QUANTITY" and "QUALITY" in units specified in permit. "AVERAGE" is normally arithmetic average (geometric average for bacterial parameters) of all sample measurements for each parameter obtained during "MONITORING PERIOD." "MAXIMUM" and "MINIMUM" are normally extreme high and low measurements obtained during "MONITORING PERIOD." (NOTE: to municipals with secondary treatment requirement, enter 30-day average of sample measurements under "AVERAGE" and enter maximum 7-day average of sample measurements obtained during monitoring period under "MAXIMUM".
6. Enter "PERMIT REQUIREMENT" for each parameter under "QUANTITY" and "QUALITY" as specified in permit.
7. Under "NO. EX" enter number of sample measurements during monitoring period that exceed maximum (and/or minimum or 7-day average as appropriate) permit requirement for each parameter. If none, enter "0".
8. Enter "FREQUENCY OF ANALYSIS" both as "SAMPLE MEASUREMENT" (actual frequency of sampling and analysis used during monitoring period) and as "PERMIT REQUIREMENT" specified in permit. (e.g., Enter "CONT." for continuous monitoring. "1/7" for one day per week. "1/30" for one day per month. "1/90" for one day per quarter, etc.)
9. Enter "SAMPLE TYPE" both as "SAMPLE MEASUREMENT" (actual sample type used during monitoring period) and as "PERMIT REQUIREMENT." (e.g., Enter "GRAB" for individual sample. "24HC" for 24-hour composite. "N/A" for continuous monitoring, etc.)

(FOLD HERE FIRST)

10. WHERE VIOLATIONS OF PERMIT REQUIREMENTS ARE REPORTED, ATTACH A BRIEF EXPLANATION TO DESCRIBE CAUSE AND CORRECTIVE ACTIONS TAKEN, REFERENCE EACH VIOLATION BY DATE.
11. If "no discharge" occurs during monitoring period, enter "NO DISCHARGE" across form in place of data entry.
12. Enter "NAME/TITLE OF PRINCIPAL EXECUTIVE OFFICER" with "SIGNATURE OF PRINCIPAL EXECUTIVE OFFICER OR AUTHORIZED AGENT," "TELEPHONE NUMBER" and "DATE" at bottom of form.
13. Mail signed Report to Office(s) by date(s) specified in permit. Retain copy for your records.
14. More detailed instructions for use of this DISCHARGE MONITORING REPORT (DMR) form may be obtained from Office(s) specified in permit.

LEGAL NOTICE

This report is required by law (33 U.S.C. 1318; 40 C.F.R. 125.27). Failure to report or failure to report truthfully can result in civil penalties not to exceed $10,000 per day of violation; or in criminal penalties not to exceed $25,000 per day of violation, or by imprisonment for not more than one year, or by both.

FOLD HERE SECOND

PLACE STAMP HERE

FOLD HERE THIRD

STAPLE HERE

PERMITTEE NAME/ADDRESS (Include Facility Name/Location if different)

NAME ~~KOPPERS INDUSTRIES INC~~

ADDRESS ~~7540 NW ST HELENS RD.~~

~~PORTLAND OR 97210~~

FACILITY ~~NW PLANT~~

LOCATION ~~MULTNOMAH COUNTY~~

NATIONAL POLLUTANT DISCHARGE ELIMINATION SYSTEM (NPDES)

DISCHARGE MONITORING REPORT (DMR)

Form Approved
OMB No. 2040-0004
Expires 3-31-88

(2-16) ~~OR-100077-9~~ PERMIT NUMBER

(17-19) 0001 DISCHARGE NUMBER

3077-J

47430

MONITORING PERIOD	YEAR	MO	DAY		YEAR	MO	DAY
FROM	92	12	1	TO	92	12	31
	(20-21)	(22-23)	(24-25)		(26-27)	(28-29)	(30-31)

NOTE: Read instructions before completing this form.

PARAMETER (32-37)		(3 Card Only) QUANTITY OR LOADING (46-53) AVERAGE	(54-61) MAXIMUM	UNITS	(4 Card Only) QUALITY OR CONCENTRATION (38-45) MINIMUM	(46-53) AVERAGE	(54-61) MAXIMUM	UNITS	NO. EX (62-63)	FREQUENCY OF ANALYSIS (64-68)	SAMPLE TYPE (69-70)
FLOW	SAMPLE MEASUREMENT	5086							N/A	4/31	EST
	PERMIT REQUIREMENT		EST	GRD							
TEMP	SAMPLE MEASUREMENT				42	47.5	52	0 f	~~4~~ x 0	4/31	GRAB
	PERMIT REQUIREMENT						100				
PH	SAMPLE MEASUREMENT				7.0 ~~XXXX~~	7.175	~~XXXX~~ 7.4		0	4/31	GRAB
	PERMIT REQUIREMENT				6.0		9.0	SU ~~RMX~~			
OIL & GREASE	SAMPLE MEASUREMENT				1.2	1.275	1.4	MG/L	0	4/31	GRAB
	PERMIT REQUIREMENT					10	15				
PHENOLS	SAMPLE MEASUREMENT				0.13	0.155	0.19	MG/L	0	4/31	GRAB
	PERMIT REQUIREMENT					0.5	0.7	(PPM)			
	SAMPLE MEASUREMENT										
	PERMIT REQUIREMENT										
	SAMPLE MEASUREMENT										
	PERMIT REQUIREMENT										

NAME/TITLE PRINCIPAL EXECUTIVE OFFICER

JOHN A. OXFORD
PLANT ~~MMX~~ MANAGER

TYPED OR PRINTED

I CERTIFY UNDER PENALTY OF LAW THAT I HAVE PERSONALLY EXAMINED AND AM FAMILIAR WITH THE INFORMATION SUBMITTED HEREIN; AND BASED ON MY INQUIRY OF THOSE INDIVIDUALS IMMEDIATELY RESPONSIBLE FOR OBTAINING THE INFORMATION, I BELIEVE THE SUBMITTED INFORMATION IS TRUE, ACCURATE AND COMPLETE. I AM AWARE THAT THERE ARE SIGNIFICANT PENALTIES FOR SUBMITTING FALSE INFORMATION, INCLUDING THE POSSIBILITY OF FINE AND IMPRISONMENT. SEE 18 U.S.C. § 1001 AND 33 U.S.C. § 1319. *(Penalties under these statutes may include fines up to $10,000 and/or maximum imprisonment of between 6 months and 5 years.)*

John A. Oxford

SIGNATURE OF PRINCIPAL EXECUTIVE OFFICER OR AUTHORIZED AGENT

TELEPHONE		DATE		
~~503~~ AREA CODE	~~286-3681~~ NUMBER	93 YEAR	1 MO	14 DAY

COMMENT AND EXPLANATION OF ANY VIOLATIONS *(Reference all attachments here)*

Koppers015672

GENERAL INSTRUCTIONS

1. If form has been partially completed by preprinting, disregard instructions directed at entry of that information already preprinted.
2. Enter "PERMITTEE NAME/MAILING ADDRESS (and facility name/location, if different)," "PERMIT NUMBER," and "DISCHARGE NUMBER" where indicated. (A separate form is required for each discharge.)
3. Enter dates beginning and ending "MONITORING PERIOD" covered by form where indicated.
4. Enter each "PARAMETER" as specified in monitoring requirements of permit.
5. Enter "SAMPLE MEASUREMENT" data for each parameter under "QUANTITY" and "QUALITY" in units specified in permit. "AVERAGE" is normally arithmetic average (geometric average for bacterial parameters) of all sample measurements for each parameter obtained during "MONITORING PERIOD." "MAXIMUM" and "MINIMUM" are normally extreme high and low measurements obtained during "MONITORING PERIOD." (NOTE: to municipals with secondary treatment requirement, enter 30-day average of sample measurements under "AVERAGE" and enter maximum 7-day average of sample measurements obtained during monitoring period under "MAXIMUM".
6. Enter "PERMIT REQUIREMENT" for each parameter under "QUANTITY" and "QUALITY" as specified in permit.
7. Under "NO. EX" enter number of sample measurements during monitoring period that exceed maximum (and/or minimum or 7-day average as appropriate) permit requirement for each parameter. If none, enter "0".
8. Enter "FREQUENCY OF ANALYSIS" both as "SAMPLE MEASUREMENT" (actual frequency of sampling and analysis used during monitoring period) and as "PERMIT REQUIREMENT" specified in permit. (e.g., Enter "CONT." for continuous monitoring. "1/7" for one day per week. "1/30" for one day per month. "1/90" for one day per quarter, etc.)
9. Enter "SAMPLE TYPE" both as "SAMPLE MEASUREMENT" (actual sample type used during monitoring period) and as "PERMIT REQUIREMENT." (e.g., Enter "GRAB" for individual sample. "24HC" for 24-hour composite. "N/A" for continuous monitoring, etc.)

(FOLD HERE FIRST)

10. WHERE VIOLATIONS OF PERMIT REQUIREMENTS ARE REPORTED, ATTACH A BRIEF EXPLANATION TO DESCRIBE CAUSE AND CORRECTIVE ACTIONS TAKEN, REFERENCE EACH VIOLATION BY DATE.
11. If "no discharge" occurs during monitoring period, enter "NO DISCHARGE" across form in place of data entry.
12. Enter "NAME/TITLE OF PRINCIPAL EXECUTIVE OFFICER" with "SIGNATURE OF PRINCIPAL EXECUTIVE OFFICER OR AUTHORIZED AGENT," "TELEPHONE NUMBER" and "DATE" at bottom of form.
13. Mail signed Report to Office(s) by date(s) specified in permit. Retain copy for your records.
14. More detailed instructions for use of this DISCHARGE MONITORING REPORT (DMR) form may be obtained from Office(s) specified in permit.

LEGAL NOTICE

This report is required by law (33 U.S.C. 1318; 40 C.F.R. 125.27). Failure to report or failure to report truthfully can result in civil penalties not to exceed $10,000 per day of violation; or in criminal penalties not to exceed $25,000 per day of violation, or by imprisonment for not more than one year, or by both.

FOLD HERE SECOND

FOLD HERE THIRD

STAPLE HERE

PLACE STAMP HERE

Koppers015673

PERMITTEE NAME/ADDRESS (Include Facility Name/Location if different)
NAME Koppers Industries Inc
ADDRESS 2400 N.W. St Helens Road
Portland OR 97210
FACILITY N.W. Plant
LOCATION Multnomah County

NATIONAL POLLUTANT DISCHARGE ELIMINATION SYSTEM (NPDES)
DISCHARGE MONITORING REPORT (DMR)

PERMIT NUMBER (2-16)	DISCHARGE NUMBER (17-19)
OR-100077-9	0001

Form Approved
OMB No. 2040-0004
Expires 3-31-88

3077-J
4743°

MONITORING PERIOD	YEAR	MO	DAY
FROM	92	12	1
TO	92	12	31
(20-21) (22-23) (24-25) / (26-27) (28-29) (30-31)			

NOTE: Read instructions before completing this form.

PARAMETER (32-37)		(3 Card Only) QUANTITY OR LOADING (46-53) AVERAGE	(54-61) MAXIMUM	UNITS	(4 Card Only) QUALITY OR CONCENTRATION (38-45) MINIMUM	(46-53) AVERAGE	(54-61) MAXIMUM	UNITS	NO. EX (62-63)	FREQUENCY OF ANALYSIS (64-68)	SAMPLE TYPE (69-70)
Flow	SAMPLE MEASUREMENT	5046							N/A	4/31	Est.
	PERMIT REQUIREMENT		Est.	GPD							
Temp.	SAMPLE MEASUREMENT				42	47.5	52	°F	0	4/31	GRAB
	PERMIT REQUIREMENT						100				
Ph.	SAMPLE MEASUREMENT				7.0	7.775	7.4		0	4/31	GRAB
	PERMIT REQUIREMENT				6.0		9.0	Su.			
Oil & Grease	SAMPLE MEASUREMENT				1.2	1.275	1.4	mg/L	0	4/31	GRAB
	PERMIT REQUIREMENT					10	15				
Phenols	SAMPLE MEASUREMENT				0.13	0.155	0.19	mg/L (PPM)	0	4/31	GRAB
	PERMIT REQUIREMENT					0.5	0.7				
	SAMPLE MEASUREMENT										
	PERMIT REQUIREMENT										
	SAMPLE MEASUREMENT										
	PERMIT REQUIREMENT										

NAME/TITLE PRINCIPAL EXECUTIVE OFFICER
John A Dyford
Plant Mgr
TYPED OR PRINTED

I CERTIFY UNDER PENALTY OF LAW THAT I HAVE PERSONALLY EXAMINED AND AM FAMILIAR WITH THE INFORMATION SUBMITTED HEREIN; AND BASED ON MY INQUIRY OF THOSE INDIVIDUALS IMMEDIATELY RESPONSIBLE FOR OBTAINING THE INFORMATION, I BELIEVE THE SUBMITTED INFORMATION IS TRUE, ACCURATE AND COMPLETE. I AM AWARE THAT THERE ARE SIGNIFICANT PENALTIES FOR SUBMITTING FALSE INFORMATION, INCLUDING THE POSSIBILITY OF FINE AND IMPRISONMENT. SEE 18 U.S.C. § 1001 AND 33 U.S.C. § 1319. *(Penalties under these statutes may include fines up to $10,000 and or maximum imprisonment of between 6 months and 5 years.)*

SIGNATURE OF PRINCIPAL EXECUTIVE OFFICER OR AUTHORIZED AGENT

TELEPHONE AREA CODE	NUMBER	DATE YEAR	MO	DAY
503	2863681	93	1	14

COMMENT AND EXPLANATION OF ANY VIOLATIONS *(Reference all attachments here)*

Koppers015674

12-18-92

W-W-T-1

Ph 7.2

water Temp

51

12-18-92
w-w T-2
Ph 7.4

water Temp
52

COFFEY LABORATORIES INC.
12423 N.E. WHITAKER WAY, PORTLAND, OR 97230
(503) 254-1794 • FAX (503) 254-1452

CHAIN OF CUSTODY

COFFEY LABORATORIES - PENDLETON BRANCH
287 S.E. FIRST, PENDLETON, OR 97801
(503) 276-0385

PROJECT #:	PROJECT NAME:	P.O. #:	PAGE 1 of 1 PAGES PLEASE PRINT OR TYPE	FOR LABORATORY USE ONLY

COMPANY NAME: KOPPERS IND. INC
REPORT ATTENTION: JOHN OXFORD
JOB #: WC921222-AA2
SAMPLES COLLECTED BY: G.E. HOFFMAN
CUSTABBR: Koppers

FIELD IDENTIFICATION: ONE LINE PER SAMPLE CONTAINER	LAB LOC	LAB ID	COLLECTION DATE	COLLECTION TIME	MEDIA	ANALYSIS REQUESTED	ANALYSIS REMARKS
WW TK#1			12-21-92			OIL & GREASE	
WW TK#1			12-21-92			PHENOLS	
WW TK#2			12-21-92			OIL & GREASE	
WW TK#2			12-21-92			PHENOLS	

RELINQUISHED BY:	DATE/TIME	RECEIVED BY:	DATE/TIME	LAB USE:
RELINQUISHED BY: J a Oxford	12/22/92 DATE/TIME	RECEIVED BY LAB: Amy F. A	DATE/TIME 12/22/92 1435	
SAMPLE REMARKS:		LEVEL 1 2 3 4	EXPRESS UPS MAIL CXX GREY TAXI LAB	

WHITE COPY - COFFEY LABORATORIES

PINK COPY - CLIENTS COPY

SHADED AREA FOR LABORATORY USE ONLY

CHAIN OF CUSTODY INSTRUCTIONS ON BACK OF PINK COPY

(7/90)

Koppers015677

COFFEY LABORATORIES, INC.

CHAIN OF CUSTODY INFORMATION / INSTRUCTIONS SHEET

PROJECT NUMBER — Applies only to samples submitted by the company. This data is provided at the companies discretion.

PROJECT NAME — Your company's project name. This data is provided at the companies discretion.

COMPANY NAME — Name of the Company or individual requesting the analysis from Coffey Laboratories, Inc.

REPORT ATTENTION — Name of the person who receives the laboratory report.

SAMPLE COLLECTED BY — The person who took the sample signs this box and gives his/her title.

FIELD ID — A short description of the sample point (For example: "Effluent from sand filter"). This description will appear on the report. Use one line per sample bottle.

COLLECTION DATE — The date on which the sample(s) was/were collected.

COLLECTION TIME — The time at which the sample(s) was/were collected.

MEDIA — This is a description of the sample matrix.

ANALYSIS REQUESTED — Make one column for each parameter or group of parameters associated to a bottle.

FOR LAB USE ONLY — Do not mark in this area (Laboratory location & ID). All shaded areas are for laboratory use only. Please do not write in these areas.

REMARKS — Record any comments about each sample on the same line as the sample description, e.g., "Wastewater contains VOCs".

RELINQUISHED BY — The sampler signs this box when he/she gives the sample to someone else, and then fills in the date and time they left his possession.

RECEIVED BY — The person who receives the samples signs here and fills in the date and time received. The date and time should be the same as the last one unless the samples were shipped.

SAMPLE REMARKS — Record any comments regarding the sample(s) as a whole or information pertinent to the sample.

SAMPLES SHIPPED VIA — How the samples are being shipped to the laboratory, e.g., "UPS".

(7/90)

Report Date: December 31, 1992
Job#: WG-921222AA-2
PO#: VERBAL JOHN (O&G/Phenols)
Project#: None
Project: None

Attention: John Oxford
Koppers Industry
7540 NW St. Helens Rd.
Portland, OR 97210

SAMPLE INFORMATION:
Date Samples Were Received By Laboratory: 12/22/92

Lab No.	Field Identification	Sample Matrix	Date	Time
1	WW Tk#1	Waste Water	12-21-92	N/A
2	WW Tk#2	Waste Water	12-21-92	N/A

ANALYTICAL RESULTS:

PARAMETER	METHOD	DETECTION LIMITS	SAMPLE #1 RESULTS	SAMPLE #2 RESULTS
Oil & Grease	EPA 413.2	0.5	1.3	1.4
Total Phenols	EPA 420.1	0.05	0.13	0.13

Results expressed as mg/L unless otherwise noted.

Sincerely,

Susan M. Coffey

Susan Coffey
President

SMC/lws

This report is for the sole and exclusive use of the above-named client. Samples are retained 15 days from the report date, or until holding time expires. Results pertain only to samples submitted.

RECEIVED
JAN - 5 1993
KOPPERS INDS., INC.
PORTLAND, OR

COFFEY LABORATORIES, INC.
12423 N.E. Whitaker Way • Portland, OR • 97230 • (503) 254-1794 • FAX (503) 254-1452

12-30-92

WW #30

Temp 45

PH 7.0

J.A.D

12-30 92

WW #4

Temp 42

P.H. 7.1

JaD

COFFEY LABORATORIES INC.
12423 N.E. WHITAKER WAY, PORTLAND, OR 97230
(503) 254-1794 • FAX (503) 254-1452

COFFEY LABORATORIES - PENDLETON BRANCH
287 S.E. FIRST, PENDLETON, OR 97801
(503) 276-0385

CHAIN OF CUSTODY

PROJECT #:	PROJECT NAME:	P.O. #:	PAGE 1 of 1 PAGES PLEASE PRINT OR TYPE	FOR LABORATORY USE ONLY

COMPANY NAME: KOPPERS IND INC
REPORT ATTENTION: JOHN OXFORD
JOB #: WG 92 1230-AG2
SAMPLES COLLECTED BY: JOHN OXFORD
CUSTABBR: Koppers

FIELD IDENTIFICATION: ONE LINE PER SAMPLE CONTAINER	LAB LOC	LAB ID	COLLECTION DATE	COLLECTION TIME	MEDIA	ANALYSIS REQUESTED	ANALYSIS REMARKS
WW TK. #3			12-30-92	2pm	WW	OIL & GREASE	
WW TK. #3			12-30-92	2pm		PHENOLS	
WW TK. #4			12-30-92	2pm		OIL & GREASE	
WW TK #4			12-30-92	2pm		PHENOLS	

RELINQUISHED BY: John A Oxford DATE/TIME 12-30-92 4:40pm
RECEIVED BY: DATE/TIME
LAB USE:
RELINQUISHED BY: DATE/TIME
RECEIVED BY LAB: DATE/TIME 12/30/92 1640
SAMPLE REMARKS:
LEVEL 1 2 3 4
EXPRESS UPS MAIL CXX GREY TAXI LAB

WHITE COPY - COFFEY LABORATORIES
PINK COPY - CLIENTS COPY

SHADED AREA FOR LABORATORY USE ONLY
CHAIN OF CUSTODY INSTRUCTIONS ON BACK OF PINK COPY

(7/90)

Koppers015682

COFFEY LABORATORIES, INC.

CHAIN OF CUSTODY INFORMATION / INSTRUCTIONS SHEET

PROJECT NUMBER — Applies only to samples submitted by the company. This data is provided at the companies discretion.

PROJECT NAME — Your company's project name. This data is provided at the companies discretion.

COMPANY NAME — Name of the Company or individual requesting the analysis from Coffey Laboratories, Inc.

REPORT ATTENTION — Name of the person who receives the laboratory report.

SAMPLE COLLECTED BY — The person who took the sample signs this box and gives his/her title.

FIELD ID — A short description of the sample point (For example: "Effluent from sand filter"). This description will appear on the report. Use one line per sample bottle.

COLLECTION DATE — The date on which the sample(s) was/were collected.

COLLECTION TIME — The time at which the sample(s) was/were collected.

MEDIA — This is a description of the sample matrix.

ANALYSIS REQUESTED — Make one column for each parameter or group of parameters associated to a bottle.

FOR LAB USE ONLY — Do not mark in this area (Laboratory location & ID). All shaded areas are for laboratory use only. Please do not write in these areas.

REMARKS — Record any comments about each sample on the same line as the sample description, e.g., "Wastewater contains VOCs".

RELINQUISHED BY — The sampler signs this box when he/she gives the sample to someone else, and then fills in the date and time they left his possession.

RECEIVED BY — The person who receives the samples signs here and fills in the date and time received. The date and time should be the same as the last one unless the samples were shipped.

SAMPLE REMARKS — Record any comments regarding the sample(s) as a whole or information pertinent to the sample.

SAMPLES SHIPPED VIA — How the samples are being shipped to the laboratory, e.g., "UPS".

(5/90)

Report Date: January 14, 1993
Job#: WG-921230AG-2
PO#: VERBAL JOHN (O&G/Phenols
Project#: None
Project: None

Attention: John Oxford
Koppers Industry
7540 NW St. Helens Rd.
Portland, OR 97210

SAMPLE INFORMATION:
Date Samples Were Received By Laboratory: 12/30/92

Lab No.	Field Identification	Sample Matrix	Date	Time
1	WW TK #3	Waste Water	12-30-92	1400
2	WW TK #4	Waste Water	12-30-92	1400

ANALYTICAL RESULTS:

PARAMETER	METHOD	DETECTION LIMITS	WW TK #3 RESULTS	WW TK #4 RESULTS
Oil & Grease	EPA 413.2	0.5	1.2	1.2
Total Phenols	EPA 420.1	0.05	0.17	0.19

Results expressed as mg/L unless otherwise noted.

Sincerely,

Susan M. Coffey,
President

SMC/lws

This report is for the sole and exclusive use of the above-named client. Samples are retained 15 days from the report date, or until holding time expires. Results pertain only to samples submitted.

COFFEY LABORATORIES, INC.
12423 N.E. Whitaker Way • Portland, OR • 97230 • (503) 254-1794 • FAX (503) 254-1452

Dec.

	WW 1	WW 2	WW 3	WW 4
Flow	45000	45000	45000	45000 = 180000 ÷ 31 5086 gal
~~Flow~~				
Temp.	51	52	40	42 = 190 ÷ 4 = 47.5
Ph.	7.2	7.4	7.0	7.1 = 28.7 ÷ 4 = 7.175
Oil + Grease	1.3	1.4	1.2	1.2 = 5.1 ÷ 4 = 1.275
Phenols.	0.13	0.13	0.17	0.19 = 0.62 ÷ 4 = 0.155

PERMITTEE NAME/ADDRESS (Include Facility Name/Location if different)

NAME ~~KOPPERS INDUSTRIES INC~~

ADDRESS ~~7540 NW ST HELENS RD~~

~~PORTLAND OR 97210~~

FACILITY LOCATION ~~N.W. PLANT~~

~~MULTNOMAH COUNTY~~

NATIONAL POLLUTANT DISCHARGE ELIMINATION SYSTEM (NPDES)

DISCHARGE MONITORING REPORT (DMR)

Form Approved
OMB No. 2040-0004
Expires 3-31-88

(2-16) ~~OR-100077-9~~ PERMIT NUMBER

(17-19) ~~0001~~ DISCHARGE NUMBER

3077-J
47430

MONITORING PERIOD	YEAR	MO	DAY		YEAR	MO	DAY
FROM	92	11	1	TO	92	11	30
	(20-21)	(22-23)	(24-25)		(26-27)	(28-29)	(30-31)

NOTE: Read instructions before completing this form.

PARAMETER (32-37)		(3 Card Only) QUANTITY OR LOADING (46-53) AVERAGE	(54-61) MAXIMUM	UNITS	(4 Card Only) QUALITY OR CONCENTRATION (38-45) MINIMUM	(46-53) AVERAGE	(54-61) MAXIMUM	UNITS	NO. EX (62-63)	FREQUENCY OF ANALYSIS (64-68)	SAMPLE TYPE (69-70)
FLOW	SAMPLE MEASUREMENT	3000							N/A	2/30	EST
	PERMIT REQUIREMENT		EST	GPD							
TEMP	SAMPLE MEASUREMENT				46	46	46		o	2/30	GRAB
	PERMIT REQUIREMENT						100	o F			
~~PKK~~ PH	SAMPLE MEASUREMENT				7.4	7.45	7.5		o	2/30	GRAB
	PERMIT REQUIREMENT				6.0		9.0	SU			
OIL & GREASE	SAMPLE MEASUREMENT				0.6	0.6	0.6	MG/L	o	2/30	GRAB
	PERMIT REQUIREMENT				0.9	1.25	1.0				
PHENOLS	SAMPLE MEASUREMENT				N/D	0.03	0.06	MG/(PPM)	o	2/30	GRAB
	PERMIT REQUIREMENT					0.5	0.7				
	SAMPLE MEASUREMENT										
	PERMIT REQUIREMENT										
	SAMPLE MEASUREMENT										
	PERMIT REQUIREMENT										

NAME/TITLE PRINCIPAL EXECUTIVE OFFICER

JOHN A. OXFORD
PLANT MANAGER

TYPED OR PRINTED

I CERTIFY UNDER PENALTY OF LAW THAT I HAVE PERSONALLY EXAMINED AND AM FAMILIAR WITH THE INFORMATION SUBMITTED HEREIN; AND BASED ON MY INQUIRY OF THOSE INDIVIDUALS IMMEDIATELY RESPONSIBLE FOR OBTAINING THE INFORMATION, I BELIEVE THE SUBMITTED INFORMATION IS TRUE, ACCURATE AND COMPLETE. I AM AWARE THAT THERE ARE SIGNIFICANT PENALTIES FOR SUBMITTING FALSE INFORMATION, INCLUDING THE POSSIBILITY OF FINE AND IMPRISONMENT. SEE 18 U.S.C § 1001 AND 33 U.S.C § 1319. *(Penalties under these statutes may include fines up to $10,000 and/or maximum imprisonment of between 6 months and 5 years.)*

John A Oxford

SIGNATURE OF PRINCIPAL EXECUTIVE OFFICER OR AUTHORIZED AGENT

TELEPHONE		DATE		
503	286-3681	92	12	14
AREA CODE	NUMBER	YEAR	MO	DAY

COMMENT AND EXPLANATION OF ANY VIOLATIONS *(Reference all attachments here)*

Koppers015686

GENERAL INSTRUCTIONS

1. If form has been partially completed by preprinting, disregard instructions directed at entry of that information already preprinted.
2. Enter "PERMITTEE NAME/MAILING ADDRESS (and facility name/location, if different)," "PERMIT NUMBER," and "DISCHARGE NUMBER" where indicated. (A separate form is required for each discharge.)
3. Enter dates beginning and ending "MONITORING PERIOD" covered by form where indicated.
4. Enter each "PARAMETER" as specified in monitoring requirements of permit.
5. Enter "SAMPLE MEASUREMENT" data for each parameter under "QUANTITY" and "QUALITY" in units specified in permit. "AVERAGE" is normally arithmetic average (geometric average for bacterial parameters) of all sample measurements for each parameter obtained during "MONITORING PERIOD." "MAXIMUM" and "MINIMUM" are normally extreme high and low measurements obtained during "MONITORING PERIOD." (NOTE: to municipals with secondary treatment requirement, enter 30-day average of sample measurements under "AVERAGE" and enter maximum 7-day average of sample measurements obtained during monitoring period under "MAXIMUM".
6. Enter "PERMIT REQUIREMENT" for each parameter under "QUANTITY" and "QUALITY" as specified in permit.
7. Under "NO. EX" enter number of sample measurements during monitoring period that exceed maximum (and/or minimum or 7-day average as appropriate) permit requirement for each parameter. If none, enter "0".
8. Enter "FREQUENCY OF ANALYSIS" both as "SAMPLE MEASUREMENT" (actual frequency of sampling and analysis used during monitoring period) and as "PERMIT REQUIREMENT" specified in permit. (e.g., Enter "CONT." for continuous monitoring. "1/7" for one day per week. "1/30" for one day per month. "1/90" for one day per quarter, etc.)
9. Enter "SAMPLE TYPE" both as "SAMPLE MEASUREMENT" (actual sample type used during monitoring period) and as "PERMIT REQUIREMENT." (e.g., Enter "GRAB" for individual sample. "24HC" for 24-hour composite. "N/A" for continuous monitoring, etc.)

(FOLD HERE FIRST)

10. WHERE VIOLATIONS OF PERMIT REQUIREMENTS ARE REPORTED, ATTACH A BRIEF EXPLANATION TO DESCRIBE CAUSE AND CORRECTIVE ACTIONS TAKEN. REFERENCE EACH VIOLATION BY DATE.
11. If "no discharge" occurs during monitoring period, enter "NO DISCHARGE" across form in place of data entry.
12. Enter "NAME/TITLE OF PRINCIPAL EXECUTIVE OFFICER" with "SIGNATURE OF PRINCIPAL EXECUTIVE OFFICER OR AUTHORIZED AGENT." "TELEPHONE NUMBER" and "DATE" at bottom of form.
13. Mail signed Report to Office(s) by date(s) specified in permit. Retain copy for your records.
14. More detailed instructions for use of this DISCHARGE MONITORING REPORT (DMR) form may be obtained from Office(s) specified in permit.

LEGAL NOTICE

This report is required by law (33 U.S.C. 1318; 40 C.F.R. 125.27). Failure to report or failure to report truthfully can result in civil penalties not to exceed $10,000 per day of violation; or in criminal penalties not to exceed $25,000 per day of violation, or by imprisonment for not more than one year, or by both.

FOLD HERE SECOND

FOLD HERE THIRD

STAPLE HERE

PLACE STAMP HERE

Koppers015687

PERMITTEE NAME/ADDRESS (Include Facility Name/Location if different)

NAME KOPPERS INDUSTRIES INC

ADDRESS 7540 NW ST HELENS RD
PORTLAND OR 97210

FACILITY N.W. PLANT

LOCATION MULTNOMAH COUNTY

NATIONAL POLLUTANT DISCHARGE ELIMINATION SYSTEM (NPDES)

DISCHARGE MONITORING REPORT (DMR)

Form Approved
OMB No. 2040-0004
Expires 3-31-88

PERMIT NUMBER (2-16)	DISCHARGE NUMBER (17-19)
OR-100077-9	0001

3077-J
47430

MONITORING PERIOD	YEAR	MO	DAY		YEAR	MO	DAY
FROM	92	11	1	TO	92	11	30
	(20-21)	(22-23)	(24-25)		(26-27)	(28-29)	(30-31)

NOTE: Read instructions before completing this form.

PARAMETER (32-37)		(3 Card Only) QUANTITY OR LOADING (46-53) AVERAGE	(54-61) MAXIMUM	UNITS	(4 Card Only) QUALITY OR CONCENTRATION (38-45) MINIMUM	(46-53) AVERAGE	(54-61) MAXIMUM	UNITS	NO. EX (62-63)	FREQUENCY OF ANALYSIS (64-68)	SAMPLE TYPE (69-70)
FLOW	SAMPLE MEASUREMENT	3000							N/A	2/30	EST
	PERMIT REQUIREMENT		EST	GPD							
TEMP	SAMPLE MEASUREMENT				46	46	46		O	2/30	GRAB
	PERMIT REQUIREMENT						100	°F			
~~XXXX~~ PH	SAMPLE MEASUREMENT				7.4	7.45	7.5		O	2/30	GRAB
	PERMIT REQUIREMENT				6.0		9.0	SU			
OIL & GREASE	SAMPLE MEASUREMENT				0.6	0.6	0.6	MG/L	O	2/30	GRAB
	PERMIT REQUIREMENT				0.9	1.25	1.0				
PHENOLS	SAMPLE MEASUREMENT				N/D	0.03	0.06	MG/(PPM)	O	2/30	GRAB
	PERMIT REQUIREMENT					0.5	0.7				
	SAMPLE MEASUREMENT										
	PERMIT REQUIREMENT										
	SAMPLE MEASUREMENT										
	PERMIT REQUIREMENT										

NAME/TITLE PRINCIPAL EXECUTIVE OFFICER

JOHN A. OXFORD
PLANT MANAGER

TYPED OR PRINTED

I CERTIFY UNDER PENALTY OF LAW THAT I HAVE PERSONALLY EXAMINED AND AM FAMILIAR WITH THE INFORMATION SUBMITTED HEREIN; AND BASED ON MY INQUIRY OF THOSE INDIVIDUALS IMMEDIATELY RESPONSIBLE FOR OBTAINING THE INFORMATION, I BELIEVE THE SUBMITTED INFORMATION IS TRUE, ACCURATE AND COMPLETE. I AM AWARE THAT THERE ARE SIGNIFICANT PENALTIES FOR SUBMITTING FALSE INFORMATION, INCLUDING THE POSSIBILITY OF FINE AND IMPRISONMENT. SEE 18 U.S.C § 1001 AND 33 U.S.C § 1319. (Penalties under these statutes may include fines up to $10,000 and or maximum imprisonment of between 6 months and 5 years.)

SIGNATURE OF PRINCIPAL EXECUTIVE OFFICER OR AUTHORIZED AGENT

TELEPHONE AREA CODE	NUMBER	DATE YEAR	MO	DAY
503	286-3681	92	12	14

COMMENT AND EXPLANATION OF ANY VIOLATIONS (Reference all attachments here)

Koppers015688

PERMITTEE NAME/ADDRESS (Include Facility Name/Location if different)
NAME: Kerr-McGee Chem. Inc.
ADDRESS: 2540 N.W. St Helens Road, Portland OR 97210
FACILITY: N.W. Plant
LOCATION: Multnomah County

NATIONAL POLLUTANT DISCHARGE ELIMINATION SYSTEM (NPDES)
DISCHARGE MONITORING REPORT (DMR)

Form Approved
OMB No. 2040-0004
Expires 3-31-88

(2-16) PERMIT NUMBER	(17-19) DISCHARGE NUMBER
OR.100077-9	0001

3077-J
47430

MONITORING PERIOD	YEAR	MO	DAY		YEAR	MO	DAY
FROM	92	11	1	TO	92	11	30
	(20-21)	(22-23)	(24-25)		(26-27)	(28-29)	(30-31)

NOTE: Read instructions before completing this form.

PARAMETER (32-37)		(3 Card Only) QUANTITY OR LOADING (46-53) AVERAGE	(54-61) MAXIMUM	UNITS	(4 Card Only) QUALITY OR CONCENTRATION (38-45) MINIMUM	(46-53) AVERAGE	(54-61) MAXIMUM	UNITS	NO. EX (62-63)	FREQUENCY OF ANALYSIS (64-68)	SAMPLE TYPE (69-70)
Flow	SAMPLE MEASUREMENT	3000							N/A	2/30	Est.
	PERMIT REQUIREMENT		N/A	GPD							
Temp.	SAMPLE MEASUREMENT				46	46	46		0	2/30	GRAB
	PERMIT REQUIREMENT						100	°F			
P.H.	SAMPLE MEASUREMENT				7.4	7.45	7.5		0	2/30	GRAB
	PERMIT REQUIREMENT				6.0		9.0	SU			
Oil + Grease	SAMPLE MEASUREMENT				0.6	0.6	0.6	mg/L	0	2/30	GRAB
	PERMIT REQUIREMENT				0.9	1.25	1.8				
Phenols	SAMPLE MEASUREMENT				N/D	0.03	0.06	mg/L	0	2/30	GRAB
	PERMIT REQUIREMENT					0.5	0.7	(PPM)			
	SAMPLE MEASUREMENT										
	PERMIT REQUIREMENT										
	SAMPLE MEASUREMENT										
	PERMIT REQUIREMENT										

NAME/TITLE PRINCIPAL EXECUTIVE OFFICER			TELEPHONE		DATE		
JOHN A. OXFORD PLANT MANAGER TYPED OR PRINTED	I CERTIFY UNDER PENALTY OF LAW THAT I HAVE PERSONALLY EXAMINED AND AM FAMILIAR WITH THE INFORMATION SUBMITTED HEREIN; AND BASED ON MY INQUIRY OF THOSE INDIVIDUALS IMMEDIATELY RESPONSIBLE FOR OBTAINING THE INFORMATION, I BELIEVE THE SUBMITTED INFORMATION IS TRUE, ACCURATE AND COMPLETE. I AM AWARE THAT THERE ARE SIGNIFICANT PENALTIES FOR SUBMITTING FALSE INFORMATION, INCLUDING THE POSSIBILITY OF FINE AND IMPRISONMENT. SEE 18 U.S.C § 1001 AND 33 U.S.C § 1319. *(Penalties under these statutes may include fines up to $10,000 and or maximum imprisonment of between 6 months and 5 years.)*	SIGNATURE OF PRINCIPAL EXECUTIVE OFFICER OR AUTHORIZED AGENT	503 AREA CODE	286 3681 NUMBER	92 YEAR	12 MO	14 DAY

COMMENT AND EXPLANATION OF ANY VIOLATIONS (*Reference all attachments here*)

Koppers015689

RECEIVED

DEC - 4 1992

KOPPERS INDS., INC.
PORTLAND, OR

Report Date: December 2, 1992
Job#: WG-921119AN-2
PO#: VERBAL JOHN
Project#: None
Project: None

Attention: John Oxford
Koppers Industry
7540 NW St. Helens Rd.
Portland, OR 97210

SAMPLE INFORMATION:
Date Samples Were Received By Laboratory: 11/19/92

Lab No.	Field Identification	Sample Matrix	Date	Time
1	W-W-T-3	Waste Water	11-19-92	1510
2	W-W-T-4	Waste Water	11-19-92	1510

ANALYTICAL RESULTS:

PARAMETER	METHOD	DETECTION LIMITS	W-W-T-3 RESULTS	W-W-T-4 RESULTS
Oil & Grease	EPA 413.2	0.6	0.6	0.6
Total Phenols	SM 420.1	0.06	0.06	ND

Results expressed as mg/L unless otherwise noted.

ND means none detected at or above the detection limit listed.

SM means Standard Methods for the Examination of Water and Wastewater, 1985, 16th Edition.

Sincerely,

Renee Chauvin
Technical Director

RJC/mlh

This report is for the sole and exclusive use of the above-named client. Samples are retained 15 days from the report date, or until holding time expires. Results pertain only to samples submitted.

COFFEY LABORATORIES, INC.
12423 N.E. Whitaker Way • Portland, OR • 97230 • (503) 254-1794 • FAX (503) 254-1452

11-19-92

W-W- T-3

Ph 7.5

---

water

Temp- 46

11-19-92

W-W-T-4

Ph 7.4

water

Temp 46

COFFEY LABORATORIES INC.
12423 N.E. WHITAKER WAY, PORTLAND, OR 97230
(503) 254-1794 • FAX (503) 254-1452

CHAIN OF CUSTODY

COFFEY LABORATORIES - PENDLETON BRANCH
287 S.E. FIRST, PENDLETON, OR 97801
(503) 276-0385

PROJECT #:	PROJECT NAME:	P.O. #:	PAGE _____ of _____ PAGES PLEASE PRINT OR TYPE	FOR LABORATORY USE ONLY
COMPANY NAME: Koppers IND REPORT ATTENTION: John Oxford				JOB #: [illegible]
SAMPLES COLLECTED BY: G. Hoffman				CUSTABBR: Koppers

FIELD IDENTIFICATION: ONE LINE PER SAMPLE CONTAINER	LAB LOC	LAB ID	COLLECTION DATE	COLLECTION TIME	MEDIA	ANALYSIS REQUESTED	ANALYSIS REMARKS
W-W-T-3			11-19-92	3:10 PM		Oil & Grease	
W-W-T-3			11-19-92	"		Phenols	
W-W-T-4			11-19-92	"		Oil + Grease	
W-W-T-4			11-19-92	"		Phenols	

RELINQUISHED BY:	DATE/TIME	RECEIVED BY:	DATE/TIME	LAB USE
RELINQUISHED BY: G. Hoffman	DATE/TIME 11-19-92	RECEIVED BY LAB: [illegible]	DATE/TIME 11/19/92 1620	
SAMPLE REMARKS:		LEVEL 1 2 3 4	EXPRESS UPS MAIL CXX GREY TAXI LAB	

WHITE COPY - COFFEY LABORATORIES

PINK COPY - CLIENTS COPY

SHADED AREA FOR LABORATORY USE ONLY

CHAIN OF CUSTODY INSTRUCTIONS ON BACK OF PINK COPY

(7/90)

Koppers015693

COFFEY LABORATORIES, INC.

CHAIN OF CUSTODY INFORMATION / INSTRUCTIONS SHEET

PROJECT NUMBER — *Applies only to samples submitted by the company. This data is provided at the companies discretion.*

PROJECT NAME — *Your company's project name. This data is provided at the companies discretion.*

COMPANY NAME — *Name of the Company or individual requesting the analysis from Coffey Laboratories, Inc.*

REPORT ATTENTION — *Name of the person who receives the laboratory report.*

SAMPLE COLLECTED BY — *The person who took the sample signs this box and gives his/her title.*

FIELD ID — *A short description of the sample point (For example: "Effluent from sand filter"). This description will appear on the report. Use one line per sample bottle.*

COLLECTION DATE — *The date on which the sample(s) was/were collected.*

COLLECTION TIME — *The time at which the sample(s) was/were collected.*

MEDIA — *This is a description of the sample matrix.*

ANALYSIS REQUESTED — *Make one column for each parameter or group of parameters associated to a bottle.*

FOR LAB USE ONLY — *Do not mark in this area (Laboratory location & ID). All shaded areas are for laboratory use only. Please do not write in these areas.*

REMARKS — *Record any comments about each sample on the same line as the sample description, e.g., "Wastewater contains VOCs".*

RELINQUISHED BY — *The sampler signs this box when he/she gives the sample to someone else, and then fills in the date and time they left his possession.*

RECEIVED BY — *The person who receives the samples signs here and fills in the date and time received. The date and time should be the same as the last one unless the samples were shipped.*

SAMPLE REMARKS — *Record any comments regarding the sample(s) as a whole or information pertinent to the sample.*

SAMPLES SHIPPED VIA — *How the samples are being shipped to the laboratory, e.g., "UPS".*

	WW3	WW4
flow	45000	45000 = 90000 ÷ 30 = 3000
temp	46	46 = 92 ÷ 2 = 46
P.H.	7.5	7.4 = 14.9 ÷ 2 7.45
oil + grease.	0.6	0.6 = 1.2 ÷ 2 0.6
Phenols.	0.06	N/D. = 0.06 ÷ 2 = 0.03

PERMITTEE NAME/ADDRESS (Include Facility Name/Location if different)

NAME KOPPERS INDUSTRIES INC

ADDRESS 7540 NW ST HELENS RD

PORTLAND OR 97210

FACILITY NORTHWEST PLANT

LOCATION MULTNOMAH COUNTY

NATIONAL POLLUTANT DISCHARGE ELIMINATION SYSTEM (NPDES)

DISCHARGE MONITORING REPORT (DMR)

Form Approved
OMB No. 2040-0004
Expires 3-31-88

(2-16) PERMIT NUMBER: OR-100077-9

(17-19) DISCHARGE NUMBER: 001

3077-J
47430

MONITORING PERIOD

	YEAR	MO	DAY		YEAR	MO	DAY
FROM	92	10	1	TO	92	10	31
	(20-21)	(22-23)	(24-25)		(26-27)	(28-29)	(30-31)

NOTE: Read instructions before completing this form.

PARAMETER (32-37)		(3 Card Only) (46-53) QUANTITY OR LOADING (54-61) AVERAGE	MAXIMUM	UNITS	(4 Card Only) (38-45) QUALITY OR CONCENTRATION (46-53) MINIMUM	AVERAGE	MAXIMUM	UNITS	NO. EX (62-63)	FREQUENCY OF ANALYSIS (64-68)	SAMPLE TYPE (69-70)
FLOW	SAMPLE MEASUREMENT	2903							N/A	2/31	EST
	PERMIT REQUIREMENT		NA	GPD							
TEMP	SAMPLE MEASUREMENT				60	60	60		0	2/31	GRAB
	PERMIT REQUIREMENT						100	°F			
PH	SAMPLE MEASUREMENT				6.5	6.55	6.6		0	2/31	GRAB
	PERMIT REQUIREMENT				6.0		9.0	SU			
OIL & GREASE	SAMPLE MEASUREMENT				0.9	1.25	1.0	MG/L	0	2/31	GRAB
	PERMIT REQUIREMENT					10	15				
PHENOLS	SAMPLE MEASUREMENT					ND		MG/L	0	2/31	GRAB
	PERMIT REQUIREMENT					0.5	0.7	(PPM)			
	SAMPLE MEASUREMENT										
	PERMIT REQUIREMENT										
	SAMPLE MEASUREMENT										
	PERMIT REQUIREMENT										

NAME/TITLE PRINCIPAL EXECUTIVE OFFICER: JOHN A OXFORD (TYPED OR PRINTED)

I CERTIFY UNDER PENALTY OF LAW THAT I HAVE PERSONALLY EXAMINED AND AM FAMILIAR WITH THE INFORMATION SUBMITTED HEREIN; AND BASED ON MY INQUIRY OF THOSE INDIVIDUALS IMMEDIATELY RESPONSIBLE FOR OBTAINING THE INFORMATION, I BELIEVE THE SUBMITTED INFORMATION IS TRUE, ACCURATE AND COMPLETE. I AM AWARE THAT THERE ARE SIGNIFICANT PENALTIES FOR SUBMITTING FALSE INFORMATION, INCLUDING THE POSSIBILITY OF FINE AND IMPRISONMENT. SEE 18 U.S.C § 1001 AND 33 U.S.C § 1319. *(Penalties under these statutes may include fines up to $10,000 and/or maximum imprisonment of between 6 months and 5 years.)*

SIGNATURE OF PRINCIPAL EXECUTIVE OFFICER OR AUTHORIZED AGENT: John A Oxford

TELEPHONE: AREA CODE 503, NUMBER 286-3681

DATE: YEAR 92 (XX), MO 11, DAY 12

COMMENT AND EXPLANATION OF ANY VIOLATIONS (*Reference all attachments here*)

Koppers015696

GENERAL INSTRUCTIONS

1. If form has been partially completed by preprinting, disregard instructions directed at entry of that information already preprinted.
2. Enter "PERMITTEE NAME/MAILING ADDRESS (and facility name/location, if different), " "PERMIT NUMBER," and "DISCHARGE NUMBER" where indicated. (A separate form is required for each discharge.)
3. Enter dates beginning and ending "MONITORING PERIOD" covered by form where indicated.
4. Enter each "PARAMETER" as specified in monitoring requirements of permit.
5. Enter "SAMPLE MEASUREMENT" data for each parameter under "QUANTITY" and "QUALITY" in units specified in permit. "AVERAGE" is normally arithmetic average (geometric average for bacterial parameters) of all sample measurements for each parameter obtained during "MONITORING PERIOD." "MAXIMUM" and "MINIMUM" are normally extreme high and low measurements obtained during "MONITORING PERIOD." (NOTE: to municipals with secondary treatment requirement, enter 30-day average of sample measurements under "AVERAGE" and enter maximum 7-day average of sample measurements obtained during monitoring period under "MAXIMUM".
6. Enter "PERMIT REQUIREMENT" for each parameter under "QUANTITY" and "QUALITY" as specified in permit.
7. Under "NO. EX" enter number of sample measurements during monitoring period that exceed maximum (and/or minimum or 7-day average as appropriate) permit requirement for each parameter. If none, enter "0".
8. Enter "FREQUENCY OF ANALYSIS" both as "SAMPLE MEASUREMENT" (actual frequency of sampling and analysis used during monitoring period) and as "PERMIT REQUIREMENT" specified in permit. (e.g., Enter "CONT." for continuous monitoring. "1/7" for one day per week. "1/30" for one day per month. "1/90" for one day per quarter, etc.)
9. Enter "SAMPLE TYPE" both as "SAMPLE MEASUREMENT" (actual sample type used during monitoring period) and as "PERMIT REQUIREMENT." (e.g., Enter "GRAB" for individual sample. "24HC" for 24-hour composite. "N/A" for continuous monitoring, etc.)

FOLD HERE FIRST

10. WHERE VIOLATIONS OF PERMIT REQUIREMENTS ARE REPORTED, ATTACH A BRIEF EXPLANATION TO DESCRIBE CAUSE AND CORRECTIVE ACTIONS TAKEN REFERENCE EACH VIOLATION BY DATE.
11. If "no discharge" occurs during monitoring period, enter "NO DISCHARGE" across form in place of data entry.
12. Enter "NAME/TITLE OF PRINCIPAL EXECUTIVE OFFICER" with "SIGNATURE OF PRINCIPAL EXECUTIVE OFFICER OR AUTHORIZED AGENT." "TELEPHONE NUMBER" and "DATE" at bottom of form.
13. Mail signed Report to Office(s) by date(s) specified in permit. Retain copy for your records.
14. More detailed instructions for use of this DISCHARGE MONITORING REPORT (DMR) form may be obtained from Office(s) specified in permit.

LEGAL NOTICE

This report is required by law (33 U.S.C. 1318; 40 C.F.R. 125.27). Failure to report or failure to report truthfully can result in civil penalties not to exceed $10,000 per day of violation; or in criminal penalties not to exceed $25,000 per day of violation, or by imprisonment for not more than one year, or by both.

FOLD HERE SECOND

PLACE STAMP HERE

FOLD HERE THIRD

STAPLE HERE

PERMITTEE NAME/ADDRESS (Include Facility Name/Location if different)

NAME KOPPERS INDUSTRIES INC

ADDRESS 7540 NW ST HELENS RD

PORTLAND OR 97210

FACILITY NORTHWEST PLANT

LOCATION MULTNOMAH COUNTY

NATIONAL POLLUTANT DISCHARGE ELIMINATION SYSTEM (NPDES)

DISCHARGE MONITORING REPORT (DMR)

Form Approved
OMB No. 2040-0004
Expires 3-31-88

(2-16) PERMIT NUMBER: OR-100077-9

(17-19) DISCHARGE NUMBER: 001

3077-J
47430

MONITORING PERIOD	YEAR	MO	DAY		YEAR	MO	DAY
FROM	92	10	1	TO	92	10	31
	(20-21)	(22-23)	(24-25)		(26-27)	(28-29)	(30-31)

NOTE: Read instructions before completing this form.

PARAMETER (32-37)		(3 Card Only) QUANTITY OR LOADING (46-53) AVERAGE	(54-61) MAXIMUM	UNITS	(4 Card Only) QUALITY OR CONCENTRATION (38-45) MINIMUM	(46-53) AVERAGE	(54-61) MAXIMUM	UNITS	NO. EX (62-63)	FREQUENCY OF ANALYSIS (64-68)	SAMPLE TYPE (69-70)
FLOW	SAMPLE MEASUREMENT	2903							N/A	2/31	EST
	PERMIT REQUIREMENT		NA	GPD							
TEMP	SAMPLE MEASUREMENT				60	60	60		0	2/31	GRAB
	PERMIT REQUIREMENT						100	°F			
PH	SAMPLE MEASUREMENT				6.5	6.55	6.6		0	2/31	GRAB
	PERMIT REQUIREMENT				6.0		9.0	SU			
OIL & GREASE	SAMPLE MEASUREMENT				0.9	1.25	1.0	MG/L	0	2/31	GRAB
	PERMIT REQUIREMENT					10	15				
PHENOLS	SAMPLE MEASUREMENT					ND		MG/L	0	2/31	GRAB
	PERMIT REQUIREMENT					0.5	0.7	(PPM)			
	SAMPLE MEASUREMENT										
	PERMIT REQUIREMENT										
	SAMPLE MEASUREMENT										
	PERMIT REQUIREMENT										

NAME/TITLE PRINCIPAL EXECUTIVE OFFICER: JOHN A OXFORD (TYPED OR PRINTED)

I CERTIFY UNDER PENALTY OF LAW THAT I HAVE PERSONALLY EXAMINED AND AM FAMILIAR WITH THE INFORMATION SUBMITTED HEREIN; AND BASED ON MY INQUIRY OF THOSE INDIVIDUALS IMMEDIATELY RESPONSIBLE FOR OBTAINING THE INFORMATION, I BELIEVE THE SUBMITTED INFORMATION IS TRUE, ACCURATE AND COMPLETE. I AM AWARE THAT THERE ARE SIGNIFICANT PENALTIES FOR SUBMITTING FALSE INFORMATION, INCLUDING THE POSSIBILITY OF FINE AND IMPRISONMENT. SEE 18 U.S.C § 1001 AND 33 U.S.C § 1319. *(Penalties under these statutes may include fines up to $10,000 and or maximum imprisonment of between 6 months and 5 years.)*

SIGNATURE OF PRINCIPAL EXECUTIVE OFFICER OR AUTHORIZED AGENT: John A Oxford

TELEPHONE: AREA CODE 503 NUMBER 286-3681

DATE: YEAR 92 MO 11 DAY 12

COMMENT AND EXPLANATION OF ANY VIOLATIONS (*Reference all attachments here*)

Koppers015698

PERMITTEE NAME/ADDRESS (Include Facility Name/Location if different)
NAME Kap PLERS INDUSTRIES INC
ADDRESS 7540 N.W. St. HELENS RD
PORTLAND OR 97210

FACILITY
LOCATION

NATIONAL POLLUTANT DISCHARGE ELIMINATION SYSTEM (NPDES)
DISCHARGE MONITORING REPORT (DMR)

Form Approved
OMB No. 2040-0004
Expires 3-31-88

(2-16) PERMIT NUMBER: OR-100077-9
(17-19) DISCHARGE NUMBER: 001

3077-J
47430

MONITORING PERIOD

FROM YEAR (20-21)	MO (22-23)	DAY (24-25)	TO YEAR (26-27)	MO (28-29)	DAY (30-31)
92	10	1	92	10	31

NOTE: Read instructions before completing this form.

PARAMETER (32-37)		(3 Card Only) QUANTITY OR LOADING (46-53) AVERAGE	(54-61) MAXIMUM	UNITS	(4 Card Only) QUALITY OR CONCENTRATION (38-45) MINIMUM	(46-53) AVERAGE	(54-61) MAXIMUM	UNITS	NO. EX (62-63)	FREQUENCY OF ANALYSIS (64-68)	SAMPLE TYPE (69-70)
FLOW.	SAMPLE MEASUREMENT	2903							N/A	2/31	Est.
	PERMIT REQUIREMENT		NA	GPD							
Temp.	SAMPLE MEASUREMENT				68	60	60	°F	0	2/31	GRAB
	PERMIT REQUIREMENT						100				
Ph.	SAMPLE MEASUREMENT				6.5	6.55	6.6	SU	0	2/31	GRAB
	PERMIT REQUIREMENT				6.0		9.0				
oil + Grease.	SAMPLE MEASUREMENT				0.9	1.25	1.0	mg/L	0	2/31	GRAB
	PERMIT REQUIREMENT					10	15				
Phenols.	SAMPLE MEASUREMENT					ND		mg/L	0	2/31	GRAB
	PERMIT REQUIREMENT					0.5	0.7	PPM			
	SAMPLE MEASUREMENT										
	PERMIT REQUIREMENT										
	SAMPLE MEASUREMENT										
	PERMIT REQUIREMENT										

NAME/TITLE PRINCIPAL EXECUTIVE OFFICER: John A Defford
TYPED OR PRINTED

I CERTIFY UNDER PENALTY OF LAW THAT I HAVE PERSONALLY EXAMINED AND AM FAMILIAR WITH THE INFORMATION SUBMITTED HEREIN; AND BASED ON MY INQUIRY OF THOSE INDIVIDUALS IMMEDIATELY RESPONSIBLE FOR OBTAINING THE INFORMATION, I BELIEVE THE SUBMITTED INFORMATION IS TRUE, ACCURATE AND COMPLETE. I AM AWARE THAT THERE ARE SIGNIFICANT PENALTIES FOR SUBMITTING FALSE INFORMATION, INCLUDING THE POSSIBILITY OF FINE AND IMPRISONMENT. SEE 18 U.S.C § 1001 AND 33 U.S.C § 1319. *(Penalties under these statutes may include fines up to $10,000 and/or maximum imprisonment of between 6 months and 5 years.)*

SIGNATURE OF PRINCIPAL EXECUTIVE OFFICER OR AUTHORIZED AGENT

TELEPHONE AREA CODE	NUMBER	DATE YEAR	MO	DAY
503	286-3681	92	11	12

COMMENT AND EXPLANATION OF ANY VIOLATIONS *(Reference all attachments here)*

Koppers015699

	WW1	WW2
flow	45000	45000 = 90000 ÷ 31 = 2.903
Temp	60	60 = 120 ÷ 2 = 60
Ph.	6.5	6.5 = 13.1 ÷ 2 = 6.55
oil + Grease	0.9	1.0 = 2.5 ÷ 2 = 1.25
Phenols	ND	ND

RECEIVED
NOV - 5 1992
KOPPERS INDS., INC.
PORTLAND, OR

Report Date: November 3, 1992
Job#: WG-921026BB-2
PO#: VERBAL JOHN
Project#: None
Project: None

Attention: John Oxford
Koppers Industry
7540 NW St. Helens Rd.
Portland, OR 97210

SAMPLE INFORMATION:
Date Samples Were Received By Laboratory: 10/26/92

Lab No.	Field Identification	Sample Matrix	Date	Time
1	W-W-T-1	Waste Water	10-26-92	1420
2	W-W-T-2	Waste Water	10-26-92	1420

ANALYTICAL RESULTS:

PARAMETER	METHOD	DETECTION LIMITS	SAMPLE RESULTS	SAMPLE RESULTS
Oil & Grease	EPA 413.2	0.6	0.9	1.0
Total Phenols	EPA 420.1	0.05	ND	ND

Results expressed as mg/L unless otherwise noted.

ND means none detected at or above the detection limit listed.

Sincerely,

Renee Chauvin
Technical Director

RJC/mlh

This report is for the sole and exclusive use of the above-named client. Samples are retained 15 days from the report date, or until holding time expires. Results pertain only to samples submitted.

COFFEY LABORATORIES, INC.
12423 N.E. Whitaker Way • Portland, OR • 97230 • (503) 254-1794 • FAX (503) 254-1452

10-26-92

w-w-T-1

PH 6.5

water Temp.

60°F

10-26-92

W-W-T-2

Ph 6.6

Water Temp.

60°F

COFFEY LABORATORIES INC.
12423 N.E. WHITAKER WAY, PORTLAND, OR 97230
(503) 254-1794 • FAX (503) 254-1452

CHAIN OF CUSTODY

COFFEY LABORATORIES - PENDLETON BRANCH
287 S.E. FIRST, PENDLETON, OR 97801
(503) 276-0385

PROJECT #:	PROJECT NAME:	P.O. #:	PAGE ____ of ____ PAGES PLEASE PRINT OR TYPE	FOR LABORATORY USE ONLY

COMPANY NAME: Koppers IND.
REPORT ATTENTION: John Oxford
JOB #: WGS2 1026-BBZ
SAMPLES COLLECTED BY: George Hoffman
CUSTABBR: Koppers

FIELD IDENTIFICATION: ONE LINE PER SAMPLE CONTAINER	LAB LOC	LAB ID	COLLECTION DATE	COLLECTION TIME	MEDIA	ANALYSIS REQUESTED	ANALYSIS REMARKS
W-W- T-1			10-26-92	2:20PM		Oil + Grease	
W-W- T-1			"	"		Phenols	
W-W- T-2			"	"		Oil + Grease	
W-W- T-2			"	"		Phenols	

RELINQUISHED BY:	DATE/TIME	RECEIVED BY:	DATE/TIME	LAB USE:
RELINQUISHED BY: George Hoffman	DATE/TIME 10-26-92	RECEIVED BY LAB: [signature]	DATE/TIME 10/26/92 1630	

SAMPLE REMARKS:

LEVEL 1 2 3 4

EXPRESS UPS MAIL CXX GREY TAXI LAB

WHITE COPY - COFFEY LABORATORIES

PINK COPY - CLIENTS COPY

SHADED AREA FOR LABORATORY USE ONLY

CHAIN OF CUSTODY INSTRUCTIONS ON BACK OF PINK COPY

(7/90)

Koppers015704

COFFEY LABORATORIES, INC.

CHAIN OF CUSTODY INFORMATION / INSTRUCTIONS SHEET

PROJECT NUMBER — *Applies only to samples submitted by the company. This data is provided at the companies discretion.*

PROJECT NAME — *Your company's project name. This data is provided at the companies discretion.*

COMPANY NAME — *Name of the Company or individual requesting the analysis from Coffey Laboratories, Inc.*

REPORT ATTENTION — *Name of the person who receives the laboratory report.*

SAMPLE COLLECTED BY — *The person who took the sample signs this box and gives his/her title.*

FIELD ID — *A short description of the sample point (For example: "Effluent from sand filter"). This description will appear on the report. Use one line per sample bottle.*

COLLECTION DATE — *The date on which the sample(s) was/were collected.*

COLLECTION TIME — *The time at which the sample(s) was/were collected.*

MEDIA — *This is a description of the sample matrix.*

ANALYSIS REQUESTED — *Make one column for each parameter or group of parameters associated to a bottle.*

FOR LAB USE ONLY — *Do not mark in this area (Laboratory location & ID). All shaded areas are for laboratory use only. Please do not write in these areas.*

REMARKS — *Record any comments about each sample on the same line as the sample description, e.g., "Wastewater contains VOCs".*

RELINQUISHED BY — *The sampler signs this box when he/she gives the sample to someone else, and then fills in the date and time they left his possession.*

RECEIVED BY — *The person who receives the samples signs here and fills in the date and time received. The date and time should be the same as the last one unless the samples were shipped.*

SAMPLE REMARKS — *Record any comments regarding the sample(s) as a whole or information pertinent to the sample.*

SAMPLES SHIPPED VIA — *How the samples are being shipped to the laboratory, e.g., "UPS".*

PERMITTEE NAME/ADDRESS (Include Facility Name/Location if different)

NAME: KOPPERS INDUSTRIES INC
ADDRESS: 7540 NW ST HELENS RD
PORTLAND OR 97210

FACILITY LOCATION: NORTHWEST PLANT
MULTNOMAH COUNTY

NATIONAL POLLUTANT DISCHARGE ELIMINATION SYSTEM (NPDES)
DISCHARGE MONITORING REPORT (DMR)

Form Approved
OMB No. 2040-0004
Expires 3-31-88

(2-16) PERMIT NUMBER: OR 100077-9

(17-19) DISCHARGE NUMBER: 001

3077-J
47430

MONITORING PERIOD

FROM YEAR (20-21)	MO. (22-23)	DAY (24-25)	TO YEAR (26-27)	MO (28-29)	DAY (30-31)
92	9	1	92	9	30

NOTE: Read instructions before completing this form.

PARAMETER (32-37)		(3 Card Only) QUANTITY OR LOADING (46-53) AVERAGE	(54-61) MAXIMUM	UNITS	(4 Card Only) QUALITY OR CONCENTRATION (38-45) MINIMUM	(46-53) AVERAGE	(54-61) MAXIMUM	UNITS	NO. EX (62-63)	FREQUENCY OF ANALYSIS (64-68)	SAMPLE TYPE (69-70)
FLOW	SAMPLE MEASUREMENT	NO FLOW									
	PERMIT REQUIREMENT										
TEMP	SAMPLE MEASUREMENT				NO FLOW						
	PERMIT REQUIREMENT										
PH	SAMPLE MEASUREMENT				NO FLOW						
	PERMIT REQUIREMENT										
OIL & GREASE	SAMPLE MEASUREMENT				NO FLOW						
	PERMIT REQUIREMENT										
PHENOLS	SAMPLE MEASUREMENT				NO FLOW						
	PERMIT REQUIREMENT										
	SAMPLE MEASUREMENT										
	PERMIT REQUIREMENT										
	SAMPLE MEASUREMENT										
	PERMIT REQUIREMENT										

NAME/TITLE PRINCIPAL EXECUTIVE OFFICER

JOHN A. OXFORD
PLANT MANAGER

TYPED OR PRINTED

I CERTIFY UNDER PENALTY OF LAW THAT I HAVE PERSONALLY EXAMINED AND AM FAMILIAR WITH THE INFORMATION SUBMITTED HEREIN; AND BASED ON MY INQUIRY OF THOSE INDIVIDUALS IMMEDIATELY RESPONSIBLE FOR OBTAINING THE INFORMATION, I BELIEVE THE SUBMITTED INFORMATION IS TRUE, ACCURATE AND COMPLETE. I AM AWARE THAT THERE ARE SIGNIFICANT PENALTIES FOR SUBMITTING FALSE INFORMATION, INCLUDING THE POSSIBILITY OF FINE AND IMPRISONMENT. SEE 18 U.S.C. § 1001 AND 33 U.S.C. § 1319. *(Penalties under these statutes may include fines up to $10,000 and/or maximum imprisonment of between 6 months and 5 years.)*

John A Oxford

SIGNATURE OF PRINCIPAL EXECUTIVE OFFICER OR AUTHORIZED AGENT

TELEPHONE: AREA CODE 503, NUMBER 286-3681

DATE: YEAR 92, MO 10, DAY 13

COMMENT AND EXPLANATION OF ANY VIOLATIONS (*Reference all attachments here*)

Koppers015706

GENERAL INSTRUCTIONS

1. If form has been partially completed by preprinting, disregard instructions directed at entry of that information already preprinted.
2. Enter "PERMITTEE NAME/MAILING ADDRESS (and facility name/location, if different)," "PERMIT NUMBER" and "DISCHARGE NUMBER" where indicated. (A separate form is required for each discharge.)
3. Enter dates beginning and ending "MONITORING PERIOD" covered by form where indicated.
4. Enter each "PARAMETER" as specified in monitoring requirements of permit.
5. Enter "SAMPLE MEASUREMENT" data for each parameter under "QUANTITY" and "QUALITY" in units specified in permit. "AVERAGE" is normally arithmetic average (geometric average for bacterial parameters) of all sample measurements for each parameter obtained during "MONITORING PERIOD." "MAXIMUM" and "MINIMUM" are normally extreme high and low measurements obtained during "MONITORING PERIOD." (NOTE: to municipals with secondary treatment requirement, enter 30-day average of sample measurements under "AVERAGE" and enter maximum 7-day average of sample measurements obtained during monitoring period under "MAXIMUM".
6. Enter "PERMIT REQUIREMENT" for each parameter under "QUANTITY" and "QUALITY" as specified in permit.
7. Under "NO. EX" enter number of sample measurements during monitoring period that exceed maximum (and/or minimum or 7-day average as appropriate) permit requirement for each parameter. If none, enter "0".
8. Enter "FREQUENCY OF ANALYSIS" both as "SAMPLE MEASUREMENT" (actual frequency of sampling and analysis used during monitoring period) and as "PERMIT REQUIREMENT" specified in permit. (e.g., Enter "CONT." for continuous monitoring. "1/7" for one day per week. "1/30" for one day per month. "1/90" for one day per quarter, etc.)
9. Enter "SAMPLE TYPE" both as "SAMPLE MEASUREMENT" (actual sample type used during monitoring period) and as "PERMIT REQUIREMENT." (e.g., Enter "GRAB" for individual sample. "24HC" for 24-hour composite. "N/A" for continuous monitoring, etc.)

(FOLD HERE FIRST)

10. WHERE VIOLATIONS OF PERMIT REQUIREMENTS ARE REPORTED, ATTACH A BRIEF EXPLANATION TO DESCRIBE CAUSE AND CORRECTIVE ACTIONS TAKEN. REFERENCE EACH VIOLATION BY DATE.
11. If "no discharge" occurs during monitoring period, enter "NO DISCHARGE" across form in place of data entry.
12. Enter "NAME/TITLE OF PRINCIPAL EXECUTIVE OFFICER" with "SIGNATURE OF PRINCIPAL EXECUTIVE OFFICER OR AUTHORIZED AGENT," "TELEPHONE NUMBER" and "DATE" at bottom of form.
13. Mail signed Report to Office(s) by date(s) specified in permit. Retain copy for your records.
14. More detailed instructions for use of this DISCHARGE MONITORING REPORT (DMR) form may be obtained from Office(s) specified in permit.

LEGAL NOTICE

This report is required by law (33 U.S.C. 1318; 40 C.F.R. 125.27). Failure to report or failure to report truthfully can result in civil penalties not to exceed $10,000 per day of violation; or in criminal penalties not to exceed $25,000 per day of violation, or by imprisonment for not more than one year, or by both.

FOLD HERE SECOND

FOLD HERE THIRD

STAPLE HERE

PLACE STAMP HERE

Koppers015707

PERMITTEE NAME/ADDRESS (Include Facility Name/Location if different)
NAME KOPPERS INDUSTRIES INC
ADDRESS 7540 N.W. ST HELENS RD
PORTLAND OR 97210

FACILITY NORTH WEST PLANT
LOCATION MULTNOMAH COUNTY

NATIONAL POLLUTANT DISCHARGE ELIMINATION SYSTEM (NPDES)
DISCHARGE MONITORING REPORT (DMR)

(2-16) PERMIT NUMBER	(17-19) DISCHARGE NUMBER
OR 100077-9	001

MONITORING PERIOD	YEAR	MO	DAY		YEAR	MO	DAY
FROM	92	9	1	TO	92	9	30
	(20-21)	(22-23)	(24-25)		(26-27)	(28-29)	(30-31)

Form Approved
OMB No. 2040-0004
Expires 3-31-88

3077-5
47430

NOTE: Read instructions before completing this form.

PARAMETER (32-37)		(3 Card Only) QUANTITY OR LOADING (46-53) AVERAGE	(54-61) MAXIMUM	UNITS	(4 Card Only) QUALITY OR CONCENTRATION (38-45) MINIMUM	(46-53) AVERAGE	(54-61) MAXIMUM	UNITS	NO. EX (62-63)	FREQUENCY OF ANALYSIS (64-68)	SAMPLE TYPE (69-70)
FLOW.	SAMPLE MEASUREMENT	NO FLOW			NO FLOW						
	PERMIT REQUIREMENT										
TEMP.	SAMPLE MEASUREMENT	NO FLOW			NO FLOW						
	PERMIT REQUIREMENT										
PH.	SAMPLE MEASUREMENT				NO FLOW.						
	PERMIT REQUIREMENT										
OIL + GREASE	SAMPLE MEASUREMENT				NO FLOW.						
	PERMIT REQUIREMENT										
PHENOLS	SAMPLE MEASUREMENT				NO FLOW.						
	PERMIT REQUIREMENT										
	SAMPLE MEASUREMENT										
	PERMIT REQUIREMENT										
	SAMPLE MEASUREMENT										
	PERMIT REQUIREMENT										

NAME/TITLE PRINCIPAL EXECUTIVE OFFICER
JOHN A. OXFORD
PLANT MANAGER
TYPED OR PRINTED

I CERTIFY UNDER PENALTY OF LAW THAT I HAVE PERSONALLY EXAMINED AND AM FAMILIAR WITH THE INFORMATION SUBMITTED HEREIN; AND BASED ON MY INQUIRY OF THOSE INDIVIDUALS IMMEDIATELY RESPONSIBLE FOR OBTAINING THE INFORMATION, I BELIEVE THE SUBMITTED INFORMATION IS TRUE, ACCURATE AND COMPLETE. I AM AWARE THAT THERE ARE SIGNIFICANT PENALTIES FOR SUBMITTING FALSE INFORMATION, INCLUDING THE POSSIBILITY OF FINE AND IMPRISONMENT. SEE 18 U.S.C § 1001 AND 33 U.S.C § 1319. *(Penalties under these statutes may include fines up to $10,000 and/or maximum imprisonment of between 6 months and 5 years.)*

SIGNATURE OF PRINCIPAL EXECUTIVE OFFICER OR AUTHORIZED AGENT

TELEPHONE AREA CODE	NUMBER	DATE YEAR	MO	DAY
503	286-3641	92	10	13

COMMENT AND EXPLANATION OF ANY VIOLATIONS *(Reference all attachments here)*

Koppers015708

PERMITTEE NAME/ADDRESS (Include Facility Name/Location if different)
NAME KOPPERS INDUSTRIES INC
ADDRESS 7540 NW ST HELENS RD
PORTLAND OR 97210

FACILITY NORTHWEST PLANT
LOCATION MULTNOMAH COUNTY

NATIONAL POLLUTANT DISCHARGE ELIMINATION SYSTEM (NPDES)
DISCHARGE MONITORING REPORT (DMR)

Form Approved
OMB No. 2040-0004
Expires 3-31-88

(2-16) PERMIT NUMBER: OR-100077-9
(17-19) DISCHARGE NUMBER: 001

3077-J
47430

MONITORING PERIOD

FROM YEAR (18-21)	MO (22-23)	DAY (24-25)	TO YEAR (26-27)	MO (28-29)	DAY (30-31)
92	8	1	92	8	31

NOTE: Read instructions before completing this form.

PARAMETER (32-37)		(3 Card Only) QUANTITY OR LOADING (46-53) AVERAGE	(54-61) MAXIMUM	UNITS	(4 Card Only) QUALITY OR CONCENTRATION (38-45) MINIMUM	(46-53) AVERAGE	(54-61) MAXIMUM	UNITS	NO. EX (62-63)	FREQUENCY OF ANALYSIS (64-68)	SAMPLE TYPE (69-70)
FLOW	SAMPLE MEASUREMENT	NO FLOW			NO FLOW						
	PERMIT REQUIREMENT										
TEMP	SAMPLE MEASUREMENT	NO FLOW			NO FLOW						
	PERMIT REQUIREMENT										
PH	SAMPLE MEASUREMENT				NO FLOW						
	PERMIT REQUIREMENT										
OIL & GREASE	SAMPLE MEASUREMENT				NO FLOW						
	PERMIT REQUIREMENT										
PHENOLS	SAMPLE MEASUREMENT				NO FLOW						
	PERMIT REQUIREMENT										
	SAMPLE MEASUREMENT										
	PERMIT REQUIREMENT										
	SAMPLE MEASUREMENT										
	PERMIT REQUIREMENT										

NAME/TITLE PRINCIPAL EXECUTIVE OFFICER
JOHN A OXFORD
PLANT MANAGER
TYPED OR PRINTED

I CERTIFY UNDER PENALTY OF LAW THAT I HAVE PERSONALLY EXAMINED AND AM FAMILIAR WITH THE INFORMATION SUBMITTED HEREIN; AND BASED ON MY INQUIRY OF THOSE INDIVIDUALS IMMEDIATELY RESPONSIBLE FOR OBTAINING THE INFORMATION, I BELIEVE THE SUBMITTED INFORMATION IS TRUE, ACCURATE AND COMPLETE. I AM AWARE THAT THERE ARE SIGNIFICANT PENALTIES FOR SUBMITTING FALSE INFORMATION, INCLUDING THE POSSIBILITY OF FINE AND IMPRISONMENT. SEE 18 U.S.C § 1001 AND 33 U.S.C § 1319. *(Penalties under these statutes may include fines up to $10,000 and/or maximum imprisonment of between 6 months and 5 years.)*

John A Oxford
SIGNATURE OF PRINCIPAL EXECUTIVE OFFICER OR AUTHORIZED AGENT

TELEPHONE AREA CODE	NUMBER	DATE YEAR	MO	DAY
503	286-3681	92	9	11

COMMENT AND EXPLANATION OF ANY VIOLATIONS *(Reference all attachments here)*

Koppers015709

GENERAL INSTRUCTIONS

1. If form has been partially completed by preprinting, disregard instructions directed at entry of that information already preprinted.
2. Enter "PERMITTEE NAME/MAILING ADDRESS (and facility name/location, if different)," "PERMIT NUMBER," and "DISCHARGE NUMBER," where indicated. (A separate form is required for each discharge.)
3. Enter dates beginning and ending "MONITORING PERIOD" covered by form where indicated.
4. Enter each "PARAMETER" as specified in monitoring requirements of permit.
5. Enter "SAMPLE MEASUREMENT" data for each parameter under "QUANTITY" and "QUALITY" in units specified in permit. "AVERAGE" is normally arithmetic average (geometric average for bacterial parameters) of all sample measurements for each parameter obtained during "MONITORING PERIOD." "MAXIMUM" and "MINIMUM" are normally extreme high and low measurements obtained during "MONITORING PERIOD." (NOTE: to municipals with secondary treatment requirement, enter 30-day average of sample measurements under "AVERAGE" and enter maximum 7-day average of sample measurements obtained during monitoring period under "MAXIMUM".
6. Enter "PERMIT REQUIREMENT" for each parameter under "QUANTITY" and "QUALITY" as specified in permit.
7. Under "NO. EX" enter number of sample measurements during monitoring period that exceed maximum (and/or minimum or 7-day average as appropriate) permit requirement for each parameter. If none, enter "0".
8. Enter "FREQUENCY OF ANALYSIS" both as "SAMPLE MEASUREMENT" (actual frequency of sampling and analysis used during monitoring period) and as "PERMIT REQUIREMENT" specified in permit. (e.g., Enter "CONT." for continuous monitoring. "1/7" for one day per week. "1/30" for one day per month. "1/90" for one day per quarter, etc.)
9. Enter "SAMPLE TYPE" both as "SAMPLE MEASUREMENT" (actual sample type used during monitoring period) and as "PERMIT REQUIREMENT" (e.g., Enter "GRAB" for individual sample. "24HC" for 24-hour composite. "N/A" for continuous monitoring, etc.)

(FOLD HERE FIRST)

10. WHERE VIOLATIONS OF PERMIT REQUIREMENTS ARE REPORTED, ATTACH A BRIEF EXPLANATION TO DESCRIBE CAUSE AND CORRECTIVE ACTIONS TAKEN, REFERENCE EACH VIOLATION BY DATE.
11. If "no discharge" occurs during monitoring period, enter "NO DISCHARGE" across form in place of data entry.
12. Enter "NAME/TITLE OF PRINCIPAL EXECUTIVE OFFICER" with "SIGNATURE OF PRINCIPAL EXECUTIVE OFFICER OR AUTHORIZED AGENT," "TELEPHONE NUMBER" and "DATE" at bottom of form.
13. Mail signed Report to Office(s) by date(s) specified in permit. Retain copy for your records.
14. More detailed instructions for use of this DISCHARGE MONITORING REPORT (DMR) form may be obtained from Office(s) specified in permit.

LEGAL NOTICE

This report is required by law (33 U.S.C. 1318; 40 C.F.R. 125.27). Failure to report or failure to report truthfully can result in civil penalties not to exceed $10,000 per day of violation; or in criminal penalties not to exceed $25,000 per day of violation, or by imprisonment for not more than one year, or by both.

FOLD HERE SECOND

FOLD HERE THIRD

STAPLE HERE

PLACE STAMP HERE

Koppers015710

PERMITTEE NAME/ADDRESS (Include Facility Name/Location if different)

NAME KOPPERS INDUSTRIES INC

ADDRESS 7540 NW ST HELENS RD
PORTLAND OR 97210

FACILITY LOCATION NORTHWEST PLANT
MULTNOMAH COUNTY

NATIONAL POLLUTANT DISCHARGE ELIMINATION SYSTEM (NPDES)
DISCHARGE MONITORING REPORT (DMR)

Form Approved
OMB No. 2040-0004
Expires 3-31-88

(2-16) PERMIT NUMBER: OR-100077-9

(17-19) DISCHARGE NUMBER: 001

MONITORING PERIOD	YEAR	MO	DAY		YEAR	MO	DAY
FROM	92	7	1	TO	92	7	31
	(20-21)	(22-23)	(24-25)		(26-27)	(28-29)	(30-31)

3077-J

47430

NOTE: Read instructions before completing this form.

PARAMETER (32-37)		(3 Card Only) QUANTITY OR LOADING (46-53) AVERAGE	(54-61) MAXIMUM	UNITS	(4 Card Only) QUALITY OR CONCENTRATION (38-45) MINIMUM	(46-53) AVERAGE	(54-61) MAXIMUM	UNITS	NO. EX (62-63)	FREQUENCY OF ANALYSIS (64-68)	SAMPLE TYPE (69-70)
FLOW	SAMPLE MEASUREMENT	NO FLOW			NO FLOW						
	PERMIT REQUIREMENT										
TEMP	SAMPLE MEASUREMENT				NO FLOW						
	PERMIT REQUIREMENT										
PH	SAMPLE MEASUREMENT				NO FLOW						
	PERMIT REQUIREMENT										
OIL & GREASE	SAMPLE MEASUREMENT				NO FLOW						
	PERMIT REQUIREMENT										
PENTACHLOROPHENOLS	SAMPLE MEASUREMENT				NO FLOW						
	PERMIT REQUIREMENT										
	SAMPLE MEASUREMENT										
	PERMIT REQUIREMENT										
	SAMPLE MEASUREMENT										
	PERMIT REQUIREMENT										

NAME/TITLE PRINCIPAL EXECUTIVE OFFICER

JOHN A. OXFORD
PLANT MANAGER

TYPED OR PRINTED

I CERTIFY UNDER PENALTY OF LAW THAT I HAVE PERSONALLY EXAMINED AND AM FAMILIAR WITH THE INFORMATION SUBMITTED HEREIN; AND BASED ON MY INQUIRY OF THOSE INDIVIDUALS IMMEDIATELY RESPONSIBLE FOR OBTAINING THE INFORMATION, I BELIEVE THE SUBMITTED INFORMATION IS TRUE, ACCURATE AND COMPLETE. I AM AWARE THAT THERE ARE SIGNIFICANT PENALTIES FOR SUBMITTING FALSE INFORMATION, INCLUDING THE POSSIBILITY OF FINE AND IMPRISONMENT. SEE 18 U.S.C. § 1001 AND 33 U.S.C § 1319. *(Penalties under these statutes may include fines up to $10,000 and/or maximum imprisonment of between 6 months and 5 years.)*

SIGNATURE OF PRINCIPAL EXECUTIVE OFFICER OR AUTHORIZED AGENT: John A Oxford

TELEPHONE AREA CODE	NUMBER	DATE YEAR	MO	DAY
503	286-3681	92	08	14

COMMENT AND EXPLANATION OF ANY VIOLATIONS *(Reference all attachments here)*.

Koppers015711

GENERAL INSTRUCTIONS

1. If form has been partially completed by preprinting, disregard instructions directed at entry of that information already preprinted.
2. Enter "PERMITTEE NAME/MAILING ADDRESS (and facility name/location, if different)," "PERMIT NUMBER," and "DISCHARGE NUMBER" where indicated. (A separate form is required for each discharge.)
3. Enter dates beginning and ending "MONITORING PERIOD" covered by form where indicated.
4. Enter each "PARAMETER" as specified in monitoring requirements of permit.
5. Enter "SAMPLE MEASUREMENT" data for each parameter under "QUANTITY" and "QUALITY" in units specified in permit. "AVERAGE" is normally arithmetic average (geometric average for bacterial parameters) of all sample measurements for each parameter obtained during "MONITORING PERIOD." "MAXIMUM" and "MINIMUM" are normally extreme high and low measurements obtained during "MONITORING PERIOD." (NOTE: to municipals with secondary treatment requirement, enter 30-day average of sample measurements under "AVERAGE" and enter maximum 7-day average of sample measurements obtained during monitoring period under "MAXIMUM".
6. Enter "PERMIT REQUIREMENT" for each parameter under "QUANTITY" and "QUALITY" as specified in permit.
7. Under "NO. EX" enter number of sample measurements during monitoring period that exceed maximum (and/or minimum or 7-day average as appropriate) permit requirement for each parameter. If none, enter "0".
8. Enter "FREQUENCY OF ANALYSIS" both as "SAMPLE MEASUREMENT" (actual frequency of sampling and analysis used during monitoring period) and as "PERMIT REQUIREMENT" specified in permit. (e.g., Enter "CONT" for continuous monitoring. "1/7" for one day per week. "1/30" for one day per month. "1/90" for one day per quarter, etc.)
9. Enter "SAMPLE TYPE" both as "SAMPLE MEASUREMENT" (actual sample type used during monitoring period) and as "PERMIT REQUIREMENT" (e.g., Enter "GRAB" for individual sample. "24HC" for 24-hour composite. "N/A" for continuous monitoring, etc.)

(FOLD HERE FIRST)

10. WHERE VIOLATIONS OF PERMIT REQUIREMENTS ARE REPORTED, ATTACH A BRIEF EXPLANATION TO DESCRIBE CAUSE AND CORRECTIVE ACTIONS TAKEN. REFERENCE EACH VIOLATION BY DATE.
11. If "no discharge" occurs during monitoring period, enter "NO DISCHARGE" across form in place of data entry.
12. Enter "NAME/TITLE OF PRINCIPAL EXECUTIVE OFFICER" with "SIGNATURE OF PRINCIPAL EXECUTIVE OFFICER OR AUTHORIZED AGENT," "TELEPHONE NUMBER" and "DATE" at bottom of form.
13. Mail signed Report to Office(s) by date(s) specified in permit. Retain copy for your records.
14. More detailed instructions for use of this DISCHARGE MONITORING REPORT (DMR) form may be obtained from Office(s) specified in permit.

LEGAL NOTICE

This report is required by law (33 U.S.C. 1318; 40 C.F.R. 125.27). Failure to report or failure to report truthfully can result in civil penalties not to exceed $10,000 per day of violation; or in criminal penalties not to exceed $25,000 per day of violation, or by imprisonment for not more than one year, or by both.

FOLD HERE SECOND

FOLD HERE THIRD

STAPLE HERE

PLACE STAMP HERE

Koppers015712

PERMITTEE NAME/ADDRESS (Include Facility Name/Location if different)

NAME KOPPERS INDUSTRIES INC

ADDRESS 7540 NW ST HELENS RD
PORTLAND OR 97210

FACILITY NORTHWEST PLANT

LOCATION MULTNOMAH COUNTY

NATIONAL POLLUTANT DISCHARGE ELIMINATION SYSTEM (NPDES)

DISCHARGE MONITORING REPORT (DMR)

Form Approved
OMB No. 2040-0004
Expires 3-31-88

(2-16) PERMIT NUMBER: OR-100077-9

(17-19) DISCHARGE NUMBER: 001

XX 3077-J
47430

MONITORING PERIOD

FROM YEAR (20-21)	MO (22-23)	DAY (24-25)	TO YEAR (26-27)	MO (28-29)	DAY (30-31)
92	6	1	92	6	30

NOTE: Read instructions before completing this form.

PARAMETER (32-37)		(3 Card Only) QUANTITY OR LOADING (46-53) AVERAGE	(54-61) MAXIMUM	UNITS	(4 Card Only) QUALITY OR CONCENTRATION (38-45) MINIMUM	(46-53) AVERAGE	(54-61) MAXIMUM	UNITS	NO. EX (62-63)	FREQUENCY OF ANALYSIS (64-68)	SAMPLE TYPE (69-70)
FLOW	SAMPLE MEASUREMENT	NO FLOW			NO FLOW						
	PERMIT REQUIREMENT										
TEMP	SAMPLE MEASUREMENT				NO FLOW						
	PERMIT REQUIREMENT										
PH	SAMPLE MEASUREMENT				NO FLOW						
	PERMIT REQUIREMENT										
OIL & GREASE	SAMPLE MEASUREMENT				NO FLOW						
	PERMIT REQUIREMENT										
~~XXXXXXXX~~ PHENOLS	SAMPLE MEASUREMENT				NO FLOW						
	PERMIT REQUIREMENT						1.750	Daily		Grab	
	SAMPLE MEASUREMENT										
	PERMIT REQUIREMENT										
	SAMPLE MEASUREMENT										
	PERMIT REQUIREMENT										

NAME/TITLE PRINCIPAL EXECUTIVE OFFICER

JOHN A OXFORD
PLANT MANAGER

TYPED OR PRINTED

I CERTIFY UNDER PENALTY OF LAW THAT I HAVE PERSONALLY EXAMINED AND AM FAMILIAR WITH THE INFORMATION SUBMITTED HEREIN; AND BASED ON MY INQUIRY OF THOSE INDIVIDUALS IMMEDIATELY RESPONSIBLE FOR OBTAINING THE INFORMATION, I BELIEVE THE SUBMITTED INFORMATION IS TRUE, ACCURATE AND COMPLETE. I AM AWARE THAT THERE ARE SIGNIFICANT PENALTIES FOR SUBMITTING FALSE INFORMATION, INCLUDING THE POSSIBILITY OF FINE AND IMPRISONMENT. SEE 18 U.S.C § 1001 AND 33 U.S.C § 1319. (Penalties under these statutes may include fines up to $10,000 and/or maximum imprisonment of between 6 months and 5 years.)

John A Oxford

SIGNATURE OF PRINCIPAL EXECUTIVE OFFICER OR AUTHORIZED AGENT

TELEPHONE AREA CODE	NUMBER	DATE YEAR	MO	DAY
503	286-3681	92	07	12

COMMENT AND EXPLANATION OF ANY VIOLATIONS (Reference all attachments here)

Koppers015713

GENERAL INSTRUCTIONS

1. If form has been partially completed by preprinting, disregard instructions directed at entry of that information already preprinted.
2. Enter "PERMITTEE NAME/MAILING ADDRESS (and facility name/location, if different)," "PERMIT NUMBER," and "DISCHARGE NUMBER" where indicated. (A separate form is required for each discharge.)
3. Enter dates beginning and ending "MONITORING PERIOD" covered by form where indicated.
4. Enter each "PARAMETER" as specified in monitoring requirements of permit.
5. Enter "SAMPLE MEASUREMENT" data for each parameter under "QUANTITY" and "QUALITY" in units specified in permit. "AVERAGE" is normally arithmetic average (geometric average for bacterial parameters) of all sample measurements for each parameter obtained during "MONITORING PERIOD." "MAXIMUM" and "MINIMUM" are normally extreme high and low measurements obtained during "MONITORING PERIOD." (NOTE: to municipals with secondary treatment requirement, enter 30-day average of sample measurements under "AVERAGE" and enter maximum 7-day average of sample measurements obtained during monitoring period under "MAXIMUM".
6. Enter "PERMIT REQUIREMENT" for each parameter under "QUANTITY" and "QUALITY" as specified in permit.
7. Under "NO. EX" enter number of sample measurements during monitoring period that exceed maximum (and/or minimum or 7-day average as appropriate) permit requirement for each parameter. If none, enter "0".
8. Enter "FREQUENCY OF ANALYSIS" both as "SAMPLE MEASUREMENT" (actual frequency of sampling and analysis used during monitoring period) and as "PERMIT REQUIREMENT" specified in permit. (e.g., Enter "CONT." for continuous monitoring. "1/7" for one day per week. "1/30" for one day per month. "1/90" for one day per quarter, etc.)
9. Enter "SAMPLE TYPE" both as "SAMPLE MEASUREMENT" (actual sample type used during monitoring period) and as "PERMIT REQUIREMENT." (e.g., Enter "GRAB" for individual sample. "24HC" for 24-hour composite. "N/A" for continuous monitoring, etc.)

(FOLD HERE FIRST)

10. WHERE VIOLATIONS OF PERMIT REQUIREMENTS ARE REPORTED, ATTACH A BRIEF EXPLANATION TO DESCRIBE CAUSE AND CORRECTIVE ACTIONS TAKEN. REFERENCE EACH VIOLATION BY DATE.
11. If "no discharge" occurs during monitoring period, enter "NO DISCHARGE" across form in place of data entry.
12. Enter "NAME/TITLE OF PRINCIPAL EXECUTIVE OFFICER" with "SIGNATURE OF PRINCIPAL EXECUTIVE OFFICER OR AUTHORIZED AGENT," "TELEPHONE NUMBER" and "DATE" at bottom of form.
13. Mail signed Report to Office(s) by date(s) specified in permit. Retain copy for your records.
14. More detailed instructions for use of this DISCHARGE MONITORING REPORT (DMR) form may be obtained from Office(s) specified in permit.

LEGAL NOTICE

This report is required by law (33 U.S.C. 1318; 40 C.F.R. 125.27). Failure to report or failure to report truthfully can result in civil penalties not to exceed $10,000 per day of violation; or in criminal penalties not to exceed $25,000 per day of violation, or by imprisonment for not more than one year, or by both.

FOLD HERE SECOND

FOLD HERE THIRD

STAPLE HERE

PLACE STAMP HERE

JOHN A OXCIDS
PLANT MANAGER

NAME AND TITLE OF PRINCIPAL EXECUTIVE OFFICER

Koppers015714

PERMITTEE NAME/ADDRESS (Include Facility Name/Location if different)

NAME KOPPERS INDUSTRIES INC

ADDRESS 7540 NW ST HELENS RD
PORTLAND OR 92710

FACILITY NORTHWEST PLANT

LOCATION MULTNOMAH COUNTY

NATIONAL POLLUTANT DISCHARGE ELIMINATION SYSTEM (NPDES)
DISCHARGE MONITORING REPORT (DMR)

Form Approved
OMB No. 2040-0004
Expires 3-31-88

(2-16) PERMIT NUMBER: OR-100077-9

(17-19) DISCHARGE NUMBER: 001

MONITORING PERIOD

FROM YEAR (20-21)	MO (22-23)	DAY (24-25)	TO YEAR (26-27)	MO (28-29)	DAY (30-31)
92	5	1	92	5	31

3077-J
47430

NOTE: Read instructions before completing this form.

PARAMETER (32-37)		(3 Card Only) QUANTITY OR LOADING (46-53) AVERAGE	(54-61) MAXIMUM	UNITS	(4 Card Only) QUALITY OR CONCENTRATION (38-45) MINIMUM	(46-53) AVERAGE	(54-61) MAXIMUM	UNITS	NO. EX (62-63)	FREQUENCY OF ANALYSIS (64-68)	SAMPLE TYPE (69-70)
FLOW	SAMPLE MEASUREMENT	NO FLOW			NO FLOW						
	PERMIT REQUIREMENT										
TEMP	SAMPLE MEASUREMENT				NO FLOW						
	PERMIT REQUIREMENT										
PH	SAMPLE MEASUREMENT				NO FOW						
	PERMIT REQUIREMENT										
OIL & GREASE	SAMPLE MEASUREMENT				NO FLOW						
	PERMIT REQUIREMENT										
PHENOBS	SAMPLE MEASUREMENT				NO FLOW						
	PERMIT REQUIREMENT										
	SAMPLE MEASUREMENT										
	PERMIT REQUIREMENT										
	SAMPLE MEASUREMENT										
	PERMIT REQUIREMENT										

NAME/TITLE PRINCIPAL EXECUTIVE OFFICER

JOHN A OXFORD
PLANT MANAGER

TYPED OR PRINTED

I CERTIFY UNDER PENALTY OF LAW THAT I HAVE PERSONALLY EXAMINED AND AM FAMILIAR WITH THE INFORMATION SUBMITTED HEREIN; AND BASED ON MY INQUIRY OF THOSE INDIVIDUALS IMMEDIATELY RESPONSIBLE FOR OBTAINING THE INFORMATION, I BELIEVE THE SUBMITTED INFORMATION IS TRUE, ACCURATE AND COMPLETE. I AM AWARE THAT THERE ARE SIGNIFICANT PENALTIES FOR SUBMITTING FALSE INFORMATION, INCLUDING THE POSSIBILITY OF FINE AND IMPRISONMENT. SEE 18 U.S.C. § 1001 AND 33 U.S.C. § 1319. *(Penalties under these statutes may include fines up to $10,000 and/or maximum imprisonment of between 6 months and 5 years.)*

SIGNATURE OF PRINCIPAL EXECUTIVE OFFICER OR AUTHORIZED AGENT

TELEPHONE AREA CODE	NUMBER	DATE YEAR	MO	DAY
503	286-3681	92	06	12

COMMENT AND EXPLANATION OF ANY VIOLATIONS *(Reference all attachments here)*

Molly

Koppers015715

EPA Form 3320-1 (Rev. 10-79) PREVIOUS EDITION TO BE USED UNTIL SUPPLY IS EXHAUSTED. (REPLACES EPA FORM T-40 WHICH MAY NOT BE USED.)

GENERAL INSTRUCTIONS

1. If form has been partially completed by preprinting, disregard instructions directed at entry of that information already preprinted.
2. Enter "PERMITTEE NAME/MAILING ADDRESS (and facility name/location, if different)," "PERMIT NUMBER" and "DISCHARGE NUMBER" where indicated. (A separate form is required for each discharge.)
3. Enter dates beginning and ending "MONITORING PERIOD" covered by form where indicated.
4. Enter each "PARAMETER" as specified in monitoring requirements of permit.
5. Enter "SAMPLE MEASUREMENT" data for each parameter under "QUANTITY" and "QUALITY" in units specified in permit. "AVERAGE" is normally arithmetic average (geometric average for bacterial parameters) of all sample measurements for each parameter obtained during "MONITORING PERIOD." "MAXIMUM" and "MINIMUM" are normally extreme high and low measurements obtained during "MONITORING PERIOD." (NOTE: to municipals with secondary treatment requirement, enter 30-day average of sample measurements under "AVERAGE" and enter maximum 7-day average of sample measurements obtained during monitoring period under "MAXIMUM".
6. Enter "PERMIT REQUIREMENT" for each parameter under "QUANTITY" and "QUALITY" as specified in permit.
7. Under "NO. EX" enter number of sample measurements during monitoring period that exceed maximum (and/or minimum or 7-day average as appropriate) permit requirement for each parameter. If none, enter "0".
8. Enter "FREQUENCY OF ANALYSIS" both as "SAMPLE MEASUREMENT" (actual frequency of sampling and analysis used during monitoring period) and as "PERMIT REQUIREMENT" specified in permit. (e.g., Enter "CONT." for continuous monitoring. "1/7" for one day per week. "1/30" for one day per month. "1/90" for one day per quarter, etc.)
9. Enter "SAMPLE TYPE" both as "SAMPLE MEASUREMENT" (actual sample type used during monitoring period) and as "PERMIT REQUIREMENT." (e.g., Enter "GRAB" for individual sample. "24HC" for 24-hour composite. "N/A" for continuous monitoring, etc.)

(FOLD HERE FIRST)

10. WHERE VIOLATIONS OF PERMIT REQUIREMENTS ARE REPORTED, ATTACH A BRIEF EXPLANATION TO DESCRIBE CAUSE AND CORRECTIVE ACTIONS TAKEN. REFERENCE EACH VIOLATION BY DATE.
11. If "no discharge" occurs during monitoring period, enter "NO DISCHARGE" across form in place of data entry.
12. Enter "NAME/TITLE OF PRINCIPAL EXECUTIVE OFFICER" with "SIGNATURE OF PRINCIPAL EXECUTIVE OFFICER OR AUTHORIZED AGENT," "TELEPHONE NUMBER" and "DATE" at bottom of form.
13. Mail signed Report to Office(s) by date(s) specified in permit. Retain copy for your records.
14. More detailed instructions for use of this DISCHARGE MONITORING REPORT (DMR) form may be obtained from Office(s) specified in permit.

LEGAL NOTICE

This report is required by law (33 U.S.C. 1318; 40 C.F.R. 125.27). Failure to report or failure to report truthfully can result in civil penalties not to exceed $10,000 per day of violation; or in criminal penalties not to exceed $25,000 per day of violation, or by imprisonment for not more than one year, or by both.

FOLD HERE SECOND

PLACE STAMP HERE

FOLD HERE THIRD

STAPLE HERE

PERMITTEE NAME/ADDRESS (Include Facility Name/Location if different)

NAME: Beppes Industries Inc.

ADDRESS: 8820 N.W. St Helens Rd
Portland Or. 97210

FACILITY: D.W. Plant

LOCATION: Multnomah County

NATIONAL POLLUTANT DISCHARGE ELIMINATION SYSTEM (NPDES)
DISCHARGE MONITORING REPORT (DMR)

Form Approved
OMB No. 2040-0004
Expires 3-31-88

PERMIT NUMBER (2-16)	DISCHARGE NUMBER (17-19)
OR-100077-9	001

30 77-J
47430

MONITORING PERIOD	YEAR	MO	DAY		YEAR	MO	DAY
FROM	92	5	1	TO	92	5	31
	(20-21)	(22-23)	(24-25)		(26-27)	(28-29)	(30-31)

NOTE: Read instructions before completing this form.

PARAMETER (32-37)		(3 Card Only) QUANTITY OR LOADING (46-53) AVERAGE	(54-61) MAXIMUM	UNITS	(4 Card Only) QUALITY OR CONCENTRATION (38-45) MINIMUM	(46-53) AVERAGE	(54-61) MAXIMUM	UNITS	NO. EX (62-63)	FREQUENCY OF ANALYSIS (64-68)	SAMPLE TYPE (69-70)
Flow.	SAMPLE MEASUREMENT	no flow.									
	PERMIT REQUIREMENT										
Temp.	SAMPLE MEASUREMENT				no flow.						
	PERMIT REQUIREMENT										
Ph.	SAMPLE MEASUREMENT				no flow						
	PERMIT REQUIREMENT										
Oil & Grease.	SAMPLE MEASUREMENT				no flow						
	PERMIT REQUIREMENT										
Phenols	SAMPLE MEASUREMENT				no flow.						
	PERMIT REQUIREMENT										
	SAMPLE MEASUREMENT										
	PERMIT REQUIREMENT										
	SAMPLE MEASUREMENT										
	PERMIT REQUIREMENT										

NAME/TITLE PRINCIPAL EXECUTIVE OFFICER			TELEPHONE		DATE		
John A. Oelke. Plant mgr.	I CERTIFY UNDER PENALTY OF LAW THAT I HAVE PERSONALLY EXAMINED AND AM FAMILIAR WITH THE INFORMATION SUBMITTED HEREIN; AND BASED ON MY INQUIRY OF THOSE INDIVIDUALS IMMEDIATELY RESPONSIBLE FOR OBTAINING THE INFORMATION, I BELIEVE THE SUBMITTED INFORMATION IS TRUE, ACCURATE AND COMPLETE. I AM AWARE THAT THERE ARE SIGNIFICANT PENALTIES FOR SUBMITTING FALSE INFORMATION, INCLUDING THE POSSIBILITY OF FINE AND IMPRISONMENT SEE 18 U.S.C § 1001 AND 33 U.S.C § 1319. (Penalties under these statutes may include fines up to $10,000 and or maximum imprisonment of between 6 months and 5 years.)	John A. Oelke Mgr. May Real	503	2863681	92	6	12
TYPED OR PRINTED		SIGNATURE OF PRINCIPAL EXECUTIVE OFFICER OR AUTHORIZED AGENT	AREA CODE	NUMBER	YEAR	MO	DAY

COMMENT AND EXPLANATION OF ANY VIOLATIONS (Reference all attachments here)

Koppers015717

PERMITTEE NAME/ADDRESS (Include Facility Name/Location if different)

NAME KOPPERS INDUSTRIES INC
ADDRESS 7540 NW ST HELENS RD
PORTLAND OR 97210

FACILITY NORTHWEST PLANT
LOCATION MULTNOMAH COUNTY

NATIONAL POLLUTANT DISCHARGE ELIMINATION SYSTEM (NPDES)
DISCHARGE MONITORING REPORT (DMR)

Form Approved
OMB No. 2040-0004
Expires 3-31-88

(2-16) PERMIT NUMBER: OR-100077-9

(17-19) DISCHARGE NUMBER: 001

3077-J

MONITORING PERIOD

	YEAR	MO	DAY		YEAR	MO	DAY
FROM	92	4	1	TO	92	4	30
	(20-21)	(22-23)	(24-25)		(26-27)	(28-29)	(30-31)

47430

NOTE: Read instructions before completing this form.

PARAMETER (32-37)		(3 Card Only) QUANTITY OR LOADING (46-53) AVERAGE	(54-61) MAXIMUM	UNITS	(4 Card Only) QUALITY OR CONCENTRATION (38-45) MINIMUM	(46-53) AVERAGE	(54-61) MAXIMUM	UNITS	NO. EX (62-63)	FREQUENCY OF ANALYSIS (64-68)	SAMPLE TYPE (69-70)
FLOW	SAMPLE MEASUREMENT								N/A	2/30	EST
	PERMIT REQUIREMENT	3000	N/A	GPD							
TEMP	SAMPLE MEASUREMENT				68	68	68		0	2/30	GRAB
	PERMIT REQUIREMENT						100	°F			
PH	SAMPLE MEASUREMENT				7.0	7.0	7.0		0	2/30	GRAB
	PERMIT REQUIREMENT				6.0		9.0				
OIL & GREASE	SAMPLE MEASUREMENT				0.6	0.6	0.6	MG/L	0	2/30	GRAB
	PERMIT REQUIREMENT					10	15				
PHENOLS	SAMPLE MEASUREMENT				0.05	0.055	0.06	MG/L	0	2/30	GRAB
	PERMIT REQUIREMENT					0.5	0.7	(PPM)			
	SAMPLE MEASUREMENT										
	PERMIT REQUIREMENT										
	SAMPLE MEASUREMENT										
	PERMIT REQUIREMENT										

NAME/TITLE PRINCIPAL EXECUTIVE OFFICER

JOHN A. OXFORD
PLANT MANAGER
TYPED OR PRINTED

I CERTIFY UNDER PENALTY OF LAW THAT I HAVE PERSONALLY EXAMINED AND AM FAMILIAR WITH THE INFORMATION SUBMITTED HEREIN; AND BASED ON MY INQUIRY OF THOSE INDIVIDUALS IMMEDIATELY RESPONSIBLE FOR OBTAINING THE INFORMATION, I BELIEVE THE SUBMITTED INFORMATION IS TRUE, ACCURATE AND COMPLETE. I AM AWARE THAT THERE ARE SIGNIFICANT PENALTIES FOR SUBMITTING FALSE INFORMATION, INCLUDING THE POSSIBILITY OF FINE AND IMPRISONMENT. SEE 18 U.S.C § 1001 AND 33 U.S.C § 1319. *(Penalties under these statutes may include fines up to $10,000 and/or maximum imprisonment of between 6 months and 5 years.)*

John a Oxford
SIGNATURE OF PRINCIPAL EXECUTIVE OFFICER OR AUTHORIZED AGENT

TELEPHONE: AREA CODE 503 NUMBER 286-3681

DATE: YEAR 92 MO 5 DAY 14

COMMENT AND EXPLANATION OF ANY VIOLATIONS (*Reference all attachments here*)

Koppers015718

GENERAL INSTRUCTIONS

1. If form has been partially completed by preprinting, disregard instructions directed at entry of that information already preprinted.
2. Enter "PERMITTEE NAME/MAILING ADDRESS (and facility name/location, if different)," "PERMIT NUMBER," and "DISCHARGE NUMBER" where indicated. (A separate form is required for each discharge.)
3. Enter dates beginning and ending "MONITORING PERIOD" covered by form where indicated.
4. Enter each "PARAMETER" as specified in monitoring requirements of permit.
5. Enter "SAMPLE MEASUREMENT" data for each parameter under "QUANTITY" and "QUALITY" in units specified in permit. "AVERAGE" is normally arithmetic average (geometric average for bacterial parameters) of all sample measurements for each parameter obtained during "MONITORING PERIOD." "MAXIMUM" and "MINIMUM" are normally extreme high and low measurements obtained during "MONITORING PERIOD." (NOTE: to municipals with secondary treatment requirement, enter 30-day average of sample measurements under "AVERAGE" and enter maximum 7-day average of sample measurements obtained during monitoring period under "MAXIMUM".
6. Enter "PERMIT REQUIREMENT" for each parameter under "QUANTITY" and "QUALITY" as specified in permit.
7. Under "NO. EX" enter number of sample measurements during monitoring period that exceed maximum (and/or minimum or 7-day average as appropriate) permit requirement for each parameter. If none, enter "0".
8. Enter "FREQUENCY OF ANALYSIS" both as "SAMPLE MEASUREMENT" (actual frequency of sampling and analysis used during monitoring period) and as "PERMIT REQUIREMENT" specified in permit. (e.g., Enter "CONT." for continuous monitoring. "1/7" for one day per week. "1/30" for one day per month. "1/90" for one day per quarter, etc.)
9. Enter "SAMPLE TYPE" both as "SAMPLE MEASUREMENT" (actual sample type used during monitoring period) and as "PERMIT REQUIREMENT." (e.g., Enter "GRAB" for individual sample. "24HC" for 24-hour composite. "N/A" for continuous monitoring, etc.)

(FOLD HERE FIRST)

10. WHERE VIOLATIONS OF PERMIT REQUIREMENTS ARE REPORTED, ATTACH A BRIEF EXPLANATION TO DESCRIBE CAUSE AND CORRECTIVE ACTIONS TAKEN. REFERENCE EACH VIOLATION BY DATE.
11. If "no discharge" occurs during monitoring period, enter "NO DISCHARGE" across form in place of data entry.
12. Enter "NAME/TITLE OF PRINCIPAL EXECUTIVE OFFICER" with "SIGNATURE OF PRINCIPAL EXECUTIVE OFFICER OR AUTHORIZED AGENT." "TELEPHONE NUMBER" and "DATE" at bottom of form.
13. Mail signed Report to Office(s) by date(s) specified in permit. Retain copy for your records.
14. More detailed instructions for use of this DISCHARGE MONITORING REPORT (DMR) form may be obtained from Office(s) specified in permit.

LEGAL NOTICE

This report is required by law (33 U.S.C. 1318; 40 C.F.R. 125.27). Failure to report or failure to report truthfully can result in civil penalties not to exceed $10,000 per day of violation; or in criminal penalties not to exceed $25,000 per day of violation, or by imprisonment for not more than one year, or by both.

FOLD HERE SECOND

FOLD HERE THIRD

STAPLE HERE

PLACE STAMP HERE

PERMITTEE NAME/ADDRESS (Include Facility Name/Location if different)
NAME KOPPERS INDUSTRIES INC
ADDRESS 7540 NW ST HELENS RD
PORTLAND OR 97210

FACILITY NORTHWEST PLANT
LOCATION MULTNOMAH COUNTY

NATIONAL POLLUTANT DISCHARGE ELIMINATION SYSTEM (NPDES)
DISCHARGE MONITORING REPORT (DMR)

(2-16) PERMIT NUMBER	(17-19) DISCHARGE NUMBER
OR-10.0077-9	001

Form Approved
OMB No. 2040-0001
Expires 3-31-88

MONITORING PERIOD	YEAR	MO	DAY		YEAR	MO	DAY
FROM	92	4	1	TO	92	4	30
	(20-21)	(22-23)	(24-25)		(26-27)	(28-29)	(30-31)

3077-J
47430

NOTE: Read instructions before completing this form.

PARAMETER (32-37)		(3 Card Only) QUANTITY OR LOADING (46-53) AVERAGE	(54-61) MAXIMUM	UNITS	(4 Card Only) QUALITY OR CONCENTRATION (38-45) MINIMUM	(46-53) AVERAGE	(54-61) MAXIMUM	UNITS	NO. EX (62-63)	FREQUENCY OF ANALYSIS (64-68)	SAMPLE TYPE (69-70)
flow.	SAMPLE MEASUREMENT	3000							N/A	2/30	Est.
	PERMIT REQUIREMENT		N/A	MGD							
Temp	SAMPLE MEASUREMENT				68	68	68	°F	0	2/30	GRAB
	PERMIT REQUIREMENT						110				
Ph.	SAMPLE MEASUREMENT				7.0	7.0	7.0		0	2/30	GRAB
	PERMIT REQUIREMENT				6.0		9.0				
Oil + Grease	SAMPLE MEASUREMENT				0.6	0.6	0.6	mg/L	0	2/30	GRAB
	PERMIT REQUIREMENT					10	15				
Phenols.	SAMPLE MEASUREMENT				0.05	0.055	0.06	mg/L	0	2/30	GRAB
	PERMIT REQUIREMENT					0.5	0.7	(ppm)			
	SAMPLE MEASUREMENT										
	PERMIT REQUIREMENT										
	SAMPLE MEASUREMENT										
	PERMIT REQUIREMENT										

NAME/TITLE PRINCIPAL EXECUTIVE OFFICER			TELEPHONE		DATE	
JOHN A OXFORD PLANT MANAGER.	I CERTIFY UNDER PENALTY OF LAW THAT I HAVE PERSONALLY EXAMINED AND AM FAMILIAR WITH THE INFORMATION SUBMITTED HEREIN; AND BASED ON MY INQUIRY OF THOSE INDIVIDUALS IMMEDIATELY RESPONSIBLE FOR OBTAINING THE INFORMATION, I BELIEVE THE SUBMITTED INFORMATION IS TRUE, ACCURATE AND COMPLETE. I AM AWARE THAT THERE ARE SIGNIFICANT PENALTIES FOR SUBMITTING FALSE INFORMATION, INCLUDING THE POSSIBILITY OF FINE AND IMPRISONMENT. SEE 18 U.S.C. § 1001 AND 33 U.S.C. § 1319. (Penalties under these statutes may include fines up to $10,000 and or maximum imprisonment of between 6 months and 5 years.)	SIGNATURE OF PRINCIPAL EXECUTIVE OFFICER OR AUTHORIZED AGENT	503	286-3681	92	4
TYPED OR PRINTED			AREA CODE	NUMBER	YEAR	MO

COMMENT AND EXPLANATION OF ANY VIOLATIONS (Reference all attachments here)

Koppers015720

apie

	WW 3	WW 4
flow.	45000	45000 = 90000 ÷ 30 = 3000
Temp.	68	68 = 136 ÷ 2 = 68
Ph.	7.0	7.0 = 14.0 ÷ 2 = 7.0
oil + Grease	0.6	0.6 = 1.2 ÷ 2 = 0.6
Phenols.	0.05	0.06 = 0.11 ÷ 2 = 0.05

4-23-92
W-W-T-4
Ph 7.0

water Temp.
68°

4-23-92

W-W-T-3

Ph 7.0

water Temp.

68°

COFFEY LABORATORIES INC.
12423 N.E. WHITAKER WAY, PORTLAND, OR 97230
(503) 254-1794 • FAX (503) 254-1452

CHAIN OF CUSTODY

COFFEY LABORATORIES - PENDLETON BRANCH
287 S.E. FIRST, PENDLETON, OR 97801
(503) 276-0385

PROJECT #:	PROJECT NAME:	P.O. #:	PAGE _____ of _____ PAGES PLEASE PRINT OR TYPE	FOR LABORATORY USE ONLY

COMPANY NAME: Koppers
REPORT ATTENTION: JOHN OXFORD
JOB #:
SAMPLES COLLECTED BY: JB
CUSTABBR:

FIELD IDENTIFICATION: ONE LINE PER SAMPLE CONTAINER	LAB LOC	LAB ID	COLLECTION DATE	COLLECTION TIME	MEDIA	ANALYSIS REQUESTED	ANALYSIS REMARKS
Grab (Api Sump)			23 Apr 92	1014	WW	PAH	
T-4			↓	1019	↓	oil & grease	
				1019		Phenols	
T-3				1021		oil & grease	
			✓	1021	✓	Phenols	

RELINQUISHED BY: George Huffman 4-23-92 10:25AM DATE/TIME
RECEIVED BY: Jason Beach 23 Apr 92 1025 DATE/TIME
LAB USE:
RELINQUISHED BY: DATE/TIME
RECEIVED BY LAB: DATE/TIME
SAMPLE REMARKS:
LEVEL 1 2 3 4
EXPRESS UPS MAIL CXX GREY TAXI LAB

WHITE COPY - COFFEY LABORATORIES
PINK COPY - CLIENTS COPY

SHADED AREA FOR LABORATORY USE ONLY
CHAIN OF CUSTODY INSTRUCTIONS ON BACK OF PINK COPY

(7/90)

Koppers015724

COFFEY LABORATORIES, INC.

CHAIN OF CUSTODY INFORMATION / INSTRUCTIONS SHEET

PROJECT NUMBER — Applies only to samples submitted by the company. This data is provided at the companies discretion.

PROJECT NAME — Your company's project name. This data is provided at the companies discretion.

COMPANY NAME — Name of the Company or individual requesting the analysis from Coffey Laboratories, Inc.

REPORT ATTENTION — Name of the person who receives the laboratory report.

SAMPLE COLLECTED BY — The person who took the sample signs this box and gives his/her title.

FIELD ID — A short description of the sample point (For example: "Effluent from sand filter"). This description will appear on the report. Use one line per sample bottle.

COLLECTION DATE — The date on which the sample(s) was/were collected.

COLLECTION TIME — The time at which the sample(s) was/were collected.

MEDIA — This is a description of the sample matrix.

ANALYSIS REQUESTED — Make one column for each parameter or group of parameters associated to a bottle.

FOR LAB USE ONLY — Do not mark in this area (Laboratory location & ID). All shaded areas are for laboratory use only. Please do not write in these areas.

REMARKS — Record any comments about each sample on the same line as the sample description, e.g., "Wastewater contains VOCs".

RELINQUISHED BY — The sampler signs this box when he/she gives the sample to someone else, and then fills in the date and time they left his possession.

RECEIVED BY — The person who receives the samples signs here and fills in the date and time received. The date and time should be the same as the last one unless the samples were shipped.

SAMPLE REMARKS — Record any comments regarding the sample(s) as a whole or information pertinent to the sample.

SAMPLES SHIPPED VIA — How the samples are being shipped to the laboratory, e.g., "UPS".

Koppers Industry

Job#: WG-920423M-3

PARAMETER	METHOD	DET. LIMITS	T-4 RESULTS	T-3 RESULTS
Oil & Grease	EPA 413.2	0.6	0.6	0.6
Total Phenols	EPA 420.1	0.05	0.06	0.05

Results expressed as mg/L unless otherwise noted.

ANALYSIS PERFORMED: Polynuclear Aromatic Hydrocarbons, by EPA Method 8310, Liquid Chromatography.

COMPOUND	DETECTION LIMIT	LABORATORY BLANK	GRAB (API SUMP)
Acenaphthene	5.0	ND	90
Acenaphthylene	5.0	ND	140
Anthracene	1.0	ND	8
Benzo(a)Anthracene	0.5	ND	8
Benzo(b)Fluoranthene	1.0	ND	ND
Benzo(k)Fluoranthene	1.0	ND	3
Benzo(g,h,i)Perylene	1.0	ND	ND
Benzo(a)Pyrene	1.0	ND	6
Chrysene	0.5	ND	5
Dibenzo(a,h)Anthracene	1.0	ND	ND
Fluoranthene	2.0	ND	ND
Fluorene	3.0	ND	40
Indeno(1,2,3-c,d)Pyrene	1.0	ND	ND
Naphthalene	5.0	ND	ND
Phenanthrene	1.0	ND	120
Pyrene	1.0	ND	60

Results expressed as µg/L unless otherwise noted.

ND means none detected at or above the detection limit listed.

PERMITTEE NAME/ADDRESS (Include Facility Name/Location if different)

NAME KOPPERS INDUSTRIES INC

ADDRESS 7540 NW ST HELENS RD

PORTLAND OR 97210

FACILITY NORTHWEST PLANT

LOCATION MULTNOMAH COUNTY

NATIONAL POLLUTANT DISCHARGE ELIMINATION SYSTEM (NPDES)

DISCHARGE MONITORING REPORT (DMR)

Form Approved
OMB No. 2040-0004
Expires 3-31-88

(2-16) PERMIT NUMBER: OR-100077-9

(17-19) DISCHARGE NUMBER: 001

MONITORING PERIOD	YEAR	MO	DAY		YEAR	MO	DAY
FROM	92	3	1	TO	92	3	31
	(20-21)	(22-23)	(24-25)		(26-27)	(28-29)	(30-31)

3077-J

47430

NOTE: Read instructions before completing this form.

PARAMETER (32-37)		(3 Card Only) (46-53) QUANTITY OR LOADING (54-61) AVERAGE	MAXIMUM	UNITS	(4 Card Only) (38-45) QUALITY OR CONCENTRATION (46-53) MINIMUM	AVERAGE	(54-61) MAXIMUM	UNITS	NO. EX (62-63)	FREQUENCY OF ANALYSIS (64-68)	SAMPLE TYPE (69-70)
FLOW	SAMPLE MEASUREMENT	2903							N/A	2/31	EST
	PERMIT REQUIREMENT		NA	GPD							
TEMP	SAMPLE MEASUREMENT				52	52.5	53		0	2/31	GRAB
	PERMIT REQUIREMENT						110	°F			
PH	SAMPLE MEASUREMENT				6.4	6.5	6.6		0	2/31	GRAB
	PERMIT REQUIREMENT				6.0		9.0				
OIL & GREASE	SAMPLE MEASUREMENT				0.7	0.75	0.8		0	2/31	GRAB
	PERMIT REQUIREMENT					10	15	MG/L			
PHENOLS	SAMPLE MEASUREMENT				0.17	0.19	0.21		0	2/31	GRAB
	PERMIT REQUIREMENT					0.5	0.7	MG/L (PPM)			
	SAMPLE MEASUREMENT										
	PERMIT REQUIREMENT										
	SAMPLE MEASUREMENT										
	PERMIT REQUIREMENT										

NAME/TITLE PRINCIPAL EXECUTIVE OFFICER

JOHN A OXFORD
PLANT MANAGER

TYPED OR PRINTED

I CERTIFY UNDER PENALTY OF LAW THAT I HAVE PERSONALLY EXAMINED AND AM FAMILIAR WITH THE INFORMATION SUBMITTED HEREIN; AND BASED ON MY INQUIRY OF THOSE INDIVIDUALS IMMEDIATELY RESPONSIBLE FOR OBTAINING THE INFORMATION, I BELIEVE THE SUBMITTED INFORMATION IS TRUE, ACCURATE AND COMPLETE. I AM AWARE THAT THERE ARE SIGNIFICANT PENALTIES FOR SUBMITTING FALSE INFORMATION, INCLUDING THE POSSIBILITY OF FINE AND IMPRISONMENT. SEE 18 U.S.C. § 1001 AND 33 U.S.C § 1319. *(Penalties under these statutes may include fines up to $10,000 and or maximum imprisonment of between 6 months and 5 years.)*

SIGNATURE OF PRINCIPAL EXECUTIVE OFFICER OR AUTHORIZED AGENT: John A Oxford

TELEPHONE		DATE		
AREA CODE	NUMBER	YEAR	MO	DAY
503	286-3681	92	4	14

COMMENT AND EXPLANATION OF ANY VIOLATIONS *(Reference all attachments here)*

Koppers015727

GENERAL INSTRUCTIONS

1. If form has been partially completed by preprinting, disregard instructions directed at entry of that information already preprinted.
2. Enter "PERMITTEE NAME/MAILING ADDRESS (and facility name/location, if different)," "PERMIT NUMBER," and "DISCHARGE NUMBER" where indicated. (A separate form is required for each discharge.)
3. Enter dates beginning and ending "MONITORING PERIOD" covered by form where indicated.
4. Enter each "PARAMETER" as specified in monitoring requirements of permit.
5. Enter "SAMPLE MEASUREMENT" data for each parameter under "QUANTITY" and "QUALITY" in units specified in permit. "AVERAGE" is normally arithmetic average (geometric average for bacterial parameters) of all sample measurements for each parameter obtained during "MONITORING PERIOD." "MAXIMUM" and "MINIMUM" are normally extreme high and low measurements obtained during "MONITORING PERIOD." (NOTE: to municipals with secondary treatment requirement, enter 30-day average of sample measurements under "AVERAGE" and enter maximum 7-day average of sample measurements obtained during monitoring period under "MAXIMUM".
6. Enter "PERMIT REQUIREMENT" for each parameter under "QUANTITY" and "QUALITY" as specified in permit.
7. Under "NO. EX" enter number of sample measurements during monitoring period that exceed maximum (and/or minimum or 7-day average as appropriate) permit requirement for each parameter. If none, enter "0".
8. Enter "FREQUENCY OF ANALYSIS" both as "SAMPLE MEASUREMENT" (actual frequency of sampling and analysis used during monitoring period) and as "PERMIT REQUIREMENT" specified in permit. (e.g., Enter "CONT." for continuous monitoring. "1/7" for one day per week. "1/30" for one day per month. "1/90" for one day per quarter, etc.)
9. Enter "SAMPLE TYPE" both as "SAMPLE MEASUREMENT" (actual sample type used during monitoring period) and as "PERMIT REQUIREMENT." (e.g., Enter "GRAB" for individual sample. "24HC" for 24-hour composite. "N/A" for continuous monitoring, etc.)

(FOLD HERE FIRST)

10. WHERE VIOLATIONS OF PERMIT REQUIREMENTS ARE REPORTED, ATTACH A BRIEF EXPLANATION TO DESCRIBE CAUSE AND CORRECTIVE ACTIONS TAKEN, REFERENCE EACH VIOLATION BY DATE.
11. If "no discharge" occurs during monitoring period, enter "NO DISCHARGE" across form in place of data entry.
12. Enter "NAME/TITLE OF PRINCIPAL EXECUTIVE OFFICER" with "SIGNATURE OF PRINCIPAL EXECUTIVE OFFICER OR AUTHORIZED AGENT." "TELEPHONE NUMBER" and "DATE" at bottom of form.
13. Mail signed Report to Office(s) by date(s) specified in permit. Retain copy for your records.
14. More detailed instructions for use of this DISCHARGE MONITORING REPORT (DMR) form may be obtained from Office(s) specified in permit.

LEGAL NOTICE

This report is required by law (33 U.S.C. 1318; 40 C.F.R. 125.27). Failure to report or failure to report truthfully can result in civil penalties not to exceed $10,000 per day of violation; or in criminal penalties not to exceed $25,000 per day of violation, or by imprisonment for not more than one year, or by both.

FOLD HERE SECOND

FOLD HERE THIRD

STAPLE HERE

PLACE STAMP HERE

PERMITTEE NAME/ADDRESS (Include Facility Name/Location if different)
NAME Koppers Industries Inc
ADDRESS 2540 N W St Helens Rd
Portland Or 97210

FACILITY Portland Plant
LOCATION Multnomah County

NATIONAL POLLUTANT DISCHARGE ELIMINATION SYSTEM (NPDES)
DISCHARGE MONITORING REPORT (DMR)

Form Approved
OMB No. 2040-0004
Expires 3-31-88

(2-16) OR-100077-9 — PERMIT NUMBER
(17-19) — DISCHARGE NUMBER

3077-8
47430

MONITORING PERIOD

	YEAR	MO	DAY		YEAR	MO	DAY
FROM	92	3	1	TO	92	3	31
	(20-21)	(22-23)	(24-25)		(26-27)	(28-29)	(30-31)

NOTE: Read instructions before completing this form.

PARAMETER (32-37)		(3 Card Only) (46-53) QUANTITY OR LOADING (54-61) AVERAGE	MAXIMUM	UNITS	(4 Card Only) (38-45) QUALITY OR CONCENTRATION (46-53) MINIMUM	(54-61) AVERAGE	MAXIMUM	UNITS	NO. EX (62-63)	FREQUENCY OF ANALYSIS (64-68)	SAMPLE TYPE (69-70)
Flow	SAMPLE MEASUREMENT	2903							N/A	2/31	Est.
	PERMIT REQUIREMENT		N/A.	GPD							
Temp.	SAMPLE MEASUREMENT				52	52.5	53		0	2/31	GRAB
	PERMIT REQUIREMENT						110	°F			
Ph.	SAMPLE MEASUREMENT				6.4	6.5	6.6		0	2/31	GRAB
	PERMIT REQUIREMENT				6.0		9.0				
Oil + grease	SAMPLE MEASUREMENT				0.7	0.75	0.8	mg/L	0	2/31	GRAB
	PERMIT REQUIREMENT					10	15				
Phenols.	SAMPLE MEASUREMENT				0.17	0.19	0.21	mg/L	0	2/31	GRAB
	PERMIT REQUIREMENT					0.5	0.7	(PPM)			
	SAMPLE MEASUREMENT										
	PERMIT REQUIREMENT										
	SAMPLE MEASUREMENT										
	PERMIT REQUIREMENT										

NAME/TITLE PRINCIPAL EXECUTIVE OFFICER: John E Duffy
TYPED OR PRINTED

I CERTIFY UNDER PENALTY OF LAW THAT I HAVE PERSONALLY EXAMINED AND AM FAMILIAR WITH THE INFORMATION SUBMITTED HEREIN; AND BASED ON MY INQUIRY OF THOSE INDIVIDUALS IMMEDIATELY RESPONSIBLE FOR OBTAINING THE INFORMATION, I BELIEVE THE SUBMITTED INFORMATION IS TRUE, ACCURATE AND COMPLETE. I AM AWARE THAT THERE ARE SIGNIFICANT PENALTIES FOR SUBMITTING FALSE INFORMATION, INCLUDING THE POSSIBILITY OF FINE AND IMPRISONMENT. SEE 18 U.S.C. § 1001 AND 33 U.S.C. § 1319. *(Penalties under these statutes may include fines up to $10,000 and/or maximum imprisonment of between 6 months and 5 years.)*

SIGNATURE OF PRINCIPAL EXECUTIVE OFFICER OR AUTHORIZED AGENT

TELEPHONE: AREA CODE 503, NUMBER 286-3641

DATE: YEAR 92, MO 4, DAY 14

COMMENT AND EXPLANATION OF ANY VIOLATIONS (*Reference all attachments here*)

Koppers015729

3-4-92
W-W-T-1
Ph 6.6

water Temp
52°F

3-4-92

W-W-T-2

Ph 6.4

water Temp.

53°F

COFFEY LABORATORIES INC.
12423 N.E. WHITAKER WAY, PORTLAND, OR 97230
(503) 254-1794 • FAX (503) 254-1452

CHAIN OF CUSTODY

COFFEY LABORATORIES - PENDLETON BRANCH
287 S.E. FIRST, PENDLETON, OR 97801
(503) 276-0385

PROJECT #:	PROJECT NAME:	P.O. #:	PAGE _____ of _____ PAGES PLEASE PRINT OR TYPE	FOR LABORATORY USE ONLY

COMPANY NAME: Koppers IND.
REPORT ATTENTION: John Oxford
JOB #: W6920304-AC2
SAMPLES COLLECTED BY: George Hoffman
CUSTABBR: Koppers

FIELD IDENTIFICATION: ONE LINE PER SAMPLE CONTAINER	LAB LOC	LAB ID	COLLECTION DATE	COLLECTION TIME	MEDIA	ANALYSIS REQUESTED	ANALYSIS REMARKS
W-W-T-1			3-4-92	3:20PM	WW	oil & Grease	
W-W-T-1			"	"	↓	Phenols	
W-W-T-2			"	"	↓	oil & Grease	
W-W-T-2			"	"	↓	Phenols	

RELINQUISHED BY:	DATE/TIME	RECEIVED BY:	DATE/TIME	LAB USE:
RELINQUISHED BY: George Hoffman	3-4-92 DATE/TIME	RECEIVED BY LAB: Danielle Ally	3/4/92 DATE/TIME	1540

SAMPLE REMARKS:

LEVEL 1 2 3 4 | EXPRESS UPS MAIL (CXX) GREY TAXI LAB

WHITE COPY - COFFEY LABORATORIES

PINK COPY - CLIENTS COPY

SHADED AREA FOR LABORATORY USE ONLY

CHAIN OF CUSTODY INSTRUCTIONS ON BACK OF PINK COPY

(7/90)

Koppers015732

COFFEY LABORATORIES, INC.

CHAIN OF CUSTODY INFORMATION / INSTRUCTIONS SHEET

PROJECT NUMBER — *Applies only to samples submitted by the company. This data is provided at the companies discretion.*

PROJECT NAME — *Your company's project name. This data is provided at the companies discretion.*

COMPANY NAME — *Name of the Company or individual requesting the analysis from Coffey Laboratories, Inc.*

REPORT ATTENTION — *Name of the person who receives the laboratory report.*

SAMPLE COLLECTED BY — *The person who took the sample signs this box and gives his/her title.*

FIELD ID — *A short description of the sample point (For example: "Effluent from sand filter"). This description will appear on the report. Use one line per sample bottle.*

COLLECTION DATE — *The date on which the sample(s) was/were collected.*

COLLECTION TIME — *The time at which the sample(s) was/were collected.*

MEDIA — *This is a description of the sample matrix.*

ANALYSIS REQUESTED — *Make one column for each parameter or group of parameters associated to a bottle.*

FOR LAB USE ONLY — *Do not mark in this area (Laboratory location & ID). All shaded areas are for laboratory use only. Please do not write in these areas.*

REMARKS — *Record any comments about each sample on the same line as the sample description, e.g., "Wastewater contains VOCs".*

RELINQUISHED BY — *The sampler signs this box when he/she gives the sample to someone else, and then fills in the date and time they left his possession.*

RECEIVED BY — *The person who receives the samples signs here and fills in the date and time received. The date and time should be the same as the last one unless the samples were shipped.*

SAMPLE REMARKS — *Record any comments regarding the sample(s) as a whole or information pertinent to the sample.*

SAMPLES SHIPPED VIA — *How the samples are being shipped to the laboratory, e.g., "UPS".*

Report Date: March 13, 1992
Job#: WG-920304AC-2
PO#: VERBAL JOHN (O&G/Phenols)
Project#: None
Project: None

Attention: John Oxford
Koppers Industry
7540 NW St. Helens Rd.
Portland, OR 97210

SAMPLE INFORMATION:
Date Samples Were Received By Laboratory: 03/04/92

Lab No.	Field Identification	Sample Matrix	Date	Time
1	W-W-T-1	Waste Water	03-04-92	1520
2	W-W-T-2	Waste Water	03-04-92	1520

ANALYTICAL RESULTS:

PARAMETER	METHOD	DETECTION LIMITS	W-W-T-1 RESULTS	W-W-T-2 RESULTS
Oil & Grease	EPA 413.2	0.5	0.7	0.8
Total Phenols	EPA 420.1	0.05	0.17	0.21

Results expressed as mg/L unless otherwise noted.

Sincerely,

Renee Chauvin
Technical Director

RJC/mlh

This report is for the sole and exclusive use of the above-named client. Samples are retained 15 days from the report date, or until holding time expires. Results pertain only to samples submitted.

RECEIVED
MAR 17 1992
KOPPERS INDS., INC.
PORTLAND, OR

COFFEY LABORATORIES, INC.
12423 N.E. Whitaker Way • Portland, OR • 97230 • (503) 254-1794 • FAX (503) 254-1452

	Test #1	Test #2	
flow.	45000	45100	= 90000 ÷ 31 = 2903
Temp.	52	53 =	105 ÷ 2 = 52.5
Ph.	6.6	6.4 =	13.0 ÷ 2 = 6.5
oil + grease.	0.7	0.8	= 1.5 ÷ 2 = 0.75
Phenols.	0.17	0.21 =	0.38 ÷ 2 = 0.19

Koppers015735

PERMITTEE NAME/ADDRESS (Include Facility Name/Location if different)

NAME ~~KOPPERS INDUSTRIES INC~~

ADDRESS ~~7540 NW ST HELENS RD~~
~~PORTLAND OR 97210~~

FACILITY LOCATION ~~NORTHWEST PLANT~~
~~MULTNOMAH COUNTY~~

NATIONAL POLLUTANT DISCHARGE ELIMINATION SYSTEM (NPDES)

DISCHARGE MONITORING REPORT (DMR)

Form Approved
OMB No. 2040-0004
Expires 3-31-88

(2-16) ~~OR-100077-9~~ PERMIT NUMBER

(17-19) DISCHARGE NUMBER

MONITORING PERIOD							
	YEAR	MO	DAY		YEAR	MO	DAY
FROM	91	2	1	TO	92	2	29
	(20-21)	(22-23)	(24-25)		(26-27)	(28-29)	(30-31)

3077-J
47430

NOTE: Read instructions before completing this form.

PARAMETER (32-37)		(3 Card Only) (46-53) QUANTITY OR LOADING (54-61) AVERAGE	MAXIMUM	UNITS	(4 Card Only) (38-45) QUALITY OR CONCENTRATION (46-53) MINIMUM	AVERAGE	(54-61) MAXIMUM	UNITS	NO. EX (62-63)	FREQUENCY OF ANALYSIS (64-68)	SAMPLE TYPE (69-70)
FLOW	SAMPLE MEASUREMENT	NO FLOW			NO FLOW						
	PERMIT REQUIREMENT										
TEMP	SAMPLE MEASUREMENT				NO FLOW						
	PERMIT REQUIREMENT										
PH	SAMPLE MEASUREMENT				NO FLOW						
	PERMIT REQUIREMENT										
OIL & GREASE	SAMPLE MEASUREMENT				NO FLOW						
	PERMIT REQUIREMENT										
PHENOLS	SAMPLE MEASUREMENT				NO FLOW						
	PERMIT REQUIREMENT										
	SAMPLE MEASUREMENT										
	PERMIT REQUIREMENT										
	SAMPLE MEASUREMENT										
	PERMIT REQUIREMENT										

NAME/TITLE PRINCIPAL EXECUTIVE OFFICER

JOHN A OXFORD
PLANT MANAGER

TYPED OR PRINTED

I CERTIFY UNDER PENALTY OF LAW THAT I HAVE PERSONALLY EXAMINED AND AM FAMILIAR WITH THE INFORMATION SUBMITTED HEREIN; AND BASED ON MY INQUIRY OF THOSE INDIVIDUALS IMMEDIATELY RESPONSIBLE FOR OBTAINING THE INFORMATION, I BELIEVE THE SUBMITTED INFORMATION IS TRUE, ACCURATE AND COMPLETE. I AM AWARE THAT THERE ARE SIGNIFICANT PENALTIES FOR SUBMITTING FALSE INFORMATION, INCLUDING THE POSSIBILITY OF FINE AND IMPRISONMENT. SEE 18 U.S.C § 1001 AND 33 U.S.C § 1319. *(Penalties under these statutes may include fines up to $10,000 and/or maximum imprisonment of between 6 months and 5 years.)*

John A Oxford

SIGNATURE OF PRINCIPAL EXECUTIVE OFFICER OR AUTHORIZED AGENT

TELEPHONE		DATE		
AREA CODE	NUMBER	YEAR	MO	DAY
503	286-3681	92	03	16

COMMENT AND EXPLANATION OF ANY VIOLATIONS *(Reference all attachments here)*

Koppers015736

GENERAL INSTRUCTIONS

1. If form has been partially completed by preprinting, disregard instructions directed at entry of that information already preprinted.
2. Enter "PERMITTEE NAME/MAILING ADDRESS (and facility name/location, if different)," "PERMIT NUMBER," and "DISCHARGE NUMBER" where indicated. (A separate form is required for each discharge.)
3. Enter dates beginning and ending "MONITORING PERIOD" covered by form where indicated.
4. Enter each "PARAMETER" as specified in monitoring requirements of permit.
5. Enter "SAMPLE MEASUREMENT" data for each parameter under "QUANTITY" and "QUALITY" in units specified in permit. "AVERAGE" is normally arithmetic average (geometric average for bacterial parameters) of all sample measurements for each parameter obtained during "MONITORING PERIOD." "MAXIMUM" and "MINIMUM" are normally extreme high and low measurements obtained during "MONITORING PERIOD." (NOTE: to municipals with secondary treatment requirement, enter 30-day average of sample measurements under "AVERAGE" and enter maximum 7-day average of sample measurements obtained during monitoring period under "MAXIMUM".
6. Enter "PERMIT REQUIREMENT" for each parameter under "QUANTITY" and "QUALITY" as specified in permit.
7. Under "NO. EX" enter number of sample measurements during monitoring period that exceed maximum (and/or minimum or 7-day average as appropriate) permit requirement for each parameter. If none, enter "0".
8. Enter "FREQUENCY OF ANALYSIS" both as "SAMPLE MEASUREMENT" (actual frequency of sampling and analysis used during monitoring period) and as "PERMIT REQUIREMENT" specified in permit (e.g., Enter "CONT." for continuous monitoring. "1/7" for one day per week. "1/30" for one day per month. "1/90" for one day per quarter, etc.)
9. Enter "SAMPLE TYPE" both as "SAMPLE MEASUREMENT" (actual sample type used during monitoring period) and as "PERMIT REQUIREMENT." (e.g., Enter "GRAB" for individual sample. "24HC" for 24-hour composite. "N/A" for continuous monitoring, etc.)

FOLD HERE FIRST

10. WHERE VIOLATIONS OF PERMIT REQUIREMENTS ARE REPORTED, ATTACH A BRIEF EXPLANATION TO DESCRIBE CAUSE AND CORRECTIVE ACTIONS TAKEN. REFERENCE EACH VIOLATION BY DATE.
11. If "no discharge" occurs during monitoring period, enter "NO DISCHARGE" across form in place of data entry.
12. Enter "NAME/TITLE OF PRINCIPAL EXECUTIVE OFFICER" with "SIGNATURE OF PRINCIPAL EXECUTIVE OFFICER OR AUTHORIZED AGENT." "TELEPHONE NUMBER" and "DATE" at bottom of form.
13. Mail signed Report to Office(s) by date(s) specified in permit. Retain copy for your records.
14. More detailed instructions for use of this DISCHARGE MONITORING REPORT (DMR) form may be obtained from Office(s) specified in permit.

LEGAL NOTICE

This report is required by law (33 U.S.C. 1318; 40 C.F.R. 125.27). Failure to report or failure to report truthfully can result in civil penalties not to exceed $10,000 per day of violation; or in criminal penalties not to exceed $25,000 per day of violation, or by imprisonment for not more than one year, or by both.

FOLD HERE SECOND

PLACE STAMP HERE

FOLD HERE THIRD

STAPLE HERE

PERMITTEE NAME/ADDRESS (Include Facility Name/Location if different)
NAME Koppers Industries Inc.
ADDRESS 7540 N W St HELENS RD
PORTLAND OR 97210

FACILITY NORTHWEST PLANT
LOCATION MULTNOMAH COUNTY

NATIONAL POLLUTANT DISCHARGE ELIMINATION SYSTEM (NPDES)
DISCHARGE MONITORING REPORT (DMR)

(2-16) OR-100077-9 PERMIT NUMBER

(17-19) DISCHARGE NUMBER

Form Approved
OMB No. 2040-0004
Expires 3-31-88

3077-I
47430

MONITORING PERIOD

	YEAR	MO	DAY		YEAR	MO	DAY
FROM	92	2	1	TO	92	2	27
	(20-21)	(22-23)	(24-25)		(26-27)	(28-29)	(30-31)

NOTE: Read instructions before completing this form.

PARAMETER (32-37)		(3 Card Only) (46-53) QUANTITY OR LOADING (54-61) AVERAGE	MAXIMUM	UNITS	(4 Card Only) (38-45) QUALITY OR CONCENTRATION (46-53) MINIMUM	AVERAGE	(54-61) MAXIMUM	UNITS	NO. EX (62-63)	FREQUENCY OF ANALYSIS (64-68)	SAMPLE TYPE (69-70)
FLOW.	SAMPLE MEASUREMENT	No Flow.									
	PERMIT REQUIREMENT										
Temp.	SAMPLE MEASUREMENT										
	PERMIT REQUIREMENT				No	Flow					
Ph	SAMPLE MEASUREMENT										
	PERMIT REQUIREMENT				No	flow.					
Oil + grease	SAMPLE MEASUREMENT				no flow.						
	PERMIT REQUIREMENT										
Phenols	SAMPLE MEASUREMENT				no flow.						
	PERMIT REQUIREMENT										
	SAMPLE MEASUREMENT										
	PERMIT REQUIREMENT										
	SAMPLE MEASUREMENT										
	PERMIT REQUIREMENT										

NAME/TITLE PRINCIPAL EXECUTIVE OFFICER
John B Oldfield
Plant mgr.
TYPED OR PRINTED

I CERTIFY UNDER PENALTY OF LAW THAT I HAVE PERSONALLY EXAMINED AND AM FAMILIAR WITH THE INFORMATION SUBMITTED HEREIN, AND BASED ON MY INQUIRY OF THOSE INDIVIDUALS IMMEDIATELY RESPONSIBLE FOR OBTAINING THE INFORMATION, I BELIEVE THE SUBMITTED INFORMATION IS TRUE, ACCURATE AND COMPLETE. I AM AWARE THAT THERE ARE SIGNIFICANT PENALTIES FOR SUBMITTING FALSE INFORMATION, INCLUDING THE POSSIBILITY OF FINE AND IMPRISONMENT. SEE 18 USC § 1001 AND 33 USC § 1319. *(Penalties under these statutes may include fines up to $10,000 and/or maximum imprisonment of between 6 months and 5 years.)*

SIGNATURE OF PRINCIPAL EXECUTIVE OFFICER OR AUTHORIZED AGENT

TELEPHONE: AREA CODE 503, NUMBER 286-3611

DATE: YEAR 92, MO 03, DAY 16

COMMENT AND EXPLANATION OF ANY VIOLATIONS *(Reference all attachments here)*

Koppers015738

PERMITTEE NAME/ADDRESS (Include Facility Name/Location if different)
NAME KOPPERS INDUSTRIES INC
ADDRESS 7540 NW ST HELENS RD
PORTLAND OR 97210

FACILITY NORTHWEST PLANT
LOCATION MULTNOMAH COUNTY

NATIONAL POLLUTANT DISCHARGE ELIMINATION SYSTEM (NPDES)
DISCHARGE MONITORING REPORT (DMR)

Form Approved
OMB No. 2040-0004
Expires 3-31-88

(2-16) OR-100077-9 — PERMIT NUMBER
(17-19) 01 — DISCHARGE NUMBER

MONITORING PERIOD	YEAR	MO	DAY		YEAR	MO	DAY
FROM	92	01	01	TO	92	01	31
	(20-21)	(22-23)	(24-25)		(26-27)	(28-29)	(30-31)

3077-J
47430

NOTE: Read instructions before completing this form.

PARAMETER (32-37)		(3 Card Only) QUANTITY OR LOADING (46-53) AVERAGE	(54-61) MAXIMUM	UNITS	(4 Card Only) QUALITY OR CONCENTRATION (38-45) MINIMUM	(46-53) AVERAGE	(54-61) MAXIMUM	UNITS	NO. EX (62-63)	FREQUENCY OF ANALYSIS (64-68)	SAMPLE TYPE (69-70)
FLOW	SAMPLE MEASUREMENT	5806							N/A	4/31	EST
	PERMIT REQUIREMENT		NA	GPD							
TEMP	SAMPLE MEASUREMENT				45	48.25	51	°F	0	4/31	GRAB ~~EST~~ ~~MEX~~
	PERMIT REQUIREMENT						110				
PH	SAMPLE MEASUREMENT				6.1	6.375	6.6		0	4/31	GRAB ~~EST~~ ~~MEX~~
	PERMIT REQUIREMENT				6.0		9.0				
OIL & GREASE	SAMPLE MEASUREMENT				0.5	0.65	0.7	MG/L	0	4/31	grab
	PERMIT REQUIREMENT					10	15				
PHENOLS	SAMPLE MEASUREMENT				0.14	0.1875	0.22	MG/L	0	4/31	GRAB
	PERMIT REQUIREMENT					0.05	0.07	(PPM)			
	SAMPLE MEASUREMENT										
	PERMIT REQUIREMENT										
	SAMPLE MEASUREMENT										
	PERMIT REQUIREMENT										

NAME/TITLE PRINCIPAL EXECUTIVE OFFICER
JOHN A OXFORD
PLANT MANAGER
TYPED OR PRINTED

I CERTIFY UNDER PENALTY OF LAW THAT I HAVE PERSONALLY EXAMINED AND AM FAMILIAR WITH THE INFORMATION SUBMITTED HEREIN; AND BASED ON MY INQUIRY OF THOSE INDIVIDUALS IMMEDIATELY RESPONSIBLE FOR OBTAINING THE INFORMATION, I BELIEVE THE SUBMITTED INFORMATION IS TRUE, ACCURATE AND COMPLETE. I AM AWARE THAT THERE ARE SIGNIFICANT PENALTIES FOR SUBMITTING FALSE INFORMATION, INCLUDING THE POSSIBILITY OF FINE AND IMPRISONMENT. SEE 18 U.S.C § 1001 AND 33 U.S.C § 1319. *(Penalties under these statutes may include fines up to $10,000 and/or maximum imprisonment of between 6 months and 5 years.)*

John A Oxford
SIGNATURE OF PRINCIPAL EXECUTIVE OFFICER OR AUTHORIZED AGENT

TELEPHONE		DATE		
503	286-3681	92	02	15
AREA CODE	NUMBER	YEAR	MO	DAY

COMMENT AND EXPLANATION OF ANY VIOLATIONS *(Reference all attachments here)*

Koppers015739

GENERAL INSTRUCTIONS

1. If form has been partially completed by preprinting, disregard instructions directed at entry of that information already preprinted.
2. Enter "PERMITTEE NAME/MAILING ADDRESS (and facility name/location, if different)," "PERMIT NUMBER," and "DISCHARGE NUMBER" where indicated. (A separate form is required for each discharge.)
3. Enter dates beginning and ending "MONITORING PERIOD" covered by form where indicated.
4. Enter each "PARAMETER" as specified in monitoring requirements of permit.
5. Enter "SAMPLE MEASUREMENT" data for each parameter under "QUANTITY" and "QUALITY" in units specified in permit. "AVERAGE" is normally arithmetic average (geometric average for bacterial parameters) of all sample measurements for each parameter obtained during "MONITORING PERIOD." "MAXIMUM" and "MINIMUM" are normally extreme high and low measurements obtained during "MONITORING PERIOD." (NOTE: to municipals with secondary treatment requirement, enter 30-day average of sample measurements under "AVERAGE" and enter maximum 7-day average of sample measurements obtained during monitoring period under "MAXIMUM".
6. Enter "PERMIT REQUIREMENT" for each parameter under "QUANTITY" and "QUALITY" as specified in permit.
7. Under "NO. EX" enter number of sample measurements during monitoring period that exceed maximum (and/or minimum or 7-day average as appropriate) permit requirement for each parameter. If none, enter "0".
8. Enter "FREQUENCY OF ANALYSIS" both as "SAMPLE MEASUREMENT" (actual frequency of sampling and analysis used during monitoring period) and as "PERMIT REQUIREMENT" specified in permit. (e.g., Enter "CONT." for continuous monitoring. "1/7" for one day per week. "1/30" for one day per month. "1/90" for one day per quarter, etc.)
9. Enter "SAMPLE TYPE" both as "SAMPLE MEASUREMENT" (actual sample type used during monitoring period) and as "PERMIT REQUIREMENT." (e.g., Enter "GRAB" for individual sample. "24HC" for 24-hour composite. "N/A" for continuous monitoring, etc.)

(FOLD HERE FIRST)

10. WHERE VIOLATIONS OF PERMIT REQUIREMENTS ARE REPORTED, ATTACH A BRIEF EXPLANATION TO DESCRIBE CAUSE AND CORRECTIVE ACTIONS TAKEN. REFERENCE EACH VIOLATION BY DATE.
11. If "no discharge" occurs during monitoring period, enter "NO DISCHARGE" across form in place of data entry.
12. Enter "NAME/TITLE OF PRINCIPAL EXECUTIVE OFFICER" with "SIGNATURE OF PRINCIPAL EXECUTIVE OFFICER OR AUTHORIZED AGENT." "TELEPHONE NUMBER" and "DATE" at bottom of form.
13. Mail signed Report to Office(s) by date(s) specified in permit. Retain copy for your records.
14. More detailed instructions for use of this DISCHARGE MONITORING REPORT (DMR) form may be obtained from Office(s) specified in permit.

LEGAL NOTICE

This report is required by law (33 U.S.C. 1318; 40 C.F.R. 125.27). Failure to report or failure to report truthfully can result in civil penalties not to exceed $10,000 per day of violation; or in criminal penalties not to exceed $25,000 per day of violation, or by imprisonment for not more than one year, or by both.

FOLD HERE SECOND

FOLD HERE THIRD

STAPLE HERE

PLACE STAMP HERE

Koppers015740

ERMITTEE NAME/ADDRESS (Include cility Name/Location if different)
AME Koppers Inc.
DDRESS 7540 N.W. Lombard Road
Portland OR 97203

ACILITY Northwest Plant
OCATION Multnomah County

NATIONAL POLLUTANT DISCHARGE ELIMINATION SYSTEM (NPDES)
DISCHARGE MONITORING REPORT (DMR)

Form Approved
OMB No. 2040-0004
Expires 3-31-88

(2-16) PERMIT NUMBER: OR-100077-9
(17-19) DISCHARGE NUMBER:

3077-J
47430

MONITORING PERIOD	YEAR	MO	DAY		YEAR	MO	DAY
FROM	92	1	1	TO	92	1	31
	(20-21)	(22-23)	(24-25)		(26-27)	(28-29)	(30-31)

NOTE: Read instructions before completing this form.

PARAMETER (32-37)		(3 Card Only) QUANTITY OR LOADING (46-53) AVERAGE	(54-61) MAXIMUM	UNITS	(4 Card Only) QUALITY OR CONCENTRATION (38-45) MINIMUM	(46-53) AVERAGE	(54-61) MAXIMUM	UNITS	NO. EX (62-63)	FREQUENCY OF ANALYSIS (64-68)	SAMPLE TYPE (69-70)
Flow	SAMPLE MEASUREMENT	5806							N/R	4/31	Est.
	PERMIT REQUIREMENT		N/A	GPD							
Temp.	SAMPLE MEASUREMENT				45	48.25	51		0	4/31	GRAB
	PERMIT REQUIREMENT						110	°F			
Ph.	SAMPLE MEASUREMENT				6.1	6.375	6.6		0	4/31	GRAB
	PERMIT REQUIREMENT				6.0		9.0				
Oil & Grease	SAMPLE MEASUREMENT				0.5	0.65	0.7	mg/L	0	4/31	GRAB
	PERMIT REQUIREMENT					10	15				
Phenols	SAMPLE MEASUREMENT				0.14	0.1875	0.22	mg/L	0	4/31	GRAB
	PERMIT REQUIREMENT					0.05	0.07	(PPM)			
	SAMPLE MEASUREMENT										
	PERMIT REQUIREMENT										
	SAMPLE MEASUREMENT										
	PERMIT REQUIREMENT										

AME/TITLE PRINCIPAL EXECUTIVE OFFICER
John A Oppen
Plant Mgr.
TYPED OR PRINTED

I CERTIFY UNDER PENALTY OF LAW THAT I HAVE PERSONALLY EXAMINED AND AM FAMILIAR WITH THE INFORMATION SUBMITTED HEREIN, AND BASED ON MY INQUIRY OF THOSE INDIVIDUALS IMMEDIATELY RESPONSIBLE FOR OBTAINING THE INFORMATION, I BELIEVE THE SUBMITTED INFORMATION IS TRUE, ACCURATE AND COMPLETE. I AM AWARE THAT THERE ARE SIGNIFICANT PENALTIES FOR SUBMITTING FALSE INFORMATION, INCLUDING THE POSSIBILITY OF FINE AND IMPRISONMENT. SEE 18 USC § 1001 AND 33 USC § 1319. (Penalties under these statutes may include fines up to $10,000 and/or maximum imprisonment of between 6 months and 5 years.)

SIGNATURE OF PRINCIPAL EXECUTIVE OFFICER OR AUTHORIZED AGENT

TELEPHONE		DATE		
503	286-3681	92	2	15
AREA CODE	NUMBER	YEAR	MO	DAY

MMENT AND EXPLANATION OF ANY VIOLATIONS (Reference all attachments here)

Koppers015741

Jan 1992

	Tank #1	Tank #2	Tank #3	Tank #4
Flow	45000	45000	45000	45000
				180 000 ÷ 31 = 5806
Temp.	45	46	51	51 = 193 ÷ 4 = 48.25 –
Ph.	6.1	6.4	6.4	6.6 = 25.5 ÷ 4 = 6.375 –
Oil + Grease	0.7	0.7	0.5	0.7 = 2.6 = 0.65 –
Phenols	0.14	0.18	0.21	0.22 = 0.75 ÷ 4 = 0.1875 –

1-14-92

W-W-T-2

PH 6.4

Water

Temp. 46

1-14-92
W-W-T-1
Ph 6.1

---

water
Temp. 45

COFFEY LABORATORIES INC.
12423 N.E. WHITAKER WAY, PORTLAND, OR 97230
(503) 254-1794 • FAX (503) 254-1452

COFFEY LABORATORIES - PENDLETON BRANCH
287 S.E. FIRST, PENDLETON, OR 97801
(503) 276-0385

CHAIN OF CUSTODY

PROJECT #:	PROJECT NAME:	P.O. #:	PAGE 1 of ____ PAGES PLEASE PRINT OR TYPE	FOR LABORATORY USE ONLY

COMPANY NAME: Koppers Ind
REPORT ATTENTION: John Oxford
SAMPLES COLLECTED BY: Geo. Hoffman

FIELD IDENTIFICATION: ONE LINE PER SAMPLE CONTAINER		COLLECTION DATE	COLLECTION TIME	MEDIA	ANALYSIS REQUESTED	ANALYSIS REMARKS
W.W.-T-1		1-14-92	2:45		Oil + Grease	
W.W.-T-1		"	"		Phenols	
W.W.-T-2		"	"		Oil + Grease	
W.W.-T-2		"	"		Phenols	

RELINQUISHED BY:	DATE/TIME	RECEIVED BY:	DATE/TIME
RELINQUISHED BY: G. Hoffman	1-14-92	RECEIVED BY LAB: Danette Ville	1/14/92 1625

SAMPLE REMARKS:

WHITE COPY - COFFEY LABORATORIES

PINK COPY - CLIENTS COPY

SHADED AREA FOR LABORATORY USE ONLY
CHAIN OF CUSTODY INSTRUCTIONS ON BACK OF PINK COPY

(7/90)

Koppers015745

COFFEY LABORATORIES, INC.

CHAIN OF CUSTODY INFORMATION / INSTRUCTIONS SHEET

PROJECT NUMBER — *Applies only to samples submitted by the company. This data is provided at the companies discretion.*

PROJECT NAME — *Your company's project name. This data is provided at the companies discretion.*

COMPANY NAME — *Name of the Company or individual requesting the analysis from Coffey Laboratories, Inc.*

REPORT ATTENTION — *Name of the person who receives the laboratory report.*

SAMPLE COLLECTED BY — *The person who took the sample signs this box and gives his/her title.*

FIELD ID — *A short description of the sample point (For example: "Effluent from sand filter"). This description will appear on the report. Use one line per sample bottle.*

COLLECTION DATE — *The date on which the sample(s) was/were collected.*

COLLECTION TIME — *The time at which the sample(s) was/were collected.*

MEDIA — *This is a description of the sample matrix.*

ANALYSIS REQUESTED — *Make one column for each parameter or group of parameters associated to a bottle.*

FOR LAB USE ONLY — *Do not mark in this area (Laboratory location & ID). All shaded areas are for laboratory use only. Please do not write in these areas.*

REMARKS — *Record any comments about each sample on the same line as the sample description, e.g., "Wastewater contains VOCs".*

RELINQUISHED BY — *The sampler signs this box when he/she gives the sample to someone else, and then fills in the date and time they left his possession.*

RECEIVED BY — *The person who receives the samples signs here and fills in the date and time received. The date and time should be the same as the last one unless the samples were shipped.*

SAMPLE REMARKS — *Record any comments regarding the sample(s) as a whole or information pertinent to the sample.*

SAMPLES SHIPPED VIA — *How the samples are being shipped to the laboratory, e.g., "UPS".*

Report Date: January 23, 1992
Job#: WG-92Q114BA-2
PO#: VERBAL JOHN

Attention: John Oxford
Koppers Industry
754Q NW St. Helens Rd.
Portland, OR 9721Q

SAMPLE INFORMATION:
Date Samples Were Received By Laboratory: Q1/14/92

Lab No.	Field Identification	Sample Matrix	Date	Time
1	W-W-T-1	Waste Water	Q1-14-92	1245
2	W-W-T-2	Waste Water	Q1-14-92	1245

ANALYTICAL RESULTS:

PARAMETER	METHOD	DETECTION LIMITS	W-W-T-1 RESULTS	W-W-T-2 RESULTS
Oil & Grease	EPA 413.2	Q.5	Q.7	Q.7
Total Phenols	EPA 42Q.1	Q.Q5	Q.14	Q.18

Results expressed as mg/L unless otherwise noted.

Sincerely,

Renee Chauvin
Technical Director

RJC/mlh

This report is for the sole and exclusive use of the above-named client. Samples are retained 15 days from the report date, or until holding time expires. Results pertain only to samples submitted.

RECEIVED
JAN 24 1992
KOPPERS INDS., INC.
PORTLAND, OR

COFFEY LABORATORIES, INC.
12423 N.E. Whitaker Way • Portland, OR • 97230 • (503) 254-1794 • FAX (503) 254-1452

1-31-92
w-w-T-3
Ph 6.4

water Temp-
51°F

1-31-92
W-W-T-4
Ph 6.6

water
Temp-
51° F

COFFEY LABORATORIES INC.
12423 N.E. WHITAKER WAY, PORTLAND, OR 97230
(503) 254-1794 • FAX (503) 254-1452

CHAIN OF CUSTODY

COFFEY LABORATORIES - PENDLETON BRANCH
287 S.E. FIRST, PENDLETON, OR 97801
(503) 276-0385

PROJECT #:	PROJECT NAME:	P.O. #:	PAGE _____ of _____ PAGES PLEASE PRINT OR TYPE	FOR LABORATORY USE ONLY

COMPANY NAME: Koppers IND
REPORT ATTENTION: John Oxford
JOB #: WG920131-AQ2
SAMPLES COLLECTED BY: Geo. Hoffman
CUSTABBR: Koppers

FIELD IDENTIFICATION: ONE LINE PER SAMPLE CONTAINER	LAB LOC	LAB ID	COLLECTION DATE	COLLECTION TIME	MEDIA	ANALYSIS REQUESTED	ANALYSIS REMARKS
W-W-T-3			1-31-92	3:30PM		Oil & Grease	
W-W-T-3			"	"		Phenols	
W-W-T-4			"	"		Oil & Grease	
W-W-T-4			"	"		Phenols	

RELINQUISHED BY: _____ DATE/TIME
RECEIVED BY: _____ DATE/TIME
LAB USE:

RELINQUISHED BY: George Hoffman 1-31-92 DATE/TIME
RECEIVED BY LAB: [illegible] DATE/TIME 1/31/92 1620

SAMPLE REMARKS:
LEVEL 1 2 3 4
EXPRESS UPS MAIL CXX GREY TAXI LAB

WHITE COPY - COFFEY LABORATORIES
PINK COPY - CLIENTS COPY

SHADED AREA FOR LABORATORY USE ONLY
CHAIN OF CUSTODY INSTRUCTIONS ON BACK OF PINK COPY

(7/90)

Koppers015750

COFFEY LABORATORIES, INC.

CHAIN OF CUSTODY INFORMATION / INSTRUCTIONS SHEET

PROJECT NUMBER — Applies only to samples submitted by the company. This data is provided at the companies discretion.

PROJECT NAME — Your company's project name. This data is provided at the companies discretion.

COMPANY NAME — Name of the Company or individual requesting the analysis from Coffey Laboratories, Inc.

REPORT ATTENTION — Name of the person who receives the laboratory report.

SAMPLE COLLECTED BY — The person who took the sample signs this box and gives his/her title.

FIELD ID — A short description of the sample point (For example: "Effluent from sand filter"). This description will appear on the report. Use one line per sample bottle.

COLLECTION DATE — The date on which the sample(s) was/were collected.

COLLECTION TIME — The time at which the sample(s) was/were collected.

MEDIA — This is a description of the sample matrix.

ANALYSIS REQUESTED — Make one column for each parameter or group of parameters associated to a bottle.

FOR LAB USE ONLY — Do not mark in this area (Laboratory location & ID). All shaded areas are for laboratory use only. Please do not write in these areas.

REMARKS — Record any comments about each sample on the same line as the sample description, e.g., "Wastewater contains VOCs".

RELINQUISHED BY — The sampler signs this box when he/she gives the sample to someone else, and then fills in the date and time they left his possession.

RECEIVED BY — The person who receives the samples signs here and fills in the date and time received. The date and time should be the same as the last one unless the samples were shipped.

SAMPLE REMARKS — Record any comments regarding the sample(s) as a whole or information pertinent to the sample.

SAMPLES SHIPPED VIA — How the samples are being shipped to the laboratory, e.g., "UPS".

(7/90)

Report Date: February 12, 1992
Job#: WG-920131AQ-2
PO#: VERBAL JOHN
(O&G/Phenols

Attention: John Oxford
Koppers Industry
7540 NW St. Helens Rd.
Portland, OR 97210

SAMPLE INFORMATION:
Date Samples Were Received By Laboratory: 01/31/92

Lab No.	Field Identification	Sample Matrix	Date	Time
1	W-W-T-3	Waste Water	01-31-92	1530
2	W-W-T-4	Waste Water	01-31-92	1530

ANALYTICAL RESULTS:

PARAMETER	METHOD	DETECTION LIMITS	W-W-T-3 RESULTS	W-W-T-4 RESULTS
Oil & Grease	EPA 413.2	0.5	0.7	0.8
Total Phenols	EPA 420.1	0.05	0.21	0.22

Results expressed as mg/L unless otherwise noted.

Sincerely,

Renee Chauvin
Technical Director

RJC/lws

This report is for the sole and exclusive use of the above-named client. Samples are retained 15 days from the report date, or until holding time expires. Results pertain only to samples submitted.

RECEIVED
FEB 14 1992
KOPPERS INDS., INC.
PORTLAND, OR

COFFEY LABORATORIES, INC.
12423 N.E. Whitaker Way • Portland, OR • 97230 • (503) 254-1794 • FAX (503) 254-1452

Kathy Amidon
Environmental Specialist
Air Quality Program

Oregon
DEPARTMENT OF
ENVIRONMENTAL
QUALITY

Northwest Region
2020 SW Fourth Ave., Suite 400
Portland, Oregon 97201-4987
(503) 229-5568 • FAX (503) 229-6957
TDD (503) 229-6993
1-800-452-4011

Koppers Industries, Inc.
Portland Terminal

Liquid Pitch Ship Unloading and Storage
Operating Emissions Estimates

17-Mar-97

MAXIMUM POTENTIAL TO EMIT

I. Basis — Pitch Unloaded/Loaded

Total Poscochem =	60,000	Tons =	1,582,813	CF
Total Chinese =	38,097	=	1,005,015	
Total Reilly =	3,947	=	104,132	
Total =	102,045	Total =	2,691,960	CF

Number of Tank Transfers = 3 from ship to storage to melter to shipping.
Temperature Expansion = 1.56 with vapor 50 DegF below liquid.
Total Vented CF = 12,579,738 CF

						Hours/transfer	Rate CF/Hr
Ship Unloading Rates	400 Tons/hour @	0.0379 Tons/CF =	10,552	CFH		10.5	
Railcar Loading Rate	79 Tons/car @	0.0375 Tons/CF =	2,105	CF		0.87	2,406
Truck Loading Rate	32.00 Tons/trailer @	0.0375 Tons/CF =	853	CF		0.35	2,406

	No. of Loading Stations	No. / day	No. of Days	Max. Tons	Vol.,CFD	Total CF
Maximum Shipments:	1 Railcar @	4	365	115,340	8,421	3,073,811
	2 Trucks @	40	365	467,200	34,112	12,450,879
			Total Pitch =	582,540		

Total Shipping Displaced = 15,524,690 CF
Estimated % Excess = 10%
Total Shipping Vented = 17,077,159 CF

II. Emissions

	Vented CF	Temp.	VP, mmHg	Vent moles	HC moles	Lbs/Lb-mol	Pounds/Yr
Transferred Vol. =	71,813,672	400	0.8	121,505	127.90	200	25,580
Shipment Vol. =	17,077,159	440	2	27,534	72.46	200	14,492
							40,071
						Tons VOC/Yr =	20.04

* Transferred Ratioed to Shipment

3/17/97 DEQ, Kathy Amidon

Title V - potential to emit (PTE)
worst case synthetic minor
NOX, SO^2 (PTE = 100 TONS/YEAR)
solid particulate matter

letter re calculations + results
schedes - 8½x11
Equipment references

Notice of intent to construct form (no fee)
send 2 mo. prior to construction for approval
General description (Plot plan)
including PTE

Non attainment - Ozone
Carbon Monoxide

Letter - Readdressing all the issues + extention to 6/15/97

KOPPERS INDUSTRIES

FAX TRANSMITTAL

Koppers Industries, Inc.
7540 N.W. St. Helens Road
Portland, OR 97210-3663

Telephone: 503-286-3681
Fax: 503-285-2831

TO: Bill Swearingen DATE: 2/7/97

FROM: Amos TOTAL # OF PAGES: 1

Boiler H.P. is 400

IF THIS TRANSMITTAL IS IN ERROR, PLEASE CALL 503-286-3681 FAX # 503-285-2831

Koppers015756

400 H.P.

KOPPERS INDUSTRIES

FAX TRANSMITTAL

Koppers Industries, Inc.
7540 N.W. St. Helens Road
Portland, OR 97210-3663

Telephone: 503-286-3681
Fax: 503-285-2831

TO: Bill Swearingen DATE: 1/31/97

FROM: Amos TOTAL # OF PAGES: 1

Boiler info, off the name plate on the boiler itself —

North American Atlas Generator

MAX. 21,000,000 BTU input

MAX. work Pressure 175#

2,000 Sq. ft. Surface

Is this what you need? I can't find anything in file.

IF THIS TRANSMITTAL IS IN ERROR, PLEASE CALL 503-286-3681 FAX # 503-285-2831

KOPPERS INDUSTRIES

FAX TRANSMITTAL

Koppers Industries, Inc.
7540 N.W. St. Helens Road
Portland, OR 97210-3663

Telephone: 503-286-3681
Fax: 503-285-2831

TO: Bill Swearingen DATE: 1/17/97

FROM: Amos TOTAL # OF PAGES: 15

Here's the info containing table 4

Boiler specifications but input, etc.

IF THIS TRANSMITTAL IS IN ERROR, PLEASE CALL 503-286-3681 FAX # 503-285-2831

KOPPERS INDUSTRIES

FAX TRANSMITTAL

Koppers Industries, Inc.
7540 N.W. St. Helens Road
Portland, OR 97210-3663

Telephone: 503-286-3681
Fax: 503-285-2831

TO: B. Swearingen, K-1800 DATE: 12/31/96

FROM: Amos TOTAL # OF PAGES: 2

Re the attached, please call me upon your return from vacation — thanks.

1/8/97 - LVMM
1/13/97 - LVMM

IF THIS TRANSMITTAL IS IN ERROR, PLEASE CALL 503-286-3681 FAX # 503-285-2831

IMPORTANT MESSAGE

FOR Amos

DATE 12/12 TIME 10:20 A.M. P.M.

M Kathy Amidon

OF Oregon DEQ

PHONE 229-5568
AREA CODE NUMBER EXTENSION

☐ FAX

☐ MOBILE
AREA CODE NUMBER TIME TO CALL

TELEPHONED		PLEASE CALL	X
CAME TO SEE YOU		WILL CALL AGAIN	
WANTS TO SEE YOU		RUSH	
RETURNED YOUR CALL		SPECIAL ATTENTION	

MESSAGE

re: boiler

Does the boiler need a permit?

SIGNED

TOPS. FORM 3002P LITHO IN U.S.A.

Title 5 — 1990

"Potential to emit" *

— 8760 hrs. per year — operation schedule

— 100 TONS SO^2/YEAR

Check table 4, for listings of business that require permitting

Do need A permit / Fed. LAW

— OFF ROAD - Diesel

December 13, 1996

Oregon

DEPARTMENT OF ENVIRONMENTAL QUALITY

NORTHWEST REGION

AMOS KAMERER
KOPPERS INDUSTRIES INC
7540 NW ST HELENS RD
PORTLAND OR 97210

RE: Application for
Air Contaminant Discharge Permit
Multnomah Co., File No. 26-2930

Enclosed is the application we discussed this morning. I have included forms for fuel burning equipment and miscellaneous processes. Please disregard any of these forms which do not apply.

Also in the packet is a copy of our permitting rules, including Table 4, which lists the types of sources required to have an air discharge permit. Please review the various categories on Table 4 to determine whether any other categories apply to your facility. This table specifies the fees which are required. The filing fee, application processing fee, and compliance determination fee are all required upon submittal of an application for a permit. In addition, the permit origination fee of $2,000 is required. The application is to be submitted to our Business Office, whose address appears at the bottom of the Administrative Information form.

Due to the approach of the holiday season, the application need not be submitted until January 1997. Because your facility is operating without the required permit, however, I urge you to complete the application as expeditiously as possible.

A thorough review of our files revealed that Koppers Industries had an air permit for the manufacture of industrial chemicals. That permit was canceled by the Department in June 1977 when Koppers decided to abandon its plans for adding a new process to the facility. The process boiler was not included in that permit. Because the Department omitted the boiler in the old permit, no enforcement action will be taken against Koppers for not seeking a permit for the boiler.

Please call me if you need assistance in completing the application forms, or have any questions about the process and/or requirements. My direct number is (503) 229-5568.

Kathy Amidon

Kathy Amidon
Environmental Specialist
Air Quality Section

Enclosure

RECEIVED
DEC 17 1996
KOPPERS INDS., INC.
PORTLAND, OR

John A. Kitzhaber
Governor

2020 SW Fourth Avenue
Suite 400
Portland, OR 97201-4987
(503) 229-5263 Voice
TTY (503) 229-5471

DEQ-1

William E. Swearingen

Amos Kamerer
Portland

Attached is letter to DEQ along with appropriate forms + check for the boiler permit application.

Important Please sign and date on both copies of form AQ101 and then mail the cover letter plus check and two copies of form packet ASAP.

Your copies letter + forms is highlighted for you to keep.

Any questions, call me.

Regards

KOPPERS INDUSTRIES, INC.
436 7TH AVE
PITTSBURGH, PA 15219-1818
(412) 227-2001

KOPPERS INDUSTRIES

Koppers Industries, Inc.
436 Seventh Avenue
Pittsburgh, PA 15219-1800

Telephone: (412) 227-2001
Fax: (412) 227-2423

August 21, 1997

DEQ Business Office
Oregon Department of Environmental Quality
811 SW Sixth Avenue
Portland, OR 97204

Attention: **Ms. Kathy Amidon**
Environmental Specialist
Air Quality Section

Re: Air Permit Initial Application
Multnomah County; File No. 26-2930
Industrial Boiler

Dear Ms. Amidon:

We were advised by the DEQ that a review of the Agency's files revealed that a previous air permit for the manufacture of industrial chemicals was canceled by the Department in June 1977 and that no provision was made to issue a permit for the boiler that remained operational. Due to this oversight by the Department no enforcement action would be taken against Koppers as long as a permit application is submitted for the existing boiler.

Enclosed are the appropriate permitting forms along with check #270594 in the amount of four thousand nine hundred forty-seven dollars ($4,947.00) to cover payment of the total fees associated with the filing, permitting, application processing, and the compliance determination. This submittal contains duplicate copies of the following completed forms and other informational material for the subject facility:

- DEQ Supplemental Information Form;
- Form AQ101 Administrative Information;
- Form AQ102 Facility Description;
- Form AQ210 for Fuel Burning Devices;
- Form AQ402 Plant Site Emission Detail - Current/Future Operations
- Summary Spreadsheet for site maximum potential emission
- USGS map of facility location;
- Site Plan for present Koppers Industries, Inc. Portland Plant
- Site Plan for future ship unloading additions to KII Portland Plant

If you have any questions, please call Mr. Amos Kamerer, Plant Manager, at 503-286-3681 or me at 412-227-2883.

Sincerely yours,

William E. Swearingen
Manager, Environmental Programs

Enclosures

cc: A. S. Kamerer; Portland Plant

C:\WPWIN60\PORTLAND\AIR_BOIL.LTR

THE BACK OF THIS DOCUMENT CONTAINS AN ARTIFICIAL WATERMARK - HOLD AT AN ANGLE TO VIEW

KOPPERS INDUSTRIES

270594 62-4 / 311

DATE: AUGUST 21 1997

PAY TO THE ORDER OF: OREGON ST DEPT ENVIRON QUALITY $4,947.00

FOUR THOUSAND NINE HUNDRED FORTY SEVEN AND 00/100 ONLY

OREGON ST DEPT ENVIRON QUALITY

811 S W SIXTH AVE
PORTLAND OR 97204

Payable through Mellon Bank (DE) N.A., Wilmington, DE 19899
Mellon Bank (East) N.A., Philadelphia, PA 19102

KOPPERS INDUSTRIES, INC.
V.P. AND C.F.O. TREASURER

⑈270594⑈ ⑆031100047⑆ 2⑈943 678⑈

KOPPERS INDUSTRIES, INC. PITTSBURGH PA 270594

SP CD	VENDOR	DIV	OUR AUDIT	YOUR INVOICE NBR	INV MO/DA	INV AMOUNT	DISC	NET AMT PAYABLE
	967125006	483	48370800155	MDA AIR PERMIT	0820	4947.00	0.00	***4947.00

OREGON DEPARTMENT OF ENVIRONMENTAL QUALITY
SUPPLEMENTAL INFORMATION FORM

AIR, WATER, SOLID WASTE AND HAZARDOUS WASTE
PERMITS AND REGISTRATIONS
MODIFICATIONS TO EXISTING FACILITIES

Unnecessary delays during permit review or facility construction often can be eliminated when potential issues and areas of overlap are identified early in the permit process. With this in mind, the Oregon Department of Environmental Quality (DEQ) is testing an integrated approach to permit processing. The purpose of this "cross-media" approach is to help the applicant determine which pre-construction environmental permits will be needed, and help DEQ expedite the permit process. The approach also helps the applicant and DEQ analyze potential impacts of the proposed modification on all environmental areas of concern; helps prevent any inadvertent transfer of pollutants from one media to another, such as from air to land; provides an opportunity to look at overall environmental impacts from a facility and net environmental benefits from a proposal; and increases opportunities to identify pollution prevention alternatives.

The following questions are meant to be a screening tool to help identify potential areas of concern and, if necessary, help DEQ establish a cross-media workgroup for your facility. If you are unsure which regulations apply to your facility, several DEQ publications and technical assistance programs can help you find answers. For a copy of the Oregon Environmental Permits Handbook, or if you have other questions, please telephone the person identified in the cover letter included with this form. You also can telephone DEQ's Technical Assistance and Service Coordinator at (503) 229-5946, or toll-free (800) 452-4011, to be referred to the appropriate program or to arrange a pre-application meeting with permit program staff.

1. Name of Facility Koppers Industries, Inc.

   Address or Location of Facility 7540 NW St. Helens Road
   Portland, OR 97210-3663

   Latitude/Longitude or other precise locational data for the facility, if available *(if you need assistance in determining latitude and longitude coordinates, please contact DEQ at 229-5946)*
   Latitude 45:34:38 Longitude 122:45:32

   Name of Contact Person Amos S. Kamerer

   Phone Number of Contact Person 503-285-3681

2. Please briefly tell us what kind of business you operate (principal products and services).

   Terminal operations for creosote and coal tar pitches.

3. Please list any local, state or federal environmental permits or registrations you may have from the list below. Please check all that apply. *Please enter the permit or registration number if available (or just indicate YES if the number is not readily available); or indicate N/A if the permit does not apply to your facility.* Please indicate which of these permits you intend to apply for or modify at this time.

   a. Air Permit (air emissions) X yes ___N/A
   Permit Number, if known _____ *modify?* ___*yes* ___*no*

b. Indirect Source Construction Permit (large parking lots) ___yes _X_N/A
*Permit Number, if known*_____ *modify?* ___*yes* ___*no*

c. Wastewater Discharge Permit (state or federal) ___yes _X_N/A
*Permit Number, if known*_____ *modify?* ___*yes* ___*no*

d. Wastewater Pretreatment Permit (local) ___yes _X_N/A
*Permit Number, if known*_____ *modify?* ___*yes* ___*no*

e. Hazardous Waste Generator Registration ___yes _X_N/A
*EPA ID Number, if known*_____ *modify?* ___*yes* ___*no*

f. Hazardous Waste Permit (RCRA Part B) ___yes _X_N/A

g. Solid Waste Disposal Permit ___yes _X_N/A
*Permit Number, if known*_____ *modify?* ___*yes* ___*no*

h. Underground Storage Tank Registration ___yes _X_N/A
*Permit Numbers, if known*_____ *modify?* ___*yes* ___*no*

i. Environmental Cleanup/Superfund Site ___yes _X_N/A

j. Voluntary Cleanup Registration ___yes _X_N/A

4. Please describe the proposed modification to your facility. This "systems design" should include a description of the proposed changes to the facility; input chemicals and approximate amounts used; anticipated volumes of wastes, emissions or discharges to the air, water and land; proposed control technologies; and any new energy sources that might be needed. If you treat your wastes prior to discharge or release, please indicate how you plan to manage or dispose of treatment residuals (ash, filters, sludge, leachate, etc.). Please use a separate sheet for your description.

5. Many companies are able to design their facilities and processes to minimize the amount of chemicals used and pollutants discharged to the environment. This information may be helpful in the permit review process and public hearings. Have you incorporated any pollution prevention concepts and technologies into the design of your facility?
_X_yes ___no ___don't know
Paving at potential spill areas. Recycle spill material.
If yes, please briefly describe the design elements and pollutant reductions anticipated. Also include any pollution prevention activities already implemented in your facility. Please use a separate sheet for your description.

If you would you like any information (written publications, videos, etc.) about pollution prevention from our Waste Reduction Assistance Program, please call (503) 229-5913, or toll-free (800) 452-4011.

6. Facilities applying for environmental permits may encounter public concerns regarding land use, noise, traffic, odors or other community issues. Are you aware of any concerns in your community regarding your facility? ___yes ___no _X_don't know

If yes, please indicate what the concerns are and how you plan to address them. Please use a separate sheet for your description.

Thank you for taking the time to fill out this form. If you have any questions, please contact the DEQ staff person listed in the cover letter, or our Technical Assistance and Services Coordinator at (503) 229-5946, or toll-free (800) 452-4011.

(Note: questions 4, 5 and 6 should be answered on a separate sheet of paper.)

Koppers015767

FORM AQ101
ADMINISTRATIVE INFORMATION

FOR DEQ USE ONLY
Permit No. _____
Application No. _____
Date Received _____
Type of Application:
EXT NEW RNW MOD SM

1. Legal Company Name	2. Facility Name *(if different from legal company name)*
Koppers Industries, Inc.	Koppers Industries, Inc.
Legal Company Name	Facility Name
436 Seventh Avenue	7540 NW St. Helens Road
Mailing Address	Mailing Address
Pittsburgh, PA 15219-1800	Portland, OR 97210-3663
City, State, Zip Code	City, State, Zip Code
412-227-2001	503-285-3681
Area Code and Telephone Number	Area Code and Telephone Number

3. Facility Location	4. Site Contact
SAME	Amos S. Kamerer; Plant Mgr.
Street Address *(if different from mailing address)*	Name and Title of Contact Person at Site
	503-285-3681
City, Zip Code	Area Code and Telephone Number
Multnomah	
County	

5. Government Facility Indicator	6. Other DEQ Permits
	NPDES Permit No. 100419

Signature

I hereby apply for permission to discharge air contaminants in the State of Oregon, as stated or described in this application, and certify that the information contained in this application, and the schedules and exhibits appended hereto, are true and correct to the best of my knowledge and belief.

Amos S. Kamerer	Plant Manager
Name of official (printed or typed)	Title of official
Signature of official	Date (mm/dd/yy)

APPLICATION FEE INFORMATION ON REVERSE. TWO COPIES OF THE COMPLETED APPLICATION MUST BE SUBMITTED, WITH ALL FEES REQUIRED, TO THE DEPARTMENT BUSINESS OFFICE: 811 SW SIXTH AVENUE, PORTLAND OR 97204.

Type of Business (OAR 340-28-1750 Table 4 entries)

Industrial Organic Chemicals SIC 2865 or 2869

Fee Information

Amos - for DEQ purposes, boilers are listed as SIC 4961 Kelly

SIC Code	Application Processing	Compliance Determination	
4961	$1540.00	$1332.00	$2872.00
Standard filing fee			$75.00
Fee: Permitting Fee		(Fees F	$2000.00
Fee:			
Fee:			
Fee:			
TOTAL FEES			$4947.00

1. Facility name Koppers Industries, Inc.	2. Permit # N/A

3. Description of facility

The plant receives truck, railcar, and barges of creosote, coal tar pitches, and allied coal tar chemicals. These products are stored in heated tanks and shipped to customers in the northwest states via truck and rail transporters.

Due to changing market conditions, KII is planning to add additional heated storage tanks to the facility. The tanks will be heated by a hot oil system. An additional 8.0 million BTU/HR natural gas fired hot oil heater will be needed when the tanks are installed. Potential tank emissions of VOM will be collected and ducted to the proposed new hot oil heater and will be incinerated at a 98% or greater destruction efficiency. A new heated pipeline installation is also planned within the next two years.

4. Seasonal or year-round operation? Year-round operation

5. Operating schedule

24 hours/day

7 days/week

6000 hours/year

6. Attach diagram

7. Attach line/block drawing

8. Attach location map

10161 2

Koppers015770

1. Facility name Koppers Industries, Inc.	2. Permit # N/A

Fuel Burning Device Information

3. ID number #1
4. Existing or future? Existing
5. Date commenced (mm/dd/yy) Circa 1965
6. Date installed/completed (mm/dd/yy) Circa 1965
7. Special controls None
8. Manufacturer North American
9. Description of device Fire tube steam boiler for heating
10. Firing method Normal dual fuel burner

Operating Schedule

11. Seasonal or year-round? Year-round
    a. Months in operation 12
12. Projected maximum hours/day 24
13. Projected maximum days/week 7
14. Projected maximum weeks/year 52

Production Information

15. Rated design capacity (input) 21,000,000 BTU/hr (specify units)
16. Projected maximum annual operation 126,000 M BTU (specify units)

Ash Generation and Disposal Information

17. Quantity generated None tons/yr
18. Description of ash disposal method N/A

Fuel Usage Information

19. Fuel usage	Primary Fuel	Backup A	Backup B	Backup C
a. Type/grade of fuel	Nat. gas	Diesel oil	N/A	N/A
b. Average sulfur content (% by wt.)	0.01 GR/SCF	0.3		
c. Design hourly usage (specify units/hr)	21 MCF/HR	140 GAL/HR		
d. Projected maximum annual usage (units/yr)	184 MMCF/Y	100,000 GPY		

Stack Information

20. Stack height 40 ft

21. Flow rate 4550 dscf/min at maximum firing rate.

Monitoring Information

22. Monitoring equipment

a. steam pressure gauge (y/n; if y, recorder?) Yes - no recorder

b. steam flow gauge (y/n; if y, recorder?) Yes - recorder

c. oxygen analyzer (y/n; if y, recorder?) No

d. visible emissions monitoring (y/n) No

e. sulfur dioxide monitor (y/n) No

f. other monitor (y/n; if y, specify; if y recorder?) No

Pollution Control Information

23. Control device(s)? (y/n; if y, identification number(s)) No

Koppers015772

PLANT SITE EMISSIONS DETAIL SHEET--CURRENT/FUTURE OPERATIONS

1. Facility name	Koppers Industries, Inc.	2. Permit #	N/A

3. Emissions Data

a. Emissions Point	Production Rates		d. Pollutant	Emission Factors			Emissions	
	b. Short-term (specify)	c. Annual (specify)		e. Short-term	f. Long-term	g. Reference(s)	h. Short-term (specify)	i. Annual (tons/yr)
#1	21.0 MBTU/HR	4.4 TBTU	NO_x	140 lb/MCF	140 lb/MCF	DEQ	2.8 lb/HR	12.3 TPY
#1	"	"	VOC	2.8 lb/MCF	2.8 lb/MCF	DEQ	0.05 lb/HR	0.3 TPY
#1	"	"	CO	35 lb/MCF	35 lb/MCF	DEQ	0.7 lb/HR	3.1 TPY
#1	"	"	PM	2.5 lb/MCF	2.5 lb/MCF	DEQ	0.05 lb/HR	0.2 TPY
#1	"	"	SO_2	3.8 lb/MCF	2.6 lb/MCF	DEQ	0.05 lb/HR	0.2 TPY

Koppers015773

MAXIMUM POTENTIAL EMISSION

PORTLAND TERMINAL

SOURCE		INPUT	FUEL	FUEL	NOx	NOx	VOC	VOC	CO	CO	SO2	SO2	PM	PM
		MM BTU/Hr		USED	lb/MMcuft	Tons/Yr	lb/MMcuft	Tons/Yr	lb/MMcuft	Tons/Yr	lb/MMcuft	Tons/Yr	lb/MMcuft	Tons/Yr
Atlas Boiler	long term	21	N Gas/Oil	Gas	140	12.334	2.800	0.247	35.000	3.084	3.800	0.335	2.500	0.220
	short term	21		Gas	140						2.600	0.229		
Hot Oil Heater	long term	8.5	N Gas/Oil	Gas	100	3.566	5.300	0.189	20.000	0.713	3.800	0.136	2.500	0.089
New H. O. Heater	long term	8	N Gas/Oil	Gas	100	3.356	5.300	0.178	20.000	0.671	3.800	0.128	2.500	0.084
						0.000		0.000		0.000		0.000		0.000
New Pitch Tanks	no controls					0.000		20.040		0.000		0.000		0.000
	98% control					0.000		0.401		0.000		0.000		0.000
ProcessTotals						6.922		0.768		1.384		0.263		0.173
Plant Total						**19.257**		**1.014**		**4.468**		**0.598**		**0.393**

Natural Gas = 1044 BTU/cuft
SO2 long term maximum based on 13,200 grains sulfur per millin cubic feet natural gas, determined by Northwest supply.
SO2 short term maximum based on 9,100 grains sulfur per millin cubic feet natural gas, determined by Northwest supply.
Emission factors are taken from DEQ table - Air Quality Division 2/23/93

Calculation for criteria pollutants = (max input in mm BTU/hr) X (Criteria emission factor) X (8760 hrs/yr)/(2000 lbs/ton * 1044 BTU/SCF)

Koppers015774

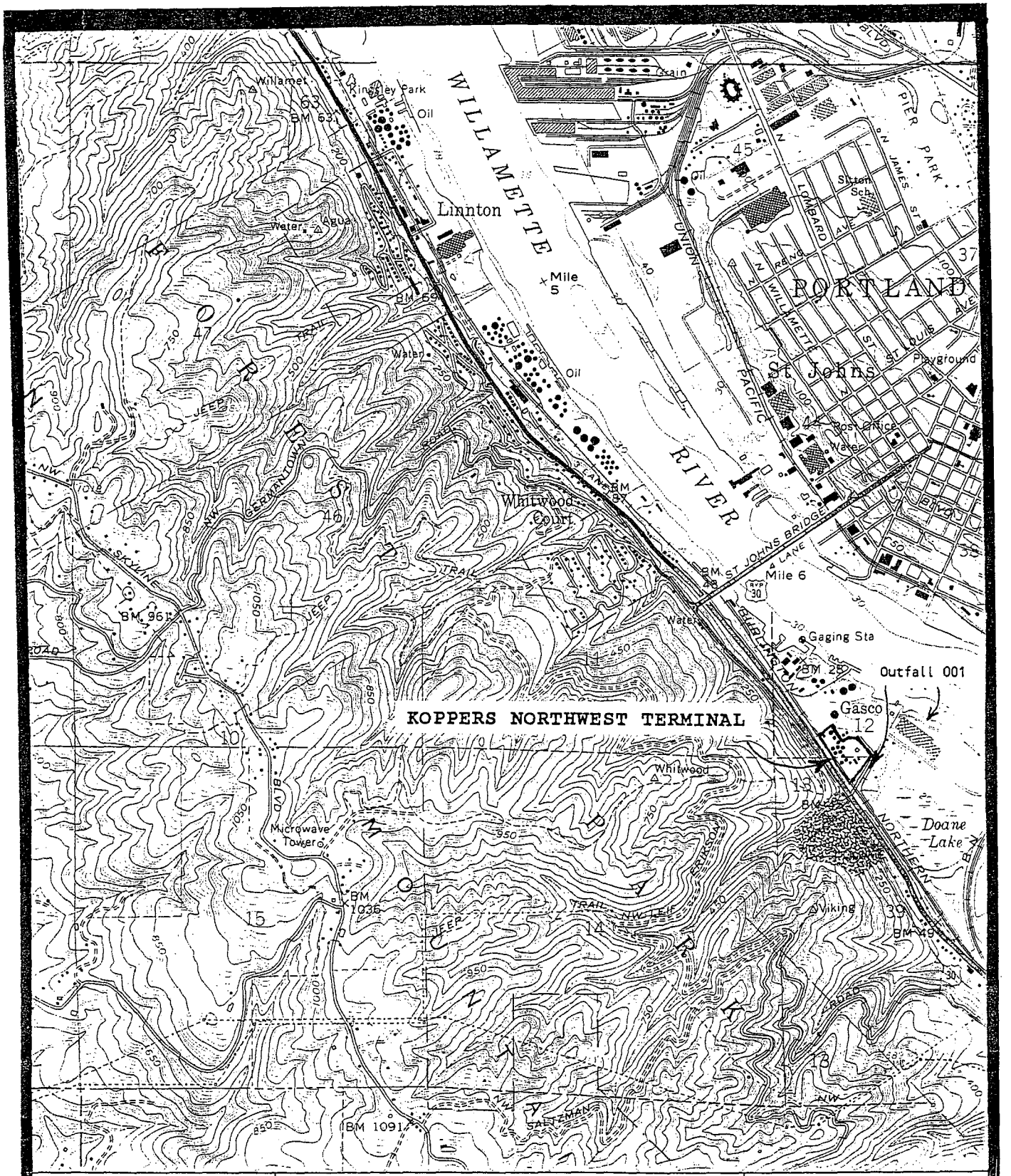

KOPPERS INDUSTRIES

PITTSBURGH, PA

NORTHWEST TERMINAL

LATITUDE: 045D 34M 38S
LONGITUDE: 122D 45M 32S

USGS MAP
LINNTON
QUADRANGLE
OREGON
SERIES 7.5 MIN

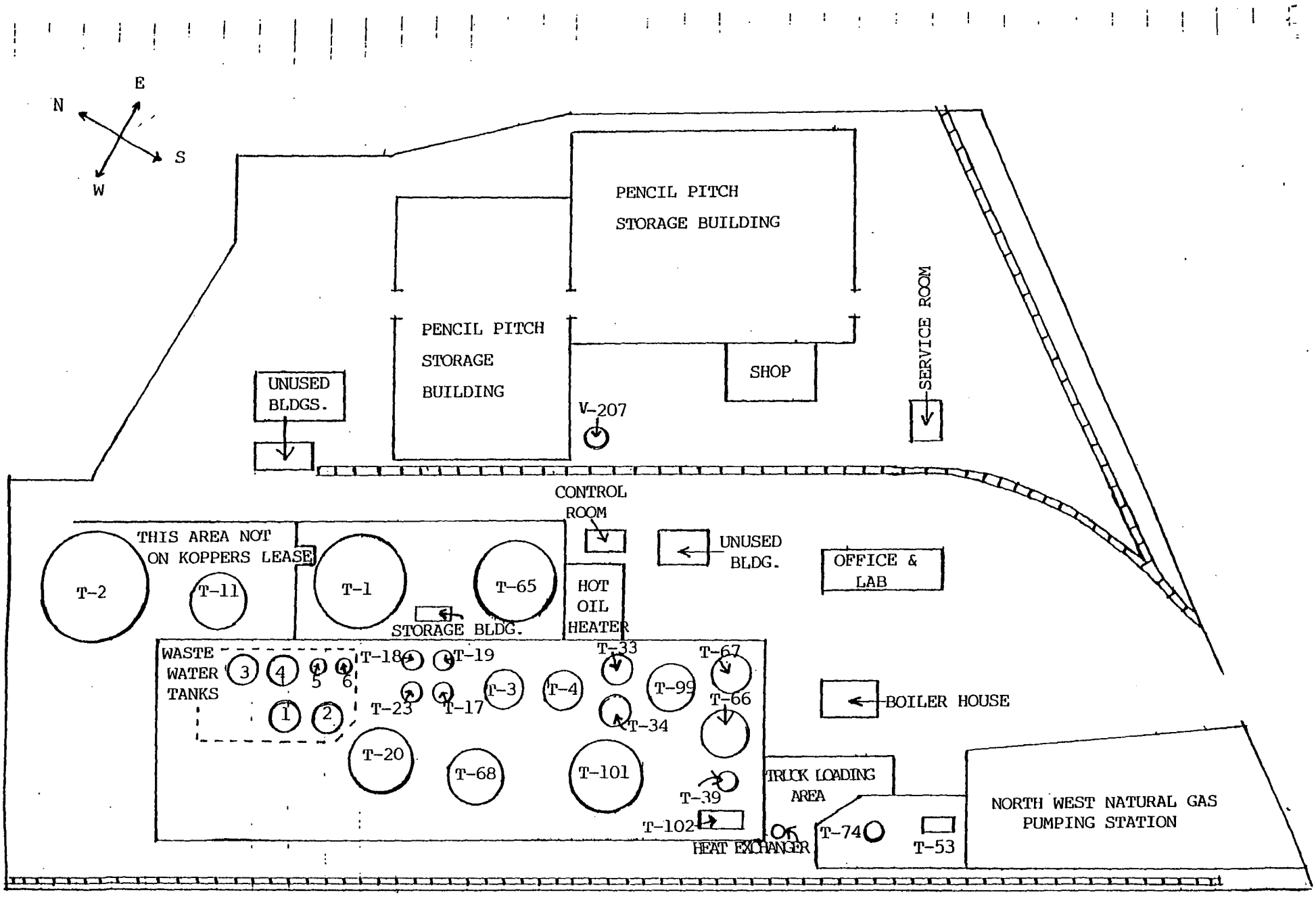

SITE PLAN

KOPPERS INDUSTRIES INC., PORTLAND, OREGON

12/95

Koppers015776

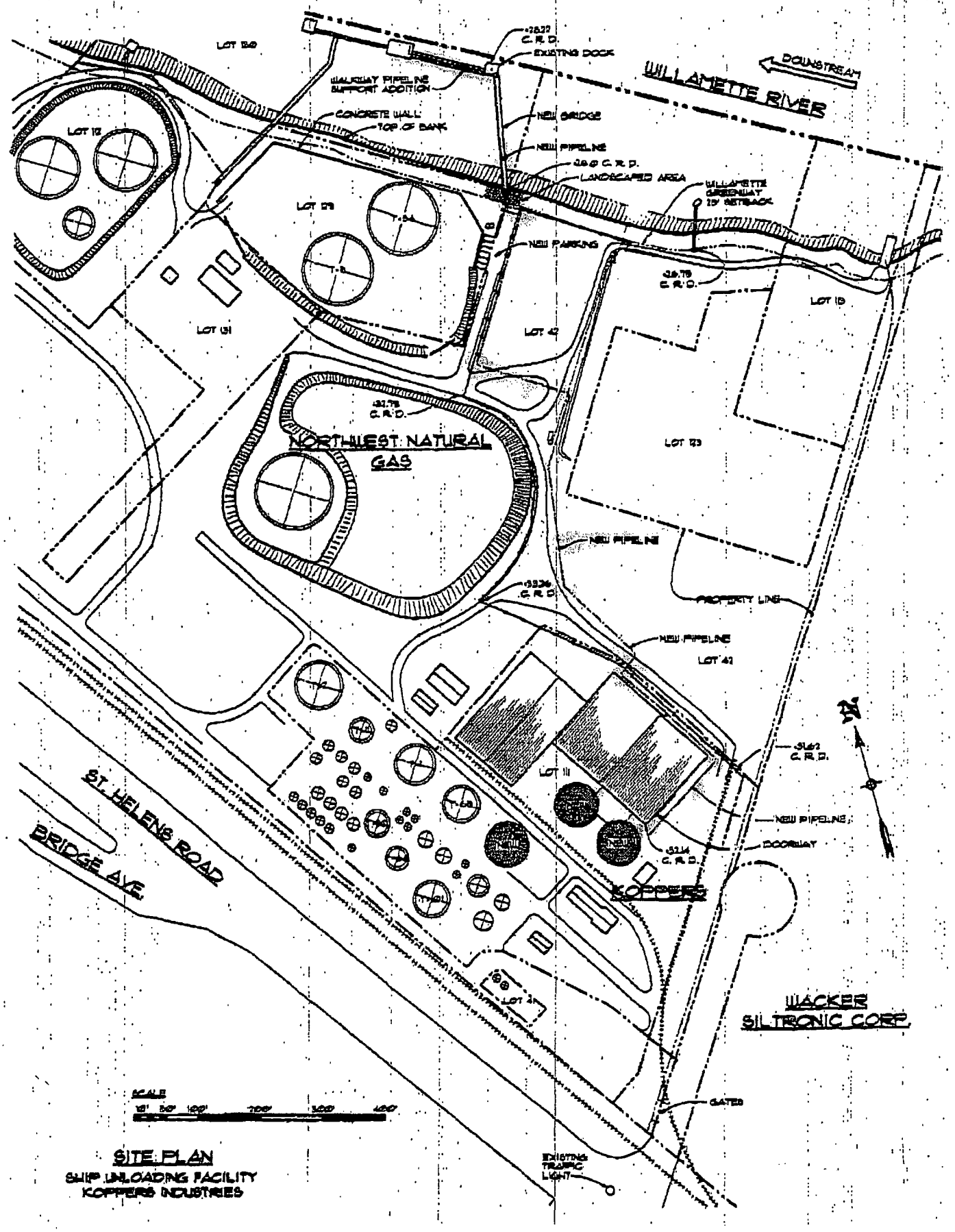

SITE PLAN
SHIP UNLOADING FACILITY
KOPPERS INDUSTRIES

Oregon
John A. Kitzhaber, M.D., Governor

Department of Environmental Quality
Northwest Region
2020 SW Fourth Avenue
Suite 400
Portland, OR 97201-4987
(503) 229-5263 Voice
TTY (503) 229-5471

March 16, 1998

KOPPERS INDUSTRIES, INC.
7540 NW ST. HELENS ROAD
PORTLAND, OR 97210

RE: PUBLIC NOTICE FOR AIR CONTAMINANT DISCHARGE PERMIT
PERMIT NO. 26-2930

Your application for an Air Contaminant Discharge Permit has been reviewed by the Department of Environmental Quality and a proposed permit has been drafted. The Department has issued a public notice from March 18, 1998 to April 17, 1998. You are invited to review the attached copy of the proposed permit and submit any comments you may have prior to the end of the notice period.

The public notice is distributed to interested individuals and the media.

All comments received will be evaluated by the Department and action on the proposed permit will be taken in the near future.

Sincerely,

Sandi Hall

Sandi Hall
Permit Coordinator
Air Quality / Northwest Region

SH:slh

Enclosure

RECEIVED
MAR 18 1998
KOPPERS INDS., INC.
PORTLAND, OR

DEQ-1

Oregon Department of Environmental Quality

A CHANCE TO COMMENT ON...

PUBLIC NOTICE

Comments Due: April 17, 1998

WHO IS THE APPLICANT:

The following facility has applied for a new Air Contaminant Discharge Permit.

Koppers Industries, Inc.
7540 NW St. Helens Road
Portland, Oregon

Permit Number: 26-2930

The DEQ has conducted a preliminary review of this application and is providing an opportunity for public comment.

WHAT IS PROPOSED:

In March 1975, Koppers Co., Inc. proposed a coal tar pitch processing facility. A permit was written to cover the operation of the proposed facility. In January 1976, the company informed the Department that the proposed operation would not be added to the facility. The permit was modified to allow the marketing of the remaining 3600 tons of coal tar on hand as roofing bitumen. The Department then canceled the permit as the facility reverted to being a terminal facility only.

In response to a complaint in Koppers' geographical area, several facilities were visited. Department staff discovered an oil-fired boiler operating without a permit. The facility contains a 21 MM Btu/hour boiler with the capacity of burning oil. All oil fired boilers greater than 10 MM Btu/hour input capacity in the Portland Air Quality Maintenance Area are required to have an air discharge permit. Because the Department had mistakenly canceled the permit in 1977, no enforcement action was taken against the source.

The company proposes to add an 8 MM Btu/hour natural gas fired hot oil heater to provide heat to storage tanks. Gaseous emissions from the tanks will be ducted to the hot oil heater for incineration. Installation of a heated pipeline is planned in the next two years.

The proposed permit is a new permit for an existing source. The proposed permit will expire on September 1, 2002.

PERTINENT AIR PROGRAMS:

At the time of application review, this source was not subject to New Source Performance Standards (NSPS), New Source Review (NSR), Prevention of Significant Deterioration (PSD), or National Emissions Standards for Hazardous Air Pollutants (NESHAPS). The source is located in a maintenance area for ozone and carbon monoxide, the area is in attainment for all other pollutants.

OTHER DEQ PERMITS ISSUED:

Other permits issued to this facility by the Department include a water quality permit NPDES #100419.

DESCRIPTION OF DISCHARGE:

Proposed Plant Site Emission Limits at the facility are shown below and are expressed in tons per year.

SO_2 tons/year	NO_x tons/year	CO tons/year
3.8	13.9	3.5

PM, PM_{10}, and VOC are emitted at less than 1.0 tons/year and are not included in the PSEL.

SPECIAL PERMIT CONDITIONS:

Special conditions contained in the permit include the requirement to notify the Department upon installation of the 8 MM Btu/hour heater. Also all nuisance condition complaints shall be investigated by a plant representative immediately following receipt of such a complaint. A log of all complaints shall be maintained at the plant site and shall include date of contact, time of observed nuisance condition, description of nuisance condition, location of receptor, and status of plant operation during the observed period.

WHERE TO FIND OTHER DOCUMENTS:

Copies of the proposed permit and review report are available at the Central Branch of the Multnomah County Public Library in Portland, Oregon. For technical information, contact Kathy Amidon of DEQ at (503) 229-5568.

The current application is available for public inspection by calling (503) 229-5582. Historical file records, if any, are available for viewing at DEQ's Northwest Region Office, 2020 SW 4th Avenue, Suite 400, Portland, OR 97201. File review hours are 9 a.m. to Noon and 1 p.m. to 4 p.m. Tuesday through Thursday. Call (503) 229-5554 or (TTY) (503) 229-5471. The building is wheelchair accessible and those with special needs should alert this office when making an appointment. This publication is available in alternate format (e.g. large print, Braille) upon request. Please contact DEQ Public Affairs at (503) 229-5317 to request an alternate format.

HOW TO COMMENT:

Written comments should be mailed to: DEQ/AQ, Permit Coordinator, 2020 SW 4th Avenue, Suite 400, Portland, OR 97201-4987. Copies of the proposed permit may be requested from Sandi Hall at (503) 229-5582. Written comments will be accepted by DEQ until **5:00 p.m., April 17, 1998**.

HOW TO REQUEST A HEARING:

If written comments indicating significant public interest or written requests from at least 10 persons, or an organization representing at least 10 persons, are received on this application, DEQ will provide a public hearing. Requests for hearing must be in writing and will be accepted by the Department until **5:00 p.m., April 17, 1998**.

WHAT HAPPENS NEXT:

The Department will review all information received during the chance to comment period. Following this review, the permit may be issued as proposed, modified or denied.

PROPOSED

AIR CONTAMINANT DISCHARGE PERMIT

Department of Environmental Quality
Northwest Region
2020 SW 4th, Suite 400
Portland, Oregon 97201-5884
Telephone: (503) 229-5263

Issued in accordance with the provisions of ORS 468A.040 and based on the land use compatibility findings included in the permit record.

ISSUED TO:

Koppers Industries, Inc.
7540 NW St. Helens Road
Portland, OR 97210-3663

INFORMATION RELIED UPON:

Application No: 16551
Date received: 8/25/97

PLANT SITE LOCATION:

7540 NW St. Helens Road
Portland, OR

LAND USE COMPATIBILITY STATEMENT:

From: City of Portland
Dated: 9/15/97

ISSUED BY THE DEPARTMENT OF ENVIRONMENTAL QUALITY:

Neil Mullane, Northwest Region Administrator

Dated

Source(s) Permitted to Discharge Air Contaminants:

TYPE OF FACILITY (from Table 4, OAR 340-28-1750)	STANDARD INDUSTRY CODE
58.b. Boiler located in Portland AQMA, 10 MM Btu/hour energy input, distillate oil fired	4961

21
8

General Category
10 mm or more

PROPOSED

PERMITTED ACTIVITIES

The permittee is herewith allowed to discharge exhaust gases from those processes and activities directly related to or associated with the air contaminant source(s) listed above in accordance with the requirements, limitations, and conditions of this permit, until such time as this permit expires or is modified or revoked.

Compliance with the specific requirements, limitations and conditions contained herein does not relieve the permittee from complying with all other laws, rules and standards administered by the Department, nor does it allow significant levels of emissions of air contaminants not limited in this permit or contained in the permit application.

PERFORMANCE STANDARDS AND EMISSION LIMITS

1. Particulate emissions from any single air contaminant source shall not exceed any of the following:

   a. 0.2 grains per standard cubic foot, corrected to 12% CO_2 or 50% excess air, for sources existing prior to June 1, 1970;
   b. 0.1 grains per standard cubic foot, corrected to 12% CO_2 or 50% excess air, for sources installed, constructed, or modified after June 1, 1970; and
   c. An opacity equal to or greater than twenty percent (20%) for a period aggregating more than three (3) minutes in any one (1) hour, excluding uncombined water vapor.
   d. Particulate matter which is larger than 250 microns and which may be deposited upon the real property of another person shall not be emitted.

2. The permittee shall not allow the emission of odorous matter or other fugitive emissions so as to create nuisance conditions off the permittee's property. Nuisance conditions will be verified by Department personnel. The creation of nuisance conditions may, in addition to any other action the Department may take, result in a permit modification to require a compliance schedule to control the nuisance conditions.

OPERATIONS AND MAINTENANCE

3. The permittee shall at all times maintain and operate all air contaminant generating processes and all air contaminant control equipment at full efficiency and effectiveness, such that the emissions of air contaminants are kept at the lowest practicable levels.

4. The permittee shall minimize fugitive dust emissions by:
   a. Treating vehicular traffic areas of the plant site under the control of the permittee.
   b. Storing collected material from air pollution control equipment in a covered container or other method equally effective in preventing the material from becoming airborne during storage and transfer.

5. A maintenance service must be performed on the boiler at least once every two years. As a minimum, the service must include an inspection of the burners and refractory chamber, cleaning, adjustment, and repair as necessary. Records of the service shall be maintained on site for a period of at least two years.

PLANT SITE EMISSION LIMITS

6. Emissions of Sulfur Dioxide on a plant site basis shall not exceed 3.8 tons per year or 10.0 pounds per hour.

7. Emissions of Nitrogen Oxides on a plant site basis shall not exceed 13.9 tons per year or 7.0 pounds per hour.

8. Emissions of Carbon Monoxide on a plant site basis shall not exceed 3.5 tons per year or 1.8 pounds per hour.

AIR POLLUTION EPISODES

9. The permittee may elect to file a Source Emission Reduction Plan (SERP) with the Department in accordance with OAR 340-27-015, specifying the procedures the permittee will follow in the event an Air Pollution Alert, Warning, or Emergency Episode is declared in the Portland area by the Department. The Source Emission Reduction Plan shall be available on the source premises for inspection by any authorized personnel.

10. In the event an Air Pollution Alert, Warning, or Emergency Episode is declared in the Portland area by the Department, the permittee shall take actions appropriate to the declared Air Pollution Episode as listed in the Source Emission Reduction Plan on file with the Department, or with Oregon Administrative Rules 340, Division 27 "Air Pollution Emergencies" if no Source Emission Reduction Plan has been filed with the Department.

Air Pollution Episodes will be declared by the Department and information will be made available through the radio and television media.

SPECIAL CONDITIONS

11. The permittee shall notify the Department in writing of the date the new hot oil heater is started up. The notification shall be submitted no later than seven (7) days after startup.

12. All nuisance condition complaints shall be investigated by a plant representative immediately following receipt of such a complaint. A log of all complaints shall be maintained at the plant site and shall include date of contact, time of observed nuisance condition, description of nuisance condition, location of receptor, and status of plant operation during the observed period.

PROPOSED

a. The nuisance complaint log shall be maintained on site for a period of not less than two years, and be made available to Department representatives upon request.

MONITORING REQUIREMENTS

13. The permittee shall effectively inspect and monitor the operation and maintenance of the plant and associated air contaminant control facilities and shall implement the procedures necessary to monitor and record the following parameters. A record of all such data shall be maintained for a period of two years at the plant site for inspection by the authorized representatives of the Department.

    a. All operating and production parameters to be reported to the Department annually as required in Condition 14.
    b. Excess emissions records as defined in OAR 340-28-1400 through 340-28-1440 (recorded on occurrence)
    c. A description of any maintenance to the air contaminant control system (recorded on occurrence)

REPORTING REQUIREMENTS

14. The permittee shall submit to the Department by January 15 of each year this permit is in effect two (2) copies of the following information for the preceding calendar year:

    a. Operating parameters:

        i. Total boiler operating time (hours/year)
        ii. Total hot oil heater operating time (hours/year)
        iii. Highest sulfur content of oil burned (obtained from supplier)
        iv. Types and quantities of fuels burned (gallons or MMCF)
        v. Average plant operating schedule (hours/day, days/week, weeks/year)

    b. A log of all planned and unplanned excess emissions in accordance with OAR 340-28-1440.

    c. A summary of all odor complaints received during the year; by specifying the number of complaints on each date that complaints were received.

    d. Explain any permanent changes made in the plant process or production which would effect air contaminant emissions, and indicate when changes were made.

    e. List all major maintenance performed on air pollution equipment

f. The report shall be sent to the Northwest Region, 2020 SW 4th Ave., #400, Portland, Oregon 97201-5884 unless otherwise noted. The permit number must be prominently displayed on the report.

FEE SCHEDULE

15. The Annual Compliance Determination Fee for this permit is due on August 1 of each year this permit is in effect. An invoice indicating the amount, as determined by Department regulations, will be mailed prior to the above date. The fee shall be submitted to the Business Office of the Department in Portland (unless otherwise notified).

GENERAL CONDITIONS AND DISCLAIMERS

G1. The permittee shall allow Department of Environmental Quality representatives access to the plant site and pertinent records at all reasonable times for the purposes of making inspections, surveys, collecting samples, obtaining data, reviewing and copying air contaminant emission discharge records and otherwise conducting all necessary functions related to this permit in accordance with ORS 468.095.

G2. The permittee shall have available at the facility at all times a copy of the Air Contaminant Discharge Permit.

G3. The permittee is prohibited from conducting open burning.

G4. The permittee shall at all times conduct dust suppression measures to meet the requirements set forth in "Fugitive Emissions" and "Nuisance Conditions" in OAR 340-21-050 through 340-21-060 and in OAR 340-30-440.

G5. The permittee shall immediately (i.e. as soon as possible but in no case more than one hour after the beginning of the excess emission period) notify the Department by telephone or in person of any excess emissions which are of a nature that could endanger public health, in accordance with OAR 340-28-1430. Follow-up reporting shall be made in accordance with Department direction and OAR 340-28-1430(3) and 340-28-1440.

Notification shall be made to the appropriate regional or branch office. The current Northwest Region telephone number is (503) 229-5554.

In the event of any excess emissions which are of a nature that could endanger public health and occur during non-business hours, weekends, or holidays, the permittee shall immediately notify the Department by calling the Oregon Emergency Response System (OERS). The current number is 1-800-452-0311.

G6. The permittee shall notify the Department in writing using a Departmental "Notice of Construction" form, or "Permit Application Form", and obtain approval in accordance with OAR 340-28-800 through 340-28-820 before:

PROPOSED

a. Constructing or installing any new source of air contaminant emissions, including air pollution control equipment, or

b. Modifying or altering an existing source that may significantly affect the emission of air contaminants, or

c. Making any physical change which increases emissions, or

d. Changing the method of operation, the process, or the fuel use, or increasing the normal hours of operation to levels above those contained in the permit application and reflected in this permit and which result in increased emissions.

G7. Application for a modification of this permit must be submitted not less than 60 days prior to the source modification. A Filing Fee and an Application Processing Fee must be submitted with an application for the permit modification.

G8. The permittee shall notify the Department in writing using a Departmental "Permit Application Form" within 60 days after the following:

a. legal change of the registered name of the company with the Corporations Division of the State of Oregon, or

b. sale or exchange of the activity or facility.

Applicable Permit Fees must be submitted with an application for the name change.

G9. Application for renewal of this permit must be submitted not less than 60 days prior to the permit expiration date. A Filing Fee, an Application Processing Fee and an Annual Compliance Determination Fee must be submitted with the application for the permit renewal.

G10. The issuance of this permit does not convey any property rights in either real or personal property, or any exclusive privileges, nor does it authorize any injury to private property or any invasion of personal rights, nor any infringement of federal, state, or local laws or regulations.

G11. This permit is subject to revocation for cause as provided in OAR 340-14-045.

ALL INQUIRIES SHOULD BE DIRECTED TO:

Department of Environmental Quality
Northwest Region
2020 SW 4th, Suite 400
Portland, Oregon 97201-4987
Telephone: (503) 229-5554

PROPOSED

Department of Environmental Quality
Northwest Region
AIR CONTAMINANT DISCHARGE PERMIT APPLICATION REVIEW REPORT

Koppers Industries, Inc.
7540 NW St. Helens Road
Portland, OR 97210-3663

SOURCE TEST	AMB MON	COMPL SCHED	SPEC COND	RPT FREQ	EXCESS RPT	NSPS	NSR	PSD	NESHAP	SIZE	PUB NTC
				A						A-2	Y

GENERAL BACKGROUND INFORMATION

1. This is a new permit for an existing source. In March 1975, Koppers Co., Inc. proposed a coal tar pitch processing facility. A permit was written to cover the operation of the proposed facility. In January 1976, the company informed the Department that the proposed operation would not be added to the facility. The permit was modified to allow the marketing of the remaining 3600 tons of coal tar on hand as roofing bitumen. The Department then canceled the permit as the facility reverted to being a terminal facility only.

   In response to a complaint in Koppers' geographical area, several facilities were visited. Department staff discovered an oil-fired boiler operating without a permit. The facility contains a 21 Mm Btu/hour boiler with the capability of burning oil. Under OAR 340-28-1750, Table 4 (formerly OAR 340-20-155, Table 1), all oil fired boilers greater than 10 MM Btu/hour input capacity in the Portland Air Quality Maintenance Area are required to have an air discharge permit. Because the Department had mistakenly canceled the permit in 1977, no enforcement action was taken against the source.

   The company proposes to add an 8 MM Btu/hour natural gas fired hot oil heater to provide heat to storage tanks. Gaseous emissions from the tanks will be ducted to the hot oil heater for incineration. Installation of a heated pipeline is planned in the next two years.

2. The facility is located in a maintenance area for carbon monoxide and ozone. Two contributors to ozone, nitrogen oxides (NO_x) and volatile organic compounds (VOC), are regulated pollutants. The facility is an insignificant source of CO, NO_x, and VOC. The area is in attainment for all other pollutants.

PROPOSED

3. A Land Use Compatibility Statement signed by the City of Portland on September 15, 1997 granted unconditional approval.

4. The Department has issued a water quality permit to this facility, NPDES 100419.

5. Existing air contaminant sources at the facility consist of the following:

worst case

EQUIPMENT	MFG/MODEL	CAPACITY/ PROD. RATE	SCC*	INSTALLED/ MODIFIED
Oil-fired boiler	N. American	21 MM Btu/hr	3-06-001-03	1965
Gas-fired heater	3.5	~~8~~ MM Btu/hr	3-06-001-02	1998/99

8 MM

F-1 /existing
F-2/new

*Source Classification Code, U.S. EPA reference

PLANT SITE EMISSION LIMIT (PSEL) INFORMATION

ORIGINAL PLANT SITE EMISSION LIMIT

6. The facility was in operation during the baseline years. Baseline year information has not been provided, however, so no Baseline Emission Rates have been established.

PROPOSED PLANT SITE EMISSION LIMIT

7. The normal operating schedule for the equipment is 24 hrs/day x 7 days/wk x 52 wks/yr = 8,736 hrs/yr.

8. Normal annual fuel usage is100,000 gallons of diesel oil and 184 million cubic feet. Maximum hourly fuel burned is 150 gallons of diesel oil and/or 30,000 cubic feet of natural gas.

9. An emission summary is below. Refer to the Plant Site Emission Detail Sheet, attached.

Source	PM tons/yr (lbs/hr)	PM_{10} tons/yr (lbs/hr)	SO_2 tons/yr (lbs/hr)	No_x tons/yr (lbs/hr)	CO tons/yr (lbs/hr)	VOC tons/yr (lbs/hr)
Oil combustion	0.1 (0.3)	0.5 (0.1)	3.6 (9.9)	1.0 (2.8)	0.3 (0.7)	0.01 (0.03)
Gas combustion	0.2 (0.1)	0.2 (0.1)	0.2 (0.1)	12.9 (4.2)	3.2 (1.1)	0.30 (0.1)
Totals	0.3 (0.4)	0.7 (0.2)	3.8 (10.0)	13.9 (7.0)	3.5 (1.8)	0.31 (0.1)

10. Only the pollutants that will be emitted at the level of 1.0 ton/year or more have been included in the Plant Site Emission Limit, shown below.

Pollutant	Short-Term Limit	Annual Limit
Sulfur dioxide (SO2)	10.0 Lb/Hour	3.8 Ton/Year
Nitrogen oxides (NOx)	7.0 Lb/Hour	13.9 Ton/Year
Carbon Monoxide (CO)	1.8 Lb/Hour	3.5 Ton/Year

SIGNIFICANT EMISSION RATE

11. The Plant Site Emission Limit increase over baseline is less than the Significant Emission Rate (SER) as defined in OAR 340-28-110 for all pollutants and is shown below. No further air quality analysis is required for those pollutants.

Pollutant	Baseline (tons/yr)	Current PSEL (tons/yr)	Increase (tons/yr)	SER (tons/yr)
SO2	0	3.8	3. 8	40
NOx	0	13.9	13.9	40
CO	0	3.5	3.5	100

ADDITIONAL REQUIREMENTS

12. Special conditions contained in the permit include the requirement to notify the Department upon installation of the 8 MM Btu/hour heater.

13. The source is required to submit reports to the Department annually.

14. The source is not subject to immediate (within one hour) reporting of excess emissions, except when the emissions may endanger public health.

15. This source is not subject to federal regulations for New Source Performance Standards (NSPS).

16. This source is not subject to federal regulations for New Source Review.

17. This source is not subject to federal regulations for Prevention of Significant Deterioration (PSD).

18. This source is not subject to federal regulations for National Emissions Standards for Hazardous Air Pollutants (NESHAP).

PROPOSED

PUBLIC NOTICE

The configuration of the plant differs greatly from the time the last permit was issued. Therefore the permit will be placed on public notice from March 16, 1998 to April 17, 1998.

KAmidon:Edruback
2/10/1998

PROPOSED

Koppers Ind.									
ACDP 26-2930									
			Plant Site Emission Detail Sheet						
		Fuel Usages	Pollutant	DEQ Emission Factor			Emissions		
Fuel:									
Oil, distillate	100	Thou. Gallons/year	PM	2	Lb/1,000 gal.	0.10	Tons/yr	0.28	Lb/hr
	140	Gal./hour	PM10	1	Lb/1,000 gal.	0.05	Tons/yr	0.14	Lb/hr
			SO2	71	Lb/1,000 gal.	3.55	Tons/yr	9.94	Lb/hr
			Nox	20	Lb/1,000 gal.	1.00	Tons/yr	2.80	Lb/hr
			CO	5	Lb/1,000 gal.	0.25	Tons/yr	0.70	Lb/hr
			VOC	0.2	Lb/1,000 gal.	0.01	Tons/yr	0.03	Lb/hr
Natural gas	184	MM Cubic Ft./year	PM	2.5	Lb/MMCF	0.23	Tons/yr	0.08	Lb/hr
	0.03	MM Cubic Ft./hour	PM10	2.5	Lb/MMCF	0.23	Tons/yr	0.08	Lb/hr
			SO2	2.6	Lb/MMCF	0.24	Tons/yr	0.08	Lb/hr
			Nox	140	Lb/MMCF	12.88	Tons/yr	4.20	Lb/hr
			CO	35	Lb/MMCF	3.22	Tons/yr	1.05	Lb/hr
			VOC	2.8	Lb/MMCF	0.26	Tons/yr	0.08	Lb/hr
						Emission Limits			
Note: PM, PM10, and VOC are emitted at					SO2	3.8	Tons/yr	10.0	Lb/hr
less than 1.0 ton/year and are not					Nox	13.9	Tons/yr	7.0	Lb/hr
included in the Plant Site Emission Limits.					CO	3.5	Tons/yr	1.8	Lb/hr

03/09/1998

KOPPERS INDUSTRIES

FAX TRANSMITTAL

Koppers Industries, Inc.
7540 N.W. St. Helens Road
Portland, OR 97210-3663

Telephone: 503-286-3681
Fax: 503-285-2831

TO: Sandi Hall, Oregon D.E.Q. DATE: 9/15/97

FROM: Amos Kameker TOTAL # OF PAGES: 3

Re: Application # 016551

The signed City of Portland Land Use Compatibility Statement is attached. Please call if any questions.

cc: W.E. Sweamingen, KII

IF THIS TRANSMITTAL IS IN ERROR, PLEASE CALL 503-286-3681 FAX # 503-285-2831

Koppers015792

September 4, 1997

Oregon

DEPARTMENT OF
ENVIRONMENTAL
QUALITY

NORTHWEST REGION

KOPPERS INDUSTRIES, INC.
7540 NW ST HELENS ROAD
PORTLAND, OR 97210-3663

RE: APPLICATION FOR AIR CONTAMINANT DISCHARGE PERMIT - NEED LUCS

The application for renewal of your Air Contaminant Discharge Permit was received by the Department of Environmental Quality on August 25, 1997 and has been assigned application number 016551.

Your application cannot be processed until a completed Land Use Compatibility Statement (LUCS) is received. State law requires that the Department assure compatibility with local land use planning for each permitted facility. The Department has no Land Use Compatibility Statement (LUCS) on file for the above facility. A blank LUCS form is enclosed. Please fill out section 1 of the form and take it to the appropriate city or county land use planner. Have them review, complete, and sign the LUCS. Please note that there may be a fee associated with the review and approval of the LUCS by the city or county land use planner. The completed form should be returned as soon as possible to:

AQ Permit Coordinator, DEQ - NWR, 2020 SW 4th Ave, Suite 400, Portland, OR 97201-4987.

If you wish, you may FAX the LUCS at (503) 229-5265. We shall hold your application pending the completed LUCS. Please include the permit number above in the subject of all correspondence with the Department. In addition to meeting the air quality standards, your facility is also obligated to operate in compliance with the daytime and nighttime noise standards set forth in Oregon Administrative Rule (OAR) 340-35-035(1). For a copy of the noise regulations, please call (503) 229-5582. Once complete, your application will be reviewed by Kathy Amidon at (503) 229-5568. If you have any questions, please contact me at (503) 229-5582.

RECEIVED
SEP 11 1997
KOPPERS INDS., INC.
PORTLAND, OR

Sincerely,

Sandi Hall
Permit Coordinator
Air Quality / Northwest Region

John A. Kitzhaber
Governor

2020 SW Fourth Avenue
Suite 400
Portland, OR 97201-4987
(503) 229-5263 Voice
TTY (503) 229-5471

DEQ-1

slh
Enclosure
cc: K Amidon/NWR

DEPARTMENT OF ENVIRONMENTAL QUALITY
LAND USE COMPATIBILITY STATEMENT (LUCS)

WHAT IS A LUCS? The LUCS is the process DEQ uses to determine that DEQ permits and other approvals that affect land use are consistent with the local government comprehensive plan.

WHY IS A LUCS REQUIRED? Oregon law requires that state agency activities that impact land use be consistent with local comprehensive plans. DEQ Division 18 administrative rules identify agency actions that are defined as programs affecting land use. These programs must have a process for determining local plan consistency.

WHEN IS A LUCS REQUIRED? A LUCS is required for nearly all DEQ permits, some general permits, and certain approvals of plans or related activities that affect land use. These activities are listed in this form. In cases where a source needs more than one DEQ permit or approval, a single LUCS may be used.

A permit modification requires a LUCS when:
- there is a physical expansion on the property or the use of additional land is proposed.
- there is a significant increase in discharges to water.
- there is a relocation of an outfall outside of the source property, or
- there is any physical change or change of operation of an air pollutant source that results in a net significant emission rate increase as defined in OAR 340-28-110.

A permit renewal requires a LUCS if one has not previously been submitted, or if one of the above four permit modification factors apply.

HOW TO COMPLETE A LUCS:
- The LUCS form is included in the DEQ permit application or approval packet.
- Applicant fills out Section 1 of the LUCS and then submits it to the city or county planning office.
- The local planning office determines if the business or facility meets all local planning requirements.
- The local planning office must attach written findings of fact for local reviews or other necessary planning approvals.
- that are required of the applicant.
- The applicant includes the completed LUCS and attachments with the permit application or approval request submittal.

WHERE TO GET HELP: Questions on the LUCS are to be directed to region staff responsible for processing the source permit or other approval application or, to Management Services Division at 800-452-4011 or (503) 229-6408.

SECTION 1 - TO BE FILLED OUT BY APPLICANT

1. Name of applicant: Koppers Industries, Inc. Contact person: Amos Kamerer
   Telephone No.: (503) 286-3681

Mailing address:
7540 NW Saint Helens Rd.
Portland, Oregon 97210-3663

Location address:
7540 NW Saint Helens Rd.
Portland, Oregon 97210-3663

Tax Acct.# [redacted] Tax Lot # 42,111,129&130 Township____ Range____ Section 12&13,T1N, R1W
Latitude 45:34:38 Longitude 122:45:32

2. Describe type of business or facility and the services or products provided:
   The plant receives creosote, refined coal tar and coal tar pitches via trucks and railcars. These products are stored in heated tanks and are shipped to customers throughout the northwest states via tank trucks and tank cars.

X:\DALE\RYOUNG\LUCSWORD.DOC

3. Circle the type of DEQ permits or approvals being applied for at this time:

Air Notice of Const.	SW Disp/Auth Permit	Fed. Permit WQ Cert.
Air Discharge Permit*	Waste Tire Storage Permit	WQ NPDES/WPCF Permit**
Title V Air Permit	HW/PCB Storage/Trmt/Disch Permit	WQ Stormwater General Permit
Air Indirect Source Permit	Pollution Control Bond Request	Wastewater/Sewer Facility Plan***
Parking/Traffic Circ. Plan	Wastewater Revolving Loan Request	Other WQ General Permit #_____****

** excluding portable facility permits* *** for onsite const-installation permits use DEQ form F:\WLANDUSE.OSS*
**** includes review of plan changes that require use of new land* ***** general permits,600,700,1200CA, and 1500 are exempt.*

4. This application is for a: new permit X permit renewal___ permit modification___ other

SECTION 2 - TO BE FILLED OUT BY CITY OR COUNTY LAND USE PLANNING OFFICIAL

5. The facility proposal is located: X inside city limits ___inside UGB ___ outside UGB

6. Name of city or county that has land use jurisdiction*: CITY OF PORTLAND
**jurisdiction means the legal entity that is responsible for land use decisions for the subject property or land use.*

7. The business or facility complies with all applicable local land use requirements: X yes ___no

7a. List all local reviews or approvals that were required of the applicant before the LUCS consistency was determined *(This does not include past requirements that do not relate to the pending DEQ permit request.)*:

NONE

7b. If no, identify reasons for noncompliance, or list requirement(s) that the applicant must comply with before LUCS consistency can be determined:

7c. Is local government currently processing remaining requirements to attain LUCS consistency: ___yes X no
Anticipated date of decision _____

7d. Is a public notice and hearing required ? ___yes X no hearing date _____

8. Planning official reviewer's telephone number: ( ) 823-7716

SIGNATURES

Christina Scarzello CHRISTINA SCARZELLO Title Associate Planner Date 9-15-97
Planning Official print planning official's name

CHRISTINA SCARZELLO _____ Title_____ Date_____
Planning Official print planning official's name
(depending upon city/county agreement on jurisdiction outside city limits but within UGB)

ATTENTION: A LUCS approval cannot be accepted by DEQ until all local requirements have been met. Written findings of fact for all local decisions addressed under 7 thru 7b must be attached to the LUCS.

X:\DALE\RYOUNG\LUCSWORD.DOC

DEPARTMENT OF ENVIRONMENTAL QUALITY
LAND USE COMPATIBILITY STATEMENT (LUCS)

WHAT IS A LUCS? The LUCS is the process DEQ uses to determine that DEQ permits and other approvals that affect land use are consistent with the local government comprehensive plan.

WHY IS A LUCS REQUIRED? Oregon law requires that state agency activities that impact land use be consistent with local comprehensive plans. DEQ Division 18 administrative rules identify agency actions that are defined as programs affecting land use. These programs must have a process for determining local plan consistency.

WHEN IS A LUCS REQUIRED? A LUCS is required for nearly all DEQ permits, some general permits, and certain approvals of plans or related activities that affect land use. These activities are listed in this form. In cases where a source needs more than one DEQ permit or approval, a single LUCS may be used.

A permit modification requires a LUCS when:
- there is a physical expansion on the property or the use of additional land is proposed.
- there is a significant increase in discharges to water.
- there is a relocation of an outfall outside of the source property, or
- there is any physical change or change of operation of an air pollutant source that results in a net significant emission rate increase as defined in OAR 340-28-110.

A permit renewal requires a LUCS if one has not previously been submitted, or if one of the above four permit modification factors apply.

HOW TO COMPLETE A LUCS:
- The LUCS form is included in the DEQ permit application or approval packet.
- Applicant fills out Section 1 of the LUCS and then submits it to the city or county planning office.
- The local planning office determines if the business or facility meets all local planning requirements.
- The local planning office must attach written findings of fact for local reviews or other necessary planning approvals.
  that are required of the applicant.
- The applicant includes the completed LUCS and attachments with the permit application or approval request submittal.

WHERE TO GET HELP: Questions on the LUCS are to be directed to region staff responsible for processing the source permit or other approval application or, to Management Services Division at 800-452-4011 or (503) 229-6408.

SECTION 1 - TO BE FILLED OUT BY APPLICANT

1. Name of applicant: Koppers Industries, Inc. Contact person: Amos Kamerer
   Telephone No.: (503) 286-3681

Mailing address:
7540 NW Saint Helens Rd.
Portland, Oregon 97210-3663

Location address:
7540 NW Saint Helens Rd.
Portland, Oregon 97210-3663

Tax Acct.# [redacted] Tax Lot # 42,111,129&130 Township____ Range____ Section 12&13,T1N, R1W
Latitude 45:34:38 Longitude 122:45:32

2. Describe type of business or facility and the services or products provided:
   The plant receives creosote, refined coal tar and coal tar pitches via trucks and railcars. These products are stored in heated tanks and are shipped to customers throughout the northwest states via tank trucks and tank cars.

X:\DALE\RYOUNG\LUCSWORD.DOC

3. Circle the type of DEQ permits or approvals being applied for at this time:

Air Notice of Const.	SW Disp/Auth Permit	Fed. Permit WQ Cert.
Air Discharge Permit*	Waste Tire Storage Permit	WQ NPDES/WPCF Permit**
Title V Air Permit	HW/PCB Storage/Trmt/Disch Permit	WQ Stormwater General Permit
Air Indirect Source Permit	Pollution Control Bond Request	Wastewater/Sewer Facility Plan***
Parking/Traffic Circ. Plan	Wastewater Revolving Loan Request	Other WQ General Permit #_____****

** excluding portable facility permits* *** for onsite const-installation permits use DEQ form F:\WLANDUSE.OSS*
**** includes review of plan changes that require use of new land* ***** general permits,600,700,1200CA, and 1500 are exempt.*

4. This application is for a: new permit_X_ permit renewal___ permit modification___ other

SECTION 2 - TO BE FILLED OUT BY CITY OR COUNTY LAND USE PLANNING OFFICIAL

5. The facility proposal is located: ___inside city limits ___inside UGB ___ outside UGB

6. Name of city or county that has land use jurisdiction*:_____
**jurisdiction means the legal entity that is responsible for land use decisions for the subject property or land use.*

7. The business or facility complies with all applicable local land use requirements: ___yes ___no

7a. List all local reviews or approvals that were required of the applicant before the LUCS consistency was determined*(This does not include past requirements that do not relate to the pending DEQ permit request.)*:

_____
_____
_____
_____
_____
_____

7b. If no, identify reasons for noncompliance, or list requirement(s) that the applicant must comply with before LUCS consistency can be determined:

_____
_____
_____
_____
_____
_____
_____

7c. Is local government currently processing remaining requirements to attain LUCS consistency: ___yes ____no
Anticipated date of decision _____

7d. Is a public notice and hearing required ? ____yes ____no hearing date _____

8. Planning official reviewer's telephone number: ( ) _____

SIGNATURES

_____ _____ Title_____ Date_____
Planning Official print planning official's name

_____ _____ Title_____ Date_____
Planning Official print planning official's name
(depending upon city/county agreement on jurisdiction outside city limits but within UGB)

ATTENTION: A LUCS approval cannot be accepted by DEQ until all local requirements have been met. Written findings of fact for all local decisions addressed under 7 thru 7b must be attached to the LUCS.

X:\DALE\RYOUNG\LUCSWORD.DOC

CITY OF PORTLAND - PLANNING BUREAU
PERMIT CENTER RECEIPT

PL № 112002

DATE: 9-15-97

NAME: KOPPERS IND., INC.
ADDRESS: 7540 NW ST. HELENS RD
JOB ADDRESS: SAME

PHONE #:
CITY/ST/ZIP: PORTLAND 97210
PERMIT #:

The following reviews require payment of the Hearings Officer fee:

Amount	Fee Code	Item Description
	0224	CCPD Height Transfer
	0202	Comp Plan Map Amendment
	0227	Conditional Use - Minor
	0203	Conditional Use - Major
	0204	Convenience Store Review
	0206	Environmental Conservation
	0229	Environmental Protection
	0225	Essential Service Provider
	0207	Excavation and Fill Reveiw
	0208	Greenway Review
	0209	Hazardous Substance Review
	0211	Industrial Park Review
	0213	Land Division - Major
	0223	Master Plan Review
	0215	Non-Conforming Use Review
	0216	Planned Unit Development
	0243	Property Tax Exemption
	0230	Reasonable Use Review
	0218	Revocable Permit Extension
	0231	Rocky Butte Hist. Features
	0220	Statewide Planning Goal
	0221	Sub-Standard Lot Review
	0232	Tree Removal Review
	0222	Zoning Map Amendment
	0254	**Hearings Officer Fee**

These reviews do not require payment of the Hearings Officer fee:

Amount	Fee Code	Item Description
	0201	Adjustment Review
	0228	Design Review - Minor
	0205	Design Review - Major
	0210	Historic Landmark Reviews
	0214	Land Division - Minor
	0212	Lot Line Adjusment
	0233	Non-Conf Use Establishment
	0217	Pre-Application Conference
		PAID
		SEP 15 1997
	0244	Plan Check
124	0251	Zoning Confirmation (LUCS)
	0253	Document and Map Sales

CITY OF PORTLAND

124 **TOTAL FEES**

- **Cash**
- ✓ **Check** #1666
- **TF**
- **Bill to:**

Bureau Staff: GS

LE: 7/91

Koppers015798

DEPARTMENT OF ENVIRONMENTAL QUALITY
LAND USE COMPATIBILITY STATEMENT (LUCS)

WHAT IS A LUCS? The LUCS is the process DEQ uses to determine that DEQ permits and other approvals that affect land use are consistent with the local government comprehensive plan.

WHY IS A LUCS REQUIRED? Oregon law requires that state agency activities that impact land use be consistent with local comprehensive plans. DEQ Division 18 administrative rules identify agency actions that are defined as programs affecting land use. These programs must have a process for determining local plan consistency.

WHEN IS A LUCS REQUIRED? A LUCS is required for nearly all DEQ permits, some general permits, and certain approvals of plans or related activities that affect land use. These activities are listed in this form. In cases where a source needs more than one DEQ permit or approval, a single LUCS may be used.

A permit modification requires a LUCS when:
- there is a physical expansion on the property or the use of additional land is proposed.
- there is a significant increase in discharges to water.
- there is a relocation of an outfall outside of the source property, or
- there is any physical change or change of operation of an air pollutant source that results in a net significant emission rate increase as defined in OAR 340-28-110.

A permit renewal requires a LUCS if one has not previously been submitted, or if one of the above four permit modification factors apply.

HOW TO COMPLETE A LUCS:
- The LUCS form is included in the DEQ permit application or approval packet.
- Applicant fills out Section 1 of the LUCS and then submits it to the city or county planning office.
- The local planning office determines if the business or facility meets all local planning requirements.
- The local planning office must attach written findings of fact for local reviews or other necessary planning approvals.
  that are required of the applicant.
- The applicant includes the completed LUCS and attachments with the permit application or approval request submittal.

WHERE TO GET HELP: Questions on the LUCS are to be directed to region staff responsible for processing the source permit or other approval application or, to Management Services Division at 800-452-4011 or (503) 229-6408.

SECTION 1 - TO BE FILLED OUT BY APPLICANT

1. Name of applicant: Koppers Industries, Inc. Contact person: Amos Kamerer
   Telephone No.: (503) 286-3681

Mailing address:
7540 NW Saint Helens Rd.
Portland, Oregon 97210-3663

Location address:
7540 NW Saint Helens Rd.
Portland, Oregon 97210-3663

Tax Acct.# [redacted] Tax Lot # 42,111,129&130 Township____ Range____ Section 12&13,T1N, R1W
Latitude 45:34:38 Longitude 122:45:32

2. Describe type of business or facility and the services or products provided:
   The plant receives creosote, refined coal tar and coal tar pitches via trucks and railcars. These products are stored in heated tanks and are shipped to customers throughout the northwest states via tank trucks and tank cars.

X:\DALE\RYOUNG\LUCSWORD.DOC

3. Circle the type of DEQ permits or approvals being applied for at this time:

Air Notice of Const.	SW Disp/Auth Permit	Fed. Permit WQ Cert.
Air Discharge Permit*	Waste Tire Storage Permit	WQ NPDES/WPCF Permit**
Title V Air Permit	HW/PCB Storage/Trmt/Disch Permit	WQ Stormwater General Permit
Air Indirect Source Permit	Pollution Control Bond Request	Wastewater/Sewer Facility Plan***
Parking/Traffic Circ. Plan	Wastewater Revolving Loan Request	Other WQ General Permit #_____****

** excluding portable facility permits* *** for onsite const-installation permits use DEQ form F:\WLANDUSE.OSS*
**** includes review of plan changes that require use of new land* ***** general permits,600,700,1200CA, and 1500 are exempt.*

4. This application is for a: new permit X permit renewal___ permit modification___ other

SECTION 2 - TO BE FILLED OUT BY CITY OR COUNTY LAND USE PLANNING OFFICIAL

5. The facility proposal is located: X inside city limits ___inside UGB ___ outside UGB

6. Name of city or county that has land use jurisdiction*: CITY OF PORTLAND
**jurisdiction means the legal entity that is responsible for land use decisions for the subject property or land use.*

7. The business or facility complies with all applicable local land use requirements: X yes ___no

7a. List all local reviews or approvals that were required of the applicant before the LUCS consistency was determined*(This does not include past requirements that do not relate to the pending DEQ permit request.)*:

NONE

7b. If no, identify reasons for noncompliance, or list requirement(s) that the applicant must comply with before LUCS consistency can be determined:

7c. Is local government currently processing remaining requirements to attain LUCS consistency: ___yes X no
Anticipated date of decision _____

7d. Is a public notice and hearing required ? ___yes X no hearing date _____

8. Planning official reviewer's telephone number: ( ) 823-7716

SIGNATURES

Christina Scarzello CHRISTINA SCARZELLO Title Associate Planner Date 9-15-97
Planning Official print planning official's name

CHRISTINA SCARZELLO _____ Title_____ Date_____
Planning Official print planning official's name
(depending upon city/county agreement on jurisdiction outside city limits but within UGB)

ATTENTION: A LUCS approval cannot be accepted by DEQ until all local requirements have been met. Written findings of fact for all local decisions addressed under 7 thru 7b must be attached to the LUCS.

X:\DALE\RYOUNG\LUCSWORD.DOC

ODEQ – Air Cont. Discharge
Permit – Orig. Application Info
1997 – 1998

Koppers015801

Air/Compliance Consultants, Inc.

October 28, 1998 *Project Number AC098*

Ms. Traci Self
Koppers Industries, Inc.
436 Seventh Avenue
Pittsburgh, Pennsylvania 15219-1800

RE: Permit Application Air Emissions Inventory Summary and Backup

Dear Ms. Self:

Air/Compliance Consultants, Inc. (ACCI) has conducted an analysis to determine the actual and potential emissions from the Portland facility. The actual emission calculations were based on the present operations, existing equipment, some residual creosote transfers and a rate of 70,000 tons per year of Pitch production. The existing potential emissions were based on the same existing operations, but at a production rate of 150,000 tons per year of Pitch. The additional market-based Phases of construction and revisions were as follows:

Phase I Revisions:

- A new tank, T-200, is vented to Fume Recovery System. The effect on emission is negligible.
- A new Hot Oil Heater rated at 10 MMBTU/hr is added. The old heater remains as a backup.
- Unit can burn oil and natural gas.

Phase II Revisions:

- A new tank, T-210, is vented to Fume recovery. The effect on emissions is negligible.
- The Fume Recovery System is replaced with a fume combustor. Pitch fumes are controlled at 98% based on an inlet loading which is assumed saturated at 400°F.

The following are attachments to this letter:

1. Emissions Summary Forms
2. Backup Calculations for Actual Emissions
3. Backup Calculations for Potential Emissions
4. ChemCAD Analysis of Fume Recovery System Maximum Hourly Emissions Rate
5. ChemCAD Analysis of Fume Recovery System Emissions, 1 Month Basis
6. Design Basis of Scrubber

1050 William Pitt Way
Pittsburgh, PA 15238
412-826-3636
412-826-3640 fax

The bases for the analyses are summarized on the first page of Attachments 2 and 3.

Please do not hesitate to call us at (412) 826-3636 if you have any questions.

Sincerely,

AIR/COMPLIANCE CONSULTANTS, INC.

Jill W. Merrill
Principal Engineer/President

JWM:jch

Attachments

cc: J. Dietz
A. Kamerer

ATTACHMENT 1

EMISSIONS SUMMARY FORMS

Actual Emissions from Existing Units
Koppers Industries, Inc., Portland Terminal

Unit	Comments	Commodity	NOx (lb/hr)	NOx Tons/Yr	VOC (lb/hr)	VOC Tons/Yr	CO (lb/hr)	CO Tons/Yr	SO2 (lb/hr)	SO2 Tons/Yr	PM-10 (lb/hr)	PM-10 Tons/Yr
Atlas Boiler		Gas	2.82	2.04	0.06	0.04	0.70	0.51	0.08	0.06	0.12	0.09
Hot Oil Heater		Gas	0.81	0.59	0.04	0.08	0.17	0.12	0.03	0.02	0.04	0.03
Fume Recovery System [1,2]		NA			12.47	15.45						
Tank 33		Heavy Oil			0.12	0.003						
Tank 67		P1/P13 Distillate			1.71	0.035						
Loading Tank 67 to Rail		P1/P13 Distillate			2.46	0.005						
Fugitives		NA			0.98	0.266						
Plant Total			**3.63**	**2.63**	**17.84**	**15.88**	**0.88**	**0.63**	**0.11**	**0.08**	**0.16**	**0.12**

NOTES
[1] The fume recovery system receives emissions from the following units: T-68, T-65, railcar loading and tank car loading.
[2] Hourly and annual VOC emissions from the fume recovery system were calculated using ChemCAD. Annual VOC was adjusted by 1997 actual operating hours over 8,760 hours.

Koppers015805

Maximum Potential Emissions from Existing Units
Koppers Industries, Inc., Portland Terminal

Unit	Comments	Commodity	NOx (lb/hr)	NOx Tons/Yr	VOC (lb/hr)	VOC Tons/Yr	CO (lb/hr)	CO Tons/Yr	SO2 (lb/hr)	SO2 Tons/Yr	PM-10 (lb/hr)	PM-10 Tons/Yr
Atlas Boiler		Gas	2.82	12.33	0.06	0.25	0.70	3.08	0.08	0.33	0.12	0.55
		Oil	3.00	13.14	0.03	0.13	0.75	3.29	10.65	46.65	0.30	1.31
		MAX	3.00	13.14	0.06	0.25	0.75	3.29	10.65	46.65	0.30	1.31
Hot Oil Heater		Gas	0.81	3.57	0.04	0.19	0.17	0.75	0.03	0.14	0.04	0.16
		Oil	1.22	5.32	0.01	0.05	0.31	1.33	4.33	18.88	0.12	0.53
		MAX	1.22	5.32	0.04	0.19	0.31	1.33	4.33	18.88	0.12	0.53
Fume Recovery System [1,2]		NA			12.47	21.51						
Tank 33		Heavy Oil			0.12	0.005						
Tank 67		P1/P13 Distillate			0.85	0.035						
Loading Tank 67 to Rail		P1/P13 Distillate			2.46	0.004						
Fugitives		NA			0.98	0.568						
Plant Total			**4.22**	**18.46**	**16.98**	**22.56**	**1.06**	**4.61**	**14.98**	**65.53**	**0.42**	**1.85**

NOTES
[1] The fume recovery system receives emissions from the following units: T-68, T-65, railcar loading and tank car loading.
[2] Hourly and annual VOC emissions from the fume recovery system were calculated using ChemCAD.

Koppers015806

Maximum Potential Emissions, Phase I
Koppers Industries, Inc., Portland Terminal

Unit	Comments	Commodity	NOx (lb/hr)	NOx Tons/Yr	VOC (lb/hr)	VOC Tons/Yr	CO (lb/hr)	CO Tons/Yr	SO2 (lb/hr)	SO2 Tons/Yr	PM-10 (lb/hr)	PM-10 Tons/Yr
Atlas Boiler		Gas	2.82	12.33	0.06	0.25	0.70	3.08	0.08	0.33	0.12	0.55
		Oil	3.00	13.14	0.03	0.13	0.75	3.29	10.65	46.65	0.30	1.31
		MAX	3.00	13.14	0.06	0.25	0.75	3.29	10.65	46.65	0.30	1.31
Hot Oil Heater(backup unit)		Gas	0.81	3.57	0.04	0.19	0.17	0.75	0.03	0.14	0.04	0.16
		Oil	1.22	5.32	0.01	0.05	0.31	1.33	4.33	18.88	0.12	0.53
		MAX	1.22	5.32	0.04	0.19	0.31	1.33	4.33	18.88	0.12	0.53
Fume Recovery System [1,2]		NA			12.47	21.51						
Tank 33		Heavy Oil			0.12	0.005						
Tank 67		Heavy Oil			0.04	0.002						
Fugitives		NA			0.98	0.568						
New Hot Oil Heater		Gas	1.34	5.87	0.03	0.12	0.34	1.47	0.04	0.16	0.06	0.26
		Oil	1.42	6.26	0.01	0.06	0.36	1.56	5.04	22.21	0.14	0.63
		MAX	1.42	6.26	0.03	0.12	0.36	1.56	5.04	22.21	0.14	0.63
T-200		Liquid Pitch				Note 3						
Plant Total			**5.64**	**24.72**	**13.74**	**22.64**	**1.41**	**6.18**	**20.02**	**87.74**	**0.56**	**2.47**

NOTES
[1] The fume recovery system receives emissions from the following units: T-68, T-65, T-200, railcar loading and tank car loading.
[2] Hourly and annual VOC emissions from the fume recovery system were calculated using ChemCAD.
[3] Emissions from T-200 are included in the fume recovery system's emissions.

Koppers015807

Maximum Potential Emissions, Phase II
Koppers Industries, Inc., Portland Terminal

Unit	Comments	Commodity	NOx (lb/hr)	NOx Tons/Yr	VOC (lb/hr)	VOC Tons/Yr	CO (lb/hr)	CO Tons/Yr	SO2 (lb/hr)	SO2 Tons/Yr	PM-10 (lb/hr)	PM-10 Tons/Yr
Atlas Boiler		Gas	2.82	12.33	0.06	0.25	0.70	3.08	0.08	0.33	0.12	0.55
		Oil	3.00	13.14	0.03	0.13	0.75	3.29	10.65	46.65	0.30	1.31
		MAX	3.00	13.14	0.06	0.25	0.75	3.29	10.65	46.65	0.30	1.31
Hot Oil Heater(backup unit)		Gas	0.81	3.57	0.04	0.19	0.17	0.75	0.03	0.14	0.04	0.16
		Oil	1.22	5.32	0.01	0.05	0.31	1.33	4.33	18.88	0.12	0.53
		MAX	1.22	5.32	0.04	0.19	0.31	1.33	4.33	18.88	0.12	0.53
Fume Combustion System[1,2]		NA			0.49	2.16						
Tank 33		Heavy Oil			0.12	0.005						
Tank 67		Heavy Oil			0.04	0.002						
Fugitives		NA			0.98	0.568						
New Hot Oil Heater		Gas	1.34	5.87	0.03	0.12	0.34	1.47	0.04	0.16	0.06	0.26
		Oil	1.42	6.26	0.01	0.06	0.36	1.56	5.04	22.21	0.14	0.63
		MAX	1.42	6.26	0.03	0.12	0.36	1.56	5.04	22.21	0.14	0.63
T-200		Liquid Pitch				Note 3						
T-210		Liquid Pitch				Note 3						
Plant Total	**Maximum**		**5.64**	**24.72**	**1.76**	**3.29**	**1.41**	**6.18**	**20.02**	**87.74**	**0.56**	**2.47**

NOTES
[1] The fume combustion system recieves emissions from the following units: T-68, T-65, T-200, T-210, railcar loading and tank car loading, and an additional loading rack.
[2] Hourly emissions from the fume combustion system were calculated assuming an uncontrolled emission rate of 24.7 and a destruction efficiency of 98%. Annual emissions assumes 8,760 hours of operation.
[3] Emissions from T-200 and T-210 are included in the fume combustion system's emissions.

Koppers015808

ATTACHMENT 2

BACKUP CALCULATIONS FOR ACTUAL EMISSIONS

Basis: Actual Emissions case

Year	Pitch Total (tons)	Pitch Total (gallons)	Pitch Solid (tons)	Pitch Solid (gallons)	Pitch Liquid (tons)	Pitch Liquid (gallons)	Additive Heavy Oil (gallons)	Fume Recovery Heavy Oil (gallons)
Maximum	70,000	12,727,273	0	0	70,000	12,727,273	84,000	36,000

Gallons = tons * 2,000 lb/ton / (11 lb/gal)

* Heavy Oil Throughput (Tank 33) assumed to be equal to 1.2 gallons per ton of Total Pitch Throughput
* New Tank(s) throughput assumed to be equal to total liquid pitch Shipments
* Rail Car througput assumed equal to 60% of total pitch shipments
* Truck througput assumed equal to 40% of total pitch shipments
* Tank 68 assumed equal to Rail Car Shipments
* Tank 65 throughput assumed equal to total solid pitch deliveries
* Uncontrolled tank breathing losses are based on +/- 10 F temperature variations.
* Fume recovery system solution usage was calculated by assuming 3,000 gallons per month for every 70,000 tons of Pitch processed per year
* Tank 67 throughput assumed equal to fume recovery system throughput
* Fume Recovery system operates whenever transfers occur.
* Inlet pitch concentration to fume recovery system was assumed saturated pitch at 400F (Actual pitch concentration is expected to be lower)
* Fume recovery system emissions were calculated by ChemCad.

Scrubber Operating Hours- Actual case
Koppers Industries, Inc., Portland Tar Plant, Portland, Oregon

Assumptions:

All Pitch comes in as solid pitch

Total Annual Pitch Production:	70,000	tons/yr
Pitch Charging into T-65	58	tons/hr, based on 1,200 tons per each change of 20.6 hrs
% Pitch loaded into trucks from T-68:	60	% of total pitch production
Pitch loading pumping rate into trucks fr	55.5	tons/hr, based on 37 tons loaded per 40 minutes
% Pitch loaded into railcar from T-65:	40	% of total pitch production
Pitch loading pumping rate into railcars f	58.0	tons/hr, based on 87 tons loaded per 90 minutes
% Pitch transferred from T-65 to T-68	60.0	% of total pitch production
Pitch transfer pumping rate from T-65 to	70.0	tons/hr
Heavy oil pumping rate:	23	tons/hr, based on 1,200 gal/15min, and a density of 9.6 lbs/gal
Heavy Oil Annual Usage:	375	tons/yr, based on 1997 actual heavy oil usage of 42,421 gal times the ratio of potential pitch production (70,000 tons) over 1997 actual pitch production (38,000 tons)

Calculations:

Transfer Description	Amount per Charge (tons)	Pumping Rate (ton/hr)	Annual Amount Transferred (tons/yr)	Annual Transfer Time (hours)	Annual Number of Transfers	T-65 fume hours	T-68 fume hours	Total hours
Dry Pitch Charging	1200	58	70,000	1,207	58	1,323		1,323
From T-68 to trucks	37	55.5	42,000	757	1,135		3,027	3,027
From T-65 to rail	87	58.0	28,000	483	322	1,127		1,127
From T-65 to T-68	1200	70.0	42,000	600	35		670	670
Heavy Oil transfer	5.76	23	375	16	65	73	73	146
TOTALS:				**3,063**	**1,615**	**2,523**	**3,770**	**6,293**

[1] Solid pitch loading hours were adjusted by 1/3 times max hours to reflect llower flow rates
The flow rate is acually lower by about 1/3, so adjusting hours will have same effect .

Assume all transfers (except Solid Pitch) are done independently and that the scrubbers are at high capacity (1,050 scfm). Assume it takes one hour before and after each transfer to turn the fime system off and on.

Annual Operating Time: 71.84% annual operating time

Maximum annual emissions = 12 * monthly emissions (lbs) 100% operating at full capacity

Monthly emissisons = 3,585 lbs (reference: Chem Cad result)

Maximum annual emissions = 43,020 lbs 100% operating at full capacity
21.51 tons 100% operating at full capacity

Actual annual emissions = 43,020 * % of annual operation hours

Actual annual emissions = 30,905 lbs/yr
15.45 tpy

Actual Emissions from Natural Gas Combustion, Koppers Industries, Inc., Portland Tar Plant

Unit ID	Heat Input (MM BTU/Hr)	Fuel Used	Max Fuel Use (mmcf/hr)	Actual 1997 Fuel Use (mmcf/yr)	NOx (lb/mmcf)	NOx (lb/hr)	NOx (tpy)	VOC (lb/mmcf)	VOC (lb/hr)	VOC (tpy)	CO (lb/mmcf)	CO (lb/hr)	CO (tpy)	SO2 (lb/mmcf)	SO2 (lb/hr)	SO2 (tpy)	PM-10 (lb/mmcf)	PM-10 (lb/hr)	PM-10 (tpy)
Atlas Boiler	21	Gas	0.02	29.19	140.000	2.816	2.043	2.784	0.056	0.041	35.000	0.704	0.511	3.800	0.076	0.055	6.200	0.125	0.090
Hot Oil Heater	8.5	Gas	0.01	11.81	100.000	0.814	0.591	5.280	0.043	0.077	21.000	0.171	0.124	3.800	0.031	0.022	4.500	0.037	0.027
Total				**41.00**		**3.630**	**2.634**		**0.099**	**0.118**		**0.875**	**0.635**		**0.107**	**0.078**		**0.161**	**0.117**

Actual annual throughput based Therm output from 1997: 428,977 Therms.
Actual hourly fuel usage based on heat input and 1,044 BTU/cf
100,000 BTU = 1 Therm
Natural Gas = 1044 BTU/cuft
Emission Factors taken from the AP-42, sections 1.4 - EPA/Jan, 1995
Calculation for criteria pollutants = (Criteria emission factor) X (Actual Fuel Use) / (2000 lbs/ton)

Koppers015812

Actual Fugitive Equipment Leak Emissions, Koppers Industries, Inc., Portland Terminal

Reference: Protocol for Equipment Leak Estimates EPA-453/R-95-017, Average Emission Factors, Table 2--1

Distillate Fugitive Equipment Leaks
Tanks 67

Process Description	Number In service	Emission Factor (lb/hr/source)	Hours (year)	Emission (lb/hr)	Emission (lb/yr)
Pump seals	3	0.01899	8	0.06	0.43
Valves (in line)	23	0.00051	8	0.01	0.09
Pressure relief valves	0	0.22907	8	0.00	0.00
Open ended valves	1	0.00374	8	0.00	0.03
Flanges	57	0.00403	8	0.23	1.72
		Total emissions		0.30	2.27

Assume pumping rate 200 gpm

Hours = 2 * gals throughput/gpm pump rate/60= $\frac{45{,}000}{200}$ *2 /60 = 7.5

Heavy Oil: Storage Fugitive Equipment Leak
Tank 33

Process Description	Number In service	Emissions (lb/hr/source)	Hours year	Emission (lb/hr)	Emission (lb/yr)
Pump seals	1	0.01899	35	0.02	0.66
Valves (in line)	7	0.00051	35	0.00	0.12
Pressure relief valves	0	0.22907	35	0.00	0.00
Open ended valves	0	0.00374	35	0.00	0.00
Flanges	18	0.00403	35	0.07	2.54
		Total emissions		0.10	3.33

Assume pumping rate 80 gpm

Hours = 2 * gals throughput/gpm pump rate/60= $\frac{84{,}000}{80}$ /60 * 2= 35.0

Pitch: Storage Fugitive Equipment Leak

Process Description	Number In service	Emissions (lb/hr/source)	Hours year	Emission (lbs/hr)	Emission (lb/yr)
Pump seals	5	0.01899	1,061	0.09	100.69
Valves (in line)	31	0.00051	1,061	0.02	16.66
Pressure relief valves	0	0.22907	1,061	0.00	0.00
Open ended valves	5	0.00374	1,061	0.02	19.86
Flanges	68	0.00403	1,061	0.27	290.65
		Total emissions		0.40	427.85

Assume pumping rate 400 gpm

Hours = 2 * gals throughput/gpm pump rate/60= $\frac{12{,}727{,}273}{400}$ /60 *2= 1,060.6

Pitch: Loading Fugitive Equipment Leak

Process Description	Number In service	Emissions (lb/hr/source)	Hours year	Emissions (lb/hr)	Emission (lb/yr)
Pump seals	2	0.01899	530	0.04	20.14
Valves (in line)	11	0.00051	530	0.01	2.96
Pressure relief valves	0	0.22907	530	0.00	0.00
Open ended valves	2	0.00374	530	0.01	3.97
Flanges	33	0.00403	530	0.13	70.53
		Total emissions		0.18	97.59

Assume pumping rate 400 gpm

Hours = * gals throughput/gpm pump rate/60= $\frac{12{,}727{,}273}{400}$ /60 = 530.3

Total VOCs **531.03 lb/yr**
0.98 lb/hr

Koppers015813

Actual Emissions from Uncontrolled Loading, Koppers Industries, Inc., Portland Terminal

Reference: AP-42, 1995, Section 5.2, "Transporation and Marketing of Petroleum Liquids"

Process Description	Label	Temp. (°F)	Vapor MW (lb/lb-mole)	V_p (psia)	Saturation Factor	Throughput (Mgal/min)	Throughput (Mgal/yr)	L_L (lb/Mgal)	L_L (lb/yr)	L_L (lb/hr)
Tank 67 to Rail	P1/P13 Distillate	170	121.77	0.0587	1.45	0.20	45	0.2051	9	2.46

Throughput given by Koppers 10/2698 ROTC

Emissions Factor, AP-42, splash fill loading.

Koppers015814

Actual Hourly VOC Loading Emissions from Uncontrolled Tanks, Koppers Industries, Inc., Portland Terminal

Tank	Commodity	Vapor MW	Temp deg F	Temp deg R	PVA psia	Pump Rate Gal/min	VOC Emissions (lb/hr)
33	Heavy Oil	174.60	250	710.0	0.0079	80.00	0.12
67	P1/P13 Distillate	121.77	170	630.0	0.0587	200.00	1.71

Pound per hour (lb/hr) tank emissions were calculated as follows

$$\frac{\text{gal}}{\text{min}} \cdot \frac{60\ \text{min}}{\text{hr}} \cdot \frac{\text{cf}}{7.48\ \text{gal}} \cdot \frac{\text{lb-mol}}{385\ \text{cf}} \cdot \frac{\text{MW lb}}{\text{lb-mol}} \cdot \frac{\text{PVA}}{14.7\ \text{psia}} \cdot \frac{530\ \text{R}}{\text{TB deg R}} = \text{lbs/hr}$$

Emissions from T-67, Koppers Industries, Inc., Portland Terminal

Reference: AP-42, Jan. 1995, Liquid Organic Storage Tanks

Tank ID	T-67	Description	P1/P13 Distillate
City	Portland	State	OR
Company	Koppers Industries, Inc.		

Tank Information

Diameter (D)	*24.25*	ft
Shell Height (H_s)	*28.5*	ft
Liquid Height (H_L)	*14.3*	ft
Tank Volume	90,000	gal
Annual Throughput- basis, empty existing material	*45,000*	gal
Number of Turnovers	0.5	turnovers
Is Tank Heated (Y/N)?	Y	
Breather Vent Pressure Range (ΔP_B)	*0.00*	psia
Paint solar absorbance (primer, good) (α)	*0.89*	
Solar Insolation (I) for Portland, OR	*1,067*	Btu/f^2-day

Content Information

Vapor Molecular Weight (M_v)	*121.77*	lb/lb-mole
Vapor Pressure @ Average Daily Temp (P_{VA})	*0.0587*	psia @ 170 F
Daily Average Ambient Temp (T_{AA})	538	°R
Daily Max Ambient Temp (T_{AX})	548	°R
Daily Min Ambient Temp (T_{AN})	528	°R
Daily Ambient Temp Range (ΔT_A)	20	°R
Daily Average Liquid Surface Temperature	630	°R
Maximum Liquid Surface Temperature	640	°R
Minimum Liquid SurfaceTemperature	620	°R
Bulk Liquid Temperature Range	20	°R
Maximum Liquid Surface Temp (T_{LX})	640.00	°R
Minimum Liquid Surface Temp (T_{LN})	620.00	°R
Average Liquid Surface Temp (T_{LA})	630.00	°R
Vapor Pressure @ Max Liq. Surface Temp(P_{LX})	*0.0752*	psia
Vapor Pressure @ Min Liq. Surface Temp (P_{LN})	*0.0456*	psia
Vapor Pressure Range (ΔP_V)	0.02966	psia

BREATHING LOSSES

Vv =	6,698 ft^3	
$H_{VO} = (H_S - H_L + H_{RO})$	=	14.50
$T_{LA} = (0.44T_{AA}) + (0.56T_B) + (0.0079\alpha I)$	=	629.44 °R
$T_B = T_{AA} + (6\alpha) - 1$	=	629 °R
Wv =	0.0011 lb/ft^3	
K_E =	0.025	
$\Delta T_v = (0.72*\Delta T_A) + 0.028\alpha I$	=	14.4 °R
K_S =	0.957	

L_S (2/96) = 61.7 lb/yr

WORKING LOSSES

$L_W = 0.0010\ M_V P_{VA} Q K_N K_P$ = 7.7 lb/yr

TOTAL LOSSES

$L_S + L_W$ = 69.4 lb/yr

Emissions from T-33, Koppers Industries, Inc., Portland Terminal

Reference: AP-42, Jan. 1995, Liquid Organic Storage Tanks

Tank ID	T-33	Description	Heavy Oil
City	Portland	State	Oregon
Company	Koppers Industries, Inc.		

Tank Information		
Diameter (D)	*18.0*	ft
Shell Height (H_s)	*24.0*	ft
Liquid Height (H_L)	*12*	ft
Liquid Temperature (F)	*250*	deg F
Tank Volume	45,000	gal
Annual Throughput	*84,000*	gal
Number of Turnovers	1.9	turnovers
Is Tank Heated (Y/N)?	Y	
Breather Vent Pressure Range (ΔP_B)	*0.00*	psia
Paint solar absorbance (primer, good) (α)	*0.89*	
Solar Insolation (I) for Portland, Oregon	*1,067*	Btu/f^2-day

Content Information		
Vapor Molecular Weight (M_v)	*174.60*	lb/lb-mole
Vapor Pressure @ Average Daily Temp (P_{VA})	*0.0079*	psia
Daily Average Ambient Temp (T_{AA})	538	°R
Daily Max Ambient Temp (T_{AX})	548	°R
Daily Min Ambient Temp (T_{AN})	528	°R
Daily Ambient Temp Range (ΔT_A)	20	°R
Daily Average Liquid Surface Temperature	710	°R
Maximum Liquid Surface Temperature	720	°R
Minimum Liquid SurfaceTemperature	700	°R
Bulk Liquid Temperature Range	20	°R
Maximum Liquid Surface Temp (T_{LX})	720.00	°R
Minimum Liquid Surface Temp (T_{LN})	700.00	°R
Average Liquid Surface Temp (T_{LA})	710.00	°R
Vapor Pressure @ Max Liq. Surface Temp(P_{LX})	*0.0102*	psia
Vapor Pressure @ Min Liq. Surface Temp (P_{LN})	*0.0061*	psia
Vapor Pressure Range (ΔP_V)	0.00416	psia

BREATHING LOSSES

Vv =	3,101 ft^3	
$H_{VO} = (H_S - H_L + H_{RO})$	=	12.19
$T_{LA} = (0.44T_{AA}) + (0.56T_B) + (0.0079\alpha I)$	=	709.44 °R
$T_B = T_{AA} + (6\alpha) - 1$	=	709 °R
Wv =	0.0002 lb/ft^3	
K_E =	0.021	
$\Delta T_v = (0.72*\Delta T_A) + 0.028\alpha I$	=	14.4 °R
K_S =	0.995	
L_S(2/96) =	**4.2 lb/yr**	

WORKING LOSSES

$L_W = 0.0010\ M_V P_{VA} Q K_N K_P$ = 2.8 lb/yr

TOTAL LOSSES

$L_S + L_W$ = 7.0 lb/yr

Heavy Oil Lookup Table

Temp (°F)	Temp (°R)	Vapor MW	VP	% wt in Vapor									
				Anthracene	Dibenzofuran	PACs	Acenaphthene	Flourene	Phenanthrene	Carbazole	Flouranthene	Pyrene	Balance HO
70	530	166.40	0.0000	10.26	4.01	0.00	14.36	67.40	0.18	1.40	0.00	0.16	2.23
80	540	166.60	0.0000	11.46	4.27	0.00	15.26	64.34	0.21	1.56	0.01	0.19	2.70
90	550	166.83	0.0001	12.69	4.52	0.00	16.11	61.24	0.25	1.72	0.01	0.23	3.23
100	560	167.09	0.0001	13.93	4.76	0.00	16.90	58.13	0.29	1.88	0.02	0.28	3.82
110	570	167.39	0.0001	15.18	4.97	0.00	17.62	55.03	0.34	2.03	0.03	0.32	4.47
120	580	167.72	0.0002	16.42	5.17	0.00	18.26	51.97	0.39	2.19	0.04	0.37	5.19
130	590	168.08	0.0002	17.64	5.34	0.00	18.82	48.97	0.44	2.34	0.06	0.43	5.96
140	600	168.48	0.0003	18.82	5.49	0.00	19.30	46.03	0.50	2.49	0.09	0.49	6.79
150	610	168.91	0.0005	19.96	5.61	0.00	19.70	43.19	0.55	2.63	0.13	0.55	7.67
160	620	169.36	0.0006	21.05	5.72	0.00	20.01	40.45	0.62	2.76	0.19	0.62	8.59
170	630	169.85	0.0008	22.08	5.79	0.00	20.24	37.82	0.68	2.88	0.26	0.69	9.56
180	640	170.36	0.0011	23.04	5.85	0.00	20.39	35.30	0.74	2.99	0.36	0.76	10.56
190	650	170.89	0.0015	23.92	5.88	0.00	20.47	32.91	0.81	3.09	0.49	0.84	11.59
200	660	171.45	0.0020	24.72	5.89	0.00	20.47	30.63	0.87	3.19	0.67	0.91	12.64
210	670	172.03	0.0027	25.44	5.89	0.00	20.41	28.48	0.93	3.27	0.89	0.99	13.71
220	680	172.64	0.0035	26.07	5.86	0.01	20.27	26.45	1.00	3.34	1.16	1.07	14.77
230	690	173.27	0.0047	26.61	5.81	0.01	20.08	24.54	1.06	3.39	1.51	1.14	15.84
240	700	173.92	0.0061	27.05	5.75	0.02	19.83	22.73	1.12	3.44	1.94	1.22	16.89
250	710	174.60	0.0079	27.40	5.67	0.03	19.52	21.04	1.18	3.47	2.47	1.29	17.92
260	720	175.31	0.0102	27.65	5.58	0.05	19.16	19.44	1.24	3.49	3.11	1.37	18.92
270	730	176.05	0.0132	27.79	5.46	0.07	18.75	17.95	1.29	3.50	3.88	1.43	19.87
280	740	176.81	0.0170	27.83	5.34	0.11	18.29	16.54	1.34	3.49	4.80	1.50	20.76
290	750	177.62	0.0218	27.76	5.20	0.16	17.79	15.22	1.38	3.47	5.87	1.56	21.59
300	760	178.47	0.0278	27.58	5.05	0.24	17.24	13.97	1.42	3.44	7.11	1.61	22.33
310	770	179.36	0.0355	27.28	4.88	0.36	16.65	12.80	1.45	3.40	8.54	1.66	22.98
320	780	180.30	0.0452	26.87	4.70	0.52	16.02	11.70	1.47	3.34	10.15	1.70	23.52
330	790	181.31	0.0574	26.35	4.51	0.74	15.35	10.67	1.49	3.26	11.96	1.73	23.94

Koppers015818

GAS USAGE (THERMS)
PORTLAND TERMINAL

	1997
JANUARY	43,267
FEBUARY	32,884
MARCH	36,210
APRIL	36,457
MAY	31,674
JUNE	33,845
JULY	35,644
AUGUST	25,900
SEPTEMBER	38,152
OCTOBER	35,925
NOVEMBER	35,265
DECEMBER	42,854
TOTAL	430,074

ATTACHMENT 3

BACKUP CALCULATIONS FOR POTENTIAL EMISSIONS

Basis: **Potential Emissions**

Year	Pitch Total (tons)	Pitch Total (gallons)	Pitch Solid (tons)	Pitch Solid (gallons)	Pitch Liquid (tons)	Pitch Liquid (gallons)	Additive Heavy Oil (gallons)	Fume Recovery Heavy Oil (gallons)
Maximum	150,000	27,272,727	0	0	150,000	27,272,727	180,000	77,143

Gallons = tons * 2,000 lb/ton / (11 lb/gal)

* Heavy Oil Throughput (Tank 33) assumed to be equal to 1.2 gallons per ton of Total Pitch Throughput
* New Tank(s) throughput assumed to be equal to total liquid pitch Shipments
* Rail Car througput assumed equal to 60% of total pitch shipments
* Truck througput assumed equal to 40% of total pitch shipments
* Tank 68 assumed equal to Rail Car Shipments
* Tank 65 throughput assumed equal to total solid pitch deliveries
* Uncontrolled tank breathing losses are based on +/- 10 F temperature variations.
* Fume recovery system solution usage was calculated by assuming 3,000 gallons per month for every 70,000 tons of Pitch processed per year.
* Tank 67 throughput assumed equal to fume recovery system throughput
* Inlet pitch concentration to fume recovery system was assumed saturated pitch at 400F (Actual pitch concentration is expected to be lower)
* Fume recovery system emissions were calculated by ChemCad.

Phase 1 Revisions

* A new tank, T-200, is vented to Fume Recovery System . The effect on emissions is negligible.
* A new Hot oil Heater rated at 10 MMBTU/hr is added. The old heater remains as a backup . Unit can burn oil and natural gas.

Phase 2 Revisions

* A new tank, T-210, is vented to Fume recovery. The effect on emissions is negligible.
* The Fume Recovery System is replaced with a fume combustor. Pitch fumes are controlled at 98% based on an inlet loading which is assumed saturated at 400F.

Fume recovery Operating Hours- Maximum Case
Koppers Industries, Inc., Portland Tar Plant, Portland, Oregon

Assumptions:

All Pitch comes in as solid pitch		
Total Annual Pitch Production:	150,000	tons/yr
Pitch laoding from barges	1,100	gallons/min
% Pitch loaded into trucks from T-68:	60	% of total pitch production
Pitch loading pumping rate into trucks from T-68:	55.5	tons/hr, based on 37 tons loaded per 40 minutes
% Pitch loaded into railcar from T-65:	40	% of total pitch production
Pitch loading pumping rate into railcars from T-65:	58.0	tons/hr, based on 87 tons loaded per 90 minutes **Phase 1**
Loading rate for 2 racks	116.0	tons/hr **Phase II** added a rack
% Pitch transferred from T-65 to T-68	60.0	% of total pitch production
Pitch transfer pumping rate from T-65 to T-68	70.0	tons/hr
Heavy oil pumping rate:	23	tons/hr, based on 1,200 gal/15min, and a density of 9.6 lbs/gal
Heavy Oil Annual Usage:	375	tons/yr, based on 1997 actual heavy oil usage of 42,421 gal times the ratio of potential pitch production (70,000 tons) over 1997 actual pitch production (38,000 tons)

Calculations:

Transfer Description	Amount per Charge (tons)	Pumping Rate (ton/hr)	Annual Amount Transferred (tons/yr)	Annual Transfer Time (hours)	Annual Number of Transfers	T-65 fume hours	T-68 fume hours	Total hours
Pitch loading from Docks	NA	297	150,000	505	NA	621		621
From T-68 to trucks	37	55.5	90,000	1,622	2,432		6486	6,486
From T-65 to rail	87	116.0	60,000	517	690	1,897		1,897
From T-65 to T-68	1200	70.0	90,000	1,286	75		1436	1,436
Heavy Oil transfer	5.76	23	375	16	65	73	73	146
TOTALS:				**3,946**	**3,262**	**2,591**	**7,995**	**10,586**

Assume all transfers are done independently and that the fume recoverys are at high capacity (1,050 scfm). Assume one hour before and after each transfer, 2 start/stop sequences. Therefore, the total fume recovery operating hours can be calculated as follows:

Actual case: fume recovery will run almost all of the time, many transfers will be done together.

Annual Operating Time: 100 % annual operating time

Maximum Potential Emissions from Fuel Oil Combustion, Koppers Industries, Inc., Portland Tar Plant

Unit ID	Heat Input (MM BTU/Hr)	Fuel Used	Hourly Potential Fuel Use (Mgal/hr)	Annual Potential* Fuel Use (Mgal/yr)	Emission Factor NOx (lb/Mgal)	NOx (lb/hr)	NOx (tpy)	Emission Factor VOC (lb/Mgal)	VOC (lb/hr)	VOC (tpy)	Emission Factor CO (lb/Mgal)	CO (lb/hr)	CO (tpy)	Emission Factor SO2 (lb/Mgal)	SO2 (lb/hr)	SO2 (tpy)	Emission Factor PM-10 (lb/Mgal)	PM-10 (lb/hr)	PM-10 (tpy)
Atlas Boiler	21	Oil	0.15	1314.00	20.00	3.00	13.14	0.20	0.03	0.13	5.00	0.75	3.29	71.00	10.65	46.65	2.00	0.30	1.31
Hot Oil Heater	8.5	Oil	0.061	531.86	20.00	1.22	5.32	0.20	0.01	0.05	5.00	0.31	1.33	71.00	4.33	18.88	2.00	0.12	0.53
New Hot Oil Heater	10	Oil	0.071	625.71	20.00	1.42	6.26	0.20	0.01	0.06	5.00	0.36	1.56	71.00	5.04	22.21	2.00	0.14	0.63
Total				**2,472**			**24.716**			**0.247**			**6.179**			**87.741**			**2.472**

* Based on 8760 hrs/yr of operation
Assumed higher heating value of #2 Fuel Oil = 140,000 BTU/gal
Emission Factors are taken from the AP-42, Section 1.3, Jan., 1995
SO2 Emission Factor calculated by assuming 0.5% S in Oil
Calculation for criteria pollutants = (max input in mm BTU/hr) X (Criteria emission factor) X (8760 hr/yr) / (2000 lbs/ton * 140,000 BTU/Gal)
Assumed PM = PM-10

Koppers015823

Maximum Potential Emissions from Natural Gas Combustion, Koppers Industries, Inc., Portland Tar Plant

Unit ID	Heat Input (MM BTU/Hr)	Fuel Used	Hourly Potential Fuel Use (mmcf/hr)	Annual Potential* Fuel Use (mmcf/yr)	Emission Factor NOx (lb/mmcf)	NOx (lb/hr)	NOx (tpy)	Emission Factor VOC (lb/mmcf)	VOC (lb/hr)	VOC (tpy)	Emission Factor CO (lb/mmcf)	CO (lb/hr)	CO (tpy)	Emission Factor SO2 (lb/mmcf)	SO2 (lb/hr)	SO2 (tpy)	Emission Factor PM-10 (lb/mmcf)	PM-10 (lb/hr)	PM-10 (tpy)
Atlas Boiler	21	Gas	0.02	176.21	140.00	2.82	12.33	2.78	0.06	0.25	35.00	0.70	3.08	3.80	0.08	0.33	6.20	0.12	0.55
Hot Oil Heater	8.5	Gas	0.01	71.32	100.00	0.81	3.57	5.28	0.04	0.19	21.00	0.17	0.75	3.80	0.03	0.14	4.50	0.04	0.16
New Hot Oil Heater	10	Gas	0.01	83.91	140.00	1.34	5.87	2.78	0.03	0.12	35.00	0.34	1.47	3.80	0.04	0.16	6.20	0.06	0.26
Total				**331.437**			**21.774**			**0.550**			**5.301**			**0.630**			**0.967**

* Based on 8760 hrs/yr of operation
Higher Heating Value Natural Gas = 1044 BTU/cuft
Emission Factors are taken from the AP-42, Section 1.4, Jan., 1995
Assumed PM = PM-10
Calculation for criteria pollutants = (max input in mm BTU/hr) X (Criteria emission factor) X (8760 hr/yr) / (2000 lbs/ton * 1044 BTU/SCF)

Koppers015824

Maximum Fugitive Equipment Leak Emissions, Koppers Industries, Inc., Portland Terminal

Reference: Protocol for Equipment Leak Estimates EPA-453/R-95-017, Average Emission Factors, Table 2--1

Heavy Oil Fugitive Equipment Leaks
Tanks 67

Process Description	Number In service	Emission Factor (lb/hr/source)	Hours (year)	Emission (lb/hr)	Emission (lb/yr)
Pump seals	3	0.01899	13	0.06	0.73
Valves (in line)	23	0.00051	13	0.01	0.15
Pressure relief valves	0	0.22907	13	0.00	0.00
Open ended valves	1	0.00374	13	0.00	0.05
Flanges	57	0.00403	13	0.23	2.95
		Total emissions		0.30	3.88

Assume pumping rate 200 gpm

Hours = 2 * gals throughput/gpm pump rate/60= $\frac{77,143}{200}$ *2 /60 = 12.9

Heavy Oil: Storage Fugitive Equipment Leak
Tank 33

Process Description	Number In service	Emissions (lb/hr/source)	Hours year	Emission (lb/hr)	Emission (lb/yr)
Pump seals	1	0.01899	75	0.02	1.42
Valves (in line)	7	0.00051	75	0.00	0.27
Pressure relief valves	0	0.22907	75	0.00	0.00
Open ended valves	0	0.00374	75	0.00	0.00
Flanges	18	0.00403	75	0.07	5.44
		Total emissions		0.10	7.13

Assume pumping rate 80 gpm

Hours = 2 * gals throughput/gpm pump rate/60= $\frac{180,000}{80}$ /60 * 2= 75.0

Pitch: Storage Fugitive Equipment Leak

Process Description	Number In service	Emissions (lb/hr/source)	Hours year	Emission (lbs/hr)	Emission (lb/yr)
Pump seals	5	0.01899	2,273	0.09	215.76
Valves (in line)	31	0.00051	2,273	0.02	35.69
Pressure relief valves	0	0.22907	2,273	0.00	0.00
Open ended valves	5	0.00374	2,273	0.02	42.55
Flanges	68	0.00403	2,273	0.27	622.82
		Total emissions		0.40	916.82

Assume pumping rate 400 gpm

Hours = 2 * gals throughput/gpm pump rate/60= $\frac{27,272,727}{400}$ /60 *2= 2,272.7

Pitch: Loading Fugitive Equipment Leak

Process Description	Number In service	Emissions (lb/hr/source)	Hours year	Emissions (lb/hr)	Emission (lb/yr)
Pump seals	2	0.01899	1,136	0.04	43.15
Valves (in line)	11	0.00051	1,136	0.01	6.33
Pressure relief valves	0	0.22907	1,136	0.00	0.00
Open ended valves	2	0.00374	1,136	0.01	8.51
Flanges	33	0.00403	1,136	0.13	151.13
		Total emissions		0.18	209.12

Assume pumping rate 400 gpm

Hours = * gals throughput/gpm pump rate/60= $\frac{27,272,727}{400}$ /60 = 1,136.4

Distillate Fugitive Equipment Leaks
Tanks 67 (Existing Case Only)

Process Description	Number In service	Emission Factor (lb/hr/source)	Hours (year)	Emission (lb/hr)	Emission (lb/yr)
Pump seals	3	0.01899	8	0.06	0.43
Valves (in line)	23	0.00051	8	0.01	0.09
Pressure relief valves	0	0.22907	8	0.00	0.00
Open ended valves	1	0.00374	8	0.00	0.03
Flanges	57	0.00403	8	0.23	1.72
		Total emissions		0.30	2.27

Assume pumping rate 200 gpm

Hours = 2 * gals throughput/gpm pump rate/60= $\frac{45,000}{200}$ *2 /60 = 7.5

TOTALS FOR EXISTING CASE ONLY - i.e T67 containing Distillate

0.98 lb/hr
1135.34 lb/yr

TOTAL FOR OTHER CASES - i.e. T67 containinf Heavy Oil

0.98 lb/hr
1136.96 lb/yr

Koppers015825

Maximum Potential Emissions from Uncontrolled Loading, Koppers Industries, Inc., Portland Terminal

Existing Case Only

Reference: AP-42, 1995, Section 5.2, "Transporation and Marketing of Petroleum Liquids"

Process Description	Label	Temp. (°F)	Vapor MW (lb/lb-mole)	V_p (psia)	Saturation Factor	Throughput (Mgal/min)	Throughput (Mgal/yr)	L_L (lb/Mgal)	L_L (lb/yr)	L_L (lb/hr)
Tank 67 to Rail	P1/P13 Distillate	170	121.77	0.0587	1.45	0.20	36	0.2051	7	2.46

Throughput given by Amos 10/2698 ROTC

Koppers015826

Maximum Hourly VOC Loading Emissions from Uncontrolled Tanks, Koppers Industries, Inc., Portland Terminal

Tank	Commodity	Vapor MW	Temp deg F	Temp deg R	PVA psia	Pump Rate Gal/min	VOC Emissions (lb/hr)	
67	Heavy Oil	171.45	200	660.0	0.0020	100.00	0.04	
33	Heavy Oil	174.60	250	710.0	0.0079	80.00	0.12	
67	P1/P13 Distillate	121.77	170	630.0	0.0587	100.00	0.85	Existing Case Only

Pound per hour (lb/hr) tank emissions were calculated as follows

$$\frac{\text{gal}}{\text{min}} \cdot \frac{60\ \text{min}}{\text{hr}} \cdot \frac{\text{cf}}{7.48\ \text{gal}} \cdot \frac{\text{lb-mol}}{385\ \text{cf}} \cdot \frac{\text{MW lb}}{\text{lb-mol}} \cdot \frac{\text{PVA}}{14.7\ \text{psia}} \cdot \frac{530\ \text{R}}{\text{TB deg R}} = \text{lbs/hr}$$

Koppers015827

Emissions from T-67, Koppers Industries, Inc., Portland Terminal
Existing Case Only

Reference: AP-42, Jan. 1995, Liquid Organic Storage Tanks

Tank ID	T-67	Description	P1/P13 Distillate
City	Portland	State	OR
Company	Koppers Industries, Inc.		

Tank Information		
Diameter (D)	*24.25*	ft
Shell Height (H_s)	*28.5*	ft
Liquid Height (H_L)	*14.3*	ft
Tank Volume	90,000	gal
Annual Throughput (assumed = remaining material)	*45,000*	gal
Number of Turnovers	0.5	turnovers
Is Tank Heated (Y/N)?	Y	
Breather Vent Pressure Range (ΔP_B)	*0.00*	psia
Paint solar absorbance (primer, good) (α)	*0.89*	
Solar Insolation (I) for Portland, OR	*1,067*	Btu/f^2-day

Content Information		
Vapor Molecular Weight (M_v)	*121.77*	lb/lb-mole
Vapor Pressure @ Average Daily Temp (P_{VA})	*0.0587*	psia @ 170 F
Daily Average Ambient Temp (T_{AA})	538	°R
Daily Max Ambient Temp (T_{AX})	548	°R
Daily Min Ambient Temp (T_{AN})	528	°R
Daily Ambient Temp Range (ΔT_A)	20	°R
Daily Average Liquid Surface Temperature	630	°R
Maximum Liquid Surface Temperature	640	°R
Minimum Liquid SurfaceTemperature	620	°R
Bulk Liquid Temperature Range	20	°R
Maximum Liquid Surface Temp (T_{LX})	640.00	°R
Minimum Liquid Surface Temp (T_{LN})	620.00	°R
Average Liquid Surface Temp (T_{LA})	630.00	°R
Vapor Pressure @ Max Liq. Surface Temp(P_{LX})	*0.0752*	psia
Vapor Pressure @ Min Liq. Surface Temp (P_{LN})	*0.0456*	psia
Vapor Pressure Range (ΔP_V)	0.02966	psia

BREATHING LOSSES

Vv =	6,698 ft^3	
$H_{VO} = (H_S - H_L + H_{RO})$	=	14.50
$T_{LA} = (0.44T_{AA}) + (0.56T_B) + (0.0079\alpha I)$	=	629.44 °R
$T_B = T_{AA} + (6\alpha) - 1$	=	629 °R
Wv =	0.0011 lb/ft^3	
K_E =	0.025	
$\Delta T_v = (0.72*\Delta T_A) + 0.028\alpha I$	=	14.4 °R
K_S =	0.957	

L_S (2/96) = 61.7 lb/yr

WORKING LOSSES

$L_W = 0.0010\ M_v P_{VA} Q K_N K_P$ = 7.7 lb/yr

TOTAL LOSSES

$L_S + L_W$ = 69.4 lb/yr

Emissions from T-67, Koppers Industries, Inc., Portland Terminal

Reference: AP-42, Jan. 1995, Liquid Organic Storage Tanks

Tank ID	T-67	Description	Heavy Oil
City	Portland	State	OR
Company	Koppers Industries, Inc.		

Tank Information		
Diameter (D)	*24.25*	ft
Shell Height (H_s)	*28.5*	ft
Liquid Height (H_L)	*14.3*	ft
Liquid Temperature (F)	*200*	deg F
Tank Volume	90,000	gal
Annual Throughput	*77,143*	gal
Number of Turnovers	0.9	turnovers
Is Tank Heated (Y/N)?	Y	
Breather Vent Pressure Range (ΔP_B)	*0.00*	psia
Paint solar absorbance (primer, good) (α)	*0.89*	
Solar Insolation (I) for Portland, OR	*1,067*	Btu/f^2-day

Content Information		
Vapor Molecular Weight (M_v)	*171.45*	lb/lb-mole
Vapor Pressure @ Average Daily Temp (P_{VA})	*0.0020*	psia
Daily Average Ambient Temp (T_{AA})	538	°R
Daily Max Ambient Temp (T_{AX})	548	°R
Daily Min Ambient Temp (T_{AN})	528	°R
Daily Ambient Temp Range (ΔT_A)	20	°R
Daily Average Liquid Surface Temperature	660	°R
Maximum Liquid Surface Temperature	670	°R
Minimum Liquid SurfaceTemperature	650	°R
Bulk Liquid Temperature Range	20	°R
Maximum Liquid Surface Temp (T_{LX})	670.00	°R
Minimum Liquid Surface Temp (T_{LN})	650.00	°R
Average Liquid Surface Temp (T_{LA})	660.00	°R
Vapor Pressure @ Max Liq. Surface Temp(P_{LX})	*0.0027*	psia
Vapor Pressure @ Min Liq. Surface Temp (P_{LN})	*0.0015*	psia
Vapor Pressure Range (ΔP_V)	0.00117	psia

BREATHING LOSSES

Vv =	6,698 ft^3	
$H_{VO} = (H_S - H_L + H_{RO})$	=	14.50
$T_{LA} = (0.44T_{AA}) + (0.56T_B) + (0.0079\alpha I)$	=	659.44 °R
$T_B = T_{AA} + (6\alpha) - 1$	=	659 °R
Wv =	0.0000 lb/ft^3	
K_E =	0.022	
$\Delta T_v = (0.72*\Delta T_A) + 0.028\alpha I$	=	14.4 °R
K_S =	0.998	
L_S (2/96) =	**2.6 lb/yr**	

WORKING LOSSES

$L_W = 0.0010 M_V P_{VA} Q K_N K_P$ =	**0.6 lb/yr**

TOTAL LOSSES

$L_S + L_W$ =	**3.3 lb/yr**

Emissions from T-33, Koppers Industries, Inc., Portland Terminal

Reference: AP-42, Jan. 1995, Liquid Organic Storage Tanks

Tank ID	T-33	Description	Heavy Oil
City	Portland	State	Oregon
Company	Koppers Industries, Inc.		

Tank Information		
Diameter (D)	*18.0*	ft
Shell Height (H_s)	*24.0*	ft
Liquid Height (H_L)	*12*	ft
Liquid Temperature (F)	*250*	deg F
Tank Volume	45,000	gal
Annual Throughput	*180,000*	gal
Number of Turnovers	4.0	turnovers
Is Tank Heated (Y/N)?	Y	
Breather Vent Pressure Range (ΔP_B)	*0.00*	psia
Paint solar absorbance (primer, good) (α)	*0.89*	
Solar Insolation (I) for Portland, Oregon	*1,067*	Btu/f^2-day

Content Information		
Vapor Molecular Weight (M_v)	*174.60*	lb/lb-mole
Vapor Pressure @ Average Daily Temp (P_{VA})	*0.0079*	psia
Daily Average Ambient Temp (T_{AA})	538	°R
Daily Max Ambient Temp (T_{AX})	548	°R
Daily Min Ambient Temp (T_{AN})	528	°R
Daily Ambient Temp Range (ΔT_A)	20	°R
Daily Average Liquid Surface Temperature	710	°R
Maximum Liquid Surface Temperature	720	°R
Minimum Liquid SurfaceTemperature	700	°R
Bulk Liquid Temperature Range	20	°R
Maximum Liquid Surface Temp (T_{LX})	720.00	°R
Minimum Liquid Surface Temp (T_{LN})	700.00	°R
Average Liquid Surface Temp (T_{LA})	710.00	°R
Vapor Pressure @ Max Liq. Surface Temp(P_{LX})	*0.0102*	psia
Vapor Pressure @ Min Liq. Surface Temp (P_{LN})	*0.0061*	psia
Vapor Pressure Range (ΔP_V)	0.00416	psia

BREATHING LOSSES

Vv =	3,101 ft^3	
$H_{VO} = (H_S - H_L + H_{RO})$	=	12.19
$T_{LA} = (0.44T_{AA}) + (0.56T_B) + (0.0079\alpha I)$	=	709.44 °R
$T_B = T_{AA} + (6\alpha) - 1$	=	709 °R
Wv =	0.0002 lb/ft^3	
K_E =	0.021	
$\Delta T_v = (0.72*\Delta T_A) + 0.028\alpha I$	=	14.4 °R
K_S =	0.995	
L_S(2/96) =	**4.2 lb/yr**	

WORKING LOSSES

$L_W = 0.0010 M_v P_{VA} Q K_N K_P$ =	**5.9 lb/yr**

TOTAL LOSSES

$L_S + L_W$ =	**10.1 lb/yr**

/ac092/permit/Rcasemax,T33 10/28/98

Heavy Oil Lookup Table

Temp (°F)	Temp (°R)	Vapor MW	VP	% wt in Vapor									
				Anthracene	Dibenzofuran	PACs	Acenaphthene	Flourene	Phenanthrene	Carbazole	Flouranthene	Pyrene	Balance HO
70	530	166.40	0.0000	10.26	4.01	0.00	14.36	67.40	0.18	1.40	0.00	0.16	2.23
80	540	166.60	0.0000	11.46	4.27	0.00	15.26	64.34	0.21	1.56	0.01	0.19	2.70
90	550	166.83	0.0001	12.69	4.52	0.00	16.11	61.24	0.25	1.72	0.01	0.23	3.23
100	560	167.09	0.0001	13.93	4.76	0.00	16.90	58.13	0.29	1.88	0.02	0.28	3.82
110	570	167.39	0.0001	15.18	4.97	0.00	17.62	55.03	0.34	2.03	0.03	0.32	4.47
120	580	167.72	0.0002	16.42	5.17	0.00	18.26	51.97	0.39	2.19	0.04	0.37	5.19
130	590	168.08	0.0002	17.64	5.34	0.00	18.82	48.97	0.44	2.34	0.06	0.43	5.96
140	600	168.48	0.0003	18.82	5.49	0.00	19.30	46.03	0.50	2.49	0.09	0.49	6.79
150	610	168.91	0.0005	19.96	5.61	0.00	19.70	43.19	0.55	2.63	0.13	0.55	7.67
160	620	169.36	0.0006	21.05	5.72	0.00	20.01	40.45	0.62	2.76	0.19	0.62	8.59
170	630	169.85	0.0008	22.08	5.79	0.00	20.24	37.82	0.68	2.88	0.26	0.69	9.56
180	640	170.36	0.0011	23.04	5.85	0.00	20.39	35.30	0.74	2.99	0.36	0.76	10.56
190	650	170.89	0.0015	23.92	5.88	0.00	20.47	32.91	0.81	3.09	0.49	0.84	11.59
200	660	171.45	0.0020	24.72	5.89	0.00	20.47	30.63	0.87	3.19	0.67	0.91	12.64
210	670	172.03	0.0027	25.44	5.89	0.00	20.41	28.48	0.93	3.27	0.89	0.99	13.71
220	680	172.64	0.0035	26.07	5.86	0.01	20.27	26.45	1.00	3.34	1.16	1.07	14.77
230	690	173.27	0.0047	26.61	5.81	0.01	20.08	24.54	1.06	3.39	1.51	1.14	15.84
240	700	173.92	0.0061	27.05	5.75	0.02	19.83	22.73	1.12	3.44	1.94	1.22	16.89
250	710	174.60	0.0079	27.40	5.67	0.03	19.52	21.04	1.18	3.47	2.47	1.29	17.92
260	720	175.31	0.0102	27.65	5.58	0.05	19.16	19.44	1.24	3.49	3.11	1.37	18.92
270	730	176.05	0.0132	27.79	5.46	0.07	18.75	17.95	1.29	3.50	3.88	1.43	19.87
280	740	176.81	0.0170	27.83	5.34	0.11	18.29	16.54	1.34	3.49	4.80	1.50	20.76
290	750	177.62	0.0218	27.76	5.20	0.16	17.79	15.22	1.38	3.47	5.87	1.56	21.59
300	760	178.47	0.0278	27.58	5.05	0.24	17.24	13.97	1.42	3.44	7.11	1.61	22.33
310	770	179.36	0.0355	27.28	4.88	0.36	16.65	12.80	1.45	3.40	8.54	1.66	22.98
320	780	180.30	0.0452	26.87	4.70	0.52	16.02	11.70	1.47	3.34	10.15	1.70	23.52
330	790	181.31	0.0574	26.35	4.51	0.74	15.35	10.67	1.49	3.26	11.96	1.73	23.94

Koppers015831

ATTACHMENT 4

CHEMCAD ANALYSIS OF FUME RECOVERY SYSTEM
MAXIMUM HOURLY EMISSIONS RATE

CHEMCAD III

Process Flowsheet Simulator

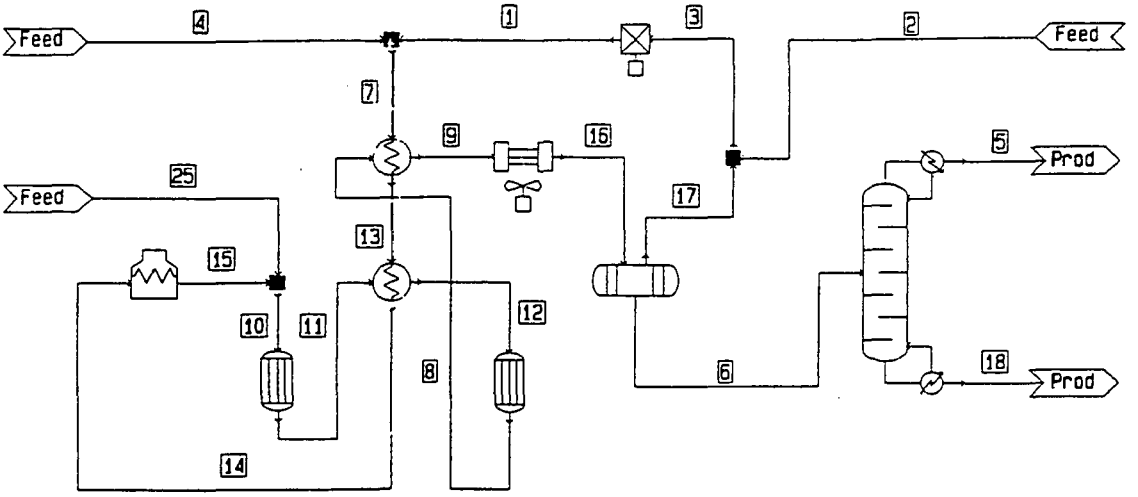

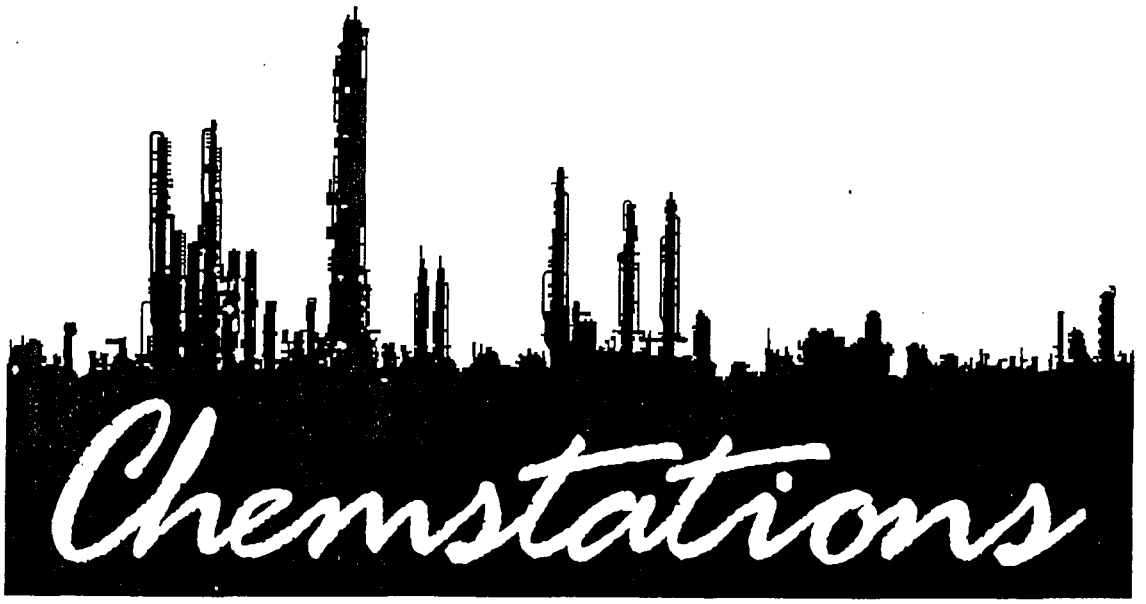

INTUITIVE CHEMICAL ENGINEERING

Chemstations, Inc.
2901 Wilcrest Drive, Suite 305, Houston, Texas 77042, U.S.A.
Telephone (713) 978-7700 • Fax (713) 978-7727

Chemstations-Europe
(Chemstations Deutschland GmbH) Sudstr. 39, D-46562 Voerde, Germany
Telephone (49 281) 943 0110 • Fax (47 22) 286 981

Stream No.	17
Name	VOC's
- - Overall - -	
Molar flow lbmol/h	22.0837
Mass flow lb/h	408.7261
Temp F	200.0000
Pres psia	14.7000
Vapor mole fraction	0.0000
Enth MMBtu/h	-2.64847
Tc F	711.0477
Pc psia	3294.9958
Std. sp gr , wtr = 1	1.002
Std. sp gr , air = 1	0.639
Degree API	9.7819
Heating values (60 F)	
Gross Btu/lbmol	9619.
Net Btu/lbmol	-9645.
Average mol wt	18.5081
Actual dens lb/ft3	60.1468
Actual vol ft3/hr	6.7955
Std liq gpm	0.8158
Std vap 60F scfh	8380.2881
- - Liquid only - -	
Molar flow lbmol/h	22.0837
Mass flow lb/h	408.7261
Average mol wt	18.5081
Actual dens lb/ft3	60.1468
Actual vol gpm	0.8473
Std liq gpm	0.8158
Std vap 60F scfh	8380.2881
Cp Btu/lbmol-F	18.2749
Z factor	0.0009
Visc cP	0.3031
Th cond Btu/hr-ft-F	0.3733
Surf tens dyne/cm	58.7270

ATTACHMENT 5

CHEMCAD ANALYSIS OF FUME RECOVERY SYSTEM EMISSIONS, 1-MONTH BASIS

Stream No.	1	33	20	5
Name	Pitch Fumes	Heavy Oil	Vap Totalizr	Minus Water
- - Overall - -				
Molar flow lbmol/h	0.0943	233.2134	102.4526	20.4882
Mass flow lb/h	24.7000	38289.0352	5062.2417	3585.6523
Temp F	400.0000	200.0000	200.0000	200.0000
Pres psia	14.7000	14.7000	14.7000	14.7000
Vapor mole fraction	0.0000	0.0000	0.0000	0.0000
Enth MMBtu/h	0.0114518	3.35397	-8.37564	1.51017
Tc F	1293.1027	1217.8970	874.6153	952.4783
Pc psia	395.1926	2408.7273	4633.7319	454.2526
Std. sp gr , wtr = 1	1.049	1.092	1.063	1.091
Std. sp gr , air = 1	9.046	5.669	1.706	6.043
Degree API	3.4243	-1.9726	1.6691	-1.7662
Heating values (60 F)				
Gross Btu/lbmol	4.308E+006	2.593E+006	5.878E+005	2.940E+006
Net Btu/lbmol	4.162E+006	2.492E+006	5.540E+005	2.847E+006
Average mol wt	261.9927	164.1803	49.4106	175.0107
Actual dens lb/ft3	56.9831	64.6572	63.1629	64.5217
Actual vol ft3/hr	0.4335	592.1855	80.1459	55.5728
Std liq gpm	0.0471	70.0686	9.5243	6.5722
Std vap 60F scfh	35.7763	88499.5000	38878.5859	7774.8315
- - Liquid only - -				
Molar flow lbmol/h	0.0943	233.2134	102.4526	20.4882
Mass flow lb/h	24.7000	38289.0352	5062.2417	3585.6523
Average mol wt	261.9927	164.1803	49.4106	175.0107
Actual dens lb/ft3	56.9830	64.6572	63.1629	64.5217
Actual vol gpm	0.0540	73.8394	9.9934	6.9294
Std liq gpm	0.0471	70.0686	9.5243	6.5722
Std vap 60F scfh	35.7763	88499.5000	38878.5859	7774.8315
Cp Btu/lbmol-F	132.7899	72.3780	28.2225	68.6495
Z factor	0.0104	0.0086	0.0021	0.0067
Visc cP	0.8220	1.761	0.4025	1.261
Th cond Btu/hr-ft-F	0.0624	0.0790	0.1258	0.0746
Surf tens dyne/cm	30.2345	40.3694	41.1704	34.4760

Stream No.	12
Name	CIrculation
- - Overall - -	
Molar flow lbmol/h	212.7850
Mass flow lb/h	51290.7813
Temp F	199.9745
Pres psia	14.7000
Vapor mole fraction	0.0000
Enth MMBtu/h	16.6586
Tc F	1274.0345
Pc psia	454.6739
Std. sp gr , wtr = 1	1.079
Std. sp gr , air = 1	8.323
Degree API	-0.4005
Heating values (60 F)	
Gross Btu/lbmol	3.936E+006
Net Btu/lbmol	3.793E+006
Average mol wt	241.0452
Actual dens lb/ft3	63.6808
Actual vol ft3/hr	805.4355
Std liq gpm	95.0009
Std vap 60F scfh	80747.3438
- - Liquid only - -	
Molar flow lbmol/h	212.7850
Mass flow lb/h	51290.7813
Average mol wt	241.0452
Actual dens lb/ft3	63.6808
Actual vol gpm	100.4294
Std liq gpm	95.0009
Std vap 60F scfh	80747.3438
Cp Btu/lbmol-F	101.7720
Z factor	0.0124
Visc cP	3.336
Th cond Btu/hr-ft-F	0.0735
Surf tens dyne/cm	40.0285

ATTACHMENT 6

DESIGN BASIS OF SCRUBBER

PORTLAND FUME SCRUBBER

TABLE 2. GAS HANDLING CAPACITIES—TYPE 7010 SCRUBBERS WITH *STANDARD* NOZZLES

DRAFT (in. H_2O Diff.)	WATER PRESSURE (psig)	SCRUBBER SIZE (inches)															
		3	4	6	8	10	12	14	16	18	20	24	30	36	42	48	54
		CAPACITIES (cfm air at flowing conditions)															
ZERO DRAFT	20	28	59	155	265	435	1040	1497	1848	2331	3310	4880	7626	11416	16230	21888	29792
	40	48	102	270	460	750	1600	2304	2844	3644	5174	7629	11921	17846	25370	34214	46569
	60	64	135	355	600	990	2000	2880	3555	4675	6637	9787	15292	22893	32545	43891	59740
	80	74	161	425	620	1180	2430	3499	4319	5105	7247	10686	16697	24996	35535	47923	65228
	100	86	183	485	815	1340	2660	3830	4728	5902	8380	12356	19306	28902	41088	55411	75420
1/4"	20	19	41	110	185	300	830	1195	1475	1644	2334	3442	5378	8051	11446	15436	21011
	40	45	95	250	425	700	1500	2160	2666	3362	4773	7038	10998	16464	23405	31564	42963
	60	61	130	345	580	955	1930	2779	3431	4430	6289	9273	14490	21692	30837	41587	56604
	80	74	158	415	705	1160	2360	3398	4195	4921	6986	10301	16095	24095	34254	46195	62876
	100	85	180	475	800	1320	2630	3787	4675	5767	8188	12073	18865	28241	40148	54144	73696
1/2"	20	13	27	71	120	200	560	806	995	1251	1777	2620	4094	6129	8713	11750	15993
	40	40	85	225	380	625	1330	1915	2364	3006	4268	6293	9834	14721	20928	28224	38416
	60	58	123	325	550	905	1840	2649	3271	4062	5766	8503	13285	19889	28274	38131	51900
	80	72	153	405	680	1120	2270	3268	4035	4724	6707	9850	15453	23134	32887	44352	60368
	100	83	176	465	785	1290	2560	3686	4551	5608	7961	11739	18343	27460	39037	52646	71657
3/4"	20	8.5	18	47	80	130	420	604	746	944	1341	1978	3090	4626	6577	8870	12073
	40	35	75	195	335	550	1130	1627	2008	2601	3693	5446	8509	12738	18109	24422	33241
	60	54	115	305	510	845	1730	2491	3075	3608	5122	7552	11800	17666	25114	33868	46099
	80	69	147	390	655	1080	2180	3139	3875	4528	6428	9479	14811	22172	31520	42508	57859
	100	81	172	455	770	1260	2490	3585	4426	5424	7700	11354	17741	26559	37756	50918	69305
1"	20	5.2	11	29	49	80	300	432	533	711	1010	1489	2328	3485	4954	6681	9094
	40	31	66	175	295	485	1000	1440	1777	2233	3170	4675	7305	10936	15546	20966	28537
	60	50	106	280	475	780	1600	2304	2844	3215	4564	6730	10516	15743	22380	30182	41081
	80	66	140	370	625	1030	2050	2952	3644	4344	6167	9093	14209	21271	30239	40780	55507
	100	78	166	440	740	1210	2400	3456	4266	5227	7421	10943	17099	25597	36389	49075	66796
1 1/2"	40	24	51	135	230	375	750	1080	1333	1718	2439	3596	5619	8412	11959	16128	21952
	60	43	92	240	410	675	1350	1944	2399	2613	3710	5471	8549	12798	18194	24537	33398
	80	59	125	330	560	915	1790	2577	3182	3865	5487	8091	12643	18927	26907	36288	49392
	100	73	155	410	690	1140	2200	3168	3911	4810	6829	10070	15734	23554	33485	45158	61465
2"	40	17	37	98	165	270	570	820	1013	1288	1829	2697	4214	6309	8969	12096	16464
	60	38	80	210	360	585	1070	1540	1902	2233	3170	4675	7305	10936	15546	20966	28537
	80	53	113	300	505	830	1600	2304	2844	3387	4808	7090	11078	16584	23576	31795	43276
2 1/2" →	100	67	142	375	635	1040	2000	2880	3555	4246	6028	8888	13888	20790	29556	39859	54252
3"	40	7	15	40	67	110	300	432	533	809	1149	1695	2649	3965	5637	7603	10348
	60	27	57	150	255	420	800	1152	1422	1779	2526	3724	5820	8712	12386	16704	22736
	80	44	94	250	420	690	1240	1785	2204	2712	3850	5677	8870	13279	18878	25459	34652
	100	54	120	315	535	880	1630	2347	2897	3276	4651	6858	10717	16043	22807	30758	41865
4"	60	19	40	105	180	295	570	820	1013	1276	1811	2671	4174	6249	8883	11980	16307
	80	36	76	200	340	560	920	1324	1635	2172	3083	4546	7104	10635	15119	20390	27753
	100	46	98	260	440	720	1320	1900	2346	2822	4007	5908	9231	13820	19647	26496	36064
6"	80	21	45	120	200	330	500	720	888	1423	2020	2979	4656	6970	9908	13363	18188
	100	30	63	165	280	460	890	1281	1582	2049	2909	4290	6703	10034	14265	19238	26185
8"	100	16	35	92	155	255	480	691	853	1435	2038	3005	4696	7030	9994	13478	18345
		MOTIVE LIQUID FLOW (gpm)															
NOZZLE FLOW	20	1.9	3.4	9.2	16	26	42	60	74	103	146	215	337	504	717	967	1317
	40	2.6	4.8	14	24	38	58	84	104	144	204	302	472	706	1004	1354	1843
	60	3.2	5.9	17	29	48	65 → 71	103	127	176	250	368	576	862	1226	1654	2251
	80	3.8	6.8	20	34	54	82	118	145	201	285	421	658	895	1400	1889	2571
	100	4.2	7.6	22	39	60	92 → 73 GPM	132	163	225	320	472	738	1105	1571	2119	2885

Data on larger and/or specially constructed units can be furnished on request.

Koppers015839

KOPPERS INDUSTRIES

Koppers Industries, Inc.
436 Seventh Avenue
Pittsburgh, PA 15219-1800

Telephone: (412) 227-2001
Fax: (412) 227-2423

October 27, 1998

Oregon Department Of Environmental Quality
Northwest Region
2020 SW Fourth Avenue
Suite 400
Portland, OR 97201-4987

Attention: Kathy Amidon

RE: Koppers Industries Inc. – Portland Terminal

Dear Ms. Amidon:

This letter is in response to our telephone conversation of October 26, 1998. You informed me that The Oregon Department of Environmental Quality (ODEQ) has been receiving odor complaints from neighbors of Koppers Industries Inc. (KII) Portland Terminal. We have investigated ways to improve the performance of the fume recovery system. We believe that the following modifications will make a significant reduction in odors and particulate emissions.

KII will replace the existing P1/P13 creosote distillate used in the fume recovery system with a KII produced commodity called " heavy oil". Changing from creosote will significantly reduce the amount of naphthalene in the fume recovery system.

To address the issue of particulate emissions, noticed by an ODEQ inspector, KII intends to install a de-mister unit in the stack of the fume recovery system. The de-mister acts to disengage any suspended matter from the vapor stream, allowing particles to drop out and be returned to the fume recovery system.

KII intends to implement the changes within the next few weeks. We appreciate your informing us of the complaints and we are taking action to resolve the issue. If you have, any questions please contact Amos Kamerer at (503) 286-3681 or me at (412) 227-2883.

Sincerely,

Traci I. Self

Traci I. Self
Environmental Manager

cc: Amos Kamerer
Jim Dietz
Kevin Fitzgerald
Steve Smith

RECEIVED
NOV - 2 1998
KOPPERS INDS., INC.
PORTLAND OR

KOPPERS INDUSTRIES

Koppers Industries, Inc.
436 Seventh Avenue
Pittsburgh, PA 15219-1800

Telephone: (412) 227-2001
Fax: (412) 227-2423

October 22, 1997

DEQ Business Office
Oregon Department of Environmental Quality
811 SW Sixth Avenue
Portland, OR 97204

Attention: **Ms. Kathy Amidon**
Environmental Specialist
Air Quality Section

Re: **Supplemental Information**
Air Permit Application
Multnomah County; File No. 26-2930
Industrial Boiler

Dear Ms. Amidon:

In response to your recent request for additional air emission data, I have evaluated the impact of burning distillate oil #2 in all of the combustion units at the Koppers Portland Terminal.

Attached is a revised spread sheet showing the maximum potential emissions from existing equipment and from additional equipment that may be installed at the facility within the next five years. Please note that the emission estimates were listed under three separate tables in the spread sheet. The scenarios were established as follows:

Case 1: existing equipment (where is, as is)
Case 2: possible future equipment additions (probable installation, but not assured)
Case 3: combined maximum potential emissions of Case 1 and Case 2

In each Case study, please note that quantities in each column that was used to calculate the total maximum potential emission for each criteria pollutant is highlighted in bold text. The results of all case studies show that the Portland Terminal is not a major source now, nor will it become a major source in the near future.

If you have any questions, please call Mr. Amos Kamerer, Plant Manager, at 503-286-3681 or me at 412-227-2883.

Sincerely yours,

W E Swearingen

William E. Swearingen
Manager, Environmental Programs

RECEIVED
OCT 27 1997
KOPPERS INDS., INC.
PORTLAND, OR

Enclosures

cc: A. S. Kamerer, Portland

C:\WPWIN60\PORTLAND\BOILER2.LTR

MAXIMUM POTENTIAL EMISSION

PORTLAND TERMINAL

Maximum Emissions from Existing Combustion Units														
CASE 1	Comments	INPUT MM BTU/Hr Gal/Hour	Burner Type	FUEL USED	NOx lb/MMcuft Gal/Hour	NOx Tons/Yr	VOC lb/MMcuft Gal/Hour	VOC Tons/Yr	CO lb/MMcuft Gal/Hour	CO Tons/Yr	SO2 lb/MMcuft Gal/Hour	SO2 Tons/Yr	PM lb/MMcuft Gal/Hour	PM Tons/Yr
Atlas Boiler	long term	21	Gas/Oil	Gas	140	12.334	2.800	0.247	35.000	3.084	3.800	0.335	2.500	0.220
	short term	21		Gas	140						2.600	0.229		
	long term	150	Gas/Oil	Oil	20	13.140	0.200	0.131	5.000	3.285	71.000	46.647	2.000	1.314
Hot Oil Heater	long term	8.5	Gas/Oil	Gas	100	3.566	5.300	0.189	20.000	0.713	3.800	0.136	2.500	0.089
		60	Gas/Oil	Oil	20	5.256	0.340	0.089	5.000	1.314	71.000	18.659	2.000	0.526
Plant Total	Maximum			Gas		18.396		0.436		4.599		65.306		1.840

Maximum Emissions from Future Combustion Units and Tanks														
CASE 2	Comments	INPUT MM BTU/Hr Gal/Hour	Burner Type	FUEL USED	NOx lb/MMcuft Gal/Hour	NOx Tons/Yr	VOC lb/MMcuft Gal/Hour	VOC Tons/Yr	CO lb/MMcuft Gal/Hour	CO Tons/Yr	SO2 lb/MMcuft Gal/Hour	SO2 Tons/Yr	PM lb/MMcuft Gal/Hour	PM Tons/Yr
New H. O. Heater	long term	8	Gas/Oil	Gas	100	3.356	5.300	0.178	20.000	0.671	3.800	0.128	2.500	0.084
New H. O. Heater	long term	57	Gas/Oil	Oil	20	4.993	0.340	0.085	5.000	1.248	71.000	17.726	2.000	0.499
New Pitch Tanks	no controls					0.000		20.040		0.000		0.000		0.000
	98% control					0.000		0.401		0.000		0.000		0.000
Plant Total	Maximum					4.993		0.579		1.248		17.726		0.499

Maximum Emissions from Existing and Future Combustion Units and Tanks												
CASE 3	FUEL USED		NOx Tons/Yr		VOC Tons/Yr		CO Tons/Yr		SO2 Tons/Yr		PM Tons/Yr
Plant Total - Maximum	Gas/Oil		23.389		1.014		5.847		83.032		2.339

Natural Gas = 1044 BTU/cuft
SO2 long term maximum based on 13,200 grains sulfur per millin cubic feet natural gas, determined by Northwest supply.
SO2 short term maximum based on 9,100 grains sulfur per millin cubic feet natural gas, determined by Northwest supply.
Distillate Oil #2 = 140,000 BTU/gallon @ 71 lbs SOx per 1,000 gallons
Calculation for criteria pollutants = (max input in mm BTU/hr) X (Criteria emission factor) X (8760 hrs/yr)/(2000 lbs/ton * 1044 BTU/SCF)
Emission factors are taken from DEQ table - Air Quality Division 2/23/93

KOPPERS INDUSTRIES

WES\TITV_PT.WK4 - 10/23/97

Koppers015842

February 11, 2004

Department of Environmental Quality
Northwest Region
2020 SW 4th Avenue, Suite 400
Portland, OR 97201-4987

RE: 2003 Annual Emission Report
Permit # 26-2930

Attention: Air Quality Permit Coordinator

Enclosed please find the 2003 annual emission report (one original and one copy) for Koppers Inc., 7540 NW Saint Helens Road, Portland, OR. 97210-3663. As required, the report includes the following:

1. Annual throughput of coal tar pitch: 20,537 tons
2. Annual throughput of heavy oil: 570 tons
3. Total boiler operating time: 2,641 hours
4. Total hot oil operating time: 6,208 hours (3,238 hours for E-170 & 2,970 hours for E-270)
5. Highest sulfur content of natural gas (no oil used during the year): 1.42 lb/Mft3.
6. Average plant operating schedule: Monday through Friday, 15 hours/day.
7. Emission calculations: Summary, CO, NOx, PM10, SO2 and VOC.
8. Chem Cad Analysis is also included.
9. Summary of 2003 maintenance performed on the fume recovery system.
10. There were no odor complaints during 2003.

Additionally, this is to advise that effective December 31, 2003 Amos Kamerer retired from Koppers. However, Amos will be available to assist me with any administrative matters the may develop. Accordingly, attached please find the letter authorizing me to sign such documents on behalf of Koppers Inc.

If you have any questions, I can be reached at 503-286-3681 or via e-mail at turnertj@koppers.com

Sincerely,

T. J. Turner
General Foreman

Enclosures

CC: T. Self, KII
B. Bauman, KII

Randall D. Collins
Vice President, Safety, Health & Environmental Affairs

KOPPERS

Koppers Inc.
436 Seventh Avenue
Pittsburgh, PA 15219-1800
Tel 412 227 2456
Fax 412 227 2333
CollinsRD@koppers.com
www.koppers.com

January 30, 2004

In accordance with the policies of Koppers Inc. (Koppers), the Portland Terminal General Foreman is authorized to sign Permit Applications, Permits, and Reports as required under the Federal Clean Water Act, Resources Conservation and Recovery Act (RCRA), Comprehensive Environmental Response, Compensation, and Liability Act (CERCLA), and applicable related state laws. Such reports include, but are not limited to, Discharge Monitoring Reports, Pretreatment Monitoring Reports, Hazardous Waste Generator and Facility Reports, Air Pollution Control Monitoring Reports, and Hazardous Material reports.

Sincerely,

Randall D. Collins

January 2003 - December 2003 Annual Emissions Summary

Emission Unit	CO	NOx	PM10	SO2	VOC
Atlas Boiler	378.70	1520.55	81.46	20.64	30.24
Hot Oil Heater	226.99	1080.91	75.94	20.54	41.38
Hot Oil Heater (New)	700.90	930.70	79.55	21.83	31.99
Fume Recovery System	0.00	0.00	0.00	0.00	182.76
Tank 33	0.00	0.00	0.00	0.00	10.34
Tank 67	0.00	0.00	0.00	0.00	16.53
Fugitives	0.00	0.00	0.00	0.00	142.54

Plant Total	CO	NOx	PM10	SO2	VOC
Pounds/Yr	1306.59	3532.17	236.95	63.00	455.77
Tons/Yr	0.65	1.77	0.12	0.03	0.23
Allowable (Tons/Yr)	99	39	N/A	39	39

January 2003 - December 2003 Annual Emissions Summary

Emission Unit	CO	Jan-03	Feb-03	Mar-03	Apr-03	May-03	Jun-03	Jul-03	Aug-03	Sep-03	Oct-03	Nov-03	Dec-03
Atlas Boiler	379	53	44	31	26	30	26	25	26	21	39	25	33
Hot Oil Heater	227	22	21	23	13	19	18	19	18	19	21	17	16
Hot Oil Heater (New)	701	78	66	67	43	54	54	50	46	54	66	50	73
Fume Recovery System	0	0	0	0	0	0	0	0	0	0	0	0	0
Tank 33	0	0	0	0	0	0	0	0	0	0	0	0	0
Tank 67	0	0	0	0	0	0	0	0	0	0	0	0	0
Fugitives	0	0	0	0	0	0	0	0	0	0	0	0	0

Plant Total	CO
Pounds/Yr	1306.59
Tons/Yr	0.65
Allowable (Tons/Yr)	99

Koppers015846

January 2003 - December 2003 Annual Emissions Summary

Emission Unit	NOx	Jan-03	Feb-03	Mar-03	Apr-03	May-03	Jun-03	Jul-03	Aug-03	Sep-03	Oct-03	Nov-03	Dec-03
Atlas Boiler	1521	212	175	125	111	120	105	98	102	83	156	100	132
Hot Oil Heater	1081	105	101	108	64	92	88	89	86	90	98	83	77
Hot Oil Heater (New)	931	104	88	89	57	72	72	67	61	71	88	67	96
Fume Recovery System	0	0	0	0	0	0	0	0	0	0	0	0	0
Tank 33	0	0	0	0	0	0	0	0	0	0	0	0	0
Tank 67	0	0	0	0	0	0	0	0	0	0	0	0	0
Fugitives	0	0	0	0	0	0	0	0	0	0	0	0	0

Plant Total	NOx
Pounds/Yr	3532.17
Tons/Yr	1.77
Allowable (Tons/Yr)	39

Koppers015847

January 2003 - December 2003 Annual Emissions Summary

Emission Unit	PM10	Jan-03	Feb-02	Mar-02	Apr-03	May-03	Jun-03	Jul-03	Aug-03	Sep-03	Oct-03	Nov-03	Dec-03
Atlas Boiler	81	11	9	7	6	6	6	5	5	4	8	5	7
Hot Oil Heater	76	8	8	3	5	7	7	7	6	7	7	6	6
Hot Oil Heater (New)	80	10	8	8	5	0	7	6	6	7	8	6	9
Fume Recovery System	0	0	0	0	0	0	0	0	0	0	0	0	0
Tank 33	0	0	0	0	0	0	0	0	0	0	0	0	0
Tank 67	0	0	0	0	0	0	0	0	0	0	0	0	0
Fugitives	0	0	0	0	0	0	0	0	0	0	0	0	0

Plant Total	PM10
Pounds/Yr	236.95
Tons/Yr	0.12
Allowable (Tons/Yr)	N/A

Koppers015848

January 2003 - December 2003 Annual Emissions Summary

Emission Unit	SO2	Jan-03	Feb-02	Mar-02	Apr-03	May-03	Jun-03	Jul-03	Aug-03	Sep-03	Oct-03	Nov-03	Dec-03
Atlas Boiler	21	3	2	2	2	2	1	1	1	1	2	1	2
Hot Oil Heater	21	2	2	2	1	2	2	2	2	2	2	2	1
Hot Oil Heater (New)	22	2	2	2	1	2	2	2	1	2	2	2	2
Fume Recovery System	0	0	0	0	0	0	0	0	0	0	0	0	0
Tank 33	0	0	0	0	0	0	0	0	0	0	0	0	0
Tank 67	0	0	0	0	0	0	0	0	0	0	0	0	0
Fugitives	0	0	0	0	0	0	0	0	0	0	0	0	0

Plant Total	SO2
Pounds/Yr	63.00
Tons/Yr	0.03
Allowable (Tons/Yr)	39

Koppers015849

January 2003 - December 2003 Annual Emissions Summary

Emission Unit	VOM	Jan-03	Feb-03	Mar-03	Apr-03	May-03	Jun-03	Jul-03	Aug-03	Sep-03	Oct-03	Nov-03	Dec-03
Atlas Boiler	30	4	3	2	2	2	2	2	2	2	3	2	3
Hot Oil Heater	41	4	4	4	2	4	3	3	3	3	4	3	3
Hot Oil Heater (New)	32	4	3	3	2	2	2	2	2	2	3	2	3
Fume Recovery System	183	3	21	18	21	18	14	15	17	13	19	9	15
Tank 33	10	8	0	0	0	0	0	0	0	0	0	0	0
Tank 67	17	17	0	0	0	0	0	0	0	0	0	0	0
Fugitives	143	10	12	8	39	9	7	9	6	7	25	6	5

Plant Total	VOC
Pounds/Yr	455.77
Tons/Yr	0.23
Allowable (Tons/Yr)	39

Koppers015850

Fume Recovery System Maintenance Recap

Date	Work Performed
1/16/2003	Checked the wash fluid level - 46" out.
1/28/2003	Cleaned and inspected the vacuum control units on tank T-200
2/4/2003	Replaced a 1" steam evacuating ball valve on the suction
2/13/2003	Pulled north fume pump due to seal failure. Switched to south pump and installed a new pump at the north position.
2/14/2003	Switched to the new north pump as the seal in the south pump when bad. Sent both pumps out for rebuilding.
3/5/2003	Checked flash fluid level.
3/7/2003	Installed rebuilt fume pump in the south position.
3/11/2003	Found north pump running but with no suction, valve to tank was closed, seal destroyed. Switched to the south pump.
3/23/2003	Checked wash fluid level, down 3" and becoming viscous.
4/1/2003	Checked wash fluid level, again.
4/10/2003	Installed rebuilt north pump. Serviced and lubricated both.
4/14/2003	Wash fluid changed.
4/15/2003	South pump appears to be leaking at the seal.
4/23/2003	South pump has a seal failure, switched to the north pump.
4/23/2003	South pump pulled for rebuilding.
5/1/2003	Repaired 1" steam line leak at flange. Replaced gasket on fume line tracing line at track 3. Also, tightened several steam fittings in area.
5/2/2003	Steam line to fume system evacuation valve leaking, replaced gate valve flange gasket.
5/20/2003	Checked wash fluid, starting to thicken and look oily at 52" out.
6/17/2003	North pump starting to show seal failure.
6/18/2003	Installed rebuilt south pump.
6/19/2003	Wash fluid changed.
6/20/2003	Installed rebuilt pump in the north position and sent our the other pump for rebuilding.
6/24/2003	Cleaned vacuum breakers and level indicators at T-65 and T-68.
6/25/2003	Checked fume system demister pads, appeared to be OK.
7/2/2003	Cleaned vacuum breakers and level indicators at T-200.
7/8/2003	Repaired several steam tracing line leaks on track 5>
7/17/2003	Checked wash fluid level, 44" out.
7/30/2003	Checked wash fluid level, starting to become viscous.
8/13/2003	Serviced and inspected both fume pump sides. Greased motors and filled gearboxes with oil.
8/19/2003	Wash fluid changed.
9/10/2003	South pump failed and switched to the north pump. South pump pulled and sent out for rebuilding.
9/24/2003	installed rebuilt south pump. Also, inspected & cleaned T-200 level indicators & vacuum breakers & pressure transmitter.
10/6/2003	Adjusted coupling assembly on the north pump.
10/10/2003	Wash fluid changed.
10/12/2003	Refilled fume tank with wash fluid.
10/15/2003	Replaced the coupling assembly on the north pump.
10/15/2003	Switched to south pump, as north pump's coupling is making noise.
10/19/2003	Repairs and adjustments made to the north pump due to vibrations.
10/28/2003	Added 12" of wash fluid to the fume tank.
10/29/2003	Added 5" of wash fluid to the fume tank.
11/4/2003	Repaired fume control valve at the truck loading station.
11/5/2003	Cleaned the fume line and fume exhaust flex hose at the truck loading station.
11/6/2003	South pump failed and switched to the north pump.
11/21/2003	South pump pulled and sent out for rebuilding.
11/21/2003	Wash fluid changed.
11/24/2003	Reinstalled the south pump.

Stream No.	1	33	20	5
Name	Pitch Fumes	Heavy Oil	Vap Totalizr	Minus Water
- - Overall - -				
Molar flow lbmol/ mo	0.0943	233.2134	102.4526	20.4882
Mass flow lb/ mo	24.7000	38289.0352	5062.2417	3585.6523
Temp F	400.0000	200.0000	200.0000	200.0000
Pres psia	14.7000	14.7000	14.7000	14.7000
Vapor mole fraction	0.0000	0.0000	0.0000	0.0000
Enth MMBtu/ mo	0.0114518	3.35397	-8.37564	1.51017
Tc F	1293.1027	1217.8970	874.6153	952.4783
Pc psia	395.1926	2408.7273	4633.7319	454.2526
Std. sp gr , wtr = 1	1.049	1.092	1.063	1.091
Std. sp gr , air = 1	9.046	5.669	1.706	6.043
Degree API	3.4243	-1.9726	1.6691	-1.7662
Heating values (60 F)				
Gross Btu/lbmol	4.308E+006	2.593E+006	5.878E+005	2.940E+006
Net Btu/lbmol	4.162E+006	2.492E+006	5.540E+005	2.847E+006
Average mol wt	261.9927	164.1803	49.4106	175.0107
Actual dens lb/ft3	56.9831	64.6572	63.1629	64.5217
Actual vol ft3/mo	0.4335	592.1855	80.1459	55.5728
Std liq gpm	0.0471	70.0686	9.5243	6.5722
Std vap 60F scf mo	35.7763	88499.5000	38878.5859	7774.8315
- - Liquid only - -				
Molar flow lbmol/mo	0.0943	233.2134	102.4526	20.4882
Mass flow lb/mo	24.7000	38289.0352	5062.2417	3585.6523
Average mol wt	261.9927	164.1803	49.4106	175.0107
Actual dens lb/ft3	56.9830	64.6572	63.1629	64.5217
Actual vol gpm	0.0540	73.8394	9.9934	6.9294
Std liq gpm	0.0471	70.0686	9.5243	6.5722
Std vap 60F scf mo	35.7763	88499.5000	38878.5859	7774.8315
Cp Btu/lbmol-F	132.7899	72.3780	28.2225	68.6495
Z factor	0.0104	0.0086	0.0021	0.0067
Visc cP	0.8220	1.761	0.4025	1.261
Th cond Btu/hr-ft-F	0.0624	0.0790	0.1258	0.0746
Surf tens dyne/cm	30.2345	40.3694	41.1704	34.4760

Stream No.	12
Name	CIrculation
- - Overall - -	
Molar flow lbmol/mo	212.7850
Mass flow lb/mo	51290.7813
Temp F	199.9745
Pres psia	14.7000
Vapor mole fraction	0.0000
Enth MMBtu/mo	16.6586
Tc F	1274.0345
Pc psia	454.6739
Std. sp gr , wtr = 1	1.079
Std. sp gr , air = 1	8.323
Degree API	-0.4005
Heating values (60 F)	
Gross Btu/lbmol	3.936E+006
Net Btu/lbmol	3.793E+006
Average mol wt	241.0452
Actual dens lb/ft3	63.6808
Actual vol ft3/mo	805.4355
Std liq gpm	95.0009
Std vap 60F scfmo	80747.3438
- - Liquid only - -	
Molar flow lbmol/mo	212.7850
Mass flow lb/mo	51290.7813
Average mol wt	241.0452
Actual dens lb/ft3	63.6808
Actual vol gpm	100.4294
Std liq gpm	95.0009
Std vap 60F scfmo	80747.3438
Cp Btu/lbmol-F	101.7720
Z factor	0.0124
Visc cP	3.336
Th cond Btu/hr-ft-F	0.0735
Surf tens dyne/cm	40.0285

MONTH	2003 S.I. SENDOUT SULFUR [LB/MMCF]			
	H_2S	RSH	RS(S)R	TOTAL
JAN	0.02	0.85	0.13	1.00
FEB	0.02	0.95	0.14	1.11
MAR	0.01	1.02	0.13	1.16
APR	0.01	0.89	0.11	1.01
MAY	0.01	0.81	0.03	0.85
JUN	0.01	1.00	0.11	1.12
JUL	0.01	0.11	0.13	0.25
AUG	0.01	0.87	0.12	1.00
SEP	0.00	0.84	0.12	0.96
OCT	0.01	0.84	0.14	0.99
NOV	0.02	1.19	0.21	1.42
DEC	0.01	0.80	0.2	1.01
MAX	0.02	1.19	0.21	1.42
AVG	**0.01**	**0.85**	**0.13**	**0.99**
MIN	0.00	0.11	0.03	0.25
DIF	0.02	1.08	0.18	1.17

NOTES:
H_2S = hydrogen sulfide
RSH = mercaptans
RS(S)R = mono-and disulfides
SPG = gas specific gravity (air = 1.000)

MONTH	2003 S.I. SENDOUT SULFUR [PPMwt]				
	SPG	H_2S	RSH	RS(S)R	TOTAL
JAN	0.578	0.45	19.2	2.94	22.59
FEB	0.575	0.45	21.6	3.18	25.21
MAR	0.576	0.23	23.1	2.95	26.30
APR	0.577	0.23	20.1	2.49	22.86
MAY	0.577	0.23	18.3	0.68	19.24
JUN	0.582	0.22	22.4	2.47	25.13
JUL	0.577	0.23	2.5	2.94	5.63
AUG	0.577	0.23	19.7	2.72	22.63
SEP	0.582	0.00	18.8	2.69	21.54
OCT	0.578	0.23	19.0	3.16	22.37
NOV	0.578	0.45	26.9	4.74	32.08
DEC	0.579	0.23	18.0	4.51	22.78
MAX	0.582	0.45	26.9	4.74	32.08
AVG	**0.578**	**0.26**	**19.1**	**2.96**	**22.36**
MIN	0.575	0.00	2.5	0.68	5.63
DIF	0.007	0.45	24.4	4.07	26.44

NOTES:
LB/MMCF = pounds of sulfur per million cubic feet of gas
GR S/CCF = grains of sulfur per 100 cubic feet of gas
PPMw =parts per million of sulfur by weight
WT% = percent of sulfur (by weight) in gas

MONTH	2003 S.I. SENDOUT SULFUR [GR S/CCF]			
	H_2S	RSH	RS(S)R	TOTAL
JAN	0.01	0.59	0.09	0.69
FEB	0.01	0.66	0.10	0.77
MAR	0.01	0.71	0.09	0.81
APR	0.01	0.62	0.08	0.70
MAY	0.01	0.56	0.02	0.59
JUN	0.01	0.69	0.08	0.78
JUL	0.01	0.08	0.09	0.17
AUG	0.01	0.60	0.08	0.69
SEP	0.00	0.58	0.08	0.67
OCT	0.01	0.58	0.10	0.69
NOV	0.01	0.83	0.15	0.99
DEC	0.01	0.56	0.14	0.70
MAX	0.01	0.83	0.15	0.99
AVG	**0.01**	**0.59**	**0.09**	**0.69**
MIN	0.00	0.08	0.02	0.17
DIF	0.01	0.75	0.13	0.81

MONTH	2003 S.I. SENDOUT SULFUR [WT%]			
	H_2S	RSH	RS(S)R	TOTAL
JAN	0.0000%	0.0019%	0.0003%	0.0023%
FEB	0.0000%	0.0022%	0.0003%	0.0025%
MAR	0.0000%	0.0023%	0.0003%	0.0026%
APR	0.0000%	0.0020%	0.0002%	0.0023%
MAY	0.0000%	0.0018%	0.0001%	0.0019%
JUN	0.0000%	0.0022%	0.0002%	0.0025%
JUL	0.0000%	0.0002%	0.0003%	0.0006%
AUG	0.0000%	0.0020%	0.0003%	0.0023%
SEP	0.0000%	0.0019%	0.0003%	0.0022%
OCT	0.0000%	0.0019%	0.0003%	0.0022%
NOV	0.0000%	0.0027%	0.0005%	0.0032%
DEC	0.0000%	0.0018%	0.0005%	0.0023%
MAX	0.0000%	0.0027%	0.0005%	0.0032%
AVG	**0.0000%**	**0.0019%**	**0.0003%**	**0.0022%**
MIN	0.0000%	0.0002%	0.0001%	0.0006%
DIF	0.0000%	0.0024%	0.0004%	0.0026%

Koppers015854

ODEQ AIR Permit 2003 Throughput Northwest Terminal - All Quantities shown are in ponuds

Movement	Jan	Feb	Mar	Apr	May	June	July	Aug	Sept	Oct	Nov	Dec	Total
T-65 to Cars	0	810300	511800	173500	348000	180000	677800	333800	344700	177600	510000	684600	4752100
T-200 to Cars	517000	512799	0	0	0	0	0	0	0	0	0	0	1029799
T-68 to Trucks	3819030	4093460	2664240	3492990	3150170	2806050	3152260	2403000	2324300	4314220	1570080	1501360	35291160
Cars to T-65	0	0	0	0	0	0	0	0	0	0	0	0	0
T-65 to T-68	0	0	0	0	0	0	0	0	0	0	0	0	0
T-65 to T-200	0	0	0	0	0	0	0	0	0	0	0	0	0
T-200 to T-65	0	0	0	0	0	0	0	0	0	0	0	0	0
T-200 to T-68	3605306	4060760	2392847	3490138	3148374	2561373	3327920	1972358	2446095	4174004	1784198	1336743	34300116
HO T-33 to T-65	0	0	0	0	36000	0	18900	0	0	0	49500	0	104400
HO T-33 to T-200	0	0	0	0	0	0	0	0	0	0	0	0	0
HO T-33 to T-68	27000	48600	27700	54900	54000	42300	49500	41400	52200	91800	34650	46800	570850
HO cars to T-33	0	0	0	0	0	98900	0	139000	0	103000	124500	0	465400
HO cars to T-67	0	0	0	0	0	0	0	0	0	0	0	0	0
HO T-67 to T-33	0	0	0	0	0	0	0	0	0	0	0	0	0
Vessel to T-200	0	0	0	15895159	0	0	0	0	0	8857565	0	0	24752724
Solid to T-65	0	0	0	0	0	0	0	859787	0	0	0	0	859787
Outage T-33 (24')	9.5'	9'	11'	13.67'	19.25'	14.67'	19'	13.5	16.75	14.9	10.25	13.5	68.9
Outage T-67 (29')	29'	29'	29'	29'	29'	29'	29'	29	29	29	29	29	145
					Hours of Operation								
E-170	362	315	284	296	266	214	253	238	233	276	205	296	3238
E-270	322	278	251	309	240	195	196	190	204	287	195	303	2970
Boiler	323	285	232	221	230	184	199	217	170	231	137	212	2641
Fume System	277	254	231	266	230	180	199	217	175	247	120	200	2596

41,073,059 - 20,537.5T

1,140,650 = 570.5T

6208

Koppers015855

KOPPERS INDUSTRIES

Koppers Industries, Inc.
7540 N.W. St. Helens Road
Portland, OR 97210-3663

Amos S. Kamerer
Plant Manager

Telephone: 503-286-3681
Fax: 503-285-2831

February 7, 2003

Department of Environmental Quality
Northwest Region
2020 SW 4th Avenue, Suite 400
Portland, OR 97201-4987

RE: 2002 Annual Emission Report
Permit # 26-2930

Attention: Air Quality Permit Coordinator

Enclosed please find the 2002 annual emission report (one original and one copy) for Koppers Industries, Inc., 7540 NW Saint Helens Road, Portland, OR. 97210-3663. As required, the report includes the following:

1. Annual throughput of coal tar pitch: 20,237 tons
2. Annual throughput of heavy oil: 399 tons
3. Total boiler operating time: 2,873 hours
4. Total hot oil operating time: 4,407 hours (1,343 hours for E-170 & 3,064 hours for E-270)
5. Highest sulfur content of natural gas (no oil used during the year): 2.72 lb/Mft3.
6. Average plant operating schedule: Monday through Thursday, 10 hours/day from January through May and Monday through Friday, 15 hours/day from June through December.
7. Emission calculations: Summary, CO, NOx, PM10, SO2 and VOC.
8. Chem Cad Analysis is also included.
9. Summary of 2002 maintenance performed on the fume recovery system.
10. There were no odor complaints during 2002.

If you have any questions, I can be reached at 503-286-3681 or via e-mail at Kamereras@koppers.com

Sincerely,

Amos S. Kamerer

Enclosures

CC: T. Self, KII
B. Bauman, KII

January 2002 - December 2002 Annual Emissions Summary

Emission Unit	CO	NOx	PM10	SO2	VOC
Atlas Boiler	343.79	1375.18	73.67	18.66	27.35
Hot Oil Heater	103.51	492.92	36.97	9.37	18.87
Hot Oil Heater (New)	895.55	1189.17	110.11	27.89	40.87
Fume Recovery System	0.00	0.00	0.00	0.00	220.00
Tank 33	0.00	0.00	0.00	0.00	101.75
Tank 67	0.00	0.00	0.00	0.00	200.69
Fugitives	0.00	0.00	0.00	0.00	170.36

Plant Total	CO	NOx	PM10	SO2	VOC
Pounds/Yr	1342.85	3057.26	220.75	55.92	779.89
Tons/Yr	0.67	1.53	0.11	0.03	0.39
Allowable (Tons/Yr)	99	39	N/A	39	39

2002 Annual Emissions Summary

Emission Unit	CO	Jan-02	Feb-02	Mar-02	Apr-02	May-02	Jun-02	Jul-02	Aug-02	Sep-02	Oct-02	Nov-02	Dec-02
Atlas Boiler	343.7946	2	12	5	26	22	34	44	30	28	51	38	52
Hot Oil Heater	103.5127	0	10	2	12	30	4	6	4	0	0	14	21
Hot Oil Heater (New)	895.5452	52	41	54	35	0	80	96	106	116	137	85	92
Fume Recovery System	0	0	0	0	0	0	0	0	0	0	0	0	0
Tank 33	0	0	0	0	0	0	0	0	0	0	0	0	0
Tank 67	0	0	0	0	0	0	0	0	0	0	0	0	0
Fugitives	0	0	0	0	0	0	0	0	0	0	0	0	0

Plant Total	CO
Pounds/Yr	1342.85
Tons/Yr	0.67
Allowable (Tons/Yr)	99

Koppers015858

2002 Annual Emissions Summary

Emission Unit	NOx	Jan-02	Feb-02	Mar-02	Apr-02	May-02	Jun-02	Jul-02	Aug-02	Sep-02	Oct-02	Nov-02	Dec-02
Atlas Boiler	1375.178	7	47	20	105	86	134	176	121	112	206	152	208
Hot Oil Heater	492.9177	0	47	11	57	143	19	27	20	0	0	68	101
Hot Oil Heater (New)	1189.167	69	54	72	47	0	106	127	141	155	182	113	123
Fume Recovery System	0	0	0	0	0	0	0	0	0	0	0	0	0
Tank 33	0	0	0	0	0	0	0	0	0	0	0	0	0
Tank 67	0	0	0	0	0	0	0	0	0	0	0	0	0
Fugitives	0	0	0	0	0	0	0	0	0	0	0	0	0

Plant Total	NOx
Pounds/Yr	3057.26
Tons/Yr	1.53
Allowable (Tons/Yr)	39

Koppers015859

2002 Annual Emissions Summary

Emission Unit	PM10	Jan-02	Feb-02	Mar-02	Apr-02	May-02	Jun-02	Jul-02	Aug-02	Sep-02	Oct-02	Nov-02	Dec-02
Atlas Boiler	73.67028	0	3	1	6	5	7	9	6	6	11	8	11
Hot Oil Heater	36.96883	0	4	1	4	11	1	2	1	0	0	5	8
Hot Oil Heater (New)	110.108	6	5	7	4	0	10	12	13	14	17	11	11
Fume Recovery System	0	0	0	0	0	0	0	0	0	0	0	0	0
Tank 33	0	0	0	0	0	0	0	0	0	0	0	0	0
Tank 67	0	0	0	0	0	0	0	0	0	0	0	0	0
Fugitives	0	0	0	0	0	0	0	0	0	0	0	0	0

Plant Total	PM10
Pounds/Yr	220.75
Tons/Yr	0.11
Allowable (Tons/Yr)	N/A

Koppers015860

2002 Annual Emissions Summary

Emission Unit	SO2	Jan-02	Feb-02	Mar-02	Apr-02	May-02	Jun-02	Jul-02	Aug-02	Sep-02	Oct-02	Nov-02	Dec-02
Atlas Boiler	18.66314	0	1	0	1	1	2	2	2	2	3	2	3
Hot Oil Heater	9.365437	0	1	0	1	3	0	1	0	0	0	1	2
Hot Oil Heater (New)	27.89403	2	1	2	1	0	2	3	3	4	4	3	3
Fume Recovery System	0	0	0	0	0	0	0	0	0	0	0	0	0
Tank 33	0	0	0	0	0	0	0	0	0	0	0	0	0
Tank 67	0	0	0	0	0	0	0	0	0	0	0	0	0
Fugitives	0	0	0	0	0	0	0	0	0	0	0	0	0

Plant Total	SO2
Pounds/Yr	55.92
Tons/Yr	0.03
Allowable (Tons/Yr)	39

Koppers015861

2002 Annual Emissions Summary

Emission Unit	VOC	Jan-02	Feb-02	Mar-02	Apr-02	May-02	Jun-02	Jul-02	Aug-02	Sep-02	Oct-02	Nov-02	Dec-02
Atlas Boiler	27.34641	0	1	0	2	2	3	4	2	2	4	3	4
Hot Oil Heater	18.86889	0	2	0	2	5	1	1	1	0	0	3	4
Hot Oil Heater (New)	40.87209	2	2	2	2	0	4	4	5	5	6	4	4
Fume Recovery System	220.001	1	13	7	16	18	25	18	24	22	31	25	21
Tank 33	101.7505	8	8	8	10	9	10	8	8	8	8	8	10
Tank 67	200.6884	17	17	17	17	17	17	17	17	17	17	17	19
Fugitives	170.3631	1	9	2	7	6	43	15	10	18	22	11	28

Plant Total	VOC
Pounds/Yr	779.89
Tons/Yr	0.39
Allowable (Tons/Yr)	39

Koppers015862

Fume Recovery System Maintenance Recap

Date	Work Performed
2/22/02	Reinstalled the south circulating pump
2/26/02	Lubricated both circulating pump systems
3/11/02	Changed out 1 steam tracing valve at the pitch truck loading area on the fume line
3/29/02	Repaired 2 steam tarce flanges with new gaskets at tank T-68, laong the road on the fume line
4/10/02	Cleaned and inspected the vacuum control units on tnaks T-200, T-68 and T-65
5/7/02	Checked the demister pads, no buildup noticed
5/21/02	Replaced the steam tracing valve at tank T-67, on the corner of the fume line
6/27/02	Switched to the south pump, as the north pump is having a bearing failure and starting to leak
7/22/02	North pump rebuild and re-installed
7/29/02	Checked, inspected and cleaned vacuum breakers on tanks T-65, T-200 and T-68
8/8/02	South pump seal failure, switched to the north pump
8/13/02	South pump unit seal rpeplaced
9/11/02	North pump unit seal faliure, switched to the south unit
9/17/02	South pump unit seal faliure, re-installed north pump and changed out the wast fluid
10/9/02	Re-installed south pump unit
10/23/02	Replaced steam tracing flange gaskets at corner of tank T-67 and by control room on the fume line
10/29/02	Checked, inspected and cleaned vacuum breakers on tanks T-65, T-200 and T-68
11/12/02	Changed out the fash fluid
11/25/02	Lubricated both circulating pump systems
12/11/02	Checked the demister pads, no buildup noticed
12/17/02	Checked, inspected and cleaned vacuum breakers on tanks T-65, T-200 and T-68

Koppers015863

SMED02LB	2002 S.I. SENDOUT SULFUR [LB/MMCF]			
MONTH	H_2S	RSH	RS(S)R	TOTAL
JAN	0.04	1.41	0.15	1.60
FEB	0.04	1.66	0.14	1.84
MAR	0.02	1.98	0.29	2.29
APR	0.01	2.35	0.36	2.72
MAY	0.01	2.07	0.20	2.28
JUN	0.02	1.96	0.28	2.26
JUL	0.02	1.64	0.27	1.93
AUG	0.01	2.09	0.27	2.37
SEP	0.01	1.98	0.28	2.27
OCT	0.02	2.10	0.28	2.40
NOV	0.03	2.30	0.33	2.66
DEC	0.03	1.58	0.24	1.85
MAX	0.04	2.35	0.36	2.72
AVG	**0.02**	**1.93**	**0.26**	**2.21**
MIN	0.01	1.41	0.14	1.60
DIF	0.03	0.94	0.22	1.12

NOTES:
H_2S = hydrogen sulfide
RSH = mercaptans
RS(S)R = mono-and disulfides
SPG = gas specific gravity (air = 1.000)

SMED02ppm	2002 S.I. SENDOUT SULFUR [PPMw]				
MONTH	SPG	H_2S	RSH	RS(S)R	TOTAL
JAN	0.579	0.90	31.8	3.38	36.1
FEB	0.580	0.90	37.4	3.15	41.4
MAR	0.586	0.45	44.1	6.46	51.0
APR	0.585	0.22	52.5	8.04	60.7
MAY	0.579	0.23	46.7	4.51	51.4
JUN	0.576	0.45	44.4	6.35	51.2
JUL	0.576	0.45	37.2	6.12	43.8
AUG	0.582	0.22	46.9	6.06	53.2
SEP	0.576	0.23	44.9	6.35	51.5
OCT	0.579	0.45	47.4	6.31	54.1
NOV	0.579	0.68	51.9	7.44	60.0
DEC	0.587	0.67	35.1	5.34	41.2
MAX	0.587	0.90	52.5	8.04	60.7
AVG	**0.580**	**0.49**	**43.3**	**5.79**	**49.6**
MIN	0.576	0.22	31.8	3.15	36.1
DIF	0.011	0.68	20.7	4.88	24.6

NOTES:
LB/MMCF = pounds of sulfur per million cubic feet of gas
GR S/CCF = grains of sulfur per 100 cubic feet of gas
PPMw =parts per million of sulfur by weight
wt% = percent of sulfur (by weight) in gas

SMED02GR	2002 S.I. SENDOUT SULFUR [GR S /CCF]			
MONTH	H_2S	RSH	RS(S)R	TOTAL
JAN	0.03	0.98	0.10	1.11
FEB	0.03	1.15	0.10	1.28
MAR	0.01	1.38	0.20	1.59
APR	0.01	1.63	0.25	1.89
MAY	0.01	1.44	0.14	1.58
JUN	0.01	1.36	0.19	1.57
JUL	0.01	1.14	0.19	1.34
AUG	0.01	1.45	0.19	1.65
SEP	0.01	1.38	0.19	1.58
OCT	0.01	1.46	0.19	1.67
NOV	0.02	1.60	0.23	1.85
DEC	0.02	1.10	0.17	1.28
MAX	0.03	1.63	0.25	1.89
AVG	**0.02**	**1.34**	**0.18**	**1.53**
MIN	0.01	0.98	0.10	1.11
DIF	0.02	0.65	0.15	0.78

SMED02%	2002 S.I. SENDOUT SULFUR [wt%]			
MONTH	H_2S	RSH	RS(S)R	TOTAL
JAN	0.0001%	0.0032%	0.0003%	0.0036%
FEB	0.0001%	0.0037%	0.0003%	0.0041%
MAR	0.0000%	0.0044%	0.0006%	0.0051%
APR	0.0000%	0.0052%	0.0008%	0.0061%
MAY	0.0000%	0.0047%	0.0005%	0.0051%
JUN	0.0000%	0.0044%	0.0006%	0.0051%
JUL	0.0000%	0.0037%	0.0006%	0.0044%
AUG	0.0000%	0.0047%	0.0006%	0.0053%
SEP	0.0000%	0.0045%	0.0006%	0.0051%
OCT	0.0000%	0.0047%	0.0006%	0.0054%
NOV	0.0001%	0.0052%	0.0007%	0.0060%
DEC	0.0001%	0.0035%	0.0005%	0.0041%
MAX	0.0001%	0.0052%	0.0008%	0.0061%
AVG	**0.0000%**	**0.0043%**	**0.0006%**	**0.0050%**
MIN	0.0000%	0.0032%	0.0003%	0.0036%
DIF	0.0001%	0.0021%	0.0005%	0.0025%

Koppers015864

ODEQ AIR Permit 2002 Throughput Northwest Terminal - All Quantities shown are in ponuds

Movement	Jan	Feb	Mar	Apr	May	June	July	Aug	Sept	Oct	Nov	Dec	Total	
T-65 to Cars					1347300	1021500	2238650	1556257	1048900	864300	1559500	855750	10492157	
T-200 to Cars	337176	1193900	1007800	857800	0	513428	0	518343	6856000	511800	0	0	11796247	
T-68 to Trucks					746120	1514740	2755110	2749620	2746000	3637020	1710280	2327180	18186070	
Cars to T-65		351450	0	0	713450	362800	553200	365300	365450	365600	366300	0	3443550	
T-65 to T-68					1921001	936000	2254000	81000	3550485	3261578	1988321	0	13992385	
T-65 to T-200						3467482	0	0	0	0	0	0	3467482	
T-200 to T-65		4478902	0	3131756	0	3800000	3400000	2000000	2000000	1000000	2000188	0	21810846	
T-200 to T-68						794225	0	829533	0	0	0	1518974	3142732	
HO T-33 to T-65		40527	0	99000	91800	51300	56700	53100	41400	40500	41400	0	515727	*
HO T-33 to T-200						96300	0	27000	0	0	0	0	123300	*
HO T-33 to T-68					17100	19800	13500	16200	24300	19800	15300	32400	158400	*
HO cars to T-33							0	0	159500	0	0	0	159500	
HO cars to T-67												228500		
HO T-67 to T-33				207371	81000	163800	0	0	0	0	0	200569	652740	
Vessel to T-200						13633914				5271234	0	11120893		
Solid to T-65		2688615		2635149	2122815	630000	495000	630000	765000	720000	2907000	1878168	15471747	
					Hours of Operation									
E-170		110	45	132	299	91	136	73	0	0	153	304	1343	
E-270	148	144	206	157	0	306	328	344	327	425	315	364	3064	
Boiler	12	64	82	137	231	311	345	316	284	412	321	358	2873	
Fume System	11	151	91	207	235	314	233	312	281	405	312	277	2829	

40,474,474 # = 20,237

797,427

399 TONS

4407

Koppers015865

AIR CONTAMINANT DISCHARGE PERMIT

Department of Environmental Quality
Northwest Region
2020 SW Fourth Avenue, Suite 400
Portland, OR 97201-4987
Telephone: (503) 229-5263

Issued in accordance with the provisions of ORS 468A.040 and based on the land use compatibility findings included in the permit record.

ISSUED TO:

Koppers Industries, Inc.
7540 NW St. Helens Road
Portland, OR 97210-3663

INFORMATION RELIED UPON:

Department Initiated

PLANT SITE LOCATION:

7540 NW St. Helens Road
Portland, OR

LAND USE COMPATIBILITY STATEMENT:

From: City of Portland
Dated: 9/15/97

ISSUED BY THE DEPARTMENT OF ENVIRONMENTAL QUALITY:

Ed Druback, Northwest Region Air Quality Manager

JUN 16 1999
Dated

ADDENDUM NO. 1

In accordance with OAR 340-14-040, Air Contaminant Discharge Permit Number 26-2930, Condition 19 now reads as follows:

19. The Annual Compliance Determination Fee for this permit is due on December 1 of each year this permit is in effect. An invoice indicating the amount, as determined by Department regulations, will be mailed prior to the above date. The fee shall be submitted to the Business Office of the Department in Portland (unless otherwise notified).

ALL INQUIRIES SHOULD BE DIRECTED TO:

Department of Environmental Quality
Northwest Region, Air Quality Section
2020 SW Fourth Avenue, Suite 400
Portland, OR 97201-4987
Telephone: (503) 229-5554

Oregon
John A. Kitzhaber, M.D., Governor

Department of Environmental Quality
Northwest Region
2020 SW Fourth Avenue
Suite 400
Portland, OR 97201-4987
(503) 229-5263 Voice
TTY (503) 229-5471

JUN 16 1999

KOPPERS INDUSTRIES INC
7540 NW ST HELENS RD
PORTLAND OR 97210-3663

RE: ACDP ADDENDUM NO. 1
PERMIT # **26-2930**

The enclosed permit addendum revises your permit referenced above. This addendum includes a change to the compliance fee due date.

This addendum became effective the date it was signed by the Regional Air Quality Manager. Should you disagree with the content of the addendum, you may make appeal to the Environmental Quality Commission, or its representative, within the next twenty days. Appeals are pursuant to ORS (Oregon Revised Statute) Chapter 183 and OAR (Oregon Administrative Rule) Chapter 340, Division 14-025(6). Appeal procedures are contained in OAR Division 11-005 through 11-140. The enclosed addendum is issued pursuant to ORS 468A and OAR 340-14-040.

A copy of the current permit must be available at the facility at all times (Condition G2). Failure to comply with permit conditions may result in a civil penalty. You are expected to read the permit carefully and comply with all conditions to protect the environment of Oregon.

Questions or comments should be directed to Kathy Amidon at (503) 229-5568.

Sincerely,

Ed Druback
Air Quality Manager
Northwest Region

EJD: jdb

Enclosure

Cc: Michelle Sandholm/AQ
EPA - Region X
Kathy Amidon/NWR

cc: T. Self
B. Meisinger

faxed: 6/17/99

RECEIVED
JUN 17 1999
KOPPERS INDS, INC.
PORTLAND OR

DEQ-1

Koppers Ind.									
ACDP 26-2930									
			Plant Site Emission Detail Sheet						
		Fuel Usages	Pollutant	DEQ Emission Factor			Emissions		
Fuel:									
Oil, distillate	600	Thou. Gallons/year	PM	2	Lb/1,000 gal.	0.60	Tons/yr	0.56	Lb/hr
	282	Gal./hour	PM10	1	Lb/1,000 gal.	0.30	Tons/yr	0.28	Lb/hr
			SO2	71	Lb/1,000 gal.	21.30	Tons/yr	20.02	Lb/hr
			NOx	20	Lb/1,000 gal.	6.00	Tons/yr	5.64	Lb/hr
			CO	5	Lb/1,000 gal.	1.50	Tons/yr	1.41	Lb/hr
			VOC	0.2	Lb/1,000 gal.	0.06	Tons/yr	0.06	Lb/hr
Natural gas	321	MM Cubic Ft./year	PM	2.5	Lb/MMCF	0.40	Tons/yr	0.10	Lb/hr
	0.04	MM Cubic Ft./hour	PM10	2.5	Lb/MMCF	0.40	Tons/yr	0.10	Lb/hr
			SO2	2.6	Lb/MMCF	0.42	Tons/yr	0.10	Lb/hr
			NOx	140	Lb/MMCF	22.47	Tons/yr	5.60	Lb/hr
			CO	35	Lb/MMCF	5.62	Tons/yr	1.40	Lb/hr
			VOC	2.8	Lb/MMCF	0.45	Tons/yr	0.11	Lb/hr
Material Transfer	70	Thou. Gallons/year	VOC			19.25	Tons/yr	14.1	Lb/hr
System	100	Gal./hour							
						Emission Limits			
Note: PM and PM10 emissions are considered					SO2	22	Tons/yr	20	Lb/hr
negligible and are not included in the PSEL.					NOx	28	Tons/yr	11	Lb/hr
					CO	7	Tons/yr	3	Lb/hr
					VOC	20	Tons/yr	14	Lb/hr
Oil usage is considered to be 12 weeks per year.									
Natural gas usage is as estimated by the applicant.									
VOC emissions from the material transfer system were									
calculated using ChemCad. Refer to the source file.									

6/01/1999

Department of Environmental Quality
Northwest Region

AIR CONTAMINANT DISCHARGE PERMIT APPLICATION REVIEW REPORT

Koppers Industries, Inc.
7540 NW St. Helens Road
Portland, OR 97210-3663

SOURCE TEST	AMB MON	COMPL SCHED	SPEC COND	RPT FREQ	EXCESS RPT	NSPS	NSR	PSD	NESHAP	SIZE	PUB NTC
			Y	A						A-2	Y

GENERAL BACKGROUND INFORMATION

1. This is a new permit for an existing source. In March 1975, Koppers Co., Inc. proposed a coal tar pitch processing facility. A permit was written to cover the operation of the proposed facility. In January 1976, the company informed the Department that the proposed operation would not be added to the facility. The permit was modified to allow the marketing of the remaining 3600 tons of coal tar on hand as roofing bitumen. The Department then canceled the permit as the facility reverted to being a terminal facility only.

   In response to a complaint in Koppers' geographical area, several facilities were visited. Department staff discovered an oil-fired boiler operating without a permit. The facility contains a 21 Mm Btu/hour boiler with the capability of burning oil. Under OAR 340-28-1750, Table 4 (formerly OAR 340-20-155, Table 1), all oil fired boilers greater than 10 MM Btu/hour input capacity in the Portland Air Quality Maintenance Area are required to have an air discharge permit. Because the Department had mistakenly canceled the permit in 1977, no enforcement action was taken against the source.

   The company proposes to replace an 8 MM Btu/hour natural gas fired hot oil heater to provide heat to storage tanks. The old heater will be used as a back-up. Gaseous emissions from the tanks will be ducted to the fume recovery system. Installation of a heated pipeline and a liquid pitch storage tank is planned within the next two years.

   The facility now receives, stores, and transfers creosote. The company plans to cease its shipments of creosote and instead move heavy oil and coal tar pitch (pencil pitch). Pencil pitch is received in solid form, placed in tanks and heated, then moved through pipes to load onto rail cars or tank cars. The heavy oil is also heated for ease of movement.

2. Changes to the facility will take place in two phases. Phase 1, a 10 MM Btu/hr hot oil heater will be added. The current hot oil heater will become a back-up. Two new storage tanks (T-33 and T-67) for pitch will be installed. The new tanks will have a vapor pressure below the trigger level, and will not be subject to New Source Performance Standards.

   Phase 2 is dependent upon business conditions. In Phase 2, one more storage tank (T-210) and a fume combustion system will be installed. The permittee is required to notify the Department prior to beginning Phase 2 construction.

3. The facility is located in a maintenance area for carbon monoxide and ozone. Two contributors to ozone, nitrogen oxides (NO_x) and volatile organic compounds (VOC), are regulated pollutants. The facility is an insignificant source of CO, NO_x , and VOC. The area is in attainment for all other pollutants.

4. A Land Use Compatibility Statement signed by the City of Portland on September 15, 1997 granted unconditional approval.

5. The Department has issued a water quality permit to this facility, NPDES 100419. The plant site includes 25 tanks for the collection and storage of storm water.

6. Air contaminant sources at the facility for the coming permit period are shown below. The table does not include equipment to be added under Phase 2.

Equipment	Manufacturer	Capacity/ Rate	Installed/ Modified
Boiler, fired on natural gas or distillate oil	N. American	21 MM Btu/hr input	1965
Hot oil heater, fired on natural gas or oil	N. American	8 MM Btu/hr input	1990
Hot oil heater, fired on natural gas or oil	N. American	10 MM Btu/hr input	1999
Pitch/oil transfer system	N/A	150,000 ton/year	1965 1999 (mod.)
Fume recovery system, with scrubber	N/A	150,000 ton/year	1987

HAZARDOUS AIR POLLUTANTS (HAPS)

7. The heating of these substances causes certain hazardous air pollutants (HAPS) to be driven off. The HAPS include naphthalene, quninoline, biphenyl, dibenzofuran, benzene, and toluene, and others in lesser quantities. Maximum total combined HAPS emissions will be 3.1 tons per year, which also represents the facility's potential to emit HAPS. After the new equipment is installed, total combined HAPS emissions are estimated at 0.001 tons per year.

8. If business conditions warrant implementation of Phase II, the current fume recovery system may be changed to a fume combustion system by feeding the HAP emissions collected by the fume recovery system through a fume combustion unit.

PLANT SITE EMISSION LIMIT (PSEL) INFORMATION

ORIGINAL PLANT SITE EMISSION LIMIT

9. The facility was in operation during the baseline years. Baseline year information has not been provided, however, so Baseline Emission Rates have not been established.

PROPOSED PLANT SITE EMISSION LIMIT

10. The normal operating schedule for the equipment is 24 hrs/day x 7 days/wk x 52 wks/yr = 8,736 hrs/yr.

11. Normal annual fuel usage is100,000 gallons of diesel oil and 184 million cubic feet of natural gas. Maximum hourly fuel burned is 150 gallons of diesel oil and/or 30,000 cubic feet of natural gas.

12. Throughput of pencil pitch is expected to be 100,000 tons per year, and a maximum of 562 tons per hour.

13. An emission summary is below. Refer to the Plant Site Emission Detail Sheet, attached.

Source	SO_2 tons/yr (lbs/hr)	NO_x tons/yr (lbs/hr)	CO tons/yr (lbs/hr)	VOC tons/yr (lbs/hr)
Oil combustion	21.3 (20.0)	6.0 (5.6)	1.5 (1.4)	0.06 (0.06)
Gas combustion	0.4 (0.1)	22.4 (5.6)	5.6 (1.4)	0.45 (0.11)
Material transfer				19.25 (14.1)
Totals	21.7 (20.1)	28.4 (11.2)	7.1 (2.8)	19.7 (14.3)

14. Emissions of PM and PM10 are considered negligible and are not included in the Plant Site Emission Limit, shown below.

Pollutant	Short-Term Limit	Annual Limit
Sulfur dioxide (SO2)	20 Lb/Hour	22 Ton/Year
Nitrogen oxides (NO_x)	11 Lb/Hour	28 Ton/Year
Carbon Monoxide (CO)	3 Lb/Hour	7 Ton/Year
Volatile Organics (VOC)	14 Lb/Hour	20 Tons/yr

SIGNIFICANT EMISSION RATE

15. The Plant Site Emission Limit increase over baseline is less than the Significant Emission Rate (SER) as defined in OAR 340-28-110 for all pollutants and is shown below. No further air quality analysis is required for those pollutants.

Significant Emission Rates:

Pollutant	Baseline (tons/yr)	Current PSEL (tons/yr)	Increase (tons/yr)	SER (tons/yr)
SO_2	0	22	22	40
NO_x	0	28	28	40
CO	0	7	7	100
VOC	0	20	20	40

ADDITIONAL REQUIREMENTS

16. Special conditions contained in the permit include the requirement to notify the Department upon installation of the 10 MM Btu/hour heater, and to make a response to all complainants. The permit also includes a requirement to conduct a study of the feasibility of reducing particulate and VOC emissions from the fume recovery exhaust stack.

17. The source is required to submit reports to the Department annually. The permit also requires a report on the results of the feasibility study (Condition 13) by June 1, 2000.

18. The source is not subject to immediate (within one hour) reporting of excess emissions, except when the emissions may endanger public health.

19. This source is not subject to federal regulations for New Source Performance Standards (NSPS), 40 CFR 60, Subpart Kb, for storage tanks because the tanks have a vapor pressure of 0.2 psia, which is lower than the trigger level of 1.5 psia.

20. This source is not subject to federal regulations for New Source Review.

21. This source is not subject to federal regulations for Prevention of Significant Deterioration (PSD).

22. This source is not subject to federal regulations for National Emissions Standards for Hazardous Air Pollutants (NESHAP), 40 CFR 63, Subpart LL, because it is not a major source.

PUBLIC NOTICE

The configuration of the plant differs greatly from the time the last permit was issued. Therefore the permit was placed on public notice from March 16, 1998 to April 15, 1998. No comments were received. During the public notice, the applicant informed the Department of a change in plans that would increase gaseous emissions. The proposed permit was modified, and again offered for public notice from February 9, 1999 to March 11, 1999. No comments were received from the public.

KAmidon:Edruback
5/18/99

AIR CONTAMINANT DISCHARGE PERMIT

Department of Environmental Quality
Northwest Region
2020 SW 4th Avenue, Suite 400
Portland, Oregon 97201-4987
Telephone: (503) 229-5263

Issued in accordance with the provisions of ORS 468A.040 and based on the land use compatibility findings included in the permit record.

ISSUED TO:

Koppers Industries, Inc.
7540 NW St. Helens Road
Portland, OR 97210-3663

INFORMATION RELIED UPON:

Application No: 016551
Date received: 8/25/97

PLANT SITE LOCATION:

7540 NW St. Helens Road
Portland, OR

LAND USE COMPATIBILITY STATEMENT:

From: City of Portland
Dated: 9/15/97

ISSUED BY THE DEPARTMENT OF ENVIRONMENTAL QUALITY:

Ed Druback, Northwest Region Air Quality Manager

JUN 0 1 1999
Dated

Source(s) Permitted to Discharge Air Contaminants:

TYPE OF FACILITY (from Table 4, OAR 340-28-1750)	STANDARD INDUSTRY CODE
58. b) Boiler located in Portland AQMA, 10 MM Btu/hour energy input, distillate oil fired	4961 (2865)

PERMITTED ACTIVITIES

The permittee is herewith allowed to discharge exhaust gases from those processes and activities directly related to or associated with the air contaminant source(s) listed above in accordance with the requirements, limitations, and conditions of this permit, until such time as this permit expires or is modified or revoked.

Compliance with the specific requirements, limitations and conditions contained herein does not relieve the permittee from complying with all other laws, rules and standards administered by the Department, nor does it allow significant levels of emissions of air contaminants not limited in this permit or contained in the permit application.

PERFORMANCE STANDARDS AND EMISSION LIMITS

1. Particulate emissions from any single air contaminant source shall not exceed any of the following:

   a. 0.2 grains per standard cubic foot, corrected to 12% CO_2 or 50% excess air, for combustion sources existing prior to June 1, 1970;
   b. 0.1 grains per standard cubic foot, corrected to 12% CO_2 or 50% excess air, for combustion sources installed, constructed, or modified after June 1, 1970;
   c. An opacity equal to or greater than twenty percent (20%) for a period aggregating more than three (3) minutes in any one (1) hour, excluding uncombined water vapor; and.
   d. Particulate emissions from any air contaminant source installed on or before June 1, 1970 other than fuel burning equipment and fugitive emission sources must not exceed 0.2 grains per standard cubic foot. This condition does not apply to fugitive emissions sources.
   e. Particulate matter which is larger than 250 microns and which may be deposited upon the real property of another person shall not be emitted.

2. The permittee shall not sell, distribute, use (combust), or make available for use, any fuel oil which exceeds the following sulfur content limitations:

   a. 0.3 percent sulfur by weight for ASTM Grade 1 (distillate).
   b. 0.5 percent sulfur by weight for ASTM Grade 2 (distillate).
   c. 1.75 percent sulfur by weight for residual fuel oil.

3. The permittee shall not allow the emission of odorous matter or other fugitive emissions so as to create nuisance conditions off the permittee's property. Nuisance conditions will be verified by Department personnel. The creation of nuisance conditions may, in addition to any other action the Department may take, result in a permit modification to require a compliance schedule to control the nuisance conditions.

OPERATIONS AND MAINTENANCE

4. The permittee shall at all times maintain and operate all air contaminant generating processes and all air contaminant control equipment at full efficiency and effectiveness, such that the emissions of air contaminants are kept at the lowest practicable levels.

5. The permittee shall minimize fugitive dust emissions by:
   a. Treating vehicular traffic areas of the plant site under the control of the permittee.
   b. Storing collected material from air pollution control equipment in a covered container or other method equally effective in preventing the material from becoming airborne during storage and transfer.

6. A maintenance service must be performed on the boiler at least once every two years. As a minimum, the service must include an inspection of the burners and refractory chamber, cleaning, adjustment, and repair as necessary. Records of the service shall be maintained on site for a period of at least two years.

PLANT SITE EMISSION LIMITS

7. Emissions of Sulfur Dioxide on a plant site basis shall not exceed 22 tons per year or 20 pounds per hour.

8. Emissions of Nitrogen Oxides on a plant site basis shall not exceed 28 tons per year or 11 pounds per hour.

9. Emissions of Carbon Monoxide on a plant site basis shall not exceed 7 tons per year or 3 pounds per hour.

10. Emissions of Volatile Organic Compounds on a plant site basis shall not exceed 20 tons per year or 14 pounds per hour

AIR POLLUTION EPISODES

11. The permittee may elect to file a Source Emission Reduction Plan (SERP) with the Department in accordance with OAR 340-27-015, specifying the procedures the permittee will follow in the event an Air Pollution Alert, Warning, or Emergency Episode is declared in the Portland area by the Department. The Source Emission Reduction Plan shall be available on the source premises for inspection by any authorized personnel.

12. In the event an Air Pollution Alert, Warning, or Emergency Episode is declared in the Portland area by the Department, the permittee shall take actions appropriate to the declared Air Pollution Episode as listed in the Source Emission Reduction Plan on file with the Department, or with Oregon Administrative Rules 340, Division 27 "Air Pollution Emergencies" if no Source Emission Reduction Plan has been filed with the Department.

Air Pollution Episodes will be declared by the Department and information will be made available through the radio and television media.

SPECIAL CONDITIONS

13. By no later than June 1, 2000, the permittee shall complete and submit to the Department a detailed study of the feasibility of reducing particulate and VOC emissions from the fume recovery exhaust stack. The study shall include a time schedule for implementation of reduction strategies where practicable.

14. The permittee shall notify the Department in writing of the date the new 10 MM Btu/hour hot oil heater is started up. The notification shall be submitted no later than seven (7) days after startup.

15. All nuisance condition complaints shall be investigated by a plant representative immediately following receipt of such a complaint. A log of all complaints shall be maintained at the plant site and shall include date of contact, time of observed nuisance condition, description of nuisance condition, location of receptor, and status of plant operation during the observed period. The nuisance complaint log shall be maintained on site for a period of not less than two years, and be made available to Department representatives upon request.

MONITORING REQUIREMENTS

16. The permittee shall effectively inspect and monitor the operation and maintenance of the plant and associated air contaminant control facilities and shall implement the procedures necessary to monitor and record the following parameters. A record of all such data shall be maintained for a period of two years at the plant site for inspection by the authorized representatives of the Department.

    a. All operating and production parameters to be reported to the Department annually as required in Condition 18.
    b. Excess emissions records as defined in OAR 340-28-1400 through 340-28-1440 (recorded on occurrence)
    c. A description of any maintenance to the air contaminant control system (recorded on occurrence)

REPORTING REQUIREMENTS

17. The permittee shall submit to the Department by June 1, 2000 the results of the feasibility study required in Condition 13.

18. The permittee shall submit to the Department by March 1 of each year this permit is in effect two (2) copies of the following information for the preceding calendar year:

    a. Operating parameters:

        i. Annual throughput of coal tar pitch
        ii. Annual throughput of heavy oil
        iii. Total boiler operating time (hours/year)
        iv. Total hot oil heater operating time (hours/year)
        v. Highest sulfur content of oil burned (obtained from supplier)
        vi. Types and quantities of fuels burned (gallons or MMCF)
        vii. Average plant operating schedule (hours/day, days/week, weeks/year)

    b. Computations of total VOC and HAPs emissions for the previous calendar year.

    c. A log of all planned and unplanned excess emissions in accordance with OAR 340-28-1440.

    d. A summary of all odor complaints received during the year; by specifying the number of complaints on each date that complaints were received.

    e. Explain any permanent changes made in the plant process or production which would effect air contaminant emissions, and indicate when changes were made.

    f. List all major maintenance performed on air pollution equipment

    g. The report shall be sent to DEQ, Northwest Region, 2020 SW 4th Ave., #400, Portland, Oregon 97201-4987 unless otherwise noted. The permit number must be prominently displayed on the report.

FEE SCHEDULE

19. The Annual Compliance Determination Fee for this permit is due on August 1 of each year this permit is in effect. An invoice indicating the amount, as determined by Department regulations, will be mailed prior to the above date. The fee shall be submitted to the Business Office of the Department in Portland (unless otherwise notified).

Removed. see addendum #1

20. The Application Processing and Filing fees for renewal of this permit are due on July 1, 2002, and must be submitted at least 60 days prior to the permit expiration date. An invoice indicating the amount, as determined by Department regulations, will be mailed prior to the above date. The fee and application shall be submitted to the Business Office of the Department in Portland (unless otherwise notified).

GENERAL CONDITIONS AND DISCLAIMERS

G1. The permittee shall allow Department of Environmental Quality representatives access to the plant site and pertinent records at all reasonable times for the purposes of making inspections, surveys, collecting samples, obtaining data, reviewing and copying air contaminant emission discharge records and otherwise conducting all necessary functions related to this permit in accordance with ORS 468.095.

G2. The permittee shall have available at the facility at all times a copy of the Air Contaminant Discharge Permit.

G3. The permittee is prohibited from conducting open burning.

G4. The permittee shall at all times conduct dust suppression measures to meet the requirements set forth in "Fugitive Emissions" and "Nuisance Conditions" in OAR 340-21-050 through 340-21-060 and in OAR 340-30-440.

G5. The permittee shall immediately (i.e. as soon as possible but in no case more than one hour after the beginning of the excess emission period) notify the Department by telephone or in person of any excess emissions which are of a nature that could endanger public health, in accordance with OAR 340-28-1430. Follow-up reporting shall be made in accordance with Department direction and OAR 340-28-1430(3) and 340-28-1440.

Notification shall be made to the appropriate regional or branch office. The current Northwest Region telephone number is (503) 229-5554.

In the event of any excess emissions which are of a nature that could endanger public health and occur during non-business hours, weekends, or holidays, the permittee shall immediately notify the Department by calling the Oregon Emergency Response System (OERS). The current number is 1-800-452-0311.

G6. The permittee shall notify the Department in writing using a Departmental "Notice of Construction" form, or "Permit Application Form", and obtain approval in accordance with OAR 340-28-800 through 340-28-820 before:

a. Constructing or installing any new source of air contaminant emissions, including air pollution control equipment, or
b. Modifying or altering an existing source that may significantly affect the emission of air contaminants, or
c. Making any physical change which increases emissions, or

d. Changing the method of operation, the process, or the fuel use, or increasing the normal hours of operation to levels above those contained in the permit application and reflected in this permit and which result in increased emissions.

G7. Application for a modification of this permit must be submitted not less than 60 days prior to the source modification. A Filing Fee and an Application Processing Fee must be submitted with an application for the permit modification.

G8. The permittee shall notify the Department in writing using a Departmental "Permit Application Form" within 60 days after the following:

a. legal change of the registered name of the company with the Corporations Division of the State of Oregon, or
b. sale or exchange of the activity or facility.

Applicable Permit Fees must be submitted with an application for the name change.

G9. The issuance of this permit does not convey any property rights in either real or personal property, or any exclusive privileges, nor does it authorize any injury to private property or any invasion of personal rights, nor any infringement of federal, state, or local laws or regulations.

G10. This permit is subject to revocation for cause as provided in OAR 340-14-045.

ALL INQUIRIES SHOULD BE DIRECTED TO:

Department of Environmental Quality
Northwest Region - Air Quality Program
2020 SW 4th Ave., Suite 400
Portland, Oregon 97201-4987
Telephone: (503) 229-5554

Oregon
John A. Kitzhaber, M.D., Governor

Department of Environmental Quality
Northwest Region Portland Office
Air Quality
2020 SW 4th Avenue, Suite 400
Portland, OR 97201-4987
(503) 229-5554
FAX (503) 229-5265
TTY (503) 229-5471

JUN 0 1 1999

KOPPERS INDUSTRIES INC
7540 NW ST HELENS RD
PORTLAND OR 97210-3663

RE: ISSUANCE OF AIR CONTAMINANT DISCHARGE PERMIT # **26-2930**

The Department of Environmental Quality has completed processing your application for an Air Contaminant Discharge Permit. Based on the material contained in the application and any comments received during the recent public notice period, we have issued the enclosed permit.

The effective date of the permit is the date it was signed by the regional Air Quality Manager. The signature and date appear on the first page of the document. The permit is issued pursuant to Oregon Revised Statutes 468A and Oregon Administrative Rules (OAR) 340-14-005 through 340-14-050, and 28-1700 through 28-1790.

You may appeal conditions or limitations contained in the attached permit by applying to the Environmental Quality Commission, or its authorized representative, within twenty days from the date of this letter. Appeals are pursuant to ORS Chapter 183 and OAR Chapter 340, Division 14-025(6). Appeal procedures are contained in OAR Division 11-005 through 11-140.

A copy of the current permit must be available at the facility at all times (Condition G2). Failure to comply with permit conditions may result in civil penalties. **You are expected to read the permit carefully and comply with all conditions** to protect the environment of Oregon.

If you have any questions, please contact Kathy Amidon at (503) 229-5568.

Sincerely,

Ed Druback

Ed Druback
Air Quality Manager
Northwest Region

cc: T. Self, K-1800
6/4/99

EJD: jdb
Enclosure

Cc: Michelle Sandholm/AQ
EPA - Region X
Kathy Amidon/NWR

RECEIVED
JUN - 2 1999
KOPPERS INDS, INC.
PORTLAND OR

KOPPERS INDUSTRIES

Koppers Industries, Inc.
7540 N.W. St. Helens Road
Portland, OR 97210-3663

Amos S. Kamerer
Plant Manager

Telephone: 503-286-3681
Fax: 503-285-2831

April 6, 2000

Oregon Department Of Environmental Quality
Northwest Region
2020 SW 4th Avenue, Suite 400
Portland. Oregon 97201-4987
Attention: Randall Bailey

RE: Koppers Industries Inc.
7540 NW ST. Helens Road
Portland, OR 97210
Air Contaminant Discharge Permit # 26-2930

Dear Mr. Bailey:

On March 21, 2000, you and Audrey O'Brien met with Mark Cilley and I to discuss the fume system and potential permit violations at the Portland facility. During this meeting you and Ms. O'Brien stated that on several occasions emissions had been observed from the fume stack and appeared to exceed the 20% opacity limit as required by the air contaminant discharge permit.

Koppers Industries, Inc. (KII) is required by special condition 13 of the permit, to complete and submit a feasibility study to reduce particulate and VOC emissions from the fume recovery exhaust stack; and we have been working with a consultant to conduct the required study. Additionally, KII has voluntarily been in the process to reduce the stack emissions, by adding a cooler which would control the temperature of the scrubbing liquor. It is my understanding from our meeting that ODEQ would prefer that KII commit to the installation of a thermal oxidizer, in lieu of the feasibility study and the cooler installation.

As you are aware, KII had anticipated and ODEQ approved, the installation of a thermal oxidizer at some time in the future, as our business conditions dictated further expansion here at the facility. However, in an effort to work cooperatively with ODEQ, KII will agree to pursue additional equipment necessary to reduce the emissions from our system. We would like to first evaluate the addition of carbon absorption to the existing system, as an option instead of a thermal oxidizer. We request four weeks to conduct this study. Should we opt for the carbon absorption addition, we will submit to ODEQ the required period necessary to install such equipment. KII would like written confirmation from ODEQ that the feasibility study in condition 13 will not be required and requests a variance from any enforcement action regarding operation of the fume system, until the additional equipment is operational.

Should KII decide that the thermal oxidizer is the best option, the following is our estimate of the period necessary to install such equipment, based on our experience at our other facilities:

Milestone	Estimated Time frame
Prepare engineering package for bid	6 weeks
Receive bids and award contract	8 weeks
Order equipment/delivery	24-40 weeks
Installation	6 weeks
Start-up/Shake-down	4 weeks

KII will begin this process upon receipt of the variance from enforcement and relief from condition 13 of air contaminant discharge permit # 26-2930. A more detailed schedule for either of the options, will be provided upon the award of the supply contracts.

If you have any questions please contact me at 286-3681.

Sincerely,

Amos S. Kamerer

cc: Audrey O'Brien- ODEQ
Traci Self, KII
Mark Cilley, KII
Jim Dietz, KII
Leslie Hyde, KII
Bill Meisinger, KII

KOPPERS INDUSTRIES

Koppers Industries, Inc.
7540 N.W. St. Helens Road
Portland, OR 97210-3663

Amos S. Kamerer
Plant Manager

Telephone: 503-286-3681
Fax: 503-285-2831

April 6, 2000

DEPT OF ENVIRONMENTAL QUALITY
RECEIVED

APR 06 2000

NORTHWEST REGION

Oregon Department Of Environmental Quality
Northwest Region
2020 SW 4th Avenue, Suite 400
Portland. Oregon 97201-4987
Attention: Randall Bailey

RE: Koppers Industries Inc.
7540 NW ST. Helens Road
Portland, OR 97210
Air Contaminant Discharge Permit # 26-2930

Dear Mr. Bailey:

On March 21, 2000, you and Audrey O'Brien met with Mark Cilley and I to discuss the fume system and potential permit violations at the Portland facility. During this meeting you and Ms. O'Brien stated that on several occasions emissions had been observed from the fume stack and appeared to exceed the 20% opacity limit as required by the air contaminant discharge permit.

Koppers Industries, Inc. (KII) is required by special condition 13 of the permit, to complete and submit a feasibility study to reduce particulate and VOC emissions from the fume recovery exhaust stack; and we have been working with a consultant to conduct the required study. Additionally, KII has voluntarily been in the process to reduce the stack emissions, by adding a cooler which would control the temperature of the scrubbing liquor. It is my understanding from our meeting that ODEQ would prefer that KII commit to the installation of a thermal oxidizer, in lieu of the feasibility study and the cooler installation.

As you are aware, KII had anticipated and ODEQ approved, the installation of a thermal oxidizer at some time in the future, as our business conditions dictated further expansion here at the facility. However, in an effort to work cooperatively with ODEQ, KII will agree to pursue additional equipment necessary to reduce the emissions from our system. We would like to first evaluate the addition of carbon absorption to the existing system, as an option instead of a thermal oxidizer. We request four weeks to conduct this study. Should we opt for the carbon absorption addition, we will submit to ODEQ the required period necessary to install such equipment. KII would like written confirmation from ODEQ that the feasibility study in condition 13 will not be required and requests a variance from any enforcement action regarding operation of the fume system, until the additional equipment is operational.

Date: 4/6/00 4:56 PM
Sender: <BAILEY.Randy@deq.state.or.us>
To: Amos Kamerer
cc: OBRIEN.Audrey@deq.state.or.us
Priority: Normal
Subject: RE: Air Permit # 26-2930

Thank you, I'll let her know

> ----------
> From:
> amos_kamerer@koppers.com[SMTP:amos_kamerer@koppers.com]
> Sent: Thursday, April 06, 2000 02:26 PM
> To: Bailey.randy@deq.state.or.us
> Subject: Air Permit # 26-2930
>
>
> Randy,
>
> I had my office manager drop off my response letter to our meeting, to you
> and
> Audrey on her way home from work today. I just realized that even though
> the
> letter shows that Audrey is copied, only the original copy that is
> addressed to
> you was taken. Thus, would you please make sure the Audrey is given a
> copy.
>
> Thanks, and please excuse this over site.
>
> Amos Kamerer
> Koppers Industries, Inc.
>
>

RFC822.TXT

3. On 3/7 at 0200 the temperature was 210 degrees F, 214 at 0600, 220 at 1000, 225 at 1800 and 225 at 2200 hours.

On March 22, we met with Dick Law to discuss cost estimates of a thermal oxidizer to replace the current fume system. Based on previous estimates for the installation of a cooler and discussion with Mr. Law, the following options exist:

1. Install cooler:
   a. Estimated cost of cooler installation.....$55,000
   b. Emissions testing w/speciated analysis (2).....$24-30,000
   c. Install test ports on current stack (including cleaning).....$5,000-7,500
   d. Additional measures such as carbon filters.....$10-15,000
   e. Possible penalties for violation of 20% opacity.....$10,000/day
   f. Cost of community involvement/deteriorating relations with ODEQ ????
   g. Perform feasibility study.....$4,300
   h. Total cost.....$98,300-????

2. Install thermal oxidizer:
   a. Estimated cost of TO installation.....$75,000-????
   b. Emissions testing using FID.....$5,000

Based on the mentality of ODEQ and cost associated with our two options, I believe it would be in everyone's best interest to proceed with the installation of a thermal oxidizer. First, the day we toured the facility, the temperature of the fume system was in the range that the proposed cooler would be operating at and the personnel from ODEQ felt it's condition was marginal at best. Second, if we install the cooler we will most likely need to install carbon filter or some additional equipment to meet the 20% opacity limit (carbon filters may be questionable due to the plugging effect). Third, relations with ODEQ and possibly the community that is becoming very active will be diminished and harm future relationships. Fourth, the cost of a thermal oxidizer may be in line with the cost of the cooler (it will depend on the BTU value of the waste gas). Fifth, we could be assessed penalties that would exceed the cost either system.

Cc: A. Kamerer
W. Meisinger
T. Self

total HAP emissions are and that the only way we can resolve this issue and prove that we are not a major source and subject to the title V requirements is to conduct testing on the system and perform speciated analysis. They stated that most of the aluminum industries have become major sources due to the emissions of polycyclic organic material (POM) and they believe our source may fall under the same permitting conditions. They further stated that if our intent was to install a cooler to meet the current permit conditions that the emissions would have to be calculated on a potential to emit basis for assessing the requirements of title V.

After more discussion, we toured the facility and observed the emissions from the fume system at approximately 11:00 a.m. The system in our view was emitting a level that was probably in the best case scenario (subjective of course). Even at this level (temperature was 200 degrees F) they felt that we would be in violation of our permit conditions but it was borderline. I stated that if the cooler would produce an exudate comparable to the current situation would they feel that it would satisfy an interim condition until phase two of the project could be completed. They would not commit and stated that they would have to determine that at the time of occurrence and actions would be based on their findings at that time.

In conclusion of our meeting we asked what our options were at this time. As stated, the following options exist:

1. Conduct monitoring and perform speciated analysis for HAP and assess applicability of title V permitting. Also conduct opacity measurements in conjunction.
2. If we proceed with the option of a cooler for an interim measure, conduct monitoring with speciated analysis and opacity measurements. Install the cooler and conduct the monitoring again all based on the potential to emit.
3. Install a thermal oxidizer and make it an integral part of the operation (i.e. have set points tied into operations that will shut down operations if exceeded) and perform monitoring but based on actual emissions with the oxidizer.

They basically concluded that if we install an oxidizer we could forego the feasibility study and the cost of a cooler and continue to be a minor source. If we choose to pursue our other options than they will take appropriate action to ensure that the air quality of Oregon is not being affected by our decision.

Amos had records of the temperature and operating conditions on the dates noted by the DEQ and they are:

1. On 2/17, at 1800 hours the temperature was 245 degrees F. At 2200 hours it was 251 degrees F. On 2/18 at 1100 hours the temperature reached 278 degrees at which time Amos had the system shutdown.
2. On 3/6 at 0200 hours the temperature was 176 degrees F. It increased to 180 by 0600 and 200 by 1000 and remained at this temperature the remainder of the day.

TO:	J. Dietz	**FROM:**	Mark A. Cilley
LOCATION:	Pittsburgh	**LOCATION:**	Stickney
SUBJECT:	Portland Fume System/Meeting with ODEQ	**DATE:**	3/22/00

On March 21, 2000, Amos and I met with Randy Bailey and Audrey O'Brien to discuss the emissions from the fume system and their concerns about permit violations from this source. During the meeting that was prompted by a letter from ODEQ, they made it very clear that on several occasions they have visited the site with as many as 5 inspectors to take opacity readings. It was noted on each of the dates (February 17, March 6 & 9) that the fume system was not in compliance with the 20% opacity limit stated in the permit.

Both of the personnel from the DEQ were experienced with the coke/aluminum industries and well versed in the potential pollutants emitted from it. As such, they stated that this meeting was the first step in developing a resolution to the current ongoing permit excursions that they were positive was occurring. They were also concerned that the potential to emit HAP's were in excess of the 10 ton/year limit that would make the source a major source subject to the title V permitting requirements or at least a synthetic minor.

We stated that we were aware of the problem with the fume system and had planned to submit the feasibility study by June first and install a cooler to reduce the emission levels by increasing the absorption capacity of the scrubber. We have also submitted an intent to construct modification for the cooler. They asked what the timing was on the thermal oxidizer and phase two of the permit application. Amos stated that phase two was scheduled to begin approximately June of 2001. Audrey O'Brien stated, "that is approximately one year and the DEQ is not willing to wait that long". They both stated that the agency did not believe that a cooler would resolve this issue and that if a resolution was not made that was amenable to all (mainly the DEQ) that appropriate actions would be taken including penalties for permit excursions. Amos asked what these penalties might entail. It was stated that the first step was the meeting we were having today that would be followed by a response from Koppers within two weeks (we agreed on April 6th). If the DEQ is not satisfied with the response received then they will perform daily inspections and write citations for permit exceedences. The penalties involved can be $10,000/day.

The local citizens in the area have also been putting tremendous pressure on the DEQ that I believe is prompting much of the current activity. The HAP's are causing concern with the citizens it is only a matter of time before the Koppers facility is recognized as a concern. Based on the permit application the DEQ does not feel confident that we know what the

3/21/00

2/17/00 - observance, steel bay cutting, Delbert (bacon smoke)
- " visable violation of opacity
"Brown tint"
3/6/00 - more of the same on the prime stock
3/8/00 - " " "

"Codex" not the answer.
T.O. - is what they want.
Any test's on our emissions, NO.

- M/C - ~~KII~~ looking at the Codex, test it, then if it doesn't, look at a carbon filtration device.
- These concerned, we don't know what is being emitted
- concerned about HAP's Numbers
- PTE phase I HAP's
" " II "
before add on controls
- Could be major source on the HAP's
- POM/HAP's
- POM is 1 HAP

Options

- 1) do the testing on what are the emissions
  2) T.O.

- "Synthetic minor permits"
- Neighborhood getting very active
  BSCO

- Need to correct or will start
  start NOV's
  $10,000/day per incident

- Letter of follow up: 4/6/00
  what are our plan's

** POP pencil pitch study to today ** sent 5:30pm 3/21

Oregon
John A. Kitzhaber, M.D., Governor

Department of Environmental Quality
Northwest Region
2020 SW Fourth Avenue
Suite 400
Portland, OR 97201-4987
(503) 229-5263 Voice
TTY (503) 229-5471

March 6, 2000

KOPPERS INDUSTRIES INC
7540 NW ST HELENS RD
PORTLAND OR 97210-3663

Re: AQ - Multnomah Co.
Koppers Industries Inc.
File No. 26-2930

Attention: Amos Kamerer, Plant Manager

On February 17, 2000, I and two other inspectors observed emissions from the fume treatment stack near the southern border of your facility. We observed that the emissions from this stack had a strong noxious odor and significant visible emissions nearly continuously. On March 6, 2000, I returned to your facility and again witnessed significant visible emissions coming from the fume treatment stack. According to information submitted by Koppers Industries Inc. during the last permit renewal, this emission point is a source of Hazardous Air Pollutants. We are concerned that the fume control system may not be able to operate in compliance with the requirements of your permit.

We wish to schedule a meeting to discuss this matter some time during the week of March 20 to March 24, 2000. Please let us know your availability as soon as possible. I can be contacted at (503) 229-6736.

Sincerely,

Randall Bailey
Air Quality Permitting
Northwest Region

RECEIVED
MAR - 8 2000
KOPPERS INDS, INC.
PORTLAND OR

KOPPERS INDUSTRIES

FAX TRANSMITTAL

7540 N.W. Saint Helens Rd.
Portland, Oregon 97210-3663
Phone: (503) 286-3681
Fax: (503) 285-2831
Web Page: www.koppers.com

TO: J. Dietz, T. Self, M. Colley DATE: 3/8/00

FROM: Amos TOTAL # OF PAGES: 2

Re the attached, please call so we can discuss

IF THIS TRANSMITTAL IS IN ERROR, PLEASE CALL 503-286-3681 FAX # 503-285-2831

1st feasibility study due 6/1/00
2nd Notice of intent to construct
3rd Reschedule 3/31 OR 31st
VAC. w/o 3/20/00
sooner than later
Tele conference.
out tomorrow AM

Date: 3/8/00 6:09 PM
Sender: Amos Kamerer
To: Jim Dietz
cc: Traci Self; Mark Cilley
Priority: Normal
Subject: ODEQ / AQ complaint

Jim,

Regarding you question about the temperature of the heavy oil in the fume tank at the time of the complaint's, that info is as follows:

2/17	1800 hours	245 F	
	2200 hours	251 F	
2/18	1100 hours	278 F	- at this time, I had them shut down the system for the week end, even though we worked maintaining the heat to the pitch unloading line, for the unloading that was due on the 23rd.
3/6	0200 hours	176 F	
	0600 hours	180 F	
	1000 hours	200 F	
	same through 2200 hours	200 F	
3/7	0200 hours	210 F	
	0600 hours	214 F	
	1000 hours	220 F	
	1800 hours	225 F	
	2200 hours	225 F	

Let us have your comments prior to our meeting on the 21st.

Amos

Ponden
Dick Law #286-1235
Comb. Engineer
1200 ACFM
$50 - $75,000
1500 °F

Greg LaBier
Camas Corp.
360-834-5214

Dick Law 3/22/00

Rental flares on vertical stacks
7' Dia. x 40' tall
$900/day
$600/day
2 months or more 20% of payment would apply
to purchase

- Rph. est. $100,000 to $200,000
based on 500 BTU value of our fumes

18,000
12
36
18
216,000

Oregon
John A. Kitzhaber, M.D., Governor

Department of Environmental Quality
811 SW Sixth Avenue
Portland, OR 97204-1390
(503) 229-5696
TTY (503) 229-6993

April 26, 2001

Re: General Air Contaminant Discharge Permit Workshops

The Department of Environmental Quality proposes to issue General Air Contaminant Discharge Permits (ACDPs) for 18 source categories. Our records indicate that your facility could potentially qualify for assignment to one of the General ACDPs. Assignment to a General ACDP is optional, but it may be a less expensive alternative to the ACDP currently issued to your facility.

The General ACDPs will be adopted by rule, with a scheduled adoption date of August 10, 2001 and effective date of January 1, 2002. The public comment period for the rulemaking will be from May 15 to June 19 and public hearings will be held on June 18, 2001. Notice of the comment period and hearings will be mailed at a later date.

Prior to the public hearings, the Department invites you to attend one of the six workshops being held at different locations throughout the state. At the workshops, the Department will explain the purpose and scope of the General ACDP program as well as answer any questions. The following topics will be addressed in detail at the workshops:

- Purpose and scope of General ACDPs
- General ACDP qualifications
- General ACDP content
- General ACDP implementation plan
- General ACDP fees

As mentioned above, the General ACDP is an optional alternative to the current type of permits issued to regulated sources. The Department is developing the General ACDPs to further streamline the permitting process and improve the efficiency and effectiveness of the program. There are several advantages to General ACDPs, including lower costs, longer permit terms, more operating flexibility, and fewer permit actions. However, there are a few elements of the program that permittees should be aware of before electing to be assigned to a General ACDP. These will be discussed in detail at the workshop, but are briefly stated as follows:

- elimination of the baseline emission rate for sources that operated in 1977 or 1978;
- significant changes at a facility will require application for a Simple or Standard ACDP;
- increases above the generic Plant Site Emission Limit (PSEL) will require an air quality analysis; and
- actual annual emissions must be less than the generic PSEL for each pollutant; therefore, not all sources notified will qualify for a General ACDP. The generic PSELs are:

Pollutant	Annual Emissions (tons)
Particulate matter (PM)	24
Fine particulate matter (PM_{10})	14/4.5*
Sulfur dioxide (SO_2)	39
Nitrogen oxides (NO_x)	39
Carbon monoxide (CO)	99
Volatile organic compounds (VOC)	39

*Medford/Ashland AQMA

RECEIVED
APR 27 2001
KOPPERS INDS, INC.
PORTLAND OR

DEQ-1

Shortly after the General ACDPs are finalized in August, you will be requested to make an election as to what type of permit is appropriate for your facility. The type of permit will determine the fees to be paid for the year 2002. The Department encourages you to attend these workshops so that you will be able to make an informed decision about the type of permit you elect.

The draft permits along with the assessment reports and application forms are available for review on DEQ's web page at http://www.deq.state.or.us/aq/. Copies of the permits will also be available at the workshop or can be mailed to you upon request.

If you have any questions, please contact Mark Fisher at (541) 388-6146 x275 or by e-mail at fisher.mark@deq.state or.us.

Sincerely,

Pat Vernon
Program Development Manager
Air Quality Division

Shortly after the General ACDPs are finalized in August, you will be requested to make an election as to what type of permit is appropriate for your facility. The type of permit will determine the fees to be paid for the year 2002. The Department encourages you to attend these workshops so that you will be able to make an informed decision about the type of permit you elect.

The draft permits along with the assessment reports and application forms are available for review on DEQ's web page at http://www.deq.state.or.us/aq/. Copies of the permits will also be available at the workshop or can be mailed to you upon request.

If you have any questions, please contact Mark Fisher at (541) 388-6146 x275 or by e-mail at fisher.mark@deq.state.or.us.

Sincerely,

Pat Vernon
Program Development Manager
Air Quality Division

Workshops:

City	Date	Time	Location	Address
Portland	May 21	1000 – 1200	DEQ Northwest Region Office – 4th floor conference room A/B	2040 SW Fourth Street Portland, OR
Salem	May 21	1500 – 1700	Employment Division Auditorium	875 Union NE Salem, OR
Roseburg	May 22	0900 – 1100	Douglas County Library – Ford Community Room	1409 NE Diamond Lake Blvd. Roseburg, OR
Medford	May 22	1500 – 1700	Jackson County Courthouse – Auditorium	10 S. Oakdale Medford, OR
Bend	May 23	1500 – 1700	Deschutes County Library - Brooks Theater	601 NW Wall Street Bend, OR
Pendleton	May 24	1500 – 1700	Pendleton City Hall - Community Room	501 Emigrant Pendleton, OR

List of proposed General ACDPs:

Permit Number	Source Category	Permit Number	Source Category
AQGP-001	Hard Chrome Platers	AQGP-010	Sawmills/millwork >25,000 Bd. ft./shift
AQGP-002	Decorative Chrome Platers	AQGP-011	Boilers: oil fired >10 MMBtu, natural gas fired ≥30 MMBtu/hr
AQGP-003	Degreasers – batch cold	AQGP-012	Crematories
AQGP-004	Degreasers – batch vapor & in-line	AQGP-013	Grain Elevators ≥10,000 tpy
AQGP-005	Degreasers – all	AQGP-014	Prepared feeds/cereal/flour ≥10,000 tpy
AQGP-006	Dry Cleaners	AQGP-015	Seed Cleaning ≥5,000 tpy
AQGP-007	Asphalt Plants	AQGP-016	Coffee Roaster - ≥30 tpy
AQGP-008	Rock Crushers ≥25,000 tpy	AQGP-017	Bulk Gasoline Terminals
AQGP-009	Ready-mix/concrete plants	AQGP-018	Electric Power Generators

DEQ-DC1

Oregon
John A. Kitzhaber, M.D., Governor

Department of Environmental Quality
Northwest Region
2020 SW Fourth Avenue
Suite 400
Portland, OR 97201-4987
(503) 229-5263 Voice
TTY (503) 229-5471

May 2, 2001

KOPPERS INDUSTRIES INC
7540 NW ST HELENS RD
PORTLAND OR 97210-3663

Re: AQ - Multnomah Co.
Koppers Industries Inc.
File No. 26-2930

Attention: Amos Kamerer, Plant Manager

Thank you for your letter dated April 24, 2001 regarding operation of the 8MMBtu/hr hot oil heater. The permit is silent with regards to the continued operation of this unit after the new unit was operational, and the review report acknowledges continued operation as back-up. If a request to operate as you describe had been made, it would have been approved with the only stipulation being that the facility must continue to operate within the existing Plant Site Emissions Limit (PSEL). We do not consider the operation of the 8MMBtu/hr hot oil heater to be a violation of the permit as long as the PSELs were not violated, and we believe that they have not. Therefore, at this time no further action is required.

If you have any questions regarding these matters, I can be contacted at (503) 229-6736.

Sincerely,

Randall Bailey
Air Quality Permitting
Northwest Region

RECEIVED
MAY - 8 2001
KOPPERS INDS, INC.
PORTLAND OR

DEQ-1

KOPPERS INDUSTRIES

Koppers Industries, Inc.
7540 N.W. St. Helens Road
Portland, OR 97210-3663

Amos S. Kamerer
Plant Manager

Telephone: 503-286-3681
Fax: 503-285-2831

April 24, 2001

Oregon Department of Environmental Quality
Northwest Region
2020 SW 4th Avenue, Suite 400
Portland, Oregon 97201-4987

Attention: Randall Bailey

Reference: Air Containment Discharge
Permit # 26-2930

Dear Mr. Bailey,

During a recent review of our various existing permits, it was noticed that as a part of our Air Containment Discharge permit application to the ODEQ, back in 1997/1998, that the application stated that it was our intent at that time, as part of Phase I of the 5-year expected business scenarios covered in the application, that when the new liquid pitch unloading project was completed and the new 10 MM Btu/hour hot oil heater was in operation, that the original, or existing, 8 MM Btu/hour hot oil heater would only be used, as back up heater.

However, during the actual construction of the liquid pitch-unloading project in 1999, not all of the necessary piping changes needed to permit this conversion to only using just the one hot oil heater for all operations, was completed. Thus, it has been our standard operating practice sense December of 1999, at the time of the start-up of the new hot oil heater, to operate both of the hot oil heaters at the same time, contrary to what our original application stated was our intention; and, we failed to advise ODEQ of this change in operations.

I would like to point out, however, that this was not done with any devious intentions; this was a simple over site on our part. The fact that our annual emission report for years 1999 and 2000 clearly shows the emission data for both of the hot oil heater operations, hopefully, demonstrates that this was the case. Also, at no time during the operations of both of these heaters at the same time, did we exceed the permit limits.

Also, as you know, the operations here at the terminal have been substantially reduced over the last year, as a result of the Western Energy Crisis and it's effect on our many customers, in the Northwest Aluminum Industry. As a part of our every day efforts to reduce our operating expenses, we are now using the one modification that was in fact made to the hot oil piping systems during the construction project, where we added one connecting pipeline between the two hot oil heater systems. This connecting line permits us to partially reduce the use of the old 8 MM But/hour heater during our operating week, and in the process, reduce our consumption of natural gas.

This permits us to shut off the old hot oil heater, once the oil in that system has raised to the proper operating temperature, then, the new hot oil heater is capable of maintaining the hot oil in both systems, at the required operating temperatures. Thus, our current operating procedure for the weekly start up of operations on Sunday afternoon, is for both of the hot oil heaters to be started at the same time, once the hot oil in the old system is up to the proper operating temperature, it is shut off, generally within a 12 to 18 hour period of time. At that point, only the new hot oil heater is operated for the balance of the operating week. So, ironically, today, we have ended up coming fairly close to what we had planned to do originally, when the application was submitted. Our year 2001 annual emission report to ODEQ will reflect this change in our regular operations and will show the resulting reduction in the emission data.

I can only reflect on what happened here; that because the submitted operating plan with the original application, to only operate the new hot oil heater after installation, did not become a part of the actual written permit when issued, I over looked the fact that operating both of the heaters at the same time reflected a change in our operations, and, thus, required ODEQ notification. I obviously, regret this over site.

If you have any questions regarding this matter, I can be reached at 503/286-3681.

Sincerely,

Amos S. Kamerer

CC: J. Dietz, KII
T. Self, KII
M. Cilley, KII

Oregon
John A. Kitzhaber, M.D., Governor

Department of Environmental Quality
811 SW Sixth Avenue
Portland, OR 97204-1390
(503) 229-5696
TTY (503) 229-6993

October 15, 2001

Koppers Industries, Inc.
7540 NW St Helens Road
Portland, OR 97210

Re: Air Contaminant Discharge Permit (ACDP) Modification:
Reclassification of Permit Type
Permit No. 262930

In August, the Department of Environmental Quality sent you two letters outlining the process for selecting a new permit category for your Air Contaminant Discharge Permit. Since then, Department staff have been meeting with permittees on both an individual and group basis to discuss the available options. The enclosed Permit Addendum has been issued to you to amend the above referenced Air Contaminant Discharge Permit, changing it to the appropriate category. The new category is based on the recent permit election process described above. The election of new permit categories is a result of the revisions to Oregon Administrative Rules Chapter 340, Division 216 adopted by the Environmental Quality Commission in May, 2001, and that became effective on July 1, 2001, as well as Oregon Revised Statutes 468A.

This is an administrative change that reclassifies your permit in accordance with the new rules, and determines the amount of your annual permit fee. All of the terms and conditions of your existing permit remain in effect until the permit is reissued at the normally scheduled renewal time. A permit modification initiated at your request, or by the Department, is the only mechanism for changing your permit conditions.

The Permit Addendum becomes effective 1/1/2002 and it will be the basis for the 2002 annual fees. The invoice for your 2002 annual fee will be mailed to you later this month.

If you feel that the permit type shown on the enclosed Permit Addendum is not correct, or if you would like to make a change to your permit election, please contact the regional office listed on the Permit Addendum before January 2, 2002. In keeping with the process outlined in our August letters, the Department will open public hearings late 2001 regarding fee increases approved by the 2001 Legislature. The Environmental Quality Commission is scheduled to consider new Air Quality fees at their March 8/9, 2002 meeting. A supplemental billing will be initiated in April to reflect any changes to your current annual fee, and reconcile any differences.

If you have any questions or comments, please contact the regional office listed on the cover of the Permit Addendum.

Sincerely,

B. Patricia Vernon

Pat Vernon
Program Development Manager
Air Quality Program

PV:af
LTR/AQ78354.doc

Enclosure

RECEIVED
OCT 23 2001
KOPPERS INDS, INC.
PORTLAND OR

cc: T. Self, K-1800
F.Y.I.
Amos

DEQ-1

AIR CONTAMINANT DISCHARGE PERMIT

Department of Environmental Quality
Northwest Region
2020 SW 4th Avenue, #400
Portland, Oregon 97201
(503) 229-5554

This permit is being issued in accordance with the provisions of ORS 468A.040 and based on the land use compatibility findings included in the permit record.

ISSUED TO:

Koppers Industries, Inc.
7540 NW St. Helens Road
Portland, OR 97210

PLANT SITE LOCATION:

7540 N.W. St. Helens Road
Portland, OR.

INFORMATION RELIED UPON:

OAR 340-216-0020, Table 1 and Permit Election on file.

ISSUED BY THE DEPARTMENT OF ENVIRONMENTAL QUALITY

Audrey M O'Brien

Audrey O'Brien, Northwest Region Air Quality Manager — 10/15/2001 Dated

Addendum Number C

In accordance with OAR 340-216-0020, Air Contaminant Discharge Permit Number (ACDP) number 26-2930 is classified as a Simple ACDP.

New Permit Addendum.doc

Oregon
John A. Kitzhaber, M.D., Governor

Department of Environmental Quality
Northwest Region
2020 SW Fourth Avenue
Suite 400
Portland, OR 97201-4987
(503) 229-5263 Voice
TTY (503) 229-5471

September 7, 2001

Re: Assignment to new types of Air Contaminant Discharge Permits

Dear Permit Holder:

Recently DEQ sent a letter, dated August 10, to all companies that hold Air Contaminant Discharge Permits (ACDP), advising of the need to select a new type of permit because of changes in DEQ's rules. The August 10 letter raised some questions that this letter is intended to clarify.

Our goal is to identify new permit categories prior to the annual compliance fee billing in October, both to meet our budgetary requirements and to be sure sources know early on what to expect for the new fees. It was not the Department's intention to provide an unreasonable timeframe in which to make selections. We have always recognized that selecting the permit category is an important decision and we intend to work closely with companies through September to help make a preliminary decision.

The preliminary selections are needed by the end of September for invoicing purposes. Our permit writers and inspectors are working diligently to provide assistance and information in making your new permit selection. We will do everything we can to help you make the proper permit selection. If, despite our combined best efforts, you are either unable to make a selection, or you do not meet the criteria for the permit category selected, the Department will select a preliminary permit category by the September 30 deadline. In all cases, the Department will detail our decision verbally or in writing. All companies have until January 2, 2002 to finalize their category selection.

As most of you know, the new permit categories are part of our recently streamlined permitting process. The new permit fees associated with those categories now more closely reflect the work required of DEQ to issue the various permit types and to evaluate compliance with permit conditions. The new permit fees did not increase the overall revenue for the Department. They did cause some companies' fees to go up, while other companies went down.

All companies will receive an invoice for the annual compliance fee in October.

The August 10 letter also discussed a proposed fee increase. Budget approval including this fee increase was approved by the legislature to cover a loss of state tax dollars (General Fund) which previously funded part of the ACDP program. The invoice you receive in October will not include those proposed fee increases. DEQ is reopening public comment on the fee increase and

Koppers015907

will hold hearings in Portland, Bend, Pendleton, Medford and Salem. The proposed fee increase will be presented to the Environmental Quality Commission early next year.

If you have any questions or concerns, please call your permit writer or inspector. Thank you for your understanding and cooperation.

Sincerely,

Audrey M O'Brien

Audrey O'Brien
Air Quality Program Manager
Northwest Region

9/7/01 11:18 AM

VMM from Rose Lim, ODEQ

They have accepted our "Simple" selection, but this will change when our business gets back to Normal

RECEIVED

SEP 1 0 2001

KOPPERS INDS, INC.
PORTLAND OR

FAX: Rose Lim
503/229-5265

Permit Selection: Please Check One Box to Indicate your permit selection

Basic ACDP	General ACDP	Simple ACDP	Standard ACDP
		X	

If you selected a General ACDP, what category applies: _____

Signature of Responsible Official: _____

Title: Plant Manager Date: 8/22/01

A.S. Kamerer
Koppers Industries, Inc.
7540 NW Saint Helens Road
Portland, OR. 97210
503/286-3681

KOPPERS
7540 N.W. St. Helens Rd.
Portland, Oregon 97210
Phone: (503) 286-3681
Fax: (503) 285-2831
E-mail: amos_kamerer@koppers.com

4.25
8/20/01

Rose / ODEQ

503 - 229 - 6191

New Permit Letter

"Blue ~~card~~ Post card" to be returned

"Standard" catagory

Fax # 5265

Synthetic minor

AMOS S. KAMERER

KOPPERS
7540 N.W. St. Helens Rd.
Portland, Oregon 97210
Phone: (503) 286-3681
Fax: (503) 285-2831
E-mail: amos_kamerer@koppers.com

Traci

Phase II

Additional tank

But would then add T.O.

Simple
vs.
Standard

Not a title 5 facility

AMOS S. KAMERER

SYLVESTER Terri

From: LIM Rose
Sent: Tuesday, August 21, 2001 10:06 AM
To: SYLVESTER Terri
Subject: RE: Koppers Industries

This is the fax (503) 285-2831.

----Original Message----
From: SYLVESTER Terri
Sent: Tuesday, August 21, 2001 9:41 AM
To: LIM Rose
Subject: RE: Koppers Industries

Get a fax number from him, please

----Original Message----
From: LIM Rose
Sent: Tuesday, August 21, 2001 9:25 AM
To: SYLVESTER Terri
Cc: FERNANDEZ Armalinda
Subject: Koppers Industries

Permit # 26-2930 Koppers Industries

I just talked to Amos Kameter and he informed that they did not receive the letter re permit election. Amos has no idea about permit election. Please check. Thanks.

The mailing address we have — and the letter would have gone to — is 7540 NW St. Helens Rd
Portland, 97210-3663

If this is not correct, please contact me, Terri Sylvester at 503-229-5181.

Thanks.

PS. You may either fax your election "sheet" since you dont have a postcard, or can do so by calling Rose back

Oregon
John A. Kitzhaber, M.D., Governor

Department of Environmental Quality
Headquarters
811 SW Sixth Avenue
Portland, OR 97204-1390
(503) 229-5696
FAX (503) 229-6124
TTY (503) 229-6993

August 10, 2001

Re: Air Contaminant Discharge Permits
Response requested by August 20, 2001

Dear Permit Holder:

This letter is to notify you that revisions to Oregon Administrative Rules for the Air Contaminant Discharge Permit (ACDP) program that became effective on July 1, 2001 will affect your permit. The rule changes were the result of a major program efficiency effort that will streamline the air quality permitting process while maintaining the same level of environmental protection. These changes will benefit both the Department and Regulated Sources. Two important changes to bring to your attention now are:

1) existing ACDPs will be replaced by new types of ACDPs and
2) General ACDPs were issued for eighteen (18) source categories.

As a result, you need to select the type of ACDP that is most appropriate for your facility and advise the Department of your decision by August 20, 2001. If you do not make a selection by that date, the Department will make the selection for you. This letter is intended to provide information to help you make your permit type selection. However, in order to make the most informed decision, you are encouraged to read the rules and discuss options with your permit writer. The information that accompanies this letter is divided into six sections. They include:

1) **Summary of Significant Rule Changes.** This section is a good overview of the more significant changes to the rules that were adopted in May of this year. Staff have tried to highlight the critical issues for you to review in making your selection.
2) **Permit Types.** This section gives an overview of each of the new permit types to aid in your analysis of which one best suits your particular needs. *The Department staff will evaluate your selection to ensure it meets all rule requirements.*
3) **Fees.** Recent and proposed new changes to the permit fee structure are explained in this section.
4) **Permit Selection Procedure.** This section contains the methods that you may use to notify the Department of your permit selection.
5) **Contacts and Resources List.** This list provides contact persons for your questions.
6) **Transition Period.** This section reviews the timing of invoices and how permits will be transitioned from the existing category to the newly selected one.

As stated above, the new permitting rules include benefits for both the Department and Regulated Sources. Some of these benefits are:

- Simplified applications
- Faster processing of permits
- Fewer source-specific permits
- Fewer permit modifications
- More operational flexibility
- More permit options
- More fee options
- Regular and predictable fees for budgeting

We are excited about implementing these new rules and realizing the benefits as soon as possible. Thank you for taking the time to review this information and make your permit selection. If you have any questions, please contact the DEQ regional office nearest you.

Sincerely,

E. Patricia Vernon
Manager, Program Operations
Air Quality Division

Koppers015914

1. SUMMARY OF SIGNIFICANT RULE CHANGES:

Types of Permits

- Your current permit may be an Insignificant Discharge, Minimal, Regular, or Synthetic Minor ACDP. A Basic, General, Simple, or Standard ACDP will replace it.

PSEL

- General and Simple ACDPs now include Generic Plant Site Emission Limits (PSELs) instead of source specific PSELs. For most pollutants, the Generic PSEL is established at the significant emission rate (SER) minus 1 ton. The most commonly used Generic PSELs are shown below in Table 1:

Table 1: Most Commonly Used Generic PSELs

Pollutant	Generic PSEL (tons/yr)	Pollutant	Generic PSEL (tons/yr)
Particulate matter (PM)	24	Carbon monoxide (CO)	99
PM <10 microns (PM_{10})	14[1]	Volatile organic compounds (VOC)	39
Sulfur dioxide (SO_2)	39	Single hazardous air pollutant (HAP)	9
Nitrogen oxides (NO_x)	39	Combined HAPs	24

- The PSEL will be an annual limit for each 12 consecutive month period instead of a calendar year limit. This allows the Department to eliminate some of the other limits in permits.
- You may retain a source-specific PSEL only if you select a Standard ACDP.
- There will no longer be any short term PSELs, except in areas where a short term SER has been established by rule as needed to meet federal air quality standards. Currently, the only area required to have short term PSEL is the Medford/Ashland Air Quality Maintenance Area (AQMA) for particulate matter (PM_{10}).

Netting Basis

- Netting Basis is a simplified way for a facility with a source specific PSEL to determine if physical changes or changes in operation are subject to the New Source Review (NSR) rules. The Netting Basis equals the baseline emission rate (actual emissions during 1977 or 1978) minus any reductions required by rule, plus any increases approved through the NSR program.
- The Netting Basis is set at zero for any facility that is issued or assigned to a Basic, Simple, or General ACDP. To take advantage of the lower fees and flexibility of a Basic, Simple or General ACDP, a source that operated during the baseline period must give up its netting

[1] In the Medford/Ashland AQMA, the Generic PSEL for PM_{10} is 4.5 tons/yr., and 49 lbs/day.

basis. Forfeiture of a netting basis is permanent. Therefore, for many sources, this is one of the most important factors to consider in selecting a permit type.

Unassigned Emissions

- Unassigned Emissions identifies the portion of the netting basis that is in excess of the current capacity of the facility. Due to physical changes at the facility, it may no longer be possible to have pollutant emissions as high as during the baseline period even when operating at maximum production levels. The excess is identified as unassigned emissions. All unassigned emissions are available for use at the facility until July 1, 2007. After that date, a cap will be placed on the total amount of unassigned emissions that may be retained. Like the netting basis, a permittee must select a Standard ACDP to retain unassigned emissions. Forfeiture of unassigned emissions is permanent.

Fees

- Permit fees are now based on the type of permit rather than the type of activity. The new fees will be effective for existing permittees for calendar year 2002, as well as any new permit applications submitted after July 1, 2001. Annual fees will continue to be invoiced in October with payment due on December 1 for the following year.
- There will no longer be any application processing or filing fees for permit renewals.
- The Minimal ACDP fee schedule (e.g., payment of the annual compliance fee once every 5 years) is no longer an option. There will be an annual fee assessed for all types of permits.
- Permit fees will include a fee increase approved by the 2001 Legislature and scheduled to be adopted by the Environmental Quality Commission in September. This fee increase is needed to retain existing ACDP staff. More information on the fee increase is provided later in this document.

2. PERMIT TYPES

Provided below is a discussion of each type of permit to assist you with making your choice. Some facilities may only qualify for one type of permit. Others may qualify for more than one. Remember, only one type of permit may be issued to a source, so the permittee must decide which type is best suited for his or her operations. A comparison of the different types of permits is provided in Table 5 on page 10.

Basic ACDP: The Basic ACDP is the best choice for facilities that meet the source descriptions provided in Table 2 on the following page.

Permit Duration:	10 years
Permit Fee:	$100/year
PSEL:	Not applicable
Other Requirements:	Annual report to demonstrate compliance with permit qualification criteria

Table 2: Basic ACDP Source Categories (OAR 340-216-0020, Table 1, Part A)

No.	**Description of Sources and Activities from OAR 340-216-0020, Table 1, Part A**
1	**Autobody Repair or Painting Shops** in the Portland AQMA painting more than 25 automobiles in a year. (Portland AQMA only)
2	**Natural Gas and Propane Fired Boilers** (with or without #2 diesel oil back-up[2]) of 10 or more MMBTU but less than 30 MMBTU/hr heat input constructed after June 9, 1989.
3	**Bakeries**, Commercial baking more than 500 tons of dough per year
4	**Cereal Preparations and Associated Grain Elevators** more than 2,000 but less than 10,000 tons per year throughput. . (special control areas only)
5	**Coffee Roasters** roasting more than 6 tons coffee beans in a year, but less than 30 tons/yr.
6	**Flour, Blended and/or Prepared and Associated Grain Elevators** more than 2,000 but less than 10,000 tons per year throughput. (special control areas only)
7	**Grain Elevators** used for intermediate storage more than 1,000 but less than 10,000 tons/yr. Throughput. (special control areas only)
8	**Millwork** (including kitchen cabinets and structural wood members) more than 5,000 but less than 25,000 bd. ft./maximum 8 hour input.
9	**Non-Ferrous Metal Foundries** more than one but less than 100 tons/yr. of metal charged
10	**Pesticide Manufacturing** more than 1,000 tons/yr. but less than 5,000 tons/yr.
11	**Prepared feeds for animals and fowl and associated grain elevators** more than 1,000 tons/yr. but less than 10,000 tons per year throughput
12	**Rock, Concrete or Asphalt Crushing** both portable and stationary more then 5,000 but less than 25,000 tons/yr. crushed
13	**Sawmills and/or Planing Mills** more than 5,000 but less than 25,000 bd. ft./maximum 8 hour finished product
14	**Seed Cleaning and Associated Grain Elevators** more than 1,000 but less than 5000 tons/year throughput. (special control areas only)
15	**Spray Paint Booths and surface coating operations** whose actual or expected usage of coating materials is greater than 250 gallons per month, excluding sources that exclusively use non-VOC containing coatings (e.g. powder coating operations).
16	**Wood Furniture and Fixtures** more than 5,000 but less than 25,000 bd. ft./maximum 8 hour input

[2] Backup means less than 10,000 gallons of fuel per year.

General ACDP: General ACDPs have been issued for 18 source categories as shown in the list provided in Table 3. General ACDPs are optional. That is, if the facility meets the qualifications of a General ACDP, the permittee may elect to be assigned to the General ACDP. The permittee still has the option to choose a source specific permit even if the facility qualifies for a General ACDP.

To qualify for a General ACDP, a source must

- have actual emissions less than the Generic PSEL,
- not require any facility-specific permit conditions, and
- not have ongoing, recurring compliance problems.

The General Permit qualifications are included in the General ACDP. The permittee may elect to obtain a Standard ACDP instead of a General ACDP in order to retain the netting basis or unassigned emissions, if applicable. In addition, the Department may determine that a Simple or Standard ACDP is required if there are ongoing, recurring compliance problems.

Permit Duration:	Issued by rule for a 10-year term; reassignment automatic unless permittee requests different type
Permit Fee:	Varies, see table 3, below
PSEL:	Generic, no netting basis, no unassigned emissions, see Table 1
Other requirements:	Maintain records of source operations and submit annual reports

Table 3: List of General ACDPs[3]

Permit Number	Source Category	Current Annual Permit Fee[4]
AQGP-001	Hard Chrome Platers	$1,300.00
AQGP-002	Decorative Chrome Platers	$900.00
AQGP-003	Halogenated Solvent Degreasers – batch cold	$900.00
AQGP-004	Halogenated Solvent Degreasers – batch vapor & in-line	$900.00
AQGP-005	Halogenated Solvent Degreasers – all	$1,300.00
AQGP-006	Dry Cleaners	$500.00
AQGP-007	Asphalt Plants	$1,300.00
AQGP-008	Rock Crushers ≥25,000 tpy	$900.00
AQGP-009	Ready-mix/concrete plants	$500.00
AQGP-010	Sawmills/millwork >25,000 Bd. ft./shift and veneer or plywood plants	$1,300.00
AQGP-011	Boilers: oil fired >10 MMBtu, natural gas fired ≥30 MMBtu/hr	$900.00
AQGP-012	Crematories	$500.00

[3] You may obtain a copy of the General ACDPs from DEQ's website or contact the Permit Coordinator listed at the end of this letter.
[4] See Table 6, page 11, for a comparison of the current annual fee and the proposed increase.

Permit Number	Source Category	Current Annual Permit Fee[4]
AQGP-013	Grain Elevators ≥10,000 tpy	$500.00
AQGP-014	Prepared feeds/cereal/flour ≥10,000 tpy	$500.00
AQGP-015	Seed Cleaning ≥5,000 tpy	$500.00
AQGP-016	Coffee Roaster - ≥30 tpy	$500.00
AQGP-017	Bulk Gasoline Plants	$500.00
AQGP-018	Electric Power Generators	$900.00

Simple ACDP: The Simple ACDP is similar to a General ACDP, except that it is issued to a specific source. It is primarily used in cases where there are not enough similar sources to issue a general permit, or where a source does not qualify for a general permit. Sources or activities required to obtain at least a Simple ACDP are listed in OAR 340-216-0020, Table 1, Part B (shown as Table 4 in this document). However, the permittee may elect to obtain a Standard ACDP instead of a Simple ACDP in order to retain the netting basis or unassigned emissions, bank an emission reduction credit, use an alternative compliance method (bubble), or take advantage of other standard permitting features. In addition, the Department may determine that a Standard ACDP is required in accordance with OAR 340-216-0020, Table 1, Part C.

Permit Duration:	Five years
Permit Fee:	$2,000 annually (See Table 6, page 11, for a comparison of the current annual fee and the proposed increase)
PSEL:	Generic, no netting basis, no unassigned emissions, actual emissions must be less than the Generic PSEL, see Table 1 on page 3.
Other Requirements:	Can include specific provisions, such has customized reporting dates, compliance schedules, specific testing or monitoring requirements.

Table 4: List of Sources and Activities from OAR 340-216-0020, Table 1, Part B

No.	Source or Activity Description (OAR 340-216-0020, Table 1, Part B)
1	Aerospace or Aerospace Parts Manufacturing
2	Aluminum Production - Primary
3	Ammonia Manufacturing
4	Animal Rendering and Animal Reduction Facilities
5	Asphalt Blowing Plants
6	Asphalt Felts or Coating
7	Asphaltic Concrete Paving Plants both stationary and portable
8	Bakeries, Commercial over 10 tons of VOC emissions per year
9	Battery Separator Manufacturing
10	Battery Manufacturing and Re-manufacturing
11	Beet Sugar Manufacturing
12	Boilers and other Fuel Burning Equipment over 10 MMBTU/hr. heat input, except

No.	Source or Activity Description (OAR 340-216-0020, Table 1, Part B)
	exclusively Natural Gas and Propane fired units (with or without #2 diesel backup[a]) under 30 MMBTU/hr. heat input
13	Building paper and Buildingboard Mills
14	Calcium Carbide Manufacturing
15	*** Can or Drum Coating
16	Cement Manufacturing
17	* Cereal Preparations and Associated Grain Elevators 10,000 or more tons/yr. throughput
18	Charcoal Manufacturing
19	Chemical Manufacturing and Distribution
20	Chlorine and Alkalies Manufacturing
21	Chrome Plating
22	Coffee Roasting (roasting more than 30 tons per year)
23	Concrete Manufacturing including Redimix and CTB
24	Crematory and Pathological Waste Incinerators
25	Electrical Power Generation from combustion (excluding units used exclusively as emergency generators)
26	Ethylene Oxide Sterilization
27	*** Flatwood Coating regulated by Division 232
28	*** Flexographic or Rotogravure Printing subject to RACT
29	* Flour, Blended and/or Prepared and Associated Grain Elevators 10,000 or more tons/yr. throughput
30	Galvanizing and Pipe Coating
31	*** Gasoline Plants and Bulk Terminals subject to OAR 232
32	Gasoline Terminals
33	Glass and Glass Container Manufacturing
34	* Grain Elevators used for intermediate storage 10,000 or more tons/yr. throughput
35	Grain terminal elevators
36	Gray iron and steel foundries, malleable iron foundries, steel investment foundries, steel foundries (not elsewhere identified)
37	Gypsum Products Manufacturing
38	Hardboard Manufacturing (including fiberboard)
39	Incinerators with two or more ton per day capacity
40	Lime Manufacturing
41	*** Liquid Storage Tanks subject to OAR Division 232
42	Magnetic Tape Manufacturing
43	Manufactured and Mobile Home Manufacturing
44	Marine Vessel Petroleum Loading and Unloading
45	Millwork (including kitchen cabinets and structural wood members) 25,000 or more bd. ft./maximum 8 hr. input
46	Molded Container
47	Motor Coach Manufacturing
48	Natural Gas and Oil Production and Processing and associated fuel burning equipment
49	Nitric Acid Manufacturing

No.	Source or Activity Description (OAR 340-216-0020, Table 1, Part B)
50	Non-Ferrous Metal Foundries 100 or more tons/yr. of metal charged
51	Organic or Inorganic Industrial Chemical Manufacturing
52	*** Paper or other Substrate Coating
53	Particleboard Manufacturing (including strandboard, flakeboard, and waferboard)
54	Perchloroethylene dry cleaners that do not submit a complete Dry Cleaner Annual Hazardous Waste and Air Compliance Report by June 1 of any given year
55	Pesticide Manufacturing greater than 5,000 or more tons/yr. annual production
56	Petroleum Refining and Re-refining of Lubricating Oils and Greases including Asphalt Production by Distillation and the reprocessing of oils and/or solvents for fuels
57	Plywood Manufacturing and/or Veneer Drying
58	Prepared feeds for animals and fowl and associated grain elevators 10,000 or more tons per year throughput
59	Primary Smelting and/or Refining of Ferrous and Non-Ferrous Metals
60	Pulp, Paper and Paperboard Mills
61	Rock, Concrete or Asphalt Crushing both portable and stationary 25,000 or more tons/yr. crushed
62	Sawmills and/or Planing Mills 25,000 or more bd. ft./maximum 8 hr. finished product
63	Secondary Smelting and/or Refining of Ferrous and Non-Ferrous Metals
64	* Seed Cleaning and Associated Grain Elevators 5,000 or more tons/yr. throughput
65	Sewage Treatment Facilities employing internal combustion for digester gasses
66	Soil Remediation Facilities stationary or portable
67	Steel Works, Rolling and Finishing Mills
68	*** Surface Coating in Manufacturing subject to RACT
69	Surface Coating Operations with actual emissions of VOCs before add on controls of 10 or more tons/yr.
70	Synthetic Resin Manufacturing
71	Tire Manufacturing
72	Wood Furniture and Fixtures 25,000 or more bd. ft./maximum 8 hr. input
73	Wood Preserving (excluding waterborne)
74	All Other Sources not listed herein that the Department determines an air quality concern exists or one which would emit significant malodorous emissions
75	All Other Sources not listed herein which would have actual emissions, if the source were to operate uncontrolled, of 5 or more tons a year of PM10 if located in a PM10 non-attainment area, or 10 or more tons of any single criteria pollutant in any part of the state

*Applies only to Special Control Areas

**Portland AQMA only

***Portland AQMA, Medford-Ashland AQMA or Salem SATS only

(a) "Back-up" means less than 10,000 gallons of fuel per year

Standard ACDP: The Standard ACDP is for sources that have actual emissions greater than the Generic PSELs or want to retain their netting basis or unassigned emissions, bank an emission reduction credit, use an alternative compliance method (bubble), or take advantage of other standard permitting features. The Standard ACDP is required for any new or modified source subject to the Oregon Title V Operating Permit program or New Source Review; incinerators for PCB and/or other hazardous wastes; all sources that the Department determines have emissions that constitute a nuisance; and, all sources subject to Reasonably Available Control Technology (RACT), National Emission Standard for Hazardous Air Pollutants (NESHAP), New Source Performance Standard (NSPS), State Maximum Available Control Technology (MACT), or other significant Air Quality regulation(s). Source categories for which a General ACDP has been issued and sources with less than 10 tons/yr emissions that qualify for a Simple ACDP are not required to select a Standard ACDP.

Permit Duration:	Five years
Permit Fee:	$4,000 annually (See Table 6, page 11, for a comparison of the current annual fee and the proposed increase)
PSEL:	Source-specific PSEL at Generic PSEL level or higher, netting basis, unassigned emissions
Other requirements:	Can include source specific provisions, such has custom reporting dates, compliance schedules, specific testing or monitoring requirements.

Table 5: ACDP Comparisons

	Basic	**General - Low**	**General– Medium**	**General – High**	**Simple**	**Standard**
Activities and sources (OAR 340-216-0020, Table 1)	Part A	Part B	Part B	Part B	Part B	Part B or C
Netting Basis	No	No	No	No	No	Maybe
PSEL	No	Generic	Generic	Generic	Generic	Source specific or Generic
Initial permit fee[5]	$100	$1,000	$1,000	$1,000	$5,000	$10,000
Annual permit fee[6]	$100	$500	$900	$1,300	$2,000	$4,000
Permit term (years)	10	10	10	10	5	5

3. FEES

As mentioned above, the fee structure has changed. Old permit fees were based on the type of activity rather than the type of permit. This created an inequity because sources with similar types of permits were charged different amounts, depending on the type of activity. The new system is based on the type of permit, which is more equitable. In addition, separate renewal fees were eliminated, and these costs were included in the annual fees. Overall, the initial

[5] The initial permit fee is waived for switching from an existing permit to a new type of permit at renewal time.
[6] See Table 6, page 11, for a comparison of the current annual fee and the proposed increase.

Koppers015922

change was revenue neutral for the Department, although individual permittees may pay more or less than they have in the past, depending on the type of activity, the old type of permit they held and the new type of permit they select. Details of the fee changes and the fiscal and economic impact analysis were provided in the May 4, 2001 rulemaking package.

In addition to the restructured fee table, the legislature approved a 30% increase to the DEQ Air Quality ACDP fees in the Department's budget for 2001-2003. This increase was necessary to fund existing staff due to rising costs and declining General Fund. As a result, the fees will be increased by a separate rulemaking that should be effective before the 2002 invoices are sent out in October. Details of the fee increase are provided in the public notice associated with that rulemaking which was mailed to you July 13 and is also available on the Department's website. The comment period for the fee increase rulemaking is scheduled to end on August 15, 2001. The proposed fee increases are shown in the following table. Although the overall fee increase is 30%, the Department has proposed to increase only five of the six annual fees rather than apply the increase across the board to all annual, initial and special activity fees. Consequently, the five annual fees are proposed to increase by 35% to produce an overall increase in fee revenue of 30%.

Table 6: Current and Proposed Annual Fees.

ACDP Permit Type	Existing Permit Annual Fees	Proposed Annual Fee	Proposed Annual Fee Increase
Basic ACDP	$100.00	$100.00	$0.00
General ACDPs			
Fee Class One	$500.00	$675.00	$175.00
Fee Class Two	$900.00	$1,210.00	$310.00
Fee Class Three	$1,300.00	$1,745.00	$445.00
Simple ACDP	$2,000.00	$2,690.00	$690.00
Standard ACDP	$4,000.00	$5,380.00	$1,380.00

NOTE: Please be advised that the legislature also approved a 20% increase to water quality permit fees. If your facility also holds a water quality permit, the Water Quality Division will be mailing you a notice in the near future of the proposed fee increase.

4. PERMIT SELECTION PROCEDURES

Please respond by August 20, 2001. If you do not respond, the Department will make the permit selection for you.

To make your permit selection, use one of the following methods:

- fill out the enclosed postcard and return it to the DEQ;
- call the Permit Coordinator at the DEQ regional office closest to the facility;
- send a facsimile that contains all the information requested in the postcard to the Permit Coordinator at the DEQ regional office closest to the facility, or

Koppers015923

- send an e-mail that contains all the information requested in the postcard to the Permit Coordinator at the DEQ regional office closest to the facility.

If you have questions, either contact your permit writer or the Permit Coordinator at the DEQ regional office closest to the facility.

Again, if the DEQ does not get a response, the Department will decide which permit is appropriate. The Department will select the permit type with the lowest fee option available, which could result in the loss of netting basis or unassigned emissions.

5. TRANSITION PERIOD

Existing permits will remain in effect until replaced by the new type of permit. Sources electing the General ACDP will be assigned to the General Permit effective January 2002. Sources electing either a Basic, Simple or Standard ACDP will be issued the new type of permit when the existing permit expires, unless the permittee requests the new type of permit sooner. Requests to replace an existing permit prior to the scheduled expiration date will incur the initial permit application-fee or specific activity fees. The annual permit fees shown in Table 5 are in effect now. The invoices that will be mailed in October will reflect the legislatively approved increase shown in Table 6, or an alternative fee schedule adopted by the Environmental Quality Commission in September. The fee will be based on your permit selection or the Department's selection if we do not get a response.

Koppers015924

6. CONTACTS AND RESOURCES

Permit selections:

Counties	Permit Coordinator Address and Telephone
Clackamas, Clatsop, Columbia, Multnomah, Tillamook, and Washington	Department of Environmental Quality Northwest Region 2020 SW 4th Avenue, Suite 400 Portland, OR 97201-4987 Telephone: (503) 229-5582 Facsimile: (503) 229-5265 e-mail: bussey.daphne.l@deq.state.or.us
Benton, Coos, Curry, Douglas, Jackson, Josephine, Lincoln, Linn, Marion, Polk, and Yamhill	Department of Environmental Quality Western Region Patty Hamman 750 Front Street NE, Suite 120 Salem, OR 97301-1039 Telephone: (503) 378-8240 ext. 225 Facsimile: (503) 378-4196 e-mail: hamman.patricia@deq.state.or.us
Baker, Crook, Deschutes, Gilliam, Grant, Harney, Hood River, Jefferson, Klamath, Lake, Malheur, Morrow, Sherman, Umatilla, Union, Wallowa, Wasco, Wheeler	Department of Environmental Quality Eastern Region Bonnie Hough 2146 NE 4th Street, Suite 104 Bend, OR 97701-3647 Telephone: (541) 388-6146 ext. 223 Facsimile: (541) 388-8283 e-mail: hough.bonnie@deq.state.or.us
All counties, if you can't reach the Permit Coordinators listed above.	Department of Environmental Quality Headquarters Linda Fernandez 811 SW Sixth Ave. Telephone: (503) 229-5584 Facsimile: (503) 229-5675 e-mail: fernandez.armalinda@deq.state.or.us

Rules and General Permits

DEQ web page: http://www.deq.state.or.us/aq/aqpermit/acdp.htm

DEQ INSPECTION REPORT
Northwest Region – Air Quality Section

Facility Name and Address: Koppers Industries, Inc. 7540 NW St. Helens Rd. Portland, OR 97210-3663	***Permit Number***: **26-2930** ***County***: **Multnomah**

Inspection Date/Time: 08/05/2002 10:40 AM	***Reason for Inspection: (check one)***	Regularly scheduled inspection	x
		Complaint follow-up	
		Other (specify)	

Permit Type: (check one)	ACDP	x	***Inspection Type: (check two)***	Comprehensive 07	x
				Informational 08	
	Title V			Announced	x
				Unannounced	

Inspector(s): (Name, Title and Agency	Rose Lim, Natural Resource Specialist DEQ-NWR/AQ	RLim
Air Quality Manager	Audrey O'Brien, Northwest Region (503) 229-5572	NLC for AOB

Facility Representative(s): (Name, Title and Phone #)	Amos Kamerer, Plant Manager (503) 286-3681

Overview of Facility

- Koppers Industries, Inc., operates a coal tar pitch processing facility. This facility receives, stores, and transfers coal tar pitch primarily used in the primary aluminum production industry.

Pre-inspection File Review

- A file review was conducted. There are no ongoing compliance schedules or enforcement actions associated with this source. An annual report for the calendar year 2001 was submitted to the Department in accordance with the current permit reporting requirement.

Walk-through of Facility

- I interviewed Mr. Amos Kamerer, the plant manager of the facility during the inspection.
- No visible emissions or odors were observed.

RECEIVED
SEP 03 2002
KOPPERS INDS, INC.
PORTLAND OR

- The facility was in operation at the time of inspection.
- The facility was operating at normal levels at the time of inspection.
- General conditions of the facility (housekeeping, fugitive emissions, etc) were good.
- Weather Condition: 70 degrees, sunny sky, and light wind.

Permit Conditions Reviewed During Inspection

Condition #	Description	In Compliance?
7,8,9,10	Plant Site Emission Limit	Y
16	Monitoring/Recordkeeping	Y
17,18	Annual Report	Y

Review of Annual or Semi-Annual Reports During Inspection

- The facility is current with submitting an annual report to the Department for each year the permit has been in effect, in accordance with current permit reporting requirements.

Compliance Status of Facility

Check one of the following:

X	Facility is in compliance with the permit conditions described above.
	Facility is not in compliance with one or more of the permit conditions described above (provide additional detail below).

Is the facility under a compliance schedule to correct previous compliance problem(s)? Check one of the following:

X	Facility is not under a compliance schedule to correct previous noncompliance.
	Facility is on schedule to correct previous noncompliance.
	Facility is not on schedule to correct previous noncompliance (provide additional detail below).

Is the facility under a compliance schedule to comply with future requirement(s)? Check one of the following:

X	Facility is not under a compliance schedule for future requirement(s).
	Facility is on schedule to meet future requirement(s).
	Facility is not on schedule to meet future requirement(s) (provide additional detail below).

Cc:

Amos Kamerer, Plant Manager
Koppers Industries, Inc.
7540 NW St. Helens Rd.
Portland, OR 97210-3663

DEQ, AQ Source File

Rose Lim 9/6/02

baseline year - Renewal
this year last chance for baseline
otherwise its set permanently
DDEQ advising permit holders re this fact.
Simple permit
PSEL
Standard permit
PSEL limits

? Need to do ASAP, if wanted

T.O. won't help re PSEL
Trac! call re Applicable Rules

Rose S. Lim
Natural Resource Specialist
Air Quality Division
Office: (503) 229-6191
lim.rose@deq.state.or.us

Oregon
DEPARTMENT OF
ENVIRONMENTAL
QUALITY
Northwest Region
2020 SW Fourth Ave Ste 400
Portland, Oregon 97201-4987
Fax: (503) 229-5265
TTY: (503) 229-5471
Toll free in OR: (800) 452-4011
www.deq.state.or.us

Kamerer Amos

From: Kamerer Amos
Sent: Tuesday, August 06, 2002 1:25 PM
To: Dietz Jim; Self Traci
Subject: ODEQ - ACDP

Jim and Traci,

The inspection today from ODEQ on the Air Permit was uneventful. The only data that was reviewed was the complaint log and the boiler inspection records. We took about a 30 minute tour of the facility, to the dock. She never even asked to see the Fume Recovery System, however, I had previously, during our office discussions, explained how the system worked. The system was running while she was here, with very little emissions, but I'm not even sure that she noticed.

She is working with Randy, learning the Air side of the business, she expects to eventually to be a Permit Writer. She said that Randy spends all of his time with the title V permits holders.

Did you two discuss the need to advise ODEQ about the emissions matter, when the fume recovery system is not working?

Amos Kamerer
Phone # 503-286-3681
Fax # 503-285-2831
E-mail: Kamereras@koppers.com

Oregon
John A. Kitzhaber, M.D., Governor

Department of Environmental Quality
Northwest Region Portland Office
Air Quality
2020 SW 4th Avenue, Suite 400
Portland, OR 97201-4987
(503) 229-5554
FAX (503) 229-5265
TTY (503) 229-5471

JUN 0 1 1999

KOPPERS INDUSTRIES INC
7540 NW ST HELENS RD
PORTLAND OR 97210-3663

RE: ISSUANCE OF AIR CONTAMINANT DISCHARGE PERMIT # **26-2930**

The Department of Environmental Quality has completed processing your application for an Air Contaminant Discharge Permit. Based on the material contained in the application and any comments received during the recent public notice period, we have issued the enclosed permit.

The effective date of the permit is the date it was signed by the regional Air Quality Manager. The signature and date appear on the first page of the document. The permit is issued pursuant to Oregon Revised Statutes 468A and Oregon Administrative Rules (OAR) 340-14-005 through 340-14-050, and 28-1700 through 28-1790.

You may appeal conditions or limitations contained in the attached permit by applying to the Environmental Quality Commission, or its authorized representative, within twenty days from the date of this letter. Appeals are pursuant to ORS Chapter 183 and OAR Chapter 340, Division 14-025(6). Appeal procedures are contained in OAR Division 11-005 through 11-140.

A copy of the current permit must be available at the facility at all times (Condition G2). Failure to comply with permit conditions may result in civil penalties. **You are expected to read the permit carefully and comply with all conditions** to protect the environment of Oregon.

If you have any questions, please contact Kathy Amidon at (503) 229-5568.

Sincerely,

Ed Druback
Air Quality Manager
Northwest Region

cc: T. Self, K-1800
6/4/99

EJD: jdb
Enclosure

Cc: Michelle Sandholm/AQ
EPA - Region X
Kathy Amidon/NWR

RECEIVED
JUN - 2 1999
KOPPERS INDS, INC.
PORTLAND OR

AIR CONTAMINANT DISCHARGE PERMIT

Department of Environmental Quality
Northwest Region
2020 SW 4th Avenue, Suite 400
Portland, Oregon 97201-4987
Telephone: (503) 229-5263

Issued in accordance with the provisions of ORS 468A.040 and based on the land use compatibility findings included in the permit record.

ISSUED TO:

Koppers Industries, Inc.
7540 NW St. Helens Road
Portland, OR 97210-3663

INFORMATION RELIED UPON:

Application No: 016551
Date received: 8/25/97

PLANT SITE LOCATION:

7540 NW St. Helens Road
Portland, OR

LAND USE COMPATIBILITY STATEMENT:

From: City of Portland
Dated: 9/15/97

ISSUED BY THE DEPARTMENT OF ENVIRONMENTAL QUALITY:

Ed Druback, Northwest Region Air Quality Manager

JUN 0 1 1999
Dated

Source(s) Permitted to Discharge Air Contaminants:

TYPE OF FACILITY (from Table 4, OAR 340-28-1750)	STANDARD INDUSTRY CODE
58. b) Boiler located in Portland AQMA, 10 MM Btu/hour energy input, distillate oil fired	4961 (2865)

PERMITTED ACTIVITIES

The permittee is herewith allowed to discharge exhaust gases from those processes and activities directly related to or associated with the air contaminant source(s) listed above in accordance with the requirements, limitations, and conditions of this permit, until such time as this permit expires or is modified or revoked.

Compliance with the specific requirements, limitations and conditions contained herein does not relieve the permittee from complying with all other laws, rules and standards administered by the Department, nor does it allow significant levels of emissions of air contaminants not limited in this permit or contained in the permit application.

PERFORMANCE STANDARDS AND EMISSION LIMITS

1. Particulate emissions from any single air contaminant source shall not exceed any of the following:

    a. 0.2 grains per standard cubic foot, corrected to 12% CO_2 or 50% excess air, for combustion sources existing prior to June 1, 1970;
    b. 0.1 grains per standard cubic foot, corrected to 12% CO_2 or 50% excess air, for combustion sources installed, constructed, or modified after June 1, 1970;
    c. An opacity equal to or greater than twenty percent (20%) for a period aggregating more than three (3) minutes in any one (1) hour, excluding uncombined water vapor; and.
    d. Particulate emissions from any air contaminant source installed on or before June 1, 1970 other than fuel burning equipment and fugitive emission sources must not exceed 0.2 grains per standard cubic foot. This condition does not apply to fugitive emissions sources.
    e. Particulate matter which is larger than 250 microns and which may be deposited upon the real property of another person shall not be emitted.

2. The permittee shall not sell, distribute, use (combust), or make available for use, any fuel oil which exceeds the following sulfur content limitations:

    a. 0.3 percent sulfur by weight for ASTM Grade 1 (distillate).
    b. 0.5 percent sulfur by weight for ASTM Grade 2 (distillate).
    c. 1.75 percent sulfur by weight for residual fuel oil.

3. The permittee shall not allow the emission of odorous matter or other fugitive emissions so as to create nuisance conditions off the permittee's property. Nuisance conditions will be verified by Department personnel. The creation of nuisance conditions may, in addition to any other action the Department may take, result in a permit modification to require a compliance schedule to control the nuisance conditions.

OPERATIONS AND MAINTENANCE

4. The permittee shall at all times maintain and operate all air contaminant generating processes and all air contaminant control equipment at full efficiency and effectiveness, such that the emissions of air contaminants are kept at the lowest practicable levels.

5. The permittee shall minimize fugitive dust emissions by:
   a. Treating vehicular traffic areas of the plant site under the control of the permittee.
   b. Storing collected material from air pollution control equipment in a covered container or other method equally effective in preventing the material from becoming airborne during storage and transfer.

6. A maintenance service must be performed on the boiler at least once every two years. As a minimum, the service must include an inspection of the burners and refractory chamber, cleaning, adjustment, and repair as necessary. Records of the service shall be maintained on site for a period of at least two years.

PLANT SITE EMISSION LIMITS

7. Emissions of Sulfur Dioxide on a plant site basis shall not exceed 22 tons per year or 20 pounds per hour.

8. Emissions of Nitrogen Oxides on a plant site basis shall not exceed 28 tons per year or 11 pounds per hour.

9. Emissions of Carbon Monoxide on a plant site basis shall not exceed 7 tons per year or 3 pounds per hour.

10. Emissions of Volatile Organic Compounds on a plant site basis shall not exceed 20 tons per year or 14 pounds per hour

AIR POLLUTION EPISODES

11. The permittee may elect to file a Source Emission Reduction Plan (SERP) with the Department in accordance with OAR 340-27-015, specifying the procedures the permittee will follow in the event an Air Pollution Alert, Warning, or Emergency Episode is declared in the Portland area by the Department. The Source Emission Reduction Plan shall be available on the source premises for inspection by any authorized personnel.

12. In the event an Air Pollution Alert, Warning, or Emergency Episode is declared in the Portland area by the Department, the permittee shall take actions appropriate to the declared Air Pollution Episode as listed in the Source Emission Reduction Plan on file with the Department, or with Oregon Administrative Rules 340, Division 27 "Air Pollution Emergencies" if no Source Emission Reduction Plan has been filed with the Department.

Air Pollution Episodes will be declared by the Department and information will be made available through the radio and television media.

SPECIAL CONDITIONS

13. By no later than June 1, 2000, the permittee shall complete and submit to the Department a detailed study of the feasibility of reducing particulate and VOC emissions from the fume recovery exhaust stack. The study shall include a time schedule for implementation of reduction strategies where practicable.

14. The permittee shall notify the Department in writing of the date the new 10 MM Btu/hour hot oil heater is started up. The notification shall be submitted no later than seven (7) days after startup.

15. All nuisance condition complaints shall be investigated by a plant representative immediately following receipt of such a complaint. A log of all complaints shall be maintained at the plant site and shall include date of contact, time of observed nuisance condition, description of nuisance condition, location of receptor, and status of plant operation during the observed period. The nuisance complaint log shall be maintained on site for a period of not less than two years, and be made available to Department representatives upon request.

MONITORING REQUIREMENTS

16. The permittee shall effectively inspect and monitor the operation and maintenance of the plant and associated air contaminant control facilities and shall implement the procedures necessary to monitor and record the following parameters. A record of all such data shall be maintained for a period of two years at the plant site for inspection by the authorized representatives of the Department.

    a. All operating and production parameters to be reported to the Department annually as required in Condition 18.
    b. Excess emissions records as defined in OAR 340-28-1400 through 340-28-1440 (recorded on occurrence)
    c. A description of any maintenance to the air contaminant control system (recorded on occurrence)

REPORTING REQUIREMENTS

17. The permittee shall submit to the Department by June 1, 2000 the results of the feasibility study required in Condition 13.

18. The permittee shall submit to the Department by March 1 of each year this permit is in effect two (2) copies of the following information for the preceding calendar year:

    a. Operating parameters:

        i. Annual throughput of coal tar pitch
        ii. Annual throughput of heavy oil
        iii. Total boiler operating time (hours/year)
        iv. Total hot oil heater operating time (hours/year)
        v. Highest sulfur content of oil burned (obtained from supplier)
        vi. Types and quantities of fuels burned (gallons or MMCF)
        vii. Average plant operating schedule (hours/day, days/week, weeks/year)

    b. Computations of total VOC and HAPs emissions for the previous calendar year.

    c. A log of all planned and unplanned excess emissions in accordance with OAR 340-28-1440.

    d. A summary of all odor complaints received during the year; by specifying the number of complaints on each date that complaints were received.

    e. Explain any permanent changes made in the plant process or production which would effect air contaminant emissions, and indicate when changes were made.

    f. List all major maintenance performed on air pollution equipment

    g. The report shall be sent to DEQ, Northwest Region, 2020 SW 4th Ave., #400, Portland, Oregon 97201-4987 unless otherwise noted. The permit number must be prominently displayed on the report.

FEE SCHEDULE

DEQ

19. The Annual Compliance Determination Fee for this permit is due on August 1 of each year this permit is in effect. An invoice indicating the amount, as determined by Department regulations, will be mailed prior to the above date. The fee shall be submitted to the Business Office of the Department in Portland (unless otherwise notified).

revised; see Addendum #1

20. The Application Processing and Filing fees for renewal of this permit are due on July 1, 2002, and must be submitted at least 60 days prior to the permit expiration date. An invoice indicating the amount, as determined by Department regulations, will be mailed prior to the above date. The fee and application shall be submitted to the Business Office of the Department in Portland (unless otherwise notified).

GENERAL CONDITIONS AND DISCLAIMERS

G1. The permittee shall allow Department of Environmental Quality representatives access to the plant site and pertinent records at all reasonable times for the purposes of making inspections, surveys, collecting samples, obtaining data, reviewing and copying air contaminant emission discharge records and otherwise conducting all necessary functions related to this permit in accordance with ORS 468.095.

G2. The permittee shall have available at the facility at all times a copy of the Air Contaminant Discharge Permit.

G3. The permittee is prohibited from conducting open burning.

G4. The permittee shall at all times conduct dust suppression measures to meet the requirements set forth in "Fugitive Emissions" and "Nuisance Conditions" in OAR 340-21-050 through 340-21-060 and in OAR 340-30-440.

G5. The permittee shall immediately (i.e. as soon as possible but in no case more than one hour after the beginning of the excess emission period) notify the Department by telephone or in person of any excess emissions which are of a nature that could endanger public health, in accordance with OAR 340-28-1430. Follow-up reporting shall be made in accordance with Department direction and OAR 340-28-1430(3) and 340-28-1440.

Notification shall be made to the appropriate regional or branch office. The current Northwest Region telephone number is (503) 229-5554.

In the event of any excess emissions which are of a nature that could endanger public health and occur during non-business hours, weekends, or holidays, the permittee shall immediately notify the Department by calling the Oregon Emergency Response System (OERS). The current number is 1-800-452-0311.

G6. The permittee shall notify the Department in writing using a Departmental "Notice of Construction" form, or "Permit Application Form", and obtain approval in accordance with OAR 340-28-800 through 340-28-820 before:

a. Constructing or installing any new source of air contaminant emissions, including air pollution control equipment, or
b. Modifying or altering an existing source that may significantly affect the emission of air contaminants, or
c. Making any physical change which increases emissions, or

d. Changing the method of operation, the process, or the fuel use, or increasing the normal hours of operation to levels above those contained in the permit application and reflected in this permit and which result in increased emissions.

G7. Application for a modification of this permit must be submitted not less than 60 days prior to the source modification. A Filing Fee and an Application Processing Fee must be submitted with an application for the permit modification.

G8. The permittee shall notify the Department in writing using a Departmental "Permit Application Form" within 60 days after the following:

a. legal change of the registered name of the company with the Corporations Division of the State of Oregon, or
b. sale or exchange of the activity or facility.

Applicable Permit Fees must be submitted with an application for the name change.

G9. The issuance of this permit does not convey any property rights in either real or personal property, or any exclusive privileges, nor does it authorize any injury to private property or any invasion of personal rights, nor any infringement of federal, state, or local laws or regulations.

G10. This permit is subject to revocation for cause as provided in OAR 340-14-045.

ALL INQUIRIES SHOULD BE DIRECTED TO:

Department of Environmental Quality
Northwest Region - Air Quality Program
2020 SW 4th Ave., Suite 400
Portland, Oregon 97201-4987
Telephone: (503) 229-5554

Department of Environmental Quality
Northwest Region

AIR CONTAMINANT DISCHARGE PERMIT APPLICATION REVIEW REPORT

Koppers Industries, Inc.
7540 NW St. Helens Road
Portland, OR 97210-3663

SOURCE TEST	AMB MON	COMPL SCHED	SPEC COND	RPT FREQ	EXCESS RPT	NSPS	NSR	PSD	NESHAP	SIZE	PUB NTC
			Y	A						A-2	Y

GENERAL BACKGROUND INFORMATION

1. This is a new permit for an existing source. In March 1975, Koppers Co., Inc. proposed a coal tar pitch processing facility. A permit was written to cover the operation of the proposed facility. In January 1976, the company informed the Department that the proposed operation would not be added to the facility. The permit was modified to allow the marketing of the remaining 3600 tons of coal tar on hand as roofing bitumen. The Department then canceled the permit as the facility reverted to being a terminal facility only.

   In response to a complaint in Koppers' geographical area, several facilities were visited. Department staff discovered an oil-fired boiler operating without a permit. The facility contains a 21 Mm Btu/hour boiler with the capability of burning oil. Under OAR 340-28-1750, Table 4 (formerly OAR 340-20-155, Table 1), all oil fired boilers greater than 10 MM Btu/hour input capacity in the Portland Air Quality Maintenance Area are required to have an air discharge permit. Because the Department had mistakenly canceled the permit in 1977, no enforcement action was taken against the source.

   The company proposes to replace an 8 MM Btu/hour natural gas fired hot oil heater to provide heat to storage tanks. The old heater will be used as a back-up. Gaseous emissions from the tanks will be ducted to the fume recovery system. Installation of a heated pipeline and a liquid pitch storage tank is planned within the next two years.

   The facility now receives, stores, and transfers creosote. The company plans to cease its shipments of creosote and instead move heavy oil and coal tar pitch (pencil pitch). Pencil pitch is received in solid form, placed in tanks and heated, then moved through pipes to load onto rail cars or tank cars. The heavy oil is also heated for ease of movement.

2. Changes to the facility will take place in two phases. Phase 1, a 10 MM Btu/hr hot oil heater will be added. The current hot oil heater will become a back-up. Two new storage tanks (T-33 and T-67) for pitch will be installed. The new tanks will have a vapor pressure below the trigger level, and will not be subject to New Source Performance Standards.

   Phase 2 is dependent upon business conditions. In Phase 2, one more storage tank (T-210) and a fume combustion system will be installed. The permittee is required to notify the Department prior to beginning Phase 2 construction.

3. The facility is located in a maintenance area for carbon monoxide and ozone. Two contributors to ozone, nitrogen oxides (NO_x) and volatile organic compounds (VOC), are regulated pollutants. The facility is an insignificant source of CO, NO_x, and VOC. The area is in attainment for all other pollutants.

4. A Land Use Compatibility Statement signed by the City of Portland on September 15, 1997 granted unconditional approval.

5. The Department has issued a water quality permit to this facility, NPDES 100419. The plant site includes 25 tanks for the collection and storage of storm water.

6. Air contaminant sources at the facility for the coming permit period are shown below. The table does not include equipment to be added under Phase 2.

Equipment	Manufacturer	Capacity/ Rate	Installed/ Modified
Boiler, fired on natural gas or distillate oil	N. American	21 MM Btu/hr input	1965
Hot oil heater, fired on natural gas or oil	N. American	8 MM Btu/hr input	1990
Hot oil heater, fired on natural gas or oil	N. American	10 MM Btu/hr input	1999
Pitch/oil transfer system	N/A	150,000 ton/year	1965 1999 (mod.)
Fume recovery system, with scrubber	N/A	150,000 ton/year	1987

HAZARDOUS AIR POLLUTANTS (HAPS)

7. The heating of these substances causes certain hazardous air pollutants (HAPS) to be driven off. The HAPS include naphthalene, quninoline, biphenyl, dibenzofuran, benzene, and toluene, and others in lesser quantities. Maximum total combined HAPS emissions will be 3.1 tons per year, which also represents the facility's potential to emit HAPS. After the new equipment is installed, total combined HAPS emissions are estimated at 0.001 tons per year.

8. If business conditions warrant implementation of Phase II, the current fume recovery system may be changed to a fume combustion system by feeding the HAP emissions collected by the fume recovery system through a fume combustion unit.

PLANT SITE EMISSION LIMIT (PSEL) INFORMATION

ORIGINAL PLANT SITE EMISSION LIMIT

9. The facility was in operation during the baseline years. Baseline year information has not been provided, however, so Baseline Emission Rates have not been established.

PROPOSED PLANT SITE EMISSION LIMIT

10. The normal operating schedule for the equipment is 24 hrs/day x 7 days/wk x 52 wks/yr = 8,736 hrs/yr.

11. Normal annual fuel usage is100,000 gallons of diesel oil and 184 million cubic feet of natural gas. Maximum hourly fuel burned is 150 gallons of diesel oil and/or 30,000 cubic feet of natural gas.

12. Throughput of pencil pitch is expected to be 100,000 tons per year, and a maximum of 562 tons per hour.

13. An emission summary is below. Refer to the Plant Site Emission Detail Sheet, attached.

Source	SO_2 tons/yr (lbs/hr)	NO_x tons/yr (lbs/hr)	CO tons/yr (lbs/hr)	VOC tons/yr (lbs/hr)
Oil combustion	21.3 (20.0)	6.0 (5.6)	1.5 (1.4)	0.06 (0.06)
Gas combustion	0.4 (0.1)	22.4 (5.6)	5.6 (1.4)	0.45 (0.11)
Material transfer				19.25 (14.1)
Totals	21.7 (20.1)	28.4 (11.2)	7.1 (2.8)	19.7 (14.3)

14. Emissions of PM and PM10 are considered negligible and are not included in the Plant Site Emission Limit, shown below.

Pollutant	Short-Term Limit	Annual Limit
Sulfur dioxide (SO2)	20 Lb/Hour	22 Ton/Year
Nitrogen oxides (NO_x)	11 Lb/Hour	28 Ton/Year
Carbon Monoxide (CO)	3 Lb/Hour	7 Ton/Year
Volatile Organics (VOC)	14 Lb/Hour	20 Tons/yr

SIGNIFICANT EMISSION RATE

15. The Plant Site Emission Limit increase over baseline is less than the Significant Emission Rate (SER) as defined in OAR 340-28-110 for all pollutants and is shown below. No further air quality analysis is required for those pollutants.

Significant Emission Rates:

Pollutant	Baseline (tons/yr)	Current PSEL (tons/yr)	Increase (tons/yr)	SER (tons/yr)
SO_2	0	22	22	40
NO_x	0	28	28	40
CO	0	7	7	100
VOC	0	20	20	40

ADDITIONAL REQUIREMENTS

16. Special conditions contained in the permit include the requirement to notify the Department upon installation of the 10 MM Btu/hour heater, and to make a response to all complainants. The permit also includes a requirement to conduct a study of the feasibility of reducing particulate and VOC emissions from the fume recovery exhaust stack.

17. The source is required to submit reports to the Department annually. The permit also requires a report on the results of the feasibility study (Condition 13) by June 1, 2000.

18. The source is not subject to immediate (within one hour) reporting of excess emissions, except when the emissions may endanger public health.

19. This source is not subject to federal regulations for New Source Performance Standards (NSPS), 40 CFR 60, Subpart Kb, for storage tanks because the tanks have a vapor pressure of 0.2 psia, which is lower than the trigger level of 1.5 psia.

20. This source is not subject to federal regulations for New Source Review.

21. This source is not subject to federal regulations for Prevention of Significant Deterioration (PSD).

22. This source is not subject to federal regulations for National Emissions Standards for Hazardous Air Pollutants (NESHAP), 40 CFR 63, Subpart LL, because it is not a major source.

PUBLIC NOTICE

The configuration of the plant differs greatly from the time the last permit was issued. Therefore the permit was placed on public notice from March 16, 1998 to April 15, 1998. No comments were received. During the public notice, the applicant informed the Department of a change in plans that would increase gaseous emissions. The proposed permit was modified, and again offered for public notice from February 9, 1999 to March 11, 1999. No comments were received from the public.

KAmidon:Edruback
5/18/99

Koppers Ind.									
ACDP 26-2930									
			Plant Site Emission Detail Sheet						
		Fuel Usages	Pollutant	DEQ Emission Factor			Emissions		
Fuel:									
Oil, distillate	600	Thou. Gallons/year	PM	2	Lb/1,000 gal.	0.60	Tons/yr	0.56	Lb/hr
	282	Gal./hour	PM10	1	Lb/1,000 gal.	0.30	Tons/yr	0.28	Lb/hr
			SO2	71	Lb/1,000 gal.	21.30	Tons/yr	20.02	Lb/hr
			NOx	20	Lb/1,000 gal.	6.00	Tons/yr	5.64	Lb/hr
			CO	5	Lb/1,000 gal.	1.50	Tons/yr	1.41	Lb/hr
			VOC	0.2	Lb/1,000 gal.	0.06	Tons/yr	0.06	Lb/hr
Natural gas	321	MM Cubic Ft./year	PM	2.5	Lb/MMCF	0.40	Tons/yr	0.10	Lb/hr
	0.04	MM Cubic Ft./hour	PM10	2.5	Lb/MMCF	0.40	Tons/yr	0.10	Lb/hr
			SO2	2.6	Lb/MMCF	0.42	Tons/yr	0.10	Lb/hr
			NOx	140	Lb/MMCF	22.47	Tons/yr	5.60	Lb/hr
			CO	35	Lb/MMCF	5.62	Tons/yr	1.40	Lb/hr
			VOC	2.8	Lb/MMCF	0.45	Tons/yr	0.11	Lb/hr
Material Transfer	70	Thou. Gallons/year	VOC			19.25	Tons/yr	14.1	Lb/hr
System	100	Gal./hour							
						Emission Limits			
Note: PM and PM10 emissions are considered					SO2	22	Tons/yr	20	Lb/hr
negligible and are not included in the PSEL.					NOx	28	Tons/yr	11	Lb/hr
					CO	7	Tons/yr	3	Lb/hr
					VOC	20	Tons/yr	14	Lb/hr
Oil usage is considered to be 12 weeks per year.									
Natural gas usage is as estimated by the applicant.									
VOC emissions from the material transfer system were									
calculated using ChemCad. Refer to the source file.									

6/01/1999

AIR CONTAMINANT DISCHARGE PERMIT

Department of Environmental Quality
Northwest Region
2020 SW Fourth Avenue, Suite 400
Portland, OR 97201-4987
Telephone: (503) 229-5263

Issued in accordance with the provisions of ORS 468A.040 and based on the land use compatibility findings included in the permit record.

ISSUED TO:

Koppers Industries, Inc.
7540 NW St. Helens Road
Portland, OR 97210-3663

INFORMATION RELIED UPON:

Department Initiated

PLANT SITE LOCATION:

7540 NW St. Helens Road
Portland, OR

LAND USE COMPATIBILITY STATEMENT:

From: City of Portland
Dated: 9/15/97

ISSUED BY THE DEPARTMENT OF ENVIRONMENTAL QUALITY:

Ed Druback, Northwest Region Air Quality Manager

JUN 16 1999
Dated

ADDENDUM NO. 1

In accordance with OAR 340-14-040, Air Contaminant Discharge Permit Number 26-2930, Condition 19 now reads as follows:

19. The Annual Compliance Determination Fee for this permit is due on December 1 of each year this permit is in effect. An invoice indicating the amount, as determined by Department regulations, will be mailed prior to the above date. The fee shall be submitted to the Business Office of the Department in Portland (unless otherwise notified).

ALL INQUIRIES SHOULD BE DIRECTED TO:

Department of Environmental Quality
Northwest Region, Air Quality Section
2020 SW Fourth Avenue, Suite 400
Portland, OR 97201-4987
Telephone: (503) 229-5554

To Amos

Date 9.14.2000 Time 8:27 ☒AM ☐PM

WHILE YOU WERE OUT

M Bill Meisinger

of

Phone Numbers

Office speed : 924 (Area Code / Number / Ext.)

Voicemail

FAX

Pager

Mobile

e-mail

☒ Telephoned

☒ Please call

☐ Returned your call

☐ Called to see you

☐ Wants to see you

☐ Will call again

☐ URGENT

Message

Units - #'s/hour - Tons/year

Called Randy 9/15 - LYMM RC having data to him by Friday 10/29/00, latest

GreenCycle' RECYCLED PAPER

Operator

Reorder #23-700

Oregon
John A. Kitzhaber, M.D., Governor

Department of Environmental Quality
Northwest Region
2020 SW Fourth Avenue
Suite 400
Portland, OR 97201-4987
(503) 229-5263 Voice
TTY (503) 229-5471

July 18, 2000

KOPPERS INDUSTRIES INC
7540 NW ST HELENS RD
PORTLAND OR 97210-3663

Re: AQ - Multnomah Co.
Koppers Industries Inc.
NC No. 018175
File No. 26-2930

Attention: Amos Kamerer, Plant Manager

I have reviewed your Notice of intent to Construct submitted June 1, 2000. This NC is accepted as fulfilling the requirement of Special Condition 13 of your Air Contaminant Discharge Permit.

To complete my review it is necessary to know the estimated criteria pollutant emissions from the proposed Thermal Oxidizer. These include emissions of PM_{10}, SO_2, NO_X, CO and VOC. I understand that you must receive this information from the supplier of the thermal oxidizer, and that the supplier has not yet been chosen. You estimate that a supplier will be chosen in September. Please forward the emissions information to the Department as soon as possible. Until that time I will suspend action on the NC approval.

Thank you for your attention to this matter. We look forward to the expeditious completion of this project. If I can be of assistance in these matters, please contact me at (503) 229-6736.

Sincerely,

Randall Bailey
Air Quality Permitting
Northwest Region

cc: J. Dietz
T. Self
M. Cilley
B. Mossinger
F.Y.I.
Amos
7/19/00

RECEIVED
JUL 19 2000
KOPPERS INDS, INC.
PORTLAND OR

Oregon
John A. Kitzhaber, M.D., Governor

Department of Environmental Quality
Northwest Region Portland Office
Air Quality Program
2020 SW 4th Avenue, Suite 400
Portland, OR 97201-4987
(503) 229-5554
FAX (503) 229-5265
TTY (503) 229-5471

June 6, 2000

KOPPERS INDUSTRIES
7540 NW ST. HELENS ROAD
PORTLAND OR 97201-4987

RE: NOTICE OF INTENT TO CONSTRUCT
FILE / PERMIT # **26-2930**
NC # **018175**

On June 01, 2000 the Department of Environmental Quality accepted for processing a Notice of Intent to Construct for your facility. Your notice requests review of the replacement installation of thermal oxidizer.

Processing of this notice is assigned to Randy Bailey at (503) 229-6736.

Unless the Department requests additional information within thirty (30) days of the date of this letter, you will be notified of approval or disapproval within sixty (60) days.

In addition to meeting the air quality standards, your facility is also obligated to operate in compliance with the daytime and nighttime noise standards set forth in Oregon Administrative Rule (OAR) 340-35-035(1). For a copy of the noise regulations, please call me at (503) 229-5582.

Sincerely,

Daphne L. Bussey
Permit Coordinator
Air Quality Program
Northwest Region

Cc: Randy Bailey/NWR

RECEIVED
JUN - 8 2000
KOPPERS INDS, INC.
PORTLAND OR

DEQ-1

KOPPERS INDUSTRIES

Koppers Industries, Inc.
7540 N.W. St. Helens Road
Portland, OR 97210-3663

Amos S. Kamerer
Plant Manager

Telephone: 503-286-3681
Fax: 503-285-2831

June 1, 2000

DEPT OF ENVIRONMENTAL QUALITY
RECEIVED

JUN 01 2000

NORTHWEST REGION

Oregon Department of Environmental Quality
Northwest Region
2020 SW 4th Avenue, Suite 400
Portland, Oregon 97201-4987

Attention: Randall Bailey

Reference: Air Containment Discharge Permit # 26-2930
Notice of Intent to Construct

Dear Mr. Bailey,

As per our recent discussions, attached please find the Notice of Intent to Construct covering the new thermal oxidizer that Koppers Industries will be installing, to replace our existing system.

If you have any questions, please contact me at 286-3681, or via e-mail at: amos_kamerer@koppers.com

Sincerely,

Amos S. Kamerer

CC: J. Dietz, KII
T. Self, KII
M. Cilley, KII
B. Meisinger, KII

KOPPERS INDUSTRIES

Koppers Industries, Inc.
7540 N.W. St. Helens Road
Portland, OR 97210-3663

Amos S. Kamerer
Plant Manager

Telephone: 503-286-3681
Fax: 503-285-2831

June 1, 2000

Oregon Department of Environmental Quality
Northwest Region
2020 SW 4th Avenue, Suite 400
Portland, Oregon 97201-4987

Attention: Randall Bailey

Reference: Air Containment Discharge Permit # 26-2930
Notice of Intent to Construct

Dear Mr. Bailey,

As per our recent discussions, attached please find the Notice of Intent to Construct covering the new thermal oxidizer that Koppers Industries will be installing, to replace our existing system.

If you have any questions, please contact me at 286-3681, or via e-mail at: amos_kamerer@koppers.com

Sincerely,

Amos S. Kamerer

CC: J. Dietz, KII
T. Self, KII
M. Cilley, KII
B. Meisinger, KII

Identification Information

1. Permit Number 26-2930

2. Legal Company Name:	3. Facility Name: *(if different from legal company name)*
Koppers Industries, Inc.	
Company Name	Facility Name
7540 NW Saint Helens Road	
Mailing Address	Location Address
Portland, OR 97210	
City, State, Zip	City, State, Zip
4. Compliance Contact:	**5. Information/Clarification Contact:**
Amos S. Kamerer, Plant Manager	
Name & Title	Name & Title
same as above	
Mailing Address	Location Address
(503) 286-3681	
Area Code & Telephone Number	Area Code & Telephone Number

Facility Information

6. SIC Codes: 2 8 6 5

7. Other Department permits? (y/n; if y, specify type and permit number) Yes X No ____

NPDES # 101642

8. Increased capacity/emissions, new pollutants? Yes ____ No X

9. If applicable, attach a Land Use Compatibility Statement.

Construction Information

10. Description of proposed construction: To add a thermal oxidizer to the pitch fume recovery system. The new thermal oxidizer will replace the existing system.

11. Attach relevant forms from Form Series AQ200, Device/Process Forms, if applicable.

12. Attach Form AQ301, Control Device Description, if applicable.

13. Attach a process flow diagram.

Emissions Data

14. Pre-and Post-Construction emissions summary data

a. Emissions Point	b. Pollutant	c. Pre-Construction Emissions		d. Post-Construction Emissions	
		short-term (specify unit)	annual (tons/year)	short-term (specify unit)	annual (tons/year)
Liquid Pitch				Per the data that was	
Storage Tanks				supplied with the original Air Permit application.	
and Load out					
locations					

15. Description of waste disposal practices *before* the construction:
No waste disposal is involved.

Koppers015953

16. Description of waste disposal practices *after* the construction: No waste disposal is involved.

Construction Data

17. Timing of construction.

a. Commence date (mm/dd/yy) 06/01/00 -Engineering, equipment bidding and award, permitting and equipment delivery.

b. Begin date (mm/dd/yy) 06/01/01 -Installation

c. Completion date (mm/dd/yy) 09/01/01 -Start-up

18. Will tax credits be requested once construction is completed? Yes _____ No X

Signature

19. Signature

I hereby certify that I have completed this application to the best of my ability and that the information herein and in the attached exhibits is true and correct to the best of my knowledge.

Amos S. Kamerer	Plant Manager
Name of Authorized Representative	Title
	06/01/00
Signature	Date (mm/dd/yy)

Date: 5/17/00 1:12 PM
Sender: Amos Kamerer
To: BILL MEISINGER
Priority: Normal
Subject: ODEQ

Bill,

Attached is a copy of the Notice of Intent to Construct form that I need to fill out for the T. O. unit.

Could you please give the info to use for number's 10, 14 and 17. I need to get this into them by June 1st. I'm not sure what we will say for # 14.

Thanks,

ODEQ AQ104.doc

Amos

Date: 6/1/00 1:54 PM
Sender: BILL MEISINGER
To: Amos Kamerer
Priority: Normal
Subject: Re:ODEQ

Amos,

10. Install thermal oxidizer system on pitch fume collection system. New system will replace the current scrubber system.

14. You have this covered. I believe the summary sheet shows 98% efficiency for the thermal oxidizer.

17. Commence Date--1 June 2000
    Begin Date-- 1 June 2001
    Completion Date--31 August 2001

Bill

_____Reply Separator_____
Subject: ODEQ
Author: Amos Kamerer
Date: 5/17/00 1:12 PM

Bill,

Attached is a copy of the Notice of Intent to Construct form that I need to fill out for the T. O. unit.

Could you please give the info to use for number's 10, 14 and 17. I need to get this into them by June 1st. I'm not sure what we will say for # 14.

Thanks,

ODEQ AQ104.doc

Amos

Department of Environmental Quality

Air Contaminant Discharge Permit No. 26-2930
Expires 9/1/2002

Compliance List

Koppers Industries is permitted to discharge exhaust gases provided the following conditions are met:

Particulate Emission Limits

- No more than 0.2 grains per cubic foot for combustion sources installed **prior** to June 1, 1970
- No more than 0.1 grains per cubic foot for sources installed or modified **after** June 1, 1970
- Opacity at no more than 20% (excluding uncombined water vapor) for a period of 3 consecutive minutes per hour
- No particulate matter larger than 250 microns

Fuel Oil shall not exceed the following sulfur content

- 0.3% by weight for ASTM Grade 1 (distillate)
- 0.5% by weight for ASTM Grade 2 (distillate)
- 1.75% by weight for residual fuel oil

There shall be NO nuisance conditions off the property caused by odorous matter or fugitive emissions

Operations & Maintenance

- All air contaminant control equipment must be operated at all times
- All air contaminant control equipment must be maintained at full efficiency and effectiveness
- Fugitive dust must be minimized by:
    1. Treating vehicular traffic areas
    2. Storing collected material from air control equipment in covered containers
- Maintenance must be performed on the boiler once every two years

Plant Site Emissions limits

- Sulfur Dioxide emissions shall NOT exceed 22 tons/year or 20 lbs/hour
- Nitrogen Oxide emissions shall NOT exceed 28 tons/year or 11 lbs/hour
- Carbon Monoxide emissions shall NOT exceed 7 tons/year or 3 lbs/hour
- Volatile Organic Compounds shall NOT exceed 20 tons/year or 14 lbs/hour

Air Pollution Episodes

- Koppers may elect to file a Source Emission Reduction Plan (SERP) specifying procedures to follow in the event an Air Pollution Alert, Warning or Episode is declared by the DEQ
- This Source Emission Reduction Plan shall be available on premises for inspection by DEQ
- In the event an Air Pollution Alert, Warning or Episode is declared by DEQ, Koppers shall take actions according to the SERPlan or Oregon Administrative Rules 340, Div 27 "Air Pollution Emergencies"
- Air Pollution Episodes are declared by DEQ and information will be available through radio & TV

Special Conditions

- By June 1, 2000 Koppers shall complete and submit to DEQ a detailed feasibility study for the reduction of particulate and VOC emissions from the fume recovery exhaust stack
- This study shall include a time schedule for implementation of reduction strategies where practicable
- Koppers shall notify DEQ in writing within seven days of the date the new 10MM Btu/hour hot oil heater is started up
- All nuisance condition complaints shall be investigated by a plant representative immediately
- A log of all complaints shall be maintained for two years at the site and should include:
    1. Date of contact
    2. Time of observed nuisance condition
    3. Description of nuisance condition
    4. Location of receptor
    5. Status of plant operation at observed period
    6. This log should be made available for DEQ inspection upon request

Monitoring Requirements

- Koppers shall effectively inspect and monitor the operation and maintenance of the air contaminant control system
- Koppers shall implement procedures to monitor and record the following parameters:
    1. All operating and production parameters to be reported to DEQ annually
    2. Excess emissions records as defined in OAR 340-28-1400 through 340-28-1440 (recorded on occurrence)
    3. A description of any maintenance to the air contaminant control system (recorded on occurrence)
    4. The record should be maintained for two years and be available for DEQ inspection

Reporting Requirements

- Koppers shall submit to DEQ the feasibility study results by June 1, 2000
- Koppers shall submit to DEQ 2 copies of the following information for the preceding year:

1. Operating parameters

    a. Annual throughput of coal tar pitch
    b. Annual throughput of heavy oil
    c. Total boiler operating time (hrs/yr)
    d. Total hot oil heater operating time (hrs/yr)
    e. Highest sulfur content of oil burned (obtained by the supplier)
    f. Types and quantities of fuels burned (gallons or MMCF)
    g. Average plant operating schedule (hrs/day, days/wk, wks/yr)

2. Computations of total VOC and HAPs emissions for the previous calendar year
3. A log of all planned and unplanned excess emissions in accordance with OAR 340-28-1440
4. A summary of all odor complaints received during the year (specify the # of complaints on each date)
5. Explain any permanent changes made in the plant process or production which would effect air contaminant emissions and when these changes were made
6. List all major maintenance performed on air pollution equipment
7. The report shall be sent to :

    DEQ Northwest Region
    2020 SW 4th Ave., Suite 400
    Portland, OR 97201-4987
    Permit # 26-2930 (must be prominently displayed on report)

Fee Schedule

- Revised: Addendum #1 on permit
  The Annual Compliance Determination Fee for this permit is due on December 1 of each year this permit is in effect. An invoice indicating the amount, as determined by Department regulations, will be mailed prior to the above date. The fee shall be submitted to the Business Office of the DEQ.
- The Application Processing and Filing fees for renewal of this permit are due on July 1, 2002, and must be submitted 60 days prior to the expiration date. An invoice indicating the amount, as determined by DEQ regulations, will be mailed prior to this date and is to be submitted to the Business Office of DEQ.

General Conditions and Disclaimers

- Koppers shall allow DEQ officials access to the plant and records at all reasonable times to: make inspections, surveys, collect samples, obtain data, copy data and all other necessary functions
- Koppers shall have a copy of the Air Contaminant Discharge Permit available at all times
- Koppers is prohibited from conducting open burning
- Koppers must conduct dust suppression measures at all times
- Koppers must notify within 1 hour via phone or in person, DEQ of any excess emissions that could endanger public health (Follow-up report to be made)

  Notification number at the regional branch office is: **(503) 229-5554**

  If the emissions occur during non-business hours, immediately contact the **OERS-** Oregon Emergency Response System **1-800-452-0311**

- Koppers shall notify and obtain approval from DEQ in advance before:
  1. Constructing or installing any new source of air contaminant emissions including air pollution control equipment
  2. Modifying or altering an existing source that may significantly affect the emission of air contaminants
  3. Making any physical change which increases emissions
  4. Changing the method of operation, the process, the fuel use or increasing hours of operation which could result in increased emissions
- Application for modification of permit must be submitted 60 days in advance along with permit and processing fees
- Koppers shall notify DEQ in writing within 60 days and pay fees if the following occurs:
  1. Legal change of registered company name
  2. Sale or exchange of activity or facility
- The issuance of this permit does not convey any property rights, exclusive privileges nor does it authorize any injury to private property or invasion of personal rights, nor any infringement of federal, state or local laws or regulations
- This permit is subject to revocation for cause

All inquiries should be directed to

DEQ
Northwest Region – Air Quality Program
2020 SW 4th Ave., Suite 400
Portland, OR 97201-4987
Phone: (503) 229-5554

Identification Information

1. Permit Number 26-2930

2. Legal Company Name:	3. Facility Name: *(if different from legal company name)*
Koppers Industries Inc.	Portland Terminal
Company Name	Facility Name
7540 NW St. Helen Road	7540 NW St. Helen Road
Mailing Address	Location Address
Portland, OR 97210	Portland, OR 97210
City, State, Zip	City, State, Zip
4. Compliance Contact:	**5. Information/Clarification Contact:**
Amos S. Kamerer	Amos S. Kamerer
Name & Title	Name & Title
Plant Manager	Plant Manager
Mailing Address	Location Address
503 286 3681	503 286 3681
Area Code & Telephone Number	Area Code & Telephone Number

Facility Information

6. SIC Codes: 2865 _____ _____ _____

7. Other Department permits? (y/n; if y, specify type and permit number) Yes X No _____

N.P.D.E.S.

8. Increased capacity/emissions, new pollutants? Yes X No _____

9. If applicable, attach a Land Use Compatibility Statement.

Construction Information

10. Description of proposed construction: Construction will provide two storage tank foundations, one 50,000 barrel coar tar pitch storage tank equipped with hot oil heating coils, pitch transfer system, hot oil heater and fume collection piping.

11. Attach relevant forms from Form Series AQ200, Device/Process Forms, if applicable.

12. Attach Form AQ301, Control Device Description, if applicable.

13. Attach a process flow diagram.

Emissions Data SEE ATTACHMENTS

14. Pre-and Post-Construction emissions summary data

a. Emissions Point	b. Pollutant	c. Pre-Construction Emissions		d. Post-Construction Emissions	
		short-term (specify unit)	annual (tons/year)	short-term (specify unit)	annual (tons/year)

15. Description of waste disposal practices *before* the construction: Solid industrial waste hauled to secured landfill. No generation of hazardous waste.

16. Description of waste disposal practices *after* the construction: No change.

Construction Data

17. Timing of construction.

    a. Commence date (mm/dd/yy) 01/18/99

    b. Begin date (mm/dd/yy) 02/01/99

    c. Completion date (mm/dd/yy) 10/01/99

18. Will tax credits be requested once construction is completed? Yes ____ No X

Signature

19. Signature

I hereby certify that I have completed this application to the best of my ability and that the information herein and in the attached exhibits is true and correct to the best of my knowledge.

Amos S. Kamerek	Plant Manager
Name of Authorized Representative	Title
	12/30/98
Signature	Date (mm/dd/yy)

Maximum Potential Emissions from Existing Units
Koppers Industries, Inc., Portland Terminal

Unit	Comments	Commodity	NOx (lb/hr)	NOx Tons/Yr	VOC (lb/hr)	VOC Tons/Yr	CO (lb/hr)	CO Tons/Yr	SO2 (lb/hr)	SO2 Tons/Yr	PM-10 (lb/hr)	PM-10 Tons/Yr
Atlas Boiler[1]		Gas	2.82	12.33	0.06	0.25	0.70	3.08	0.08	0.33	0.12	0.55
		Oil/Gas	3.00	12.52	0.06	0.22	0.75	3.13	10.65	11.31	0.30	1.24
		MAX	3.00	12.52	0.06	0.25	0.75	3.13	10.65	11.31	0.30	1.24
Hot Oil Heater(backup unit)[1]		Gas	0.81	3.57	0.04	0.19	0.17	0.75	0.03	0.14	0.04	0.16
		Oil/Gas	1.22	3.97	0.04	0.16	0.31	0.88	4.33	4.60	0.12	0.43
		MAX	1.22	3.97	0.04	0.19	0.31	0.88	4.33	4.60	0.12	0.43
Fume Recovery System [2,3]		NA			12.47	18.11						
Tank 33		Heavy Oil			0.37	0.016						
Tank 67		P1/P13 Distillate			0.59	0.024						
Loading Tank 67 to Rail		P1/P13 Distillate			1.71	0.003						
Fugitives		NA			0.98	0.568						
Plant Total			**4.22**	**16.49**	**16.22**	**19.15**	**1.06**	**4.01**	**14.98**	**15.91**	**0.42**	**1.67**

NOTES
[1] Combustion units may be run on natural gas or #2 fuel oil. However, fuel oil combustion will occur a maximum of 12 weeks during any given year.
[2] The fume recovery system receives emissions from the following units: T-68, T-65, T-200, railcar loading and tank car loading.
[3] Hourly and annual VOC emissions from the fume recovery system were calculated using ChemCAD.

Koppers015964

Maximum Potential Emissions, Phase I
Koppers Industries, Inc., Portland Terminal

Unit	Comments	Commodity	NOx (lb/hr)	NOx Tons/Yr	VOC (lb/hr)	VOC Tons/Yr	CO (lb/hr)	CO Tons/Yr	SO2 (lb/hr)	SO2 Tons/Yr	PM-10 (lb/hr)	PM-10 Tons/Yr
Atlas Boiler[1]		Gas	2.82	12.33	0.06	0.25	0.70	3.08	0.08	0.33	0.12	0.55
		Oil/Gas	3.00	12.52	0.06	0.22	0.75	3.13	10.65	11.31	0.30	1.24
		MAX	3.00	12.52	0.06	0.25	0.75	3.13	10.65	11.31	0.30	1.24
Hot Oil Heater(backup unit)[1]		Gas	0.81	3.57	0.04	0.19	0.17	0.75	0.03	0.14	0.04	0.16
		Oil/Gas	1.22	3.97	0.04	0.16	0.31	0.88	4.33	4.60	0.12	0.43
		MAX	1.22	3.97	0.04	0.19	0.31	0.88	4.33	4.60	0.12	0.43
Fume Recovery System [2,3]		NA			12.47	18.11						
Tank 33		Heavy Oil			0.37	0.016						
Tank 67		Heavy Oil			0.15	0.006						
Fugitives		NA			0.98	0.568						
New Hot Oil Heater[1]		Gas	1.34	5.87	0.03	0.12	0.34	1.47	0.04	0.16	0.06	0.26
		Oil/Gas	1.42	5.96	0.03	0.10	0.36	1.49	5.04	5.34	0.14	0.52
		MAX	1.42	5.96	0.03	0.12	0.36	1.49	5.04	5.34	0.14	0.52
T-200		Liquid Pitch				Note 4						
Plant Total			**5.64**	**22.45**	**14.10**	**19.25**	**1.41**	**5.50**	**20.02**	**21.26**	**0.56**	**2.19**

NOTES
[1] Combustion units may be run on natural gas or #2 fuel oil. However, fuel oil combustion will occur a maximum of 12 weeks during any given year.
[2] The fume recovery system receives emissions from the following units: T-68, T-65, T-200, railcar loading and tank car loading.
[3] Hourly and annual VOC emissions from the fume recovery system were calculated using ChemCAD.
[4] Emissions from T-200 are included in the fume recovery system's emissions.

Koppers015965

KOPPERS INDUSTRIES

Koppers Industries, Inc.
7540 N.W. St. Helens Road
Portland, OR 97210-3663

Amos S. Kamerer
Plant Manager

Telephone: 503-286-3681
Fax: 503-285-2831

FAX MEMORANDUM

Department of Environmental Quality
Northwest Region – Air Quality Program
Attn: Kathy Amidon
2020 SW 4th Ave., Suite 400
Portland, Oregon 97201-5544

December 22, 1999

Reference: Air Contaminant Discharge Permit # 26 – 2930

Dear Kathy,

As required in subject permit, Special Conditions item # 14, this is to advise the Department that Koppers started the regular operation of the new 10 MM Btu/hour hot oil heater on Wednesday December 15th.

If you have any questions, please advise.

Regards and Happy Holidays,

Amos

Amos Kamerer

CC: J. Dietz, KII
T. Self, KII
M. Cilley, KII

Oregon
John A. Kitzhaber, M.D., Governor

Department of Environmental Quality
811 SW Sixth Avenue
Portland, OR 97204-1390
(503) 229-5696
TDD (503) 229-6993

September 1, 1999

Koppers Industries, Inc.
7540 NW St Helens Road
Portland, OR 97210

Re: Department Initiated Modification
Air Contaminant Discharge Permit
No. 26-2930

Dear Permit Holder:

The Air Quality Division is instituting a new invoicing policy as of October 1, 1999. On that date, the Division will be mailing invoices for all Compliance Determination fees. Those fees will be due on December 1 of each year for Regular Air Contaminant Discharge Permit (ACDP) holders and December 1 every five (5) years for Minimal ACDP holders. This replaces the previous policy of having compliance fees due one month prior to the permittee's expiration month.

The invoices will be mailed no later than October 1 of each year. This year, unless your invoicing is already due on December 1, the amount you will be billed will be pro-rated so that no one overpays or underpays fees.

Renewal invoicing will remain as it always has been with the invoices due two months prior to the expiration date of your permit.

If you have any questions regarding the above, please contact Terri Sylvester, in Portland, at (503) 229-5181, or toll-free at 1-800-452-4011.

Sincerely,

Gregory A. Green

Gregory A. Green
Air Quality Administrator
Air Quality Division

cc: Northwest Region

GAG:MS:j
LTR\AQ76967.DOC

RECEIVED
SEP - 3 1999
KOPPERS INDS, INC.
PORTLAND OR

DEQ-1

AIR CONTAMINANT DISCHARGE PERMIT
OREGON DEPARTMENT OF ENVIRONMENTAL QUALITY
Northwestern Region
2020 SW 4th Avenue, Suite 400
Portland, OR 97201-4987
Telephone: (503) 229-5582

Issued in accordance with the provisions of ORS 468A.040 and based on the land use compatibility findings included in the permit record.

ISSUED TO:

Koppers Industries, Inc.
7540 N.W. St. Helens Road
Portland, OR. 97210-3663

INFORMATION RELIED UPON:

Department Initiated Modification

PLANT SITE LOCATION:

7540 N.W. St. Helens Road
Portland, OR.

LAND USE COMPATIBILITY STATEMENT:

From: City of Portland
Dated: 09/15/1997

ISSUED BY THE DEPARTMENT OF ENVIRONMENTAL QUALITY

Gregory A. Green

Greg Green, Air Quality Administrator

SEP 01 1999

Date

ADDENDUM No. B

In accordance with OAR 340-014-040, Air Contaminant Discharge Permit No. , the following conditions now read as follows:

19. The Annual Compliance Determination Fee for this permit is due on December 1 of each year this permit is in effect. An invoice indicating the amount, as determined by Department regulations, will be mailed prior to the above date. The fee shall be submitted to the Business Office of the Department in Portland (unless otherwise notified).

G7. The Application Processing and Filing fees for renewal of this permit are due on July 1, 2002, and must be submitted at least 60 days prior to the permit expiration date. An invoice indicating the amount, as determined by Department regulations, will be mailed prior to the above date. The fee and application shall be submitted to the Business of the Department in Portland (unless otherwise notified).

Author: AMIDON Kathy <AMIDON.Kathy@deq.state.or.us> at internet
Date: 6/23/99 3:12 PM
Priority: Normal
TO: Amos Kamerer at PITT
Subject: RE: 6/15/99 Inspection Report
---------- Message Contents ----------

I agree that it is important for me to understand the processes at your facility. So I really appreciate the very clear explanations below. I will your note to our file. Thanks again!

> ----------
> From:
> amos_kamerer@mail.koppers.com[SMTP:amos_kamerer@mail.koppers.com]
> Sent: Wednesday, June 23, 1999 05:33 AM
> To: amidon.kathy@deq.state.or.us
> Subject: 6/15/99 Inspection Report
>
>
> Kathy,
>
> This came back as undelivered, so I am trying it again.
>
> Amos
>
>
> _____ Forward Header
> _____
> Subject: 6/15/99 Inspection Report
> Author: AMOS KAMERER at PITT
> Date: 6/22/99 5:29 PM
>
>
>
>
> Kathy,
>
> Confirming our telephone conversation of earlier today. For your
> benefit and future understanding, I wanted to correct a couple of the
> items that you covered in subject report, that were incorrect.
>
> 1) We are not a transfer point for heavy oil. We use heavy oil in our
> process, for softening point adjustments to the binder pitch, and as the
> wash oil in the fume recovery system. We do not sell, or distribute, heavy
> oil through this facility. We only sell, and distribute, the binder pitch.
>
> 2) It's important to remember that there is a big difference between
> crude coal tar, and coal tar binder pitch. Crude coal tar is the byproduct
> material that we buy from the steel/coke industry, that we then use as our
> raw material. We distill this crude coal tar, to make the coal tar binder
> pitch. There is about a 50% yield of pitch from the crude coal tar; the
> other 50% yield are byproducts that are then blended into creosote and
> other refined tar products, that we sell. So, it's important to refer to
> them correctly, and to under stand them properly, as the environmental
> regulations and concerns for each of these materials, is different.
>
> 3) We no longer receive pencil pitch through the port of Portland,
> all of it now comes in through the Port of Longview, Wash.. Another reason

> considered, when making the decision to convert to liquid pitch imports.
>
> 4) The schedule for us to receive liquid pitch through our new
> unloading facility and new storage tank, is for the first vessel to be
> received by the end of this year, not year 2002. For next year 2000, we
> will receive 6 vessels, or about 75% of our total imports as liquid, thus,
> after this year, only about 25% of our imports will be pencil pitch, or
> about 3 vessels a year. We hope to be receiving only liquid pitch, no
> pencil pitch, by the end of the year 2002, if all goes well.
>
> We covered quite a lot of information in our relativity short visit
> last week, and I have a tendency to talk to fast in the first place. So,
> I am sorry that I did not make some of these point a little clearer at
> that time. The important thing is, that you understand these things
> correctly.
>
> Let me know if you have any further questions or if I can be of any
> further assistance. I will let you know when the cooler for the heavy oil
> has been added to the fume recovery system.
>
> Regards,
>
> Amos
>
>

Author: AMOS KAMERER at PITT
Date: 6/22/99 2:56 PM
Priority: Normal
TO: amidon.kathy@deq.state.or.us at internet
CC: Traci Self at PITT
CC: Jim Dietz at PITT
CC: BILL MEISINGER at TECHCTR
Subject: 6/15/99 Inspection Report
---------- Message Contents ----------

Kathy,

Confirming our telephone conversation of earlier today. For your benefit and future understanding, I wanted to correct a couple of the items that you covered in subject report, that were incorrect.

1) We are not a transfer point for heavy oil. We use heavy oil in our process, for softening point adjustments to the binder pitch, and as the wash oil in the fume recovery system. We do not sell, or distribute, heavy oil through this facility. We only sell, and distribute, the binder pitch.

2) It's important to remember that there is a big difference between crude coal tar, and coal tar binder pitch. Crude coal tar is the byproduct material that we buy from the steel/coke industry, that we then use as our raw material. We distill this crude coal tar, to make the coal tar binder pitch. There is about a 50% yield of pitch from the crude coal tar; the other 50% yield are byproducts that are then blended into creosote and other refined tar products, that we sell. So, it's important to refer to them correctly, and to under stand them properly, as the environmental regulations and concerns for each of these materials, is different.

3) We no longer receive pencil pitch through the port of Portland, all of it now comes in through the Port of Longview, Wash.. Another reason considered, when making the decision to convert to liquid pitch imports.

4) The schedule for us to receive liquid pitch through our new unloading facility and new storage tank, is for the first vessel to be received by the end of this year, not year 2002. For next year 2000, we will receive 6 vessels, or about 75% of our total imports as liquid, thus, after this year, only about 25% of our imports will be pencil pitch, or about 3 vessels a year. We hope to be receiving only liquid pitch, no pencil pitch, by the end of the year 2002, if all goes well.

We covered quite a lot of information in our relativity short visit last week, and I have a tendency to talk to fast in the first place. So, I am sorry that I did not make some of these point a little clearer at that time. The important thing is, that you understand these things correctly.

Let me know if you have any further questions or if I can be of any further assistance. I will let you know when the cooler for the heavy oil has been added to the fume recovery system.

Regards,

Amos

KOPPERS INDUSTRIES

FAX TRANSMITTAL

7540 N.W. Saint Helens Rd.
Portland, Oregon 97210-3663
Phone: (503) 286-3681
Fax: (503) 285-2831
Web Page: www.koppers.com

TO: Dietz, Self, Meisinger

DATE: 6/22/99

FROM: Amos

TOTAL # OF PAGES: 3

See my e-mail this date, regarding the attached Inspection Report.

IF THIS TRANSMITTAL IS IN ERROR, PLEASE CALL 503-286-3681 FAX # 503-285-2831

RECEIVED

JUN 21 1999

KOPPERS INDS, INC.
PORTLAND OR

DEPARTMENT OF ENVIRONMENTAL QUALITY

Northwest Region -- Air Quality Section

Inspection Report

Date: June 15, 1999

EOP

Company: Koppers Industries
County: Multnomah
File No.: 26-2930

Address: 7540 NW St. Helens Road
City: Portland

Interviewee: Amos Kamerer
Phone: 286-3681

Inspection Date: 15 Jun 99

Conditions: Low, thick overcast; variable winds

Narrative:

Jennifer Yockum, of the Department's headquarters staff, accompanied me on this visit.

Koppers Industries receives pencil pitch, a solid form of coal tar, heats the product to a liquid state, and ships it out via rail and truck. The facility is also a transfer point for heavy oil. Until this year, the facility was a transfer point for creosote, which has a penetrating odor at low levels of escaped gas. The facility is located in the northwest industrial area between Highway 30 (St. Helens Road) to the west and Wacker Siltronic Corp. to the east. The facility area is leased from Northwest Natural (formerly Northwest Natural Gas), and has been in existence since 1965.

Liquid coal tar is used by the aluminum industry. It is called electrode binder pitch and is molded into anodes used in the electric current smelting process. One pound of coal tar pitch is used for each ten pounds of aluminum produced. Pencil pitch is received from marine vessels at the Port of Portland and transported to the facility by truck. The raw material is unloaded into a large, open warehouse. In its solid form, pencil pitch is cylindrical and about two inches in diameter. It can be a source of fugitive particulate emissions as pieces flake off as they are rubbed together during the unloading process. The area near the warehouse opening is cleaned with a street sweeper, then water hoses, after each delivery. The collected material is processed to recover as much raw material as is feasible, and the remainder is disposed of at the Hillsboro landfill. The doors are closed during times of high winds. The possibility exists that a wind could carry pencil pitch particles onto the neighboring site during an unloading operation, or if the area near the warehouse doors is not cleaned between loads. The edge of Koppers' property is less than 30 yards from the south door of the warehouse.

The company plans to stop shipments of pencil pitch and instead receive the coal tar in its original liquid form some time within the next three years. A new storage tank to accommodate the change is currently being constructed. It is expected that a second tank and a pipeline to the marine vessel off-loading area at the Port will be added by the end of the year 2002. The company is examining the feasibility of adding a thermal oxidizer when the second tank is constructed. It is believed that the current fume recovery system will become inadequate with the addition of the second tank.

The current fume recovery system consists of insulated piping to which all heated storage tanks are vented, and a demister to collect particulate prior to the exhaust of gasses. The temperature at the demister is supposed to be 180-200° F, but the temperature rises during the 5-day work week as continuous use heats the air at the collection tank upon which the demister sits. The company plans to add a cooling unit to the process.

Weather conditions did not allow for an opacity reading on the demister stack. It appeared that opacity ranged from 15% to as much as 35% during the time we toured the plant. I explained opacity, and the method used for judging it, to Mr. Kamerer. We compared the discharge from the boiler stack, which was clearly steam, to the exhaust of the demister stack, which had a brown tinge to it and did not disperse as quickly as the steam. The demister stack is considered to be in marginal compliance until an opacity reading can be done. Mr. Kamerer said he would speak to the company's environmental manager about the problem.

The 21 million Btu boiler was operating on low pressure during the time of the inspection. Steam was the only visible emission from the boiler stack.

Odor complaints to the facility have dropped considerably since the cessation of the receipt of creosote. A slight odor was detected on site, but no odors were detected off site.

The facility was found to be in marginal compliance for opacity limits at the demister stack. The facility was found to be in full compliance with all other permit conditions at the time of the inspection.

Submitted by: Kathy Amidon

cc: Amos Kamerer
Koppers Industries, Inc.
7540 NW St. Helens Road
Portland, OR 97210-3663

The company plans to stop shipments of pencil pitch and instead receive the coal tar in its original liquid form some time within the next three years. A new storage tank to accommodate the change is currently being constructed. It is expected that a second tank and a pipeline to the marine vessel off-loading area at the Port will be added by the end of the year 2002. The company is examining the feasibility of adding a thermal oxidizer when the second tank is constructed. It is believed that the current fume recovery system will become inadequate with the addition of the second tank.

The current fume recovery system consists of insulated piping to which all heated storage tanks are vented, and a demister to collect particulate prior to the exhaust of gasses. The temperature at the demister is supposed to be 180-200° F, but the temperature rises during the 5-day work week as continuous use heats the air at the collection tank upon which the demister sits. The company plans to add a cooling unit to the process.

Weather conditions did not allow for an opacity reading on the demister stack. It appeared that opacity ranged from 15% to as much as 35% during the time we toured the plant. I explained opacity, and the method used for judging it, to Mr. Kamerer. We compared the discharge from the boiler stack, which was clearly steam, to the exhaust of the demister stack, which had a brown tinge to it and did not disperse as quickly as the steam. The demister stack is considered to be in marginal compliance until an opacity reading can be done. Mr. Kamerer said he would speak to the company's environmental manager about the problem.

The 21 million Btu boiler was operating on low pressure during the time of the inspection. Steam was the only visible emission from the boiler stack.

Odor complaints to the facility have dropped considerably since the cessation of the receipt of creosote. A slight odor was detected on site, but no odors were detected off site.

The facility was found to be in marginal compliance for opacity limits at the demister stack. The facility was found to be in full compliance with all other permit conditions at the time of the inspection.

Submitted by: Kathy Amidon

cc: Amos Kamerer
Koppers Industries, Inc.
7540 NW St. Helens Road
Portland, OR 97210-3663

KOPPERS

7540 N.W. St. Helens Rd.
Portland, Oregon 97210
(503) 286-3681

6/25/99

Kathy Amidon

Invoice is correct based on the long delay for processing the permit.

Next invoice will be issued per the admendment + will be due in December, each year

AMOS S. KAMERER

KOPPERS INDUSTRIES

#229-5265

FAX TRANSMITTAL

7540 N.W. Saint Helens Rd.
Portland, Oregon 97210-3663
Phone: (503) 286-3681
Fax: (503) 285-2831
Web Page: www.koppers.com

TO: Kathy Amidon, DEQ DATE: 6/22/99

FROM: Amos Kamerer TOTAL # OF PAGES: 2

Here's the Invoice. I'm Assuming that you will have this one canceled and a new one issued at the correct time. Let me know if I need to do anything else —
cc: T. Self, KII

IF THIS TRANSMITTAL IS IN ERROR, PLEASE CALL 503-286-3681 FAX # 503-285-2831

State of Oregon

Department of Environmental Quality

INVOICE

AIR CONTAMINANT DISCHARGE PERMIT COMPLIANCE FEE

FOR THE PERIOD: 9/1/1998 THROUGH 12/1/1999

Invoice Number: **AQCDP00-0079**
Invoice Date: 6/3/1999
Invoice Due Date: **7/7/1999**

Permit Number: 262930

To: Koppers Industries Inc
436 7th Ave
Pittsburg, PA 15219

Location:

Koppers Industries, Inc.
7540 NW ST. HELENS ROAD
PORTLAND, OR 97210

Itemized fee as per Table 4 as revised 6/30/1998

Ref #		Category #	Amount Due	Date Due
	OIL BOILERS, 10-250 MILLION BTU/HR,IN AQMAS	58B	$2,165	
	Total		**$2,165**	7/7/1999
440	**Total due with $200 7-day Late Fee**		**$2,365**	7/14/1999
	Total due with $400 30-day Late Fee		**$2,565**	8/6/1999

RECEIVED

JUN 21 1999

KOPPERS INDS, INC.
PORTLAND OR

Ok to Pay

Environmental expense #807

DEQ COPY - - - - - - - - - - - - *Cut here and return bottom portion with payment* - - - - - - - - - - - -

Remit and make checks payable to:

Dept. of Environmental Quality
Attn: Business Office
811 SW Sixth Avenue
Portland, OR 97204-1390

Invoice Number: **AQCDP00-0079**

Amount Due **$2,165**

Amount Enclosed: [ ]

Facility Name: Koppers Industries, Inc.

Permit Number: **262930**

99-10040-11110-8101 $2,165

AQCDP00-0079

March 10, 1999

Oregon Department Of Environmental Quality
Northwest Region
2020 SW Fourth Avenue
Suite 400
Portland, OR 97201-4987

Attention: Kathy Amidon

RE: Koppers Industries Inc. – Portland Terminal
Public Notice-Comments
Proposed Air Permit Application No. 26-2930
Multnomah County

Dear Ms. Amidon:

Koppers Industries Inc. (KII) respectively submits the following comments/clarfications for the proposed air contaminant discharge permit for the Portland Terminal.

KII proposed a phased approach to modifying conditions at the Portland Terminal. As part of the application process, calculated emissions were submitted for existing, Phase I and Phase II conditions. KII intends only to proceed with Phase II if business conditions require an additional storage tank (T-210). If this tank is required then KII will install a fume combustion system.

The Portland Terminal facility presently consists of the following units:

1. 21MM BTU Atlas Boiler
2. 8MM BTU Hot oil heater
3. Fume Recovery *System*
4. Tanks 33 and 67

The proposed system in Phase I will consist of:

1. 21MM BTU Atlas Boiler
2. 10MM BTU hot oil heater(new)
3. *8 MM BTU hot oil heater*
4. *Fume Recovery system*
5. *Tank 200 (new), T-33, T-67*

Phase II- implemented based on business conditions will consist of in addition to the units listed for Phase I:

6. Tank 210 (new)
7. Fume combustion system

Public Notice

Special Permit Conditions:

1. The 8MM Btu/hour heater should be a 10MM Btu/hour heater.
2. KII requests a permit condition stating that Phase II of the project may be implemented based on business conditions. If Phase II is implemented then the fume combustion system may be installed.

Air Contaminant Discharge Permit Application Review Report:

General Background Information- Page 1 of 4

Paragraph 3. -The statement that " gaseous emissions from the tanks will be ducted to the hot oil heater for incineration. Installation of a heated pipeline and two liquid pitch storage tanks is planned within the next two years " is incorrect. The sentence should read- *gaseous emissions from the tanks will be ducted to the fume recovery system". Installation of a heated pipeline and a liquid pitch storage tank is planned within the next two years.*

Page 2 of 4 Number 5-Air Contaminant sources at the facility for the coming permit period are:

Koppers Industries Inc. requests the table be amended to reflect that the boilers and both heaters are capable of both oil and gas firing.

The production rate of the pitch/oil transfer system should be 150,000 ton/yr. instead of 150,000 gal/yr.

The fume recovery system is presently in operation and will continue to operate. It should be added to the table.

The table has been modified to incorporate the requested changes described above.

Equipment	MFG/Model	Capacity/ Prod. Rate	SCC*	Installed/modified
Oil/gas-fired boiler	N. American	21 MM Btu/hr	3-06-001-03	1965
Oil/Gas-fired heater	N. American	8 MM BTU/hr	3-06-001-02	1990
Oil/Gas-fired heater	N. American	10 MM Btu/hr		1999
Pitch/oil transfer heater	N/A	150,000 ton/yr.		1965 inst. 1999 modified
Fume recovery system	N/A	150,000 ton/yr.		1987

Hazardous Air Pollutants (HAPS)- Page 2 of 4

Number 6, Fourth sentence states " The current fume recovery system will be changed to a fume combustion system by feeding the HAP emissions collected by the fume recovery system through the facility's boiler for incineration. The sentence should read " If business conditions warrant implementation of Phase II, the current fume recovery system may be changed to a fume combustion system by feeding the emissions collected through the fume combustion unit.

Proposed Plant Site Emission Limit- Page 3 of 4

Number 10. Reads " throughput of pencil pitch is expected to be 70,000 gallons per year, and a maximum of 100 gallons per hour. The correct statement is " Throughput of pitch is expected to be 150,000 tons per year, and a maximum of 562 tons per hour.

Plant Site Emission Detail Sheet

Material Transfer System reads in column labeled fuel usage 70 Thou. Gallons/year and 100 tons. /hour.

Correct material transfer system fuel usage should be 150,000-tons/ year and 562 ton/hr.

Page 4 of 4

Additional requirements

Number 14. Reads: Special Conditions contained in the permit include the requirement to notify the Department upon installation of the 8MM Btu/hr heater, and to make a response to all complainants.

KII requests the following correction:

14. Special conditions contained in the permit include the requirement to notify the Department upon installation of the 10 MM Btu/hr, heater, and to make a response to all complainants.

Air contaminant Discharge Permit

Page 1 of 7:

Type of Facility

Standard Industry code for the facility is 2865 and not 4961 as listed.

The boiler at the facility is a 21MM Btu/hour unit as listed in the above table. KII requests the addition of the of the following units to the list of "Sources permitted to Discharge Air Contaminants":

1. **21MM BTU Atlas Boiler**
2. **10MM BTU hot oil heater(new)**
3. ***8 MM BTU hot oil heater***
4. ***Fume Recovery system***
5. ***Tank 200 (new), T-33, T-67***
6. ***Tank 210(new (if required)***
7. ***Fume Combustion System (if required)***

Reporting Requirements (Page 4, Item 16:)

KII requests that report submittal be made the Department by March 1 of each year for the preceding calendar year. KII requests the additional time in order to submit a thorough ate report that contains the information requested in item 16. The January 15 date would not allow sufficient time to gather and analyze data to include in a detailed report.

KII appreciates the opportunity to provide comment/clarification on the draft permit and public notice. Thank you for all of your hard work and review of the application and supplements.

If you have, any questions please contact Amos Kamerer at (503) 286-3681 or me at (412) 227-2883.

Sincerely,

Traci I. Self
Environmental Manager

cc: Amos Kamerer
Jim Dietz
Kevin Fitzgerald
Steve Smith
Bill Meisinger

Author: Traci Self at PITT
Date: 3/3/99 1:31 PM
Priority: Normal
TO: Amos Kamerer at PITT
TO: Steve Smith at PITT
TO: Kevin Fitzgerald at PITT
TO: Jim Dietz at PITT
TO: BILL MEISINGER at TECHCTR
Subject: Portland draft air permit comments
---------- Message Contents ----------

Attached are comments for the air permit. In addition to these comments I need some assurance that we can meet the following conditions:

Page 2 of 7

Performance standard and emission limits Number 2.
Sulfur content of 0.3% by weight and) for ASTM Grade 1

Page 3 of 7
Boiler maintenance service once every 2 years.

Page 3 of 4
Proposed Plant site emission limit
Number 9
Oil usage 100,00 gals/yr
natural gas 184 mmcf/yr
Please respond as soon as possible. Thank You.

Traci

Author: Traci Self at PITT
Date: 2/16/99 5:40 PM
Priority: Normal
TO: Amos Kamerer at PITT
TO: JIM DIETZ at TECHCTR
TO: Kevin Fitzgerald at PITT
Subject: Re: Portland Air Contaminant Proposed Permit
---------- Message Contents ----------

Hi Kevin,

The unit should be tons and not gallons. We used 150,000 tons/year for the maximum emission calculations. With the numbers proposed in the permit we would be limited to 150,000 tons/year. Thanks for the comments we will make sure the changes are forwarded to ODEQ.

_____ Reply Separator _____
Subject: Portland Air Contaminant Proposed Permit
Author: Kevin Fitzgerald at PITT
Date: 2/17/99 8:05 AM

Traci:

On page 3 of the review report item #10 they refer to 70,000 gallons of pencil pitch per year with a maximum of 100 gallons per hour. I believe this is 70,000 metric tons per year and 100 metric tons per hour not gallons. Also my question is does this limit us to those quantities?

Let me know.

Kevin

Please check with Amos and Jim on what our maximum throughput might be.

Amos Kamerer
Portland

KOPPERS INDUSTRIES

INTEROFFICE CORRESPONDENCE

To:	Kevin Fitzgerald Jim Dietz Steve Smith Amos Kamerer w/o attachment Jill Merrill-ACCI	From:	Traci I. Self
		Location:	K-1800
Subject:	Portland Air Contaminant Proposed Permit	Date:	February 15, 1999

Attached is the draft proposed air permit for Portland Terminal. The comment period ends March 11, 1999. If KII wants to make any changes to the permit before issuance, we must make them before this date. Please review the permit and provide comments by March 5, 1999. Thank You.

RECEIVED

FEB 19 1999

KOPPERS INDS, INC.
PORTLAND OR

Oregon
John A. Kitzhaber, M.D., Governor

Department of Environmental Quality
Northwest Region
2020 SW Fourth Avenue
Suite 400
Portland, OR 97201-4987
(503) 229-5263 Voice
TTY (503) 229-5471

February 10, 1999

KOPPERS INDUSTRIES INC
7540 NW ST HELENS RD
PORTLAND OR 97210-3663

RE: PUBLIC NOTICE FOR AIR
CONTAMINANT DISCHARGE PERMIT
Permit # 26-2930

Your application for an Air Contaminant Discharge Permit has been reviewed by the Department of Environmental Quality and a proposed permit has been drafted. The Department has issued a public notice from February 9, 1999 to March 11, 1999. You are invited to review the attached copy of the proposed permit and submit any comments you may have prior to the end of the notice period.

The public notice is distributed to interested individuals and the media.

All comments received will be evaluated by the Department and action on the proposed permit will be taken in the near future.

Sincerely,

Johnny D Baumgartner

Johnny D. Baumgartner
Air Quality Permit Coordinator
Northwest Region

Enclosure

Koppers015988

RECEIVED

FEB 1 2 1999

KOPPERS INDS, INC.
PORTLAND OR

OREGON DEPARTMENT OF ENVIRONMENTAL QUALITY
A CHANCE TO COMMENT ON . . .

PUBLIC NOTICE

Comments Due: March 11, 1999

WHO IS THE APPLICANT:

The following facility has applied for a new Air Contaminant Discharge Permit.

Koppers Industries, Inc.
7540 NW St. Helens Rd.
Portland OR 97210

Permit Number: 26-2930

The DEQ has conducted a preliminary review of this application and is providing an opportunity for public comment.

FACILITY DESCRIPTION:

Koppers Industries, Inc. own and operates a facility located at 7540 NW St. Helens Road in Portland that receives, stores, and transfers creosote. The company plans to cease its shipments of creosote and instead move heavy oil and coal tar pitch (pencil pitch). Pencil pitch is received in solid form, placed in tanks and heated, then moved through pipes to load onto rail cars or tank cars. The heavy oil is also heated for ease of movement.

The proposed permit is a new permit for an existing source. The proposed permit will expire on 9/1/2002.

PERTINENT AIR PROGRAMS:

At the time of application review, this source was not subject to New Source Performance Standards (NSPS), New Source Review (NSR), Prevention of Significant Deterioration (PSD), or National Emissions Standards for Hazardous Air Pollutants (NESHAPS). The facility is located in a maintenance area for carbon monoxide and ozone. Two contributors to ozone, nitrogen oxides (NO_x) and volatile organic compounds (VOC), are regulated pollutants. The facility is an insignificant source of CO, NO_x, and VOC. The area is in attainment for all other pollutants.

AUTHORITY FOR PERMIT ISSUANCE:

The authority for issuance of air quality permits is provided by Oregon Revised Statute (ORS) 468A.045 and the specific procedures for issuance, denial, modification, and revocation of permits contained in Oregon Administrative Rules (OAR) 340, Division 14. Departmental review indicates that this applicant has met all applicable state and federal air quality regulations that provide for issuance of a permit to accommodate increased emissions.

OTHER DEQ PERMITS ISSUED:

The Department has issued a water quality permit to this facility, NPDES 100419. The plant site includes 25 tanks for the collection and storage of storm water.

DESCRIPTION OF DISCHARGE: Proposed Plant Site Emission Limits at the facility are shown below and are expressed in tons per year.

Pollutant	Baseline (tons/yr)	Current PSEL (tons/yr)	Increase (tons/yr)	SER (tons/yr)
SO_2	0	22	22	40
NO_x	0	28	28	40
CO	0	7	7	100
VOC	0	20	20	40

SPECIAL PERMIT CONDITIONS: Special conditions contained in the permit include the requirement to notify the Department upon installation of the ~~8~~ 10 MM Btu/hour heater, and to make a response to all complainants.

COMPLIANCE HISTORY: In response to a complaint in Koppers' geographical area, several facilities were visited. Department staff discovered an oil-fired boiler operating without a permit. The facility contains a 21 Mm Btu/hour boiler with the capability of burning oil. Under OAR 340-28-1750, Table 4 (formerly OAR 340-20-155, Table 1), all oil fired boilers greater than 10 MM Btu/hour input capacity in the Portland Air Quality Maintenance Area are required to have an air discharge permit. Because the Department had mistakenly canceled the permit in 1977, no enforcement action was taken against the source.

WHERE TO FIND OTHER DOCUMENTS: Copies of the proposed permit and review report are available at the Central Branch Public Library in Portland, Oregon. For technical information, contact Kathy Amidon of DEQ at (503) 229-5568.

The current application is available for public inspection by calling (503) 229-5582. Historical file records, if any, are available for viewing at DEQ's Northwest Region Office, 2020 SW 4th Avenue, Suite 400, Portland, OR 97201. File review hours are 9 a.m. to Noon and 1 p.m. to 4 p.m. Tuesday through Thursday. Call (503) 229-5554 or (TTY) (503) 229-5471. The building is wheelchair accessible and those with special needs should alert this office when making an appointment. This publication is available in alternate format (e.g. large print, Braille) upon request. Please contact DEQ Public Affairs at (503) 229-5317 to request an alternate format.

HOW TO COMMENT: Written comments should be mailed to: DEQ/AQ, Permit Coordinator, 2020 SW 4th Avenue, Suite 400, Portland, OR 97201-4987. Copies of the proposed permit may be requested from Johnny Baumgartner at (503) 229-5582. Written comments will be accepted by DEQ until **5:00 p.m., March 11, 1999**.

HOW TO REQUEST A HEARING: If written comments indicating significant public interest or written requests from at least 10 persons, or an organization representing at least 10 persons, are received on this application, DEQ will provide a public hearing. Requests for hearing must be in writing and will be accepted by the Department until **5:00 p.m., March 11, 1999**.

WHAT HAPPENS NEXT: The Department will review all information received during the chance to comment period. Following this review, the permit may be issued as proposed, modified or denied.

RECEIVED
FEB 12 1999
KOPPERS INDS, INC.
PORTLAND OR

PROPOSED

AIR CONTAMINANT DISCHARGE PERMIT

Department of Environmental Quality
Northwest Region
2020 SW 4th Avenue, Suite 400
Portland, Oregon 97201-4987
Telephone: (503) 229-5263

Issued in accordance with the provisions of ORS 468A.040 and based on the land use compatibility findings included in the permit record.

ISSUED TO:

Koppers Industries, Inc.
7540 NW St. Helens Road
Portland, OR 97210-3663

INFORMATION RELIED UPON:

Application No: 016551
Date received: 8/25/97

PLANT SITE LOCATION:

7540 NW St. Helens Road
Portland, OR

LAND USE COMPATIBILITY STATEMENT:

From: City of Portland
Dated: 9/15/97

ISSUED BY THE DEPARTMENT OF ENVIRONMENTAL QUALITY:

Ed Druback, Northwest Region Air Quality Manager

Dated

Source(s) Permitted to Discharge Air Contaminants:

TYPE OF FACILITY (from Table 4, OAR 340-28-1750)	STANDARD INDUSTRY CODE
58. b) Boiler located in Portland AQMA, 10 MM Btu/hour energy input, distillate oil fired	4961

PROPOSED

PERMITTED ACTIVITIES

The permittee is herewith allowed to discharge exhaust gases from those processes and activities directly related to or associated with the air contaminant source(s) listed above in accordance with the requirements, limitations, and conditions of this permit, until such time as this permit expires or is modified or revoked.

Compliance with the specific requirements, limitations and conditions contained herein does not relieve the permittee from complying with all other laws, rules and standards administered by the Department, nor does it allow significant levels of emissions of air contaminants not limited in this permit or contained in the permit application.

PERFORMANCE STANDARDS AND EMISSION LIMITS

1. Particulate emissions from any single air contaminant source shall not exceed any of the following:

   a. 0.2 grains per standard cubic foot, corrected to 12% CO_2 or 50% excess air, for combustion sources existing prior to June 1, 1970;
   b. 0.1 grains per standard cubic foot, corrected to 12% CO_2 or 50% excess air, for combustion sources installed, constructed, or modified after June 1, 1970; and
   c. An opacity equal to or greater than twenty percent (20%) for a period aggregating more than three (3) minutes in any one (1) hour, excluding uncombined water vapor.
   d. Particulate matter which is larger than 250 microns and which may be deposited upon the real property of another person shall not be emitted.

2. The permittee shall not sell, distribute, use (combust), or make available for use, any fuel oil which exceeds the following sulfur content limitations:

   a. 0.3 percent sulfur by weight for ASTM Grade 1 (distillate).
   b. 0.5 percent sulfur by weight for ASTM Grade 2 (distillate).
   c. 1.75 percent sulfur by weight for residual fuel oil.

   TJ for future reference

3. The permittee shall not allow the emission of odorous matter or other fugitive emissions so as to create nuisance conditions off the permittee's property. Nuisance conditions will be verified by Department personnel. The creation of nuisance conditions may, in addition to any other action the Department may take, result in a permit modification to require a compliance schedule to control the nuisance conditions.

OPERATIONS AND MAINTENANCE

4. The permittee shall at all times maintain and operate all air contaminant generating processes and all air contaminant control equipment at full efficiency and effectiveness, such that the emissions of air contaminants are kept at the lowest practicable levels.

5. The permittee shall minimize fugitive dust emissions by:
   a. Treating vehicular traffic areas of the plant site under the control of the permittee.
   b. Storing collected material from air pollution control equipment in a covered container or other method equally effective in preventing the material from becoming airborne during storage and transfer.

6. A maintenance service must be performed on the boiler at least once every two years. As a minimum, the service must include an inspection of the burners and refractory chamber, cleaning, adjustment, and repair as necessary. Records of the service shall be maintained on site for a period of at least two years.

PLANT SITE EMISSION LIMITS

7. Emissions of Sulfur Dioxide on a plant site basis shall not exceed 22 tons per year or 20 pounds per hour.

8. Emissions of Nitrogen Oxides on a plant site basis shall not exceed 28 tons per year or 11 pounds per hour.

9. Emissions of Carbon Monoxide on a plant site basis shall not exceed 7 tons per year or 3 pounds per hour.

10. Emissions of Volatile Organic Compounds on a plant site basis shall not exceed 20 tons per year or 14 pounds per hour

AIR POLLUTION EPISODES

11. The permittee may elect to file a Source Emission Reduction Plan (SERP) with the Department in accordance with OAR 340-27-015, specifying the procedures the permittee will follow in the event an Air Pollution Alert, Warning, or Emergency Episode is declared in the Portland area by the Department. The Source Emission Reduction Plan shall be available on the source premises for inspection by any authorized personnel.

12. In the event an Air Pollution Alert, Warning, or Emergency Episode is declared in the Portland area by the Department, the permittee shall take actions appropriate to the declared Air Pollution Episode as listed in the Source Emission Reduction Plan on file with the Department, or with Oregon Administrative Rules 340, Division 27 "Air Pollution Emergencies" if no Source Emission Reduction Plan has been filed with the Department.

Air Pollution Episodes will be declared by the Department and information will be made available through the radio and television media.

PROPOSED

SPECIAL CONDITIONS

13. The permittee shall notify the Department in writing of the date the new hot oil heater is started up. The notification shall be submitted no later than seven (7) days after startup.

14. All nuisance condition complaints shall be investigated by a plant representative immediately following receipt of such a complaint. A log of all complaints shall be maintained at the plant site and shall include date of contact, time of observed nuisance condition, description of nuisance condition, location of receptor, and status of plant operation during the observed period. The nuisance complaint log shall be maintained on site for a period of not less than two years, and be made available to Department representatives upon request.

MONITORING REQUIREMENTS

15. The permittee shall effectively inspect and monitor the operation and maintenance of the plant and associated air contaminant control facilities and shall implement the procedures necessary to monitor and record the following parameters. A record of all such data shall be maintained for a period of two years at the plant site for inspection by the authorized representatives of the Department.

    a. All operating and production parameters to be reported to the Department annually as required in Condition 16.
    b. Excess emissions records as defined in OAR 340-28-1400 through 340-28-1440 (recorded on occurrence)
    c. A description of any maintenance to the air contaminant control system (recorded on occurrence)

REPORTING REQUIREMENTS

16. The permittee shall submit to the Department by January 15 of each year this permit is in effect two (2) copies of the following information for the preceding calendar year:

    a. Operating parameters:

        i. Annual throughput of coal tar pitch
        ii. Annual throughput of heavy oil
        iii. Total boiler operating time (hours/year)
        iv. Total hot oil heater operating time (hours/year)
        v. Highest sulfur content of oil burned (obtained from supplier)
        vi. Types and quantities of fuels burned (gallons or MMCF)
        vii. Average plant operating schedule (hours/day, days/week, weeks/year)

    b. Computations of total VOC and HAPs emissions for the previous calendar year.

PROPOSED

c. A log of all planned and unplanned excess emissions in accordance with OAR 340-28-1440.

d. A summary of all odor complaints received during the year; by specifying the number of complaints on each date that complaints were received.

e. Explain any permanent changes made in the plant process or production which would effect air contaminant emissions, and indicate when changes were made.

f. List all major maintenance performed on air pollution equipment

g. The report shall be sent to the Northwest Region, 2020 SW 4th Ave., #400, Portland, Oregon 97201-4987 unless otherwise noted. The permit number must be prominently displayed on the report.

FEE SCHEDULE

17. The Annual Compliance Determination Fee for this permit is due on August 1 of each year this permit is in effect. An invoice indicating the amount, as determined by Department regulations, will be mailed prior to the above date. The fee shall be submitted to the Business Office of the Department in Portland (unless otherwise notified).

18. The Application Processing and Filing fees for renewal of this permit are due on July 1, 2002, and must be submitted at least 60 days prior to the permit expiration date. An invoice indicating the amount, as determined by Department regulations, will be mailed prior to the above date. The fee and application shall be submitted to the Business Office of the Department in Portland (unless otherwise notified).

GENERAL CONDITIONS AND DISCLAIMERS

G1. The permittee shall allow Department of Environmental Quality representatives access to the plant site and pertinent records at all reasonable times for the purposes of making inspections, surveys, collecting samples, obtaining data, reviewing and copying air contaminant emission discharge records and otherwise conducting all necessary functions related to this permit in accordance with ORS 468.095.

G2. The permittee shall have available at the facility at all times a copy of the Air Contaminant Discharge Permit.

G3. The permittee is prohibited from conducting open burning.

G4. The permittee shall at all times conduct dust suppression measures to meet the requirements set forth in "Fugitive Emissions" and "Nuisance Conditions" in OAR 340-21-050 through 340-21-060 and in OAR 340-30-440.

PROPOSED

G5. The permittee shall immediately (i.e. as soon as possible but in no case more than one hour after the beginning of the excess emission period) notify the Department by telephone or in person of any excess emissions which are of a nature that could endanger public health, in accordance with OAR 340-28-1430. Follow-up reporting shall be made in accordance with Department direction and OAR 340-28-1430(3) and 340-28-1440.

Notification shall be made to the appropriate regional or branch office. The current Northwest Region telephone number is (503) 229-5554.

In the event of any excess emissions which are of a nature that could endanger public health and occur during non-business hours, weekends, or holidays, the permittee shall immediately notify the Department by calling the Oregon Emergency Response System (OERS). The current number is 1-800-452-0311.

G6. The permittee shall notify the Department in writing using a Departmental "Notice of Construction" form, or "Permit Application Form", and obtain approval in accordance with OAR 340-28-800 through 340-28-820 before:

a. Constructing or installing any new source of air contaminant emissions, including air pollution control equipment, or
b. Modifying or altering an existing source that may significantly affect the emission of air contaminants, or
c. Making any physical change which increases emissions, or
d. Changing the method of operation, the process, or the fuel use, or increasing the normal hours of operation to levels above those contained in the permit application and reflected in this permit and which result in increased emissions.

G7. Application for a modification of this permit must be submitted not less than 60 days prior to the source modification. A Filing Fee and an Application Processing Fee must be submitted with an application for the permit modification.

G8. The permittee shall notify the Department in writing using a Departmental "Permit Application Form" within 60 days after the following:

a. legal change of the registered name of the company with the Corporations Division of the State of Oregon, or
b. sale or exchange of the activity or facility.

Applicable Permit Fees must be submitted with an application for the name change.

G9. The issuance of this permit does not convey any property rights in either real or personal property, or any exclusive privileges, nor does it authorize any injury to private property or any invasion of personal rights, nor any infringement of federal, state, or local laws or regulations.

G10. This permit is subject to revocation for cause as provided in OAR 340-14-045.

ALL INQUIRIES SHOULD BE DIRECTED TO:

Department of Environmental Quality
Northwest Region - Air Quality
2020 SW 4th Avenue, Suite 400
Portland, Oregon 97201-4987
Telephone: (503) 229-5554

PROPOSED

Department of Environmental Quality
Northwest Region

AIR CONTAMINANT DISCHARGE PERMIT APPLICATION REVIEW REPORT

Koppers Industries, Inc.
7540 NW St. Helens Road
Portland, OR 97210-3663

SOURCE TEST	AMB MON	COMPL SCHED	SPEC COND	RPT FREQ	EXCESS RPT	NSPS	NSR	PSD	NESHAP	SIZE	PUB NTC
			Y	A						A-2	Y

GENERAL BACKGROUND INFORMATION

1. This is a new permit for an existing source. In March 1975, Koppers Co., Inc. proposed a coal tar pitch processing facility. A permit was written to cover the operation of the proposed facility. In January 1976, the company informed the Department that the proposed operation would not be added to the facility. The permit was modified to allow the marketing of the remaining 3600 tons of coal tar on hand as roofing bitumen. The Department then canceled the permit as the facility reverted to being a terminal facility only.

   In response to a complaint in Koppers' geographical area, several facilities were visited. Department staff discovered an oil-fired boiler operating without a permit. The facility contains a 21 Mm Btu/hour boiler with the capability of burning oil. Under OAR 340-28-1750, Table 4 (formerly OAR 340-20-155, Table 1), all oil fired boilers greater than 10 MM Btu/hour input capacity in the Portland Air Quality Maintenance Area are required to have an air discharge permit. Because the Department had mistakenly canceled the permit in 1977, no enforcement action was taken against the source.

   The company proposes to replace an 8 MM Btu/hour natural gas fired hot oil heater to provide heat to storage tanks. The old heater will be used as a back-up. Gaseous emissions from the tanks will be ducted to the hot oil heater for incineration. Installation of a heated pipeline and two liquid pitch storage tanks is planned within the next two years.

   The facility now receives, stores, and transfers creosote. The company plans to cease its shipments of creosote and instead move heavy oil and coal tar pitch (pencil pitch). Pencil pitch is received in solid form, placed in tanks and heated, then moved through pipes to load onto rail cars or tank cars. The heavy oil is also heated for ease of movement.

PROPOSED

2. The facility is located in a maintenance area for carbon monoxide and ozone. Two contributors to ozone, nitrogen oxides (NO_x) and volatile organic compounds (VOC), are regulated pollutants. The facility is an insignificant source of CO, NO_x, and VOC. The area is in attainment for all other pollutants.

3. A Land Use Compatibility Statement signed by the City of Portland on September 15, 1997 granted unconditional approval.

4. The Department has issued a water quality permit to this facility, NPDES 100419. The plant site includes 25 tanks for the collection and storage of storm water.

5. Air contaminant sources at the facility for the coming permit period are:

EQUIPMENT	MFG/MODEL	CAPACITY/ PROD. RATE	SCC*	INSTALLED/ MODIFIED
Oil-fired boiler	N. American	21 MM Btu/hr	3-06-001-03	1965
Gas-fired heater	TBD	8 MM Btu/hr	3-06-001-02	1998/99
Pitch/oil transfer system	n/a	150,000 gal/yr	unknown	1965 inst. 2000 mod.

*Source Classification Code, U.S. EPA reference

HAZARDOUS AIR POLLUTANTS (HAPS)

6. The heating of these substances causes certain hazardous air pollutants (HAPS) to be driven off. The HAPS include naphthalene, quninoline, biphenyl, dibenzofuran, benzene, and toluene, and others in lesser quantities. Maximum total combined HAPS emissions will be 3.1 tons per year, which also represents the facility's potential to emit HAPS. After the new equipment is installed, total combined HAPS emissions are estimated at 0.001 tons per year. The current fume recovery system will be changed to a fume combustion system by feeding the HAP emissions collected by the fume recovery system through the facility's boiler for incineration. The emission levels noted in this paragraph were based upon maximum potential emissions under the facility's configuration after the heated pipeline, new storage tanks, and fume combustion systems are installed. Further details are contained in the source file.

PLANT SITE EMISSION LIMIT (PSEL) INFORMATION

ORIGINAL PLANT SITE EMISSION LIMIT

7. The facility was in operation during the baseline years. Baseline year information has not been provided, however, so Baseline Emission Rates have not been established.

PROPOSED

PROPOSED PLANT SITE EMISSION LIMIT

8. The normal operating schedule for the equipment is 24 hrs/day x 7 days/wk x 52 wks/yr = 8,736 hrs/yr.

9. Normal annual fuel usage is100,000 gallons of diesel oil and 184 million cubic feet of natural gas. Maximum hourly fuel burned is 150 gallons of diesel oil and/or 30,000 cubic feet of natural gas.

10. Throughput of pencil pitch is expected to be ~~70,000~~ 150,000 ~~gallons~~ TONS per year, and a maximum of ~~100~~ 562 ~~gallons~~ TONS per hour.

11. An emission summary is below. Refer to the Plant Site Emission Detail Sheet, attached.

Source	SO_2 tons/yr (lbs/hr)	NO_x tons/yr (lbs/hr)	CO tons/yr (lbs/hr)	VOC tons/yr (lbs/hr)
Oil combustion	21.3 (20.0)	6.0 (5.6)	1.5 (1.4)	0.06 (0.06)
Gas combustion	0.4 (0.1)	22.4 (5.6)	5.6 (1.4)	0.45 (0.11)
Material transfer				19.25 (14.1)
Totals	21.7 (20.1)	28.4 (11.2)	7.1 (2.8)	19.7 (14.3)

12. Emissions of PM and PM10 are considered negligible and are not included in the Plant Site Emission Limit, shown below.

Pollutant	Short-Term Limit	Annual Limit
Sulfur dioxide (SO_2)	20 Lb/Hour	22 Tons/Year
Nitrogen oxides (NO_x)	11 Lb/Hour	28 Tons/Year
Carbon Monoxide (CO)	3 Lb/Hour	7 Tons/Year
Volatile Organics (VOC)	14 Lb/Hour	20 Tons/Year

SIGNIFICANT EMISSION RATE

13. The Plant Site Emission Limit increase over baseline is less than the Significant Emission Rate (SER) as defined in OAR 340-28-110 for all pollutants and is shown below. No further air quality analysis is required for those pollutants.

PROPOSED

Significant Emission Rates:

Pollutant	Baseline (tons/yr)	Current PSEL (tons/yr)	Increase (tons/yr)	SER (tons/yr)
SO_2	0	22	22	40
NO_x	0	28	28	40
CO	0	7	7	100
VOC	0	20	20	40

ADDITIONAL REQUIREMENTS

14. Special conditions contained in the permit include the requirement to notify the Department upon installation of the ~~8~~ 10 MM Btu/hour heater, and to make a response to all complainants.

15. The source is required to submit reports to the Department annually.

16. The source is not subject to immediate (within one hour) reporting of excess emissions, except when the emissions may endanger public health.

17. This source is not subject to federal regulations for New Source Performance Standards (NSPS).

18. This source is not subject to federal regulations for New Source Review.

19. This source is not subject to federal regulations for Prevention of Significant Deterioration (PSD).

20. This source is not subject to federal regulations for National Emissions Standards for Hazardous Air Pollutants (NESHAP).

PUBLIC NOTICE

The configuration of the plant differs greatly from the time the last permit was issued. Therefore the permit was placed on public notice from March 16, 1998 to April 15, 1998. No comments were received. During the public notice, the applicant informed the Department of a change in plans that would increase gaseous emissions. The proposed permit has been modified, and will again be put on public notice from February 9, 1999 to March 11, 1999.

KAmidon:Edruback
2/10/1998

PROPOSED

Koppers Ind.									
ACDP 26-2930									
			Plant Site Emission Detail Sheet						
		Fuel Usages	Pollutant	DEQ Emission Factor			Emissions		
Fuel:									
Oil, distillate	600	Thou. Gallons/year	PM	2	Lb/1,000 gal.	0.60	Tons/yr	0.56	Lb/hr
	282	Gal./hour	PM10	1	Lb/1,000 gal.	0.30	Tons/yr	0.28	Lb/hr
			SO2	71	Lb/1,000 gal.	21.30	Tons/yr	20.02	Lb/hr
			Nox	20	Lb/1,000 gal.	6.00	Tons/yr	5.64	Lb/hr
			CO	5	Lb/1,000 gal.	1.50	Tons/yr	1.41	Lb/hr
			VOC	0.2	Lb/1,000 gal.	0.06	Tons/yr	0.06	Lb/hr
Natural gas	321	MM Cubic Ft./year	PM	2.5	Lb/MMCF	0.40	Tons/yr	0.10	Lb/hr
	0.04	MM Cubic Ft./hour	PM10	2.5	Lb/MMCF	0.40	Tons/yr	0.10	Lb/hr
			SO2	2.6	Lb/MMCF	0.42	Tons/yr	0.10	Lb/hr
			Nox	140	Lb/MMCF	22.47	Tons/yr	5.60	Lb/hr
			CO	35	Lb/MMCF	5.62	Tons/yr	1.40	Lb/hr
			VOC	2.8	Lb/MMCF	0.45	Tons/yr	0.11	Lb/hr
	150	tons							
Material Transfer	~~70~~	Thou. Gallons/year	VOC			19.25	Tons/yr	14.1	Lb/hr
System	~~100~~	Gal./hour							
	562	tons							
						Emission Limits			
Note: PM and PM10 emissions are considered					SO2	22	Tons/yr	20	Lb/hr
negligible and are not included in the PSEL.					Nox	28	Tons/yr	11	Lb/hr
					CO	7	Tons/yr	3	Lb/hr
					VOC	20	Tons/yr	14	Lb/hr
Oil usage is considered to be 12 weeks per year.									
Natural gas usage is as estimated by the applicant.									
VOC emissions from the material transfer system were									
calculated using ChemCad. Refer to the source file.									

2/01/1999

RECEIVED

FEB 1 2 1999

KOPPERS INDS, INC.
PORTLAND OR

KOPPERS INDUSTRIES

Koppers Industries, Inc.
436 Seventh Avenue
Pittsburgh, PA 15219-1800

Telephone: (412) 227-2001
Fax: (412) 227-2423

March 10, 1999

VIA FACSIMILE (503-229-5265) AND UPS NEXT DAY AIR

Oregon Department Of Environmental Quality
Northwest Region
2020 SW Fourth Avenue
Suite 400
Portland, OR 97201-4987

Attention: Kathy Amidon

RE: Koppers Industries, Inc. – Portland Terminal
Public Notice-Comments
Proposed Air Permit Application No. 26-2930
Multnomah County

Dear Ms. Amidon:

Koppers Industries, Inc. (KII) respectively submits the following comments/clarifications for the proposed air contaminant discharge permit for the Portland Terminal.

KII proposed a phased approach to modifying conditions at the Portland Terminal. As part of the application process, calculated emissions were submitted for existing, Phase I and Phase II conditions. KII intends only to proceed with Phase II if business conditions require an additional storage tank (T-210). If this tank is required then KII will install a fume combustion system.

The Portland Terminal facility presently consists of the following units:

1. 21MM BTU Atlas Boiler
2. 8MM BTU Hot oil heater
3. Fume Recovery *System*
4. Tanks 33 and 67

The proposed system in Phase I will consist of:

1. 21MM BTU Atlas Boiler
2. 10MM BTU hot oil heater(new)
3. *8 MM BTU hot oil heater*
4. *Fume Recovery system*

5. *Tank 200 (new), T-33, T-67*

Phase II- implemented based on business conditions will consist of in addition to the units listed for Phase I:

6. Tank 210 (new)
7. Fume combustion system

Public Notice

Special Permit Conditions:

1. The 8MM Btu/hour heater should be a 10MM Btu/hour heater.
2. KII requests a permit condition stating that Phase II of the project may be implemented based on business conditions. If Phase II is implemented then the fume combustion system may be installed.

Air Contaminant Discharge Permit Application Review Report:

General Background Information- Page 1 of 4

Paragraph 3. -The statement that " gaseous emissions from the tanks will be ducted to the hot oil heater for incineration. Installation of a heated pipeline and two liquid pitch storage tanks is planned within the next two years" is incorrect. The sentence should read "*gaseous emissions from the tanks will be ducted to the fume recovery system. Installation of a heated pipeline and a liquid pitch storage tank is planned within the next two years.* "

Page 2 of 4 Number 5-Air Contaminant sources at the facility for the coming permit period are:

Koppers Industries, Inc. requests the table be amended to reflect that the boilers and both heaters are capable of both oil and gas firing.

The production rate of the pitch/oil transfer system should be 150,000 ton/yr. instead of 150,000 gal/yr.

The fume recovery system is presently in operation and will continue to operate. It should be added to the table.

The table has been modified to incorporate the requested changes described above.

Equipment	MFG/Model	Capacity/ Prod. Rate	SCC*	Installed/modified
Oil/gas-fired boiler	N. American	21 MM Btu/hr	3-06-001-03	1965
Oil/Gas-fired heater	N. American	8 MM BTU/hr	3-06-001-02	1990
Oil/Gas-fired heater	N. American	10 MM Btu/hr		1999
Pitch/oil transfer System	N/A	150,000 ton/yr.		1965 inst. 1999 modified
Fume recovery system	N/A	150,000 ton/yr.		1987

Hazardous Air Pollutants (HAPS)- Page 2 of 4

Number 6, Fourth sentence states "The current fume recovery system will be changed to a fume combustion system by feeding the HAP emissions collected by the fume recovery system through the facility's boiler for incineration." The sentence should read "If business conditions warrant implementation of Phase II, the current fume recovery system may be changed to a fume combustion system by feeding the emissions collected through the fume combustion unit."

Proposed Plant Site Emission Limit- Page 3 of 4

Number 10. Reads " throughput of pencil pitch is expected to be 70,000 gallons per year, and a maximum of 100 gallons per hour." The correct statement is "Throughput of pitch is expected to be 150,000 tons per year, and a maximum of 562 tons per hour."

Plant Site Emission Detail Sheet

Material Transfer System reads in column labeled fuel usage 70 Thou. Gallons/year and 100 tons. /hour.

Correct material transfer system fuel usage should be 150,000-tons/ year and 562 ton/hr.

Page 4 of 4

Additional requirements

Number 14. Reads: Special Conditions contained in the permit include the requirement to notify the Department upon installation of the 8MM Btu/hr heater, and to make a response to all complainants.

KII requests the following correction:

14. Special conditions contained in the permit include the requirement to notify the Department upon installation of the 10 MM Btu/hr, heater, and to make a response to all complainants.

Air contaminant Discharge Permit

Page 1 of 7:

Type of Facility

Standard Industry code for the facility is 2865 and not 4961 as listed.

The boiler at the facility is a 21MM Btu/hour unit as listed in the above table. KII requests the addition of the of the following units to the list of "Sources permitted to Discharge Air Contaminants":

1. **21MM BTU Atlas Boiler**
2. **10MM BTU hot oil heater(new)**
3. ***8 MM BTU hot oil heater***
4. ***Fume Recovery system***
5. ***Tank 200 (new), T-33, T-67***
6. ***Tank 210(new (if required)***
7. ***Fume Combustion System (if required)***

Reporting Requirements (Page 4, Item 16:)

KII requests that report submittal be made the Department by March 1 of each year for the preceding calendar year. KII requests the additional time in order to submit a thorough report that contains the information requested in item 16. The January 15 date would not allow sufficient time to gather and analyze data to include in a detailed report.

KII appreciates the opportunity to provide comment/clarification on the draft permit and public notice. Thank you for all of your hard work and review of the application and supplements.

If you have any questions please contact Amos Kamerer at (503) 286-3681 or me at (412) 227-2883.

Sincerely,

Traci I. Self
Environmental Manager

cc: Amos Kamerer
Jim Dietz
Kevin Fitzgerald
Steve Smith
Bill Meisinger

RECEIVED

MAR 1 5 1999

KOPPERS INDS, INC.
PORTLAND OR

Oregon
John A. Kitzhaber, M.D., Governor

Department of Environmental Quality
811 SW Sixth Avenue
Portland, OR 97204-1390
(503) 229-5696
TDD (503) 229-6993

February 26, 1999

Koppers Industries, Inc.
Attn: Environmental Officer

7540 NW St Helens Road
Portland, OR 97210

RE: Year 2000 (Y2K) and Air Quality Permit Number 26-2930

As the year 2000 approaches, you have no doubt heard about the year 2000 computer date problem that may affect businesses around the world. The Department of Environmental Quality is in the process of reviewing all our systems and processes to ensure that the services we provide will not be interrupted. One vital lesson that we have learned in this process is that the ways we rely on technology are not always obvious. Most business processes rely on computers to some extent, and we are prepared to examine such systems for problems, but we have also learned that many automated processes from materials handling to process control to cameras and fax machines rely in embedded chips which may contain time and date functions.

Your business may receive a similar notice related to Year 2000 issues from other Department of Environmental Quality Programs or Oregon State agencies, however we believe this is an important issue. This letter specifically applies to your Department of Environmental Quality Air Quality Permit Number 26-2930.

As a regulator, and a steward of Oregon's environment, we are concerned that the year 2000 problem could have an adverse impact on permit holders, and through their failure, on the environment. If you haven't already done so, we strongly recommend that you perform a Y2K assessment of your business operations, and take appropriate steps to mitigate risks that you discover. We will not be asking permit holders to submit plans or certifications to DEQ, as we lack appropriate resources to evaluate your business process issues. However, I must advise you that permit requirements will be enforced. Foreseeable and preventable Year 2000 failures will not be acceptable reasons for permit violations.

In order to encourage prompt identification and timely correction of Y2K problems with computerized equipment, DEQ offers amnesty from penalty for those violations occurring during "Y2K" testing. In meeting the conditions for amnesty, the facility must design and conduct the tests well in advance of the problem date(s), conduct the test for the shortest possible time, and take immediate corrective action. DEQ has adopted, verbatim, EPA's Y2K Enforcement Policy which is available via internet at *www.epa.gov/year2000/finalpol.htm* or in hard copy at any DEQ office. Facilities conducting Y2K testing should submit written notification to DEQ in advance of when the tests will occur to demonstrate that the violations were caused by the testing.

I want to extend my sincerest wishes for success in your organization's Year 2000 efforts. Your business operations may depend upon it, as could the health of Oregon's environment. You may find additional information about our own efforts on our web site at www.deq.state.or.us (under "What's New"). You can follow links to several other sites. Please contact Ernie Weber at (503) 229-6765 or weber.ernie@deq.state.or.us if you have questions on this matter.

Sincerely,

Langdon Marsh
Director

CC: T. Self, K-1800

RECEIVED
MAR - 1 1999
KOPPERS INDS, INC.
PORTLAND OR

DEQ-1

LM:RJW:j
LTR\AQ76847.DOC

Author: Traci Self at PITT
Date: 1/26/99 3:36 PM
Priority: Normal
TO: Amos Kamerer at PITT
CC: Kevin Fitzgerald at PITT
CC: Steve Smith at PITT
CC: Randy Collins at PITT
Subject: Portland Terminal Air Permit-Update

---------- Message Contents ----------

I received a call from Kathy Amidon of ODEQ stating that she received all the required information from KII and the permit has been forwarded to her supervisor to be placed for public notice. She said the public notice should be placed within a week. She advices that KII review the public notice and make any corrections before the end of the 30 day comment period. If ODEQ does not receive significant comments within this timeframe, the permit will be issued. I did not ask but I believe the notice will be forwarded to you at the Portland facility. Thank You.
Traci

S/B posted 2/11
Due 3/11

KOPPERS INDUSTRIES

Koppers Industries, Inc.
436 Seventh Avenue
Pittsburgh, PA 15219-1800

Telephone: (412) 227-2001
Fax: (412) 227-2423

Via Fax and Regular Mail

January 21, 1999

Oregon Department Of Environmental Quality
Northwest Region
2020 SW Fourth Avenue
Suite 400
Portland, OR 97201-4987

Attention: Kathy Amidon

Subject: Contaminant Discharge Permit No. 26-2930- Additional Information

Dear Ms. Amidon:

This letter is in response to our telephone conversation of January 20, 1999. During that conversation, you requested additional information regarding assumptions used in calculating Volatile Organic Compound (VOC) and Hazardous Air Pollutants (HAP).

The emissions inventory for Koppers Industries, Inc. Portland Plant was based on AP-42 methods for tanks and combustion units and a process design model used to calculate fume recovery system emissions called ChemCad. HAP emissions were calculated by speciating VOC emissions based on known liquid/vapor compositions.

For the actual case scenario, a plant throughput of 70,000 tons of pitch per year was assumed. The facility handles Pitch, P1/P13 distillate, and Heavy Oil. The operating hours were calculated for the fume recovery system based on the known pumping rates and throughputs. Under the actual scenario, the combustion units only use natural gas as a fuel.

For the potential case scenarios, the maximum plant design throughput of 150,000 tons of pitch per year was assumed. Three scenarios were considered. The first case assumed existing units remain. The second case, Phase I incorporates the installation of a new hot oil heater and pitch storage tank. The third case, Phase II, incorporates the installation of a second new pitch storage tank and upgrading the fume recovery system to a fume combustion system. The facility will only handle Pitch and Heavy Oil in all cases. The operating hours for the plant and all units are assumed to be equal to 8,760 hours per year. The combustion units may burn natural gas or diesel as a fuel, although diesel oil will be restricted to 12 week per year.

It is my understanding that with submission of these items a draft permit will be issued for public comment.

If you have any questions, please call me at 412-227-2883.

Sincerely,

Traci I. Self

Traci I. Self
Environmental Manager

CC: Amos Kamerer
Steve Smith
Bill Meisinger
Jim Dietz
Kevin Fitzgerald

RECEIVED

JAN 2 6 1999

KOPPERS INDS, INC.
PORTLAND OR

INTEROFFICE CORRESPONDENCE

DATE: 12/29/98

TO: KEVIN FITZGERALD

CC: AMOS KAMERER, RANDY COLLINS, AND STEVE SMITH

FROM: T. SELF

RE: PORTLAND AIR AND NPDES PERMIT UPDATE

Air Permit Issues

Oregon Department Of Environmental Quality (ODEQ) requested additional information for the contaminant air discharge permit. The agency wanted a list of all the storage tanks on the facility that includes tank contents, date of installation and vapor pressure. The information is required to determine if any of the tanks are subject to new source performance standards (NSPS). None of the existing tanks or the two new liquid pitch tanks would be subject to NSPS because the vapor pressures and/or installation dates are outside the standards.

ODEQ also requested KII provide emission calculations for Hazardous Air Pollutants (HAP). The calculations are required to determine if the HAP emissions or at or above Title V trigger levels. Calculations by Air Compliance Consultants (ACCI) indicate that the HAP emissions are well below Title V levels.

A Notice of Intent to Construct has been prepared and forwarded to Amos Kamerer for signature and submittal to ODEQ. If ODEQ does not comment within 60 days, construction may begin. Construction would be at the risk of KII, a permit to operate is not guaranteed until issuance by ODEQ.

Kathy Amidon –ODEQ permit writer, stated that the air permit will be issued. The additional information was required to ensure that the appropriate type of permit was prepared. She said a draft permit would be sent for KII and public comment. If significant comments are not received within 30 days, the permit will be issued.

Although several questions and requests for information have been made and satisfied, I fully expect that KII will receive an acceptable air permit to allow the current and planned operations.

Water Permit Issues

Amos and I have reviewed the draft NPDES permit renewal. The permit writer was informed that KII did not have any comments or objections to the draft permit. The draft permit will be issued for public comment. If significant public comments are not received within 30 days, the permit will be issued. We do not expect public comment, the draft permit is essentially the same as the previous NPDES permit issued to the facility.

RECEIVED

JAN 0 8 1999

KOPPERS INDS, INC.
PORTLAND OR

December 29, 1998

Oregon Department Of Environmental Quality
Northwest Region
2020 SW Fourth Avenue
Suite 400
Portland, OR 97201-4987

Attention: Kathy Amidon

RE: Koppers Industries Inc. – Portland Terminal
Supplemental Information
Air Permit Application No. 26-2930
Multnomah County

Dear Ms. Amidon:

In response to our telephone conversation of December 8, 1998, and my letter to you dated December 22, 1998, I have enclosed the following requested information:

1. List of all tanks which includes tank contents, date of installation and vapor pressure.
2. Hazardous Air Pollutant (HAP) calculation (actual and potential) for the facility.
3. Design of new tanks 200 and 210, including materials to be stored for purpose of determining new source performance standards applicability (40 CFR 60, Kb)

As stated in previous correspondence the Portland Terminal Liquid pitch facility is proposed for construction in two phases. Phase I will consist of addition of a new liquid pitch storage tank (T- 200) and a new 10 MM BTU/Hr hot oil heater. The existing 8.5 MM BTU/HR hot oil heater will be used as a back up unit. Phase II will consist of addition of a liquid pitch storage tank (T-210) and new fume combustion system, if required. Koppers Industries Inc. has prepared HAP calculations (actual and maximum potential) for each phase. The HAP emissions for existing, Phase I and Phase II are well below Title V trigger levels.

A summary of all storage tanks which includes tank contents, date of installation and vapor pressure is enclosed. Tanks containing creosote will be changed to heavy oil storage upon installation of the de-mister unit. The current and future vapor pressures are shown on the table. The new liquid pitch tanks 200 and 210 are not subject to new source performace standards (40 CFR 60, Kb) because the vapor pressures are below the applicable standards.

A "Property Site Plan" indicating tank location is provided.

KII plans to commence construction of tank T-200 and the new hot oil heater on or about January 18, 1999. Therefore, KII will submit a "Notice of Intent to Construct". This notice will be submitted separately.

The Portland terminal is presently using natural gas for the boiler and hot oil heater. However, the terminal is operating under an interruptible gas contract. In the event that natural gas becomes unavailable, diesel fuel must be used in the units. The maximum potential emission calculations for existing units and proposed Phase 1 reflect use of diesel fuel for a maximum period of 12 weeks.

Because of the variability of business projections and uncertainty of obtaining a non-interruptible gas supply, Koppers Industries Inc. is requesting Oregon Department Of Environmental Quality (ODEQ), permit the Portland facility based on the maximum potential emission calculations listed for Phase I.

If you have, any questions please contact Amos Kamerer at (503) 286-3681 or me at (412) 227-2883.

Sincerely,

Traci I. Self
Environmental Manager

Attachments

cc: Amos Kamerer
Jim Dietz
Kevin Fitzgerald
Steve Smith

KOPPERS INDUSTRIES

FAX TRANSMITTAL

Koppers Industries, Inc.
7540 N.W. St. Helens Road
Portland, OR 97210-3663

Telephone: 503-286-3681
Fax: 503-285-2831

TO: Tracy

DATE: 12/29

FROM: Amos

TOTAL # OF PAGES: 2

IF THIS TRANSMITTAL IS IN ERROR, PLEASE CALL 503-286-3681 FAX # 503-285-2831

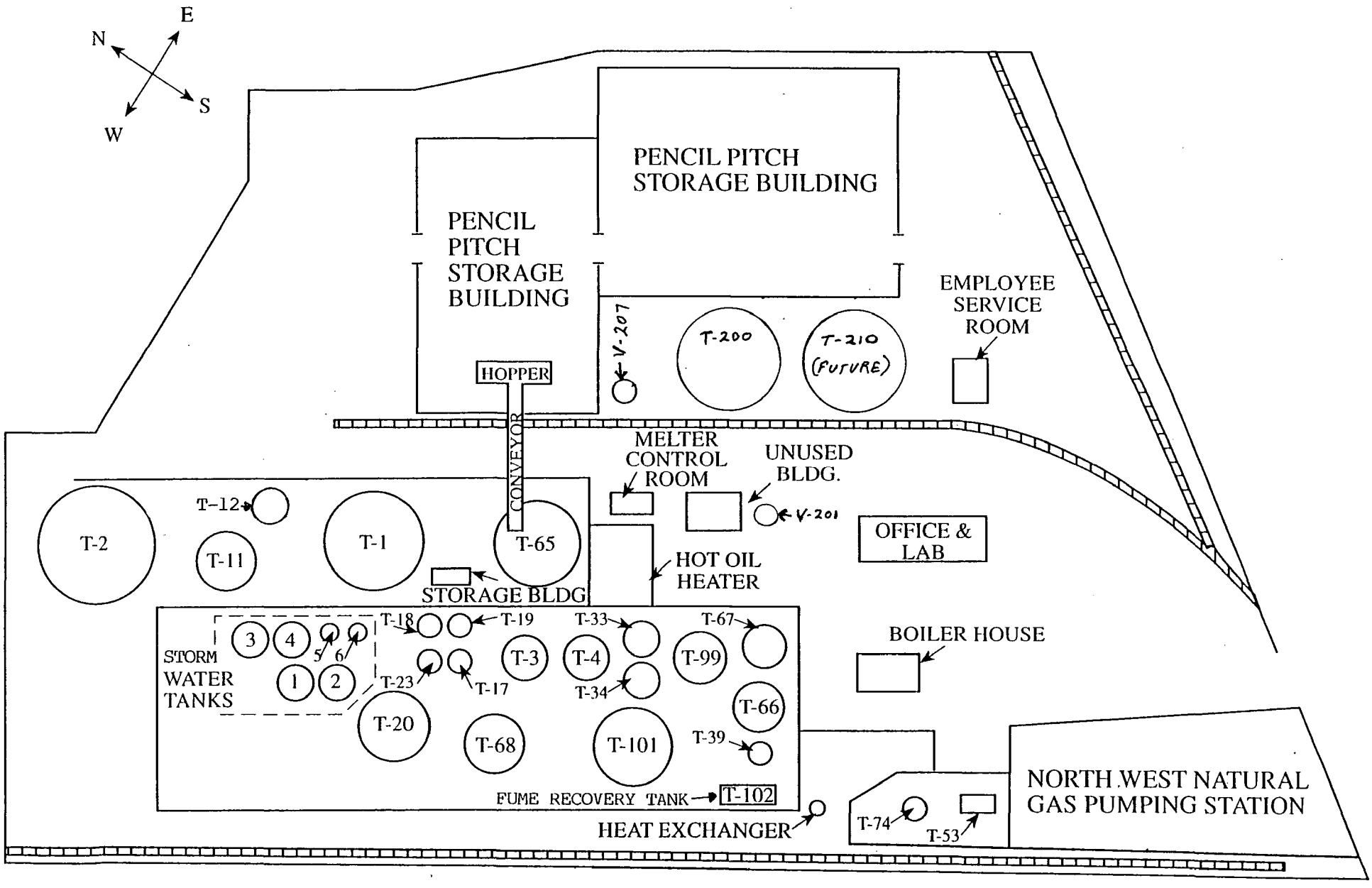

PROPERTY SITE PLAN

Koppers016020

KOPPERS INDUSTRIES

Koppers Industries, Inc.
436 Seventh Avenue
Pittsburgh, PA 15219-1800

Telephone: (412) 227-2001
Fax: (412) 227-2423

December 22, 1998

Oregon Department Of Environmental Quality
Northwest Region
2020 SW Fourth Avenue
Suite 400
Portland, OR 97201-4987

Attention: Kathy Amidon

Subject: Contaminant Discharge Permit No. 26-2930

Dear Ms. Amidon:

This letter is in response to our telephone conversation of December 8, 1998. During that conversation you informed me that additional information was required to continue processing the air contaminate discharge permit. You requested the following additional information:

1. A list of all tanks which includes tank contents, date of installation and vapor pressure.
2. Hazardous Air Pollutant (HAP) calculation (actual and potential) for the facility.
3. Design of new tanks 200 and 201, including materials to be stored, for purpose of determining new source performance standards applicability (40 CFR 60,Kb).

It is my understanding that with submission of these items a draft permit will be issued for public comment, provided that the facility does not have potential to emit pollutants at or above Title V trigger levels.

If you have any questions, please call me at 412-227-2883.

Sincerely,

Traci I. Self
Environmental Manager

CC: Amos Kamerer
Steve Smith
Bill Meisinger
Jim Dietz
Kevin Fitzgerald

RECEIVED

DEC 2 8 1998

KOPPERS INDS, INC.
PORTLAND OR

KOPPERS INDUSTRIES

Koppers Industries, Inc.
436 Seventh Avenue
Pittsburgh, PA 15219-1800

Telephone: (412) 227-2001
Fax: (412) 227-2423

November 10, 1998

VIA UPS NEXT DAY AIR

Oregon Department Of Environmental Quality
Northwest Region
2020 SW Fourth Avenue
Suite 400
Portland, OR 97201-4987

Attention: Kathy Amidon

RE: Koppers Industries Inc. – Portland Terminal
Supplemental Information
Air Permit Application No. 26-2930
Multnomah County

Dear Ms. Amidon:

In response to our telephone conversation, with Amos Kamerer, on November 2, 1998, I am enclosing a revised emission estimate spreadsheet for Phase I. Phase I will consist of addition of a new liquid pitch storage tank (T- 200) and a new 10 MM BTU/Hr hot oil heater. The existing 8.5 MM BTU/HR hot oil heater will be used as a back up unit.

The Portland terminal is presently using natural gas for the boiler and hot oil heater. However, the terminal is operating under an interruptible gas contract. In the event that natural gas becomes unavailable, diesel fuel must be used in the units. The maximum potential emission calculations for existing units and proposed Phase 1 have been revised to reflect use of diesel fuel for a maximum period of 12 weeks.

Because of the variability of business projections and the uncertainty of obtaining a non-interruptible gas supply, Koppers Industries Inc. is requesting Oregon Department Of Environmental Quality (ODEQ) permit the Portland facility based on the maximum potential emission calculations listed for Phase I.

If you have, any questions please contact Amos Kamerer at (503) 286-3681 or me at (412) 227-2883.

Sincerely,

Traci I. Self
Environmental Manager

RECEIVED
NOV 16 1998
KOPPERS INDS. INC.
PORTLAND OR

Attachments

cc: Amos Kamerer
Jim Dietz
Kevin Fitzgerald
Steve Smith

Maximum Potential Emissions from Existing Units
Koppers Industries, Inc., Portland Terminal

Unit	Comments	Commodity	NOx (lb/hr)	NOx Tons/Yr	VOC (lb/hr)	VOC Tons/Yr	CO (lb/hr)	CO Tons/Yr	SO2 (lb/hr)	SO2 Tons/Yr	PM-10 (lb/hr)	PM-10 Tons/Yr
Atlas Boiler[1]		Gas	2.82	12.33	0.06	0.25	0.70	3.08	0.08	0.33	0.12	0.55
		Oil/Gas	3.00	12.52	0.06	0.22	0.75	3.13	10.65	11.31	0.30	1.24
		MAX	3.00	12.52	0.06	0.25	0.75	3.13	10.65	11.31	0.30	1.24
Hot Oil Heater(backup unit)[1]		Gas	0.81	3.57	0.04	0.19	0.17	0.75	0.03	0.14	0.04	0.16
		Oil/Gas	1.22	3.97	0.04	0.16	0.31	0.88	4.33	4.60	0.12	0.43
		MAX	1.22	3.97	0.04	0.19	0.31	0.88	4.33	4.60	0.12	0.43
Fume Recovery System [2,3]		NA			12.47	21.51						
Tank 33		Heavy Oil			0.12	0.005						
Tank 67		P1/P13 Distillate			0.85	0.035						
Loading Tank 67 to Rail		P1/P13 Distillate			2.46	0.004						
Fugitives		NA			0.98	0.568						
Plant Total			**4.22**	**16.49**	**16.98**	**22.56**	**1.06**	**4.01**	**14.98**	**15.91**	**0.42**	**1.67**

NOTES
[1] Combustion units may be run on natural gas or #2 fuel oil. However, fuel oil combustion will occur a maximum of 12 weeks during any given year.
[2] The fume recovery system receives emissions from the following units: T-68, T-65, T-200, railcar loading and tank car loading.
[3] Hourly and annual VOC emissions from the fume recovery system were calculated using ChemCAD.

Koppers016024

Maximum Potential Emissions, Phase I
Koppers Industries, Inc., Portland Terminal

Unit	Comments	Commodity	NOx (lb/hr)	NOx Tons/Yr	VOC (lb/hr)	VOC Tons/Yr	CO (lb/hr)	CO Tons/Yr	SO2 (lb/hr)	SO2 Tons/Yr	PM-10 (lb/hr)	PM-10 Tons/Yr
Atlas Boiler[1]		Gas	2.82	12.33	0.06	0.25	0.70	3.08	0.08	0.33	0.12	0.55
		Oil/Gas	3.00	12.52	0.06	0.22	0.75	3.13	10.65	11.31	0.30	1.24
		MAX	3.00	12.52	0.06	0.25	0.75	3.13	10.65	11.31	0.30	1.24
Hot Oil Heater(backup unit)[1]		Gas	0.81	3.57	0.04	0.19	0.17	0.75	0.03	0.14	0.04	0.16
		Oil/Gas	1.22	3.97	0.04	0.16	0.31	0.88	4.33	4.60	0.12	0.43
		MAX	1.22	3.97	0.04	0.19	0.31	0.88	4.33	4.60	0.12	0.43
Fume Recovery System [2,3]		NA			12.47	21.51						
Tank 33		Heavy Oil			0.12	0.005						
Tank 67		Heavy Oil			0.04	0.002						
Fugitives		NA			0.98	0.568						
New Hot Oil Heater[1]		Gas	1.34	5.87	0.03	0.12	0.34	1.47	0.04	0.16	0.06	0.26
		Oil/Gas	1.42	5.96	0.03	0.10	0.36	1.49	5.04	5.34	0.14	0.52
		MAX	1.42	5.96	0.03	0.12	0.36	1.49	5.04	5.34	0.14	0.52
T-200		Liquid Pitch				Note 4						
Plant Total			**5.64**	**22.45**	**13.74**	**22.64**	**1.41**	**5.50**	**20.02**	**21.26**	**0.56**	**2.19**

NOTES
[1] Combustion units may be run on natural gas or #2 fuel oil. However, fuel oil combustion will occur a maximum of 12 weeks during any given year.
[2] The fume recovery system receives emissions from the following units: T-68, T-65, T-200, railcar loading and tank car loading.
[3] Hourly and annual VOC emissions from the fume recovery system were calculated using ChemCAD.
[4] Emissions from T-200 are included in the fume recovery system's emissions.

Koppers016025

Maximum Potential Emissions from Combined Natural Gas/Fuel Oil Combustion, Koppers Industries, Inc., Portland Tar Plant

Unit ID	Heat Input (MM BTU/Hr)	Fuel Used	Hourly Potential Fuel Use (Mgal/hr) (mmcf/hr)	Annual Potential* Fuel Use (Mgal/yr) (mmcf/yr)	Emission Factor NOx (lb/Mgal) (lb/mmcf)	NOx (lb/hr)	NOx (tpy)	Emission Factor VOC (lb/Mgal) (lb/mmcf)	VOC (lb/hr)	VOC (tpy)	Emission Factor CO (lb/Mgal) (lb/mmcf)	CO (lb/hr)	CO (tpy)	Emission Factor SO2 (lb/Mgal) (lb/mmcf)	SO2 (lb/hr)	SO2 (tpy)	Emission Factor PM-10 (lb/Mgal) (lb/mmcf)	PM-10 (lb/hr)	PM-10 (tpy)
Atlas Boiler	21	Oil	0.15	302.40	20.00	3.00	3.02	0.20	0.03	0.03	5.00	0.75	0.76	71.00	10.65	10.74	2.00	0.30	0.30
		Gas	0.02	135.66	140.00	2.82	9.50	2.78	0.06	0.19	35.00	0.70	2.37	3.80	0.08	0.57	6.20	0.12	0.94
Hot Oil Heater	8.5	Oil	0.061	122.40	20.00	1.22	1.22	0.20	0.01	0.01	5.00	0.31	0.31	71.00	4.33	4.35	2.00	0.12	0.12
		Gas	0.01	54.91	100.00	0.81	2.75	3.28	0.04	0.14	21.00	0.17	0.58	3.80	0.03	0.26	4.50	0.04	0.31
New Hot Oil Heater	10	Oil	0.071	144.00	20.00	1.42	1.44	0.20	0.01	0.01	5.00	0.36	0.36	71.00	5.04	5.11	2.00	0.14	0.14
		Gas	0.01	64.60	140.00	1.34	4.52	2.78	0.03	0.09	35.00	0.34	1.13	3.80	0.04	0.23	6.20	0.06	0.38
Total							**22.451**			**0.481**			**5.503**			**21.257**			**2.191**

* Based on 2,016 hours/year of fuel oil combustion and 6744 hours/yr of natural gas combustion
Assumed higher heating value of #2 Fuel Oil = 140,000 BTU/gal
Higher Heating Value Natural Gas = 1044 BTU/cuft
Emission Factors are taken from the AP-42, Section 1.3, Jan., 1995
SO2 Emission Factor calculated by assuming 0.5% S in Oil
Calculation for criteria pollutants during oil combustion = (max input in mm BTU/hr) X (Criteria emission factor) X (8760 hr/yr) / (2000 lbs/ton * 140,000 BTU/Gal)
Calculation for criteria pollutants during natural gas combustion]= (max input in mm BTU/hr) X (Criteria emission factor) X (8760 hr/yr) / (2000 lbs/ton * 1044 BTU/SCF)
Assumed PM = PM-10

Koppers016026

Maximum Potential Emissions from Natural Gas Combustion, Koppers Industries, Inc., Portland Tar Plant

Unit ID	Heat Input (MM BTU/Hr)	Fuel Used	Hourly Potential Fuel Use (mmcf/hr)	Annual Potential* Fuel Use (mmcf/yr)	Emission Factor NOx (lb/mmcf)	NOx (lb/hr)	NOx (tpy)	Emission Factor VOC (lb/mmcf)	VOC (lb/hr)	VOC (tpy)	Emission Factor CO (lb/mmcf)	CO (lb/hr)	CO (tpy)	Emission Factor SO2 (lb/mmcf)	SO2 (lb/hr)	SO2 (tpy)	Emission Factor PM-10 (lb/mmcf)	PM-10 (lb/hr)	PM-10 (tpy)
Atlas Boiler	21	Gas	0.02	176.21	140.00	2.82	12.33	2.78	0.06	0.25	35.00	0.70	3.08	3.80	0.08	0.33	6.20	0.12	0.55
Hot Oil Heater	8.5	Gas	0.01	71.32	100.00	0.81	3.57	5.28	0.04	0.19	21.00	0.17	0.75	3.80	0.03	0.14	4.50	0.04	0.16
New Hot Oil Heater	10	Gas	0.01	83.91	140.00	1.34	5.87	2.78	0.03	0.12	35.00	0.34	1.47	3.80	0.04	0.16	6.20	0.06	0.26
Total				**331.437**			**21.774**			**0.550**			**5.301**			**0.630**			**0.967**

* Based on 8760 hrs/yr of operation
Higher Heating Value Natural Gas = 1044 BTU/cuft
Emission Factors are taken from the AP-42, Section 1.4, Jan., 1995
Assumed PM = PM-10
Calculation for criteria pollutants = (max input in mm BTU/hr) X (Criteria emission factor) X (8760 hr/yr) / (2000 lbs/ton * 1044 BTU/SCF)

Koppers016027