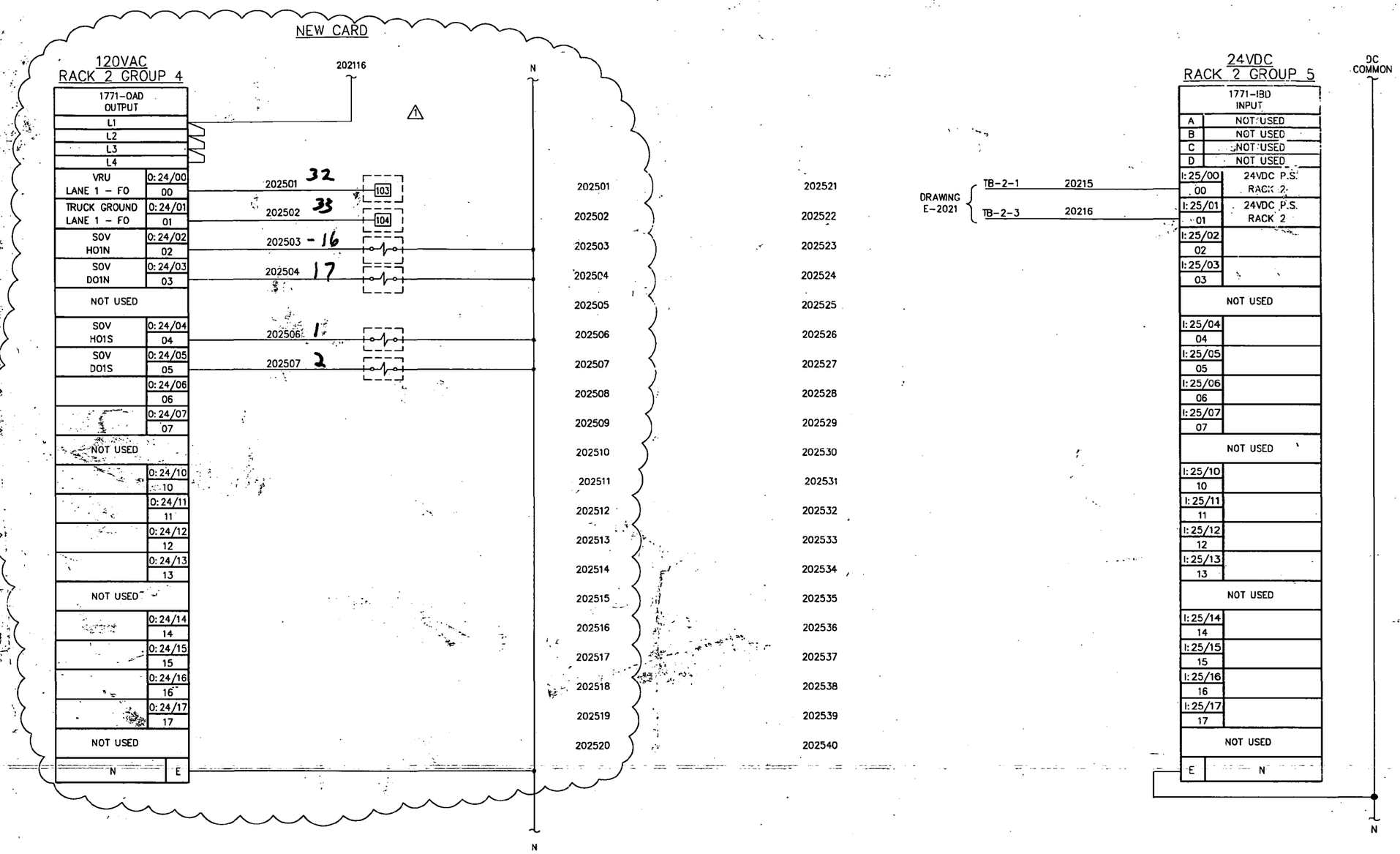

DRAWING NO.	REFERENCE DRAWINGS	REV. NO.	DATE	REVISED	DRAWN BY	CKD. BY
		0	05/27/98	ISSUE FOR CONSTRUCTION	DAB	WHB
		1	09/10/99	ADDED 1771-OAD CARD	DAB	WHB

TOSCO
Tosco Corporation
5528 NW Doane St.
Portland, Oregon 97210

ALPHA ENGINEERS and CONSTRUCTORS, INC.
2929 NW 29th AVE, PORTLAND, OR. 97210 Tel:(503)227-3317/Fax:(503)227-3244

DRAWN BY	DAB
CHKD BY	AAB
APPD BY	WHB
SCALE	NONE
DATE	05/19/98

PORTLAND TERMINAL
PORTLAND OREGON
PLC SCHEMATIC
LANE 1 - RACK 2
GROUP 4, 5

DRAWING NO.	SHEET	REV.
0608-E-2025	1 OF 1	1

0608E20261.DWG<CPO: 09/14/99 [TIME: 1:38 PM] >

COP0021307

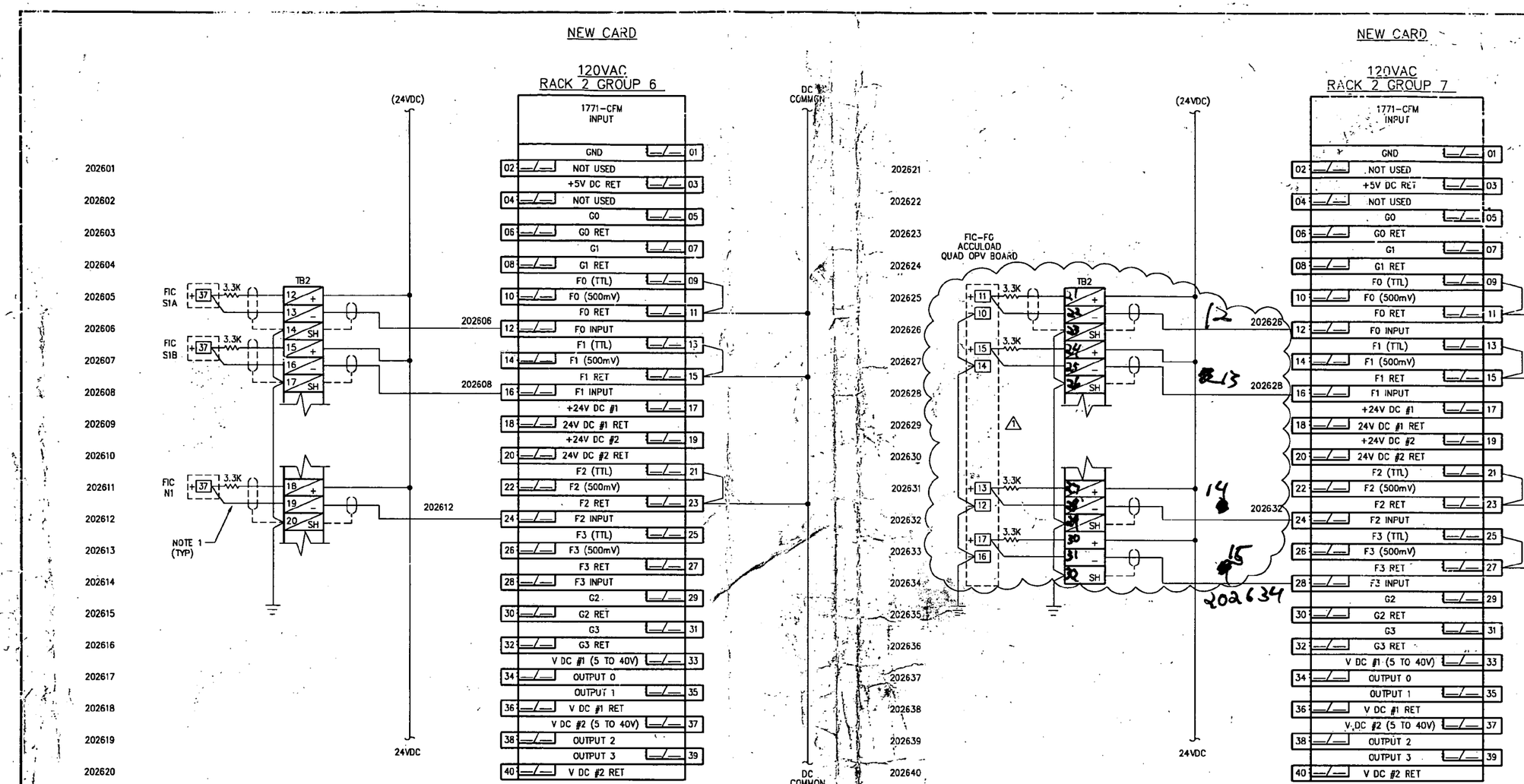

NOTE:

1. WIRE NUMBER CARRIES THROUGHOUT.

REV	DATE	BY	CHK	REVISED
1	09/10/99	DAB	WHB	ADDED TERM. BLKS.
0	06/03/98	DAB	WHB	ISSUE FOR CONSTRUCTION

DRAWING NO. | REFERENCE DRAWINGS

TOSCO
TOSCO Corporation
5528 NW Doane St.
Portland, Oregon 97210

PORTLAND TERMINAL
PLC SCHEMATIC
LANE 1 – RACK 2
GROUP 6,7

ALPHA ENGINEERS and CONSTRUCTORS, INC.
2929 NW 29TH AVE. PORTLAND, OR. 97210 Tel: 503-227-3317

SCALE:	NONE	DESIGNED BY:	AAB
DATE:	03/19/98	CHECKED BY:	WHB
DRAWN BY:	DAB	ENG. APPR. BY:	

CADD FILE/PLOT DATE: 0608E20261.DWG <CPD: 09/14/99 (TIME: 2:01 PM) >

DRAWING NUMBER	SHEET	REV
0608-E-2026	1 OF 1	1

COP00021308

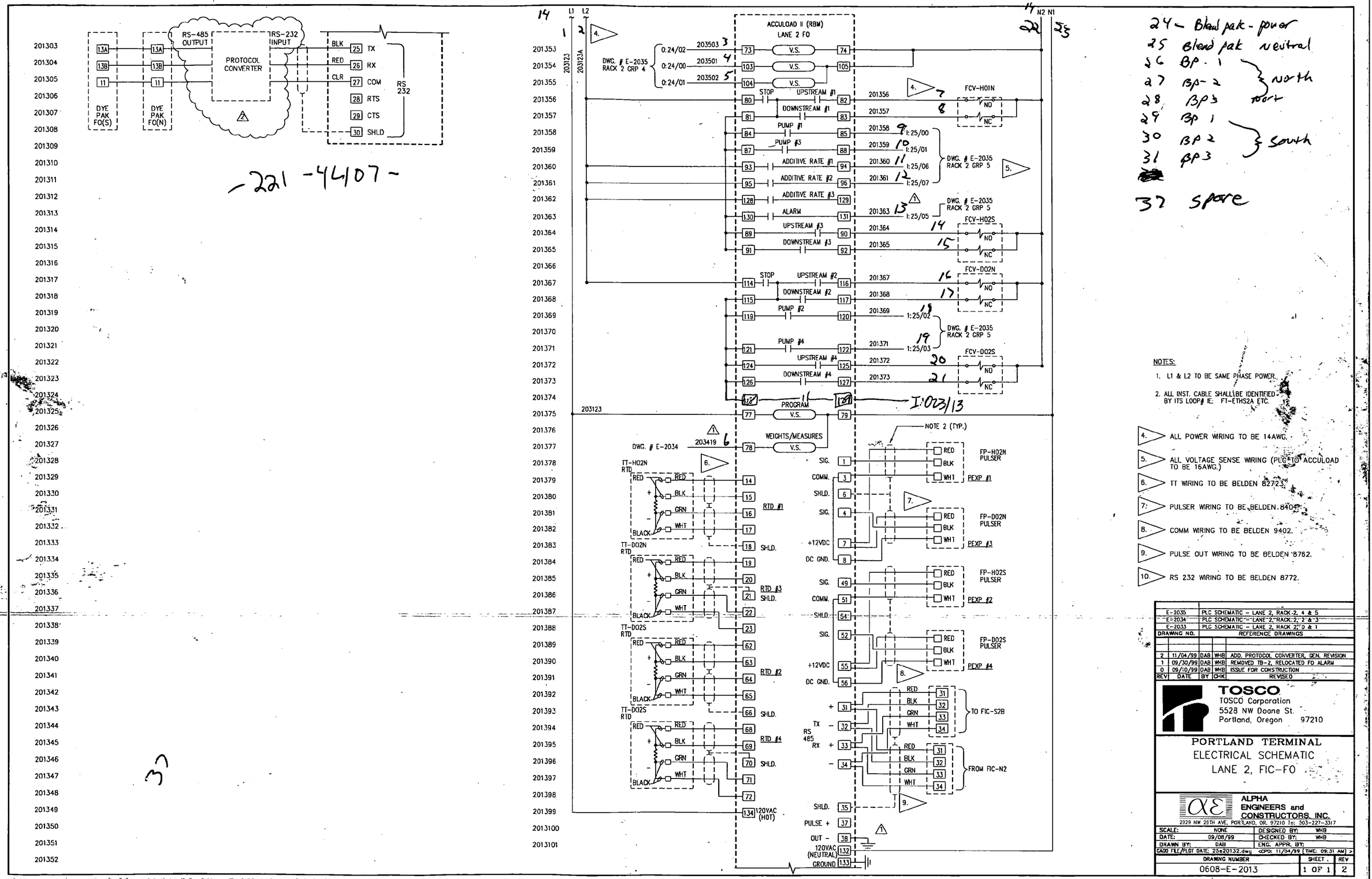
RS-485 OUTPUT
RS-232 INPUT
PROTOCOL CONVERTER
DYE PAK FO(S)
DYE PAK FO(N)
BLK
RED
CLR
TX
RX
COM
RTS
CTS
SHLD
RS 232
-221-4407-
ACCULOAD II (RBM)
LANE 2 FO
DWG. # E-2035 RACK 2 GRP 4
0:24/02
0:24/00
0:24/01
V.S.
STOP
UPSTREAM #1
DOWNSTREAM #1
PUMP #1
PUMP #3
ADDITIVE RATE #1
ADDITIVE RATE #2
ADDITIVE RATE #3
ALARM
UPSTREAM #3
DOWNSTREAM #3
UPSTREAM #2
DOWNSTREAM #2
PUMP #2
PUMP #4
UPSTREAM #4
DOWNSTREAM #4
PROGRAM
WEIGHTS/MEASURES
FCV-H01N
FCV-H02S
FCV-D02N
FCV-D02S
DWG. # E-2035 RACK 2 GRP 5
I:25/00
I:25/01
I:25/06
I:25/07
I:25/05
I:25/02
I:25/03
I:023/13
NOTE 2 (TYP.)
DWG. # E-2034
TT-H02N RTD
TT-D02N RTD
TT-D02S RTD
RTD #1
RTD #3
RTD #2
RTD #4
SHLD.
120VAC (HOT)
FP-H02N PULSER
FP-D02N PULSER
FP-H02S PULSER
FP-D02S PULSER
PEXP #1
PEXP #3
PEXP #2
PEXP #4
+12VDC
DC GND.
RS 485
TO FIC-S2B
FROM FIC-N2
PULSE +
OUT -
120VAC (NEUTRAL)
GROUND
24 - Blend pak - power
25 Blend pak neutral
26 BP - 1
27 BP - 2
28 BP3
29 BP 1
30 BP 2
31 BP3
north
south
37 spare
NOTES:
1. L1 & L2 TO BE SAME PHASE POWER.
2. ALL INST. CABLE SHALL BE IDENTIFIED BY ITS LOOP# IE: FT-ETHS2A ETC.
4. ALL POWER WIRING TO BE 14AWG.
5. ALL VOLTAGE SENSE WIRING (PLC TO ACCULOAD TO BE 16AWG.)
6. TT WIRING TO BE BELDEN 8272.
7. PULSER WIRING TO BE BELDEN 8404.
8. COMM WIRING TO BE BELDEN 9402.
9. PULSE OUT WIRING TO BE BELDEN 8762.
10. RS 232 WIRING TO BE BELDEN 8772.
E-2035 PLC SCHEMATIC - LANE 2, RACK 2, 4 & 5
E-2034 PLC SCHEMATIC - LANE 2, RACK 2, 2 & 3
E-2033 PLC SCHEMATIC - LANE 2, RACK 2, 0 & 1
DRAWING NO. REFERENCE DRAWINGS
2 11/04/99 DAB WHB ADD. PROTOCOL CONVERTER, GEN. REVISION
1 09/30/99 DAB WHB REMOVED TB-2, RELOCATED FO ALARM
0 09/10/99 DAB WHB ISSUE FOR CONSTRUCTION
REV DATE BY CHK REVISED
TOSCO
TOSCO Corporation
5528 NW Doane St.
Portland, Oregon 97210
PORTLAND TERMINAL
ELECTRICAL SCHEMATIC
LANE 2, FIC-FO
ALPHA ENGINEERS and CONSTRUCTORS, INC.
2929 NW 25TH AVE, PORTLAND, OR. 97210 Tel: 503-227-3317
SCALE: NONE
DESIGNED BY: WHB
DATE: 09/08/99
CHECKED BY: WHB
DRAWN BY: DAB
ENG. APPR. BY:
CADD FILE/PLOT DATE: 25e20132.dwg
DRAWING NUMBER 0608-E-2013
SHEET 1 OF 1
REV 2

COP0021309

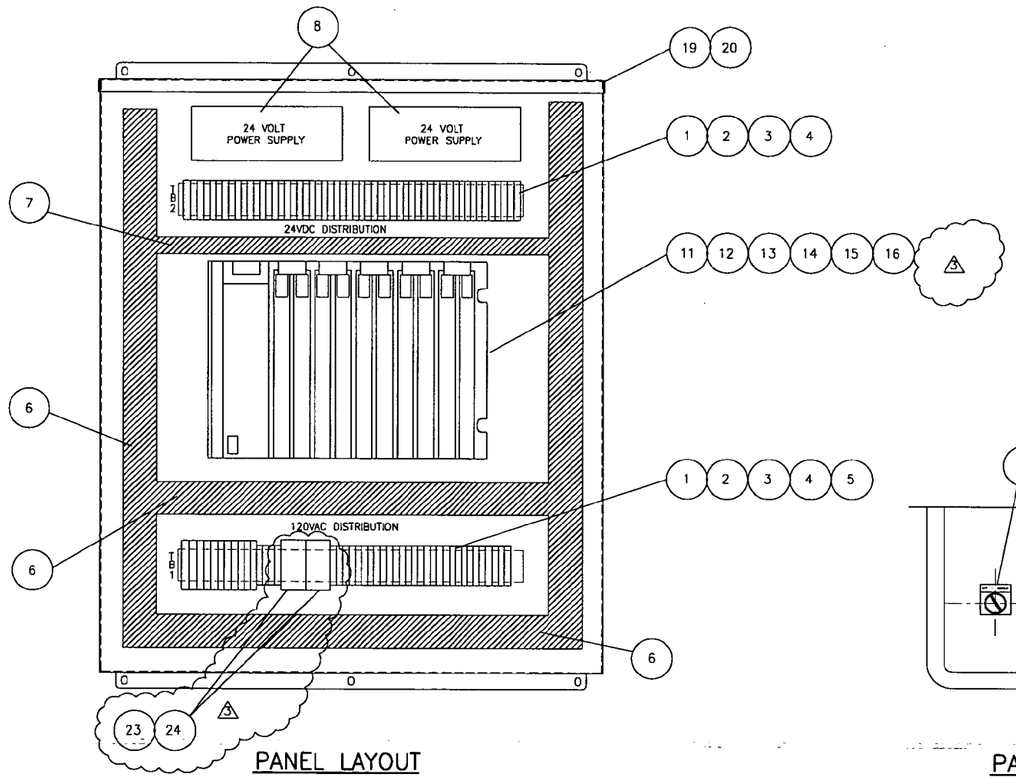

PANEL LAYOUT

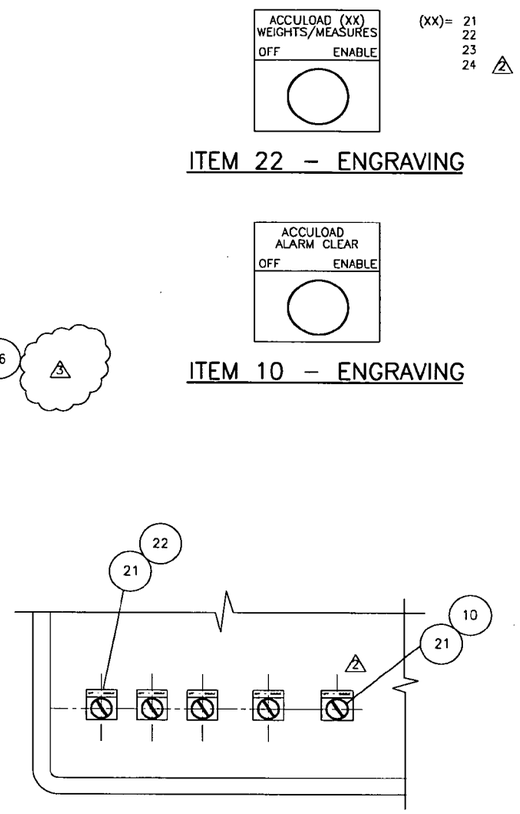

PANEL DOOR FRONT

BILL OF MATERIAL

ITEM	QUANTITY	DESCRIPTION
1	6'	ALLEN-BRADLEY CAT. #1492-DR5 DIN RAIL
2	80	ALLEN-BRADLEY CAT. #1492-W6 TERMINAL BLOCKS
3	4	ALLEN-BRADLEY CAT. #1492-CJ7-10 JUMPERS
4	4	ALLEN-BRADLEY CAT. #1492-EA35 END ANCHORS
2 5	13	ALLEN-BRADLEY CAT. #1492-GH050 CIRCUIT BREAKER (5A)
6	11'	2" X 3" PANDUIT
7	2'-6"	1" X 3" PANDUIT
8	2	POWER-ONE HD24-4.8-A, POWER SUPPLY
9	–	NOT USED
10	1	ALLEN-BRADLEY JUMBO LEGEND PLATE #800T-X609E
11	1	ALLEN-BRADLEY CAT. # 1771 – A2(PANEL MOUNTED CHASSIS)
12	1	ALLEN-BRADLEY CAT. # 1771 – ASB SER. D RI/O ADAPTER
3 13	1	ALLEN-BRADLEY CAT. # 1771 – P7 POWER SUPPLY
14	2	ALLEN-BRADLEY CAT. # 1771 – CFM FLOW MODULE
2 15	2	ALLEN-BRADLEY CAT. # 1771 – OAD OUTPUT MODULE
16	3	ALLEN-BRADLEY CAT. # 1771 – IAD INPUT MODULE
3 17	–	NOT USED
18	1	ALLEN-BRADLEY CAT. # 1771 – CT PS CABLE
19	1	HOFFMAN CAT. # A36H3012GORLP
20	1	HOFFMAN CAT. # A36P30
21	5	ALLEN-BRADLEY 2 POSITION SELECTOR SWITCH #800T-H31D1
2 22	4	ALLEN-BRADLEY JUMBO LEGEND PLATE #800T-X609E
3 23	2	ALLEN-BRADLEY CAT. # 700-HK32Z24 24 VDC RELAY
24	2	ALLEN-BRADLEY CAT. # 700-HN122 RELAY BASE DIN RAIL MOUNT

NOTES:

1. ALL NEW +24VDC POWER WIRE SHALL BE 16 GA. BLUE.
2. ALL NEW 24VDC COMMON WIRE SHALL BE 16 GA. WHITE W/BLUE STRIPE.
3. ALL EQPT. BY TOSCO; ALL CONDUIT AND WIRING BY CONTRACTOR.

REV	DATE	BY	CHK	REVISED
3	10/06/99	DAB	WHB	ADD 1771-IAD & RELAYS, REMOVE 1771-IBD
2	09/10/99	DAB	WHB	ADDED 1771-OAD AND SWITCH
1	02/11/98	DAB	WHB	AS-BUILT
0	06/03/98	DAB	WHB	ISSUE FOR CONSTRUCTION

DRAWING NO. | REFERENCE DRAWINGS

TOSCO
TOSCO Corporation
5528 NW Doane St.
Portland, Oregon 97210

PORTLAND TERMINAL
TRUCK LOADING RACK
ELECTRICAL PANEL LAYOUT
LANE 2

ALPHA ENGINEERS and CONSTRUCTORS, INC.
2529 NW 29TH AVE., PORTLAND, OR. 97210 Tel: 503-227-3317

SCALE:	NONE	DESIGNED BY:	AAB
DATE:	05/19/98	CHECKED BY:	WHB
DRAWN BY:	DAB	ENG. APPR. BY:	

CADD FILE/PLOT DATE: 25e20303.dwg <CPD: 10/07/99 (TIME: 08:50 AM)>

DRAWING NUMBER	SHEET	REV
0608-E-2030	1 OF 1	3

COP0021310

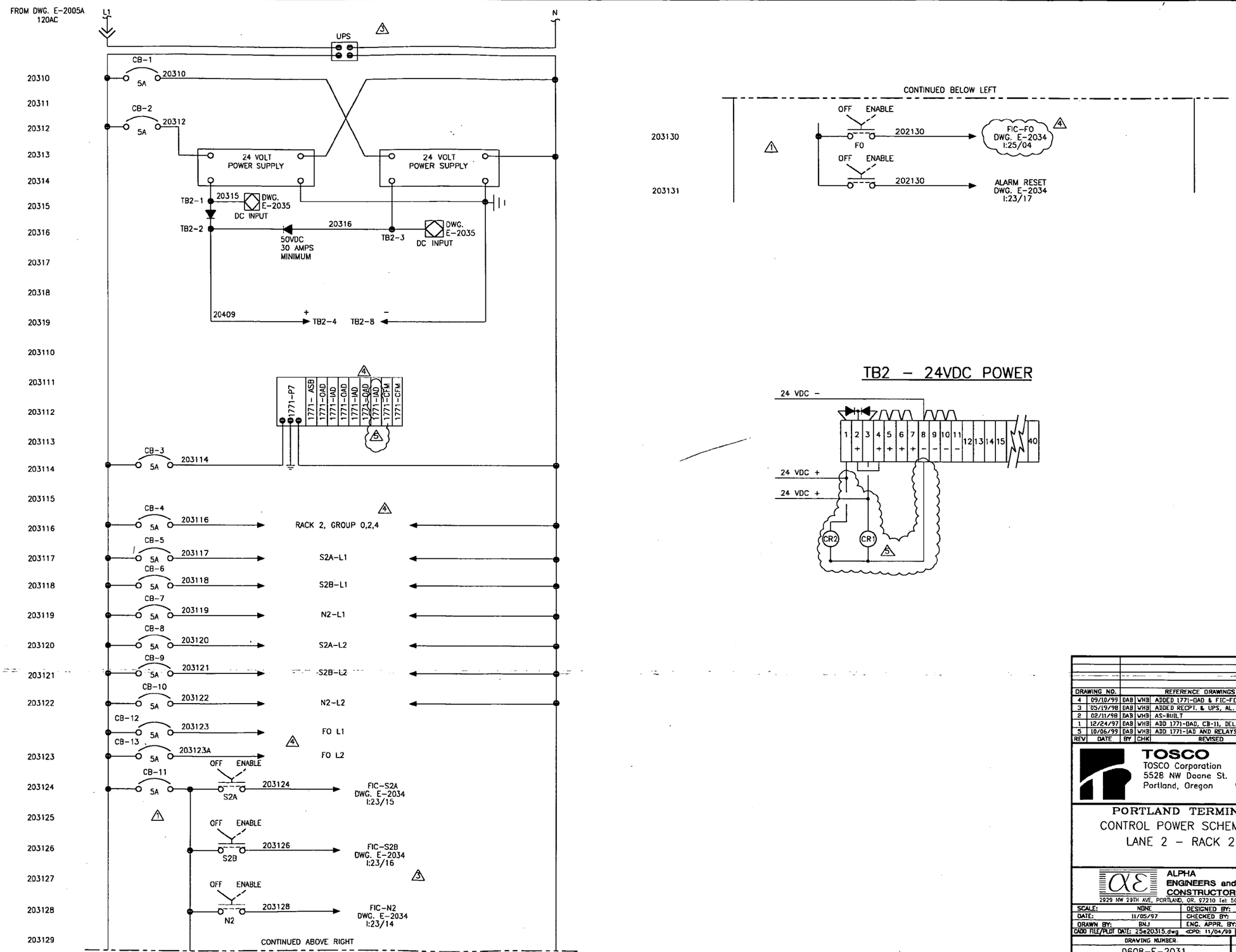

REV	DATE	BY	CHK	REVISED
4	09/10/99	DAB	WHB	ADDED 1771-OAD & FIC-FO, CB12&13
3	05/19/98	DAB	WHB	ADDED RECPT. & UPS, AL. RESET,
2	02/11/98	DAB	WHB	AS-BUILT
1	12/24/97	DAB	WHB	ADD 1771-OAD, CB-11, DEL. 20A CB
5	10/06/99	DAB	WHB	ADD 1771-IAD AND RELAYS

DRAWING NO. | REFERENCE DRAWINGS

TOSCO
TOSCO Corporation
5528 NW Doane St.
Portland, Oregon 97210

PORTLAND TERMINAL
CONTROL POWER SCHEMATIC
LANE 2 - RACK 2

ALPHA ENGINEERS and CONSTRUCTORS, INC.
2929 NW 29TH AVE, PORTLAND, OR. 97210 Tel: 503-227-3317

SCALE:	NONE	DESIGNED BY:	AAB
DATE:	11/05/97	CHECKED BY:	WHB
DRAWN BY:	BNJ	ENG. APPR. BY:	WHB
CADD FILE/PLOT DATE: 25#20315.dwg		<CPD: 11/04/99 [TIME: 09:32 AM] >	

DRAWING NUMBER:	SHEET	REV
0608-E-2031	1 OF 1	5

COP0021311

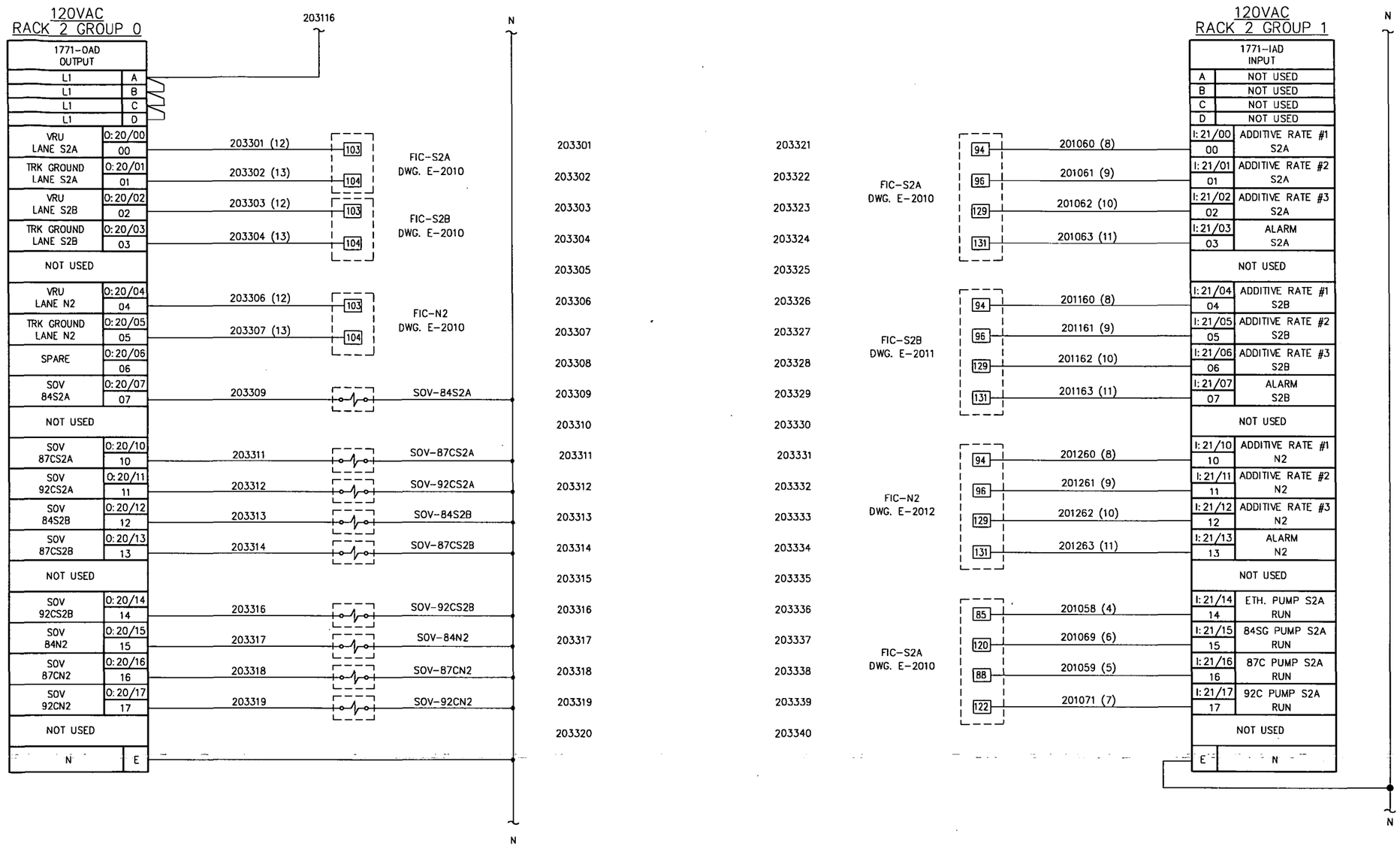

NOTE:

1. (XX) DENOTES ELECTRICAL CONTRACTORS WIRE PULL NO.

DRAWING NO.	REFERENCE DRAWINGS	REV. NO.	DATE	REVISED	DRAWN BY	CKD. BY
E-2010	ELECTRICAL LANE S2A SCHEMATIC	0	11/25/97	ISSUED FOR CONSTRUCTION	DAB	WHB
E-2011	ELECTRICAL LANE S2B SCHEMATIC	1	02/11/98	AS-BUILT	DAB	WHB
E-2012	ELECTRICAL LANE N2 SCHEMATIC	2	06/05/98	ADDED WIRE PULL NUMBERS	DAB	WHB
E-2033	PLC SCHEMATIC RACK 2 - TRUCKLOADING					

TOSCO
Tosco Corporation
5528 NW Doane St.
Portland, Oregon 97210

ALPHA ENGINEERS and CONSTRUCTORS, INC.
2929 NW 29th AVE, PORTLAND, OR. 97210 Tel:(503)227-3317/Fax:(503)227-3244

DRAWN BY	BNJ
CHKD BY	AAB
APPD BY	WHB
SCALE	NONE

PORTLAND TERMINAL
PORTLAND OREGON
PLC SCHEMATIC
LANE 2 - RACK 2
GROUP 0,1

DATE	DRAWING NO.	SHEET	REV.
11/17/97	0608-E-2033	1 OF 1	2

25E20332.DWG <CPD: 06/04/98 [TIME: 08:03 AM] >

COP0021312

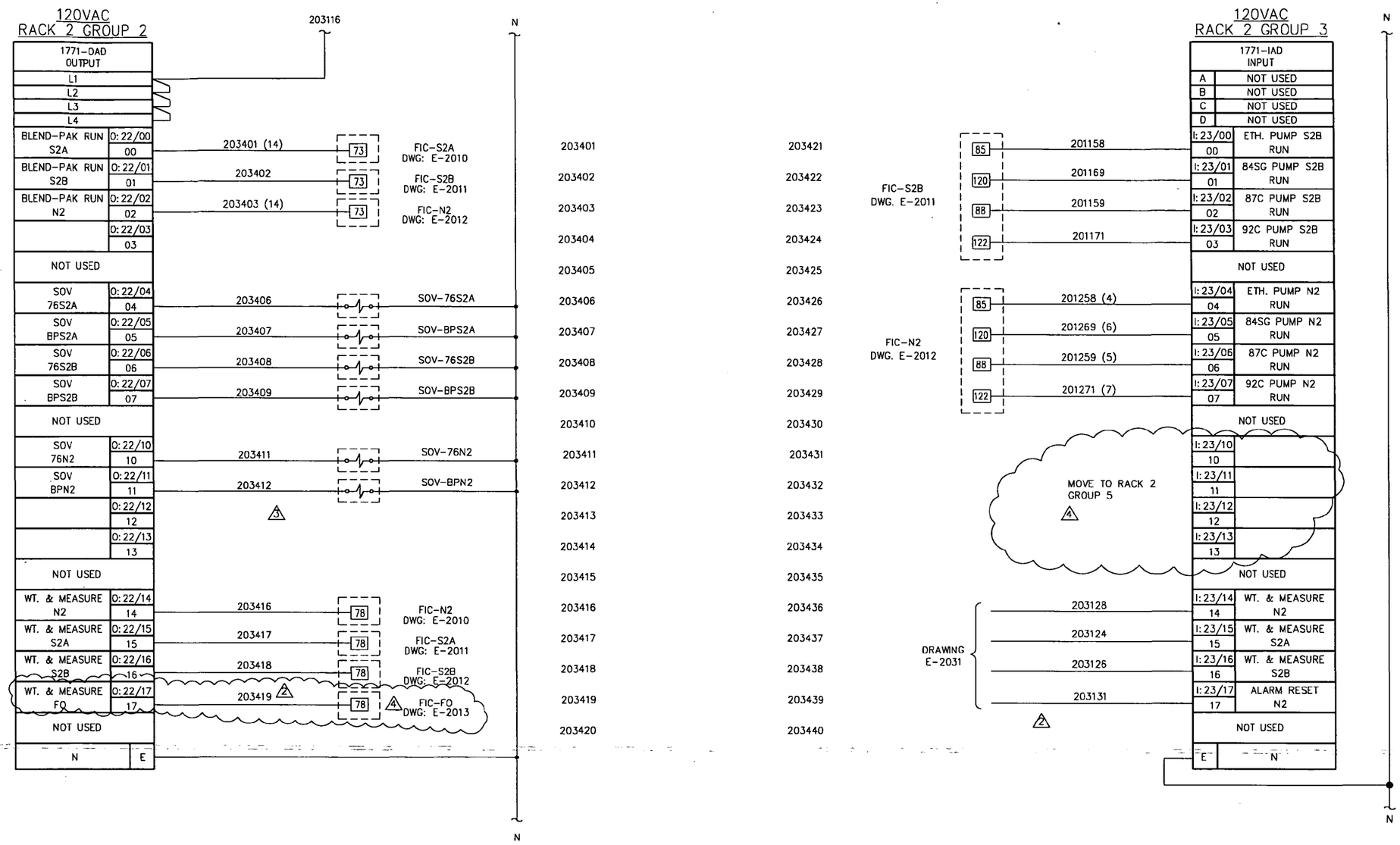

DRAWING NO.	REFERENCE DRAWINGS	REV. NO.	DATE	REVISED	DRAWN BY	CKD. BY
E-2010	ELECTRICAL LANE S2A SCHEMATIC	0	11/25/97	ISSUED FOR CONSTRUCTION	DAB	WHB
E-2011	ELECTRICAL LANE S2B SCHEMATIC	1	02/11/98	AS-BUILT	DAB	WHB
E-2012	ELECTRICAL LANE N2 SCHEMATIC	2	05/19/98	ADD WT. & MEASURES, ALARM RESET	DAB	WHB
E-2031	CONTROL POWER SCHEMATIC LANE 2 - RACK 2	3	06/03/98	ADD 76 & BP ADDITIVE SOV'S	DAB	WHB
		4	09/10/99	ADDED CONNECTION TO FIC-FO	DAB	WHB

TOSCO
Tosco Corporation
5528 NW Doane St.
Portland, Oregon 97210

ALPHA ENGINEERS and CONSTRUCTORS, INC.
2929 NW 29th AVE, PORTLAND, OR. 97210 Tel:(503)227-3317/Fax:(503)227-3244

DRAWN BY	BNJ
CHKD BY	AAB
APPD BY	WHB
SCALE	NONE
DATE	11/17/97

PORTLAND TERMINAL

PORTLAND OREGON

PLC SCHEMATIC
LANE 2 - RACK 2
GROUP 2,3

DRAWING NO.	SHEET	REV.
0608-E-2034	1 OF 1	4

25a20344.dwg <CPD: 10/07/99 [TIME: 10:04 AM] >

COP00213113

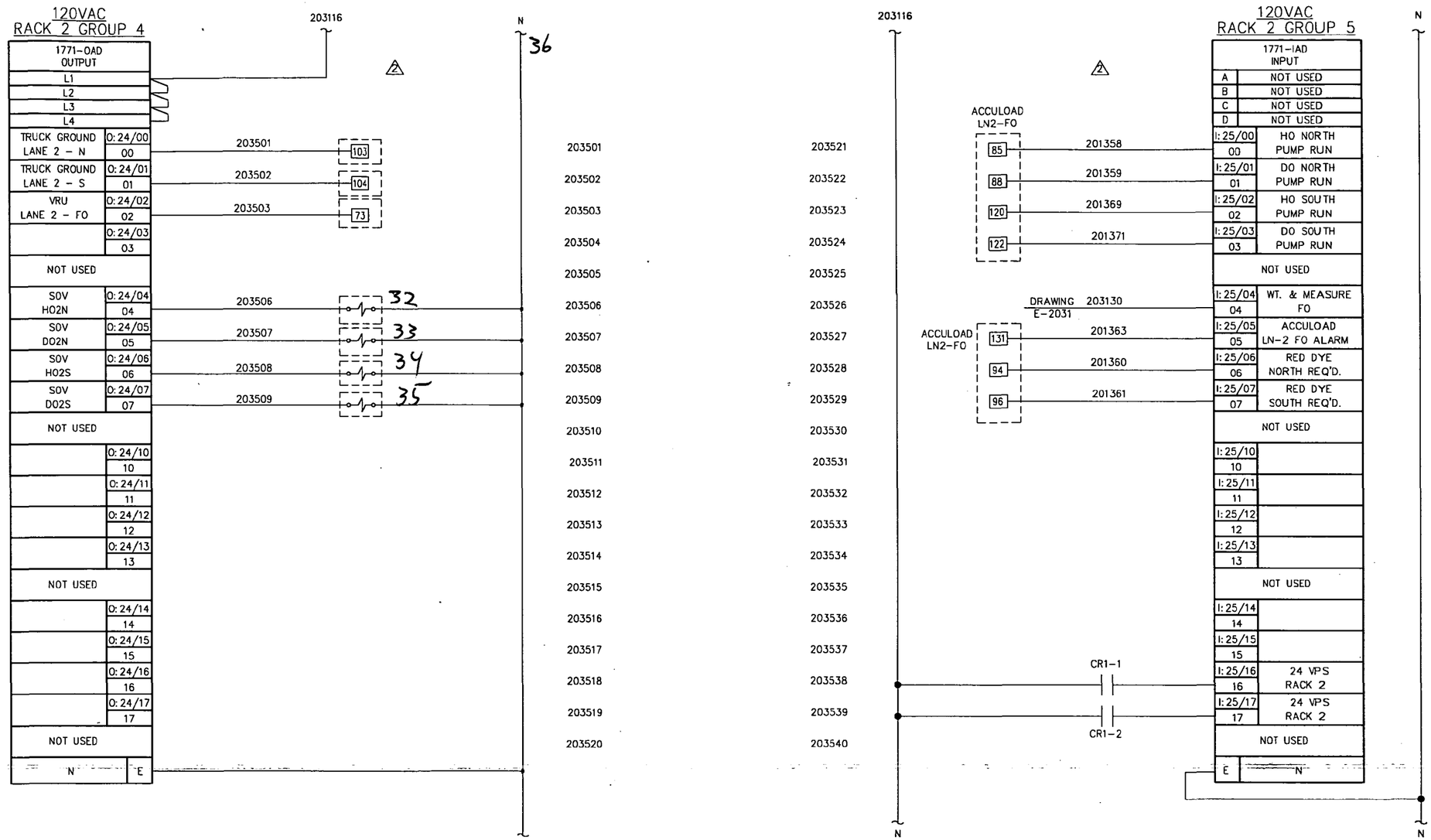

DRAWING NO.	REFERENCE DRAWINGS	REV. NO.	DATE	REVISED	DRAWN BY	CKD. BY
		0	11/25/97	ISSUED FOR CONSTRUCTION	DAB	WHB
		1	06/05/98	AS-BUILT	DAB	WHB
		2	10/06/99	ADDED 1771-OAD CARD, REPLACE ISB WITH IAD CARD	DAB	WHB
		3	11/04/99	GEN. REVISION	DAB	WHB

TOSCO
Tosco Corporation
5528 NW Doane St.
Portland, Oregon 97210

ALPHA ENGINEERS and CONSTRUCTORS, INC.
2929 NW 29th AVE, PORTLAND, OR. 97210 Tel:(503)227-3317/Fax:(503)227-3244

DRAWN BY	BNJ
CHKD BY	AAB
APPD BY	WHB
SCALE	NONE
DATE	11/17/97

PORTLAND TERMINAL
PORTLAND OREGON
PLC SCHEMATIC
LANE 2 - RACK 2
GROUP 4,5

DRAWING NO.	SHEET	REV.
0608-E-2035	1 OF 1	3

<CPD: 11/04/99 [TIME: 09:42 AM] > 25620353.dwg

COP0021314

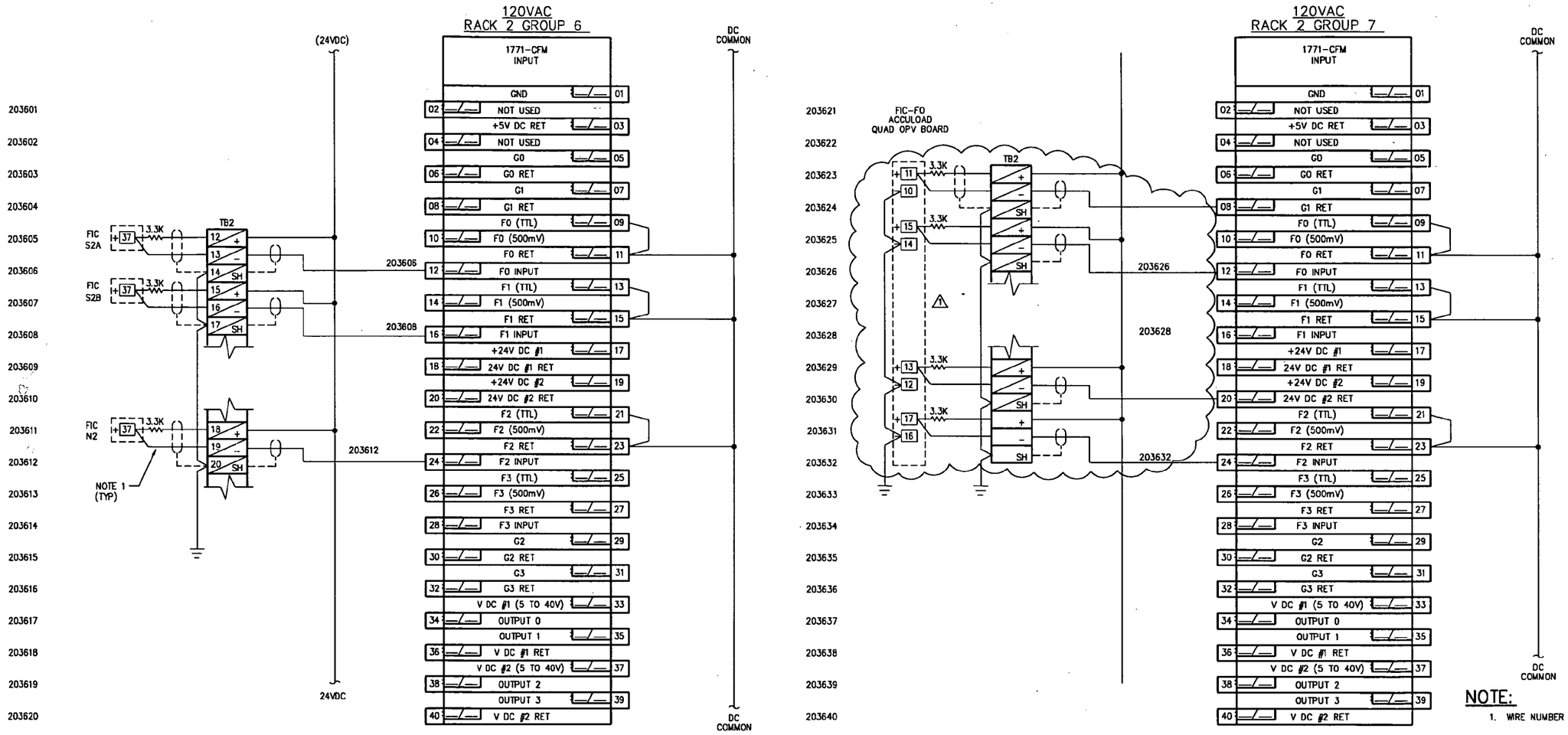

NOTE:

1. WIRE NUMBER IS THE SAME AS LOOP NUMBER.

REV	DATE	BY	CHK	REVISED
2	09/10/99	DAB	VHB	ADDED TERM. BLK'S
1	06/05/98	DAB	VHB	AS-BUILT
0	11/25/97	BNJ	VHB	ISSUED FOR CONSTRUCTION

DRAWING NO. REFERENCE DRAWINGS

TOSCO
TOSCO Corporation
5528 NW Doane St.
Portland, Oregon 97210

PORTLAND TERMINAL
PLC SCHEMATIC
LANE 2 - RACK 2
GROUP 6,7

ALPHA ENGINEERS and CONSTRUCTORS, INC.
2929 NW 29TH AVE, PORTLAND, OR. 97210 Tel: 503-227-3317

SCALE:	NONE	DESIGNED BY:	AAD
DATE:	11/17/98	CHECKED BY:	VHB
DRAWN BY:	BNJ	ENG. APPR. BY:	VHB

CADD FILE/PLOT DATE: 25E20381.DWG <CPD: 09/20/99 (TIME: 4:07 PM)>

DRAWING NUMBER	SHEET	REV
0608-E-2036	1 OF 1	2

COP00213150

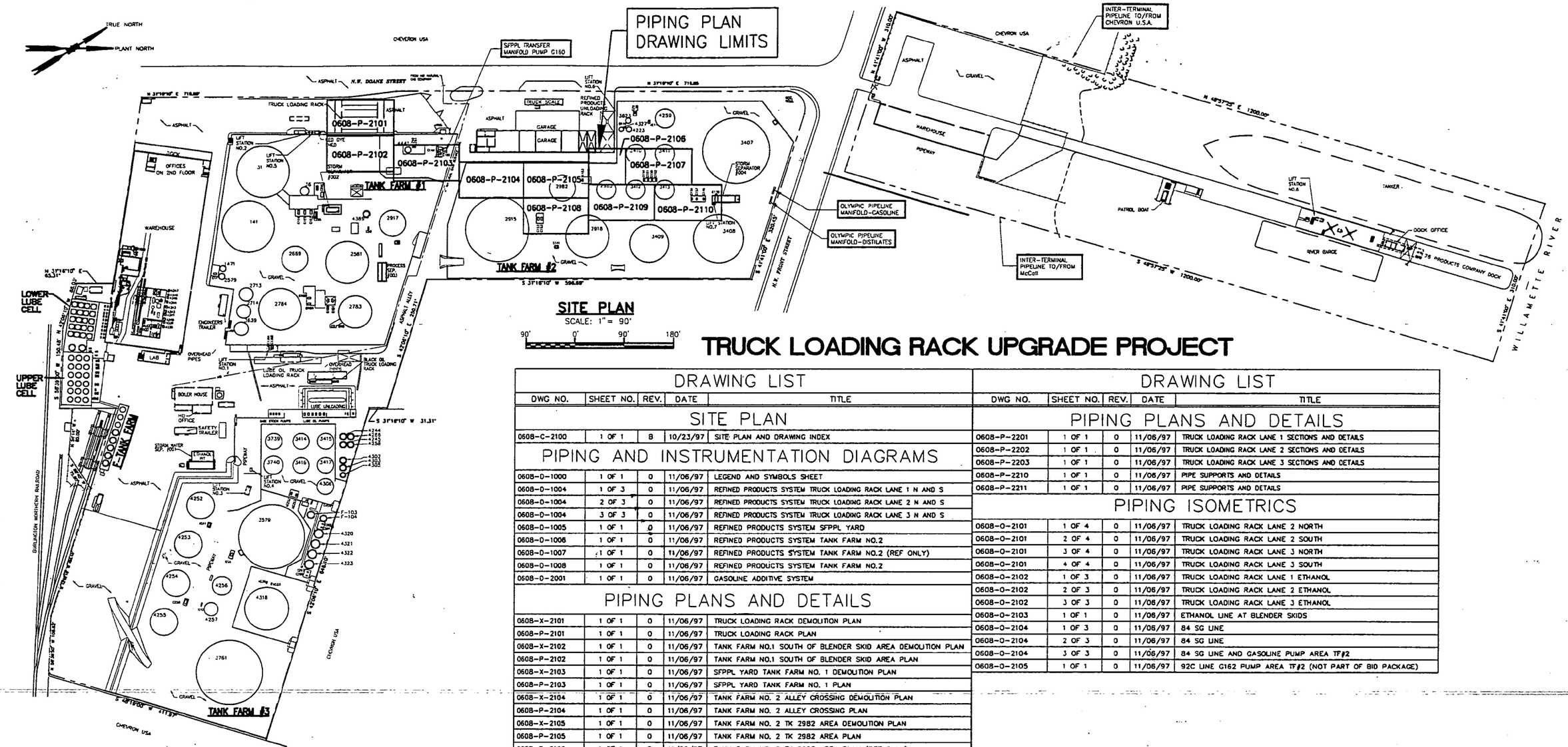

SITE PLAN

SCALE: 1" = 90'

90' 0' 90' 180'

TRUCK LOADING RACK UPGRADE PROJECT

DRAWING LIST

DWG NO.	SHEET NO.	REV.	DATE	TITLE
SITE PLAN				
0608-C-2100	1 OF 1	8	10/23/97	SITE PLAN AND DRAWING INDEX
PIPING AND INSTRUMENTATION DIAGRAMS				
0608-D-1000	1 OF 1	0	11/06/97	LEGEND AND SYMBOLS SHEET
0608-D-1004	1 OF 3	0	11/06/97	REFINED PRODUCTS SYSTEM TRUCK LOADING RACK LANE 1 N AND S
0608-D-1004	2 OF 3	0	11/06/97	REFINED PRODUCTS SYSTEM TRUCK LOADING RACK LANE 2 N AND S
0608-D-1004	3 OF 3	0	11/06/97	REFINED PRODUCTS SYSTEM TRUCK LOADING RACK LANE 3 N AND S
0608-D-1005	1 OF 1	0	11/06/97	REFINED PRODUCTS SYSTEM SFPPL YARD
0608-D-1006	1 OF 1	0	11/06/97	REFINED PRODUCTS SYSTEM TANK FARM NO.2
0608-D-1007	1 OF 1	0	11/06/97	REFINED PRODUCTS SYSTEM TANK FARM NO.2 (REF ONLY)
0608-D-1008	1 OF 1	0	11/06/97	REFINED PRODUCTS SYSTEM TANK FARM NO.2
0608-D-2001	1 OF 1	0	11/06/97	GASOLINE ADDITIVE SYSTEM
PIPING PLANS AND DETAILS				
0608-X-2101	1 OF 1	0	11/06/97	TRUCK LOADING RACK DEMOLITION PLAN
0608-P-2101	1 OF 1	0	11/06/97	TRUCK LOADING RACK PLAN
0608-X-2102	1 OF 1	0	11/06/97	TANK FARM NO.1 SOUTH OF BLENDER SKID AREA DEMOLITION PLAN
0608-P-2102	1 OF 1	0	11/06/97	TANK FARM NO.1 SOUTH OF BLENDER SKID AREA PLAN
0608-X-2103	1 OF 1	0	11/06/97	SFPPL YARD TANK FARM NO. 1 DEMOLITION PLAN
0608-P-2103	1 OF 1	0	11/06/97	SFPPL YARD TANK FARM NO. 1 PLAN
0608-X-2104	1 OF 1	0	11/06/97	TANK FARM NO. 2 ALLEY CROSSING DEMOLITION PLAN
0608-P-2104	1 OF 1	0	11/06/97	TANK FARM NO. 2 ALLEY CROSSING PLAN
0608-X-2105	1 OF 1	0	11/06/97	TANK FARM NO. 2 TK 2982 AREA DEMOLITION PLAN
0608-P-2105	1 OF 1	0	11/06/97	TANK FARM NO. 2 TK 2982 AREA PLAN
0608-P-2106	1 OF 1	0	11/06/97	TANK FARM NO. 2 TK 2983 AREA PLAN (REF ONLY)
0608-X-2107	1 OF 1	0	11/06/97	DELETED
0608-P-2107	1 OF 1	0	11/06/97	TANK FARM NO. 2 PUMP G155, G156, G161, AND G162 AREA PLAN (REF ONLY)
0608-X-2108	1 OF 1	0	11/06/97	TANK FARM NO. 2 PUMP G152 AND G153 AREA DEMOLITION PLAN
0608-P-2108	1 OF 1	0	11/06/97	TANK FARM NO. 2 PUMP G152 AND G153 AREA PLAN
0608-X-2109	1 OF 1	0	11/06/97	TANK FARM NO. 2 TK 2983 AND TK3412 AREA DEMOLITION PLAN
0608-P-2109	1 OF 1	0	11/06/97	TANK FARM NO. 2 TK 2983 AND TK3412 AREA PLAN
0608-X-2110	1 OF 1	0	11/06/97	TANK FARM NO. 2 G146, G157 AND G158 AREA DEMOLITION PLAN
0608-P-2110	1 OF 1	0	11/06/97	TANK FARM NO. 2 G146, G157 AND G158 AREA PLAN

DRAWING LIST

DWG NO.	SHEET NO.	REV.	DATE	TITLE
PIPING PLANS AND DETAILS				
0608-P-2201	1 OF 1	0	11/06/97	TRUCK LOADING RACK LANE 1 SECTIONS AND DETAILS
0608-P-2202	1 OF 1	0	11/06/97	TRUCK LOADING RACK LANE 2 SECTIONS AND DETAILS
0608-P-2203	1 OF 1	0	11/06/97	TRUCK LOADING RACK LANE 3 SECTIONS AND DETAILS
0608-P-2210	1 OF 1	0	11/06/97	PIPE SUPPORTS AND DETAILS
0608-P-2211	1 OF 1	0	11/06/97	PIPE SUPPORTS AND DETAILS
PIPING ISOMETRICS				
0608-O-2101	1 OF 4	0	11/06/97	TRUCK LOADING RACK LANE 2 NORTH
0608-O-2101	2 OF 4	0	11/06/97	TRUCK LOADING RACK LANE 2 SOUTH
0608-O-2101	3 OF 4	0	11/06/97	TRUCK LOADING RACK LANE 3 NORTH
0608-O-2101	4 OF 4	0	11/06/97	TRUCK LOADING RACK LANE 3 SOUTH
0608-O-2102	1 OF 3	0	11/06/97	TRUCK LOADING RACK LANE 1 ETHANOL
0608-O-2102	2 OF 3	0	11/06/97	TRUCK LOADING RACK LANE 2 ETHANOL
0608-O-2102	3 OF 3	0	11/06/97	TRUCK LOADING RACK LANE 3 ETHANOL
0608-O-2103	1 OF 1	0	11/06/97	ETHANOL LINE AT BLENDER SKIDS
0608-O-2104	1 OF 3	0	11/06/97	84 SG LINE
0608-O-2104	2 OF 3	0	11/06/97	84 SG LINE
0608-O-2104	3 OF 3	0	11/06/97	84 SG LINE AND GASOLINE PUMP AREA TF#2
0608-O-2105	1 OF 1	0	11/06/97	92C LINE G162 PUMP AREA TF#2 (NOT PART OF BID PACKAGE)

DRAWING NO.	REFERENCE DRAWINGS	REV. NO.	DATE	REVISED	DRAWN BY	CKD. BY
		0	11/06/97	ISSUE FOR CONSTRUCTION	DAB	KJP

TOSCO
Tosco Distribution Company
A Division of Tosco Corporation
5528 NW Doane St.
Portland, Oregon 97210

ALPHA ENGINEERS and CONSTRUCTORS, INC.
19 NW 5th AVE, SUITE 204, PORTLAND, OR 97209 Tel:(503)227-3317/Fax:(503)227-3244

DRAWN BY	DAB
CHKD BY	KJP
APPD BY	WHB
SCALE	AS SHOWN
DATE	10/03/97

PORTLAND TERMINAL
PORTLAND, OREGON
TRUCK LOAD RACK UPGRADE PROJECT
SITE PLAN AND DRAWING INDEX

DRAWING NO.	SHEET	REV.
0608-C-2100	1 OF 1	0

6BPC2100.DWG <CPD: 11/06/97 [TIME: 08:48 AM]>

COP0021316

LINE SYMBOLS

- MAIN PROCESS
- SECONDARY PROCESS
- CAPILLARY TUBE
- ELECTRICAL SIGNAL
- HYDRAULIC LINE
- PNUEMATIC SIGNAL
- ELECTROMAGNETIC OR SONIC SIGNAL
- INTERNAL SYSTEM LINK (SOFT WARE DATA LINK)
- PACKAGED EQUIPMENT
- SPEC BREAK OR PHYSICAL LOCATION BREAK
- DRAWING NO. COORDINATE — FLOW TO OR FROM ANOTHER DRAWING
- INSTRUMENTATION REFERENCE FLAG

INSULATION

THICKNESS IN INCHES — 2"H

TYPE	
A	ASBESTOS
H	HOT
C	COLD
PP	PERSONAL PROTECTION
FP	FREEZE PROTECTION

INSULATION WITH HEAT TRACE

E/T

TYPE	
E/T	ELECTRIC TRACE
S/T	STEAM TRACE

VALVE SYMBOLS

- GATE VALVE
- BUTTERFLY VALVE
- BALL VALVE
- GLOBE VALVE
- CHECK VALVE
- PLUG VALVE
- RELIEF VALVE
- THREE-WAY SOLENOID VALVE
- FOUR-WAY SOLENOID VALVE
- NEEDLE VALVE
- COCK VALVE
- SLIDE VALVE
- TWIN SEAL VALVE

VALVE OPERATORS

- CONTROL VALVE
- PISTION OPERATED VALVE
- SOLENOID OPERATED VALVE
- PRESSURE CONTROL VALVE INTERGRAL SENSING
- PRESSURE CONTROL VALVE EXTERNAL SENSING
- DIGITAL CONTROL VALVE

VALVE ACTUATORS

- DIAPHRAGM
- MOTOR
- SOLENOID
- CYLINDER
- HAND ACTUATOR
- FLOAT

MISC. SYMBOLS

- TURBINE METER
- POSITIVE DISPLACEMENT METER
- MIXER
- REDUCER
- Y-TYPE STAINER
- HOSE
- UNION
- ORIFICE FLANGE
- FLANGES
- HOSE CONNECTION
- EXPANSION JOINT
- DIAPHRAGM SEAL
- TIE POINT — SPECIALITY ITEM
- HOSE
- FLEXIBLE COUPLING
- FLAT OR CONICAL SCREEN MOUNTED BETWEEN FLANGES
- IA-INSTRUMENT AIR PA-PROCESS AIR
- BASKET STAINER
- REMOVABLE SPOOL
- MANHOLE COVER
- CAP OR PLUG
- PIG LAUNCHER/ RETRIEVER STATION
- PIG TRIP INDICATOR
- VENT
- SPRAY NOZZLE
- TRAP
- FLOW SIGHT GLASS
- FLAME ARRESTOR
- DRAIN
- EXPANSION JOINT
- FLOW STRAIGTENER

INSTRUMENT IDENTIFICATION

- LOCAL MOUNTED,NO PANEL
- MAIN PANEL MOUNTED
- LOCAL PANEL MOUNTED
- INSIDE MAIN PANEL MOUNTED
- INSIDE LOCAL PANEL MOUNTED
- CRT SHARED DISPLAY, SHARED CONTROL
- NON-DISPLAYED INTERLOCK PERFORMED BY DCS OR PLC
- INTERLOCK
- INDICATOR LIGHT

FIRST LETTER — SUCCEEDING LETTERS: PCV 1000 — LOOP NUMBER

FIRST LETTER

A	ANALYSIS	K	TIME
B	BURNER/FLAME	L	LEVEL/PILOT LIGHT
C	CONDUCTIVITY	M	MOTOR
D	DENSITY	P	PRESSURE
E	VOLTAGE	Q	QUANTITY/EVENT
F	FLOW	S	SPEED
G	GAGING	T	TEMPERATURE
H	HAND	V	VISCOSITY/VIBRATION
I	CURRENT	W	WEIGHT
J	POWER	Y	EVENT, STATE OR PRESENCE
		Z	POSITION

SUCCEEDING LETTERS

A	ALARM	O	ORIFICE
C	CONTROL	Q	TOTALIZER
D	DIFFERENTIAL	S	SWITCH
E	PRIMARY ELEMENT	SE	SAFETY ELEMENT
F	RATIO	SV	SAFETY ELEMENT
G	GLASS	T	TRANSMITTER
H	HIGH/OPEN	V	VALVE/DAMPER/LOUVER
I	INDICATING	W	WELL
J	REMOTE AMPLIFIER	Y	TRANSDUCER
L	PILOT LIGHT/ LOW/CLOSED	Z	FINAL CONTROL DEVICE
P	PULSER		

COLOR CODING

GREEN	NORMAL OPERATION, START, OPEN, ON
RED	STOP, HIGHEST PRIORITY ALARM, CLOSED, OFF

EQUIPMENT

- HORIZONTAL CENTRIFUGAL PUMP
- INLINE CENTRIFUGAL PUMP
- POSITIVE DISPLACEMENT PUMP
- METERING PUMP
- DOUBLE DIAPHRAGM PUMP
- SUMP PUMP
- MIXER
- EJECTOR
- COMPRESSOR
- FILTER/ STRAINER (F/S)
- ATMOSPHERIC TANK
- FLOATING ROOF TANK
- VESSEL
- CONE BOTTOM TANK OR BIN

LINE IDENTIFICATION

2"-GA-1001-A — LINE IDENTIFICATION

- A — MATERIAL SPECIFICATION
- 1001 — LINE NUMBER
- GA — SERVICE
- 2" — SIZE

CODE	CLASS - MATERIAL
A1	CLASS 150 - C.S.
B	CLASS 300 - C.S.
C	CLASS 150 - C.S.
E	CLASS 150 - S.S.
K1	CLASS 150 - CPVC
L1	CLASS 150 - PVC

LINE SERVICE

IA	INSTRUMENT AIR
PA	PLANT AIR
GA	GASOLINE ADDITIVE
RD	RED DYE ADDITIVE
STM	STEAM
DO	DIESEL
87B	87 OCTANE BLENDED GASOLINE
87C	87 OCTANE CLEAR GASOLINE
92C	92 OCTANE CLEAR GASOLINE
84G	84 OCTANE SUBGRADE GASOLINE
HO	HEATING OIL
LO	LUBE OIL
AV	AVIATION GAS
ETH	ETHANOL
AP	PROCESS AIR
CW	TREATED WATER
OW	OILY WATER
OOS	OUT OF SERVICE

- HV1001 — MANUAL VALVE TAG NUMBER
- CV1001 — CHECK VALVE TAG NUMBER

ABBREVIATIONS

AOV	AIR OPERATED VALVE
ATM	ATMOSHERE
BFP	BACK FLOW PREVENTER
BOP	BOTTOM OF PIPE
CONC	CONCENTRIC
CP	CALIBRATION PORT
CS	CARBON STEEL
ECC	ECCENTRIC
FC	FAIL CLOSED
FF	FLAT FACE
FO	FAIL OPEN
HOA	HAND-OFF-AUTO-SWITCH
LC	LOCK CLOSED
LG	LEVEL GAUGE
MOV	MOTOR OPERATED VALVE
NC	NORMALLY CLOSED
NO	NORMALLY OPEN
RF	RAISED FACE
SG	SIGHT GLASS
SP	SAMPLE PORT
ST	STEAM TRACED
TOS	TOP OF STEEL
TP	TEST PORT
TYP	TYPICAL

DRAWING NUMBER IDENTIFICATION

X-XXXX

- XXXX — DRAWING NUMBER
- X — DISIPLINE CODE

A	ARCHITECTURAL
C	CIVIL
D	DIAGRAMS (PFD'S & PID'S)
E	ELECTRICAL
F	FIGURES
I	INSTRUMENTATION
L	LOOP DIAGRAMS
M	MECHANICAL
P	PIPING
R	REMOVAL/DEMOLITION
S	STRUCTURAL

DRAWING NO.	REFERENCE DRAWINGS	REV. NO.	DATE	REVISED	DRAWN BY	CKD. BY
		A	10/22/97	ISSUE FOR BID	DAB	WHB

TOSCO
Tosco Distribution Company
A Division of Tosco Corporation
5528 NW Doane St.
Portland, Oregon 97210

ALPHA ENGINEERS and CONSTRUCTORS, INC.
19 NW 5th AVE, SUITE 204, PORTLAND, OR. 97209 Tel:(503)227-3317/Fax:(503)227-3244

DRAWN BY	DAB
CHKD BY	WHB
APPD BY	KJP
SCALE	NONE
DATE	10/15/97

PORTLAND TERMINAL
PORTLAND, OREGON
PIPING & INSTRUMENTATION DIAGRAM
LEGEND & SYMBOLS

DRAWING NO.	SHEET	REV.
0608-D-1000	1 OF 1	A

\PD10000.DWG <CPD: 11/06/97 [TIME: 08:04 AM]>

COP0021317

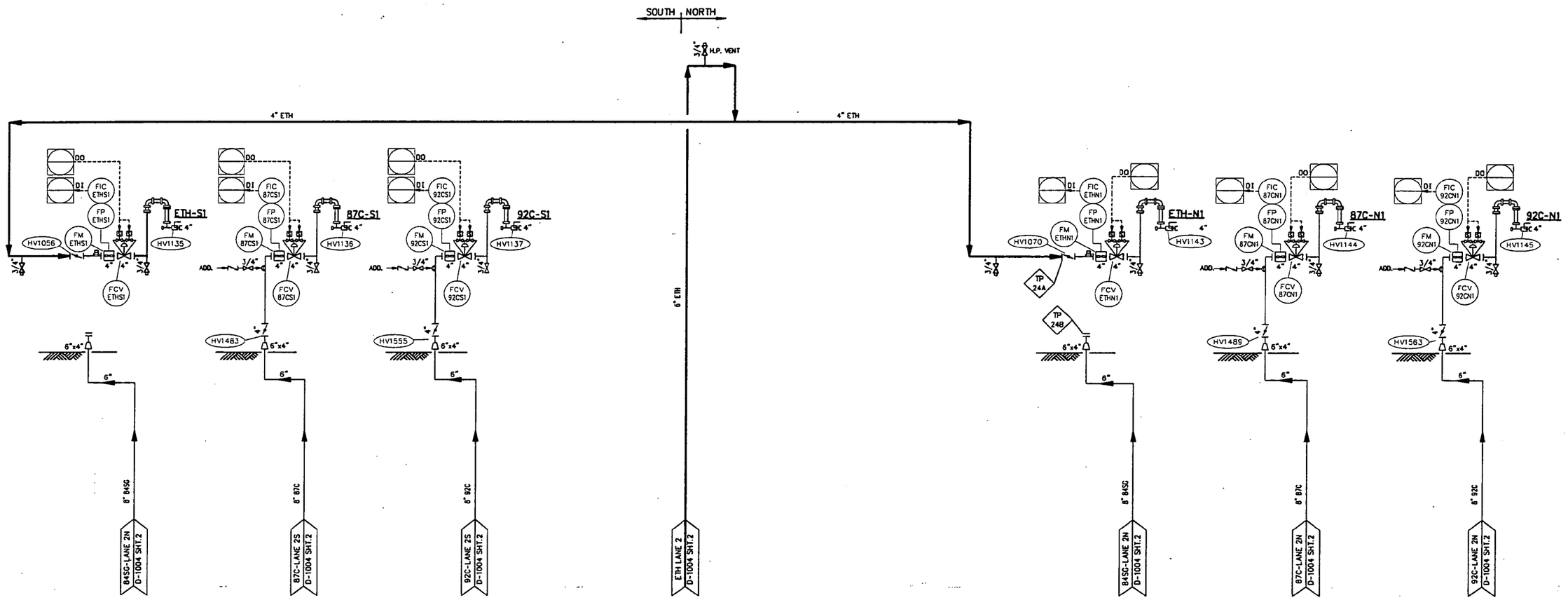

NOTES:

1. THIS DRAWING RECREATED FROM SPEC SERVICES DWGS. 0608-D-1003 THRU D-1010.
2. SEE DWG. 0608-D-2001 FOR GASOLINE ADDITIVE SYSTEM
3. NEW WORK SHOWN BOLD

DRAWING NO.	REFERENCE DRAWINGS	REV. NO.	DATE	REVISED	DRAWN BY	CKD. BY
0608-D-1000	LEGEND AND SYMBOLS	0	11/06/97	ISSUE FOR CONSTRUCTION	DAB	KJP
0608-D-1005	REFINED PRODUCTS SYSTEM SFPPL YARD					
0608-D-2001	GASOLINE ADDITIVE SYSTEM					

TOSCO
Tosco Distribution Company
A Division of Tosco Corporation
5528 NW Doane St.
Portland, Oregon 97210

ALPHA ENGINEERS and CONSTRUCTORS, INC.
19 NW 5th AVE, SUITE 204, PORTLAND, OR. 97209 Tel:(503)227-3317/Fax:(503)227-3244

DRAWN BY	DAB
CHKD BY	KJP
APPD BY	WHB
SCALE	NONE
DATE	08/18/97

PORTLAND TERMINAL
PORTLAND, OREGON
PIPING & INSTRUMENTATION DIAGRAM
REFINED PRODUCTS SYSTEM
TRUCK LOADING RACK
LANE 1 NORTH AND SOUTH

DRAWING NO.	SHEET	REV.
0608-D-1004	1 OF 3	0

P01004-1.DWG <CPD: 11/06/97 [TIME: 08:06 AM] >

COP0021318

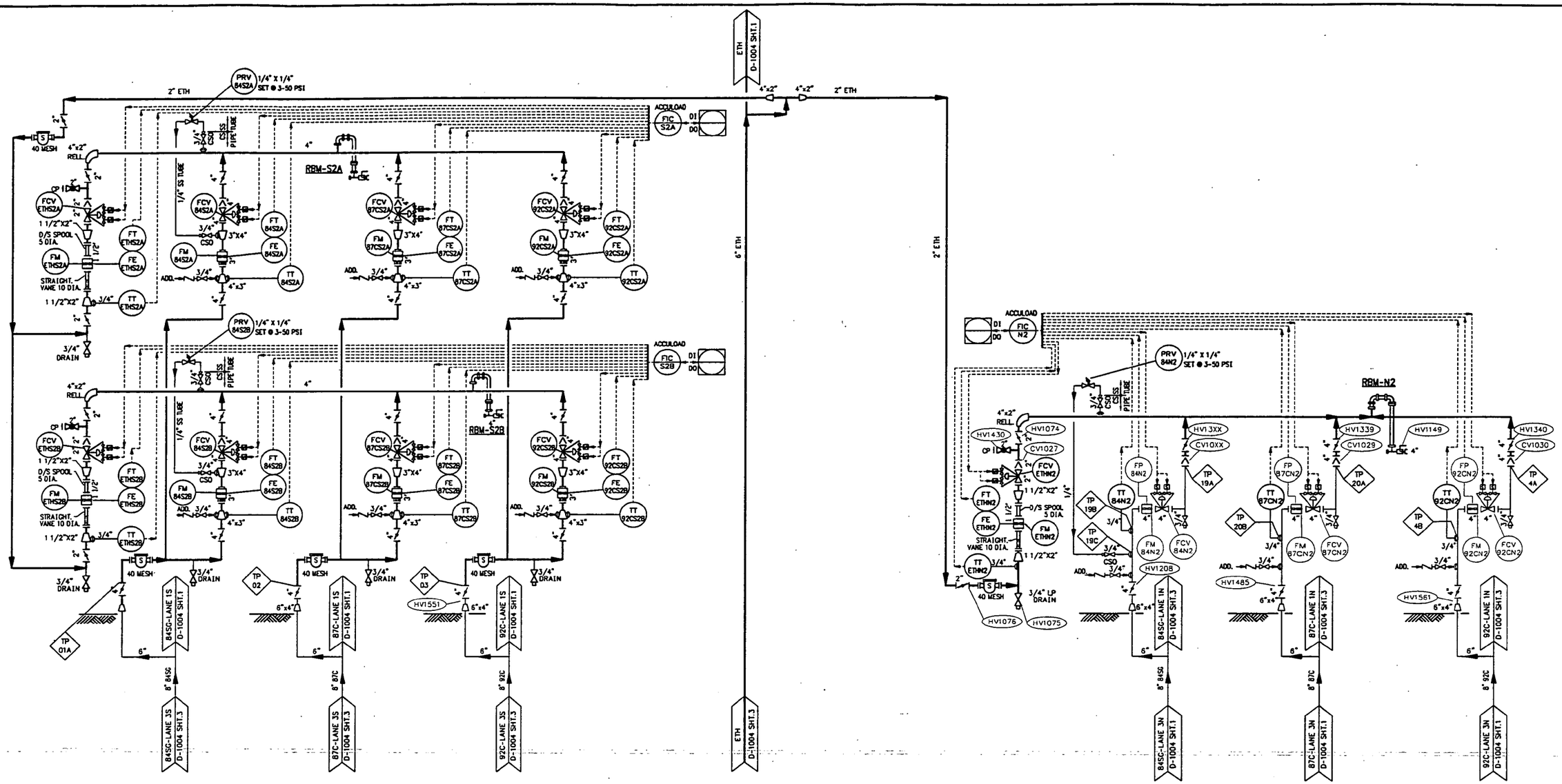

NOTES:

1. THIS DRAWING RECREATED FROM SPEC SERVICES DWGS. 0608-D-1003 THRU D-1010.
2. SEE DWG. 0608-D-2001 FOR GASOLINE ADDITIVE SYSTEM
3. NEW WORK SHOWN BOLD

DRAWING NO.	REFERENCE DRAWINGS	REV. NO.	DATE	REVISED	DRAWN BY	CKD. BY
0608-D-1000	LEGEND AND SYMBOLS	0	11/06/97	ISSUE FOR CONSTRUCTION	DAB	KJP
0608-D-1005	REFINED PRODUCTS SYSTEM SFPPL YARD					
0608-D-2001	GASOLINE ADDITIVE SYSTEM					

TOSCO
Tosco Northwest Company
A Division of Tosco Corporation
5528 NW Doane St.
Portland, Oregon 97210

ALPHA ENGINEERS and CONSTRUCTORS, INC.
19 NW 5th AVE, SUITE 204, PORTLAND, OR. 97209 Tel:(503)227-3317/Fax:(503)227-3244

DRAWN BY	DAB
CHKD BY	KJP
APPD BY	WHB
SCALE	NONE
DATE	10/14/97

PORTLAND TERMINAL
PORTLAND, OREGON
PIPING & INSTRUMENTATION DIAGRAM
REFINED PRODUCTS SYSTEM
TRUCK LOADING RACK
LANE 2 NORTH AND SOUTH

DRAWING NO.	SHEET	REV.
0608-D-1004	2 OF 3	0

PD1004-2.DWG <PD: 11/06/97 [TIME: 08:17 AM]>

COP0021319

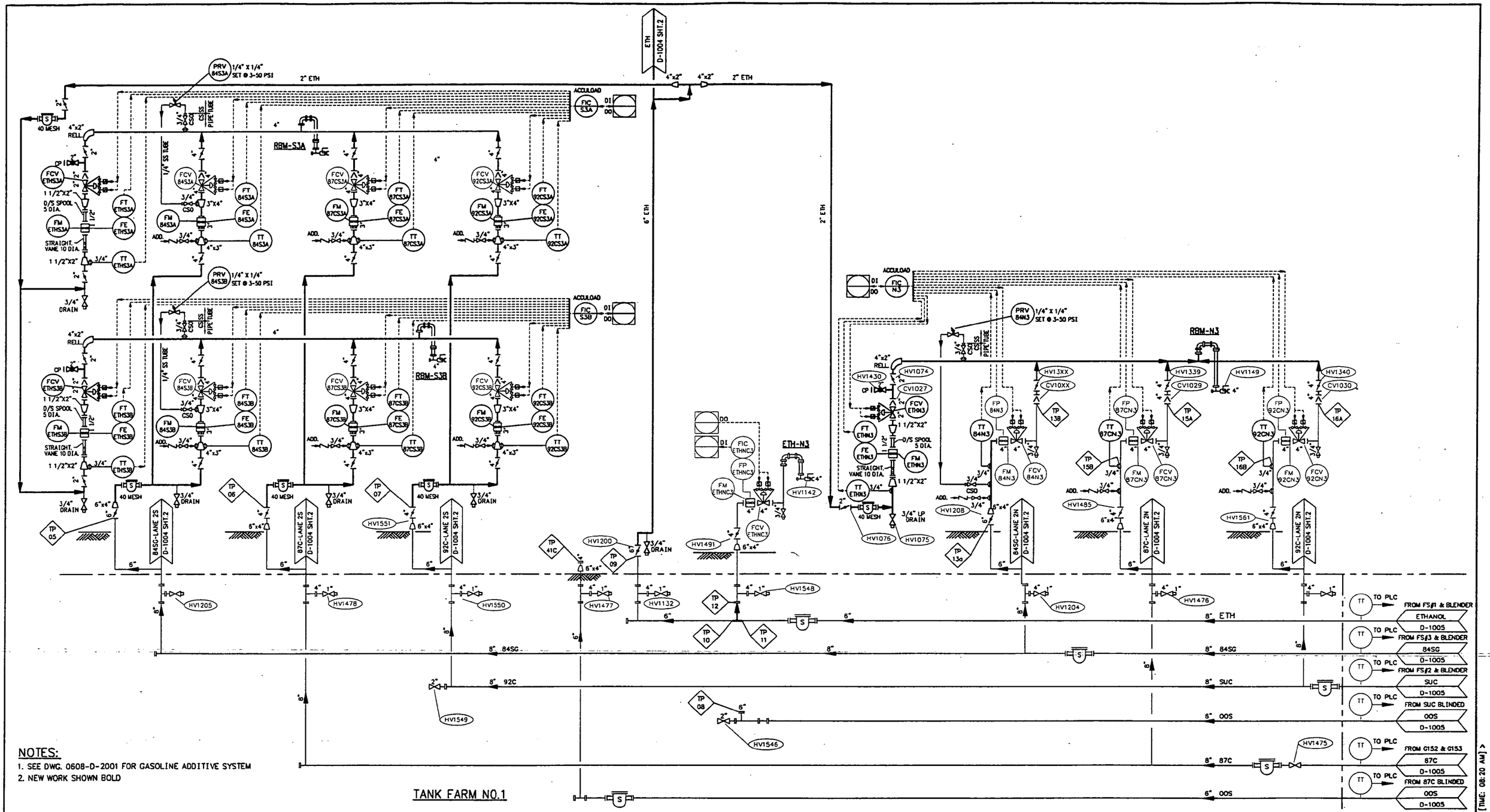

NOTES:

1. SEE DWG. 0608-D-2001 FOR GASOLINE ADDITIVE SYSTEM
2. NEW WORK SHOWN BOLD

TANK FARM NO.1

DRAWING NO.	REFERENCE DRAWINGS	REV. NO.	DATE	REVISED	DRAWN BY	CKD. BY
0608-D-1000	LEGEND AND SYMBOLS	0	11/06/97	ISSUE FOR CONSTRUCTION	DAB	KJP
0608-D-1005	REFINED PRODUCTS SYSTEM SFPPL YARD					
0608-D-2001	GASOLINE ADDITIVE SYSTEM					

TOSCO
Tosco Northwest Company
A Division of Tosco Corporation
5528 NW Doane St.
Portland, Oregon 97210

ALPHA ENGINEERS and CONSTRUCTORS, INC.
19 NW 5th AVE, SUITE 204, PORTLAND, OR. 97209 Tel: (503)227-3317/Fax: (503)227-3244

DRAWN BY	DAB
CHKD BY	KJP
APPD BY	WHB
SCALE	NONE
DATE	10/14/97

PORTLAND TERMINAL
PORTLAND, OREGON
PIPING & INSTRUMENTATION DIAGRAM
REFINED PRODUCTS SYSTEM
TRUCK LOADING RACK
LANE 3 NORTH AND SOUTH

DRAWING NO.	SHEET	REV.
0608-D-1004	3 OF 3	0

PD1004-3.DWG <CPD: 11/06/97 [TIME: 08:20 AM] >

COP00021320

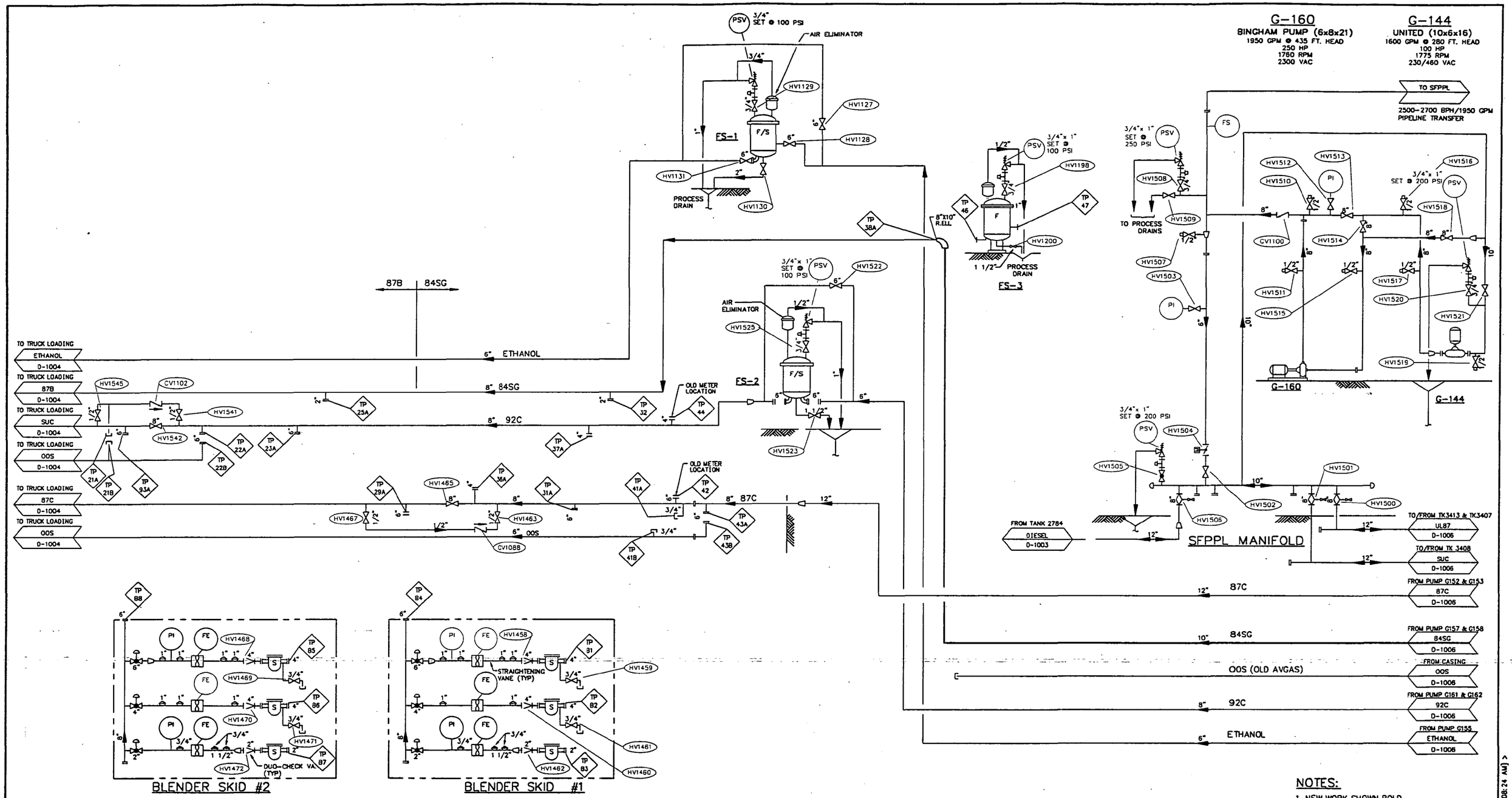

NOTES:

1. NEW WORK SHOWN BOLD

DRAWING NO.	REFERENCE DRAWINGS	REV. NO.	DATE	REVISED	DRAWN BY	CKD. BY
0608-D-1000	LEGEND AND SYMBOLS	0	11/06/97	ISSUE FOR CONSTRUCTION	DAB	KJP
0608-D-1003	DIESEL SYSTEM					
0608-D-1004	REFINED PRODUCTS SYSTEM TRUCK LOADING RACK					
0608-D-1006	REFINED PRODUCTS SYSTEM TANK FARM NO.2					

TOSCO
Tosco Distribution Company
A Division of Tosco Corporation
5528 NW Doane St.
Portland, Oregon 97210

ALPHA ENGINEERS and CONSTRUCTORS, INC.
19 NW 5th AVE, SUITE 204, PORTLAND, OR. 97209 Tel:(503)227-3317/Fax:(503)227-3244

DRAWN BY	DAB
CHKD BY	KJP
APPD BY	WHB
SCALE	NONE
DATE	03/14/95

PORTLAND TERMINAL
PORTLAND, OREGON
PIPING & INSTRUMENTATION DIAGRAM
REFINED PRODUCTS SYSTEM
SFPPL YARD

DRAWING NO.	SHEET	REV.
0608-D-1005	1 OF 1	0

\VPD10050.DWG <CPD: 11/06/97 [TIME: 08:24 AM] >

COP0021321

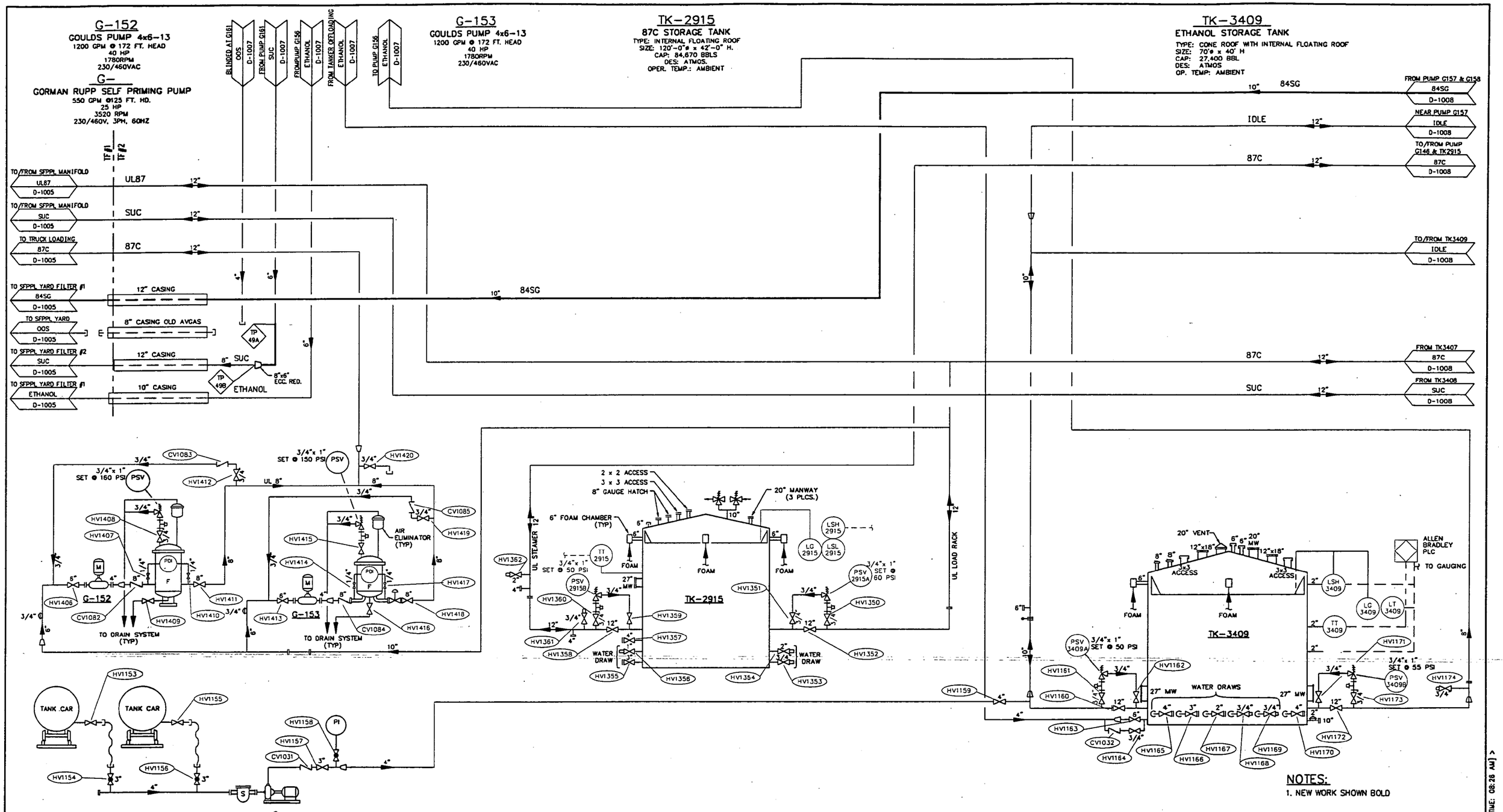

NOTES:
1. NEW WORK SHOWN BOLD

DRAWING NO.	REFERENCE DRAWINGS	REV. NO.	DATE	REVISED	DRAWN BY	CKD. BY
0608-D-1000	LEGEND AND SYMBOLS	0	11/06/97	ISSUE FOR CONSTRUCTION	DAB	KJP
0608-D-1005	REFINED PRODUCTS SYSTEM SFPPL YARD					
0608-D-1007	REFINED PRODUCTS SYSTEM TANK FARM NO.2					
0608-D-1008	REFINED PRODUCTS SYSTEM TANK FARM NO.2					

TOSCO
Tosco Distribution Company
A Division of Tosco Corporation
5528 NW Doane St.
Portland, Oregon 97210

ALPHA ENGINEERS and CONSTRUCTORS, INC.
19 NW 5th AVE., SUITE 204, PORTLAND, OR. 97209 Tel:(503)227-3317/Fax:(503)227-3244

DRAWN BY	DAB
CHKD BY	KJP
APPD BY	WHB
SCALE	NONE
DATE	08/19/97

PORTLAND TERMINAL
PORTLAND, OREGON
PIPING & INSTRUMENTATION DIAGRAM
REFINED PRODUCTS SYSTEM
TANK FARM NO.2

DRAWING NO.	SHEET	REV.
0608-D-1006	1 OF 1	0

\P010060.DWG <CPD: 11/06/97 [TIME: 08:26 AM] >

COP00021322

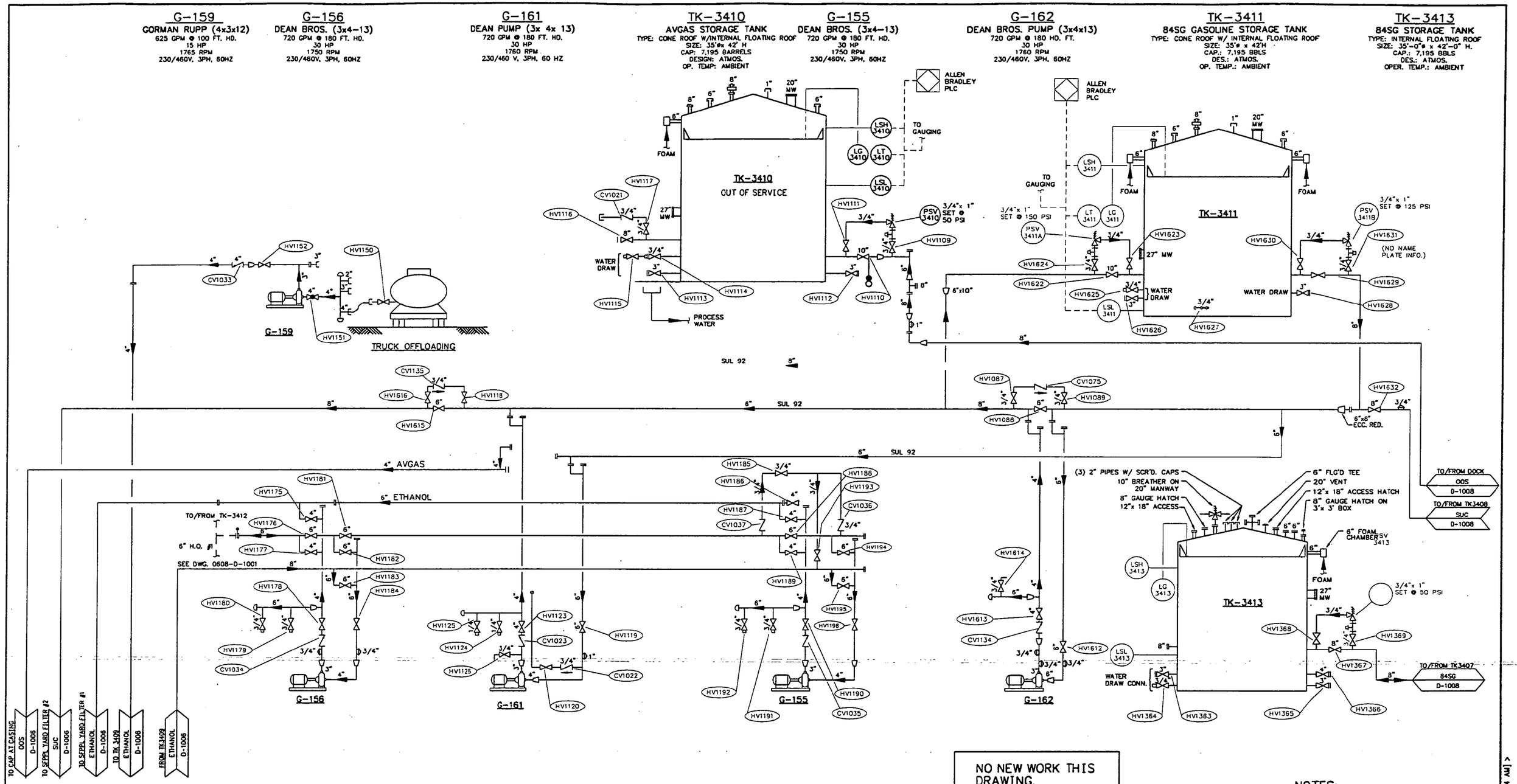

NOTES:
1. NEW WORK SHOWN BOLD

DRAWING NO.	REFERENCE DRAWINGS	REV. NO.	DATE	REVISED	DRAWN BY	CKD. BY
0608-D-1000	LEGEND AND SYMBOLS	0	11/06/97	FOR INFORMATION ONLY	DAB	KJP
0608-D-1006	REFINED PRODUCTS SYSTEM TANK FARM NO.2					
0608-D-1008	REFINED PRODUCTS SYSTEM TANK FARM NO.2					
0608-D-1001	HEATING OIL SYSTEM					

TOSCO
Tosco Distribution Company
A Division of Tosco Corporation
5528 NW Doane St.
Portland, Oregon 97210

ALPHA ENGINEERS and CONSTRUCTORS, INC.
19 NW 5th AVE, SUITE 204, PORTLAND, OR 97209 Tel:(503)227-3317/Fax:(503)227-3244

DRAWN BY	DAB
CHKD BY	KJP
APPD BY	WHB
SCALE	NONE
DATE	08/19/97

PORTLAND TERMINAL
PORTLAND, OREGON
PIPING & INSTRUMENTATION DIAGRAM
REFINED PRODUCTS SYSTEM
TANK FARM NO.2

DRAWING NO.	SHEET	REV.
0608-D-1007	1 OF 1	0

\PD10070.DWG <CPD: 11/06/97 [TIME: 08:34 AM] >

COP00213

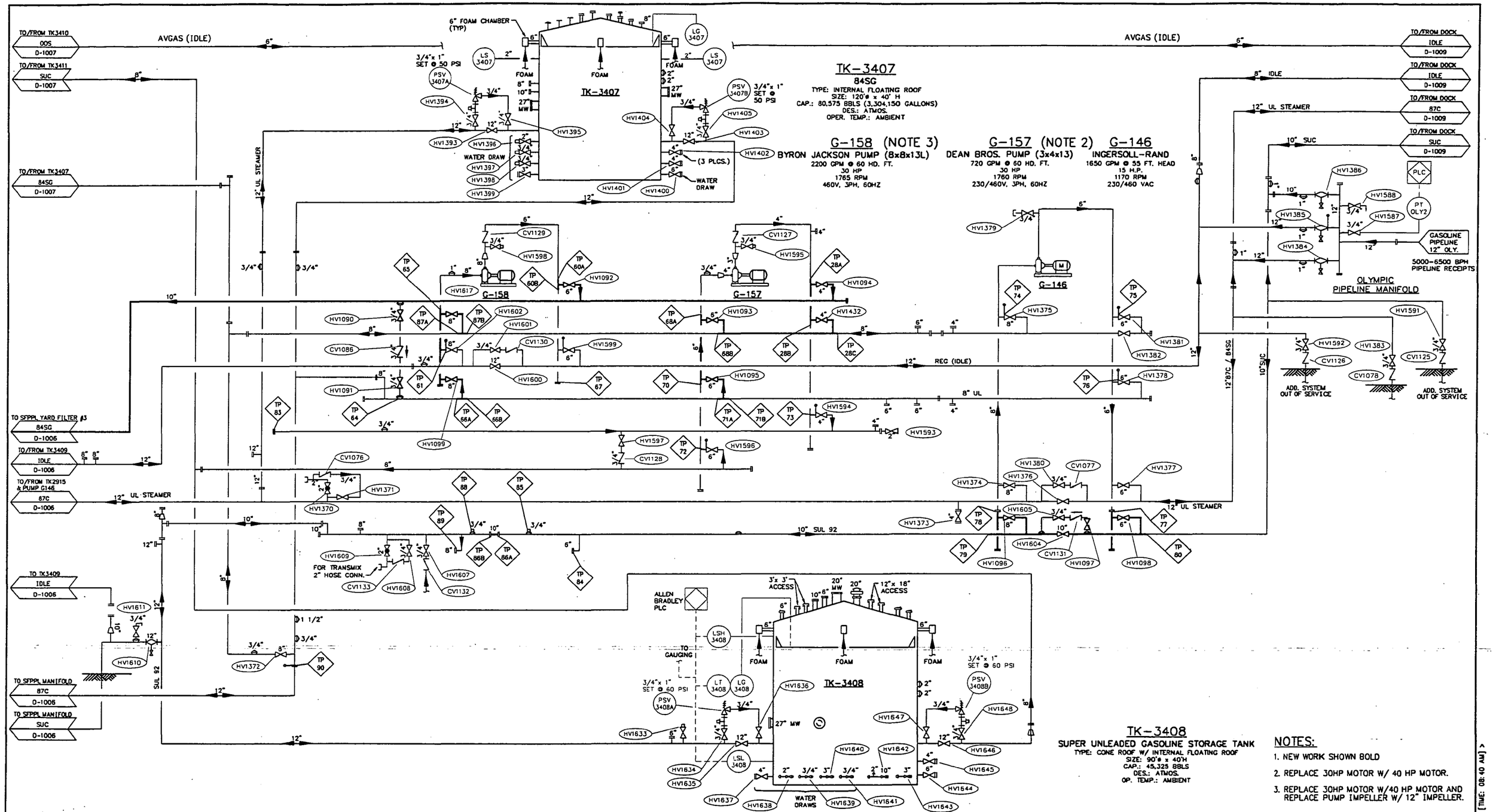

NOTES:

1. NEW WORK SHOWN BOLD
2. REPLACE 30HP MOTOR W/ 40 HP MOTOR.
3. REPLACE 30HP MOTOR W/40 HP MOTOR AND REPLACE PUMP IMPELLER W/ 12" IMPELLER.

DRAWING NO.	REFERENCE DRAWINGS	REV. NO.	DATE	REVISED	DRAWN BY	CKD. BY
0608-D-1000	LEGEND AND SYMBOLS	0	11/06/97	ISSUE FOR CONSTRUCTION	DAB	KJP
0608-D-1006	REFINED PRODUCTS SYSTEM TANK FARM NO.2					
0608-D-1007	REFINED PRODUCTS SYSTEM TANK FARM NO.2					
0608-D-1009	REFINED PRODUCTS SYSTEM DOCK AREA					

TOSCO
Tosco Distribution Company
A Division of Tosco Corporation
5528 NW Doane St.
Portland, Oregon 97210

ALPHA ENGINEERS and CONSTRUCTORS, INC.
19 NW 5th AVE., SUITE 204, PORTLAND, OR. 97209 Tel:(503)227-3317/Fax:(503)227-3244

DRAWN BY	DAB
CHKD BY	KJP
APPD BY	WHB
SCALE	NONE
DATE	08/19/97

PORTLAND TERMINAL
PORTLAND, OREGON
PIPING & INSTRUMENTATION DIAGRAM
REFINED PRODUCTS SYSTEM
TANK FARM NO.2

DRAWING NO.	SHEET	REV.
0608-D-1008	1 OF 1	0

VPD10080.DWG <PPD: 11/06/97 [TIME: 08:40 AM] >

COP0021324

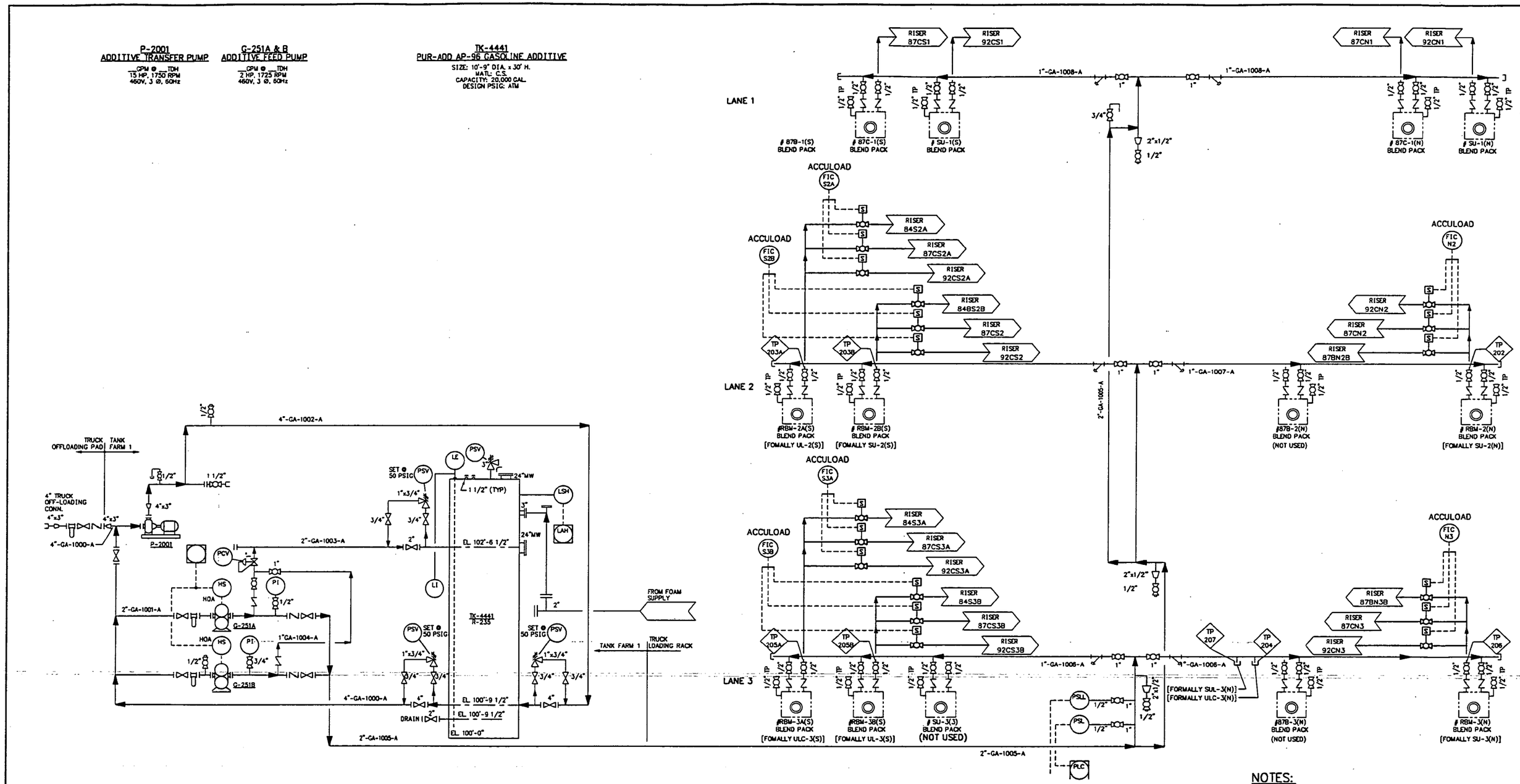

NOTES:

1. SEE DWG. 0608-D-1004 FOR TRUCK LOADING RACK
2. NEW WORK SHOWN BOLD

DRAWING NO.	REFERENCE DRAWINGS	REV. NO.	DATE	REVISED	DRAWN BY	CKD. BY
0608-D-1000	LEGEND AND SYMBOLS	0	11/06/97	ISSUE FOR CONSTRUCTION	DAB	KJP
0608-D-1004	REFINED PRODUCTS SYSTEM TRUCK LOADING RACK					

TOSCO
Tosco Northwest Company
A Division of Tosco Corporation
5528 NW Doane St.
Portland, Oregon 97210

ALPHA ENGINEERS and CONSTRUCTORS, INC.
19 NW 5th AVE, SUITE 204, PORTLAND, OR 97209 Tel:(503)227-3317/Fax:(503)227-3244

DRAWN BY	DAB
CKD BY	KJP
APPD BY	WHB
SCALE	NONE
DATE	08/18/97

PORTLAND TERMINAL
PORTLAND, OREGON
PIPING & INSTRUMENTATION DIAGRAM
GASOLINE ADDITIVE SYSTEM

DRAWING NO.	SHEET	REV.
0608-D-2001	1 OF 1	0

\P02001D.DWG <PPD: 11/06/97 [TIME: 08:22 AM] >

COP00021325

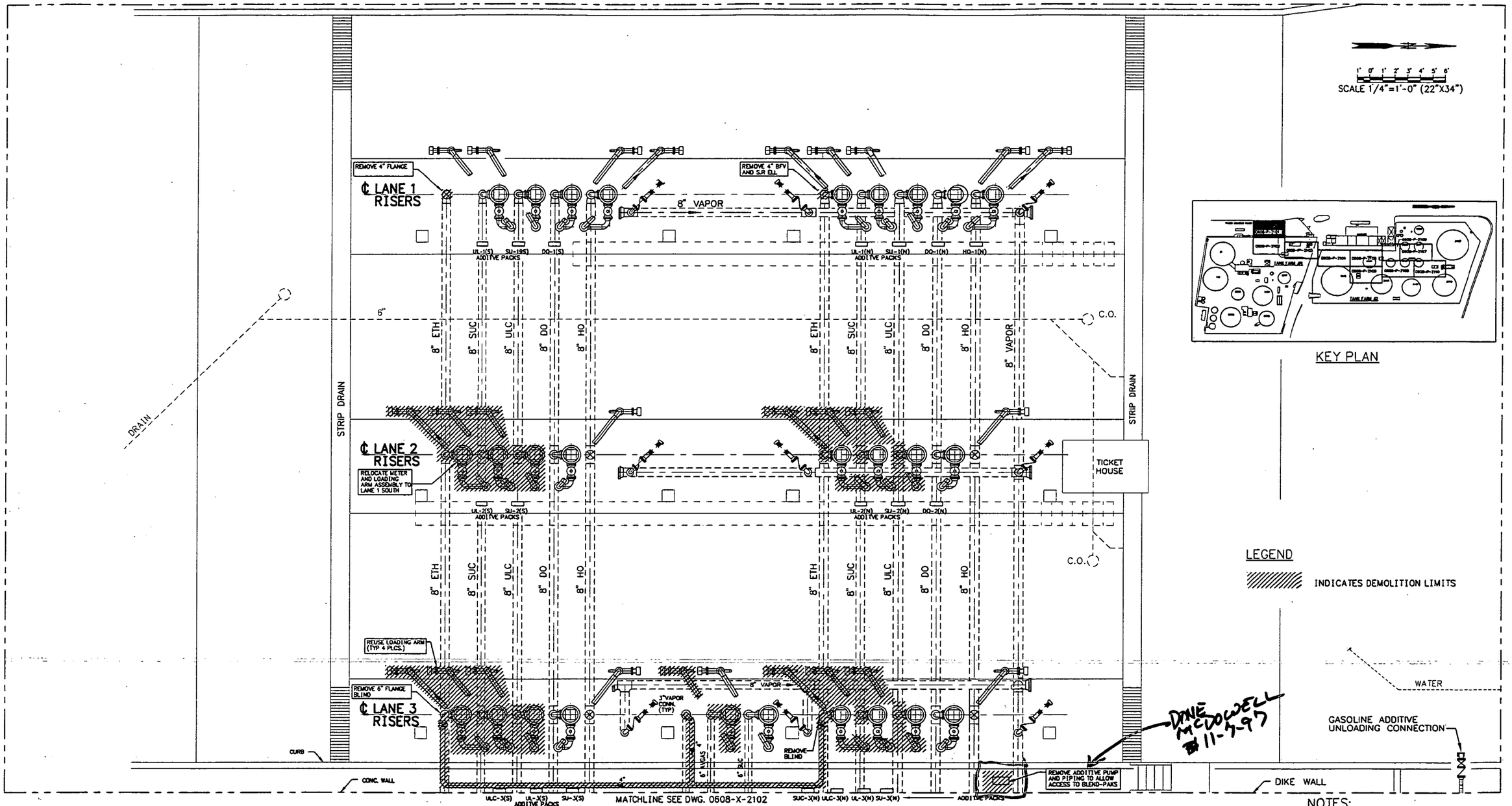

PLAN
SCALE 1/4"=1'-0"

NOTES:
1. VERIFY ALL DIMENSIONS PRIOR TO FABRICATION.

DRAWING NO.	REFERENCE DRAWINGS	REV. NO.	DATE	REVISED	DRAWN BY	CKD. BY
0608-X-2102	PIPING TANK FARM NO.1 SOUTH OF BLENDER SKID AREA	0	11/06/97	ISSUE FOR CONSTRUCTION	DAB	KJP

TOSCO
Tosco Distribution Company
A Division of Tosco Corporation
5528 NW Doane St.
Portland, Oregon 97210

ALPHA ENGINEERS and CONSTRUCTORS, INC.
19 NW 5th AVE, SUITE 204, PORTLAND, OR 97209 Tel:(503)227-3317/Fax:(503)227-3244

DRAWN BY	DAB
CHKD BY	KJP
APPD BY	WHB
SCALE	AS SHOWN
DATE	09/05/97

PORTLAND TERMINAL
PORTLAND, OREGON
TRUCK LOAD RACK UPGRADE PROJECT
PIPING
TRUCK LOADING RACK
DEMOLITION PLAN

DRAWING NO.	SHEET	REV.
0608-X-2101	1 OF 1	0

68X21010.DWG <CPD: 11/06/97 [TIME: 07:01 AM] >

COP00021326

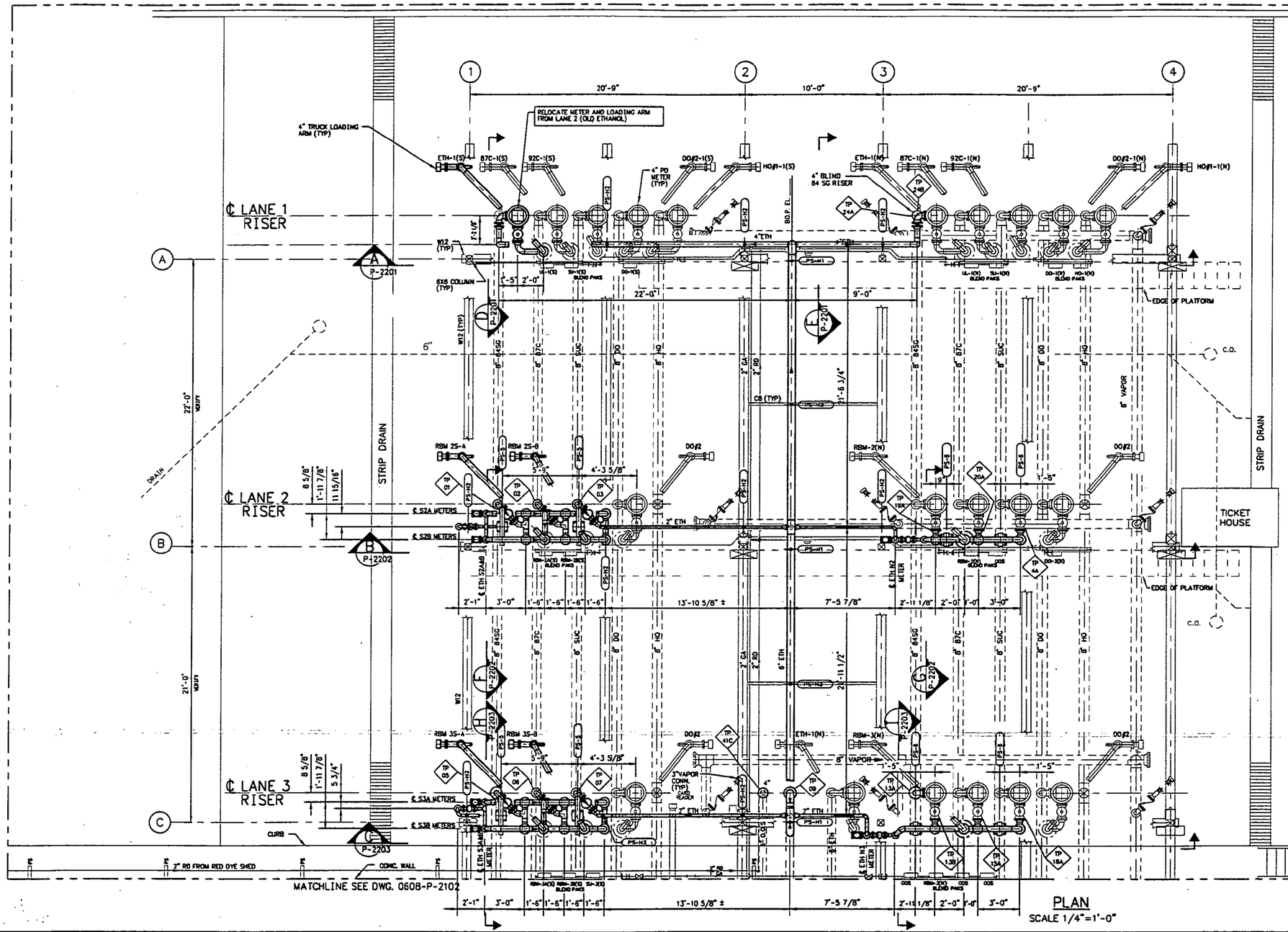

PLAN
SCALE 1/4"=1'-0"

SCALE 1/4"=1'-0" (22"X34")

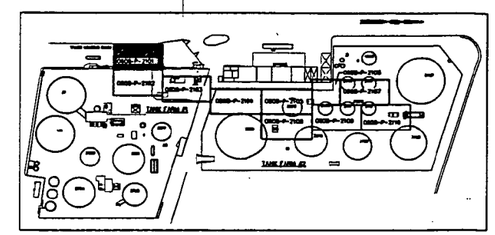

KEY PLAN

LEGEND

- EXISTING PIPING & EQUIPMENT
- NEW PIPING AND EQUIPMENT

NOTES:

1. VERIFY ALL DIMENSIONS PRIOR TO FABRICATION.
2. SEE DWG. 0608-X-2101 FOR DEMOLITION
3. SEE DWG. 0608-P-2210 & P-2211 FOR PIPE SUPPORTS

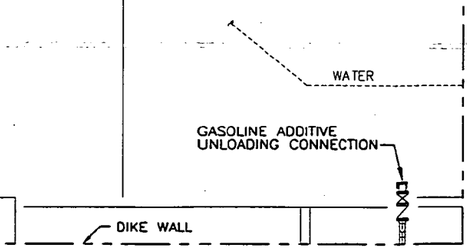

DRAWING NO.	REFERENCE DRAWINGS	REV. NO.	DATE	REVISED	DRAWN BY	CKD. BY
0608-P-2102	PIPING TANK FARM NO.1 SOUTH OF BLENDER AREA	0	11/06/97	ISSUE FOR CONSTRUCTION	DAB	KJP

TOSCO
Tosco Distribution Company
A Division of Tosco Corporation
5528 NW Doane St.
Portland, Oregon 97210

ALPHA ENGINEERS and CONSTRUCTORS, INC.
19 NW 5th AVE., SUITE 204, PORTLAND, OR. 97209 Tel: (503)227-3317/Fax: (503)227-3244

DRAWN BY	DAB
CHKD BY	KJP
APPD BY	WHB
SCALE	AS SHOWN
DATE	09/05/97

PORTLAND TERMINAL
PORTLAND, OREGON
TRUCK LOAD RACK UPGRADE PROJECT
PIPING
TRUCK LOADING RACK

DRAWING NO.	SHEET	REV.
0608-P-2101	1 OF 1	0

COP00021327

69P2101D.DWG <CPD: 11/06/97 [TIME: 06:59 AM] >

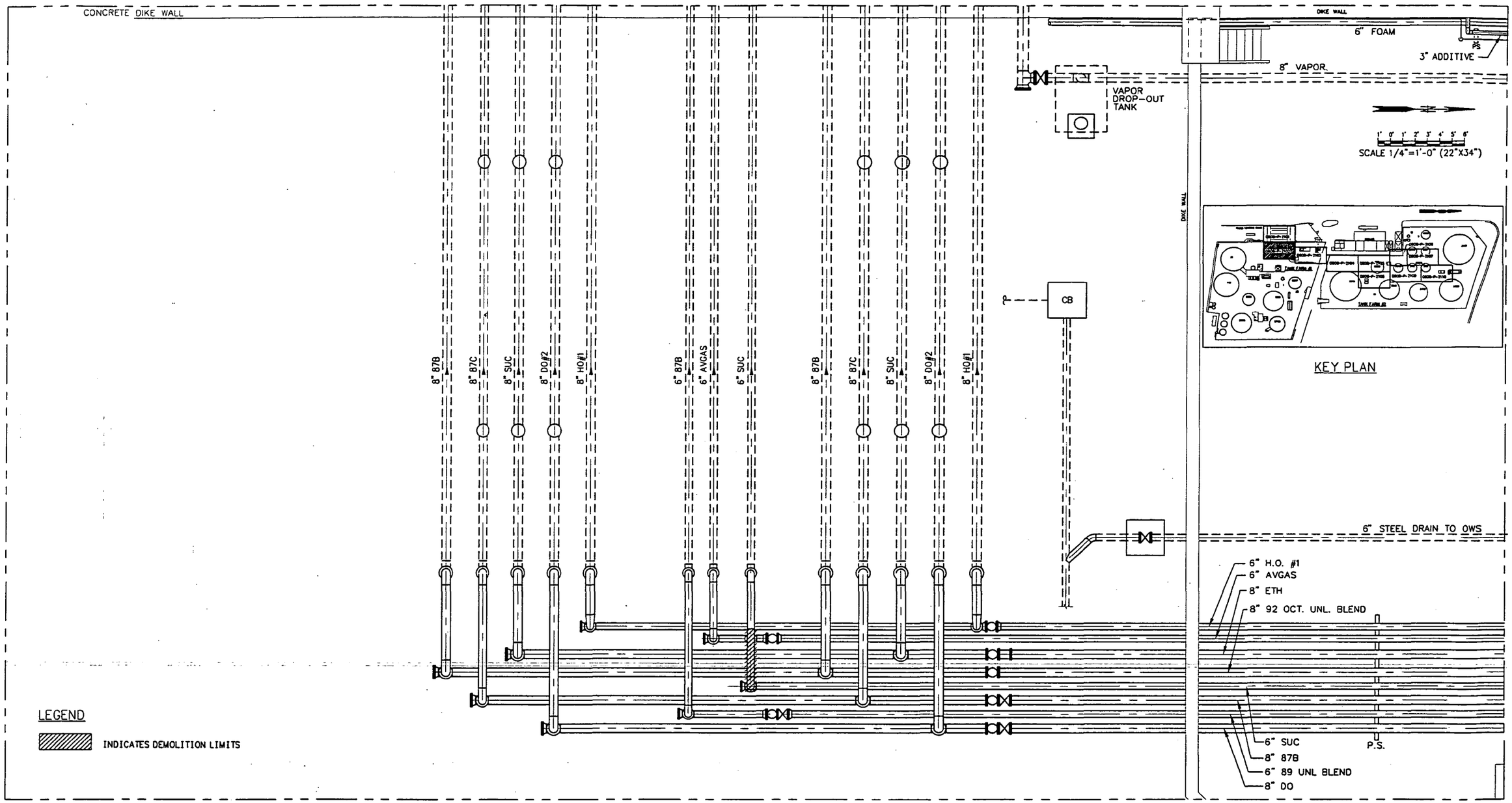

PLAN
SCALE 1/4"=1'-0"

NOTES:
1. VERIFY ALL DIMENSIONS PRIOR TO FABRICATION.

DRAWING NO.	REFERENCE DRAWINGS	REV. NO.	DATE	REVISED	DRAWN BY	CKD. BY
0608-X-2103	PIPING SFPPL YARD TANK FARM NO.1 DEMOLITION	0	11/06/97	ISSUE FOR CONSTRUCTION	DAB	KJP
0608-X-2101	PIPING TRUCK LOADING RACK DEMOLITION					

TOSCO
Tosco Distribution Company
A Division of Tosco Corporation
5528 NW Doane St.
Portland, Oregon 97210

ALPHA ENGINEERS and CONSTRUCTORS, INC.
19 NW 5th AVE. SUITE 204, PORTLAND, OR. 97209 Tel:(503)227-3317/Fax:(503)227-3244

DRAWN BY	DAB
CHKD BY	KJP
APPD BY	WHB
SCALE	AS SHOWN
DATE	09/05/97

PORTLAND TERMINAL
PORTLAND, OREGON
TRUCK LOAD RACK MODIFICATIONS
PIPING TANK FARM NO.1
SOUTH OF BLENDER SKID AREA
DEMOLITION

DRAWING NO.	SHEET	REV.
0608-X-2102	1 OF 1	0

68X21020.DWG <CPD: 11/06/97 [TIME: 10:54 AM] >

COP0021328

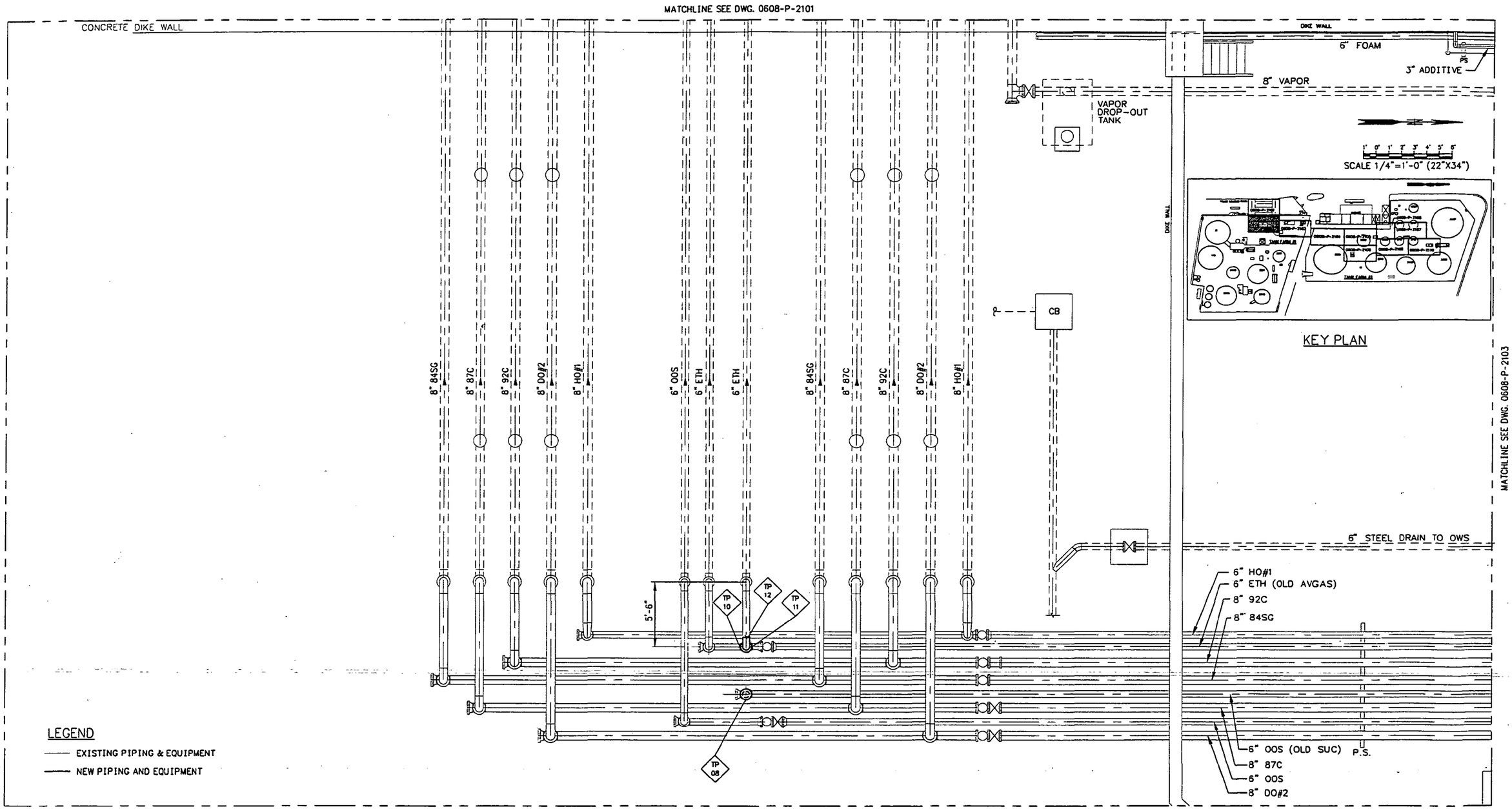

PLAN

SCALE 1/4"=1'-0"

NOTES:

1. VERIFY ALL DIMENSIONS PRIOR TO FABRICATION.
2. SEE DWG. 0608-X-2102 FOR DEMOLITION.

DRAWING NO.	REFERENCE DRAWINGS	REV. NO.	DATE	REVISED	DRAWN BY	CKD. BY
0608-P-2101	PIPING TRUCK LOADING RACK	0	11/06/97	ISSUE FOR CONSTRUCTION	DAB	KJP
0608-P-2103	PIPING SFPPL YARD AREA					

TOSCO
Tosco Distribution Company
A Division of Tosco Corporation
5528 NW Doane St.
Portland, Oregon 97210

ALPHA ENGINEERS and CONSTRUCTORS, INC.
19 NW 5th AVE, SUITE 204, PORTLAND, OR. 97209 Tel: (503)227-3317/Fax: (503)227-3244

DRAWN BY	DAB
CHKD BY	KJP
APPD BY	WHB
SCALE	AS SHOWN
DATE	09/05/97

PORTLAND TERMINAL
PORTLAND, OREGON
TRUCK LOAD RACK MODIFICATIONS
PIPING
TANK FARM NO.1

DRAWING NO.	SHEET	REV.
0608-P-2102	1 OF 1	0

68P31020.DWG <CPD: 11/06/97 [TIME: 07:03 AM]>

COP00021329

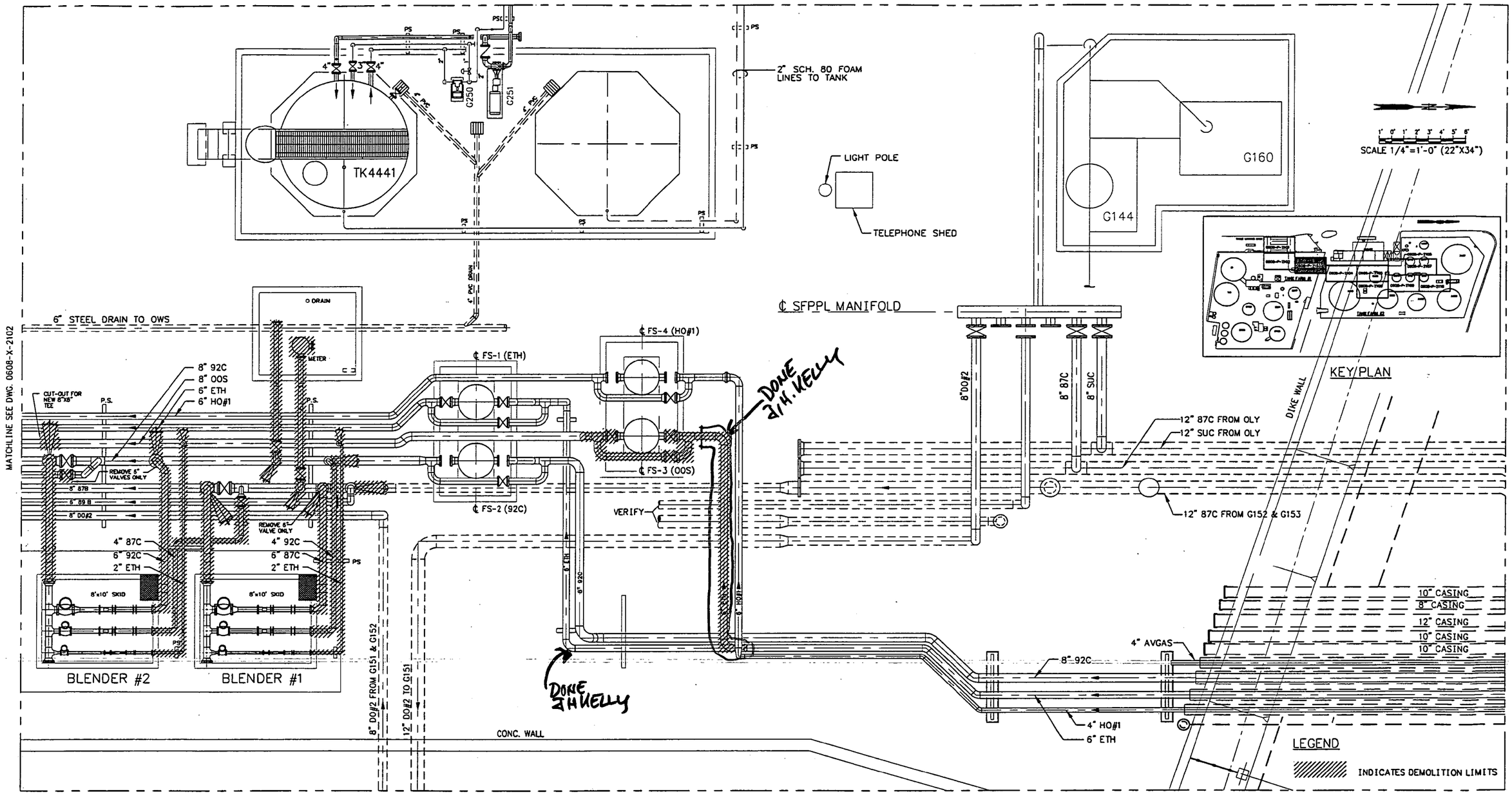

PLAN

SCALE 1/4"=1'-0"

NOTES:

1. VERIFY ALL DIMENSIONS PRIOR TO FABRICATION.

DRAWING NO.	REFERENCE DRAWINGS	REV. NO.	DATE	REVISED	DRAWN BY	CKD. BY
0608-X-2102	TANK FARM NO. 1 PIPING SOUTH OF BLENDER SKIDS DEMOLITION	0	11/06/97	ISSUE FOR CONSTRUCTION	DAB	KJP
0608-P-2104	TANK FARM NO.2 ALLEY CROSSING DEMOLITION					

TOSCO
Tosco Distribution Company
A Division of Tosco Corporation
5528 NW Doane St.
Portland, Oregon 97210

ALPHA ENGINEERS and CONSTRUCTORS, INC.
19 NW 5th AVE, SUITE 204, PORTLAND, OR. 97209 Tel:(503)227-3317/Fax:(503)227-3244

DRAWN BY	DAB
CHKD BY	KJP
APPD BY	WHB
SCALE	AS SHOWN
DATE	09/05/97

PORTLAND TERMINAL
PORTLAND, OREGON
TRUCK LOADRACK MODIFICATIONS
PIPING
SFPPL YARD TANK FARM NO.1
DEMOLITION

DRAWING NO.	SHEET	REV.
0608-X-2103	1 OF 1	0

8BX2030.DWG <CPD: 11/06/97 [TIME: 07:06 AM] >

COP00021330

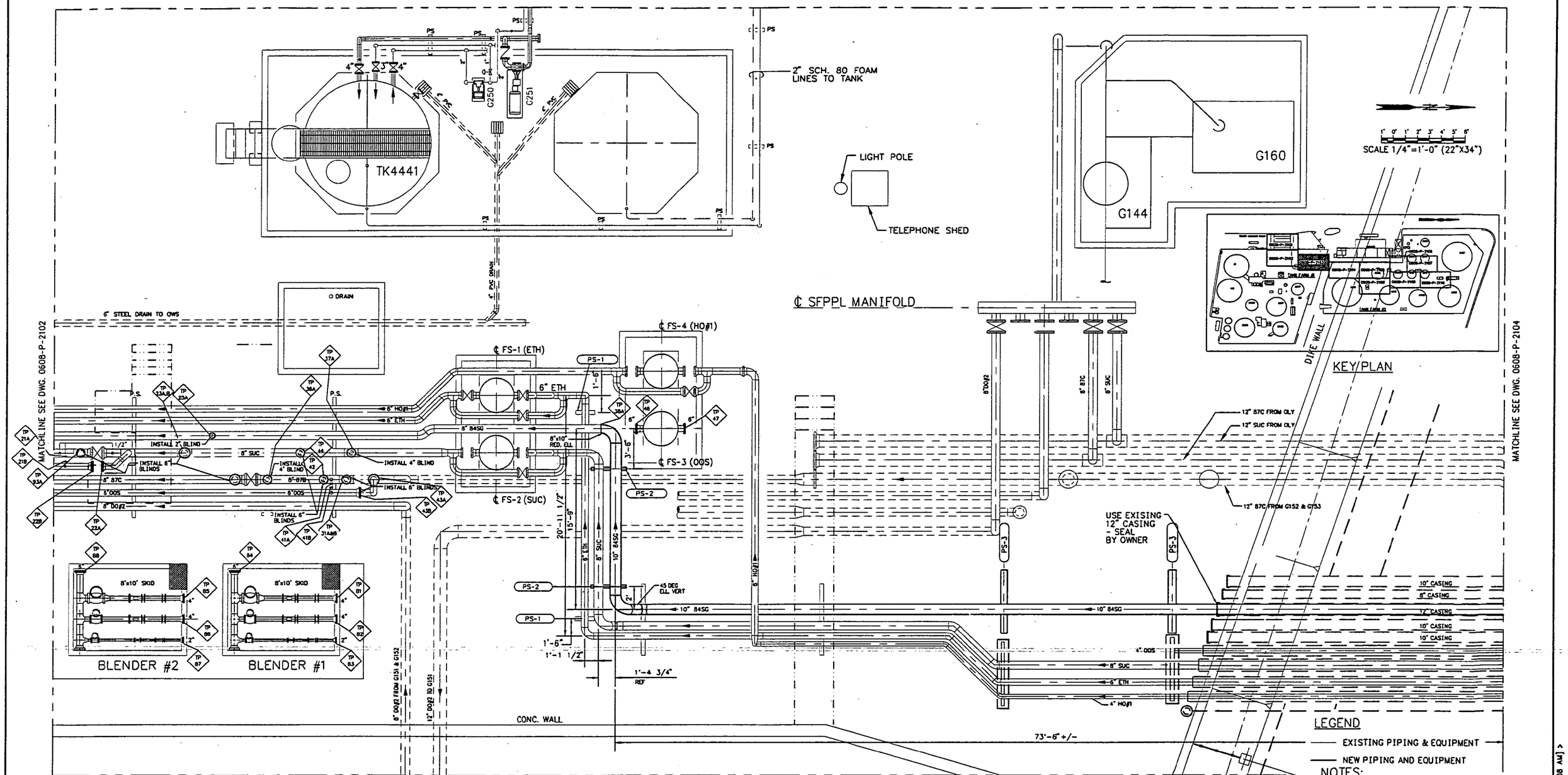

NOTES:
1. VERIFY ALL DIMENSIONS PRIOR TO FABRICATION.
2. SEE DWG. 0608-X-2103 FOR DEMOLITION
3. SEE DWG. 0608-P-2210 FOR PIPE SUPPORTS.

PLAN
SCALE 1/4"=1'-0"

DRAWING NO.	REFERENCE DRAWINGS	REV. NO.	DATE	REVISED	DRAWN BY	CKD. BY
0608-P-2102	TANK FARM NO. 1 PIPING	0	11/06/97	ISSUE FOR CONSTRUCTION	DAB	KJP
0608-P-2104	TANK FARM NO.2 PIPING					

TOSCO
Tosco Distribution Company
A Division of Tosco Corporation
5528 NW Doane St.
Portland, Oregon 97210

ALPHA ENGINEERS and CONSTRUCTORS, INC.
19 NW 5th AVE., SUITE 204, PORTLAND, OR. 97209 Tel:(503)227-3317/Fax:(503)227-3244

DRAWN BY	DAB
CHKD BY	KJP
APPD BY	WHB
SCALE	AS SHOWN
DATE	09/05/97

PORTLAND TERMINAL
PORTLAND, OREGON
TRUCK LOAD RACK UPGRADE PROJECT
PIPING
SFPPL YARD TANK FARM NO.1

DRAWING NO.	SHEET	REV.
0608-P-2103	1 OF 1	0

6BP21030.DWG <PD: 11/06/97 [TIME: 07:08 AM] >

COP0021331

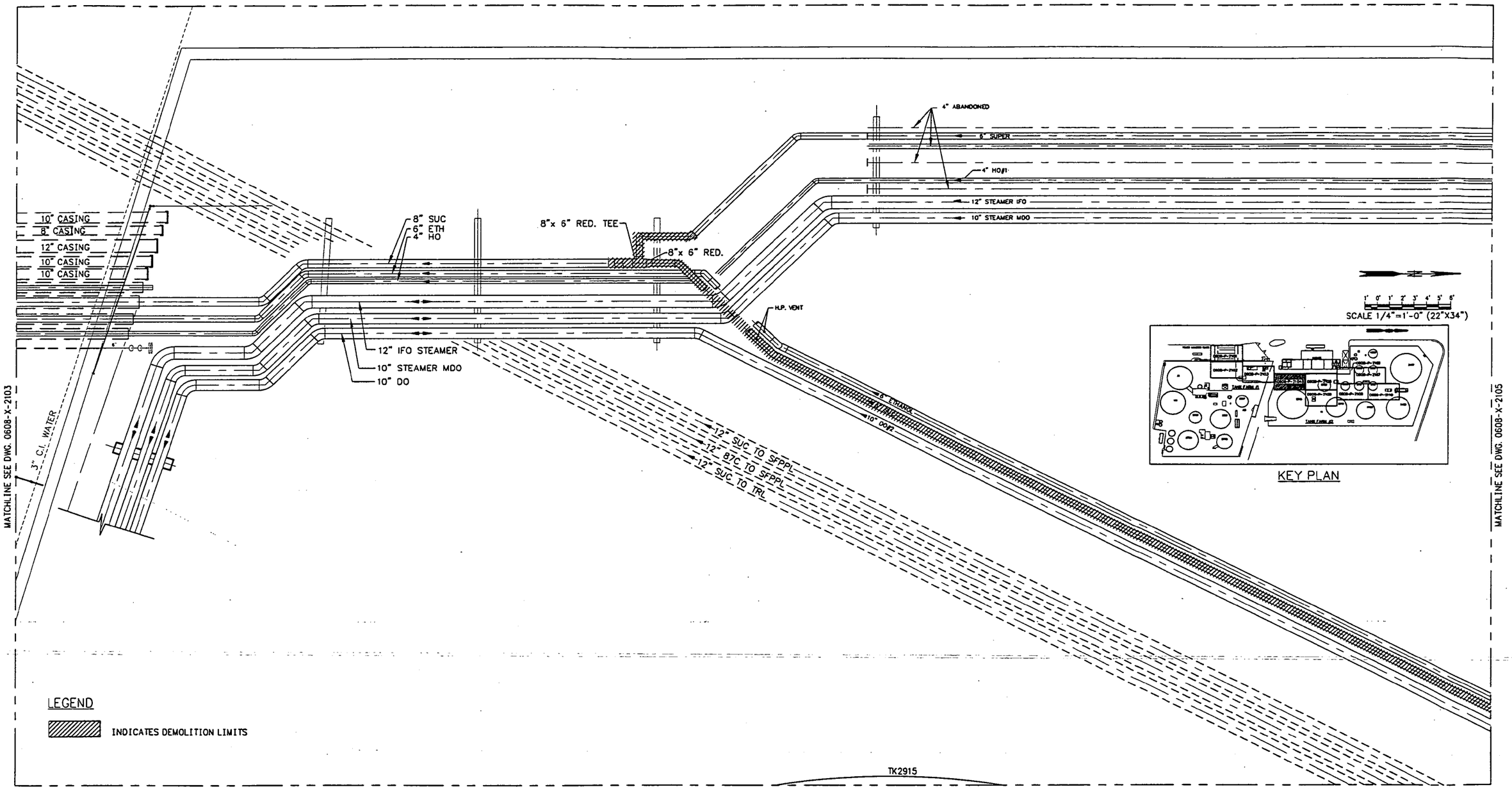

PLAN
SCALE 1/4"=1'-0"

NOTES:
1. VERIFY ALL DIMENSIONS PRIOR TO FABRICATION.

DRAWING NO.	REFERENCE DRAWINGS	REV. NO.	DATE	REVISED	DRAWN BY	CKD. BY
0608-X-2103	SFPPL YARD TANK FARM NO.1 PIPING DEMOLITION	0	11/06/97	ISSUE FOR CONSTRUCTION	DAB	KJP
0608-X-2105	TANK FARM NO.2 TK 2982 AREA DEMOLITION PLAN					

TOSCO
Tosco Distribution Company
A Division of Tosco Corporation
5528 NW Doane St.
Portland, Oregon 97210

ALPHA ENGINEERS and CONSTRUCTORS, INC.
19 NW 5th AVE, SUITE 204, PORTLAND, OR. 97209 Tel:(503)227-3317/Fax:(503)227-3244

DRAWN BY	DAB
CHKD BY	KJP
APPD BY	WHB
SCALE	AS SHOWN
DATE	09/05/97

PORTLAND TERMINAL
PORTLAND, OREGON
TRUCK LOAD RACK UPGRADE PROJECT
PIPING TANK FARM NO.2
ALLEY CROSSING
DEMOLITION

DRAWING NO.	SHEET	REV.
0608-X-2104	1 OF 1	0

68X21040.DWG <CPD: 11/06/97 [TIME: 07:01:01 AM]>

COP00213322

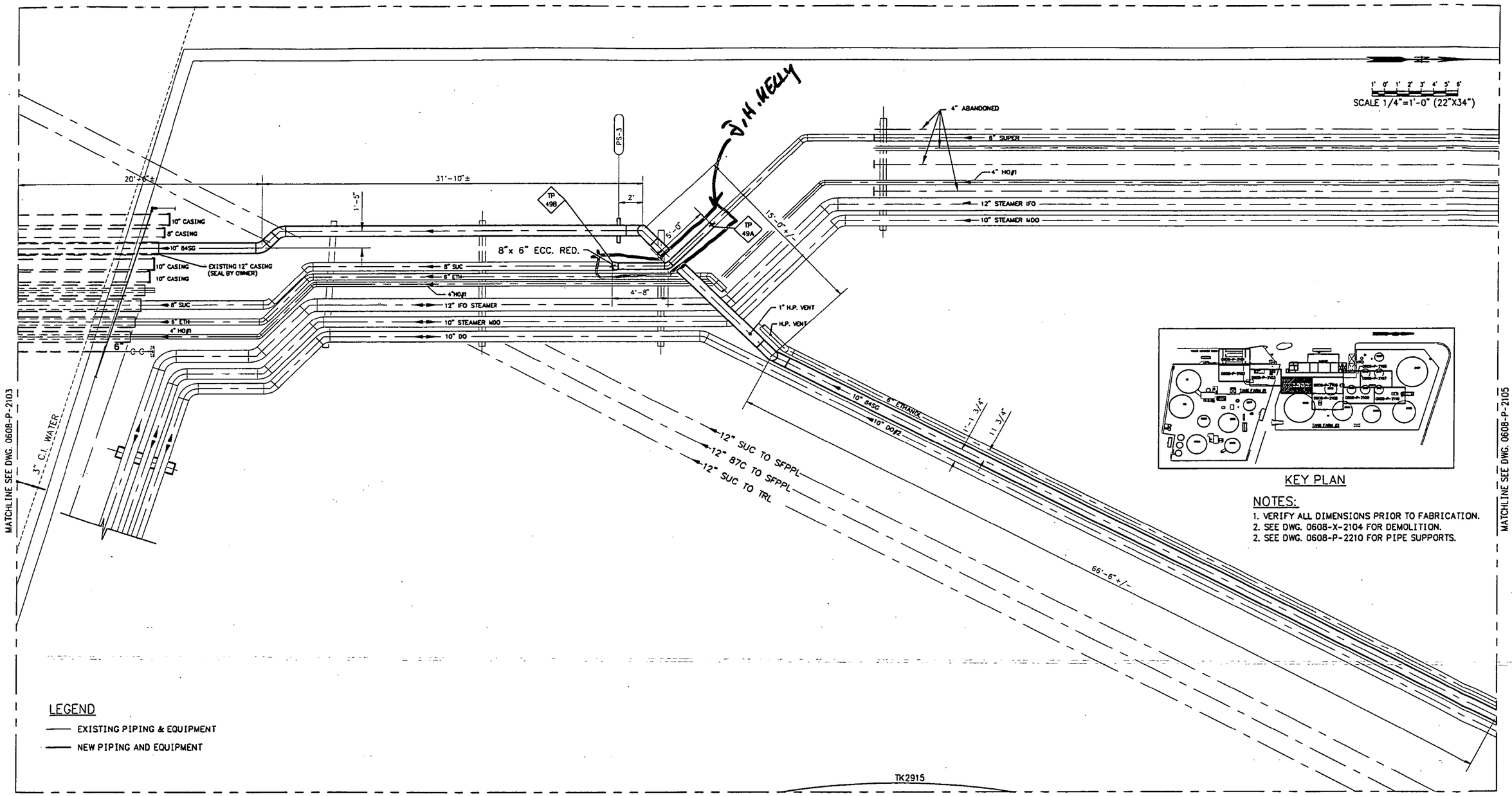

KEY PLAN

NOTES:

1. VERIFY ALL DIMENSIONS PRIOR TO FABRICATION.
2. SEE DWG. 0608-X-2104 FOR DEMOLITION.
2. SEE DWG. 0608-P-2210 FOR PIPE SUPPORTS.

PLAN
SCALE 1/4"=1'-0"

DRAWING NO.	REFERENCE DRAWINGS	REV. NO.	DATE	REVISED	DRAWN BY	CKD. BY
0608-P-2103	SFPPL YARD TANK FARM NO.1 PLAN	0	11/06/97	ISSUE FOR CONSTRUCTION	DAB	KJP
0608-P-2105	TANK FARM NO.2 TK 2982 AREA PLAN					

TOSCO
Tosco Distribution Company
A Division of Tosco Corporation
5528 NW Doane St.
Portland, Oregon 97210

ALPHA ENGINEERS and CONSTRUCTORS, INC.
19 NW 5th AVE, SUITE 204, PORTLAND, OR. 97209 Tel:(503)227-3317/Fax:(503)227-3244

DRAWN BY	DAB
CHKD BY	KJP
APPD BY	WHB
SCALE	AS SHOWN
DATE	09/05/97

PORTLAND TERMINAL
PORTLAND, OREGON
TRUCK LOAD RACK UPGRADE PROJECT
PIPING
TANK FARM NO.2
ALLEY CROSSING

DRAWING NO.	SHEET	REV.
0608-P-2104	1 OF 1	0

68P21040.DWG <CPD: 11/06/97 [TIME: 07:14 AM] >

COP0021333

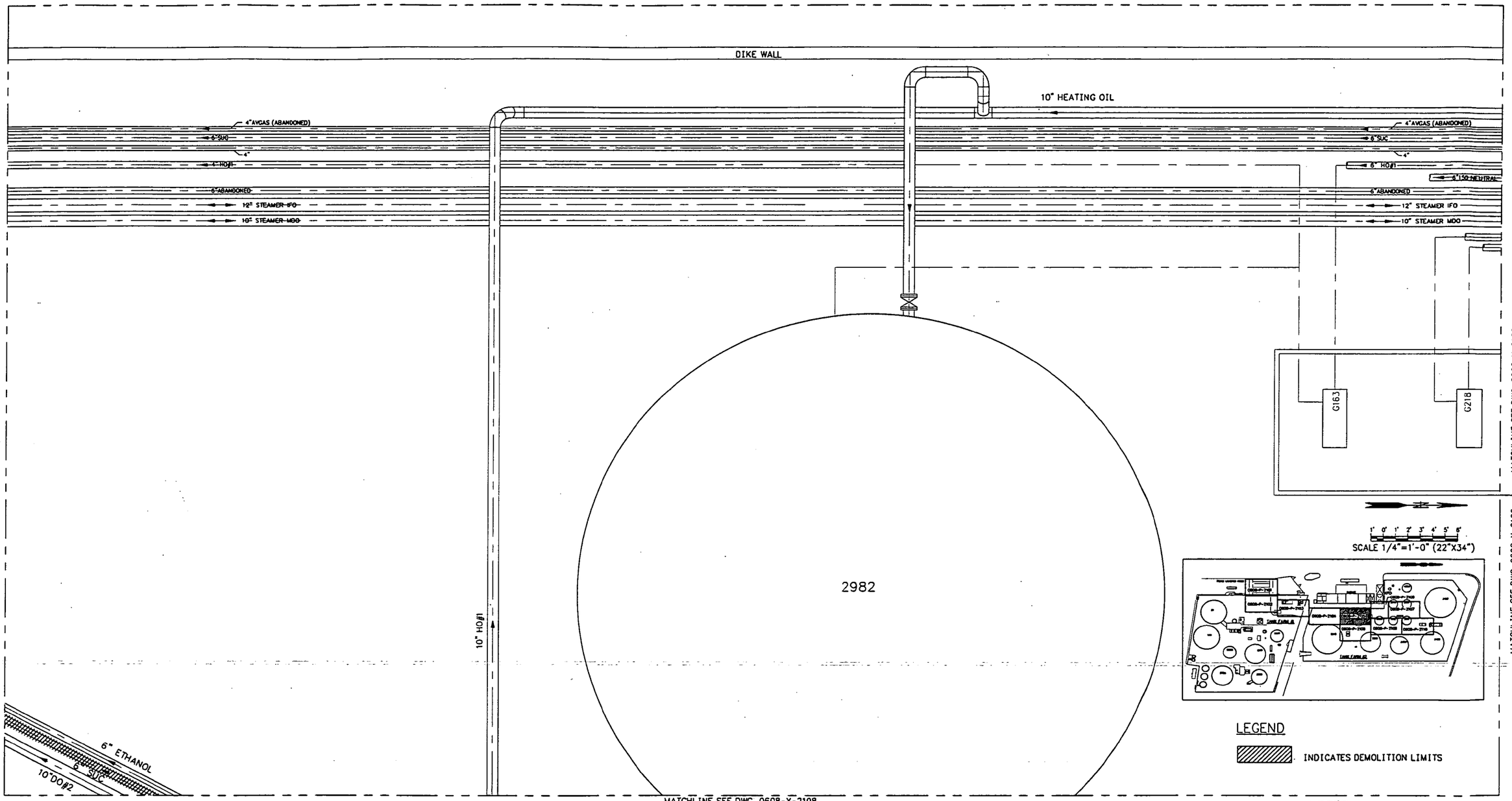

PLAN
SCALE 1/4"=1'-0"

NOTES:
1. VERIFY ALL DIMENSIONS PRIOR TO FABRICATION.

DRAWING NO.	REFERENCE DRAWINGS	REV. NO.	DATE	REVISED	DRAWN BY	CKD. BY
0608-X-2104	PIPING TANK FARM NO.2 ALLEY CROSSING DEMOLITION	0	11/06/97	ISSUE FOR CONSTRUCTION	DAB	KJP
0608-X-2109	PIPING TANK FARM NO.2 TK 2982 AND TK 3412 AREA DEMOLITION					
0608-X-2108	PIPING TANK FARM NO.2 PUMP G152 AND G153 AREA DEMOLITION					

TOSCO
Tosco Distribution Company
A Division of Tosco Corporation
5528 NW Doane St.
Portland, Oregon 97210

ALPHA ENGINEERS and CONSTRUCTORS, INC.
19 NW 5th AVE, SUITE 204, PORTLAND, OR 97209 Tel:(503)227-3317/Fax:(503)227-3244

DRAWN BY	DAB
CHKD BY	KJP
APPD BY	WHB
SCALE	AS SHOWN
DATE	09/05/97

PORTLAND TERMINAL
PORTLAND, OREGON
TRUCK LOAD RACK UPGRADE PROJECT
PIPING TANK FARM NO.2
TK 2982 AREA
DEMOLITION

DRAWING NO.	SHEET	REV.
0608-X-2105	1 OF 1	0

COP0021334

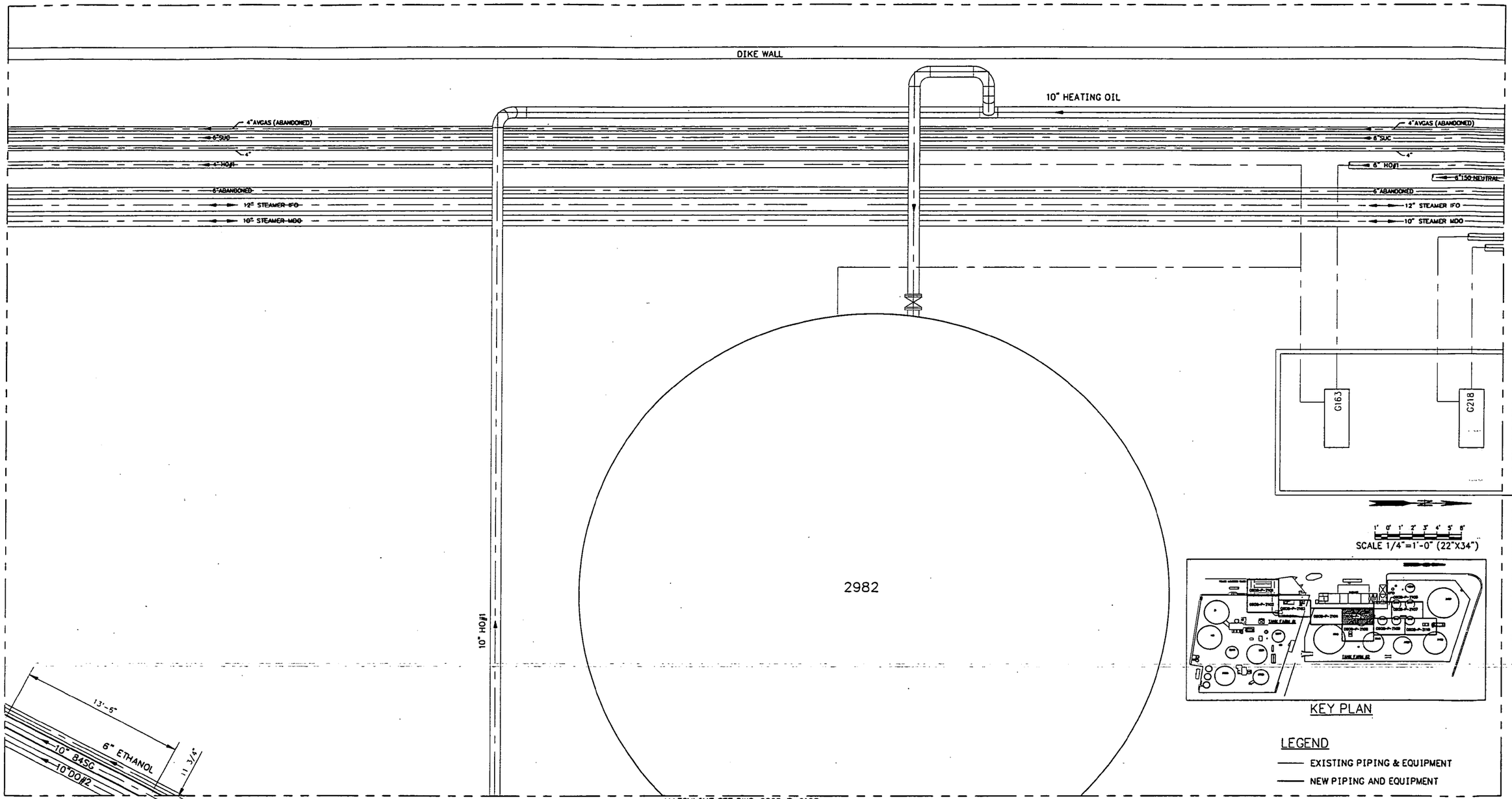

PLAN

SCALE 1/4"=1'-0"

NOTES:

1. VERIFY ALL DIMENSIONS PRIOR TO FABRICATION.
2. SEE DWG. 0608-X-2105 FOR DEMOLITION.

DRAWING NO.	REFERENCE DRAWINGS	REV. NO.	DATE	REVISED	DRAWN BY	CKD. BY
0608-P-2104	PIPING TANK FARM NO.2 ALLEY CROSSING AREA	0	11/06/97	ISSUE FOR CONSTRUCTION	DAB	KJP
0608-P-2108	TANK FARM NO.2 PUMP G152 AND G153 AREA					
0608-P-2109	TANK FARM NO.2 TK2982 AND TK3412 AREA					

TOSCO
Tosco Distribution Company
A Division of Tosco Corporation
5528 NW Doane St.
Portland, Oregon 97210

ALPHA ENGINEERS and CONSTRUCTORS, INC.
19 NW 5th AVE, SUITE 204, PORTLAND, OR. 97209 Tel:(503)227-3317/Fax:(503)227-3244

DRAWN BY	DAB
CHKD BY	KJP
APPD BY	WHB
SCALE	AS SHOWN
DATE	09/05/97

PORTLAND TERMINAL
PORTLAND, OREGON
TRUCK LOAD RACK UPGRADE PROJECT
PIPING
TANK FARM NO.2

DRAWING NO.	SHEET	REV.
0608-P-2105	1 OF 1	0

COP00021335

69P21050.DWG <CPD: 11/06/97 [TIME: 07:17 AM]>

SCALE 1/4"=1'-0" (22"X34")

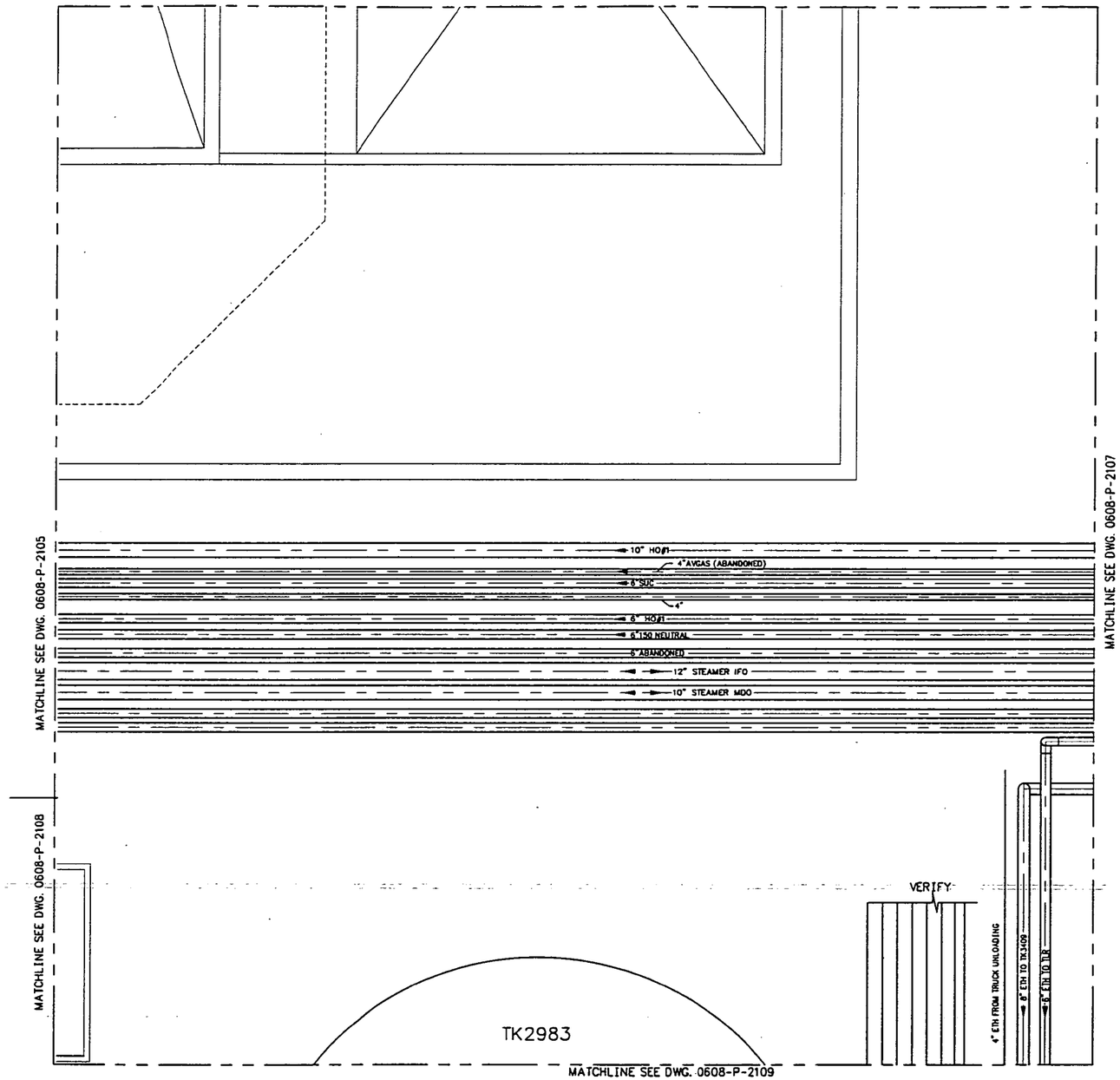

PLAN
SCALE 1/4"=1'-0"

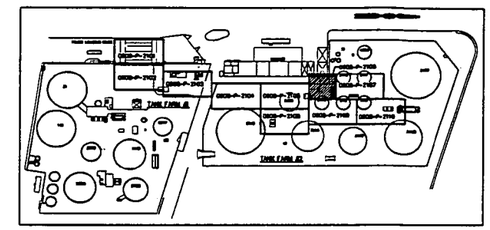

KEY PLAN

NO NEW WORK THIS DWG.
FOR REFERENCE ONLY

NOTES:
1. VERIFY ALL DIMENSIONS PRIOR TO FABRICATION.

DRAWING NO.	REFERENCE DRAWINGS	REV. NO.	DATE	REVISED	DRAWN BY	CKD. BY
		0	11/06/97	FOR INFORMATION ONLY	DAB	KJP

TOSCO
Tosco Distribution Company
A Division of Tosco Corporation
5528 NW Doane St.
Portland, Oregon 97210

ALPHA ENGINEERS and CONSTRUCTORS, INC.
19 NW 5th AVE. SUITE 204, PORTLAND, OR. 97209 Tel:(503)227-3317/Fax:(503)227-3244

DRAWN BY	DAB
CHKD BY	KJP
APPD BY	WHB
SCALE	AS SHOWN
DATE	09/05/97

PORTLAND TERMINAL
PORTLAND, OREGON
TRUCK LOAD RACK UPGRADE PROJECT
PIPING TANK FARM NO.2
TK 2983 AREA

DRAWING NO.	SHEET	REV.
0608-P-2106	1 OF 1	0

68P2106O.DWG <CPD: 11/06/97 [TIME: 07:18 AM]>

COP0021336

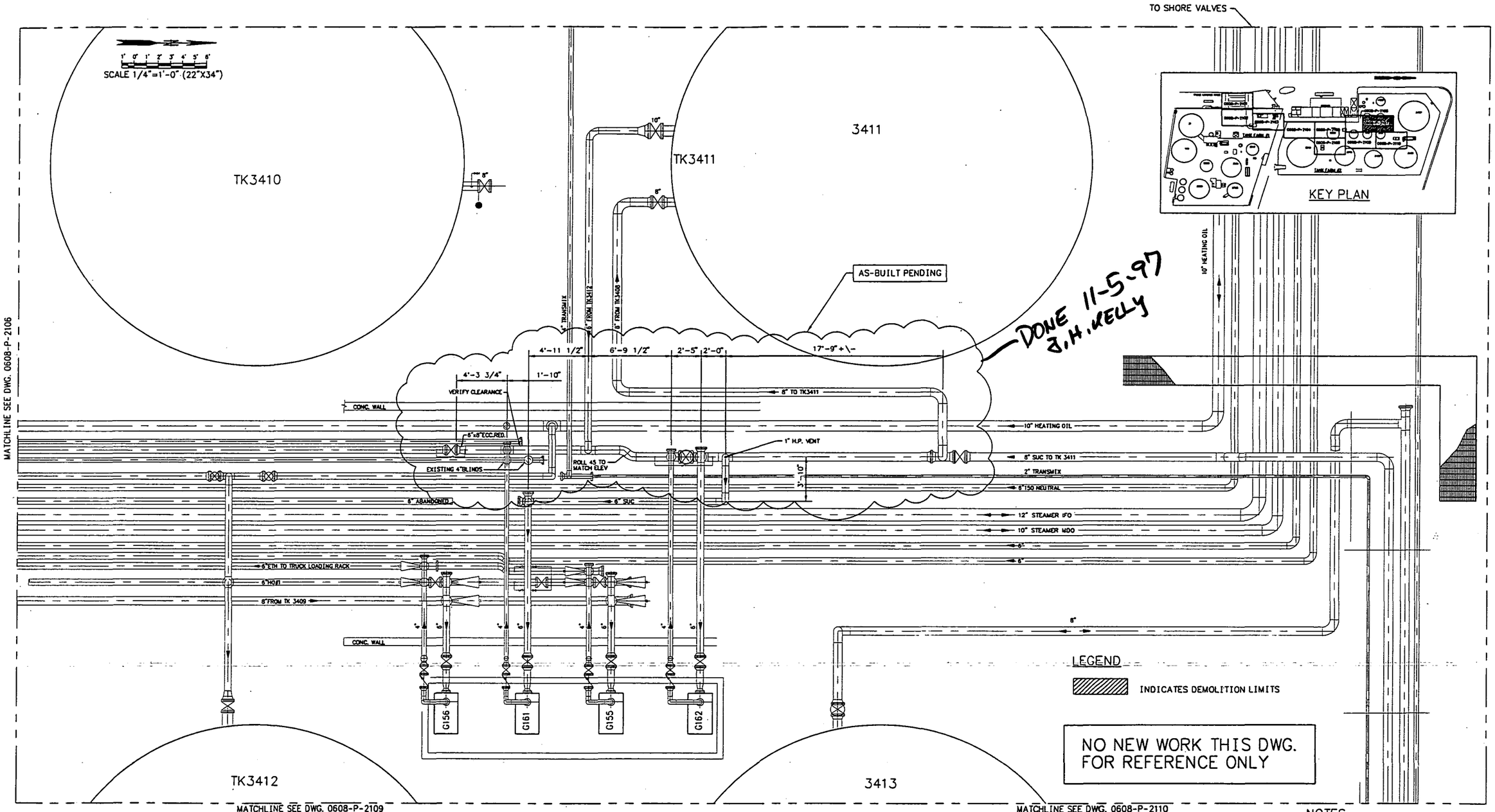

PLAN
SCALE 1/4"=1'-0"

NOTES:
1. VERIFY ALL DIMENSIONS PRIOR TO FABRICATION.
2. SEE DWG. 0608-X-2107 FOR DEMOLITION.

DRAWING NO.	REFERENCE DRAWINGS	REV. NO.	DATE	REVISED	DRAWN BY	CKD. BY
0608-P-2109	PIPING TANK FARM NO.2 TK2982 AND TK3412 AREA	0	11/06/97	FOR INFORMATION ONLY	DAB	KJP
0608-P-2110	PIPING TANK FARM NO.2 G146, G157, AND G156 AREA					

TOSCO
Tosco Distribution Company
A Division of Tosco Corporation
5528 NW Doane St.
Portland, Oregon 97210

ALPHA ENGINEERS and CONSTRUCTORS, INC.
19 NW 5th AVE, SUITE 204, PORTLAND, OR 97209 Tel:(503)227-3317/Fax:(503)227-3244

DRAWN BY	DAB
CHKD BY	KJP
APPD BY	WHB
SCALE	AS SHOWN
DATE	09/05/97

PORTLAND TERMINAL
PORTLAND, OREGON
TRUCK LOAD RACK UPGRADE PROJECT
PIPING TANK FARM NO.2
PUMP G155, G156, G161, AND G162 AREA

DRAWING NO.	SHEET	REV.
0608-P-2107	1 OF 1	0

6BP21070.DWG <CPD: 11/06/97 [TIME: 07:19 AM] >

COP0021337

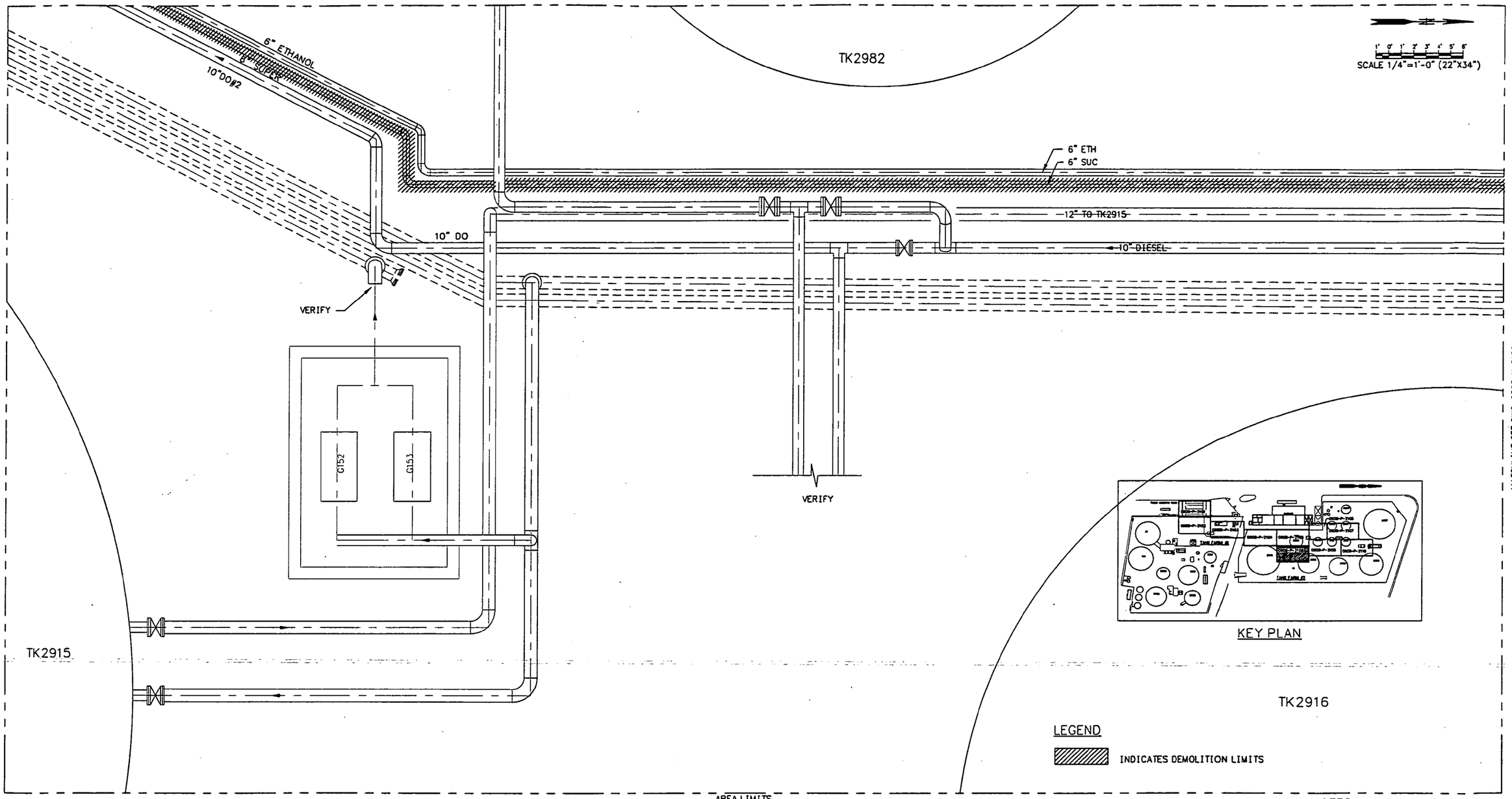

PLAN
SCALE 1/4"=1'-0"

NOTES:
1. VERIFY ALL DIMENSIONS PRIOR TO FABRICATION.

DRAWING NO.	REFERENCE DRAWINGS	REV. NO.	DATE	REVISED	DRAWN BY	CKD. BY
0608-X-2105	PIPING TANK FARM NO.2 TK 2982 AREA PLAN	0	11/06/97	ISSUE FOR CONSTRUCTION	DAB	KJP
0608-X-2109	PIPING TANK FARM NO.2 TK2983 AND TK3412 DEMOLITION					

TOSCO
Tosco Distribution Company
A Division of Tosco Corporation
5528 NW Doane St.
Portland, Oregon 97210

ALPHA ENGINEERS and CONSTRUCTORS, INC.
19 NW 5th AVE, SUITE 204, PORTLAND, OR. 97209 Tel:(503)227-3317/Fax:(503)227-3244

DRAWN BY	DAB
CHKD BY	KJP
APPD BY	WHB
SCALE	AS SHOWN
DATE	09/05/97

PORTLAND TERMINAL
PORTLAND, OREGON
TRUCK LOAD RACK UPGRADE PROJECT
PIPING TANK FARM NO.2
PUMP G152 AND G153 AREA
DEMOLITION

DRAWING NO.	SHEET	REV.
0608-X-2108	1 OF 1	0

6BX21080.DWG <CPD: 11/06/97 [TIME: 07:53 AM] >

COP00021338

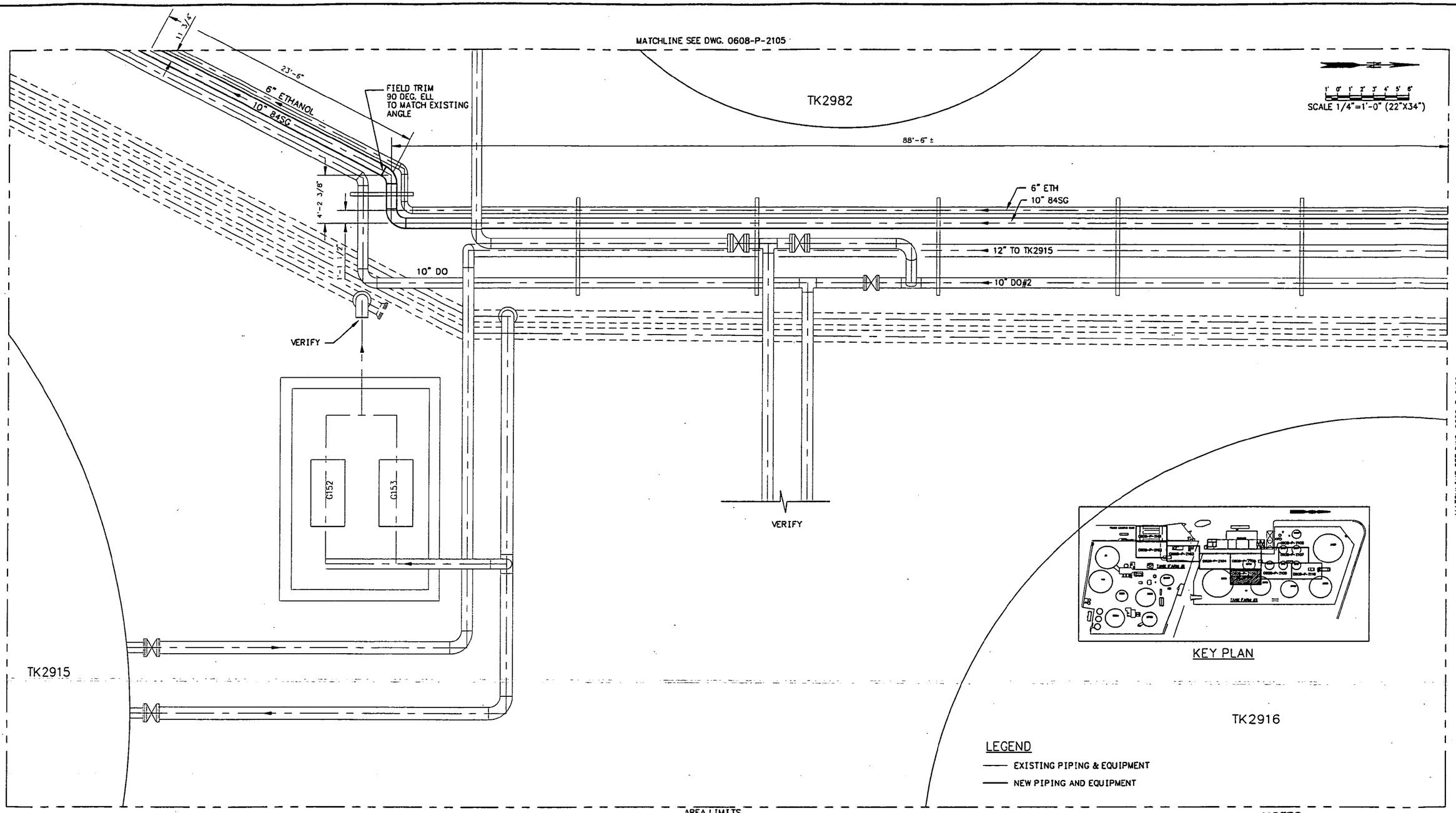

PLAN
SCALE 1/4"=1'-0"

NOTES:
1. VERIFY ALL DIMENSIONS PRIOR TO FABRICATION.
2. SEE DWG. 0608-P-2108 FOR DEMOLITION.

DRAWING NO.	REFERENCE DRAWINGS	REV. NO.	DATE	REVISED	DRAWN BY	CKD. BY
0608-P-2105	PIPING TANK FARM NO.2 TK 2982 AREA	0	11/06/97	ISSUE FOR CONSTRUCTION	DAB	KJP
0608-P-2109	PIPING TANK FARM NO.2 TK2983 AND TK3412 AREA					

TOSCO
Tosco Distribution Company
A Division of Tosco Corporation
5528 NW Doane St.
Portland, Oregon 97210

ALPHA ENGINEERS and CONSTRUCTORS, INC.
19 NW 5th AVE, SUITE 204, PORTLAND, OR. 97209 Tel:(503)227-3317/Fax:(503)227-3244

DRAWN BY	DAB
CKD BY	KJP
APPD BY	WHB
SCALE	AS SHOWN
DATE	09/05/97

PORTLAND TERMINAL
PORTLAND, OREGON
TRUCK LOAD RACK UPGRADE PROJECT
PIPING TANK FARM NO.2
PUMP G152 AND G153 AREA

DRAWING NO.	SHEET	REV.
0608-P-2108	1 OF 1	0

08P2108D.DWG <CPD: 11/06/97 [TIME: 07:55 AM] >

COP00213399

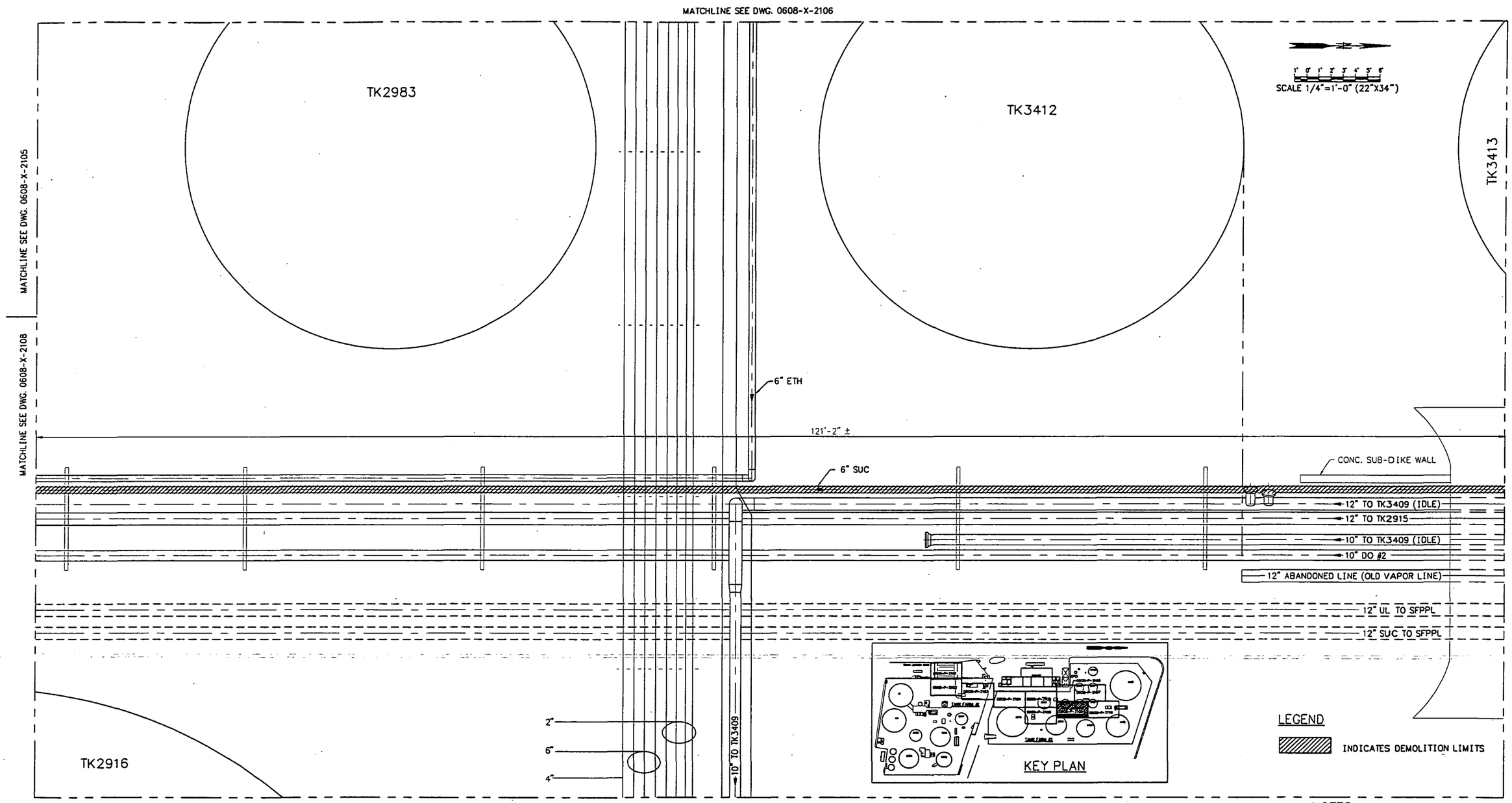

PLAN
SCALE 1/4"=1'-0"

NOTES:
1. VERIFY ALL DIMENSIONS PRIOR TO FABRICATION.

DRAWING NO.	REFERENCE DRAWINGS	REV. NO.	DATE	REVISED	DRAWN BY	CKD. BY
0608-X-P2108	PIPING TANK FARM NO.2 PUMP G152 AND G153 AREA DEMOLITION	0	11/06/97	ISSUE FOR CONSTRUCTION	DAB	KJP
0608-X-P2110	PIPING TANK FARM NO.2 G146, G157, AND G158 AREA DEMOLITION					

TOSCO
Tosco Distribution Company
A Division of Tosco Corporation
5528 NW Doane St.
Portland, Oregon 97210

ALPHA ENGINEERS and CONSTRUCTORS, INC.
19 NW 5th AVE, SUITE 204, PORTLAND, OR. 97209 Tel:(503)227-3317/Fax:(503)227-3244

DRAWN BY	DAB
CHKD BY	KJP
APPD BY	WHB
SCALE	AS SHOWN
DATE	09/05/97

PORTLAND TERMINAL
PORTLAND, OREGON
TRUCK LOAD RACK UPGRADE PROJECT
PIPING TANK FARM NO.2
TK2983 AND TK3412 AREA
DEMOLITION

DRAWING NO.	SHEET	REV.
0608-X-2109	1 OF 1	0

COP00021340

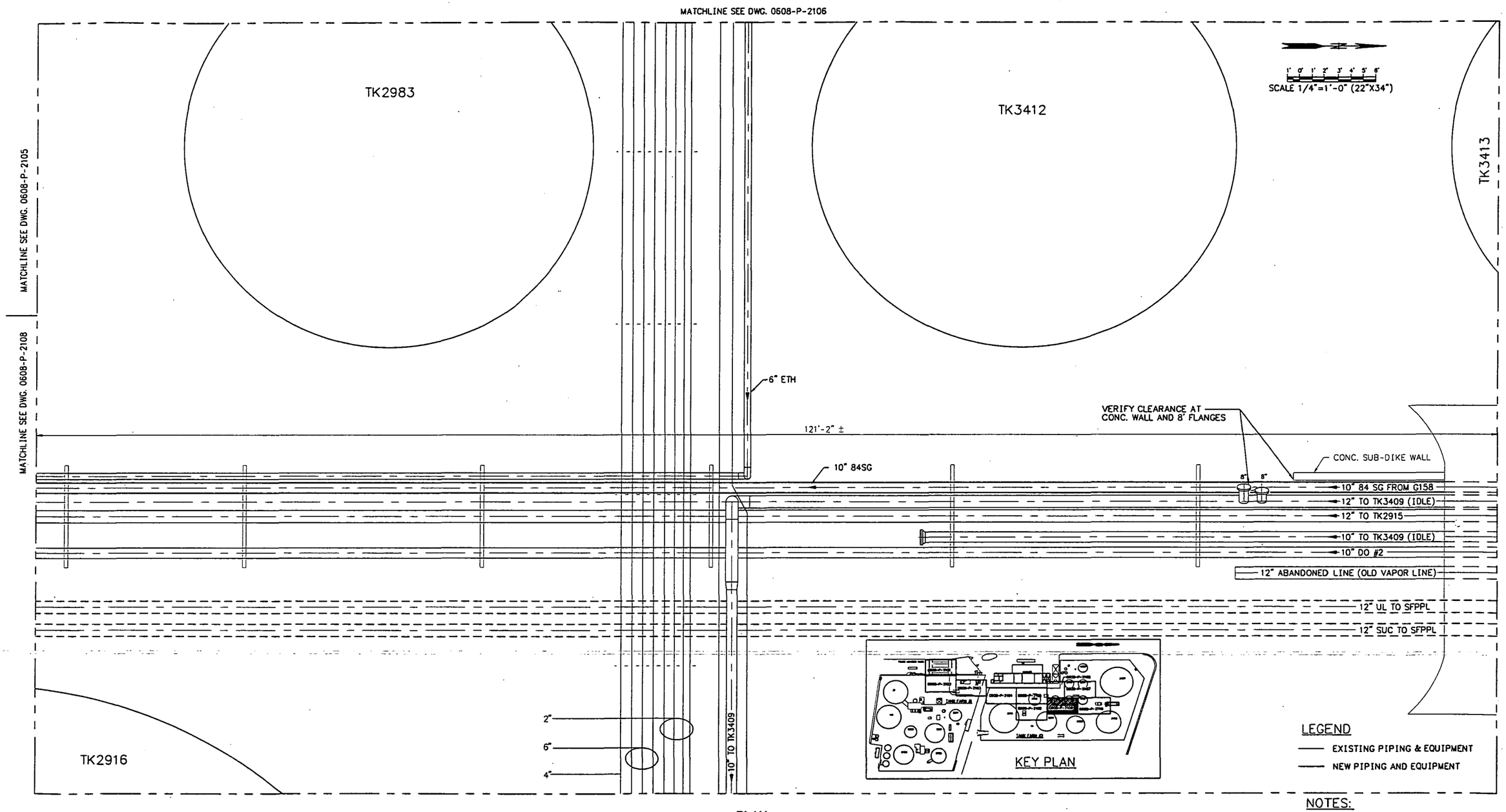

PLAN
SCALE 1/4"=1'-0"

NOTES:
1. VERIFY ALL DIMENSIONS PRIOR TO FABRICATION.
2. SEE DWG. 0608-X-2109 FOR DEMOLITION

DRAWING NO.	REFERENCE DRAWINGS	REV. NO.	DATE	REVISED	DRAWN BY	CKD. BY
0608-P-2108	PIPING TANK FARM NO.2 PUMP G152 AND G153 AREA	0	11/06/97	ISSUE FOR CONSTRUCTION	DAB	KJP
0608-P-2110	PIPING TANK FARM NO.2 G146, G157, AND G158 AREA					

TOSCO
Tosco Distribution Company
A Division of Tosco Corporation
5528 NW Doane St.
Portland, Oregon 97210

ALPHA ENGINEERS and CONSTRUCTORS, INC.
19 NW 5th AVE., SUITE 204, PORTLAND, OR. 97209 Tel:(503)227-3317/Fax:(503)227-3244

DRAWN BY	DAB
CHKD BY	KJP
APPD BY	WHB
SCALE	AS SHOWN
DATE	09/05/97

PORTLAND TERMINAL
PORTLAND, OREGON
TRUCK LOAD RACK UPGRADE PROJECT
PIPING TANK FARM NO.2
TK2983 AND TK3412 AREA

DRAWING NO.	SHEET	REV.
0608-P-2109	1 OF 1	0

COP0021341

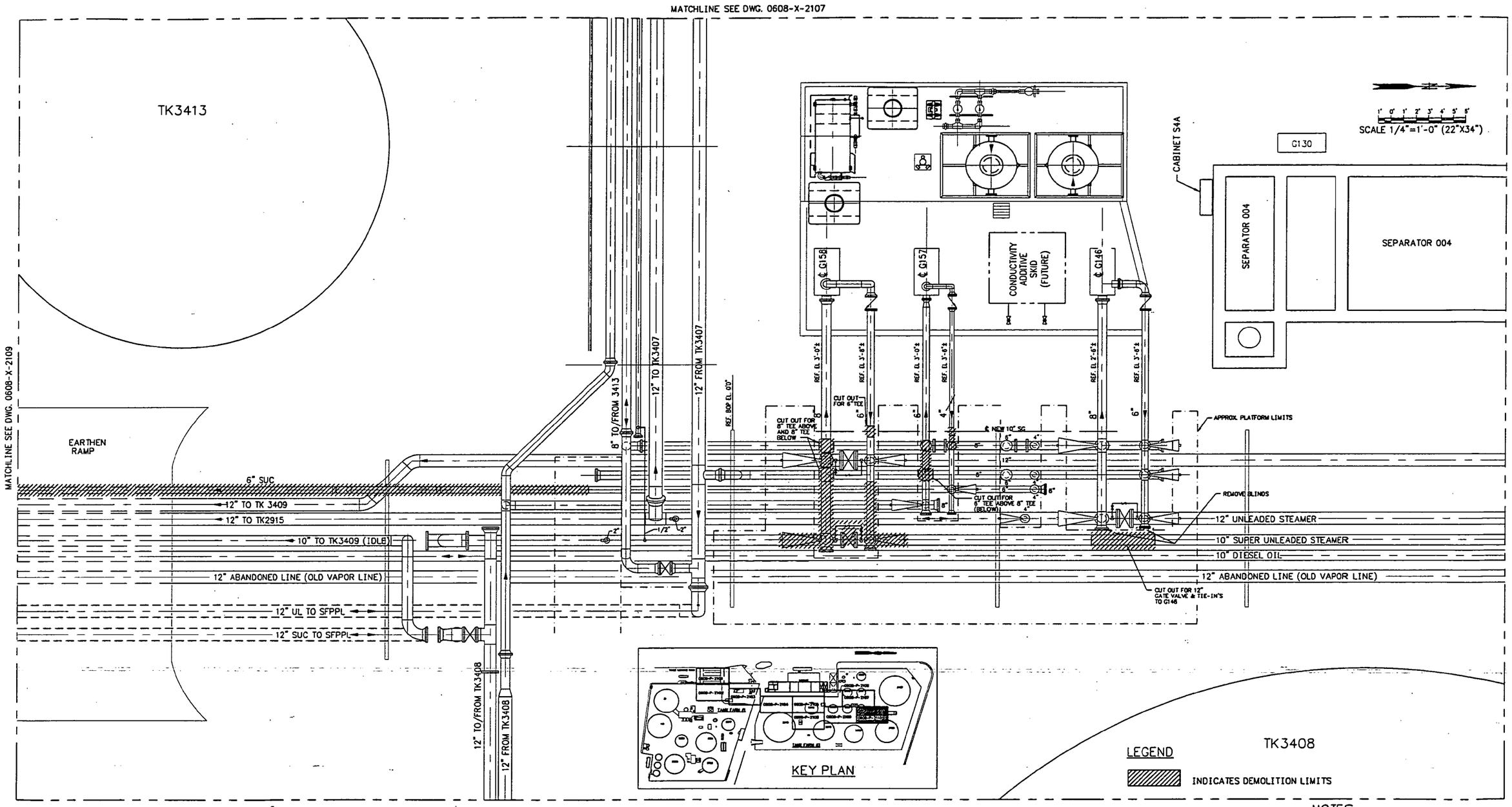

PLAN
SCALE 1/4"=1'-0"

NOTES:
1. VERIFY ALL DIMENSIONS PRIOR TO FABRICATION.

DRAWING NO.	REFERENCE DRAWINGS	REV. NO.	DATE	REVISED	DRAWN BY	CKD. BY
0608-X-2109	PIPING TANK FARM NO.2 TK2983 AND TK3412 AREA DEMOLITION	0	11/06/97	ISSUE FOR CONSTRUCTION	DAB	KJP

TOSCO
Tosco Distribution Company
A Division of Tosco Corporation
5528 NW Doane St.
Portland, Oregon 97210

ALPHA ENGINEERS and CONSTRUCTORS, INC.
19 NW 5th AVE., SUITE 204, PORTLAND, OR. 97209 Tel:(503)227-3317/Fax:(503)227-3244

DRAWN BY	DAB
CHKD BY	KJP
APPD BY	WHB
SCALE	AS SHOWN
DATE	09/05/97

PORTLAND TERMINAL
PORTLAND, OREGON
TRUCK LOAD RACK UPGRADE PROJECT
PIPING TANK FARM NO.2
G146, G157, AND G158 AREA DEMOLITION

DRAWING NO.	SHEET	REV.
0608-X-2110	1 OF 1	0

68X23100.DWG <CPD: 11/06/97 [TIME: 07:59 AM] >

COP00213422

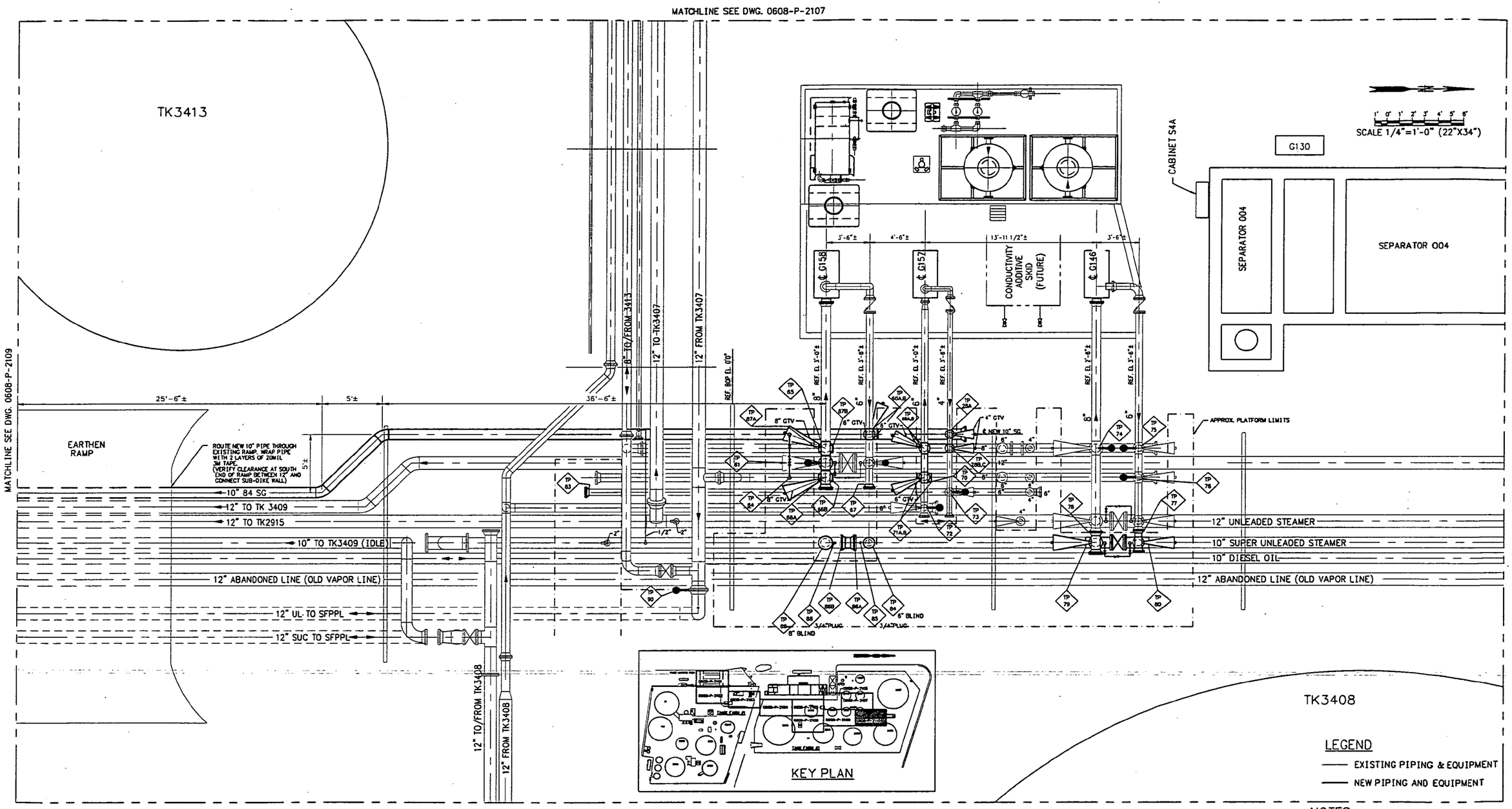

PLAN
SCALE 1/4"=1'-0"

NOTES:
1. VERIFY ALL DIMENSIONS PRIOR TO FABRICATION.

DRAWING NO.	REFERENCE DRAWINGS	REV. NO.	DATE	REVISED	DRAWN BY	CKD. BY
0608-P-2109	PIPING TANK FARM NO.2 TK2983 AND TK3412 AREA	0	11/06/97	ISSUE FOR CONSTRUCTION	DAB	KJP

TOSCO
Tosco Distribution Company
A Division of Tosco Corporation
5528 NW Doane St.
Portland, Oregon 97210

ALPHA ENGINEERS and CONSTRUCTORS, INC.
19 NW 5th AVE, SUITE 204, PORTLAND, OR. 97209 Tel:(503)227-3317/Fax:(503)227-3244

DRAWN BY	DAB
CKKD BY	KJP
APPD BY	WHB
SCALE	AS SHOWN
DATE	09/05/97

PORTLAND TERMINAL
PORTLAND, OREGON
TRUCK LOAD RACK UPGRADE PROJECT
PIPING TANK FARM NO.2
G146, G157, AND G158 AREA

DRAWING NO.	SHEET	REV.
0608-P-2110	1 OF 1	0

COP00213438

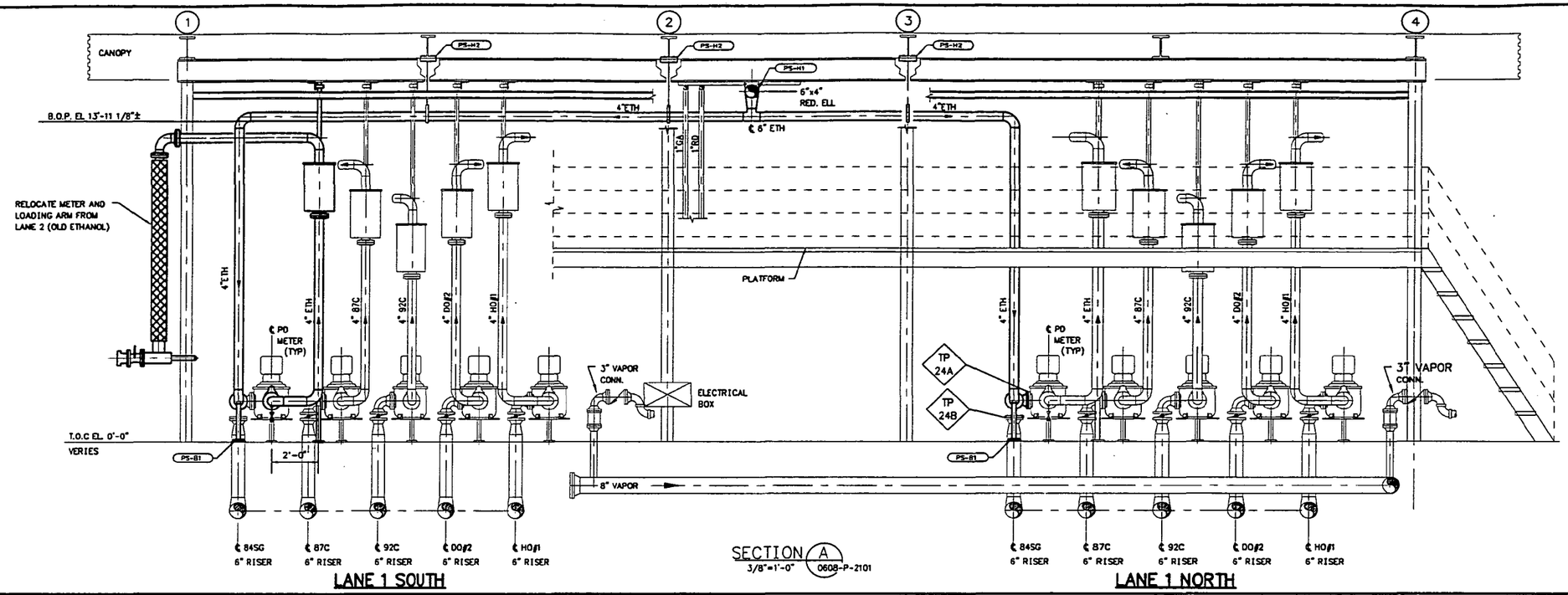

SECTION A
3/8"=1'-0" 0608-P-2101

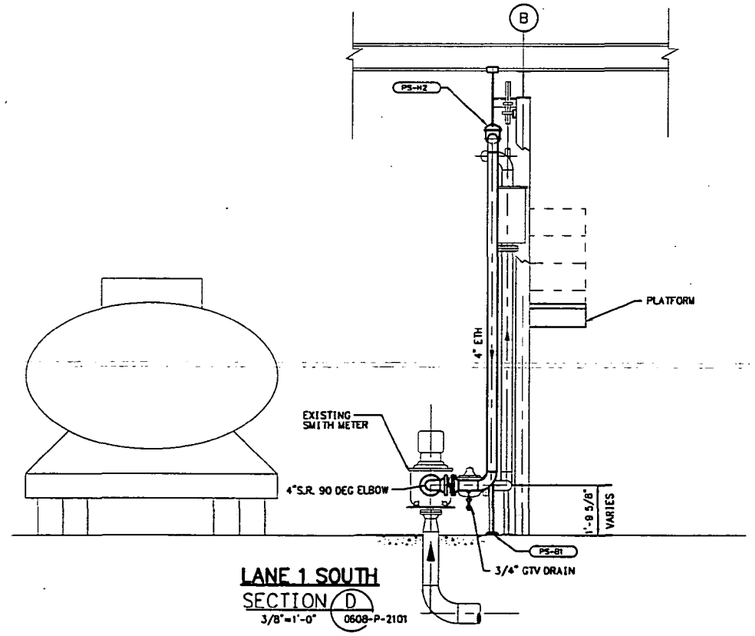

LANE 1 SOUTH
SECTION D
3/8"=1'-0" 0608-P-2101

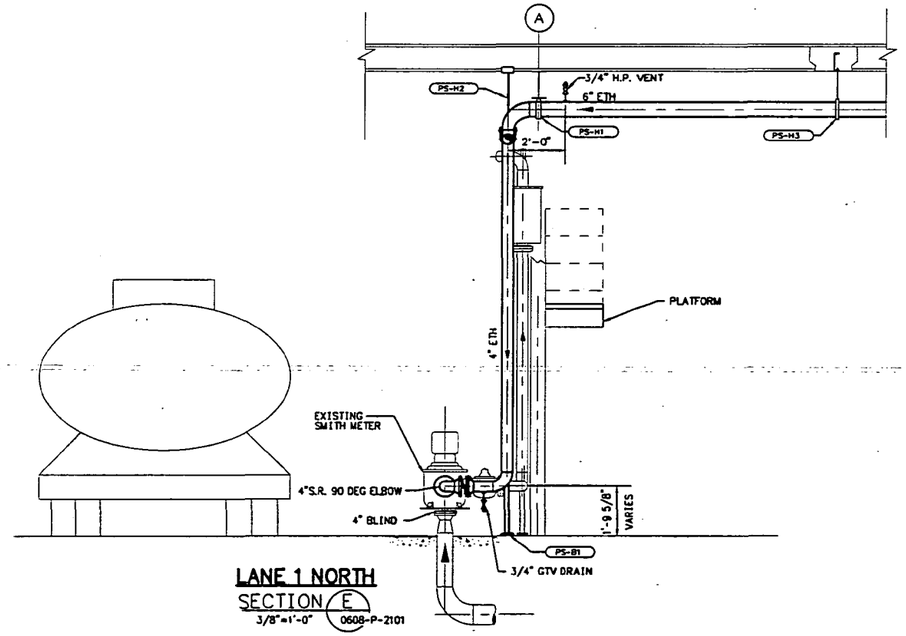

LANE 1 NORTH
SECTION E
3/8"=1'-0" 0608-P-2101

NOTES:

1. VERIFY ALL DIMENSIONS PRIOR TO FABRICATION.
2. SEE DWG. 0608-P-2210 FOR PIPE SUPPORTS.

DRAWING NO.	REFERENCE DRAWINGS	REV. NO.	DATE	REVISED	DRAWN BY	CKD. BY
0608-P-2101	PIPING TRUCK LOADING RACK	0	11/06/97	ISSUE FOR CONSTRUCTION	DAB	KJP

TOSCO
Tosco Distribution Company
A Division of Tosco Corporation
5528 NW Doane St.
Portland, Oregon 97210

ALPHA ENGINEERS and CONSTRUCTORS, INC.
19 NW 5th AVE, SUITE 204, PORTLAND, OR. 97209 Tel:(503)227-3317/Fax:(503)227-3244

DRAWN BY	DAB
CHKD BY	KJP
APPD BY	WHB
SCALE	AS SHOWN
DATE	10/15/97

PORTLAND TERMINAL
PORTLAND, OREGON
TRUCK LOAD RACK UPGRADE PROJECT
PIPING TRUCK LOADING RACK
LANE 1
SECTION AND DETAILS

DRAWING NO.	SHEET	REV.
0608-P-2201	1 OF 1	0

COP00021344

8BP22010.DWG <CPD: 11/06/97 [TIME: 08:01 AM] >

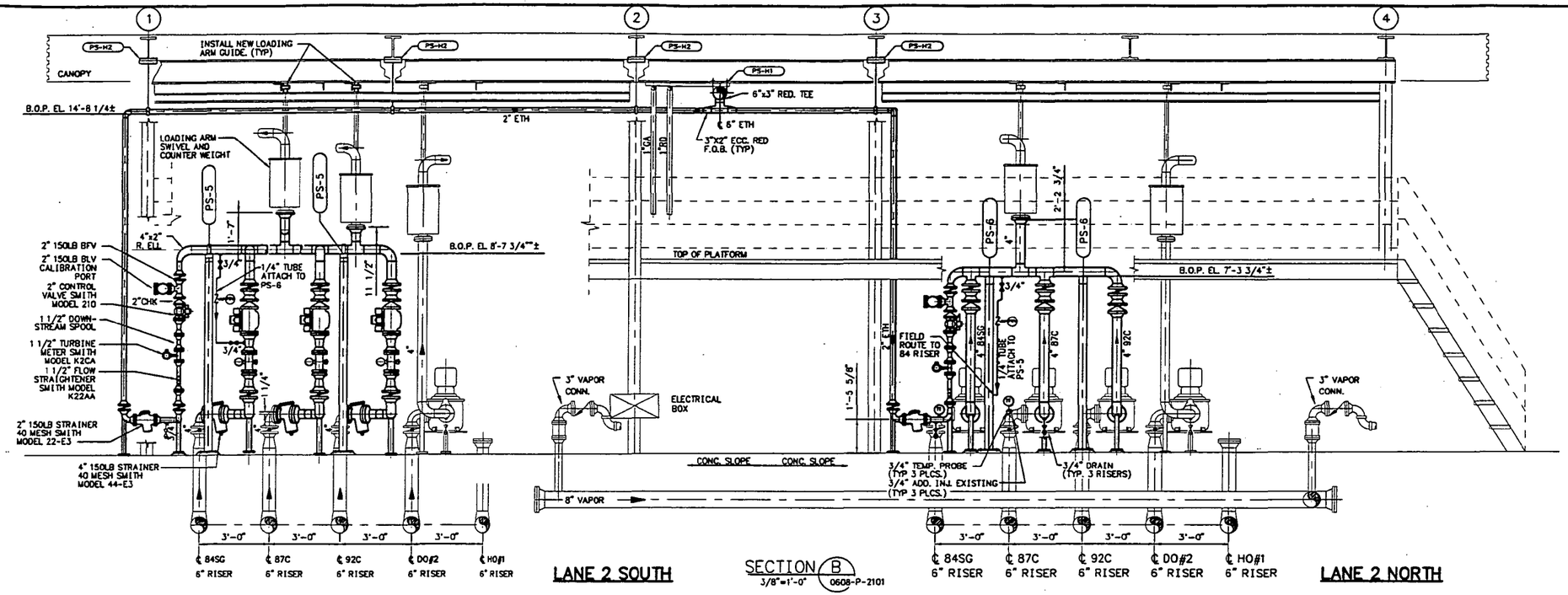

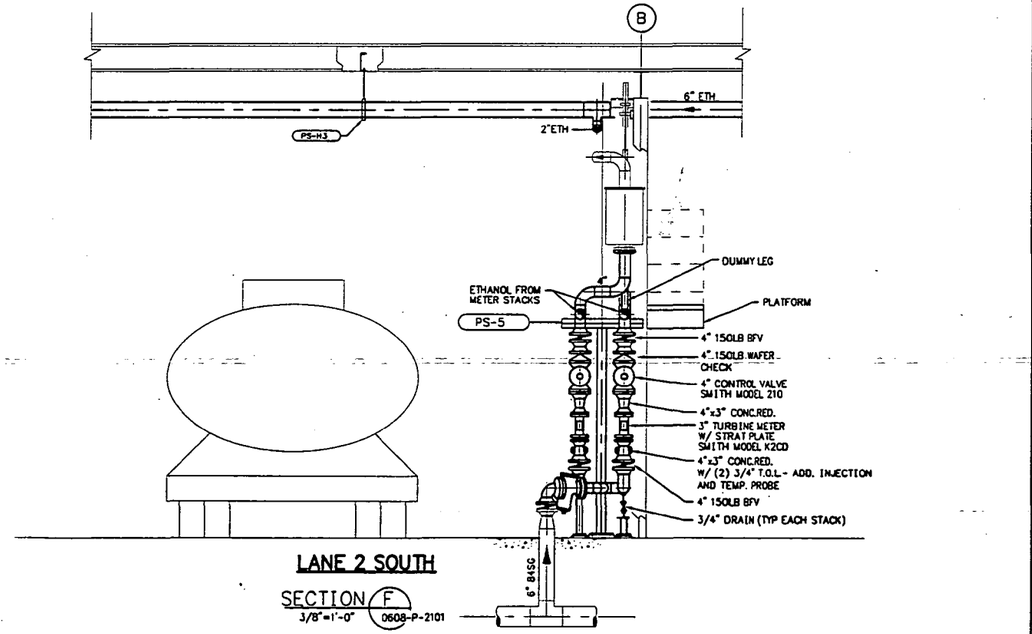

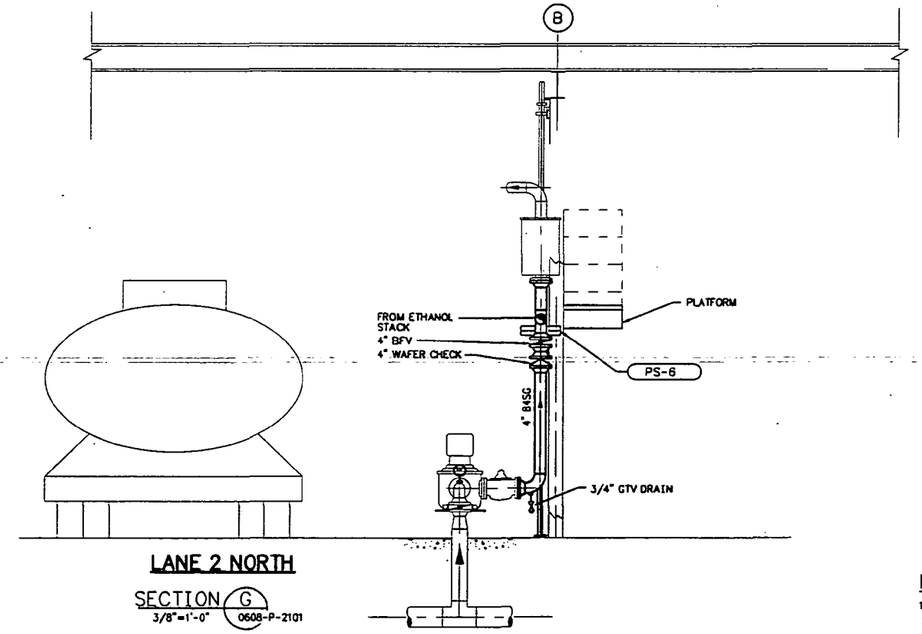

NOTES:

1. VERIFY ALL DIMENSIONS PRIOR TO FABRICATION.
2. SEE DWG. 0608-P-2210 FOR PIPE SUPPORTS.

DRAWING NO.	REFERENCE DRAWINGS	REV. NO.	DATE	REVISED	DRAWN BY	CKD. BY
0608-P-2101	PIPING TRUCK LOADING RACK	0	11/06/97	ISSUE FOR CONSTRUCTION	DAB	KJP

TOSCO
Tosco Distribution Company
A Division of Tosco Corporation
5528 NW Doane St.
Portland, Oregon 97210

ALPHA ENGINEERS and CONSTRUCTORS, INC.
19 NW 5th AVE., SUITE 204, PORTLAND, OR. 97209 Tel:(503)227-3317/Fax:(503)227-3244

DRAWN BY	DAB
CHKD BY	KJP
APPD BY	WHB
SCALE	AS SHOWN
DATE	10/15/97

PORTLAND TERMINAL
PORTLAND, OREGON
TRUCK LOAD RACK UPGRADE PROJECT
PIPING TRUCK LOADING RACK
LANE 2
SECTION AND DETAILS

DRAWING NO.	SHEET	REV.
0608-P-2202	1 OF 1	0

6BP22020.DWG <CPD: 11/06/97 [TIME: 10:40 AM] >

COP0021345

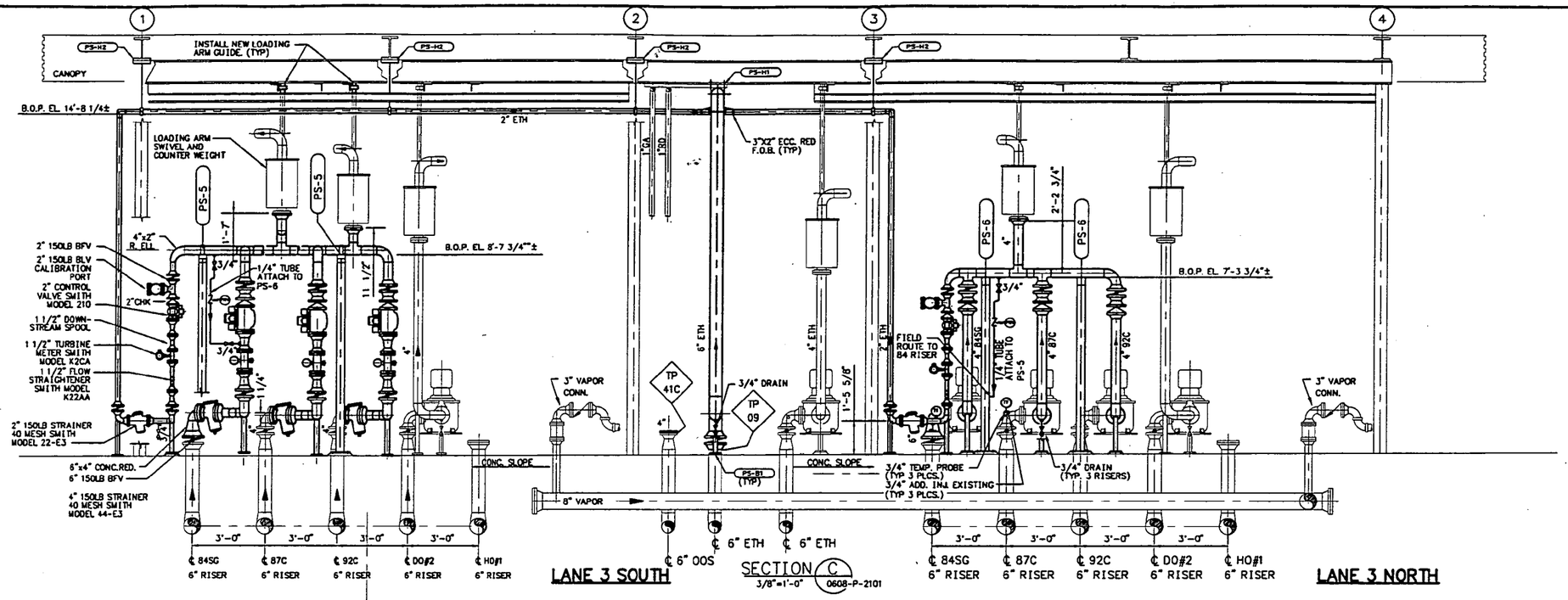

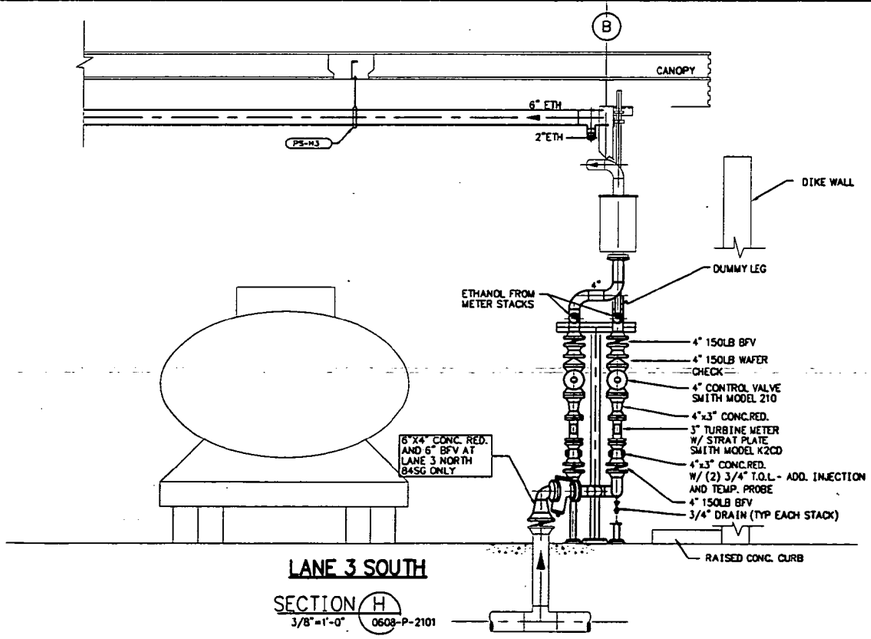

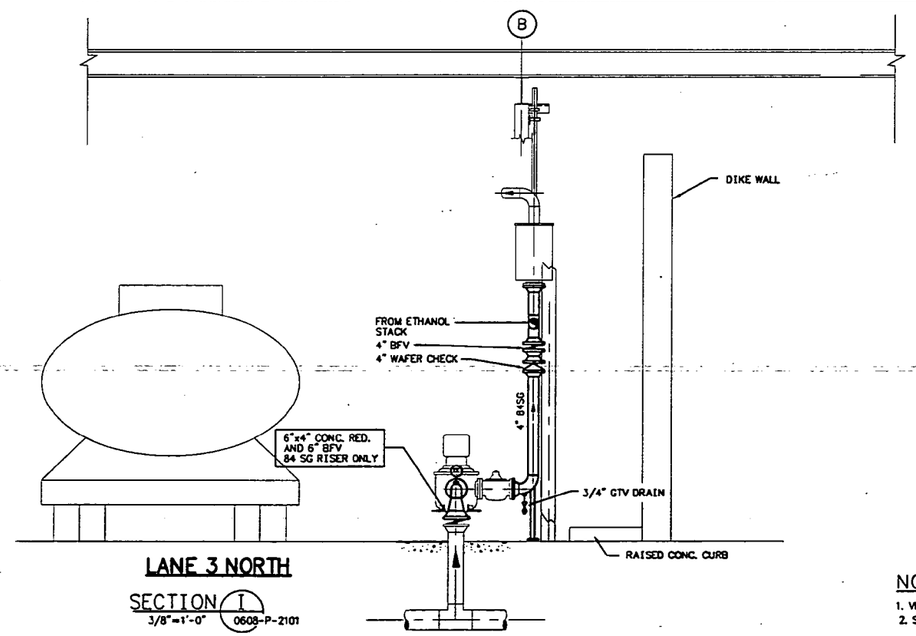

NOTES:

1. VERIFY ALL DIMENSIONS PRIOR TO FABRICATION.
2. SEE DWG. 0608-P-2210 FOR PIPE SUPPORTS.

DRAWING NO.	REFERENCE DRAWINGS	REV. NO.	DATE	REVISED	DRAWN BY	CKD. BY
0608-P-2101	PIPING TRUCK LOADING RACK	0	11/06/97	ISSUE FOR CONSTRUCTION	DAB	KJP

TOSCO
Tosco Distribution Company
A Division of Tosco Corporation
5528 NW Doane St.
Portland, Oregon 97210

ALPHA ENGINEERS and CONSTRUCTORS, INC.
19 NW 5th AVE, SUITE 204, PORTLAND, OR. 97209 Tel:(503)227-3317/Fax:(503)227-3244

DRAWN BY	DAB
CHKD BY	KJP
APPD BY	WHB
SCALE	AS SHOWN
DATE	10/15/97

PORTLAND TERMINAL
PORTLAND, OREGON
TRUCK LOAD RACK UPGRADE PROJECT
PIPING TRUCK LOADING RACK
LANE 3
SECTION AND DETAILS

DRAWING NO.	SHEET	REV.
0608-P-2203	1 OF 1	0

6BP2203D.DWG <CPD: 11/06/97 [TIME: 10:42 AM]>

COP00213463

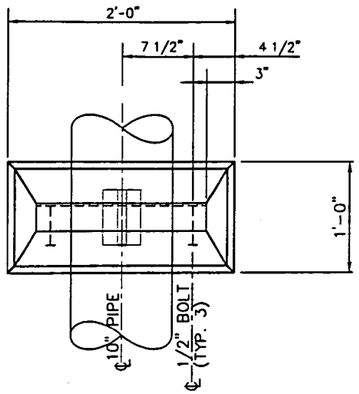

PLAN

PIPE SLEEPER

PS-3 DWG. 0608-P-2102 AND P-2103
3 REQUIRED

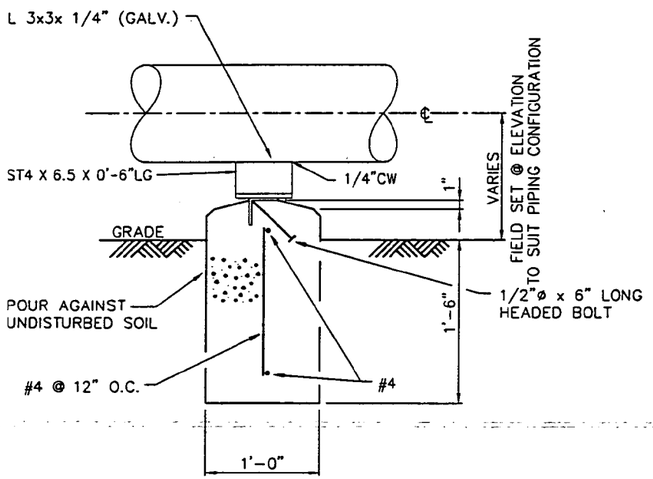

SECTION

VERIFY WITH OWNER
OPTIONAL H-TYPE SUPPORT
MATCH EXISTING SUPPORTS AT
THIS LOCATION

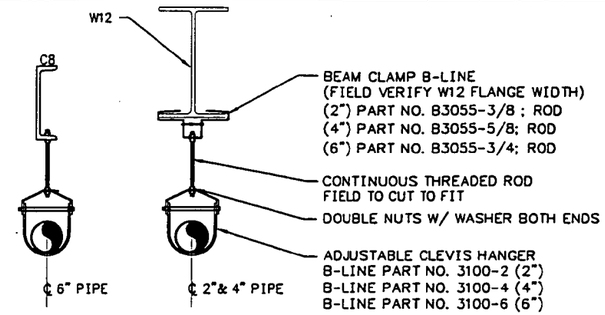

ADJUSTABLE CLEVIS HANGER

PS-H3
(6") 2 REQUIRED

PS-H2 DWG. 0608-P-2101
(2") 7 REQUIRED
(4") 3 REQUIRED

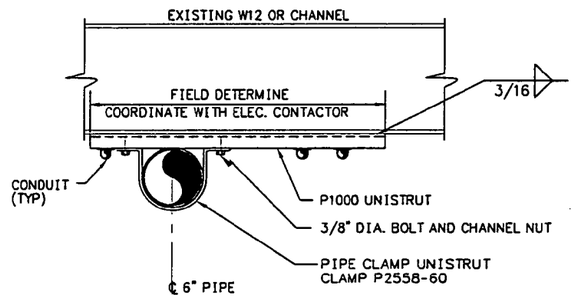

PIPE CLAMP

PS-H1 DWG. 0608-P-2101
3 REQUIRED

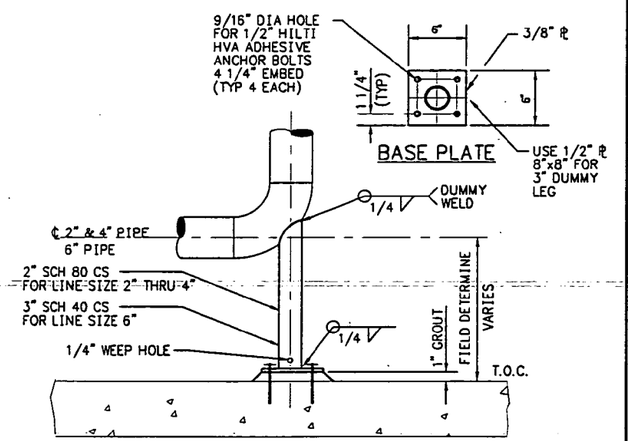

BASE SUPPORT

PS-B1
(2" & 4") 29 REQUIRED
(6") 1 REQUIRED

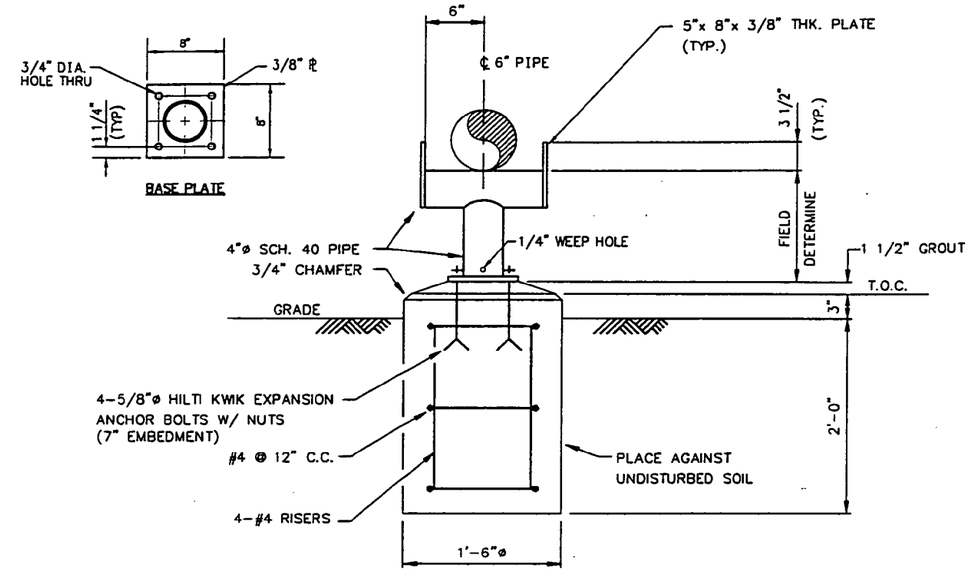

PIPE STAND

PS-1 DWG. 0608-P-2103
2 REQUIRED

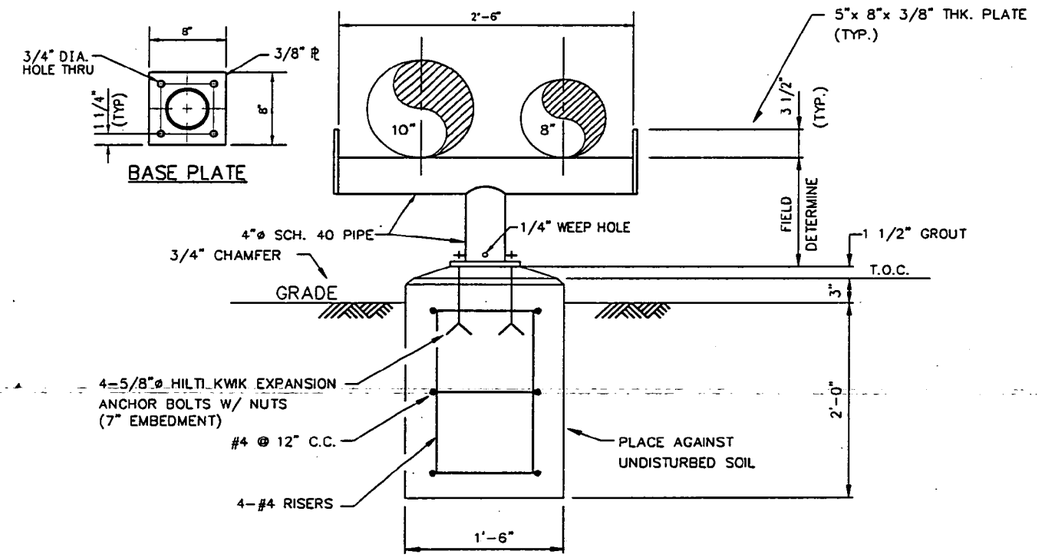

PIPE STAND

PS-2 DWG. 0608-P-2103
2 REQUIRED

NOTES:
1. VERIFY ALL DIMENSIONS PRIOR TO FABRICATION.

DRAWING NO.	REFERENCE DRAWINGS	REV. NO.	DATE	REVISED	DRAWN BY	CKD. BY
		0	11/06/97	ISSUE FOR CONSTRUCTION	DAB	KJP

TOSCO
Tosco Distribution Company
A Division of Tosco Corporation
5528 NW Doane St.
Portland, Oregon 97210

ALPHA ENGINEERS and CONSTRUCTORS, INC.
19 NW 5th AVE, SUITE 204, PORTLAND, OR. 97209 Tel:(503)227-3317/Fax:(503)227-3244

DRAWN BY	DAB
CHKD BY	KJP
APPD BY	WHB
SCALE	AS SHOWN
DATE	09/05/97

PORTLAND TERMINAL
PORTLAND, OREGON
TRUCK LOAD RACK UPGRADE PROJECT
PIPE SUPPORT DETAILS

DRAWING NO.	SHEET	REV.
0608-P-2210	1 OF 1	0

6BP2210A.DWG <CPD: 10/24/97 [TIME: 10:05 AM]>

COP00213470

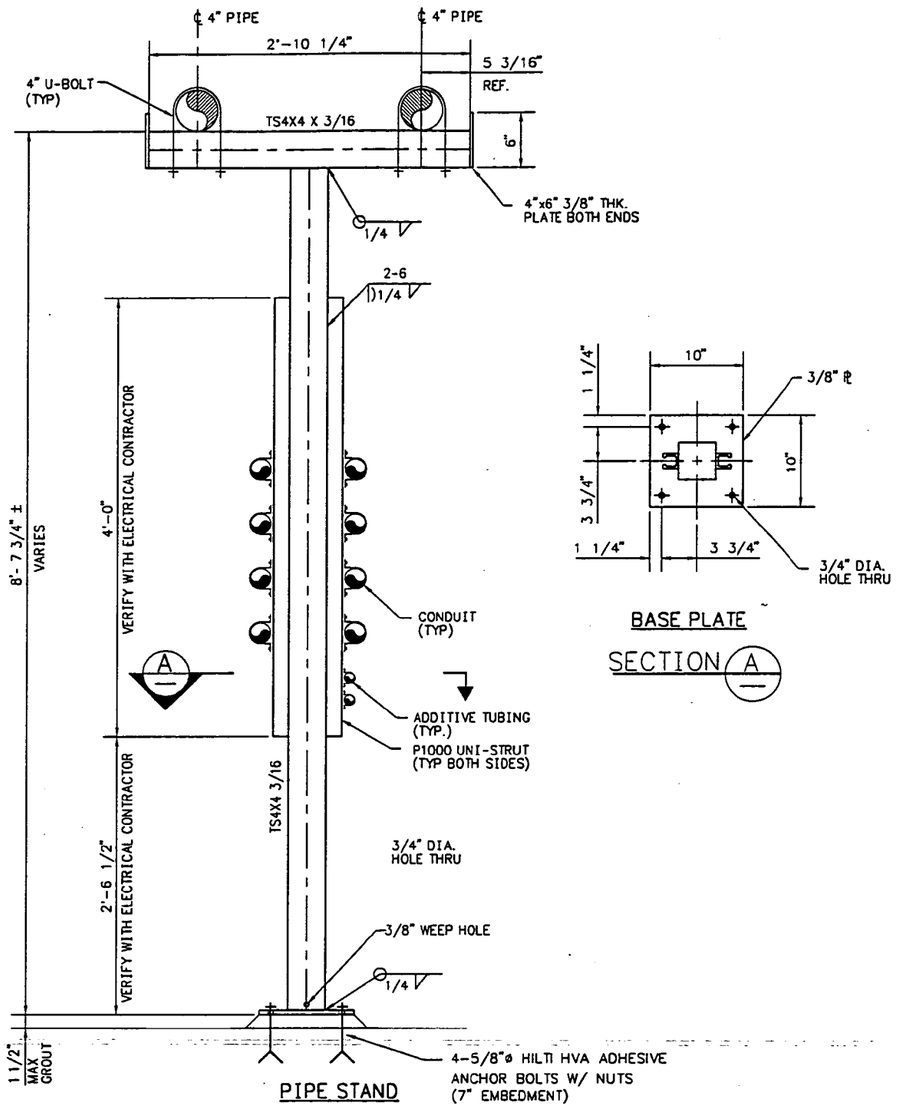

PIPE STAND

PS-5 DWG. 0608-P-2101
4 REQUIRED

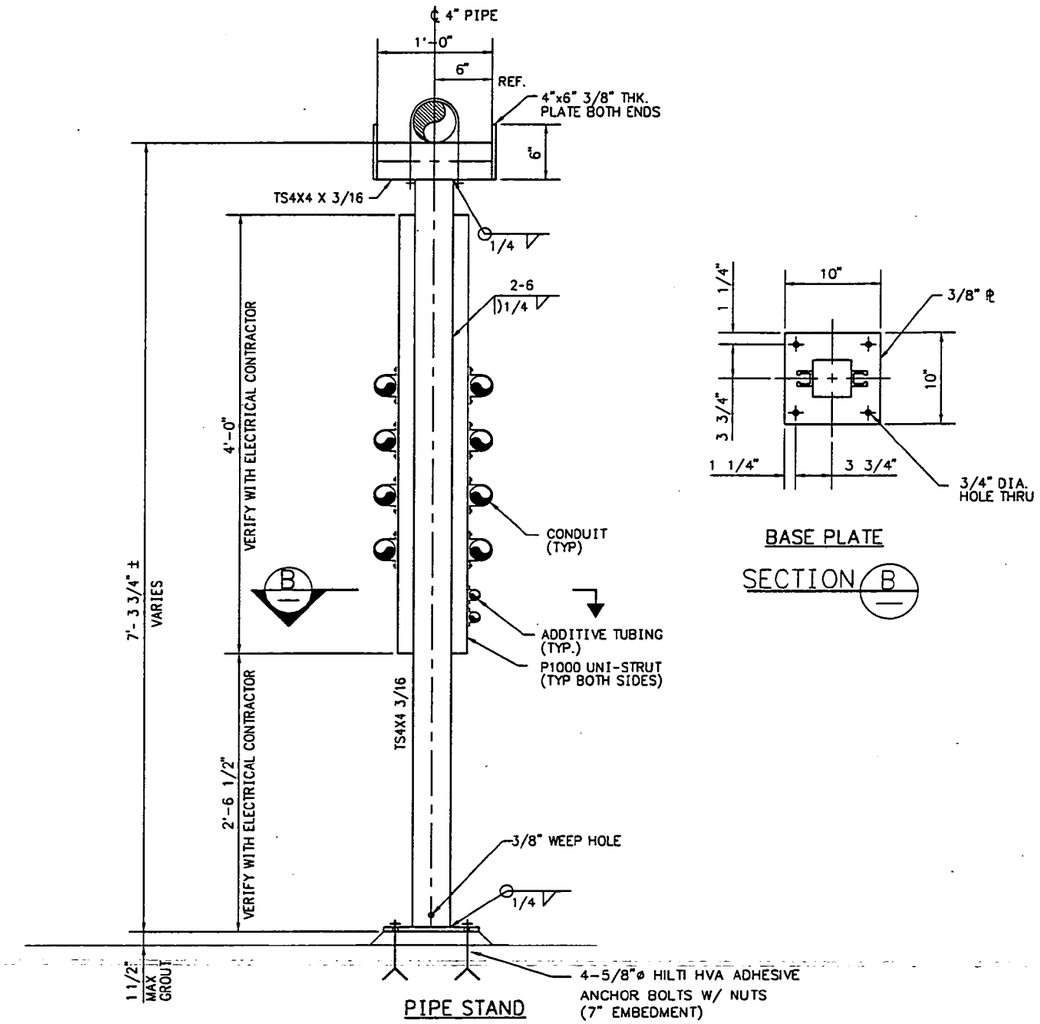

PIPE STAND

PS-6 DWG. 0608-P-2101
4 REQUIRED

NOTES:
1. VERIFY ALL DIMENSIONS PRIOR TO FABRICATION.

DRAWING NO.	REFERENCE DRAWINGS	REV. NO.	DATE	REVISED	DRAWN BY	CKD. BY
		0	11/06/97	ISSUE FOR CONSTRUCTION	DAB	KJP

TOSCO
Tosco Distribution Company
A Division of Tosco Corporation
5528 NW Doane St.
Portland, Oregon 97210

ALPHA ENGINEERS and CONSTRUCTORS, INC.
19 NW 5th AVE. SUITE 204, PORTLAND, OR. 97209 Tel:(503)227-3317/Fax:(503)227-3244

DRAWN BY	DAB
CHKD BY	KJP
APPD BY	WHB
SCALE	AS SHOWN

PORTLAND TERMINAL
PORTLAND, OREGON
TRUCK LOAD RACK UPGRADE PROJECT
PIPE SUPPORT DETAILS

DATE	DRAWING NO.	SHEET	REV.
10/19/97	0608-P-2211	1 OF 1	0

68P22110.DWG <CPD: 11/06/97 [TIME: 08:38 AM]>

COP0021348

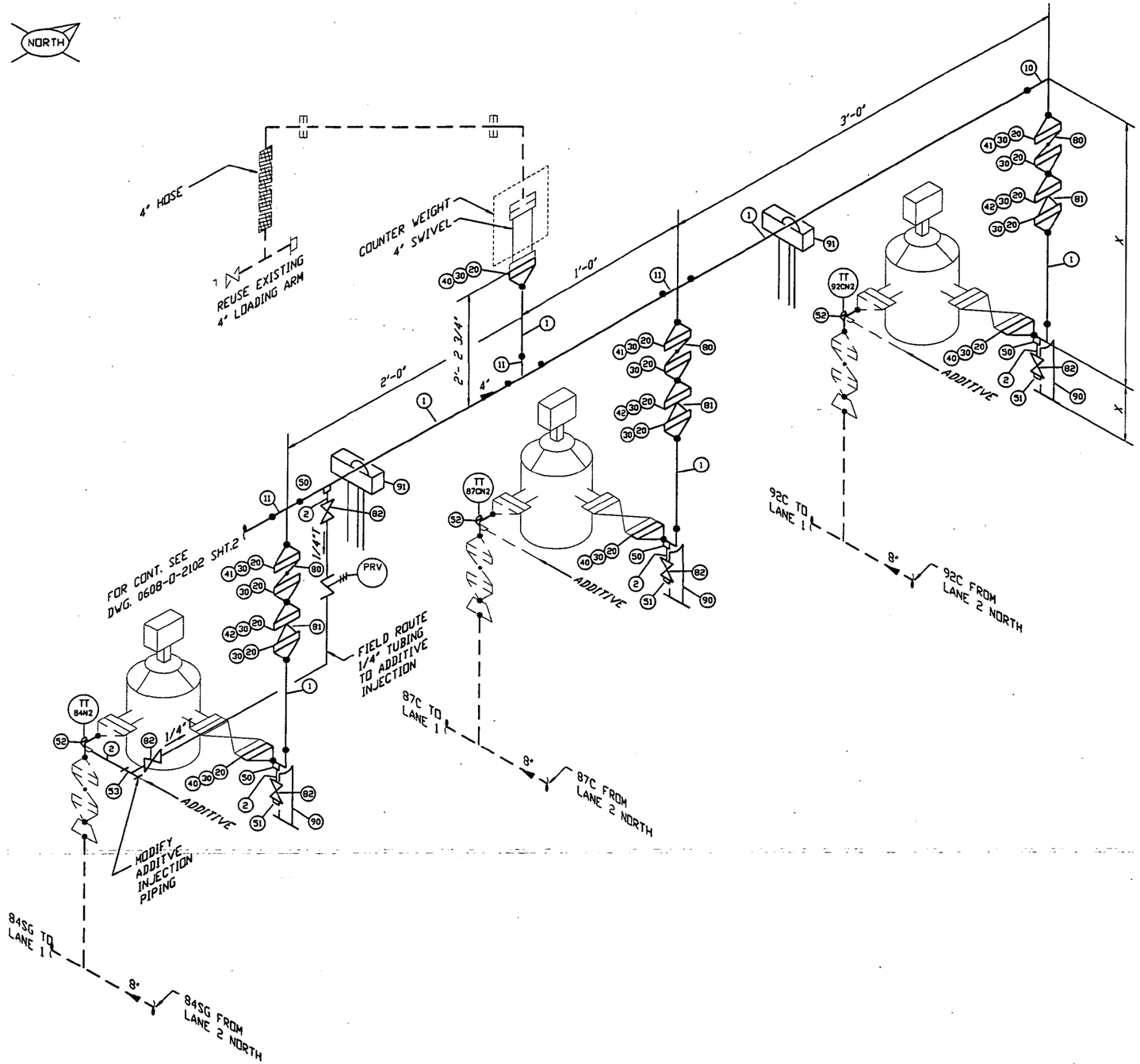

MARK	QTY	SIZE	SCH	DESCRIPTION	TAG
PIPE					
1	20'	4"	SCH 40	PIPE A-53 GRADE B	
2	6	3/4"x3"LG	SCH 160	PIPE NIPPLE, T.O.B. A-53 GRADE B	
FITTINGS					
10	4	4"	SCH 40	90 DEG. L.R. ELBOW, BW, ASTM A234 GRADE WPB	
11	3	4"	SCH 40	TEE, BW, ASTM A234 GRADE WPB	
FLANGES					
20	13	4"	150LB	FLANGE, WN, SCH 40 BORE, R.F., ASTM A105	
GASKETS					
30	16	4"	150LB	GASKET, 1/16" THK GARLOK	
BOLTS					
40	4 SETS	4"	-	8 - 5/8" X 3 1/2" LG. STUD BOLT W/ 2 H.D. NUTS, B7/2H	
(1) 41	3 SETS	4"	-	8 - 5/8" X 5 3/4" LG. STUD BOLT W/ 2 H.D. NUTS, B7/2H	
(2) 42	3 SETS	4"	-	8 - 5/8" X 6 1/2" LG. STUD BOLT W/ 2 H.D. NUTS, B7/2H	
FORGED STEEL FITTINGS					
50	3	3/4"x4"	3000LB	THREADOLET, ASTM A105	
51	4	3/4"	3000LB	THREADED H.D. PLUG, ASTM A105	
52	3	3/4"	3000LB	ELBOWLET, ASTM A105	
53	1	3/4"	3000LB	THREADED TEE, ASTM A105	
VALVES					
80	3	4"	150LB	BUTTERFLY VALVE, WAFER TYPE (BY OWNER)	
81	3	4"	150LB	WAFER CHECK VALVE (BY OWNER)	
82	5	3/4"	CL800	GATE VALVE, THREADED	
MISC					
90	3	2"	SCH 80	2" DUMMY LEG SUPPORT PS-B1	
91	2	-	-	PIPE SUPPORT PS-6	
INSTRUMENTS AND CONTROLS					
TT	3	3/4"	3000LB	TEMPERATURE PROBE AND WELL, TPW-3-2.5 (BY OWNER)	

NOTES:
(1) BOLT LENGTHS BASED ON 4" BFV FACE TO FACE OF 2 1/8" PLUS (2) 1/16" GASKETS
(2) BOLT LENGTH BASED ON 4" WAFER CKV FACE TO FACE 2 7/8" PLUS (2) 1/16" GASKETS

NOTES:

1. CONTRACTOR TO FIELD VERIFY ALL DIMENSIONS PRIOR TO FABRICATION.
2. ALL PIPE AND FITTINGS TO BE PRE-PRIMED.
3. SEE PIPING PLAN DWG. 0608-P-2101 FOR PIPE SUPPORT LOCATIONS.
4. SEE DWG. 0608-P-2210 FOR PIPE SUPPORT DETAILS.

——— NEW PIPE
– – – – EXISTING PIPE

DRAWING NO.	REFERENCE DRAWINGS	REV. NO.	DATE	REVISED	DRAWN BY	CKD. BY
		0	11/06/97	ISSUE FOR CONSTRUCTION	DAB	WHB

TOSCO
Tosco Northwest Company
A Division of Tosco Corporation
5528 NW Doane St.
Portland, Oregon 97210

ALPHA ENGINEERS and CONSTRUCTORS, INC.
19 NW 5th AVE, SUITE 204, PORTLAND, OR. 97209 Tel:(503)227-3317/Fax:(503)227-3244

DRAWN BY	DAB
CHKD BY	KJP
APPD BY	WHB
SCALE	NONE
DATE	09/22/97

PORTLAND TERMINAL
PORTLAND, OREGON
TRUCK LOAD RACK UPGRADE PROJECT
PIPING ISOMETRIC
TRUCK LOADING RACK
LANE 2 NORTH

DRAWING NO.	SHEET	REV.
0608-0-2101	1 OF 4	0

S:\LANE2N.DWG <CPD: 11/06/97 [TIME: 10:08 AM] >

COP0021349

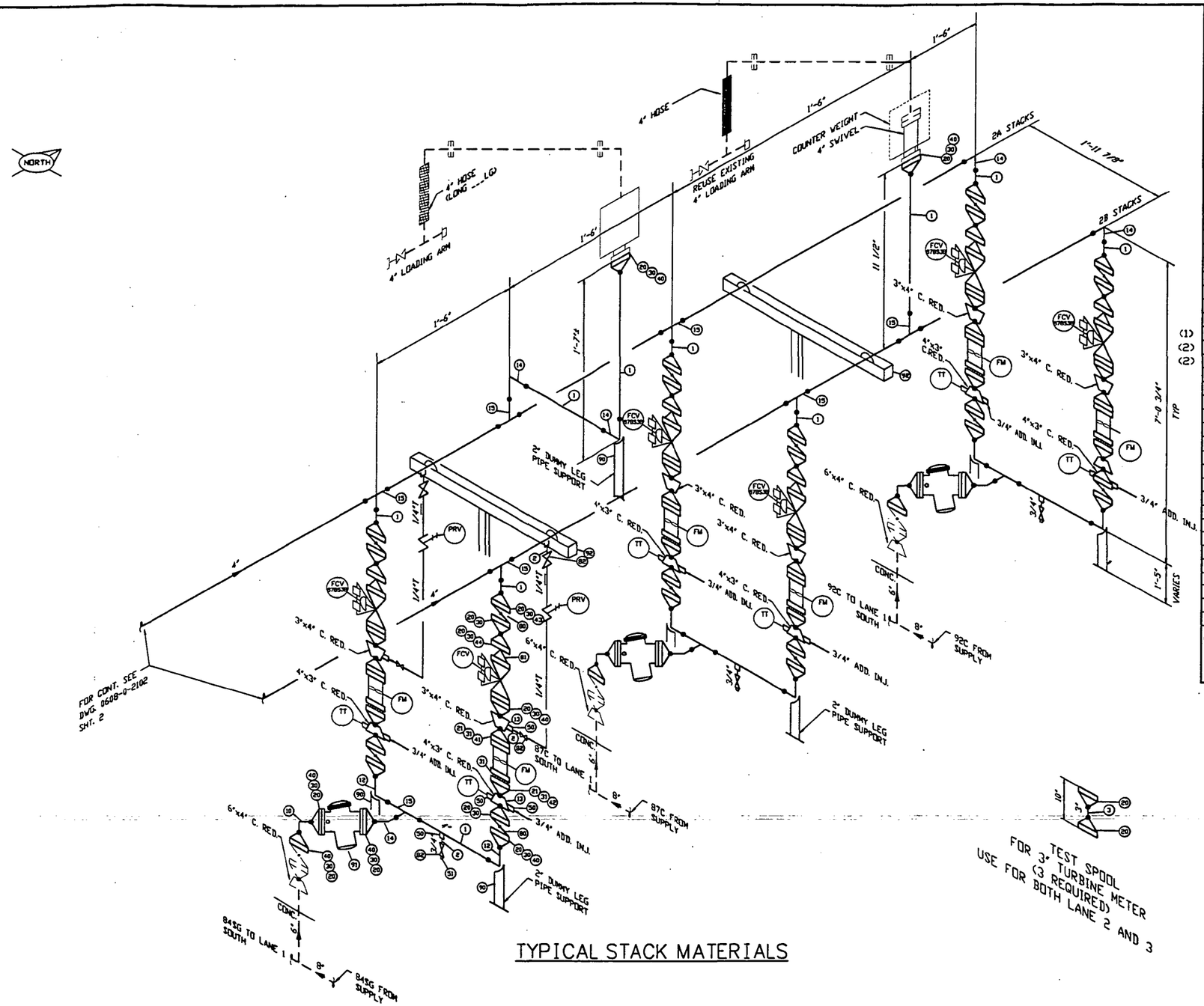

TYPICAL STACK MATERIALS

MARK	QTY	SIZE	SCH	DESCRIPTION	TAG
PIPE					
1	23'	4"	SCH 40	PIPE A-53 GRADE B	
2	7	3/4"x3"LG	SCH 160	PIPE NIPPLE, T.O.B. A-53 GRADE B	
3	3'	3"	SCH 40	PIPE A-53 GRADE B	
FITTINGS					
10	3	4"	SCH 40	REDUCING TEE, BW, ASTM A234 GRADE WPB	
11	-	-	-	NOT USED	
12	10	4"	SCH 40	90 DEG. L.R. ELBOW, BW, ASTM A234 GRADE WPB	
13	12	4"x3"	SCH 40	CONCENTRIC REDUCER, BW, ASTM A234 GRADE WPB	
14	3	4"	SCH 40	45 DEG. ELBOW, BW, ASTM A234 GRADE WPB	
15	8	4"	SCH 40	TEE, BW, ASTM A234 GRADE WPB	
16	-	-	-	-	
FLANGES					
20	54	4"	150LB	FLANGE, WN, SCH 40 BORE, R.F., ASTM A105	
21	12	3"	150LB	FLANGE, WN, SCH 40 BORE, R.F., ASTM A105	
22	-	-	-	-	
GASKETS					
30	55	4"	150LB	GASKET, 1/16" THK GARLOK	
31	-	-	-	-	
BOLTS					
40	23 SETS	4"	-	8 - 5/8" X 3 1/2" LG, STUD BOLT W/ 2 H.D. NUTS, B7/2H	
(1) 41	6 SETS	3"	-	4 - 5/8" X 3 1/2" LG, STUD BOLT W/ 2 H.D. NUTS, B7/2H	
(2) 42	6 SETS	3"	-	4 - 5/8" X 4 1/2" LG, STUD BOLT W/ 2 H.D. NUTS, B7/2H	
(2) 43	12 SETS	4"	-	8 - 5/8" X 5 3/4" LG, STUD BOLT W/ 2 H.D. NUTS, B7/2H	
44	6 SETS	4"	-	8 - 5/8" X 6 1/2" LG, STUD BOLT W/ 2 H.D. NUTS, B7/2H	
45	-	-	-	-	
FORGED STEEL FITTINGS					
50	8	3/4"x4"	3000LB	THREADOLET, ASTM A105	
51	3	3/4"	3000LB	THREADED H.D. PLUG, ASTM A105	
52	3	3/4"	3000LB	90 DEG. ELBOW, THREADED, ASTM A105	
VALVES					
80	12	4"	150LB	BUTTERFLY VALVE, WAFER TYPE (BY OWNER)	
81	6	4"	150LB	WAFER CHECK VALVE (BY OWNER)	
82	7	3/4"	CL800	GATE VALVE, THREADED	
83	-	-	-	-	
MISC					
90	7	2"	SCH 80	2" DUMMY LEG SUPPORT PS-B1	
91	3	4"	150LB	BASKET STRAINER, 40 MESH BASKET, SMITH MODEL 44-V3 (BY OWNER)	
92	2	-	-	PIPE SUPPORT PS-5	
INSTRUMENTS AND CONTROLS					
FM	6	3"	150LB	FLOW METER, TURBINE TYPE, SMITH K2CD (BY OWNER)	
FCV	6	4"	150LB	CONTROL VALVE, SMITH MODEL 210 (BY OWNER)	
TT	6	3/4"	3000LB	TEMPERATURE PROBE AND WELL, TPW-3-2.5 (BY OWNER)	

NOTES:
(1) BOLT LENGTHS BASED ON 4" BFV FACE TO FACE OF 2 1/8" PLUS (2) 1/16" GASKETS
(2) BOLT LENGTH BASED ON 4" WAFER CKV FACE TO FACE 2 7/8" PLUS (2) 1/16" GASKETS

NOTES:

1. CONTRACTOR TO FIELD VERIFY ALL DIMENSIONS PRIOR TO FABRICATION.
2. ALL PIPE AND FITTINGS TO BE PRE-PRIMED.
3. SEE PIPING PLAN DWG. 0608-P-2101 FOR PIPE SUPPORT LOCATIONS.
4. SEE DWG. 0608-P-2210 & P-2211 FOR PIPE SUPPORT DETAILS.

——— NEW PIPE
- - - - - EXISTING PIPE

DRAWING NO.	REFERENCE DRAWINGS	REV. NO.	DATE	REVISED	DRAWN BY	CKD. BY
		0	11/06/97	ISSUE FOR CONSTRUCTION	DAB	KJP

TOSCO
Tosco Northwest Company
A Division of Tosco Corporation
5528 NW Doane St.
Portland, Oregon 97210

ALPHA ENGINEERS and CONSTRUCTORS, INC.
19 NW 5th AVE. SUITE 204, PORTLAND, OR. 97209 Tel:(503)227-3317/Fax:(503)227-3244

DRAWN BY	DAB
CHKD BY	KJP
APPD BY	WHB
SCALE	NONE
DATE	09/22/97

PORTLAND TERMINAL
PORTLAND, OREGON
TRUCK LOAD RACK UPGRADE PROJECT
PIPING ISOMETRIC
TRUCK LOADING RACK
LANE 2 SOUTH

DRAWING NO.	SHEET	REV.
0608-0-2101	2 OF 4	0

\LANE2S.DWG <CPD: 11/06/97 [TIME: 10:28 AM] >

COP0021350

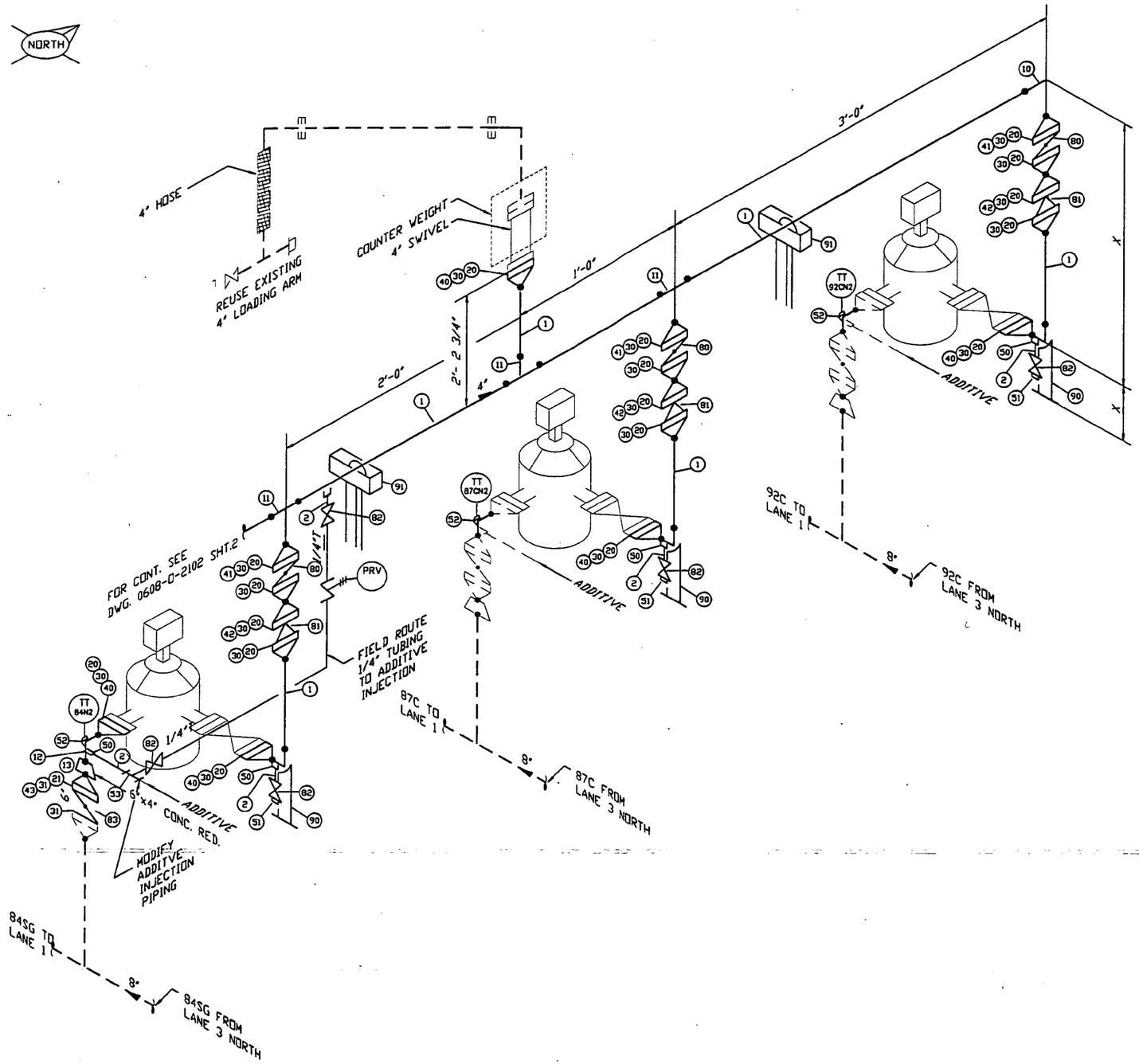

MARK	QTY	SIZE	SCH	DESCRIPTION	TAG
PIPE					
1	20'	4"	SCH 40	PIPE A-53 GRADE B	
2	6	3/4"x3"LG	SCH 160	PIPE NIPPLE, T.O.B. A-53 GRADE B	
FITTINGS					
10	4	4"	SCH 40	90 DEG. L.R. ELBOW, BW, ASTM A234 GRADE WPB	
11	3	4"	SCH 40	TEE, BW, ASTM A234 GRADE WPB	
12	1	4"	SCH 40	90 DEG. S.R. ELBOW, BW, ASTM A234 GRADE WPB	
13	1	6"x4"	SCH 40	CONCENTRIC REDUCER, BW, ASTM A234 GRADE WPB	
FLANGES					
20	14	4"	150LB	FLANGE, WN, SCH 40 BORE, R.F., ASTM A105	
21	1	6"	150LB	FLANGE, WN, SCH 40 BORE, R.F., ASTM A105	
GASKETS					
30	17	4"	150LB	GASKET, 1/16" THK GARLOK	
31	2	6"	150LB	GASKET, 1/16" THK GARLOK	
BOLTS					
40	5 SETS	4"	-	8 - 5/8" X 3 1/2" LG, STUD BOLT W/ 2 H.D. NUTS, B7/2H	
(1) 41	3 SETS	4"	-	8 - 5/8" X 5 3/4" LG, STUD BOLT W/ 2 H.D. NUTS, B7/2H	
(2) 42	3 SETS	4"	-	8 - 5/8" X 6 1/2" LG, STUD BOLT W/ 2 H.D. NUTS, B7/2H	
(3) 43	1 SET	6"	-	8 - 3/4" X 6 1/4" LG, STUD BOLT W/ 2 H.D. NUTS, B7/2H	
FORGED STEEL FITTINGS					
50	3	3/4"x4"	3000LB	THREADOLET, ASTM A105	
51	5	3/4"	3000LB	THREADED H.D. PLUG, ASTM A105	
52	3	3/4"	3000LB	ELBOWLET, ASTM A105	
53	1	3/4"	3000LB	THREADED TEE, ASTM A105	
VALVES					
80	3	4"	150LB	BUTTERFLY VALVE, WAFER TYPE (BY OWNER)	
81	3	4"	150LB	WAFER CHECK VALVE (BY OWNER)	
82	5	3/4"	CL800	GATE VALVE, THREADED	
83	1	6"	150LB	BUTTERFLY VALVE, WAFER TYPE (BY OWNER)	
MISC					
90	3	2"	SCH 80	2" DUMMY LEG SUPPORT PS-B1	
91	2	-	-	PIPE SUPPORT PS-6	
INSTRUMENTS AND CONTROLS					
TT	3	3/4"	3000LB	TEMPERATURE PROBE AND WELL, TPW-3-2.5 (BY OWNER)	

NOTES:
(1) BOLT LENGTHS BASED ON 4" BFV FACE TO FACE OF 2 1/8" PLUS (2) 1/16" GASKETS
(2) BOLT LENGTH BASED ON 4" WAFER CKV FACE TO FACE 2 7/8" PLUS (2) 1/16" GASKETS
(3) BOLT LENGTH BASED ON 6" BFV FACE TO FACE 2 2/5" PLUS (2) 1/16" GASKETS

NOTES:

1. CONTRACTOR TO FIELD VERIFY ALL DIMENSIONS PRIOR TO FABRICATION.
2. ALL PIPE AND FITTINGS TO BE PRE-PRIMED.
3. SEE PIPING PLAN DWG. 0608-P-2101 FOR PIPE SUPPORT LOCATIONS.
4. SEE DWG. 0608-P-2210 FOR PIPE SUPPORT DETAILS.

——— NEW PIPE

– – – – EXISTING PIPE

DRAWING NO.	REFERENCE DRAWINGS	REV. NO.	DATE	REVISED	DRAWN BY	CKD. BY
		0	11/06/97	ISSUE FOR CONSTRUCTION	DAB	KJP

TOSCO
Tosco Northwest Company
A Division of Tosco Corporation
5528 NW Doane St.
Portland, Oregon 97210

ALPHA ENGINEERS and CONSTRUCTORS, INC.
19 NW 5th AVE, SUITE 204, PORTLAND, OR. 97209 Tel:(503)227-3317/Fax:(503)227-3244

DRAWN BY	DAB
CHKD BY	KJP
APP'D BY	WHB
SCALE	NONE
DATE	09/22/97

PORTLAND TERMINAL
PORTLAND, OREGON
TRUCK LOAD RACK UPGRADE PROJECT
PIPING ISOMETRIC
TRUCK LOADING RACK
LANE 3 NORTH

DRAWING NO.	SHEET	REV.
0608-0-2101	3 OF 4	0

S:\ANE3N.DWG <CPD: 11/06/97 [TIME: 10:14 AM]>

COP0021351

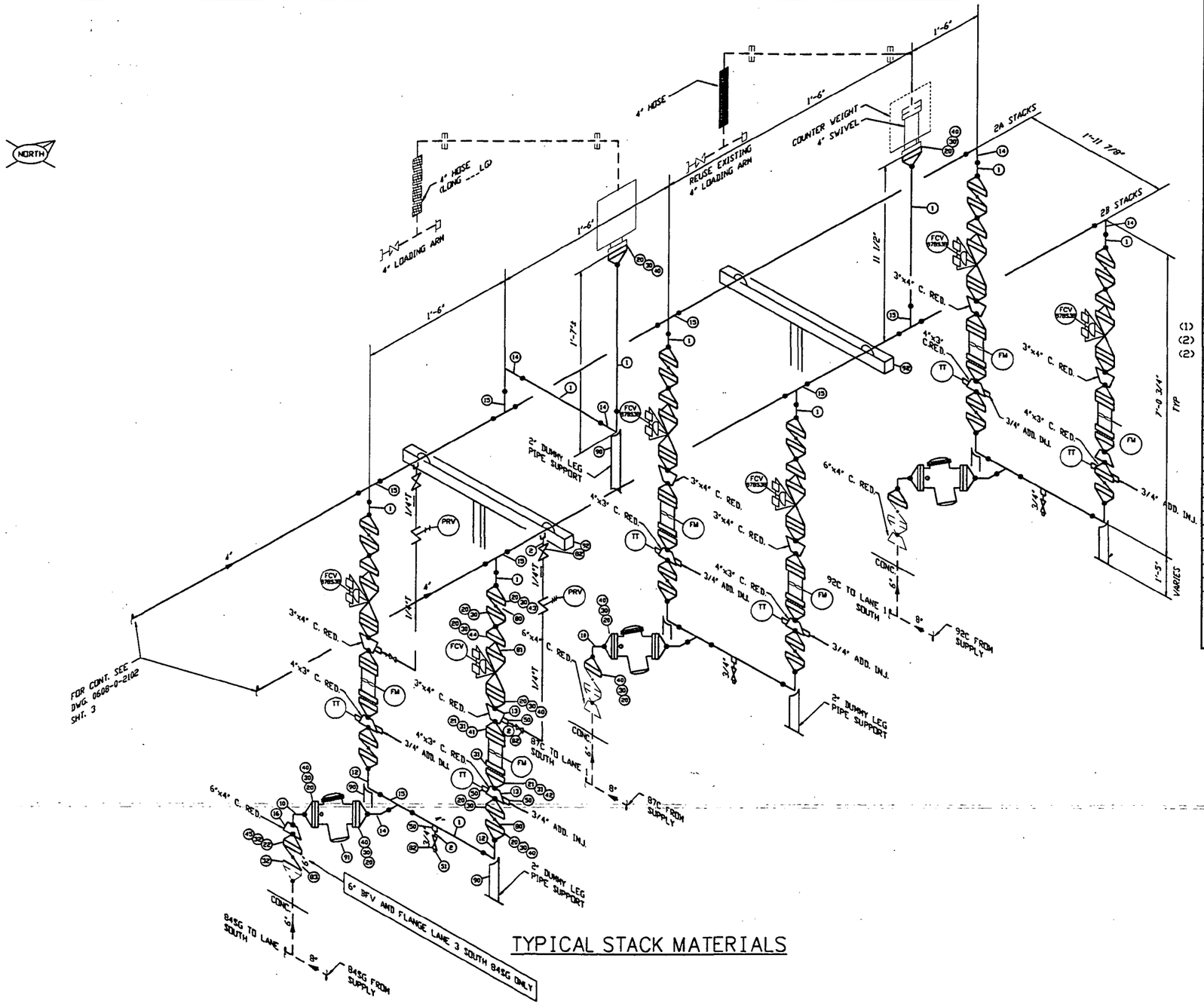

TYPICAL STACK MATERIALS

MARK	QTY	SIZE	SCH	DESCRIPTION	TAG
PIPE					
1	23'	4"	SCH 40	PIPE A-53 GRADE B	
2	7	3/4"x3"LG	SCH 160	PIPE NIPPLE, T.O.B. A-53 GRADE B	
FITTINGS					
10	3	4"	SCH 40	REDUCING TEE, BW, ASTM A234 GRADE WPB	
11	-	-	-	NOT USED	
12	10	4"	SCH 40	90 DEG. L.R. ELBOW, BW, ASTM A234 GRADE WPB	
13	12	4"x3"	SCH 40	CONCENTRIC REDUCER, BW, ASTM A234 GRADE WPB	
14	3	4"	SCH 40	45 DEG. ELBOW, BW, ASTM A234 GRADE WPB	
15	8	4"	SCH 40	TEE, BW, ASTM A234 GRADE WPB	
16	1	6"x4"	SCH 40	CONCENTRIC REDUCER, BW, ASTM A234 GRADE WPB	
FLANGES					
20	47	4"	150LB	FLANGE, WN, SCH 40 BORE, R.F., ASTM A105	
21	12	3"	150LB	FLANGE, WN, SCH 40 BORE, R.F., ASTM A105	
22	1	6"	150LB	FLANGE, WN, SCH 40 BORE, R.F., ASTM A105	
GASKETS					
30	53	4"	150LB	GASKET, 1/16" THK GARLOK	
31	18	3"	150LB	GASKET, 1/16" THK GARLOK	
BOLTS					
40	22 SETS	4"	-	8 - 5/8" X 3 1/2" LG, STUD BOLT W/ 2 H.D. NUTS, B7/2H	
41	6 SETS	3"	-	4 - 5/8" X 3 1/2" LG, STUD BOLT W/ 2 H.D. NUTS, B7/2H	
42	6 SETS	3"	-	4 - 5/8" X 4 1/2" LG, STUD BOLT W/ 2 H.D. NUTS, B7/2H	
(1) 43	12 SETS	4"	-	8 - 5/8" X 5 3/4" LG, STUD BOLT W/ 2 H.D. NUTS, B7/2H	
(2) 44	6 SETS	4"	-	8 - 5/8" X 6 1/2" LG, STUD BOLT W/ 2 H.D. NUTS, B7/2H	
(2) 45	1 SET	6"	-	8 - 3/4" X 6 1/4" LG, STUD BOLT W/ 2 H.D. NUTS, B7/2H	
FORGED STEEL FITTINGS					
50	8	3/4"x4"	3000LB	THREADOLET, ASTM A105	
51	3	3/4"	3000LB	THREADED H.D. PLUG, ASTM A105	
52	3	3/4"	3000LB	90 DEG. ELBOW, THREADED, ASTM A105	
VALVES					
80	12	4"	150LB	BUTTERFLY VALVE, WAFER TYPE (BY OWNER)	
81	6	4"	150LB	WAFER CHECK VALVE (BY OWNER)	
82	7	3/4"	CL800	GATE VALVE, THREADED	
83	1	6"	150LB	BUTTERFLY VALVE, WAFER TYPE (BY OWNER)	
MISC					
90	7	2"	SCH 80	2" DUMMY LEG SUPPORT PS-B1	
91	3	4"	150LB	BASKET STRAINER, 40 MESH BASKET, SMITH MODEL 44-V3 (BY OWNER)	
92	2	-	-	PIPE SUPPORT PS-5	
INSTRUMENTS AND CONTROLS					
FM	6	3"	150LB	FLOW METER, TURBINE TYPE, SMITH K2CD (BY OWNER)	
FCV	6	4"	150LB	CONTROL VALVE, SMITH MODEL 210 (BY OWNER)	
TT	6	3/4"	3000LB	TEMPERATURE PROBE AND WELL, TPW-3-2.5 (BY OWNER)	

NOTES:
(1) BOLT LENGTHS BASED ON 4" BFV FACE TO FACE OF 2 1/8" PLUS (2) 1/16" GASKETS
(2) BOLT LENGTH BASED ON 4" WAFER CKV FACE TO FACE 2 7/8" PLUS (2) 1/16" GASKETS
(3) BOLT LENGTH BASED ON 6" BFV FACE TO FACE 2 1/4" PLUS (2) 1/16" GASKETS

NOTES:

1. CONTRACTOR TO FIELD VERIFY ALL DIMENSIONS PRIOR TO FABRICATION.
2. ALL PIPE AND FITTINGS TO BE PRE-PRIMED.
3. SEE PIPING PLAN DWG. 0608-P-2101 FOR PIPE SUPPORT LOCATIONS.
4. SEE DWG. 0608-P-2210 & P-2211 FOR PIPE SUPPORT DETAILS.

——— NEW PIPE
- - - - - EXISTING PIPE

DRAWING NO.	REFERENCE DRAWINGS	REV. NO.	DATE	REVISED	DRAWN BY	CKD. BY
		0	11/06/97	ISSUE FOR CONSTRUCTION	DAB	KJP

TOSCO
Tosco Northwest Company
A Division of Tosco Corporation
5528 NW Doane St.
Portland, Oregon 97210

ALPHA ENGINEERS and CONSTRUCTORS, INC.
19 NW 5th AVE, SUITE 204, PORTLAND, OR 97209 Tel:(503)227-3317/Fax:(503)227-3244

DRAWN BY	DAB
CHKD BY	KJP
APPD BY	WHB
SCALE	NONE
DATE	09/22/97

PORTLAND TERMINAL
PORTLAND, OREGON
TRUCK LOAD RACK UPGRADE PROJECT
PIPING ISOMETRIC
TRUCK LOADING RACK
LANE 3 SOUTH

DRAWING NO.	SHEET	REV.
0608-0-2101	4 OF 4	0

\LANE3S1.DWG <CP>: 11/06/97 [TIME: 10:24 AM] >

COP00021352

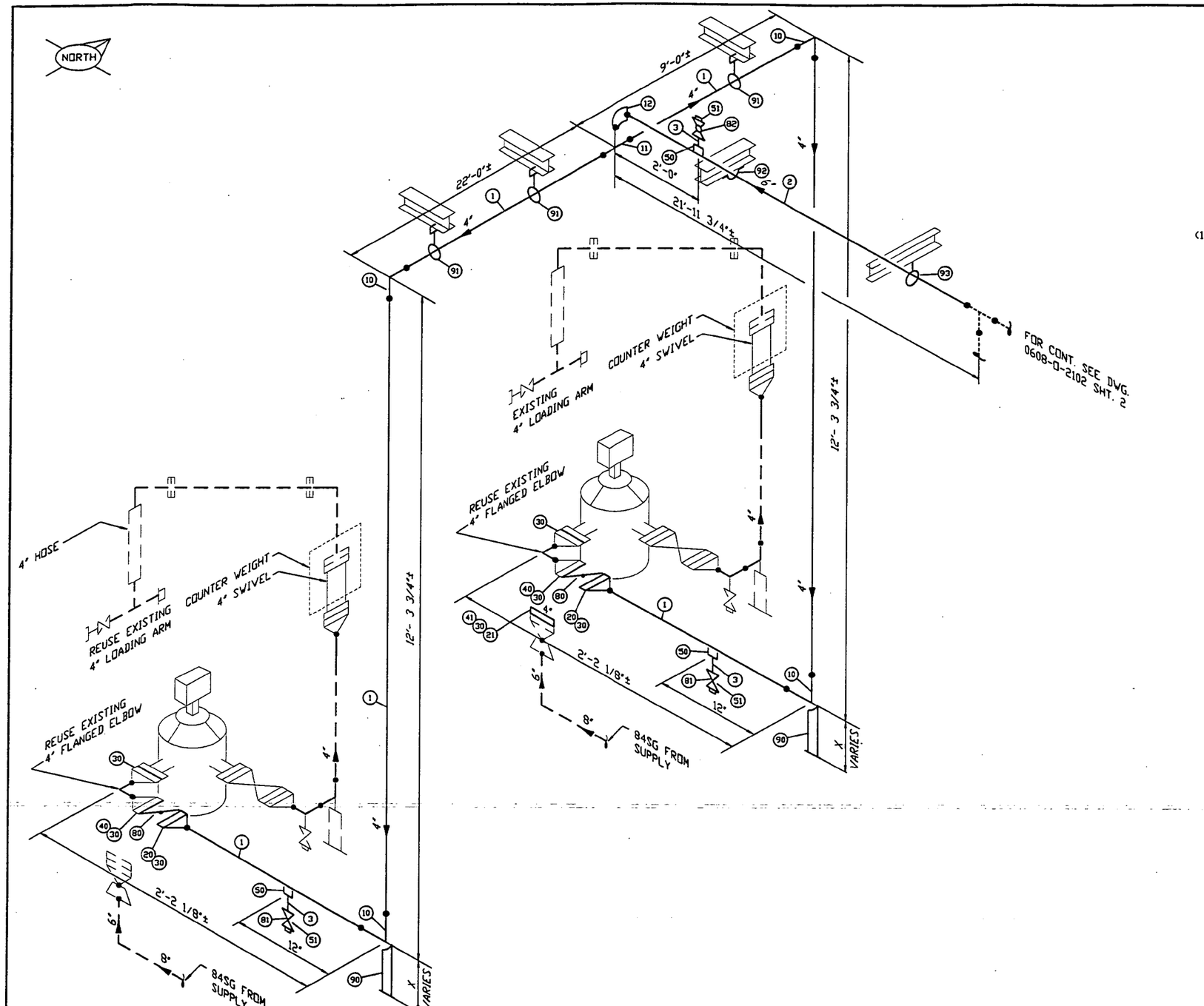

MARK	QTY	SIZE	SCH	DESCRIPTION	TAG
PIPE					
1	26'	4"	SCH 40	PIPE A-53 GRADE B	
2	22'	6"	SCH 40	PIPE A-53 GRADE B	
3	3	3/4"x3"LG	SCH 160	PIPE NIPPLE, T.O.B. A-53 GRADE B	
FITTINGS					
10	4	4"	SCH 40	90 DEG. L.R. ELBOW, BW, ASTM A234 GRADE WPB	
11	1	4"	SCH 40	TEE, BW, ASTM A234 GRADE WPB	
12	1	6"x4"	SCH 40	90 DEG REDUCING ELBOW, BW, ASTM A234 GRADE WPB	
FLANGES					
20	2	4"	150LB	FLANGE, WN, SCH 40 BORE, R.F., ASTM A105	
21	1	4"	150LB	FLANGE, BLIND, R.F., ASTM A105	
GASKETS					
30	19	4"	150LB	GASKET, 1/16" THK GARLOK	
BOLTS					
40	2 SETS	4"	-	8 - 5/8" X 5 3/4" LG, STUD BOLT W/ 2 H.D. NUTS, B7/2H (1)	
41	1 SET	4"	-	8 - 5/8" X 3 1/2" LG, STUD BOLT W/ 2 H.D. NUTS, B7/2H	
FORGED STEEL FITTINGS					
50	3	3/4"x4"	3000LB	THREADOLET, ASTM A105	
51	3	3/4"	3000LB	THREADED H.D. PLUG, ASTM A105	
VALVES					
80	2	4"	150LB	BUTTERFLY VALVE, WAFER TYPE (BY OWNER)	
81	2	3/4"	CL800	GATE VALVE, THREADED	
82	1	3/4"	CL800	BALL VALVE, THREADED	
MISC					
90	2	2"	SCH 80	2" DUMMY LEG SUPPORT PS-B1	
91	3	4"	-	CLEVIS HANGER PS-H2	
92	1	6"	-	PIPE CLAMP PS-H1	
93	1	6"	-	CLEVIS HANGER PS-H3	

NOTES:
(1) BOLT LENGTHS BASED ON 4" BFV FACE TO FACE OF 2 1/8" PLUS (2) 1/16" GASKETS

NOTES:

1. CONTRACTOR TO FIELD VERIFY ALL DIMENSIONS PRIOR TO FABRICATION.
2. ALL PIPE AND FITTINGS TO BE PRE-PRIMED.
3. SEE PIPING PLAN DWG. 0608-P-2101 FOR PIPE SUPPORT LOCATIONS.
4. SEE DWG. 0608-P-2210 FOR PIPE SUPPORT DETAILS.

——— NEW PIPE

– – – – EXISTING PIPE

DRAWING NO.	REFERENCE DRAWINGS	REV. NO.	DATE	REVISED	DRAWN BY	CKD. BY
		0	11/06/97	ISSUE FOR CONSTRUCTION	DAB	KJP

TOSCO
Tosco Northwest Company
A Division of Tosco Corporation
5528 NW Doane St.
Portland, Oregon 97210

ALPHA ENGINEERS and CONSTRUCTORS, INC.
19 NW 5th AVE, SUITE 204, PORTLAND, OR. 97209 Tel:(503)227-3317/Fax:(503)227-3244

DRAWN BY	DAB
CHKD BY	KJP
APPD BY	WHB
SCALE	NONE
DATE	09/22/97

PORTLAND TERMINAL
PORTLAND, OREGON
TRUCK LOAD RACK UPGRADE PROJECT
PIPING ISOMETRIC
TRUCK LOADING RACK
ETHANOL LANE 1

DRAWING NO.	SHEET	REV.
0608-0-2102	1 OF 3	0

SOS\ETH1.DWG <CPD: 11/06/97 [TIME: 10:28 AM] >

COP00021353

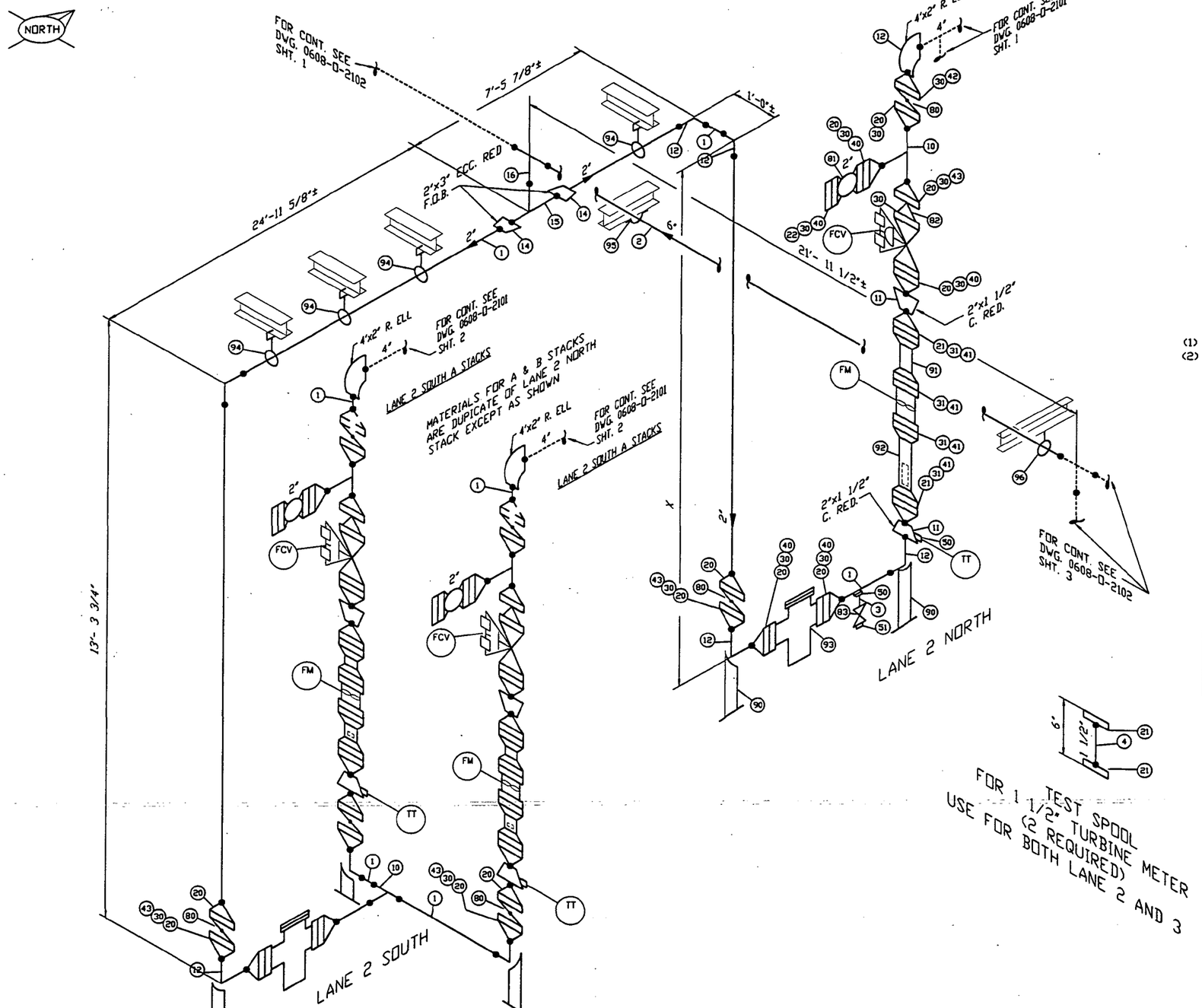

MARK	QTY	SIZE	SCH	DESCRIPTION	TAG
PIPE					
1	40'	2"	SCH 80	PIPE A-53 GRADE B	
2	22'	6"	SCH 40	PIPE A-53 GRADE B	
3	2	3/4"x3"LG	SCH 160	PIPE NIPPLE, T.O.B. A-53 GRADE B	
4	2'	1 1/2"	SCH 80	PIPE A-53 GRADE B	
FITTINGS					
10	4	2"	SCH 80	TEE, BW, ASTM A234 GRADE WPB	
11	6	2"x 1 1/2"	SCH 80	CONCENTRIC REDUCER, BW, ASTM A234 GRADE WPB	
12	8	2"	SCH 80	90 DEG. L.R. ELBOW, BW, ASTM A234 GRADE WPB	
13	3	4"x2"	SCH 80	90 DEG. REDUCING ELBOW, BW, ASTM A234 GRADE WPB	
14	2	3"x2"	SCH 80	ECCENTRIC REDUCER, BW, ASTM A234 GRADE WPB	
15	1	3"	SCH 40	TEE, BW, ASTM A234 GRADE WPB	
16	1	6"x3"	SCH 40	REDUCING TEE, BW, ASTM A234 GRADE WPB	
FLANGES					
20	25	2"	150LB	FLANGE, WN, SCH 80 BORE, R.F., ASTM A105	
21	10	1 1/2"	150LB	FLANGE, WN, SCH 80 BORE, R.F., ASTM A105	
22	3	2"	150LB	FLANGE, BLIND, R.F., ASTM A105	
23	4	1 1/2"	150LB	FLANGE, SLIP-ON, R.F., ASTM A105	
GASKETS					
30	33	2"	150LB	GASKET, 1/16" THK GARLOK	
31	12	1 1/2"	150LB	GASKET, 1/16" THK GARLOK	
BOLTS					
40	13 SETS	2"	-	4 - 5/8" X 3" LG, STUD BOLT W/ 2 H.D. NUTS, B7/2H	
41	12 SETS	1 1/2"	-	4 - 5/8" X 2 3/4" LG, STUD BOLT W/ 2 H.D. NUTS, B7/2H	
(1) 42	7 SETS	2"	-	4 - 5/8" X 5" LG, STUD BOLT W/ 2 H.D. NUTS, B7/2H	
(2) 43	3 SETS	2"	-	4 - 5/8" X 5 1/2" LG, STUD BOLT W/ 2 H.D. NUTS, B7/2H	
FORGED STEEL FITTINGS					
50	5	3/4"x4"	3000LB	THREADOLET, ASTM A105	
51	2	3/4"	3000LB	THREADED H.D. PLUG, ASTM A105	
VALVES					
80	7	2"	150LB	BUTTERFLY VALVE, WAFER TYPE (BY OWNER)	
81	3	2"	150LB	FULL PORT BALL VALVE (BY OWNER)	
82	3	2"	150LB	WAFER CHECK VALVE (BY OWNER)	
83	2	3/4"	CL800	GATE VALVE, THREADED	
MISC					
90	5	2"	SCH 80	2" DUMMY LEG SUPPORT PS-B1	
91	3	1 1/2"	150LB	D/S FLOW STRAIGHT. ASSY., SMITH K22BA-AO (BY OWNER)	
92	3	1 1/2"	150LB	U/S FLOW STRAIGHT. ASSY, SMITH K22AA-AO (BY OWNER)	
93	2	2"	150LB	STRAINER, 40 MESH BASKET, SMITH MODEL 22-E3 (BY OWNER)	
94	4	2"	-	CLEVIS HANGER PS-H2	
95	1	6"	-	PIPE CLAMP PS-H1	
96	1	6"		CLEVIS HANGER PS-H3	
INSTRUMENTS AND CONTROLS					
FM	3	1 1/2"	150LB	FLOW METER, TURBINE TYPE, SMITH K2CA (BY OWNER)	
FCV	3	2"	150LB	CONTROL VALVE, SMITH MODEL 210 (BY OWNER)	
TT	3	3/4"	3000LB	TEMPERATURE PROBE AND WELL, TPW-3-2.5 (BY OWNER)	

NOTES:
(1) BOLT LENGTHS BASED ON 2" BFV FACE TO FACE OF 1 3/4" PLUS (2) 1/16" GASKETS
(2) BOLT LENGTH BASED ON 2" WAFER CKV FACE TO FACE 2 3/8" PLUS (2) 1/16" GASKETS

NOTES:

1. CONTRACTOR TO FIELD VERIFY ALL DIMENSIONS PRIOR TO FABRICATION.
2. ALL PIPE AND FITTINGS TO BE PRE-PRIMED.
3. SEE PIPING PLAN DWG. 0608-P-2101 FOR PIPE SUPPORT LOCATIONS.
4. SEE DWG. 0608-P-2210 FOR PIPE SUPPORT DETAILS.

——— NEW PIPE
– – – – EXISTING PIPE

DRAWING NO.	REFERENCE DRAWINGS	REV. NO.	DATE	REVISED	DRAWN BY	CKD. BY
		0	10/06/97	ISSUE FOR CONSTRUCTION	DAB	KJP

TOSCO
Tosco Northwest Company
A Division of Tosco Corporation
5528 NW Doane St.
Portland, Oregon 97210

ALPHA ENGINEERS and CONSTRUCTORS, INC.
19 NW 5th AVE, SUITE 204, PORTLAND, OR. 97209 Tel:(503)227-3317/Fax:(503)227-3244

DRAWN BY	DAB
CHKD BY	KJP
APPD BY	WHB
SCALE	NONE
DATE	09/22/97

PORTLAND TERMINAL
PORTLAND, OREGON
TRUCK LOAD RACK UPGRADE PROJECT
PIPING ISOMETRIC
TRUCK LOADING RACK
LANE 2 ETHANOL

DRAWING NO.	SHEET	REV.
0608-0-2102	2 OF 3	0

SOS\ETH2.DWG <CPD: 11/06/97 [TIME: 10:30 AM] >

COP0021354

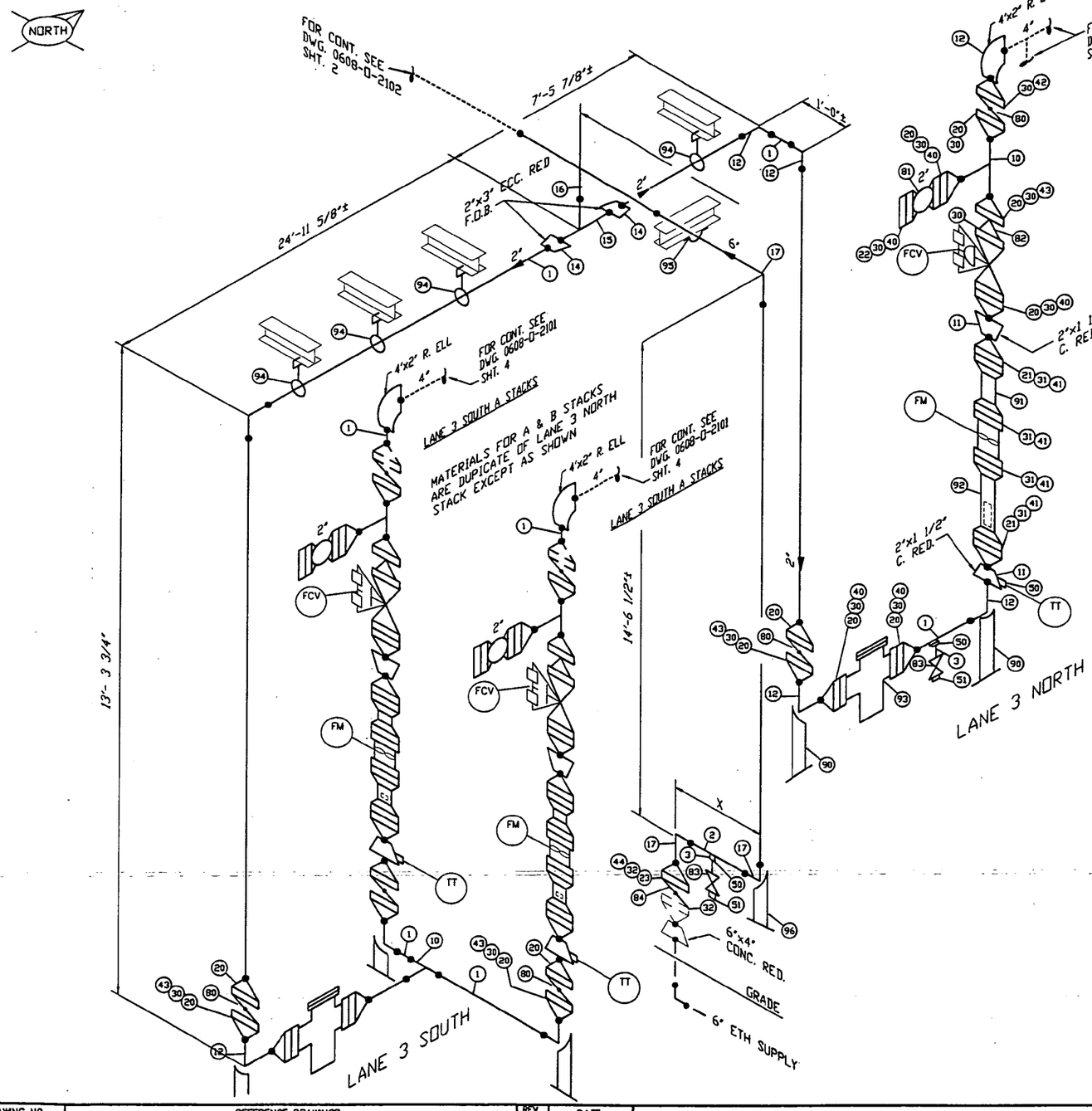

MARK	QTY	SIZE	SCH	DESCRIPTION	TAG
PIPE					
1	40'	2"	SCH 80	PIPE A-53 GRADE B	
2	22'	6"	SCH 40	PIPE A-53 GRADE B	
3	2	3/4"x3"LG	SCH 160	PIPE NIPPLE, T.O.B. A-53 GRADE B	
FITTINGS					
10	4	2"	SCH 80	TEE, BW, ASTM A234 GRADE WPB	
11	6	2"x 1 1/2"	SCH 80	CONCENTRIC REDUCER, BW, ASTM A234 GRADE WPB	
12	8	2"	SCH 80	90 DEG. L.R. ELBOW, BW, ASTM A234 GRADE WPB	
13	3	4"x2"	SCH 80	90 DEG. REDUCING ELBOW, BW, ASTM A234 GRADE WPB	
14	2	3"x2"	SCH 80	ECCENTRIC REDUCER, BW, ASTM A234 GRADE WPB	
15	1	3"	SCH 40	TEE, BW, ASTM A234 GRADE WPB	
16	1	6"x3"	SCH 40	REDUCING TEE, BW, ASTM A234 GRADE WPB	
17	3	6"	SCH 40	90 DEG. L.R. ELBOW, BW, ASTM A234 GRADE WPB	
FLANGES					
20	25	2"	150LB	FLANGE, WN, SCH 80 BORE, R.F., ASTM A105	
21	6	1 1/2"	150LB	FLANGE, WN, SCH 80 BORE, R.F., ASTM A105	
22	3	2"	150LB	FLANGE, BLIND, R.F., ASTM A105	
23	2	6"	150LB	FLANGE, BLIND, R.F., ASTM A105	
GASKETS					
30	33	2"	150LB	GASKET, 1/16" THK GARLOK	
31	12	1 1/2"	150LB	GASKET, 1/16" THK GARLOK	
32	2	6"	150LB	GASKET, 1/16" THK GARLOK	
BOLTS					
40	13 SETS	2"	-	4 - 5/8" X 3" LG, STUD BOLT W/ 2 H.D. NUTS, B7/2H	
41	12 SETS	1 1/2"	-	4 - 5/8" X 2 3/4" LG, STUD BOLT W/ 2 H.D. NUTS, B7/2H	
(1) 42	7 SETS	2"	-	4 - 5/8" X 5" LG, STUD BOLT W/ 2 H.D. NUTS, B7/2H	
(2) 43	3 SETS	2"	-	4 - 5/8" X 5 1/2" LG, STUD BOLT W/ 2 H.D. NUTS, B7/2H	
(3) 44	1 SET	6"	-	8 - 3/4" X 6 1/4" LG, STUD BOLT W/ 2 H.D. NUTS, B7/2H	
FORGED STEEL FITTINGS					
50	6	3/4"x4"	3000LB	THREADOLET, ASTM A105	
51	3	3/4"	3000LB	THREADED H.D. PLUG, ASTM A105	
VALVES					
80	7	2"	150LB	BUTTERFLY VALVE, WAFER TYPE (BY OWNER)	
81	3	2"	150LB	FULL PORT BALL VALVE (BY OWNER)	
82	3	2"	150LB	WAFER CHECK VALVE (BY OWNER)	
83	3	3/4"	CL800	GATE VALVE, THREADED	
84	1	6"	150LB	BUTTERFLY VALVE, WAFER TYPE (BY OWNER)	
MISC					
90	5	2"	SCH 80	2" DUMMY LEG SUPPORT PS-B1	
91	3	1 1/2"	150LB	D/S FLOW STRAIGHT. ASSY., SMITH K22BA-A0 (BY OWNER)	
92	3	1 1/2"	150LB	U/S FLOW STRAIGHT. ASSY, SMITH K22AA-A0 (BY OWNER)	
93	2	2"	150LB	STRAINER, 40 MESH BASKET, SMITH MODEL 22-E3 (BY OWNER)	
94	4	2"	-	CLEVIS HANGER PS-H2	
95	1	6"	-	PIPE CLAMP PS-H1	
96	1	6"	SCH 40	3" DUMMY LEG SUPPORT PS-B1	
INSTRUMENTS AND CONTROLS					
FM	3	1 1/2"	150LB	FLOW METER, TURBINE TYPE, SMITH K2CA (BY OWNER)	
FCV	3	2"	150LB	CONTROL VALVE, SMITH MODEL 210 (BY OWNER)	
TT	3	3/4"	3000LB	TEMPERATURE PROBE AND WELL, TPW-3-2.5 (BY OWNER)	

NOTES:
(1) BOLT LENGTHS BASED ON 2" BFV FACE TO FACE OF 1 3/4" PLUS (2) 1/16" GASKETS
(2) BOLT LENGTH BASED ON 2" WAFER CKV FACE TO FACE 2 3/8" PLUS (2) 1/16" GASKETS
(3) BOLT LENGTHS BASED ON 6" BFV FACE TO FACE OF 2 1/4" PLUS (2) 1/16" GASKETS

NOTES:

1. CONTRACTOR TO FIELD VERIFY ALL DIMENSIONS PRIOR TO FABRICATION.
2. ALL PIPE AND FITTINGS TO BE PRE-PRIMED.
3. SEE PIPING PLAN DWG. 0608-P-2101 FOR PIPE SUPPORT LOCATIONS.
4. SEE DWG. 0608-P-2210 FOR PIPE SUPPORT DETAILS.

——— NEW PIPE
— — — EXISTING PIPE

DRAWING NO.	REFERENCE DRAWINGS	REV. NO.	DATE	REVISED	DRAWN BY	CKD. BY
		0	11/06/97	ISSUE FOR CONSTRUCTION	DAB	KJP

TOSCO
Tosco Northwest Company
A Division of Tosco Corporation
5528 NW Doane St.
Portland, Oregon 97210

ALPHA ENGINEERS and CONSTRUCTORS, INC.
19 NW 5th AVE., SUITE 204, PORTLAND, OR. 97209 Tel: (503)227-3317/Fax: (503)227-3244

DRAWN BY	DAB
CHKD BY	KJP
APPD BY	WHB
SCALE	NONE
DATE	09/22/97

PORTLAND TERMINAL
PORTLAND, OREGON
TRUCK LOAD RACK UPGRADE PROJECT
PIPING ISOMETRIC
TRUCK LOADING RACK
LANE 3 ETHANOL

DRAWING NO.	SHEET	REV.
0608-0-2102	3 OF 3	0

SOS\ETH3.DWG <PD: 11/06/97 [TIME: 10:32 AM]>

COP00021355

MARK	QTY	SIZE	SCH	DESCRIPTION	TAG
PIPE					
1					
2	20'	6"	SCH 40	PIPE A-53 GRADE B	
FITTINGS					
10					
11					
12					
13	3	6"	SCH 40	90 DEG. L.R. ELBOW, BW, ASTM A234 GRADE WPB	
14	1	6"	SCH 40	TEE, BW, ASTM A234 GRADE WPB	
FLANGES					
20					
21	1	6"	150LB	FLANGE, WN, SCH 40 BORE, R.F., ASTM A105	
GASKETS					
30					
31	2	6"	150LB	GASKET, 1/16" THK GARLOK	
BOLTS					
40					
41	2 SETS	6"		8 - 3/4" X 3 3/4" LG, STUD BOLT W/ 2 H.D. NUTS, B7/2H	
VALVES					
80					
MISC					
90	2	-	-	PIPE SUPPORT	

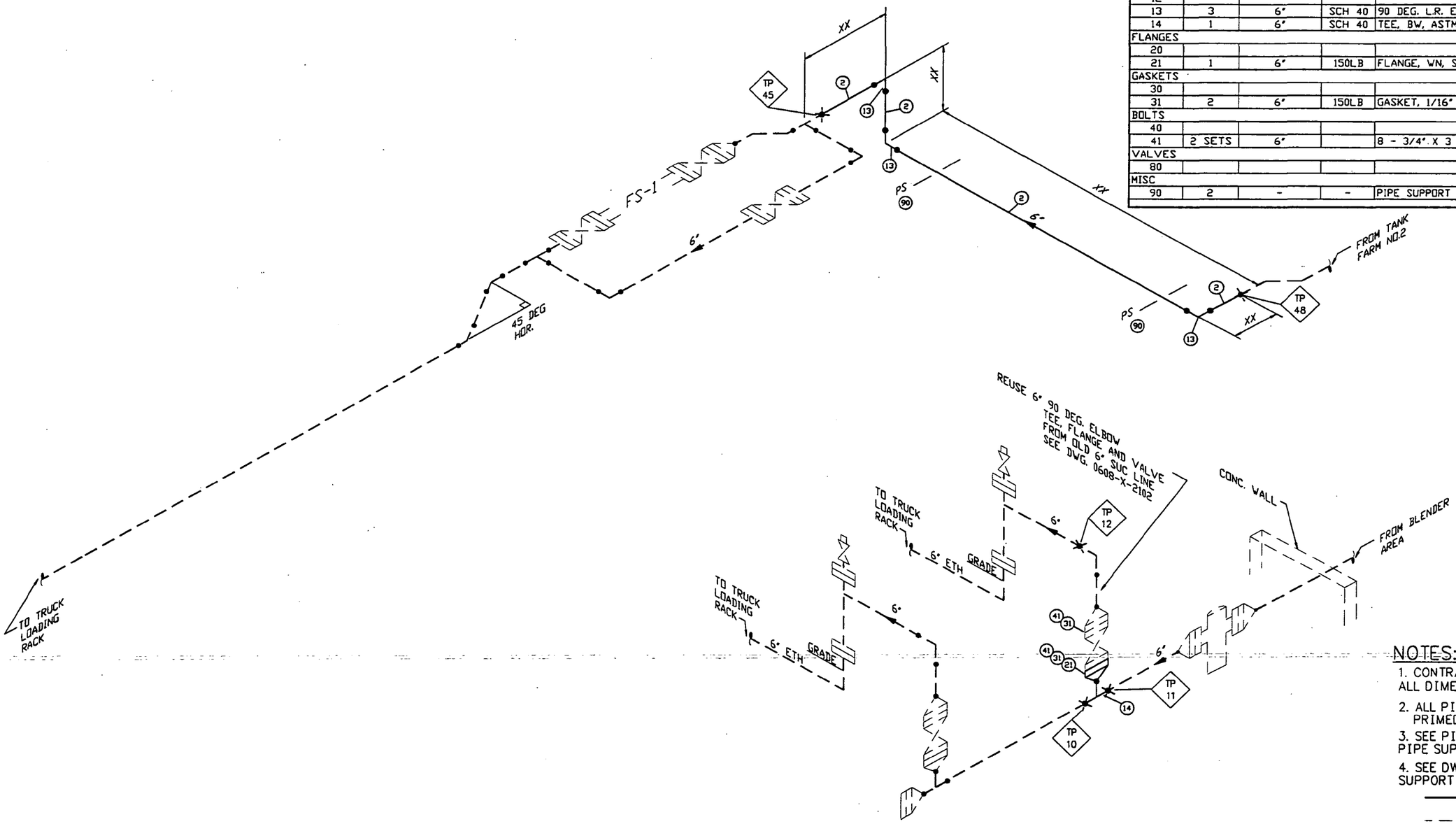

NOTES:

1. CONTRACTOR TO FIELD VERIFY ALL DIMENSIONS PRIOR TO FABRICATION.
2. ALL PIPE AND FITTINGS TO BE PRE-PRIMED.
3. SEE PIPING PLAN DWG. 0608-P-2101 FOR PIPE SUPPORT LOCATIONS.
4. SEE DWG. 0608-P-2210 FOR PIPE SUPPORT DETAILS.

——— NEW PIPE

– – – – EXISTING PIPE

DRAWING NO.	REFERENCE DRAWINGS	REV. NO.	DATE	REVISED	DRAWN BY	CKD. BY
0608-P-2102	PIPING TANK FARM NO.1 SOUTH OF BLENDER SKIDS	0	11/06/97	ISSUE FOR CONSTRUCTION	DAB	KJP
0608-P-2103	PIPING SFPPL YARD TANK FARM NO.1					

TOSCO
Tosco Northwest Company
A Division of Tosco Corporation
5528 NW Doane St.
Portland, Oregon 97210

ALPHA ENGINEERS and CONSTRUCTORS, INC.
19 NW 5th AVE, SUITE 204, PORTLAND, OR. 97209 Tel:(503)227-3317/Fax:(503)227-3244

DRAWN BY	DAB
CHKD BY	KJP
APPD BY	WHB
SCALE	NONE
DATE	09/22/97

PORTLAND TERMINAL
PORTLAND, OREGON
TRUCK LOAD RACK UPGRADE PROJECT
PIPING ISOMETRIC
ETHANOL LINE AT
BLENDER SKIDS

DRAWING NO.	SHEET	REV.
0608-0-2103	1 OF 1	0

68021031.DWG <CPD: 11/06/97 [TIME: 10:34 AM] >

COP00021356

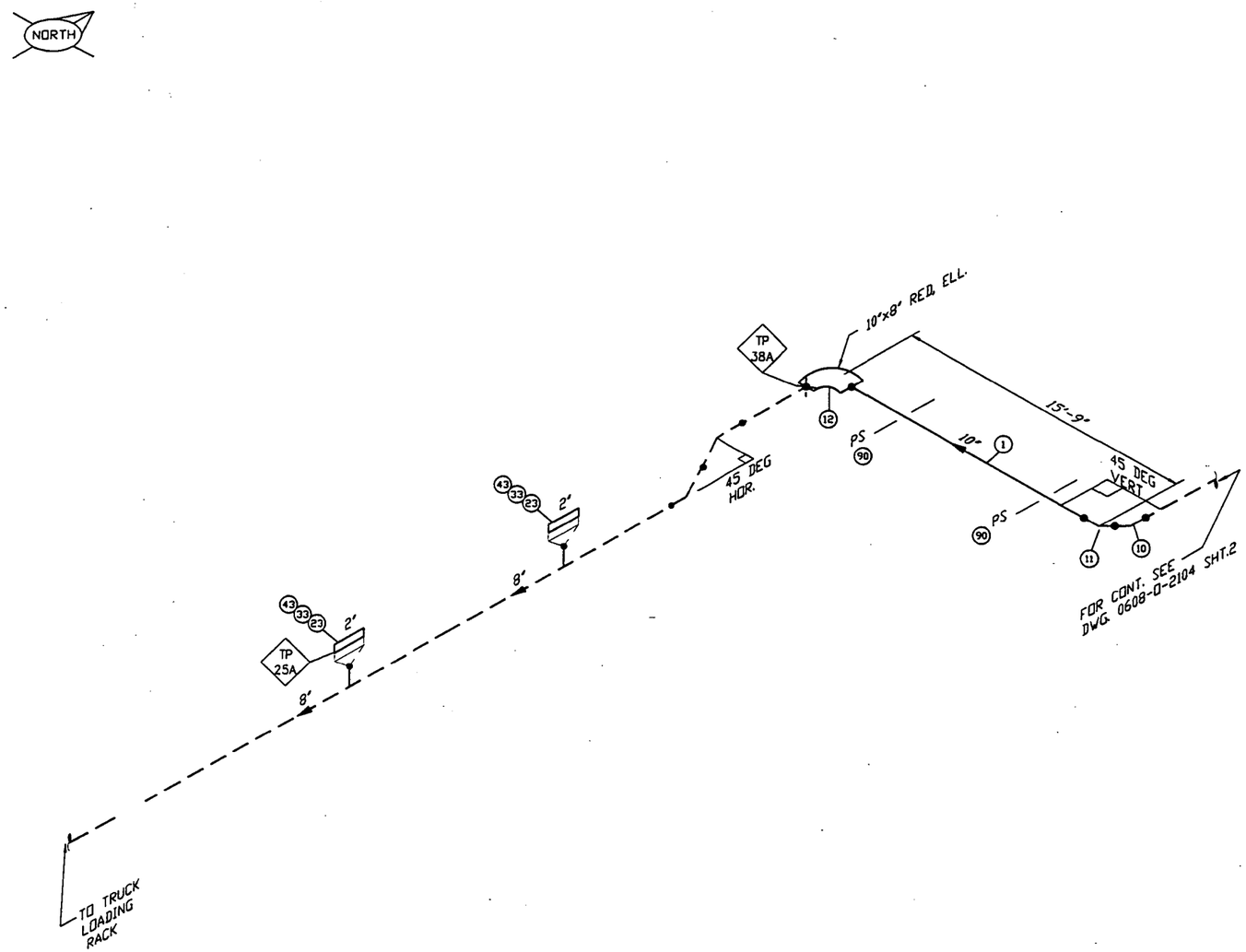

MARK	QTY	SIZE	SCH	DESCRIPTION	TAG
PIPE					
1	14'	10"	SCH 40	PIPE A-53 GRADE B	
2					
3					
4					
FITTINGS					
10	1	10"	SCH 40	45 DEG. ELBOW, BW, ASTM A234 GRADE WPB	
11	1	10"	SCH 40	90 DEG. L.R. ELBOW, BW, ASTM A234 GRADE WPB	
12	1	10"x8"	SCH 40	REDUCING ELBOW, BW, ASTM A234 GRADE WPB	
13					
14					
15					
16					
FLANGES					
20					
21					
22					
23	1	2"	150LB	FLANGE,BLIND, R.F., ASTM A105	
GASKETS					
30					
31					
32					
33	2	2"	150LB	GASKET, 1/16" THK GARLOK	
BOLTS					
40					
41					
42					
43	2 SETS	2"	-	4 - 5/8" X 3" LG, STUD BOLT W/ 2 H.D. NUTS, B7/2H	
THREADED FITTINGS					
50					
51					
52					
VALVES					
80					
81					
82					
83					
MISC					
90	2	10"	SCH 40	PIPE SUPPORT	

NOTES:

NOTES:

1. CONTRACTOR TO FIELD VERIFY ALL DIMENSIONS PRIOR TO FABRICATION.
2. ALL PIPE AND FITTINGS TO BE PRE-PRIMED.
3. SEE PIPING PLAN DWG. 0608-P-2101 FOR PIPE SUPPORT LOCATIONS.
4. SEE DWG. 0608-P-2___ FOR PIPE SUPPORT DETAILS.

——— NEW PIPE

– — — – EXISTING PIPE

DRAWING NO.	REFERENCE DRAWINGS	REV. NO.	DATE	REVISED	DRAWN BY	CKD. BY
		0	11/06/97	ISSUE FOR CONSTRUCTION	DAB	KJP

TOSCO
Tosco Northwest Company
A Division of Tosco Corporation
5528 NW Doane St.
Portland, Oregon 97210

ALPHA ENGINEERS and CONSTRUCTORS, INC.
19 NW 5th AVE, SUITE 204, PORTLAND, OR. 97209 Tel:(503)227-3317/Fax:(503)227-3244

DRAWN BY	DAB
CHKD BY	KJP
APPD BY	WHB
SCALE	NONE
DATE	09/22/97

PORTLAND TERMINAL
PORTLAND, OREGON
TRUCK LOAD RACK UPGRADE PROJECT
PIPING ISOMETRIC
84 SG LINE

DRAWING NO.	SHEET	REV.
0608-0-2104	1 OF 3	0

6802104.DWG <CPD: 11/06/97 [TIME: 10:35 AM]>

COP00021357

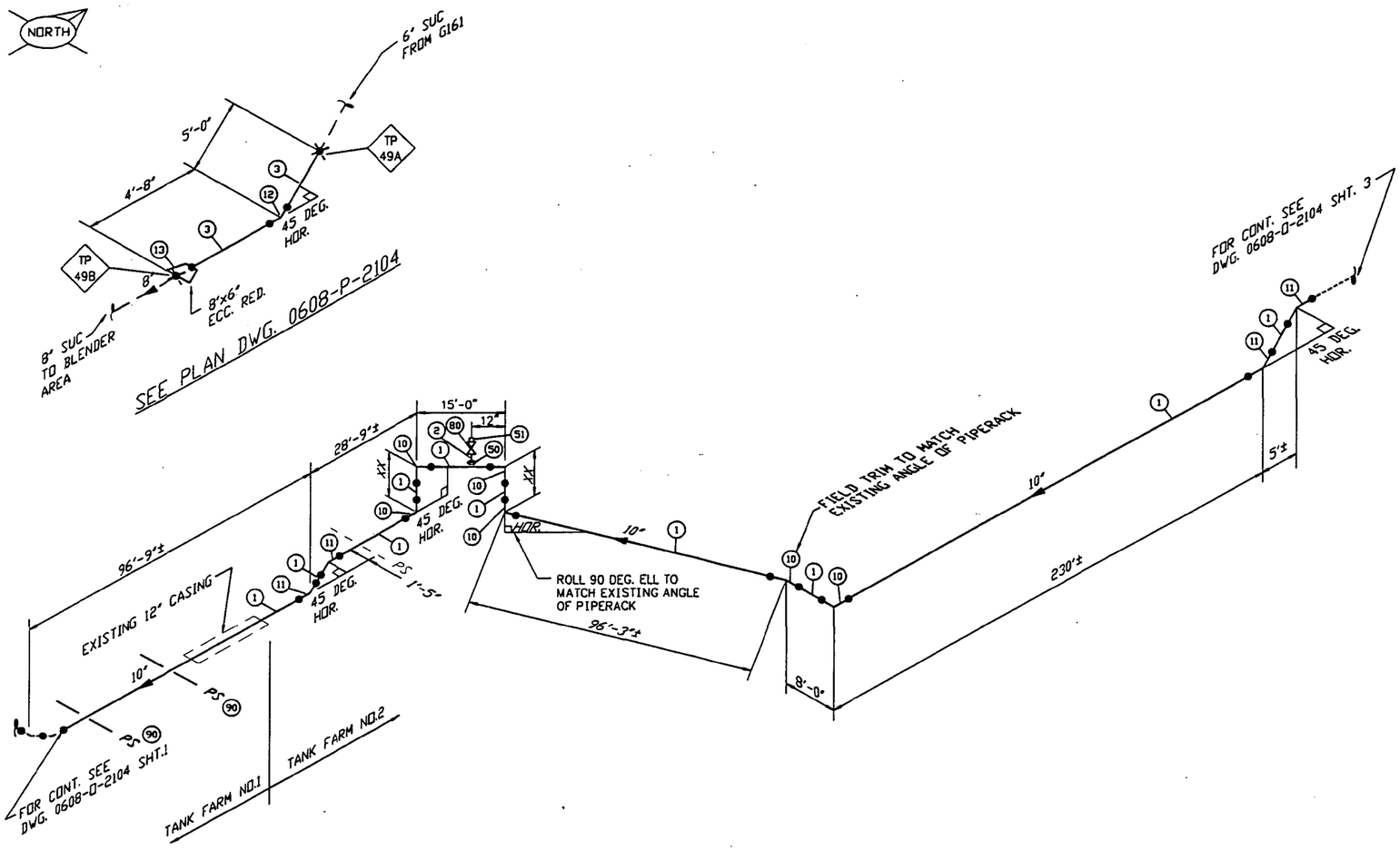

MARK	QTY	SIZE	SCH	DESCRIPTION	TAG
PIPE					
1	480'	10"	SCH 40	PIPE A-53 GRADE B	
2	1	3/4"x3"LG	SCH 160	PIPE NIPPLE, T.B.E, A-53 GRADE B	
3	9'	6"	SCH 40	PIPE A-53 GRADE B	
FITTINGS					
10	6	10"	SCH 40	90 DEG. L.R. ELBOW, BW, ASTM A234 GRADE WPB	
11	4	10"	SCH 40	45 DEG. ELBOW, BW, ASTM A234 GRADE WPB	
12	1	6"	SCH 40	45 DEG. ELBOW, BW, ASTM A234 GRADE WPB	
13	1	8"x6"	SCH 40	ECCENTRIC REDUCER, BW, ASTM A234 GRADE WPB	
THREADED FITTINGS					
50	1	3/4"x10"	3000LB	THREADOLET, ASTM A-105	
51	1	3/4"	3000LB	HEX HEAD PLUG, THREADED, ASTM A-105	
VALVES					
80	1	3/4"	CL800	GATE VALVE, THREADED	
MISC					
90	2	10"	SCH 40	PIPE SUPPORT	

NOTES:

NOTES:

1. CONTRACTOR TO FIELD VERIFY ALL DIMENSIONS PRIOR TO FABRICATION.
2. ALL PIPE AND FITTINGS TO BE PRE-PRIMED.
3. SEE PIPING PLAN DWG. 0608-P-2101 FOR PIPE SUPPORT LOCATIONS.
4. SEE DWG. 0608-P-2210 FOR PIPE SUPPORT DETAILS.

——— NEW PIPE

– — — – EXISTING PIPE

DRAWING NO.	REFERENCE DRAWINGS	REV. NO.	DATE	REVISED	DRAWN BY	CKD. BY
		0	11/06/97	ISSUE FOR CONSTRUCTION	DAB	KJP

TOSCO
Tosco Northwest Company
A Division of Tosco Corporation
5528 NW Doane St.
Portland, Oregon 97210

ALPHA ENGINEERS and CONSTRUCTORS, INC.
19 NW 5th AVE, SUITE 204, PORTLAND, OR. 97209 Tel:(503)227-3317/Fax:(503)227-3244

DRAWN BY	DAB
CHKD BY	KJP
APPD BY	WHB
SCALE	NONE
DATE	09/22/97

PORTLAND TERMINAL
PORTLAND, OREGON
TRUCK LOAD RACK UPGRADE PROJECT
PIPING ISOMETRIC
84 SG LINE

DRAWING NO.	SHEET	REV.
0608-0-2104	2 OF 3	0

6802104.2.DWG <CPD: 11/06/97 [TIME: 10:38 AM]>

COP0021358

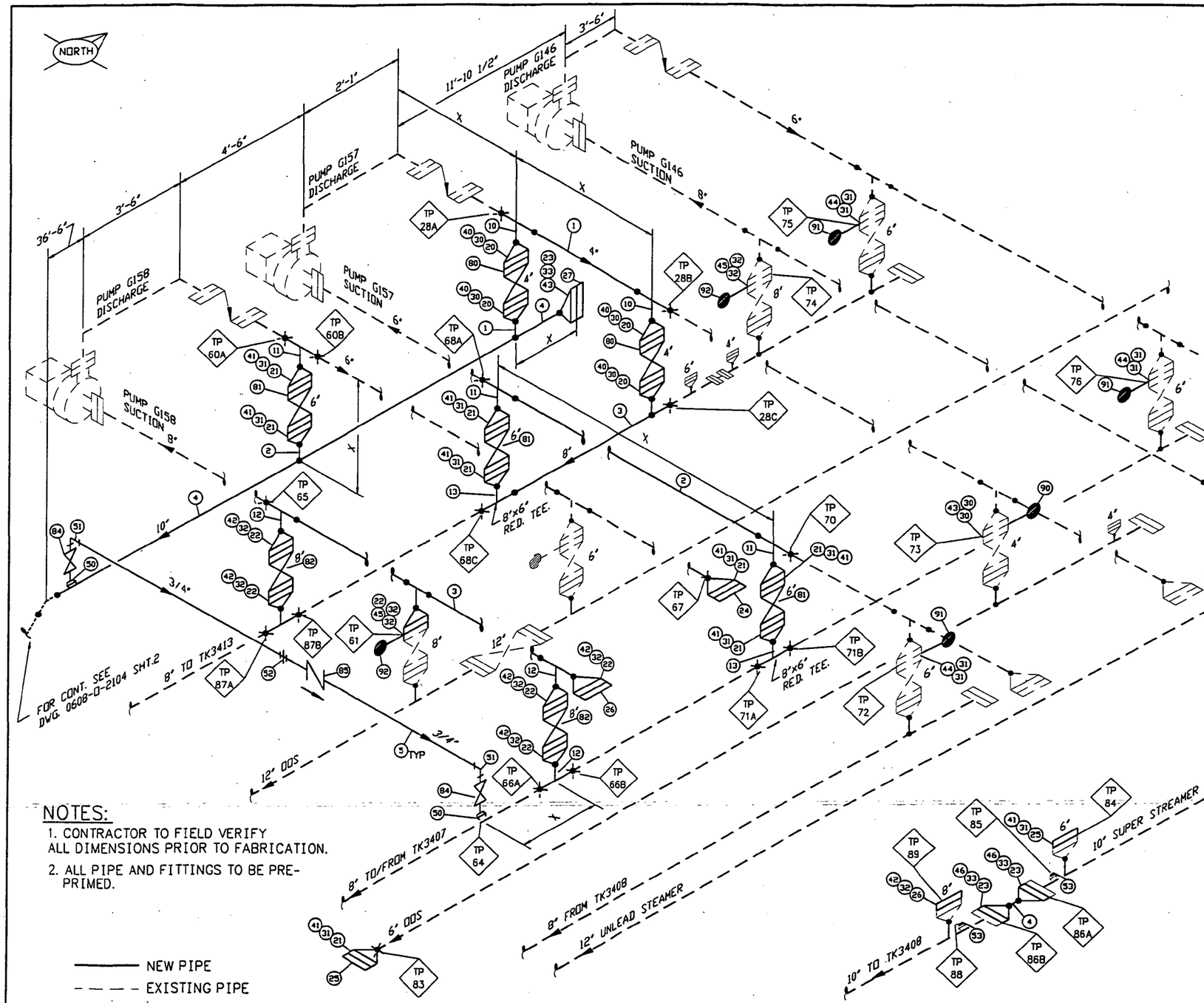

MARK	QTY	SIZE	SCH	DESCRIPTION	TAG
PIPE					
1	4'	4"	SCH 40	PIPE A-53 GRADE B	
2	4'	6"	SCH 40	PIPE A-53 GRADE B	
3	3'	8"	SCH 40	PIPE A-53 GRADE B	
4	48'	10"	SCH 40	PIPE A-53 GRADE B	
5	10	3/4"x __LG	SCH 160	PIPE NIPPLE, T.B.E, A-53 GRADE B	
FITTINGS					
10	2	4"	SCH 40	TEE, BW, ASTM A234 GRADE WPB	
11	4	6"	SCH 40	TEE, BW, ASTM A234 GRADE WPB	
12	6	8"	SCH 40	TEE, BW, ASTM A234 GRADE WPB	
13	2	8"x6"	SCH 40	REDUCING TEE, BW, ASTM A234 GRADE WPB	
14	1	10"x8"	SCH 40	REDUCING TEE, BW, ASTM A234 GRADE WPB	
15	1	10"x6"	SCH 40	REDUCING TEE, BW, ASTM A234 GRADE WPB	
FLANGES					
20	4	4"	150LB	FLANGE, WN, SCH 40 BORE, R.F., ASTM A105	
21	12	6"	150LB	FLANGE, WN, SCH 40 BORE, R.F., ASTM A105	
22	10	8"	150LB	FLANGE, WN, SCH 40 BORE, R.F., ASTM A105	
23	3	10"	150LB	FLANGE, WN, SCH 40 BORE, R.F., ASTM A105	
24	2	10"	150LB	FLANGE, SLIP-ON SCH 40 BORE, R.F., ASTM A105	
25	4	6"	150LB	FLANGE,BLIND, R.F., ASTM A105	
26	3	8"	150LB	FLANGE,BLIND, R.F., ASTM A105	
27	1	10"	150LB	FLANGE,BLIND, R.F., ASTM A105	
GASKETS					
30	6	4"	150LB	GASKET, 1/16" THK GARLOK	
31	19	6"	150LB	GASKET, 1/16" THK GARLOK	
32	12	8"	150LB	GASKET, 1/16" THK GARLOK	
33	5	10"	150LB	GASKET, 1/16" THK GARLOK	
MISC					
90	1	4"	150LB	FRY PAN, 3/8" THK, ASTM A285	
91	3	6"	150LB	FRY PAN, 1/2" THK, ASTM A285	
92	2	8"	150LB	FRY PAN, 1/2" THK, ASTM A285	

BOLTS				
40	4 SETS	4"	–	4 - 5/8" X 3 1/2" LG, STUD BOLT W/ 2 H.D. NUTS, B7/2H
41	13 SETS	6"	–	8 - 3/4" X 3 3/4" LG, STUD BOLT W/ 2 H.D. NUTS, B7/2H
42	10 SETS	8"	–	8 - 3/4" X 4" LG, STUD BOLT W/ 2 H.D. NUTS, B7/2H
43	1 SET	4"	–	4 - 5/8" X 4" LG, STUD BOLT W/ 2 H.D. NUTS, B7/2H
44	3 SETS	6"	–	8 - 3/4" X 4 1/4" LG, STUD BOLT W/ 2 H.D. NUTS, B7/2H
45	2 SETS	8"	–	8 - 3/4" X 4 3/4" LG, STUD BOLT W/ 2 H.D. NUTS, B7/2H
46	5 SETS	10"	–	12 - 7/8" X 4 1/2" LG, STUD BOLT W/ 2 H.D. NUTS, B7/2H
THREADED FITTINGS				
50	4	3/4"x8"	3000LB	THREADOLET, ASTM A-105
51	4	3/4"	3000LB	90 DEG ELBOW, THREADED, ASTM A-105
52	2	3/4"	3000LB	UNION, THREADED, ASTM A-105
53	2	3/4"	3000LB	HEX HEAD PLUG, THREADED, ASTM A-105
VALVES				
80	2	4"	150LB	GATE VALVE, FLANGED, RF (BY OWNER)
81	4	6"	150LB	GATE VALVE, FLANGED, RF (BY OWNER)
82	3	8"	150LB	GATE VALVE, FLANGED, RF (BY OWNER)
83	1	10"	150LB	GATE VALVE, FLANGED, RF (BY OWNER)
84	4	3/4"	CL800	GATE VALVE, THREADED
85	2	3/4"	CL800	CHECK VALVE THREADED
NOTES:				

NOTES:

1. CONTRACTOR TO FIELD VERIFY ALL DIMENSIONS PRIOR TO FABRICATION.
2. ALL PIPE AND FITTINGS TO BE PRE-PRIMED.

——— NEW PIPE
– – – – EXISTING PIPE

DRAWING NO.	REFERENCE DRAWINGS	REV. NO.	DATE	REVISED	DRAWN BY	CKD. BY
		0	11/06/97	ISSUE FOR CONSTRUCTION	DAB	KJP

TOSCO
Tosco Northwest Company
A Division of Tosco Corporation
5528 NW Doane St.
Portland, Oregon 97210

ALPHA ENGINEERS and CONSTRUCTORS, INC.
19 NW 5th AVE, SUITE 204, PORTLAND, OR. 97209 Tel:(503)227-3317/Fax:(503)227-3244

DRAWN BY	DAB
CHKD BY	KJP
APPD BY	WHB
SCALE	NONE
DATE	09/22/97

PORTLAND TERMINAL
PORTLAND, OREGON
TRUCK LOAD RACK UPGRADE PROJECT
PIPING ISOMETRIC
84 SG LINE AND GASOLINE
PUMP AREA TF#2

DRAWING NO.	SHEET	REV.
0608-0-2104	3 OF 3	0

6802104 3.DWG <CPD: 11/06/97 [TIME: 10:37 AM] >

COP00021359

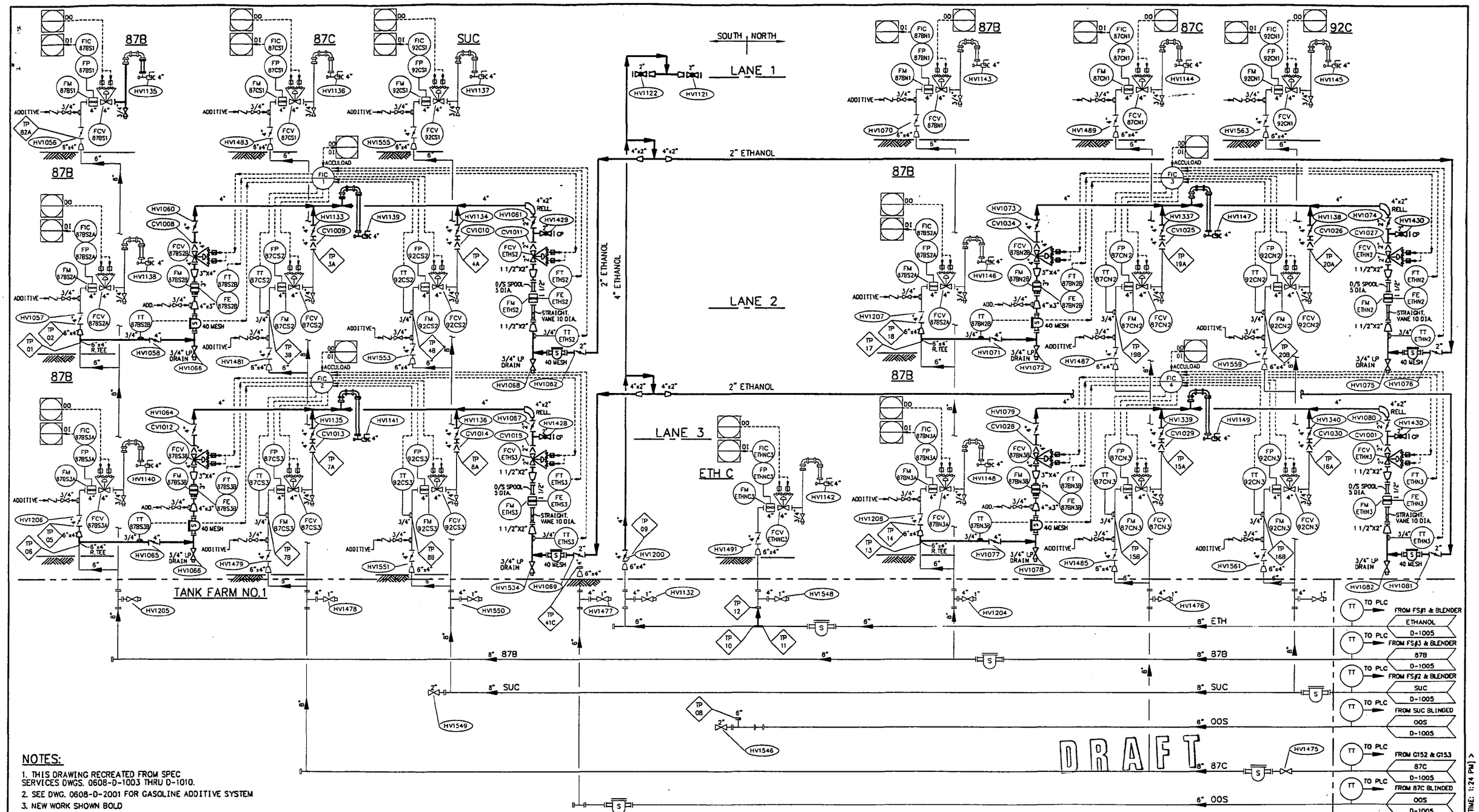

NOTES:

1. THIS DRAWING RECREATED FROM SPEC SERVICES DWGS. 0608-D-1003 THRU D-1010.
2. SEE DWG. 0608-D-2001 FOR GASOLINE ADDITIVE SYSTEM
3. NEW WORK SHOWN BOLD

DRAWING NO.	REFERENCE DRAWINGS	REV. NO.	DATE	REVISED	DRAWN BY	CKD. BY
0608-D-1000	LEGEND AND SYMBOLS	A	08/19/97	ACCULOAD INSTALLATION - PRELIMINARY FOR HAZOP	DAB	KJP
0608-D-1005	REFINED PRODUCTS SYSTEM SFPPL YARD	B	08/29/97	ADDED STRAINERS AND ETHANOL CALIBRATION PORTS	DAB	KJP
0608-D-2001	GASOLINE ADDITIVE SYSTEM	C	09/10/97	ADDED 4" BFV'S ON 87C AND 92C RISERS	DAB	WHB
		D	09/19/97	REVISED 3" STRAINERS TO 4" STRAINERS, REMOVE 3" DS SPOOL	DAB	WHB
		E	09/30/97	ADDED 4" HV1200 ON ETHANOL LINE	DAB	WHB

TOSCO
Tosco Northwest Company
A Division of Tosco Corporation
5528 NW Doane St.
Portland, Oregon 97210

ALPHA ENGINEERS and CONSTRUCTORS, INC.
19 NW 5th AVE., SUITE 204, PORTLAND, OR. 97209 Tel:(503)227-3317/Fax:(503)227-3244

DRAWN BY	DAB
CHKD BY	KJP
APPD BY	WHB
SCALE	NONE
DATE	08/18/97

PORTLAND TERMINAL
PORTLAND, OREGON
PIPING & INSTRUMENTATION DIAGRAM
REFINED PRODUCTS SYSTEM
TRUCK LOADING RACK

DRAWING NO.	SHEET	REV.
0608-D-1004	1 OF 1	D

\PDI0041.DWG <CPD: 09/30/97 [TIME: 1:24 PM] >

COP0021360

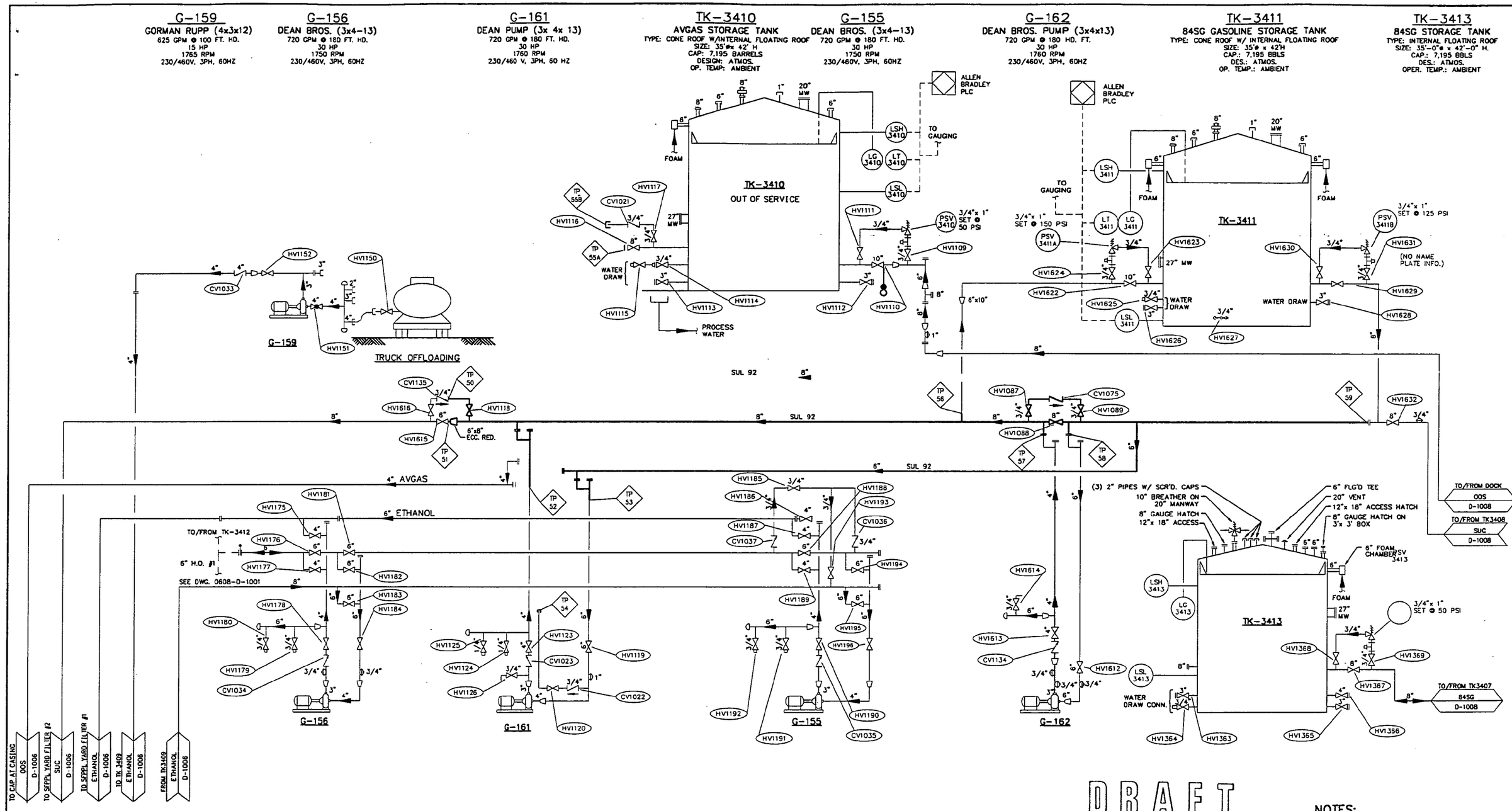

DRAFT

NOTES:

1. THIS DRAWING RECREATED FROM SPEC SERVICES DWGS. 0608-D-1003 THRU D-1010.
2. NEW WORK SHOWN BOLD

DRAWING NO.	REFERENCE DRAWINGS	REV. NO.	DATE	REVISED	DRAWN BY	CKD. BY
0608-D-1000	LEGEND AND SYMBOLS	A	08/19/97	ACCULOAD INSTALLATION - PRELIMINARY FOR HAZOP	DAB	KJP
0608-D-1006	REFINED PRODUCTS SYSTEM TANK FARM NO.2	B	08/29/97	REVISED TK3413 SERVICE, CONTINUATION TO TK3407	DAB	KJP
0608-D-1008	REFINED PRODUCTS SYSTEM TANK FARM NO.2	C	10/01/97	REVISED 8" SUC LINE TIE POINTS, CHANGED 8" BACK TO 6" LINE	DAB	KJP
0608-D-1001	HEATING OIL SYSTEM					

TOSCO
Tosco Northwest Company
A Division of Tosco Corporation
5528 NW Doane St.
Portland, Oregon 97210

ALPHA ENGINEERS and CONSTRUCTORS, INC.
19 NW 5th AVE, SUITE 204, PORTLAND, OR. 97209 Tel:(503)227-3317/Fax:(503)227-3244

DRAWN BY	DAB
CHKD BY	KJP
APPD BY	WHB
SCALE	NONE
DATE	08/19/97

PORTLAND TERMINAL
PORTLAND, OREGON
PIPING & INSTRUMENTATION DIAGRAM
REFINED PRODUCTS SYSTEM
TANK FARM NO.2

DRAWING NO.	SHEET	REV.
0608-D-1007	1 OF 1	C

\PD1007C.DWG <CPD: 10/02/97 [TIME: 4:17 PM] >

COP00213611

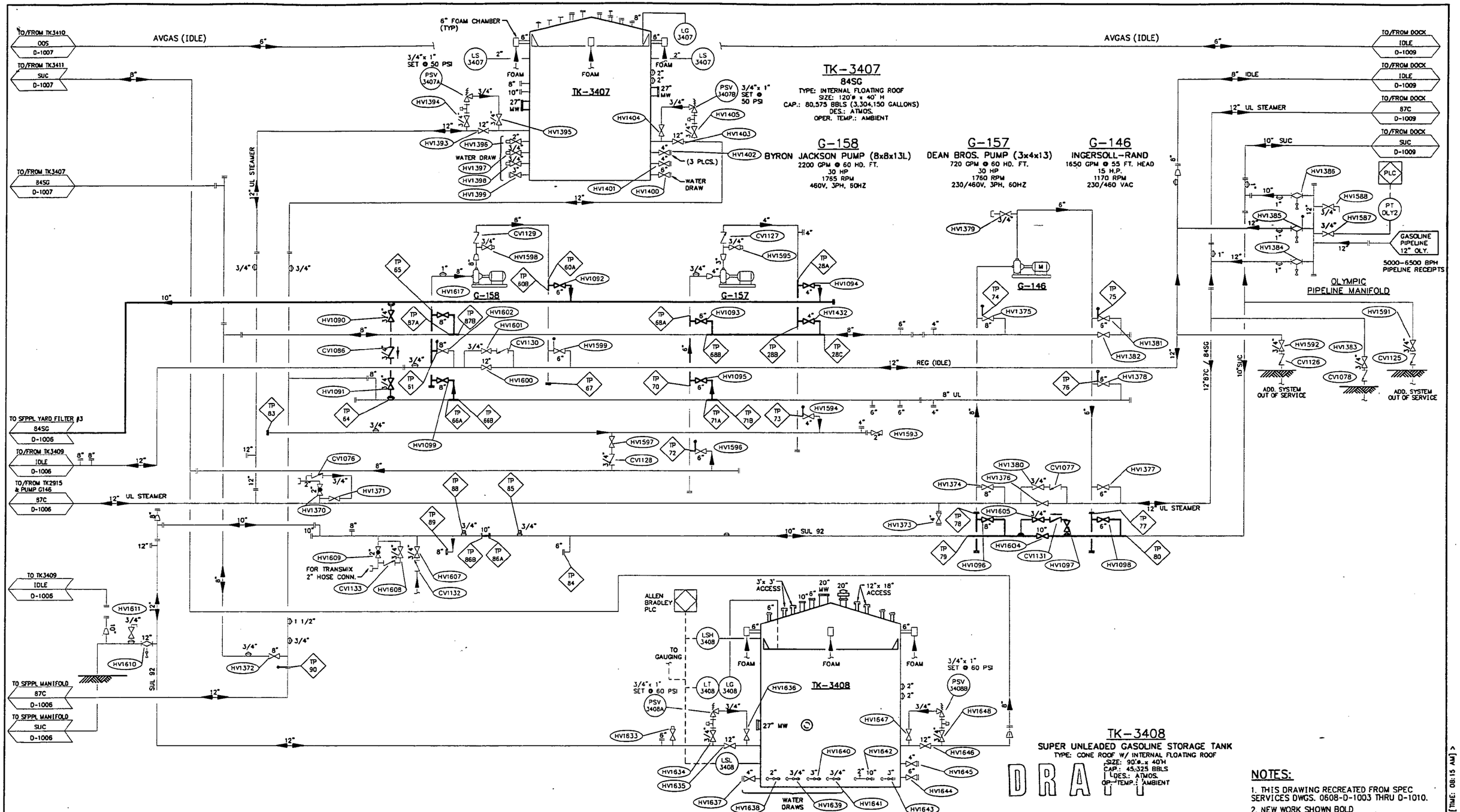

NOTES:

1. THIS DRAWING RECREATED FROM SPEC SERVICES DWGS. 0608-D-1003 THRU D-1010.
2. NEW WORK SHOWN BOLD

DRAWING NO.	REFERENCE DRAWINGS	REV. NO.	DATE	REVISED	DRAWN BY	CKD. BY
0608-D-1000	LEGEND AND SYMBOLS	A	08/19/97	ACCULOAD INSTALLATION - PRELIMINARY FOR HAZOP	DAB	KJP
0608-D-1006	REFINED PRODUCTS SYSTEM TANK FARM NO.2	B	08/29/97	REVISED G157 SUCTION, CONTINUATION TO TK3407	DAB	KJP
0608-D-1007	REFINED PRODUCTS SYSTEM TANK FARM NO.2	C	10/01/97	UPDATED PER HAZOP COMMENTS. ADDED 8" VALVE AT G158	DAB	KJP
0608-D-1009	REFINED PRODUCTS SYSTEM DOCK AREA					

TOSCO
Tosco Northwest Company
A Division of Tosco Corporation
5528 NW Doane St.
Portland, Oregon 97210

ALPHA ENGINEERS and CONSTRUCTORS, INC.
19 NW 5th AVE, SUITE 204, PORTLAND, OR. 97209 Tel:(503)227-3317/Fax:(503)227-3244

DRAWN BY	DAB
CHKD BY	KJP
APPD BY	WHB
SCALE	NONE
DATE	08/19/97

PORTLAND TERMINAL
PORTLAND, OREGON
PIPING & INSTRUMENTATION DIAGRAM
REFINED PRODUCTS SYSTEM
TANK FARM NO.2

DRAWING NO.	SHEET	REV.
0608-D-1008	1 OF 1	C

\P01008C.DWG <CPD: 10/03/97 [TIME: 08:15 AM] >

COP00213622

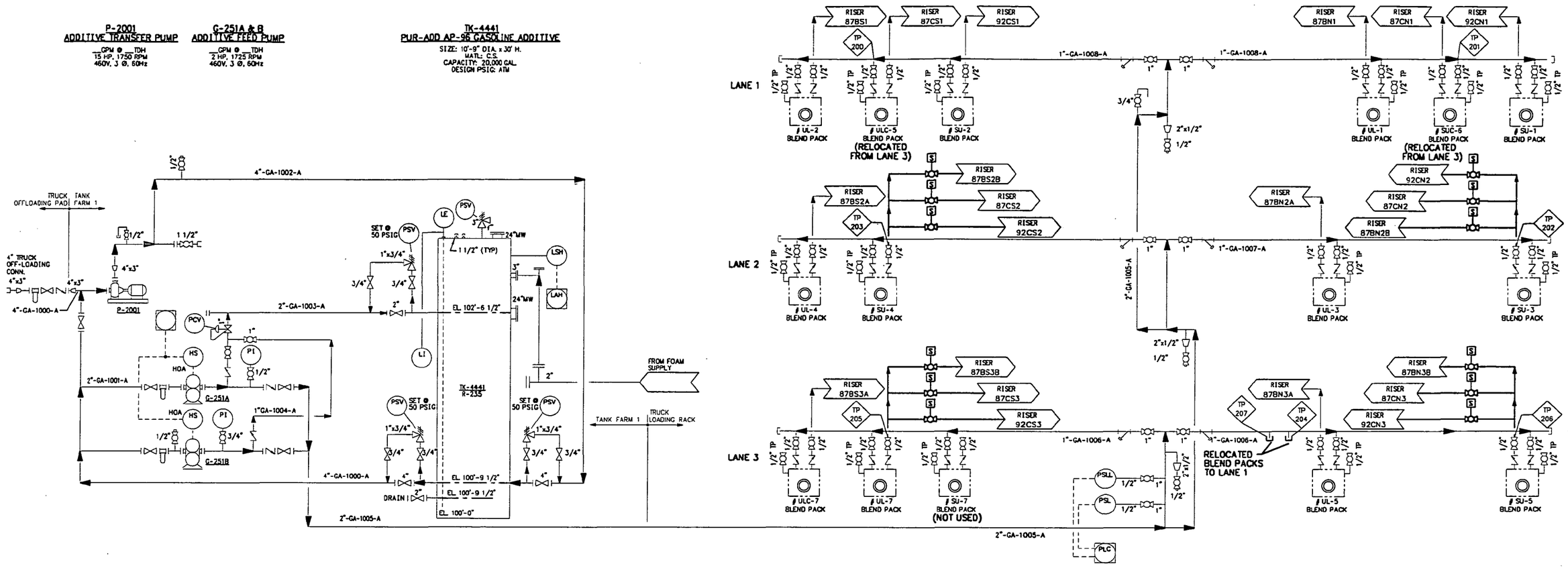

DRAFT

NOTES:

1. SEE DWG. 0608-D-1004 FOR TRUCK LOADING RACK
2. NEW WORK SHOWN BOLD

DRAWING NO.	REFERENCE DRAWINGS	REV. NO.	DATE	REVISED	DRAWN BY	CKD. BY
0608-D-1000	LEGEND AND SYMBOLS	A	08/29/97	ACCULOAD INSTALLATION - PRELIMINARY FOR HAZOP	DAB	
0608-D-1004	REFINED PRODUCTS SYSTEM TRUCK LOADING RACK					

TOSCO
Tosco Northwest Company
A Division of Tosco Corporation
5528 NW Doane St.
Portland, Oregon 97210

ALPHA ENGINEERS and CONSTRUCTORS, INC.
19 NW 5th AVE., SUITE 204, PORTLAND, OR. 97209 Tel:(503)227-3317/Fax:(503)227-3244

DRAWN BY	DAB
CHKD BY	
APPD BY	
SCALE	NONE
DATE	08/18/97

PORTLAND TERMINAL
PORTLAND, OREGON
PIPING & INSTRUMENTATION DIAGRAM
GASOLINE ADDITIVE SYSTEM

DRAWING NO.	SHEET	REV.
0608-D-2001	1 OF 1	A

\PD2001A.DWG <CPD: 08/29/97 [TIME: 10:34 AM]>

COP00213363

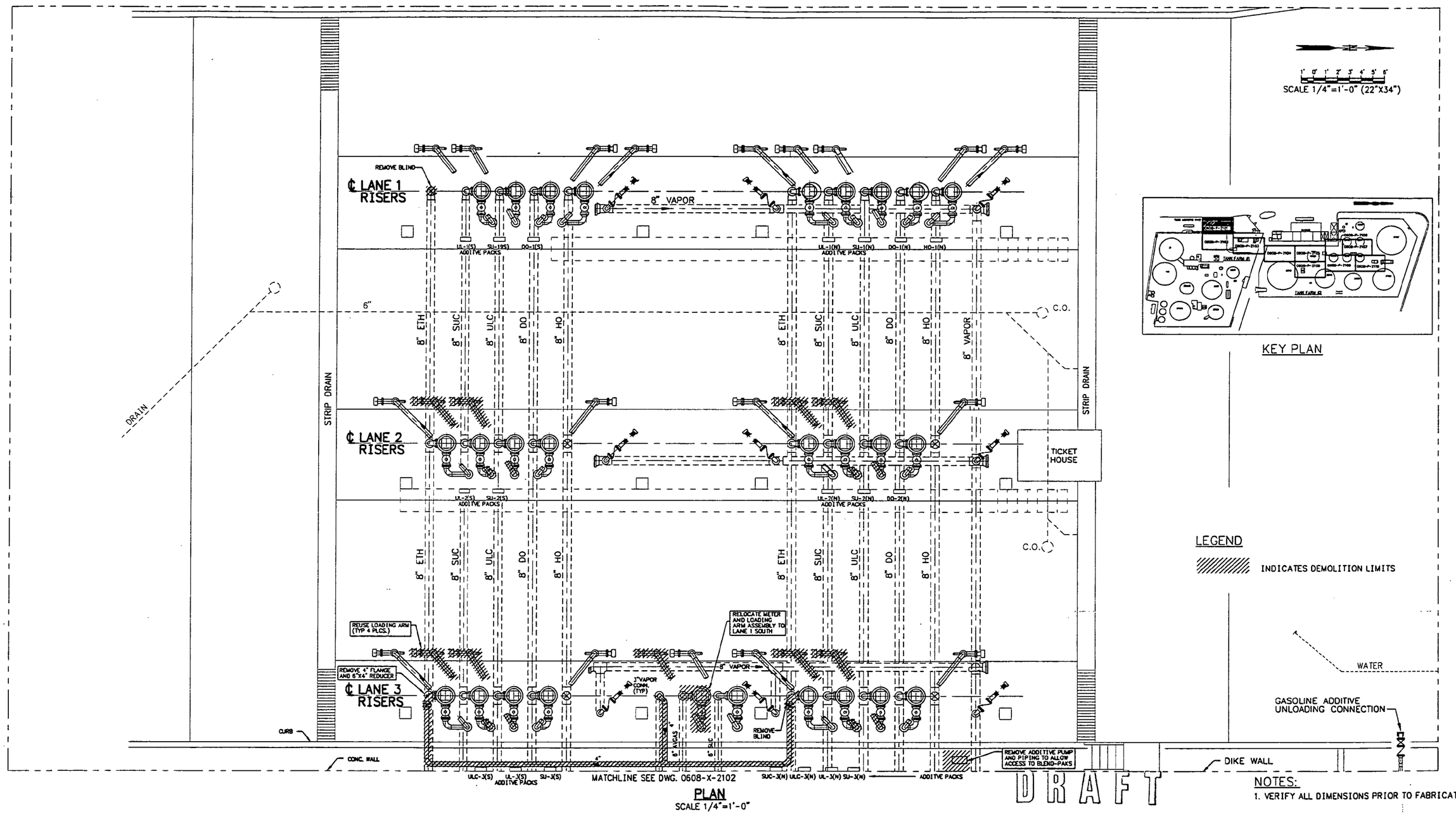

DRAWING NO.	REFERENCE DRAWINGS	REV. NO.	DATE	REVISED	DRAWN BY	CKD. BY
0608-X-2102	PIPING TANK FARM NO.1 TRUCK LOAD RACK PIPEWAY	A	10/03/97	ISSUE FOR BID ONLY	DAB	

TOSCO
Tosco Distribution Company
A Division of Tosco Corporation
5528 NW Doane St.
Portland, Oregon 97210

ALPHA ENGINEERS and CONSTRUCTORS, INC.
19 NW 5th AVE, SUITE 204, PORTLAND, OR. 97209 Tel:(503)227-3317/Fax:(503)227-3244

DRAWN BY	DAB
CHKD BY	
APPD BY	
SCALE	AS SHOWN
DATE	09/05/97

PORTLAND TERMINAL
PORTLAND, OREGON
TRUCK LOAD RACK UPGRADE PROJECT
PIPING
TRUCK LOADING RACK
DEMOLITION PLAN

DRAWING NO.	SHEET	REV.
0608-X-2101	1 OF 1	A

68X2101A.DWG <CPD: 10/03/97 [TIME: 10:41 AM]>

COP00213647

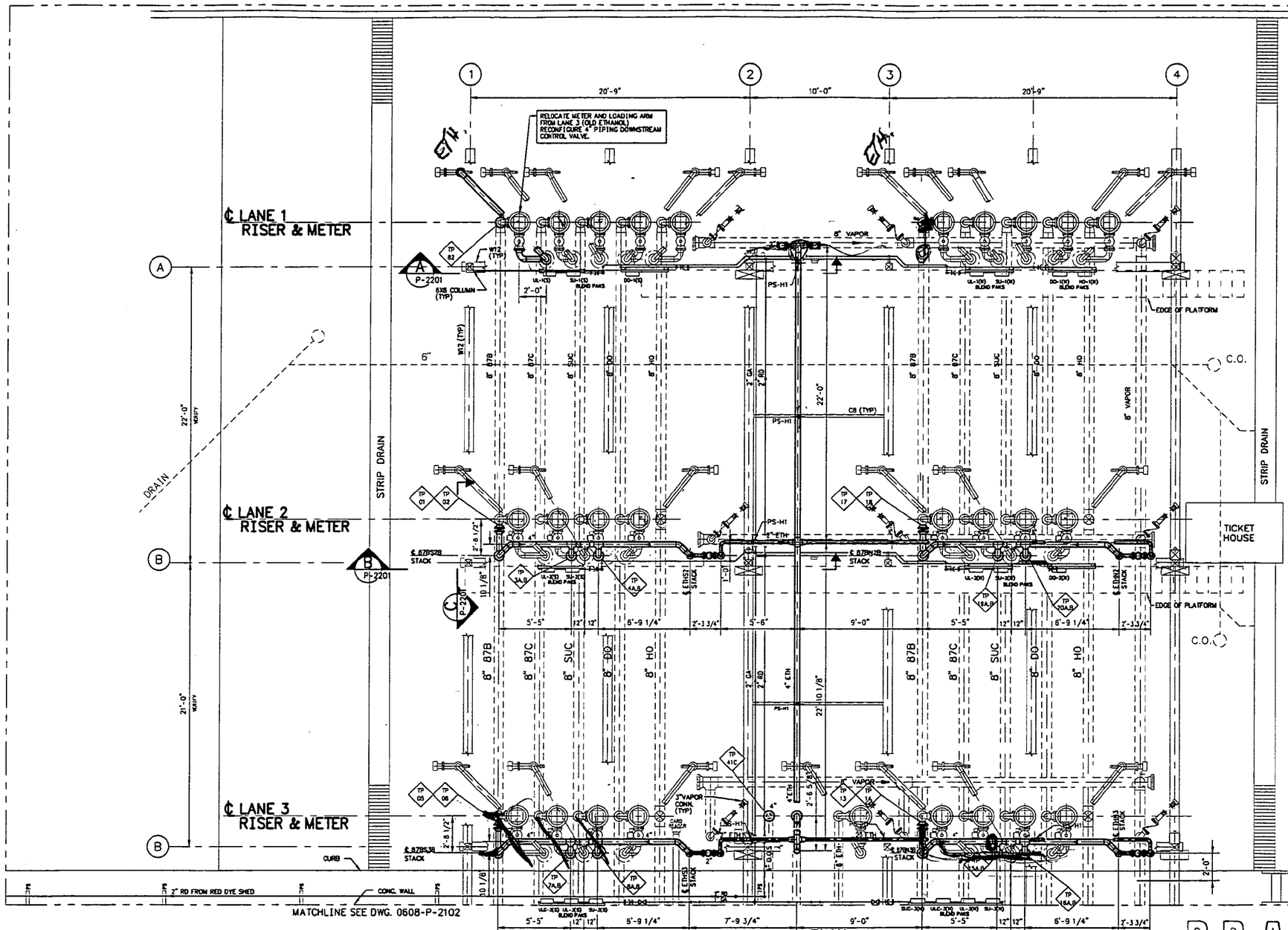

PLAN
SCALE 1/4"=1'-0"

SCALE 1/4"=1'-0" (22"X34")

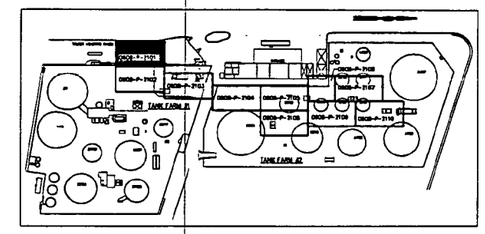

KEY PLAN

LEGEND

EXISTING PIPING & EQUIPMENT

NEW PIPING AND EQUIPMENT

NOTES:

1. VERIFY ALL DIMENSIONS PRIOR TO FABRICATION.
2. SEE DWG. 0608-X-2101 FOR DEMOLITION
3. SEE DWG. 0608-P-2202 FOR PIPE SUPPORTS
4. FOR ADDITIVE PIPING SEE DWG. _____

DRAFT

DRAWING NO.	REFERENCE DRAWINGS	REV. NO.	DATE	REVISED	DRAWN BY	CKD. BY
0608-P-2102	PIPING TANK FARM NO.1 SOUTH OF BLENDER AREA	A	10/03/97	ISSUE FOR BID ONLY	DAB	

TOSCO
Tosco Distribution Company
A Division of Tosco Corporation
5528 NW Doane St.
Portland, Oregon 97210

ALPHA ENGINEERS and CONSTRUCTORS, INC.
19 NW 5th AVE., SUITE 204, PORTLAND, OR. 97209 Tel:(503)227-3317/Fax:(503)227-3244

DRAWN BY	DAB
CHKD BY	
APPD BY	
SCALE	AS SHOWN
DATE	09/05/97

PORTLAND TERMINAL
PORTLAND, OREGON
TRUCK LOAD RACK UPGRADE PROJECT
PIPING
TRUCK LOADING RACK

DRAWING NO.	SHEET	REV.
0608-P-2101	1 OF 1	A

0608P2101D.DWG <CPD: 10/03/97 [TIME: 10:42 AM] >

COP00213655

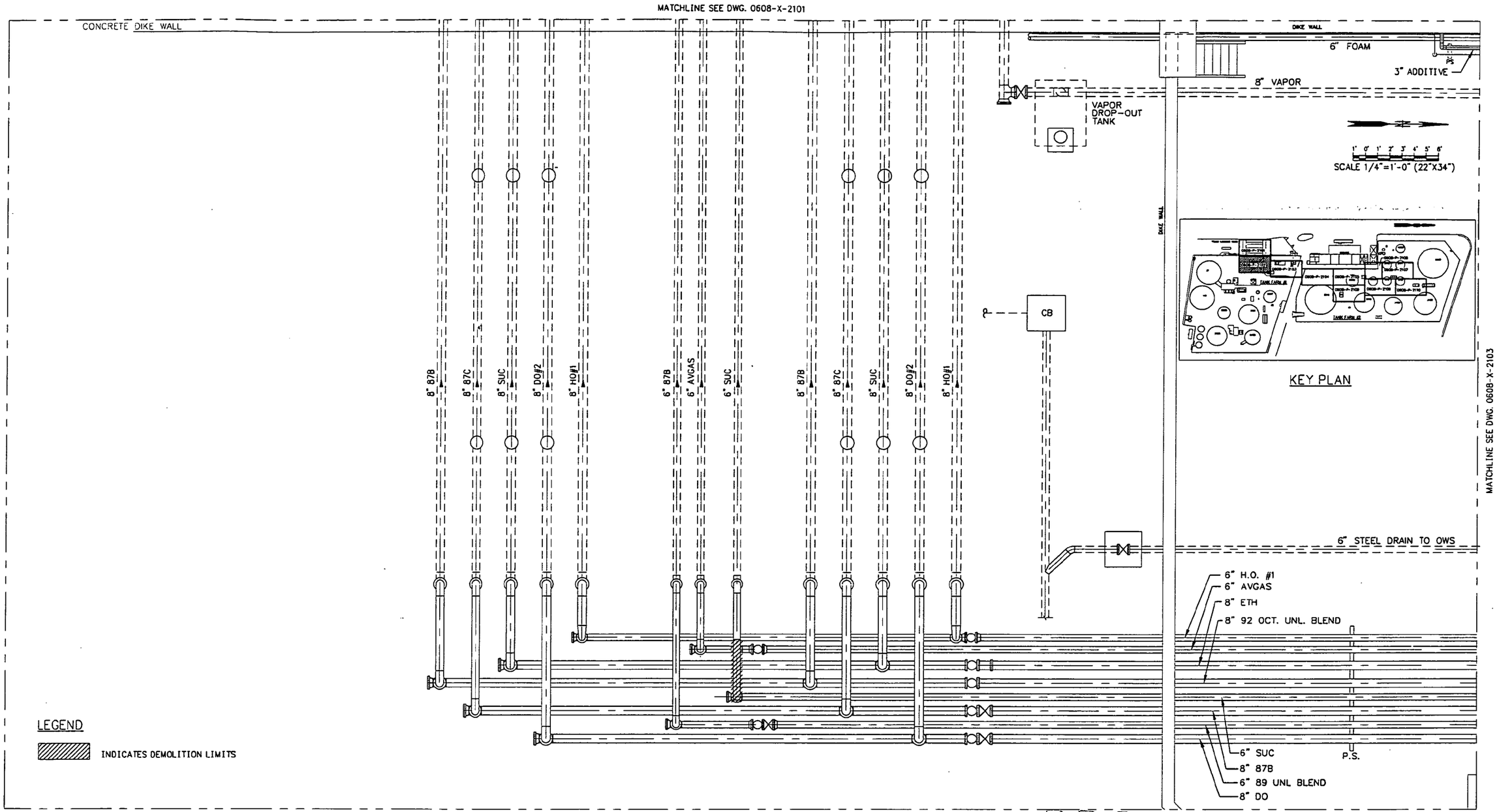

PLAN
SCALE 1/4"=1'-0"

NOTES:
1. VERIFY ALL DIMENSIONS PRIOR TO FABRICATION.

DRAWING NO.	REFERENCE DRAWINGS	REV. NO.	DATE	REVISED	DRAWN BY	CKD. BY
0608-X-2103	PIPING SFPPL YARD TANK FARM NO.1 DEMOLITION	A	10/03/97	ISSUE FOR BID ONLY	DAB	
0608-X-2101	PIPING TRUCK LOADING RACK DEMOLITION					

TOSCO
Tosco Distribution Company
A Division of Tosco Corporation
5528 NW Doane St.
Portland, Oregon 97210

ALPHA ENGINEERS and CONSTRUCTORS, INC.
19 NW 5th AVE, SUITE 204, PORTLAND, OR. 97209 Tel:(503)227-3317/Fax:(503)227-3244

DRAWN BY	DAB
CHKD BY	
APPD BY	
SCALE	AS SHOWN
DATE	09/05/97

PORTLAND TERMINAL
PORTLAND, OREGON
TRUCK LOAD RACK MODIFICATIONS
PIPING TANK FARM NO.1
SOUTH OF BLENDER SKID AREA
DEMOLITION

DRAWING NO.	SHEET	REV.
0608-X-2102	1 OF 1	A

68X2102A.DWG <CPD: 10/03/97 [TIME: 10:38 AM] >

COP00021366

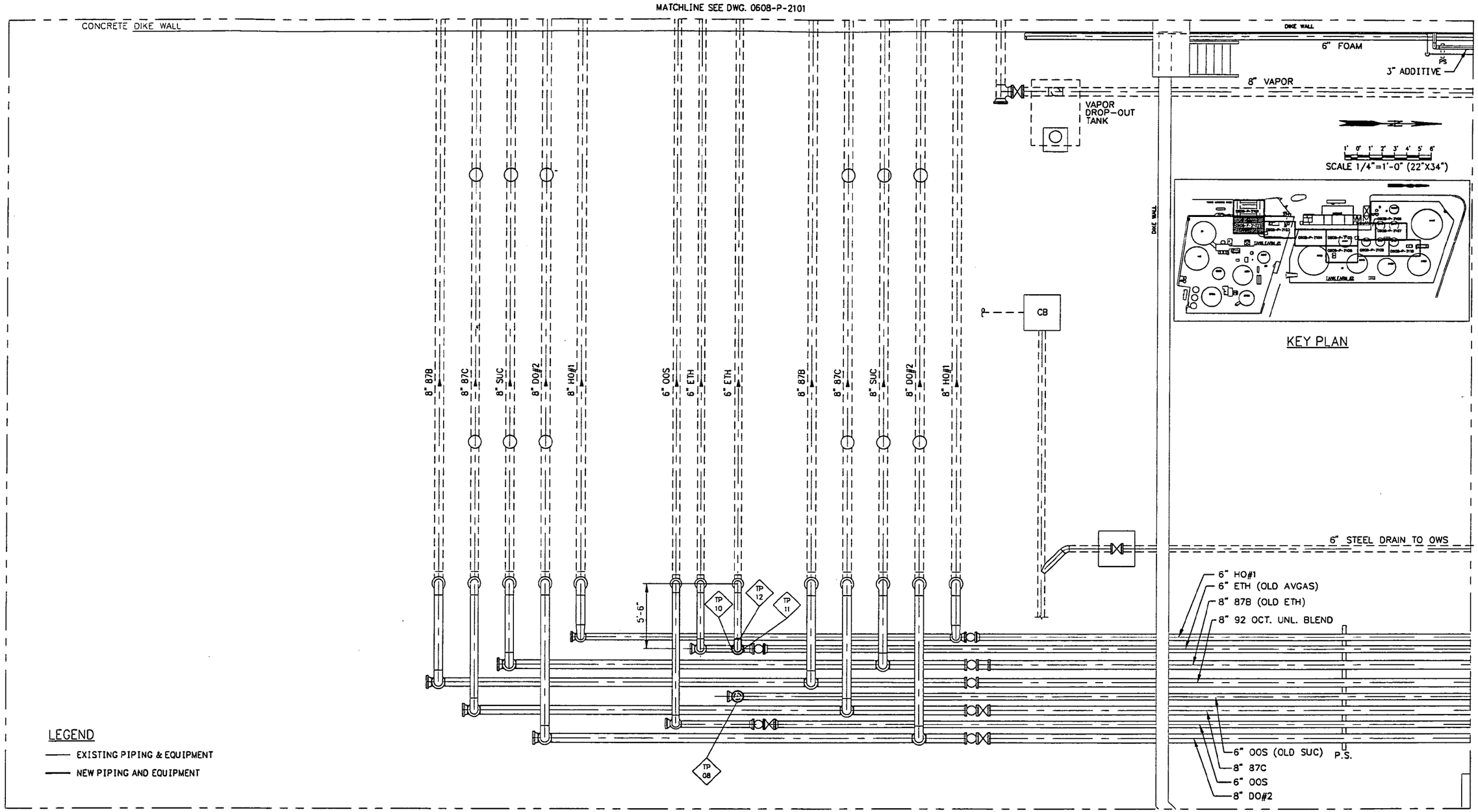

PLAN
SCALE 1/4"=1'-0"

NOTES:
1. VERIFY ALL DIMENSIONS PRIOR TO FABRICATION.

DRAFT

DRAWING NO.	REFERENCE DRAWINGS	REV. NO.	DATE	REVISED	DRAWN BY	CKD. BY
0608-P-2101	PIPING TRUCK LOADING RACK	A	10/03/97	ISSUE FOR BID ONLY	DAB	
0608-P-2103	PIPING SFPPL YARD AREA					

TOSCO
Tosco Distribution Company
A Division of Tosco Corporation
5528 NW Doane St.
Portland, Oregon 97210

ALPHA ENGINEERS and CONSTRUCTORS, INC.
19 NW 5th AVE, SUITE 204, PORTLAND, OR. 97209 Tel:(503)227-3317/Fax:(503)227-3244

DRAWN BY	DAB
CHKD BY	
APPD BY	
SCALE	AS SHOWN
DATE	09/05/97

PORTLAND TERMINAL
PORTLAND, OREGON
TRUCK LOAD RACK MODIFICATIONS
PIPING
TANK FARM NO.1

DRAWING NO.	SHEET	REV.
0608-P-2102	1 OF 1	A

68P2102A.DWG <CPD: 10/03/97 [TIME: 10:45 AM]>

COP00021367

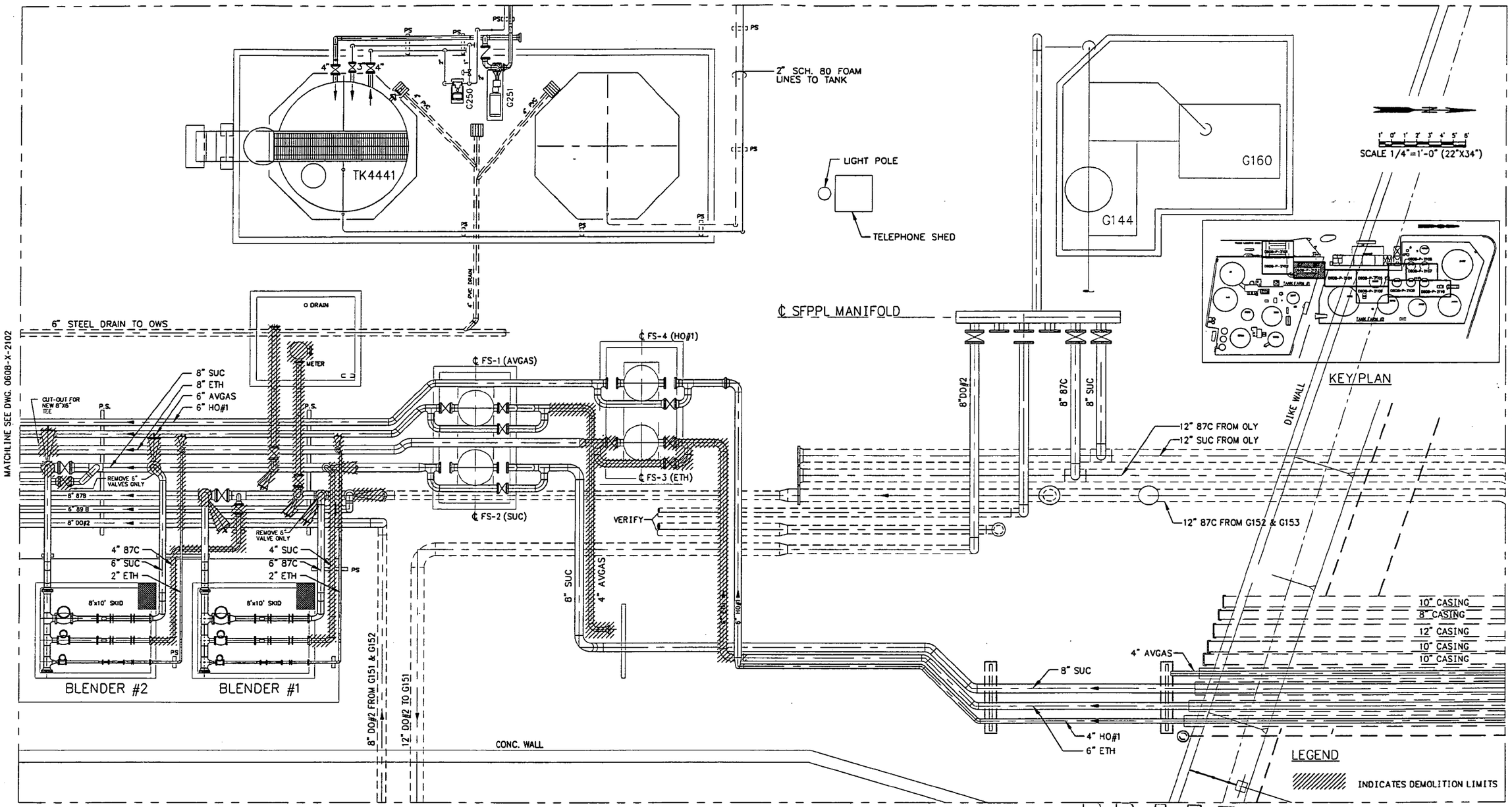

PLAN
SCALE 1/4"=1'-0"

NOTES:
1. VERIFY ALL DIMENSIONS PRIOR TO FABRICATION.

DRAWING NO.	REFERENCE DRAWINGS	REV. NO.	DATE	REVISED	DRAWN BY	CKD. BY
0608-X-2102	TANK FARM NO. 1 PIPING SOUTH OF BLENDER SKIDS DEMOLITION	A	10/03/97	ISSUE FOR BID ONLY	DAB	
0608-P-2104	TANK FARM NO.2 ALLEY CROSSING DEMOLITION					

TOSCO
Tosco Distribution Company
A Division of Tosco Corporation
5528 NW Doane St.
Portland, Oregon 97210

ALPHA ENGINEERS and CONSTRUCTORS, INC.
19 NW 5th AVE, SUITE 204, PORTLAND, OR. 97209 Tel:(503)227-3317/Fax:(503)227-3244

DRAWN BY	DAB
CHKD BY	
APPD BY	
SCALE	AS SHOWN
DATE	09/05/97

PORTLAND TERMINAL
PORTLAND, OREGON
TRUCK LOADRACK MODIFICATIONS
PIPING
SFPPL YARD TANK FARM NO.1
DEMOLITION

DRAWING NO.	SHEET	REV.
0608-X-2103	1 OF 1	A

68X2103A.DWG <CPD: 10/03/97 [TIME: 10:54 AM] >

COP00021368

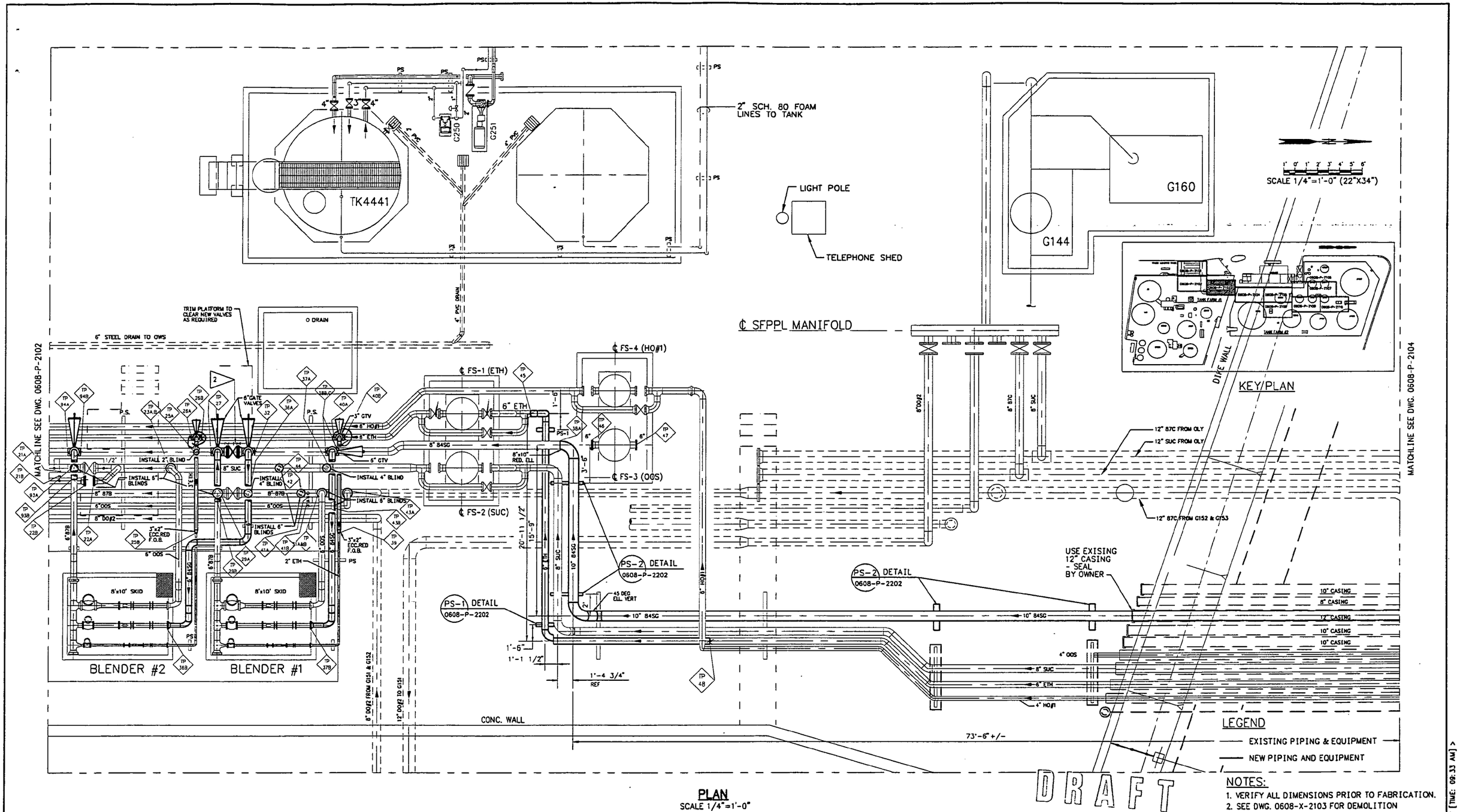

PLAN
SCALE 1/4"=1'-0"

DRAWING NO.	REFERENCE DRAWINGS	REV. NO.	DATE	REVISED	DRAWN BY	CKD. BY
0608-P-2102	TANK FARM NO. 1 PIPING	A	09/12/97	FOR REVIEW AND COMMENT	DAB	
0608-P-2104	TANK FARM NO.2 PIPING					

TOSCO
Tosco Distribution Company
A Division of Tosco Corporation
5528 NW Doane St.
Portland, Oregon 97210

ALPHA ENGINEERS and CONSTRUCTORS, INC.
19 NW 5th AVE, SUITE 204, PORTLAND, OR. 97209 Tel:(503)227-3317/Fax:(503)227-3244

DRAWN BY	DAB
CHKD BY	
APPD BY	
SCALE	AS SHOWN
DATE	09/05/97

PORTLAND TERMINAL
PORTLAND, OREGON
TRUCK LOAD RACK UPGRADE PROJECT
PIPING
SFPPL YARD TANK FARM NO.1

DRAWING NO.	SHEET	REV.
0608-P-2103	1 OF 1	A

68P2103A.DWG <CP3> 09/18/97 [TIME: 09:33 AM]

COP00213691

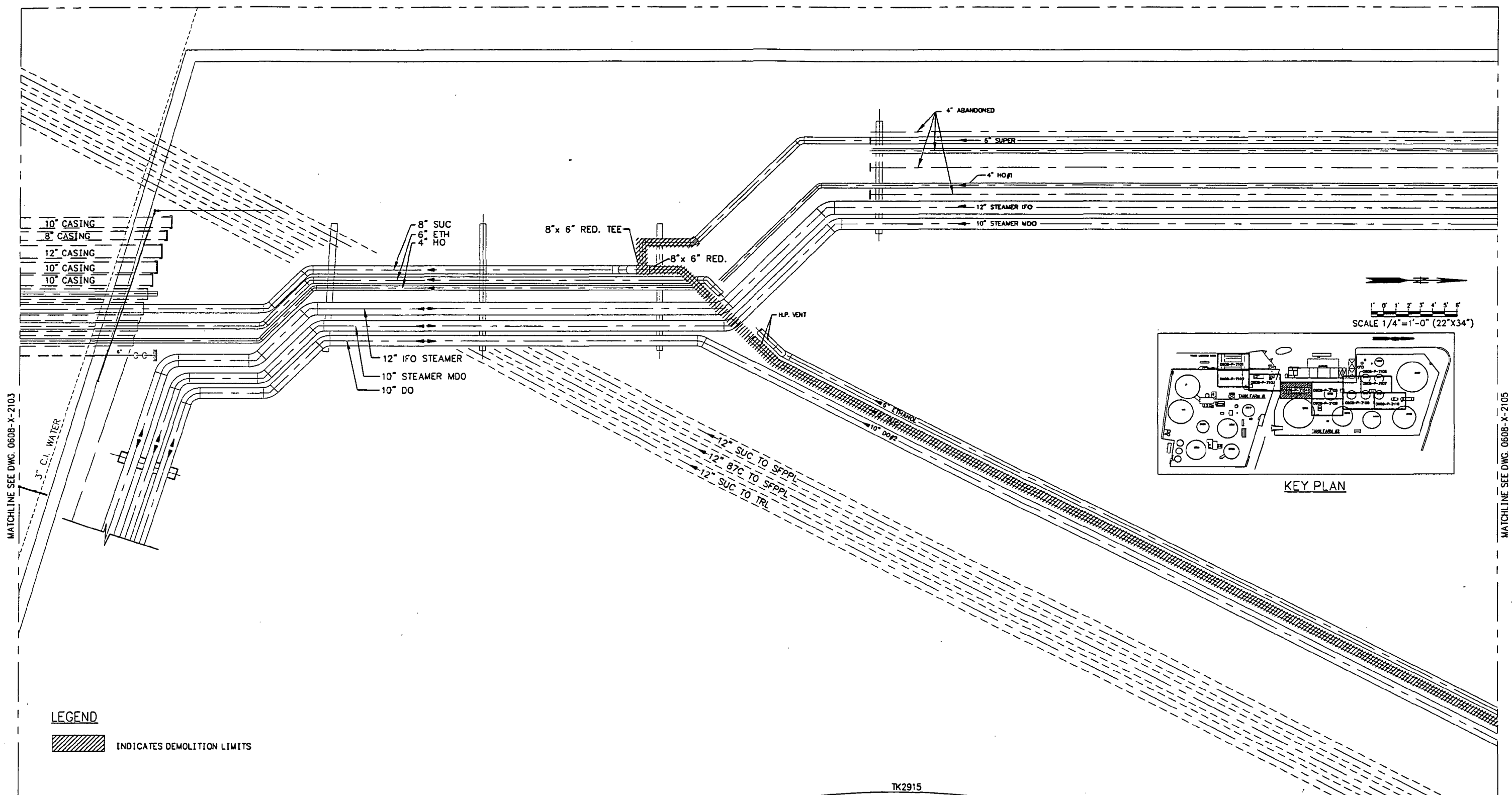

PLAN
SCALE 1/4"=1'-0"

DRAFT

NOTES:
1. VERIFY ALL DIMENSIONS PRIOR TO FABRICATION.

DRAWING NO.	REFERENCE DRAWINGS	REV. NO.	DATE	REVISED	DRAWN BY	CKD. BY
0608-X-2103	SFPPL YARD TANK FARM NO.1 PIPING DEMOLITION	A	10/03/97	ISSUE FOR BID ONLY	DAB	
0608-X-2105	TANK FARM NO.2 TK 2982 AREA DEMOLITION PLAN					

TOSCO
Tosco Distribution Company
A Division of Tosco Corporation
5528 NW Doane St.
Portland, Oregon 97210

ALPHA ENGINEERS and CONSTRUCTORS, INC.
19 NW 5th AVE, SUITE 204, PORTLAND, OR. 97209 Tel:(503)227-3317/Fax:(503)227-3244

DRAWN BY	DAB
CHKD BY	
APPD BY	
SCALE	AS SHOWN
DATE	09/05/97

PORTLAND TERMINAL
PORTLAND, OREGON
TRUCK LOAD RACK UPGRADE PROJECT
PIPING TANK FARM NO.2
ALLEY CROSSING
DEMOLITION

DRAWING NO.	SHEET	REV.
0608-X-2104	1 OF 1	A

68X2104A.DWG <CPD: 10/03/97 [TIME: 11:18 AM] >

COP00021370

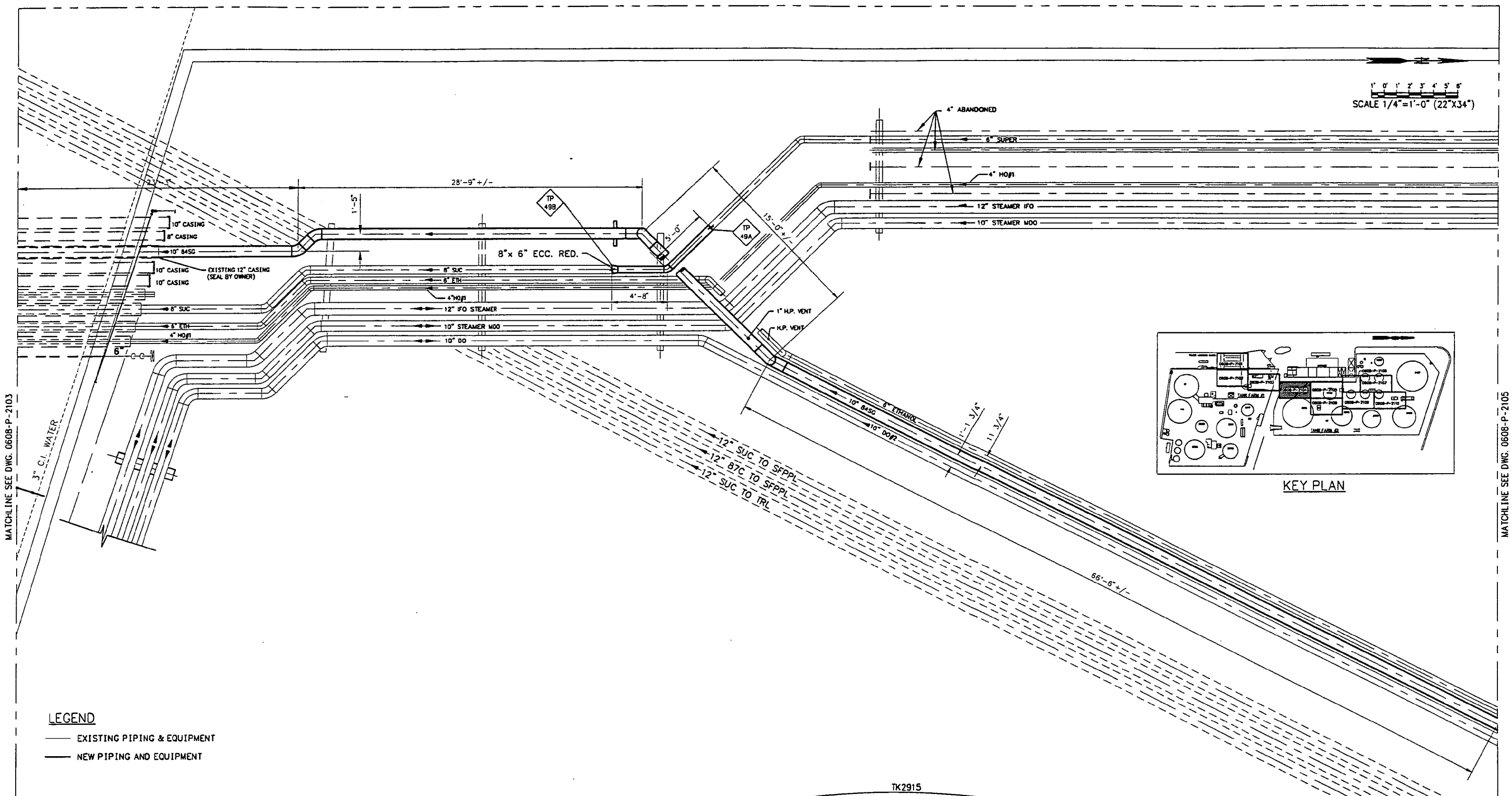

PLAN
SCALE 1/4"=1'-0"

DRAFT

NOTES:
1. VERIFY ALL DIMENSIONS PRIOR TO FABRICATION.
2. SEE DWG. 0608-X-2104 FOR DEMOLITION.

DRAWING NO.	REFERENCE DRAWINGS	REV. NO.	DATE	REVISED	DRAWN BY	CKD. BY
0608-P-2103	SFPPL YARD TANK FARM NO.1 PLAN	A	10/03/97	ISSUE FOR BID ONLY	DAB	
0608-P-2105	TANK FARM NO.2 TK 2982 AREA PLAN					

TOSCO
Tosco Distribution Company
A Division of Tosco Corporation
5528 NW Doane St.
Portland, Oregon 97210

ALPHA ENGINEERS and CONSTRUCTORS, INC.
19 NW 5th AVE, SUITE 204, PORTLAND, OR. 97209 Tel:(503)227-3317/Fax:(503)227-3244

DRAWN BY	DAB
CHKD BY	
APPD BY	
SCALE	AS SHOWN
DATE	09/05/97

PORTLAND TERMINAL
PORTLAND, OREGON
TRUCK LOAD RACK UPGRADE PROJECT
PIPING
TANK FARM NO.2
ALLEY CROSSING

DRAWING NO.	SHEET	REV.
0608-P-2104	1 OF 1	A

68P2104A.DWG <CPD: 10/03/97 [TIME: 11:23 AM] >

COP00021371

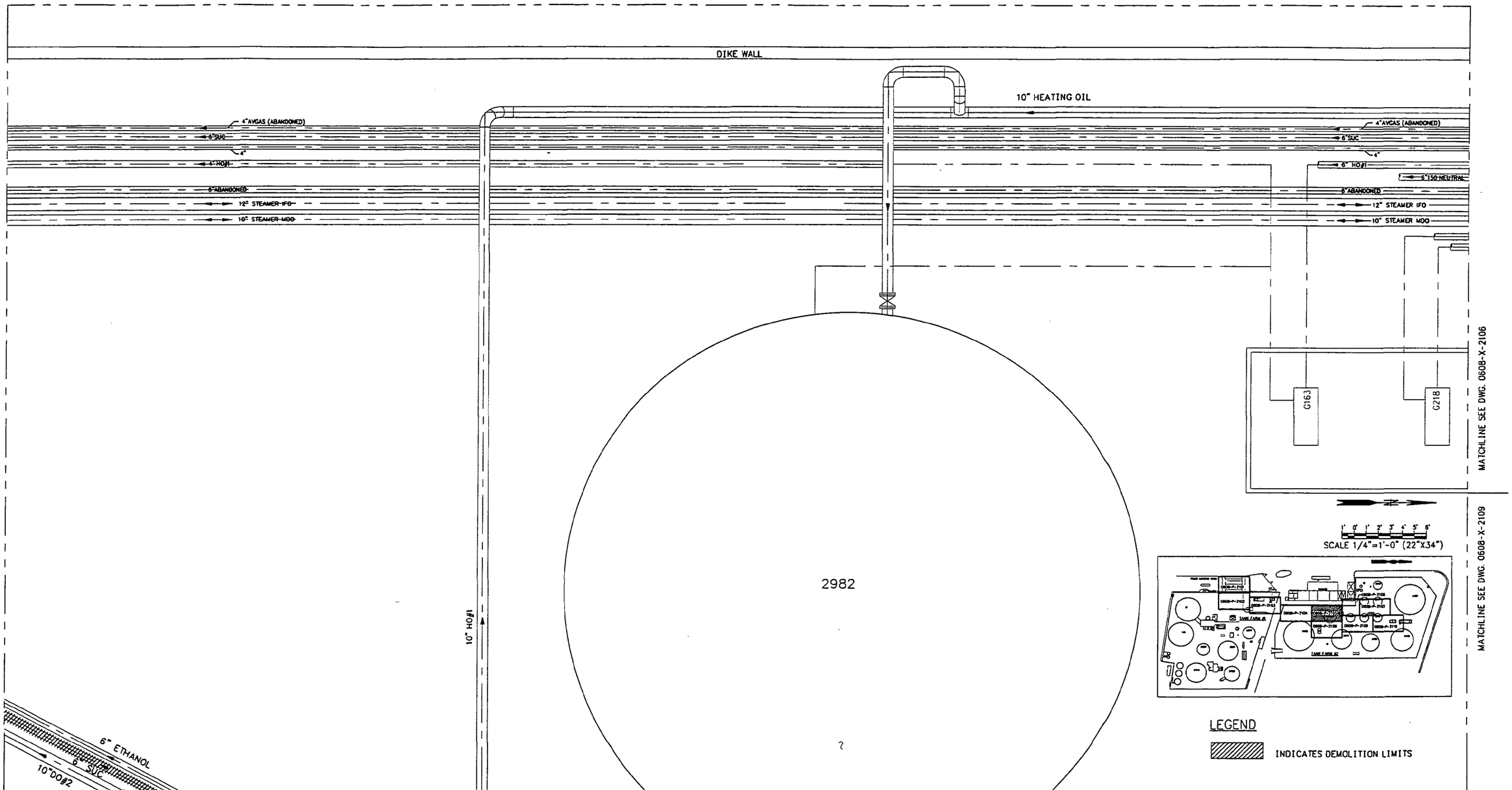

PLAN
SCALE 1/4"=1'-0"

DRAFT

NOTES:
1. VERIFY ALL DIMENSIONS PRIOR TO FABRICATION.

DRAWING NO.	REFERENCE DRAWINGS	REV. NO.	DATE	REVISED	DRAWN BY	CKD. BY
0608-X-2104	PIPING TANK FARM NO.2 ALLEY CROSSING DEMOLITION	A	10/03/97	ISSUE FOR BID ONLY	DAB	
0608-X-2109	PIPING TANK FARM NO.2 TK 2982 AND TK 3412 AREA DEMOLITION					
0608-X-2108	PIPING TANK FARM NO.2 PUMP G152 AND G153 AREA DEMOLITION					

TOSCO
Tosco Distribution Company
A Division of Tosco Corporation
5528 NW Doane St.
Portland, Oregon 97210

ALPHA ENGINEERS and CONSTRUCTORS, INC.
19 NW 5th AVE., SUITE 204, PORTLAND, OR. 97209 Tel:(503)227-3317/Fax:(503)227-3244

DRAWN BY	DAB
CHKD BY	
APPD BY	
SCALE	AS SHOWN
DATE	09/05/97

PORTLAND TERMINAL
PORTLAND, OREGON
TRUCK LOAD RACK UPGRADE PROJECT
PIPING TANK FARM NO.2
TK 2982 AREA
DEMOLITION

DRAWING NO.	SHEET	REV.
0608-X-2105	1 OF 1	A

68X2105A.DWG <CPD: 10/03/97 [TIME: 11:33 AM] >

COP00213722

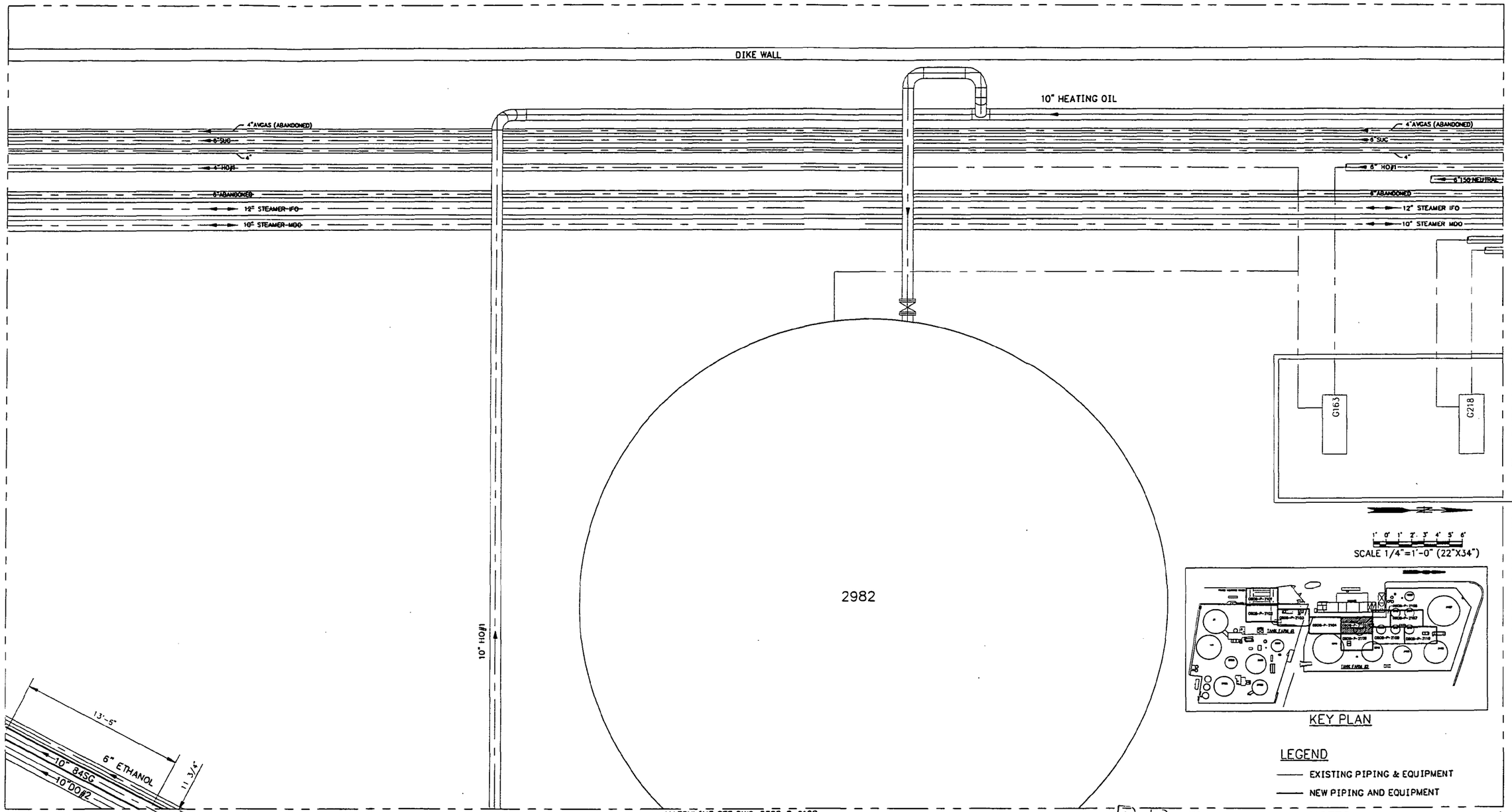

PLAN
SCALE 1/4"=1'-0"

NOTES:
1. VERIFY ALL DIMENSIONS PRIOR TO FABRICATION.
2. SEE DWG. 0608-X-2105 FOR DEMOLITION.

DRAWING NO.	REFERENCE DRAWINGS	REV. NO.	DATE	REVISED	DRAWN BY	CKD. BY
0608-P-2104	PIPING TANK FARM NO.2 ALLEY CROSSING AREA	A	10/03/97	ISSUE FOR BID ONLY	DAB	
0608-P-2108	TANK FARM NO.2 PUMP G152 AND G153 AREA					
0608-P-2109	TANK FARM NO.2 TK2982 AND TK3412 AREA					

TOSCO
Tosco Distribution Company
A Division of Tosco Corporation
5528 NW Doane St.
Portland, Oregon 97210

ALPHA ENGINEERS and CONSTRUCTORS, INC.
19 NW 5th AVE, SUITE 204, PORTLAND, OR. 97209 Tel:(503)227-3317/Fax:(503)227-3244

DRAWN BY	DAB
CHKD BY	
APPD BY	
SCALE	AS SHOWN
DATE	09/05/97

PORTLAND TERMINAL
PORTLAND, OREGON
TRUCK LOAD RACK UPGRADE PROJECT
PIPING
TANK FARM NO.2

DRAWING NO.	SHEET	REV.
0608-P-2105	1 OF 1	A

6BP2105A.DWG <CPD: 10/03/97 [TIME: 11:40 AM] >

COP00213733

SCALE 1/4"=1'-0" (22"X34")

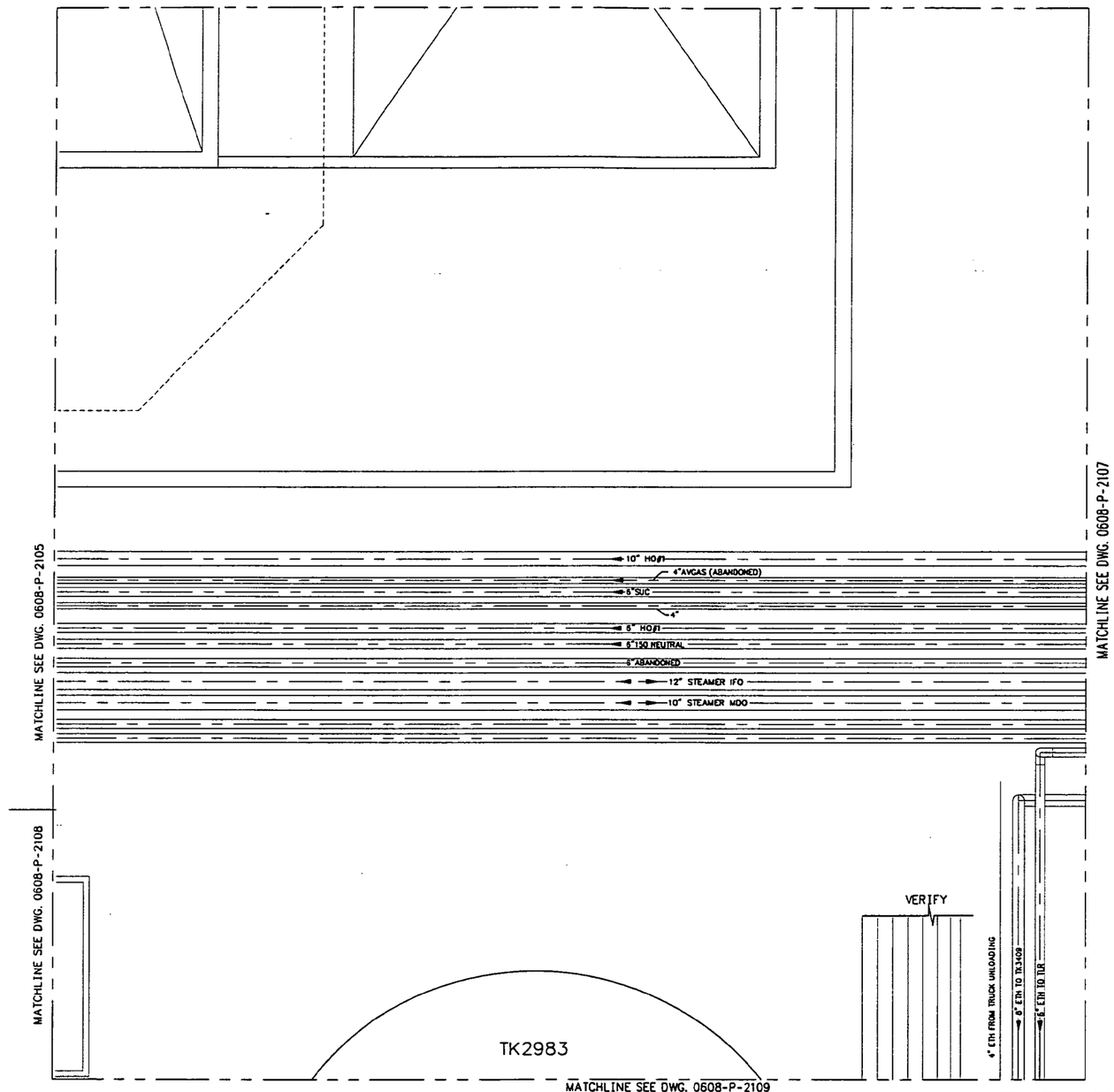

PLAN
SCALE 1/4"=1'-0"

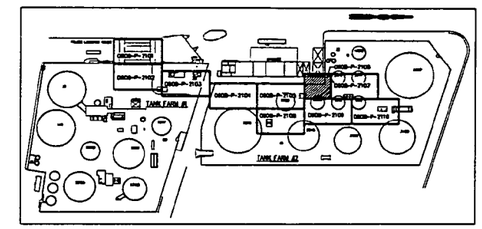

KEY PLAN

NO NEW WORK THIS DWG.
FOR REFERENCE ONLY

DRAFT

NOTES:
1. VERIFY ALL DIMENSIONS PRIOR TO FABRICATION.

DRAWING NO.	REFERENCE DRAWINGS	REV. NO.	DATE	REVISED	DRAWN BY	CKD. BY
		A	10/03/97	FOR INFORMATION ONLY	DAB	

TOSCO
Tosco Distribution Company
A Division of Tosco Corporation
5528 NW Doane St.
Portland, Oregon 97210

ALPHA ENGINEERS and CONSTRUCTORS, INC.
19 NW 5th AVE, SUITE 204, PORTLAND, OR 97209 Tel:(503)227-3317/Fax:(503)227-3244

DRAWN BY	DAB
CHKD BY	
APPD BY	
SCALE	AS SHOWN
DATE	09/05/97

PORTLAND TERMINAL
PORTLAND, OREGON
TRUCK LOAD RACK UPGRADE PROJECT
PIPING TANK FARM NO.2
TK 2983 AREA

DRAWING NO.	SHEET	REV.
0608-P-2106	1 OF 1	A

68P2106A.DWG <CPD: 10/03/97 [TIME: 11:47 AM]>

COP00213374

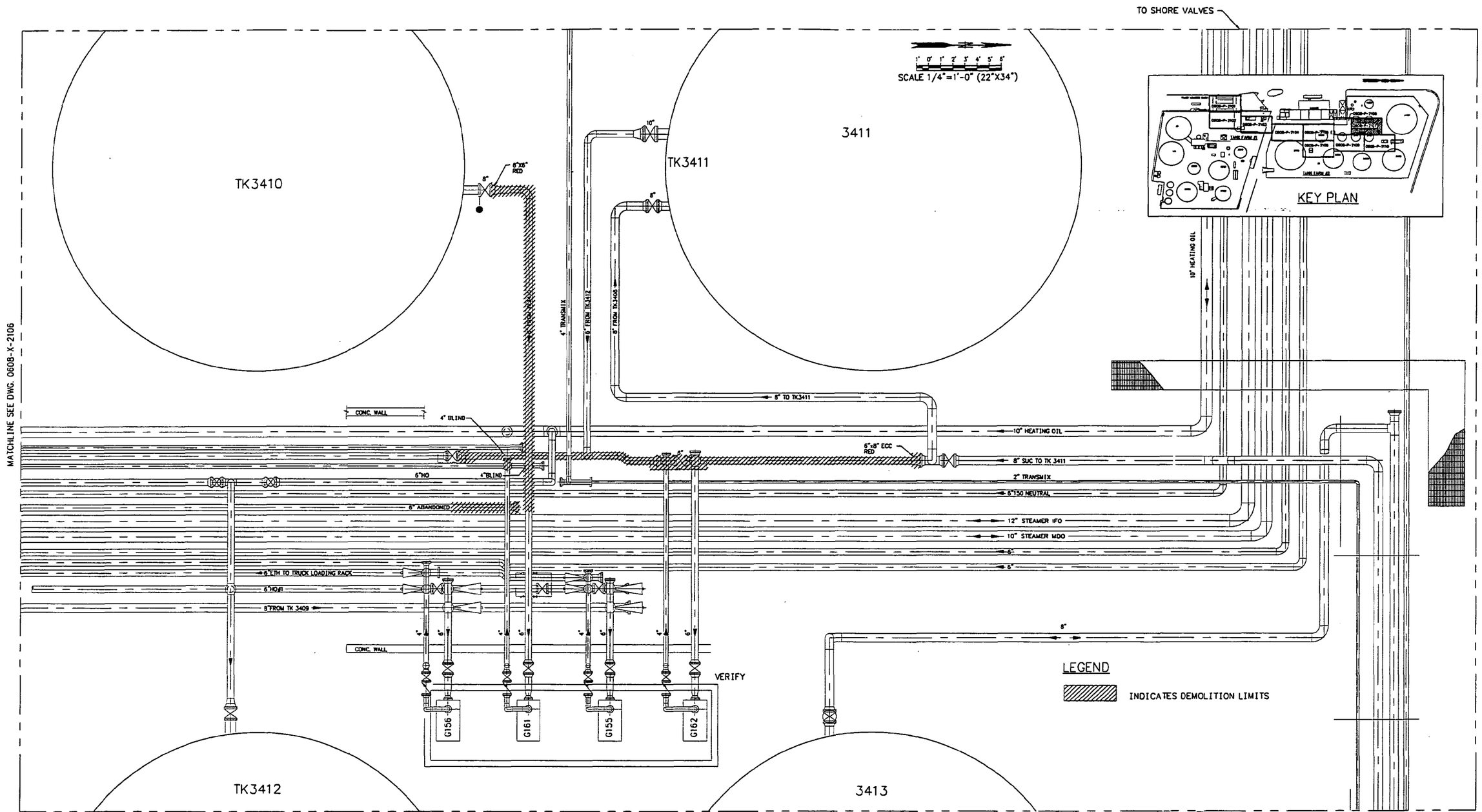

PLAN
SCALE 1/4"=1'-0"

DRAFT

NOTES:
1. VERIFY ALL DIMENSIONS PRIOR TO FABRICATION.

DRAWING NO.	REFERENCE DRAWINGS	REV. NO.	DATE	REVISED	DRAWN BY	CKD. BY
0608-X-2109	PIPING TANK FARM NO.2 TK 2982 AND TK3412 AREA DEMOLITION	A	10/03/97	ISSUE FOR BID ONLY	DAB	
0608-X-2110	PIPING TANK FARM NO.2 G146, G157, AND G158 AREA DEMOLITION					

TOSCO
Tosco Distribution Company
A Division of Tosco Corporation
5528 NW Doane St.
Portland, Oregon 97210

ALPHA ENGINEERS and CONSTRUCTORS, INC.
19 NW 5th AVE, SUITE 204, PORTLAND, OR. 97209 Tel:(503)227-3317/Fax:(503)227-3244

DRAWN BY	DAB
CHKD BY	
APPD BY	
SCALE	AS SHOWN
DATE	09/05/97

PORTLAND TERMINAL
PORTLAND, OREGON
TRUCK LOAD RACK UPGRADE PROJECT
PIPING TANK FARM NO.2
PUMP G155, G156, G161, AND G162 AREA DEMOLITION

DRAWING NO.	SHEET	REV.
0608-X-2107	1 OF 1	A

<CPD: 10/03/97 [TIME: 12:11 AM]>
68X2107A.DWG

COP00021375

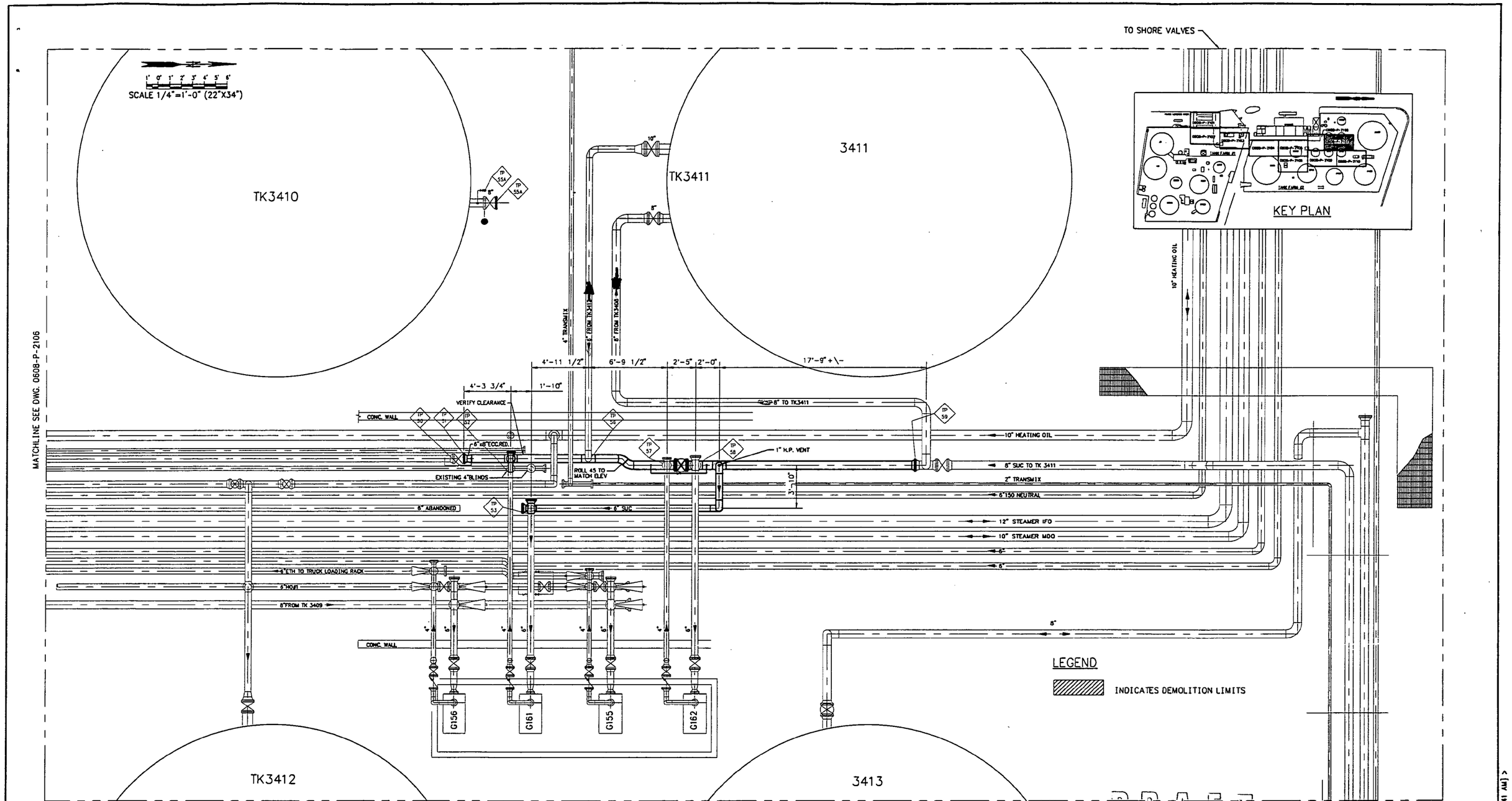

PLAN

SCALE 1/4"=1'-0"

DRAFT

NOTES:

1. VERIFY ALL DIMENSIONS PRIOR TO FABRICATION.
2. SEE DWG. 0608-X-2107 FOR DEMOLITION.

DRAWING NO.	REFERENCE DRAWINGS	REV. NO.	DATE	REVISED	DRAWN BY	CKD. BY
0608-P-2109	PIPING TANK FARM NO.2 TK2982 AND TK3412 AREA	A	10/03/97	ISSUE FOR BID ONLY	DAB	
0608-P-2110	PIPING TANK FARM NO.2 G146, G157, AND G156 AREA					

TOSCO
Tosco Distribution Company
A Division of Tosco Corporation
5528 NW Doane St.
Portland, Oregon 97210

ALPHA ENGINEERS and CONSTRUCTORS, INC.
19 NW 5th AVE, SUITE 204, PORTLAND, OR. 97209 Tel:(503)227-3317/Fax:(503)227-3244

DRAWN BY DAB
CHKD BY
APPD BY
SCALE AS SHOWN
DATE 09/05/97

PORTLAND TERMINAL
PORTLAND, OREGON
TRUCK LOAD RACK UPGRADE PROJECT
PIPING TANK FARM NO.2
PUMP G155, G156, G161, AND G162 AREA

DRAWING NO.	SHEET	REV.
0608-P-2107	1 OF 1	A

6BP2107A.DWG <CPD: 10/03/97 [TIME: 12:41 AM] >

COP00021376

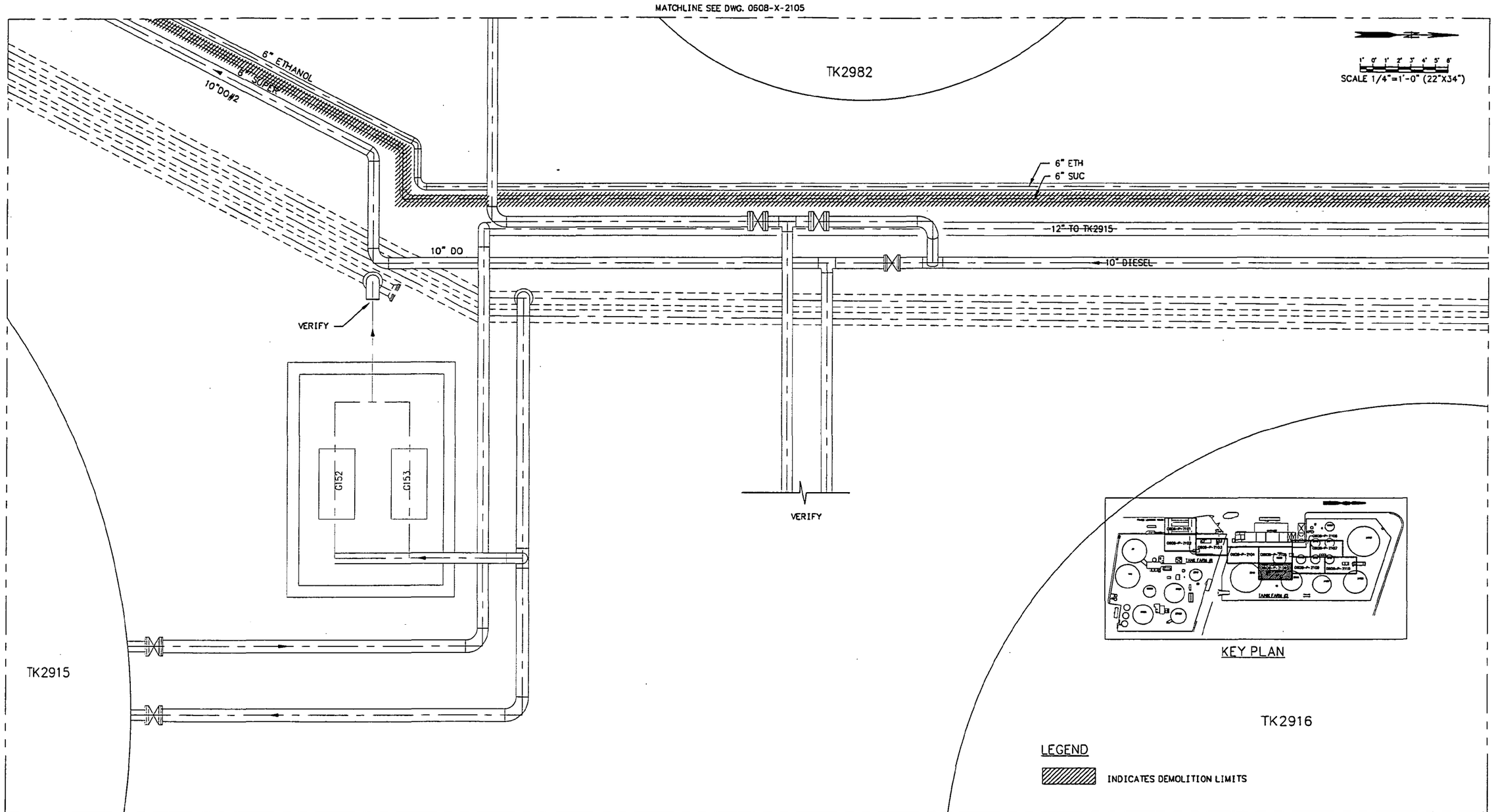

PLAN
SCALE 1/4"=1'-0"

DRAFT

NOTES:
1. VERIFY ALL DIMENSIONS PRIOR TO FABRICATION.

DRAWING NO.	REFERENCE DRAWINGS	REV. NO.	DATE	REVISED	DRAWN BY	CKD. BY
0608-X-2105	PIPING TANK FARM NO.2 TK 2982 AREA PLAN	A	10/03/97	ISSUE FOR BID ONLY	DAB	
0608-X-2109	PIPING TANK FARM NO.2 TK2983 AND TK3412 DEMOLITION					

TOSCO
Tosco Distribution Company
A Division of Tosco Corporation
5528 NW Doane St.
Portland, Oregon 97210

ALPHA ENGINEERS and CONSTRUCTORS, INC.
19 NW 5th AVE, SUITE 204, PORTLAND, OR 97209 Tel:(503)227-3317/Fax:(503)227-3244

DRAWN BY DAB
CHKD BY
APPD BY
SCALE AS SHOWN
DATE 09/05/97

PORTLAND TERMINAL
PORTLAND, OREGON
TRUCK LOAD RACK UPGRADE PROJECT
PIPING TANK FARM NO.2
PUMP G152 AND G153 AREA
DEMOLITION

DRAWING NO.	SHEET	REV.
0608-X-2108	1 OF 1	A

68X2108A.DWG <CPD: 10/03/97 [TIME: 12:51 AM]>

COP00213777

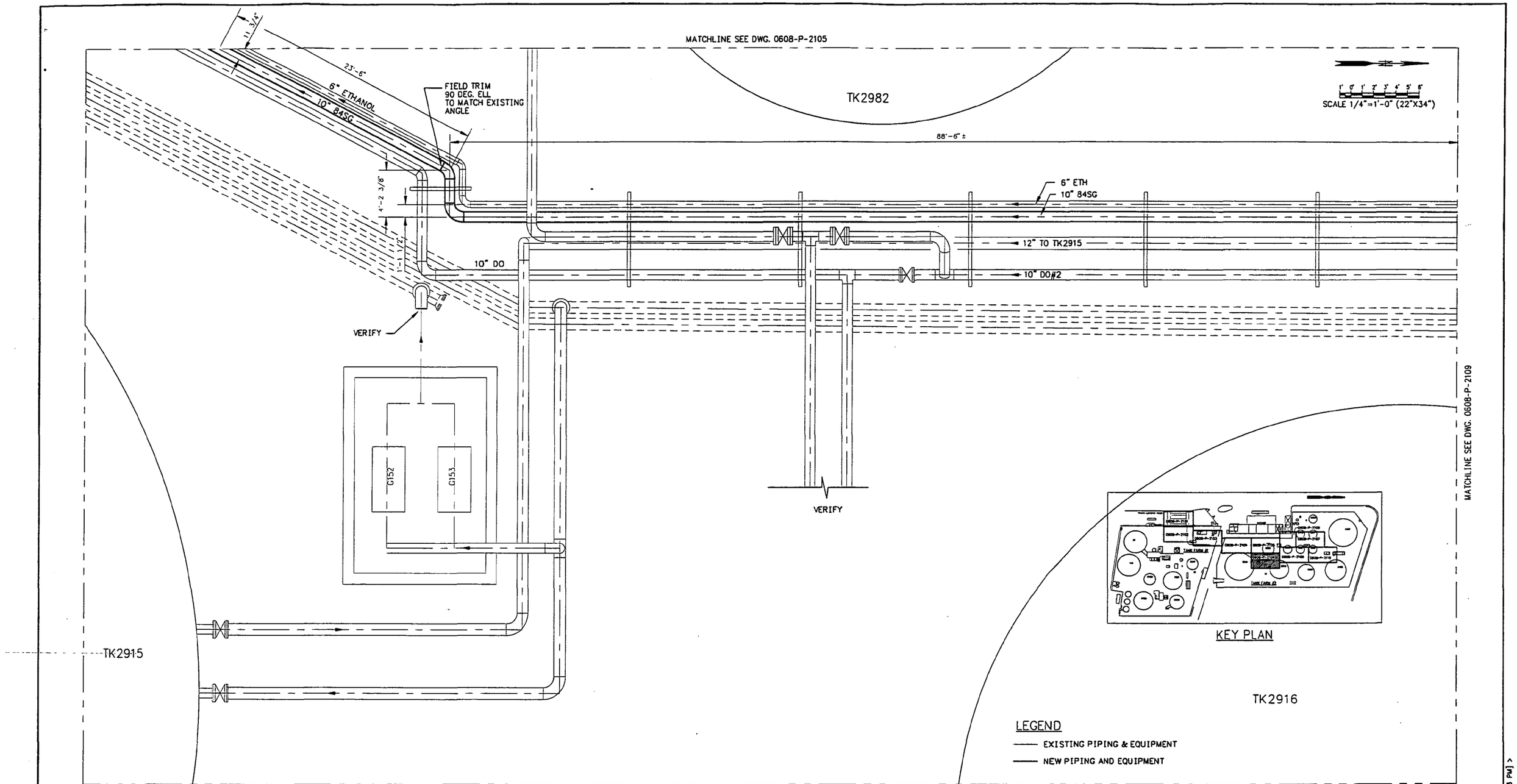

PLAN
SCALE 1/4"=1'-0"

DRAFT

NOTES:
1. VERIFY ALL DIMENSIONS PRIOR TO FABRICATION.
2. SEE DWG. 0608-P-2108 FOR DEMOLITION.

DRAWING NO.	REFERENCE DRAWINGS	REV. NO.	DATE	REVISED	DRAWN BY	CKD. BY
0608-P-2105	PIPING TANK FARM NO.2 TK 2982 AREA	A	10/03/97	ISSUE FOR BID ONLY	DAB	
0608-P-2109	PIPING TANK FARM NO.2 TK2983 AND TK3412 AREA					

TOSCO
Tosco Distribution Company
A Division of Tosco Corporation
5528 NW Doane St.
Portland, Oregon 97210

ALPHA ENGINEERS and CONSTRUCTORS, INC.
19 NW 5th AVE, SUITE 204, PORTLAND, OR. 97209 Tel:(503)227-3317/Fax:(503)227-3244

DRAWN BY DAB
CHKD BY
APPD BY
SCALE AS SHOWN
DATE 09/05/97

PORTLAND TERMINAL
PORTLAND, OREGON
TRUCK LOAD RACK UPGRADE PROJECT
PIPING TANK FARM NO.2
PUMP G152 AND G153 AREA

DRAWING NO.	SHEET	REV.
0608-P-2108	1 OF 1	A

68P2108A.DWG <CPD: 10/03/97 [TIME: 1:03 PM] >

COP00213780

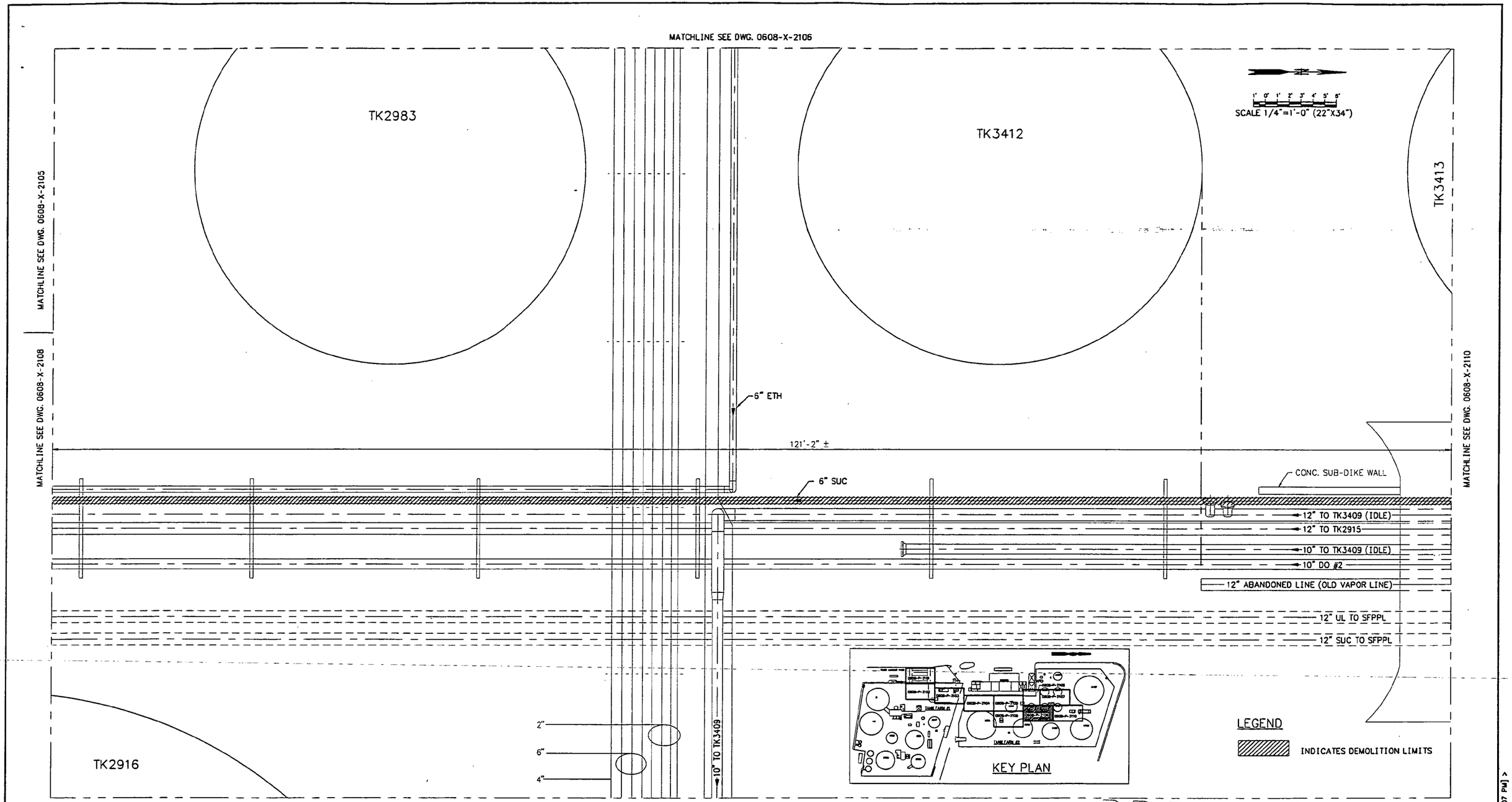

PLAN
SCALE 1/4"=1'-0"

DRAFT

NOTES:
1. VERIFY ALL DIMENSIONS PRIOR TO FABRICATION.

DRAWING NO.	REFERENCE DRAWINGS	REV. NO.	DATE	REVISED	DRAWN BY	CKD. BY
0608-X-P2108	PIPING TANK FARM NO.2 PUMP G152 AND G153 AREA DEMOLITION	A	10/03/97	ISSUE FOR BID ONLY	DAB	
0608-X-P2110	PIPING TANK FARM NO.2 G146, G157, AND G158 AREA DEMOLITION					

TOSCO
Tosco Distribution Company
A Division of Tosco Corporation
5528 NW Doane St.
Portland, Oregon 97210

ALPHA ENGINEERS and CONSTRUCTORS, INC.
19 NW 5th AVE, SUITE 204, PORTLAND, OR. 97209 Tel:(503)227-3317/Fax:(503)227-3244

DRAWN BY	DAB
CHKD BY	
APPD BY	
SCALE	AS SHOWN
DATE	09/05/97

PORTLAND TERMINAL
PORTLAND, OREGON
TRUCK LOAD RACK UPGRADE PROJECT
PIPING TANK FARM NO.2
TK2982 AND TK3412 AREA
DEMOLITION

DRAWING NO.	SHEET	REV.
0608-X-2109	1 OF 1	A

6B2109A.DWG <PD: 10/03/97 [TIME: 1:07 PM] >

COP00213791

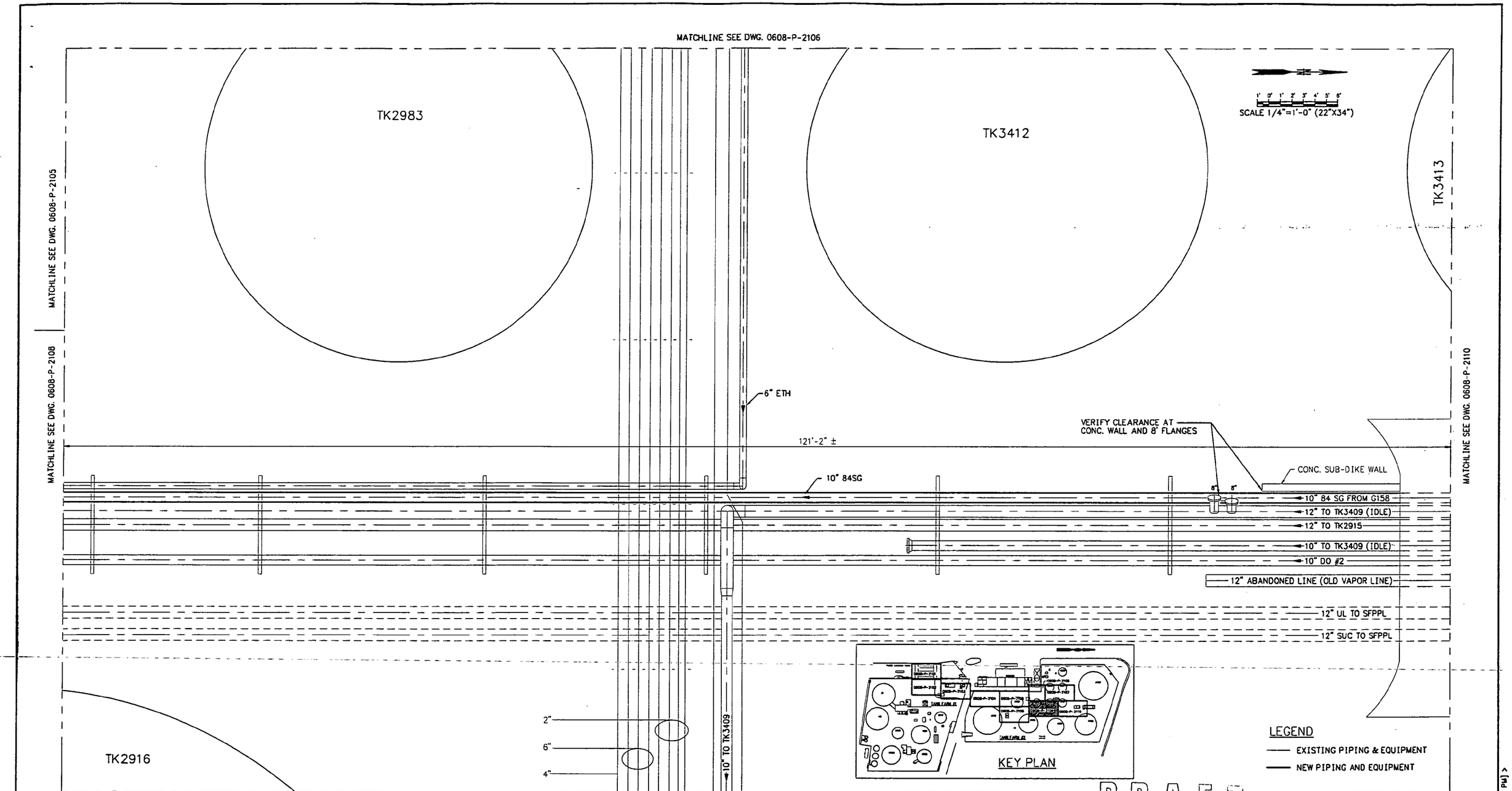

PLAN
SCALE 1/4"=1'-0"

NOTES:
1. VERIFY ALL DIMENSIONS PRIOR TO FABRICATION.
2. SEE DWG. 0608-X-2109 FOR DEMOLITION

DRAWING NO.	REFERENCE DRAWINGS	REV. NO.	DATE	REVISED	DRAWN BY	CKD. BY
0608-P-2108	PIPING TANK FARM NO.2 PUMP G152 AND G153 AREA	A	10/03/97	ISSUE FOR BID ONLY	DAB	
0608-P-2110	PIPING TANK FARM NO.2 G146, G157, AND G158 AREA					

TOSCO
Tosco Distribution Company
A Division of Tosco Corporation
5528 NW Doane St.
Portland, Oregon 97210

ALPHA ENGINEERS and CONSTRUCTORS, INC.
19 NW 5th AVE, SUITE 204, PORTLAND, OR. 97209 Tel:(503)227-3317/Fax:(503)227-3244

DRAWN BY DAB
CHKD BY
APPD BY
SCALE AS SHOWN
DATE 09/05/97

PORTLAND TERMINAL
PORTLAND, OREGON
TRUCK LOAD RACK UPGRADE PROJECT
PIPING TANK FARM NO.2
TK2983 AND TK3412 AREA

DRAWING NO.	SHEET	REV.
0608-P-2109	1 OF 1	A

68P2109A.DWG <PC> 10/03/97 [TIME: 1:12 PM]

COP0021380

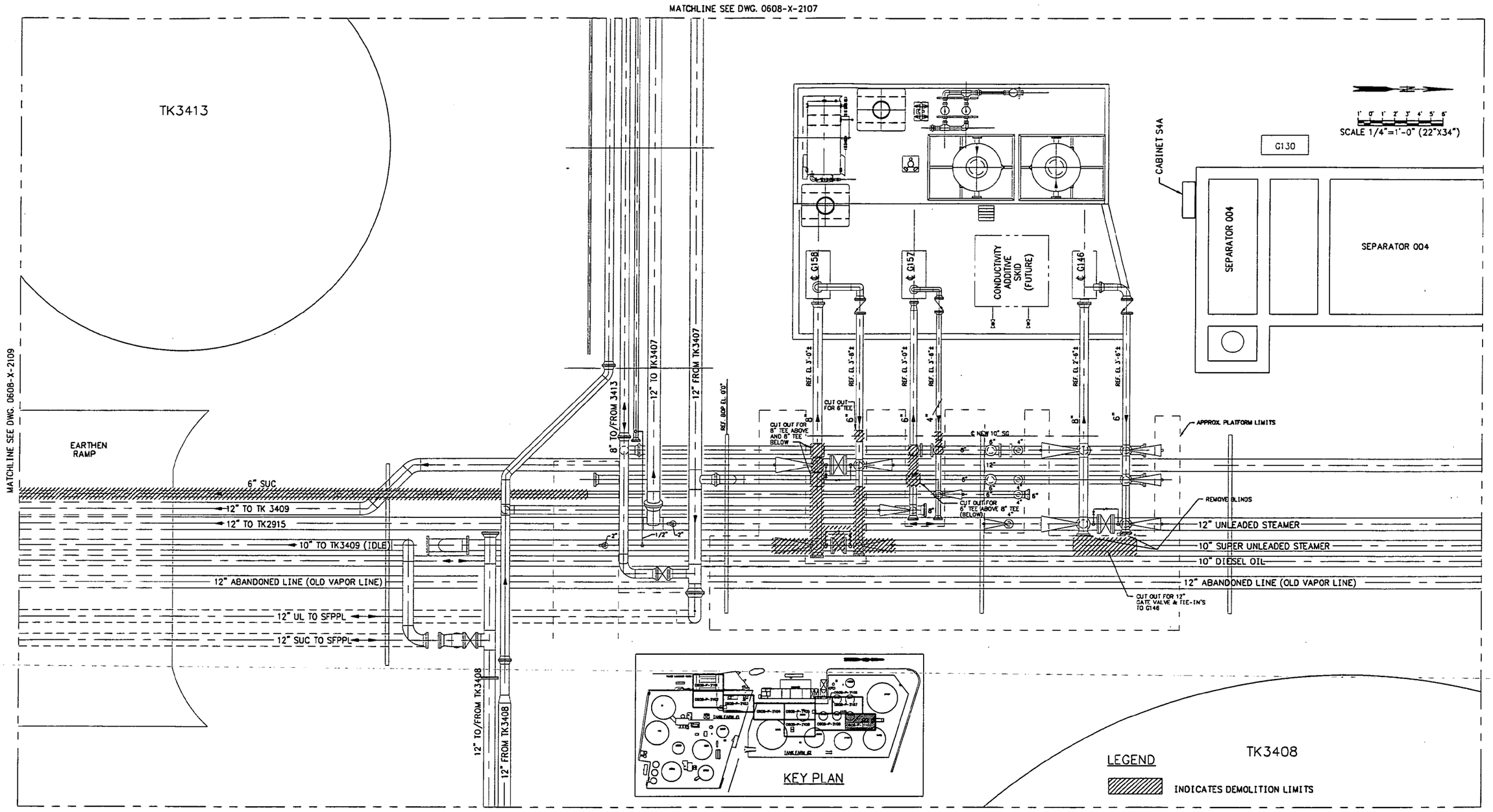

PLAN
SCALE 1/4"=1'-0"

DRAFT

NOTES:
1. VERIFY ALL DIMENSIONS PRIOR TO FABRICATION.

DRAWING NO.	REFERENCE DRAWINGS	REV. NO.	DATE	REVISED	DRAWN BY	CKD. BY
0608-X-2109	PIPING TANK FARM NO.2 TK2983 AND TK3412 AREA DEMOLITION	A	10/03/97	ISSUE FOR BID ONLY	DAB	

TOSCO
Tosco Distribution Company
A Division of Tosco Corporation
5528 NW Doane St.
Portland, Oregon 97210

ALPHA ENGINEERS and CONSTRUCTORS, INC.
19 NW 5th AVE, SUITE 204, PORTLAND, OR. 97209 Tel:(503)227-3317/Fax:(503)227-3244

DRAWN BY	DAB
CHKD BY	
APPD BY	
SCALE	AS SHOWN
DATE	09/05/97

PORTLAND TERMINAL
PORTLAND, OREGON
TRUCK LOAD RACK UPGRADE PROJECT
PIPING TANK FARM NO.2
G146, G157, AND G158 AREA
DEMOLITION

DRAWING NO.	SHEET	REV.
0608-X-2110	1 OF 1	A

68X2110A.DWG <CPD: 10/03/97 [MJM] 1:16 PM>

COP0021381

MATCHLINE SEE DWG. 0608-P-2107

MATCHLINE SEE DWG. 0608-P-2109

TK3413

EARTHEN RAMP

ROUTE NEW 10" PIPE THROUGH EXISTING RAMP. WRAP PIPE WITH 2 LAYERS OF 20MIL 3M TAPE. (VERIFY CLEARANCE AT SOUTH END OF RAMP BETWEEN 12" AND CONNECT SUB-DIKE WALL)

10" 84 SG

12" TO TK 3409

12" TO TK2915

10" TO TK3409 (IDLE)

12" ABANDONED LINE (OLD VAPOR LINE)

12" UL TO SFPPL

12" SUC TO SFPPL

8"-TO/FROM-3413

12" TO-TK3407

12" FROM TK3407

12" TO/FROM TK3408

12" FROM TK3408

REF. BOP EL. 0'0"

25'-6"±

5'±

36'-6"±

3'-6"±

4'-6"±

13'-11 1/2"±

3'-6"±

G158

G157

G146

CONDUCTIVITY ADDITIVE SKID (FUTURE)

CABINET S4A

G130

SEPARATOR 004

SEPARATOR 004

SCALE 1/4"=1'-0" (22"X34")

APPROX. PLATFORM LIMITS

12" UNLEADED STEAMER

10" SUPER UNLEADED STEAMER

10" DIESEL OIL

12" ABANDONED LINE (OLD VAPOR LINE)

8" GTV

6" GTV

4" GTV

℄ NEW 10" SG

6" BLIND

3/4"PLUG

3/4"PLUG

8" BLIND

TK3408

KEY PLAN

LEGEND

EXISTING PIPING & EQUIPMENT

NEW PIPING AND EQUIPMENT

DRAFT

NOTES:

1. VERIFY ALL DIMENSIONS PRIOR TO FABRICATION.

PLAN

SCALE 1/4"=1'-0"

DRAWING NO.	REFERENCE DRAWINGS	REV. NO.	DATE	REVISED	DRAWN BY	CKD. BY
0608-P-2109	PIPING TANK FARM NO.2 TK2983 AND TK3412 AREA	A	10/03/97	ISSUE FOR BID ONLY	DAB	

TOSCO
Tosco Distribution Company
A Division of Tosco Corporation
5528 NW Doane St.
Portland, Oregon 97210

ALPHA ENGINEERS and CONSTRUCTORS, INC.
19 NW 5th AVE, SUITE 204, PORTLAND, OR 97209 Tel:(503)227-3317/Fax:(503)227-3244

DRAWN BY	DAB
CHKD BY	
APPD BY	
SCALE	AS SHOWN
DATE	09/05/97

PORTLAND TERMINAL

PORTLAND, OREGON

TRUCK LOAD RACK UPGRADE PROJECT

PIPING TANK FARM NO.2

G146, G157, AND G158 AREA

DRAWING NO.	SHEET	REV.
0608-P-2110	1 OF 1	A

6BP2110A.DWG <CPD: 10/03/97 [TIME: 1:30 PM] >

COP0021382

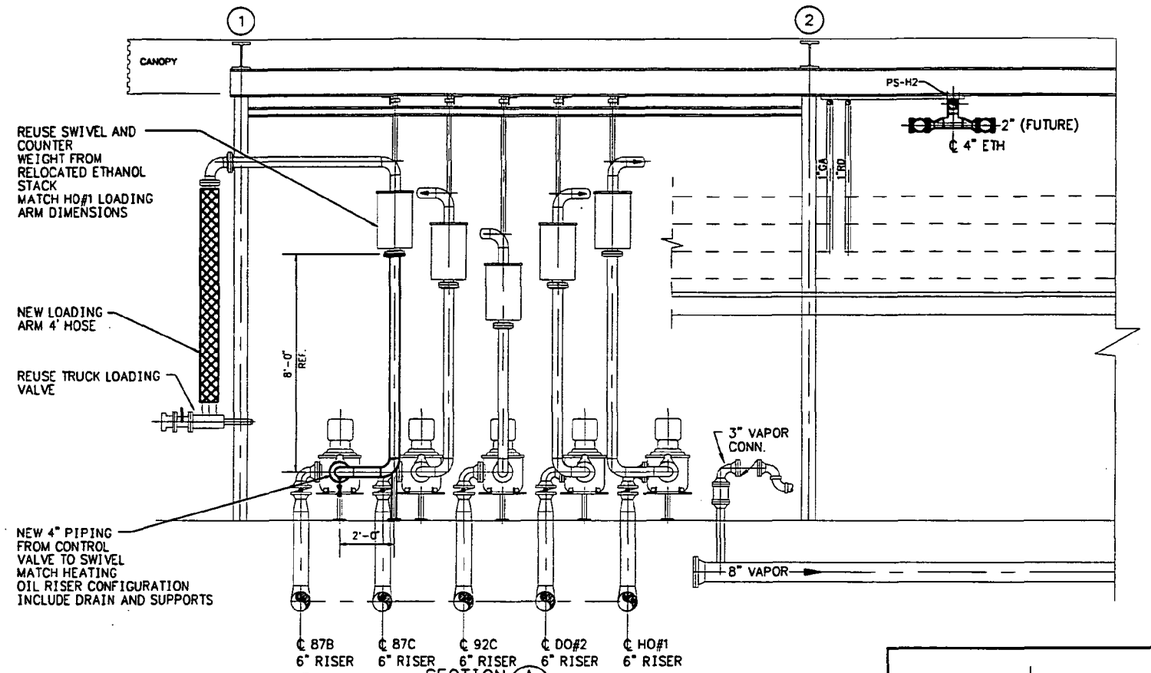

LANE 1 SOUTH

SECTION A 3/8"=1'-0" 0608-P-2101

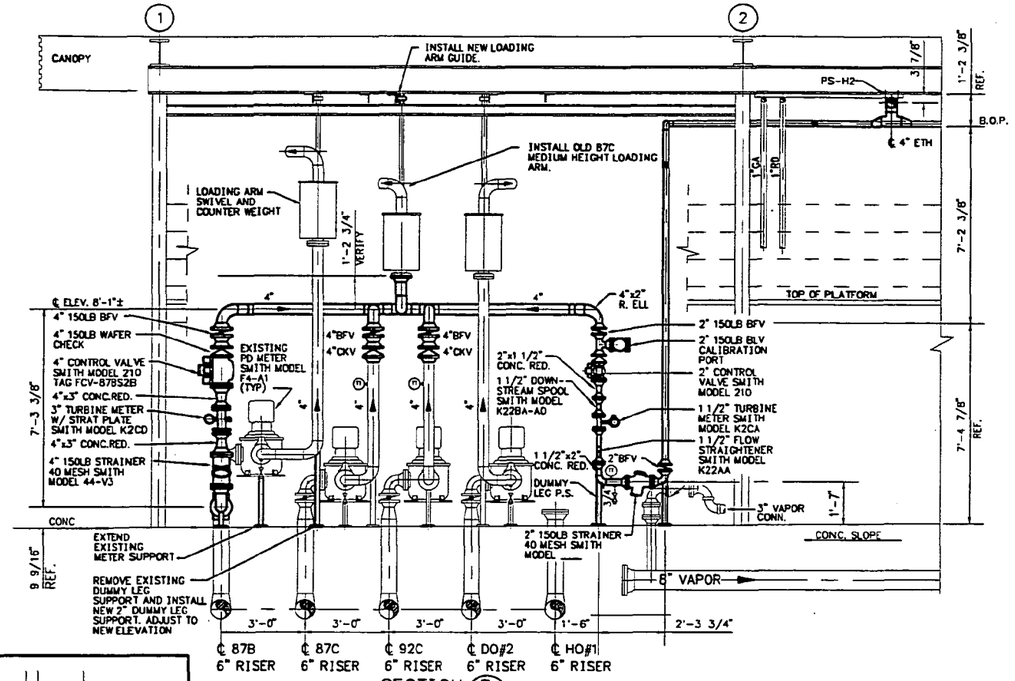

LANE 2 SOUTH

SECTION B 3/8"=1'-0" 0608-P-2101

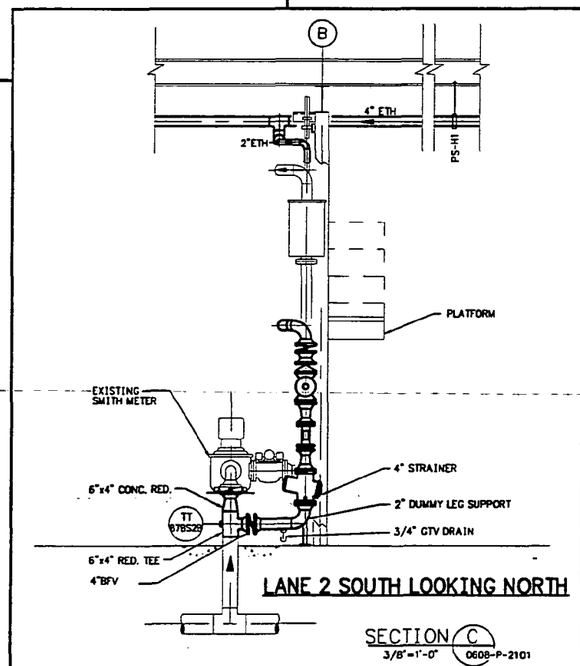

LANE 2 SOUTH LOOKING NORTH

SECTION C 3/8"=1'-0" 0608-P-2101

DRAFT

NOTES:

1. VERIFY ALL DIMENSIONS PRIOR TO FABRICATION.

DRAWING NO.	REFERENCE DRAWINGS	REV. NO.	DATE	REVISED	DRAWN BY	CKD. BY
0608-P-2101	PIPING TRUCK LOADING RACK	A	10/03/97	ISSUE FOR BID ONLY	DAB	

TOSCO
Tosco Distribution Company
A Division of Tosco Corporation
5528 NW Doane St.
Portland, Oregon 97210

ALPHA ENGINEERS and CONSTRUCTORS, INC.
19 NW 5th AVE, SUITE 204, PORTLAND, OR. 97209 Tel:(503)227-3317/Fax:(503)227-3244

DRAWN BY	DAB
CHKD BY	
APPD BY	
SCALE	AS SHOWN
DATE	09/05/97

PORTLAND TERMINAL
PORTLAND, OREGON
TRUCK LOAD RACK UPGRADE PROJECT
PIPING
TRUCK LOADING RACK
SECTION AND DETAILS

DRAWING NO.	SHEET	REV.
0608-P-2201	1 OF 1	A

6BP2201B.DWG <PPD: 10/03/97 [MuE: 1:48 PM]>

COP0021383

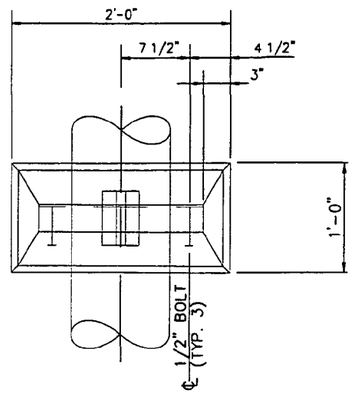

PLAN

PIPE SLEEPER

PS-X
X REQUIRED

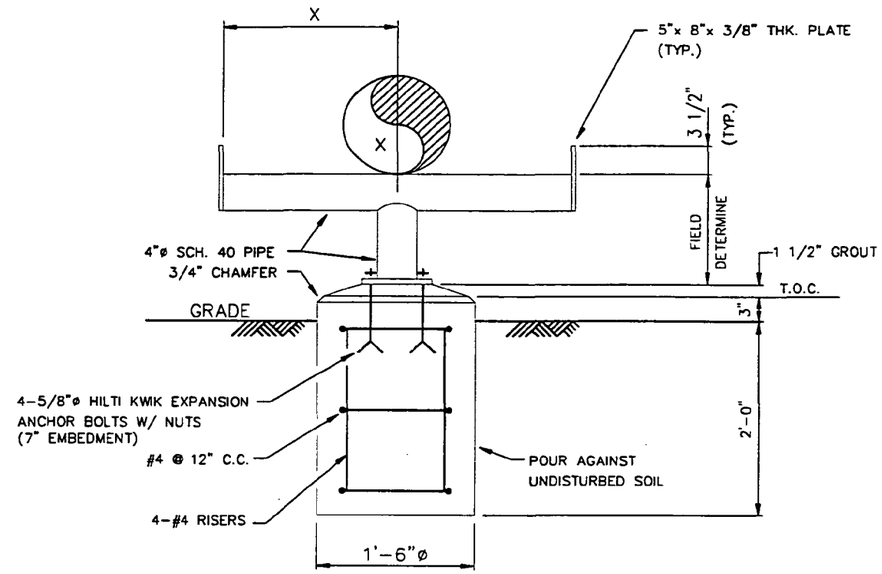

PIPE SUPPORT PS-X
X REQUIRED

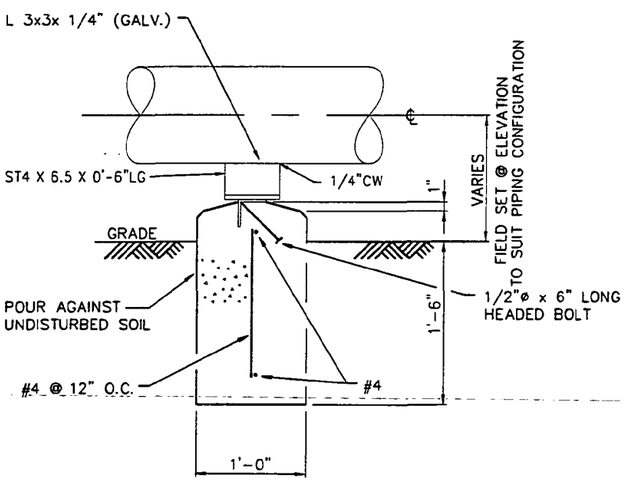

SECTION

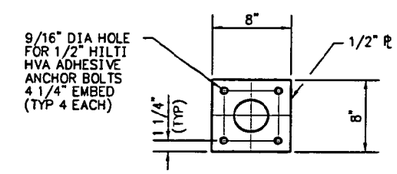

PS-1 BASE PLATE

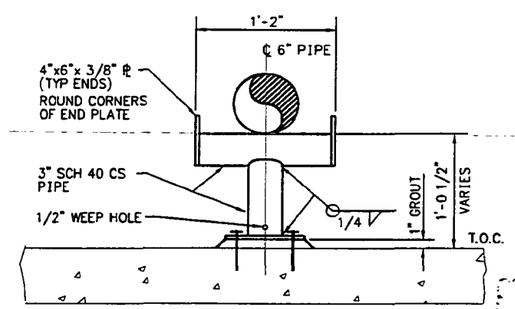

PIPE SUPPORT PS-X
X REQUIRED

DRAFT

NOTES:

1. VERIFY ALL DIMENSIONS PRIOR TO FABRICATION.

DRAWING NO.	REFERENCE DRAWINGS	REV. NO.	DATE	REVISED	DRAWN BY	CKD. BY
		A	10/03/97	ISSUE FOR BID ONLY	DAB	

TOSCO
Tosco Distribution Company
A Division of Tosco Corporation
5528 NW Doane St.
Portland, Oregon 97210

ALPHA ENGINEERS and CONSTRUCTORS, INC.
19 NW 5th AVE., SUITE 204, PORTLAND, OR. 97209 Tel:(503)227-3317/Fax:(503)227-3244

DRAWN BY	DAB
CHKD BY	
APPD BY	
SCALE	AS SHOWN
DATE	09/05/97

PORTLAND TERMINAL
PORTLAND, OREGON
TRUCK LOAD RACK UPGRADE PROJECT
PIPE SUPORT DETAILS

DRAWING NO.	SHEET	REV.
0608-P-2202	1 OF 1	A

6BP2202A.DWG <CPD: 10/03/97 [TUE: 2:00 PM]>

COP0021384

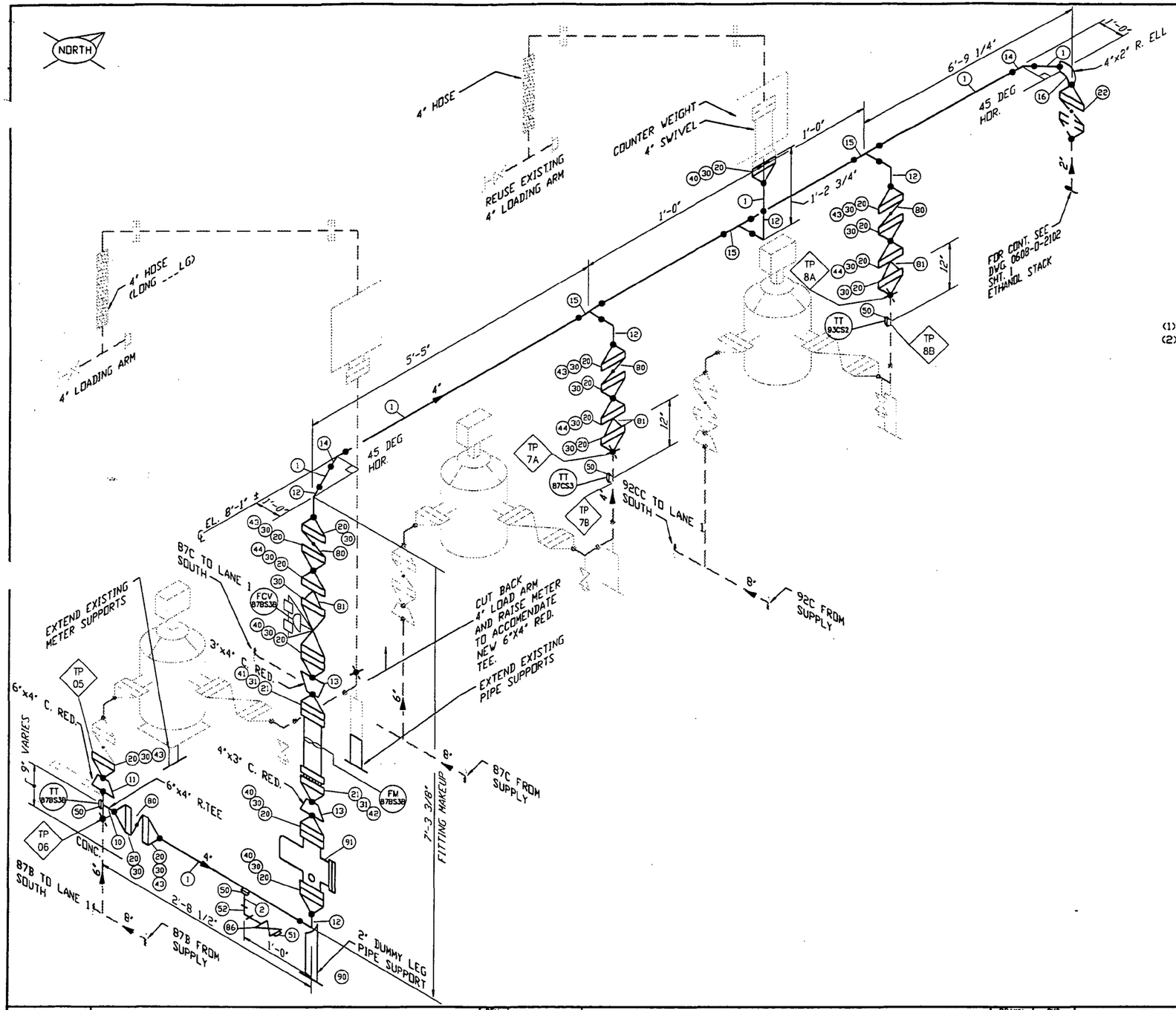

MARK	QTY	SIZE	SCH	DESCRIPTION	TAG
PIPE					
1	15'	4"	SCH 40	PIPE A-53 GRADE B	
2	2	3/4"x3"LG	SCH 160	PIPE NIPPLE, T.O.B. A-53 GRADE B	
FITTINGS					
10	1	6"x4"x4"	SCH 40	REDUCING TEE, BW, ASTM A234 GRADE WPB	
11	1	6"x4"	SCH 40	CONCENTRIC REDUCER, BW, ASTM A234 GRADE WPB	
12	5	6"	SCH 40	90 DEG. L.R. ELBOW, BW, ASTM A234 GRADE WPB	
13	2	4"x3"	SCH 40	CONCENTRIC REDUCER, BW, ASTM A234 GRADE WPB	
14	2	4"	SCH 40	45 DEG. ELBOW, BW, ASTM A234 GRADE WPB	
15	3	4"	SCH 40	TEE, BW, ASTM A234 GRADE WPB	
16	1	4"x2"	SCH 40	90 DEG REDUCING ELBOW, BW, ASTM A234 GRADE WPB	
FLANGES					
20	17	4"	150LB	FLANGE, WN, SCH 40 BORE, R.F., ASTM A105	
21	2	3"	150LB	FLANGE, WN, SCH 40 BORE, R.F., ASTM A105	
22	1	2"	150LB	FLANGE, WN, SCH 40 BORE, R.F., ASTM A105	
GASKETS					
30	19	4"	150LB	GASKET, 1/16" THK GARLOK	
31	2	3"	150LB	GASKET, 1/16" THK GARLOK	
BOLTS					
40	4 SETS	4"	-	8 - 5/8" X 3 1/2" LG, STUD BOLT W/ 2 H.D. NUTS, B7/2H	
41	5 SETS	3"	-	4 - 5/8" X 3 1/2" LG, STUD BOLT W/ 2 H.D. NUTS, B7/2H	
42	5 SETS	3"	-	4 - 5/8" X 4 1/2" LG, STUD BOLT W/ 2 H.D. NUTS, B7/2H	
(1) 43	5 SETS	4"	-	8 - 5/8" X 5 3/4" LG, STUD BOLT W/ 2 H.D. NUTS, B7/2H	
(2) 44	3 SETS	4"	-	8 - 5/8" X 6 1/2" LG, STUD BOLT W/ 2 H.D. NUTS, B7/2H	
FORGED STEEL FITTINGS					
50	4	3/4"x4"	3000LB	THREADOLET, ASTM A105	
51	1	3/4"	3000LB	THREADED H.D. PLUG, ASTM A105	
52	1	3/4"	3000LB	90 DEG. ELBOW, THREADED, ASTM A105	
VALVES					
80	4	4"	150LB	BUTTERFLY VALVE, WAFER TYPE (BY OWNER)	
81	3	4"	150LB	WAFER CHECK VALVE (BY OWNER)	
82	1	3/4"	CL800	GATE VALVE, THREADED	
MISC					
90	1	2"	SCH 40	2" DUMMY LEG SUPPORT	
91	1	4"	150LB	BASKET STRAINER, 40 MESH BASKET, SMITH MODEL 44-V3 (BY OWNER)	
INSTRUMENTS AND CONTROLS					
FM	1	3"	150LB	FLOW METER, TURBINE TYPE, SMITH K2CD (BY OWNER)	
FCV	1	4"	150LB	CONTROL VALVE, SMITH MODEL 210 (BY OWNER)	
TT	3	3/4"	3000LB	TEMPERATURE PROBE AND WELL, TPW-3-2.5 (BY OWNER)	

NOTES:
(1) BOLT LENGTHS BASED ON 4" BFV FACE TO FACE OF 2 1/8" PLUS (2) 1/16" GASKETS
(2) BOLT LENGTH BASED ON 4" WAFER CKV FACE TO FACE 2 7/8" PLUS (2) 1/16" GASKETS

NOTES:

1. CONTRACTOR TO FIELD VERIFY ALL DIMENSIONS PRIOR TO FABRICATION.
2. ALL PIPE AND FITTINGS TO BE PRE-PRIMED.
3. SEE PIPING PLAN DWG. 0608-P-2101 FOR PIPE SUPPORT LOCATIONS.
4. SEE DWG. 0608-P-2202 FOR PIPE SUPPORT DETAILS.

DRAFT

NEW PIPE
EXISTING PIPE

DRAWING NO.	REFERENCE DRAWINGS	REV. NO.	DATE	REVISED	DRAWN BY	CKD. BY
1		A	09/26/97	FOR REVIEW AND COMMENT	DAB	

TOSCO
Tosco Northwest Company
A Division of Tosco Corporation
5528 NW Doane St.
Portland, Oregon 97210

ALPHA ENGINEERS and CONSTRUCTORS, INC.
19 NW 5th AVE, SUITE 204, PORTLAND, OR. 97209 Tel:(503)227-3317/Fax:(503)227-3244

DRAWN BY	DAB
CHKD BY	
APPD BY	
SCALE	NONE
DATE	09/22/97

PORTLAND TERMINAL
PORTLAND, OREGON
TRUCK LOAD RACK UPGRADE PROJECT
PIPING ISOMETRIC
TRUCK LOADING RACK
LANE 3 SOUTH

DRAWING NO.	SHEET	REV.
0608-0-2101	1 OF 4	A

6802101.DWG <CPD: 09/30/97 [TIME: 12:31 AM] >

COP00021385

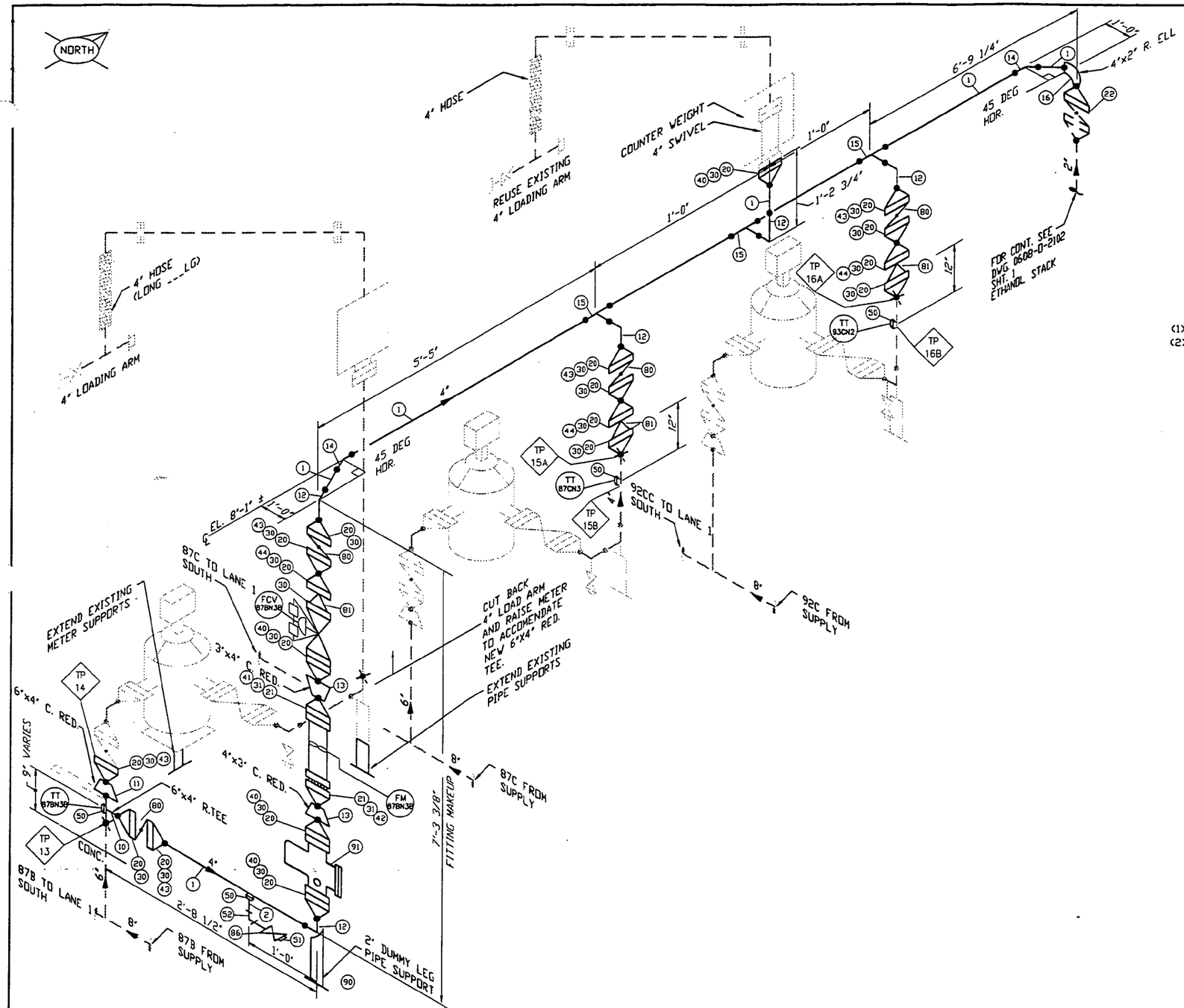

MARK	QTY	SIZE	SCH	DESCRIPTION	TAG
PIPE					
1	15'	4"	SCH 40	PIPE A-53 GRADE B	
2	2	3/4"x3"LG	SCH 160	PIPE NIPPLE, T.O.B. A-53 GRADE B	
FITTINGS					
10	1	6"x4"x4"	SCH 40	REDUCING TEE, BW, ASTM A234 GRADE WPB	
11	1	6"x4"	SCH 40	CONCENTRIC REDUCER, BW, ASTM A234 GRADE WPB	
12	5	6"	SCH 40	90 DEG. L.R. ELBOW, BW, ASTM A234 GRADE WPB	
13	2	4"x3"	SCH 40	CONCENTRIC REDUCER, BW, ASTM A234 GRADE WPB	
14	2	4"	SCH 40	45 DEG. ELBOW, BW, ASTM A234 GRADE WPB	
15	3	4"	SCH 40	TEE, BW, ASTM A234 GRADE WPB	
16	1	4"x2"	SCH 40	90 DEG REDUCING ELBOW, BW, ASTM A234 GRADE WPB	
FLANGES					
20	17	4"	150LB	FLANGE, WN, SCH 40 BORE, R.F., ASTM A105	
21	2	3"	150LB	FLANGE, WN, SCH 40 BORE, R.F., ASTM A105	
22	1	2"	150LB	FLANGE, WN, SCH 40 BORE, R.F., ASTM A105	
GASKETS					
30	19	4"	150LB	GASKET, 1/16" THK GARLOK	
31	2	3"	150LB	GASKET, 1/16" THK GARLOK	
BOLTS					
40	4 SETS	4"	-	8 - 5/8" X 3 1/2" LG. STUD BOLT W/ 2 H.D. NUTS, B7/2H	
41	5 SETS	3"	-	4 - 5/8" X 3 1/2" LG. STUD BOLT W/ 2 H.D. NUTS, B7/2H	
42	5 SETS	3"	-	4 - 5/8" X 4 1/2" LG. STUD BOLT W/ 2 H.D. NUTS, B7/2H	
(1) 43	5 SETS	4"	-	8 - 5/8" X 5 3/4" LG. STUD BOLT W/ 2 H.D. NUTS, B7/2H	
(2) 44	3 SETS	4"	-	8 - 5/8" X 6 1/2" LG. STUD BOLT W/ 2 H.D. NUTS, B7/2H	
FORGED STEEL FITTINGS					
50	4	3/4"x4"	3000LB	THREADOLET, ASTM A105	
51	1	3/4"	3000LB	THREADED H.D. PLUG, ASTM A105	
52	1	3/4"	3000LB	90 DEG. ELBOW, THREADED, ASTM A105	
VALVES					
80	4	4"	150LB	BUTTERFLY VALVE, WAFER TYPE (BY OWNER)	
81	3	4"	150LB	WAFER CHECK VALVE (BY OWNER)	
82	1	3/4"	CL800	GATE VALVE, THREADED	
MISC					
90	1	2"	SCH 40	2" DUMMY LEG SUPPORT	
91	1	4"	150LB	BASKET STRAINER, 40 MESH BASKET, SMITH MODEL 44-V3 (BY OWNER)	
INSTRUMENTS AND CONTROLS					
FM	1	3"	150LB	FLOW METER, TURBINE TYPE, SMITH K2CD (BY OWNER)	
FCV	1	4"	150LB	CONTROL VALVE, SMITH MODEL 210 (BY OWNER)	
TT	3	3/4"	3000LB	TEMPERATURE PROBE AND WELL, TPW-3-2.5 (BY OWNER)	

NOTES:
(1) BOLT LENGTHS BASED ON 4" BFV FACE TO FACE OF 2 1/8" PLUS (2) 1/16" GASKETS
(2) BOLT LENGTH BASED ON 4" WAFER CKV FACE TO FACE 2 7/8" PLUS (2) 1/16" GASKETS

NOTES:

1. CONTRACTOR TO FIELD VERIFY ALL DIMENSIONS PRIOR TO FABRICATION.
2. ALL PIPE AND FITTINGS TO BE PRE-PRIMED.
3. SEE PIPING PLAN DWG. 0608-P-2101 FOR PIPE SUPPORT LOCATIONS.
4. SEE DWG. 0608-P-2202 FOR PIPE SUPPORT DETAILS.

DRAFT

——— NEW PIPE
– – – EXISTING PIPE

DRAWING NO.	REFERENCE DRAWINGS	REV. NO.	DATE	REVISED	DRAWN BY	CKD. BY
		A	09/26/97	FOR REVIEW AND COMMENT	DAB	

TOSCO
Tosco Northwest Company
A Division of Tosco Corporation
5528 NW Doane St.
Portland, Oregon 97210

ALPHA ENGINEERS and CONSTRUCTORS, INC.
19 NW 5th AVE., SUITE 204, PORTLAND, OR. 97209 Tel:(503)227-3317/Fax:(503)227-3244

DRAWN BY	DAB
CHKD BY	
APPD BY	
SCALE	NONE
DATE	09/22/97

PORTLAND TERMINAL
PORTLAND, OREGON
TRUCK LOAD RACK UPGRADE PROJECT
PIPING ISOMETRIC
TRUCK LOADING RACK
LANE 3 NORTH

DRAWING NO.	SHEET	REV.
0608-0-2101	2 OF 4	A

6802I012.DWG <PPD: 09/30/97 [TIME: 12:15 AM]>

COP0021386

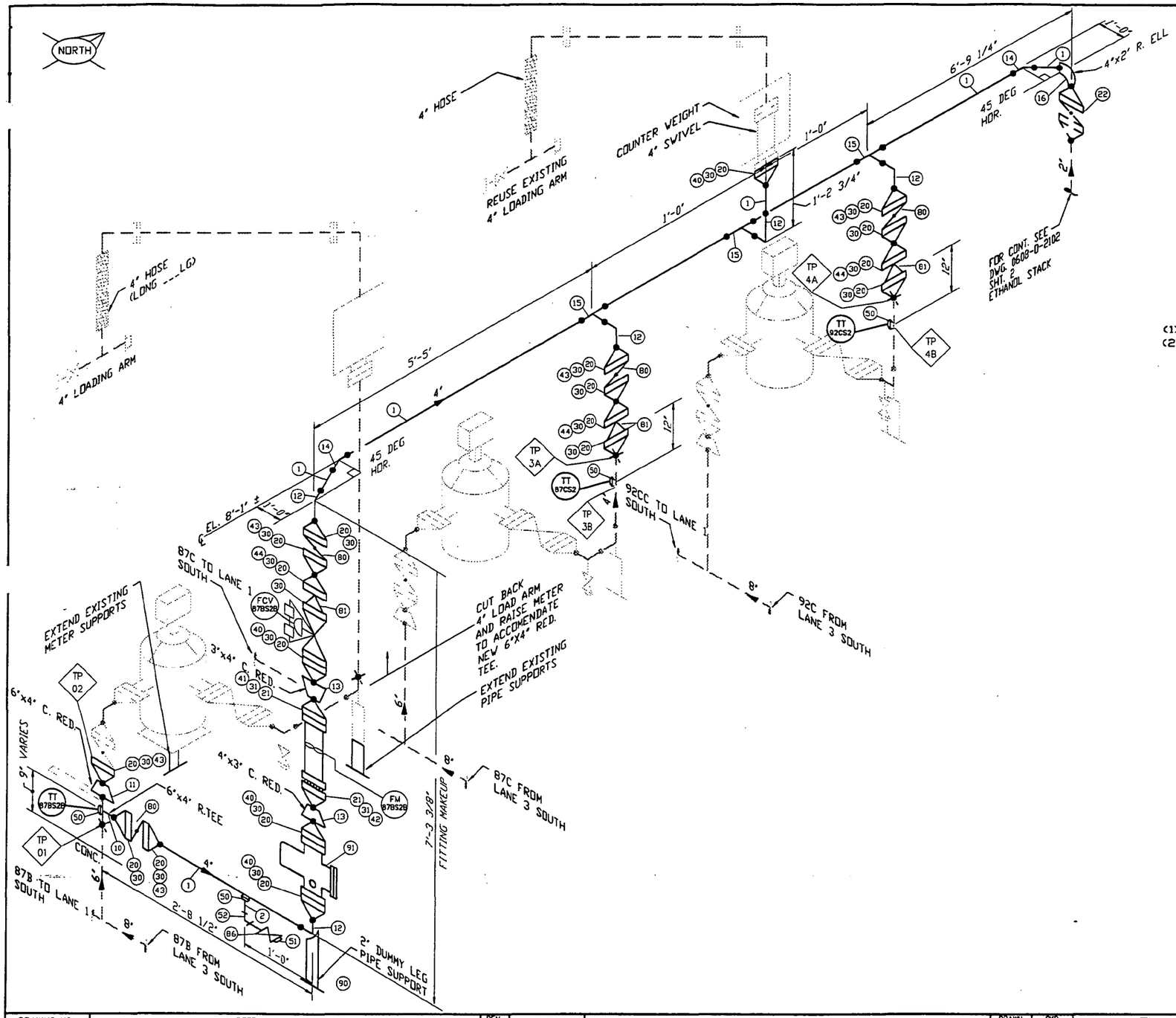

	MARK	QTY	SIZE	SCH	DESCRIPTION	TAG
	PIPE					
	1	15'	4"	SCH 40	PIPE A-53 GRADE B	
	2	2	3/4"x3"LG	SCH 160	PIPE NIPPLE, T.D.B. A-53 GRADE B	
	FITTINGS					
	10	1	6"x4"x4"	SCH 40	REDUCING TEE, BW, ASTM A234 GRADE WPB	
	11	1	6"x4"	SCH 40	CONCENTRIC REDUCER, BW, ASTM A234 GRADE WPB	
	12	5	6"	SCH 40	90 DEG. L.R. ELBOW, BW, ASTM A234 GRADE WPB	
	13	2	4"x3"	SCH 40	CONCENTRIC REDUCER, BW, ASTM A234 GRADE WPB	
	14	2	4"	SCH 40	45 DEG. ELBOW, BW, ASTM A234 GRADE WPB	
	15	3	4"	SCH 40	TEE, BW, ASTM A234 GRADE WPB	
	16	1	4"x2"	SCH 40	90 DEG REDUCING ELBOW, BW, ASTM A234 GRADE WPB	
	FLANGES					
	20	17	4"	150LB	FLANGE, WN, SCH 40 BORE, R.F., ASTM A105	
	21	2	3"	150LB	FLANGE, WN, SCH 40 BORE, R.F., ASTM A105	
	22	1	2"	150LB	FLANGE, WN, SCH 40 BORE, R.F., ASTM A105	
	GASKETS					
	30	19	4"	150LB	GASKET, 1/16" THK GARLOK	
	31	2	3"	150LB	GASKET, 1/16" THK GARLOK	
	BOLTS					
	40	4 SETS	4"	-	8 - 5/8" X 3 1/2" LG, STUD BOLT W/ 2 H.D. NUTS, B7/2H	
	41	5 SETS	3"	-	4 - 5/8" X 3 1/2" LG, STUD BOLT W/ 2 H.D. NUTS, B7/2H	
	42	5 SETS	3"	-	4 - 5/8" X 4 1/2" LG, STUD BOLT W/ 2 H.D. NUTS, B7/2H	
(1)	43	5 SETS	4"	-	8 - 5/8" X 5 3/4" LG, STUD BOLT W/ 2 H.D. NUTS, B7/2H	
(2)	44	3 SETS	4"	-	8 - 5/8" X 6 1/2" LG, STUD BOLT W/ 2 H.D. NUTS, B7/2H	
	FORGED STEEL FITTINGS					
	50	4	3/4"x4"	3000LB	THREADOLET, ASTM A105	
	51	1	3/4"	3000LB	THREADED H.D. PLUG, ASTM A105	
	52	1	3/4"	3000LB	90 DEG. ELBOW, THREADED, ASTM A105	
	VALVES					
	80	4	4"	150LB	BUTTERFLY VALVE, WAFER TYPE (BY OWNER)	
	81	3	4"	150LB	WAFER CHECK VALVE (BY OWNER)	
	82	1	3/4"	CL800	GATE VALVE, THREADED	
	MISC					
	90	1	2"	SCH 40	2" DUMMY LEG SUPPORT	
	91	1	4"	150LB	BASKET STRAINER, 40 MESH BASKET, SMITH MODEL 44-V3 (BY OWNER)	
	INSTRUMENTS AND CONTROLS					
	FM	1	3"	150LB	FLOW METER, TURBINE TYPE, SMITH K2CD (BY OWNER)	
	FCV	1	4"	150LB	CONTROL VALVE, SMITH MODEL 210 (BY OWNER)	
	TT	3	3/4"	3000LB	TEMPERATURE PROBE AND WELL, TPW-3-2.5 (BY OWNER)	

NOTES:
(1) BOLT LENGTHS BASED ON 4" BFV FACE TO FACE OF 2 1/8" PLUS (2) 1/16" GASKETS
(2) BOLT LENGTH BASED ON 4" WAFER CKV FACE TO FACE 2 7/8" PLUS (2) 1/16" GASKETS

NOTES:

1. CONTRACTOR TO FIELD VERIFY ALL DIMENSIONS PRIOR TO FABRICATION.
2. ALL PIPE AND FITTINGS TO BE PRE-PRIMED.
3. SEE PIPING PLAN DWG. 0608-P-2101 FOR PIPE SUPPORT LOCATIONS.
4. SEE DWG. 0608-P-2___ FOR PIPE SUPPORT DETAILS.

DRAFT

——— NEW PIPE
- - - - EXISTING PIPE

DRAWING NO.	REFERENCE DRAWINGS	REV. NO.	DATE	REVISED	DRAWN BY	CKD. BY
		A	09/26/97	FOR REVIEW AND COMMENT	DAB	

TOSCO
Tosco Northwest Company
A Division of Tosco Corporation
5528 NW Doane St.
Portland, Oregon 97210

ALPHA ENGINEERS and CONSTRUCTORS, INC.
19 NW 5th AVE., SUITE 204, PORTLAND, OR. 97209 Tel:(503)227-3317/Fax:(503)227-3244

DRAWN BY	DAB
CHKD BY	
APPD BY	
SCALE	NONE
DATE	09/22/97

PORTLAND TERMINAL
PORTLAND, OREGON
TRUCK LOAD RACK UPGRADE PROJECT
PIPING ISOMETRIC
TRUCK LOADING RACK
LANE 2 SOUTH

DRAWING NO.	SHEET	REV.
0608-0-2101	3 OF 4	A

6802101J.DWG <CPD: 09/30/97 [TIME: 12:39 AM] >

COP00213877

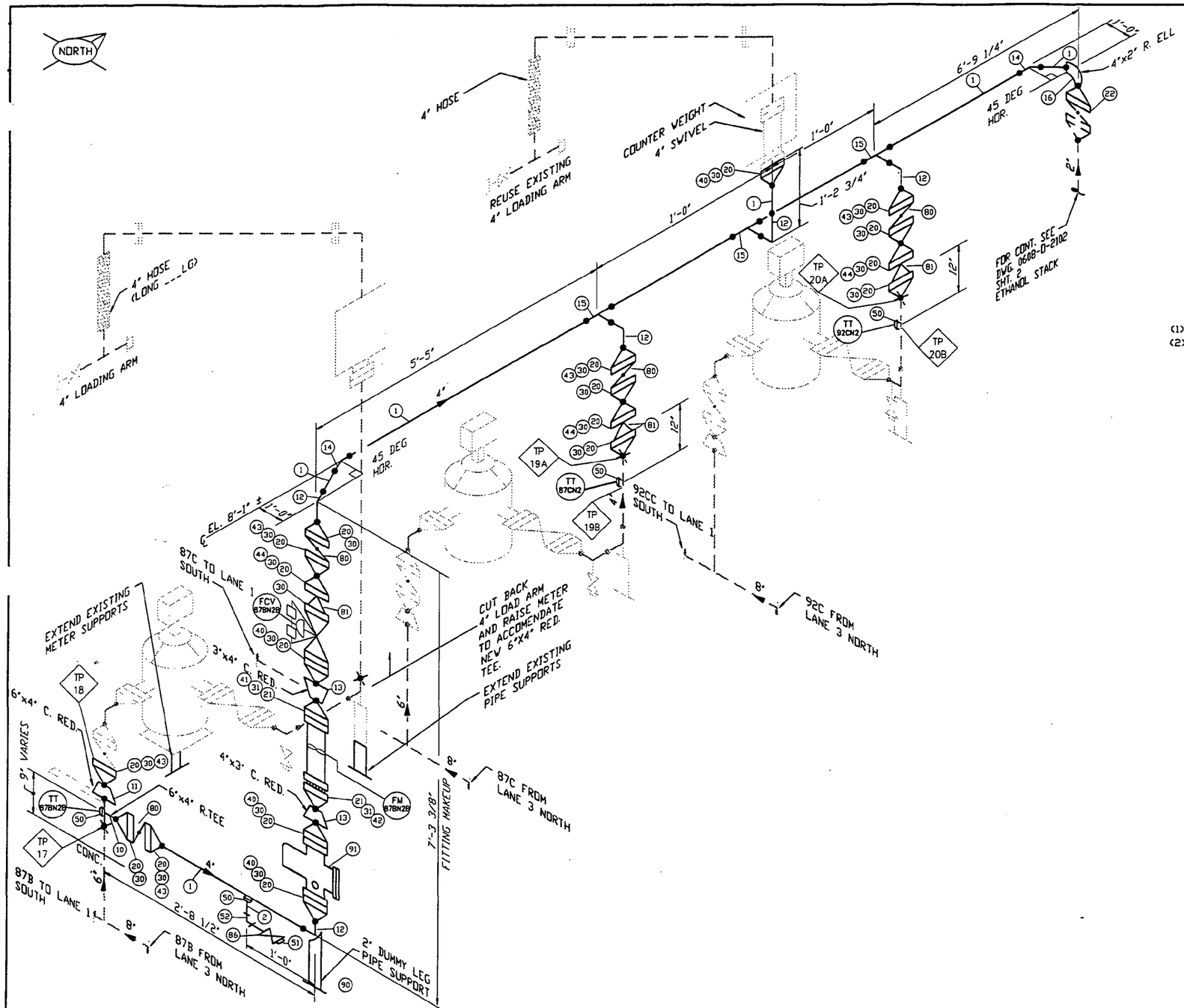

MARK	QTY	SIZE	SCH	DESCRIPTION	TAG
PIPE					
1	15'	4"	SCH 40	PIPE A-53 GRADE B	
2	2	3/4"x3"LG	SCH 160	PIPE NIPPLE, T.O.B. A-53 GRADE B	
FITTINGS					
10	1	6"x4"x4"	SCH 40	REDUCING TEE, BW, ASTM A234 GRADE WPB	
11	1	6"x4"	SCH 40	CONCENTRIC REDUCER, BW, ASTM A234 GRADE WPB	
12	5	6"	SCH 40	90 DEG. L.R. ELBOW, BW, ASTM A234 GRADE WPB	
13	2	4"x3"	SCH 40	CONCENTRIC REDUCER, BW, ASTM A234 GRADE WPB	
14	2	4"	SCH 40	45 DEG. ELBOW, BW, ASTM A234 GRADE WPB	
15	3	4"	SCH 40	TEE, BW, ASTM A234 GRADE WPB	
16	1	4"x2"	SCH 40	90 DEG REDUCING ELBOW, BW, ASTM A234 GRADE WPB	
FLANGES					
20	17	4"	150LB	FLANGE, WN, SCH 40 BORE, R.F., ASTM A105	
21	2	3"	150LB	FLANGE, WN, SCH 40 BORE, R.F., ASTM A105	
22	1	2"	150LB	FLANGE, WN, SCH 40 BORE, R.F., ASTM A105	
GASKETS					
30	19	4"	150LB	GASKET, 1/16" THK GARLOK	
31	2	3"	150LB	GASKET, 1/16" THK GARLOK	
BOLTS					
40	4 SETS	4"	-	8 - 5/8" X 3 1/2" LG, STUD BOLT W/ 2 H.D. NUTS, B7/2H	
41	5 SETS	3"	-	4 - 5/8" X 3 1/2" LG, STUD BOLT W/ 2 H.D. NUTS, B7/2H	
42	5 SETS	3"	-	4 - 5/8" X 4 1/2" LG, STUD BOLT W/ 2 H.D. NUTS, B7/2H	
(1) 43	5 SETS	4"	-	8 - 5/8" X 5 3/4" LG, STUD BOLT W/ 2 H.D. NUTS, B7/2H	
(2) 44	3 SETS	4"	-	8 - 5/8" X 6 1/2" LG, STUD BOLT W/ 2 H.D. NUTS, B7/2H	
FORGED STEEL FITTINGS					
50	4	3/4"x4"	3000LB	THREADOLET, ASTM A105	
51	1	3/4"	3000LB	THREADED H.D. PLUG, ASTM A105	
52	1	3/4"	3000LB	90 DEG. ELBOW, THREADED, ASTM A105	
VALVES					
80	4	4"	150LB	BUTTERFLY VALVE, WAFER TYPE (BY OWNER)	
81	3	4"	150LB	WAFER CHECK VALVE (BY OWNER)	
82	1	3/4"	CL800	GATE VALVE, THREADED	
MISC					
90	1	2"	SCH 40	2" DUMMY LEG SUPPORT	
91	1	4"	150LB	BASKET STRAINER, 40 MESH BASKET, SMITH MODEL 44-V3 (BY OWNER)	
INSTRUMENTS AND CONTROLS					
FM	1	3"	150LB	FLOW METER, TURBINE TYPE, SMITH K2CD (BY OWNER)	
FCV	1	4"	150LB	CONTROL VALVE, SMITH MODEL 210 (BY OWNER)	
TT	3	3/4"	3000LB	TEMPERATURE PROBE AND WELL, TPW-3-2.5 (BY OWNER)	

NOTES:
(1) BOLT LENGTHS BASED ON 4" BFV FACE TO FACE OF 2 1/8" PLUS (2) 1/16" GASKETS
(2) BOLT LENGTH BASED ON 4" WAFER CKV FACE TO FACE 2 7/8" PLUS (2) 1/16" GASKETS

NOTES:

1. CONTRACTOR TO FIELD VERIFY ALL DIMENSIONS PRIOR TO FABRICATION.
2. ALL PIPE AND FITTINGS TO BE PRE-PRIMED.
3. SEE PIPING PLAN DWG. 0608-P-2101 FOR PIPE SUPPORT LOCATIONS.
4. SEE DWG. 0608-P-2___ FOR PIPE SUPPORT DETAILS.

——— NEW PIPE
- - - - EXISTING PIPE

DRAFT

DRAWING NO.	REFERENCE DRAWINGS	REV. NO.	DATE	REVISED	DRAWN BY	CKD. BY
		A	09/26/97	FOR REVIEW AND COMMENT	DAB	

TOSCO
Tosco Northwest Company
A Division of Tosco Corporation
5528 NW Doane St.
Portland, Oregon 97210

ALPHA ENGINEERS and CONSTRUCTORS, INC.
19 NW 5th AVE, SUITE 204, PORTLAND, OR. 97209 Tel:(503)227-3317/Fax:(503)227-3244

DRAWN BY DAB
CHKD BY
APPD BY
SCALE NONE
DATE 09/22/97

PORTLAND TERMINAL
PORTLAND, OREGON
TRUCK LOAD RACK UPGRADE PROJECT
PIPING ISOMETRIC
TRUCK LOADING RACK
LANE 2 NORTH

DRAWING NO.	SHEET	REV.
0608-0-2101	4 OF 4	A

68021014.DWG <CPD: 09/30/97 [TIME: 12:41 AM]>

COP00021388

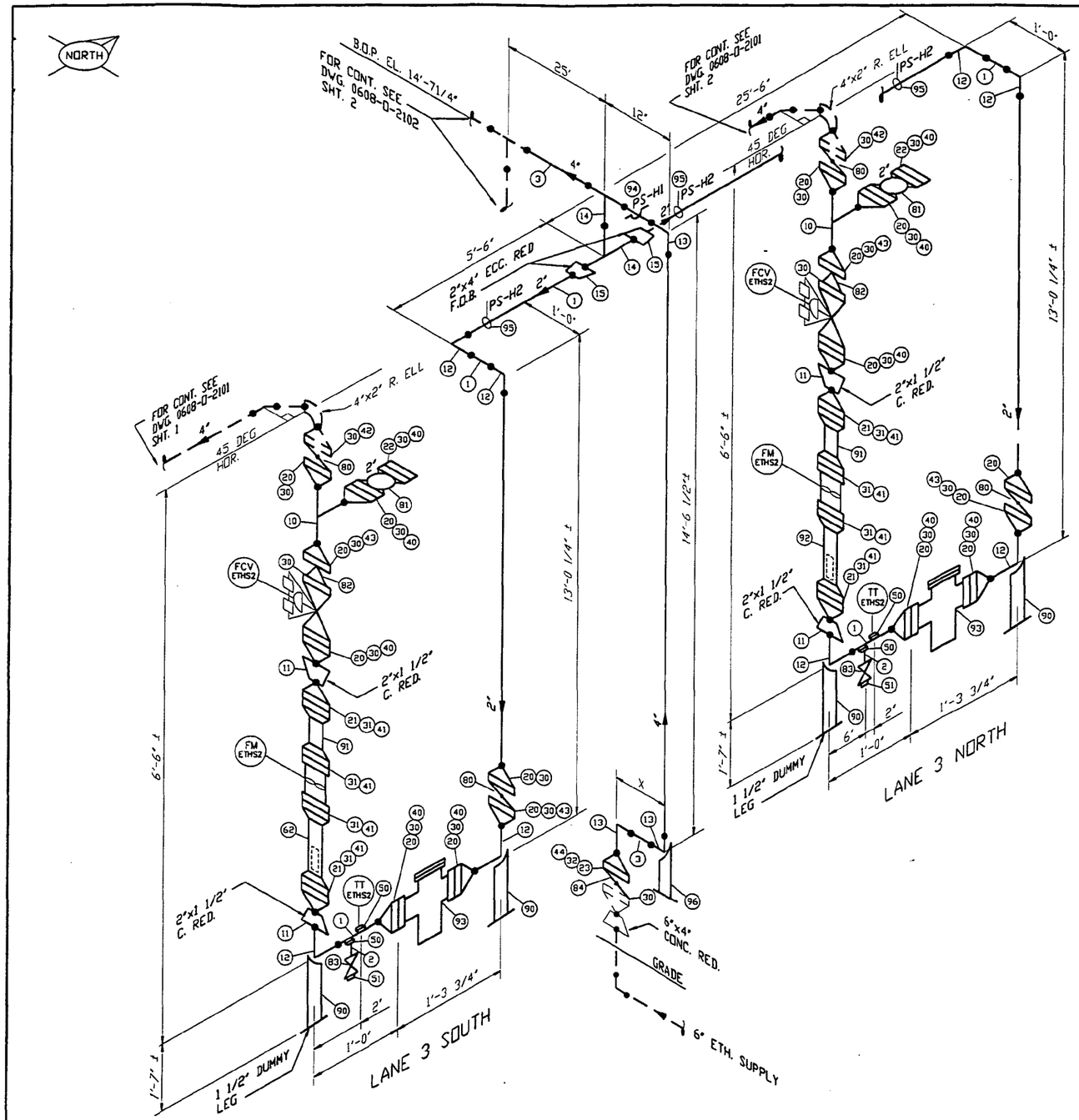

MARK	QTY	SIZE	SCH	DESCRIPTION	TAG
PIPE					
1	58'	2"	SCH 40	PIPE A-53 GRADE B	
2	2	3/4"x3"LG	SCH 160	PIPE NIPPLE, T.O.B. A-53 GRADE B	
3	40'	4"	SCH 40	PIPE A-53 GRADE B	
FITTINGS					
10	2	2"	SCH 40	TEE, BW, ASTM A234 GRADE WPB	
11	4	2"x 1 1/2"	SCH 40	CONCENTRIC REDUCER, BW, ASTM A234 GRADE WPB	
12	8	2"	SCH 40	90 DEG. L.R. ELBOW, BW, ASTM A234 GRADE WPB	
13	3	4"	SCH 40	90 DEG. L.R. ELBOW, BW, ASTM A234 GRADE WPB	
14	4	4"x2"	SCH 40	ECCENTRIC REDUCER, BW, ASTM A234 GRADE WPB	
15	3	4"	SCH 40	TEE, BW, ASTM A234 GRADE WPB	
FLANGES					
20	18	2"	150LB	FLANGE, WN, SCH 40 BORE, R.F., ASTM A105	
21	4	1 1/2"	150LB	FLANGE, WN, SCH 40 BORE, R.F., ASTM A105	
22	4	2"	150LB	FLANGE, BLIND, R.F., ASTM A105	
23	1	4"	150LB	FLANGE, WN, SCH 40 BORE, R.F., ASTM A105	
GASKETS					
30	26	2"	150LB	GASKET, 1/16" THK GARLOK	
31	8	1 1/2"	150LB	GASKET, 1/16" THK GARLOK	
32	2	4"	150LB	GASKET, 1/16" THK GARLOK	
BOLTS					
40	14 SETS	2"	-	4 - 5/8" X 3" LG, STUD BOLT W/ 2 H.D. NUTS, B7/2H	
41	8 SETS	1 1/2"	-	4 - 5/8" X 2 3/4" LG, STUD BOLT W/ 2 H.D. NUTS, B7/2H	
(1) 42	4 SETS	2"	-	4 - 5/8" X 5" LG, STUD BOLT W/ 2 H.D. NUTS, B7/2H	
(2) 43	2 SETS	2"	-	4 - 5/8" X 5 1/2" LG, STUD BOLT W/ 2 H.D. NUTS, B7/2H	
(3) 44	1 SET	4"	-	8 - 5/8" X 5 3/4" LG, STUD BOLT W/ 2 H.D. NUTS, B7/2H	
FORGED STEEL FITTINGS					
50	4	3/4"x4"	3000LB	THREADOLET, ASTM A105	
51	2	3/4"	3000LB	THREADED H.D. PLUG, ASTM A105	
VALVES					
80	4	2"	150LB	BUTTERFLY VALVE, WAFER TYPE (BY OWNER)	
81	4	2"	150LB	FULL PORT BALL VALVE (BY OWNER)	
82	2	2"	150LB	WAFER CHECK VALVE (BY OWNER)	
83	2	3/4"	CL800	GATE VALVE, THREADED	
84	1	4"	150LB	BUTTERFLY VALVE, WAFER TYPE (BY OWNER)	
MISC					
90	4	2"	SCH 40	2" DUMMY LEG SUPPORT	
91	2	1 1/2"	150LB	D/S FLOW STRAIGHT. ASSY., SMITH K22BA-AO (BY OWNER)	
92	2	1 1/2"	150LB	U/S FLOW STRAIGHT. ASSY, SMITH K22AA-AO (BY OWNER)	
93	2	2"	150LB	STRAINER, 40 MESH BASKET, SMITH MODEL 22-E3 (BY OWNER)	
94	1	4"	-	PIPE CLAMP, PS-H1	
95	3	2"	-	PIPE SUPORT PS-H2	
96	1	2"	-	2" DUMMY LEG SUPPORT	
INSTRUMENTS AND CONTROLS					
FM	2	1 1/2"	150LB	FLOW METER, TURBINE TYPE, SMITH K2CA (BY OWNER)	
FCV	2	2"	150LB	CONTROL VALVE, SMITH MODEL 210 (BY OWNER)	
TT	3	3/4"	3000LB	TEMPERATURE PROBE AND WELL, TPW-3-2.5 (BY OWNER)	

NOTES:
(1) BOLT LENGTHS BASED ON 2" BFV FACE TO FACE OF 1 3/4" PLUS (2) 1/16" GASKETS
(2) BOLT LENGTH BASED ON 2" WAFER CKV FACE TO FACE 2 3/8" PLUS (2) 1/16" GASKETS
(3) BOLT LENGTHS BASED ON 4" BFV FACE TO FACE OF 2 1/8" PLUS (2) 1/16" GASKETS

NOTES:

1. CONTRACTOR TO FIELD VERIFY ALL DIMENSIONS PRIOR TO FABRICATION.
2. ALL PIPE AND FITTINGS TO BE PRE-PRIMED.
3. SEE PIPING PLAN DWG. 0608-P-2101 FOR PIPE SUPPORT LOCATIONS.
4. SEE DWG. 0608-P-2202 FOR PIPE SUPPORT DETAILS.

——— NEW PIPE
— — — EXISTING PIPE

DRAFT

DRAWING NO.	REFERENCE DRAWINGS	REV. NO.	DATE	REVISED	DRAWN BY	CKD. BY
		A	09/26/97	ISSUE FOR BID ONLY	DAB	

TOSCO
Tosco Northwest Company
A Division of Tosco Corporation
5528 NW Doane St.
Portland, Oregon 97210

ALPHA ENGINEERS and CONSTRUCTORS, INC.
19 NW 5th AVE, SUITE 204, PORTLAND, OR. 97209 Tel:(503)227-3317/Fax:(503)227-3244

DRAWN BY DAB
CHKD BY
APPD BY
SCALE NONE
DATE 09/22/97

PORTLAND TERMINAL
PORTLAND, OREGON
TRUCK LOAD RACK UPGRADE PROJECT:
PIPING ISOMETRIC
TRUCK LOADING RACK
LANE 3 ETHANOL

DRAWING NO. 0608-0-2102 | SHEET 1 OF 2 | REV. A

6802102I.DWG <CPD: 10/03/97 [TIME: 2:07 PM]>

COP0021389

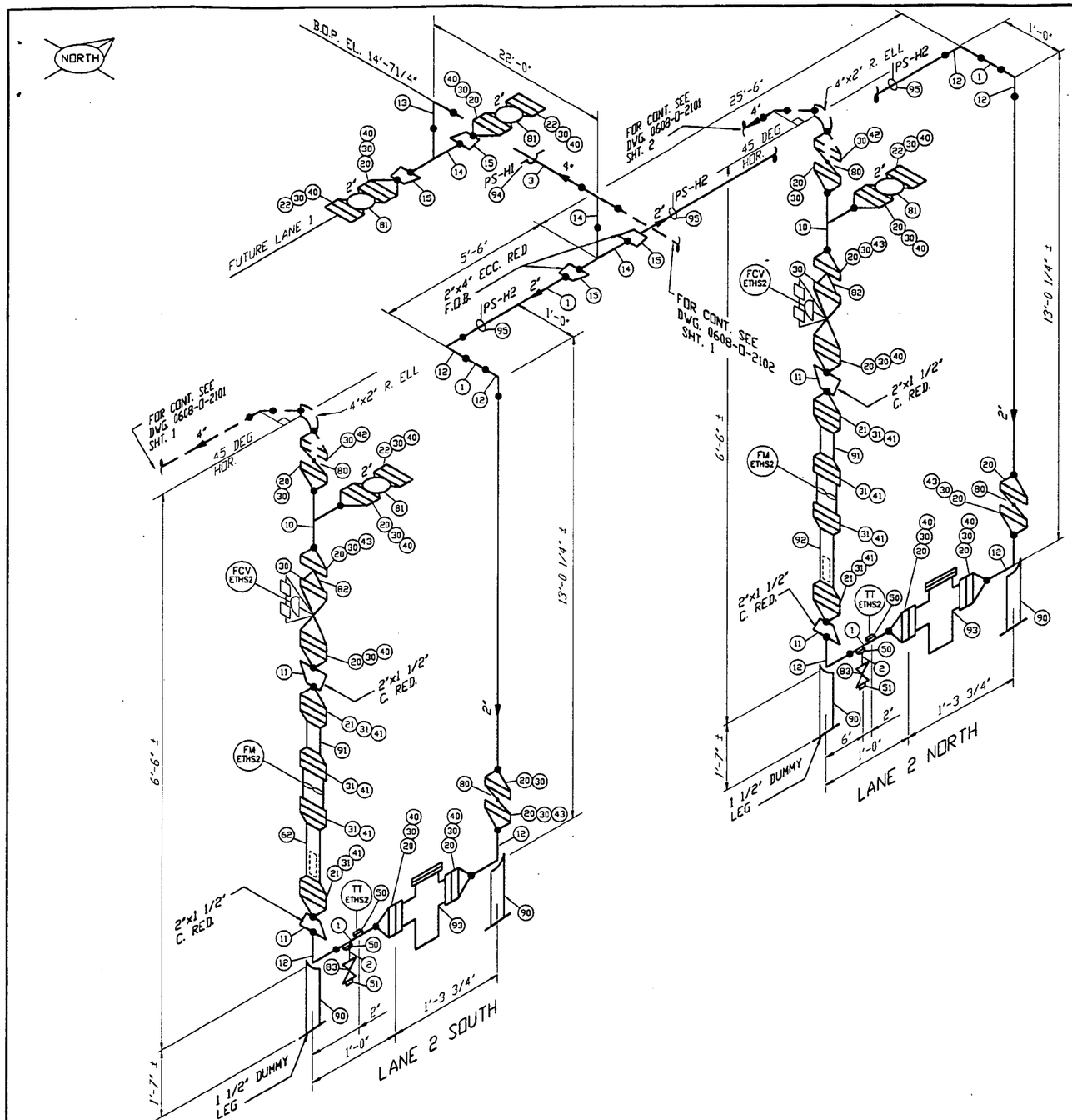

MARK	QTY	SIZE	SCH	DESCRIPTION	TAG
PIPE					
1	58'	2"	SCH 40	PIPE A-53 GRADE B	
2	2	3/4"x3"LG	SCH 160	PIPE NIPPLE, T.O.B. A-53 GRADE B	
3	22'	4"	SCH 40	PIPE A-53 GRADE B	
FITTINGS					
10	2	2"	SCH 40	TEE, BW, ASTM A234 GRADE WPB	
11	4	2"x 1 1/2"	SCH 40	CONCENTRIC REDUCER, BW, ASTM A234 GRADE WPB	
12	8	2"	SCH 40	90 DEG. L.R. ELBOW, BW, ASTM A234 GRADE WPB	
13	1	4"	SCH 40	90 DEG. L.R. ELBOW, BW, ASTM A234 GRADE WPB	
14	4	4"x2"	SCH 40	ECCENTRIC REDUCER, BW, ASTM A234 GRADE WPB	
15	3	4"	SCH 40	TEE, BW, ASTM A234 GRADE WPB	
FLANGES					
20	18	2"	150LB	FLANGE, WN, SCH 40 BORE, R.F., ASTM A105	
21	4	1 1/2"	150LB	FLANGE, WN, SCH 40 BORE, R.F., ASTM A105	
22	4	2"	150LB	FLANGE, BLIND, R.F., ASTM A105	
GASKETS					
30	26	2"	150LB	GASKET, 1/16" THK GARLOK	
31	8	1 1/2"	150LB	GASKET, 1/16" THK GARLOK	
BOLTS					
40	14 SETS	2"	-	4 - 5/8" X 3" LG, STUD BOLT W/ 2 H.D. NUTS, B7/2H	
41	8 SETS	1 1/2"	-	4 - 5/8" X 2 3/4" LG, STUD BOLT W/ 2 H.D. NUTS, B7/2H	
(1) 42	4 SETS	2"	-	4 - 5/8" X 5" LG, STUD BOLT W/ 2 H.D. NUTS, B7/2H	
(2) 43	2 SETS	2"	-	4 - 5/8" X 5 1/2" LG, STUD BOLT W/ 2 H.D. NUTS, B7/2H	
FORGED STEEL FITTINGS					
50	4	3/4"x4"	3000LB	THREADOLET, ASTM A105	
51	2	3/4"	3000LB	THREADED H.D. PLUG, ASTM A105	
VALVES					
80	4	2"	150LB	BUTTERFLY VALVE, WAFER TYPE (BY OWNER)	
81	4	2"	150LB	FULL PORT BALL VALVE (BY OWNER)	
82	2	2"	150LB	WAFER CHECK VALVE (BY OWNER)	
83	2	3/4"	CL800	GATE VALVE, THREADED	
MISC					
90	4	2"	SCH 40	2" DUMMY LEG SUPPORT	
91	2	1 1/2"	150LB	D/S FLOW STRAIGHT. ASSY., SMITH K22BA-AO (BY OWNER)	
92	2	1 1/2"	150LB	U/S FLOW STRAIGHT. ASSY, SMITH K22AA-AO (BY OWNER)	
93	2	2"	150LB	STRAINER, 40 MESH BASKET, SMITH MODEL 22-E3 (BY OWNER)	
94	1	4"	-	PIPE CLAMP, PS-H1	
95	3	2"	-	PIPE SUPORT PS-H2	
INSTRUMENTS AND CONTROLS					
FM	2	1 1/2"	150LB	FLOW METER, TURBINE TYPE, SMITH K2CA (BY OWNER)	
FCV	2	2"	150LB	CONTROL VALVE, SMITH MODEL 210 (BY OWNER)	
TT	3	3/4"	3000LB	TEMPERATURE PROBE AND WELL, TPW-3-2.5 (BY OWNER)	

NOTES:
(1) BOLT LENGTHS BASED ON 2" BFV FACE TO FACE OF 1 3/4" PLUS (2) 1/16" GASKETS
(2) BOLT LENGTH BASED ON 2" WAFER CKV FACE TO FACE 2 3/8" PLUS (2) 1/16" GASKETS

NOTES:

1. CONTRACTOR TO FIELD VERIFY ALL DIMENSIONS PRIOR TO FABRICATION.
2. ALL PIPE AND FITTINGS TO BE PRE-PRIMED.
3. SEE PIPING PLAN DWG. 0608-P-2101 FOR PIPE SUPPORT LOCATIONS.
4. SEE DWG. 0608-P-2___ FOR PIPE SUPPORT DETAILS.

——— NEW PIPE
– – – – EXISTING PIPE

DRAFT

DRAWING NO.	REFERENCE DRAWINGS	REV. NO.	DATE	REVISED	DRAWN BY	CKD. BY
		A	10/03/97	ISSUE FOR BID ONLY	DAB	

TOSCO
Tosco Northwest Company
A Division of Tosco Corporation
5528 NW Doane St.
Portland, Oregon 97210

ALPHA ENGINEERS and CONSTRUCTORS, INC.
19 NW 5th AVE, SUITE 204, PORTLAND, OR. 97209 Tel:(503)227-3317/Fax:(503)227-3244

DRAWN BY DAB
CHKD BY
APRD BY
SCALE NONE
DATE 09/22/97

PORTLAND TERMINAL
PORTLAND, OREGON
TRUCK LOAD RACK UPGRADE PROJECT
PIPING ISOMETRIC
TRUCK LOADING RACK
LANE 2 ETHANOL

DRAWING NO. 0608-0-2102 | SHEET 2 OF 2 | REV. A

68021022.DWG <CPD: 10/03/97 [TIME: 2:00 PM]>

COP00021390

MARK	QTY	SIZE	SCH	DESCRIPTION	TAG
PIPE					
1	12'	3"	SCH 40	PIPE A-53 GRADE B	
2	20'	6"	SCH 40	PIPE A-53 GRADE B	
FITTINGS					
10	2	2"	SCH 40	90 DEG. L.R. ELBOW, BW, ASTM A234 GRADE WPB	
11	2	6"x3"	SCH 40	REDUCING TEE, BW, ASTM A234 GRADE WPB	
12	2	3"x2"	SCH 40	CONCENTRIC REDUCER, BW, ASTM A234 GRADE WPB	
13	3	6"	SCH 40	90 DEG. L.R. ELBOW, BW, ASTM A234 GRADE WPB	
14	1	6"	SCH 40	TEE, BW, ASTM A234 GRADE WPB	
FLANGES					
20	4	3"	150LB	FLANGE, WN, SCH 40 BORE, R.F., ASTM A105	
21	1	6"	150LB	FLANGE, WN, SCH 40 BORE, R.F., ASTM A105	
GASKETS					
30	4	3"	150LB	GASKET, 1/16" THK GARLOK	
31	2	6"	150LB	GASKET, 1/16" THK GARLOK	
BOLTS					
40	4 SETS	3"	-	4 - 5/8" X 3 1/2" LG, STUD BOLT W/ 2 H.D. NUTS, B7/2H	
41	2 SETS	6"		8 - 3/4" X 3 3/4" LG, STUD BOLT W/ 2 H.D. NUTS, B7/2H	
VALVES					
80	2	3"	150LB	GATE VALVE, FLANGED, RF (BY OWNER)	
MISC					
90	2	-	-	PIPE SUPPORT	

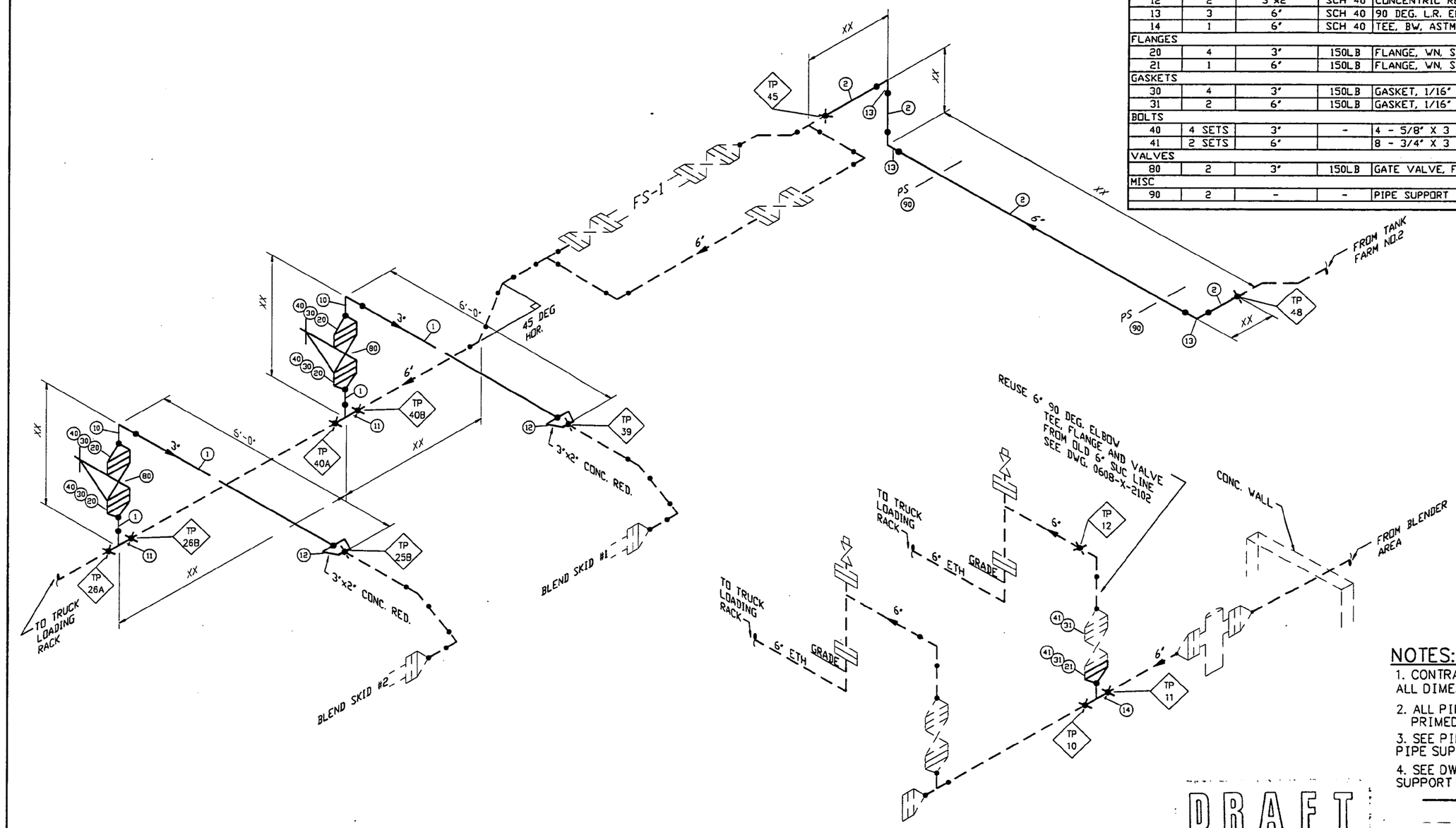

NOTES:

1. CONTRACTOR TO FIELD VERIFY ALL DIMENSIONS PRIOR TO FABRICATION.
2. ALL PIPE AND FITTINGS TO BE PRE-PRIMED.
3. SEE PIPING PLAN DWG. 0608-P-2101 FOR PIPE SUPPORT LOCATIONS.
4. SEE DWG. 0608-P-2___ FOR PIPE SUPPORT DETAILS.

——— NEW PIPE

– – – – EXISTING PIPE

DRAFT

DRAWING NO.	REFERENCE DRAWINGS	REV. NO.	DATE	REVISED	DRAWN BY	CKD. BY
0608-P-2102	PIPING TANK FARM NO.1 SOUTH OF BLENDER SKIDS	A	10/03/97	ISSUE FOR BID ONLY	DAB	
0608-P-2103	PIPING SFPPL YARD TANK FARM NO.1					

TOSCO
Tosco Northwest Company
A Division of Tosco Corporation
5528 NW Doane St.
Portland, Oregon 97210

ALPHA ENGINEERS and CONSTRUCTORS, INC.
19 NW 5th AVE, SUITE 204, PORTLAND, OR. 97209 Tel:(503)227-3317/Fax:(503)227-3244

DRAWN BY	DAB
CHKD BY	
APPD BY	
SCALE	NONE
DATE	09/22/97

PORTLAND TERMINAL
PORTLAND, OREGON
TRUCK LOAD RACK UPGRADE PROJECT
PIPING ISOMETRIC
ETHANOL LINE AT
BLENDER SKIDS

DRAWING NO.	SHEET	REV.
0608-0-2103	1 OF 1	A

6802103I.DWG <CPD: 10/03/97 [TIME: 2:18 PM]>

COP00021391

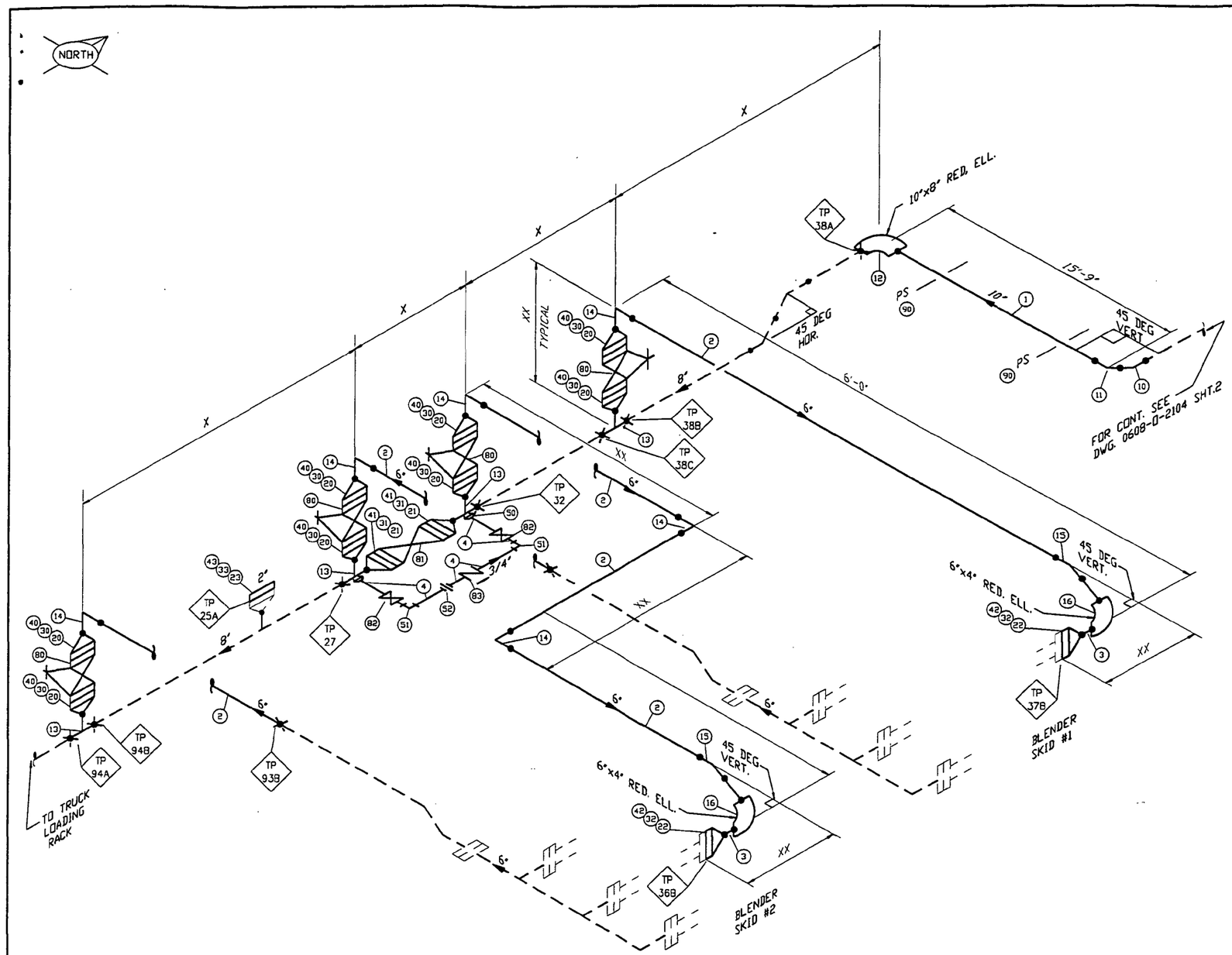

MARK	QTY	SIZE	SCH	DESCRIPTION	TAG
PIPE					
1	14'	10"	SCH 40	PIPE A-53 GRADE B	
2	35'	6"	SCH 40	PIPE A-53 GRADE B	
3	2'	4"	SCH 40	PIPE A-53 GRADE B	
4	7	3/4"x __LG	SCH 160	PIPE NIPPLE, T.B.E, A-53 GRADE B	
FITTINGS					
10	1	10"	SCH 40	45 DEG. ELBOW, BW, ASTM A234 GRADE WPB	
11	1	10"	SCH 40	90 DEG. L.R. ELBOW, BW, ASTM A234 GRADE WPB	
12	1	10"x8"	SCH 40	REDUCING ELBOW, BW, ASTM A234 GRADE WPB	
13	4	8"x6"	SCH 40	REDUCING TEE, BW, ASTM A234 GRADE WPB	
14	6	6"	SCH 40	90 DEG. L.R. ELBOW, BW, ASTM A234 GRADE WPB	
15	2	6"	SCH 40	45 DEG. ELBOW, BW, ASTM A234 GRADE WPB	
16	2	6"x4"	SCH 40	REDUCING ELBOW, BW, ASTM A234 GRADE WPB	
FLANGES					
20	8	6"	150LB	FLANGE, WN, SCH 40 BORE, R.F., ASTM A105	
21	2	8"	150LB	FLANGE, WN, SCH 40 BORE, R.F., ASTM A105	
22	2	4"	150LB	FLANGE, WN, SCH 40 BORE, R.F., ASTM A105	
23	1	2"	150LB	FLANGE,BLIND, R.F., ASTM A105	
GASKETS					
30	8	6"	150LB	GASKET, 1/16" THK GARLOK	
31	2	8"	150LB	GASKET, 1/16" THK GARLOK	
32	2	4"	150LB	GASKET, 1/16" THK GARLOK	
33	1	2"	150LB	GASKET, 1/16" THK GARLOK	
BOLTS					
40	8 SETS	6"	-	8 - 3/4" X 3 3/4" LG, STUD BOLT W/ 2 H.D. NUTS, B7/2H	
41	2 SETS	8"	-	8 - 3/4" X 4" LG, STUD BOLT W/ 2 H.D. NUTS, B7/2H	
42	2 SETS	4"	-	4 - 5/8" X 3 1/2" LG, STUD BOLT W/ 2 H.D. NUTS, B7/2H	
43	1 SET	2"	-	4 - 5/8" X 3" LG, STUD BOLT W/ 2 H.D. NUTS, B7/2H	
THREADED FITTINGS					
50	2	3/4"x8"	3000LB	THREADOLET, ASTM A-105	
51	2	3/4"	3000LB	90 DEG ELBOW, THREADED, ASTM A-105	
52	1	3/4"	3000LB	UNION, THREADED, ASTM A-105	
VALVES					
80	4	6"	150LB	GATE VALVE, FLANGED, RF (BY OWNER)	
81	1	8"	150LB	GATE VALVE, FLANGED, RF (BY OWNER)	
82	2	3/4"	CL800	GATE VALVE, THREADED	
83	1	3/4"	CL800	CHECK VALVE THREADED	
MISC					
90	2	10"	SCH 40	PIPE SUPPORT	

NOTES:

NOTES:

1. CONTRACTOR TO FIELD VERIFY ALL DIMENSIONS PRIOR TO FABRICATION.
2. ALL PIPE AND FITTINGS TO BE PRE-PRIMED.
3. SEE PIPING PLAN DWG. 0608-P-2101 FOR PIPE SUPPORT LOCATIONS.
4. SEE DWG. 0608-P-2___ FOR PIPE SUPPORT DETAILS.

——— NEW PIPE

– – – – EXISTING PIPE

DRAFT

DRAWING NO.	REFERENCE DRAWINGS	REV. NO.	DATE	REVISED	DRAWN BY	CKD. BY
		A	10/03/97	ISSUE FOR BID	DAB	

TOSCO
Tosco Northwest Company
A Division of Tosco Corporation
5528 NW Doane St.
Portland, Oregon 97210

ALPHA ENGINEERS and CONSTRUCTORS, INC.
19 NW 5th AVE, SUITE 204, PORTLAND, OR 97209 Tel:(503)227-3317/Fax:(503)227-3244

DRAWN BY	DAB
CHKD BY	
APPD BY	
SCALE	NONE
DATE	09/22/97

PORTLAND TERMINAL
PORTLAND, OREGON
TRUCK LOAD RACK UPGRADE PROJECT
PIPING ISOMETRIC
84 SG LINE

DRAWING NO.	SHEET	REV.
0608-0-2104	1 OF 3	A

6802104D.DWG <CPD: 10/03/97 [TIME: 2:23 PM]>

COP0021392

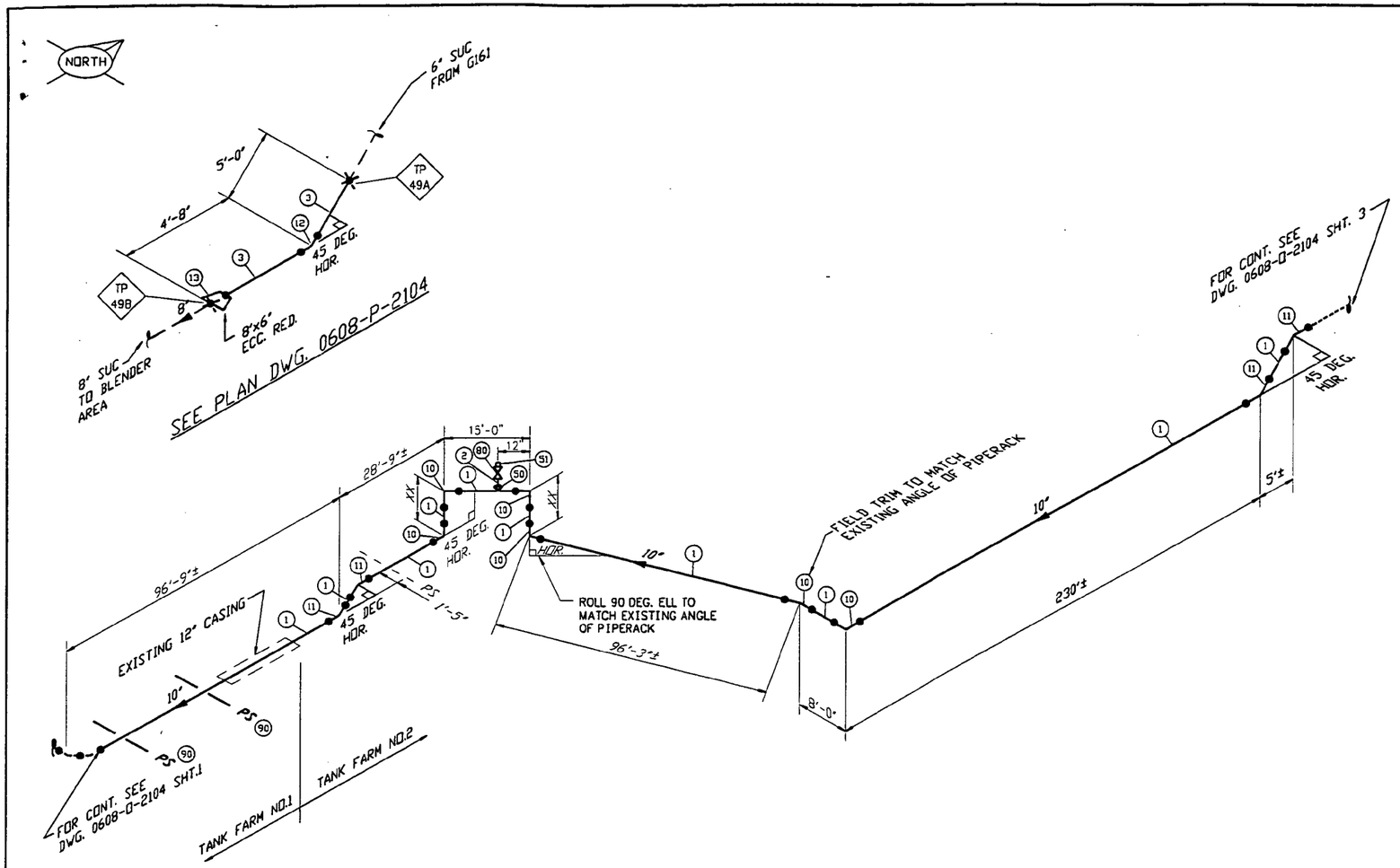

MARK	QTY	SIZE	SCH	DESCRIPTION	TAG
PIPE					
1	480'	10"	SCH 40	PIPE A-53 GRADE B	
2	1	3/4"x3"LG	SCH 160	PIPE NIPPLE, T.B.E, A-53 GRADE B	
3	9'	6"	SCH 40	PIPE A-53 GRADE B	
FITTINGS					
10	6	10"	SCH 40	90 DEG. L.R. ELBOW, BW, ASTM A234 GRADE WPB	
11	4	10"	SCH 40	45 DEG. ELBOW, BW, ASTM A234 GRADE WPB	
12	1	6"	SCH 40	45 DEG. ELBOW, BW, ASTM A234 GRADE WPB	
13	1	8"x6"	SCH 40	ECCENTRIC REDUCER, BW, ASTM A234 GRADE WPB	
THREADED FITTINGS					
50	1	3/4"x10"	3000L.B	THREADOLET, ASTM A-105	
51	1	3/4"	3000L.B	HEX HEAD PLUG, THREADED, ASTM A-105	
VALVES					
80	1	3/4"	CL800	GATE VALVE, THREADED	
MISC					
90	2	10"	SCH 40	PIPE SUPPORT	

NOTES:

NOTES:

1. CONTRACTOR TO FIELD VERIFY ALL DIMENSIONS PRIOR TO FABRICATION.
2. ALL PIPE AND FITTINGS TO BE PRE-PRIMED.
3. SEE PIPING PLAN DWG. 0608-P-2101 FOR PIPE SUPPORT LOCATIONS.
4. SEE DWG. 0608-P-2202 FOR PIPE SUPPORT DETAILS.

——— NEW PIPE

– – – – EXISTING PIPE

DRAFT

DRAWING NO.	REFERENCE DRAWINGS	REV. NO.	DATE	REVISED	DRAWN BY	CKD. BY
		A	09/26/97	FOR REVIEW AND COMMENT	DAB	

TOSCO
Tosco Northwest Company
A Division of Tosco Corporation
5528 NW Doane St.
Portland, Oregon 97210

ALPHA ENGINEERS and CONSTRUCTORS, INC.
19 NW 5th AVE, SUITE 204, PORTLAND, OR. 97209 Tel:(503)227-3317/Fax:(503)227-3244

DRAWN BY DAB
CHKD BY
APPD BY
SCALE NONE
DATE 09/22/97

PORTLAND TERMINAL
PORTLAND, OREGON
TRUCK LOAD RACK UPGRADE PROJECT
PIPING ISOMETRIC
84 SG LINE

DRAWING NO.	SHEET	REV.
0608-0-2104	2 OF 3	A

68021042.DWG <CPD: 10/03/97 [TIME: 2:34 PM]>

COP00213931

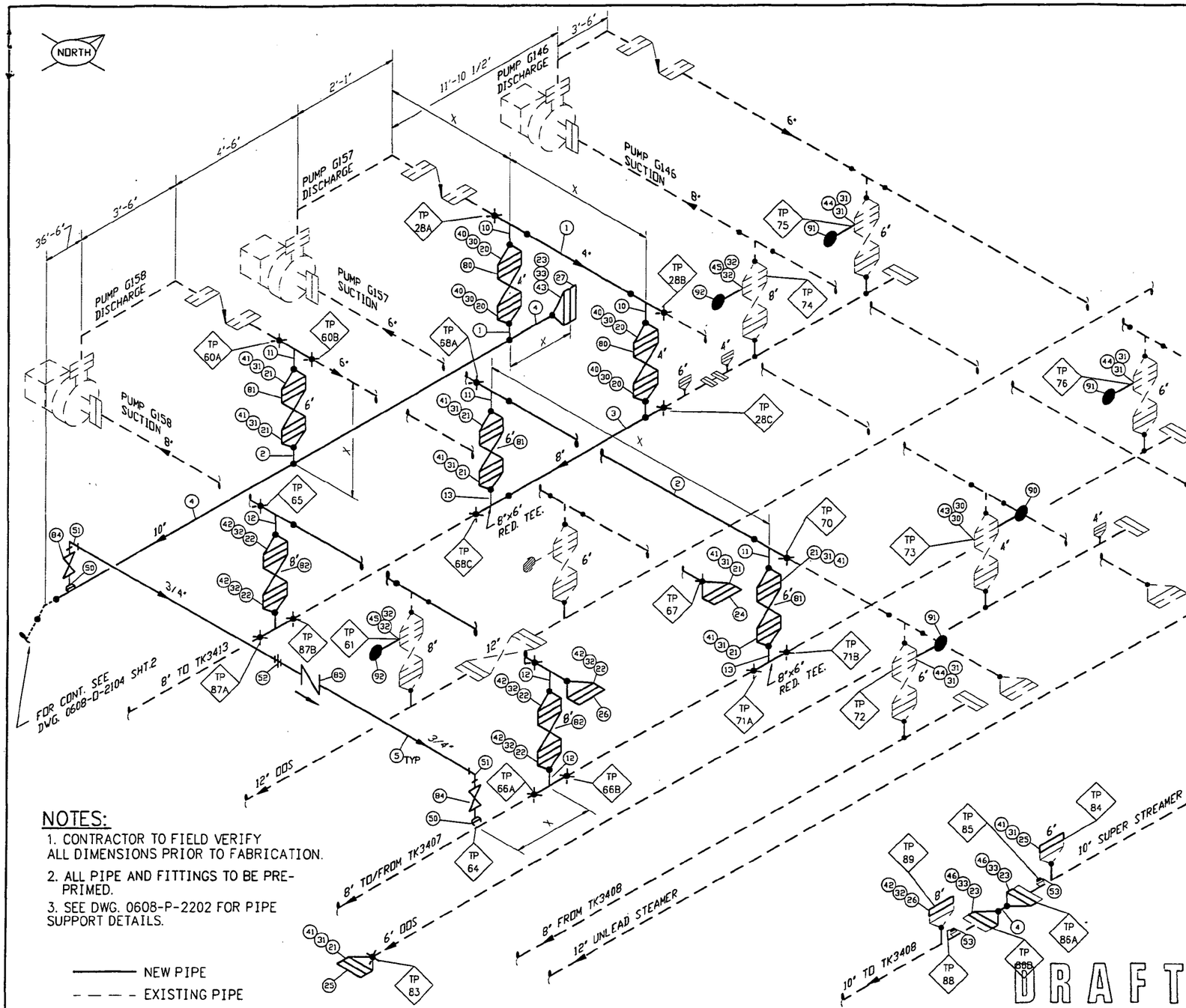

MARK	QTY	SIZE	SCH	DESCRIPTION	TAG
PIPE					
1	4'	4"	SCH 40	PIPE A-53 GRADE B	
2	4'	6"	SCH 40	PIPE A-53 GRADE B	
3	3'	8"	SCH 40	PIPE A-53 GRADE B	
4	48'	10"	SCH 40	PIPE A-53 GRADE B	
5	10	3/4"x __LG	SCH 160	PIPE NIPPLE, T.B.E, A-53 GRADE B	
FITTINGS					
10	2	4"	SCH 40	TEE, BW, ASTM A234 GRADE WPB	
11	4	6"	SCH 40	TEE, BW, ASTM A234 GRADE WPB	
12	5	8"	SCH 40	TEE, BW, ASTM A234 GRADE WPB	
13	2	8"x6"	SCH 40	REDUCING TEE, BW, ASTM A234 GRADE WPB	
14	1	10"x8"	SCH 40	REDUCING TEE, BW, ASTM A234 GRADE WPB	
15	1	10"x6"	SCH 40	REDUCING TEE, BW, ASTM A234 GRADE WPB	
FLANGES					
20	4	4"	150LB	FLANGE, WN, SCH 40 BORE, R.F., ASTM A105	
21	12	6"	150LB	FLANGE, WN, SCH 40 BORE, R.F., ASTM A105	
22	9	8"	150LB	FLANGE, WN, SCH 40 BORE, R.F., ASTM A105	
23	3	10"	150LB	FLANGE, WN, SCH 40 BORE, R.F., ASTM A105	
24	2	10"	150LB	FLANGE, SLIP-ON SCH 40 BORE, R.F., ASTM A105	
25	4	6"	150LB	FLANGE,BLIND, R.F., ASTM A105	
26	3	8"	150LB	FLANGE,BLIND, R.F., ASTM A105	
27	1	10"	150LB	FLANGE,BLIND, R.F., ASTM A105	
GASKETS					
30	6	4"	150LB	GASKET, 1/16" THK GARLOK	
31	19	6"	150LB	GASKET, 1/16" THK GARLOK	
32	12	8"	150LB	GASKET, 1/16" THK GARLOK	
33	5	10"	150LB	GASKET, 1/16" THK GARLOK	
MISC					
90	1	4"	150LB	FRY PAN, 3/8" THK, ASTM A285	
91	3	6"	150LB	FRY PAN, 1/2" THK, ASTM A285	
92	2	8"	150LB	FRY PAN, 1/2" THK, ASTM A285	
BOLTS					
40	4 SETS	4"	-	4 - 5/8" X 3 1/2" LG, STUD BOLT W/ 2 H.D. NUTS, B7/2H	
41	13 SETS	6"	-	8 - 3/4" X 3 3/4" LG, STUD BOLT W/ 2 H.D. NUTS, B7/2H	
42	10 SETS	8"	-	8 - 3/4" X 4" LG, STUD BOLT W/ 2 H.D. NUTS, B7/2H	
43	1 SET	4"	-	4 - 5/8" X 4" LG, STUD BOLT W/ 2 H.D. NUTS, B7/2H	
44	3 SETS	6"	-	8 - 3/4" X 4 1/4" LG, STUD BOLT W/ 2 H.D. NUTS, B7/2H	
45	2 SETS	8"	-	8 - 3/4" X 4 3/4" LG, STUD BOLT W/ 2 H.D. NUTS, B7/2H	
46	5 SETS	10"	-	12 - 7/8" X 4 1/2" LG, STUD BOLT W/ 2 H.D. NUTS, B7/2H	
THREADED FITTINGS					
50	4	3/4"x8"	3000LB	THREADOLET, ASTM A-105	
51	4	3/4"	3000LB	90 DEG ELBOW, THREADED, ASTM A-105	
52	2	3/4"	3000LB	UNION, THREADED, ASTM A-105	
53	2	3/4"	3000LB	HEX HEAD PLUG, THREADED, ASTM A-105	
VALVES					
80	2	4"	150LB	GATE VALVE, FLANGED, RF (BY OWNER)	
81	4	6"	150LB	GATE VALVE, FLANGED, RF (BY OWNER)	
82	3	8"	150LB	GATE VALVE, FLANGED, RF (BY OWNER)	
83	1	10"	150LB	GATE VALVE, FLANGED, RF (BY OWNER)	
84	4	3/4"	CL800	GATE VALVE, THREADED	
85	2	3/4"	CL800	CHECK VALVE THREADED	

NOTES:

NOTES:

1. CONTRACTOR TO FIELD VERIFY ALL DIMENSIONS PRIOR TO FABRICATION.
2. ALL PIPE AND FITTINGS TO BE PRE-PRIMED.
3. SEE DWG. 0608-P-2202 FOR PIPE SUPPORT DETAILS.

——— NEW PIPE

– – – – EXISTING PIPE

DRAFT

DRAWING NO.	REFERENCE DRAWINGS	REV. NO.	DATE	REVISED	DRAWN BY	CKD. BY
		A	10/03/97	ISSUE FOR BID ONLY	DAB	

TOSCO
Tosco Northwest Company
A Division of Tosco Corporation
5528 NW Doane St.
Portland, Oregon 97210

ALPHA ENGINEERS and CONSTRUCTORS, INC.
19 NW 5th AVE, SUITE 204, PORTLAND, OR. 97209 Tel:(503)227-3317/Fax:(503)227-3244

DRAWN BY DAB
CHKD BY
APPD BY
SCALE NONE
DATE 09/22/97

PORTLAND TERMINAL
PORTLAND, OREGON
TRUCK LOAD RACK UPGRADE PROJECT
PIPING ISOMETRIC
84 SG LINE AND GASOLINE
PUMP AREA TF#2

DRAWING NO. 0608-0-2104 | SHEET 3 OF 3 | REV. A

68021043.DWG <CPD: 10/03/97 [THU: 2:39 PM] >

COP0021394

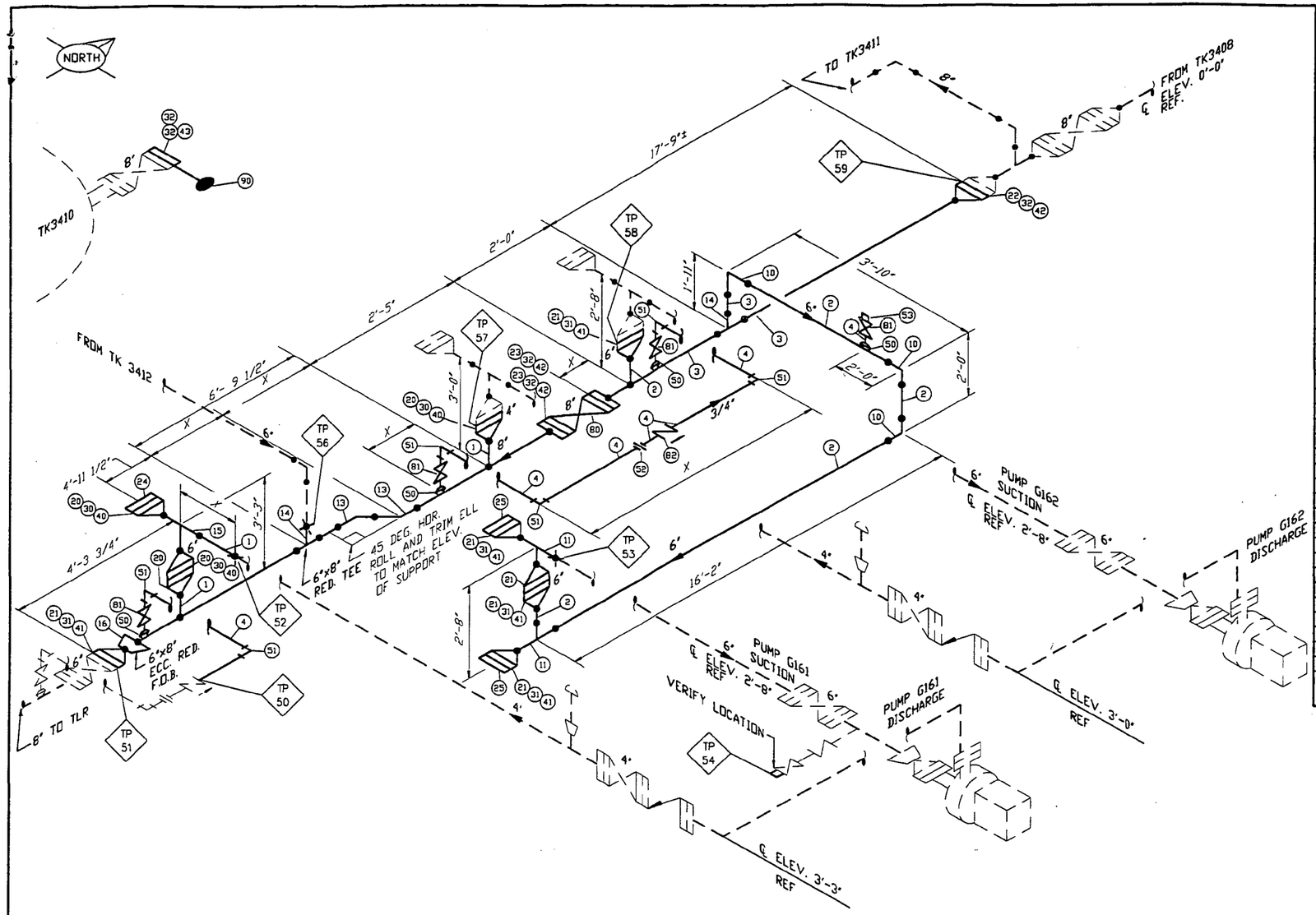

MARK	QTY	SIZE	SCH	DESCRIPTION	TAG
PIPE					
1	4'	4"	SCH 40	PIPE A-53 GRADE B	
2	25'	6"	SCH 40	PIPE A-53 GRADE B	
3	40'	8"	SCH 40	PIPE A-53 GRADE B	
4	12	3/4"x __LG	SCH 160	PIPE NIPPLE, T.B.E, A-53 GRADE B	
FITTINGS					
10	3	6"	SCH 40	90 DEG. L.R. ELBOW, BW, ASTM A234 GRADE WPB	
11	2	6"	SCH 40	TEE, BW, ASTM A234 GRADE WPB	
12	1	8"	SCH 40	TEE, BW, ASTM A234 GRADE WPB	
13	2	8"	SCH 40	45 DEG ELBOW, BW, ASTM A234 GRADE WPB	
14	2	8"x6"	SCH 40	REDUCING TEE, BW, ASTM A234 GRADE WPB	
15	1	4"	SCH 40	TEE, BW, ASTM A234 GRADE WPB	
16	1	8"x6"	SCH 40	ECCENTRIC REDUCER, BW, ASTM A234 GRADE WPB	
FLANGES					
20	4	4"	150LB	FLANGE, WN, SCH 40 BORE, R.F., ASTM A105	
21	6	6"	150LB	FLANGE, WN, SCH 40 BORE, R.F., ASTM A105	
22	1	8"	150LB	FLANGE, WN, SCH 40 BORE, R.F., ASTM A105	
23	2	8"	150LB	FLANGE, SLIP-ON SCH 40 BORE, R.F., ASTM A105	
24	1	4"	150LB	FLANGE,BLIND, R.F., ASTM A105	
25	2	6"	150LB	FLANGE,BLIND, R.F., ASTM A105	
GASKETS					
30	3	4"	150LB	GASKET, 1/16" THK GARLOK	
31	5	6"	150LB	GASKET, 1/16" THK GARLOK	
32	5	8"	150LB	GASKET, 1/16" THK GARLOK	
BOLTS					
40	3 SETS	4"	-	4 - 5/8" X 3 1/2" LG, STUD BOLT W/ 2 H.D. NUTS, B7/2H	
41	5 SETS	6"	-	8 - 3/4" X 3 3/4" LG, STUD BOLT W/ 2 H.D. NUTS, B7/2H	
42	3 SETS	8"	-	8 - 3/4" X 4" LG, STUD BOLT W/ 2 H.D. NUTS, B7/2H	
43	1 SET	8"	-	8 - 3/4" X 4 3/4" LG, STUD BOLT W/ 2 H.D. NUTS, B7/2H	
THREADED FITTINGS					
50	4	3/4"x8"	3000LB	THREADOLET, ASTM A-105	
51	6	3/4"	3000LB	90 DEG ELBOW, THREADED, ASTM A-105	
52	1	3/4"	3000LB	UNION, THREADED, ASTM A-105	
53	1	3/4"	3000LB	HEX HEAD PLUG, THREADED, ASTM A-105	
VALVES					
80	1	8"	150LB	GATE VALVE, FLANGED, RF (BY OWNER)	
81	4	3/4"	CL800	GATE VALVE, THREADED	
82	1	3/4"	CL800	CHECK VALVE THREADED	
MISC					
90	1	8"	150LB	SPEC BLIND 1/2" THK,ASTM A285	

NOTES:

NOTES:

1. CONTRACTOR TO FIELD VERIFY ALL DIMENSIONS PRIOR TO FABRICATION.
2. ALL PIPE AND FITTINGS TO BE PRE-PRIMED.
3. SEE DWG. 0608-P-2202 FOR PIPE SUPPORT DETAILS.

DRAFT

——— NEW PIPE

– – – – EXISTING PIPE

DRAWING NO.	REFERENCE DRAWINGS	REV. NO.	DATE	REVISED	DRAWN BY	CKD. BY
		A	09/26/97	FOR REVIEW AND COMMENT	DAB	

TOSCO
Tosco Northwest Company
A Division of Tosco Corporation
5528 NW Doane St.
Portland, Oregon 97210

ALPHA ENGINEERS and CONSTRUCTORS, INC.
19 NW 5th AVE., SUITE 204, PORTLAND, OR. 97209 Tel:(503)227-3317/Fax:(503)227-3244

DRAWN BY DAB
CHKD BY
APPD BY
SCALE NONE
DATE 09/22/97

PORTLAND TERMINAL
PORTLAND, OREGON
TRUCK LOAD RACK UPGRADE PROJECT
PIPING ISOMETRIC
SUPER UNLEADED LINE
G162 PUMP AREA TF#2

DRAWING NO.	SHEET	REV.
0608-0-2105	1 OF 1	A

6802105.DWG <CPD: 10/03/97 [TUE: 2:41 PM]>

COP00021395

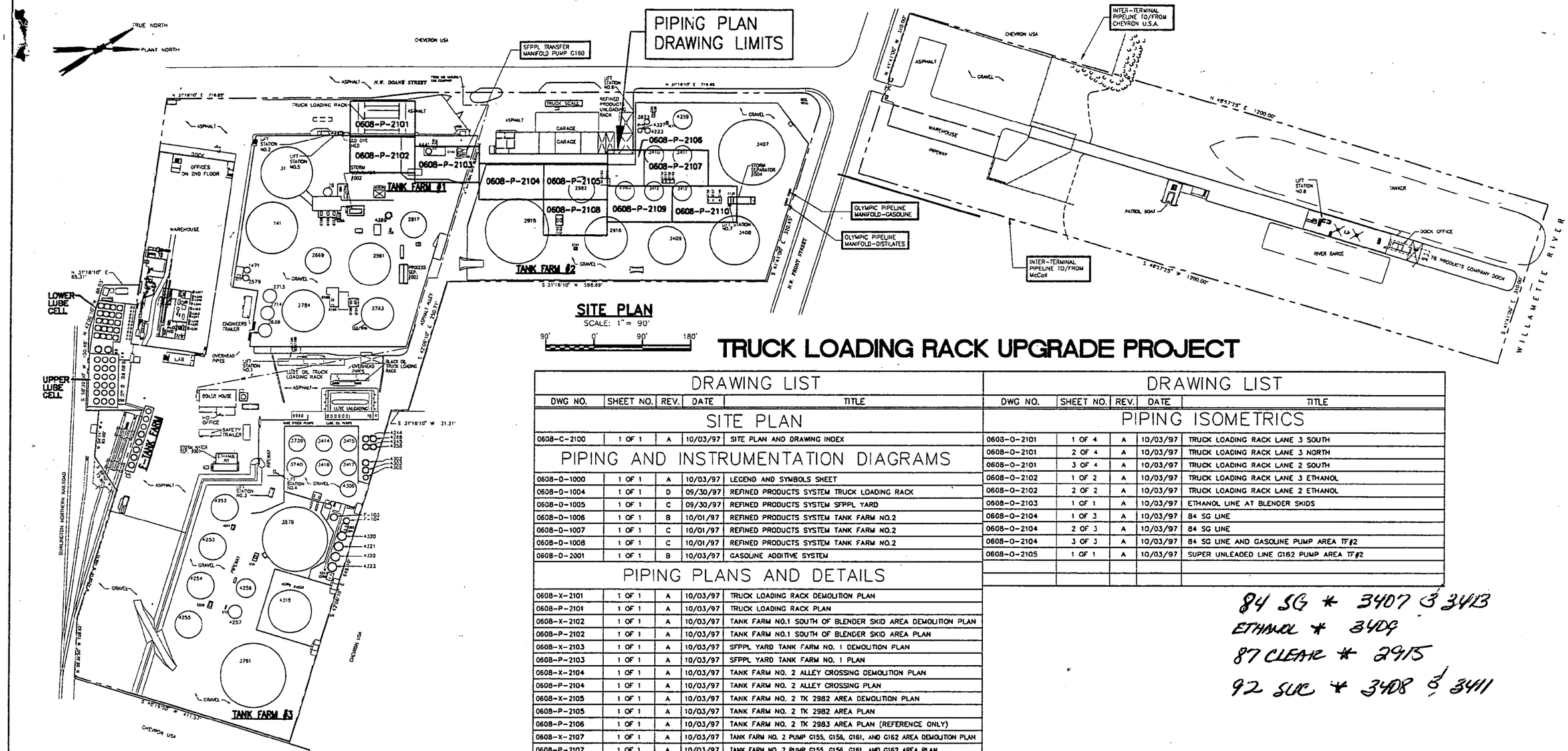

SITE PLAN

SCALE: 1" = 90'

90' 0' 90' 180'

TRUCK LOADING RACK UPGRADE PROJECT

DRAWING LIST				
DWG NO.	SHEET NO.	REV.	DATE	TITLE
SITE PLAN				
0608-C-2100	1 OF 1	A	10/03/97	SITE PLAN AND DRAWING INDEX
PIPING AND INSTRUMENTATION DIAGRAMS				
0608-D-1000	1 OF 1	A	10/03/97	LEGEND AND SYMBOLS SHEET
0608-D-1004	1 OF 1	D	09/30/97	REFINED PRODUCTS SYSTEM TRUCK LOADING RACK
0608-D-1005	1 OF 1	C	09/30/97	REFINED PRODUCTS SYSTEM SFPPL YARD
0608-D-1006	1 OF 1	B	10/01/97	REFINED PRODUCTS SYSTEM TANK FARM NO.2
0608-D-1007	1 OF 1	C	10/01/97	REFINED PRODUCTS SYSTEM TANK FARM NO.2
0608-D-1008	1 OF 1	C	10/01/97	REFINED PRODUCTS SYSTEM TANK FARM NO.2
0608-D-2001	1 OF 1	B	10/03/97	GASOLINE ADDITIVE SYSTEM
PIPING PLANS AND DETAILS				
0608-X-2101	1 OF 1	A	10/03/97	TRUCK LOADING RACK DEMOLITION PLAN
0608-P-2101	1 OF 1	A	10/03/97	TRUCK LOADING RACK PLAN
0608-X-2102	1 OF 1	A	10/03/97	TANK FARM NO.1 SOUTH OF BLENDER SKID AREA DEMOLITION PLAN
0608-P-2102	1 OF 1	A	10/03/97	TANK FARM NO.1 SOUTH OF BLENDER SKID AREA PLAN
0608-X-2103	1 OF 1	A	10/03/97	SFPPL YARD TANK FARM NO. 1 DEMOLITION PLAN
0608-P-2103	1 OF 1	A	10/03/97	SFPPL YARD TANK FARM NO. 1 PLAN
0608-X-2104	1 OF 1	A	10/03/97	TANK FARM NO. 2 ALLEY CROSSING DEMOLITION PLAN
0608-P-2104	1 OF 1	A	10/03/97	TANK FARM NO. 2 ALLEY CROSSING PLAN
0608-X-2105	1 OF 1	A	10/03/97	TANK FARM NO. 2 TK 2982 AREA DEMOLITION PLAN
0608-P-2105	1 OF 1	A	10/03/97	TANK FARM NO. 2 TK 2982 AREA PLAN
0608-P-2106	1 OF 1	A	10/03/97	TANK FARM NO. 2 TK 2983 AREA PLAN (REFERENCE ONLY)
0608-X-2107	1 OF 1	A	10/03/97	TANK FARM NO. 2 PUMP G155, G156, G161, AND G162 AREA DEMOLITION PLAN
0608-P-2107	1 OF 1	A	10/03/97	TANK FARM NO. 2 PUMP G155, G156, G161, AND G162 AREA PLAN
0608-X-2108	1 OF 1	A	10/03/97	TANK FARM NO. 2 PUMP G152 AND G153 AREA DEMOLITION PLAN
0608-P-2108	1 OF 1	A	10/03/97	TANK FARM NO. 2 PUMP G152 AND G153 AREA PLAN
0608-X-2109	1 OF 1	A	10/03/97	TANK FARM NO. 2 TK 2983 AND TK3412 AREA DEMOLITION PLAN
0608-P-2109	1 OF 1	A	10/03/97	TANK FARM NO. 2 TK 2983 AND TK3412 AREA PLAN
0608-X-2110	1 OF 1	A	10/03/97	TANK FARM NO. 2 G146, G157 AND G158 AREA DEMOLITION PLAN
0608-P-2110	1 OF 1	A	10/03/97	TANK FARM NO. 2 G146, G157 AND G158 AREA PLAN
0608-P-2201	1 OF 1	A	10/03/97	TRUCK LOADING RACK SECTIONS AND DETAILS
0608-P-2202	1 OF 1	A	10/03/97	PIPE SUPPORTS

DRAWING LIST				
DWG NO.	SHEET NO.	REV.	DATE	TITLE
PIPING ISOMETRICS				
0608-0-2101	1 OF 4	A	10/03/97	TRUCK LOADING RACK LANE 3 SOUTH
0608-0-2101	2 OF 4	A	10/03/97	TRUCK LOADING RACK LANE 3 NORTH
0608-0-2101	3 OF 4	A	10/03/97	TRUCK LOADING RACK LANE 2 SOUTH
0608-0-2102	1 OF 2	A	10/03/97	TRUCK LOADING RACK LANE 3 ETHANOL
0608-0-2102	2 OF 2	A	10/03/97	TRUCK LOADING RACK LANE 2 ETHANOL
0608-0-2103	1 OF 1	A	10/03/97	ETHANOL LINE AT BLENDER SKIDS
0608-0-2104	1 OF 3	A	10/03/97	84 SG LINE
0608-0-2104	2 OF 3	A	10/03/97	84 SG LINE
0608-0-2104	3 OF 3	A	10/03/97	84 SG LINE AND GASOLINE PUMP AREA TF#2
0608-0-2105	1 OF 1	A	10/03/97	SUPER UNLEADED LINE G162 PUMP AREA TF#2

84 SG * 3407 & 3413
ETHANOL * 3409
87 CLEAR * 2915
92 SUP * 3408 & 3411

DRAFT

DRAWING NO.	REFERENCE DRAWINGS	REV. NO.	DATE	REVISED	DRAWN BY	CKD. BY
		A	10/03/97	FOR REVIEW AND COMMENT	DAB	

TOSCO
Tosco Distribution Company
A Division of Tosco Corporation
5528 NW Doane St.
Portland, Oregon 97210

ALPHA ENGINEERS and CONSTRUCTORS, INC.
19 NW 5th AVE. SUITE 204, PORTLAND, OR. 97209 Tel:(503)227-3317/Fax:(503)227-3244

DRAWN BY	DAB
CHKD BY	
APPD BY	
SCALE	AS SHOWN
DATE	10/03/97
DRAWING NO.	0608-C-2100
SHEET	1 OF 1
REV.	A

PORTLAND TERMINAL
PORTLAND, OREGON
TRUCK LOAD RACK UPGRADE PROJECT
SITE PLAN AND DRAWING INDEX

68PC2100.DWG <CPD: 10/03/97 [TIME: 09:51 AM]>

COP00021396

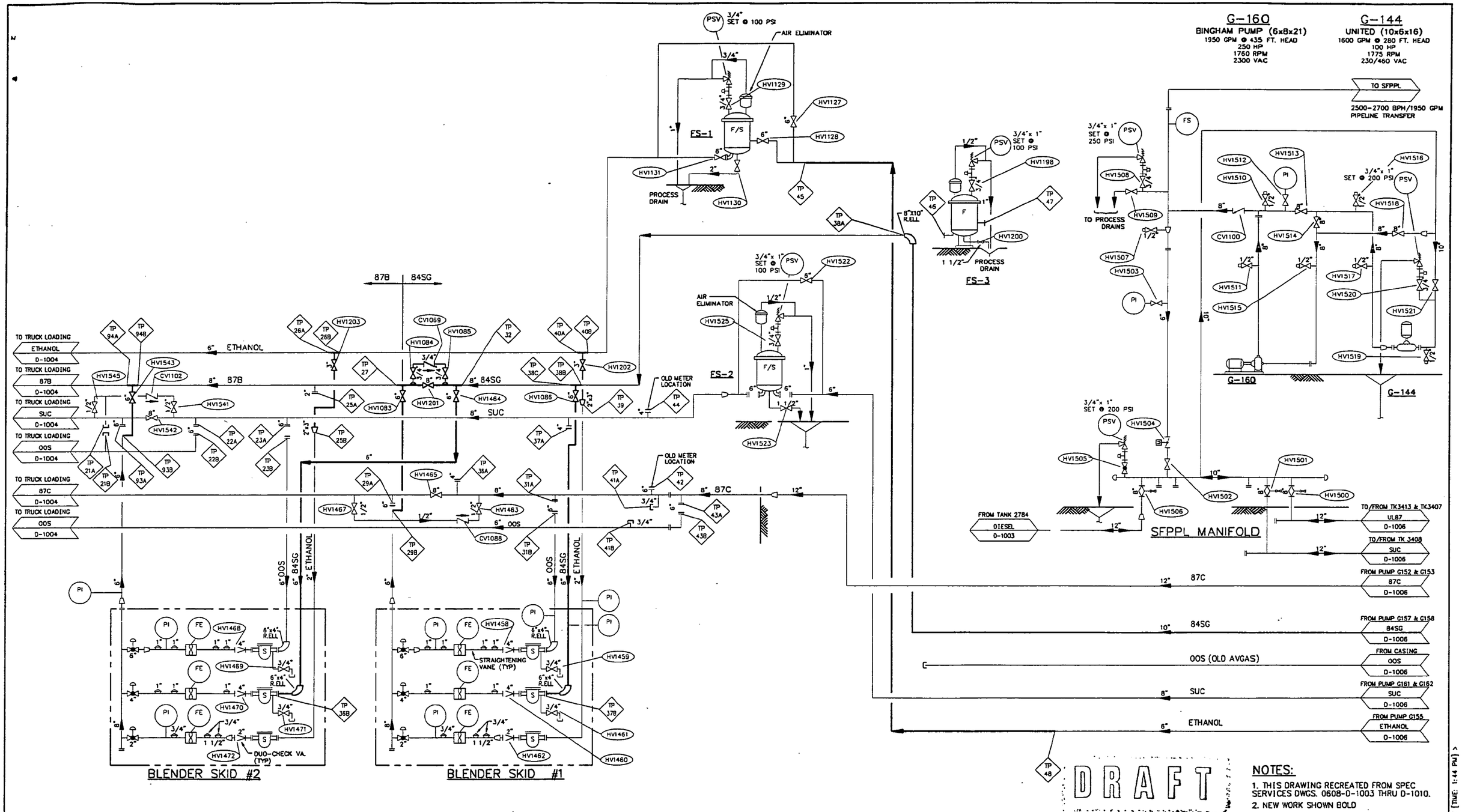

NOTES:

1. THIS DRAWING RECREATED FROM SPEC SERVICES DWGS. 0608-D-1003 THRU D-1010.
2. NEW WORK SHOWN BOLD

DRAWING NO.	REFERENCE DRAWINGS	REV. NO.	DATE	REVISED	DRAWN BY	CKD. BY
0608-D-1000	LEGEND AND SYMBOLS	A	08/19/97	ACCULOAD INSTALLATION - PRELIMINARY FOR HAZOP	DAB	KJP
0608-D-1003	DIESEL SYSTEM	B	08/29/97	CHANGE OPTIONAL ROUTING THRU FILTER, 2" ETH TO 3" ETH, CHECK VALVE DIR.	DAB	WHB
0608-D-1004	REFINED PRODUCTS SYSTEM TRUCK LOADING RACK	C	09/30/97	BLINDED 1ST STREAM OF BLENDERS 1 AND 2	DAB	KJP
0608-D-1006	REFINED PRODUCTS SYSTEM TANK FARM NO.2					

TOSCO
Tosco Northwest Company
A Division of Tosco Corporation
5528 NW Doane St.
Portland, Oregon 97210

ALPHA ENGINEERS and CONSTRUCTORS, INC.
19 NW 5th AVE., SUITE 204, PORTLAND, OR. 97209 Tel:(503)227-3317/Fax:(503)227-3244

DRAWN BY	DAB
CHKD BY	KJP
APPD BY	WHB
SCALE	NONE
DATE	03/14/95

PORTLAND TERMINAL
PORTLAND, OREGON
PIPING & INSTRUMENTATION DIAGRAM
REFINED PRODUCTS SYSTEM
SFPPL YARD

DRAWING NO.	SHEET	REV.
0608-D-1005	1 OF 1	C

\PD1005C.DWG <CPD: 09/30/97 [TIME: 1:44 PM]>

COP00213397

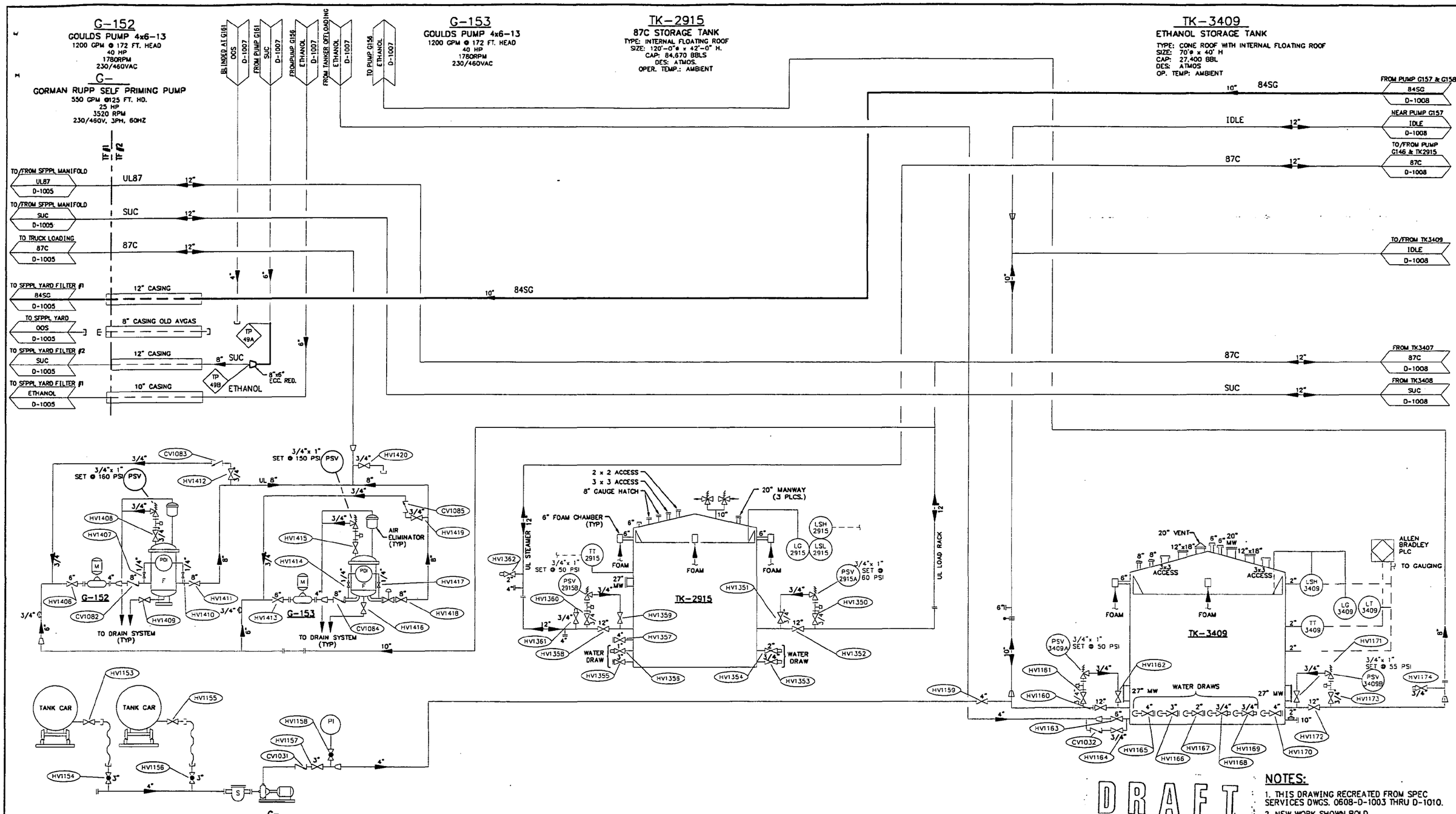

NOTES:

1. THIS DRAWING RECREATED FROM SPEC SERVICES DWGS. 0608-D-1003 THRU D-1010.
2. NEW WORK SHOWN BOLD

DRAWING NO.	REFERENCE DRAWINGS	REV. NO.	DATE	REVISED	DRAWN BY	CKD. BY
0608-D-1000	LEGEND AND SYMBOLS	A	08/19/97	ACCULOAD INSTALLATION - PRELIMINARY FOR HAZOP	DAB	KJP
0608-D-1005	REFINED PRODUCTS SYSTEM SFPPL YARD	B	10/01/97	REVISED TIE POINTS 49 A & B, CHANGED 8" SUC BACK TO 6"	DAB	KJP
0608-D-1007	REFINED PRODUCTS SYSTEM TANK FARM NO.2					
0608-D-1008	REFINED PRODUCTS SYSTEM TANK FARM NO.2					

TOSCO
Tosco Northwest Company
A Division of Tosco Corporation
5528 NW Doane St.
Portland, Oregon 97210

ALPHA ENGINEERS and CONSTRUCTORS, INC.
19 NW 5th AVE., SUITE 204, PORTLAND, OR. 97209 Tel:(503)227-3317/Fax:(503)227-3244

DRAWN BY	DAB
CHKD BY	KJP
APPD BY	WHB
SCALE	NONE
DATE	08/19/97

PORTLAND TERMINAL
PORTLAND, OREGON
PIPING & INSTRUMENTATION DIAGRAM
REFINED PRODUCTS SYSTEM
TANK FARM NO.2

DRAWING NO.	SHEET	REV.
0608-D-1006	1 OF 1	B

\PDI0008.DWG <CP2: 10/02/97 [TIME: 1:06 PM] <

COP00213398

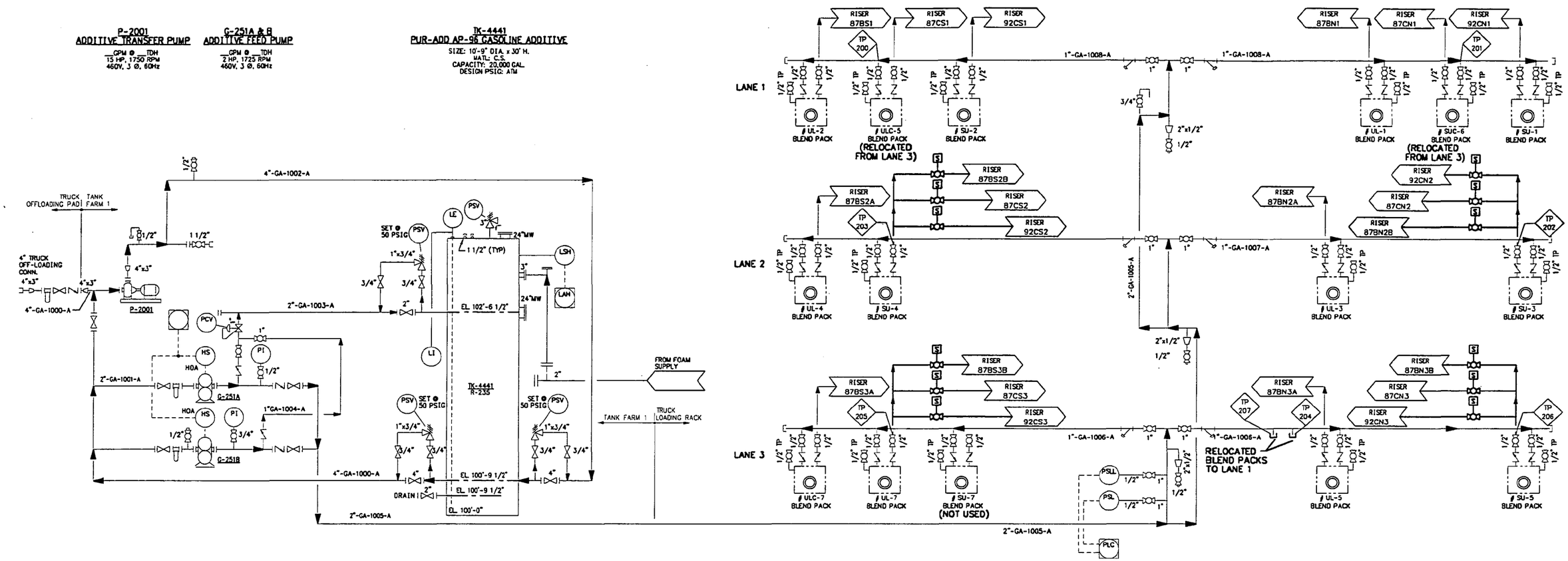

NOTES:

1. SEE DWG. 0608-D-1004 FOR TRUCK LOADING RACK
2. NEW WORK SHOWN BOLD

DRAFT

DRAWING NO.	REFERENCE DRAWINGS	REV. NO.	DATE	REVISED	DRAWN BY	CKD. BY
0608-D-1000	LEGEND AND SYMBOLS	A	08/29/97	ACCULOAD INSTALLATION - PRELIMINARY FOR HAZOP	DAB	
0608-D-1004	REFINED PRODUCTS SYSTEM TRUCK LOADING RACK					

TOSCO
Tosco Northwest Company
A Division of Tosco Corporation
5528 NW Doane St.
Portland, Oregon 97210

ALPHA ENGINEERS and CONSTRUCTORS, INC.
19 NW 5th AVE, SUITE 204, PORTLAND, OR. 97209 Tel:(503)227-3317/Fax:(503)227-3244

DRAWN BY	DAB
CHKD BY	
APPD BY	
SCALE	NONE
DATE	08/18/97

PORTLAND TERMINAL
PORTLAND, OREGON
PIPING & INSTRUMENTATION DIAGRAM
GASOLINE ADDITIVE SYSTEM

DRAWING NO.	SHEET	REV.
0608-D-2001	1 OF 1	A

\PD2001A.DWG <CPD: 08/29/97 [TIME: 10:34 AM]>

COP00213399

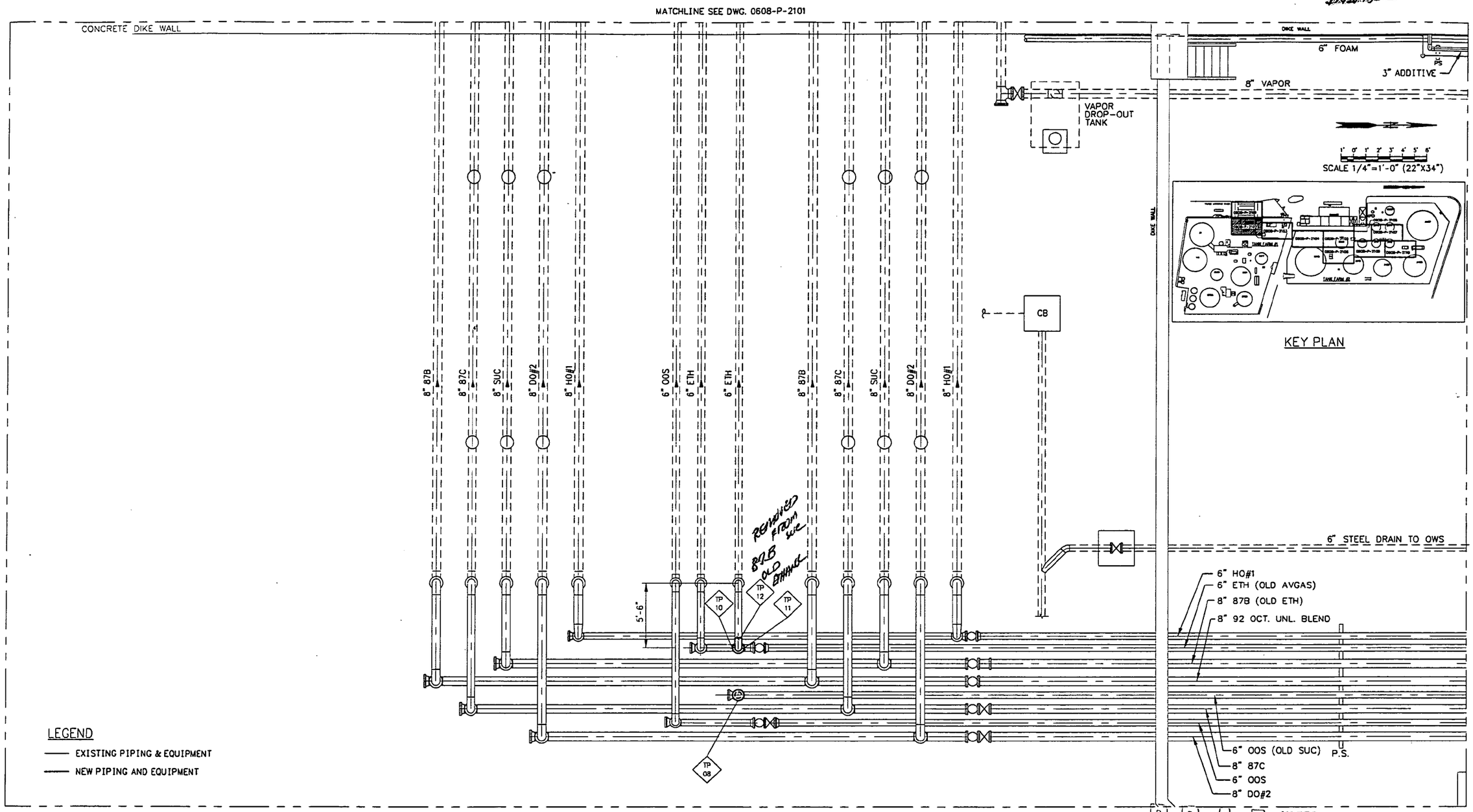

PLAN
SCALE 1/4"=1'-0"

NOTES:
1. VERIFY ALL DIMENSIONS PRIOR TO FABRICATION.

DRAWING NO.	REFERENCE DRAWINGS	REV. NO.	DATE	REVISED	DRAWN BY	CKD. BY
0608-P-2101	PIPING TRUCK LOADING RACK	A	10/03/97	ISSUE FOR BID ONLY	DAB	
0608-P-2103	PIPING SFPPL YARD AREA					

TOSCO
Tosco Distribution Company
A Division of Tosco Corporation
5528 NW Doane St.
Portland, Oregon 97210

ALPHA ENGINEERS and CONSTRUCTORS, INC.
19 NW 5th AVE, SUITE 204, PORTLAND, OR. 97209 Tel:(503)227-3317/Fax:(503)227-3244

DRAWN BY	DAB
CHKD BY	
APPD BY	
SCALE	AS SHOWN
DATE	09/05/97

PORTLAND TERMINAL
PORTLAND, OREGON
TRUCK LOAD RACK MODIFICATIONS
PIPING
TANK FARM NO.1

DRAWING NO.	SHEET	REV.
0608-P-2102	1 OF 1	A

8BP2102A.DWG <CPD: 10/03/97 [TIME: 10:45 AM] >

COP00021400

INSTALL

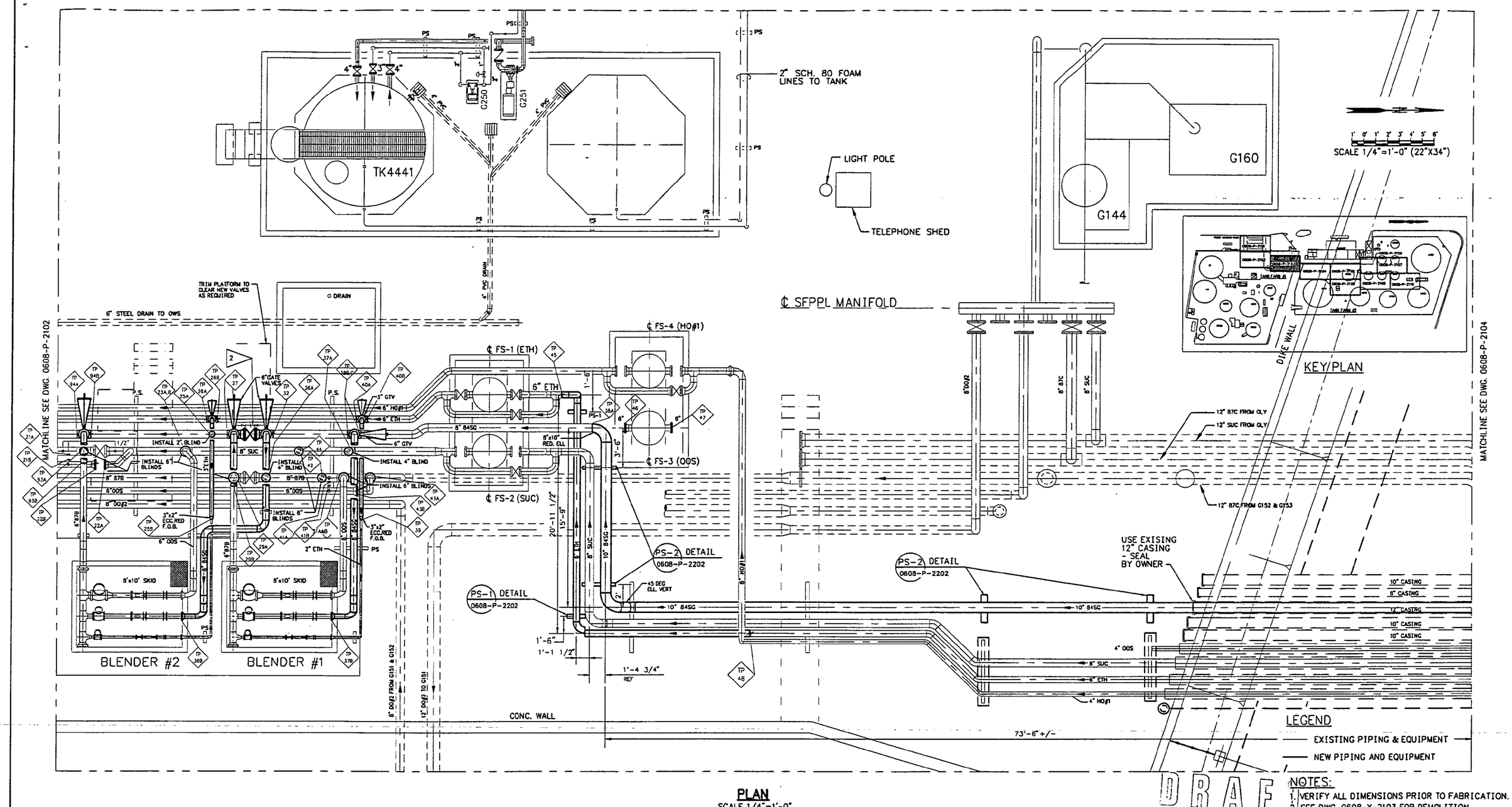

PLAN
SCALE 1/4"=1'-0"

NOTES:
1. VERIFY ALL DIMENSIONS PRIOR TO FABRICATION.
2. SEE DWG. 0608-X-2103 FOR DEMOLITION

DRAWING NO.	REFERENCE DRAWINGS	REV. NO.	DATE	REVISED	DRAWN BY	CKD. BY
0608-P-2102	TANK FARM NO. 1 PIPING	A	09/12/97	FOR REVIEW AND COMMENT	DAB	
0608-P-2104	TANK FARM NO.2 PIPING					

TOSCO
Tosco Distribution Company
A Division of Tosco Corporation
5528 NW Doane St.
Portland, Oregon 97210

ALPHA ENGINEERS and CONSTRUCTORS, INC.
19 NW 5th AVE, SUITE 204, PORTLAND, OR 97209 Tel:(503)227-3317/Fax:(503)227-3244

DRAWN BY	DAB
CHKD BY	
APPD BY	
SCALE	AS SHOWN
DATE	09/05/97

PORTLAND TERMINAL
PORTLAND, OREGON
TRUCK LOAD RACK UPGRADE PROJECT
PIPING
SFPPL YARD TANK FARM NO.1

DRAWING NO.	SHEET	REV.
0608-P-2103	1 OF 1	A

COP0021401

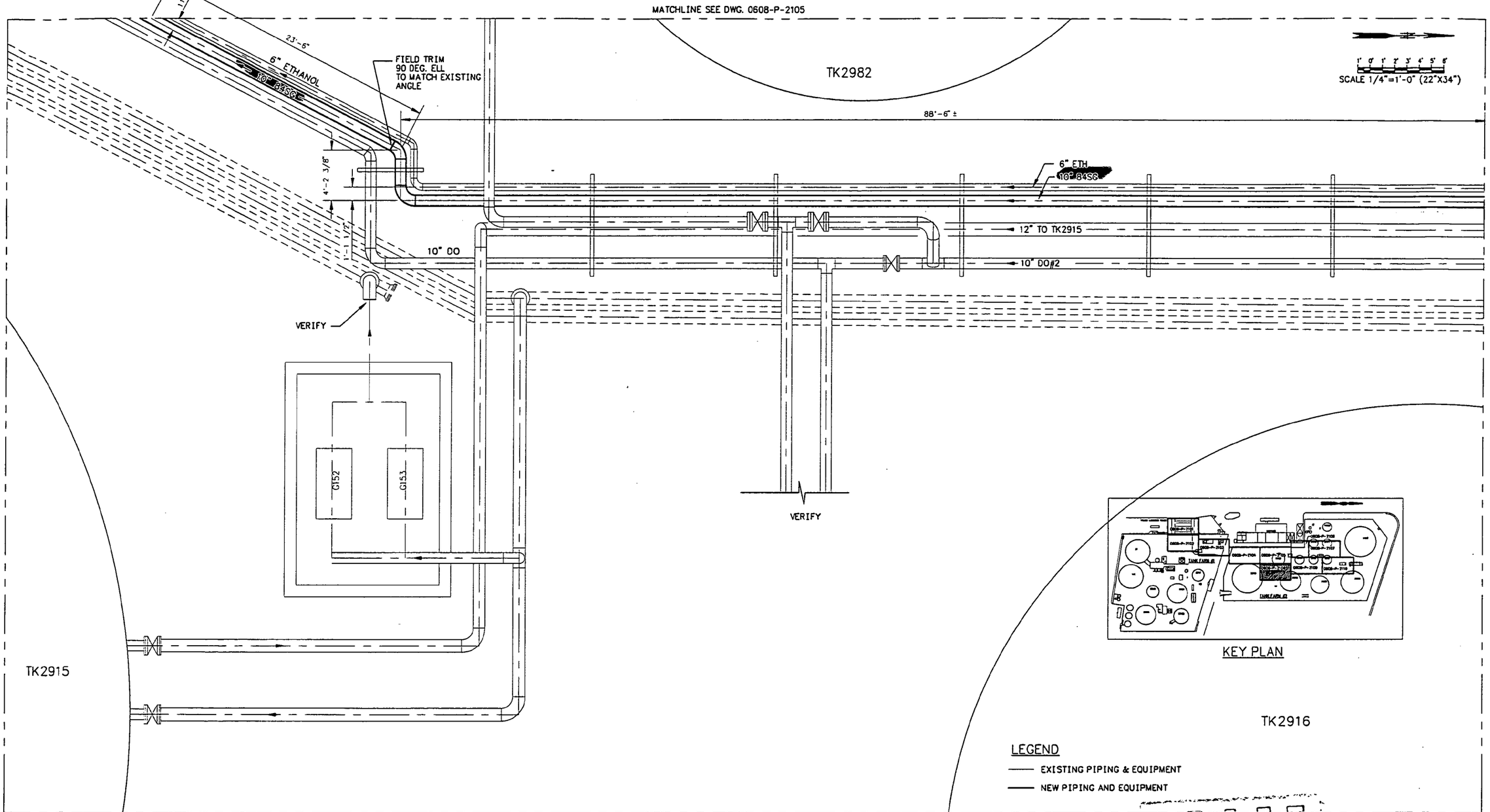

PLAN
SCALE 1/4"=1'-0"

DRAFT

NOTES:
1. VERIFY ALL DIMENSIONS PRIOR TO FABRICATION.
2. SEE DWG. 0608-P-2108 FOR DEMOLITION.

DRAWING NO.	REFERENCE DRAWINGS	REV. NO.	DATE	REVISED	DRAWN BY	CKD. BY
0608-P-2105	PIPING TANK FARM NO.2 TK 2982 AREA	A	10/03/97	ISSUE FOR BID ONLY	DAB	
0608-P-2109	PIPING TANK FARM NO.2 TK2983 AND TK3412 AREA					

TOSCO
Tosco Distribution Company
A Division of Tosco Corporation
5528 NW Doane St.
Portland, Oregon 97210

ALPHA ENGINEERS and CONSTRUCTORS, INC.
19 NW 5th AVE, SUITE 204, PORTLAND, OR. 97209 Tel:(503)227-3317/Fax:(503)227-3244

DRAWN BY	DAB
CHKD BY	
APRD BY	
SCALE	AS SHOWN
DATE	09/05/97

PORTLAND TERMINAL
PORTLAND, OREGON
TRUCK LOAD RACK UPGRADE PROJECT
PIPING TANK FARM NO.2
PUMP G152 AND G153 AREA

DRAWING NO.	SHEET	REV.
0608-P-2108	1 OF 1	A

6BP2108A.DWG <CPD: 10/03/97 [TIME: 1:03 PM] >

COP0021402

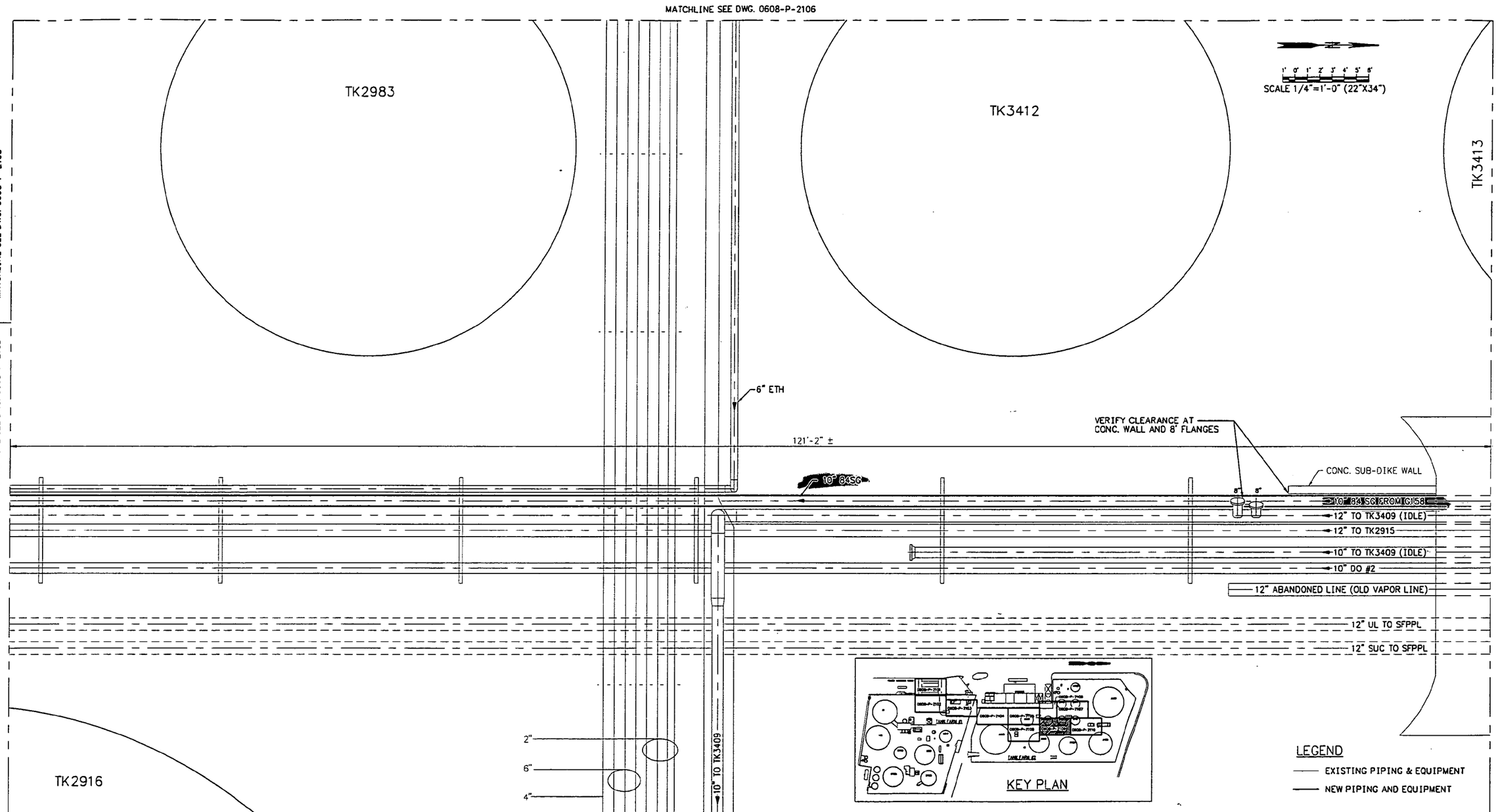

PLAN
SCALE 1/4"=1'-0"

NOTES:
1. VERIFY ALL DIMENSIONS PRIOR TO FABRICATION.
2. SEE DWG. 0608-X-2109 FOR DEMOLITION

DRAWING NO.	REFERENCE DRAWINGS	REV. NO.	DATE	REVISED	DRAWN BY	CKD. BY
0608-P-2108	PIPING TANK FARM NO.2 PUMP G152 AND G153 AREA	A	10/03/97	ISSUE FOR BID ONLY	DAB	
0608-P-2110	PIPING TANK FARM NO.2 G146, G157, AND G158 AREA					

TOSCO
Tosco Distribution Company
A Division of Tosco Corporation
5528 NW Doane St.
Portland, Oregon 97210

ALPHA ENGINEERS and CONSTRUCTORS, INC.
19 NW 5th AVE, SUITE 204, PORTLAND, OR. 97209 Tel:(503)227-3317/Fax:(503)227-3244

DRAWN BY	DAB
CHKD BY	
APPD BY	
SCALE	AS SHOWN
DATE	09/05/97

PORTLAND TERMINAL
PORTLAND, OREGON
TRUCK LOAD RACK UPGRADE PROJECT
PIPING TANK FARM NO.2
TK2983 AND TK3412 AREA

DRAWING NO.	SHEET	REV.
0608-P-2109	1 OF 1	A

68P2109A.DWG <CPD: 10/03/97 [TIME: 1:12 PM] >

COP00021403

MATCHLINE SEE DWG. 0608-P-2107

MATCHLINE SEE DWG. 0608-P-2109

TK3413

EARTHEN RAMP

ROUTE NEW 10" PIPE THROUGH EXISTING RAMP. WRAP PIPE WITH 2 LAYERS OF 20MIL 3M TAPE. (VERIFY CLEARANCE AT SOUTH END OF RAMP BETWEEN 12" AND CONNECT SUB-DIKE WALL)

10" NEW SG

12" TO TK 3409

12" TO TK2915

10" TO TK3409 (IDLE)

12" ABANDONED LINE (OLD VAPOR LINE)

12" UL TO SFPPL

12" SUC TO SFPPL

25'-6"±

5'±

36'-6"±

8" TO/FROM 3413

12" TO TK3407

12" FROM TK3407

REF. BOP EL. 0'0"

12" TO/FROM TK3408

12" FROM TK3408

G158

G157

G146

CONDUCTIVITY ADDITIVE SKID (FUTURE)

3'-6"±

4'-6"±

13'-11 1/2"±

3'-6"±

REF. EL. 3'-0"±

REF. EL. 3'-6"±

REF. EL. 2'-6"±

8" GTV

6" GTV

4" GTV

4" NEW 10" SG

6" BLIND

3/4"PLUG

APPROX. PLATFORM LIMITS

12" UNLEADED STEAMER

10" SUPER UNLEADED STEAMER

10" DIESEL OIL

12" ABANDONED LINE (OLD VAPOR LINE)

CABINET S4A

G130

SEPARATOR 004

SEPARATOR 004

SCALE 1/4"=1'-0" (22"X34")

TK3408

KEY PLAN

LEGEND

EXISTING PIPING & EQUIPMENT

NEW PIPING AND EQUIPMENT

DRAFT

NOTES:

1. VERIFY ALL DIMENSIONS PRIOR TO FABRICATION.

PLAN

SCALE 1/4"=1'-0"

DRAWING NO.	REFERENCE DRAWINGS	REV. NO.	DATE	REVISED	DRAWN BY	CKD. BY
0608-P-2109	PIPING TANK FARM NO.2 TK2983 AND TK3412 AREA	A	10/03/97	ISSUE FOR BID ONLY	DAB	

TOSCO
Tosco Distribution Company
A Division of Tosco Corporation
5528 NW Doane St.
Portland, Oregon 97210

ALPHA ENGINEERS and CONSTRUCTORS, INC.
19 NW 5th AVE, SUITE 204, PORTLAND, OR. 97209 Tel:(503)227-3317/Fax:(503)227-3244

DRAWN BY	DAB
CHKD BY	
APPD BY	
SCALE	AS SHOWN
DATE	09/05/97

PORTLAND TERMINAL
PORTLAND, OREGON
TRUCK LOAD RACK UPGRADE PROJECT
PIPING TANK FARM NO.2
G146, G157, AND G158 AREA

DRAWING NO.	SHEET	REV.
0608-P-2110	1 OF 1	A

<PD: 10/03/97 1:30 PM> 6BP2110A.DWG

COP0021404

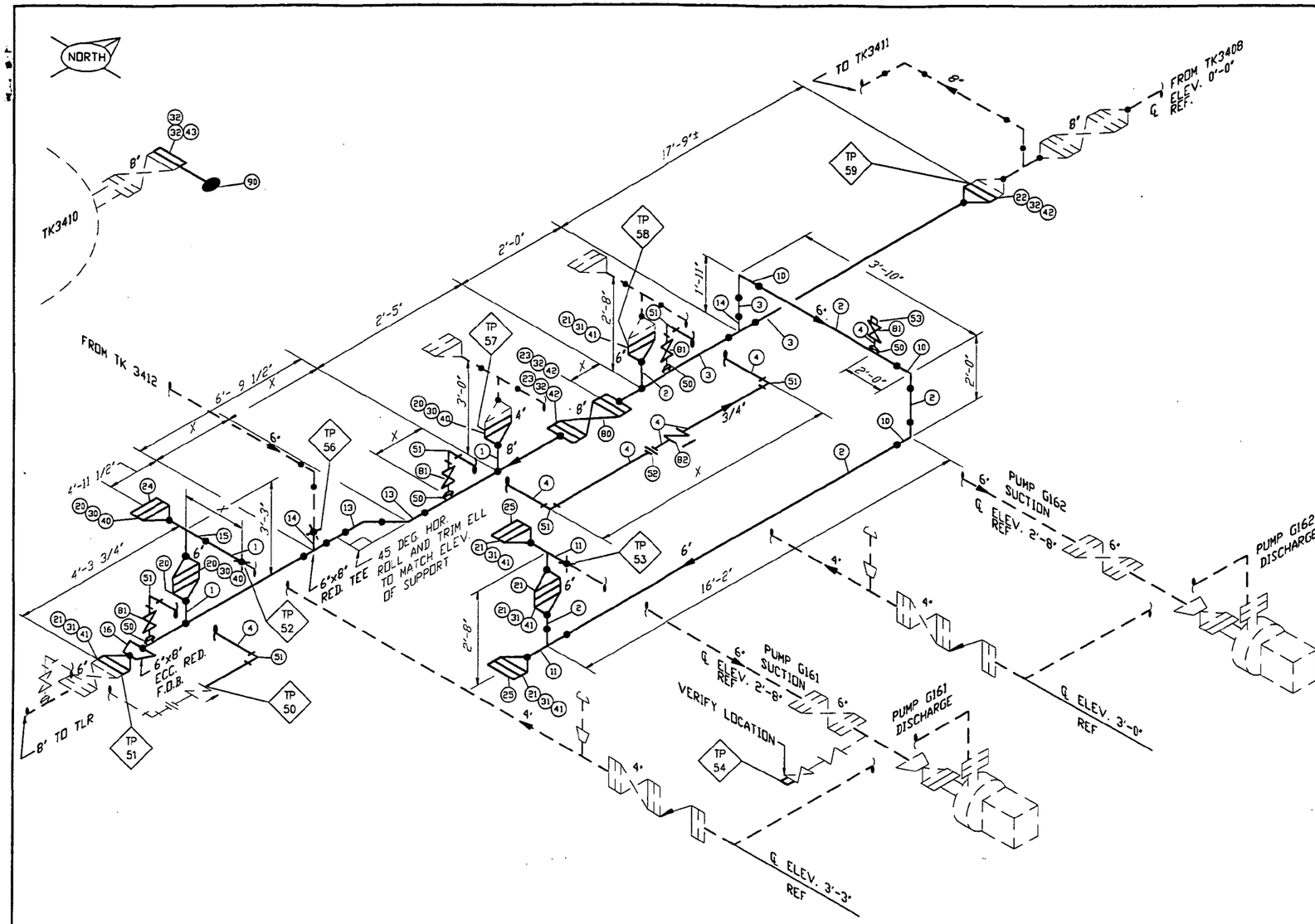

MARK	QTY	SIZE	SCH	DESCRIPTION	TAG
PIPE					
1	4'	4"	SCH 40	PIPE A-53 GRADE B	
2	25'	6"	SCH 40	PIPE A-53 GRADE B	
3	40'	8"	SCH 40	PIPE A-53 GRADE B	
4	12	3/4"x __LG	SCH 160	PIPE NIPPLE, T.B.E, A-53 GRADE B	
FITTINGS					
10	3	6"	SCH 40	90 DEG. L.R. ELBOW, BW, ASTM A234 GRADE WPB	
11	2	6"	SCH 40	TEE, BW, ASTM A234 GRADE WPB	
12	1	8"	SCH 40	TEE, BW, ASTM A234 GRADE WPB	
13	2	8"	SCH 40	45 DEG ELBOW, BW, ASTM A234 GRADE WPB	
14	2	8"x6"	SCH 40	REDUCING TEE, BW, ASTM A234 GRADE WPB	
15	1	4"	SCH 40	TEE, BW, ASTM A234 GRADE WPB	
16	1	8"x6"	SCH 40	ECCENTRIC REDUCER, BW, ASTM A234 GRADE WPB	
FLANGES					
20	4	4"	150LB	FLANGE, WN, SCH 40 BORE, R.F., ASTM A105	
21	6	6"	150LB	FLANGE, WN, SCH 40 BORE, R.F., ASTM A105	
22	1	8"	150LB	FLANGE, WN, SCH 40 BORE, R.F., ASTM A105	
23	2	8"	150LB	FLANGE, SLIP-ON SCH 40 BORE, R.F., ASTM A105	
24	1	4"	150LB	FLANGE,BLIND, R.F., ASTM A105	
25	2	6"	150LB	FLANGE,BLIND, R.F., ASTM A105	
GASKETS					
30	3	4"	150LB	GASKET, 1/16" THK GARLOK	
31	5	6"	150LB	GASKET, 1/16" THK GARLOK	
32	5	8"	150LB	GASKET, 1/16" THK GARLOK	
BOLTS					
40	3 SETS	4"	-	4 - 5/8" X 3 1/2" LG, STUD BOLT W/ 2 H.D. NUTS, B7/2H	
41	5 SETS	6"	-	8 - 3/4" X 3 3/4" LG, STUD BOLT W/ 2 H.D. NUTS, B7/2H	
42	3 SETS	8"	-	8 - 3/4" X 4" LG, STUD BOLT W/ 2 H.D. NUTS, B7/2H	
43	1 SET	8"	-	8 - 3/4" X 4 3/4" LG, STUD BOLT W/ 2 H.D. NUTS, B7/2H	
THREADED FITTINGS					
50	4	3/4"x8"	3000LB	THREADOLET, ASTM A-105	
51	6	3/4"	3000LB	90 DEG ELBOW, THREADED, ASTM A-105	
52	1	3/4"	3000LB	UNION, THREADED, ASTM A-105	
53	1	3/4"	3000LB	HEX HEAD PLUG, THREADED, ASTM A-105	
VALVES					
80	1	8"	150LB	GATE VALVE, FLANGED, RF (BY OWNER)	
81	4	3/4"	CL800	GATE VALVE, THREADED	
82	1	3/4"	CL800	CHECK VALVE THREADED	
MISC					
90	1	8"	150LB	SPEC BLIND 1/2" THK,ASTM A285	

NOTES:

NOTES:

1. CONTRACTOR TO FIELD VERIFY ALL DIMENSIONS PRIOR TO FABRICATION.
2. ALL PIPE AND FITTINGS TO BE PRE-PRIMED.
3. SEE DWG. 0608-P-2202 FOR PIPE SUPPORT DETAILS.

——— NEW PIPE

– – – – EXISTING PIPE

DRAWING NO.	REFERENCE DRAWINGS	REV. NO.	DATE	REVISED	DRAWN BY	CKD. BY
		A	09/26/97	FOR REVIEW AND COMMENT	DAB	

TOSCO
Tosco Northwest Company
A Division of Tosco Corporation
5528 NW Doane St.
Portland, Oregon 97210

ALPHA ENGINEERS and CONSTRUCTORS, INC.
19 NW 5th AVE, SUITE 204, PORTLAND, OR. 97209 Tel:(503)227-3317/Fax:(503)227-3244

DRAWN BY	DAB
CHKD BY	
APPD BY	
SCALE	NONE
DATE	09/22/97

PORTLAND TERMINAL
PORTLAND, OREGON
TRUCK LOAD RACK UPGRADE PROJECT
PIPING ISOMETRIC
SUPER UNLEADED LINE
G162 PUMP AREA TF#2

DRAWING NO.	SHEET	REV.
0608-0-2105	1 OF 1	A

6802105.DWG <CPD: 10/03/97 [TWE: 2:41 PM]>

COP0021405

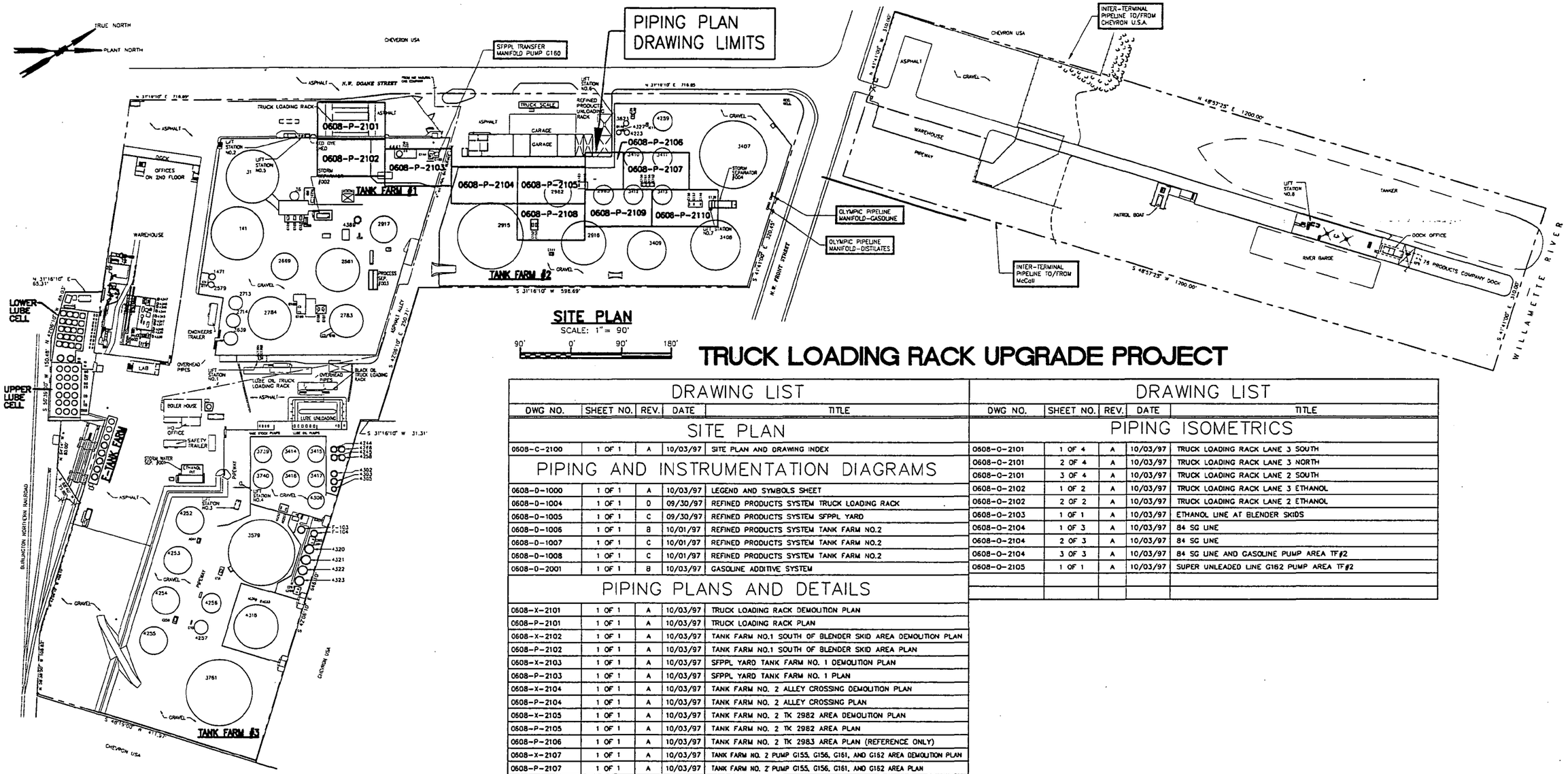

TRUCK LOADING RACK UPGRADE PROJECT

DRAWING LIST

DWG NO.	SHEET NO.	REV.	DATE	TITLE
SITE PLAN				
0608-C-2100	1 OF 1	A	10/03/97	SITE PLAN AND DRAWING INDEX
PIPING AND INSTRUMENTATION DIAGRAMS				
0608-0-1000	1 OF 1	A	10/03/97	LEGEND AND SYMBOLS SHEET
0608-0-1004	1 OF 1	D	09/30/97	REFINED PRODUCTS SYSTEM TRUCK LOADING RACK
0608-0-1005	1 OF 1	C	09/30/97	REFINED PRODUCTS SYSTEM SFPPL YARD
0608-0-1006	1 OF 1	B	10/01/97	REFINED PRODUCTS SYSTEM TANK FARM NO.2
0608-0-1007	1 OF 1	C	10/01/97	REFINED PRODUCTS SYSTEM TANK FARM NO.2
0608-0-1008	1 OF 1	C	10/01/97	REFINED PRODUCTS SYSTEM TANK FARM NO.2
0608-0-2001	1 OF 1	B	10/03/97	GASOLINE ADDITIVE SYSTEM
PIPING PLANS AND DETAILS				
0608-X-2101	1 OF 1	A	10/03/97	TRUCK LOADING RACK DEMOLITION PLAN
0608-P-2101	1 OF 1	A	10/03/97	TRUCK LOADING RACK PLAN
0608-X-2102	1 OF 1	A	10/03/97	TANK FARM NO.1 SOUTH OF BLENDER SKID AREA DEMOLITION PLAN
0608-P-2102	1 OF 1	A	10/03/97	TANK FARM NO.1 SOUTH OF BLENDER SKID AREA PLAN
0608-X-2103	1 OF 1	A	10/03/97	SFPPL YARD TANK FARM NO. 1 DEMOLITION PLAN
0608-P-2103	1 OF 1	A	10/03/97	SFPPL YARD TANK FARM NO. 1 PLAN
0608-X-2104	1 OF 1	A	10/03/97	TANK FARM NO. 2 ALLEY CROSSING DEMOLITION PLAN
0608-P-2104	1 OF 1	A	10/03/97	TANK FARM NO. 2 ALLEY CROSSING PLAN
0608-X-2105	1 OF 1	A	10/03/97	TANK FARM NO. 2 TK 2982 AREA DEMOLITION PLAN
0608-P-2105	1 OF 1	A	10/03/97	TANK FARM NO. 2 TK 2982 AREA PLAN
0608-P-2106	1 OF 1	A	10/03/97	TANK FARM NO. 2 TK 2983 AREA PLAN (REFERENCE ONLY)
0608-X-2107	1 OF 1	A	10/03/97	TANK FARM NO. 2 PUMP G155, G156, G161, AND G162 AREA DEMOLITION PLAN
0608-P-2107	1 OF 1	A	10/03/97	TANK FARM NO. 2 PUMP G155, G156, G161, AND G162 AREA PLAN
0608-X-2108	1 OF 1	A	10/03/97	TANK FARM NO. 2 PUMP G152 AND G153 AREA DEMOLITION PLAN
0608-P-2108	1 OF 1	A	10/03/97	TANK FARM NO. 2 PUMP G152 AND G153 AREA PLAN
0608-X-2109	1 OF 1	A	10/03/97	TANK FARM NO. 2 TK 2983 AND TK3412 AREA DEMOLITION PLAN
0608-P-2109	1 OF 1	A	10/03/97	TANK FARM NO. 2 TK 2983 AND TK3412 AREA PLAN
0608-X-2110	1 OF 1	A	10/03/97	TANK FARM NO. 2 G146, G157 AND G158 AREA DEMOLITION PLAN
0608-P-2110	1 OF 1	A	10/03/97	TANK FARM NO. 2 G146, G157 AND G158 AREA PLAN
0608-P-2201	1 OF 1	A	10/03/97	TRUCK LOADING RACK SECTIONS AND DETAILS
0608-P-2202	1 OF 1	A	10/03/97	PIPE SUPPORTS

DRAWING LIST

DWG NO.	SHEET NO.	REV.	DATE	TITLE
PIPING ISOMETRICS				
0608-0-2101	1 OF 4	A	10/03/97	TRUCK LOADING RACK LANE 3 SOUTH
0608-0-2101	2 OF 4	A	10/03/97	TRUCK LOADING RACK LANE 3 NORTH
0608-0-2101	3 OF 4	A	10/03/97	TRUCK LOADING RACK LANE 2 SOUTH
0608-0-2102	1 OF 2	A	10/03/97	TRUCK LOADING RACK LANE 3 ETHANOL
0608-0-2102	2 OF 2	A	10/03/97	TRUCK LOADING RACK LANE 2 ETHANOL
0608-0-2103	1 OF 1	A	10/03/97	ETHANOL LINE AT BLENDER SKIDS
0608-0-2104	1 OF 3	A	10/03/97	84 SG LINE
0608-0-2104	2 OF 3	A	10/03/97	84 SG LINE
0608-0-2104	3 OF 3	A	10/03/97	84 SG LINE AND GASOLINE PUMP AREA TF#2
0608-0-2105	1 OF 1	A	10/03/97	SUPER UNLEADED LINE G162 PUMP AREA TF#2

DRAFT

DRAWING NO.	REFERENCE DRAWINGS	REV. NO.	DATE	REVISED	DRAWN BY	CKD. BY
		A	10/03/97	FOR REVIEW AND COMMENT	DAB	

TOSCO
Tosco Distribution Company
A Division of Tosco Corporation
5528 NW Doane St.
Portland, Oregon 97210

ALPHA ENGINEERS and CONSTRUCTORS, INC.
19 NW 5th AVE, SUITE 204, PORTLAND, OR 97209 Tel:(503)227-3317/Fax:(503)227-3244

DRAWN BY	DAB
CHKD BY	
APPD BY	
SCALE	AS SHOWN
DATE	10/03/97

PORTLAND TERMINAL
PORTLAND, OREGON
TRUCK LOAD RACK UPGRADE PROJECT
SITE PLAN AND DRAWING INDEX

DRAWING NO.	SHEET	REV.
0608-C-2100	1 OF 1	A

68PC2100.DWG <CPD: 10/03/97 [TIME: 09:51 AM] >

COP00021406