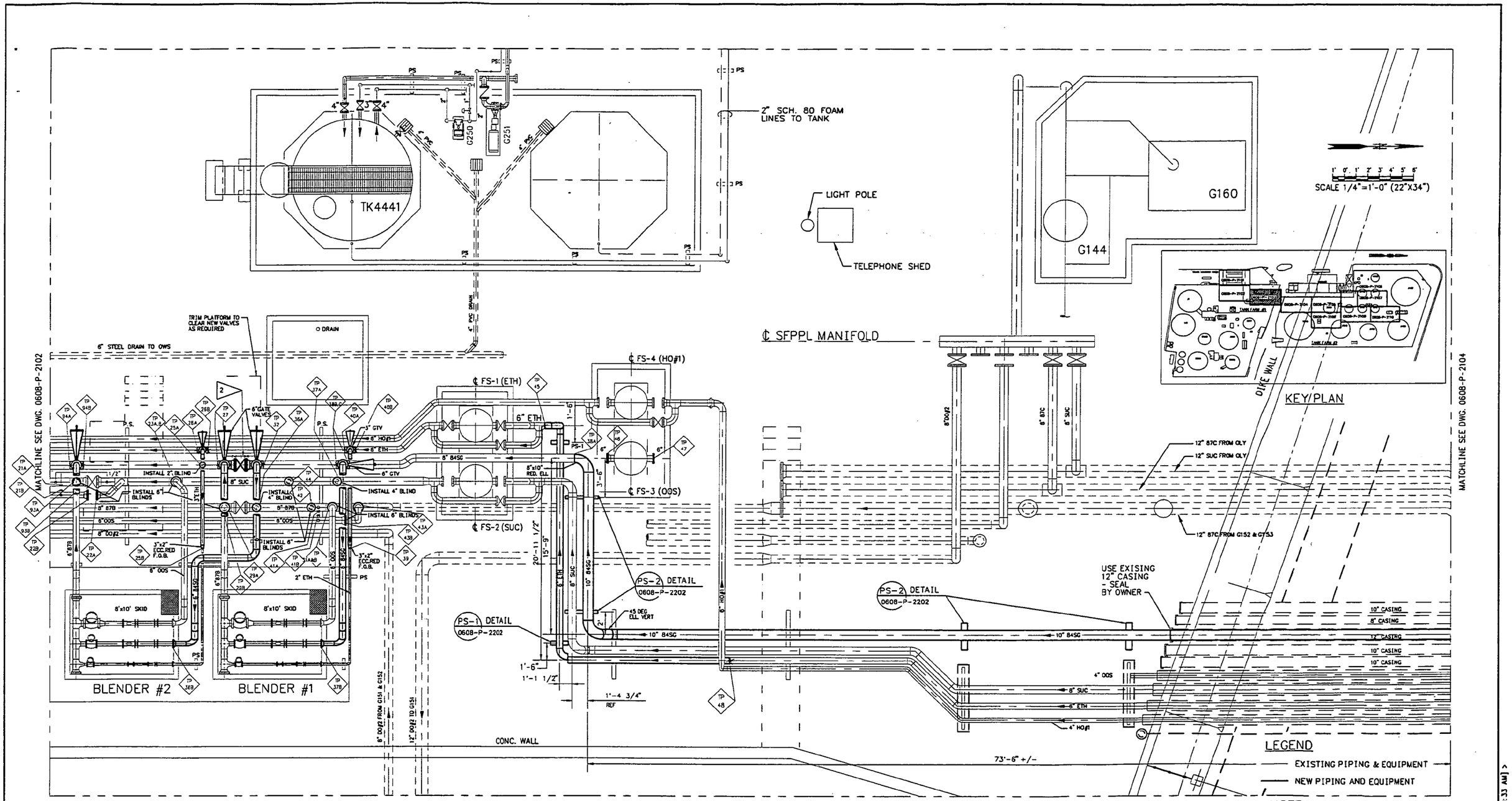

PLAN
SCALE 1/4"=1'-0"

NOTES:
1. VERIFY ALL DIMENSIONS PRIOR TO FABRICATION.
2. SEE DWG. 0608-X-2103 FOR DEMOLITION

DRAWING NO.	REFERENCE DRAWINGS	REV. NO.	DATE	REVISED	DRAWN BY	CKD. BY
0608-P-2102	TANK FARM NO. 1 PIPING	A	09/12/97	FOR REVIEW AND COMMENT	DAB	
0608-P-2104	TANK FARM NO.2 PIPING					

TOSCO
Tosco Distribution Company
A Division of Tosco Corporation
5528 NW Doane St.
Portland, Oregon 97210

ALPHA ENGINEERS and CONSTRUCTORS, INC.
19 NW 5th AVE, SUITE 204, PORTLAND, OR. 97209 Tel:(503)227-3317/Fax:(503)227-3244

DRAWN BY DAB
CHKD BY
APPD BY
SCALE AS SHOWN
DATE 09/05/97

PORTLAND TERMINAL
PORTLAND, OREGON
TRUCK LOAD RACK UPGRADE PROJECT
PIPING
SFPPL YARD TANK FARM NO.1

DRAWING NO.	SHEET	REV.
0608-P-2103	1 OF 1	A

6BP2103A.DWG <CPD: 09/16/97 [TIME: 09:33 AM] >

COP00214070

COP00021408

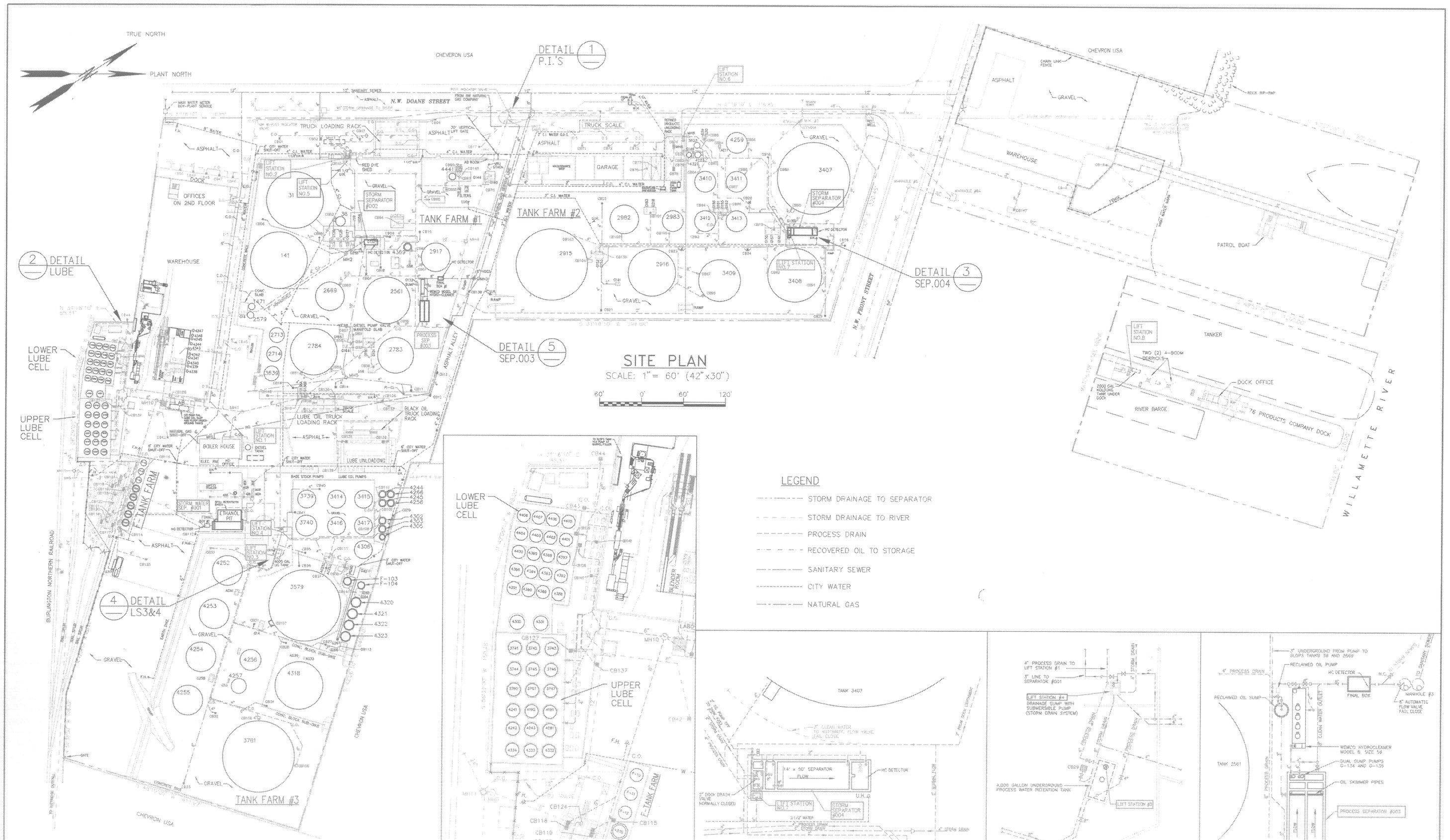

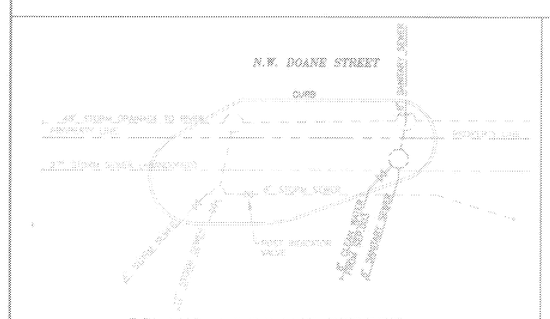

ISLAND AT DOANE STREET
DETAIL 1
NTS

LOWER & UPPER LUBE CELLS RAIL CAR LOADING/OFFLOADING, AND TANK FARM F
DETAIL 2
NTS

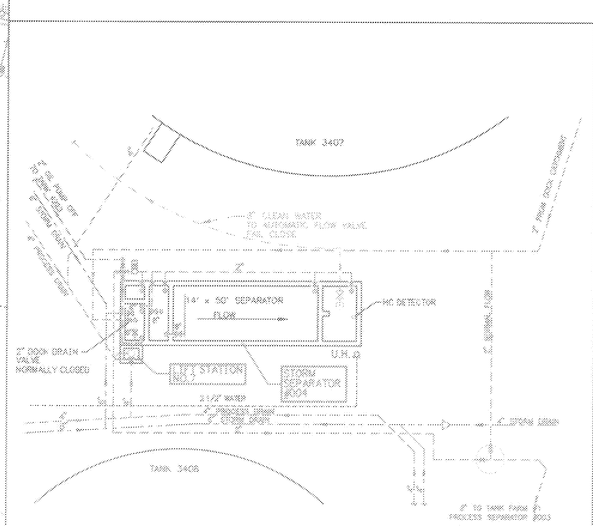

OIL/WATER SEPARATOR #004 FOR STORM AND PROCESS DRAINS - TANK FARM 2
DETAIL 3
NTS

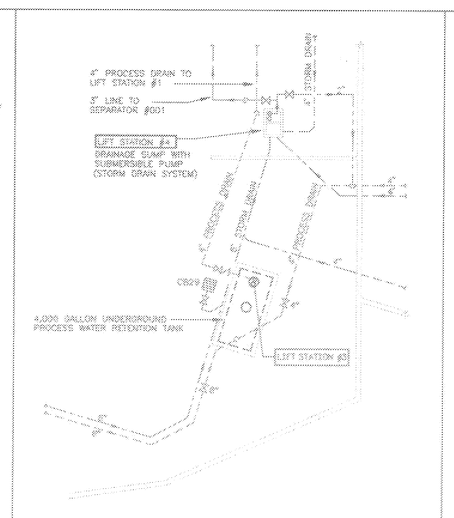

PROCESS WATER RETENTION TANK AND STORM DRAIN SUMP - TANK FARM 3
DETAIL 4
NTS

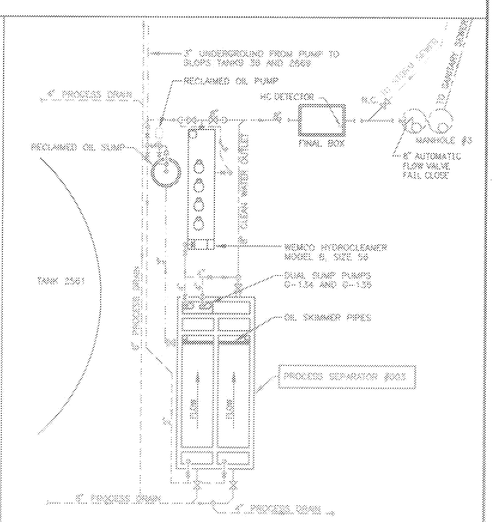

A.P.I SEPARATOR #003 AND HYDROCLEANER - TANK FARM 1
DETAIL 5
NTS

REV. NO.	DATE	REVISED	DRAWN BY	CKD. BY
0	10/15/96	UPDATED PER COAST GUARD REQUIREMENTS	DAB	WHB
1	03/04/97	GENERAL REVISION TO CURRENT STATUS	DAB	KJP
2	07/24/97	UPDATED TO REFLECT STORM DRAINAGE TO RIVER	DAB	MK

TOSCO
Tosco Northwest Company
A Division of Tosco Corporation
9528 NW Doane St
Portland, Oregon 97210

ALPHA ENGINEERS and CONSTRUCTORS, INC.
19 NW 5th AVE, SUITE 204, PORTLAND, OR. 97209 Tel:(503)227-3317,Fax:(503)227-3244

DRAWN BY	D.A.BYNUM
CHKD BY	WHB
APPD BY	KJP
SCALE	AS SHOWN
DATE	10/15/96

PORTLAND TERMINAL
PORTLAND, OREGON
PLOT PLAN
PROCESS, STORM, AND SANITARY DRAINAGE

DRAWING NO.	SHEET	REV.
0608-C-7000	1 OF 1	2

608-7000.DWG <GPD: 07/24/97 [TIME: 2:11 PM]>

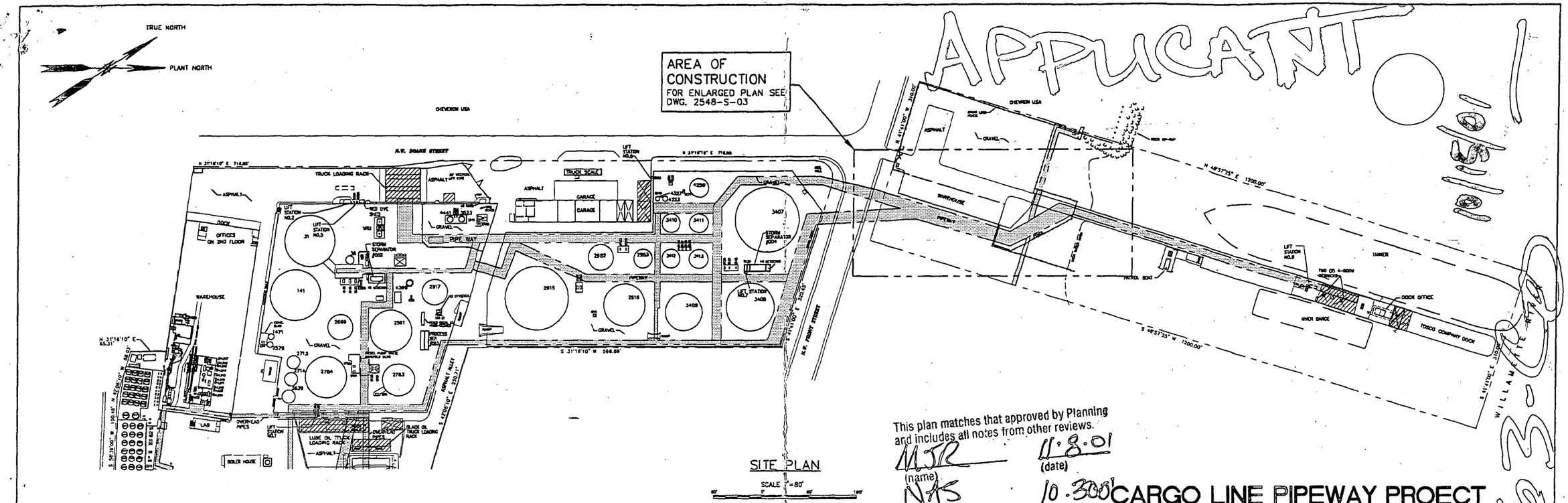

SITE PLAN

SCALE 1"=80'

This plan matches that approved by Planning and includes all notes from other reviews.

MJR (name) 11.8.01 (date)

NAS

10-300

CARGO LINE PIPEWAY PROECT

GENERAL CONCRETE NOTES:

1. ALL CONCRETE CONSTRUCTION, IN ADDITION TO THE SPECIFICATIONS, SHALL COMPLY WITH THE LATEST ADOPTED EDITION OF THE FOLLOWING ACI CODES: (ACI 318-89/318R-89 BUILDING REQUIREMENTS FOR REINFORCED CONCRETE, ACI 315R-80 MANUAL OF ENGINEERING AND PLACING DRAWINGS FOR REINFORCED CONCRETE STRUCTURES, ACI 304R-89 GUIDE FOR MEASURING, MIXING, TRANSPORTING AND PLACING CONCRETE, ACI 301-89 SPECIFICATION FOR STRUCTURAL CONCRETE FOR BUILDINGS). THE FOLLOWING NOTES ARE PROVIDED FOR USE AS A GUIDE TO ALL REQUIREMENTS:
2. CEMENT SHALL BE TYPE 1 OR TYPE 2 AND CONFORM TO ASTM C150, UNLESS OTHERWISE SPECIFIED OR REQUIRED.
3. AGGREGATES FOR NORMAL WEIGHT CONCRETE SHALL CONFORM TO ASTM C33 "SPECIFICATION FOR CONCRETE AGGREGATES".
4. THE NOMINAL MAXIMUM SIZE OF THE AGGREGATE SHALL NOT BE MORE THAN ONE-FIFTH OF THE NARROWEST DIMENSION BETWEEN SIDES OF THE FORMS, ONE-THIRD OF THE DEPTHS OF SLABS, NOR THREE-FOURTHS OF THE MINIMUM CLEAR SPACING BETWEEN REINFORCING BARS. THESE LIMITATIONS MAY BE WAIVED IF, IN THE JUDGMENT OF THE ENGINEER, WORKABILITY AND METHODS OF CONSOLIDATION ARE SUCH THAT THE CONCRETE CAN BE PLACED WITHOUT HONEYCOMB OR VOIDS.
5. CONCRETE FOR ALL PARTS OF THE WORK SHALL BE OF THE SPECIFIED QUALITY CAPABLE OF BEING PLACED WITHOUT EXCESSIVE SEGREGATION AND, WHEN HARDENED, OF DEVELOPING ALL CHARACTERISTICS REQUIRED BY THESE SPECIFICATIONS AND THE CONTRACT DOCUMENTS.
6. THE SPECIFIED COMPRESSIVE STRENGTH OF THE CONCRETE (F'c) FOR EACH PORTION OF THE STRUCTURE SHALL BE AS DESIGNATED BELOW. STRENGTH REQUIREMENTS SHALL BE BASED ON 28-DAY COMPRESSIVE STRENGTH, UNLESS NOTED OTHERWISE.

   ALL CONCRETE . . . . . 5000 PSI
7. THE CONCRETE WILL BE MIXED SUCH THAT THERE IS 5% AIR ENTRAINMENT AND THE SLUMP DOES NOT EXCEEED 4".
8. ALL REINFORCING STEEL, WIRE MESH, ANCHOR BOLTS, HOLDDOWN ANCHORS AND OTHER INSERTS SHALL BE SECURED IN POSITION AND INSPECTED BY THE ENGINEER PRIOR TO PLACING OF CONCRETE. REBAR SHALL BE A615 GRADE 60.
9. EXPOSED HORIZONTAL CONCRETE SURFACES SHALL BE WOOD FLOATED TO DEPRESS COARSE AGGREGATE AND STEEL TROWELED TO A HARD, SMOOTH SURFACE. ALL EXTERIOR WALKING SURFACES SHALL HAVE A BROOM FINISH. ALL EXPOSED EDGES SHALL BE CHAMFERED 3/4 INCH.
10. CONCRETE SURFACES SHALL BE PROTECTED DURING CURING AGAINST EARLY EVAPORATION OF WATER, ACTION BY SUN, RAIN, WATER, FROST AND MECHANICAL INJURY.
11. CONTRACTOR SHALL VERIFY ALL DIMENSIONS AND CONDITIONS AT THE JOB SITE PRIOR TO COMMENCING WORK, AND SHALL REPORT ANY DISCREPANCIES TO THE ENGINEER.
12. ALL BAR SPLICES SHALL BE 24" MIN.
13. SOIL: SILTY SAND; BASIC DESIGN BEARING CAPACITY = 1500 PSF (PER MULTNOMAH CNTY.)
14. CRUSHED ROCK BACKFILL SHALL BE 3/4" MINUS, WELL GRADED WITH NOT MORE THAN 5% PASSING A 200 MESH SCREEN ON A WET SIEVE ANALYSIS. COMPACTED TO 95% MODIFIED PROCTOR. (8" MAX. LIFTS, 6" MIN. REQUIRED)
15. NOTE USED
16. BACKFILL OR CRUSHED ROCK SHALL BE MIN. 6" BELOW EXISTING GRADE.

SPECIAL INSPECTIONS REQUIRED

1. SPECIAL INSPECTIONS REQUIRED PER U.B.C. 97 FOR THE FOLLOWING:
   - COMPACTION
   - CONCRETE/ REBAR

City of Portland
APPROVED
NOV 09 2001
D1-166763-CO
Permit Number

REGISTERED PROFESSIONAL ENGINEER 18815PE OREGON NOV. 12, 1998 WILLIAM H. BISHOP
EXPIRES: 12-31-01

DRAWING INDEX

DWG NO.	SHEET NO.	REV.	DATE	TITLE
1703-S-01	1 OF 1	A	10/8/01	PARTIAL SITE PLAN AND GENERAL CONCRETE NOTES
1703-S-02	1 OF 1	A	10/8/01	GREENWAY SITE PLAN
1703-S-03	1 OF 1	A	10/8/01	RETAINING WALL PLAN
1703-S-04	1 OF 1	A	10/8/01	RETAINING WALL SECTIONS AND DETAILS
1703-S-05	1 OF 1	A	10/8/01	MISCELLANEOUS SECTIONS AND DETAILS

DRAWING NO.	REFERENCE DRAWINGS	REV.	DATE	REVISED	DRAWN	CKD.	CIV/STRL	MECH/PIPING	ELEC/INST	SAFETY	P.E.
		0	10/8/01	ISSUE FOR CONSTRUCTION	QKB	WHB					

TOSCO
Tosco Refining Company
A Division of Tosco Corporation
5528 NW Doane St.
Portland, Oregon 97210

CLIENT APPROVALS		
REV	BY	DATE

ALPHA ENGINEERS and CONSTRUCTORS, INC.
2928 NW 29th AVE., PORTLAND, OR. 97210 Tel:(503)227-3717/Fax:(503)227-3244

AECI PROJECT NUMBER 25-48

SCALE: 1"=60'		DATE
DRAWN BY	QKB	10/5/01
DESIGNED BY	OAB	10/1/01
CHECKED BY		
WORK ORDER	25-48	22X34
DATE		
7/30/01		

PORTLAND TERMINAL
PORTLAND, OREGON
CARGO LINE PIPEWAY PROJECT
PARTIAL SITE PLAN
& GENERAL CONCRETE NOTES

DRAWING NO. 2548-S-01 SHEET 1 OF 1 REV. 0

s010.dwg DWG <<CPD: 10/11/01 [TIME: 1:29 PM] >

COP0021409

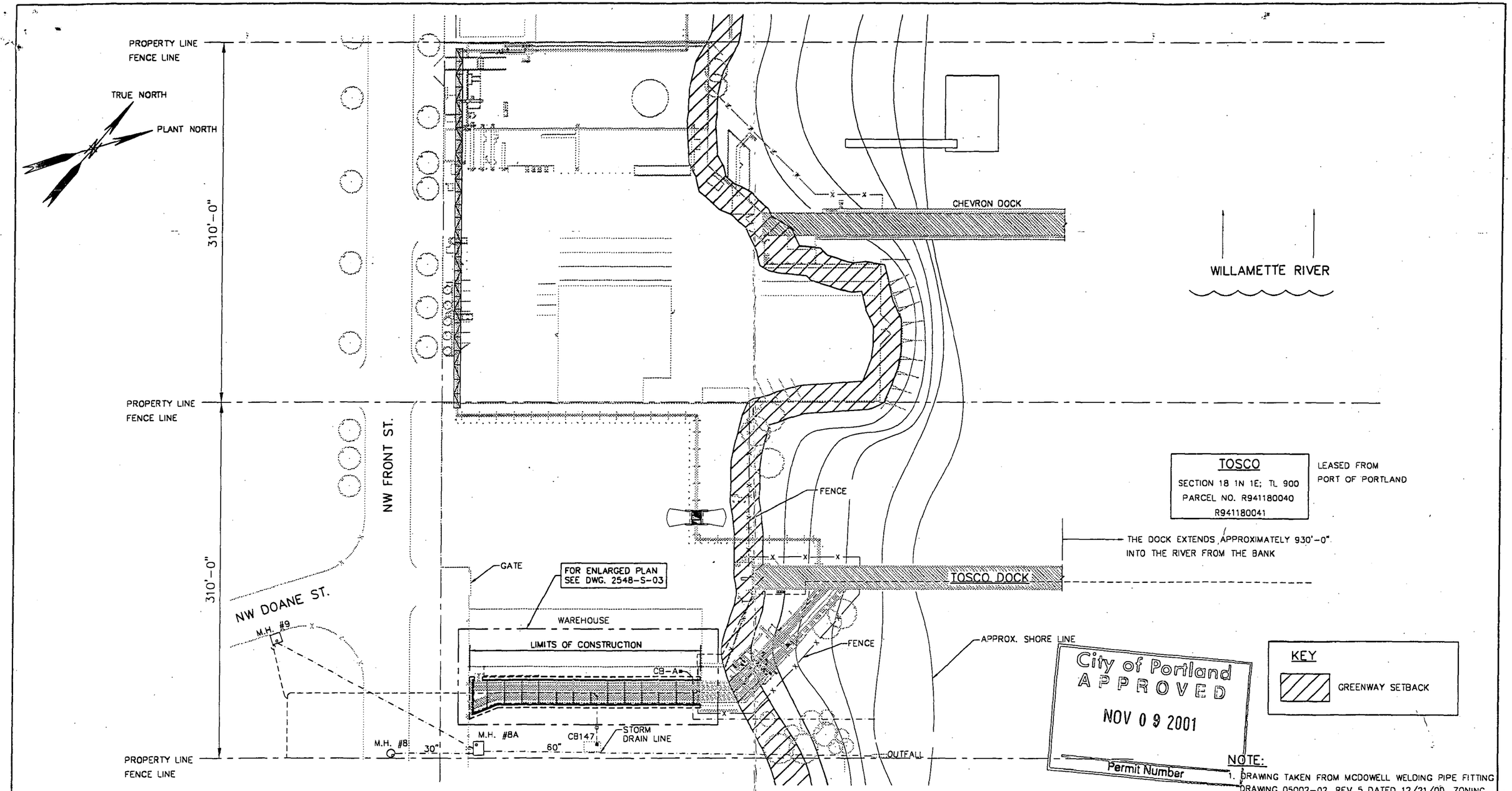

NOTE:
1. DRAWING TAKEN FROM MCDOWELL WELDING PIPE FITTING DRAWING 05002-02, REV 5 DATED 12/21/00, ZONING COMPLIANCE PAGE CASE FILE #LUR 00-00003 GW HS.

ALPHA ENGINEERS and CONSTRUCTORS, INC.
2929 NO 29th AVE, PORTLAND, OR. 97210 Tel:(503)227-1317/Fax:(503)227-3244

AECI PROJECT NUMBER: 25-48

DRAWING NO.	REFERENCE DRAWINGS	REV.	DATE	REVISED	DRAWN	CKD.	QV/STRL	MECH/PPING	ELEC/INST	SAFETY	P.E.
2548-S-03	RETAINING WALL PLAN	0	10/8/01	ISSUE FOR CONSTRUCTION	QKB	WHB					

TOSCO
Tosco Refining Company
A Division of Tosco Corporation
5528 NW Doane St.
Portland, Oregon 97210

CLIENT APPROVALS		
REV	BY	DATE

SCALE: 1"=40'		DATE
DRAWN BY	QKB	10/5/01
DESIGNED BY	DAB	10/1/01
CHECKED BY		
WORK ORDER	25-48	22X34
DATE		
7/30/01		

PORTLAND TERMINAL
PORTLAND, OREGON
CARGO LINE PIPEWAY PROJECT
GREENWAY SITE PLAN

DRAWING NO.	SHEET	REV.
2548-S-02	1 OF 1	0

COP0021410

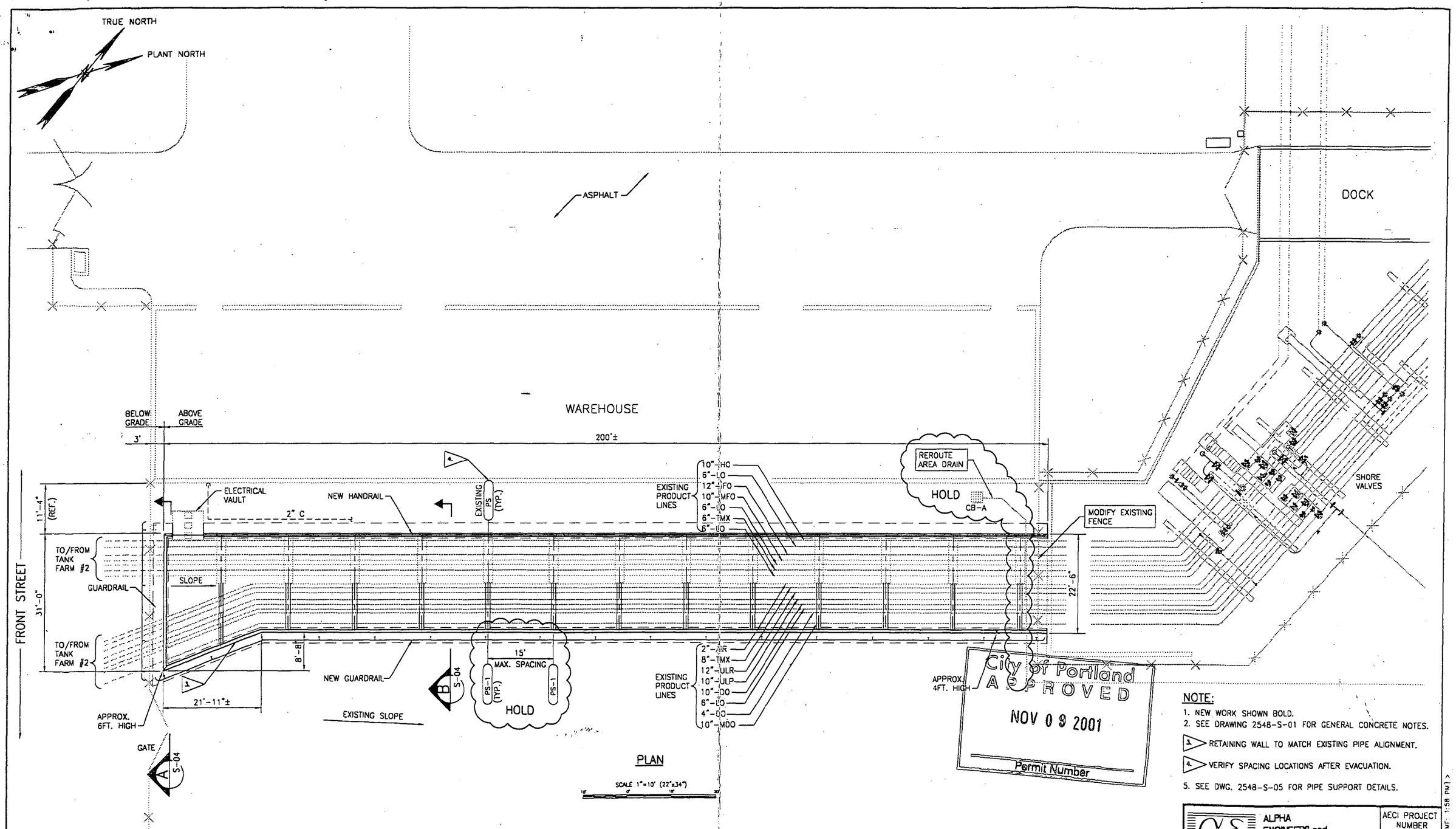

NOTE:

1. NEW WORK SHOWN BOLD.
2. SEE DRAWING 2548-S-01 FOR GENERAL CONCRETE NOTES.
3. RETAINING WALL TO MATCH EXISTING PIPE ALIGNMENT.
4. VERIFY SPACING LOCATIONS AFTER EVACUATION.
5. SEE DWG. 2548-S-05 FOR PIPE SUPPORT DETAILS.

DRAWING NO.	REFERENCE DRAWINGS	REV.	DATE	REVISED	DRAWN	CKD.	QV/STRL	MECH/PIPING	ELEC/INST	SAFETY	P.E.
2548-S-01	PARTIAL SITE PLAN AND GENERAL CONCRETE NOTES	0	10/8/01	ISSUE FOR CONSTRUCTION	DAB	WHB					
2548-S-04	RETAINING WALL SECTIONS AND DETAILS										
2548-S-05	MISCELLANEOUS SECTION AND DETAILS										

TOSCO
Tosco Refining Company
A Division of Tosco Corporation
5528 NW Doane St.
Portland, Oregon 97210

CLIENT APPROVALS		
REV	BY	DATE

ALPHA ENGINEERS and CONSTRUCTORS, INC.
2929 NO 29th AVE, PORTLAND, OR 97210 Tel(503)227-3317/Fax(503)227-3244

AECI PROJECT NUMBER 25-48

SCALE: 1"=10"		DATE
DRAWN BY	QKB	10/08/01
DESIGNED BY	DAB	10/01/01
CHECKED BY		
WORK ORDER	25-48	22x34
DATE		
07/30/01		

PORTLAND TERMINAL
PORTLAND, OREGON
CARGO LINE PIPEWAY PROJECT
PARTIAL PLAN
DOCK WAREHOUSE AREA
RETAINING WALL PLAN

DRAWING NO. 2548-S-03 | SHEET 1 OF 1 | REV. 0

2548p01a.dwg <CPD: 10/11/01 [TIME: 1:58 PM]>

COP0021411

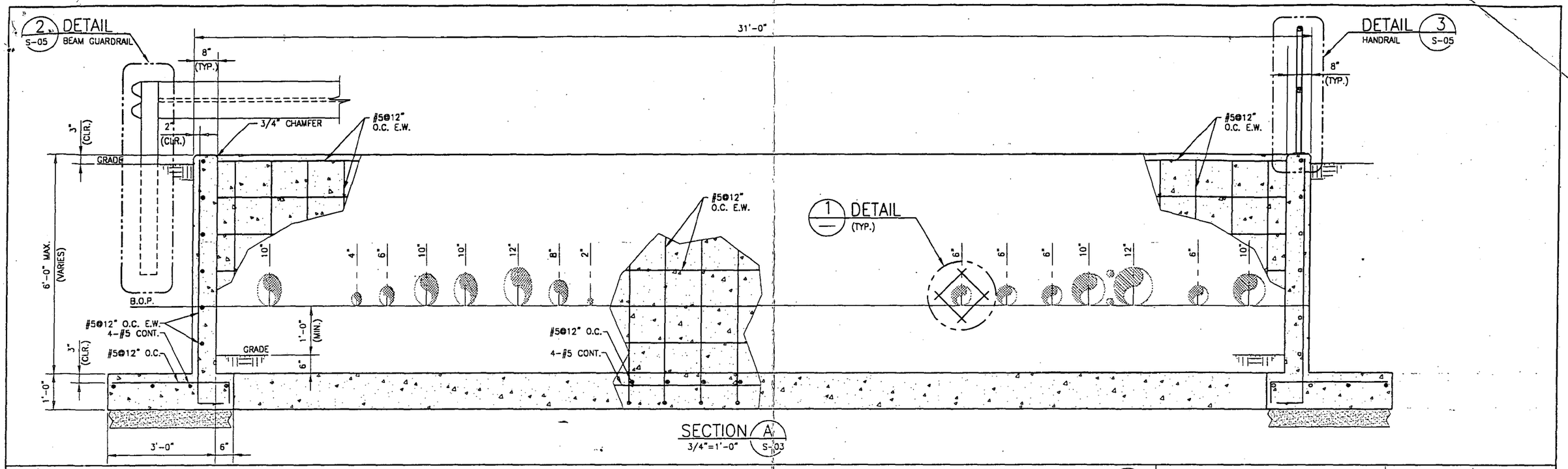

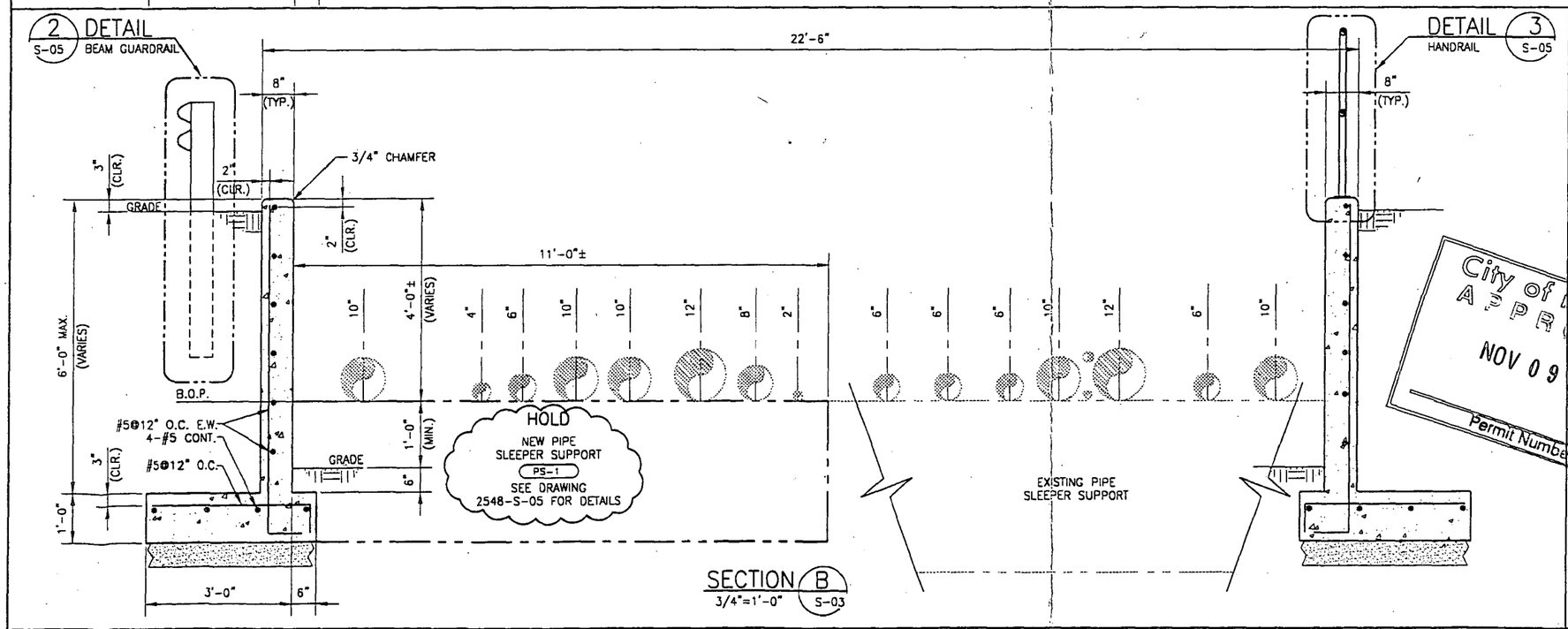

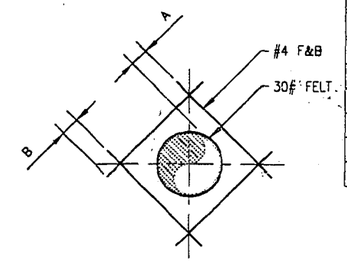

TYPICAL PIPE OPENING REINFORCEMENT

DETAIL 1 NOT TO SCALE

REINFORCING SCHEDULE

PIPE DIAMETER	A	B
2"	2"	6"
4"	2"	12"
6"	2"	12"
8"	2"	14"
10"	2"	16"
12"	2"	18"

City of Portland APPROVED NOV 09 2001 Permit Number

NOTE:

1. NEW WORK SHOWN BOLD.
2. CONTRACTOR TO FIELD VERIFY DIMENSIONS AND ELEVATIONS.
3. SEE DRAWING 2548-S-01 FOR GENERAL CONCRETE NOTES.

ALPHA ENGINEERS and CONSTRUCTORS, INC.
2929 NW 29th AVE, PORTLAND, OR. 97210 Tel:(503)227-3317/Fax:(503)227-3244

AECI PROJECT NUMBER 25-48

DRAWING NO.	REFERENCE DRAWINGS	REV.	DATE	REVISED	DRAWN	CKD.	CIV/STRL	MECH/PIPING	ELEC/INST	SAFETY	P.E.
2548-S-01	PARTIAL SITE PLAN AND GENERAL CONCRETE NOTES	0	10/8/01	ISSUE FOR CONSTRUCTION	DAB	WHB					
2548-S-03	RETAINING WALL PLAN										
2548-S-05	RETAINING WALL DETAILS										

TOSCO
Tosco Refining Company
A Division of Tosco Corporation
5528 NW Doane St.
Portland, Oregon 97210

CLIENT APPROVALS

BY	DATE

SCALE 3/4"=1'-0"		DATE
DRAWN BY	DKB	10/08/01
DESIGNED BY	DAB	10/01/01
CHECKED BY		
WORK ORDER	25-48	22x34
DATE		
07/30/01		

PORTLAND TERMINAL
PORTLAND, OREGON
CARGO LINE PIPEWAY PROJECT
PARTIAL PLAN
DOCK WAREHOUSE AREA
RETAINING WALL SECTION & DETAILS

DRAWING NO.	SHEET	REV.
2548-S-04	1 OF 1	0

s02c.dwg;DWG <CPD: 10/11/01 [TIME: 2:19 PM] >

COP0021412

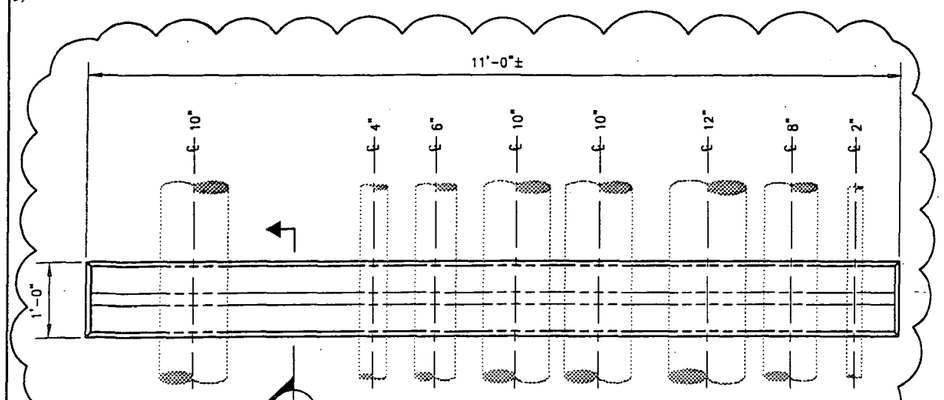

PIPE SLEEPER PLAN

PS-1

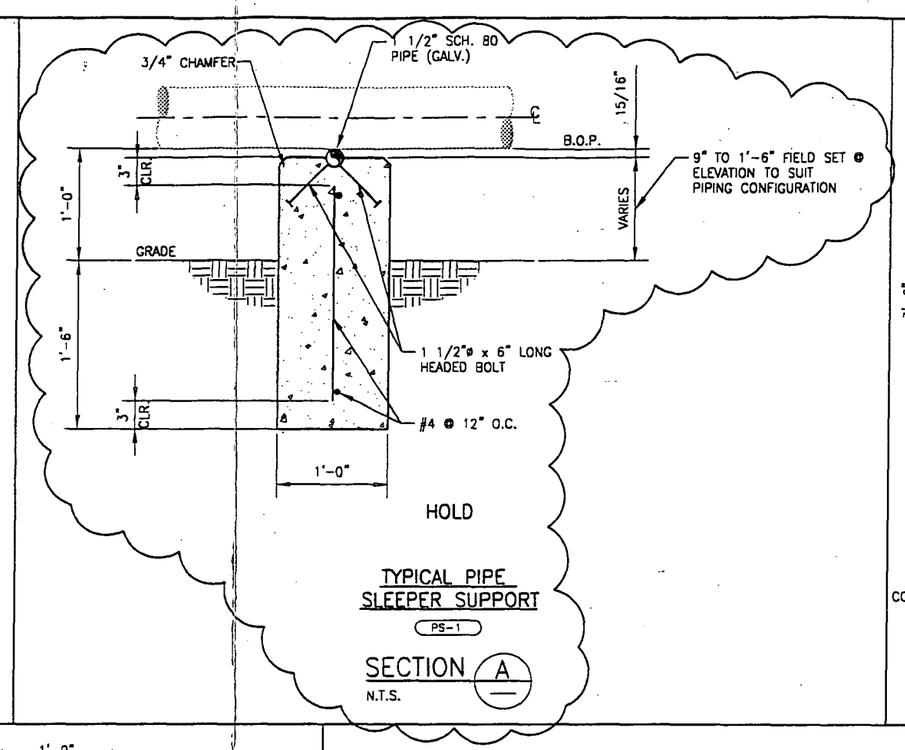

TYPICAL PIPE SLEEPER SUPPORT

PS-1

SECTION A

N.T.S.

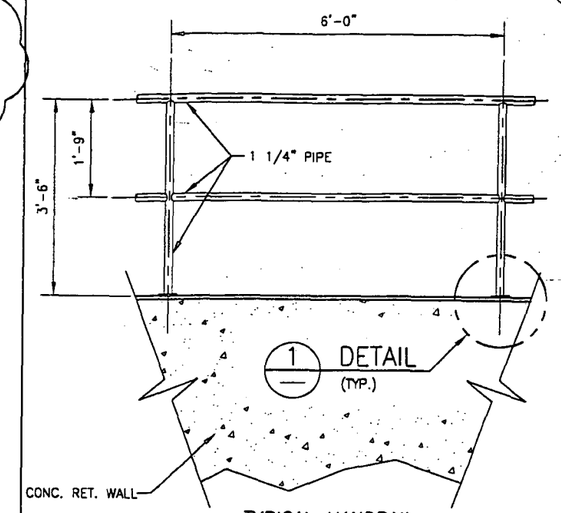

TYPICAL HANDRAIL

DETAIL 3 S-04

3/4"=1'-0"

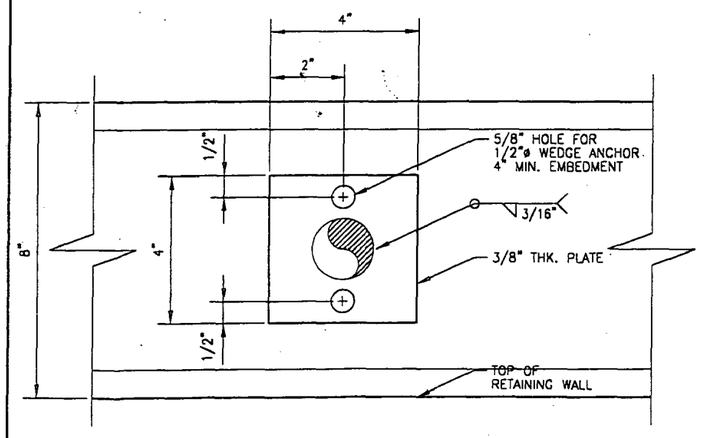

TYPICAL HANDRAIL BASEPLATE

1 DETAIL

N.T.S.

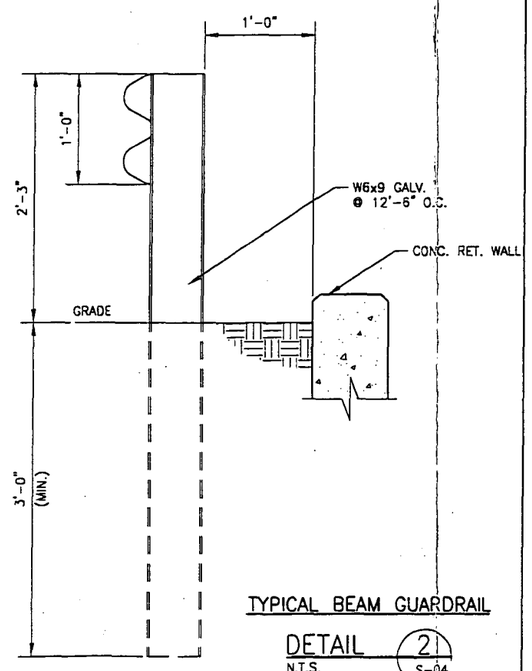

TYPICAL BEAM GUARDRAIL

DETAIL 2 S-04

N.T.S.

City of Portland
APPROVED
NOV 09 2001
Permit Number

NOTE:

1. NEW WORK SHOWN BOLD.
2. CONTRACTOR TO FIELD VERIFY DIMENSIONS AND ELEVATIONS.
3. SEE DRAWING 2548-S-01 FOR GENERAL CONCRETE NOTES.
4. HOT DIP GALVANIZE ALL STEEL.

DRAWING NO.	REFERENCE DRAWINGS	REV.	DATE	REVISED	DRAWN	CKD.	CIV/STRL	MECH/PPING	ELEC/INST	SAFETY	P.E.
2548-S-04	RETAINING WALL DETAILS	0	10/8/01	ISSUE FOR CONSTRUCTION	DAB	WHB					

TOSCO
Tosco Refining Company
A Division of Tosco Corporation
5528 NW Doane St.
Portland, Oregon 97210

CLIENT APPROVALS	
BY	DATE

ALPHA ENGINEERS and CONSTRUCTORS, INC.
2929 NW 29th AVE., PORTLAND, OR. 97210 Tel(503)227-3317/Fax(503)227-3244

AECI PROJECT NUMBER 25-48

SCALE:AS SHWON		DATE
DRAWN BY	QKB	10/08/01
DESIGNED BY	DAB	10/01/01
CHECKED BY		
WORK ORDER	25-48	22x34
DATE		
07/30/01		

PORTLAND TERMINAL
PORTLAND, OREGON
CARGO LINE PIPEWAY PROJECT
PARTIAL PLAN
DOCK WAREHOUSE AREA
MISCELLANEOUS SECTION & DETAILS

DRAWING NO. 2548-S-05 SHEET 1 OF 1 REV. 0

a050.dwg:DWG <CPD: 10/11/01 [TIME: 2:34 PM] >

COP0021413

ALPHA ENGINEERS and CONSTRUCTORS, INC.

WORK ORDER NO.	DATE 10/3/01	PREPARED BY JPD	CHECKED BY	PAGE 1/3
CUSTOMER		PROJECT		
SUBJECT				

SCOPE OF WORK

PROVIDE RET. WALL DESIGN AT PIPE TRENCH.
USE RETAINPRO SOFTWARE W/FOLLOWING:

- 30 PCF EQ. FLUID PRESS (U.B.C.)
- ADD 150 PSF SURCHARGE MIN AT T/WALL
- $f'_c = 5000$ PSI / $F_y = 60$ KSI REBAR

VERY CONS DUE H.R. 3' FROM WALL

1.) RESULTS

SLIDING S.F. = 1.56 > 1.5
O.T.M S.F. = 2.16 > 1.5 } o.k

θ_{soil} Allow = 1500 PSF (1 + 5'(0.2)) = 3000 PSF U.B.C

θ_{ACTUAL} = 1810 PSF < 3000 o.k.

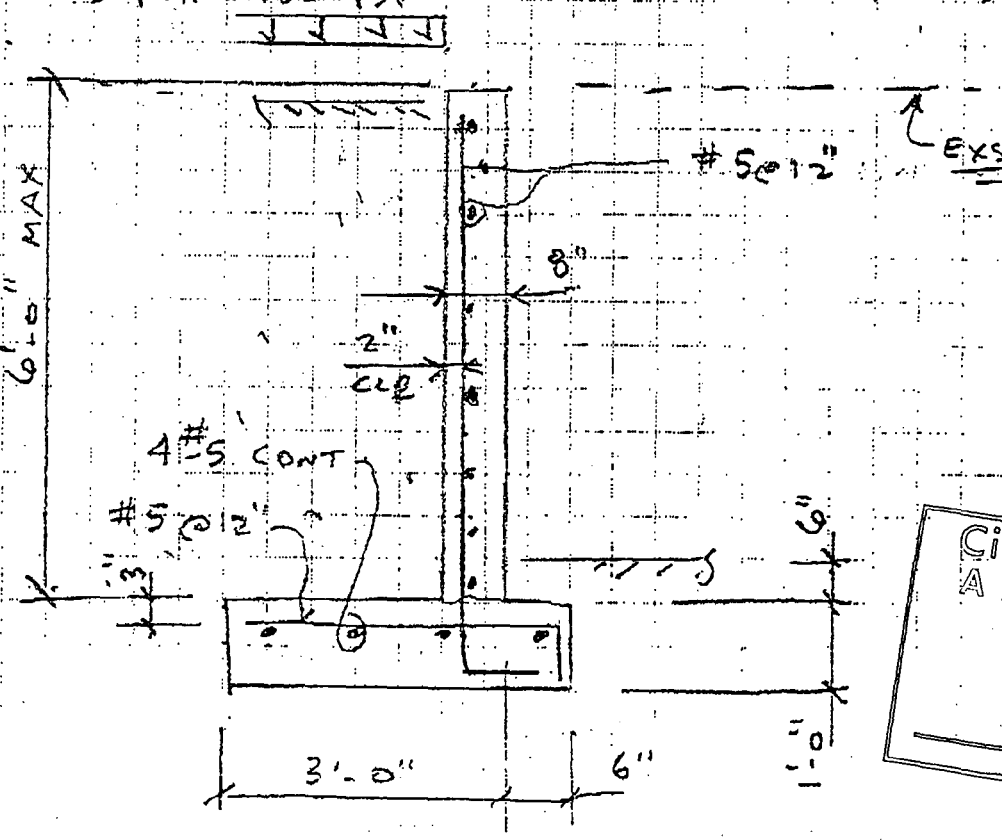

SECTION

City of Portland APPROVED NOV 09 2001 Permit Number

FORM 50-001 (REV. 7-97)

COP0021414

To specify your own special title block here, use the "Settings" screen and enter your title block information.

Title : 100301
Job # : 1...
Description....
Ret wall / pipe trench

Dsgnr: JPD

Date: OCT 3,2001

-15

Cantilevered Retaining Wall Design

RetainPro V5.0.4 (c) 1989-98 Retain Pro

Summary of Overturning & Resisting Forces & Moments

Item		.....OVERTURNING..... Force lbs	Distance ft	Moment ft-#
Heel Active Pressure	=	1,021.4	2.66	2,717.3
Toe Active Pressure	=	-33.8	0.50	-16.9
Surcharge Over Toe	=			
Adjacent Footing Load	=			
Added Lateral Load	=			
Load @ Stem Above Soil	=			
Total	=	987.6	O.T.M. =	2,700.4

Resisting/Overturning Ratio = 2.16

Vertical Loads used for Soil Pressure = 3,273.2 lbs

Vertical component of active pressure used for soil pressure

		.....RESISTING..... Force lbs	Distance ft	Moment ft-#
Soil Over Heel	=	1,540.0	2.33	3,593.3
Sloped Soil Over Heel	=			
Surcharge Over Heel	=	350.0	2.33	816.7
Adjacent Footing Load	=			
Axial Dead Load on Stem	=		0.00	
Soil Over Toe	=	27.5	0.25	6.9
Surcharge Over Toe	=			
Stem Weight(s)	=	600.0	0.83	500.0
Earth @ Stem Transitions	=			
Footing Weight	=	525.0	1.75	918.7
Key Weight	=			
Vert. Component	=			
Total	=	3,042.5 lbs	R.M.=	5,835.6

City of Portland
APPROVED
NOV 0 9 2001
Permit Number

To specify your own special title block here, use the "Settings" screen and enter your title block information.

Title : 100301
Job # : 1... Dsgnr: JPD Date: OCT 3,2001
Description....
Ret wall / pipe trench

Cantilevered Retaining Wall Design

RetainPro V5.0.4 (c) 1989-98 Retain Pro

Criteria

Retained Height	=	6.00 ft
Wall height above soil	=	0.00 ft
Slope Behind Wal	=	0.00 : 1
Height of Soil over Toe	=	6.00 in
Soil Density	=	110.00 pcf
Wind on Stem	=	0.0 psf

Soil Data

Allow Soil Bearing	=	3,000.0 psf
Equivalent Fluid Pressure Method		
Heel Active Pressure	=	30.0 psf/ft
Toe Active Pressure	=	30.0 psf/ft
Passive Pressure	=	250.0 psf/ft
Water height over heel	=	0.0 ft
Footing||Soil Friction	=	0.400
Soil height to ignore for passive pressure	=	0.00 in

Footing Strengths & Dimensions

f'c = 5,000 psi Fy = 60,000 psi

Min. As %	=	0.0018
Toe Width	=	0.50 ft
Heel Width	=	3.00
Total Footing Width	=	3.50
Footing Thickness	=	12.00 in
Key Width	=	0.00 in
Key Depth	=	0.00 in
Key Distance from Toe	=	0.00 ft

Cover @ Top = 2.00 in @ Btm.= 3.00 in

Surcharge Loads

Surcharge Over Heel = 150.0 psf
Used To Resist Sliding & Overturning

Surcharge Over Toe = 0.0 psf
Used for Sliding & Overturning

Design Summary

Total Bearing Load	=	3,273 lbs	
...resultant ecc.	=	6.55 in	
Soil Pressure @ Toe	=	1,810 psf	OK
Soil Pressure @ Heel	=	61 psf	OK
Allowable	=	3,000 psf	
Soil Pressure Less Than Allowable			
ACI Factored @ Toe	=	2,355 psf	
ACI Factored @ Heel	=	79 psf	
Footing Shear @ Toe	=	0.0 psi	OK
Footing Shear @ Heel	=	11.3 psi	OK
Allowable	=	120.2 psi	
Wall Stability Ratios			
Overturning	=	2.16	OK
Sliding	=	1.56	OK
Sliding Calcs (Vertical Component Used)			
Lateral Sliding Force	=	987.6 lbs	
less 100% Passive Force	= -	281.3 lbs	
less 100% Friction Force	= -	1,309.3 lbs	
Added Force Req'd	=	0.0 lbs	OK
....for 1.5 : 1 Stability	=	0.0 lbs	OK

Footing Design Results

		Toe	Heel	
Factored Pressure	=	2,355	79	psf
Mu' : Upward	=	281	1,592	ft-#
Mu' : Downward	=	36	3,659	ft-#
Mu: Design	=	245	2,067	ft-#
Actual 1-Way Shear	=	0.00	11.28	psi
Allow 1-Way Shear	=	120.21	120.21	psi
Toe Reinforcing	=	None Spec'd		
Heel Reinforcing	=	None Spec'd		
Key Reinforcing	=	None Spec'd		

Stem Construction

Top Stem

Design height	ft =		Stem OK 0.00
Wall Material Above "Ht"	=		Concrete
Thickness	=		8.00
Rebar Size	=		# 5
Rebar Spacing	=		12.00
Rebar Placed at	=		Edge
Design Data			
fb/FB + fa/Fa	=		0.386
Total Force @ Section	lbs =		1,328.9
Moment....Actual	ft-# =		3,086.8
Moment.....Allowable	=		7,993.7
Shear.....Actual	psi =		17.9
Shear.....Allowable	psi =		76.0
Bar Embed ABOVE Ht.	in =		12.00
Bar Embed BELOW Ht.	in =		6.00
Wall Weight	=		100.0
Rebar Depth 'd'	in =		6.19
Masonry Data			
f'm	psi =		
Fs	psi =		
Solid Grouting	=		
Special Inspection	=		
Modular Ratio 'n'	=		
Short Term Factor	=		
Equiv. Solid Thick.	=		
Masonry Block Type = Medium Weight			
Concrete Data			
f'c	psi =		2,000.0
Fy	psi =		60,000.0

Other Acceptable Sizes & Spacings
Toe: Not req'd, Mu < S * Fr
Heel: Not req'd, Mu < S * Fr
Key: No key defined

City of Portland
APPROVED
NOV 09 2001
Permit Number

Carlson Testing, Inc.

P.O. Box 23814
Tigard, Oregon 97281
Phone (503) 684-3460
FAX (503) 684-0954

4060 Hudson Ave., NE
Salem, OR 97301
Phone (503) 589-1252
FAX (503) 589-1309

P.O. Box 7918
Bend, OR 97708
Phone (541) 330-9155
FAX (541) 330-9163

JOBSITE FILE

Special Inspection

DAILY FIELD REPORT

Project: TOSCO Refining Co.

Date: 12-11-01

Job Address: 5528 NW Doane

Type of Inspection: Reinforced Concrete

Permit No.: 01-1166763

CTI Job #: T0108499

Weather: Rain

Fab Shop:

Inspection Notes (include location, testing data, substitutions/deviations, materials and methods of construction, conformance statement, etc.):

Inspected rebar for new concrete wall on North side full length and new concrete footing on South side full length. Rebar Placed per city approved plans

Cast & set of 3 cylinders on app. 52 cyds. of Ross Island concrete mix #5010 BYR.

per request of Tosco engineer and Dan w/ E mois.

Also- concrete scheduled to start at 11AM- Pump delay to 1230- so 1½ hrs of standby time

Inspector: Ted KL

Certification No.: COP 681

Use of the information contained in this report constitutes acceptance of all terms on the reverse of this form and Carlson Testing, Inc.'s General Conditions. Information contained herein is not to be reproduced, except in full, without prior authorization from this office.

Carlson Testing, Inc.

P.O. Box 23814
Tigard, Oregon 97281
Phone (503) 684-3460
FAX (503) 684-0954

4060 Hudson Ave., NE
Salem, OR 97301
Phone (503) 589-1252
FAX (503) 589-1309

P.O. Box 7918
Bend, OR 97708
Phone (541) 330-9155
FAX (541) 330-9163

Special Inspection

DAILY FIELD REPORT

Project: Tosco Refining Company

Date: 12-21-01

Job Address: 5528 N.W. Doane

Type of Inspection: Rebar/concrete

Permit No.: 01-166763-CO

CTI Job #: T0108499

Weather: Cloudy

Fab Shop: ——

Inspection Notes (include location, testing data, substitutions/deviations, materials and methods of construction, conformance statement, etc.):

As requested by contractor, A CTI Rep inspected rebar in south retaining wall and end wall footing. Rebar size, grade and placement was in compliance with approved plans and specs. Observed contractor place by pump, approx 36 yds of Ross Island concrete mix 5010B-5000 PSI into the above listed locations. Concrete consolidated by vibrator. Cast one set of four 6x12 samples

Engineer on site - shortened return wall do to rebar was to short to end of wall - end of wall bulkhead - 6" shorter

Inspector: D. Vick

Certification No.: #729

Use of the information contained in this report constitutes acceptance of all terms on the reverse of this form and Carlson Testing, Inc.'s General Conditions.
Information contained herein is not to be reproduced, except in full, without prior authorization from this office.

Carlson Testing, Inc.

Main Office
PO Box 23814
Tigard, OR 97281
Phone (503)684-3460
Fax # (503)684-0954

Branch Office
4060 Hudson Ave.
Salem, OR 97301
Phone (503) 589-1252
Fax # (503) 589-1309

JOB NO. _____

REPORT OF IN-PLACE SOIL DENSITY TESTS

FILE COPY

Client CM ~~EIMTE~~ EMEIS

Project Tosco Refinnery Co

Material Description 3/4 - Ø Rock Morse Bro Angle pit

Max. Dry Density 130.1 lbs./cu. ft. Optimum Moisture 15.6 Method of Test T-180

95%

DATE OF TEST	TEST NO.	South Ftg Trench TEST LOCATION	DENSITY COUNT	MOIST. COUNT	Rock Soil MODE	% C.P.	ADJ. MAX DEN.	ELEV. FT.	% FIELD MOIST.	IN-PLACE DENSITY (LBS/C U. FT.) WET	DRY	% COMP.
12/3	#1	West End South trench 45' East of beginning	2204	122	6"			FG FTG	8.4	134.7	124.2	96%
	#2	East End south trench 60' west of Trench	2696	99	6"			FG	6.9	125.7	117.6	90%
	#3	East End south Trench 35' west of Trench	2673	103	6"			FG	7.3	126.1	117.6	90%
	#4	Center south Trench ℄ Trench Retest of (B)	2203	111	6"			FG	7.4	134.8	125.4	96%
	#5	East End south Trench ℄ Trench Retest of (C)	2302	113	6"			FG	7.7	132.8	123.2	95%

Standard Counts: Density 2739 Moisture 602 Gauge ID 14489 Calibration Data 4-02

Remarks: Retest of 11/30/01, J. Black #1 #2 #3 - crew used plate compactor they changed to Vibatory Roller - I stayed @ site to retest. All Testing are Retests. GH

Tested by Gene Hilby

Our reports pertain to the material tested/inspected only. Infomation containted herein is not to be reproduced, except in full, without prior authorization from this office.

Ross Island Sand & Gravel Co.
4315 S.E. McLoughlin Blvd.
P.O. Box 82249
Portland,, OR 97282-0249
(503) 239-5504

CONCRETE MIX DESIGN

MIX ID : 5010B [ ] 5000 PSI 11/16/01

CONTRACTOR : C M EMEIS
PROJECT : TOSCO PIPELINE PIPEWAY
CONSTRUCTION TYPE : GENERAL / NOT FOR EXTERIOR FLATWORK
PLACEMENT : CHUTE OR PUMP

WEIGHTS PER CUBIC YARD (SATURATED, SURFACE-DRY)

			YIELD, CU FT
TYPE I/II CEMENT, LB	705		3.59
ASTM C33 ROSS ISLAND SAND, LB	1258		7.88
ASTM #67 ROSS ISLAND 3/4", LB	1800		10.64
WATER, LB (GAL-US)	290	(34.8)	4.65
TOTAL AIR, %	2.0		0.55
			=======
		TOTAL	27.30
ASTM C494 WATER REDUCER @ 4 OZ/CWT, OZ	28.20		
WATER/CEMENT RATIO, LBS/LB	0.41		
SLUMP, IN	4.00		
CONCRETE UNIT WEIGHT, PCF	148.5		

PREPARED BY :

_____

ROSS ISLAND TECHNICAL SERVICES

Ross Island Sand & Gravel Co.
4315 S.E. McLoughlin Blvd.
P.O. Box 82249
Portland,, OR 97282-0249
(503) 239-5504

CONCRETE MIX DESIGN

MIX ID : CDF50B [ ] 500 PSI

11/16/01

CONTRACTOR : C M EMEIS
PROJECT : TOSCO PIPELINE PIPEWAY
CONSTRUCTION TYPE : LOW STRENGTH FILL
PLACEMENT : CHUTE OR PUMP(4"+ LINE)

WEIGHTS PER CUBIC YARD (SATURATED, SURFACE-DRY)

		YIELD, CU FT
TYPE I/II CEMENT, LB	125	0.64
CLASS F FLYASH, LB	300	2.08
ASTM C33 ROSS ISLAND SAND, LB	1493	9.35
ASTM #67 ROSS ISLAND 3/4", LB	1581	9.35
WATER, LB (GAL-US)	265 (31.8)	4.25
TOTAL AIR, %	6.0 +/- 1.5	1.64
		=======
	TOTAL	27.30
ASTM C260 AIR ENTRAINMENT / .75 OZ/CWT, OZ	3.2	
WATER/CEMENT RATIO, LBS/LB	0.62	
SLUMP, IN	6.00	
CONCRETE UNIT WEIGHT, PCF	137.9	

PREPARED BY :

ROSS ISLAND TECHNICAL SERVICES

Carlson Testing, Inc.

P.O. Box 23814
Tigard, Oregon 97281
Phone (503) 684-3460
FAX (503) 684-0954

4060 Hudson Ave., NE
Salem, OR 97301
Phone (503) 589-1252
FAX (503) 589-1309

P.O. Box 7918
Bend, OR 97708
Phone (541) 330-9155
FAX (541) 330-9163

FILE COPY

Special Inspection

SO. WALL SUB GRADE

DAILY FIELD REPORT

NO. WALL FOOTS & WALL REBAR

Project: Tosco Refining Company Cargo Line Pipeway

Date: 11/30/01

Job Address: 5528 NW Doane

Type of Inspection: Rebar // Conc

Permit No.: 01-166763-CO

CTI Job #:

Weather: Rain (470)

Fab Shop:

Inspection Notes (include location, testing data, substitutions/deviations, materials and methods of construction, conformance statement, etc.):

- Observed Rebar as follows to be in general conformance with approved drawings:
  - Retaining wall Footing, North of and adjacent to pipeway. (190' Long ±).
- observed & tested 25.5 yd³ ± of Ross Island Mix 5010BVR (5,000 PSI f'c) pumped into the aforementioned area for a 5,000 PSI spec; made one set of 4 cyls:
  - Slump = 4" (spec = 4" max)
  - Conc Temp = 58°

Concrete was mechanically vibrated.

Inspector: Jeffrey W. Black

Certification No.: C.O.B. 708

Use of the information contained in this report constitutes acceptance of all terms on the reverse of this form and Carlson Testing, Inc.'s General Conditions. Information contained herein is not to be reproduced, except in full, without prior authorization from this office.

Carlson Testing, Inc.

Compressive Strength
Data Sheet

Date Billed _____

Tigard Telephone Number: #(503) 684-3460
Salem Telephone Number #(503) 589-1252
Bend Telephone Number #(541) 330-9155

REPORT OF: (6x12) - 2x4 - 3x6 - 4x8 - 4x4x8 - Cylinders - 2x2x2 Cubes (Circle which one applies) TEST SPECIMENS

Test Methods: ASTM: C172, C143, C1064, C31, UBC: _____ or Other: SUB-GRADE

Date Molded: 11/30, 2001 **FILE COPY** Cast By: No. Jeff Black (Please specify)

Permit(s):#: 01-166763-CO Jurisdiction: Portland Conc FOOTS & WALL REBAR

Project: TOSCO Refining Company Cargo Line Pipeway CTI Job #: _____

Job Address: 5528 N.W. Doane Cubic Yards: 9 of 25.5

Contractor: C.M. Emeis Sub-Contractor: Same

Concrete Supplier: Ross Island Truck #: 83 Load #: 1 Ticket #: T-239552

Weather: Rain Air Temp. at Sampling Time: 47° Test Time 1140

Cylinders were cast for the following location: W. end of work

Total Concrete Placement Location: Retaining Wall FTG, N. of & adjacent to pipeway

Strength Req'd: 5,000 (*) - PSI @ 28 Days - Conc. Temp: 58° - % Air: — - Slump: 4" - Cement Type: I/II

Mix Number: 5010 BVR - Admix/Amount: (SK)

Set Number	Test Days	Register Number	Date Rec'd	Date Test	Total Load	Area	Unit PSI	Cylinder Weight	Tested By
1A	14								
1B	28								
1C	28								
1D	Hold								

Remarks: (*) Per Structural notes

**Field Cures require separate Compressive Test Data Sheet.

***Each set must have a separate Compressive Test Data Sheet.

*****Please attach all tickets Batch Weight Data **if** you receive them.

COP0021423

Carlson Testing, Inc.

Main Office
PO Box 23814
Tigard, OR 97281
Phone (503)684-3460
Fax # (503)684-0954

Branch Office
4060 Hudson Ave.
Salem, OR 97301
Phone (503) 589-1252
Fax # (503) 589-1309

JOB NO. _____

FILE COPY

REPORT OF IN-PLACE SOIL DENSITY TESTS

So. WALL SUB-GRADE

Client C.M. Emeis

Project TOSCO Refining — Cargo Line Pipeway // 5528 NW Doane

Material Description Morse Bros (Angell) 3/4" -

Max. Dry Density 130.1 lbs./cu. ft. Optimum Moisture 13.6 Method of Test T-180

DATE OF TEST	TEST NO.	TEST LOCATION	DENSITY COUNT	MOIST. COUNT	MODE	% C.P.	ADJ. MAX DEN.	ELEV. FT.	% FIELD MOIST.	IN-PLACE DENSITY (LBS/C U. FT.) WET	DRY	% COMP.
11/30/01	SF 1	South Retaining wall	2842	143	4"			FTG Bottom	7.6	127.0	119.9	92
			W. end									
	2	FTG, adjacent	2634	166	4"				8.8	133.0	122.2	94
			Center									
	3	to pipeway	2981	139	4"				7.5	126.6	117.7	90
			E. end									

Standard Counts: Density 2590 Moisture 725 Gauge ID 21072 Calibration Data _____

Remarks: Spec = 95%, per dispatch. Recommend retests.

Tested by Jeffrey W. Black

Our reports pertain to the material tested/inspected only. Infomation containted herein is not to be reproduced, except in full, without prior authorization from this office.

INDICATE PERMIT(S) REQUIRED
(To Be Filled Out by Permit Center Staff)

Plumbing	☐	#
Mechanical	☐	#
Electrical	☐	#
Building	☐	#
Sprinkler	☐	#
Alarm	☐	#

City of Portland
Office of Planning & Development Review
INSPECTION RECORD

Commercial Building Permit

01-166763-000-00-CO Issued: 11/13/01

5528 NW DOANE AVE

TOSCO RETAINING WALL

Const: V-N Occ: U2

Applicant: ALPHA ENGINEERS & CONSTRUCTION

Owner: TOSCO CORP

Contractor: To Bid

IVR #: 2130367

BUILD RETAINING WALL.

24-HOUR
INSPECTION REQUEST SERVICE

BUILDINGS	TDD	FIRE MARSHAL
(503) 823-7000	(503) 823-6868	(503) 823-3700

THIS RECORD SHALL BE MAINTAINED IN A CONSPICUOUS PLACE ON THE JOB UNTIL COMPLETION.

PLEASE CALL FOR ALL INSPECTIONS.

APPROVED PLANS REQUIRED ON JOB SITE **AT ALL TIMES.**

NO WORK OF ANY KIND, ON ANY PART OF ANY BUILDING OR STRUCTURE REQUIRING INSPECTION SHALL BE COVERED OR CONCEALED IN ANY MANNER WHATSOEVER, WITHOUT FIRST OBTAINING APPROVAL.

Plumbing Contractor: **Date Issued:**

Inspection/Comments	Date	Insp
Underground		
Underfloor		
Rough-in-Plumbing		
Water Service		
Sanitary Sewer		
Sub Surface Disposal System		
Storm Sewer		
Rain Drain		
Final Plumbing		

Mechanical Contractor: **Date Issued:**

Gas Piping		
Rough-In HVAC		
Final HVAC		

Electrical Contractor: **Date Issued:**

Rough-in Wiring		
Final Electrical		

Fire Marshal: **Date Issued:**

Sprinkler		
Alarm		
Final Fire Marshal		

Building Contractor: **Date Issued:**

Footing/Slab Form		
Foundation Wall Form		
Roofing		
Framing		
Under Floor		
Cover Wall/Ceiling		
Nailing		
Final Building		

EC #200 12/14/01

Overall

These permits shall become null and void without prior notification by the Office of Planning and Development Review, if such work authorized by the permit is not commenced within 180 days from the issuance, or if said work is suspended or abandoned for a period of 180 days from the start of such work.

DO NOT OCCUPY PRIOR TO BUILDING FINAL APPROVAL

LT – m drive files\forms\Commercial Inspection Record 1099.doc

11-30-01 North Side Ftg's & Wall
Ftgs - #5-12"oc Walls - #5-12" oc E.W.,
#4 Continuous. DE

12-20-01 South Side Ftg & Wall - Restrick same as above. DE

12-21-01 End Wall Ftg. #5-12"oc & (4) #5 Continuous. DE

1-18-02 End Wall Restrick #5-12"oc E.W. See Section A & Detail 1 DP.

CITY OF

PORTLAND, OREGON

OFFICE OF PLANNING AND DEVELOPMENT REVIEW
1900 SW 4th Ave, Suite 5000
Portland, OR 97201

MULTNOMAH COUNTY

COMMERCIAL BUILDING PERMIT

01-166763-000-00-CO

Site Address: **5528 NW DOANE AVE**

Issued: 11/13/01

TOSCO RETAINING WALL

PROJECT INFORMATION		Occ. Group	Const. Type
Hazardous	**Addition**	**U2**	**V-N**

Project Description: BUILD RETAINING WALL.

APPLICANT	**ALPHA ENGINEERS & CONSTRUCTION *BILL BISHOP***	Phone	(503) 227-3317
OWNER	**TOSCO CORP**	Phone	
CONTRACTOR	**To Bid**	Phone	

Project Details	
Code Edition (Year)	1997
Number of Stories	1
Water District	City of Portland

Project Details	
Ground Disturbance?	Yes
SI-Reinforced Concrete	Yes
Zoning - Property (1)	IHi

BEFORE YOU DIG

ATTENTION: Oregon law requires you to follow rules adopted by the Oregon Utility Notification Center. Those rules are set forth in OAR 952-001-0010 through OAR 952-001-0090. You may obtain copies of the rules by calling the center. (Note: the telephone number for the Oregon Utility Notification Center is 1-800-332-2344).

CITY CONTACT **PROCESS MANAGEMENT** Phone: 503-823-7357

E-Mail: Fax: (503) 823-4172

INSPECTION REQUEST PHONES NUMBERS

Building/Trade Inspections - Call Before 6:00 AM: **(503) 823-7000**

TDD: (503) 823-6868

IVR Inspection Request Number: **2130367**

Ross Island Sand & Gravel Co.
4315 S.E. McLoughlin Blvd.
P.O. Box 82249
Portland,, OR 97282-0249
(503) 239-5504

CONCRETE MIX DESIGN

MIX ID : 5010B [ ] 5000 PSI

11/16/01

CONTRACTOR : C M EMEIS
PROJECT : TOSCO PIPELINE PIPEWAY
CONSTRUCTION TYPE : GENERAL / NOT FOR EXTERIOR FLATWORK
PLACEMENT : CHUTE OR PUMP

WEIGHTS PER CUBIC YARD (SATURATED, SURFACE-DRY)

			YIELD, CU FT
TYPE I/II CEMENT, LB	705		3.59
ASTM C33 ROSS ISLAND SAND, LB	1258		7.88
ASTM #67 ROSS ISLAND 3/4", LB	1800		10.64
WATER, LB (GAL-US)	290	(34.8)	4.65
TOTAL AIR, %	2.0		0.55
			=======
		TOTAL	27.30

ASTM C494 WATER REDUCER @ 4 OZ/CWT, OZ	28.20
WATER/CEMENT RATIO, LBS/LB	0.41
SLUMP, IN	4.00
CONCRETE UNIT WEIGHT, PCF	148.5

PREPARED BY :

ROSS ISLAND TECHNICAL SERVICES

COP0021428

TOSCO REFINING CO.

BLDG. PERMIT DOCUMENTS

CARGO LINE PIPEWAY PROJECT

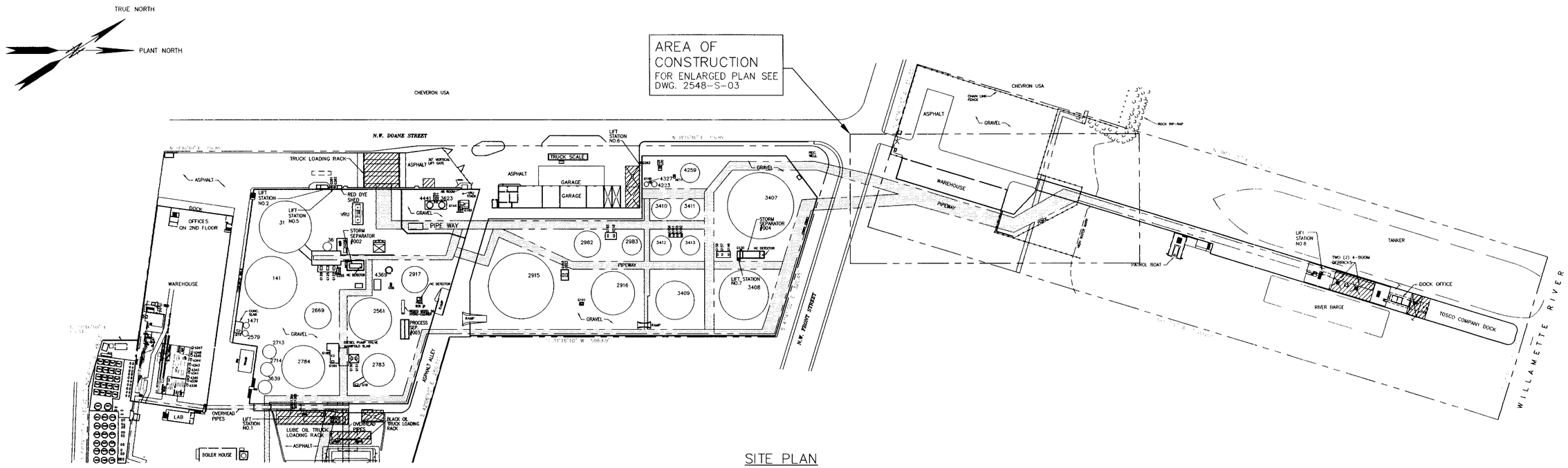

SITE PLAN

SCALE 1"=80'

CARGO LINE PIPEWAY PROECT

GENERAL CONCRETE NOTES:

1. ALL CONCRETE CONSTRUCTION, IN ADDITION TO THE SPECIFICATIONS, SHALL COMPLY WITH THE LATEST ADOPTED EDITION OF THE FOLLOWING ACI CODES: (ACI 318-89/318R-89 BUILDING REQUIREMENTS FOR REINFORCED CONCRETE, ACI 315R-80 MANUAL OF ENGINEERING AND PLACING DRAWINGS FOR REINFORCED CONCRETE STRUCTURES, ACI 304R-89 GUIDE FOR MEASURING, MIXING, TRANSPORTING AND PLACING CONCRETE, ACI 301-89 SPECIFICATION FOR STRUCTURAL CONCRETE FOR BUILDINGS). THE FOLLOWING NOTES ARE PROVIDED FOR USE AS A GUIDE TO ALL REQUIREMENTS:
2. CEMENT SHALL BE TYPE 1 OR TYPE 2 AND CONFORM TO ASTM C150, UNLESS OTHERWISE SPECIFIED OR REQUIRED.
3. AGGREGATES FOR NORMAL WEIGHT CONCRETE SHALL CONFORM TO ASTM C33 "SPECIFICATION FOR CONCRETE AGGREGATES".
4. THE NOMINAL MAXIMUM SIZE OF THE AGGREGATE SHALL NOT BE MORE THAN ONE-FIFTH OF THE NARROWEST DIMENSION BETWEEN SIDES OF THE FORMS, ONE-THIRD OF THE DEPTHS OF SLABS, NOR THREE-FOURTHS OF THE MINIMUM CLEAR SPACING BETWEEN REINFORCING BARS. THESE LIMITATIONS MAY BE WAIVED IF, IN THE JUDGMENT OF THE ENGINEER, WORKABILITY AND METHODS OF CONSOLIDATION ARE SUCH THAT THE CONCRETE CAN BE PLACED WITHOUT HONEYCOMB OR VOIDS.
5. CONCRETE FOR ALL PARTS OF THE WORK SHALL BE OF THE SPECIFIED QUALITY CAPABLE OF BEING PLACED WITHOUT EXCESSIVE SEGREGATION AND, WHEN HARDENED, OF DEVELOPING ALL CHARACTERISTICS REQUIRED BY THESE SPECIFICATIONS AND THE CONTRACT DOCUMENTS.
6. THE SPECIFIED COMPRESSIVE STRENGTH OF THE CONCRETE (F'c) FOR EACH PORTION OF THE STRUCTURE SHALL BE AS DESIGNATED BELOW. STRENGTH REQUIREMENTS SHALL BE BASED ON 28-DAY COMPRESSIVE STRENGTH, UNLESS NOTED OTHERWISE.

   ALL CONCRETE . . . . . 5000 PSI
7. THE CONCRETE WILL BE MIXED SUCH THAT THERE IS 5% AIR ENTRAINMENT AND THE SLUMP DOES NOT EXCEEED 4".
8. ALL REINFORCING STEEL, WIRE MESH, ANCHOR BOLTS, HOLDDOWN ANCHORS AND OTHER INSERTS SHALL BE SECURED IN POSITION AND INSPECTED BY THE ENGINEER PRIOR TO PLACING OF CONCRETE. REBAR SHALL BE A615 GRADE 60.
9. EXPOSED HORIZONTAL CONCRETE SURFACES SHALL BE WOOD FLOATED TO DEPRESS COARSE AGGREGATE AND STEEL TROWELED TO A HARD, SMOOTH SURFACE. ALL EXTERIOR WALKING SURFACES SHALL HAVE A BROOM FINISH. ALL EXPOSED EDGES SHALL BE CHAMFERED 3/4 INCH.
10. CONCRETE SURFACES SHALL BE PROTECTED DURING CURING AGAINST EARLY EVAPORATION OF WATER, ACTION BY SUN, RAIN, WATER, FROST AND MECHANICAL INJURY.
11. CONTRACTOR SHALL VERIFY ALL DIMENSIONS AND CONDITIONS AT THE JOB SITE PRIOR TO COMMENCING WORK, AND SHALL REPORT ANY DISCREPANCIES TO THE ENGINEER.
12. ALL BAR SPLICES SHALL BE 24" MIN.
13. SOIL: SILTY SAND; BASIC DESIGN BEARING CAPACITY = 1500 PSF (PER MULTNOMAH CNTY.)
14. CRUSHED ROCK BACKFILL SHALL BE 3/4" MINUS, WELL GRADED WITH NOT MORE THAN 5% PASSING A 200 MESH SCREEN ON A WET SIEVE ANALYSIS, COMPACTED TO 95% MODIFIED PROCTOR. (8" MAX. LIFTS, 6" MIN. REQUIRED)
15. NOTE USED.
16. BACKFILL OR CRUSHED ROCK SHALL BE MIN. 6" BELOW EXISTING GRADE.

SPECIAL INSPECTIONS REQUIRED

1. SPECIAL INSPECTIONS REQUIRED PER U.B.C. 97 FOR THE FOLLOWING:
   - COMPACTION
   - CONCRETE/ REBAR

DRAWING INDEX

DWG NO.	SHEET NO.	REV.	DATE	TITLE
1703-S-01	1 OF 1	0	10/8/01	PARTIAL SITE PLAN AND GENERAL CONCRETE NOTES
1703-S-02	1 OF 1	0	10/8/01	GREENWAY SITE PLAN
1703-S-03	1 OF 1	0	10/8/01	RETAINING WALL PLAN
1703-S-04	1 OF 1	0	10/8/01	RETAINING WALL SECTIONS AND DETAILS
1703-S-05	1 OF 1	0	10/8/01	MISCELLANEOUS SECTIONS AND DETAILS

ALPHA ENGINEERS and CONSTRUCTORS, INC.
2929 NW 29th AVE., PORTLAND, OR. 97210 Tel:(503)227-3317/Fax:(503)227-3244

AECI PROJECT NUMBER 25-48

DRAWING NO.	REFERENCE DRAWINGS	REV.	DATE	REVISED	DRAWN	CKD.	CIV/STRL	MECH/PIPING	ELEC/INST	SAFETY	P.E.
		0	10/8/01	ISSUE FOR CONSTRUCTION	QKB	WHB					

TOSCO
Tosco Refining Company
A Division of Tosco Corporation
5528 NW Doane St.
Portland, Oregon 97210

CLIENT APPROVALS		
REV	BY	DATE

SCALE: 1"=80'		DATE
DRAWN BY	QKB	10/5/01
DESIGNED BY	DAB	10/11/01
CHECKED BY		
WORK ORDER	25-48	22X34
DATE		
7/30/01		

PORTLAND TERMINAL
PORTLAND, OREGON
CARGO LINE PIPEWAY PROJECT
PARTIAL SITE PLAN
& GENERAL CONCRETE NOTES

DRAWING NO.	SHEET	REV
2548-S-01	1 OF 1	0

s010.dwg,DWG <CPD: 10/11/01 [TIME: 1:29 PM] >

COP0021430

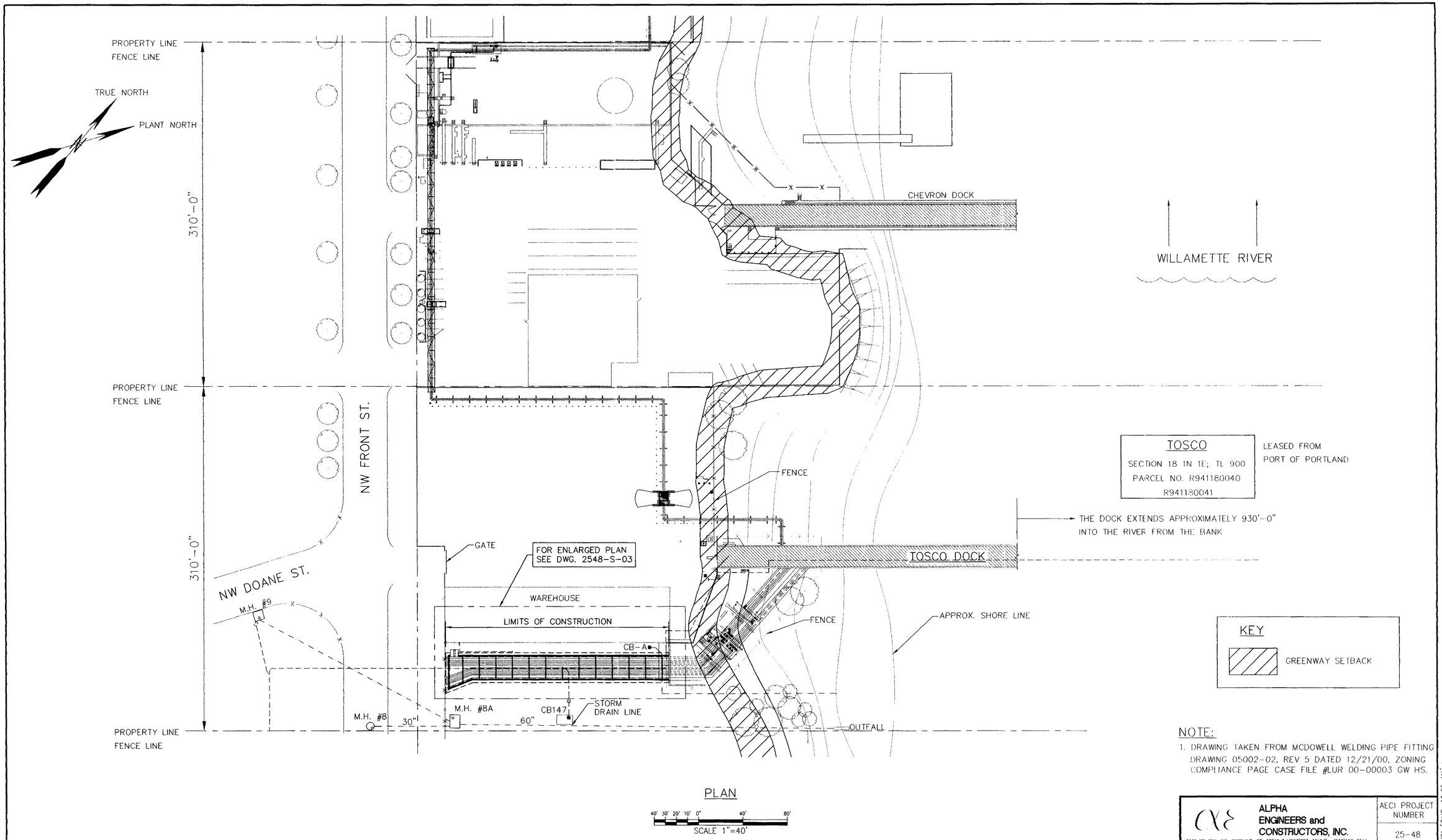

NOTE:

1. DRAWING TAKEN FROM MCDOWELL WELDING PIPE FITTING DRAWING 05002-02, REV 5 DATED 12/21/00, ZONING COMPLIANCE PAGE CASE FILE #LUR 00-00003 GW HS.

ALPHA ENGINEERS and CONSTRUCTORS, INC.
2929 NW 29th AVE., PORTLAND, OR. 97210 Tel:(503)227-3317/Fax:(503)227-3244

AECI PROJECT NUMBER: 25-48

DRAWING NO.	REFERENCE DRAWINGS	REV.	DATE	REVISED	DRAWN	CKD.	CIV/STRL	MECH/PIPING	ELEC/INST	SAFETY	P.E.
2548-S-03	RETAINING WALL PLAN	0	10/8/01	ISSUE FOR CONSTRUCTION	QKB	WHB					

TOSCO
Tosco Refining Company
A Division of Tosco Corporation
5528 NW Doane St.
Portland, Oregon 97210

CLIENT APPROVALS		
REV	BY	DATE

SCALE: 1"=40'		DATE
DRAWN BY	QKB	10/5/01
DESIGNED BY	DAB	10/1/01
CHECKED BY		
WORK ORDER	25-48	22X34
DATE		
7/30/01		

PORTLAND TERMINAL
PORTLAND, OREGON
CARGO LINE PIPEWAY PROJECT
GREENWAY SITE PLAN

DRAWING NO.	SHEET	REV.
2548-S-02	1 OF 1	0

s03a.dwg DWG <CPD: 10/11/01 [TIME: 10:25 AM]>

COP0021431

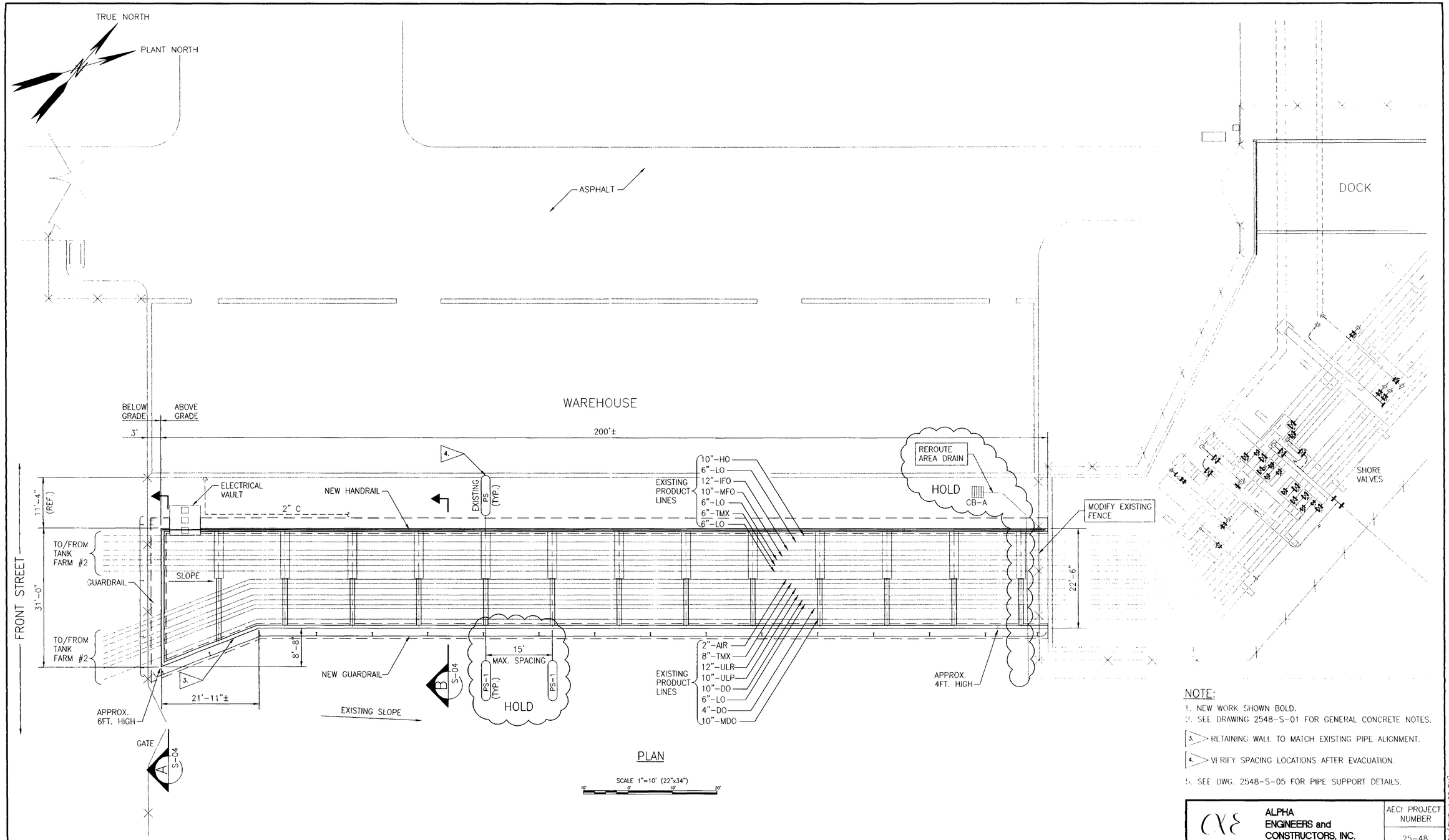

NOTE:

1. NEW WORK SHOWN BOLD.
2. SEE DRAWING 2548-S-01 FOR GENERAL CONCRETE NOTES.
3. RETAINING WALL TO MATCH EXISTING PIPE ALIGNMENT.
4. VERIFY SPACING LOCATIONS AFTER EVACUATION.
5. SEE DWG. 2548-S-05 FOR PIPE SUPPORT DETAILS.

DRAWING NO.	REFERENCE DRAWINGS	REV.	DATE	REVISED	DRAWN	CKD.	CIV/STRL	MECH/PIPING	ELEC/INST	SAFETY	P.E.
2548-S-01	PARTIAL SITE PLAN AND GENERAL CONCRETE NOTES	0	10/8/01	ISSUE FOR CONSTRUCTION	DAB	WHB					
2548-S-04	RETAINING WALL SECTIONS AND DETAILS										
2548-S-05	MISCELLANEOUS SECTION AND DETAILS										

TOSCO
Tosco Refining Company
A Division of Tosco Corporation
5528 NW Doane St.
Portland, Oregon 97210

CLIENT APPROVALS		
REV	BY	DATE

ALPHA ENGINEERS and CONSTRUCTORS, INC.
2929 NW 29th AVE., PORTLAND, OR 97210 Tel:(503)227-3317/Fax:(503)227-3244

AECI PROJECT NUMBER: 25-48

SCALE: 1"=10"		DATE
DRAWN BY	QKB	10/08/01
DESIGNED BY	DAB	10/01/01
CHECKED BY		
WORK ORDER	25-48	22x34
DATE		
07/30/01		

PORTLAND TERMINAL
PORTLAND, OREGON
CARGO LINE PIPEWAY PROJECT
PARTIAL PLAN
DOCK WAREHOUSE AREA
RETAINING WALL PLAN

DRAWING NO.	SHEET	REV.
2548-S-03	1 OF 1	0

2548b01a.dwg <CPD: 10/11/01 [TIME: 1:56 PM]>

COP0021432

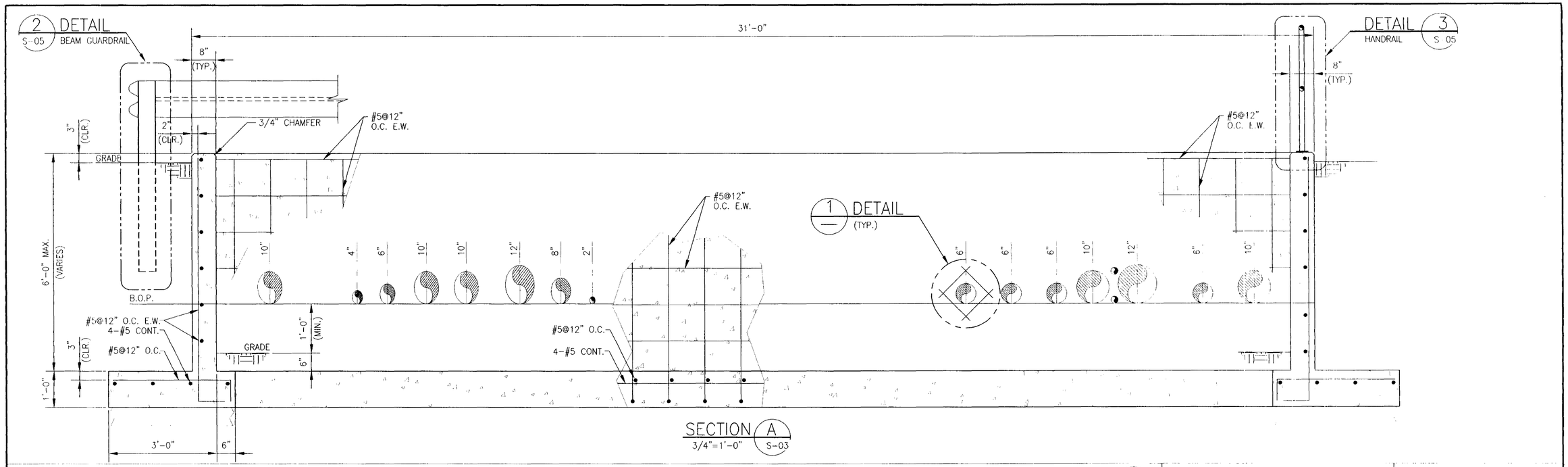

SECTION A
3/4"=1'-0" S-03

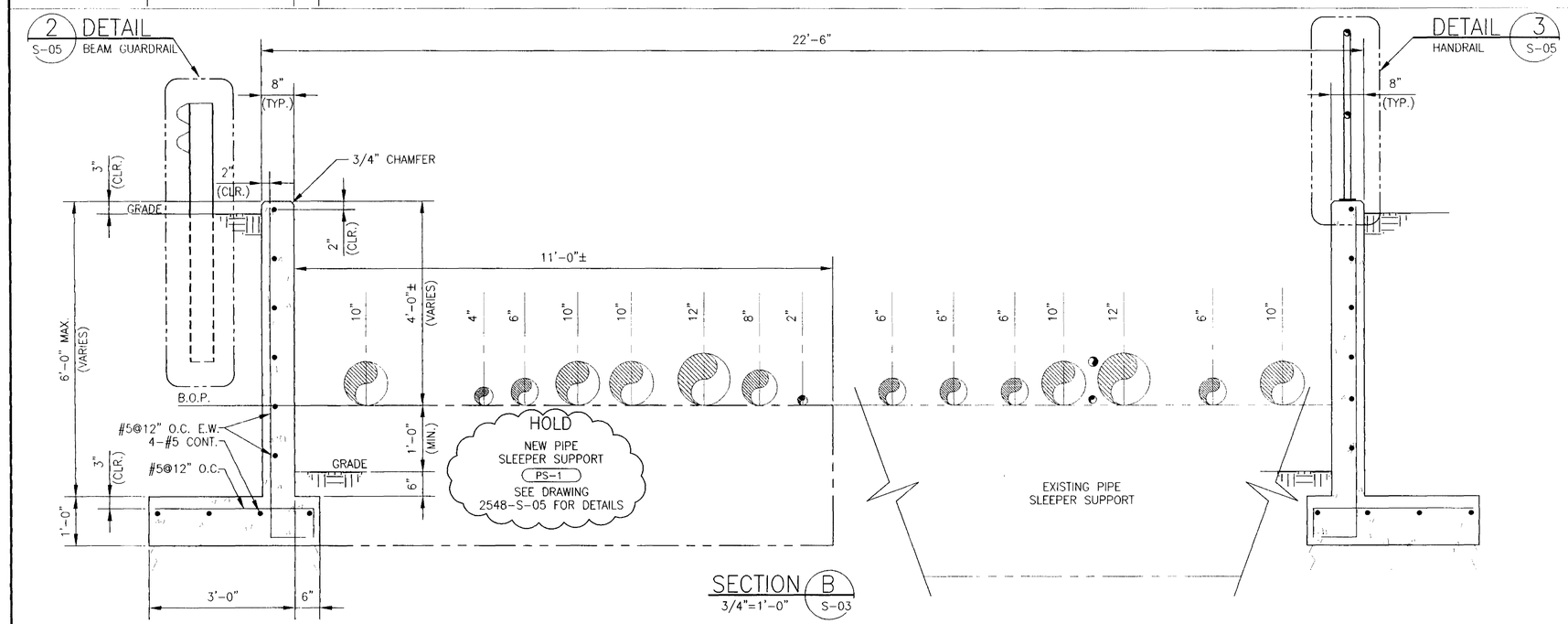

SECTION B
3/4"=1'-0" S-03

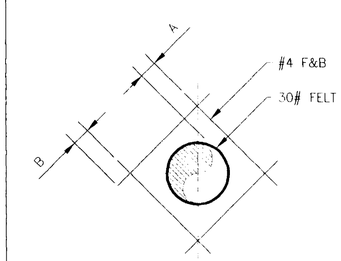

TYPICAL PIPE OPENING REINFORCEMENT

DETAIL 1
NOT TO SCALE

REINFORCING SCHEDULE

PIPE DIAMETER	A	B
2"	2"	6"
4"	2"	12"
6"	2"	12"
8"	2"	14"
10"	2"	16"
12"	2"	18"

NOTE:

1. NEW WORK SHOWN BOLD.
2. CONTRACTOR TO FIELD VERIFY DIMENSIONS AND ELEVATIONS.
3. SEE DRAWING 2548-S-01 FOR GENERAL CONCRETE NOTES.

ALPHA ENGINEERS and CONSTRUCTORS, INC.
2929 NW 29th AVE., PORTLAND, OR 97210 Tel:(503)227-3317/Fax:(503)227-3244

AECI PROJECT NUMBER 25-48

DRAWING NO.	REFERENCE DRAWINGS	REV.	DATE	REVISED	DRAWN	CKD.	CIV/STRL	MECH/PIPING	ELEC/INST	SAFETY	P.E.
2548-S-01	PARTIAL SITE PLAN AND GENERAL CONCRETE NOTES	0	10/8/01	ISSUE FOR CONSTRUCTION	DAB	WHB					
2548-S-03	RETAINING WALL PLAN										
2548-S-05	RETAINING WALL DETAILS										

TOSCO
Tosco Refining Company
A Division of Tosco Corporation
5528 NW Doane St.
Portland, Oregon 97210

CLIENT APPROVALS	
BY	DATE

SCALE 3/4"=1'-0"		DATE
DRAWN BY	OKB	10/08/01
DESIGNED BY	DAB	10/01/01
CHECKED BY		
WORK ORDER	25-48	22x34
DATE		
07/30/01		

PORTLAND TERMINAL
PORTLAND, OREGON
CARGO LINE PIPEWAY PROJECT
PARTIAL PLAN
DOCK WAREHOUSE AREA
RETAINING WALL SECTION & DETAILS

DRAWING NO.	SHEET	REV.
2548-S-04	1 OF 1	0

s02a.dwg,DWG <CPD: 10/11/01 [TIME: 2:19 PM] >

COP0021433

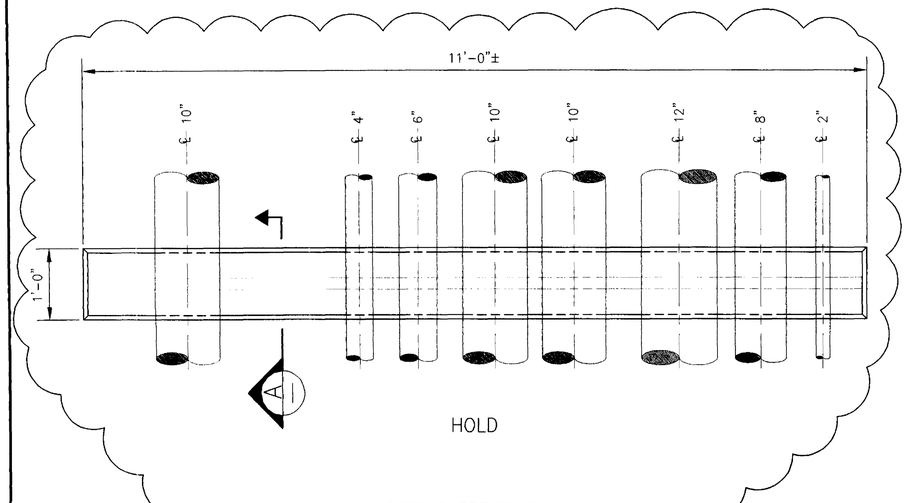

PIPE SLEEPER PLAN

PS-1

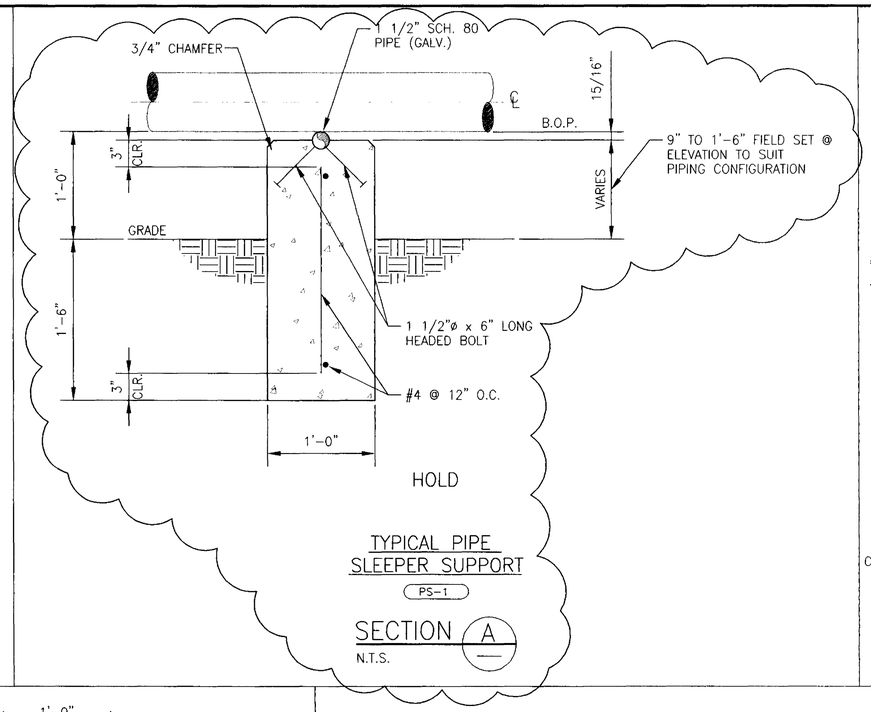

TYPICAL PIPE SLEEPER SUPPORT

PS-1

SECTION A

N.T.S.

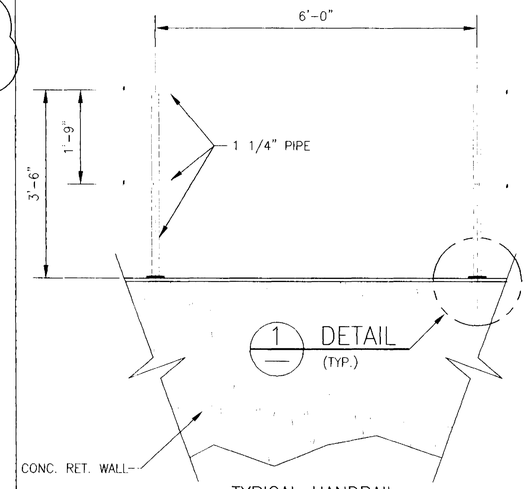

TYPICAL HANDRAIL

DETAIL 3

3/4"=1'-0"

S-04

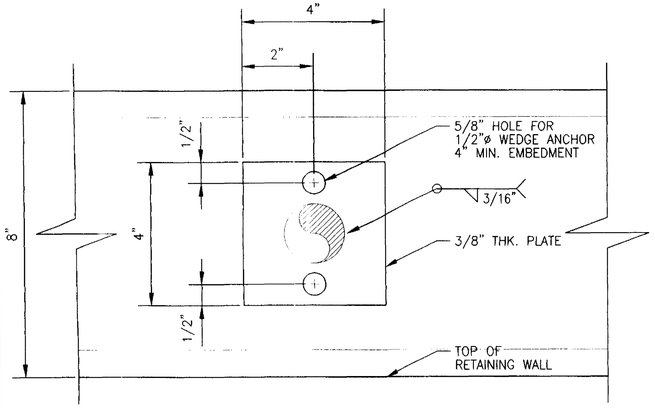

TYPICAL HANDRAIL BASEPLATE

1 DETAIL

N.T.S.

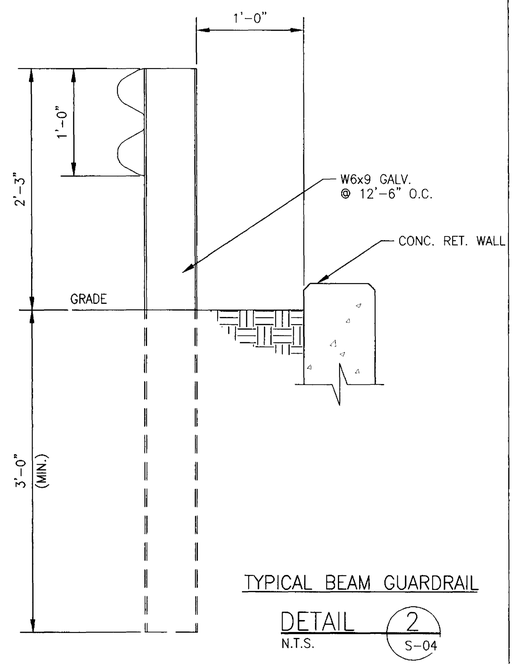

TYPICAL BEAM GUARDRAIL

DETAIL 2

N.T.S.

S-04

NOTE:

1. NEW WORK SHOWN BOLD.
2. CONTRACTOR TO FIELD VERIFY DIMENSIONS AND ELEVATIONS.
3. SEE DRAWING 2548-S-01 FOR GENERAL CONCRETE NOTES.
4. HOT DIP GALVANIZE ALL STEEL.

DRAWING NO.	REFERENCE DRAWINGS	REV.	DATE	REVISED	DRAWN	CKD.	CIV/STRL	MECH/PIPING	ELEC/INST	SAFETY	P.E.
2548-S-04	RETAINING WALL DETAILS	0	10/8/01	ISSUE FOR CONSTRUCTION	DAB	WHB					

TOSCO
Tosco Refining Company
A Division of Tosco Corporation
5528 NW Doane St.
Portland, Oregon 97210

CLIENT APPROVALS	
BY	DATE

ALPHA ENGINEERS and CONSTRUCTORS, INC.
2929 NW 29th AVE, PORTLAND, OR 97210 Tel:(503)227-3317/Fax:(503)227-3244

AECI PROJECT NUMBER 25-48

SCALE AS SHWON		DATE
DRAWN BY	QKB	10/08/01
DESIGNED BY	DAB	10/01/01
CHECKED BY		
WORK ORDER	25-48	22x34
DATE		
07/30/01		

PORTLAND TERMINAL
PORTLAND, OREGON
CARGO LINE PIPEWAY PROJECT
PARTIAL PLAN
DOCK WAREHOUSE AREA
MISCELLANEOUS SECTION & DETAILS

DRAWING NO.	SHEET	REV.
2548-S-05	1 OF 1	0

s050.dwg,DWG <CPD: 10/11/01 [TIME: 2:34 PM] >

COP0021434

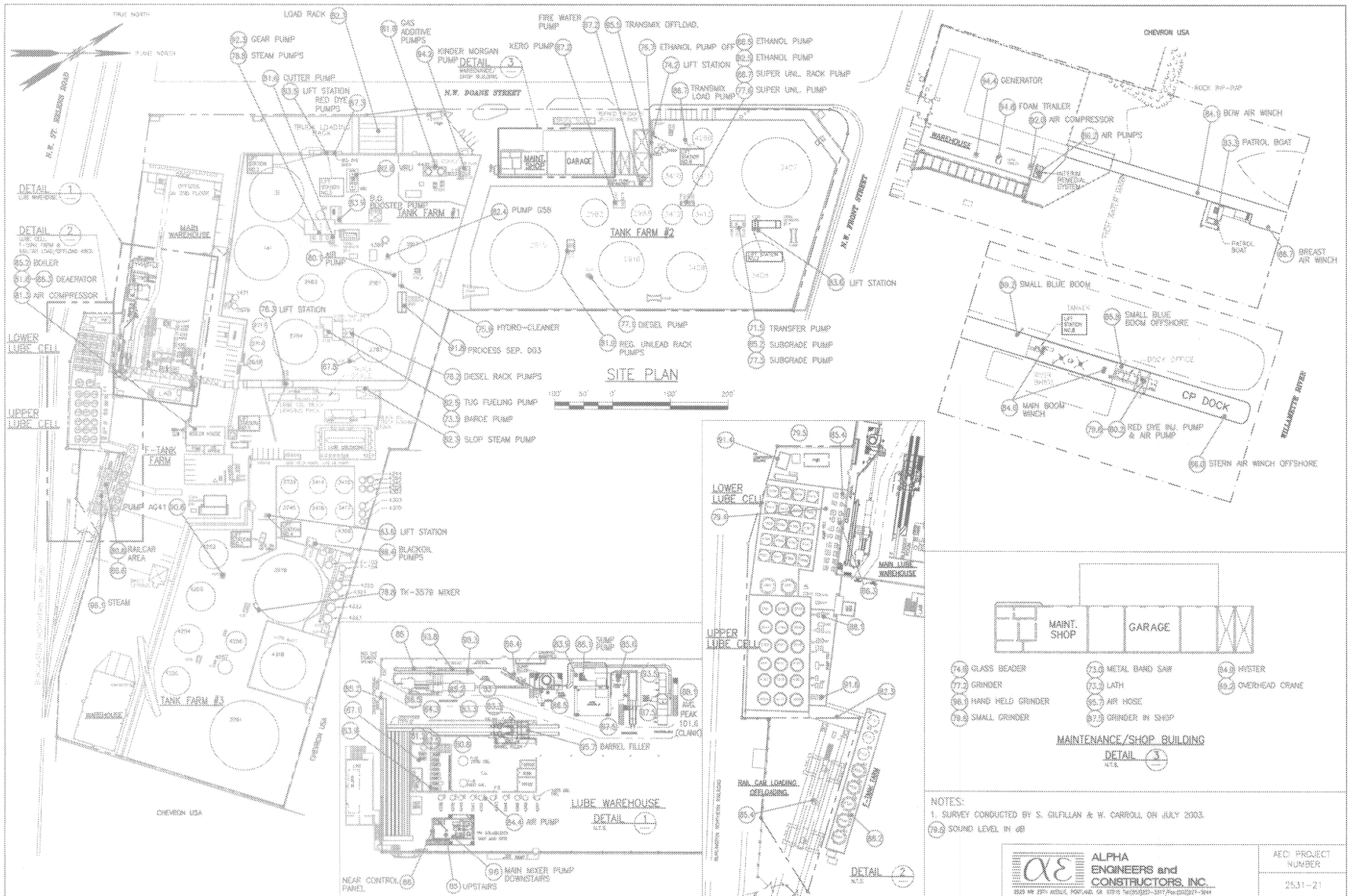

NOTES:
1. SURVEY CONDUCTED BY S. GILFILLAN & W. CARROLL ON JULY 2003.
79.8 SOUND LEVEL IN dB

ALPHA ENGINEERS and CONSTRUCTORS, INC.
1908 NW 69TH AVENUE, PORTLAND, OR 97210 tel(503)297-3117 fax(503)297-9414

AEC PROJECT NUMBER 2531-21

REVISION DESCRIPTION	REV BY	CHK BY	DATE	NO.	REVISION DESCRIPTION	REV BY	CHK BY	APPR BY	DATE
0 UPDATED DWG	DFB	DAB	7/25/03						

CONFIDENTIAL
NOT TO BE DISCLOSED, USED OR DUPLICATED EXCEPT AS AUTHORIZED IN WRITING BY CONOCOPhillips

ConocoPhillips
5528 NW DOANE ST
PORTLAND, OREGON 97210

DR.	DAB	CONTRACTOR No.	
DSGN.	DAB	PROJECT NO.	2531-21
CK.	AP.	DWG. SCALE	
DATE	06/30/03	PLOT SCALE	

PORTLAND TERMINAL

TITLE: SOUND SURVEY SITE PLAN

DWG. No. POR-2531-21-HS-01 | SHEET 1 OF 1 | REV. No. 0

COP0021435

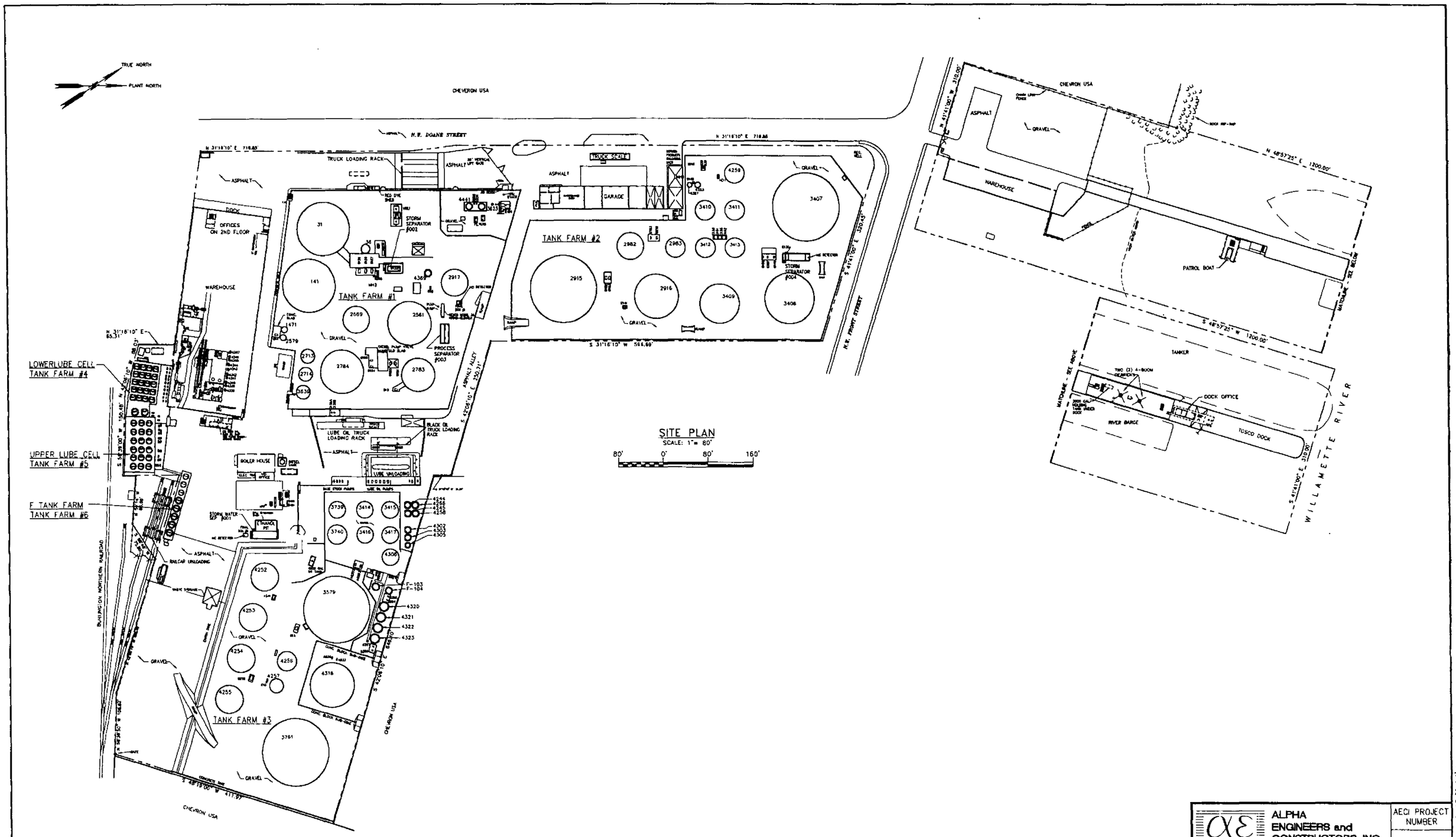

ALPHA ENGINEERS and CONSTRUCTORS, INC.
2929 NW 29th AVE, PORTLAND, OR 97210 Tel (503)227-3317/Fax (503)227-3244

AECI PROJECT NUMBER 25-23

DRAWING NO.	REFERENCE DRAWINGS	REV.	DATE	REVISED	DRAWN	CKD.	CIV/STRL	MECH/PIPING	ELEC/INST	SAFETY	P.E.
		A	01/03/00	CURRENT ISSUE	DAB						

TOSCO
Tosco Refining Company
A Division of Tosco Corporation
5528 NW Doane St
Portland, Oregon 97210

CLIENT APPROVALS		
REV	BY	DATE

SCALE: 1"=10'		DATE
DRAWN BY	DAB	
DESIGNED BY		
CHECKED BY		
WORK ORDER		

PORTLAND TERMINAL
PORTLAND, OREGON

SITE PLAN

DATE	DRAWING NO.	SHEET	REV
09/28/99	0608-C-01	1 OF 1	A

COP0021436

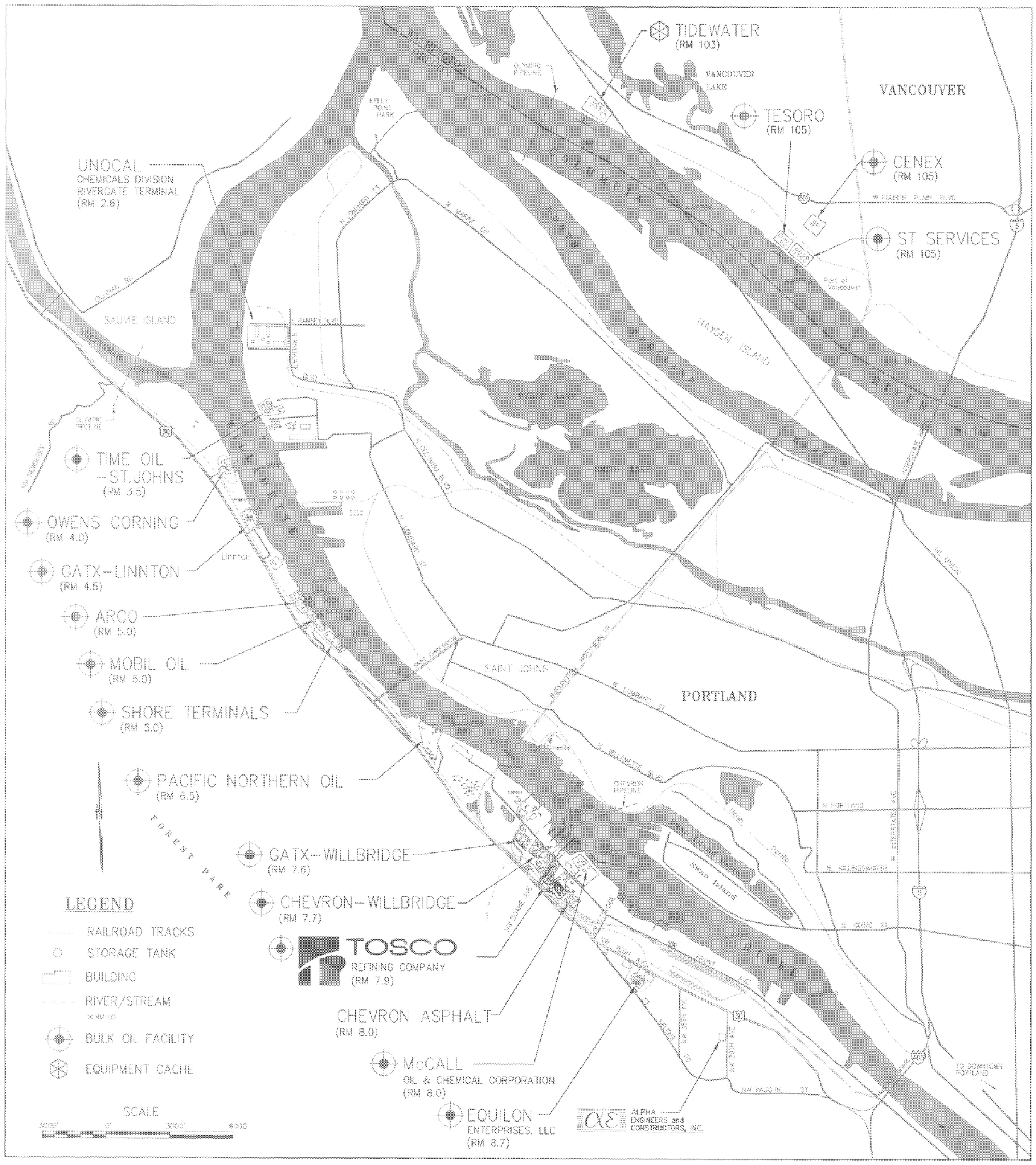

MAP DATA TAKEN FROM USGS 1:24000 MAPS OF PORTLAND, OREG.-WASH. & LINNTON OR.

ALPHA ENGINEERS and CONSTRUCTORS, INC.
2323 NW 29th AVE, PORTLAND, OR. 97210 Tel.(503)227-3317/Fax:(503)227-3244

TOSCO
Tosco Refining Company
5528 NW Doane Avenue
Portland, Oregon 97210

PORTLAND TERMINALS

PORTLAND, OREGON

LOCATION MAP

EST.	BY	CK.	DRAWG NUMBER
01-14-2000	DAB	WHB	2531-C-01

COP0021437

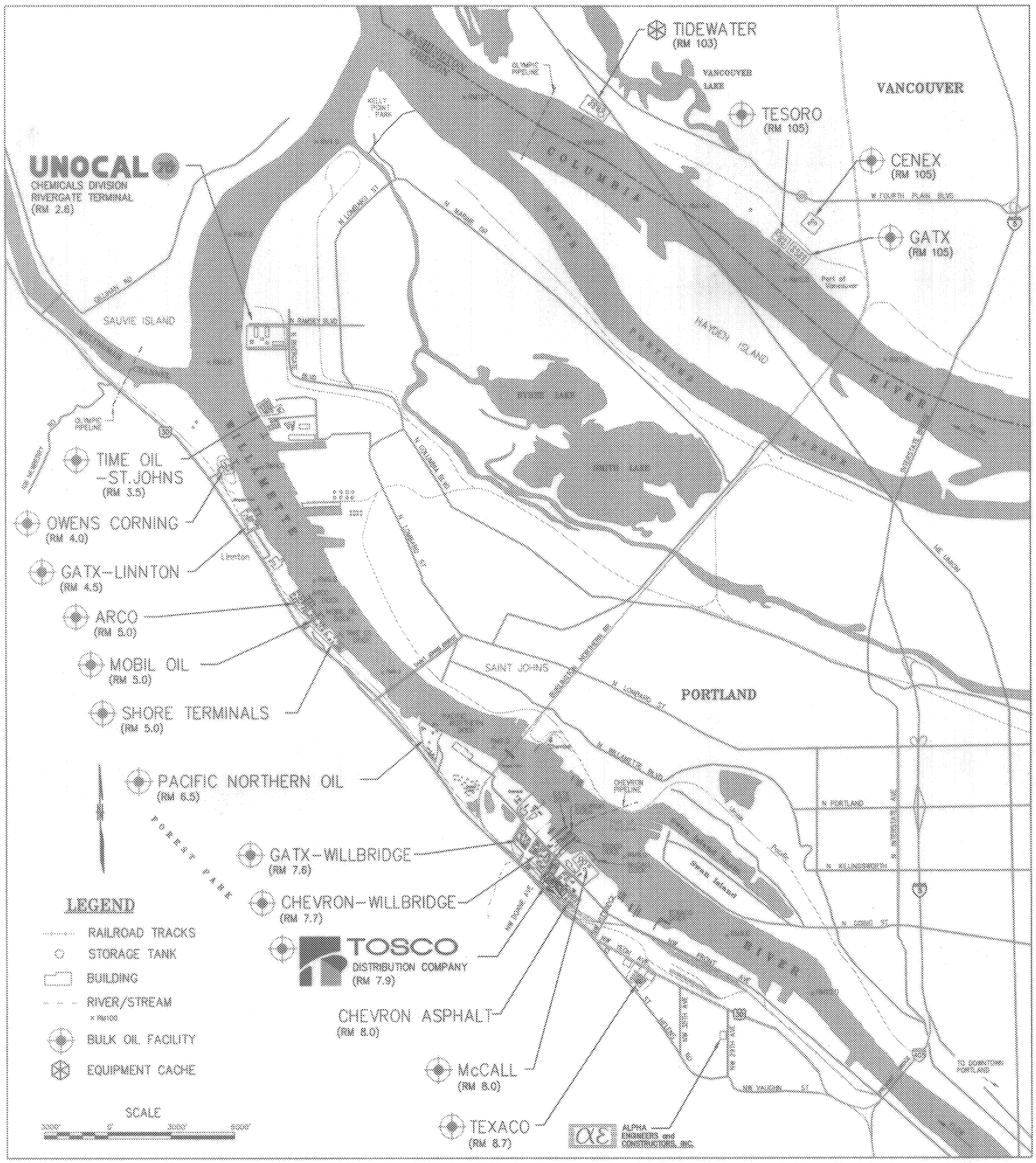

MAP DATA TAKEN FROM USGS 1:24000 MAPS OF PORTLAND, OREG.–WASH. & LINNTON OR.

ALPHA ENGINEERS and CONSTRUCTORS, INC.
2828 NW 29th AVE, PORTLAND, OR 97210 Tel (503)227-1317/Fax (503)227-9344

TOSCO
Tosco Corporation Company
5528 NW Doane St.
Portland, Oregon 97210

PORTLAND TERMINALS

PORTLAND, OREGON

LOCATION MAP

DATE	BY	CK	DRAWING NUMBER
01-06-2000	DAB	WHB	2531-C-01

COP0021438

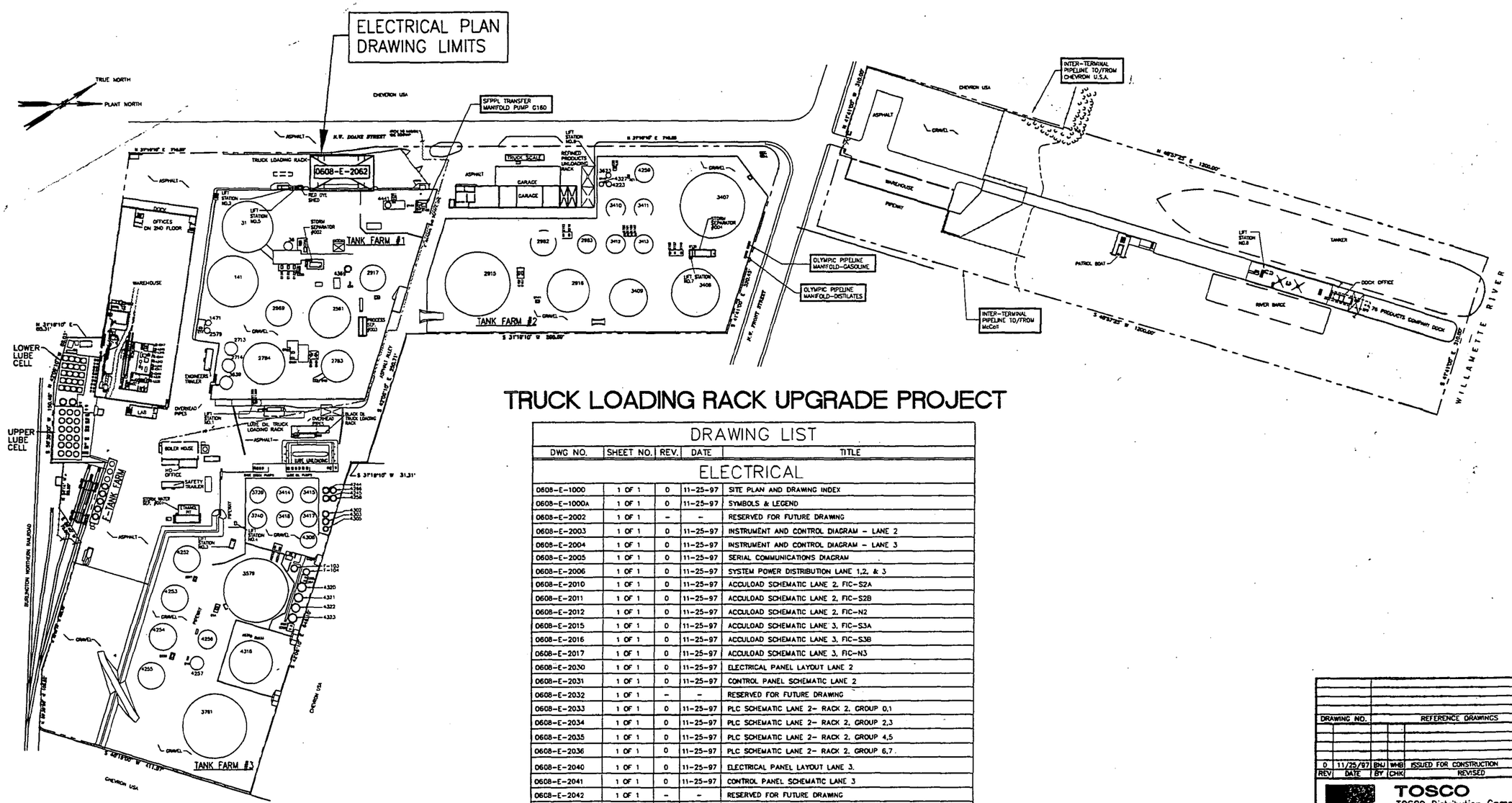

SITE PLAN
SCALE: 1" = 90'
90' 0' 90' 180'

TRUCK LOADING RACK UPGRADE PROJECT

DRAWING LIST

DWG NO.	SHEET NO.	REV.	DATE	TITLE
ELECTRICAL				
0608-E-1000	1 OF 1	0	11-25-97	SITE PLAN AND DRAWING INDEX
0608-E-1000A	1 OF 1	0	11-25-97	SYMBOLS & LEGEND
0608-E-2002	1 OF 1	-	-	RESERVED FOR FUTURE DRAWING
0608-E-2003	1 OF 1	0	11-25-97	INSTRUMENT AND CONTROL DIAGRAM - LANE 2
0608-E-2004	1 OF 1	0	11-25-97	INSTRUMENT AND CONTROL DIAGRAM - LANE 3
0608-E-2005	1 OF 1	0	11-25-97	SERIAL COMMUNICATIONS DIAGRAM
0608-E-2006	1 OF 1	0	11-25-97	SYSTEM POWER DISTRIBUTION LANE 1,2, & 3
0608-E-2010	1 OF 1	0	11-25-97	ACCULOAD SCHEMATIC LANE 2, FIC-S2A
0608-E-2011	1 OF 1	0	11-25-97	ACCULOAD SCHEMATIC LANE 2, FIC-S2B
0608-E-2012	1 OF 1	0	11-25-97	ACCULOAD SCHEMATIC LANE 2, FIC-N2
0608-E-2015	1 OF 1	0	11-25-97	ACCULOAD SCHEMATIC LANE 3, FIC-S3A
0608-E-2016	1 OF 1	0	11-25-97	ACCULOAD SCHEMATIC LANE 3, FIC-S3B
0608-E-2017	1 OF 1	0	11-25-97	ACCULOAD SCHEMATIC LANE 3, FIC-N3
0608-E-2030	1 OF 1	0	11-25-97	ELECTRICAL PANEL LAYOUT LANE 2
0608-E-2031	1 OF 1	0	11-25-97	CONTROL PANEL SCHEMATIC LANE 2
0608-E-2032	1 OF 1	-	-	RESERVED FOR FUTURE DRAWING
0608-E-2033	1 OF 1	0	11-25-97	PLC SCHEMATIC LANE 2- RACK 2, GROUP 0,1
0608-E-2034	1 OF 1	0	11-25-97	PLC SCHEMATIC LANE 2- RACK 2, GROUP 2,3
0608-E-2035	1 OF 1	0	11-25-97	PLC SCHEMATIC LANE 2- RACK 2, GROUP 4,5
0608-E-2036	1 OF 1	0	11-25-97	PLC SCHEMATIC LANE 2- RACK 2, GROUP 6,7
0608-E-2040	1 OF 1	0	11-25-97	ELECTRICAL PANEL LAYOUT LANE 3.
0608-E-2041	1 OF 1	0	11-25-97	CONTROL PANEL SCHEMATIC LANE 3
0608-E-2042	1 OF 1	-	-	RESERVED FOR FUTURE DRAWING
0608-E-2043	1 OF 1	0	11-25-97	PLC SCHEMATIC, LANE 3 - RACK 2, GROUP 0,1
0608-E-2044	1 OF 1	0	11-25-97	PLC SCHEMATIC, LANE 3 - RACK 2, GROUP 2,3
0608-E-2045	1 OF 1	0	11-25-97	PLC SCHEMATIC, LANE 3 - RACK 2, GROUP 4,5
0608-E-2046	1 OF 1	0	11-25-97	PLC SCHEMATIC LANE 3 - RACK 2, GROUP 6,7
0608-E-2060	1 OF 1	0	11-25-97	CONDUIT INTERCONNECT DIAGRAM LANE 2 AND 3
0608-E-2061	1 OF 1	-	-	RESERVED FOR FUTURE DRAWING
0608-E-2062	1 OF 1	0	11-25-97	CONDUIT LAYOUT LANE 2
0608-E-2063	1 OF 1	-	-	RESERVED FOR FUTURE DRAWING
0608-E-2070	1 OF 1	0	11-21-97	ACCULOAD RBM SUPPORT FRAME

DRAWING NO.	REFERENCE DRAWINGS

REV	DATE	BY	CHK	REVISED
0	11/25/97	BNJ	WHB	ISSUED FOR CONSTRUCTION

TOSCO
TOSCO Distribution Company
A Division of Tosco Corporation
5528 NW Doane St.
Portland, Oregon 97210

PORTLAND TERMINAL
SITE PLAN
ELECTRICAL

ALPHA ENGINEERS and CONSTRUCTORS, INC.
19 NW 5TH AVE.SUITE 204 PORTLAND, OR. 97209 Tel: 503-227-3317

SCALE:	NONE	DESIGNED BY:	DAB
DATE:	11/17/97	CHECKED BY:	WHB
DRAWN BY:	BNJ	ENG. APPR.,BY:	WHB
CADD FILE/PLOT DATE:	\25E1000.DWG <CPO: 11/25/97	TIME: 1:12 PM) >	

DRAWING NUMBER	SHEET	REV
0608-E-1000	1 OF 1	0

COP0021439

ONE LINE DIAGRAM SYMBOLS

SYMBOL	DESCRIPTION
	- 1-PHASE, TWO-WINDING XFMR
	- 3-PHASE, TWO-WINDING XFMR WITH DELTA-WYE CONNECTIONS
	- 3-PHASE, 3 WIRE, WYE, GROUNDED
*	- CURRENT TRANSFORMER * INDICATES QUANTITY
*	- POTENTIAL TRANSFORMER WITH PRIMARY FUSE * INDICATES QUANTITY
	- SURGE ARRESTER
	- FUSE, THERMAL CURRENT
	- ISOLATING PRIMARY FUSE CUTOUT, DRY
	- ISOLATING FUSE SWITCH FOR ON-LOAD SWITCHING
	- MEDIUM-VOLTAGE STARTER WITH CURRENT LIMITIING FUSES * INDICATES FUSE AND STARTER SIZES
	- FUSED SAFETY SWITCH * INDICATES SWITCH AND FUSE RATING
	- DISCONNECT SWITCH, GROUP OPERATED
	- DISCONNECT SWITCH, STICK OPERATED
	- DISCONNECT SWITCH, SELF OR DOUBLE-THROW
	- CIRCUIT BREAKER, LOW VOLTAGE, MOLDED CASE
	- POTHEAD
M	- WOUND-ROTOR INDUCTION MOTOR
*	- SWITCHES (* INDICATES TYPE) SS - SELECTOR, AS - AMMETER VS - VOLTMETER SYN - SYNCHRONIZING
*	- TRANSDUCER (* INDICATES TYPE)
	- GENERATOR, INSTRUMENT, METER, OR MOTOR (* INDICATES TYPE)

A	- AMMETER	PF	- POWER FACTOR
F	- FREQ METER	PI	- POSITION INDICATOR
SYS	- SYNCHROSCOPE	REC	- RECORDING METER
V	- VOLTMETER	T	- TEMP RECORDING METER
VAR	- VARMETER	VA	- VOLT-AMPERE METER
W	- WATTMETER	VARH	- VARHOUR METER
TT	- TOTAL TIME METER	WHD	- WATTHOUR-DETECTOR METER
GD	- GROUND DETECTOR	WH	- WATTHOUR METER
G	GENERATOR	M	- MOTOR

SCHEMATIC/WIRING DIAGRAM SYMBOLS

SYMBOL	DESCRIPTION
	- NORMALLY OPEN LIMIT SWITCH
	- NORMALLY OPEN LIMIT SWITCH HELD CLOSED
	- NORMALLY CLOSED LIMIT SWITCH
	- NORMALLY CLOSED LIMIT SWITCH HELD OPEN
	- FLOW ACTUATED SWITCH, CLOSES ON INCREASE IN FLOW
	- FLOW ACTUATED SWITCH, OPENS ON INCREASE IN FLOW
	- LEVEL ACTUATED SWITCH, CLOSES ON RISE IN LEVEL
	- LEVEL-ACTUATED SWITCH, OPEN ON RISE IN LEVEL
	- PRESSURE OR VACUUM-ACTUATED SWITCH, CLOSES ON RISING PRESSURE OR VACUUM
	- PRESSURE OR VACUUM-ACTUATED SWITCH, OPENS ON RISING PRESSURE OR VACUUM
	- DIFFERENTIAL PRESSURE SWITCH, CLOSES ON DIFFERENTIAL PRESSURE CHANGE
	- TEMPERATURE-ACTUATED SWITCH, CLOSES ON RISING TEMPERATURE
	- TEMPERATURE-ACTUATED SWITCH, OPENS ON RISING TEMPERATURE
*	- SPEED-ACTUATED SWITCH, OPERATES ON SHAFT ROTATION *INDICATES FUNCTION, ZS=ZERO SPEED, OS=OVERSPEED, US=UNDERSPEED
*	- RELAY OR OPERATING COIL *INDICATES FUNCTION, MS - MOTOR STARTER CR - CONTROL RELAY TDR - TIME-DELAY RELAY C - CONTACTOR
	- NORMALLY OPEN CONTACT (MAKE)
	- NORMALLY CLOSED CONTACT (BREAK)
	- NORMALLY OPEN CONTACT WITH TIME DELAY CLOSING (TDC) AFTER COIL IS ENERGIZED
	- NORMALLY CLOSED CONTACT WITH TIME DELAY OPENING (TDO) AFTER COIL IS ENERGIZED
	- NORMALLY OPEN CONTACT WITH TIME DELAY OPENING (TDO) AFTER COIL IS DE-ENERGIZED
	- NORMALLY CLOSED CONTACT WITH TIME DELAY CLOSING (TDC) AFTER COIL IS DE-ENERGIZED

SYMBOL	DESCRIPTION
	- CIRCUIT-OPENING PUSHBUTTON MOMENTARY OR SPRING RETURN
	- TWO-CIRCUIT PUSHBUTTON MOMENTARY OR SPRING RETURN
	- MUSHROOM HEAD CIRCUIT OPENING PUSHBUTTON (FOR EMERGENCY APPLICATIONS)
	- CIRCUIT-CLOSING SWITCH
	- CIRCUIT-OPENING SWITCH
	- TWO-POSITION TRANSFER SWITCH
OFF	- THREE-POSITION TRANSFER SWITCH
	- CIRCUIT BREAKER, DOUBLE POLE
	- SOLENOID
	- SPACE HEATER
	- CROSSING OF PATH OR CONDUCTORS NOT CONNECTED
	- CONNECTION
	- TERMINAL CONNECTION
	PLUG AND RECEPTACLE
	- TWO CONDUCTORS WITH OVERALL SHIELD FOR GROUNDING CONNECTION
	- GROUNDING CONNECTION
	- CHASSIS CONNECTION
	- MULTICELL BATTERY (DC)
	- THERMAL ELEMENT
*	- PILOT LIGHT *INDICATES COLOR

A - AMBER	OP - OPALESCENT
B - BLUE	P - PURPLE
C - CLEAR	R - RED
G - GREEN	W - WHITE
O - ORANGE	Y - YELLOW

SYMBOL	DESCRIPTION
H1 H2 X1 X2	- CONTROL TRANSFORMER W/GROUND
OL'S	- OVERLOAD CONTACTS
AREA EPQ	- _____ _____ ___

PLAN DRAWING SYMBOLS

SYMBOL	DESCRIPTION
	- HORIZONTAL MOTOR OR GENERATOR
	- DRY-TYPE 1-PHASE TRANSFORMER
	- EXTERNALLY-OPERATED DISCONNECT SWITCH
	- COMBINATION CONTROLLER AND DISCONNECTING MEANS
S_{TH}	- MANUAL STARTER SWITCH WITH THERMAL OVERLOADS
J	- JUNCTION BOX
T	- THERMOSTAT
	- TELEPHONE RCPT, PUBLIC
	- SOUND SYSTEM DEVICE
	- SIGNAL OR ALARM HORN
5a B	- POLE - MOUNTED FLOODLIGHT, ARROW INDICATES AIMING DIRECTION
	- POLE-MOUNTED STREET LIGHT
5a B	- BRACKET-MOUNTED FLOODLIGHT ARROW INDICATES AIMING DIRECTION
5 B	- EMERGENCY LIGHTING FIXTURE, BATTERY OPERATED, ARROWS INDICATE AIMING
	- GROUNDING ROD

SWITCH OUTLET: SMALL LETTER BY THE SIDE OF SYMBOL INDICATES THE CONTROLLED FIXTURE

	- SINGLE RCPT
	- DOUBLE RCPT
	- SINGLE SPECIAL-PURPOSE
	- FLEXIBLE CONDUIT
	- CONDUIT W/ SEAL FITTING

SPECIAL IDENTIFICATION OF OUTLETS

WP - WEATHERPROOF	DT - DUSTTIGHT
VT - VAPORTIGHT	RT - RAINTIGHT
WT - WEATHERTIGHT	XP - EXPLOSIONPROOF

CEILING MTD	WALL MTD	DESCRIPTION
5a A	5a A	SURFACE OR PENDANT INCAN-DESCENT, MERCURY-VAPOR, OR SIMILAR LAMP FIXTURE
5a A	5a A	SURFACE OR PENDENT INDIVIDUAL FLUORESCENT FIXTURE
		LIGHT. ARROWS INDICATE ROUTE OF EGRESS
		JUNCTION BOX
S_a		SINGLE-POLE SWITCH
S_3		THREE-WAY SWITCH
S_4		FOUR-WAY SWITCH
S_K		KEY-OPERATED SWITCH

LIGHTING OUTLETS: CAPITAL LETTER OUTSIDE SYMBOL INDICATES FIXTURE TYPE AS SHOWN ON FIXTURE SCHEDULE. NUMERIC INDICATES CIRCUIT NO. SMALL LETTER DESIGNATES THE CONTROLLING SWITCH

RECEPTACLE OUTLETS: NUMERICAL BY THE SIDE OF SYMBOL INDICATES CIRCUIT NUMBER

SYMBOL	DESCRIPTION
*	- SWITCHES OR DEVICES * INDICATES TYPE

BRS	BELT RUN-OFF SWITCH	OS	OVERSPEED SWITCH
DPS	DIFFERENTIAL PRESSURE SWITCH	PCS	PLUGGED CHUTE SWITCH
ES	EMERGENCY PULL-CORD SWITCH	PNS	POSITION SWITCH
FS	FLOW SWITCH	PS	PRESSURE SWITCH
LS	LIMIT SWITCH	RPS	BELT RIP SWITCH
MTD	METAL DETECTOR	RS	ROTATION SWITCH
HOA	HAND-OFF-AUTO	RTD	RESISTANCE TEMPERATURE DETECTOR
		SV	SOLENOID VALVE

POLE LINE SYMBOLS

SYMBOL	DESCRIPTION
	-NEW CLASS 2 POLE
	-EXISTING POLES TO BE REPLACED
	-POLE MOUNTED TRANSFORMER

LOGIC DIAGRAM SYMBOLS

SYMBOL	DESCRIPTION
	- INPUT/OUTPUT INSTRUMENTATION DEVICE (FIELD MOUNTED)
	- INPUT/OUTPUT INSTRUMENTATION DEVICE (BOARD MOUNTED)
*	LOGIC CONTINUATION * INDICATES DRAWING NUMBER
*	- TIME DELAY

REV	DATE	BY	CHK	REVISED
0	11/25/97	MJT	WHB	ISSUED FOR CONSTRUCTION

DRAWING NO. | REFERENCE DRAWINGS

TOSCO
TOSCO Distribution Company
A Division of Tosco Corporation
5528 NW Doane St.
Portland, Oregon 97210

PORTLAND TERMINAL
ELECTRICAL
SYMBOLS AND LEGEND
SHEET

ALPHA ENGINEERS and CONSTRUCTORS, INC.
19 NW 5TH AVE,SUITE 204 PORTLAND, OR. 97209 Tel: 503-227-3317

SCALE:	NONE	DESIGNED BY:	DAB
DATE:	11/17/97	CHECKED BY:	WHB
DRAWN BY:	MJC	ENG. APPR. BY:	WHB

CADD FILE/PLOT DATE: 25E1000A.DWG <CPO: 11/25/97 (TIME: 10:11 AM)>

DRAWING NUMBER	SHEET	REV
0608-E-1000A	1 OF 1	0

COP0021440

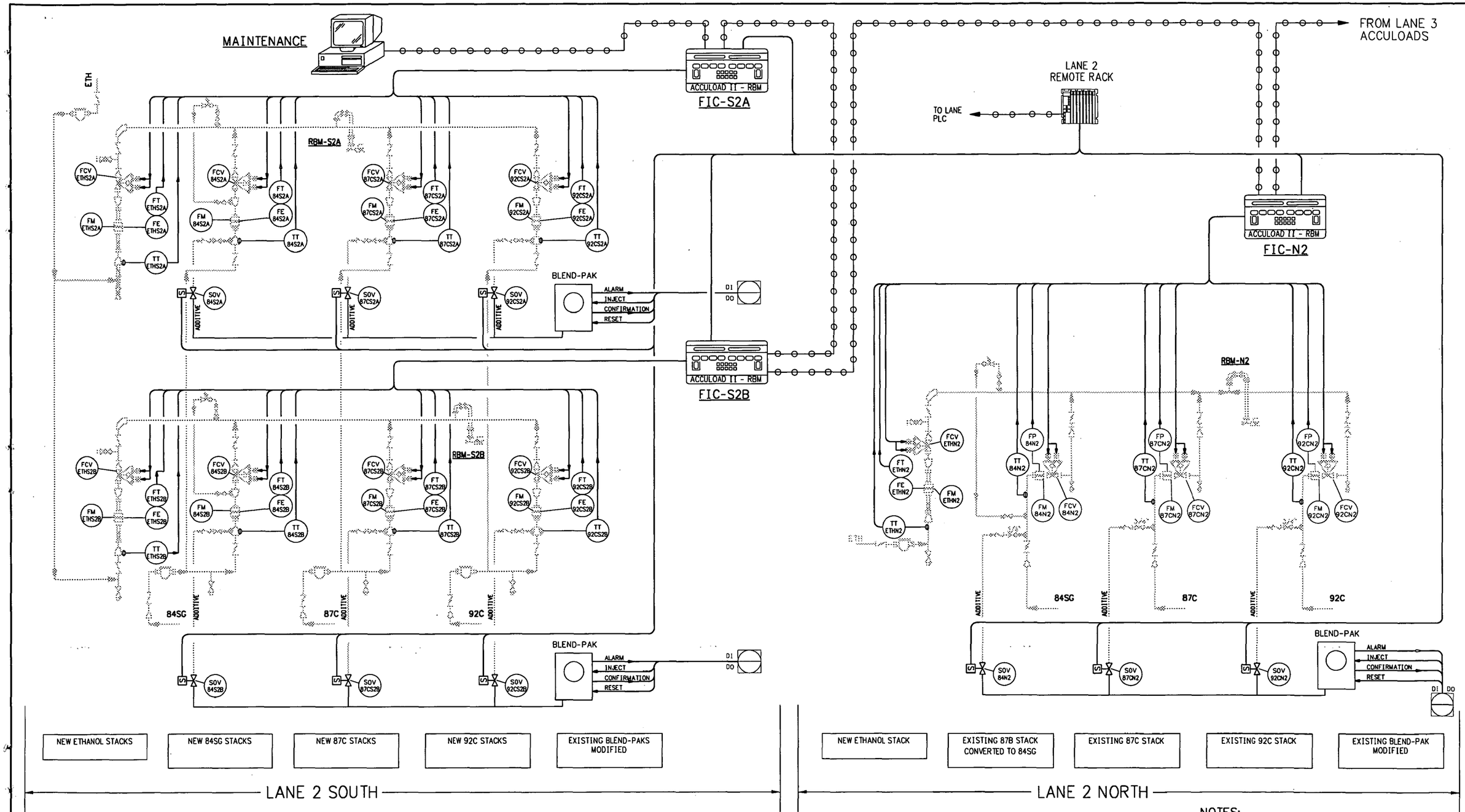

SYSTEM INTERFACE

NOTES:
1. USE PLC FOR AB AND BP CONTROL
2. USE REMOTE RACKS

DRAWING NO.	REFERENCE DRAWINGS	REV. NO.	DATE	REVISED	DRAWN BY	CKD. BY
		0	11/25/97	ISSUED FOR CONSTRUCTION	DAB	WHB

TOSCO
Tosco Northwest Company
A Division of Tosco Corporation
5528 NW Doane St.
Portland, Oregon 97210

ALPHA ENGINEERS and CONSTRUCTORS, INC.
19 NW 5th AVE, SUITE 204, PORTLAND, OR. 97209 Tel:(503)227-3317/Fax:(503)227-3244

DRAWN BY	DAB
CHKD BY	AAB
APPD BY	WHB
SCALE	NONE
DATE	09/10/97

PORTLAND TERMINAL
PORTLAND, OREGON
ELECTRICAL
INSTRUMENTATION & CONTROL DIAGRAM
TRUCK LOADING RACK
LANE 2

DRAWING NO.	SHEET	REV.
0608-E-2003	1 OF 1	0

68E2003B.DWG <CPD: 11/25/97 [TIME: 09:11 AM] >

COP0021441

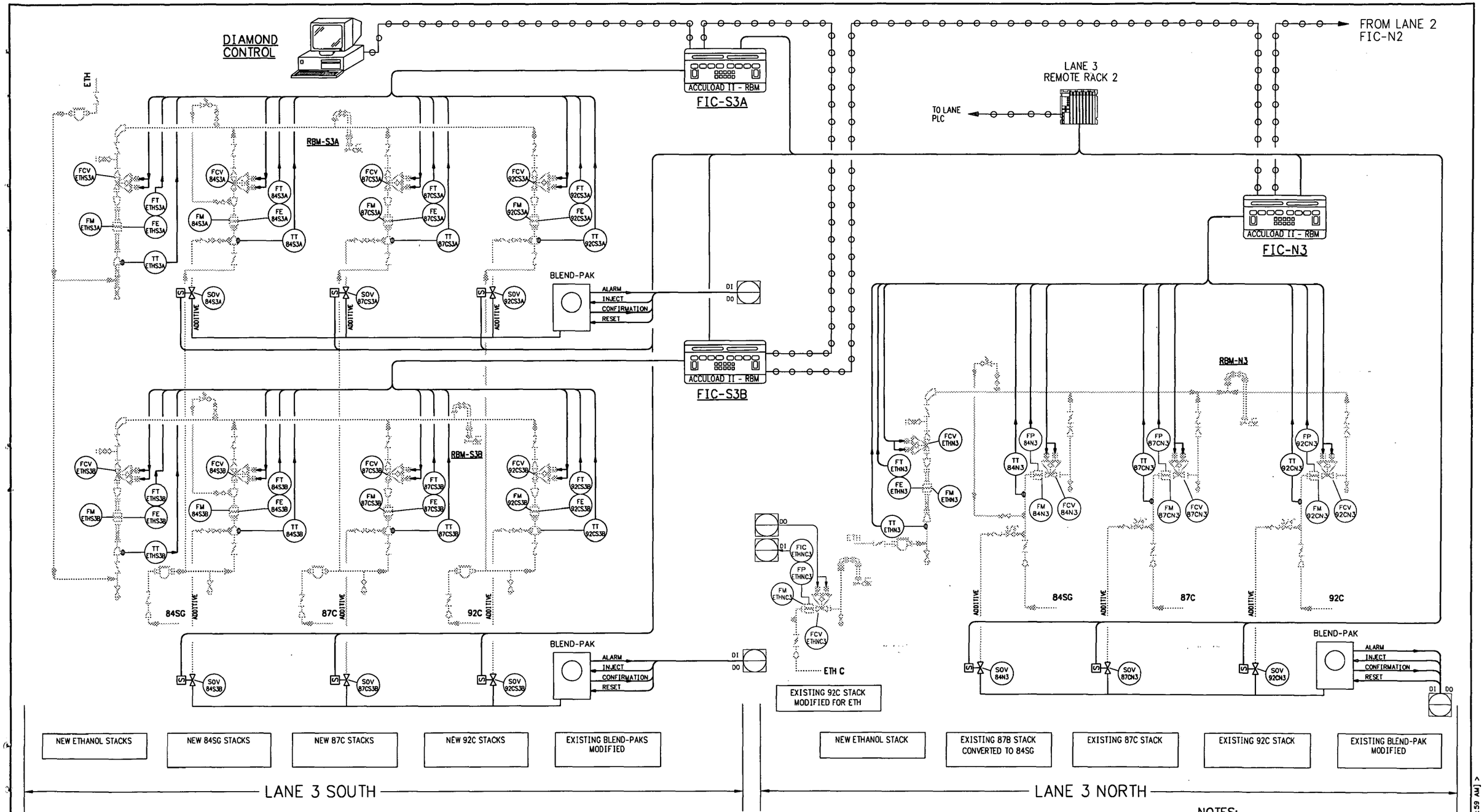

SYSTEM INTERFACE

NOTES:
1. USE PLC FOR AB AND BP CONTROL
2. USE REMOTE RACKS

DRAWING NO.	REFERENCE DRAWINGS	REV. NO.	DATE	REVISED	DRAWN BY	CKD. BY
		0	11/25/97	ISSUED FOR CONSTRUCTION	CPM	WHB

TOSCO
Tosco Northwest Company
A Division of Tosco Corporation
5528 NW Doane St.
Portland, Oregon 97210

ALPHA ENGINEERS and CONSTRUCTORS, INC.
19 NW 5th AVE, SUITE 204, PORTLAND, OR. 97209 Tel:(503)227-3317/Fax:(503)227-3244

DRAWN BY	CPM
CHKD BY	AAB
APPD BY	WHB
SCALE	NONE
DATE	09/10/97

PORTLAND TERMINAL
PORTLAND, OREGON
ELECTRICAL
INSTRUMENTATION & CONTROL DIAGRAM
TRUCK LOADING RACK
LANE 3

DRAWING NO.	SHEET	REV.
0608-E-2004	1 OF 1	0

68E20048.DWG <CPD: 11/25/97 [TIME: 08:59 AM] >

COP0021442

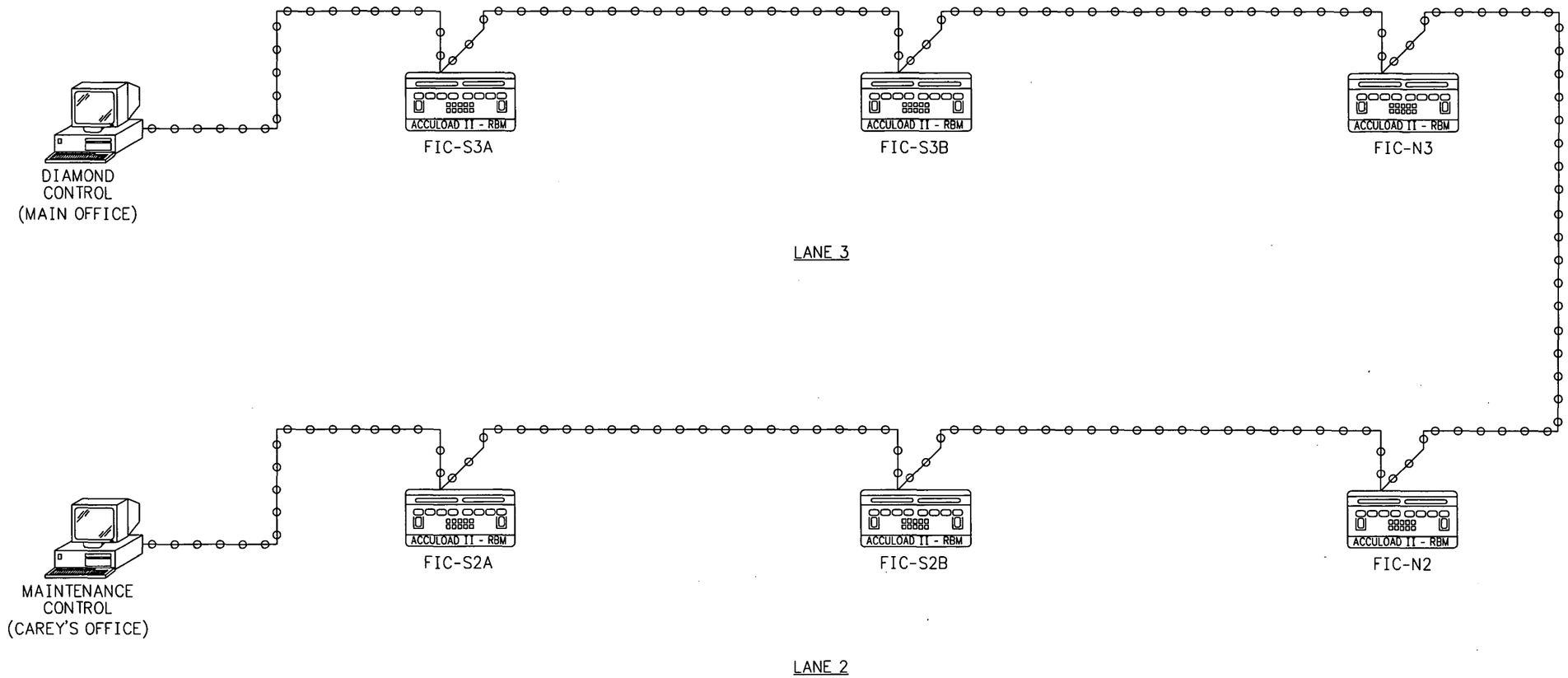

SYSTEM INTERFACE

DRAWING NO.	REFERENCE DRAWINGS	REV. NO.	DATE	REVISED	DRAWN BY	CKD. BY
		0	11/25/97	ISSUED FOR CONSTRUCTION	BNJ	AAB

TOSCO
Tosco Northwest Company
A Division of Tosco Corporation
5528 NW Doane St.
Portland, Oregon 97210

ALPHA ENGINEERS and CONSTRUCTORS, INC.
19 NW 5th AVE, SUITE 204, PORTLAND, OR. 97209 Tel:(503)227-3317/Fax:(503)227-3244

DRAWN BY	BNJ
CHKD BY	AAB
APPD BY	WHB
SCALE	NONE
DATE	11/17/97

PORTLAND TERMINAL

PORTLAND, OREGON

ELECTRICAL
SERIAL COMMUNICATIONS DIAGRAM
TRUCK LOADING LANES 2 & 3

DRAWING NO.	SHEET	REV.
0608-E-2005	1 OF 1	0

25E20058.DWG <CPD: 11/25/97 [TIME: 10:09 AM] >

COP0021443

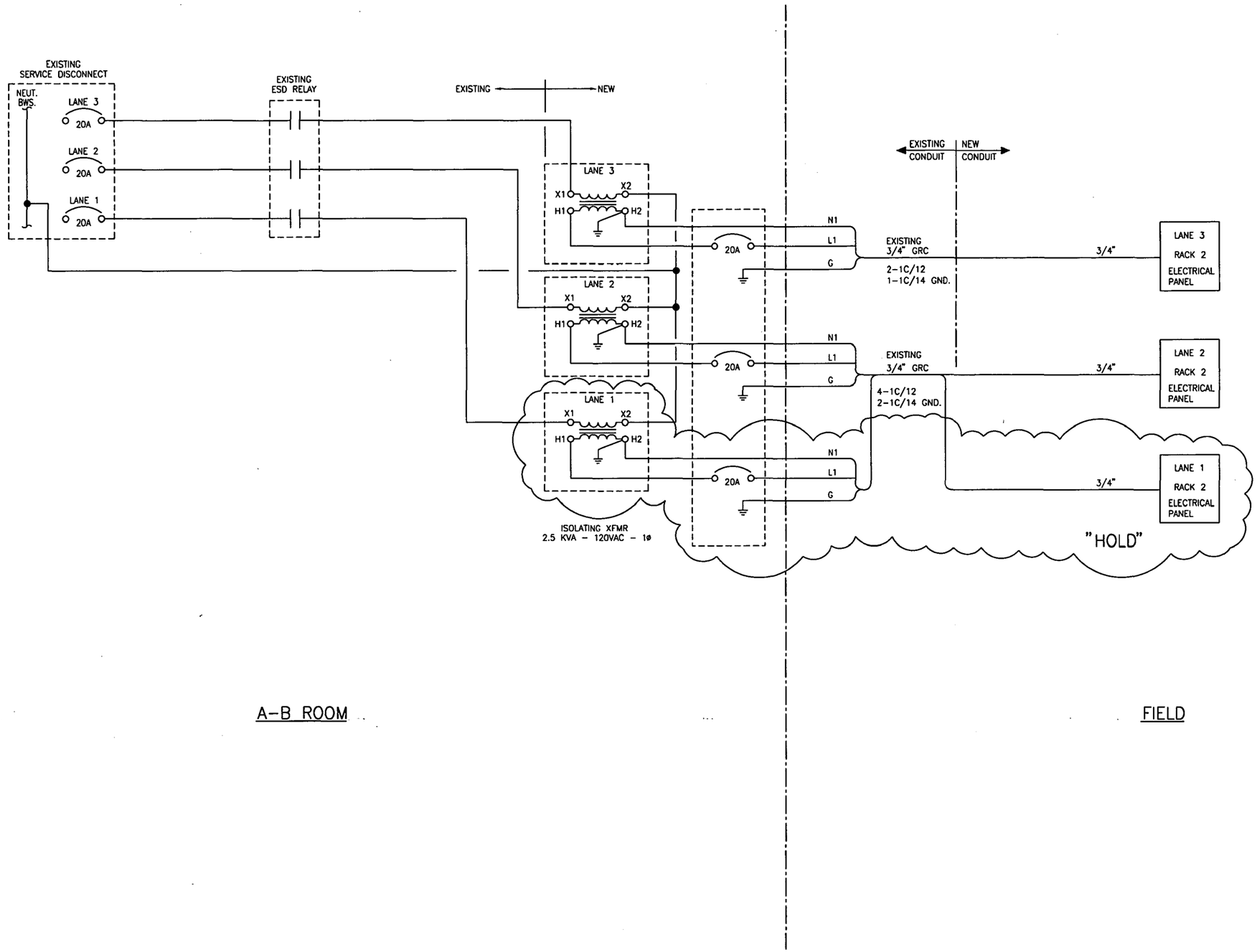

DRAWING NO.				REFERENCE DRAWINGS
0	11/25/97	BNJ	WHB	ISSUED FOR CONSTRUCTION
REV	DATE	BY	CHK	REVISED

TOSCO
TOSCO Distribution Company
A Division of Tosco Corporation
5528 NW Doane St.
Portland, Oregon 97210

PORTLAND TERMINAL
ELECTRICAL SCHEMATIC
LANES 1, 2, AND 3

ALPHA ENGINEERS and CONSTRUCTORS, INC.
19 NW 5TH AVE.SUITE 204 PORTLAND, OR. 97209 Tel: 503-227-3317

SCALE:	NONE	DESIGNED BY:	DAB
DATE:	11/17/97	CHECKED BY:	WHB
DRAWN BY:	BNJ	ENG. APPR. BY:	WHB
CADD FILE/PLOT DATE: 25E20068.DWG <CPD: 11/25/97		TIME: 10:10 AM>	

DRAWING NUMBER	SHEET	REV
0608-E-2006	1 OF 1	0

COP0021444

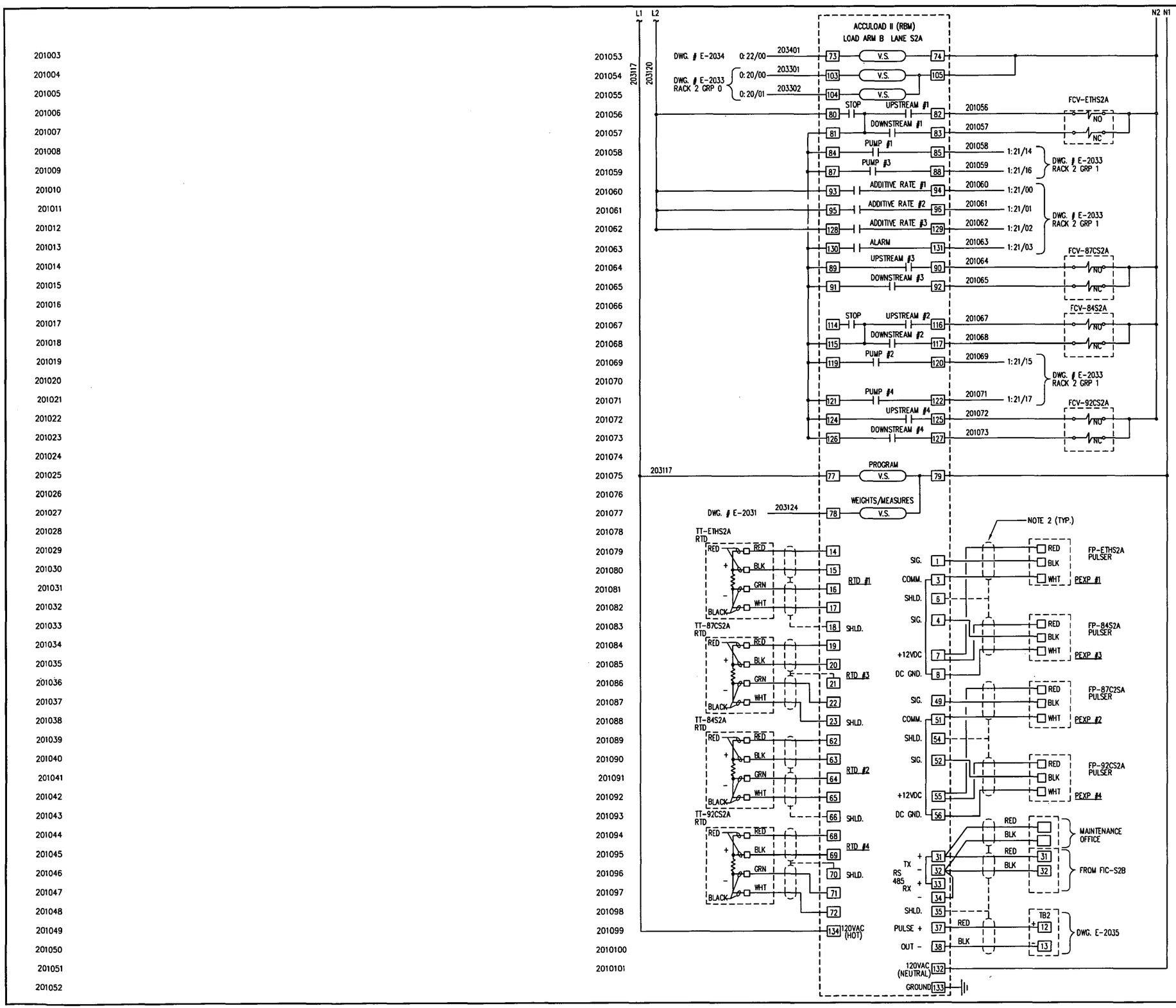

NOTE:

1. L1 & L2 TO BE SAME PHASE POWER.
2. ALL INST. CABLE SHALL BE IDENTIFIED BY ITS LOOP# IE: FT-ETHS2A ETC.
3. FIELD INSTALLED JUMPERS (31-33) AND (32-34).

E-2033	PLC SCHEMATIC - RACK 2			
DRAWING NO.	REFERENCE DRAWINGS			
0	11/25/97	BNJ	WHB	ISSUED FOR CONSTRUCTION
REV	DATE	BY	CHK	REVISED

TOSCO
TOSCO Distribution Company
A Division of Tosco Corporation
5528 NW Doane St.
Portland, Oregon 97210

PORTLAND TERMINAL
ELECTRICAL SCHEMATIC
LANE 2, FIC-S2A

ALPHA ENGINEERS and CONSTRUCTORS, INC.
19 NW 5TH AVE,SUITE 204 PORTLAND, OR. 97209 Tel: 503-227-3317

SCALE:	NONE	DESIGNED BY:	DAB
DATE:	11/17/97	CHECKED BY:	WHB
DRAWN BY:	BNJ	ENG. APPR. BY:	WHB
CADD FILE/PLOT DATE: 25E2010B.DWG	<CPD: 11/25/97	TIME: 11:48 AM>	
DRAWING NUMBER		SHEET	REV
0608-E-2010		1 OF 1	0

COP0021445

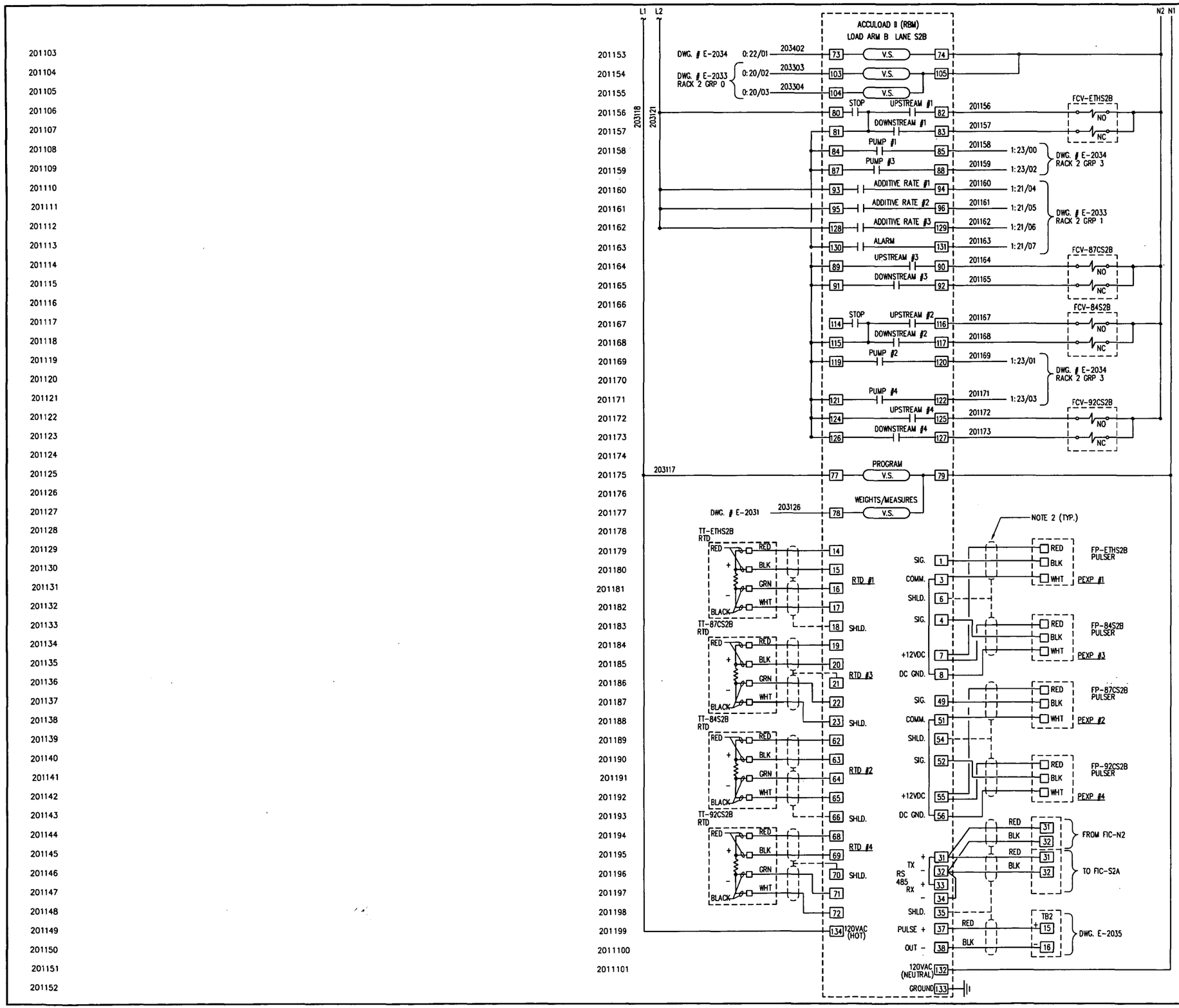

NOTE:

1. L1 & L2 TO BE SAME PHASE POWER.
2. ALL INST. CABLE SHALL BE IDENTIFIED BY ITS LOOP# IE: FT-ETHS2A ETC.
3. FIELD INSTALL JUMPERS (31-33) & (32-34)

DRAWING NO.	REFERENCE DRAWINGS
E-2033	PLC SCHEMATIC - RACK 2

REV	DATE	BY	CHK	REVISED
0	11/25/97	BNJ	WHB	ISSUED FOR CONSTRUCTION

TOSCO
TOSCO Distribution Company
A Division of Tosco Corporation
5528 NW Doane St.
Portland, Oregon 97210

PORTLAND TERMINAL
ELECTRICAL SCHEMATIC
LANE 2, FIC-S2B

ALPHA ENGINEERS and CONSTRUCTORS, INC.
19 NW 5TH AVE.,SUITE 204 PORTLAND, OR. 97209 Tel: 503-227-3317

SCALE:	NONE	DESIGNED BY:	DAB
DATE:	11/17/97	CHECKED BY:	WHB
DRAWN BY:	BNJ	ENG. APPR. BY:	WHB
CADD FILE/PLOT DATE:	25E2011B.DWG	<CPD: 11/25/97 (TIME: 11:58 AM) >	

DRAWING NUMBER	SHEET	REV
0608-E-2011	1 OF 1	0

COP0021446

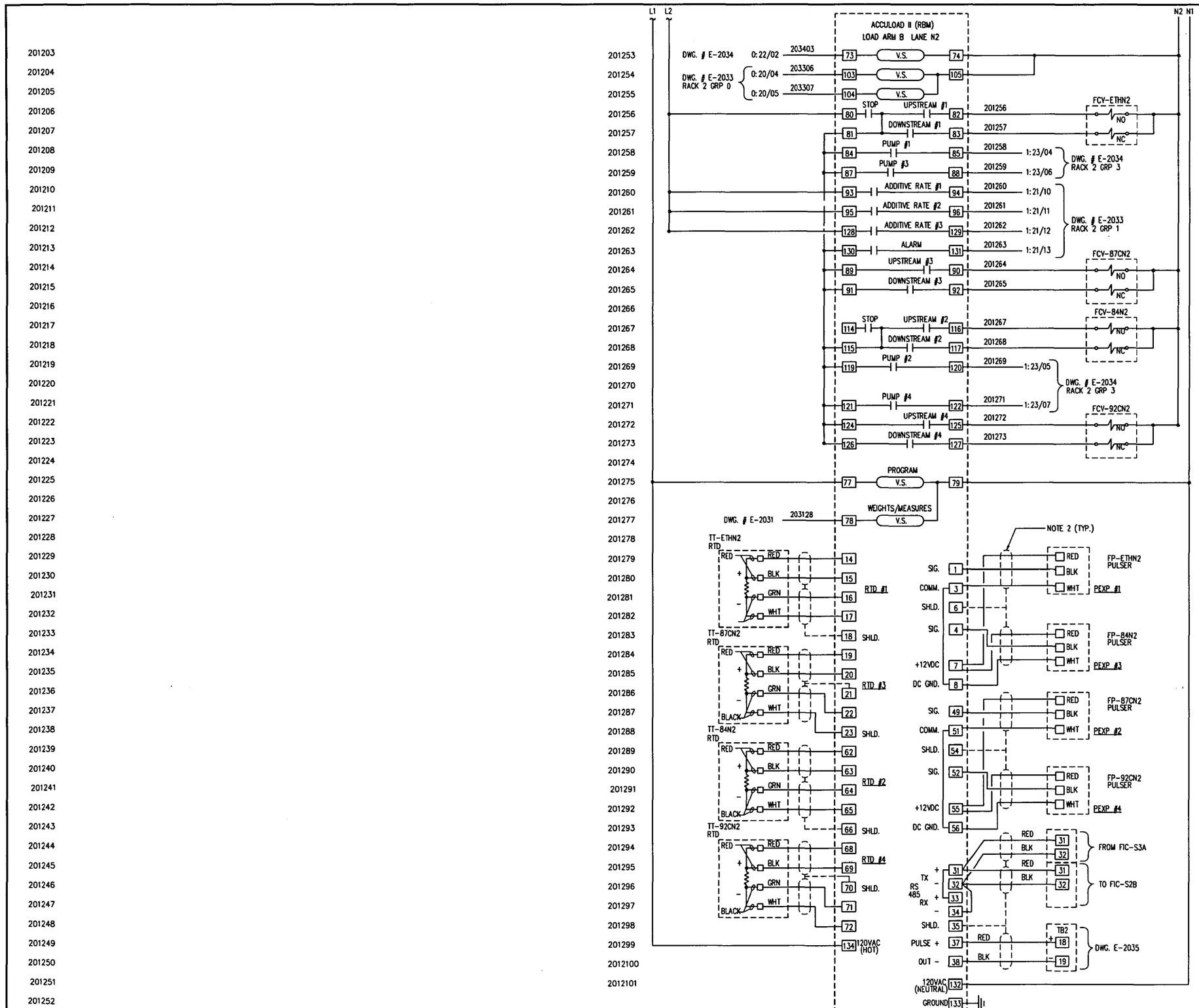

NOTE:

1. L1 & L2 TO BE SAME PHASE POWER.
2. ALL INST. CABLE SHALL BE IDENTIFIED BY ITS LOOP# IE: FT-ETHS2A ETC.
3. FIELD INSTALLED JUMPERS (31-33) AND (32-34).

E-2033	PLC SCHEMATIC - RACK 2			
DRAWING NO.	REFERENCE DRAWINGS			
0	11/25/97	BNJ	WHB	ISSUED FOR CONSTRUCTION
REV	DATE	BY	CHK	REVISED

TOSCO
TOSCO Distribution Company
A Division of Tosco Corporation
5528 NW Doane St.
Portland, Oregon 97210

PORTLAND TERMINAL
ELECTRICAL SCHEMATIC
LANE 2, FIC-N2

ALPHA ENGINEERS and CONSTRUCTORS, INC.
19 NW 5TH AVE, SUITE 704 PORTLAND, OR. 97209 Tel: 503-227-3317

SCALE:	NONE	DESIGNED BY:	DAB
DATE:	11/17/97	CHECKED BY:	WHB
DRAWN BY:	BNJ	ENG. APPR. BY:	WHB
CADD FILE/PLOT DATE: 25E2012B.DWG		<CPD: 11/20/97	TIME: 11:40 AM>
DRAWING NUMBER		SHEET	REV
0608-E-2012		1 OF 1	0

COP0021447

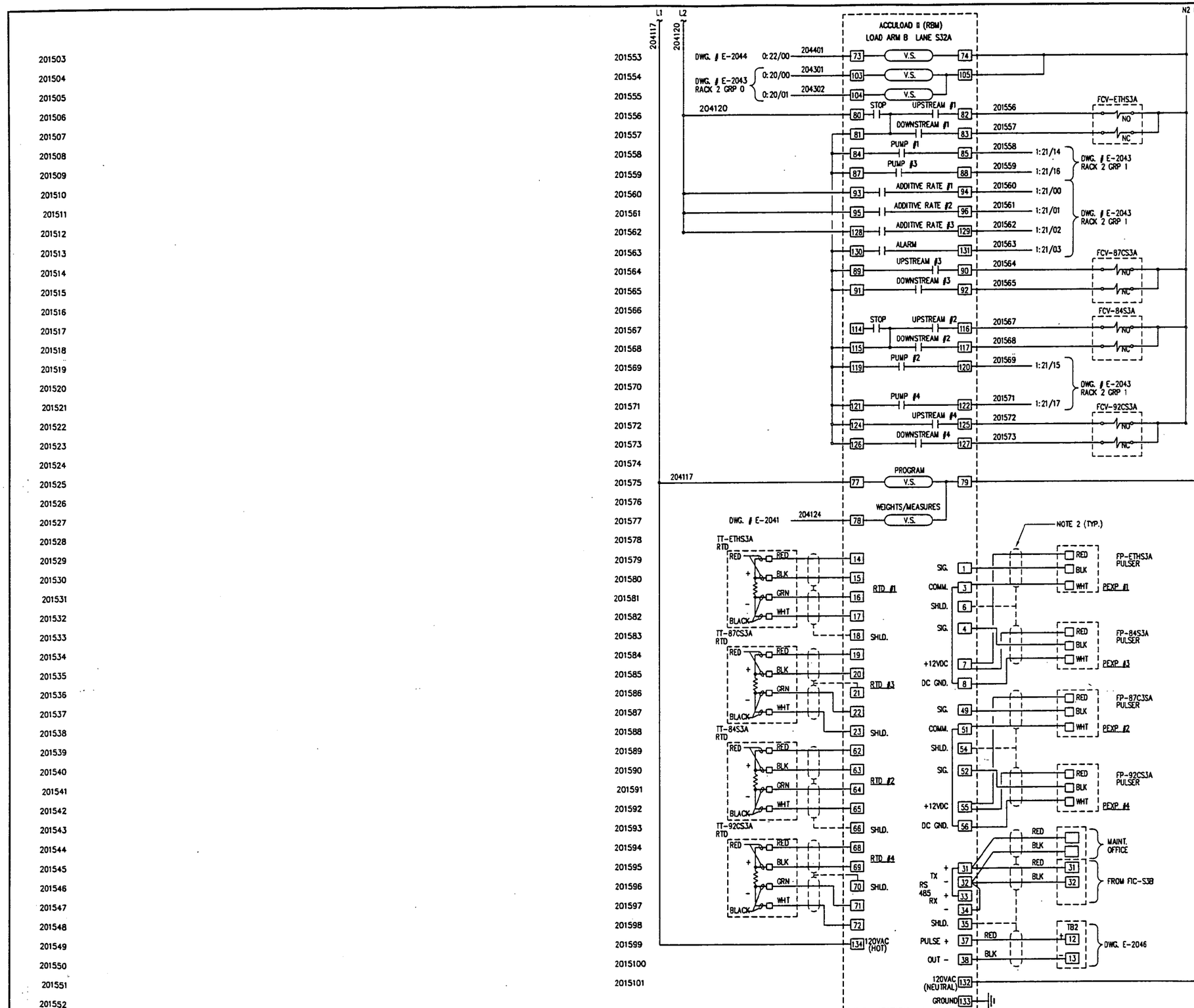

NOTE:

1. L1 & L2 TO BE SAME PHASE POWER.
2. ALL INST. CABLE SHALL BE IDENTIFIED BY ITS LOOP# IE: FT-ETHS3A ETC.
3. FIELD INSTALLED JUMPERS (31-33) AND (32-34).

E-2043	PLC SCHEMATIC - RACK 2
DRAWING NO.	REFERENCE DRAWINGS

REV	DATE	BY	CHK	REVISED
0	11/25/97	BNJ	WHB	ISSUED FOR CONSTRUCTION

TOSCO
TOSCO Distribution Company
A Division of Tosco Corporation
5528 NW Doane St.
Portland, Oregon 97210

PORTLAND TERMINAL
ELECTRICAL SCHEMATIC
LANE 3, FIC-S3A

ALPHA ENGINEERS and CONSTRUCTORS, INC.
19 NW 5TH AVE.,SUITE 204 PORTLAND, OR 97209 Tel: 503-227-3317

SCALE:	NONE	DESIGNED BY:	DAB
DATE:	11/17/97	CHECKED BY:	WHB
DRAWN BY:	BNJ	ENG. APPR. BY:	WHB
CADD FILE/PLOT DATE: 25E20158.DWG		<CPD: 11/25/97	TIME: 1:09 PM>

DRAWING NUMBER	SHEET	REV
0608-E-2015	1 OF 1	0

COP0021448

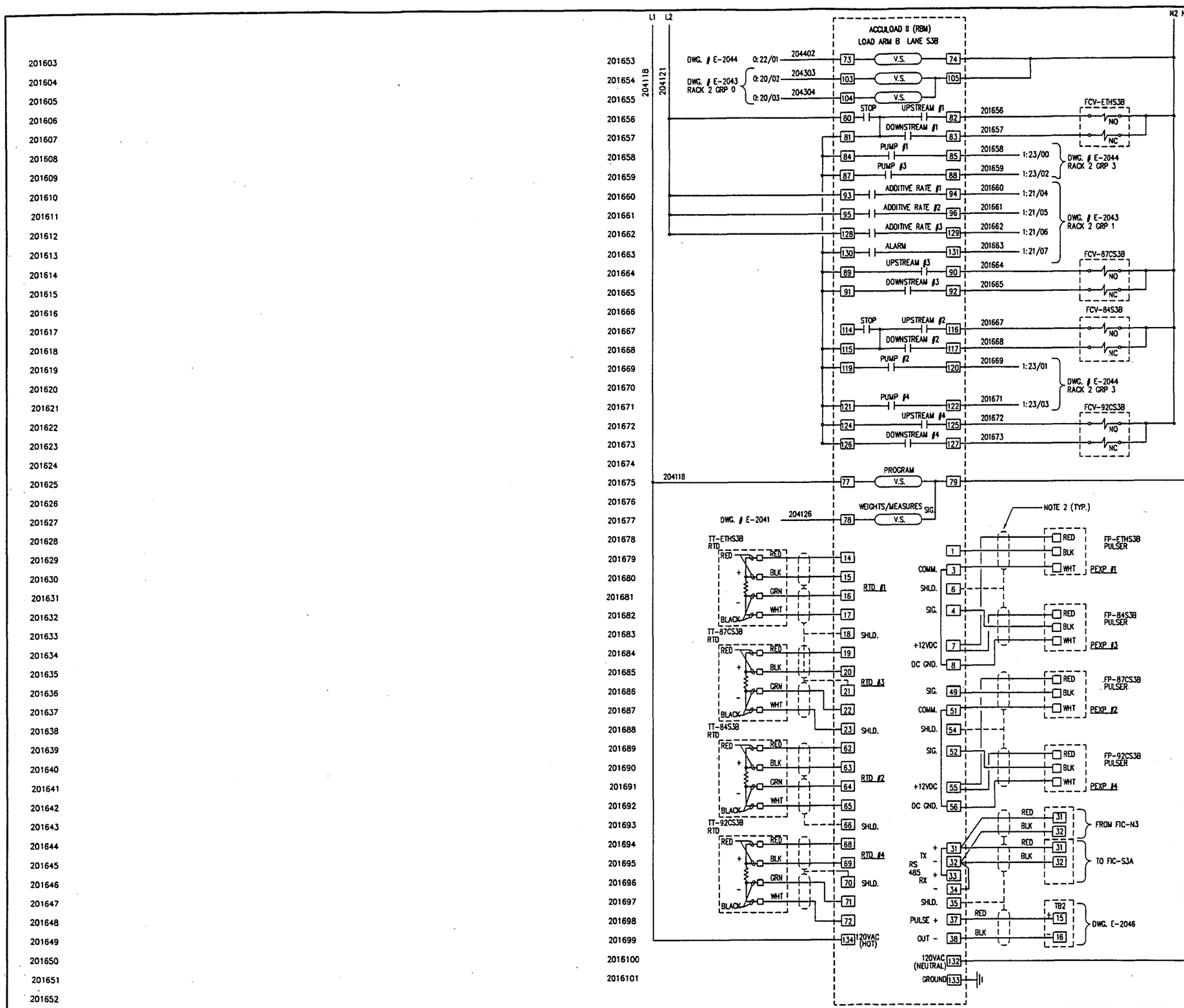

NOTE:

1. L1 & L2 TO BE SAME PHASE POWER.
2. ALL INST. CABLE SHALL BE IDENTIFIED BY ITS LOOP# IE: FT-ETHS3A ETC.
3. FIELD INSTALL JUMPERS (31-33) & (32-34)

E-2043	PLC SCHEMATIC - RACK 2			
DRAWING NO.	REFERENCE DRAWINGS			
0	11/25/97	BNJ	WHB	ISSUED FOR CONSTRUCTION
REV	DATE	BY	CHK	REVISED

TOSCO
TOSCO Distribution Company
A Division of Tosco Corporation
5528 NW Doane St.
Portland, Oregon 97210

PORTLAND TERMINAL
ELECTRICAL SCHEMATIC
LANE 3, FIC-S3B

ALPHA ENGINEERS and CONSTRUCTORS, INC.
19 NW 5TH AVE.,SUITE 204 PORTLAND, OR. 97209 Tel: 503-227-3317

SCALE:	NONE	DESIGNED BY:	AAB
DATE:	11/17/97	CHECKED BY:	WHB
DRAWN BY:	BNJ	ENG. APPR. BY:	WHB
CADD FILE/PLOT DATE: 25E2016B.DWG		<CPD: 11/25/97	TIME: 12:52 AM>
DRAWING NUMBER		SHEET	REV
0608-E-2016		1 OF 1	0

COP0021449

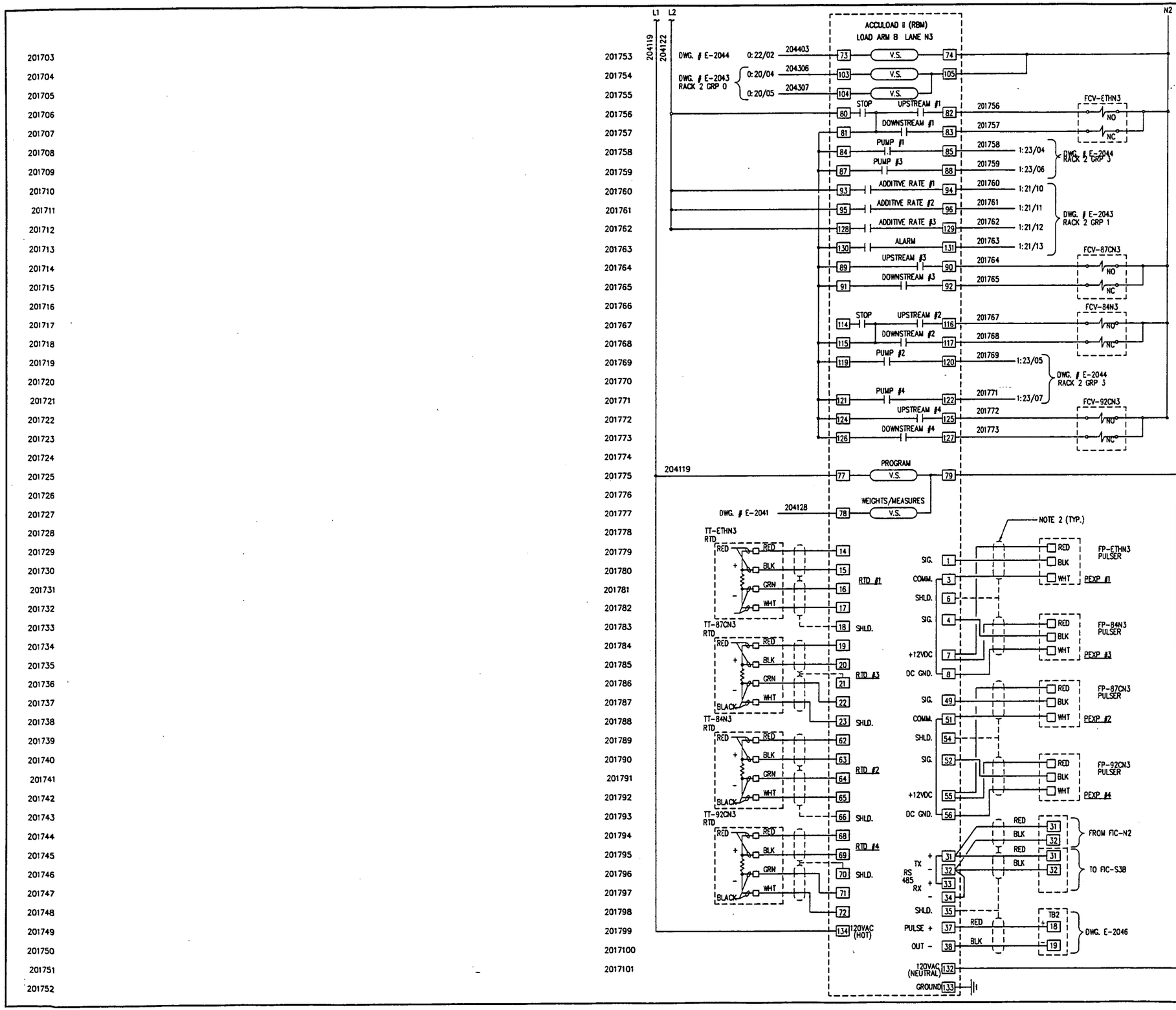

NOTE:

1. L1 & L2 TO BE SAME PHASE POWER.
2. ALL INST. CABLE SHALL BE IDENTIFIED BY ITS LOOP# IE: FT-ETHS3A ETC.
3. FIELD INSTALLED JUMPERS (31-33) AND (32-34).

DRAWING NO.				E-2043 PLC SCHEMATIC - RACK 2 / REFERENCE DRAWINGS
REV	DATE	BY	CHK	REVISED
0	11/25/97	BNJ	WHB	ISSUED FOR CONSTRUCTION

TOSCO
TOSCO Distribution Company
A Division of Tosco Corporation
5528 NW Doane St.
Portland, Oregon 97210

PORTLAND TERMINAL
ELECTRICAL SCHEMATIC
LANE 3, FIC-N3

ALPHA ENGINEERS and CONSTRUCTORS, INC.
19 NW 5TH AVE.SUITE 204 PORTLAND, OR. 97209 tel: 503-227-3317

SCALE:	NONE	DESIGNED BY:	DAB
DATE:	11/17/97	CHECKED BY:	WHB
DRAWN BY:	BNJ	ENG. APPR. BY:	WHB
CADD FILE/PLOT DATE: 25E20178.DWG		<CPD: 11/25/97	TIME: 1:03 PM>
DRAWING NUMBER		SHEET	REV
0608-E-2017		1 OF 1	0

COP0021450

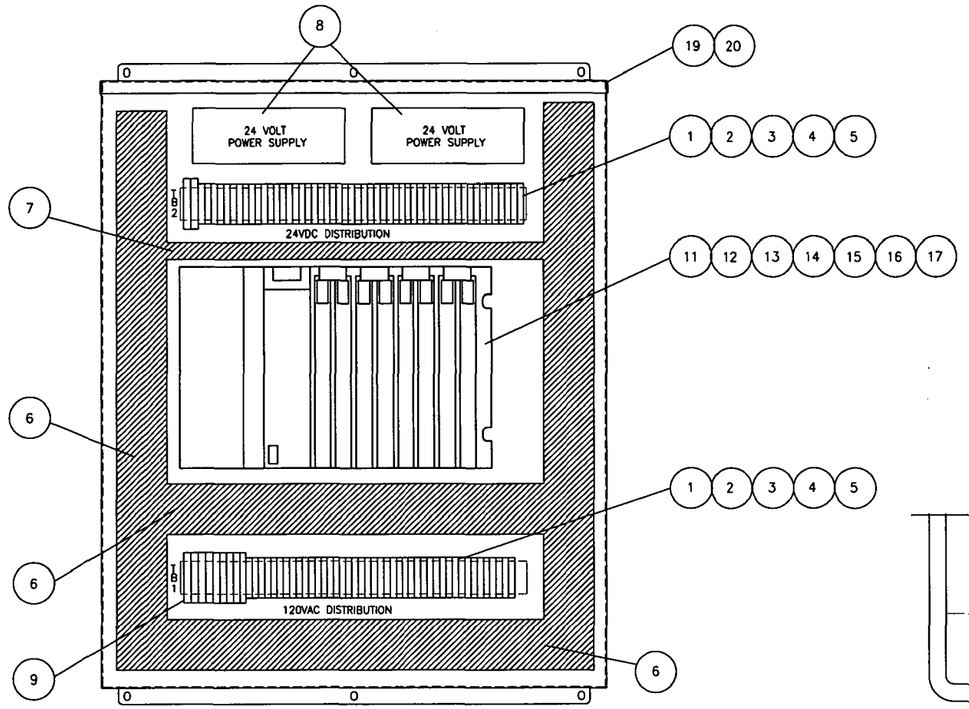

PANEL LAYOUT

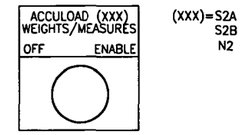

(XXX)=S2A
S2B
N2

ITEM 22 – ENGRAVING

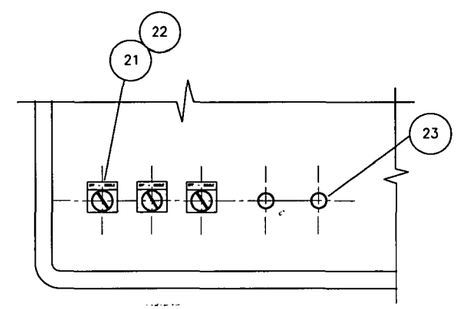

PANEL DOOR FRONT

BILL OF MATERIAL

ITEM	QUANTITY	DESCRIPTION
1	6'	ALLEN-BRADLEY CAT. #1492-DR5 DIN RAIL
2	80	ALLEN-BRADLEY CAT. #1492-W6 TERMINAL BLOCKS
3	4	ALLEN-BRADLEY CAT. #1492-CJ7-10 JUMPERS
4	4	ALLEN-BRADLEY CAT. #1492-EA35 END ANCHORS
5	10	ALLEN-BRADLEY CAT. #1492-GH050 CIRCUIT BREAKER (5A)
6	11'	3" X 3" PANDUIT
7	2'-6"	1" X 3" PANDUIT
8	2	POWER-ONE HD24-4.8-A
9	1	ALLEN-BRADLEY CAT. #1492-GH200 (20A)
10	–	NOT USED
11	1	ALLEN-BRADLEY CAT. # 1771 - A2B RACK
12	1	ALLEN-BRADLEY CAT. # 1771 - ASB SER. D RI/O ADAPTER
13	1	ALLEN-BRADLEY CAT. # 1771 - P7 POWER SUPPLY
14	2	ALLEN-BRADLEY CAT. # 1771 - CFM FLOW MODULE
15	1	ALLEN-BRADLEY CAT. # 1771 - OAD OUTPUT MODULE
16	2	ALLEN-BRADLEY CAT. # 1771 - IAD INPUT MODULE
17	1	ALLEN-BRADLEY CAT. # 1771 - IBD DC INPUT MODULE
18	1	ALLEN-BRADLEY CAT. # 1771 - PC1 PS CABLE
19	1	HOFFMAN CAT. # A36H3012G0RLP
20	1	HOFFMAN CAT. # A36P30
21	3	ALLEN-BRADLEY 2 POSITION SELECTOR SWITCH #800T-H31D1
22	3	ALLEN-BRADLEY JUMBO LEGEND PLATE #800T-X609E
23	2	ALLEN-BRADLEY CLOSING BUTTON #800T-N1

NOTES:

1. ALL NEW +24VDC POWER WIRE SHALL BE 16 GA. BLUE.
2. ALL NEW 24VDC COMMON WIRE SHALL BE 16 GA. WHITE W/BLUE STRIPE.
3. ALL EQPT. BY TOSCO; ALL CONDUIT AND WIRING BY CONTRACTOR.

DRAWING NO.				REFERENCE DRAWINGS
0	11/25/97	BNJ	WHB	ISSUED FOR CONSTRUCTION
REV	DATE	BY	CHK	REVISED

TOSCO
TOSCO Distribution Company
A Division of Tosco Corporation
5528 NW Doane St.
Portland, Oregon 97210

PORTLAND TERMINAL
TRUCK LOADING RACK
ELECTRICAL PANEL LAYOUT
LANE 2

ALPHA ENGINEERS and CONSTRUCTORS, INC.
19 NW 5TH AVE.SUITE 204 PORTLAND, OR. 97209 Tel: 503-227-3317

SCALE:	NONE	DESIGNED BY:	AAB
DATE:	11/17/97	CHECKED BY:	WHB
DRAWN BY:	BNJ	ENG. APPR. BY:	WHB

CADD FILE/PLOT DATE: 25E20308.DWG <CPD: 11/25/97 TIME: 10:31 AM>

DRAWING NUMBER	SHEET	REV
0608-E-2030	1 OF 1	0

COP0021451

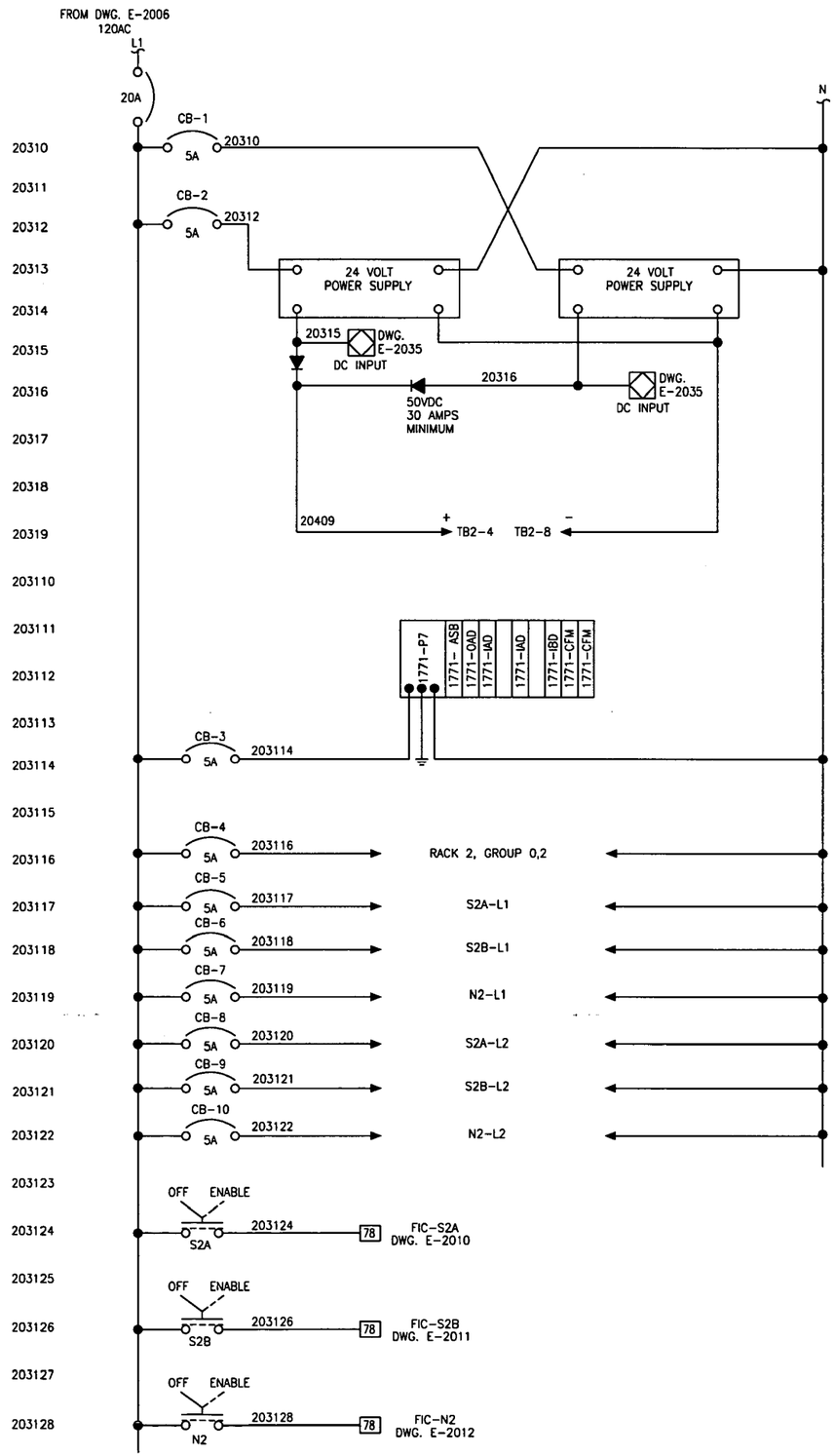

CONTROL POWER

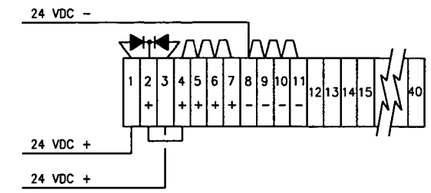

TB2 – 24VDC POWER

DRAWING NO.	REFERENCE DRAWINGS

REV	DATE	BY	CHK	REVISED
0	11/25/97	DAB	WHB	ISSUED FOR CONSTRUCTION

TOSCO
TOSCO Distribution Company
A Division of Tosco Corporation
5528 NW Doane St.
Portland, Oregon 97210

PORTLAND TERMINAL
CONTROL POWER SCHEMATIC
LANE 2 – RACK 2

ALPHA ENGINEERS and CONSTRUCTORS, INC.
19 NW 5TH AVE.,SUITE 204 PORTLAND, OR. 97209 Tel: 503-227-3317

SCALE:	NONE	DESIGNED BY:	AAB
DATE:	11/05/97	CHECKED BY:	WHB
DRAWN BY:	BNJ	ENG. APPR. BY:	WHB

CADD FILE/PLOT DATE: 25E20.31B.DWG <CPD: 11/25/97 TIME: 10:52 AM>

DRAWING NUMBER	SHEET	REV
0608-E-2031	1 OF 1	0

COP0021452

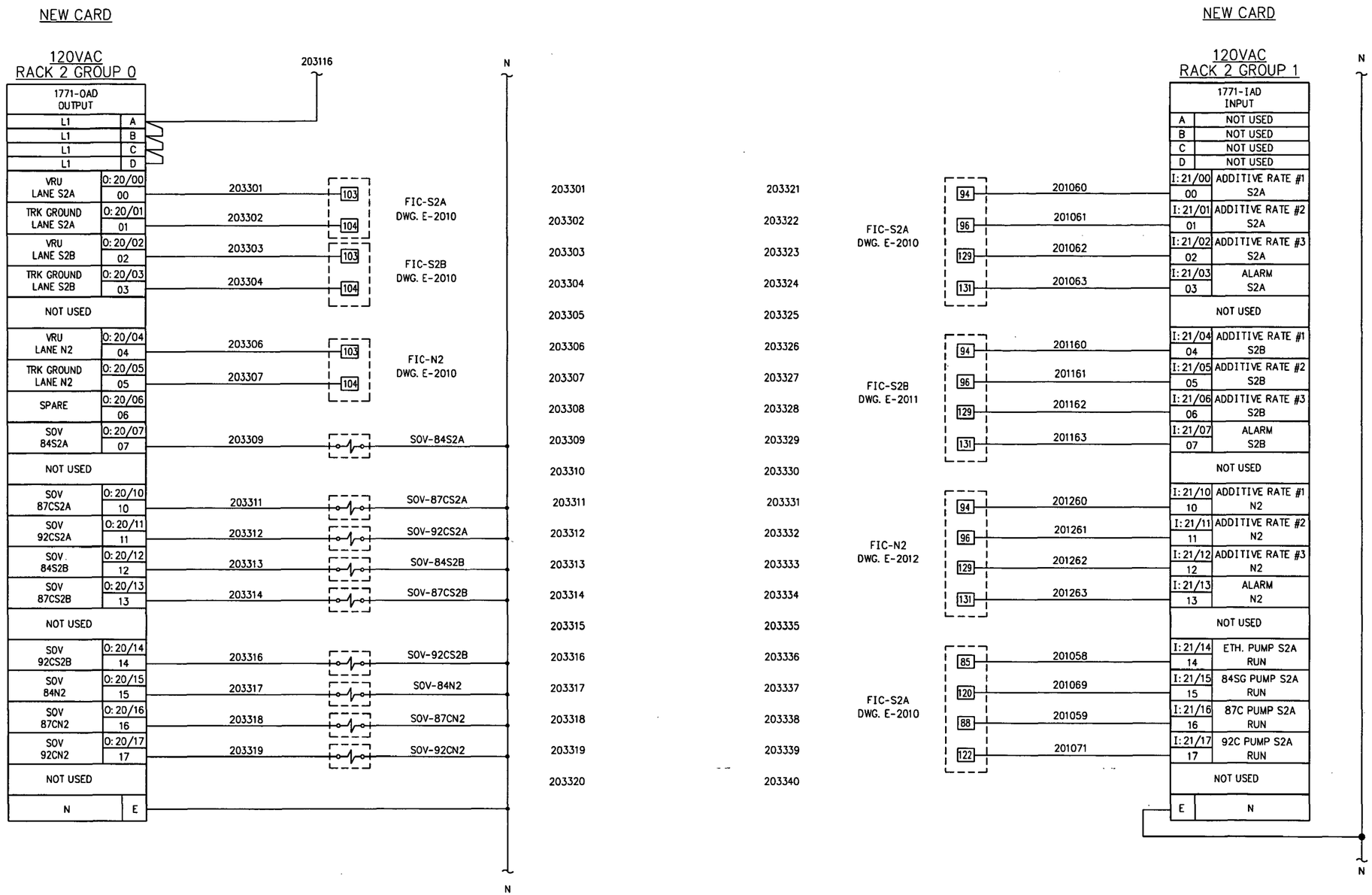

DRAWING NO.	REFERENCE DRAWINGS	REV. NO.	DATE	REVISED	DRAWN BY	CKD. BY
E-2010	ELECTRICAL LANE S2A SCHEMATIC	0	11/25/97	ISSUED FOR CONSTRUCTION	DAB	WHB
E-2011	ELECTRICAL LANE S2B SCHEMATIC					
E-2012	ELECTRICAL LANE N2 SCHEMATIC					
E-2033	PLC SCHEMATIC RACK 2 - TRUCKLOADING					

TOSCO
Tosco Distribution Company
A Division of Tosco Corporation
5528 NW Doane St.
Portland, Oregon 97210

ALPHA ENGINEERS and CONSTRUCTORS, INC.
19 NW 5th AVE, SUITE 204, PORTLAND, OR. 97209 Tel:(503)227-3317/Fax:(503)227-3244

DRAWN BY	BNJ
CHKD BY	AAB
APPD BY	WHB
SCALE	NONE
DATE	11/17/97

PORTLAND TERMINAL
PORTLAND OREGON
PLC SCHEMATIC
LANE 2 - RACK 2

DRAWING NO.	SHEET	REV.
0608-E-2033	1 OF 1	0

25E2033B.DWG <CPD: 11/25/97 [TIME: 10:17 AM]>

COP0021453

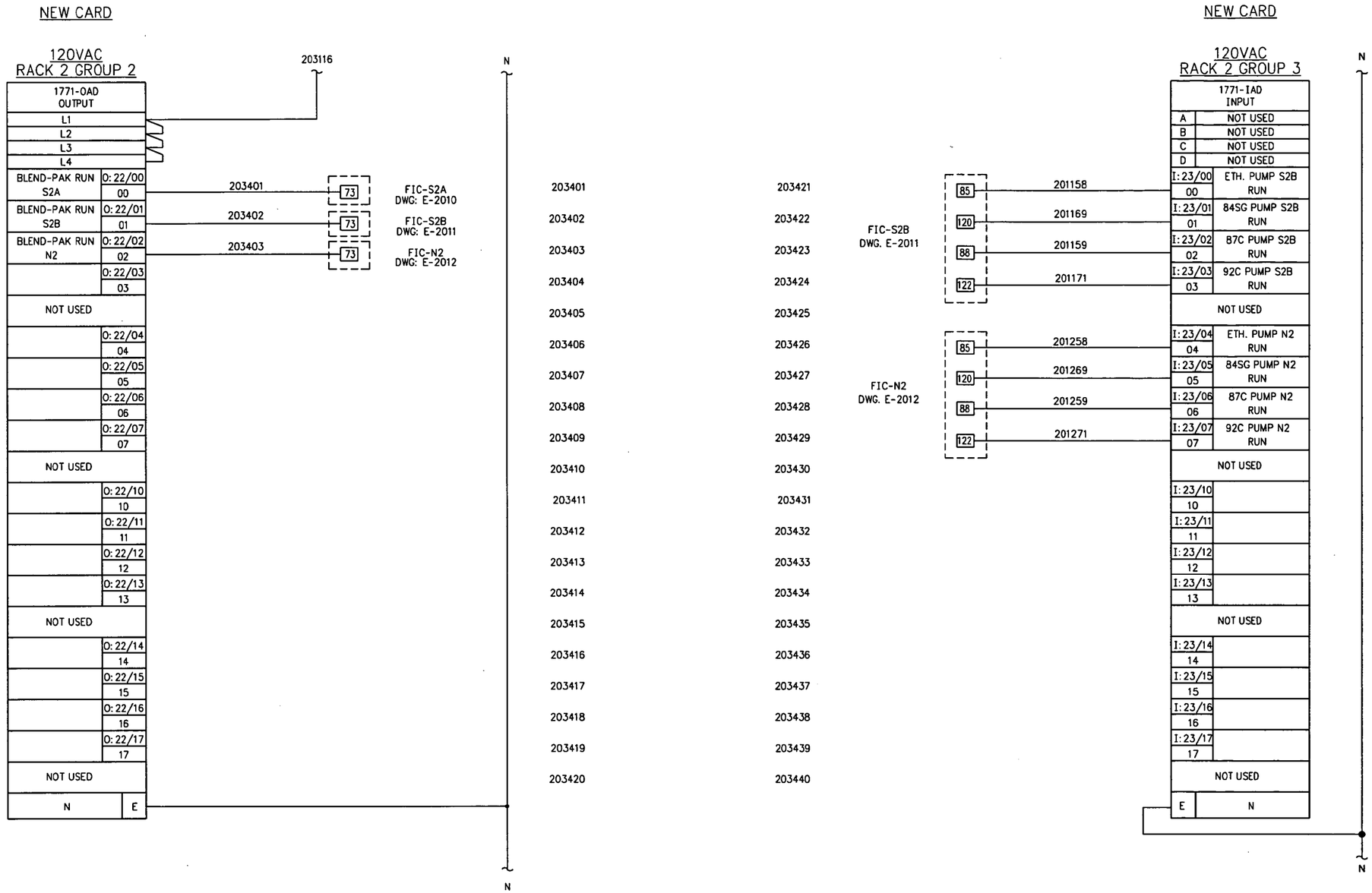

DRAWING NO.	REFERENCE DRAWINGS	REV. NO.	DATE	REVISED	DRAWN BY	CKD. BY
E-2011	ELECTRICAL LANE S2B SCHEMATIC	0	11/25/97	ISSUED FOR CONSTRUCTION	DAB	WHB
E-2012	ELECTRICAL LANE N2 SCHEMATIC					

TOSCO
Tosco Distribution Company
A Division of Tosco Corporation
5528 NW Doane St.
Portland, Oregon 97210

ALPHA ENGINEERS and CONSTRUCTORS, INC.
19 NW 5th AVE, SUITE 204, PORTLAND, OR. 97209 Tel:(503)227-3317/Fax:(503)227-3244

DRAWN BY	BNJ
CHKD BY	AAB
APPD BY	WHB
SCALE	NONE
DATE	11/17/97

PORTLAND TERMINAL
PORTLAND OREGON
PLC SCHEMATIC
LANE 2 - RACK 2

DRAWING NO.	SHEET	REV.
0608-E-2034	1 OF 1	0

25E20348.DWG <CPD: 11/25/97 [TIME: 10:21 AM] >

COP0021454

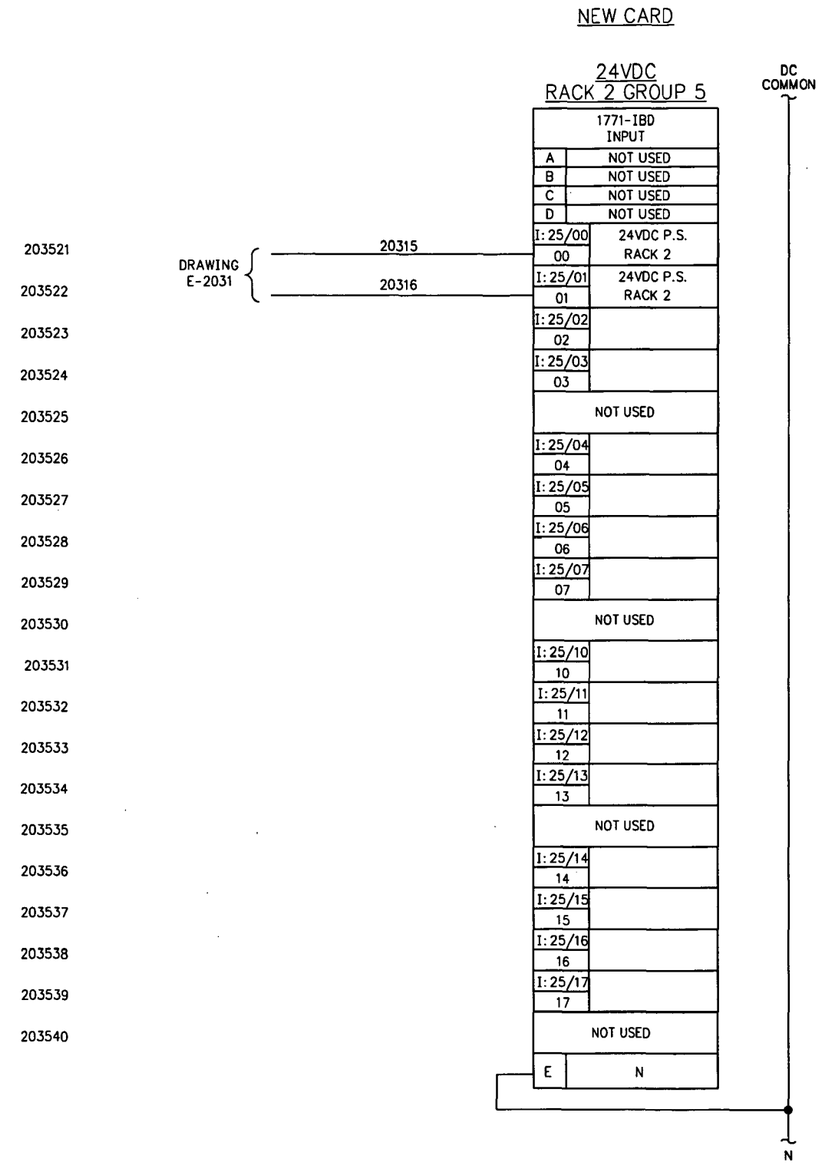

DRAWING NO.	REFERENCE DRAWINGS	REV. NO.	DATE	REVISED	DRAWN BY	CKD. BY
		0	11/25/97	ISSUED FOR CONSTRUCTION	DAB	WHB

TOSCO
Tosco Distribution Company
A Division of Tosco Corporation
5528 NW Doane St.
Portland, Oregon 97210

ALPHA ENGINEERS and CONSTRUCTORS, INC.
19 NW 5th AVE, SUITE 204, PORTLAND, OR. 97209 Tel:(503)227-3317/Fax:(503)227-3244

DRAWN BY	BNJ
CHKD BY	AAB
APPD BY	WHB
SCALE	NONE
DATE	11/17/97

PORTLAND TERMINAL
PORTLAND OREGON
PLC SCHEMATIC
LANE 2 - RACK 2

DRAWING NO.	SHEET	REV.
0608-E-2035	1 OF 1	0

25E2035B.DWG <CPD: 11/25/97 [TIME: 10:24 AM]>

COP0021455

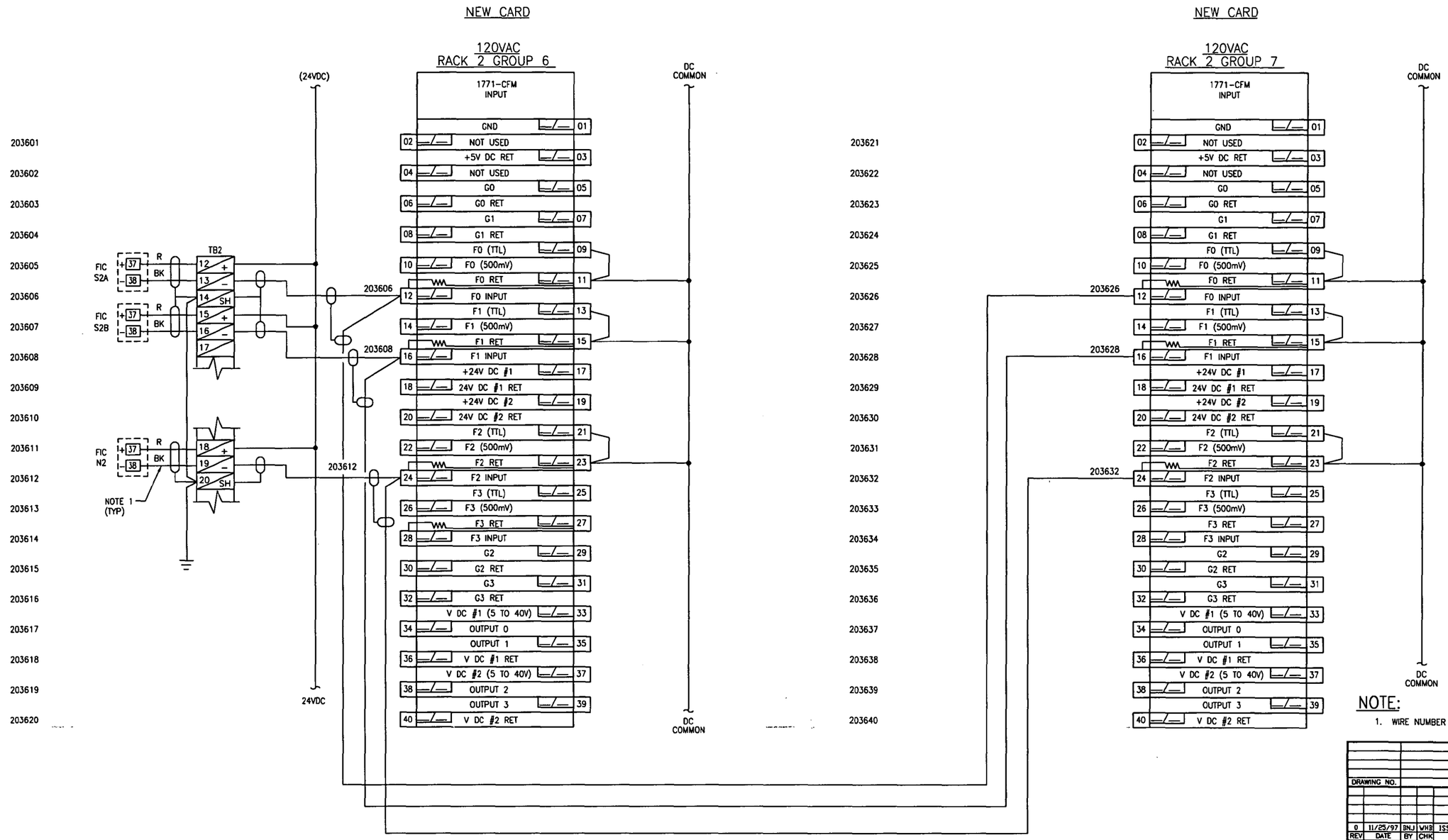

NOTE:

1. WIRE NUMBER IS THE SAME AS LOOP NUMBER.

DRAWING NO.	REFERENCE DRAWINGS

REV	DATE	BY	CHK	REVISED
0	11/25/97	BNJ	WHB	ISSUED FOR CONSTRUCTION

TOSCO
TOSCO Distribution Company
A Division of Tosco Corporation
5528 NW Doane St.
Portland, Oregon 97210

PORTLAND TERMINAL
PLC SCHEMATIC
LANE 2 – RACK 2

ALPHA ENGINEERS and CONSTRUCTORS, INC.
19 NW 5TH AVE,SUITE 204 PORTLAND, OR. 97209 Tel: 503-227-3317

SCALE:	NONE	DESIGNED BY:	AAB
DATE:	11/17/98	CHECKED BY:	WHB
DRAWN BY:	BNJ	ENG. APPR. BY:	WHB
CADD FILE/PLOT DATE:	25E2036B.DWG	<CPD: 11/25/97	TIME: 10:30 AM >

DRAWING NUMBER	SHEET	REV
0608-E-2036	1 OF 1	0

COP0021456

BILL OF MATERIAL		
ITEM	QUANTITY	DESCRIPTION
1	6'	ALLEN-BRADLEY CAT. #1492-DR5 DIN RAIL
2	80	ALLEN-BRADLEY CAT. #1492-W6 TERMINAL BLOCKS
3	4	ALLEN-BRADLEY CAT. #1492-CJ7-10 JUMPERS
4	4	ALLEN-BRADLEY CAT. #1492-EA35 END ANCHORS
5	10	ALLEN-BRADLEY CAT. #1492-GH050 CIRCUIT BREAKER (5A)
6	11'	3" X 3" PANDUIT
7	2'-6"	1" X 3" PANDUIT
8	2	POWER-ONE HD24-4.8-A
9	1	ALLEN-BRADLEY CAT. #1492-GH200 (20A)
10	-	NOT USED
11	1	ALLEN-BRADLEY CAT. # 1771 - A2B RACK
12	1	ALLEN-BRADLEY CAT. # 1771 - ASB SER. D RI/O ADAPTER
13	1	ALLEN-BRADLEY CAT. # 1771 - P7 POWER SUPPLY
14	2	ALLEN-BRADLEY CAT. # 1771 - CFM FLOW MODULE
15	1	ALLEN-BRADLEY CAT. # 1771 - OAD OUTPUT MODULE
16	2	ALLEN-BRADLEY CAT. # 1771 - IAD INPUT MODULE
17	1	ALLEN-BRADLEY CAT. # 1771 - IBD DC INPUT MODULE
18	1	ALLEN-BRADLEY CAT. # 1771 - PC1 PS CABLE
19	1	HOFFMAN CAT. # A36H3012GORLP
20	1	HOFFMAN CAT. # A36P30
21	3	ALLEN-BRADLEY 2 POSITION SELECTOR SWITCH #800T-H31D1
22	3	ALLEN-BRADLEY JUMBO LEGEND PLATE #800T-X609E
23	2	ALLEN-BRADLEY CLOSING BUTTON #800T-N1

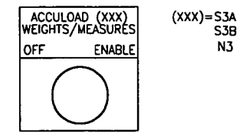

ITEM 22 - ENGRAVING

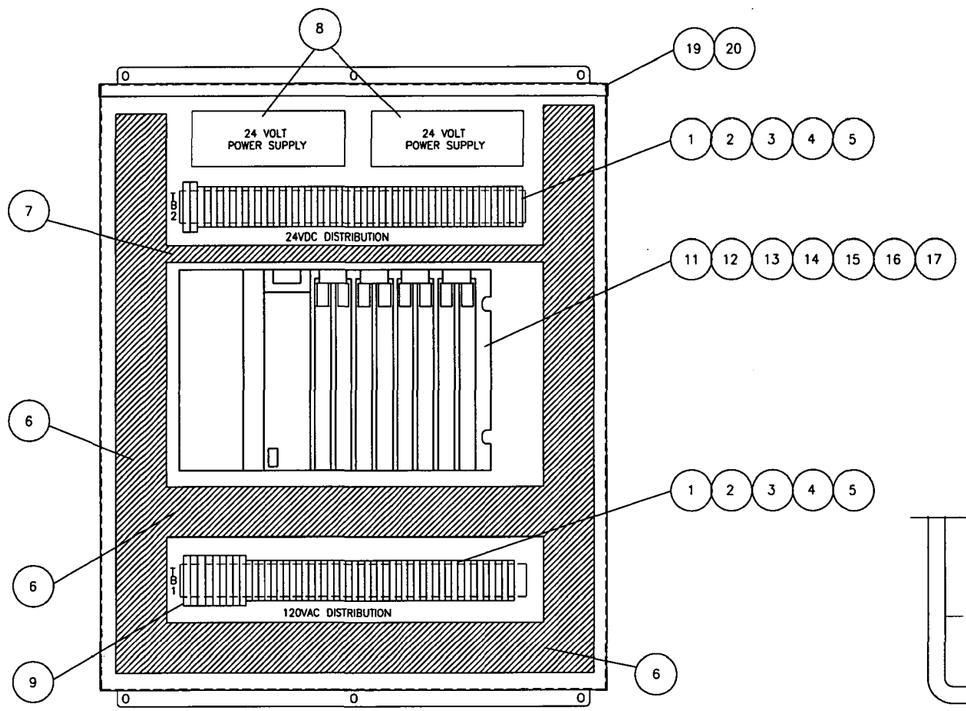

PANEL LAYOUT

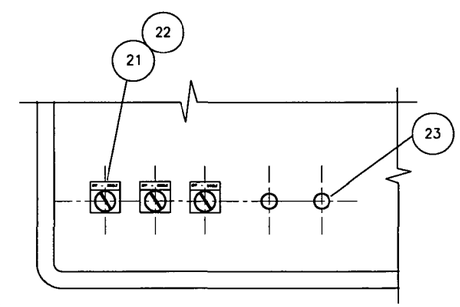

PANEL DOOR FRONT

NOTES:

1. ALL NEW +24VDC POWER WIRE SHALL BE 16 GA. BLUE.
2. ALL NEW 24VDC COMMON WIRE SHALL BE 16 GA. WHITE W/BLUE STRIPE.
3. ALL EQPT. BY TOSCO; ALL CONDUIT AND WIRING BY CONTRACTOR.

DRAWING NO.				REFERENCE DRAWINGS
0	11/25/97	DAB	WHB	ISSUED FOR CONSTRUCTION
REV	DATE	BY	CHK	REVISED

TOSCO
TOSCO Distribution Company
A Division of Tosco Corporation
5528 NW Doane St.
Portland, Oregon 97210

PORTLAND TERMINAL
TRUCK LOADING RACK
ELECTRICAL PANEL LAYOUT
LANE 3

ALPHA ENGINEERS and CONSTRUCTORS, INC.
19 NW 5TH AVE.,SUITE 204 PORTLAND, OR. 97209 Tel. 503-227-3317

SCALE:	NONE	DESIGNED BY:	AAB
DATE:	11/17/97	CHECKED BY:	WHB
DRAWN BY:	BNJ	ENG. APPR. BY:	WHB

CADD FILE/PLOT DATE: 25E20408.DWG <CPD: 11/25/97 TIME: 10:10 AM>

DRAWING NUMBER	SHEET	REV
0608-E-2040	1 OF 1	0

COP00214457

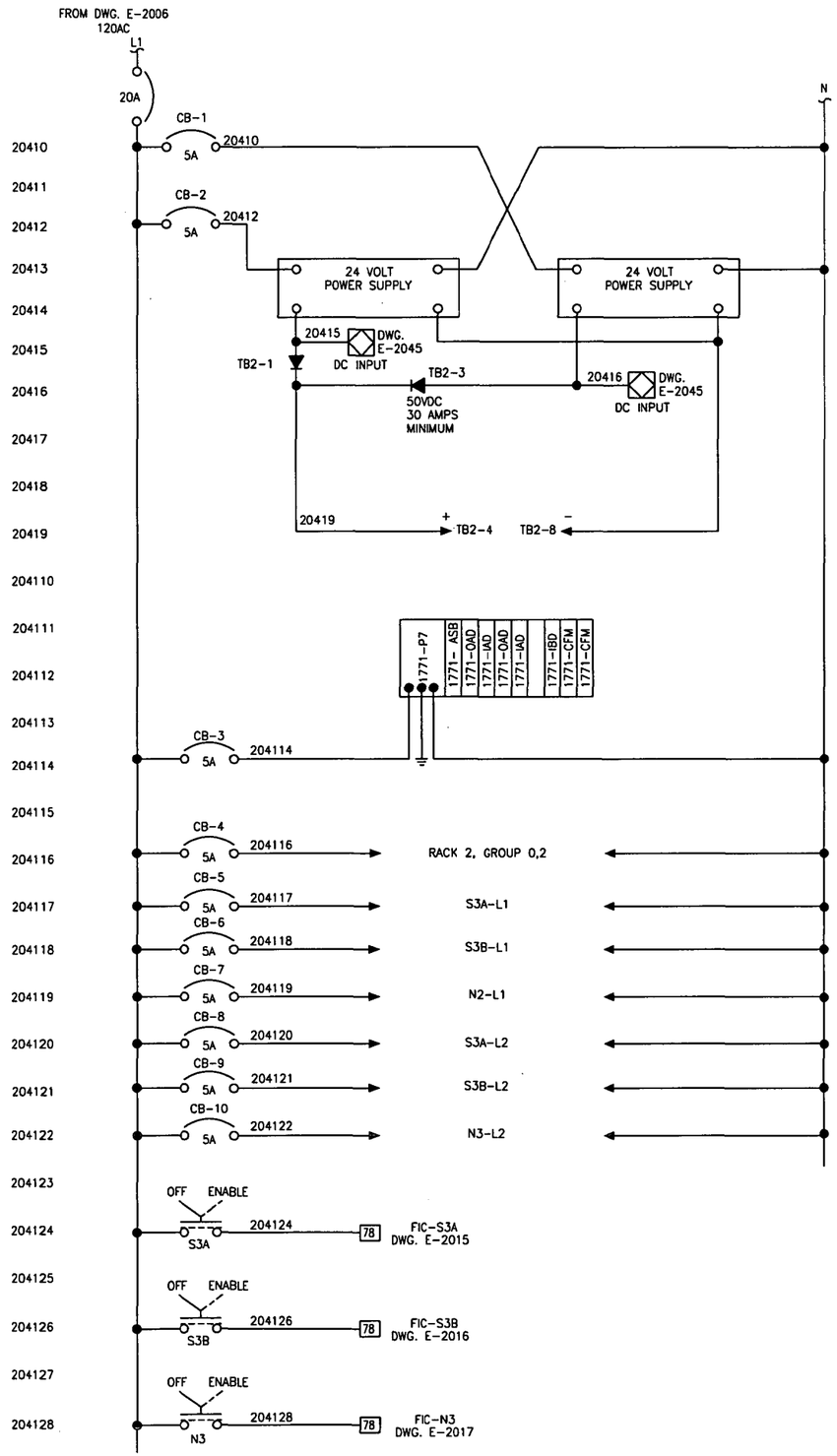

CONTROL POWER

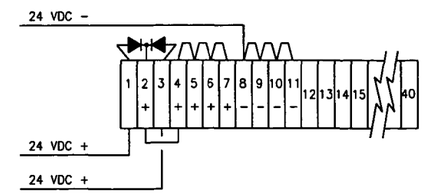

TB2 - 24VDC POWER

DRAWING NO.	REFERENCE DRAWINGS

REV	DATE	BY	CHK	REVISED
0	11/25/97	DAB	WHB	ISSUED FOR CONSTRUCTION

TOSCO
TOSCO Distribution Company
A Division of Tosco Corporation
5528 NW Doane St.
Portland, Oregon 97210

PORTLAND TERMINAL
CONTROL POWER SCHEMATIC
LANE 3 - RACK 2

ALPHA ENGINEERS and CONSTRUCTORS, INC.
19 NW 5TH AVE,SUITE 204 PORTLAND, OR. 97209 Tel: 503-227-3317

SCALE:	NONE	DESIGNED BY:	AAB
DATE:	11/05/97	CHECKED BY:	WHB
DRAWN BY:	BNJ	ENG. APPR. BY:	WHB

CADD FILE/PLOT DATE: 25E2041B.DWG <CPD: 11/25/97 TIME: 10:12 AM>

DRAWING NUMBER	SHEET	REV
0608-E-2041	1 OF 1	0

COP0021458

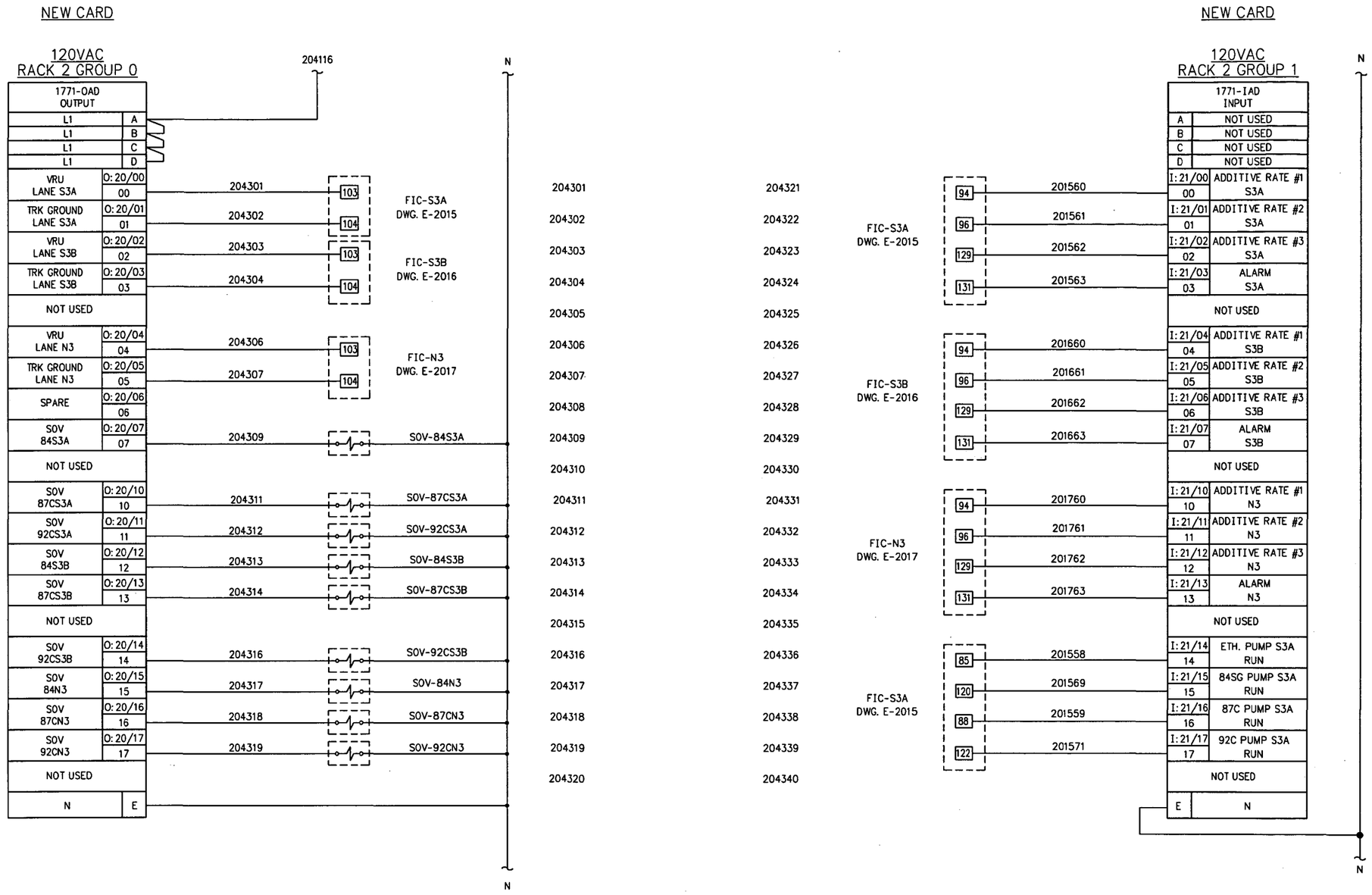

DRAWING NO.	REFERENCE DRAWINGS	REV. NO.	DATE	REVISED	DRAWN BY	CKD. BY
E-2015	ELECTRICAL LANE S2A SCHEMATIC	0	11/25/97	ISSUED FOR CONSTRUCTION	DAB	WHB
E-2016	ELECTRICAL LANE S2B SCHEMATIC					
E-2017	ELECTRICAL LANE N2 SCHEMATIC					
E-2043	PLC SCHEMATIC RACK 2 - TRUCKLOADING					

TOSCO
Tosco Distribution Company
A Division of Tosco Corporation
5528 NW Doane St.
Portland, Oregon 97210

ALPHA ENGINEERS and CONSTRUCTORS, INC.
19 NW 5th AVE, SUITE 204, PORTLAND, OR. 97209 Tel:(503)227-3317/Fax:(503)227-3244

DRAWN BY	BNJ
CHKD BY	AAB
APPD BY	WHB
SCALE	NONE
DATE	11/17/97

PORTLAND TERMINAL
PORTLAND OREGON
PLC SCHEMATIC
RACK 2 - TRUCKLOADING

DRAWING NO.	SHEET	REV.
0608-E-2043	1 OF 1	0

25E20438.DWG <CPD: 11/25/97 [TIME: 10:20 AM] >

COP0021459

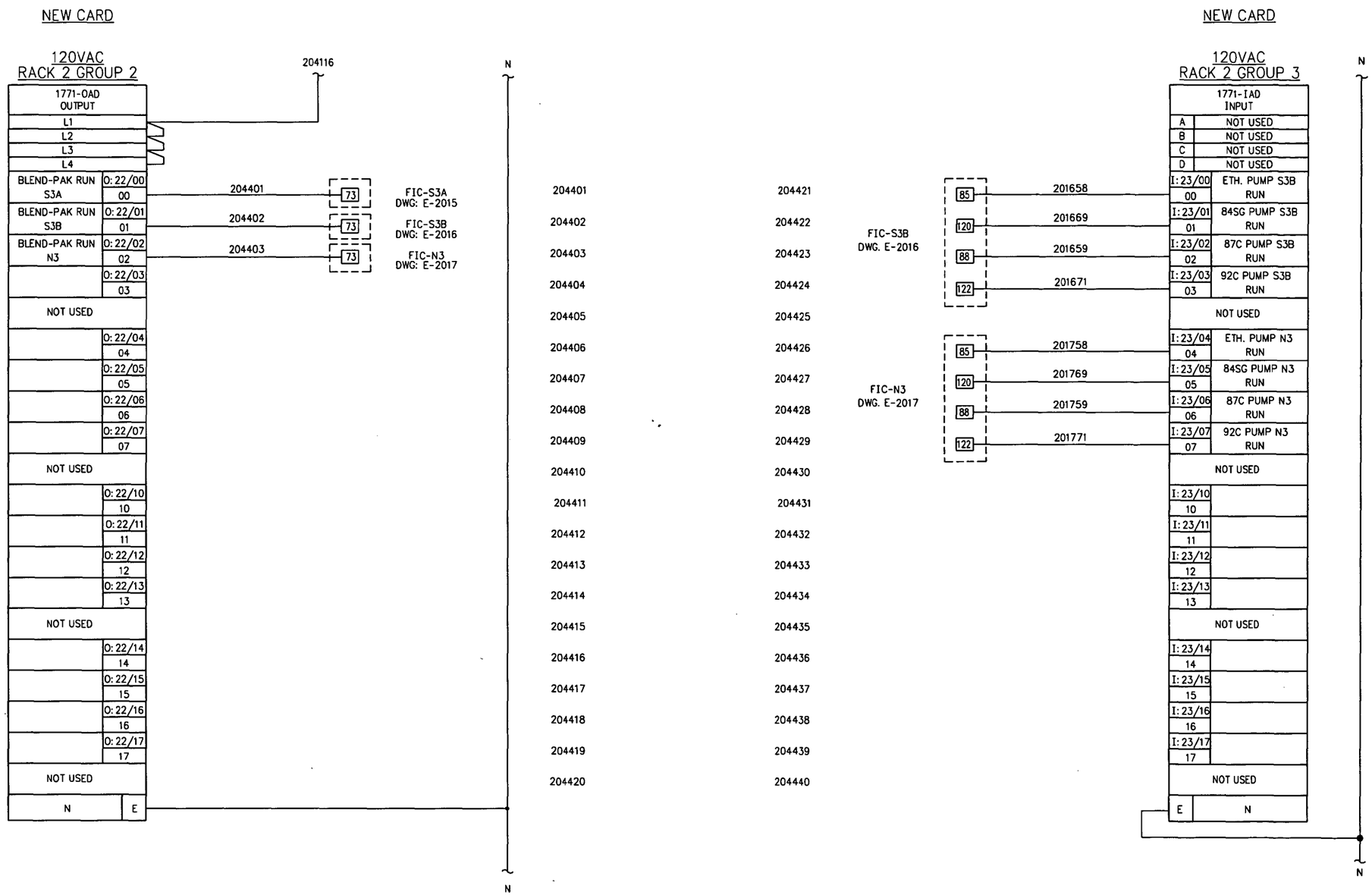

DRAWING NO.	REFERENCE DRAWINGS	REV. NO.	DATE	REVISED	DRAWN BY	CKD. BY
E-2015	ELECTRICAL LANE S3A SCHEMATIC	0	11/25/97	ISSUED FOR CONSTRUCTION	DAB	WHB
E-2016	ELECTRICAL LANE S3B SCHEMATIC					
E-2017	ELECTRICAL LANE N3 SCHEMATIC					

TOSCO
Tosco Distribution Company
A Division of Tosco Corporation
5528 NW Doane St.
Portland, Oregon 97210

ALPHA ENGINEERS and CONSTRUCTORS, INC.
19 NW 5th AVE, SUITE 204, PORTLAND, OR. 97209 Tel:(503)227-3317/Fax:(503)227-3244

DRAWN BY	BNJ
CHKD BY	AAB
APPD BY	WHB
SCALE	NONE
DATE	11/17/97

PORTLAND TERMINAL
PORTLAND OREGON
PLC SCHEMATIC
LANE 3 - RACK 2

DRAWING NO.	SHEET	REV.
0608-E-2044	1 OF 1	0

25C2044B.DWG <CPD: 11/25/97 [TIME: 10:23 AM] >

COP0021460

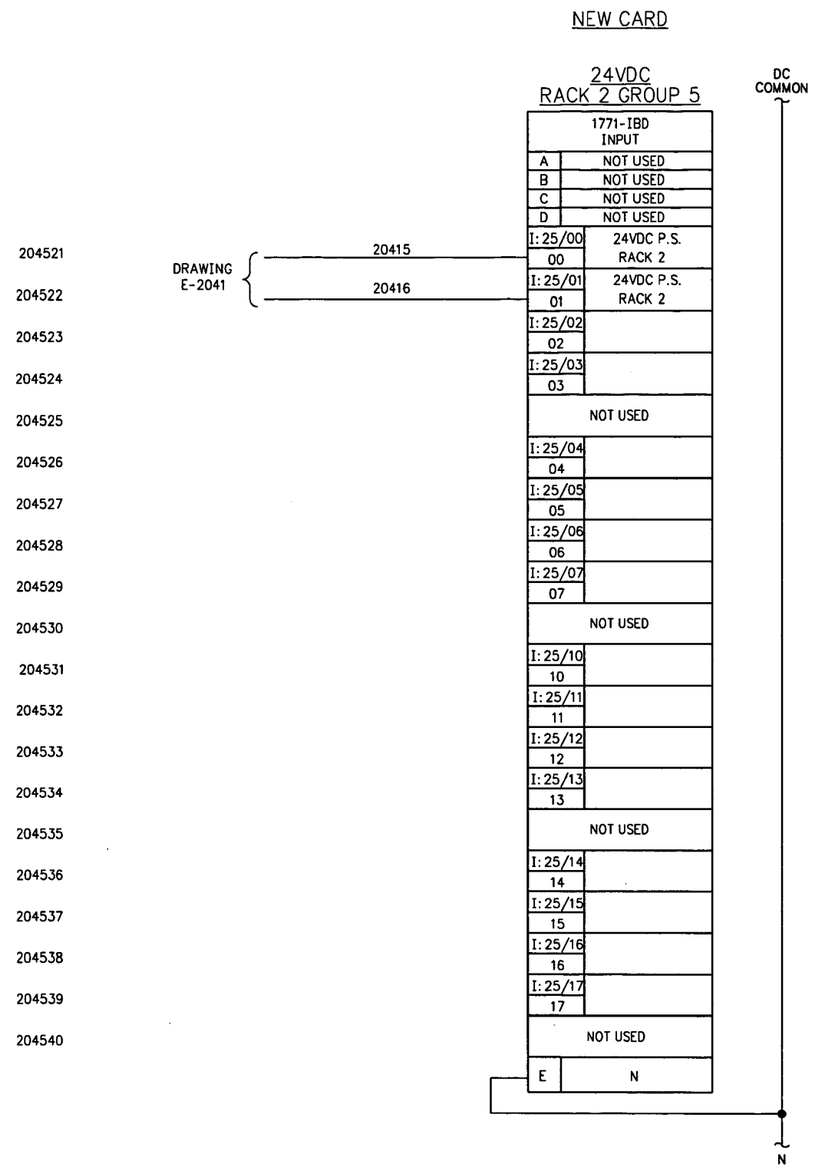

DRAWING NO.	REFERENCE DRAWINGS	REV. NO.	DATE	REVISED	DRAWN BY	CKD. BY
		0	11/25/97	ISSUED FOR CONSTRUCTION	DAB	WHB

TOSCO
Tosco Distribution Company
A Division of Tosco Corporation
5528 NW Doane St.
Portland, Oregon 97210

ALPHA ENGINEERS and CONSTRUCTORS, INC.
19 NW 5th AVE., SUITE 204, PORTLAND, OR. 97209 Tel: (503)227-3317/Fax: (503)227-3244

DRAWN BY	BNJ
CHKD BY	AAB
APPD BY	WHB
SCALE	NONE
DATE	11/17/97

PORTLAND TERMINAL
PORTLAND OREGON
PLC SCHEMATIC
LANE 3 - RACK 2

DRAWING NO.	SHEET	REV.
0608-E-2045	1 OF 1	0

25E2045B.DWG <CPD: 11/25/97 [TIME: 10:25 AM] >

COP0021461

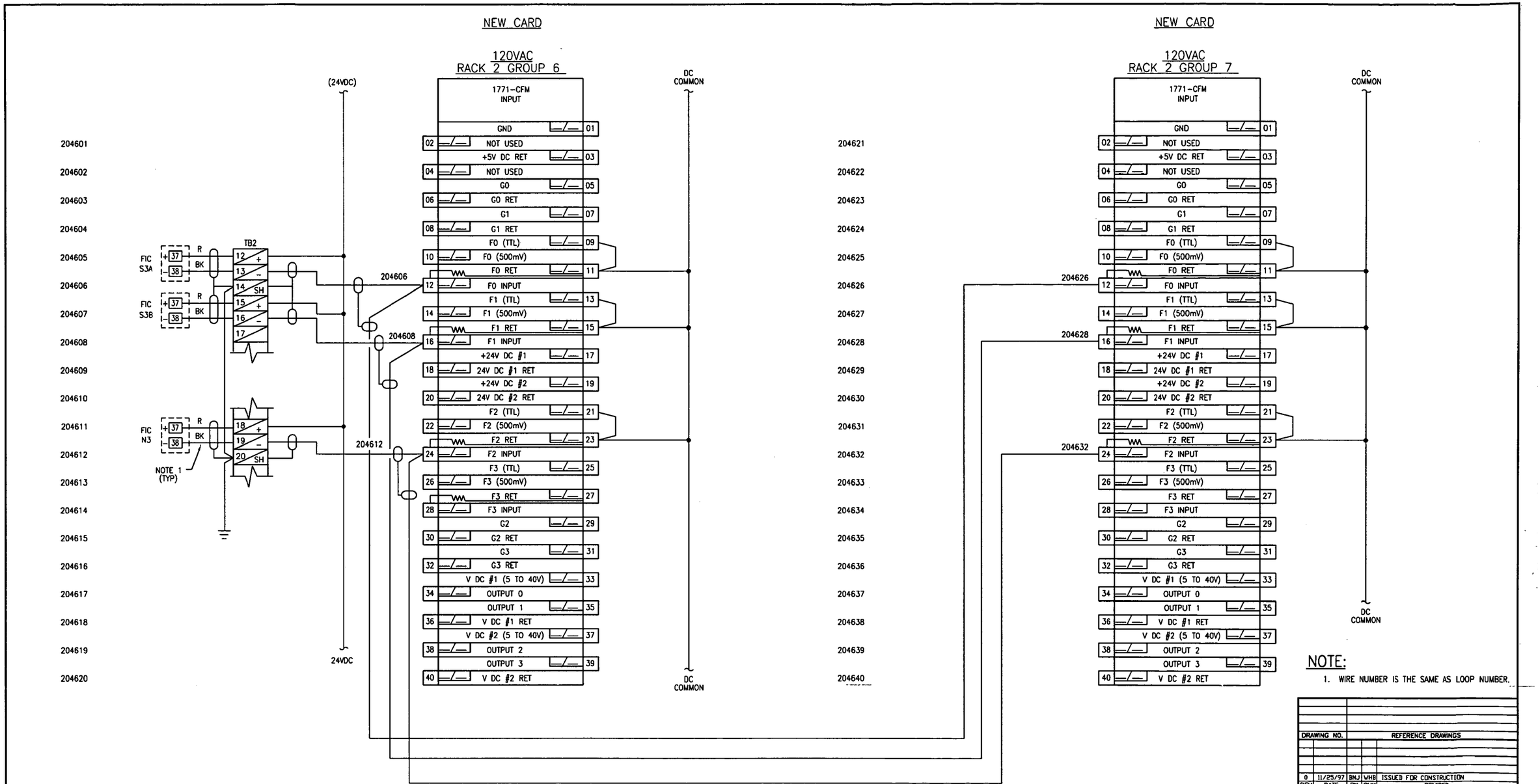

NOTE:

1. WIRE NUMBER IS THE SAME AS LOOP NUMBER.

DRAWING NO.	REFERENCE DRAWINGS

REV	DATE	BY	CHK	REVISED
0	11/25/97	BNJ	WHB	ISSUED FOR CONSTRUCTION

TOSCO
TOSCO Distribution Company
A Division of Tosco Corporation
5528 NW Doane St.
Portland, Oregon 97210

PORTLAND TERMINAL
PLC SCHEMATIC
LANE 3 – RACK 2

ALPHA ENGINEERS and CONSTRUCTORS, INC.
19 NW 5TH AVE,SUITE 204 PORTLAND, OR. 97209 Tel: 503-227-3317

SCALE:	NONE	DESIGNED BY:	AAB
DATE:	11/17/98	CHECKED BY:	WHB
DRAWN BY:	BNJ	ENG. APPR. BY:	WHB

CADD FILE/PLOT DATE: 25E2046B.DWG <CPD: 11/25/97 TIME: 10:29 AM>

DRAWING NUMBER	SHEET	REV
0608-E-2046	1 OF 1	0

COP0021462

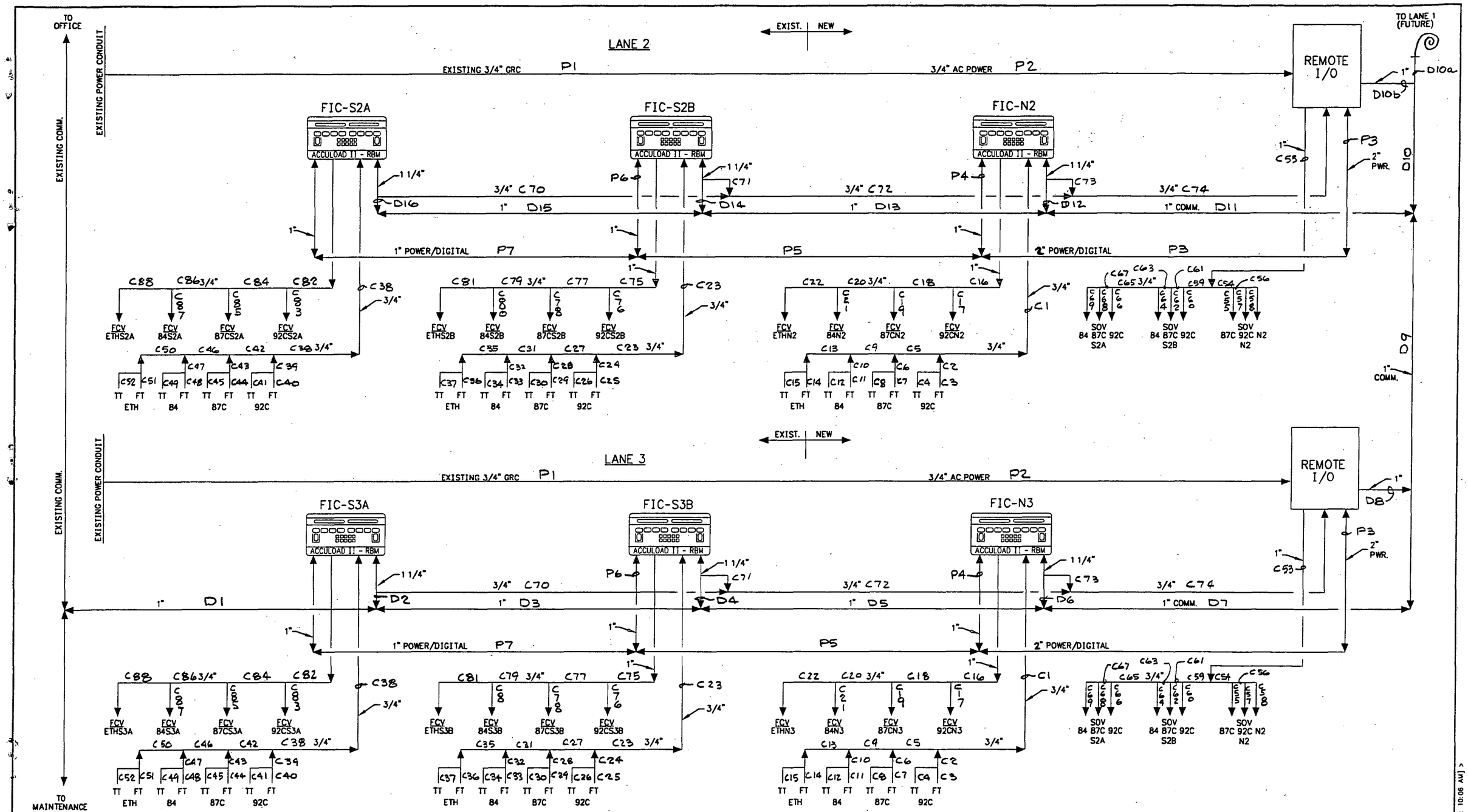

DRAWING NO.	REFERENCE DRAWINGS	REV. NO.	DATE	REVISED	DRAWN BY	CKD. BY
		0	11/25/97	ISSUED FOR CONSTRUCTION	BNJ	DAB

TOSCO
Tosco Northwest Company
A Division of Tosco Corporation
5528 NW Doane St.
Portland, Oregon 97210

ALPHA ENGINEERS and CONSTRUCTORS, INC.
19 NW 5th AVE. SUITE 204, PORTLAND, OR. 97209 Tel:(503)227-3317/Fax:(503)227-3244

DRAWN BY	BNJ
CHKD BY	AAB
APPD BY	WHB
SCALE	NONE
DATE	11/17/97

PORTLAND TERMINAL
PORTLAND, OREGON
ELECTRICAL
CONDUIT INTERCONNECT DIAGRAM
LANE 2 AND 3

DRAWING NO.	SHEET	REV.
0608-E-2060	1 OF 1	0

25E20608.DWG <CPD: 11/25/97 [TIME: 10:06 AM]>

COP0021463

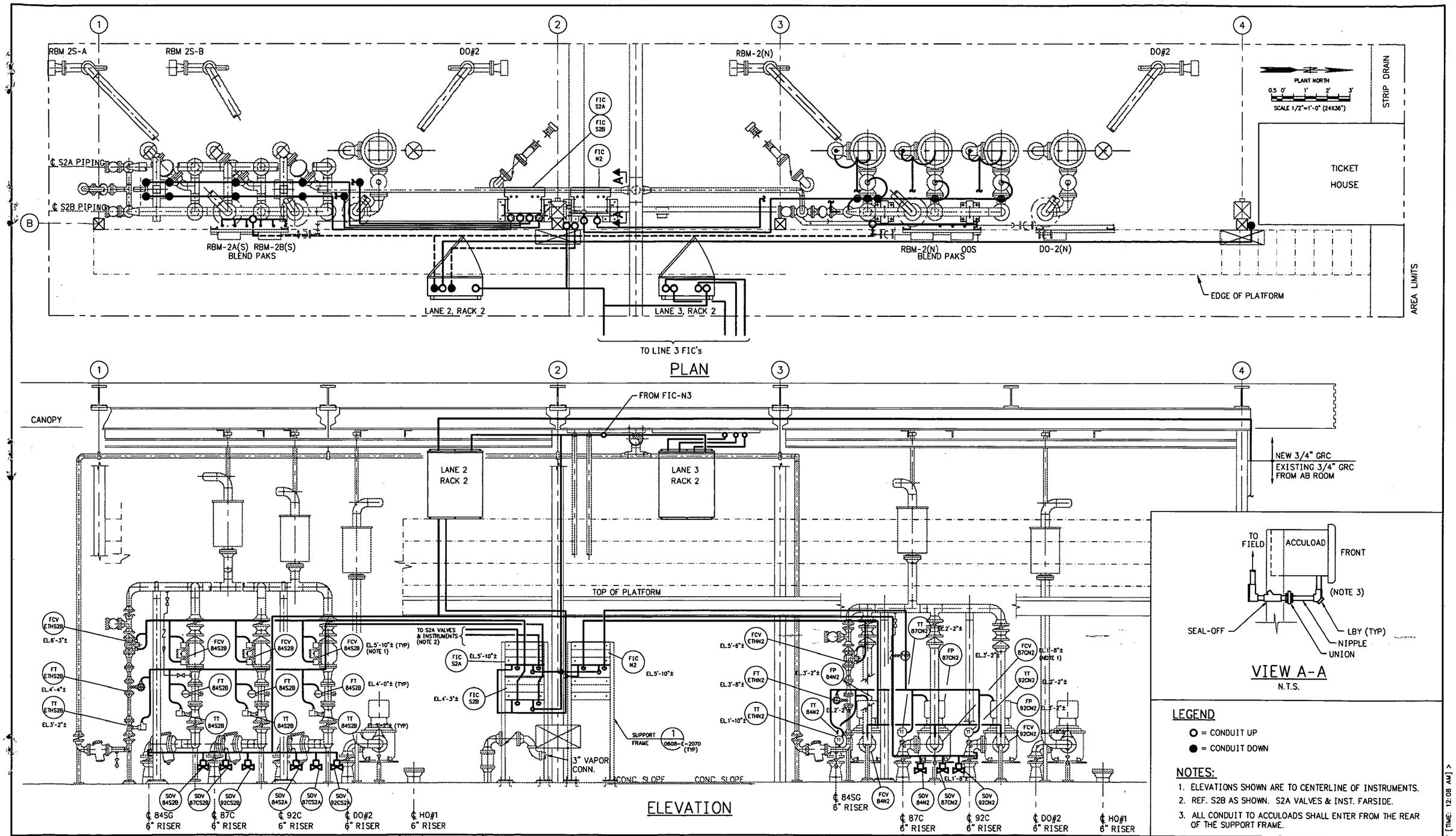

DRAWING NO.	REFERENCE DRAWINGS	REV. NO.	DATE	REVISED	DRAWN BY	CKD. BY
		0	11/25/97	ISSUED FOR CONSTRUCTION	DAB	AAB

TOSCO
Tosco Distribution Company
A Division of Tosco Corporation
5528 NW Doane St.
Portland, Oregon 97210

ALPHA ENGINEERS and CONSTRUCTORS, INC.
19 NW 5th AVE, SUITE 204, PORTLAND, OR. 97209 Tel: (503)227-3317/Fax: (503)227-3244

DRAWN BY	DAB
CHKD BY	AAB
APPD BY	WHB
SCALE	AS SHOWN
DATE	11/17/97

PORTLAND TERMINAL
PORTLAND, OREGON
TRUCK LOAD RACK UPGRADE PROJECT
ELECTRICAL
CONDUIT LAYOUT
LANE 2

DRAWING NO.	SHEET	REV.
0608-E-2062	1 OF 1	0

25E20620.DWG <CPD: 11/25/97 [TIME: 12:08 AM] >

COP0021464

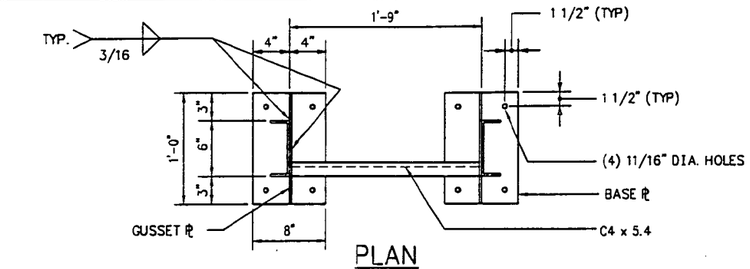

PLAN

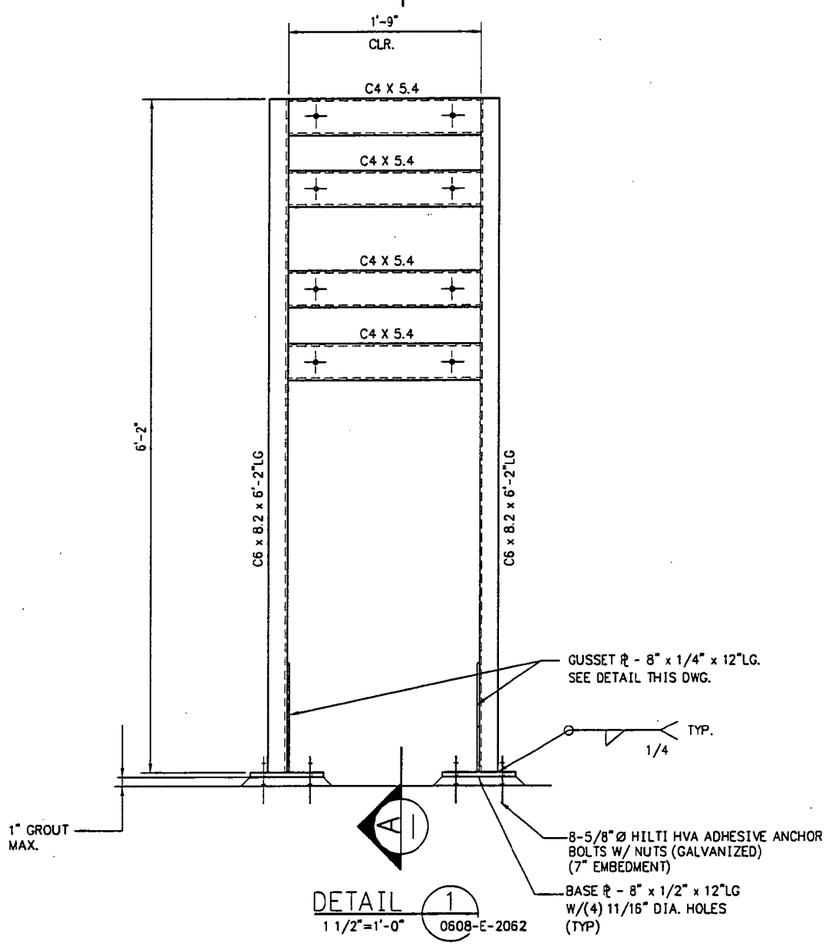

DETAIL 1 / 0608-E-2062
1 1/2"=1'-0"

SUPPORT FRAME

(4 REQUIRED)

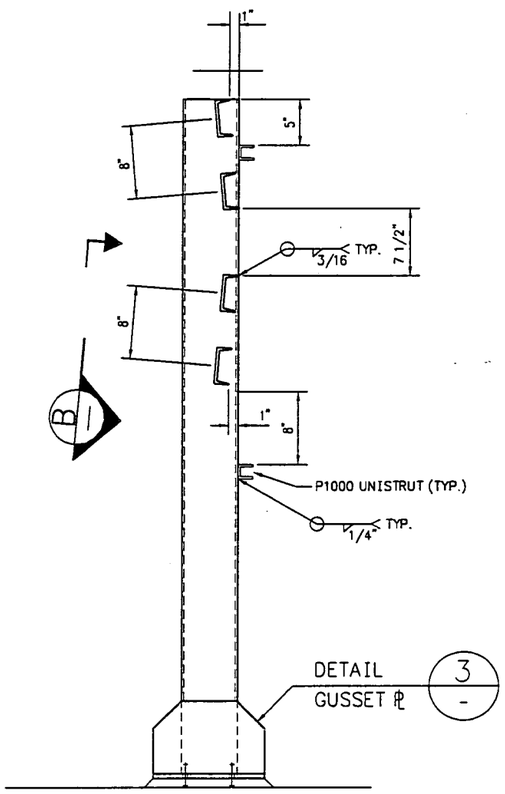

SECTON A
1 1/2"=1'-0"

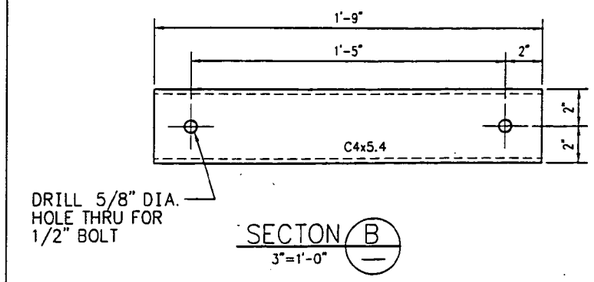

SECTON B
3"=1'-0"

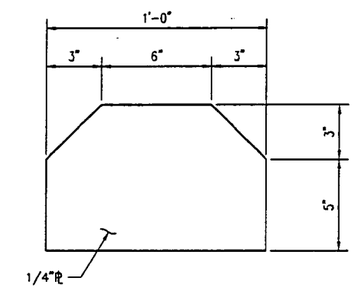

GUSSET PLATE

DETAIL 3
3"=1'-0"

NOTES

1. REMOVE ANY SHARP EDGES.
2. SHOP PRIME AND TOP COAT ALL SURFACES.

DRAWING NO.	REFERENCE DRAWINGS	REV. NO.	DATE	REVISED	DRAWN BY	CKD. BY
0608-E-2062	LANE 2 CONDIUT PLAN	0	11/21/97	ISSUE FOR FABRICATION	DAB	WHB
0608-E-20XX	LANE 3 CONDIUT PLAN					

TOSCO
Tosco Distribution Company
A Division of Tosco Corporation
5528 NW Doane St.
Portland, Oregon 97210

ALPHA ENGINEERS and CONSTRUCTORS, INC.
19 NW 5th AVE., SUITE 204, PORTLAND, OR. 97209 Tel:(503)227-3317/Fax:(503)227-3244

DRAWN BY	DAB
CHKD BY	WHB
APPD BY	WHB
SCALE	NONE
DATE	11/17/97

PORTLAND TERMINAL
PORTLAND OREGON
ELECTRICAL
ACCULOAD RBM
SUPPORT FRAME

DRAWING NO.	SHEET	REV.
0608-E-2070	1 OF 1	0

25E20448.DWG <CPD: 11/19/97 [TIME: 10:43 AM] >

COP00214655

ALPHA
ENGINEERS and
CONSTRUCTORS, INC.

19 N.W. 5TH AVENUE • SUITE 204 • PORTLAND, OR 97209
TEL 503.227.3317 • FAX 503.227.3244

TRANSMITTAL LETTER

No. 2503-001

To: Dennis Coey
Tosco Corporation
5528 N.W. Doane Ave.
Portland, OR 97210
(503) 248-1558

From: Bill Bishop
Date: 11/25/97

Project: TOSCO Portland Terminal Truck Load Rack Upgrade Project

Item	Drawing No.	Document Title	Issued For:	Qty.	Rev.	Form
1	Set Drawings	E&I Construction Drawings Truck Rack Upgrade Project	Constr.	27	0	11x17

Transmitted by:

William Bishop, P.E.

cc: Roger McGowne - TOSCO Portland
Bill Tyska
Project File

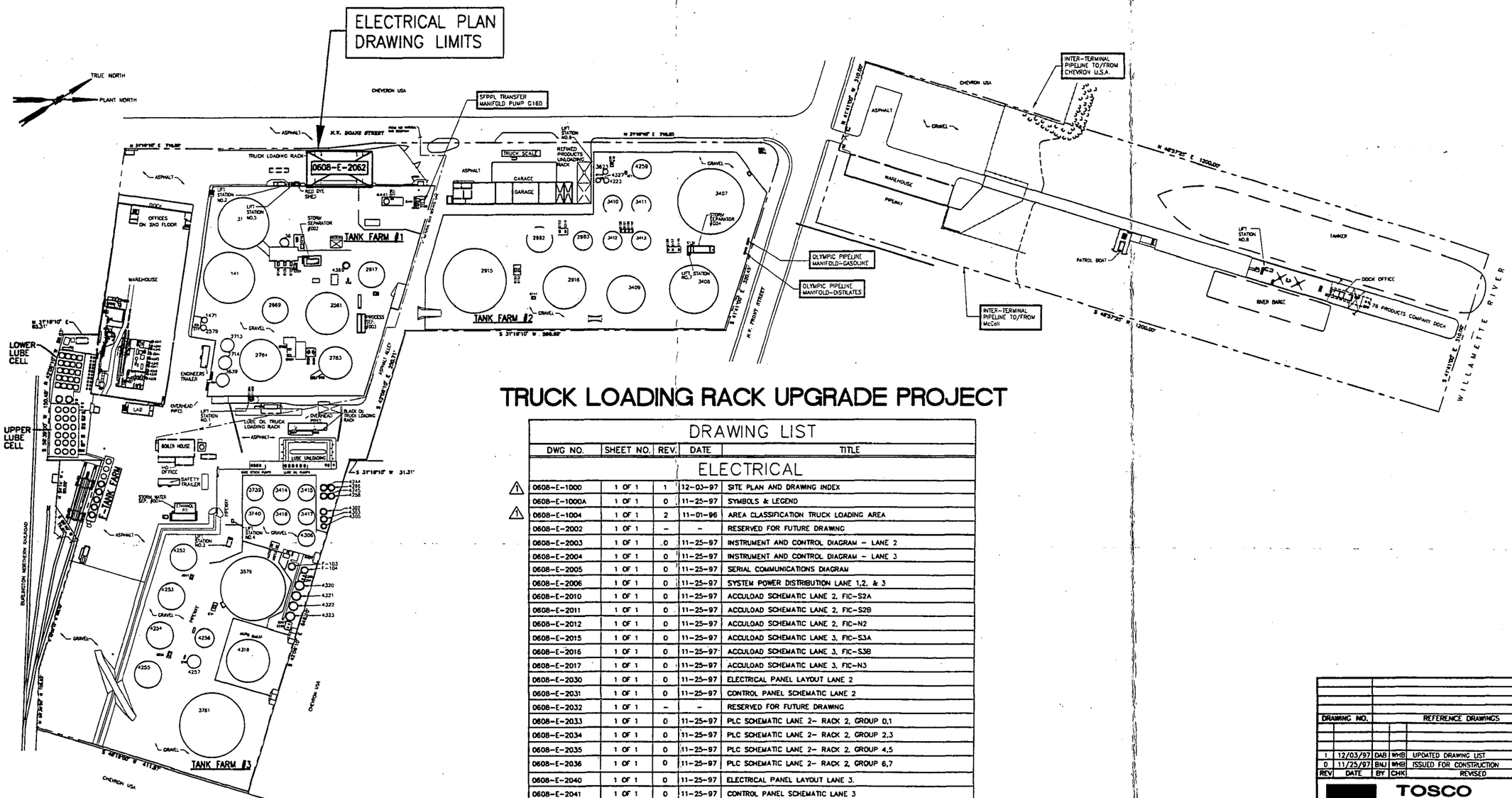

SITE PLAN
SCALE: 1" = 90'
90' 0' 90' 180'

TRUCK LOADING RACK UPGRADE PROJECT

DRAWING LIST

DWG NO.	SHEET NO.	REV.	DATE	TITLE
				ELECTRICAL
0608-E-1000	1 OF 1	1	12-03-97	SITE PLAN AND DRAWING INDEX
0608-E-1000A	1 OF 1	0	11-25-97	SYMBOLS & LEGEND
0608-E-1004	1 OF 1	2	11-01-96	AREA CLASSIFICATION TRUCK LOADING AREA
0608-E-2002	1 OF 1	–	–	RESERVED FOR FUTURE DRAWING
0608-E-2003	1 OF 1	0	11-25-97	INSTRUMENT AND CONTROL DIAGRAM – LANE 2
0608-E-2004	1 OF 1	0	11-25-97	INSTRUMENT AND CONTROL DIAGRAM – LANE 3
0608-E-2005	1 OF 1	0	11-25-97	SERIAL COMMUNICATIONS DIAGRAM
0608-E-2006	1 OF 1	0	11-25-97	SYSTEM POWER DISTRIBUTION LANE 1,2, & 3
0608-E-2010	1 OF 1	0	11-25-97	ACCULOAD SCHEMATIC LANE 2, FIC-S2A
0608-E-2011	1 OF 1	0	11-25-97	ACCULOAD SCHEMATIC LANE 2, FIC-S2B
0608-E-2012	1 OF 1	0	11-25-97	ACCULOAD SCHEMATIC LANE 2, FIC-N2
0608-E-2015	1 OF 1	0	11-25-97	ACCULOAD SCHEMATIC LANE 3, FIC-S3A
0608-E-2016	1 OF 1	0	11-25-97	ACCULOAD SCHEMATIC LANE 3, FIC-S3B
0608-E-2017	1 OF 1	0	11-25-97	ACCULOAD SCHEMATIC LANE 3, FIC-N3
0608-E-2030	1 OF 1	0	11-25-97	ELECTRICAL PANEL LAYOUT LANE 2
0608-E-2031	1 OF 1	0	11-25-97	CONTROL PANEL SCHEMATIC LANE 2
0608-E-2032	1 OF 1	–	–	RESERVED FOR FUTURE DRAWING
0608-E-2033	1 OF 1	0	11-25-97	PLC SCHEMATIC LANE 2– RACK 2, GROUP 0,1
0608-E-2034	1 OF 1	0	11-25-97	PLC SCHEMATIC LANE 2– RACK 2, GROUP 2,3
0608-E-2035	1 OF 1	0	11-25-97	PLC SCHEMATIC LANE 2– RACK 2, GROUP 4,5
0608-E-2036	1 OF 1	0	11-25-97	PLC SCHEMATIC LANE 2– RACK 2, GROUP 6,7
0608-E-2040	1 OF 1	0	11-25-97	ELECTRICAL PANEL LAYOUT LANE 3.
0608-E-2041	1 OF 1	0	11-25-97	CONTROL PANEL SCHEMATIC LANE 3
0608-E-2042	1 OF 1	–	–	RESERVED FOR FUTURE DRAWING
0608-E-2043	1 OF 1	0	11-25-97	PLC SCHEMATIC, LANE 3 – RACK 2, GROUP 0,1
0608-E-2044	1 OF 1	0	11-25-97	PLC SCHEMATIC, LANE 3 – RACK 2, GROUP 2,3
0608-E-2045	1 OF 1	0	11-25-97	PLC SCHEMATIC, LANE 3 – RACK 2, GROUP 4,5
0608-E-2046	1 OF 1	0	11-25-97	PLC SCHEMATIC LANE 3 – RACK 2, GROUP 6,7
0608-E-2060	1 OF 1	1	12-04-97	CONDUIT INTERCONNECT DIAGRAM LANE 2 AND 3
0608-E-2061	1 OF 1	–	–	RESERVED FOR FUTURE DRAWING
0608-E-2062	1 OF 1	1	12-03-97	CONDUIT LAYOUT LANE 2
0608-E-2063	1 OF 1	–	–	RESERVED FOR FUTURE DRAWING
0608-E-2070	1 OF 1	–	–	RESERVED FOR FUTURE DRAWING

DRAWING NO.			REFERENCE DRAWINGS
1	12/03/97	DAB	WHB	UPDATED DRAWING LIST
0	11/25/97	BNJ	WHB	ISSUED FOR CONSTRUCTION
REV	DATE	BY	CHK	REVISED

TOSCO
TOSCO Distribution Company
A Division of Tosco Corporation
5528 NW Doane St.
Portland, Oregon 97210

PORTLAND TERMINAL
SITE PLAN
ELECTRICAL

ALPHA ENGINEERS and CONSTRUCTORS, INC.
19 NW 5TH AVE.SUITE 204 PORTLAND, OR. 97209 Tel: 503-227-3317

SCALE:	NONE	DESIGNED BY:	DAB
DATE:	11/17/97	CHECKED BY:	WHB
DRAWN BY:	BNJ	ENG. APPR. BY:	WHB
CADD FILE/PLOT DATE:	\25E1000.DWG <CPO: 12/03/97	TIME: 4:28 PM >	

DRAWING NUMBER	SHEET	REV
0608-E-1000	1 OF 1	1

COP00021467

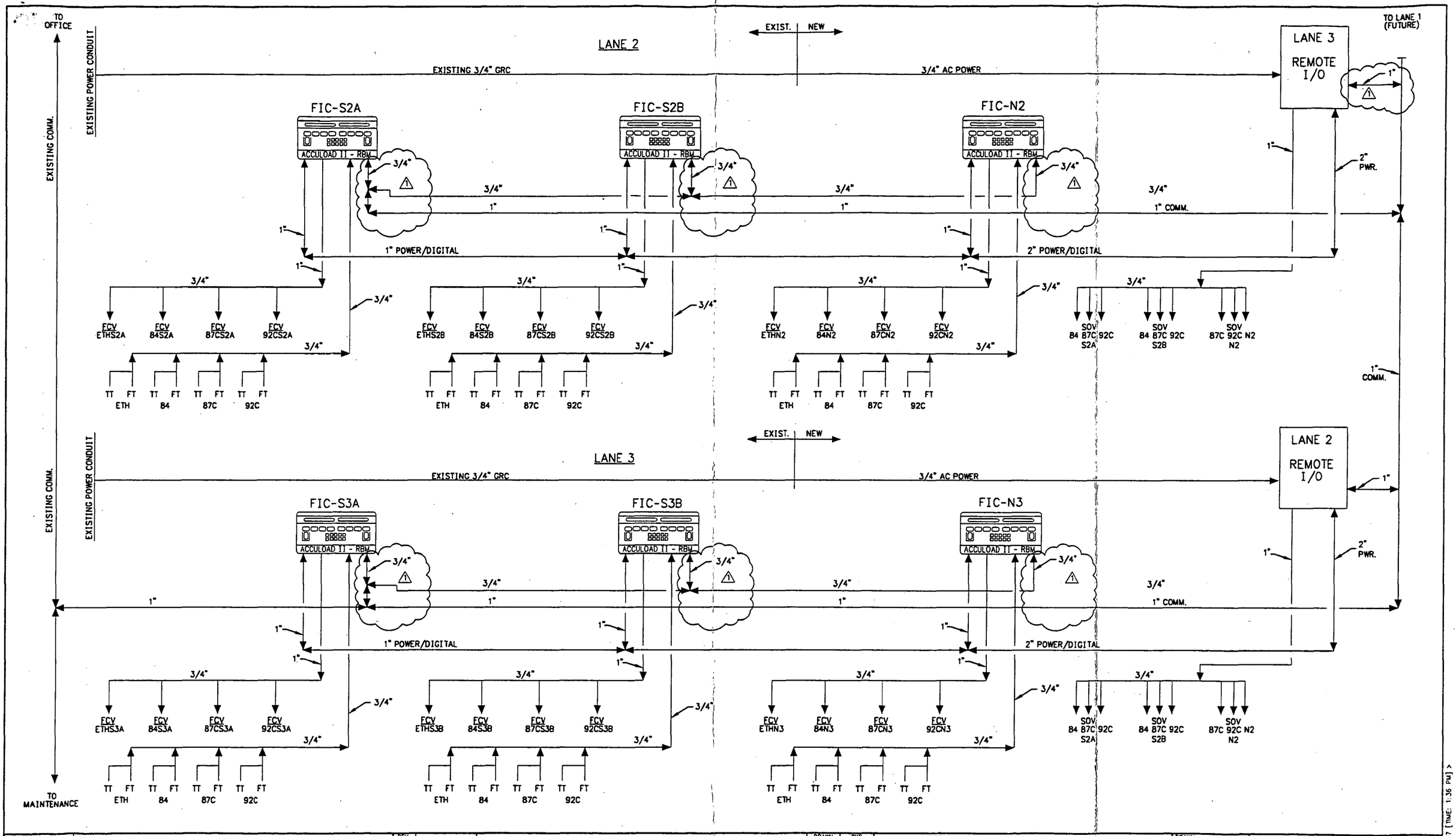

DRAWING NO.	REFERENCE DRAWINGS	REV. NO.	DATE	REVISED	DRAWN BY	CKD. BY
/		0	11/25/97	ISSUED FOR CONSTRUCTION	BNJ	DAB
		1	12/04/97	MODIFIED CONDUIT RUNS	DAB	WHB

TOSCO
Tosco Northwest Company
A Division of Tosco Corporation
5528 NW Doane St.
Portland, Oregon 97210

ALPHA ENGINEERS and CONSTRUCTORS, INC.
19 NW 5th AVE, SUITE 204, PORTLAND, OR. 97209 Tel:(503)227-3317/Fax:(503)227-3244

DRAWN BY	BNJ
CHKD BY	AAB
APPD BY	WHB
SCALE	NONE
DATE	11/17/97

PORTLAND TERMINAL
PORTLAND, OREGON
ELECTRICAL
CONDUIT INTERCONNECT DIAGRAM
LANE 2 AND 3

DRAWING NO.	SHEET	REV.
0608-E-2060	1 OF 1	1

25E20601.DWG <CPD: 12/04/97 [TIME: 1:36 PM] >

COP0021468

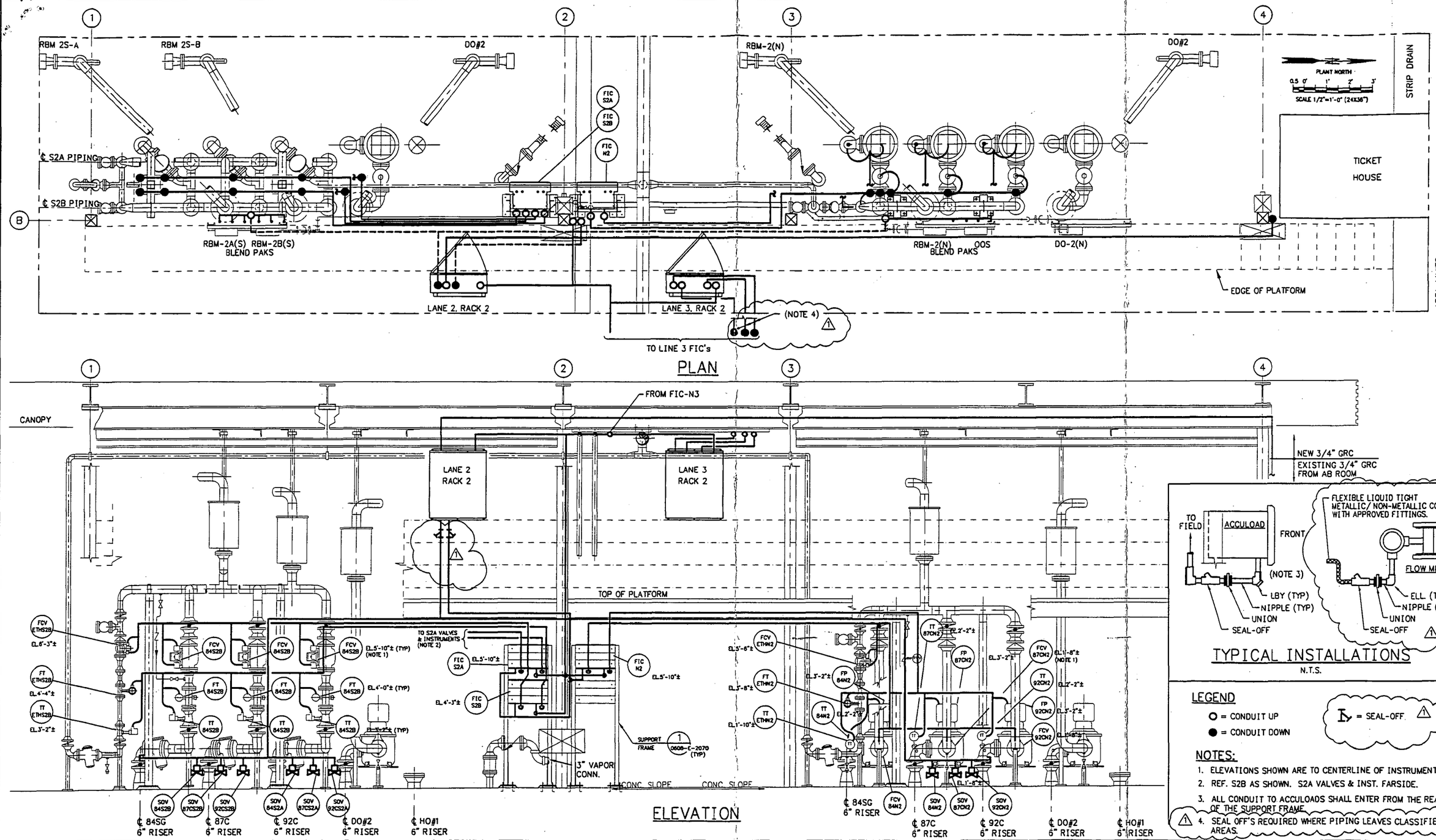

DRAWING NO.	REFERENCE DRAWINGS	REV. NO.	DATE	REVISED	DRAWN BY	CKD. BY
		0	11/25/97	ISSUED FOR CONSTRUCTION	DAB	AAB
		1	12/03/97	ADDED SEAL-OFFS, FLOW METER TYPICAL INSTALLATION	DAB	WHB

TOSCO
Tosco Distribution Company
A Division of Tosco Corporation
5528 NW Doane St.
Portland, Oregon 97210

ALPHA ENGINEERS and CONSTRUCTORS, INC.
19 NW 5th AVE, SUITE 204, PORTLAND, OR. 97209 Tel: (503)227-3317/Fax: (503)227-3244

DRAWN BY	DAB
CHKD BY	AAB
APPD BY	WHB
SCALE	AS SHOWN
DATE	11/17/97

PORTLAND TERMINAL
PORTLAND, OREGON
TRUCK LOAD RACK UPGRADE PROJECT
ELECTRICAL
CONDUIT LAYOUT
LANE 2

DRAWING NO.	SHEET	REV.
0608-E-2062	1 OF 1	1

25E20621.DWG <CPD: 12/03/97 [TIME: 4:16 PM] >

COP00214699

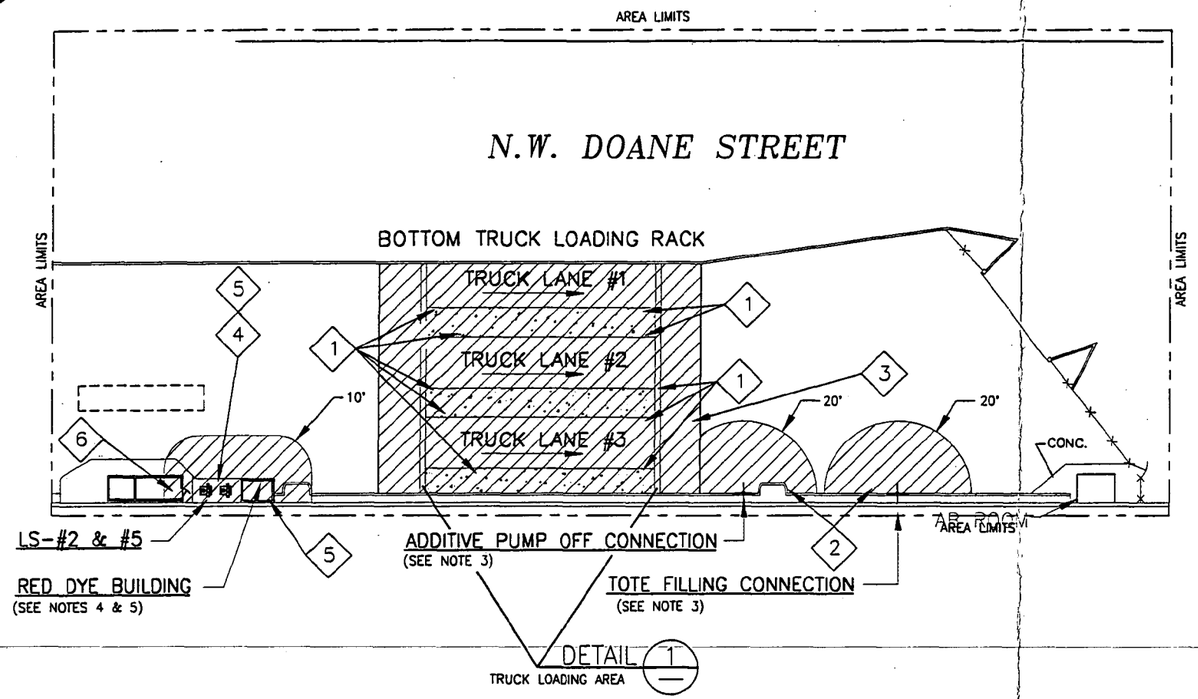

PLAN

SCALE: 1" = 20'

20' 0' 20' 40'

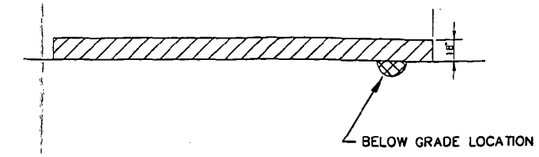

TRUCK LOADING AREA

DETAIL 1
SCALE: NTS

LEGEND

CLASS I, DIVISION 1

CLASS I, DIVISION 2

4 — ELECTRICAL SURVEY RECOMMENDATION ITEM NUMBERS

NOTES:

1. ALL SUMPS, PITS AND BELOW GRADE AREAS IN A CLASSIFIED AREA ARE CONSIDERED CLASS I, DIVISION 1.
2. ALL SUMPS, PITS AND BELOW GRADE AREAS IN AN UNCLASSIFIED AREA ARE CONSIDERED CLASS I, DIVISION 2.
3. CLASSIFIED AREA EXTENDS 18" FROM EDGE OF THE CONNECTION AND HORIZONTALLY 20' AT AN ELEVATION OF 18".
4. CLASSIFIED AREA EXTENDS 36" FROM THE EDGE OF THE BUILDING AND HORIZONTALLY 10' AT AN ELEVATION OF 18"
5. INSIDE RED DYE BUILDING IS CLASS 1, DIVISION 1.
6. CLASS 1, DIVISION 2 AREA EXTENDS 15' FROM OUTSIDE.

DRAWING NO.	REFERENCE DRAWINGS	REV. NO.	DATE	REVISED	DRAWN BY	CKD. BY
0608-E-1000	ELECTRICAL AREA CLASSIFICATION - INDEX PLAN	A	10/19/95	ISSUED FOR UNOCAL REVIEW	DC	GRE
0608-E-1001	ELECTRICAL AREA CLASSIFICATION - TANK FARM #1	0	1/3/96	REVISED PER UNOCAL COMMENTS, ISSUED AFC	DC	GRE
0608-E-1002	ELECTRICAL AREA CLASSIFICATION - TANK FARM #2	1	4/15/96	REVISED BY ROBERTS TECHNICAL SERVICES & AECI	NF	UNK
0608-E-1003	ELECTRICAL AREA CLASSIFICATION - GARAGE	2	11/01/96	ADDED SURVEY ITEM NUMBERS	DAB	WHB
0608-E-1005	ELECTRICAL AREA CLASSIFICATION - RAIL CAR LOADING					
0608-E-1006	ELECTRICAL AREA CLASSIFICATION - DOCK LOADING & UNLOADING					

TOSCO
Tosco Distribution Company
A Division of Tosco Corporation
5528 NW Doane St.
Portland, Oregon 97210

ALPHA ENGINEERS and CONSTRUCTORS, INC.
19 NW 5th AVE, SUITE 204, PORTLAND, OR. 97209 Tel:(503)227-3317/Fax:(503)227-3244

DRAWN BY	DC
CHKD BY	GRE
APPD BY	DAB
SCALE	1"=20'
DATE	1/3/96

PORTLAND TERMINAL
PORTLAND, OREGON
ELECTRICAL
AREA CLASSIFICATION
TRUCK LOADING AREA

DRAWING NO.	SHEET	REV.
0608-E-1004	1 OF 1	2

6GE104-2.DWG <CPD: 12/03/97 [TIME: 4:24 PM]>

COP0021470

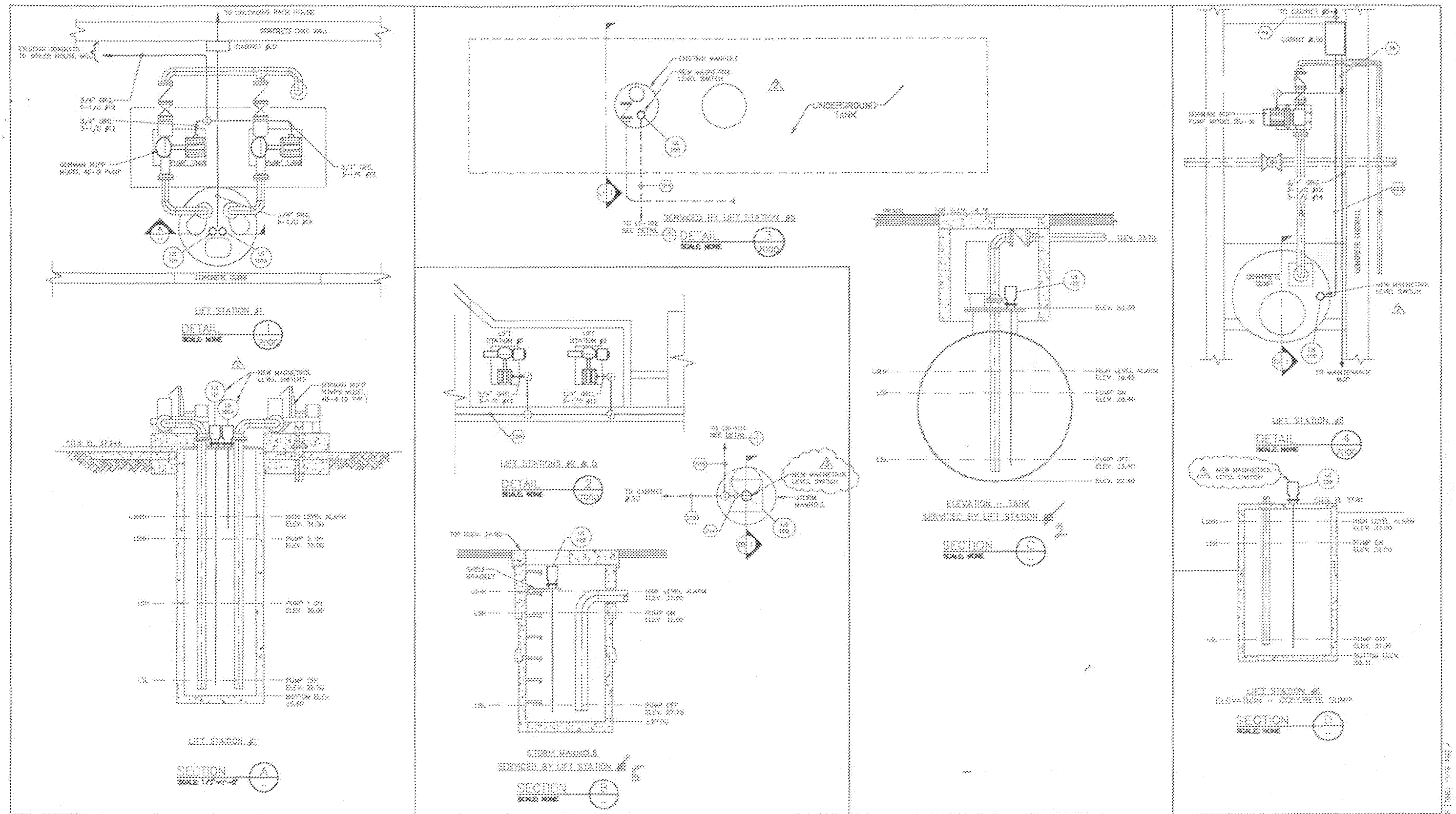
UNOCAL
76 PRODUCTS COMPANY
LOS ANGELES, CALIFORNIA
ALPHA
ENGINEERS and
CONSTRUCTORS, INC.
PORTLAND TERMINAL
1995-2000 MODIFICATIONS
ELECTRICAL
CONDUIT ROUTING
SHEET 2 OF 2
08/18/95
0609-E-7014
2 OF 2
3
REVISIONS (PRIMARY)
REVISED BY
DATE
REMARKS
0 08/30/95 ISSUE FOR CONSTRUCTION
1 11/27/95 GENERAL REVISION
2 01/17/96 CHANGE SWITCHES TO MONITORS
3 03/01/96 REMOVE LS-105 & LS-106 FROM CONTROL TO MONITORS
DETAIL
SECTION
UNDERGROUND TANK
ELEVATION - TANK
SERVICED BY LIFT STATION #2
LIFT STATIONS #4 & 5
LIFT STATION #6
LIFT STATION #7
CITRAN TANKS
SERVICED BY LIFT STATION #6

COP0021471

ALPHA
ENGINEERS and
CONSTRUCTORS, INC.

19 N.W. 5TH AVENUE • SUITE 204 • PORTLAND, OR 97209
TEL 503.227.3317 • FAX 503.227.3244

TRANSMITTAL LETTER
No. 2503-002

To: Dennis Coey
Tosco Corporation
5528 N.W. Doane Ave.
Portland, OR 97210
(503) 248-1538

From: W. Bishop
Date: 12/04/97

Project: TOSCO Portland Terminal Truck Load Rack Upgrade Project

Item	Drawing No.	Document Title	Issued For:	Qty.	Rev.	Form
1	0608-E-1000	Site Plan - Electrical	Constr.	3	1	11x17
2	0608-E-2060	Con. Inter. Dia.	Constr.	3	2	11X17
3	0608-E-2062	Elec. Conduit Layout	Constr.	3	1	11X17
4	0608-E-1004	Area Classification	Constr.	3	2	11X17

Transmitted by:

William Bishop, P.E.

cc: Roger McGowne - TOSCO Portland
Bill Tyska
Project File

ONE LINE DIAGRAM SYMBOLS

SYMBOL	DESCRIPTION
	1-PHASE, TWO-WINDING XFMR
	3-PHASE, TWO-WINDING XFMR WITH DELTA-WYE CONNECTIONS
	3-PHASE, 3 WIRE, WYE, GROUNDED
*	CURRENT TRANSFORMER • INDICATES QUANTITY
*	POTENTIAL TRANSFORMER WITH PRIMARY FUSE • INDICATES QUANTITY
	SURGE ARRESTER
	FUSE, THERMAL CURRENT
	ISOLATING PRIMARY FUSE CUTOUT, DRY
	ISOLATING FUSE SWITCH FOR ON-LOAD SWITCHING
	MEDIUM-VOLTAGE STARTER WITH CURRENT LIMITING FUSES • INDICATES FUSE AND STARTER SIZES
	FUSED SAFETY SWITCH • INDICATES SWITCH AND FUSE RATING
	DISCONNECT SWITCH, GROUP OPERATED
	DISCONNECT SWITCH, STICK OPERATED
	DISCONNECT SWITCH, SELF OR DOUBLE-THROW
	CIRCUIT BREAKER, LOW VOLTAGE, MOLDED CASE
	POTHEAD
M	WOUND-ROTOR INDUCTION MOTOR
	SWITCHES (• INDICATES TYPE) SS - SELECTOR, AS - AMMETER VS - VOLTMETER SYN - SYNCHRONIZING
	TRANSDUCER (• INDICATES TYPE)
	GENERATOR, INSTRUMENT, METER, OR MOTOR (• INDICATES TYPE)

A	AMMETER	PF	POWER FACTOR
F	FREQ METER	PI	POSITION INDICATOR
SYS	SYNCHROSCOPE	REC	RECORDING METER
V	VOLTMETER	T	TEMP RECORDING METER
VAR	VARMETER	VA	VOLT-AMPERE METER
W	WATTMETER	VARH	VARHOUR METER
TT	TOTAL TIME METER	WHD	WATTHOUR-DETECTOR METER
GD	GROUND DETECTOR	WH	WATTHOUR METER
G	GENERATOR	M	MOTOR

SCHEMATIC/WIRING DIAGRAM SYMBOLS

SYMBOL	DESCRIPTION
	NORMALLY OPEN LIMIT SWITCH
	NORMALLY OPEN LIMIT SWITCH HELD CLOSED
	NORMALLY CLOSED LIMIT SWITCH
	NORMALLY CLOSED LIMIT SWITCH HELD OPEN
	FLOW ACTUATED SWITCH, CLOSES ON INCREASE IN FLOW
	FLOW ACTUATED SWITCH, OPENS ON INCREASE IN FLOW
	LEVEL ACTUATED SWITCH, CLOSES ON RISE IN LEVEL
	LEVEL-ACTUATED SWITCH, OPEN ON RISE IN LEVEL
	PRESSURE OR VACUUM-ACTUATED SWITCH, CLOSES ON RISING PRESSURE OR VACUUM
	PRESSURE OR VACUUM-ACTUATED SWITCH, OPENS ON RISING PRESSURE OR VACUUM
	DIFFERENTIAL PRESSURE SWITCH, CLOSES ON DIFFERENTIAL PRESSURE CHANGE
	TEMPERATURE-ACTUATED SWITCH, CLOSES ON RISING TEMPERATURE
	TEMPERATURE-ACTUATED SWITCH, OPENS ON RISING TEMPERATURE
*	SPEED-ACTUATED SWITCH, OPERATES ON SHAFT ROTATION *INDICATES FUNCTION, ZS=ZERO SPEED, OS=OVERSPEED, US=UNDERSPEED
*	RELAY OR OPERATING COIL *INDICATES FUNCTION, MS - MOTOR STARTER CR - CONTROL RELAY TDR - TIME-DELAY RELAY C - CONTACTOR
	NORMALLY OPEN CONTACT (MAKE)
	NORMALLY CLOSED CONTACT (BREAK)
	NORMALLY OPEN CONTACT WITH TIME DELAY CLOSING (TDC) AFTER COIL IS ENERGIZED
	NORMALLY CLOSED CONTACT WITH TIME DELAY OPENING (TDO) AFTER COIL IS ENERGIZED
	NORMALLY OPEN CONTACT WITH TIME DELAY OPENING (TDO) AFTER COIL IS DE-ENERGIZED
	NORMALLY CLOSED CONTACT WITH TIME DELAY CLOSING (TDC) AFTER COIL IS DE-ENERGIZED

SYMBOL	DESCRIPTION
	CIRCUIT-OPENING PUSHBUTTON MOMENTARY OR SPRING RETURN
	TWO-CIRCUIT PUSHBUTTON MOMENTARY OR SPRING RETURN
	MUSHROOM HEAD CIRCUIT OPENING PUSHBUTTON (FOR EMERGENCY APPLICATIONS)
	CIRCUIT-CLOSING SWITCH
	CIRCUIT-OPENING SWITCH
	TWO-POSITION TRANSFER SWITCH
OFF	THREE-POSITION TRANSFER SWITCH
	CIRCUIT BREAKER, DOUBLE POLE
	SOLENOID
	SPACE HEATER
	CROSSING OF PATH OR CONDUCTORS NOT CONNECTED
	CONNECTION
	TERMINAL CONNECTION
	PLUG AND RECEPTACLE
	TWO CONDUCTORS WITH OVERALL SHIELD FOR GROUNDING CONNECTION
	GROUNDING CONNECTION
	CHASSIS CONNECTION
+ -	MULTICELL BATTERY (DC)
	THERMAL ELEMENT
*	PILOT LIGHT *INDICATES COLOR

A	AMBER	OP	OPALESCENT
B	BLUE	P	PURPLE
C	CLEAR	R	RED
G	GREEN	W	WHITE
O	ORANGE	Y	YELLOW

SYMBOL	DESCRIPTION
H1 H2 X1 X2	CONTROL TRANSFORMER W/GROUND
OL'S	OVERLOAD CONTACTS
AREA EPO	EMERGENCY PROCESS OFF
	POWER RECEPTACLE

PLAN DRAWING SYMBOLS

SYMBOL	DESCRIPTION
	HORIZONTAL MOTOR OR GENERATOR
	DRY-TYPE 1-PHASE TRANSFORMER
	EXTERNALLY-OPERATED DISCONNECT SWITCH
	COMBINATION CONTROLLER AND DISCONNECTING MEANS
STH	MANUAL STARTER SWITCH WITH THERMAL OVERLOADS
J	JUNCTION BOX
T	THERMOSTAT
	TELEPHONE RCPT, PUBLIC
	SOUND SYSTEM DEVICE
	SIGNAL OR ALARM HORN
5a B	POLE - MOUNTED FLOODLIGHT, ARROW INDICATES AIMING DIRECTION
	POLE-MOUNTED STREET LIGHT
5a B	BRACKET-MOUNTED FLOODLIGHT ARROW INDICATES AIMING DIRECTION
5 B	EMERGENCY LIGHTING FIXTURE, BATTERY OPERATED, ARROWS INDICATE AIMING
	GROUNDING ROD

SWITCH OUTLET: SMALL LETTER BY THE SIDE OF SYMBOL INDICATES THE CONTROLLED FIXTURE

SYMBOL	DESCRIPTION
	SINGLE RCPT
	DOUBLE RCPT
	SINGLE SPECIAL-PURPOSE
	FLEXIBLE CONDUIT
	CONDUIT W/ SEAL FITTING

SPECIAL IDENTIFICATION OF OUTLETS

WP - WEATHERPROOF	DT - DUSTTIGHT
VT - VAPORTIGHT	RT - RAINTIGHT
WT - WEATHERTIGHT	XP - EXPLOSIONPROOF

CEILING MTD	WALL MTD	DESCRIPTION
5a A	5a A	SURFACE OR PENDANT INCANDESCENT, MERCURY-VAPOR, OR SIMILAR LAMP FIXTURE
5a A	5a A	SURFACE OR PENDENT INDIVIDUAL FLUORESCENT FIXTURE
		LIGHT. ARROWS INDICATE ROUTE OF EGRESS
J	J	JUNCTION BOX

S_a	SINGLE-POLE SWITCH
S_3	THREE-WAY SWITCH
S_4	FOUR-WAY SWITCH
S_K	KEY-OPERATED SWITCH

LIGHTING OUTLETS: CAPITAL LETTER OUTSIDE SYMBOL INDICATES FIXTURE TYPE AS SHOWN ON FIXTURE SCHEDULE. NUMERIC INDICATES CIRCUIT NO. SMALL LETTER DESIGNATES THE CONTROLLING SWITCH

RECEPTACLE OUTLETS: NUMERICAL BY THE SIDE OF SYMBOL INDICATES CIRCUIT NUMBER

SYMBOL	DESCRIPTION
*	SWITCHES OR DEVICES • INDICATES TYPE

BRS	BELT RUN-OFF SWITCH	OS	OVERSPEED SWITCH
DPS	DIFFERENTIAL PRESSURE SWITCH	PCS	PLUGGED CHUTE SWITCH
ES	EMERGENCY PULL-CORD SWITCH	PNS	POSITION SWITCH
FS	FLOW SWITCH	PS	PRESSURE SWITCH
LS	LIMIT SWITCH	RPS	BELT RIP SWITCH
MTD	METAL DETECTOR	RS	ROTATION SWITCH
HOA	HAND-OFF-AUTO	RTD	RESISTANCE TEMPERATURE DETECTOR
		SV	SOLENOID VALVE

POLE LINE SYMBOLS

SYMBOL	DESCRIPTION
	-NEW CLASS 2 POLE
	-EXISTING POLES TO BE REPLACED
	-POLE MOUNTED TRANSFORMER

LOGIC DIAGRAM SYMBOLS

SYMBOL	DESCRIPTION
	INPUT/OUTPUT INSTRUMENTATION DEVICE (FIELD MOUNTED)
	INPUT/OUTPUT INSTRUMENTATION DEVICE (BOARD MOUNTED)
	LOGIC CONTINUATION • INDICATES DRAWING NUMBER
	TIME DELAY

REV	DATE	BY	CHK	REVISED
1	02/11/98	DAB	WHB	AS-BUILT
1	11/25/97	MJT	WHB	ISSUED FOR CONSTRUCTION

DRAWING NO. | REFERENCE DRAWINGS

TOSCO
TOSCO Corporation
5528 NW Doane St.
Portland, Oregon 97210

PORTLAND TERMINAL
ELECTRICAL
SYMBOLS AND LEGEND
SHEET

ALPHA ENGINEERS and CONSTRUCTORS, INC.
2929 NW 29TH AVE, PORTLAND, OR. 97210 Tel: 503-227-3317

SCALE:	NONE	DESIGNED BY:	DAB
DATE:	11/17/97	CHECKED BY:	WHB
DRAWN BY:	MJC	ENG. APPR. BY:	WHB
CADD FILE/PLOT DATE:	25E1000A.DWG	CPD: 06/04/98	TIME: 09:54 AM

DRAWING NUMBER	SHEET	REV
0608-E-1000A	1 OF 1	0

COP00214473

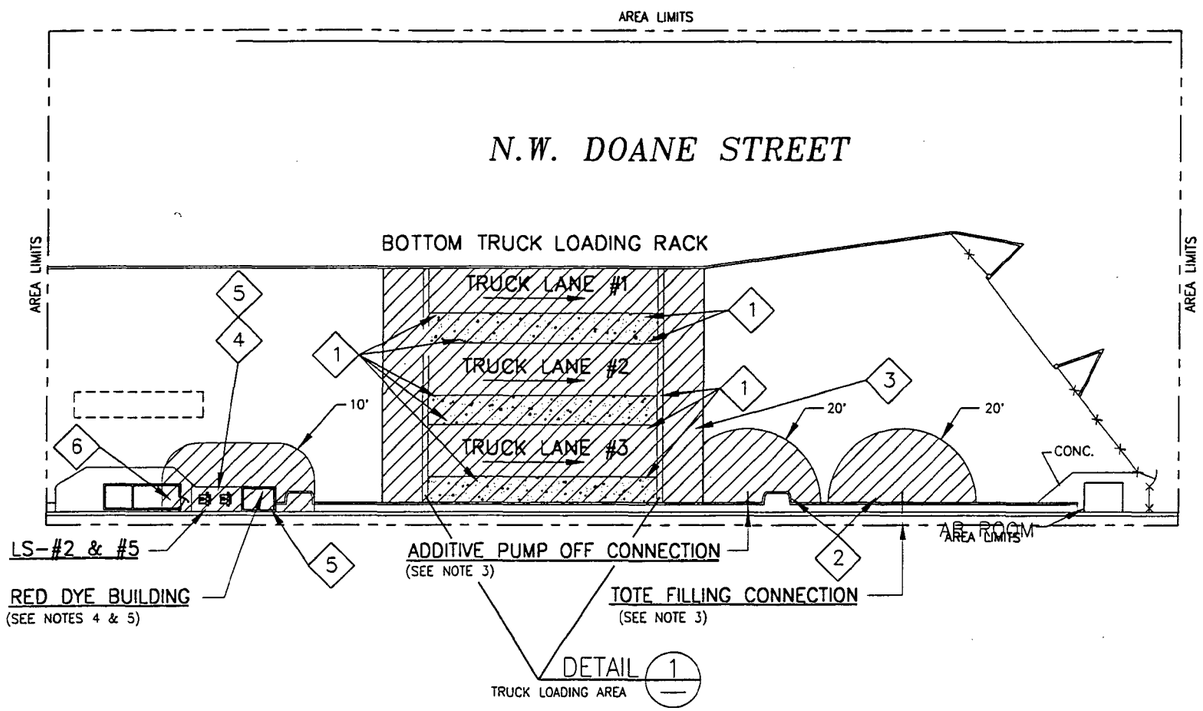

PLAN

SCALE: 1" = 20'

20' 0' 20' 40'

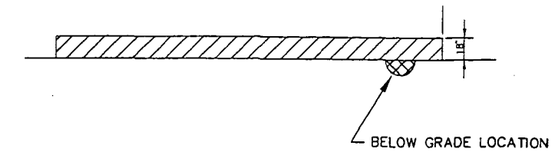

TRUCK LOADING AREA

DETAIL 1

SCALE: NTS

LEGEND

CLASS I, DIVISION 1

CLASS I, DIVISION 2

4 — ELECTRICAL SURVEY RECOMMENDATION ITEM NUMBERS

NOTES:

1. ALL SUMPS, PITS AND BELOW GRADE AREAS IN A CLASSIFIED AREA ARE CONSIDERED CLASS I, DIVISION 1.
2. ALL SUMPS, PITS AND BELOW GRADE AREAS IN AN UNCLASSIFIED AREA ARE CONSIDERED CLASS I, DIVISION 2.
3. CLASSIFIED AREA EXTENDS 18" FROM EDGE OF THE CONNECTION AND HORIZONTALLY 20' AT AN ELEVATION OF 18".
4. CLASSIFIED AREA EXTENDS 36" FROM THE EDGE OF THE BUILDING AND HORIZONTALLY 10' AT AN ELEVATION OF 18"
5. INSIDE RED DYE BUILDING IS CLASS 1, DIVISION 1.
6. CLASS 1, DIVISION 2 AREA EXTENDS 15' FROM OUTSIDE.

DRAWING NO.	REFERENCE DRAWINGS	REV. NO.	DATE	REVISED	DRAWN BY	CKD. BY
0608-E-1000	ELECTRICAL AREA CLASSIFICATION - INDEX PLAN	A	10/19/95	ISSUED FOR UNOCAL REVIEW	DC	GRE
0608-E-1001	ELECTRICAL AREA CLASSIFICATION - TANK FARM #1	0	1/3/96	REVISED PER UNOCAL COMMENTS, ISSUED AFC	DC	GRE
0608-E-1002	ELECTRICAL AREA CLASSIFICATION - TANK FARM #2	1	4/15/96	REVISED BY ROBERTS TECHNICAL SERVICES & AECI	NF	UNK
0608-E-1003	ELECTRICAL AREA CLASSIFICATION - GARAGE	2	11/01/96	ADDED SURVEY ITEM NUMBERS	DAB	WHB
0608-E-1005	ELECTRICAL AREA CLASSIFICATION - RAIL CAR LOADING					
0608-E-1006	ELECTRICAL AREA CLASSIFICATION - DOCK LOADING & UNLOADING					

TOSCO
Tosco Distribution Company
A Division of Tosco Corporation
5528 NW Doane St.
Portland, Oregon 97210

ALPHA ENGINEERS and CONSTRUCTORS, INC.
19 NW 5th AVE, SUITE 204, PORTLAND, OR. 97209 Tel:(503)227-3317/Fax:(503)227-3244

DRAWN BY	DC
CHKD BY	GRE
APPD BY	DAB
SCALE	1" = 20'
DATE	1/3/96

PORTLAND TERMINAL

PORTLAND, OREGON

ELECTRICAL
AREA CLASSIFICATION
TRUCK LOADING AREA

DRAWING NO.	SHEET	REV.
0608-E-1004	1 OF 1	2

COP00214474

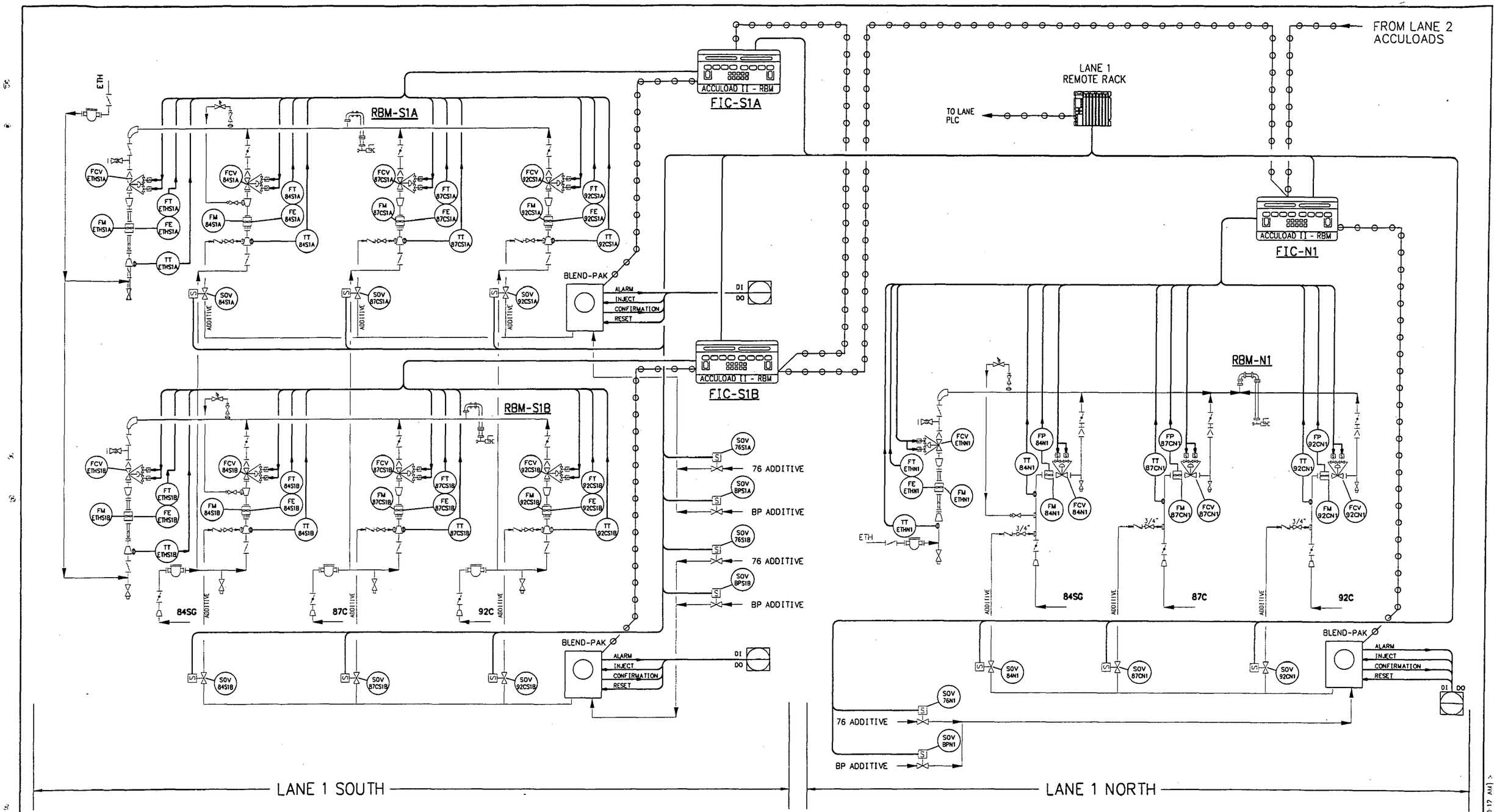

DRAWING NO.	REFERENCE DRAWINGS	REV. NO.	DATE	REVISED	DRAWN BY	CKD. BY
		0	06/05/98	ISSUE FOR CONSTRUCTION	DAB	WHB

TOSCO
Tosco Corporation
5528 NW Doane St.
Portland, Oregon 97210

ALPHA ENGINEERS and CONSTRUCTORS, INC.
2929 NW 29th AVE., PORTLAND, OR. 97210 Tel:(503)227-3317/Fax:(503)227-3244

DRAWN BY	DAB
CHKD BY	AAB
APPD BY	WHB
SCALE	NONE
DATE	05/27/98

PORTLAND TERMINAL
PORTLAND, OREGON
ELECTRICAL LANE 1 GAS
INSTRUMENTATION & CONTROL DIAGRAM
TRUCK LOADING RACK

DRAWING NO.	SHEET	REV.
0608-E-2002	1 OF 1	0

25F2002I.DWG <CPB: 06/04/98 [MAR 10 12 AM]>

COP00214475

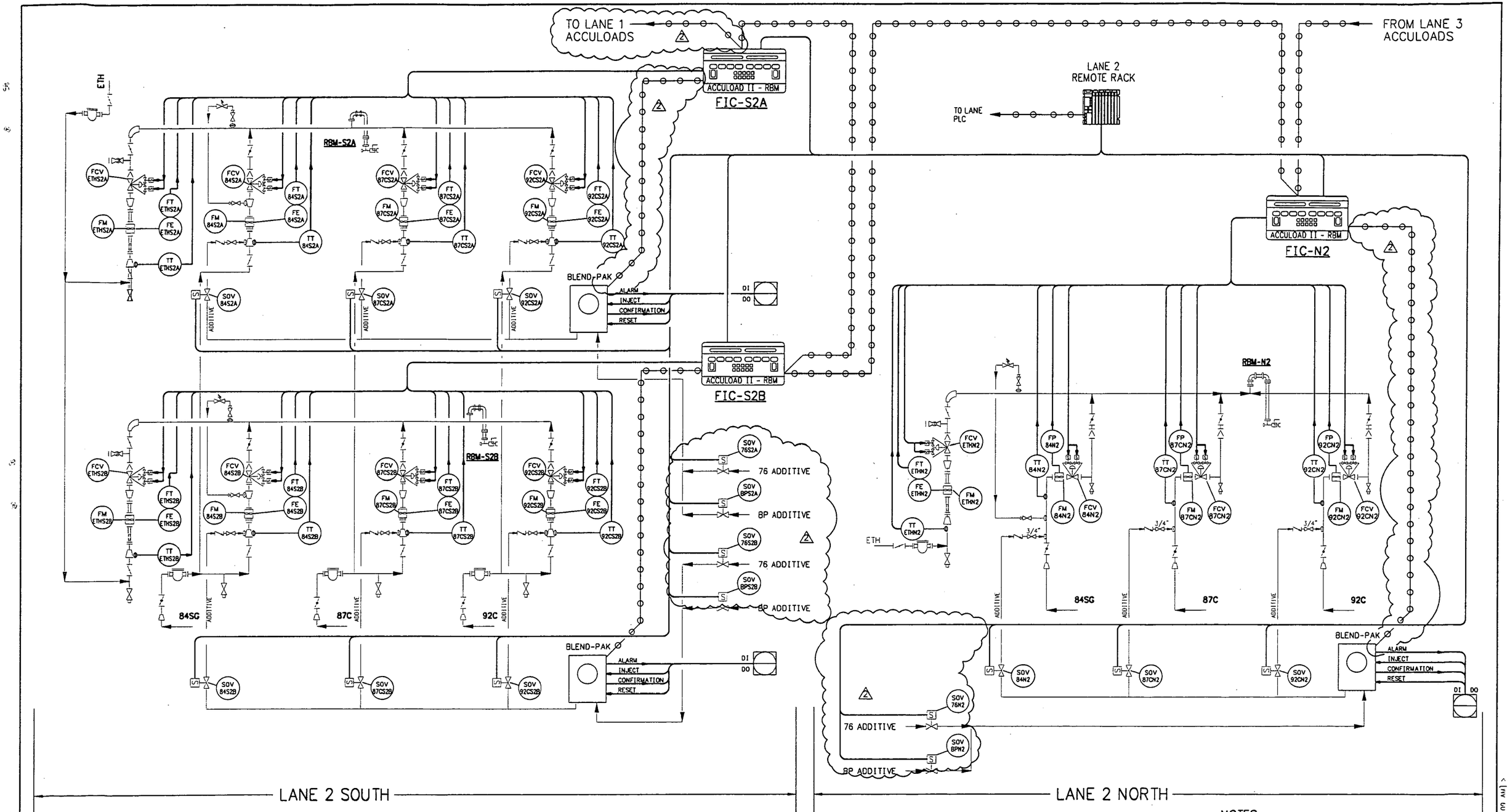

NOTES:

1. USE PLC FOR AB AND BP CONTROL
2. USE REMOTE RACKS

DRAWING NO.	REFERENCE DRAWINGS	REV. NO.	DATE	REVISED	DRAWN BY	CKD. BY
		0	11/25/97	ISSUED FOR CONSTRUCTION	DAB	WHB
		1	02/11/98	AS-BUILT	DAB	WHB
		2	06/05/98	ADDED LANE 1 TIE-IN & 76/BP ADDITIVE SOV'S	DAB	WHB

TOSCO
Tosco Corporation
5528 NW Doane St.
Portland, Oregon 97210

ALPHA ENGINEERS and CONSTRUCTORS, INC.
2929 NW 29th AVE., PORTLAND, OR. 97210 Tel:(503)227-3317/Fax:(503)227-3244

DRAWN BY	DAB
CHKD BY	AAB
APPD BY	WHB
SCALE	NONE
DATE	09/10/97

PORTLAND TERMINAL
PORTLAND, OREGON
ELECTRICAL LANE 2 - GAS
INSTRUMENTATION & CONTROL DIAGRAM
TRUCK LOADING RACK

DRAWING NO.	SHEET	REV.
0608-E-2003	1 OF 1	2

25E20012.DWG <CPD: 05/27/98 [TMF: 11:00 AM]>

COP0021476

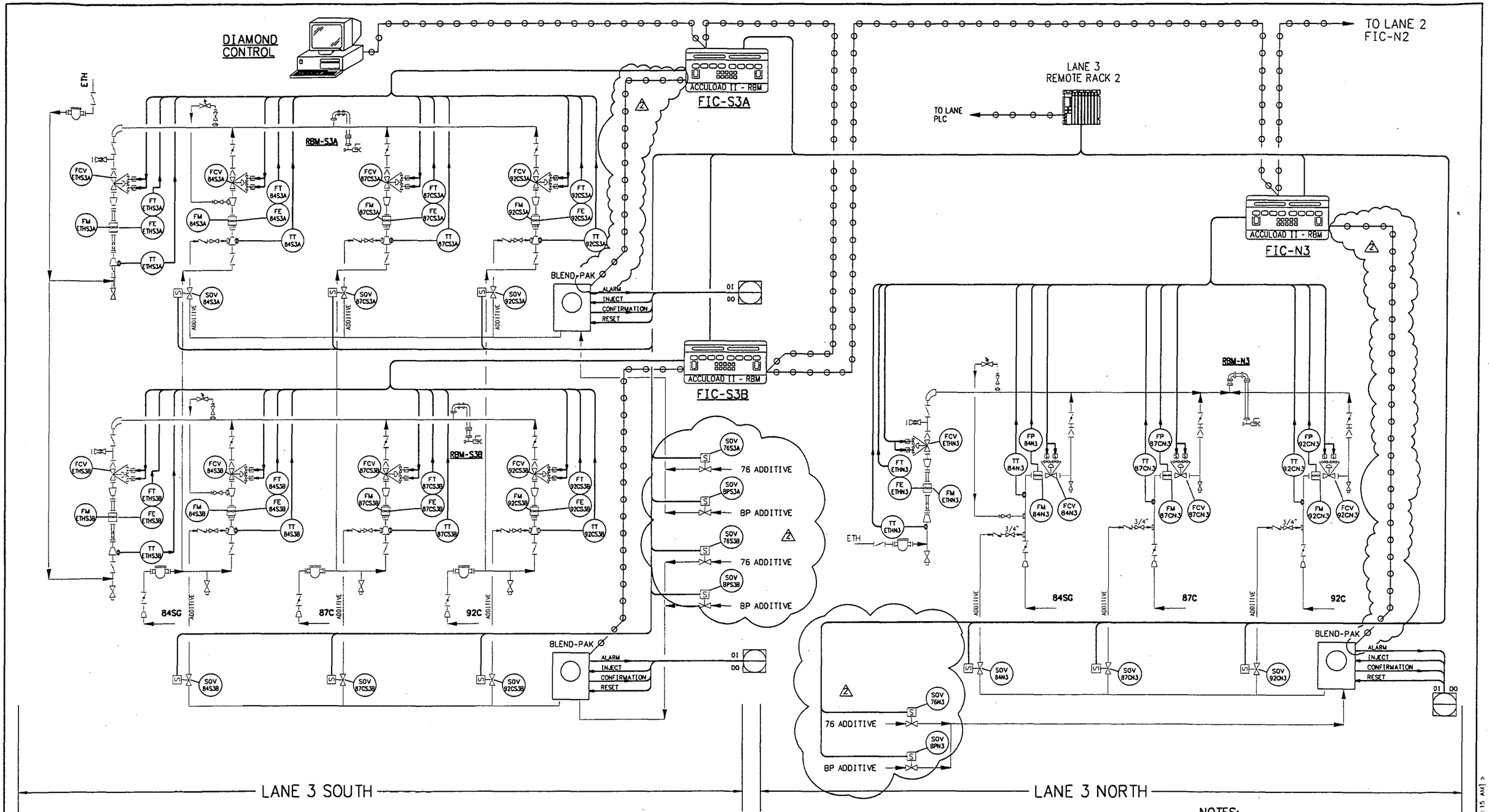

NOTES:

1. USE PLC FOR AB AND BP CONTROL
2. USE REMOTE RACKS

DRAWING NO.	REFERENCE DRAWINGS	REV. NO.	DATE	REVISED	DRAWN BY	CKD. BY
		0	11/25/97	ISSUED FOR CONSTRUCTION	CPM	WHB
		1	02/11/98	AS-BUILT	DAB	WHB
		2	06/05/98	ADDED 76/BP ADDITIVE SOV'S	DAB	WHB

TOSCO
Tosco Corporation
5528 NW Doane St.
Portland, Oregon 97210

ALPHA ENGINEERS and CONSTRUCTORS, INC.
2929 NW 29th AVE, PORTLAND, OR. 97210 Tel:(503)227-3317/Fax:(503)227-3244

DRAWN BY	CPM
CHKD BY	AAB
APPD BY	WHB
SCALE	NONE
DATE	09/10/97

PORTLAND TERMINAL
PORTLAND, OREGON
ELECTRICAL LANE 3 - GAS
INSTRUMENTATION & CONTROL DIAGRAM
TRUCK LOADING RACK

DRAWING NO.	SHEET	REV.
0608-E-2004	1 OF 1	2

25E20042.DWG, <CPD: 06/04/98 [TIME: 10:15 AM] >

COP0021477

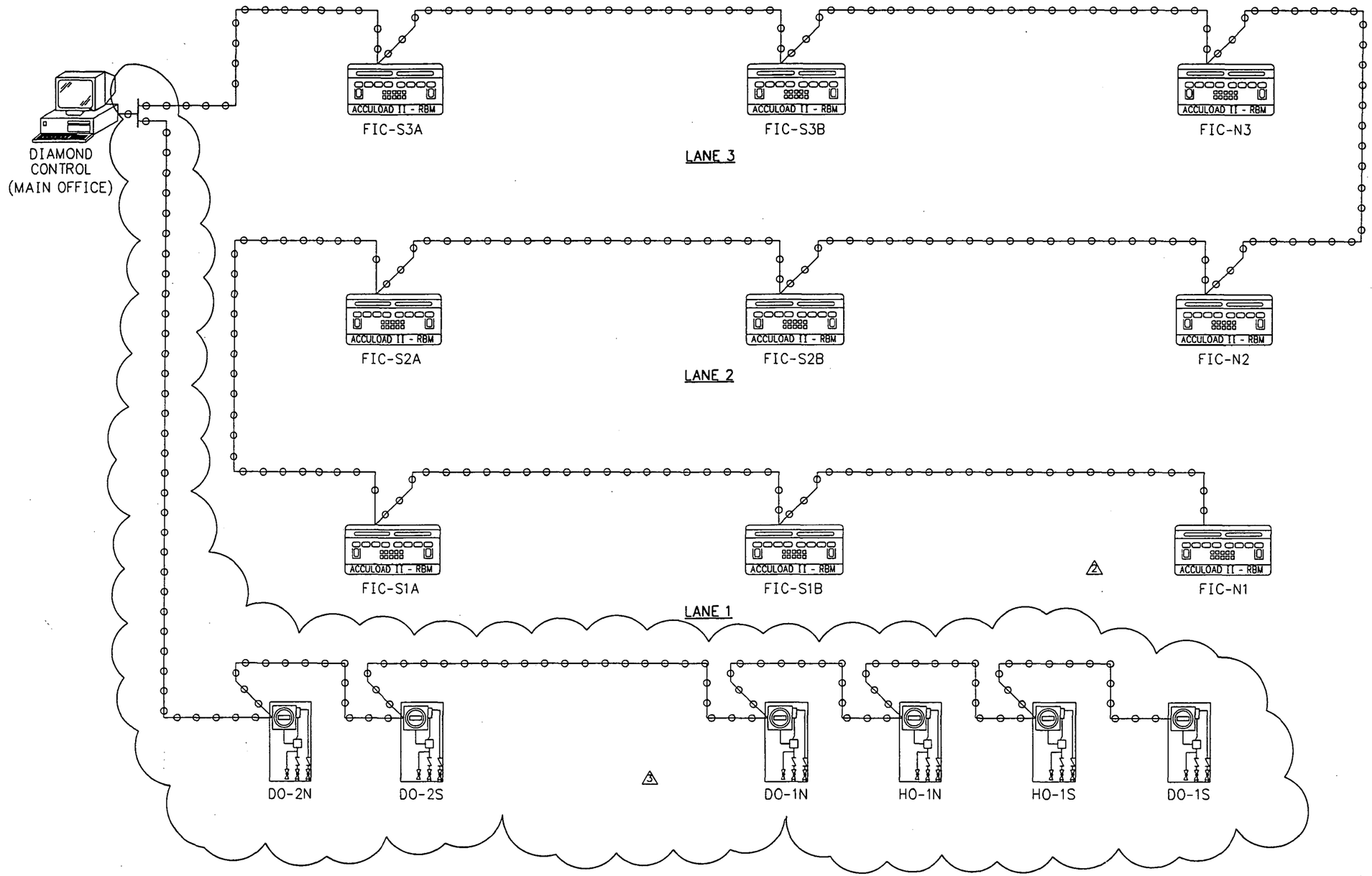

SYSTEM INTERFACE

DRAWING NO.	REFERENCE DRAWINGS	REV. NO.	DATE	REVISED	DRAWN BY	CKD. BY
		0	11/25/97	ISSUED FOR CONSTRUCTION	BNJ	AAB
		1	02/11/98	AS-BUILT.	DAB	WHB
		2	06/05/98	ADDED LANE 1	DAB	WHB
		3	07/08/98	ADDED BLEND PAKS TO DIAMOND CONTROL	DAB	WHB

TOSCO
Tosco Corporation
5528 NW Doane St.
Portland, Oregon 97210

ALPHA ENGINEERS and CONSTRUCTORS, INC.
2929 NW 29th AVE, PORTLAND, OR. 97210 Tel:(503)227-3317/Fax:(503)227-3244

DRAWN BY	BNJ
CHKD BY	AAB
APPD BY	WHB
SCALE	NONE
DATE	11/17/97

PORTLAND TERMINAL
PORTLAND, OREGON
ELECTRICAL
DIAMOND COMMUNICATIONS DIAGRAM
TRUCK LOADING LANES 1, 2 & 3

DRAWING NO.	SHEET	REV.
0608-E-2005	1 OF 1	3

23E20053.DWG <CPD: 07/08/98 [TIME: 10:40 AM]>

COP0021478

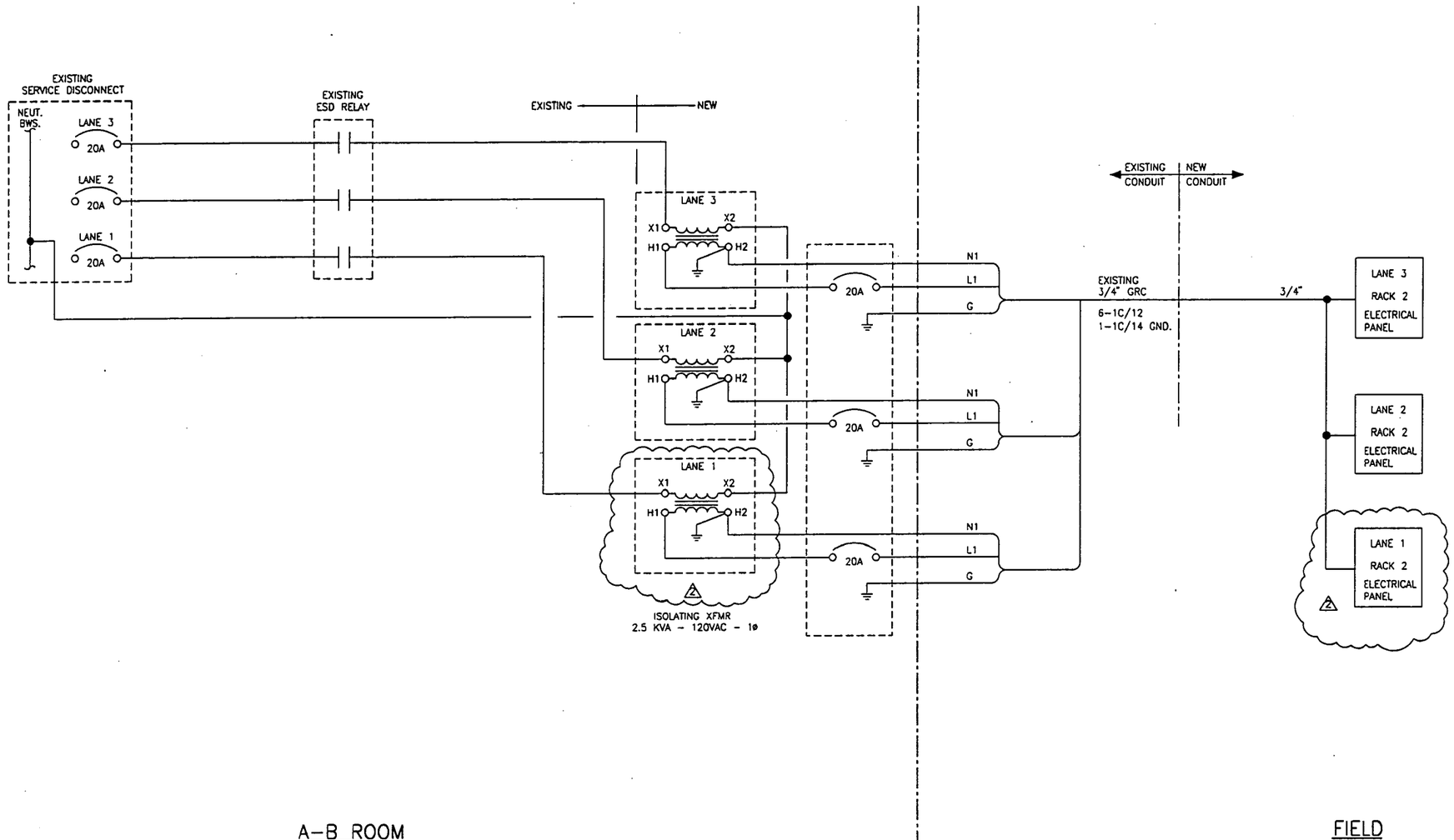

REV	DATE	BY	CHK	REVISED
2	06/05/98	DAB	VHB	ADD LANE 1
1	02/11/98	DAB	VHB	AS-BUILT
0	11/25/97	BNJ	VHB	ISSUED FOR CONSTRUCTION

DRAWING NO. | REFERENCE DRAWINGS

TOSCO
TOSCO Corporation
5528 NW Doane St.
Portland, Oregon 97210

PORTLAND TERMINAL
SYSTEM POWER DISTRIBUTION
LANES 1, 2, AND 3

ALPHA ENGINEERS and CONSTRUCTORS, INC.
2929 NW 29TH AVE, PORTLAND, OR. 97210 Tel: 503-227-3317

SCALE:	NONE	DESIGNED BY:	DAB
DATE:	11/17/97	CHECKED BY:	VHB
DRAWN BY:	BNJ	ENG. APPR. BY:	VHB
CADD FILE/PLOT DATE: 25E20062.DWG <CPD: 06/04/98		TIME: 10:17 AM	

DRAWING NUMBER	SHEET	REV
0608-E-2006	1 OF 1	2

COP0021479

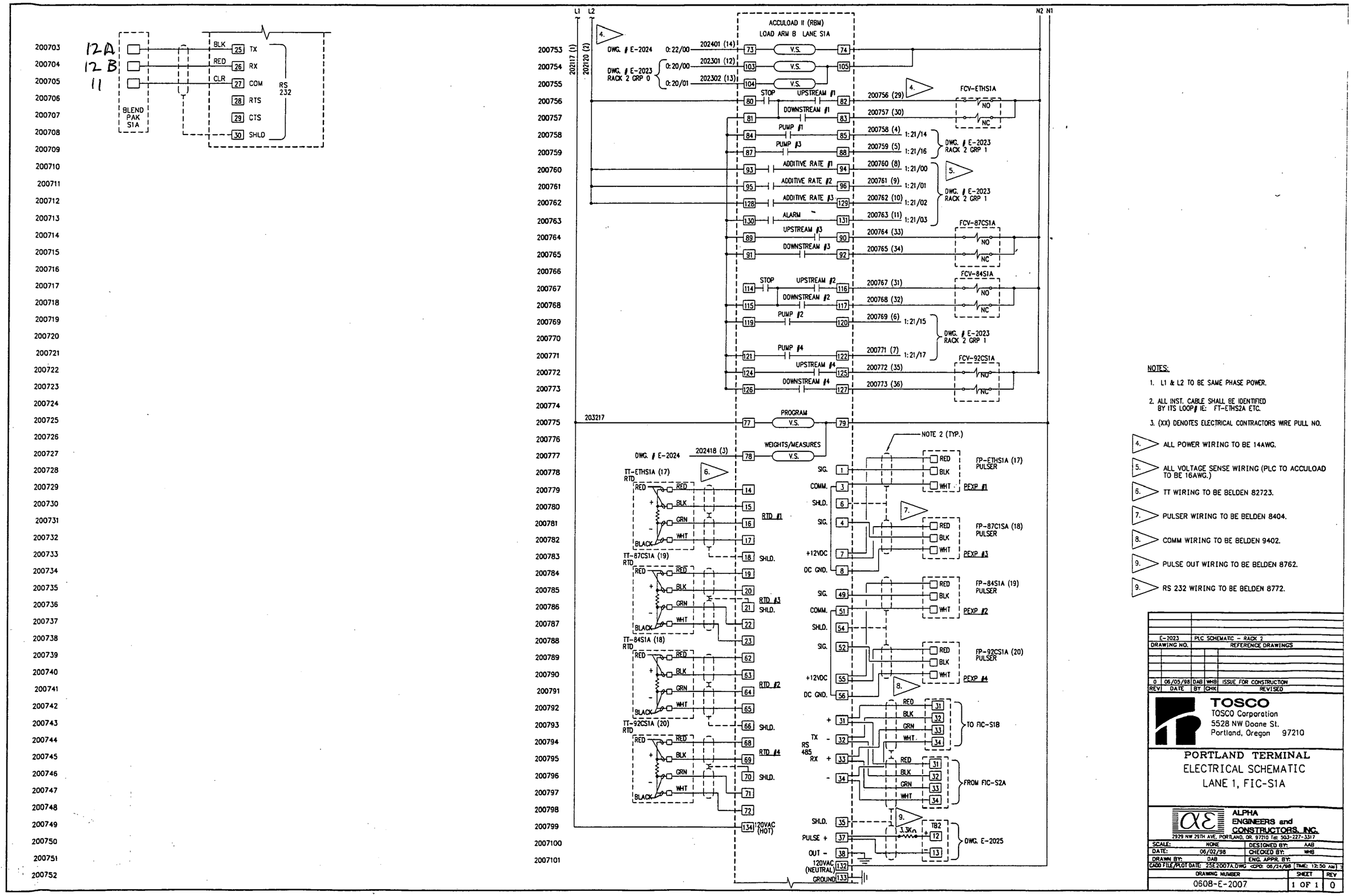

NOTES:

1. L1 & L2 TO BE SAME PHASE POWER.
2. ALL INST. CABLE SHALL BE IDENTIFIED BY ITS LOOP# IE: FT-ETHS2A ETC.
3. (XX) DENOTES ELECTRICAL CONTRACTORS WIRE PULL NO.
4. ALL POWER WIRING TO BE 14AWG.
5. ALL VOLTAGE SENSE WIRING (PLC TO ACCULOAD TO BE 16AWG.)
6. TT WIRING TO BE BELDEN 82723.
7. PULSER WIRING TO BE BELDEN 8404.
8. COMM WIRING TO BE BELDEN 9402.
9. PULSE OUT WIRING TO BE BELDEN 8762.
9. RS 232 WIRING TO BE BELDEN 8772.

DRAWING NO.	REFERENCE DRAWINGS
E-2023	PLC SCHEMATIC – RACK 2

REV	DATE	BY	CHK	REVISED
0	06/05/98	DAB	WHB	ISSUE FOR CONSTRUCTION

TOSCO
TOSCO Corporation
5528 NW Doane St.
Portland, Oregon 97210

PORTLAND TERMINAL
ELECTRICAL SCHEMATIC
LANE 1, FIC-S1A

ALPHA ENGINEERS and CONSTRUCTORS, INC.
2929 NW 29TH AVE. PORTLAND, OR. 97210 Tel: 503-227-3317

SCALE:	NONE	DESIGNED BY:	AAB
DATE:	06/02/98	CHECKED BY:	WHB
DRAWN BY:	DAB	ENG. APPR. BY:	

CADD FILE/PLOT DATE: 25E2007A.DWG <CPD: 06/24/98 [TIME: 12:50 AM]

DRAWING NUMBER	SHEET	REV
0608-E-2007	1 OF 1	0

COP0021480

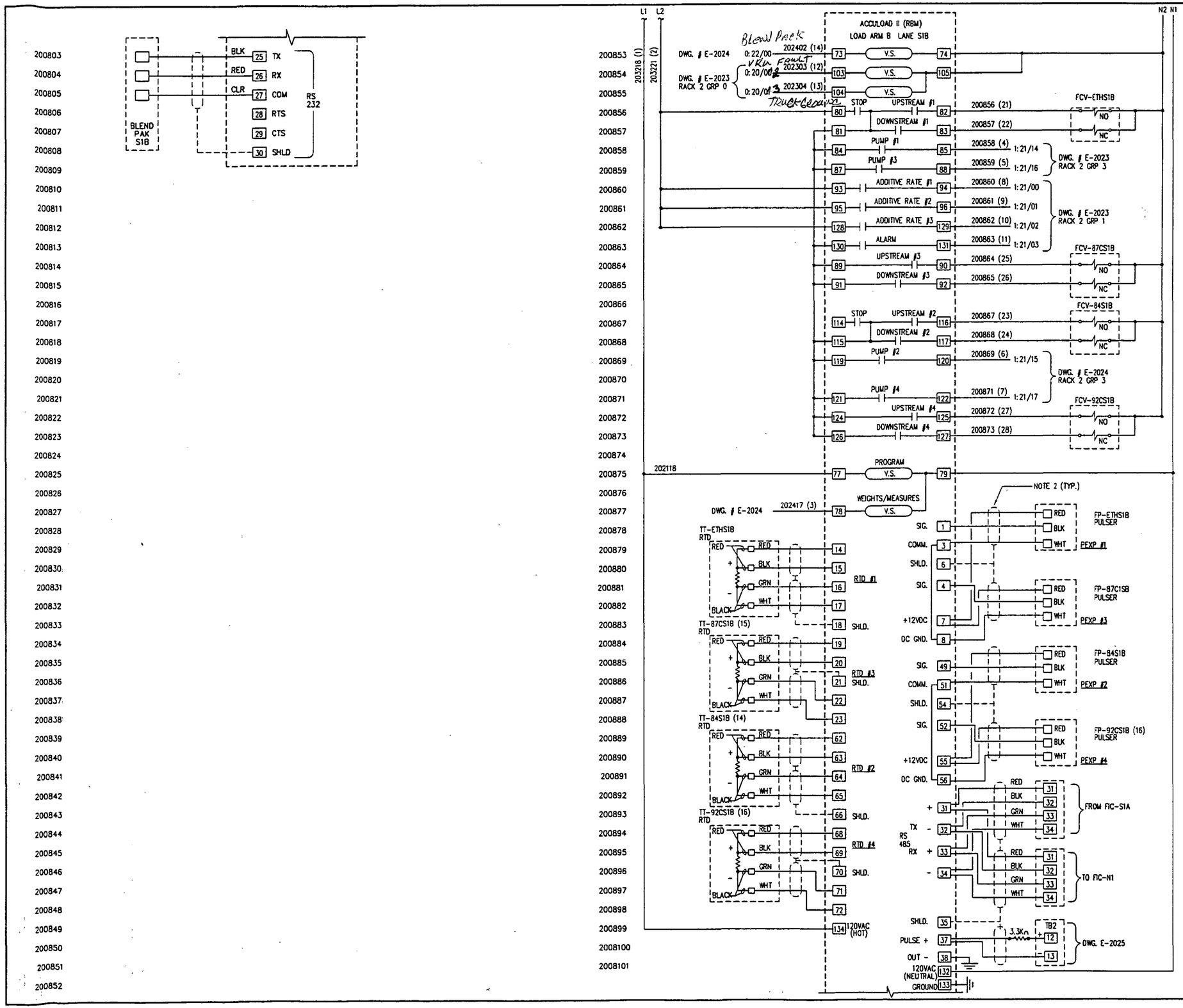

NOTE:

1. L1 & L2 TO BE SAME PHASE POWER.
2. ALL INST. CABLE SHALL BE IDENTIFIED BY ITS LOOP# IE: FT-ETHS2A ETC.
3. (XX) DENOTES ELECTRICAL CONTRACTORS WIRE PULL NO.
4. SEE DWG. 0608-E-2007 FOR WIRING TYPE.

REV	DATE	BY	CHK	REVISED
0	06/02/98	DAB	WHB	ISSUE FOR CONSTRUCTION

DRAWING NO. E-2023 — PLC SCHEMATIC - RACK 2

REFERENCE DRAWINGS

TOSCO
TOSCO Corporation
5528 NW Doane St.
Portland, Oregon 97210

PORTLAND TERMINAL
ELECTRICAL SCHEMATIC
LANE 1, FIC-S1B

ALPHA ENGINEERS and CONSTRUCTORS, INC.
2929 NW 29TH AVE. PORTLAND, OR. 97210 Tel: 503-227-3317

SCALE:	NONE	DESIGNED BY:	AAB
DATE:	05/19/98	CHECKED BY:	WHB
DRAWN BY:	DAB	ENG. APPR. BY:	

CADD FILE/PLOT DATE: 25E2008A.DWG <CPO: 06/03/98 TIME: 10:41 AM>

DRAWING NUMBER	SHEET	REV
0608-E-2008	1 OF 1	0

COP0021481

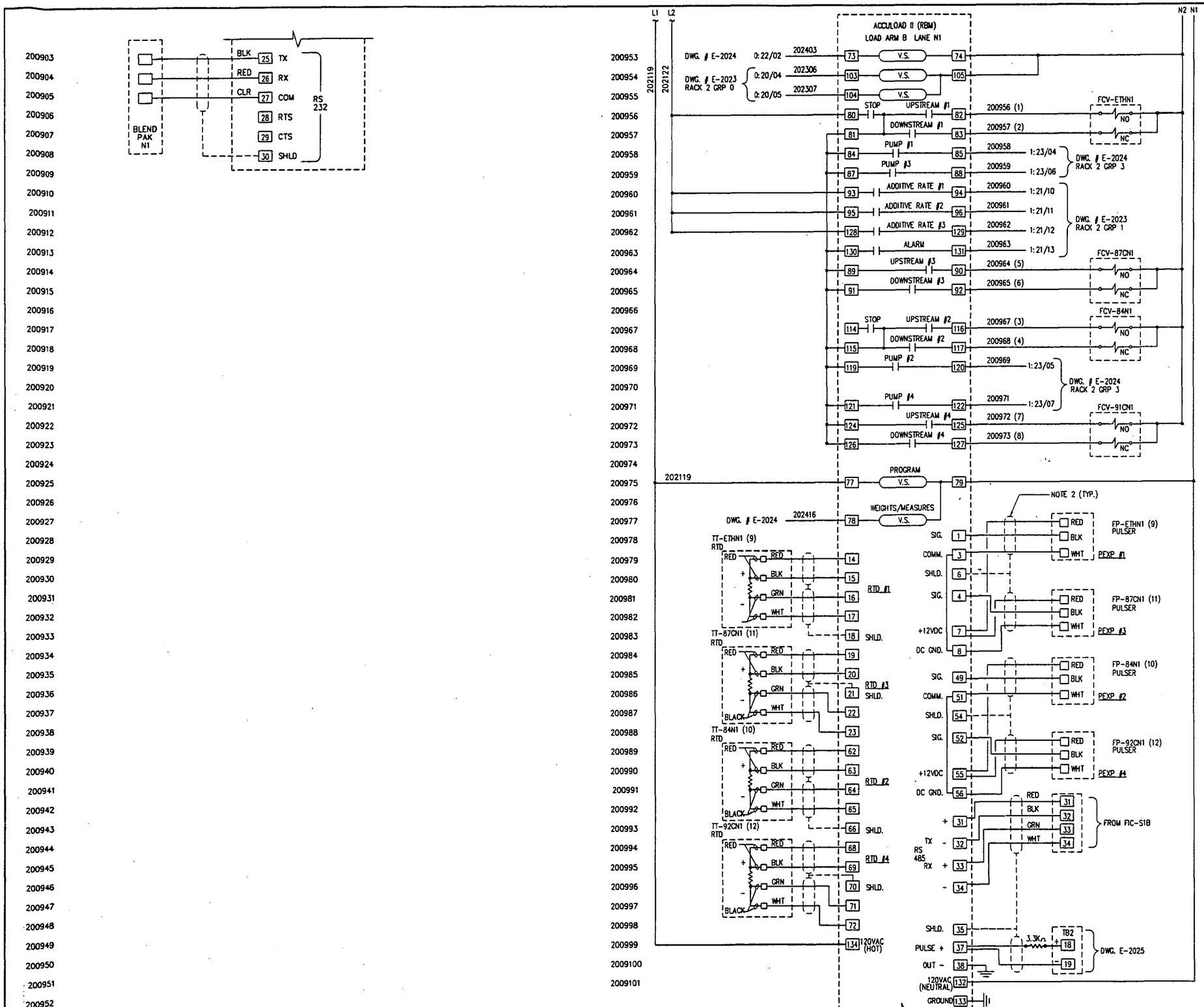

NOTE:

1. L1 & L2 TO BE SAME PHASE POWER.
2. ALL INST. CABLE SHALL BE IDENTIFIED BY ITS LOOP # IE: FT-ETHS2A ETC.
3. (XX) DENOTES ELECTRICAL CONTRACTORS WIRE PULL NO.
4. SEE DWG. 0608-E-2007 FOR WIRING TYPE.

REV	DATE	BY	CHK	REVISED
0	06/02/98	DAB	WHB	ISSUE FOR CONSTRUCTION

DRAWING NO. E-2023 — REFERENCE DRAWINGS: PLC SCHEMATIC - RACK 2

TOSCO
TOSCO Corporation
5528 NW Doane St.
Portland, Oregon 97210

PORTLAND TERMINAL
ELECTRICAL SCHEMATIC
LANE 1, FIC-N1

ALPHA ENGINEERS and CONSTRUCTORS, INC.
2929 NW 29TH AVE, PORTLAND, OR. 97210 Tel: 503-227-3317

SCALE:	NONE	DESIGNED BY:	AAB
DATE:	05/19/98	CHECKED BY:	WHB
DRAWN BY:	DAB	ENG. APPR. BY:	

CADD FILE/PLOT DATE: 25E2009A.DWG <CP0: 06/03/98 (TIME: 10:57 AM)

DRAWING NUMBER	SHEET	REV
0608-E-2009	1 OF 1	0

COP0021482

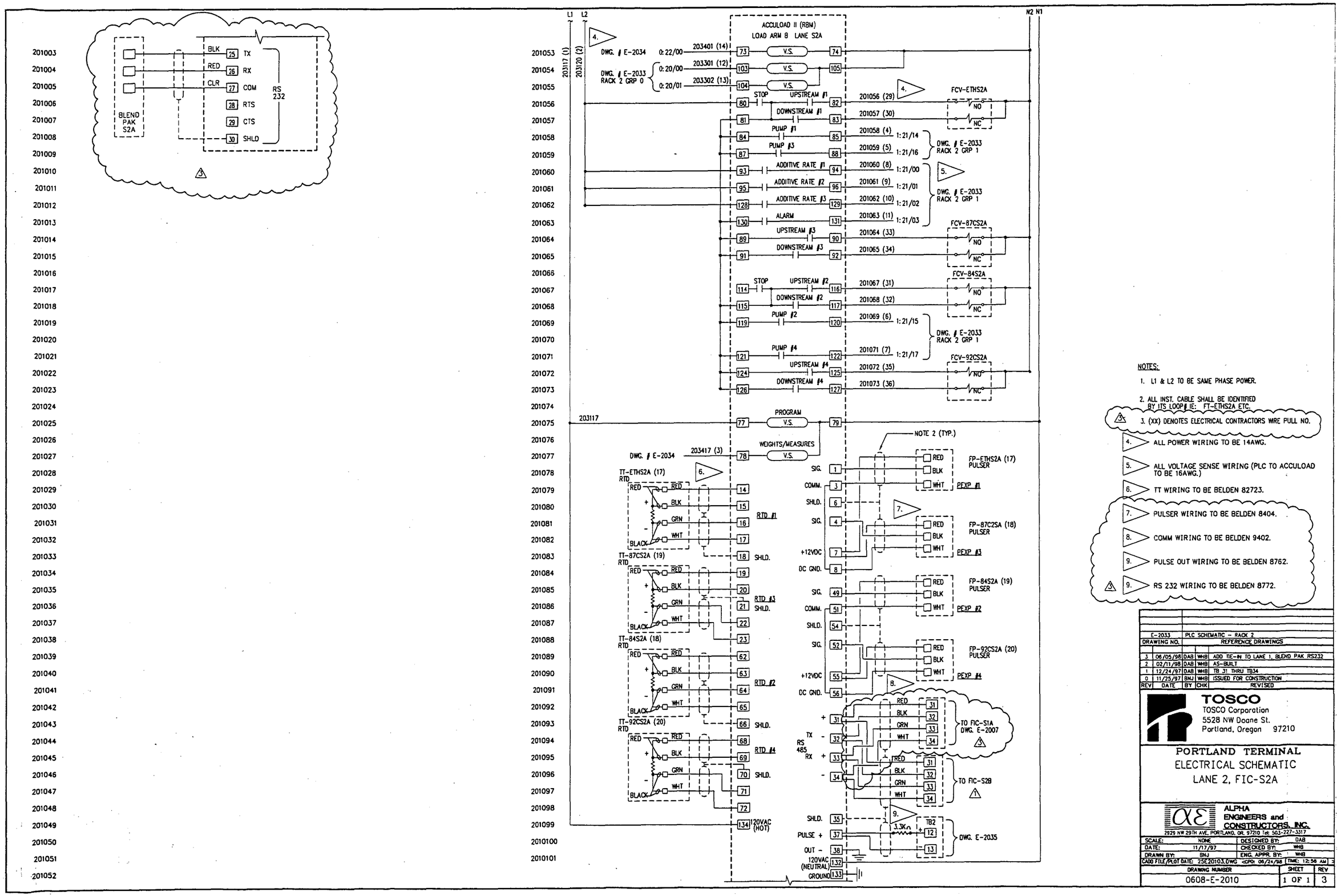

NOTES:

1. L1 & L2 TO BE SAME PHASE POWER.
2. ALL INST. CABLE SHALL BE IDENTIFIED BY ITS LOOP# IE: FT-ETHS2A ETC.
3. (XX) DENOTES ELECTRICAL CONTRACTORS WIRE PULL NO.
4. ALL POWER WIRING TO BE 14AWG.
5. ALL VOLTAGE SENSE WIRING (PLC TO ACCULOAD TO BE 16AWG.)
6. TT WIRING TO BE BELDEN 82723.
7. PULSER WIRING TO BE BELDEN 8404.
8. COMM WIRING TO BE BELDEN 9402.
9. PULSE OUT WIRING TO BE BELDEN 8762.
9. RS 232 WIRING TO BE BELDEN 8772.

DRAWING NO.	E-2033	PLC SCHEMATIC - RACK 2			
		REFERENCE DRAWINGS			
3	06/05/98	DAB	WHB	ADD TIE-IN TO LANE 1, BLEND PAK RS232	
2	02/11/98	DAB	WHB	AS-BUILT	
1	12/24/97	DAB	WHB	TB 31 THRU TB34	
0	11/25/97	BNJ	WHB	ISSUED FOR CONSTRUCTION	
REV	DATE	BY	CHK	REVISED	

TOSCO
TOSCO Corporation
5528 NW Doane St.
Portland, Oregon 97210

PORTLAND TERMINAL
ELECTRICAL SCHEMATIC
LANE 2, FIC-S2A

ALPHA ENGINEERS and CONSTRUCTORS, INC.
2929 NW 29TH AVE. PORTLAND, OR. 97210 Tel: 503-227-3317

SCALE:	NONE	DESIGNED BY:	DAB
DATE:	11/17/97	CHECKED BY:	WHB
DRAWN BY:	BNJ	ENG. APPR. BY:	WHB

CADD FILE/PLOT DATE: 25E20103.DWG <CPO: 06/24/98 TIME: 12:58 AM>

DRAWING NUMBER	SHEET	REV
0608-E-2010	1 OF 1	3

COP00021483

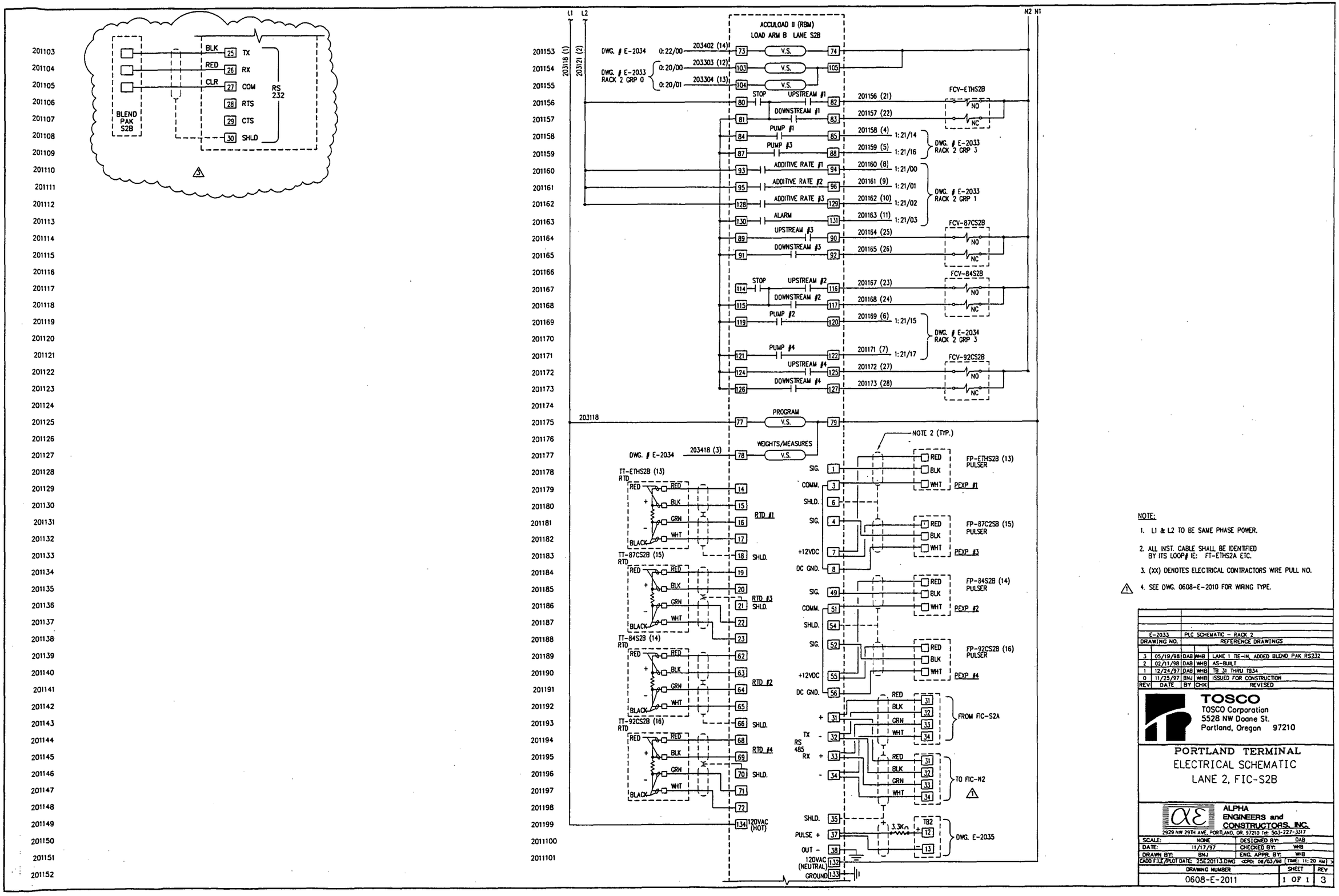

NOTE:

1. L1 & L2 TO BE SAME PHASE POWER.
2. ALL INST. CABLE SHALL BE IDENTIFIED BY ITS LOOP# IE: FT-ETHS2A ETC.
3. (XX) DENOTES ELECTRICAL CONTRACTORS WIRE PULL NO.
4. SEE DWG. 0608-E-2010 FOR WIRING TYPE.

DRAWING NO.				E-2033 PLC SCHEMATIC - RACK 2 REFERENCE DRAWINGS
3	05/19/98	DAB	WHB	LANE 1 TIE-IN, ADDED BLEND PAK RS232
2	02/11/98	DAB	WHB	AS-BUILT
1	12/24/97	DAB	WHB	TB 31 THRU TB34
0	11/25/97	BNJ	WHB	ISSUED FOR CONSTRUCTION
REV	DATE	BY	CHK	REVISED

TOSCO
TOSCO Corporation
5528 NW Doane St.
Portland, Oregon 97210

PORTLAND TERMINAL
ELECTRICAL SCHEMATIC
LANE 2, FIC-S2B

ALPHA ENGINEERS and CONSTRUCTORS, INC.
2929 NW 29TH AVE., PORTLAND, OR. 97210 Tel: 503-227-3317

SCALE:	NONE	DESIGNED BY:	DAB
DATE:	11/17/97	CHECKED BY:	WHB
DRAWN BY:	BNJ	ENG. APPR. BY:	WHB

CADD FILE/PLOT DATE: 25E2011J.DWG <CPD: 06/03/98 TIME: 11:20 AM>

DRAWING NUMBER	SHEET	REV
0608-E-2011	1 OF 1	3

COP0021484

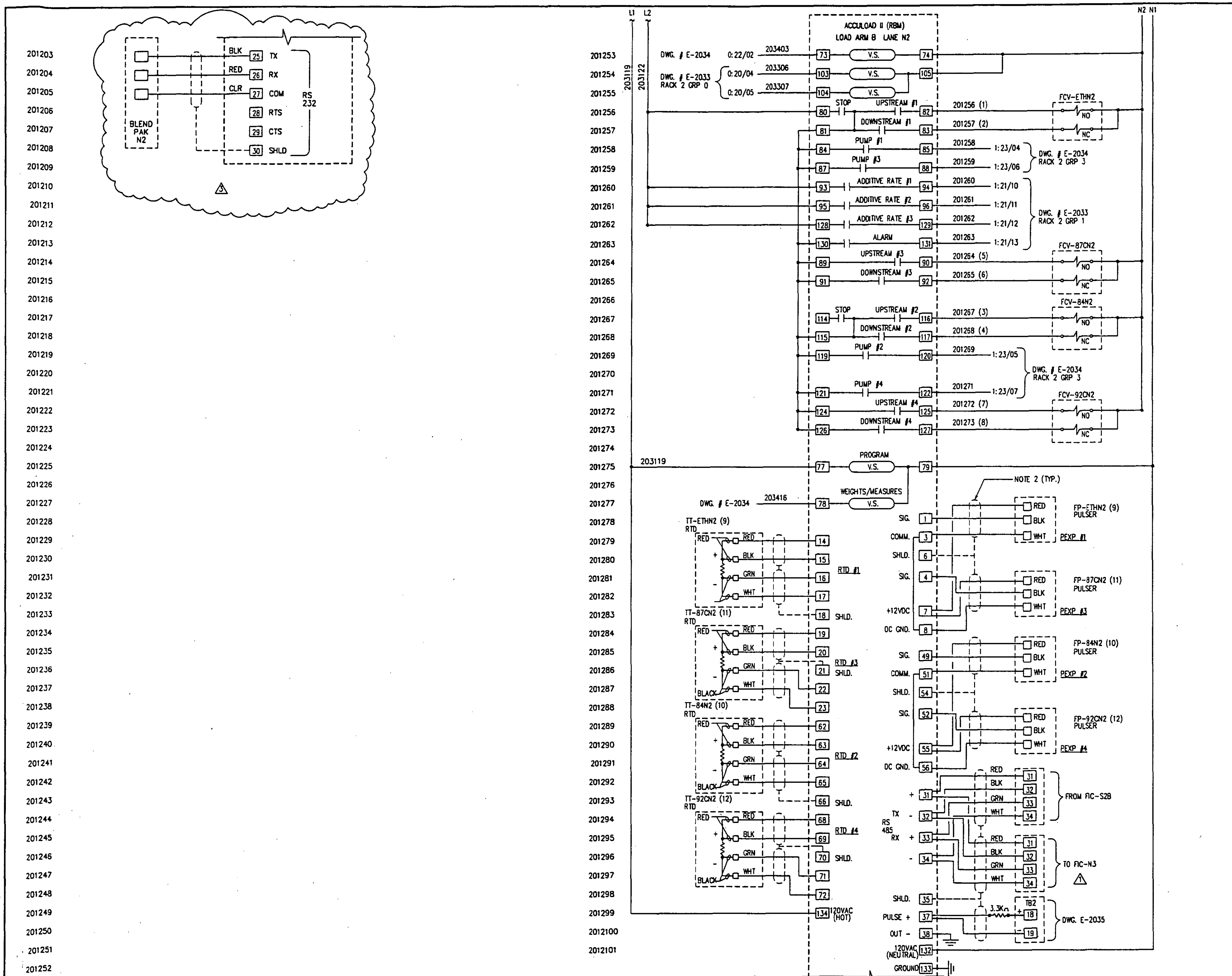

NOTE:

1. L1 & L2 TO BE SAME PHASE POWER.
2. ALL INST. CABLE SHALL BE IDENTIFIED BY ITS LOOP# IE: FT-ETHS2A ETC.
3. (XX) DENOTES ELECTRICAL CONTRACTORS WIRE PULL NO.
4. SEE DWG. 0608-E-2010 FOR WIRING TYPE.

DRAWING NO.	REFERENCE DRAWINGS
E-2033	PLC SCHEMATIC - RACK 2

REV	DATE	BY	CHK	REVISED
3	06/02/98	DAB	WHB	LANE 1 TIE-IN, ADD BLEND PAK RS232
2	02/11/98	DAB	WHB	AS-BUILT
1	12/24/97	DAB	WHB	TB31 THRU TB34
0	11/25/97	BNJ	WHB	ISSUED FOR CONSTRUCTION

TOSCO
TOSCO Corporation
5528 NW Doane St.
Portland, Oregon 97210

PORTLAND TERMINAL
ELECTRICAL SCHEMATIC
LANE 2, FIC-N2

ALPHA ENGINEERS and CONSTRUCTORS, INC.
2929 NW 29TH AVE, PORTLAND, OR. 97210 Tel: 503-227-3317

SCALE:	NONE	DESIGNED BY:	DAB
DATE:	11/17/97	CHECKED BY:	WHB
DRAWN BY:	BNJ	ENG. APPR. BY:	WHB

CADD FILE/PLOT DATE: 25E20123.DWG <CPD: 06/03/98 TIME: 11:26 AM

DRAWING NUMBER	SHEET	REV
0608-E-2012	1 OF 1	3

COP0021485

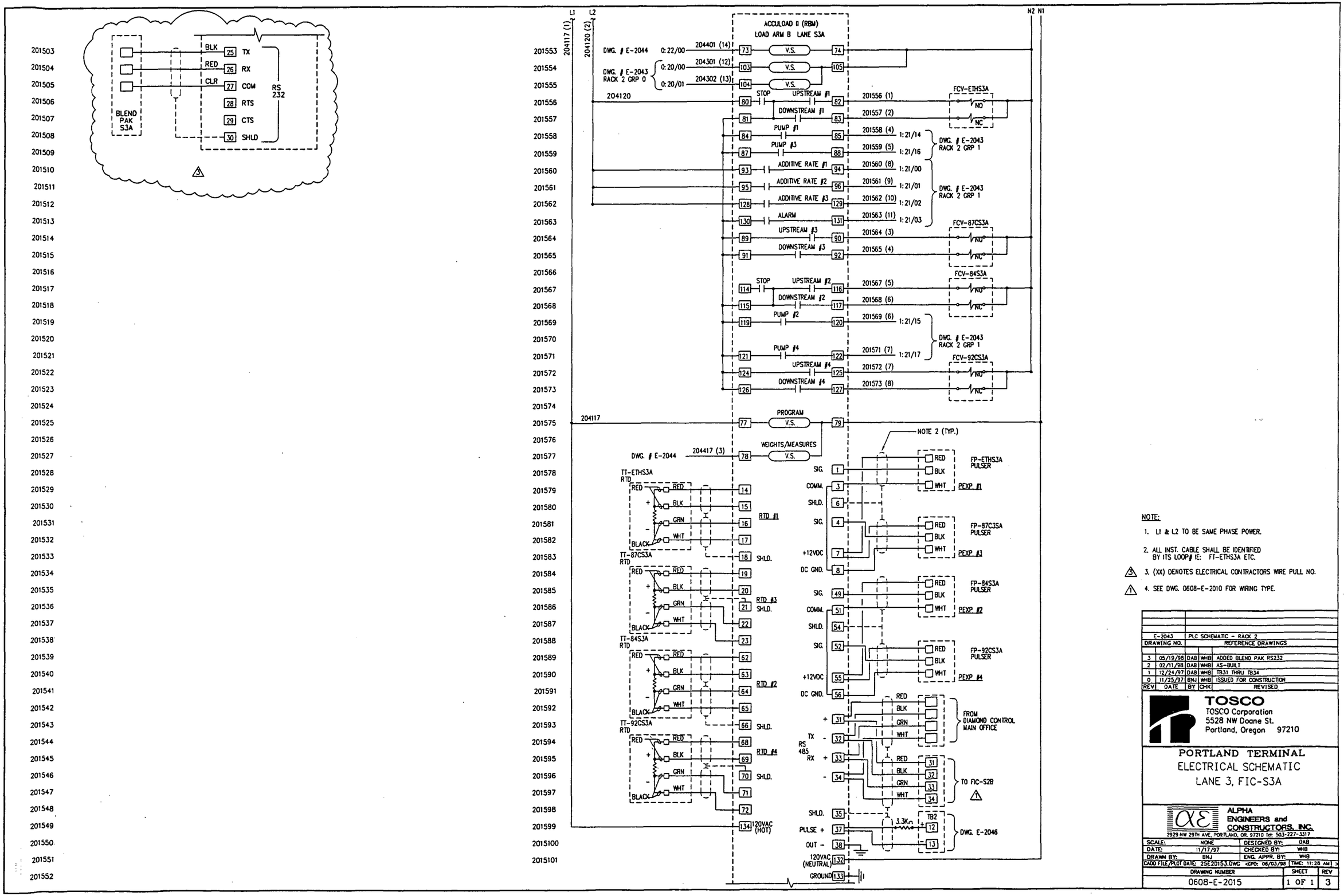

NOTE:

1. L1 & L2 TO BE SAME PHASE POWER.
2. ALL INST. CABLE SHALL BE IDENTIFIED BY ITS LOOP# IE: FT-ETHS3A ETC.
3. (XX) DENOTES ELECTRICAL CONTRACTORS WIRE PULL NO.
4. SEE DWG. 0608-E-2010 FOR WIRING TYPE.

E-2043	PLC SCHEMATIC - RACK 2			
DRAWING NO.	REFERENCE DRAWINGS			
3	05/19/98	DAB	WHB	ADDED BLEND PAK RS232
2	02/11/98	DAB	WHB	AS-BUILT
1	12/24/97	DAB	WHB	TB31 THRU TB34
0	11/25/97	BNJ	WHB	ISSUED FOR CONSTRUCTION
REV	DATE	BY	CHK	REVISED

TOSCO
TOSCO Corporation
5528 NW Doane St.
Portland, Oregon 97210

PORTLAND TERMINAL
ELECTRICAL SCHEMATIC
LANE 3, FIC-S3A

ALPHA ENGINEERS and CONSTRUCTORS, INC.
2929 NW 29TH AVE, PORTLAND, OR. 97210 Tel: 503-227-3317

SCALE:	NONE	DESIGNED BY:	DAB
DATE:	11/17/97	CHECKED BY:	WHB
DRAWN BY:	BNJ	ENG. APPR. BY:	WHB
CADD FILE/PLOT DATE: 25E2015S.DWG		<CPD: 06/03/98	TIME: 11:28 AM>

DRAWING NUMBER	SHEET	REV
0608-E-2015	1 OF 1	3

COP00021486

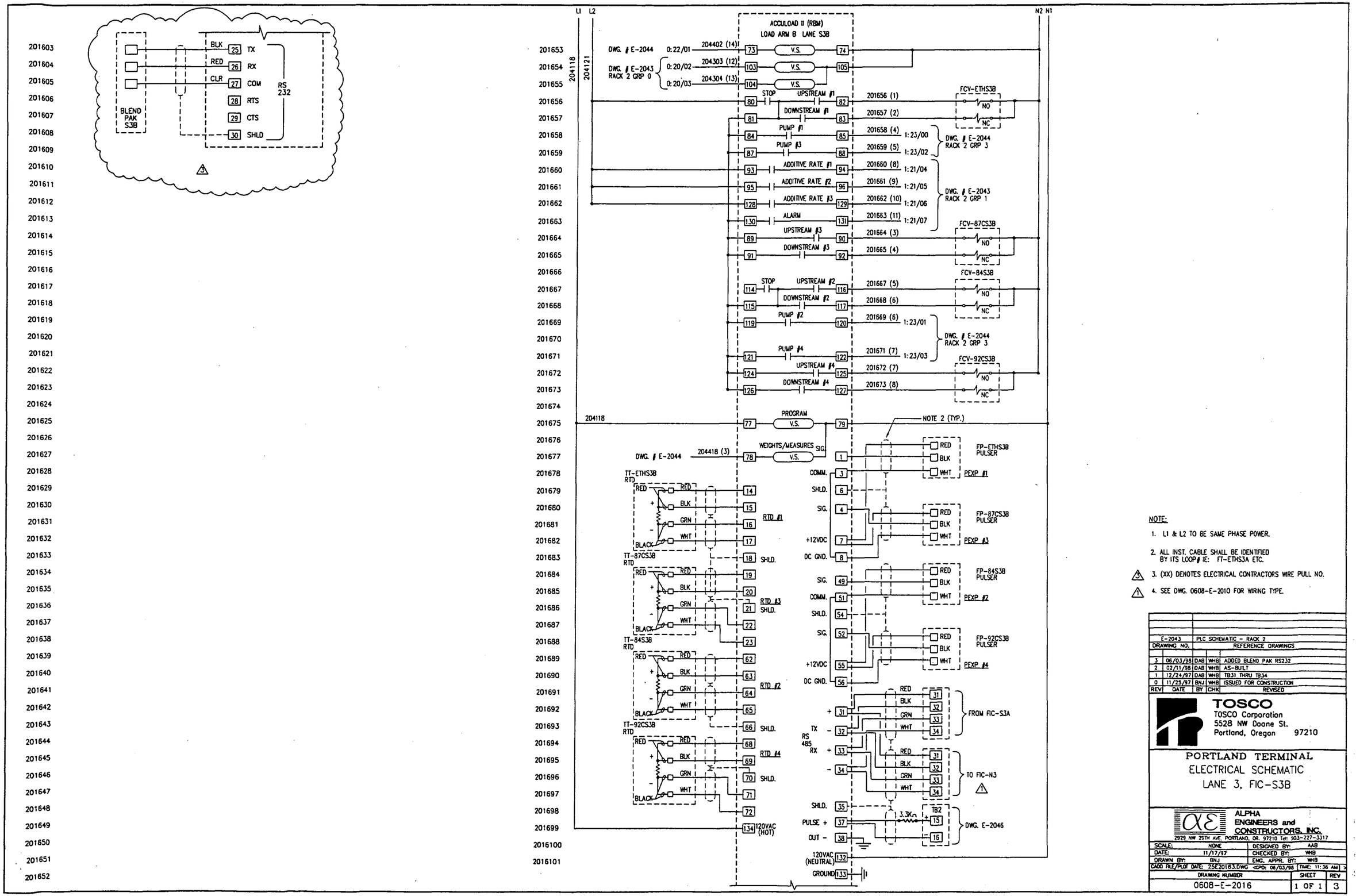

NOTE:

1. L1 & L2 TO BE SAME PHASE POWER.
2. ALL INST. CABLE SHALL BE IDENTIFIED BY ITS LOOP# IE: FT-ETHS3A ETC.
3. (XX) DENOTES ELECTRICAL CONTRACTORS WIRE PULL NO.
4. SEE DWG. 0608-E-2010 FOR WIRING TYPE.

E-2043	PLC SCHEMATIC - RACK 2
DRAWING NO.	REFERENCE DRAWINGS

REV	DATE	BY	CHK	REVISED
3	06/03/98	DAB	WHB	ADDED BLEND PAK RS232
2	02/11/98	DAB	WHB	AS-BUILT
1	12/24/97	DAB	WHB	TB31 THRU TB34
0	11/25/97	BNJ	WHB	ISSUED FOR CONSTRUCTION

TOSCO
TOSCO Corporation
5528 NW Doane St.
Portland, Oregon 97210

PORTLAND TERMINAL
ELECTRICAL SCHEMATIC
LANE 3, FIC-S3B

ALPHA ENGINEERS and CONSTRUCTORS, INC.
2929 NW 25TH AVE. PORTLAND, OR. 97210 Tel: 503-227-3317

SCALE:	NONE	DESIGNED BY:	AAB
DATE:	11/17/97	CHECKED BY:	WHB
DRAWN BY:	BNJ	ENG. APPR. BY:	WHB
CADD FILE/PLOT DATE:	25E2016.3.DWG <CPD: 06/03/98	TIME: 11:36 AM>	

DRAWING NUMBER	SHEET	REV
0608-E-2016	1 OF 1	3

COP0021487

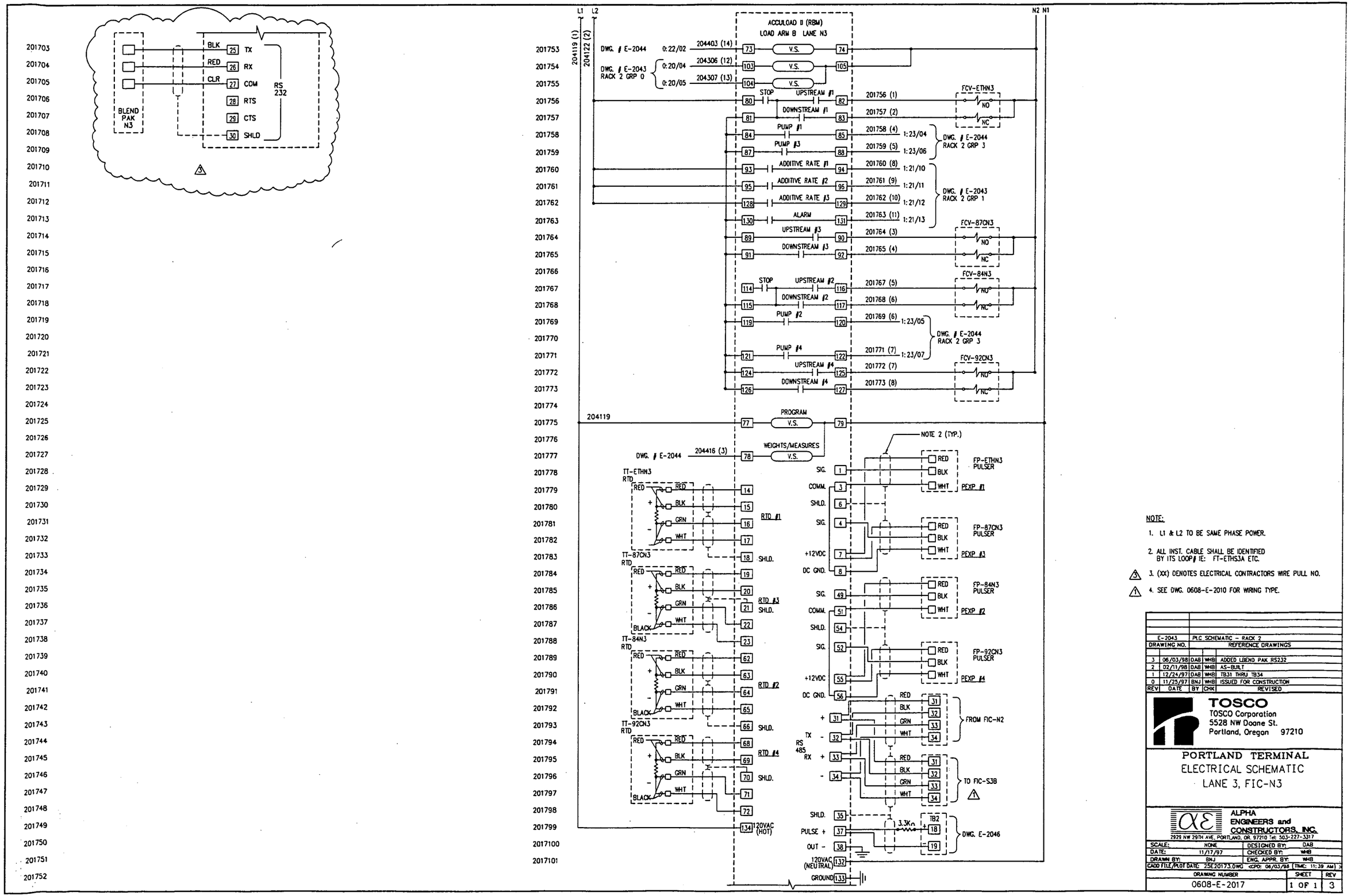

NOTE:

1. L1 & L2 TO BE SAME PHASE POWER.
2. ALL INST. CABLE SHALL BE IDENTIFIED BY ITS LOOP# IE: FT-ETHS3A ETC.
3. (XX) DENOTES ELECTRICAL CONTRACTORS WIRE PULL NO.
4. SEE DWG. 0608-E-2010 FOR WIRING TYPE.

E-2043				PLC SCHEMATIC - RACK 2
DRAWING NO.				REFERENCE DRAWINGS
3	06/03/98	DAB	WHB	ADDED LBEND PAK RS232
2	02/11/98	DAB	WHB	AS-BUILT
1	12/24/97	DAB	WHB	TB31 THRU TB34
0	11/25/97	BNJ	WHB	ISSUED FOR CONSTRUCTION
REV	DATE	BY	CHK	REVISED

TOSCO
TOSCO Corporation
5528 NW Doane St.
Portland, Oregon 97210

PORTLAND TERMINAL
ELECTRICAL SCHEMATIC
LANE 3, FIC-N3

ALPHA ENGINEERS and CONSTRUCTORS, INC.
2929 NW 29TH AVE., PORTLAND, OR. 97210 Tel: 503-227-3317

SCALE:	NONE	DESIGNED BY:	DAB
DATE:	11/17/97	CHECKED BY:	WHB
DRAWN BY:	BNJ	ENG. APPR. BY:	WHB
CADD FILE/PLOT DATE: 25E20173.DWG		<CPO: 06/03/98	TIME: 11:39 AM>

DRAWING NUMBER	SHEET	REV
0608-E-2017	1 OF 1	3

COP0021488

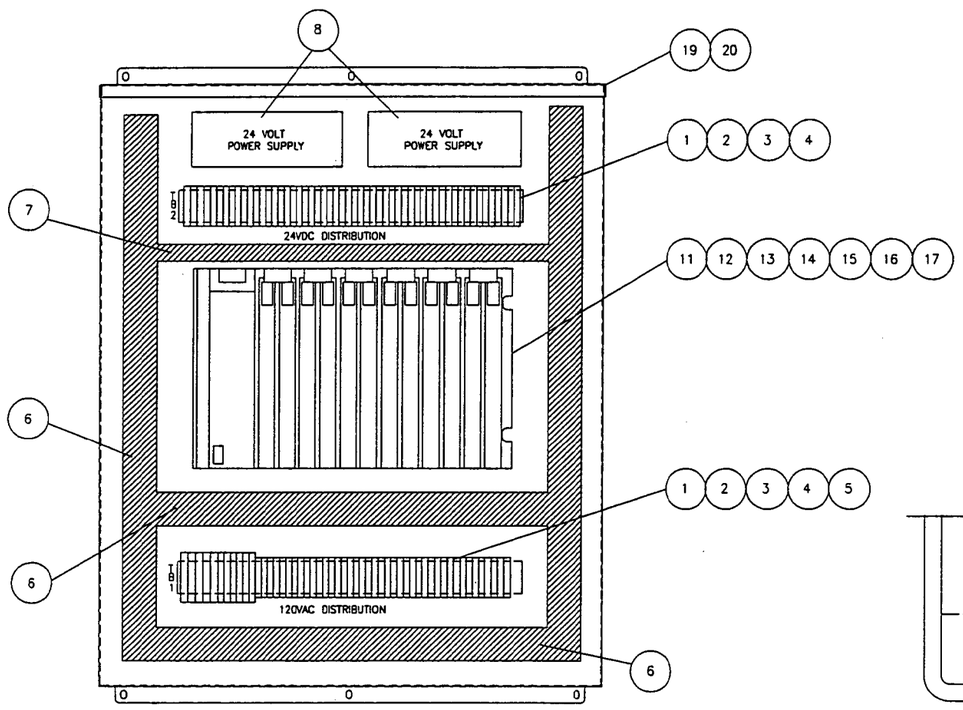

PANEL LAYOUT

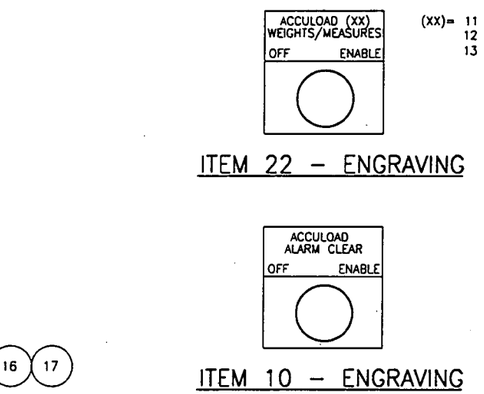

ITEM 22 – ENGRAVING

ITEM 10 – ENGRAVING

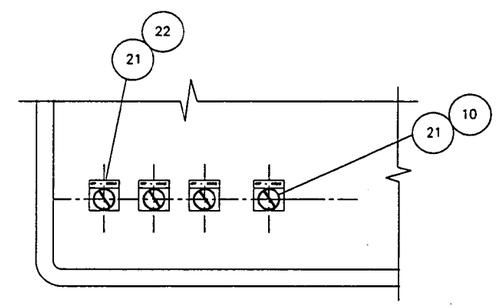

PANEL DOOR FRONT

BILL OF MATERIAL

ITEM	QUANTITY	DESCRIPTION
1	6'	ALLEN-BRADLEY CAT. #1492-DR5 DIN RAIL
2	80	ALLEN-BRADLEY CAT. #1492-W6 TERMINAL BLOCKS
3	4	ALLEN-BRADLEY CAT. #1492-CJ7-10 JUMPERS
4	4	ALLEN-BRADLEY CAT. #1492-EA35 END ANCHORS
5	11	ALLEN-BRADLEY CAT. #1492-GH050 CIRCUIT BREAKER (5A)
6	11'	2" X 3" PANDUIT
7	2'-6"	1" X 3" PANDUIT
8	2	POWER-ONE HD24-4.8-A, POWER SUPPLY
9	–	NOT USED
10	1	ALLEN-BRADLEY JUMBO LEGEND PLATE #800T-X609E
11	1	ALLEN-BRADLEY CAT. # 1771 – A3(PANEL MOUNTED CHASSIS)
12	1	ALLEN-BRADLEY CAT. # 1771 – ASB SER. D RI/O ADAPTER
13	2	ALLEN-BRADLEY CAT. # 1771 – P4S POWER SUPPLY
14	2	ALLEN-BRADLEY CAT. # 1771 – CFM FLOW MODULE
15	1	ALLEN-BRADLEY CAT. # 1771 – OAD OUTPUT MODULE
16	2	ALLEN-BRADLEY CAT. # 1771 – IAD INPUT MODULE
17	1	ALLEN-BRADLEY CAT. # 1771 – IBD DC INPUT MODULE
18	1	ALLEN-BRADLEY CAT. # 1771 – CT PS CABLE
19	1	HOFFMAN CAT. # A36H3012GQRLP
20	1	HOFFMAN CAT. # A36P30
21	4	ALLEN-BRADLEY 2 POSITION SELECTOR SWITCH #800T-H31D1
22	3	ALLEN-BRADLEY JUMBO LEGEND PLATE #800T-X609E
23	–	NOT USED

NOTES:

1. ALL NEW +24VDC POWER WIRE SHALL BE 16 GA. BLUE.
2. ALL NEW 24VDC COMMON WIRE SHALL BE 16 GA. WHITE W/BLUE STRIPE.
3. ALL EQPT. BY TOSCO; ALL CONDUIT AND WIRING BY CONTRACTOR.

DRAWING NO.	REFERENCE DRAWINGS

REV	DATE	BY	CHK	REVISED
0	06/03/98	DAB	WHB	ISSUE FOR CONSTRUCTION

TOSCO
TOSCO Corporation
5528 NW Doane St.
Portland, Oregon 97210

PORTLAND TERMINAL
TRUCK LOADING RACK
ELECTRICAL PANEL LAYOUT
LANE 1

ALPHA ENGINEERS and CONSTRUCTORS, INC.
2929 NW 29TH AVE, PORTLAND, OR. 97210 Tel: 503-227-3317

SCALE:	NONE	DESIGNED BY:	AAB
DATE:	03/19/98	CHECKED BY:	WHB
DRAWN BY:	DAB	ENG. APPR. BY:	

CADD FILE/PLOT DATE: 25E2020A.DWG <CPD: 06/03/98 TIME: 3:51 PM>

DRAWING NUMBER	SHEET	REV
0608-E-2020	1 OF 1	0

COP00021489

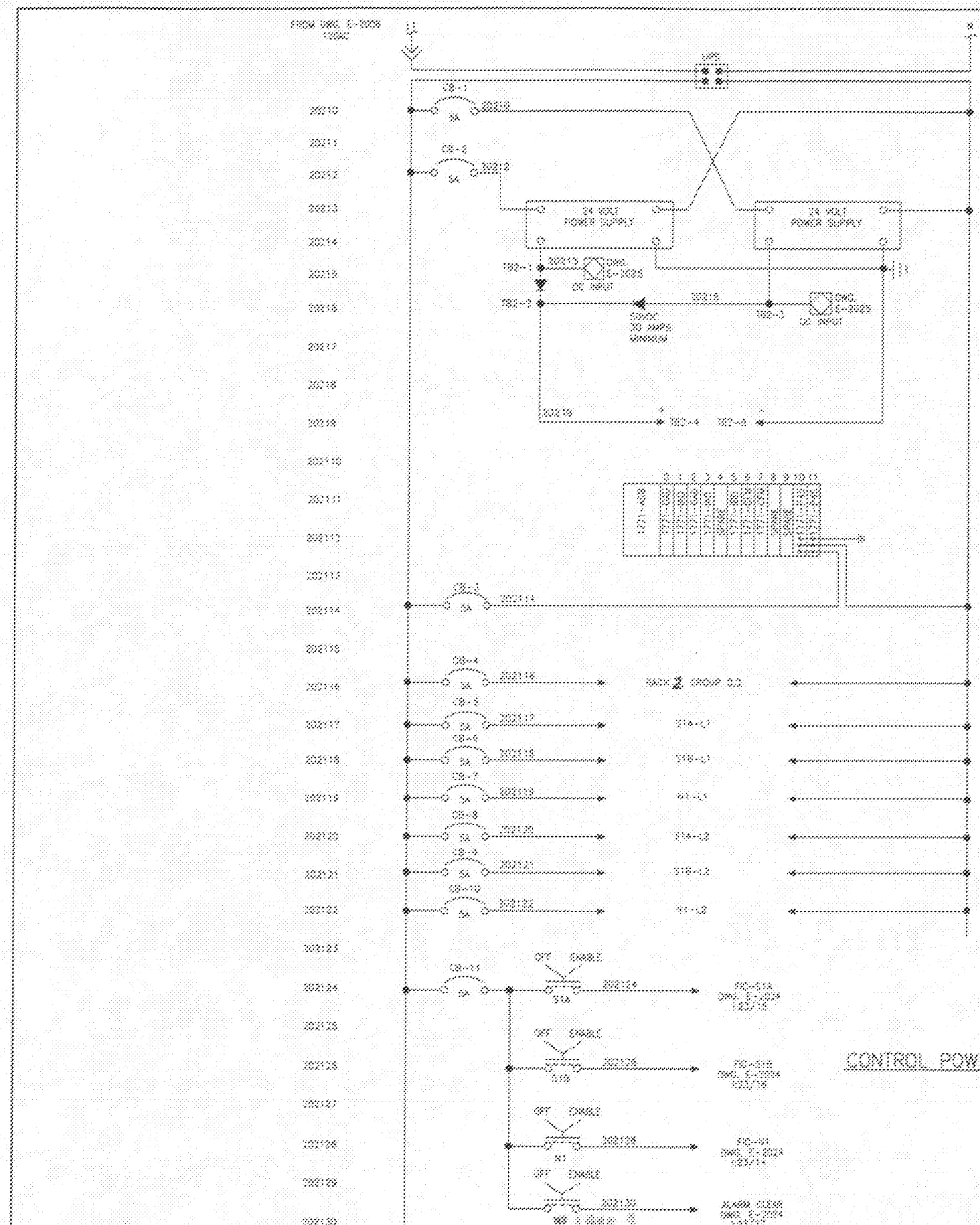

CONTROL POWER

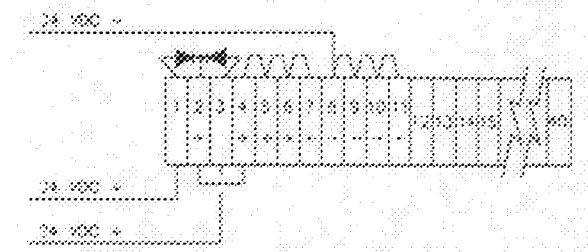

TB2 – 24VDC POWER

TOSCO

TOSCO Corporation
3528 NW Stone St.
Portland, Oregon 97210

PORTLAND TERMINAL
CONTROL POWER SCHEMATIC
LANE 1 – RACK 1

ALPHA ENGINEERING and CONSTRUCTIONS, INC.

COP00021490

NEW CARD

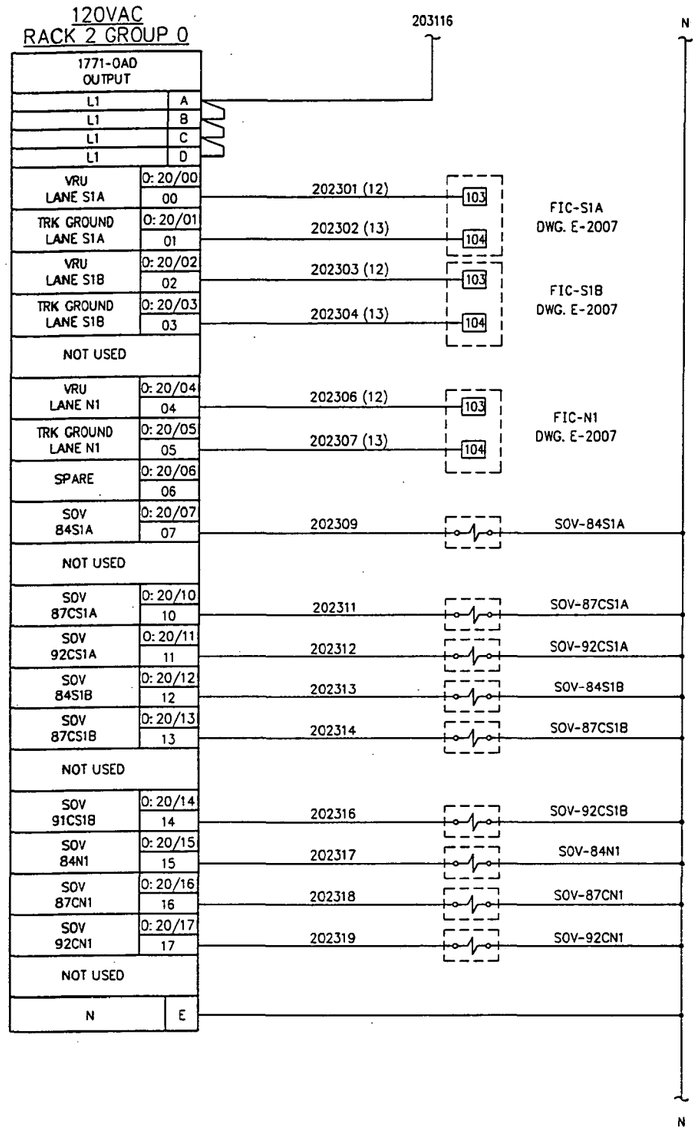

NEW CARD

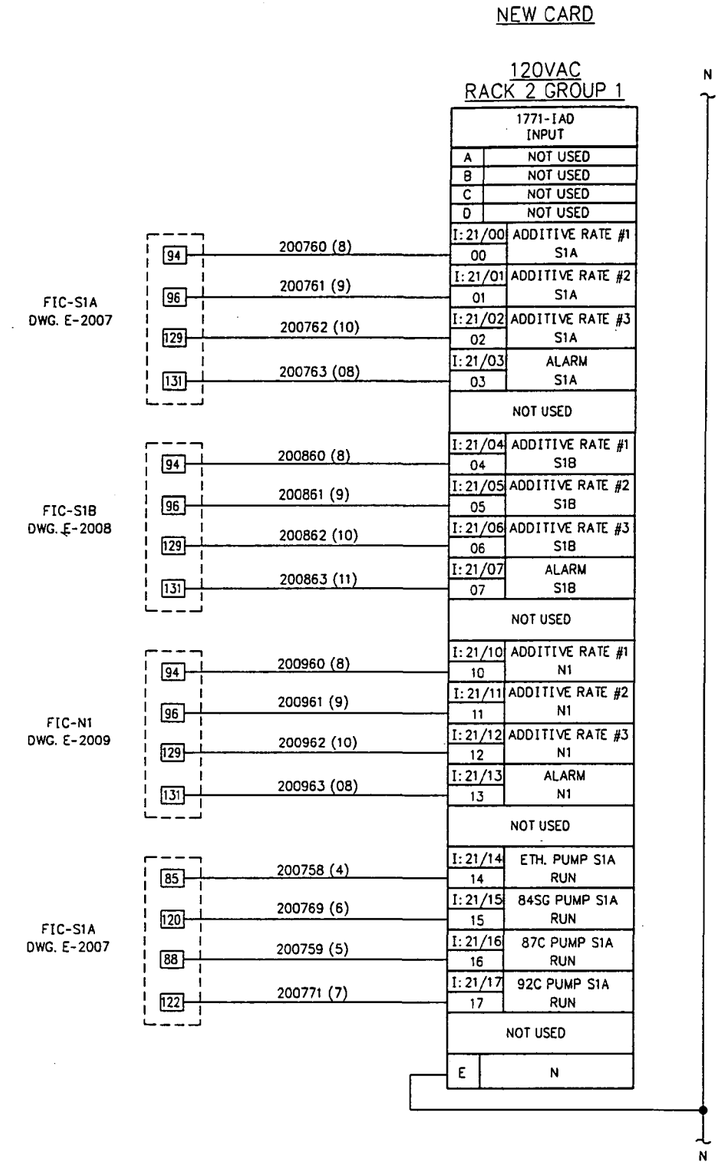

NOTE:

1. (XX) DENOTES ELECTRICAL CONTRACTORS WIRE PULL NO.

RAWING NO.	REFERENCE DRAWINGS	REV. NO.	DATE	REVISED	DRAWN BY	CKD. BY
E-2007	ELECTRICAL LANE S1A SCHEMATIC	0	06/03/98	ISSUE FOR CONSTRUCTION	DAB	WHB
E-2008	ELECTRICAL LANE S1B SCHEMATIC					
E-2009	ELECTRICAL LANE N1 SCHEMATIC					
E-2021	CONTROL POWER SCHEMATIC LANE 1 RACK 2.					

TOSCO
Tosco Corporation
5528 NW Doane St.
Portland, Oregon 97210

ALPHA ENGINEERS and CONSTRUCTORS, INC.
2929 NW 29th AVE, PORTLAND, OR. 97210 Tel:(503)227-3317/Fax:(503)227-3244

DRAWN BY	DAB
CHKD BY	WHB
APPD BY	
SCALE	NONE
DATE	05/19/98

PORTLAND TERMINAL
PORTLAND OREGON
PLC SCHEMATIC
LANE 1 - RACK 2
GROUP 0,1

DRAWING NO.	SHEET	REV.
0608-E-2023	1 OF 1	0

25E2023A.DWG <CPD: 05/19/98 [TIME: 12:13 AM]>

COP0021491

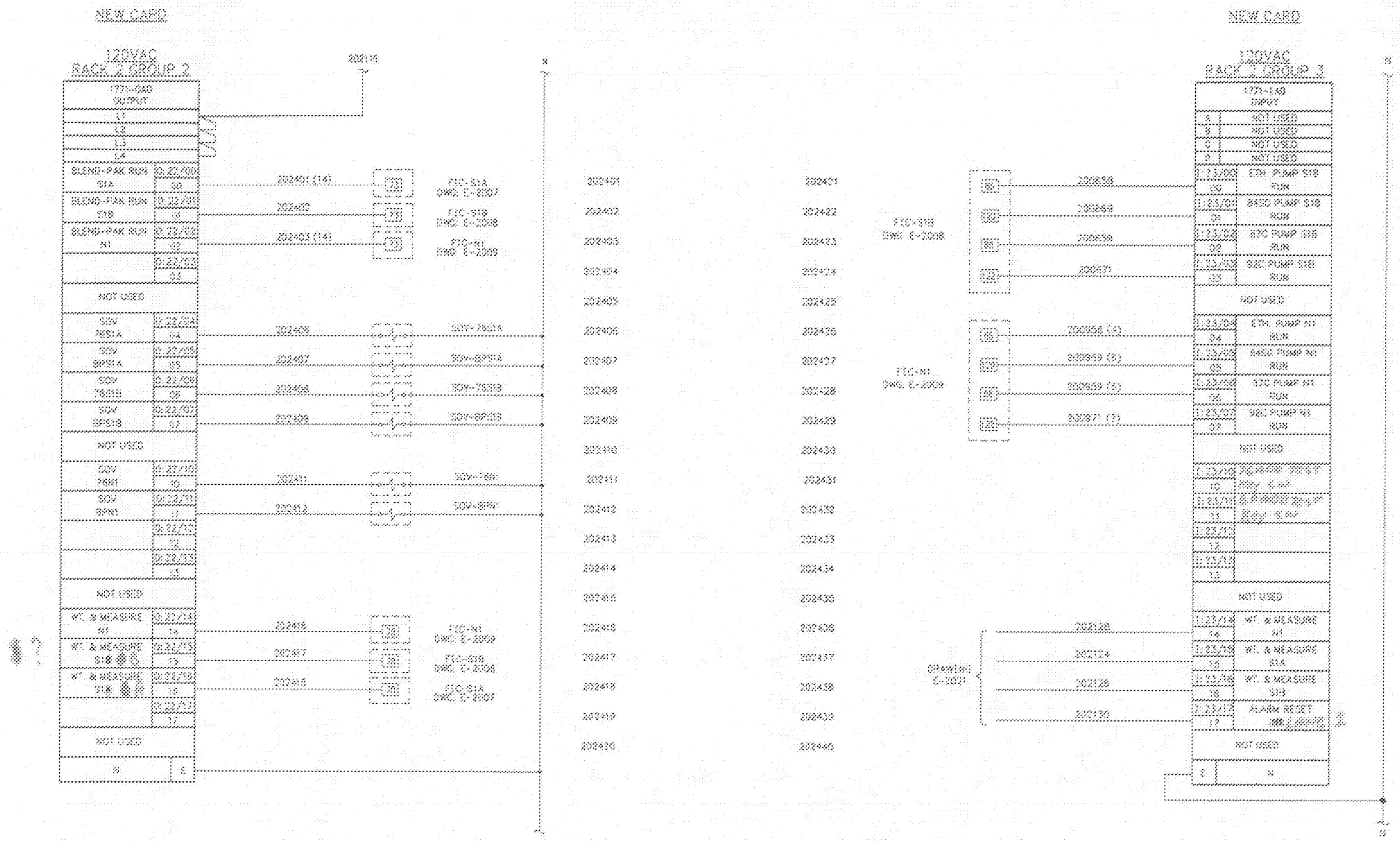

NOTE:

1. (XX) DENOTES ELECTRICAL CONTRACTORS WIRE PULL NO.

DRAWING NO.	REFERENCE DRAWINGS	REV. NO.	DATE	REVISED	DRAWN BY	CHK BY
E-2007	ELECTRICAL LANE S1A SCHEMATIC	0	05/20/98	ISSUE FOR CONSTRUCTION	DAB	WHR
E-2008	ELECTRICAL LANE S1B SCHEMATIC					
E-2009	ELECTRICAL LANE N1 SCHEMATIC					
E-2021	CONTROL POWER SCHEMATIC LANE 1 - RACK 1					

TOSCO
Tosco Corporation
6528 NW Doane St.
Portland, Oregon 97210

ALPHA ENGINEERS and CONSTRUCTORS, INC.
5229 NE 82nd Ave., Portland, OR 97220 • 503/257-1570 • FAX 503/257-1574

DRAWN BY	DAB
CHKD BY	JAB
APPD BY	WHR
SCALE	NONE
DATE	05/19/98

PORTLAND TERMINAL
PORTLAND, OREGON
PLC SCHEMATIC
LANE 1 - RACK 2
GROUP 2,3

DRAWING NO.	SHT.	REV.
0608-E-2024	1 OF 1	0

COP00021492

SPARE

RACK 2 GROUP 4

NEW CARD

24VDC
RACK 2 GROUP 5

DC COMMON

				1771-IBD INPUT	
				A	NOT USED
				B	NOT USED
				C	NOT USED
				D	NOT USED
202521	DRAWING E-2021	TB-2-1	20215	I:25/00 00	24VDC P.S. RACK 2
202522		TB-2-3	20216	I:25/01 01	24VDC P.S. RACK 2
202523				I:25/02 02	
202524				I:25/03 03	
202525				NOT USED	
202526				I:25/04 04	
202527				I:25/05 05	
202528				I:25/06 06	
202529				I:25/07 07	
202530				NOT USED	
202531				I:25/10 10	
202532				I:25/11 11	
202533				I:25/12 12	
202534				I:25/13 13	
202535				NOT USED	
202536				I:25/14 14	
202537				I:25/15 15	
202538				I:25/16 16	
202539				I:25/17 17	
202540				NOT USED	
				E	N

N

DRAWING NO.	REFERENCE DRAWINGS	REV. NO.	DATE	REVISED	DRAWN BY	CKD. BY
		0	05/27/98	ISSUE FOR CONSTRUCTION	DAB	WHB

TOSCO
Tosco Corporation
5528 NW Doane St.
Portland, Oregon 97210

ALPHA ENGINEERS and CONSTRUCTORS, INC.
2929 NW 29th AVE, PORTLAND, OR. 97210 Tel:(503)227-3317/Fax:(503)227-3244

DRAWN BY	DAB
CHKD BY	AAB
APPD BY	WHB
SCALE	NONE
DATE	05/19/98

PORTLAND TERMINAL
PORTLAND OREGON

PLC SCHEMATIC
LANE 1 - RACK 2
GROUP 4, 5

DRAWING NO.	SHEET	REV.
0608-E-2025	1 OF 1	0

25E20250.DWG <CPD: 06/03/98 [THUF 4:52 PM]>

COP0021493

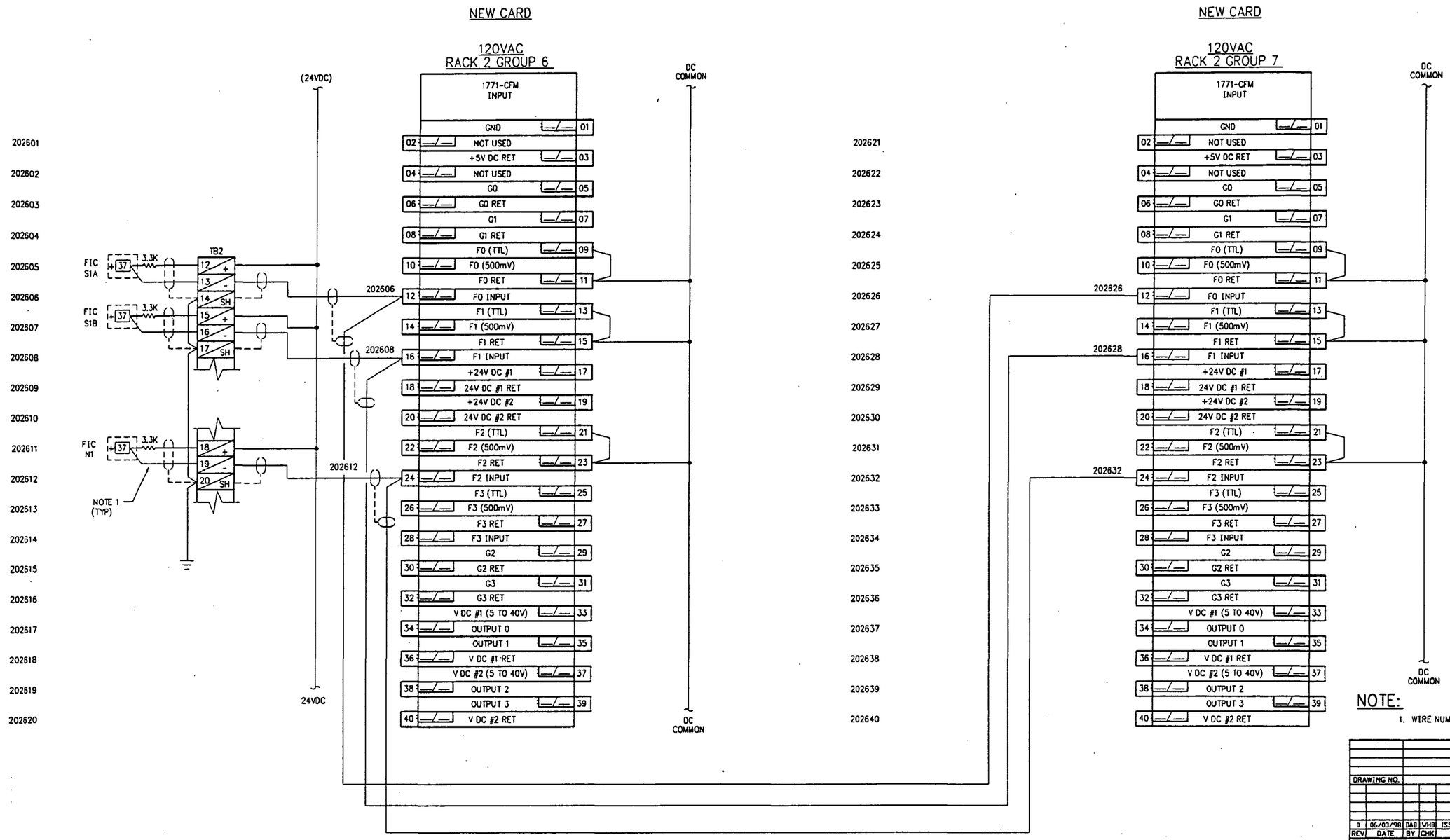

DRAWING NO.	REFERENCE DRAWINGS

REV	DATE	BY	CHK	REVISED
0	06/03/98	DAB	VHB	ISSUE FOR CONSTRUCTION

TOSCO
TOSCO Corporation
5528 NW Doane St.
Portland, Oregon 97210

PORTLAND TERMINAL
PLC SCHEMATIC
LANE 1 - RACK 2
GROUP 6,7

ALPHA ENGINEERS and CONSTRUCTORS, INC.
2929 NW 29TH AVE., PORTLAND, OR. 97210 Tel: 503-227-3317

SCALE:	NONE	DESIGNED BY:	AAB
DATE:	05/19/98	CHECKED BY:	VHB
DRAWN BY:	DAB	ENG. APPR. BY:	

CADD FILE/PLOT DATE: 25E2026A.DWG <CPD: 06/03/98 TIME: 5:06 PM> >

DRAWING NUMBER	SHEET	REV
0608-E-2026	1 OF 1	0

COP00214944

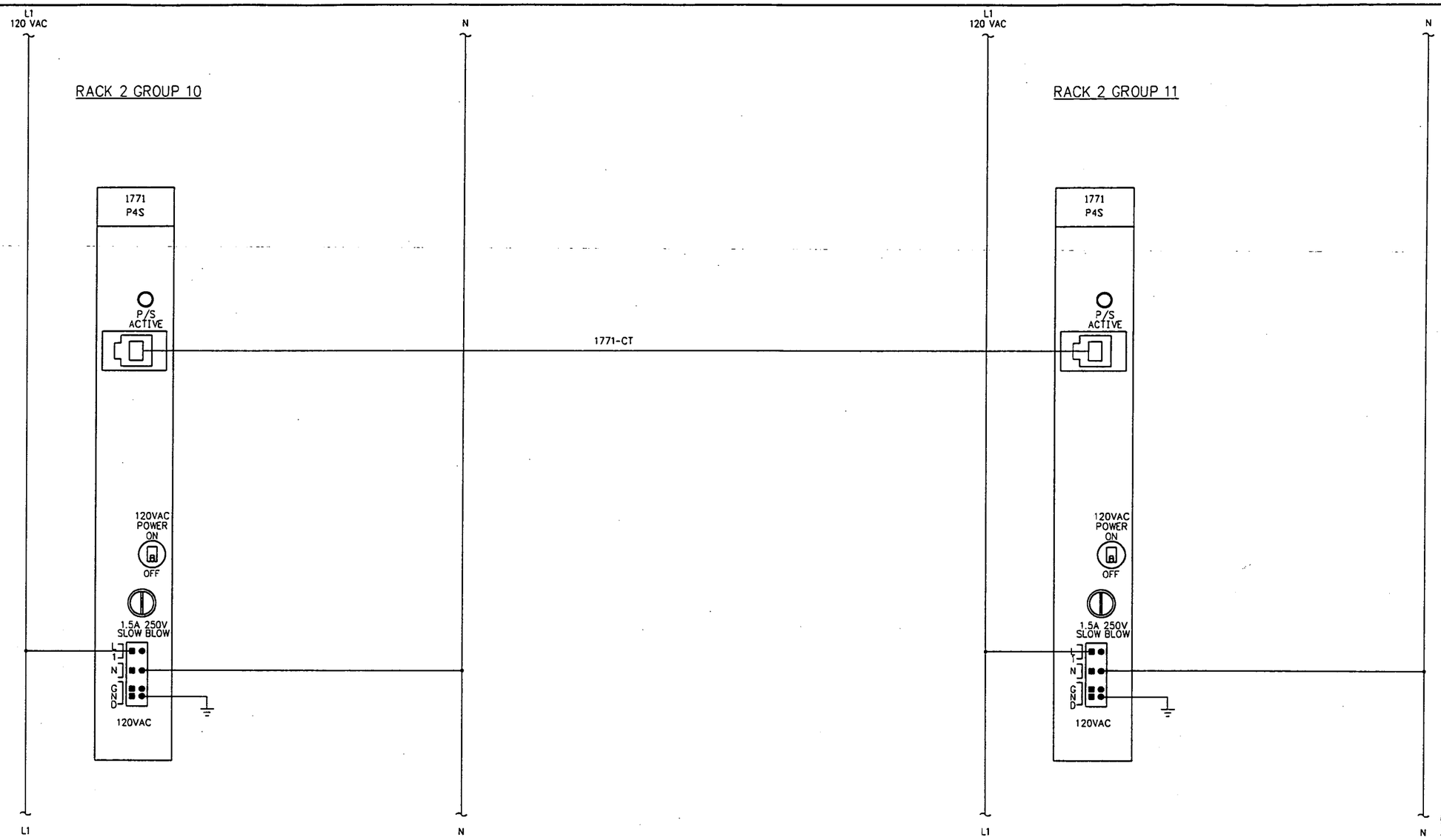

DRAWING NO.	REFERENCE DRAWINGS	REV. NO.	DATE	REVISED	DRAWN BY	CKD. BY
		0	05/27/98	ISSUE FOR CONSTRUCTION	DAB	AAB

TOSCO
Tosco Corporation
5528 NW Doane St.
Portland, Oregon 97210

ALPHA ENGINEERS and CONSTRUCTORS, INC.
2929 NW 29th AVE, PORTLAND, OR. 97210 Tel:(503)227-3317/Fax:(503)227-3244

DRAWN BY	DAB
CHKD BY	AAB
APPD BY	WHB
SCALE	NONE
DATE	05/27/98

PORTLAND TERMINAL
PORTLAND OREGON
PLC SCHEMATIC
LANE 1 - RACK 2
GROUP 10, 11

DRAWING NO.	SHEET	REV.
0608-E-2028	1 OF 1	0

25F20280.DWG, APPD: 06/03/98 [TIME: 08:31 AM]

COP00214495

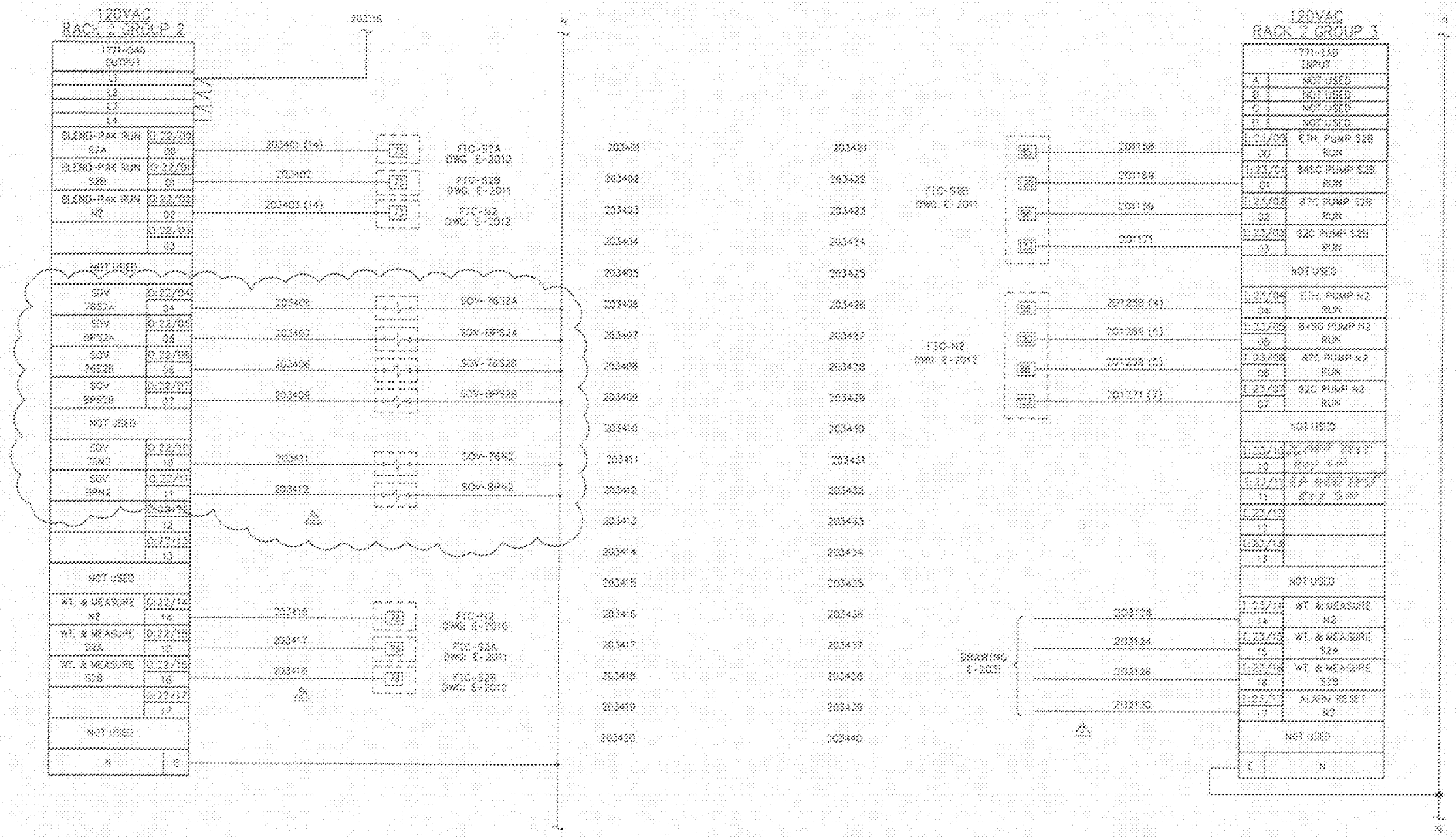

DRAWING NO.	REFERENCE DRAWINGS	REV NO.	DATE	REVISED	DRAWN BY	CHK BY
E-2030	ELECTRICAL LANE 52A SCHEMATIC	0	11/20/97	ISSUED FOR CONSTRUCTION	DAB	WHB
E-2031	ELECTRICAL LANE 52B SCHEMATIC	1	02/11/98	AS-BUILT	DAB	WHB
E-2032	ELECTRICAL LANE N2 SCHEMATIC	2	05/19/98	ADD WT. & MEASURES, ALARM RESET	DAB	WHB
E-2031	CONTROL POWER SCHEMATIC LANE 2 - RACK 2	3	06/03/98	ADD 75 & 8P ADDITIVE 120V'S	DAB	WHB

TOSCO
Tosco Corporation
2929 NW Doane St.
Portland, Oregon 97210

ALPHA ENGINEERS and CONSTRUCTORS, INC.

DRAWN BY: SKU
CHK BY: AAB
APP BY: WHB
SCALE: NONE
DATE: 11/17/97

PORTLAND TERMINAL
PORTLAND OREGON
PLC SCHEMATIC
LANE 2 - RACK 2
GROUP 2,3

DRAWING NO.: 0608-E-2034
REV: 1
SHT: 1 OF 1
SIZE: D

COP00021496

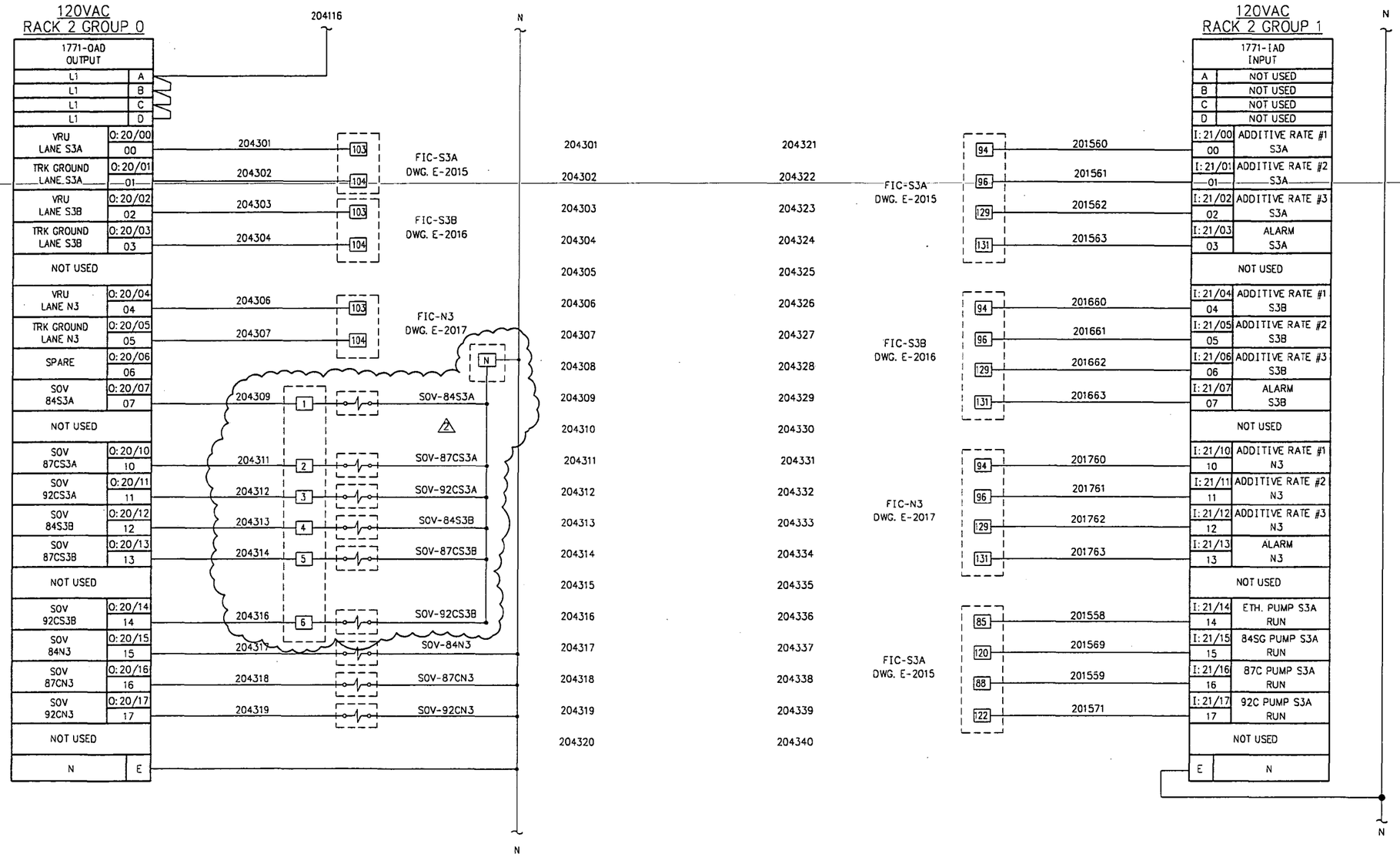

DRAWING NO.	REFERENCE DRAWINGS	REV. NO.	DATE	REVISED	DRAWN BY	CKD. BY
E-2015	ELECTRICAL LANE S2A SCHEMATIC	0	11/25/97	ISSUED FOR CONSTRUCTION	DAB	WHB
E-2016	ELECTRICAL LANE S2B SCHEMATIC	1	02/11/98	AS-BUILT	DAB	WHB
E-2017	ELECTRICAL LANE N2 SCHEMATIC	2	06/24/98	ADD FIELD TB'S	DAB	AAB
E-2043	PLC SCHEMATIC RACK 2 - TRUCKLOADING					

TOSCO
Tosco Corporation
5529 NW Doane St.
Portland, Oregon 97210

ALPHA ENGINEERS and CONSTRUCTORS, INC.
2929 NW 29th AVE, PORTLAND, OR. 97210 Tel:(503)227-3317/Fax:(503)227-3244

DRAWN BY	BNJ
CHKD BY	AAB
APPD BY	WHB
SCALE	NONE
DATE	11/17/97

PORTLAND TERMINAL
PORTLAND OREGON
PLC SCHEMATIC
LANE 3 - RACK 2
GROUP 0,1

DRAWING NO.	SHEET	REV.
0608-E-2043	1 OF 1	2

25E20432.DWG <CPD: 06/26/98 [TIME: 11:56 AM]>

COP0021497

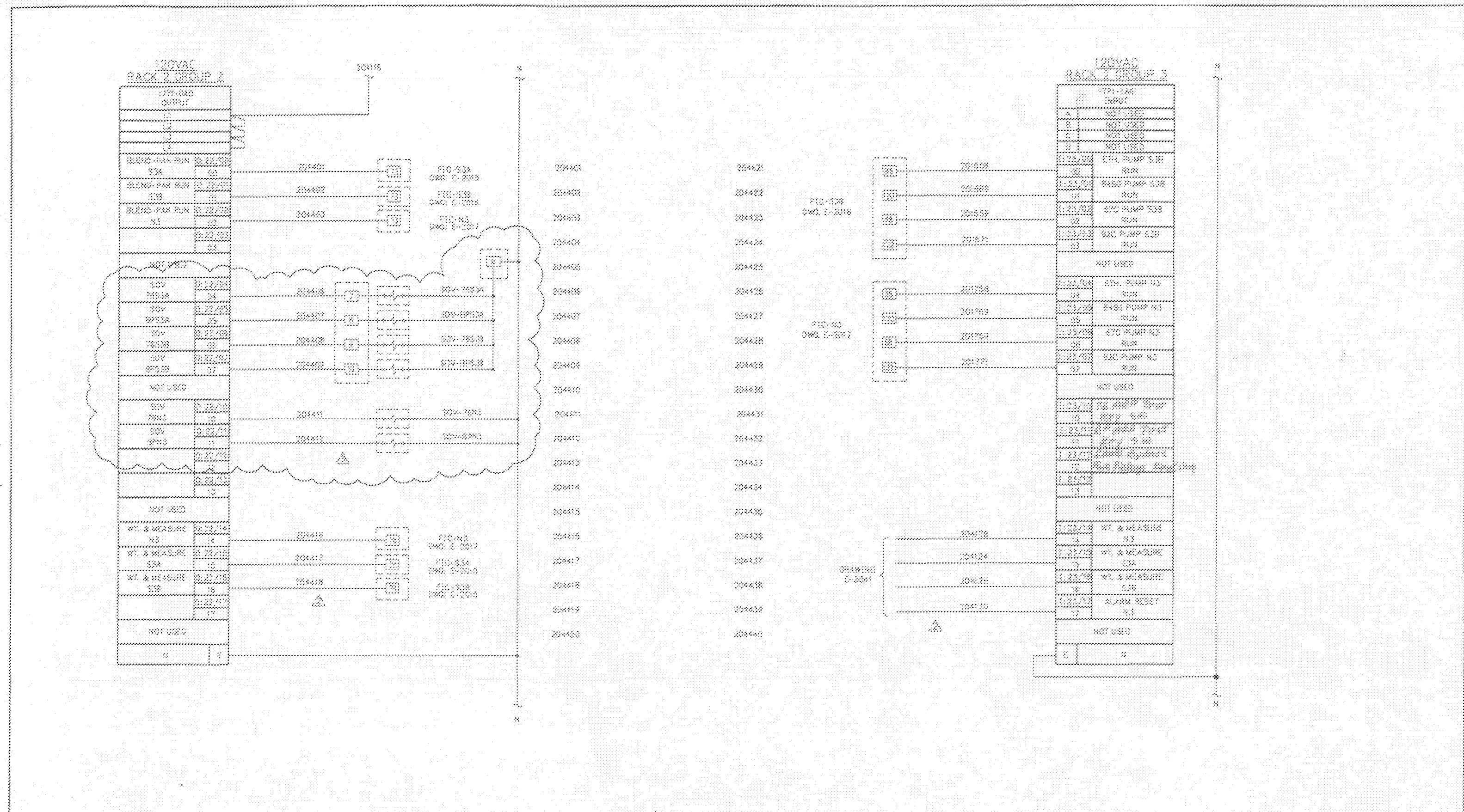

DRAWING NO.	REFERENCE DRAWINGS	REV. NO.	DATE	REVISIONS	DRAWN BY	CHK. BY
E-2015	ELECTRICAL LANE 5,6A SCHEMATIC	0	11/25/97	ISSUED FOR CONSTRUCTION	DAB	MHB
E-2016	ELECTRICAL LANE 5,6B SCHEMATIC	1	02/11/98	AS-BUILT	DAB	MHB
E-2017	ELECTRICAL LANE 4,3 SCHEMATIC	2	05/13/98	ADD WT. & MEASURES, ALARM RESET	DAB	MHB
		3	06/24/98	ADD 78 & 89F ADDITIONS 90V/S	DAB	MHB

TOSCO
Tosco Corporation
5728 SW Macadam St.
Portland, Oregon 97239

ALPHA
ENGINEERS and
CONSTRUCTORS, INC.
10024 SW 30th Ave., Portland, OR 97219 Tel (503) 244-7700 Fax (503) 244-7711

DRAWN BY	DAB
CHK. BY	MHB
APP. BY	MHB
DATE	11/17/97

PORTLAND TERMINAL
PORTLAND OREGON
P.C. SCHEMATIC
LANE 3 - RACK 2
GROUP 2,3

DRAWING NO. 0608-E-2044 | SHT. 1 OF 1 | REV. 3

COP00021498

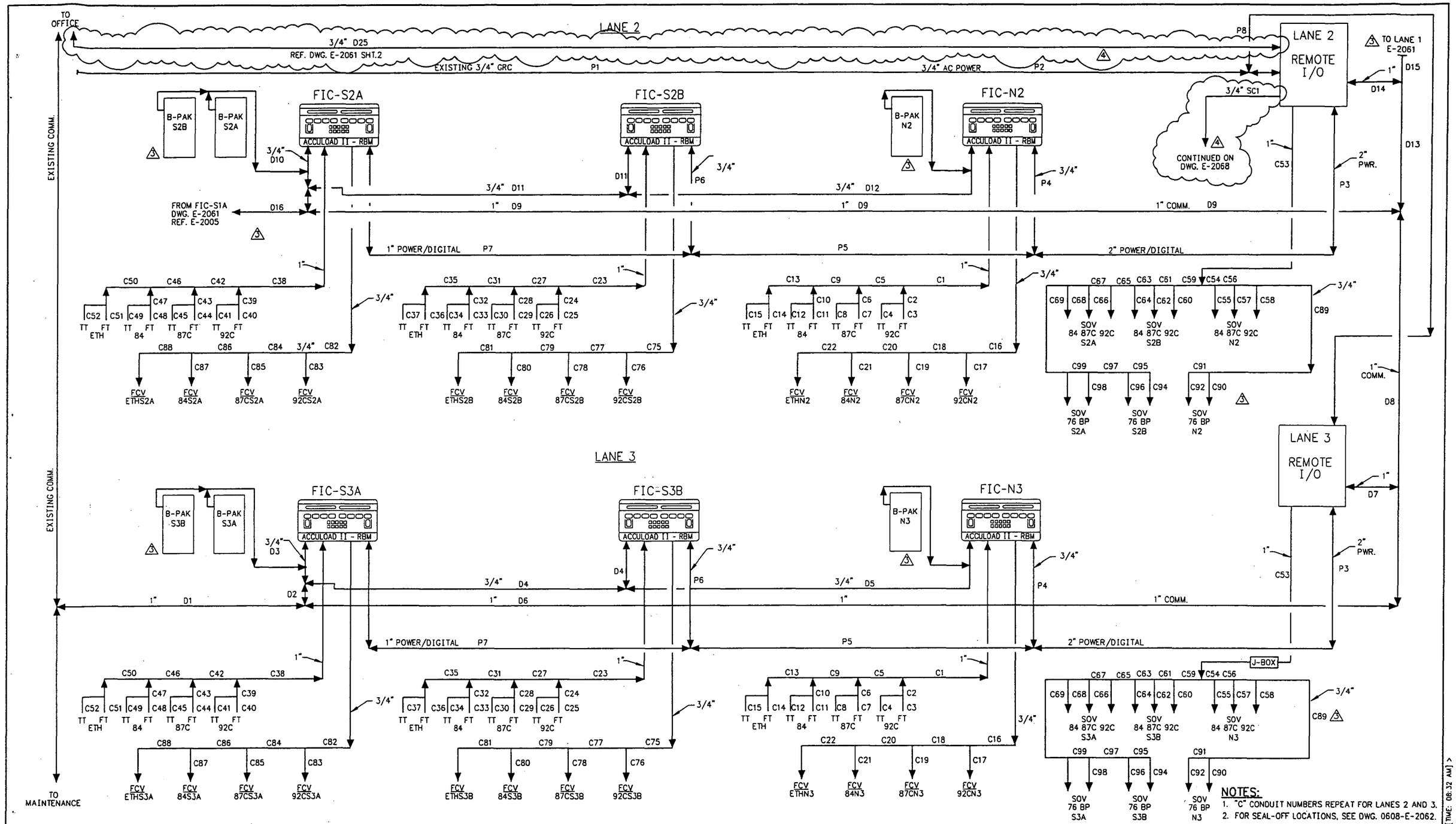

NOTES:
1. "C" CONDUIT NUMBERS REPEAT FOR LANES 2 AND 3.
2. FOR SEAL-OFF LOCATIONS, SEE DWG. 0608-E-2062.

DRAWING NO.	REFERENCE DRAWINGS	REV. NO.	DATE	REVISED	DRAWN BY	CKD. BY
0608-E-2061	CONDUIT INTERCONNECT DIAGRAM LANE 1	0	11/25/97	ISSUED FOR CONSTRUCTION	BNJ	DAB
0608-E-2005	SERIAL COMMUNICATION DIAGRAM LANE 1, 2 & 3	1	12/04/97	MODIFIED CONDUIT RUNS	DAB	WHB
0608-E-2068	LANE 2 - GAS CONDUIT DIAGRAM BLEND-PAK COMMUNICATIONS	2	12/12/97	ADDED CONDUIT NO.S; MODIFIED DATA CONDUITS	WHB	WHB
		3	06/24/98	ADD TIE-IN TO LANE 1, 76 & BP ADDITIVE SOV'S, B-PAK COMM.	DAB	AAB
		4	07/08/98	BLEND PAK DATA CONDUIT	DAB	WHB

TOSCO
Tosco Corporation
5528 NW Doane St.
Portland, Oregon 97210

ALPHA ENGINEERS and CONSTRUCTORS, INC.
2929 NW 29th AVE, PORTLAND, OR. 97210 Tel:(503)227-3317/Fax:(503)227-3244

DRAWN BY	BNJ
CHKD BY	AAB
APPD BY	WHB
SCALE	NONE
DATE	11/17/97

PORTLAND TERMINAL
PORTLAND, OREGON
ELECTRICAL
CONDUIT INTERCONNECT DIAGRAM LANE 2 AND 3

DRAWING NO.	SHEET	REV.
0608-E-2060	1 OF 1	4

25E20604.DWG <CPD: 07/10/98 [TIME: 08:32 AM]>

COP0021499

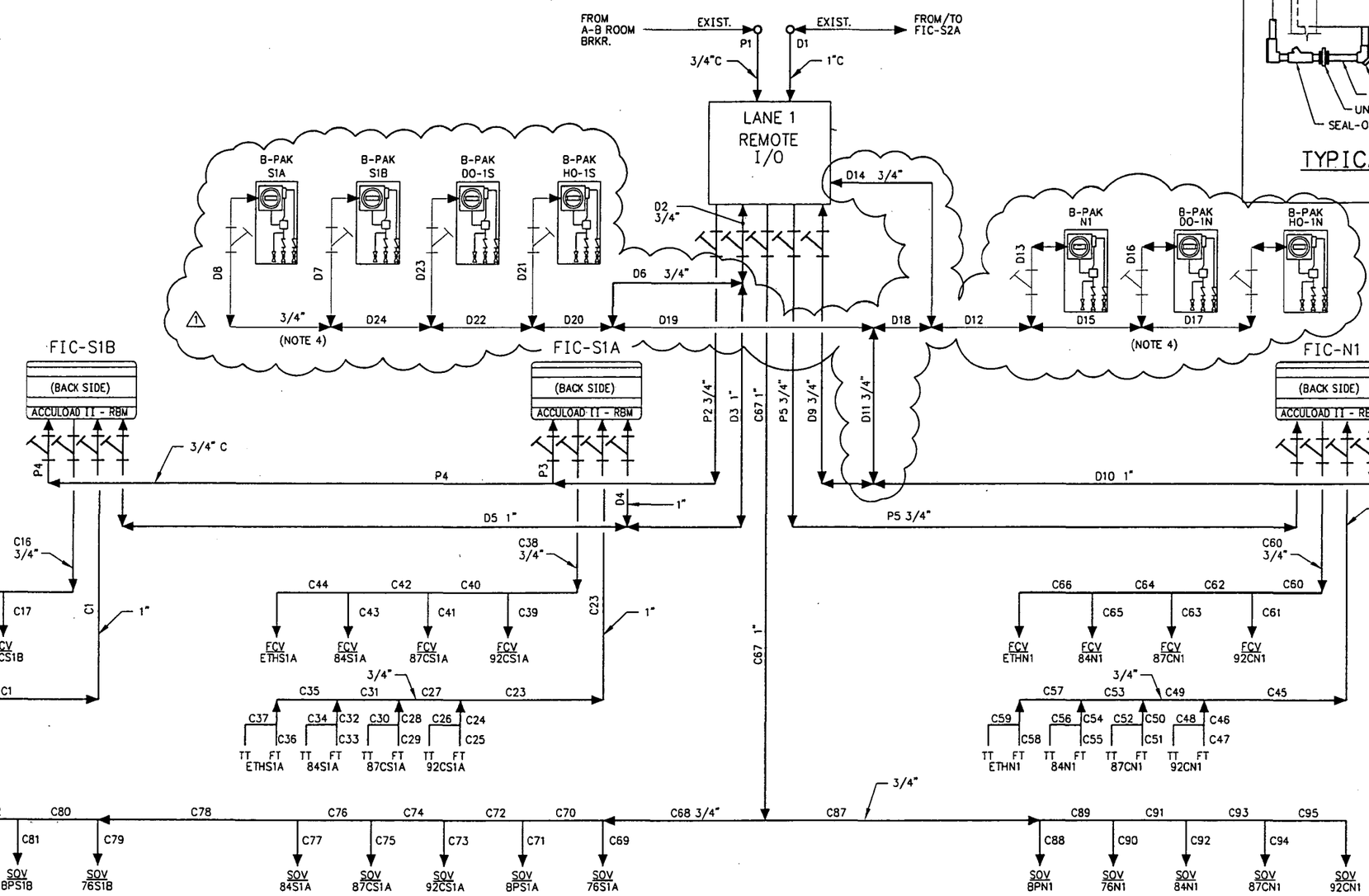

LANE 1

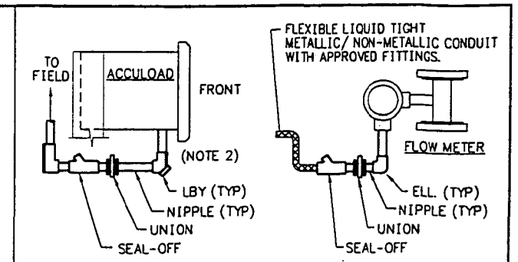

TYPICAL INSTALLATIONS
N.T.S.

NOTES:

1. REF. E-2061 SHT2 FOR CONDUIT & WIRE SCHEDULE
2. ALL CONDUIT TO ACCULOADS SHALL ENTER FROM THE REAR OF THE SUPPORT FRAME.
3. SEAL OFF'S REQUIRED WHERE PIPING LEAVES CLASSIFIED AREAS.
4. FOR NEW CONDUIT CONN. TO EXISTING CONDUIT @ B-PAK REF. DWG. E-2067.
5. ALL NEW WORK SHOWN BOLD.

DRAWING NO.	REFERENCE DRAWINGS	REV. NO.	DATE	REVISED	DRAWN BY	CKD. BY
0608-E-2062	CONDUIT INTERCONNECT DIAGRAM LANE 2	0	06/26/98	ISSUED FOR CONSTRUCTION	DAB	AAB
0608-E-2005	SERIAL COMMUNICATION DIAGRAM LANE 1, 2 & 3	1	07/08/98	ADDED DO & HO BLEND PAKS	DAB	WHB

TOSCO
Tosco Corporation
5528 NW Doane St.
Portland, Oregon 97210

ALPHA ENGINEERS and CONSTRUCTORS, INC.
2929 NW 29th AVE, PORTLAND, OR. 97210 Tel:(503)227-3317/Fax:(503)227-3244

DRAWN BY	DAB
CHKD BY	AAB
APPD BY	WHB
SCALE	NONE
DATE	06/24/98

PORTLAND TERMINAL
PORTLAND, OREGON
ELECTRICAL
CONDUIT INTERCONNECT DIAGRAM LANE 1

DRAWING NO.	SHEET	REV.
0608-E-2061	1 OF 3	1

25E20611.DWG <CPD: 07/09/98 [TIME: 10:15 AM] >

COP00021500

Conduit No	Size	From	To	Fill	Mfg. No.
D1	1"	FIC-S2A (22)	Ln 1 - Rack 2	1-4c/20 shld	Bel 9402
		Ln 2 - Rack 2		1-2c/20 shld	Bel 9463
		Ln 2 - Rack 2	D14	1-4c/20 shld	Bel 9402
D2	3/4"	Ln 1 - Rack 2	D3 / D6	3-4c/20 shld	Bel 9402
				2-2c/20 shld	Bel 8762
D3	3/4"	D2 / D6	D4 /D5	2-4c/20 shld	Bel 9402
				2-3c/20 shld	Bel 8772
				2-2c/20 shld	Bel 8762
D4	3/4"	D3	FIC-S1A (11)	2-4c/20 shld	Bel 9402
				1-3c/20 shld	Bel 8772
				1-2c/20 shld	Bel 8762
D5	3/4"	D3 / D4	FIC-S1B (12)	2-4c/20 shld	Bel 9402
				1-3c/20 shld	Bel 8772
				1-2c/20 shld	Bel 8762
D6	3/4"	D2/D3	D18 / D19	2-3c/20 shld	Bel 8772
				1-4c/20 shld	Bel 9402
D7	3/4"	D8/D24	Blend-Pak S1B	1-3c/20 shld	Bel 8772
D8	3/4"	D7/D24	Blend-Pak S1A	1-3c/20 shld	Bel 8772
D9	3/4"	Ln 1 - Rack 2	D10 / D11	1-4c/20 shld	Bel 9402
				1-2c/20 shld	Bel 8762
D10	3/4"	D9 / D11	FIC - N1 (13)	1-4c/20 shld	Bel 9402
				1-3c/20 shld	Bel 8772
				1-2c/20 shld	Bel 8762
D11	3/4"	D18/D19	D10	1-3c/20 shld	Bel 8772
D12	Exist	D13	D14/D18	2-4c/20 shld	Bel 9402
				1-3c/20 shld	Bel 8772
D13	Exist	D12	Blend-Pak N1	1-3c/20 shld	Bel 8772
D14	3/4"	Ln 1 - Rack 2	D12	1-4c/20 shld	Bel 9402
D15	Exist	D12/D13	D16/D17	2-4c/20 shld	Bel 9402
D16	Exist	D15	B-Pak Do-1N	2-4c/20 shld	Bel 9402
D17	Exist	D16	B-Pak HO-1N	2-4c/20 shld	Bel 9402
D18	Exist	D12/D14	D11/D19	1-4c/20 shld	Bel 9402
				1-3c/20 shld	Bel 8772
D19	Exist	D18	D6/D20	1-4c/20 shld	Bel 9402
D20	Exist	D6/D19	D21/D22	1-4c/20 shld	Bel 9402
				2-3c/20 shld	Bel 8772
D21	Exist	D20	B-Pak Ho-1S	2-4c/20 shld	Bel 9402
D22	Exist	D21/D20	D23/D24	1-4c/20 shld	Bel 9402
				2-3c/20 shld	Bel 8772
D23	Exist	D22	B-Pak Do-1S	1-4c/20 shld	Bel 9402
D24	Exist	D22	D7 / D8	2-4c/20 shld	Bel 8772
D25	3/4"	DIAMOND CONTROL	Ln 2 - Rack 2	1-4c/20 shld	Bel 8772
P1	3/4"	A-B Room bkr.	Ln 1 - Rack 2	2-1c/12	THHN
				1-1c/14	THHN
P2	3/4"	Ln 1 - Rack 2	P3 / P4	32-1c/14	THHN
P3	3/4"	P2 / P4	FIC- S1A (11)	16-1c/14	THHN
P4	3/4"	P3 / P4	FIC- S1B (12)	16-1c/14	THHN
P5	3/4"	Ln 1 - Rack 2	FIC - N1 (13)	16-1c/14	THHN
C1	1"	FIC - S1B (12)	C2 / C5	4-4c/20 shld	Bel 8404
				4-4c/20 shld	Bel 82723
C2	3/4"	C2 / C5	C3 / C4	1-4c/20 shld	Bel 8404
				1-4c/20 shld	Bel 82723
C3	3/4"	C2	FT-92CS1B	1-4c/20 shld	Bel 8404
C4	3/4"	C2	TT-92CS1B	1-4c/20 shld	Bel 82723

Conduit No	Size	From	To	Fill	Mfg. No.
C5	3/4"	C1	C6 / C9	3-4c/20 shld	Bel 8404
				3-4c/20 shld	Bel 82723
C6	3/4"	C5	C7 / C8	1-4c/20 shld	Bel 8404
				1-4c/20 shld	Bel 82723
C7	3/4"	C6	FT-87CS1B	1-4c/20 shld	Bel 8404
C8	3/4"	C6	TT-87CS1B	1-4c/20 shld	Bel 82723
C9	3/4"	C5 / C6	C10 / C13	2-4c/20 shld	Bel 8404
				2-4c/20 shld	Bel 82723
C10	3/4"	C5 / C6	C11 /C12	2-4c/20 shld	Bel 8404
				2-4c/20 shld	Bel 82723
C11	3/4"	C10	FT-84S1B	1-4c/20 shld	Bel 8404
C12	3/4"	C10	TT-84S1B	1-4c/20 shld	Bel 82723
C13	3/4"	C9	C14 / C15	1-4c/20 shld	Bel 8404
				1-4c/20 shld	Bel 82723
C14	3/4"	C13	FT-ETHS1B	1-4c/20 shld	Bel 8404
C15	3/4"	C13	TT-ETHS1B	1-4c/20 shld	Bel 82723
C16	3/4"	FIC - S1B (12)	C17 / C18	10-1c/16	THHN
C17	3/4"	C16	FCV-92CS1B	4-1c/16	THHN
C18	3/4"	C16 / C17	C19 / C20	8-1c/16	THHN
C19	3/4"	C18	FCV- 87CS1B	4-1c/16	THHN
C20	3/4"	C18 / C19	C21 / C22	6-1c/16	THHN
C21	3/4"	C20	FCV-84S1B	4-1c/16	THHN
C22	3/4"	C20	FCV- ETHS1B	4-1c/16	THHN
C23	1"	FIC-S1A (11)	C24 /C27	4-4c/20 shld	Bel 8404
				4-4c/20 shld	Bel 82723
C24	3/4"	C23	C25 / C26	1-4c/20 shld	Bel 8404
				1-4c/20 shld	Bel 82723
C25	3/4"	C24	FT-92CS1A	1-4c/20 shld	Bel 8404
C26	3/4"	C24	TT-92CS1A	1-4c/20 shld	Bel 82723
C27	3/4"	C28 / C31	C23 / C24	3-4c/20 shld	Bel 8404
				3-4c/20 shld	Bel 82723
C28	3/4"	C27	C29 / C30	1-4c/20 shld	Bel 8404
				1-4c/20 shld	Bel 82723
C29	3/4"	C29	FT-87CS1A	1-4c/20 shld	Bel 8404
C30	3/4"	C27	TT-87CS1A	1-4c/20 shld	Bel 82723
C31	3/4"	C27 / C28	C32 / C35	2-4c/20 shld	Bel 8404
				2-4c/20 shld	Bel 82723
C32	3/4"	C31	C33 / C34	2-4c/20 shld	Bel 8404
				2-4c/20 shld	Bel 82723
C33	3/4"	C32	FT-84S1A	1-4c/20 shld	Bel 8404
C34	3/4"	C32	TT-84S1A	1-4c/20 shld	Bel 82723
C35	3/4"	C31 / C32	C36 / C37	1-4c/20 shld	Bel 8404
				1-4c/20 shld	Bel 82723
C36	3/4"	C35	FT-ETHS1A	1-4c/20 shld	Bel 8404
C37	3/4"	C35	TT-ETHS1A	1-4c/20 shld	Bel 82723
C38	3/4"	FIC - S1A (11)	C39 / C40	10-1c/16	THHN
C39	3/4"	C38	FCV-92CS1A	4-1c/16	THHN
C40	3/4"	C38 / C39	C41 / C42	8-1c/16	THHN
C41	3/4"	C40	FCV- 87CS1A	4-1c/16	THHN
C42	3/4"	C40 / C41	C43 / C44	6-1c/16	THHN

NOTES:

1. CONTRACTOR TO VERIFY PRIOR TO INSTALLATION

DRAWING NO.	REFERENCE DRAWINGS	REV. NO.	DATE	REVISED	DRAWN BY	CKD. BY
0608-E-2061	CONDUIT INTERCONNECT DIAGRAM LANE 1 SHT 1	0	06/26/98	ISSUED FOR CONSTRUCTION	DAB	AAB
		1	07/08/98	ADDED B-PAKS	DAB	WHB

TOSCO
Tosco Corporation
5528 NW Doane St.
Portland, Oregon 97210

ALPHA ENGINEERS and CONSTRUCTORS, INC.
2929 NW 29th AVE., PORTLAND, OR. 97210 Tel:(503)227-3317/Fax:(503)227-3244

DRAWN BY	DAB
CHKD BY	AAB
APPD BY	WHB
SCALE	NONE
DATE	06/24/98

PORTLAND TERMINAL
PORTLAND, OREGON
ELECTRICAL
CONDUIT & WIRE SCHEDULE
LANE 1

DRAWING NO.	SHEET	REV.
0608-E-2061	2 OF 3	0

25E281-2.DWG <CPD: 07/10/98 [TIME: 3:54 PM]>

COP0021501

Conduit No	Size	From	To	Fill	Mfg. No.
C43	3/4"	C42 / C43	FCV-84S1A	4-1c/16	THHN
C44	3/4"	C20	FCV- ETHS1B	4-1c/16	THHN
C45	1"	FIC-N1 (13)	C46 / C49	4-4c/20 shld	Bel 8404
				4-4c/20 shld	Bel 82723
C46	3/4"	C45	C47 / C48	1-4c/20 shld	Bel 8404
				1-4c/20 shld	Bel 82723
C47	3/4"	C46	FT-92CN1	1-4c/20 shld	Bel 8404
C48	3/4"	C46	TT-92CN1	1-4c/20 shld	Bel 82723
C49	3/4"	C45 / C46	C50 / C53	3-4c/20 shld	Bel 8404
				3-4c/20 shld	Bel 82723
C50	3/4"	C49	C51 / C52	1-4c/20 shld	Bel 8404
				1-4c/20 shld	Bel 82723
C51	3/4"	C50	FT-87CN1	1-4c/20 shld	Bel 8404
C52	3/4"	C50	TT-87CN1	1-4c/20 shld	Bel 82723
C53	3/4"	C49 /C50	C54 / C57	2-4c/20 shld	Bel 8404
				2-4c/20 shld	Bel 82723
C54	3/4"	C53	C55 / C56	2-4c/20 shld	Bel 8404
				2-4c/20 shld	Bel 82723
C55	3/4"	C54	FT-84N1	1-4c/20 shld	Bel 8404
C56	3/4"	C54	TT-84N1	1-4c/20 shld	Bel 82723
C57	3/4"	C53 / C54	C58 / C59	1-4c/20 shld	Bel 8404
				1-4c/20 shld	Bel 82723
C58	3/4"	C57	FT-ETHN1	1-4c/20 shld	Bel 8404
C59	3/4"	C57	TT-ETHN1	1-4c/20 shld	Bel 82723
C60	3/4"	FIC - N1 (13)	C61 / C62	10-1c/14	THHN
C61	3/4"	C60	FCV-92CN1	4-1c/14	THHN
C62	3/4"	C60 / C61	C63 / C64	8-1c/14	THHN
C63	3/4"	C62	FCV- 87CN1	4-1c/14	THHN
C64	3/4"	C65 / C66	C62 / C63	6-1c/14	THHN
C65	3/4"	C64	FCV-84N1	4-1c/14	THHN
C66	3/4"	C64 / C65	FCV- ETHN1	4-1c/14	THHN
C67	1"	Ln 1 - Rack 2	C68 / C87	19-1c/14	THHN
C68	3/4"	C68	C69 / C70	12-1c/14	THHN
C69	3/4"	C68 / C70	SOV-76S1A	3-1c/14	THHN
C70	3/4"	C68 / C69	C71 / C72	11-1c/14	THHN
C71	3/4"	C70	SOV-BPS1A	3-1c/14	THHN
C72	3/4"	C73 / C74	C70 / C71	10-1c/14	THHN
C73	3/4"	C72	SOV-92CS1A	3-1c/14	THHN
C74	3/4"	C75 / C76	C72 / C73	9-1c/14	THHN
C75	3/4"	C74	SOV-87CS1A	3-1c/14	THHN
C76	3/4"	C74 / C75	C77 / C78	8-1c/14	THHN
C77	3/4"	C76	SOV-84S1A	3-1c/14	THHN
C78	3/4"	C76 / C77	C79 / C80	7-1c/14	THHN
C79	3/4"	C78	SOV-76S1B	3-1c/14	THHN
C80	3/4"	C78 / C79	C81 / C82	6-1c/14	THHN
C81	3/4"	C80	SOV-BPS1B	3-1c/14	THHN
C82	3/4"	C80 / C81	C83 / C84	5-1c/14	THHN
C83	3/4"	C82	SOV-92CS1B	3-1c/14	THHN
C84	3/4"	C86 / C86	C82 / C83	4-1c/14	THHN
C85	3/4"	C84	SOV-87CS1B	3-1c/14	THHN

Conduit No	Size	From	To	Fill	Mfg. No.
C86	3/4"	C84 / C85	SOV-84S1B	3-1c/14	THHN
C87	3/4"	C67 / C68	C88 / C89	7-1c/14	THHN
C88	3/4"	C87	SOV-76N1	3-1c/14	THHN
C89	3/4"	C87 / C88	C90 / C91	6-1c/14	THHN
C90	3/4"	C89	SOV-BPN1	3-1c/14	THHN
C91	3/4"	C89 / C90	C92 / C93	5-1c/14	THHN
C92	3/4"	C91	SOV-84N1	3-1c/14	THHN
C93	3/4"	C91 / C92	C94 / C95	4-1c/14	THHN
C94	3/4"	C93	SOV-87CN1	3-1c/14	THHN
C95	3/4"	C93 / C94	SOV-92CN1	3-1c/14	THHN

NOTES:

1. CONTRACTOR TO VERIFY PRIOR TO INSTALLATION

DRAWING NO.	REFERENCE DRAWINGS	REV. NO.	DATE	REVISED	DRAWN BY	CKD. BY
0608-E-2061	CONDUIT INTERCONNECT DIAGRAM LANE 1 SHT 1	0	07/08/98	ISSUED FOR CONSTRUCTION	DAB	AAB

TOSCO
Tosco Corporation
5528 NW Doane St.
Portland, Oregon 97210

ALPHA ENGINEERS and CONSTRUCTORS, INC.
2929 NW 29th AVE, PORTLAND, OR. 97210 Tel: (503)227-3317/Fax: (503)227-3244

DRAWN BY	DAB
CHKD BY	AAB
APPD BY	WHB
SCALE	NONE
DATE	07/08/98

PORTLAND TERMINAL
PORTLAND, OREGON
ELECTRICAL
CONDUIT & WIRE SCHEDULE
LANE 1

DRAWING NO.	SHEET	REV.
0608-E-2061	3 OF 3	0

25E281-3.DWG <CPD: 07/10/98 [TIME: 08:48 AM]>

COP0021502

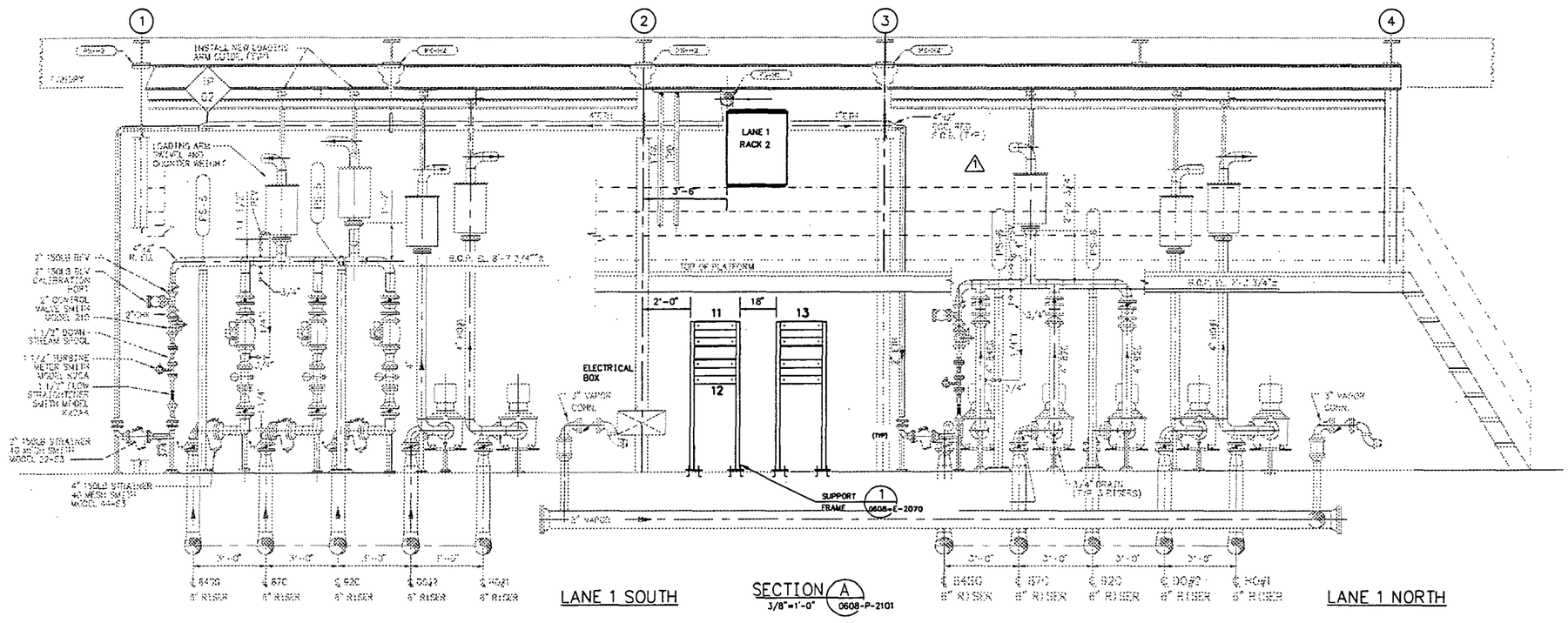

NOTES:

DRAWING NO.	REFERENCE DRAWINGS	REV. NO.	DATE	REVISED	DRAWN BY	CKD. BY
0608-E-2070	ACCULOAD RBU SUPPORT FRAME	0	07/08/98	ISSUE FOR CONSTRUCTION	DAB	WHB

TOSCO
Tosco Corporation
5528 NW Doane St.
Portland, Oregon 97210

ALPHA ENGINEERS and CONSTRUCTORS, INC.
2929 NW 29th AVE. PORTLAND, OR. 97210 Tel: (503)227-3317/Fax: (503)227-3244

DRAWN BY	DAB
CHKD BY	WHB
APPD BY	WHB
SCALE	AS SHOWN
DATE	07/08/98

PORTLAND TERMINAL
PORTLAND, OREGON
TRUCK LOAD RACK UPGRADE PROJECT
ELECTRICAL
ACCULOAD & PANEL LOCATION
LANE 1

DRAWING NO.	SHEET	REV.
0608-E-2063	1 OF 1	0

25E2063D.DWG <CPD: 07/10/98 [TIME: 09:27 AM] >

COP0021503

BILL OF MATERIAL

ITEM	QUANTITY	DESCRIPTION
1	4	CROUSE HINDS; 3/4" ELL, NO. OELB2
2	6	CROUSE HINDS; 3/4" TEE, NO. OET2

LANE 2 SOUTH

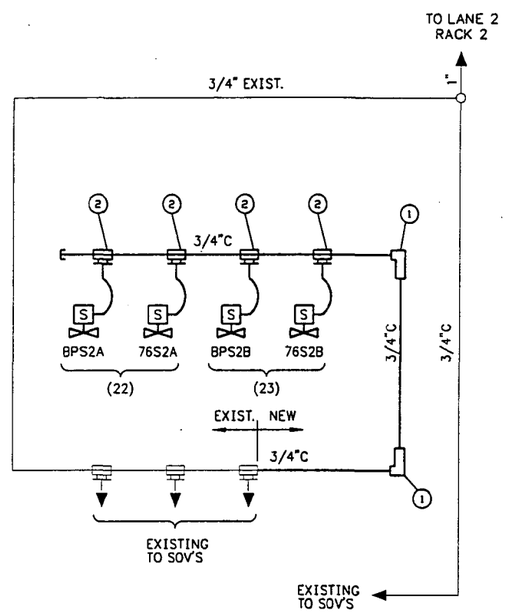

NOTES:

1. PULL 4/14 GA. BLK THHN WIRE FROM RACK 2 (REF. DWG. E-2034 REV.3 FOR PLC CONNECTIONS) & DAISY CHAIN 1 GND & 1 NEUTRAL FROM CLOSEST EXISTING SOLENOID VALVE TO NEW INSTALLATION.
2. AT RACK 2 REMOVE INTERNAL SEALER AT CONDUIT SEALOFF.

LANE 2 NORTH

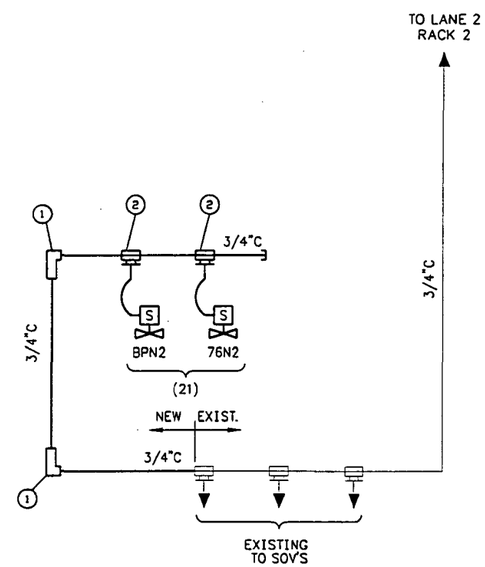

NOTES:

1. PULL 2/14 GA. BLK THHN WIRE FROM RACK 2 (REF. DWG. E-2034 REV.3 FOR PLC CONNECTIONS) & DAISY CHAIN 1 GND & 1 NEUTRAL FROM CLOSEST EXISTING SOLENOID VALVE TO NEW INSTALLATION.
2. AT RACK 2 REMOVE INTERNAL SEALER AT CONDUIT SEALOFF.

DRAWING NO.	REFERENCE DRAWINGS	REV. NO.	DATE	REVISED	DRAWN BY	CKD. BY
		0	06/26/98	ISSUED FOR CONSTRUCTION	DAB	AAB

TOSCO
Tosco Corporation
5528 NW Doane St.
Portland, Oregon 97210

ALPHA ENGINEERS and CONSTRUCTORS, INC.
2929 NW 29th AVE., PORTLAND, OR. 97210 Tel:(503)227-3317/Fax:(503)227-3244

DRAWN BY	DAB
CHKD BY	AAB
APPD BY	WHB
SCALE	NONE
DATE	06/24/98

PORTLAND TERMINAL
PORTLAND, OREGON
ELECTRICAL
LANE 2
CONDUIT DETAILS
76 & BP ADDITIVES

DRAWING NO.	SHEET	REV.
0608-E-2065	1 OF 1	0

25E20650.DWG <CPD: 06/26/98 [TIME: 12:10 AM] >

COP00021504

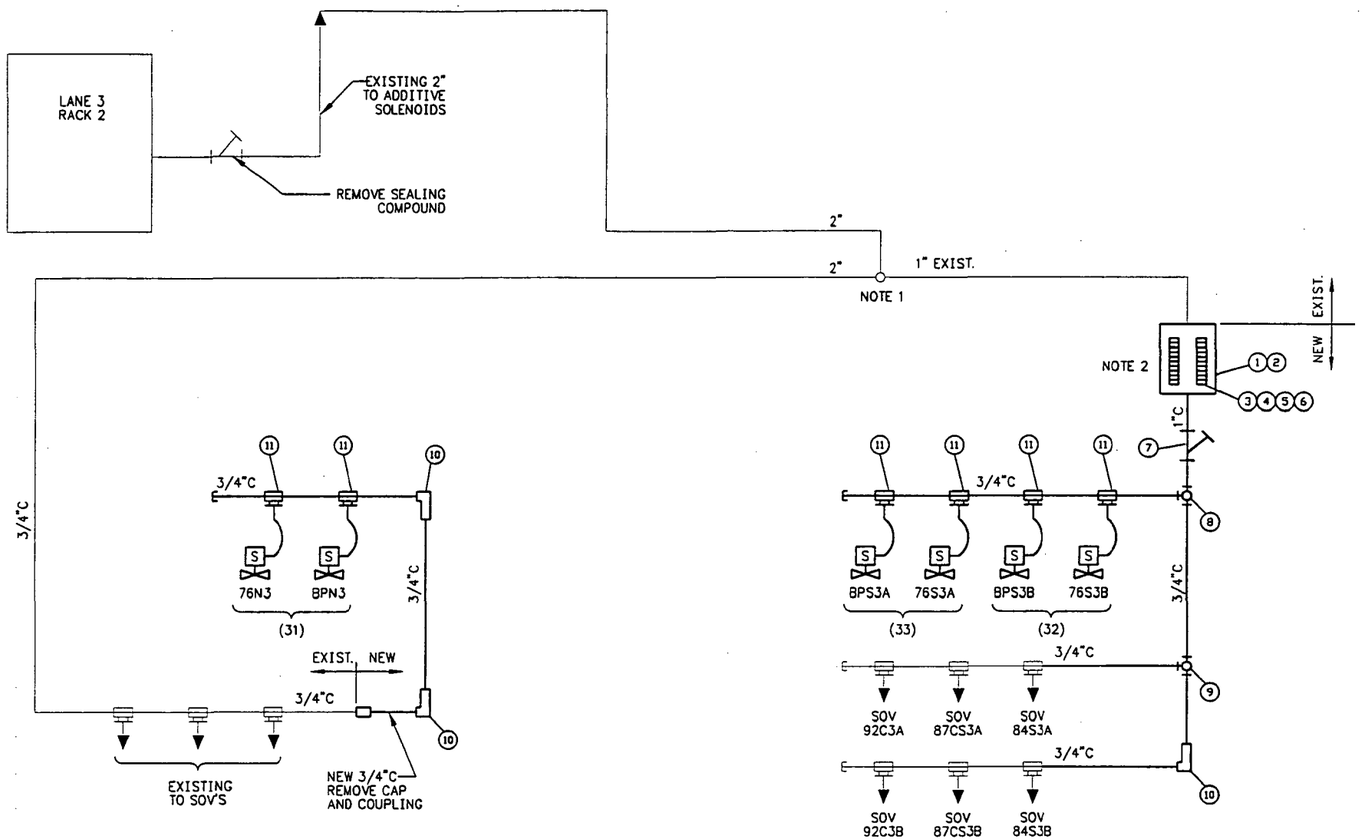

LANE 3 NORTH

(LOOKING AT WALL)

LANE 3 SOUTH

(LOOKING AT WALL)

NOTES:

1. PULL 2/14 GA. BLK THHN WIRE FROM RACK 2 (REF. DWG. E-2044 REV.3 FOR PLC CONNECTIONS) & DAISY CHAIN 1 GND & 1 NEUTRAL FROM CLOSEST EXISTING SOLENOID VALVE TO NEW INSTALLATION.

NOTES:

1. DISCONNECT EXISTING SOLENOID WIRES AND PULL TO 2"C JUNCTION FROM RACK 2. PULL 10/14 GA. BLK THHN WIRE FROM RACK 2 TO JUNCTION OF 2"/1"C. (REF. DWG. E-2043 REV.2 & E-2044 REV.3 FOR PLC & TB CONN.) 4 SIGNAL & 6 SPARES.
2. BREAK EXISTING CONDUIT APPROX. 5FT ABOVE GRADE. REMOVE ALL CONDUIT BELOW. INSTALL "J-BOX" W/TERMINALS & ROUTE TO NEW CONDUIT AS SHOWN. WIRE ALL SOLENOIDS FROM TERMINALS.

BILL OF MATERIAL

ITEM	QUANTITY	DESCRIPTION
1	1	ENCLOSURE: HOFFMAN A-121006 CHSCFG NEMA 4X
2	1	PANEL: HOFFMAN A-12P10
3	1	ALLEN-BRADLEY: MOUNTING RAIL # 1492-N22 3FT
4	40	ALLEN-BRADLEY: TERMINAL BLOCKS # 1492-F1
5	1	ALLEN-BRADLEY: END BARRIER # 1492-N18
6	2	ALLEN-BRADLEY: END ANCHORS # 1492-N23
7	1	CROUSE HINDS: 1" VERT. FEMALE SEAL, NO. EYS31
8	1	CROUSE HINDS: 1" TEE , GUAT 36
9	1	CROUSE HINDS: 3/4" TEE , GUAT 26
10	3	CROUSE HINDS: 3/4" ELL, NO. 0ELB2
11	6	CROUSE HINDS: 3/4" TEE, NO. 0ET2

DRAWING NO.	REFERENCE DRAWINGS	REV. NO.	DATE	REVISED	DRAWN BY	CKD. BY
0608-E-2043	PLC SCHMATIC LANE 3, GROUP 0,1	0	06/26/98	ISSUED FOR CONSTRUCTION	DAB	AAB
0608-E-2044	PLC SCHMATIC LANE 3, GROUP 2,3					

TOSCO
Tosco Corporation
5528 NW Doane St.
Portland, Oregon 97210

ALPHA ENGINEERS and CONSTRUCTORS, INC.
2929 NW 29th AVE, PORTLAND, OR. 97210 Tel:(503)227-3317/Fax:(503)227-3244

DRAWN BY	DAB
CHKD BY	AAB
APPD BY	WHB
SCALE	NONE
DATE	06/24/98

PORTLAND TERMINAL
PORTLAND, OREGON
ELECTRICAL
LANE 3
CONDUIT DETAILS
76 & BP ADDITIVES

DRAWING NO.	SHEET	REV.
0608-E-2066	1 OF 1	0

25E20660.DWG <CPD: 06/26/98 [TIME: 12:13 AM] >

COP00021505

BILL OF MATERIAL

ITEM	QUANTITY	DESCRIPTION
1	4	CROUSE HINDS: 1" TEE , GUAT 36
2		NOT USED
3	2	CROUSE HINDS: 3/4" ELL. NO. 0ELB2
4	TBD	BELDEN #8772

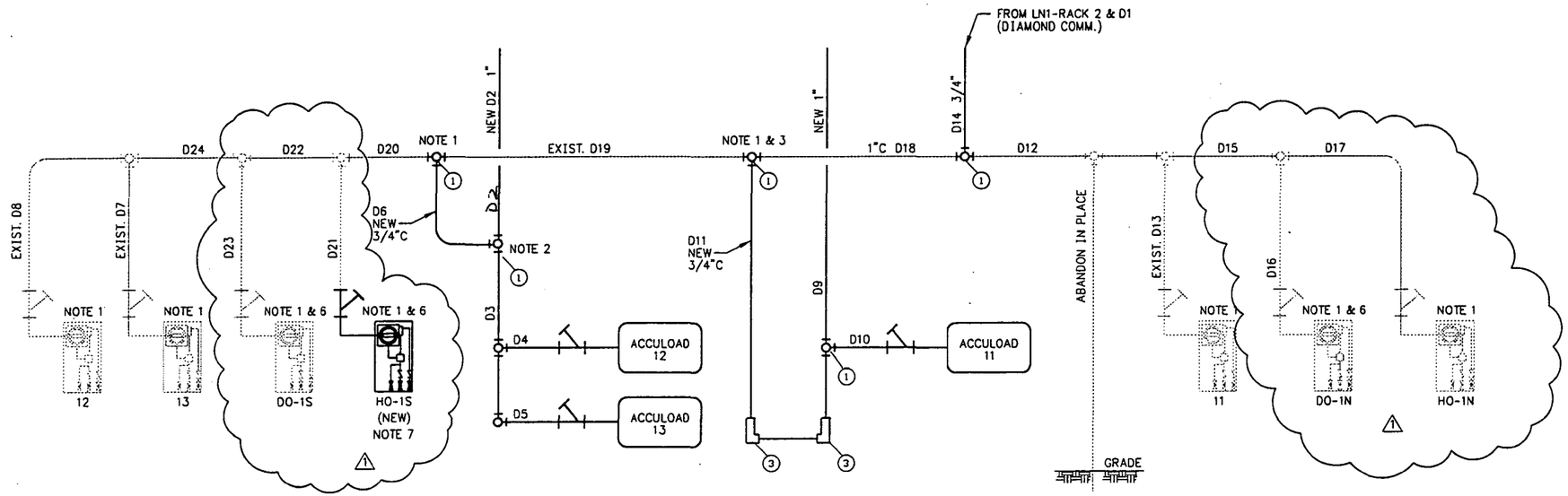

LANE 1 SOUTH

LANE 1 NORTH

NOTES:

1. REMOVE EXISTING COMM. WIRE FROM B-PAK 11,12,13, DO-1N, HO-1N, AND DO-1S. BREAK EXISTING CONDUIT AS SHOWN & INSTALL ITEM (1)
2. INSTALL ITEM (1) & 12,13. NEW 3/4"C DROP LEG. INSTALL 1 EA COMM. WIRE FROM B-PAK 22 & 23 TO ACCULOAD 12 & 13 PER DWG. E-2007, 8 REV. 0. WIRE SHALL BE BELDEN # 8772.
3. INSTALL NEW 3/4"C DROP LEG WITH 2 OF ITEM (3) & INSTALL 1 NEW COMM. WIRE FROM B-PAK 11 TO ACCULOAD 11 PER DWG. E-2009, REV.3 WIRE SHALL BE BELDEN # 8772.
4. FOR CONDUIT DES. & WIRE REF. DWG. E-2061 SHT.2.
5. RS-232 SERIAL WIRE COLORS SHALL BE:
   BLK = TX
   RED = RX
   CLR = COM.
6. CONDUIT & WIRE FOR POWER EXISTS FOR B-PAK HO-1S.
7. NEW WORK SHOWN BOLD.
8. DIAMOND SERIAL COMM. WIRE FOR DO-1N, HO-1N, DO-1S & HO-1S SHALL BE BELDEN 9402 (4C/20 SHLD).
   RS-485 COMM. WIRE COLORS SHALL BE: TX+ = RED
   TX- = BLK
   RX+ = GRN
   RX- = WHT

DRAWING NO.	REFERENCE DRAWINGS	REV. NO.	DATE	REVISED	DRAWN BY	CKD. BY
0608-E-2007	ACCULOAD SCHEMATIC LANE 1, FIC-S1A	0	06/26/98	ISSUED FOR CONSTRUCTION	DAB	AAB
0608-E-2008	ACCULOAD SCHEMATIC LANE 1, FIC-S1B	1	07/08/98	ADD CONDUIT SCHEDULE NO.S, BLEND PAKS	DAB	WHB
0608-E-2061	ELECTRICAL CONDUIT INTERCONNECT DIAGRAM LN1 SHT 1 & 2					

TOSCO
Tosco Corporation
5528 NW Doane St.
Portland, Oregon 97210

ALPHA ENGINEERS and CONSTRUCTORS, INC.
2929 NW 29th AVE, PORTLAND, OR. 97210 Tel:(503)227-3317/Fax:(503)227-3244

DRAWN BY	DAB
CHKD BY	AAB
APPD BY	WHB
SCALE	NONE
DATE	06/24/98

PORTLAND TERMINAL
PORTLAND, OREGON

ELECTRICAL
LANE 1 - GAS
CONDUIT DIAGRAM BLEND-PAK
COMMUNICATIONS

DRAWING NO.	SHEET	REV.
0608-E-2067	1 OF 1	1

25C20671.DWG <CPD: 07/10/98 [TIME: 11:36 AM] >
COP00021506

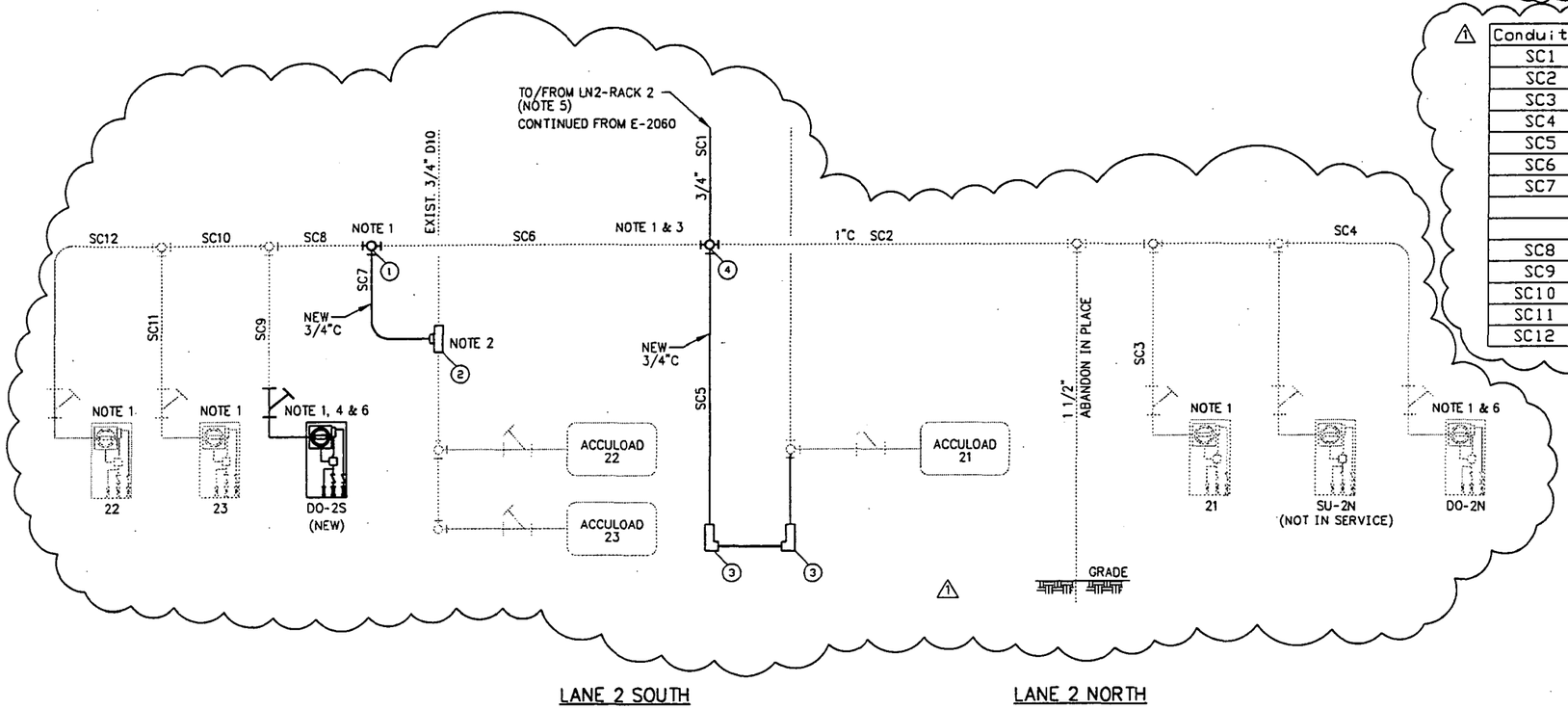

BILL OF MATERIAL

ITEM	QUANTITY	DESCRIPTION
1	1	CROUSE HINDS: 1" TEE , GUAT 36
2	1	CROUSE HINDS: 3/4" TEE , NO. OET2
3	2	CROUSE HINDS: 3/4" ELL, NO. OELB2
4	1	CROUSE HINDS: 1" x GUAX 36
5	TBD	BELDEN #8772

Conduit N	Size	From	To	Fill	Mfg. No.
SC1	3/4"	Ln2 - Rack2	SC2/SC3	2-3c/20 shld	Bel 8772
SC2	Exist	SC1	SC11/SC12	3-3c/20 shld	Bel 8772
SC3	Exist	SC2	Blend-pak 21	1-3c/20 shld	Bel 8772
SC4	Exist	SC2	Blend-pak DO-2	2-3c/20 shld	Bel 8772
SC5	Exist	SC2	Accuload 21	1-3c/20 shld	Bel 8772
SC6	Exist	SC2	SC6	2-3c/20 shld	Bel 8772
SC7	3/4"	SC8	D10 exists	2-3c/20 shld	Bel 8772
		D10	Accuload 22	1-3c/20 shld	Bel 8772
		D10	Accuload 23	1-3c/20 shld	Bel 8772
SC8	Exist	SC6/SC7	SC7/SC8	4-3c/20 shld	Bel 8772
SC9	Exist	SC8	Blend-pak DO-2	2-3c/20 shld	Bel 8772
SC10	Exist	SC8	SC11/SC12	2-3c/20 shld	Bel 8772
SC11	Exist	SC10	Blend-pak 23	1-3c/20 shld	Bel 8772
SC12	Exist	SC10	Blend-pak 22	1-3c/20 shld	Bel 8772

NOTES:

1. REMOVE EXISTING COMM. WIRE FROM B-PAK 21,22,23, AND DO-2N. BREAK EXISTING CONDUIT AS SHOWN. INSTALL ITEM (1) & (4)
2. BREAK 3/4"C DROP LEG TO ACCULOAD 22 & 23. INSTALL ITEM (2) & NEW 3/4"C DROP LEG. INSTALL 1 EA COMM. WIRE FROM B-PAK 22 & 23 TO ACCULOAD 22 & 23 PER DWG. E-2010, 11 REV. 3. WIRE SHALL BE BELDEN # 8772.
3. INSTALL NEW 3/4"C DROP LEG WITH 2 OF ITEM (3) & INSTALL 1 NEW COMM. WIRE FROM B-PAK 21 TO ACCULOAD 21 PER DWG. E-2012, REV.3 WIRE SHALL BE BELDEN # 8772.
4. CONDUIT AND WIRE EXISTING FOR POWER TO B-PAK DO-2S.
5. COMMUNICATION WIRE FROM DIAMOND CONTROL SHALL BE BELDEN #8772 (3C/20 SHLD). USE EXISTING COMMUNICATION CONDUIT TO LN2 - RACK 2 & LN1- RACK 2.
6. RS-232 SERIAL WIRE COLORS SHALL BE:
   BLK = TX
   RED = RX
   CLR = COM.
7. NEW WORK SHOWN BOLD.
8. DIAMOND SERIAL COMM. WIRE FOR DO-2N & DO-2S SHALL BE BELDEN 9402 (4C/20 SHLD).
   RS-485 COMM. WIRE COLORS SHALL BE:
   TX+ = RED
   TX- = BLK
   RX+ = GRN
   RX- = WHT

DRAWING NO.	REFERENCE DRAWINGS	REV. NO.	DATE	REVISED	DRAWN BY	CKD. BY
0608-E-2010	ACCULOAD SCHEMATIC LANE 2, FIC-S2A	0	06/26/98	ISSUED FOR CONSTRUCTION	DAB	AAB
0608-E-2011	ACCULOAD SCHEMATIC LANE 1, FIC-S2B	1	07/08/98	ADDED B-PAK, CONDUIT SCHEDULE, NOTES	DAB	WHB
0608-E-2012	ACCULOAD SCHEMATIC LANE 2, FIC-N2					

TOSCO
Tosco Corporation
5528 NW Doane St.
Portland, Oregon 97210

ALPHA ENGINEERS and CONSTRUCTORS, INC.
2929 NW 29th AVE, PORTLAND, OR. 97210 Tel: (503)227-3317/Fax: (503)227-3244

DRAWN BY	DAB
CHKD BY	AAB
APPD BY	WHB
SCALE	NONE
DATE	06/24/98

PORTLAND TERMINAL
PORTLAND, OREGON

ELECTRICAL
LANE 2 - GAS
CONDUIT DIAGRAM BLEND-PAK
COMMUNICATIONS

DRAWING NO.	SHEET	REV.
0608-E-2068	1 OF 1	1

25E2068I.DWG <CPD: 07/10/98 [TIME: 1:23 PM]>

COP00021507

BILL OF MATERIAL		
ITEM	QUANTITY	DESCRIPTION
1	2	CROUSE HINDS: 1" TEE , GUAT 36
2	2	CROUSE HINDS: 3/4" TEE , NO. OET2
3	TBD	BELDEN #8772

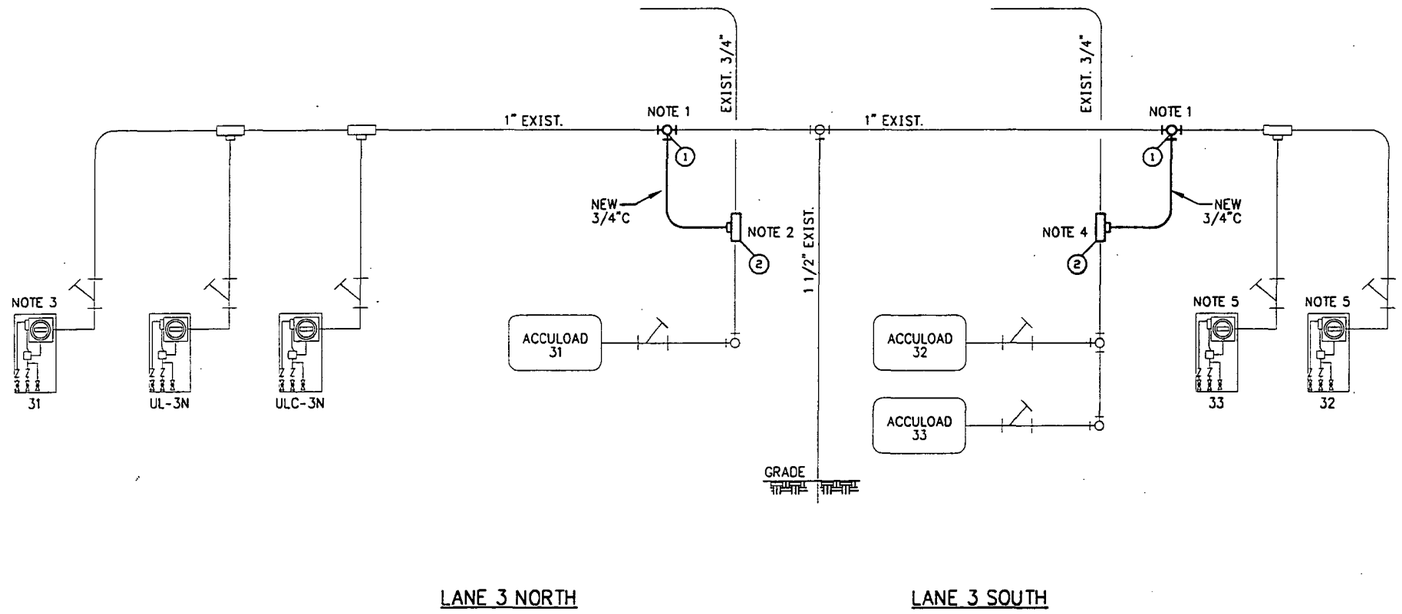

NOTES:

1. REMOVE EXISTING COMM. WIRE FROM B-PAK 31,32, & 33 BREAK EXIST. CONDUIT NEAREST TO ACCULOAD 31,32, & 33. INSTALL ITEM (1)
2. BREAK 3/4"C DROP LEG TO ACCULOAD 31 INSTALL ITEM & NEW 3/4"C DROP LEG FROM ITEM (1) TO ITEM (2)
3. INSTALL 1 COMM. WIRE FROM B-PAK 31 TO ACCULOAD 31 PER DWG. E-2017, REV.3. WIRE SHALL BE BELDEN # 8772.
4. BREAK 3/4"C DROP LEG TO ACCULOAD #32 & 33. INSTALL NEW 3/4"C DROP LEG FROM ITEM (1) TO ITEM (2)
5. INSTALL 1 EA. COMM. WIRE FROM B-PAK #32 & 33 TO ACCULOAD #32,33 PER DWGS. E-2015 & E-2016, REV.3. WIRE SHALL BE BELDEN #8772.

DRAWING NO.	REFERENCE DRAWINGS	REV. NO.	DATE	REVISED	DRAWN BY	CKD. BY
0608-E-2015	ACCULOAD SCHEMATIC LANE 3, FIC-S3A	0	06/26/98	ISSUED FOR CONSTRUCTION	DAB	AAB
0608-E-2016	ACCULOAD SCHEMATIC LANE 3, FIC-S3B					

TOSCO
Tosco Corporation
5528 NW Doane St.
Portland, Oregon 97210

ALPHA ENGINEERS and CONSTRUCTORS, INC.
2929 NW 29th AVE, PORTLAND, OR. 97210 Tel:(503)227-3317/Fax:(503)227-3244

DRAWN BY	DAB
CHKD BY	AAB
APPD BY	WHB
SCALE	NONE
DATE	06/24/98

PORTLAND TERMINAL
PORTLAND, OREGON
ELECTRICAL
LANE 3 - GAS
CONDUIT DIAGRAM BLEND-PAK
COMMUNICATIONS TO ACCULOADS

DRAWING NO.	SHEET	REV.
0608-E-2069	1 OF 1	0

2:E20690.DWG <CPD: 06/26/98 [time: 12:21 AM] >

COP00215081

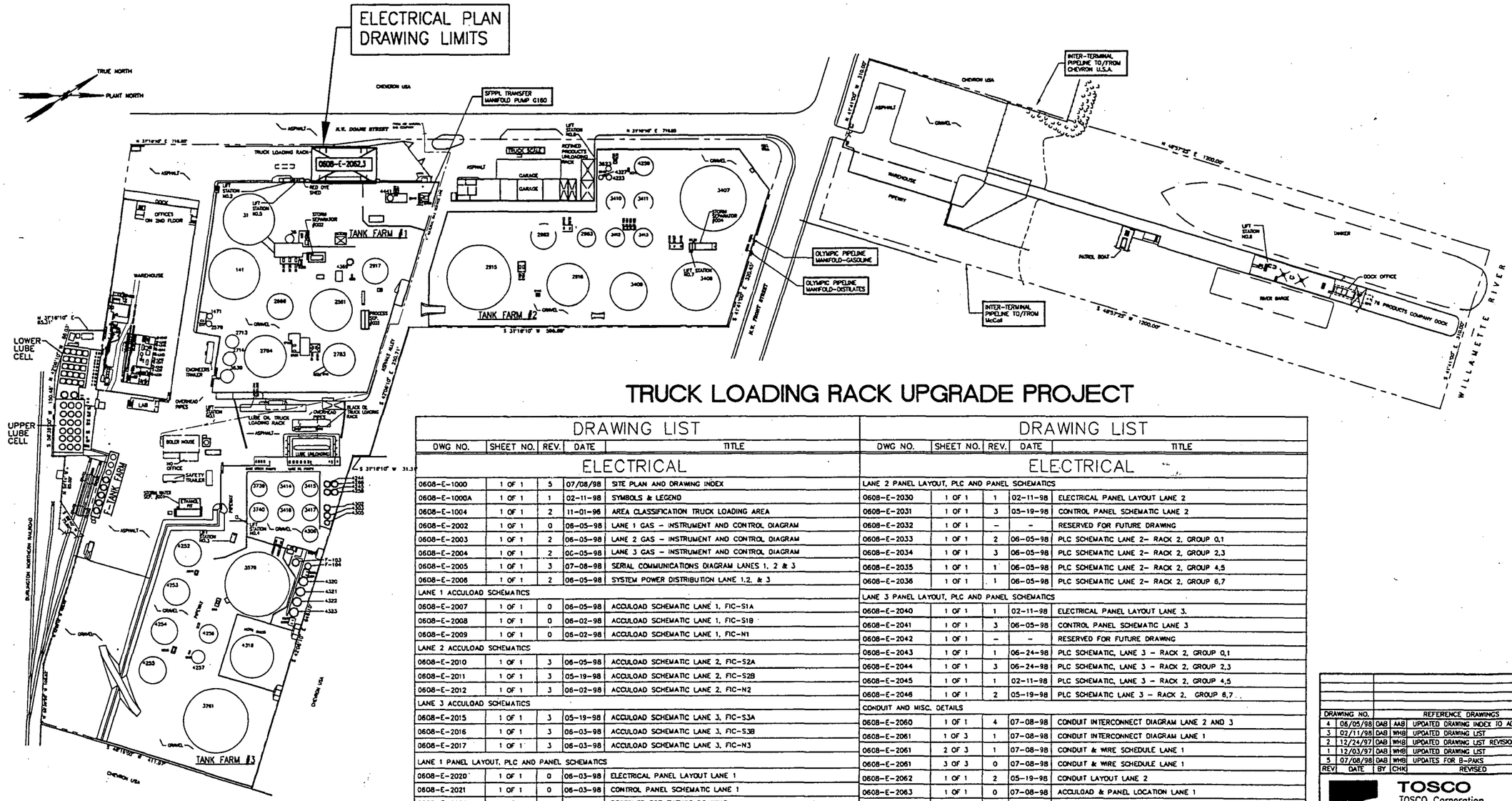

SITE PLAN
SCALE: 1" = 90'
90' 0' 90' 180'

TRUCK LOADING RACK UPGRADE PROJECT

DRAWING LIST

DWG NO.	SHEET NO.	REV.	DATE	TITLE
ELECTRICAL				
0608-E-1000	1 OF 1	5	07/08/98	SITE PLAN AND DRAWING INDEX
0608-E-1000A	1 OF 1	1	02-11-98	SYMBOLS & LEGEND
0608-E-1004	1 OF 1	2	11-01-96	AREA CLASSIFICATION TRUCK LOADING AREA
0608-E-2002	1 OF 1	0	06-05-98	LANE 1 GAS - INSTRUMENT AND CONTROL DIAGRAM
0608-E-2003	1 OF 1	2	06-05-98	LANE 2 GAS - INSTRUMENT AND CONTROL DIAGRAM
0608-E-2004	1 OF 1	2	06-05-98	LANE 3 GAS - INSTRUMENT AND CONTROL DIAGRAM
0608-E-2005	1 OF 1	3	07-08-98	SERIAL COMMUNICATIONS DIAGRAM LANES 1, 2 & 3
0608-E-2006	1 OF 1	2	06-05-98	SYSTEM POWER DISTRIBUTION LANE 1,2, & 3
LANE 1 ACCULOAD SCHEMATICS				
0608-E-2007	1 OF 1	0	06-05-98	ACCULOAD SCHEMATIC LANE 1, FIC-S1A
0608-E-2008	1 OF 1	0	06-02-98	ACCULOAD SCHEMATIC LANE 1, FIC-S1B
0608-E-2009	1 OF 1	0	06-02-98	ACCULOAD SCHEMATIC LANE 1, FIC-N1
LANE 2 ACCULOAD SCHEMATICS				
0608-E-2010	1 OF 1	3	06-05-98	ACCULOAD SCHEMATIC LANE 2, FIC-S2A
0608-E-2011	1 OF 1	3	05-19-98	ACCULOAD SCHEMATIC LANE 2, FIC-S2B
0608-E-2012	1 OF 1	3	06-02-98	ACCULOAD SCHEMATIC LANE 2, FIC-N2
LANE 3 ACCULOAD SCHEMATICS				
0608-E-2015	1 OF 1	3	05-19-98	ACCULOAD SCHEMATIC LANE 3, FIC-S3A
0608-E-2016	1 OF 1	3	06-03-98	ACCULOAD SCHEMATIC LANE 3, FIC-S3B
0608-E-2017	1 OF 1	3	06-03-98	ACCULOAD SCHEMATIC LANE 3, FIC-N3
LANE 1 PANEL LAYOUT, PLC AND PANEL SCHEMATICS				
0608-E-2020	1 OF 1	0	06-03-98	ELECTRICAL PANEL LAYOUT LANE 1
0608-E-2021	1 OF 1	0	06-03-98	CONTROL PANEL SCHEMATIC LANE 1
0608-E-2022	1 OF 1	-	-	RESERVED FOR FUTURE DRAWING
0608-E-2023	1 OF 1	0	06-03-98	PLC SCHEMATIC LANE 1- RACK 2, GROUP 0,1
0608-E-2024	1 OF 1	0	06-05-98	PLC SCHEMATIC LANE 1- RACK 2, GROUP 2,3
0608-E-2025	1 OF 1	0	05-27-98	PLC SCHEMATIC LANE 1- RACK 2, GROUP 4,5
0608-E-2026	1 OF 1	0	06-03-98	PLC SCHEMATIC LANE 1- RACK 2, GROUP 6,7
0608-E-2027	1 OF 1	-	-	RESERVED FOR FUTURE DRAWING
0608-E-2028	1 OF 1	0	05-27-98	PLC SCHEMATIC LANE 1- RACK 2, GROUP 10,11

DRAWING LIST

DWG NO.	SHEET NO.	REV.	DATE	TITLE
ELECTRICAL				
LANE 2 PANEL LAYOUT, PLC AND PANEL SCHEMATICS				
0608-E-2030	1 OF 1	1	02-11-98	ELECTRICAL PANEL LAYOUT LANE 2
0608-E-2031	1 OF 1	3	05-19-98	CONTROL PANEL SCHEMATIC LANE 2
0608-E-2032	1 OF 1	-	-	RESERVED FOR FUTURE DRAWING
0608-E-2033	1 OF 1	2	06-05-98	PLC SCHEMATIC LANE 2- RACK 2, GROUP 0,1
0608-E-2034	1 OF 1	3	06-05-98	PLC SCHEMATIC LANE 2- RACK 2, GROUP 2,3
0608-E-2035	1 OF 1	1	06-05-98	PLC SCHEMATIC LANE 2- RACK 2, GROUP 4,5
0608-E-2036	1 OF 1	1	06-05-98	PLC SCHEMATIC LANE 2- RACK 2, GROUP 6,7
LANE 3 PANEL LAYOUT, PLC AND PANEL SCHEMATICS				
0608-E-2040	1 OF 1	1	02-11-98	ELECTRICAL PANEL LAYOUT LANE 3.
0608-E-2041	1 OF 1	3	06-05-98	CONTROL PANEL SCHEMATIC LANE 3
0608-E-2042	1 OF 1	-	-	RESERVED FOR FUTURE DRAWING
0608-E-2043	1 OF 1	1	06-24-98	PLC SCHEMATIC, LANE 3 - RACK 2, GROUP 0,1
0608-E-2044	1 OF 1	3	06-24-98	PLC SCHEMATIC, LANE 3 - RACK 2, GROUP 2,3
0608-E-2045	1 OF 1	1	02-11-98	PLC SCHEMATIC, LANE 3 - RACK 2, GROUP 4,5
0608-E-2046	1 OF 1	2	05-19-98	PLC SCHEMATIC LANE 3 - RACK 2, GROUP 6,7
CONDUIT AND MISC. DETAILS				
0608-E-2060	1 OF 1	4	07-08-98	CONDUIT INTERCONNECT DIAGRAM LANE 2 AND 3
0608-E-2061	1 OF 3	1	07-08-98	CONDUIT INTERCONNECT DIAGRAM LANE 1
0608-E-2061	2 OF 3	1	07-08-98	CONDUIT & WIRE SCHEDULE LANE 1
0608-E-2061	3 OF 3	0	07-08-98	CONDUIT & WIRE SCHEDULE LANE 1
0608-E-2062	1 OF 1	2	05-19-98	CONDUIT LAYOUT LANE 2
0608-E-2063	1 OF 1	0	07-08-98	ACCULOAD & PANEL LOCATION LANE 1
0608-E-2064	1 OF 1	-	-	RESERVED
0608-E-2065	1 OF 1	0	06-26-98	LANE 2 CONDUIT DETAILS 76 & BP ADDITIVES
0608-E-2066	1 OF 1	0	06-26-98	LANE 3 CONDUIT DETAILS 76 & BP ADDITIVES
0608-E-2067	1 OF 1	1	07-08-98	LANE 1 - GAS CONDUIT DIAGRAM BLEND-PAK COMM. TO ACCULOADS
0608-E-2068	1 OF 1	1	07-08-98	LANE 2 - GAS CONDUIT DIAGRAM BLEND-PAK COMM. TO ACCULOADS
0608-E-2069	1 OF 1	0	06-26-98	LANE 3 - GAS CONDUIT DIAGRAM BLEND-PAK COMM. TO ACCULOADS
0608-E-2070	1 OF 1	1	06-05-98	ACCULOAD RBU SUPPORT FRAME

DRAWING NO.				REFERENCE DRAWINGS
4	06/05/98	DAB	AAB	UPDATED DRAWING INDEX TO ADD LANE 1
3	02/11/98	DAB	WHB	UPDATED DRAWING LIST
2	12/24/97	DAB	WHB	UPDATED DRAWING LIST REVISIONS
1	12/03/97	DAB	WHB	UPDATED DRAWING LIST
5	07/08/98	DAB	WHB	UPDATES FOR B-PAKS
REV	DATE	BY	CHK	REVISED

TOSCO
TOSCO Corporation
5528 NW Doane St.
Portland, Oregon 97210

PORTLAND TERMINAL
ELECTRICAL
SITE PLAN AND
DRAWING INDEX

ALPHA ENGINEERS and CONSTRUCTORS, INC.
2929 NW 29TH AVE. PORTLAND, OR 97210 Tel: 503-227-3317

SCALE:	NONE	DESIGNED BY:	DAB
DATE:	11/17/97	CHECKED BY:	WHB
DRAWN BY:	BNJ	ENG. APPR. BY:	WHB

CADD FILE/PLOT DATE: 25E10005.DWG <CPO: 07/10/98 TIME: 09:37 AM>

DRAWING NUMBER	SHEET	REV
0608-E-1000	1 OF 1	5

COP00021509

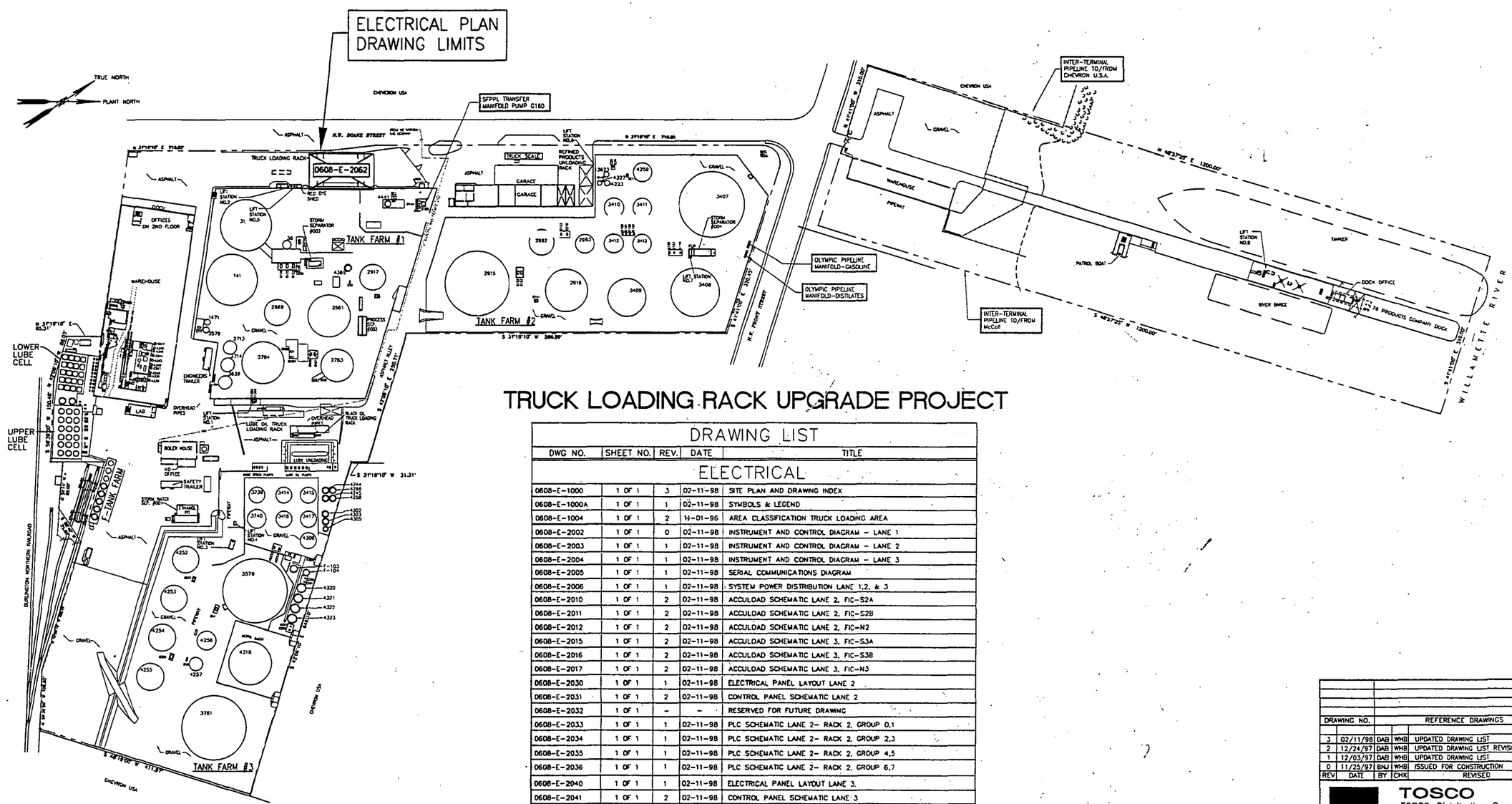

SITE PLAN
SCALE: 1" = 90'
90' 0' 90' 180'

TRUCK LOADING RACK UPGRADE PROJECT

DRAWING LIST

DWG NO.	SHEET NO.	REV.	DATE	TITLE
ELECTRICAL				
0608-E-1000	1 OF 1	3	02-11-98	SITE PLAN AND DRAWING INDEX
0608-E-1000A	1 OF 1	1	02-11-98	SYMBOLS & LEGEND
0608-E-1004	1 OF 1	2	10-01-96	AREA CLASSIFICATION TRUCK LOADING AREA
0608-E-2002	1 OF 1	0	02-11-98	INSTRUMENT AND CONTROL DIAGRAM – LANE 1
0608-E-2003	1 OF 1	1	02-11-98	INSTRUMENT AND CONTROL DIAGRAM – LANE 2
0608-E-2004	1 OF 1	1	02-11-98	INSTRUMENT AND CONTROL DIAGRAM – LANE 3
0608-E-2005	1 OF 1	1	02-11-98	SERIAL COMMUNICATIONS DIAGRAM
0608-E-2006	1 OF 1	1	02-11-98	SYSTEM POWER DISTRIBUTION LANE 1,2, & 3
0608-E-2010	1 OF 1	2	02-11-98	ACCULOAD SCHEMATIC LANE 2, FIC-S2A
0608-E-2011	1 OF 1	2	02-11-98	ACCULOAD SCHEMATIC LANE 2, FIC-S2B
0608-E-2012	1 OF 1	2	02-11-98	ACCULOAD SCHEMATIC LANE 2, FIC-N2
0608-E-2015	1 OF 1	2	02-11-98	ACCULOAD SCHEMATIC LANE 3, FIC-S3A
0608-E-2016	1 OF 1	2	02-11-98	ACCULOAD SCHEMATIC LANE 3, FIC-S3B
0608-E-2017	1 OF 1	2	02-11-98	ACCULOAD SCHEMATIC LANE 3, FIC-N3
0608-E-2030	1 OF 1	1	02-11-98	ELECTRICAL PANEL LAYOUT LANE 2
0608-E-2031	1 OF 1	2	02-11-98	CONTROL PANEL SCHEMATIC LANE 2
0608-E-2032	1 OF 1	–	–	RESERVED FOR FUTURE DRAWING
0608-E-2033	1 OF 1	1	02-11-98	PLC SCHEMATIC LANE 2– RACK 2, GROUP 0,1
0608-E-2034	1 OF 1	1	02-11-98	PLC SCHEMATIC LANE 2– RACK 2, GROUP 2,3
0608-E-2035	1 OF 1	1	02-11-98	PLC SCHEMATIC LANE 2– RACK 2, GROUP 4,5
0608-E-2036	1 OF 1	1	02-11-98	PLC SCHEMATIC LANE 2– RACK 2, GROUP 6,7
0608-E-2040	1 OF 1	1	02-11-98	ELECTRICAL PANEL LAYOUT LANE 3.
0608-E-2041	1 OF 1	2	02-11-98	CONTROL PANEL SCHEMATIC LANE 3
0608-E-2042	1 OF 1	–	–	RESERVED FOR FUTURE DRAWING
0608-E-2043	1 OF 1	1	02-11-98	PLC SCHEMATIC, LANE 3 – RACK 2, GROUP 0,1
0608-E-2044	1 OF 1	1	02-11-98	PLC SCHEMATIC, LANE 3 – RACK 2, GROUP 2,3
0608-E-2045	1 OF 1	1	02-11-98	PLC SCHEMATIC, LANE 3 – RACK 2, GROUP 4,5
0608-E-2046	1 OF 1	1	02-11-98	PLC SCHEMATIC LANE 3 – RACK 2, GROUP 6,7
0608-E-2060	1 OF 1	1	12-04-97	CONDUIT INTERCONNECT DIAGRAM LANE 2 AND 3
0608-E-2061	1 OF 1	–	–	RESERVED FOR FUTURE DRAWING
0608-E-2062	1 OF 1	1	12-03-97	CONDUIT LAYOUT LANE 2
0608-E-2063	1 OF 1	–	–	RESERVED FOR FUTURE DRAWING
0608-E-2070	1 OF 1	–	–	RESERVED FOR FUTURE DRAWING

DRAWING NO.			REFERENCE DRAWINGS
3	02/11/98	DAB	WHB	UPDATED DRAWING LIST
2	12/24/97	DAB	WHB	UPDATED DRAWING LIST REVISIONS
1	12/03/97	DAB	WHB	UPDATED DRAWING LIST
0	11/25/97	BNJ	WHB	ISSUED FOR CONSTRUCTION
REV	DATE	BY	CHK	REVISED

TOSCO
TOSCO Distribution Company
A Division of Tosco Corporation
5528 NW Doane St.
Portland, Oregon 97210

PORTLAND TERMINAL
SITE PLAN
ELECTRICAL

ALPHA ENGINEERS and CONSTRUCTORS, INC.
19 NW 5TH AVE.,SUITE 204 PORTLAND, OR. 97209 Tel: 503-227-3317

SCALE: NONE	DESIGNED BY: DAB
DATE: 11/17/97	CHECKED BY: WHB
DRAWN BY: BNJ	ENG. APPR. BY: WHB

CADD FILE/PLOT DATE: \25E1000.DWG <CPD: 02/18/98 [TIME: 2:13 PM] >

DRAWING NUMBER	SHEET	REV
0608-E-1000	1 OF 1	3

COP00021510

ONE LINE DIAGRAM SYMBOLS

SYMBOL	DESCRIPTION
	1-PHASE, TWO-WINDING XFMR
	3-PHASE, TWO-WINDING XFMR WITH DELTA-WYE CONNECTIONS
	3-PHASE, 3 WIRE, WYE, GROUNDED
*	CURRENT TRANSFORMER • INDICATES QUANTITY
*	POTENTIAL TRANSFORMER WITH PRIMARY FUSE • INDICATES QUANTITY
	SURGE ARRESTER
	FUSE, THERMAL CURRENT
	ISOLATING PRIMARY FUSE CUTOUT, DRY
	ISOLATING FUSE SWITCH FOR ON-LOAD SWITCHING
	MEDIUM-VOLTAGE STARTER WITH CURRENT LIMITIING FUSES • INDICATES FUSE AND STARTER SIZES
	FUSED SAFETY SWITCH • INDICATES SWITCH AND FUSE RATING
	DISCONNECT SWITCH, GROUP OPERATED
	DISCONNECT SWITCH, STICK OPERATED
	DISCONNECT SWITCH, SELF OR DOUBLE-THROW
	CIRCUIT BREAKER, LOW VOLTAGE, MOLDED CASE
	POTHEAD
M	WOUND-ROTOR INDUCTION MOTOR
	SWITCHES (• INDICATES TYPE) SS - SELECTOR, AS - AMMETER VS - VOLTMETER SYN - SYNCHRONIZING
	TRANSDUCER (• INDICATES TYPE)
	GENERATOR, INSTRUMENT, METER, OR MOTOR (• INDICATES TYPE)

A	AMMETER	PF	POWER FACTOR
F	FREQ METER	PI	POSITION INDICATOR
SYS	SYNCHROSCOPE	REC	RECORDING METER
V	VOLTMETER	T	TEMP RECORDING METER
VAR	VARMETER	VA	VOLT-AMPERE METER
W	WATTMETER	VARH	VARHOUR METER
TT	TOTAL TIME METER	WHD	WATTHOUR-DETECTOR METER
GD	GROUND DETECTOR	WH	WATTHOUR METER
G	GENERATOR	M	MOTOR

SCHEMATIC/WIRING DIAGRAM SYMBOLS

SYMBOL	DESCRIPTION
	NORMALLY OPEN LIMIT SWITCH
	NORMALLY OPEN LIMIT SWITCH HELD CLOSED
	NORMALLY CLOSED LIMIT SWITCH
	NORMALLY CLOSED LIMIT SWITCH HELD OPEN
	FLOW ACTUATED SWITCH, CLOSES ON INCREASE IN FLOW
	FLOW ACTUATED SWITCH, OPENS ON INCREASE IN FLOW
	LEVEL ACTUATED SWITCH, CLOSES ON RISE IN LEVEL
	LEVEL-ACTUATED SWITCH, OPEN ON RISE IN LEVEL
	PRESSURE OR VACUUM-ACTUATED SWITCH, CLOSES ON RISING PRESSURE OR VACUUM
	PRESSURE OR VACUUM-ACTUATED SWITCH, OPENS ON RISING PRESSURE OR VACUUM
	DIFFERENTIAL PRESSURE SWITCH, CLOSES ON DIFFERENTIAL PRESSURE CHANGE
	TEMPERATURE-ACTUATED SWITCH, CLOSES ON RISING TEMPERATURE
	TEMPERATURE-ACTUATED SWITCH, OPENS ON RISING TEMPERATURE
*	SPEED-ACTUATED SWITCH, OPERATES ON SHAFT ROTATION *INDICATES FUNCTION, ZS=ZERO SPEED, OS=OVERSPEED, US=UNDERSPEED
*	RELAY OR OPERATING COIL *INDICATES FUNCTION, MS - MOTOR STARTER CR - CONTROL RELAY TDR - TIME-DELAY RELAY C - CONTACTOR
	NORMALLY OPEN CONTACT (MAKE)
	NORMALLY CLOSED CONTACT (BREAK)
	NORMALLY OPEN CONTACT WITH TIME DELAY CLOSING (TDC) AFTER COIL IS ENERGIZED
	NORMALLY CLOSED CONTACT WITH TIME DELAY OPENING (TDO) AFTER COIL IS ENERGIZED
	NORMALLY OPEN CONTACT WITH TIME DELAY OPENING (TDO) AFTER COIL IS DE-ENERGIZED
	NORMALLY CLOSED CONTACT WITH TIME DELAY CLOSING (TDC) AFTER COIL IS DE-ENERGIZED

SYMBOL	DESCRIPTION
	CIRCUIT-OPENING PUSHBUTTON MOMENTARY OR SPRING RETURN
	TWO-CIRCUIT PUSHBUTTON MOMENTARY OR SPRING RETURN
	MUSHROOM HEAD CIRCUIT OPENING PUSHBUTTON (FOR EMERGENCY APPLICATIONS)
	CIRCUIT-CLOSING SWITCH
	CIRCUIT-OPENING SWITCH
	TWO-POSITION TRANSFER SWITCH
OFF	THREE-POSITION TRANSFER SWITCH
	CIRCUIT BREAKER, DOUBLE POLE
	SOLENOID
	SPACE HEATER
	CROSSING OF PATH OR CONDUCTORS NOT CONNECTED
	CONNECTION
	TERMINAL CONNECTION
	PLUG AND RECEPTACLE
	TWO CONDUCTORS WITH OVERALL SHIELD FOR GROUNDING CONNECTION
	GROUNDING CONNECTION
	CHASSIS CONNECTION
+ -	MULTICELL BATTERY (DC)
	THERMAL ELEMENT
*	PILOT LIGHT *INDICATES COLOR

A - AMBER	OP - OPALESCENT
B - BLUE	P - PURPLE
C - CLEAR	R - RED
G - GREEN	W - WHITE
O - ORANGE	Y - YELLOW

SYMBOL	DESCRIPTION
H1 H2 X1 X2	CONTROL TRANSFORMER W/GROUND
OL'S	OVERLOAD CONTACTS
AREA EPD	

PLAN DRAWING SYMBOLS

SYMBOL	DESCRIPTION
	HORIZONTAL MOTOR OR GENERATOR
	DRY-TYPE 1-PHASE TRANSFORMER
	EXTERNALLY-OPERATED DISCONNECT SWITCH
	COMBINATION CONTROLLER AND DISCONNECTING MEANS
S_{TH}	MANUAL STARTER SWITCH WITH THERMAL OVERLOADS
J	JUNCTION BOX
T	THERMOSTAT
	TELEPHONE RCPT, PUBLIC
	SOUND SYSTEM DEVICE
	SIGNAL OR ALARM HORN
5a B	POLE - MOUNTED FLOODLIGHT, ARROW INDICATES AIMING DIRECTION
	POLE-MOUNTED STREET LIGHT
5a B	BRACKET-MOUNTED FLOODLIGHT ARROW INDICATES AIMING DIRECTION
5 B	EMERGENCY LIGHTING FIXTURE, BATTERY OPERATED, ARROWS INDICATE AIMING
	GROUNDING ROD

SWITCH OUTLET: SMALL LETTER BY THE SIDE OF SYMBOL INDICATES THE CONTROLLED FIXTURE

SYMBOL	DESCRIPTION
	SINGLE RCPT
	DOUBLE RCPT
	SINGLE SPECIAL-PURPOSE
	FLEXIBLE CONDUIT
	CONDUIT W/ SEAL FITTING

SPECIAL IDENTIFICATION OF OUTLETS

WP - WEATHERPROOF	DT - DUSTTIGHT
VT - VAPORTIGHT	RT - RAINTIGHT
WT - WEATHERTIGHT	XP - EXPLOSIONPROOF

CEILING MTD	WALL MTD	DESCRIPTION
5a A	5a A	SURFACE OR PENDANT INCANDESCENT, MERCURY-VAPOR, OR SIMILAR LAMP FIXTURE
5a A	5a A	SURFACE OR PENDENT INDIVIDUAL FLUORESCENT FIXTURE
X	X	LIGHT. ARROWS INDICATE ROUTE OF EGRESS
J	J	JUNCTION BOX
S_a		SINGLE-POLE SWITCH
S_3		THREE-WAY SWITCH
S_4		FOUR-WAY SWITCH
S_K		KEY-OPERATED SWITCH

LIGHTING OUTLETS: CAPITAL LETTER OUTSIDE SYMBOL INDICATES FIXTURE TYPE AS SHOWN ON FIXTURE SCHEDULE. NUMERIC INDICATES CIRCUIT NO. SMALL LETTER DESIGNATES THE CONTROLLING SWITCH

RECEPTACLE OUTLETS: NUMERICAL BY THE SIDE OF SYMBOL INDICATES CIRCUIT NUMBER

SYMBOL	DESCRIPTION
*	SWITCHES OR DEVICES • INDICATES TYPE

BRS	BELT RUN-OFF SWITCH	OS	OVERSPEED SWITCH
DPS	DIFFERENTIAL PRESSURE SWITCH	PCS	PLUGGED CHUTE SWITCH
ES	EMERGENCY PULL-CORD SWITCH	PNS	POSITION SWITCH
FS	FLOW SWITCH	PS	PRESSURE SWITCH
LS	LIMIT SWITCH	RPS	BELT RIP SWITCH
MTD	METAL DETECTOR	RS	ROTATION SWITCH
HOA	HAND-OFF-AUTO	RTD	RESISTANCE TEMPERATURE DETECTOR
		SV	SOLENOID VALVE

POLE LINE SYMBOLS

SYMBOL	DESCRIPTION
	-NEW CLASS 2 POLE
	-EXISTING POLES TO BE REPLACED
	-POLE MOUNTED TRANSFORMER

LOGIC DIAGRAM SYMBOLS

SYMBOL	DESCRIPTION
	INPUT/OUTPUT INSTRUMENTATION DEVICE (FIELD MOUNTED)
	INPUT/OUTPUT INSTRUMENTATION DEVICE (BOARD MOUNTED)
	LOGIC CONTINUATION • INDICATES DRAWING NUMBER
	TIME DELAY

REV	DATE	BY	CHK	REVISED
1	02/11/98	DAB	WHB	AS-BUILT
1	11/25/97	MJT	WHB	ISSUED FOR CONSTRUCTION

DRAWING NO. | REFERENCE DRAWINGS

TOSCO
TOSCO Distribution Company
A Division of Tosco Corporation
5528 NW Doane St.
Portland, Oregon 97210

PORTLAND TERMINAL ELECTRICAL SYMBOLS AND LEGEND SHEET

ALPHA ENGINEERS and CONSTRUCTORS, INC.
19 NW 5TH AVE, SUITE 204 PORTLAND, OR 97209 tel: 503-227-3317

SCALE:	NONE	DESIGNED BY:	DAB
DATE:	11/17/97	CHECKED BY:	WHB
DRAWN BY:	MJC	ENG. APPR. BY:	WHB

CADD FILE/PLOT DATE: 25E1000A.DWG <CPD: 11/25/97 TIME: 10:11 AM>

DRAWING NUMBER	SHEET	REV
0608-E-1000A	1 OF 1	0

COP0021511

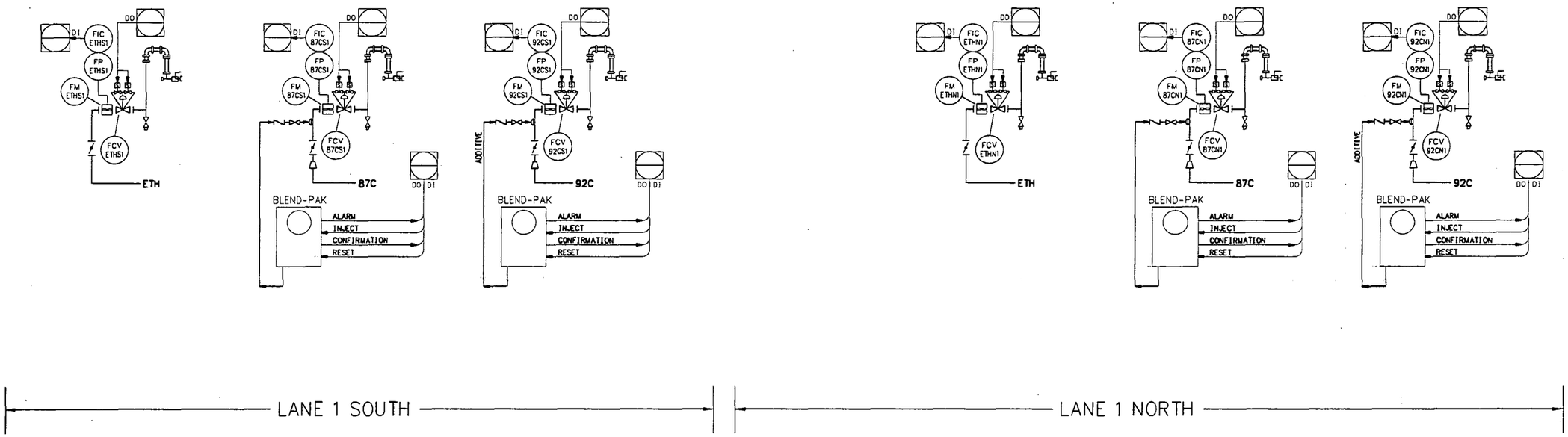

SYSTEM INTERFACE

NOTES:

1. USE PLC FOR AB AND BP CONTROL
2. USE REMOTE RACKS

DRAWING NO.	REFERENCE DRAWINGS	REV. NO.	DATE	REVISED	DRAWN BY	CKD. BY
		0	02/11/98	AS-BUILT	DAB	WHB

TOSCO
Tosco Northwest Company
A Division of Tosco Corporation
5528 NW Doane St.
Portland, Oregon 97210

ALPHA ENGINEERS and CONSTRUCTORS, INC.
19 NW 5th AVE, SUITE 204, PORTLAND, OR. 97209 Tel:(503)227-3317/Fax:(503)227-3244

DRAWN BY	DAB
CHKD BY	WHB
APPD BY	WHB
SCALE	NONE
DATE	09/10/97

PORTLAND TERMINAL
PORTLAND, OREGON
ELECTRICAL
INSTRUMENTATION & CONTROL DIAGRAM
TRUCK LOADING RACK
LANE 1

DRAWING NO.	SHEET	REV.
0608-E-2002	1 OF 1	0

25E20020.DWG <CPD: 02/11/98 [TIME: 1:43 PM] >

COP0021512

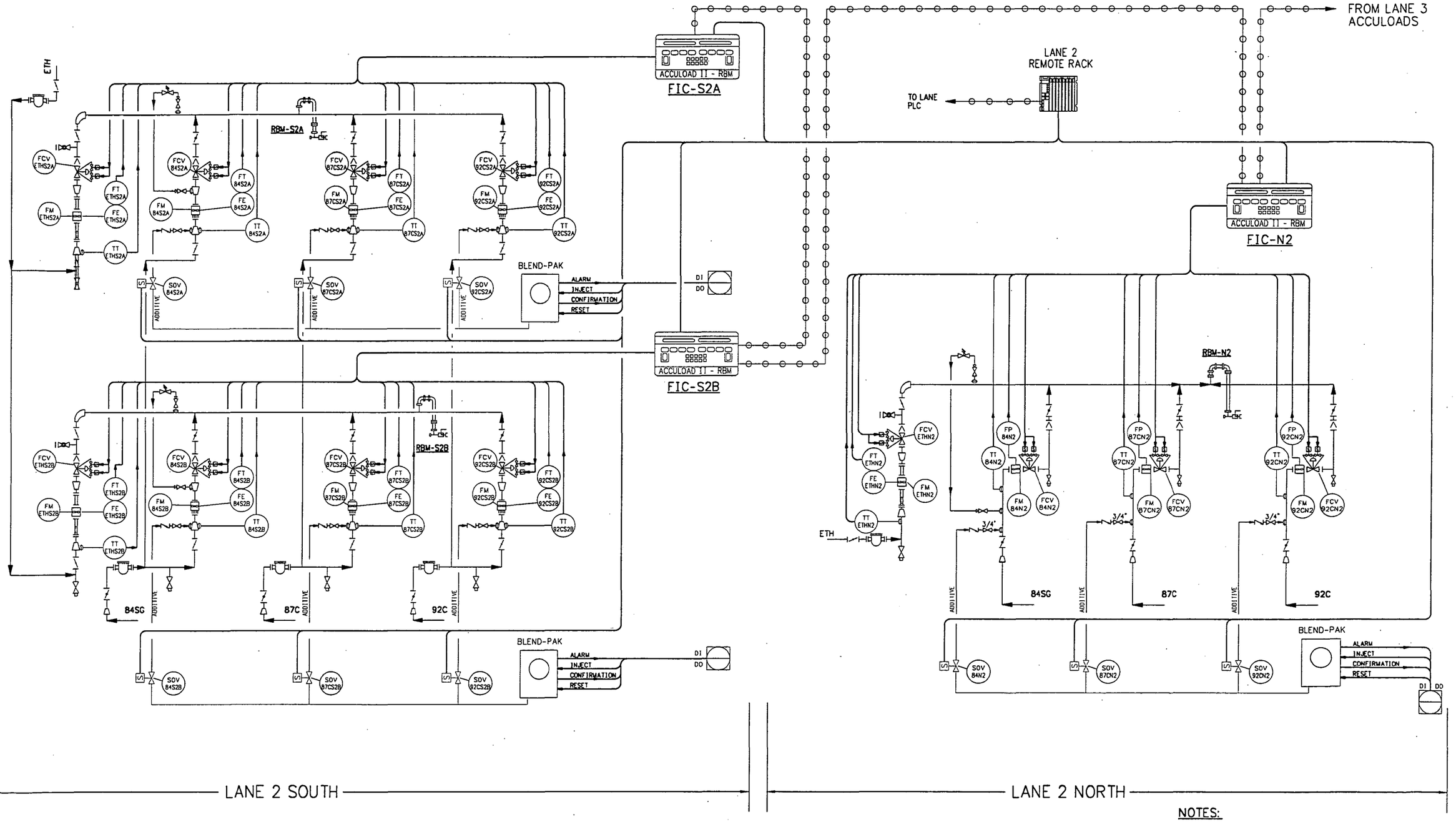

SYSTEM INTERFACE

NOTES:
1. USE PLC FOR AB AND BP CONTROL
2. USE REMOTE RACKS

DRAWING NO.	REFERENCE DRAWINGS	REV. NO.	DATE	REVISED	DRAWN BY	CKD. BY
		0	11/25/97	ISSUED FOR CONSTRUCTION	DAB	WHB
		1	02/11/98	AS-BUILT	DAB	WHB

TOSCO
Tosco Northwest Company
A Division of Tosco Corporation
5528 NW Doane St.
Portland, Oregon 97210

ALPHA ENGINEERS and CONSTRUCTORS, INC.
19 NW 5th AVE, SUITE 204, PORTLAND, OR. 97209 Tel:(503)227-3317/Fax:(503)227-3244

DRAWN BY	DAB
CHKD BY	AAB
APPD BY	WHB
SCALE	NONE
DATE	09/10/97

PORTLAND TERMINAL
PORTLAND, OREGON
ELECTRICAL
INSTRUMENTATION & CONTROL DIAGRAM
TRUCK LOADING RACK
LANE 2

DRAWING NO.	SHEET	REV.
0608-E-2003	1 OF 1	1

25K2003O.DWG <CPD: 02/11/98 [TIME: 2:06 PM] >

COP00215113

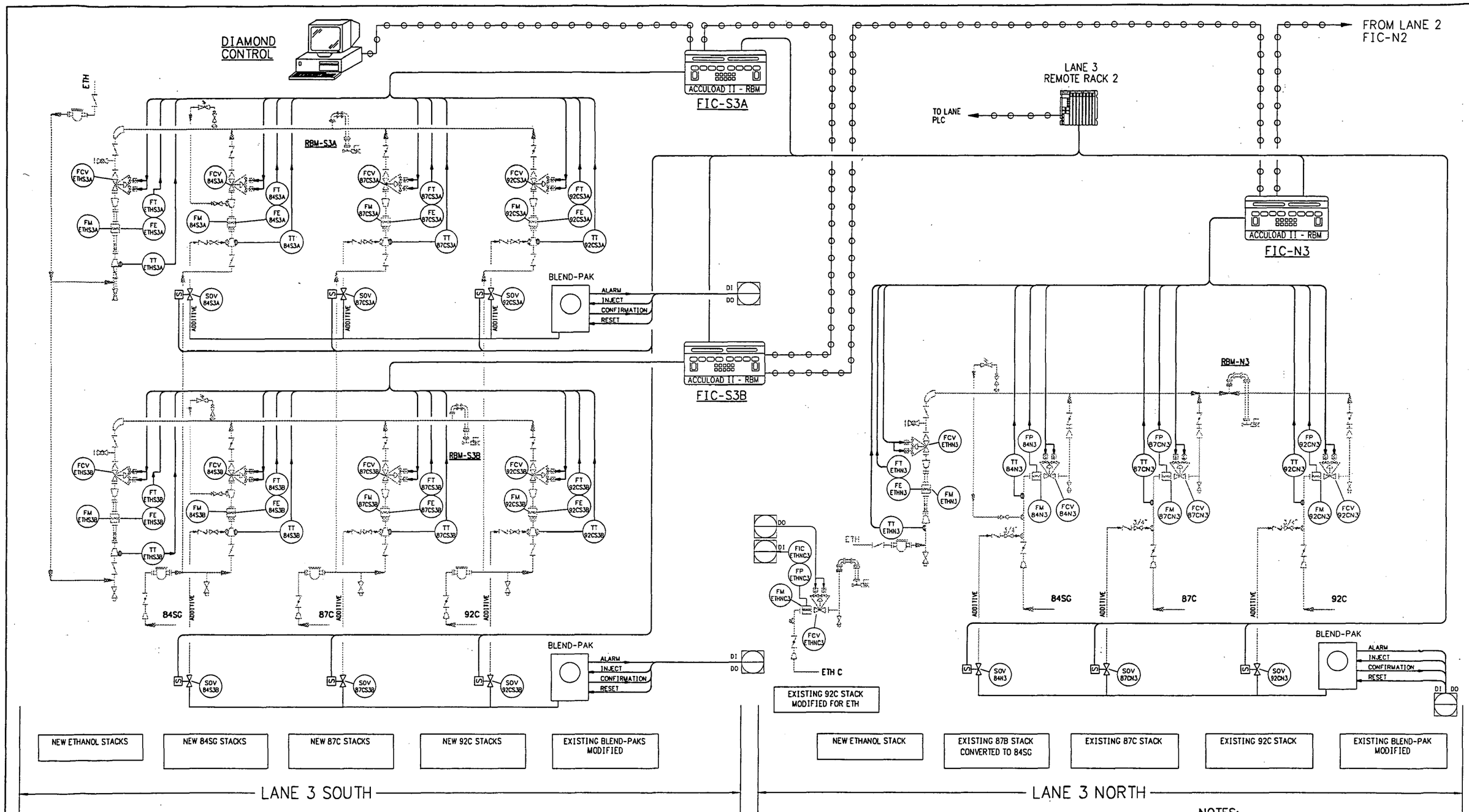

SYSTEM INTERFACE

NOTES:
1. USE PLC FOR AB AND BP CONTROL
2. USE REMOTE RACKS

DRAWING NO.	REFERENCE DRAWINGS	REV. NO.	DATE	REVISED	DRAWN BY	CKD. BY
		0	11/25/97	ISSUED FOR CONSTRUCTION	CPM	WHB
		1	02/11/98	AS-BUILT	DAB	WHB

TOSCO
Tosco Northwest Company
A Division of Tosco Corporation
5528 NW Doane St.
Portland, Oregon 97210

ALPHA ENGINEERS and CONSTRUCTORS, INC.
19 NW 5th AVE, SUITE 204, PORTLAND, OR. 97209 Tel:(503)227-3317/Fax:(503)227-3244

DRAWN BY	CPM
CHKD BY	AAB
APPD BY	WHB
SCALE	NONE
DATE	09/10/97

PORTLAND TERMINAL
PORTLAND, OREGON
ELECTRICAL
INSTRUMENTATION & CONTROL DIAGRAM
TRUCK LOADING RACK
LANE 3

DRAWING NO.	SHEET	REV.
0608-E-2004	1 OF 1	1

25E20040.DWG <CFD: 02/18/98 [TIME: 1:42 PM]>

COP00215144

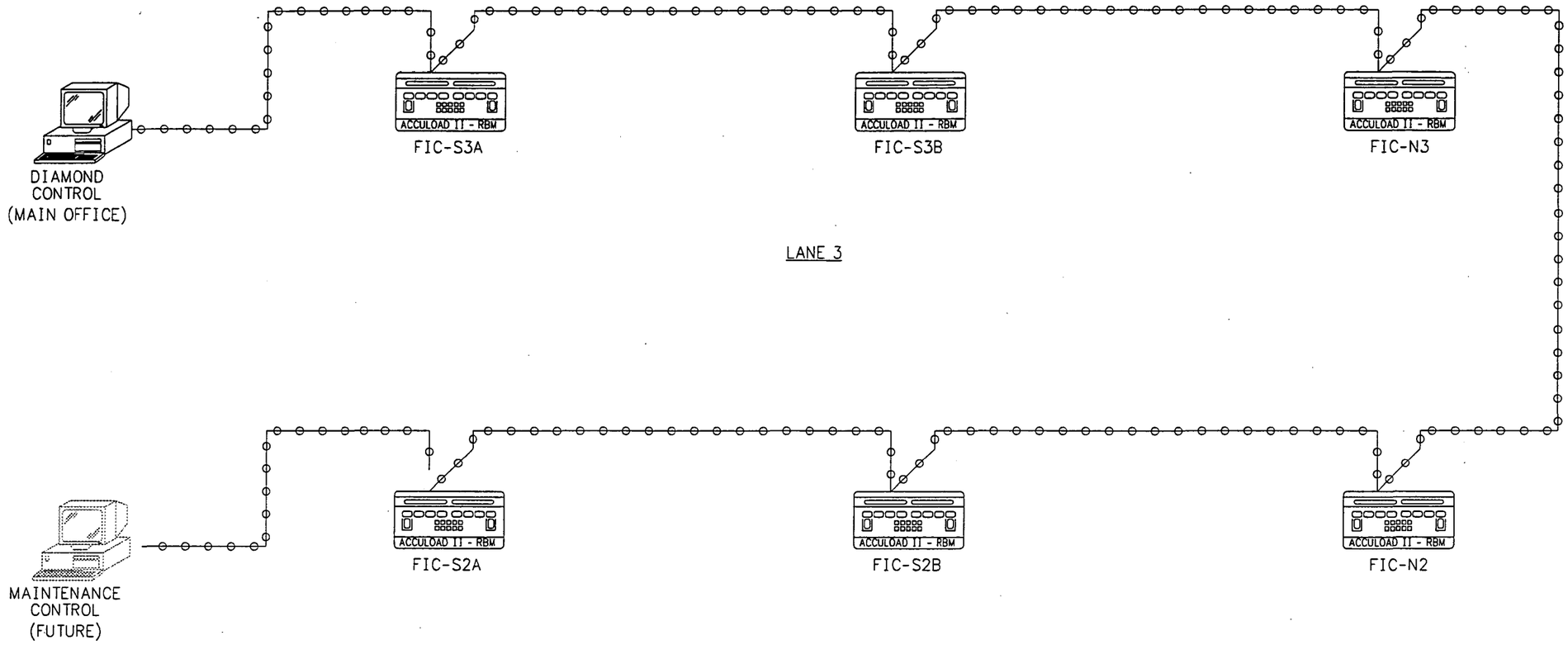

SYSTEM INTERFACE

DRAWING NO.	REFERENCE DRAWINGS	REV. NO.	DATE	REVISED	DRAWN BY	CKD. BY
		0	11/25/97	ISSUED FOR CONSTRUCTION	BNJ	AAB
		1	02/11/98	AS-BUILT	DAB	WHB

TOSCO
Tosco Northwest Company
A Division of Tosco Corporation
5528 NW Doane St.
Portland, Oregon 97210

ALPHA ENGINEERS and CONSTRUCTORS, INC.
19 NW 5th AVE, SUITE 204, PORTLAND, OR. 97209 Tel:(503)227-3317/Fax:(503)227-3244

DRAWN BY	BNJ
CHKD BY	AAB
APPD BY	WHB
SCALE	NONE
DATE	11/17/97

PORTLAND TERMINAL
PORTLAND, OREGON
ELECTRICAL
SERIAL COMMUNICATIONS DIAGRAM
TRUCK LOADING LANES 2 & 3

DRAWING NO.	SHEET	REV.
0608-E-2005	1 OF 1	1

25E20050.DWG <CPD: 02/12/98 [TIME: 1:39 PM]>

COP0021515

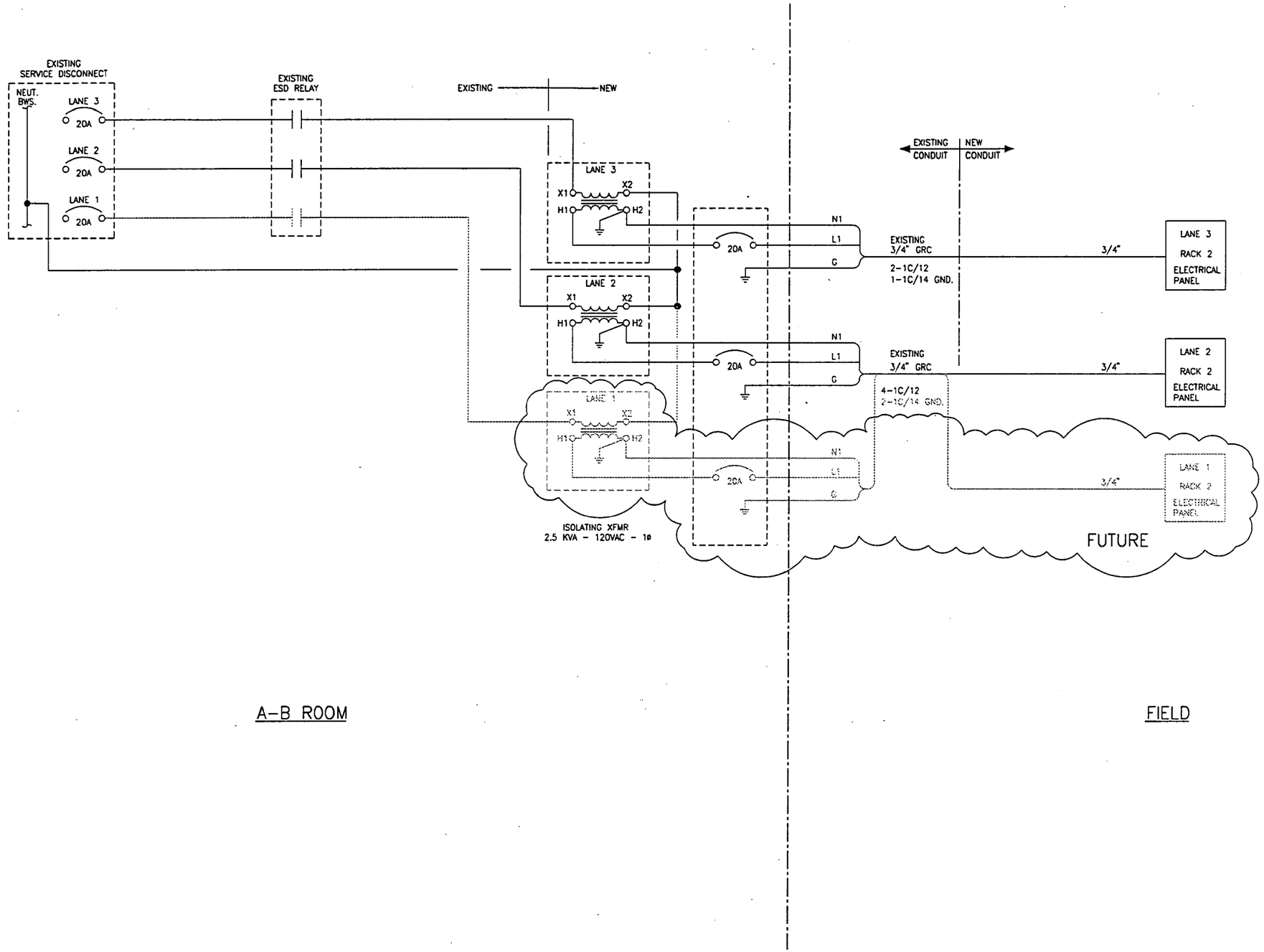

DRAWING NO.				REFERENCE DRAWINGS
1	02/11/98	DAB	VHB	AS-BUILT
0	11/25/97	BNJ	VHB	ISSUED FOR CONSTRUCTION
REV	DATE	BY	CHK	REVISED

TOSCO
TOSCO Distribution Company
A Division of Tosco Corporation
5528 NW Doane St.
Portland, Oregon 97210

PORTLAND TERMINAL
ELECTRICAL SCHEMATIC
LANES 1, 2, AND 3

ALPHA ENGINEERS and CONSTRUCTORS, INC.
19 NW 5TH AVE,SUITE 204 PORTLAND, OR. 97209 Tel: 503-227-3317

SCALE:	NONE	DESIGNED BY:	DAB
DATE:	11/17/97	CHECKED BY:	VHB
DRAWN BY:	BNJ	ENG. APPR. BY:	VHB
CADD FILE/PLOT DATE:	25E20061.DWG	<CPD: 02/18/98	TIME: 1:46 PM>

DRAWING NUMBER	SHEET	REV
0608-E-2006	1 OF 1	1

COP0021516

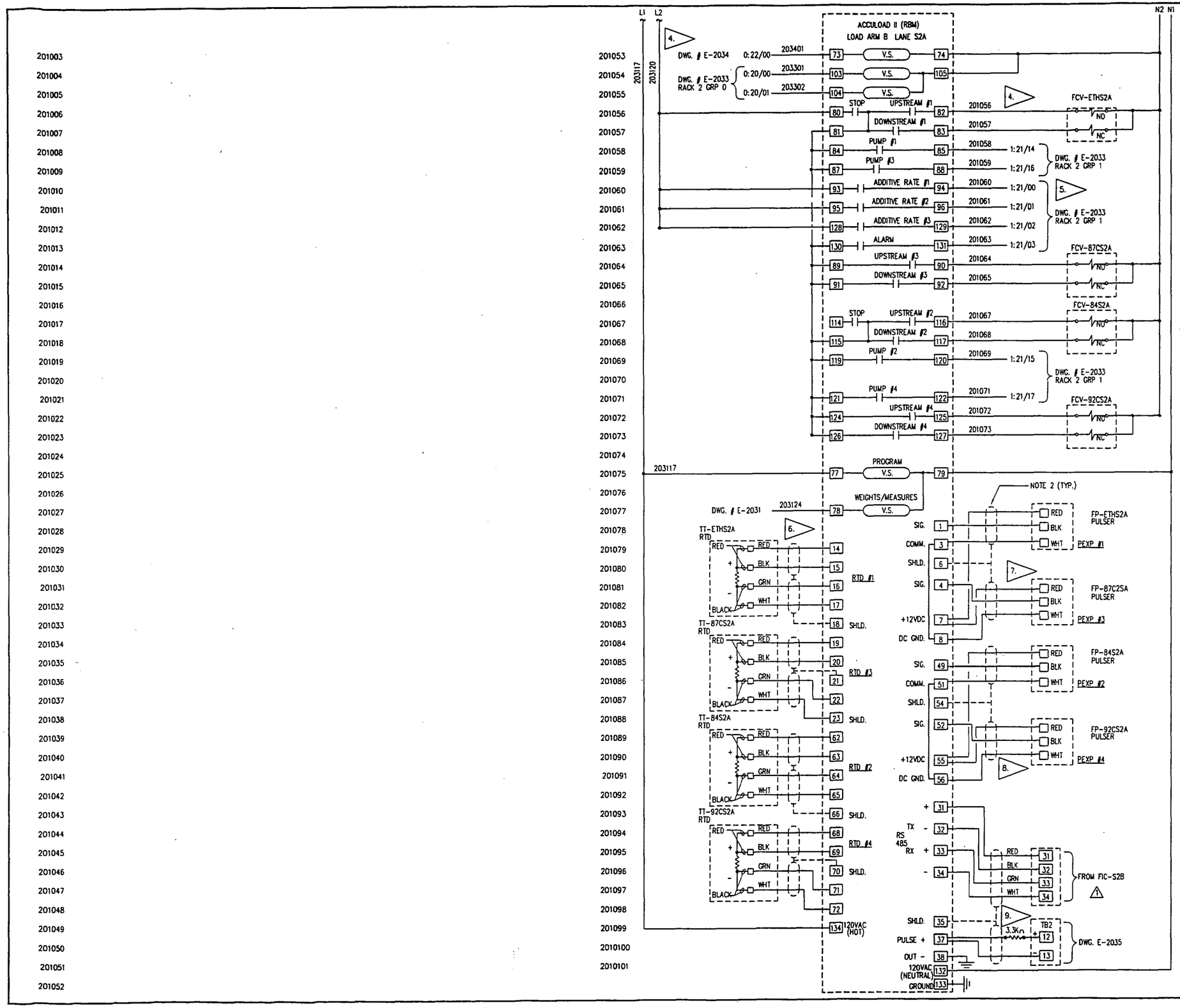

NOTES:

1. L1 & L2 TO BE SAME PHASE POWER.
2. ALL INST. CABLE SHALL BE IDENTIFIED BY ITS LOOP# IE: FT-ETHS2A ETC.
3. FIELD INSTALLED JUMPERS (31-33) AND (32-34).
4. ALL POWER WIRING TO BE 14AWG.
5. ALL VOLTAGE SENSE WIRING (PLC TO ACCULOAD TO BE 16AWG.)
6. TT WIRING TO BE BELDEN 82723.
7. PULSER WIRING TO BE BELDEN 8402.
8. COMM WIRING TO BE BELDEN 8762.
9. PULSE WIRING TO BE BELDEN 8762.

DRAWING NO.	E-2033	PLC SCHEMATIC - RACK 2		
		REFERENCE DRAWINGS		
REV	DATE	BY	CHK	REVISED
2	02/11/98	DAB	WHB	AS-BUILT
1	12/24/97	DAB	WHB	TB 31 THRU TB34
0	11/25/97	BNJ	WHB	ISSUED FOR CONSTRUCTION

TOSCO
TOSCO Distribution Company
A Division of Tosco Corporation
5528 NW Doane St.
Portland, Oregon 97210

PORTLAND TERMINAL
ELECTRICAL SCHEMATIC
LANE 2, FIC-S2A

ALPHA ENGINEERS and CONSTRUCTORS, INC.
19 NW 5TH AVE.,SUITE 204 PORTLAND, OR. 97209 Tel: 503-227-3317

SCALE:	NONE	DESIGNED BY:	DAB
DATE:	11/17/97	CHECKED BY:	WHB
DRAWN BY:	BNJ	ENG. APPR. BY:	WHB
CADD FILE/PLOT DATE:	25E20102.DWG	<CPD: 02/12/98	TIME: 2:00 PM>
DRAWING NUMBER		SHEET	REV
0608-E-2010		1 OF 1	2

COP0021517

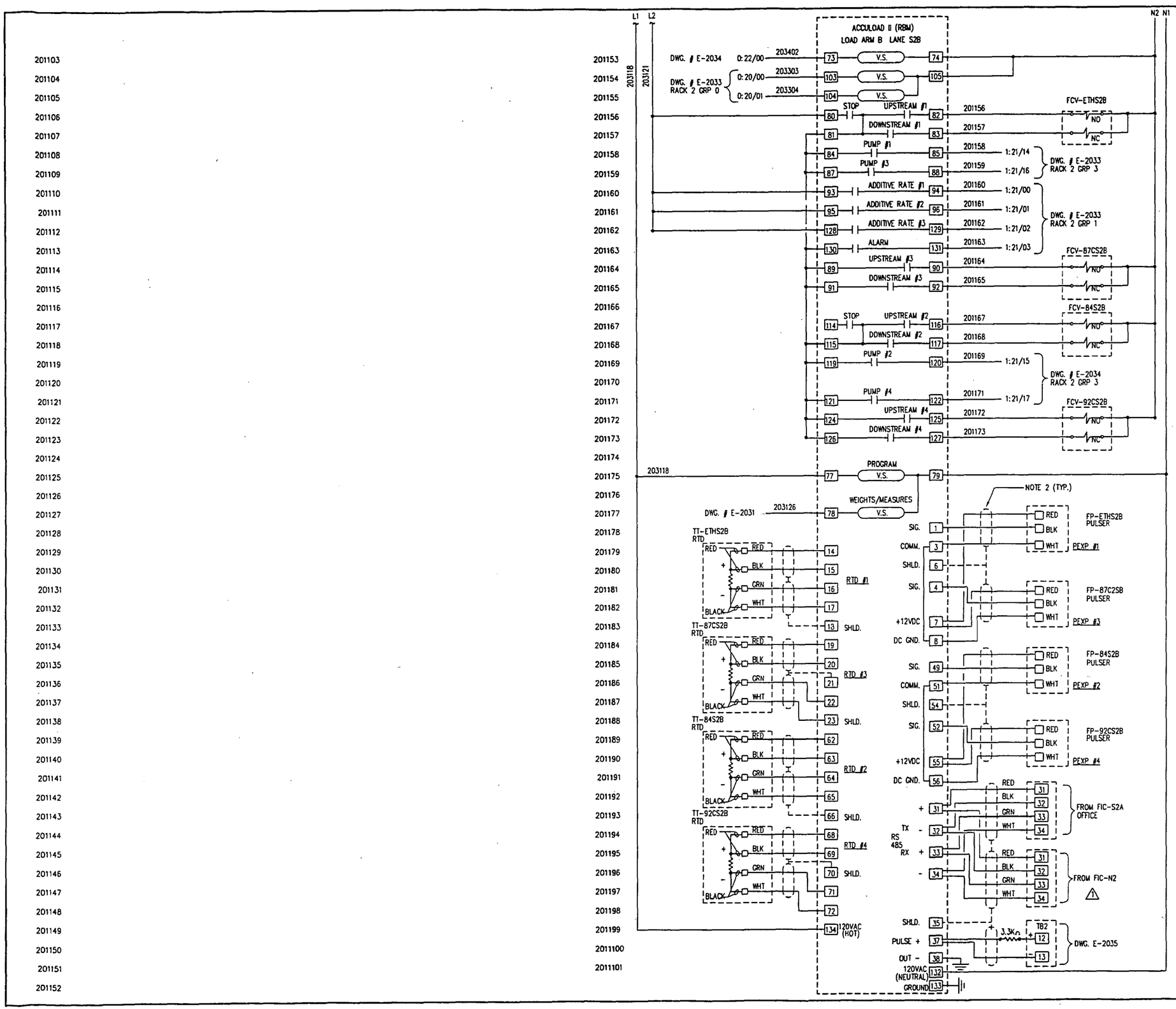

NOTE:

1. L1 & L2 TO BE SAME PHASE POWER.
2. ALL INST. CABLE SHALL BE IDENTIFIED BY ITS LOOP# IE: FT-ETHS2A ETC.
3. FIELD INSTALLED JUMPERS (31-33) AND (32-34).
4. SEE DWG. 0608-E-2010 FOR WIRING TYPE.

DRAWING NO.	REFERENCE DRAWINGS
E-2033	PLC SCHEMATIC - RACK 2

REV	DATE	BY	CHK	REVISED
2	02/11/98	DAB	WHB	AS-BUILT
1	12/24/97	DAB	WHB	TB 31 THRU TB34
0	11/25/97	BNJ	WHB	ISSUED FOR CONSTRUCTION

TOSCO
TOSCO Distribution Company
A Division of Tosco Corporation
5528 NW Doane St.
Portland, Oregon 97210

PORTLAND TERMINAL
ELECTRICAL SCHEMATIC
LANE 2, FIC-S2B

ALPHA ENGINEERS and CONSTRUCTORS, INC.
19 NW 5TH AVE.,SUITE 204 PORTLAND, OR. 97209 Tel: 503-227-3317

SCALE:	NONE	DESIGNED BY:	DAB
DATE:	11/17/97	CHECKED BY:	WHB
DRAWN BY:	BNJ	ENG. APPR. BY:	WHB
CADD FILE/PLOT DATE:	25E20112.DWG	<DPD: 02/12/98	TIME: 2:05 PM >

DRAWING NUMBER	SHEET	REV
0608-E-2011	1 OF 1	2

COP0021518

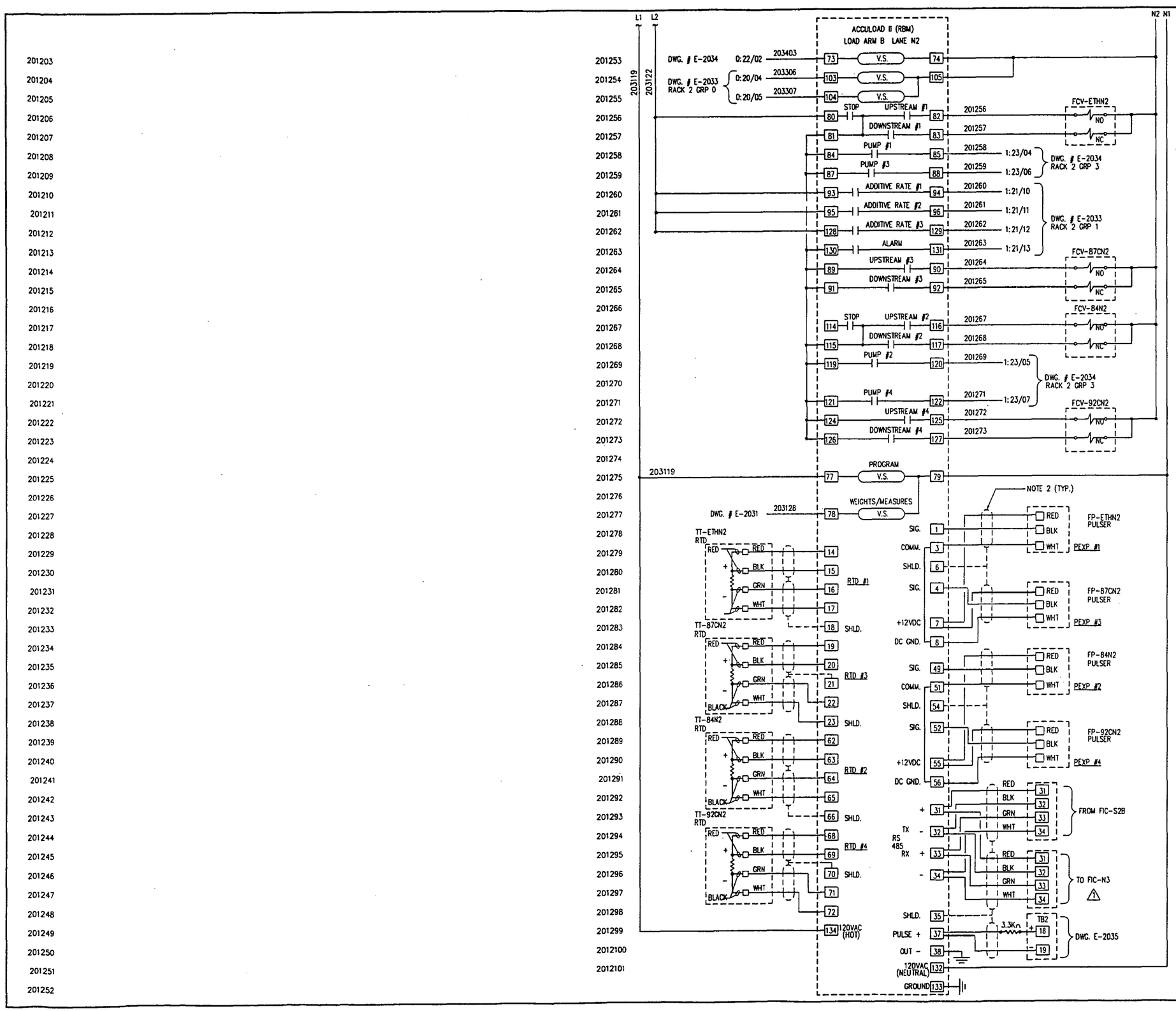

NOTE:

1. L1 & L2 TO BE SAME PHASE POWER.
2. ALL INST. CABLE SHALL BE IDENTIFIED BY ITS LOOP# IE: FT-ETHS2A ETC.
3. FIELD INSTALLED JUMPERS (31-33) AND (32-34).
4. ⚠ SEE DWG. 0608-E-2010 FOR WIRING TYPE.

REV	DATE	BY	CHK	REVISED
2	02/11/98	BJL	DAB	WHB
1	12/24/97	DAB	WHB	TB31 THRU TB34
0	11/25/97	BNJ	WHB	ISSUED FOR CONSTRUCTION

DRAWING NO. E-2033 — REFERENCE DRAWINGS: PLC SCHEMATIC – RACK 2

TOSCO
TOSCO Distribution Company
A Division of Tosco Corporation
5528 NW Doane St.
Portland, Oregon 97210

PORTLAND TERMINAL
ELECTRICAL SCHEMATIC
LANE 2, FIC-N2

ALPHA ENGINEERS and CONSTRUCTORS, INC.
19 NW 5TH AVE.SUITE 704 PORTLAND, OR. 97209 tel: 503-227-3317

SCALE: NONE	DESIGNED BY: DAB
DATE: 11/17/97	CHECKED BY: WHB
DRAWN BY: BNJ	ENG. APPR. BY: WHB
CADD FILE/PLOT DATE: 25E20122.DWG	CPD: 02/12/98 TIME: 2:24 PM
DRAWING NUMBER: 0608-E-2012	SHEET: 1 OF 1 REV: 2

COP0021519

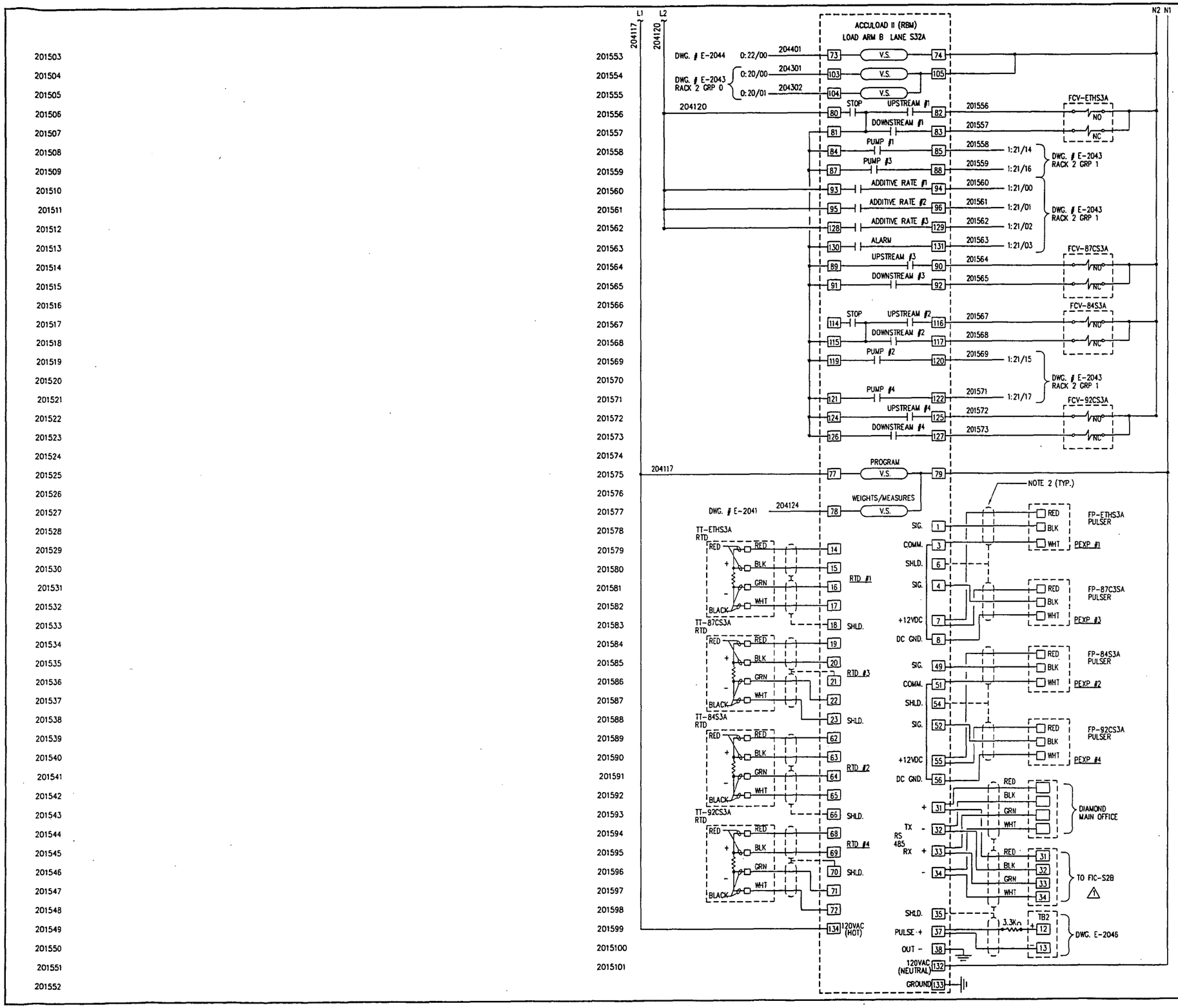

NOTE:

1. L1 & L2 TO BE SAME PHASE POWER.
2. ALL INST. CABLE SHALL BE IDENTIFIED BY ITS LOOP# IE: FT-ETHS3A ETC.
3. FIELD INSTALLED JUMPERS (31-33) AND (32-34).
4. SEE DWG. 0608-E-2010 FOR WIRING TYPE.

E-2043	PLC SCHEMATIC - RACK 2
DRAWING NO.	REFERENCE DRAWINGS

REV	DATE	BY	CHK	REVISED
2	02/11/98	DAB	WHB	AS-BUILT
1	12/24/97	DAB	WHB	TB31 THRU TB34
0	11/25/97	BNJ	WHB	ISSUED FOR CONSTRUCTION

TOSCO
TOSCO Distribution Company
A Division of Tosco Corporation
5528 NW Doane St.
Portland, Oregon 97210

PORTLAND TERMINAL
ELECTRICAL SCHEMATIC
LANE 3, FIC-S3A

ALPHA ENGINEERS and CONSTRUCTORS, INC.
19 NW 5TH AVE.,SUITE 204 PORTLAND, OR. 97209 tel: 503-227-3317

SCALE:	NONE	DESIGNED BY:	DAB
DATE:	11/17/97	CHECKED BY:	WHB
DRAWN BY:	BNJ	ENG. APPR. BY:	WHB

CADD FILE/PLOT DATE: 25E20152.DWG <CPD: 02/12/98 TIME: 2:32 PM>

DRAWING NUMBER	SHEET	REV
0608-E-2015	1 OF 1	2

COP0021520

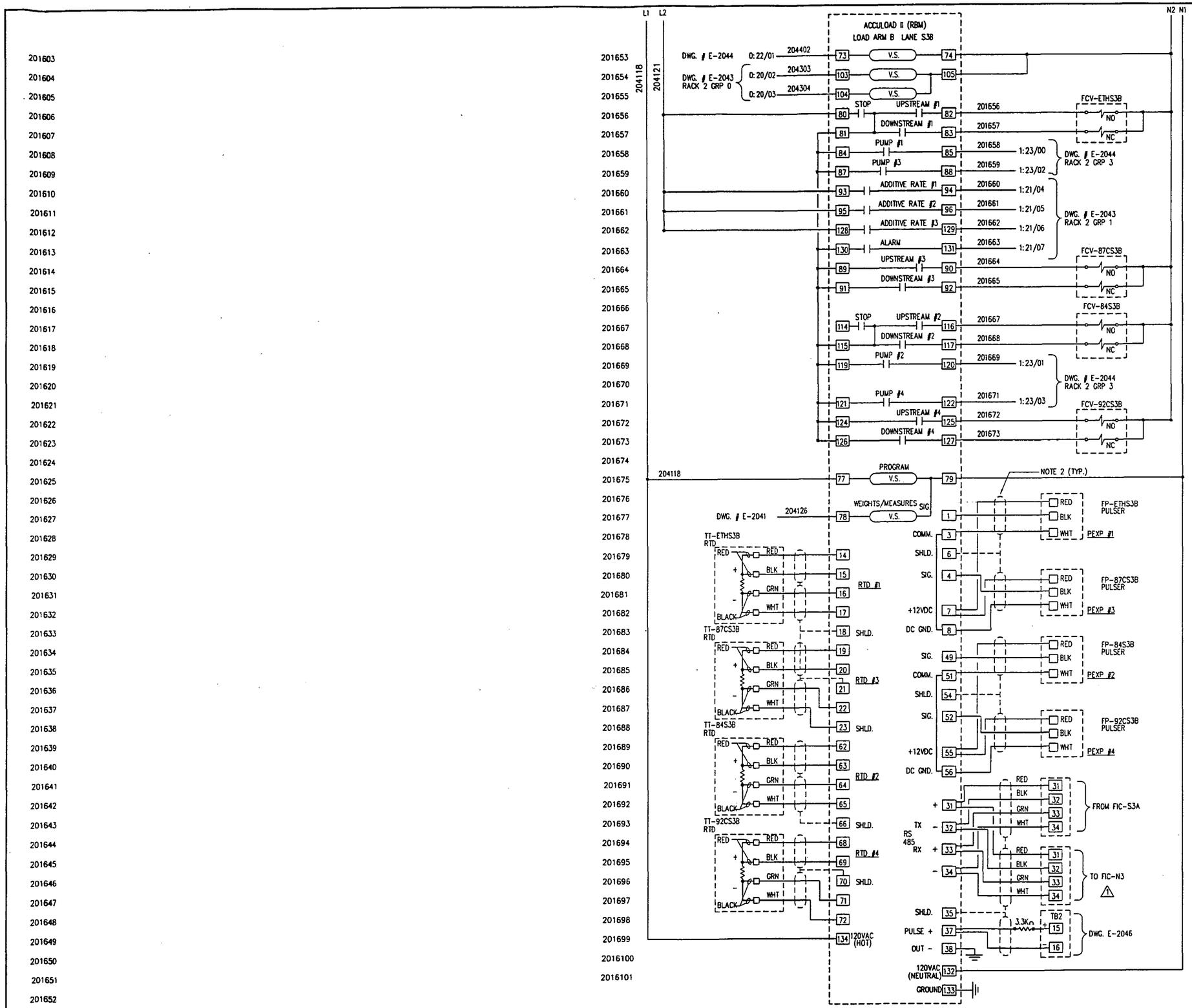

NOTE:

1. L1 & L2 TO BE SAME PHASE POWER.
2. ALL INST. CABLE SHALL BE IDENTIFIED BY ITS LOOP# IE: FT-ETHS3A ETC.
3. FIELD INSTALL JUMPERS (31-33) & (32-34)
4. SEE DWG. 0608-E-2010 FOR WIRING TYPE.

DRAWING NO.	REFERENCE DRAWINGS
E-2043	PLC SCHEMATIC - RACK 2

REV	DATE	BY	CHK	REVISED
2	02/11/98	DAB	WHB	AS-BUILT
1	12/24/97	DAB	WHB	TB31 THRU TB34
0	11/25/97	BNJ	WHB	ISSUED FOR CONSTRUCTION

TOSCO
TOSCO Distribution Company
A Division of Tosco Corporation
5528 NW Doane St.
Portland, Oregon 97210

PORTLAND TERMINAL
ELECTRICAL SCHEMATIC
LANE 3, FIC-S3B

ALPHA ENGINEERS and CONSTRUCTORS, INC.
19 NW 5TH AVE.,SUITE 204 PORTLAND, OR. 97209 tel: 503-227-3317

SCALE:	NONE	DESIGNED BY:	AAB
DATE:	11/17/97	CHECKED BY:	WHB
DRAWN BY:	BNJ	ENG. APPR. BY:	WHB

CADD FILE/PLOT DATE: 25E20162.DWG <CPD: 02/13/98 TIME: 2:33 PM>

DRAWING NUMBER	SHEET	REV
0608-E-2016	1 OF 1	2

COP0021521

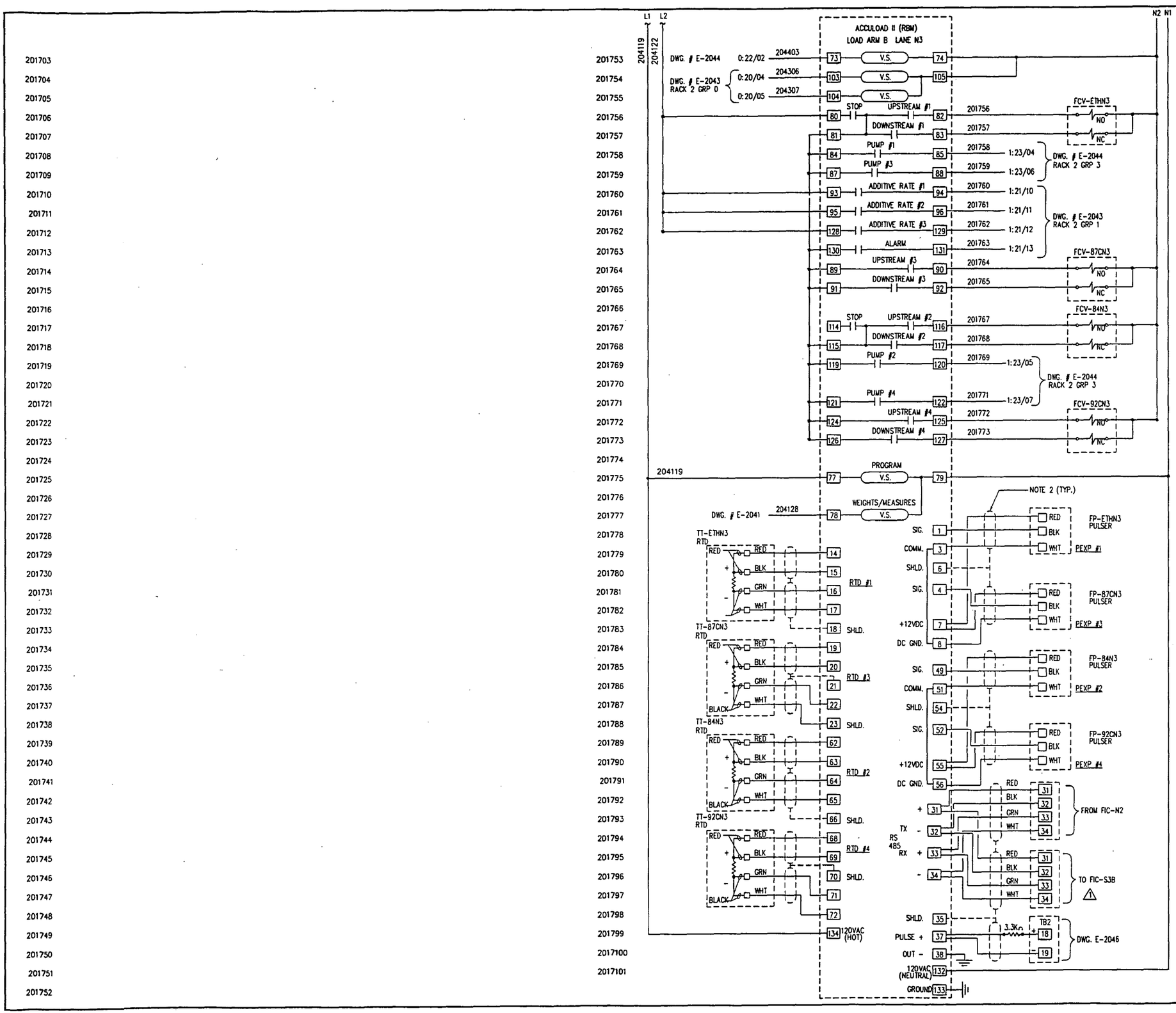

NOTE:

1. L1 & L2 TO BE SAME PHASE POWER.
2. ALL INST. CABLE SHALL BE IDENTIFIED BY ITS LOOP # IE: FT-ETHS3A ETC.
3. FIELD INSTALLED JUMPERS (31-33) AND (32-34).
4. SEE DWG. 0608-E-2010 FOR WIRING TYPE.

REV	DATE	BY	CHK	REVISED
2	02/11/98	DAB	WHB	AS-BUILT
1	12/24/97	DAB	WHB	TB31 THRU TB34
0	11/25/97	BNJ	WHB	ISSUED FOR CONSTRUCTION

DRAWING NO. E-2043 — PLC SCHEMATIC – RACK 2 — REFERENCE DRAWINGS

TOSCO
TOSCO Distribution Company
A Division of Tosco Corporation
5528 NW Doane St.
Portland, Oregon 97210

PORTLAND TERMINAL
ELECTRICAL SCHEMATIC
LANE 3, FIC-N3

ALPHA ENGINEERS and CONSTRUCTORS, INC.
19 NW 5TH AVE. SUITE 204 PORTLAND, OR. 97209 Tel: 503-227-3317

SCALE:	NONE	DESIGNED BY:	DAB
DATE:	11/17/97	CHECKED BY:	WHB
DRAWN BY:	BNJ	ENG. APPR. BY:	WHB
CADD FILE/PLOT DATE:	25E20172.DWG	<CPD: 02/12/98	TIME: 2:34 PM>
DRAWING NUMBER		SHEET	REV
0608-E-2017		1 OF 1	2

COP0021522

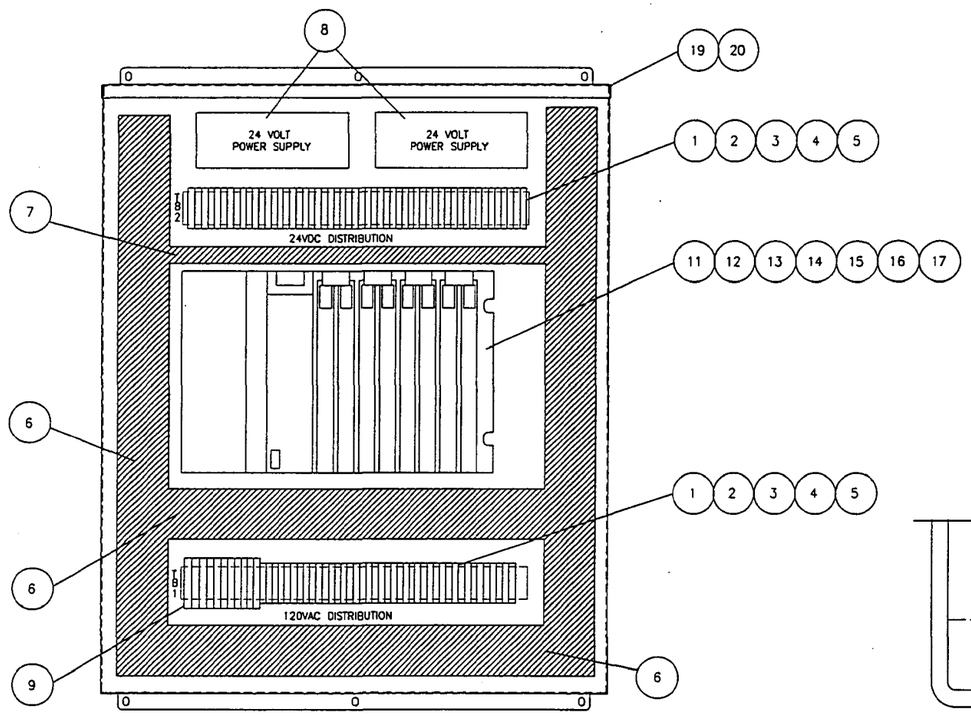

PANEL LAYOUT

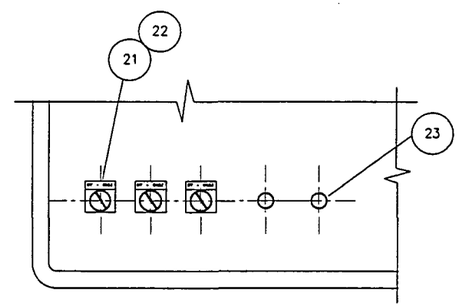

PANEL DOOR FRONT

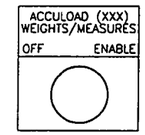

(XXX)=S2A
S2B
N2

ITEM 22 – ENGRAVING

BILL OF MATERIAL

ITEM	QUANTITY	DESCRIPTION
1	6'	ALLEN-BRADLEY CAT. #1492-DR5 DIN RAIL
2	80	ALLEN-BRADLEY CAT. #1492-W6 TERMINAL BLOCKS
3	4	ALLEN-BRADLEY CAT. #1492-CJ7-10 JUMPERS
4	4	ALLEN-BRADLEY CAT. #1492-EA35 END ANCHORS
5	10	ALLEN-BRADLEY CAT. #1492-GH050 CIRCUIT BREAKER (5A)
6	11'	3" X 3" PANDUIT
7	2'-6"	1" X 3" PANDUIT
8	2	POWER-ONE HD24-4.8-A
9	11	ALLEN-BRADLEY CAT. #1492-GH050
10	–	NOT USED
11	1	ALLEN-BRADLEY CAT. # 1771 - A2B RACK
12	1	ALLEN-BRADLEY CAT. # 1771 - ASB SER. D RI/O ADAPTER
13	1	ALLEN-BRADLEY CAT. # 1771 - P7 POWER SUPPLY
14	2	ALLEN-BRADLEY CAT. # 1771 - CFM FLOW MODULE
15	1	ALLEN-BRADLEY CAT. # 1771 - OAD OUTPUT MODULE
16	2	ALLEN-BRADLEY CAT. # 1771 - IAD INPUT MODULE
17	1	ALLEN-BRADLEY CAT. # 1771 - IBD DC INPUT MODULE
18	1	ALLEN-BRADLEY CAT. # 1771 - PC1 PS CABLE
19	1	HOFFMAN CAT. # A36H3012GQRLP
20	1	HOFFMAN CAT. # A36P30
21	3	ALLEN-BRADLEY 2 POSITION SELECTOR SWITCH #800T-H3101
22	3	ALLEN-BRADLEY JUMBO LEGEND PLATE #800T-X609E
23	2	ALLEN-BRADLEY CLOSING BUTTON #800T-N1

NOTES:

1. ALL NEW +24VDC POWER WIRE SHALL BE 16 GA. BLUE.
2. ALL NEW 24VDC COMMON WIRE SHALL BE 16 GA. WHITE W/BLUE STRIPE.
3. ALL EQPT. BY TOSCO; ALL CONDUIT AND WIRING BY CONTRACTOR.

DRAWING NO.				REFERENCE DRAWINGS
1	02/11/98	DAB	VHB	AS-BUILT
0	11/25/97	BNJ	VHB	ISSUED FOR CONSTRUCTION
REV	DATE	BY	CHK	REVISED

TOSCO
TOSCO Distribution Company
A Division of Tosco Corporation
5528 NW Doane St.
Portland, Oregon 97210

PORTLAND TERMINAL
TRUCK LOADING RACK
ELECTRICAL PANEL LAYOUT
LANE 2

ALPHA ENGINEERS and CONSTRUCTORS, INC.
19 NW 5TH AVE.SUITE 204 PORTLAND, OR. 97209 Tel: 503-227-3317

SCALE:	NONE	DESIGNED BY:	AAB
DATE:	11/17/97	CHECKED BY:	VHB
DRAWN BY:	BNJ	ENG. APPR. BY:	VHB

CADD FILE/PLOT DATE: 25E20302.DWG <CPD: 02/11/98 (TIME: 3:15 PM) >

DRAWING NUMBER	SHEET	REV
0608-E-2030	1 OF 1	1

COP0021523

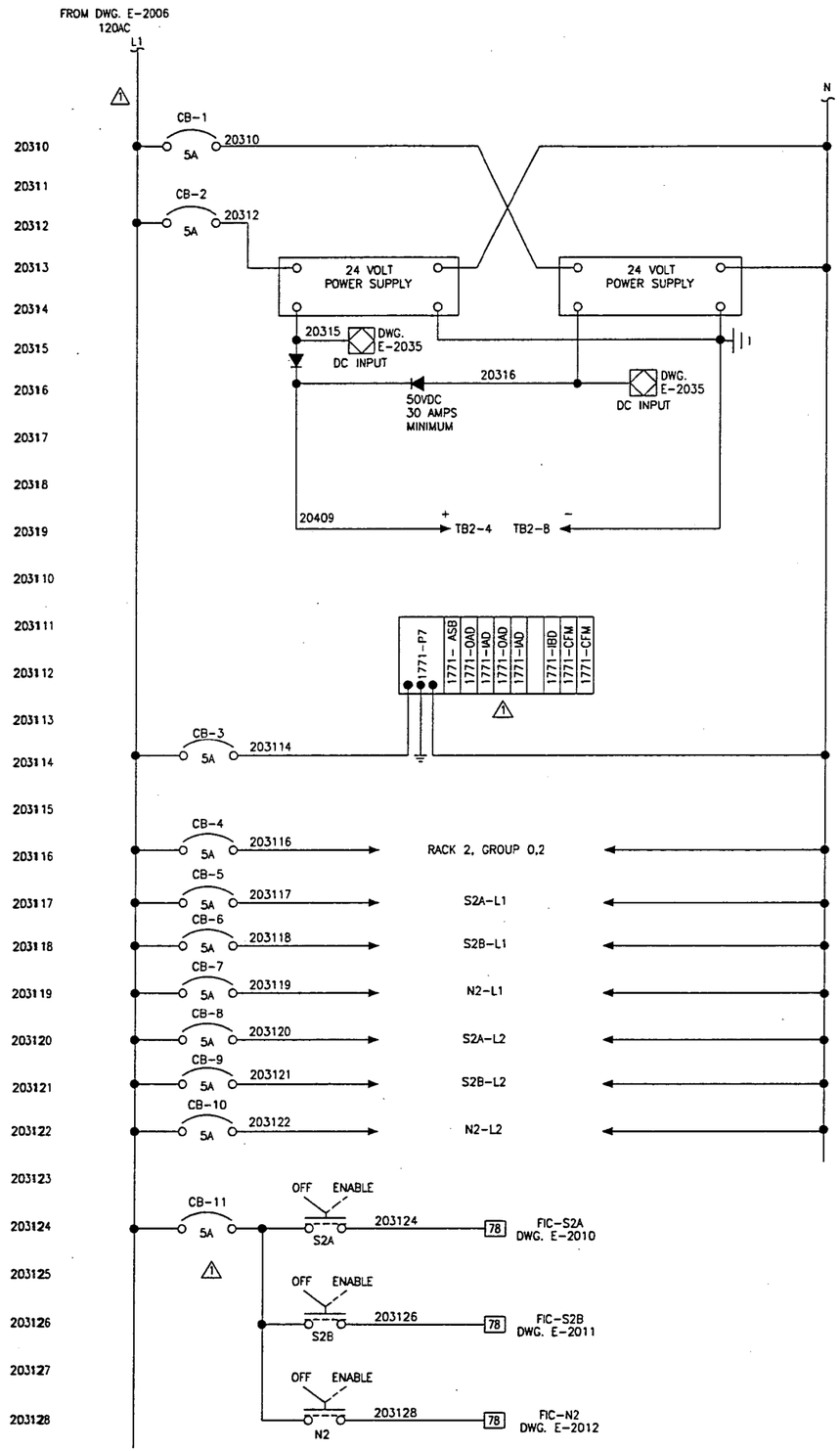

CONTROL POWER

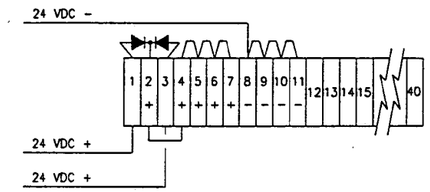

TB2 - 24VDC POWER

DRAWING NO.				REFERENCE DRAWINGS
2	02/11/98	DAB	VHB	AS-BUILT
1	12/24/97	DAB	VHB	ADD 1771-OAD, CB-11, DEL. 20A CB
0	11/25/97	DAB	VHB	ISSUED FOR CONSTRUCTION
REV	DATE	BY	CHK	REVISED

TOSCO
TOSCO Distribution Company
A Division of Tosco Corporation
5528 NW Doane St.
Portland, Oregon 97210

PORTLAND TERMINAL
CONTROL POWER SCHEMATIC
LANE 2 - RACK 2

ALPHA ENGINEERS and CONSTRUCTORS, INC.
19 NW 5TH AVE.SUITE 204 PORTLAND, OR. 97209 Tel: 503-227-3317

SCALE:	NONE	DESIGNED BY:	AAB
DATE:	11/05/97	CHECKED BY:	VHB
DRAWN BY:	BNJ	ENG. APPR. BY:	VHB
CADD FILE/PLOT DATE:	25E20312.DWG	CPD: 02/11/98	TIME: 3:20 PM

DRAWING NUMBER	SHEET	REV
0608-E-2031	1 OF 1	2

COP00215242

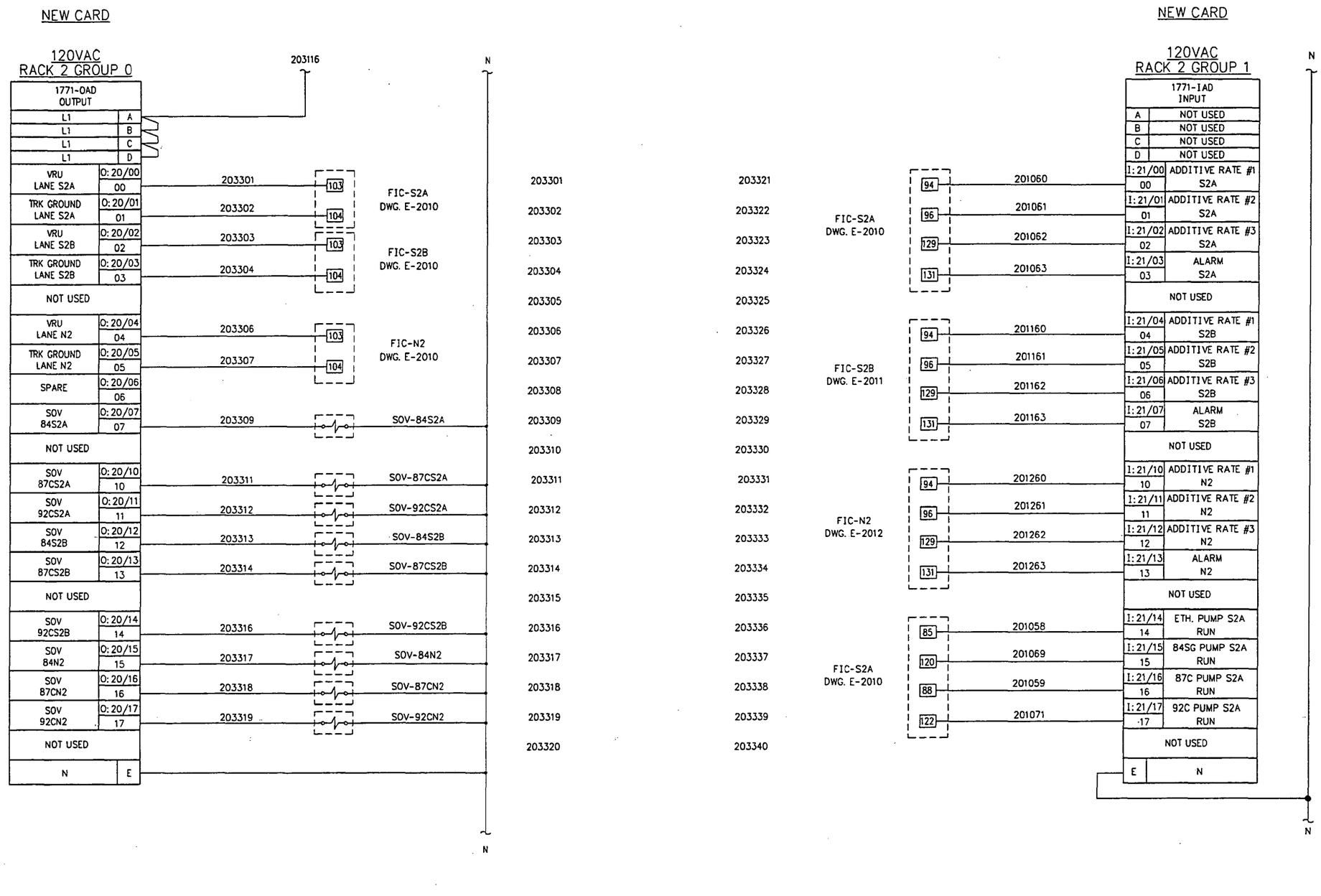

DRAWING NO.	REFERENCE DRAWINGS	REV. NO.	DATE	REVISED	DRAWN BY	CKD. BY
E-2010	ELECTRICAL LANE S2A SCHEMATIC	0	11/25/97	ISSUED FOR CONSTRUCTION	DAB	WHB
E-2011	ELECTRICAL LANE S2B SCHEMATIC	1	02/11/98	AS-BUILT	DAB	WHB
E-2012	ELECTRICAL LANE N2 SCHEMATIC					
E-2033	PLC SCHEMATIC RACK 2 - TRUCKLOADING					

TOSCO
Tosco Distribution Company
A Division of Tosco Corporation
5528 NW Doane St.
Portland, Oregon 97210

ALPHA ENGINEERS and CONSTRUCTORS, INC.
19 NW 5th AVE., SUITE 204, PORTLAND, OR. 97209 Tel:(503)227-3317/Fax:(503)227-3244

DRAWN BY	BNJ
CHKD BY	AAB
APPD BY	WHB
SCALE	NONE
DATE	11/17/97

PORTLAND TERMINAL
PORTLAND OREGON
PLC SCHEMATIC
LANE 2 - RACK 2

DRAWING NO.	SHEET	REV.
0608-E-2033	1 OF 1	1

COP0021525

NEW CARD

120VAC RACK 2 GROUP 2

203116

1771-OAD OUTPUT		
L1		
L2		
L3		
L4		
BLEND-PAK RUN S2A	0:22/00	00
BLEND-PAK RUN S2B	0:22/01	01
BLEND-PAK RUN N2	0:22/02	02
	0:22/03	03
NOT USED		
	0:22/04	04
	0:22/05	05
	0:22/06	06
	0:22/07	07
NOT USED		
	0:22/10	10
	0:22/11	11
	0:22/12	12
	0:22/13	13
NOT USED		
	0:22/14	14
	0:22/15	15
	0:22/16	16
	0:22/17	17
NOT USED		
N	E	

203401	73	FIC-S2A DWG: E-2010
203402	73	FIC-S2B DWG: E-2011
203403	73	FIC-N2 DWG: E-2012

N

203401	203421
203402	203422
203403	203423
203404	203424
203405	203425
203406	203426
203407	203427
203408	203428
203409	203429
203410	203430
203411	203431
203412	203432
203413	203433
203414	203434
203415	203435
203416	203436
203417	203437
203418	203438
203419	203439
203420	203440

FIC-S2B DWG. E-2011	85	201158
	120	201169
	88	201159
	122	201171
FIC-N2 DWG. E-2012	85	201258
	120	201269
	88	201259
	122	201271

NEW CARD

120VAC RACK 2 GROUP 3

1771-IAD INPUT	
A	NOT USED
B	NOT USED
C	NOT USED
D	NOT USED
I:23/00	ETH. PUMP S2B RUN
00	
I:23/01	84SG PUMP S2B RUN
01	
I:23/02	87C PUMP S2B RUN
02	
I:23/03	92C PUMP S2B RUN
03	
NOT USED	
I:23/04	ETH. PUMP N2 RUN
04	
I:23/05	84SG PUMP N2 RUN
05	
I:23/06	87C PUMP N2 RUN
06	
I:23/07	92C PUMP N2 RUN
07	
NOT USED	
I:23/10	
10	
I:23/11	
11	
I:23/12	
12	
I:23/13	
13	
NOT USED	
I:23/14	
14	
I:23/15	
15	
I:23/16	
16	
I:23/17	
17	
NOT USED	
E	N

N

N

DRAWING NO.	REFERENCE DRAWINGS	REV. NO.	DATE	REVISED	DRAWN BY	CKD. BY
E-2011	ELECTRICAL LANE S2B SCHEMATIC	0	11/25/97	ISSUED FOR CONSTRUCTION	DAB	WHB
E-2012	ELECTRICAL LANE N2 SCHEMATIC	1	02/11/98	AS-BUILT	DAB	WHB

TOSCO
Tosco Distribution Company
A Division of Tosco Corporation
5528 NW Doane St.
Portland, Oregon 97210

ALPHA ENGINEERS and CONSTRUCTORS, INC.
19 NW 5th AVE, SUITE 204, PORTLAND, OR. 97209 Tel:(503)227-3317/Fax:(503)227-3244

DRAWN BY	BNJ
CHKD BY	AAB
APPD BY	WHB
SCALE	NONE
DATE	11/17/97

PORTLAND TERMINAL
PORTLAND OREGON
PLC SCHEMATIC
LANE 2 - RACK 2

DRAWING NO.	SHEET	REV.
0608-E-2034	1 OF 1	1

<CPD: 02/18/98 [TIME: 1:50 PM]>
3SE20341.DWG

COP0021526

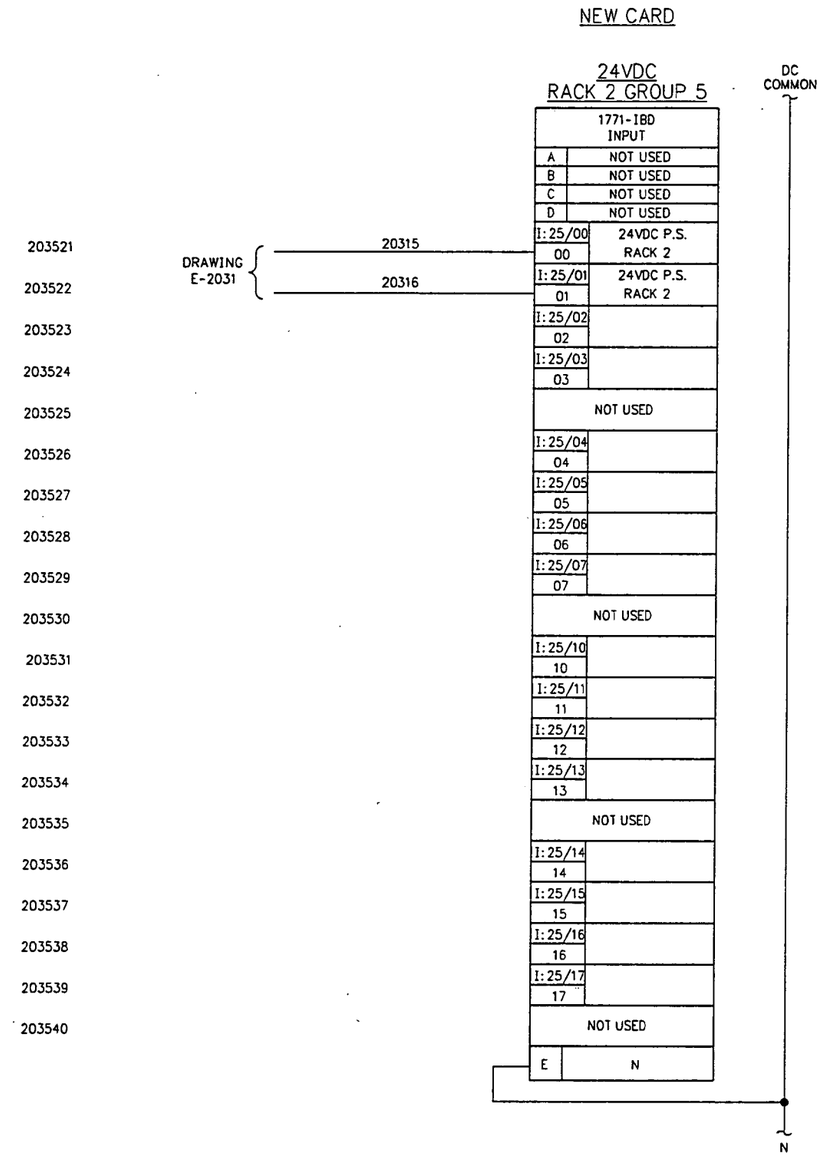

DRAWING NO.	REFERENCE DRAWINGS	REV. NO.	DATE	REVISED	DRAWN BY	CKD. BY
		0	11/25/97	ISSUED FOR CONSTRUCTION	DAB	WHB
		1	02/11/98	AS-BUILT	DAB	WHB

TOSCO
Tosco Distribution Company
A Division of Tosco Corporation
5528 NW Doane St.
Portland, Oregon 97210

ALPHA ENGINEERS and CONSTRUCTORS, INC.
19 NW 5th AVE, SUITE 204, PORTLAND, OR. 97209 Tel:(503)227-3317/Fax:(503)227-3244

DRAWN BY	BNJ
CHKD BY	AAB
APPD BY	WHB
SCALE	NONE
DATE	11/17/97

PORTLAND TERMINAL
PORTLAND OREGON
PLC SCHEMATIC
LANE 2 - RACK 2

DRAWING NO.	SHEET	REV.
0608-E-2035	1 OF 1	1

25E2035I.DWG <CPD: 02/16/98 [TIME: 1:52 PM]>

COP00021527

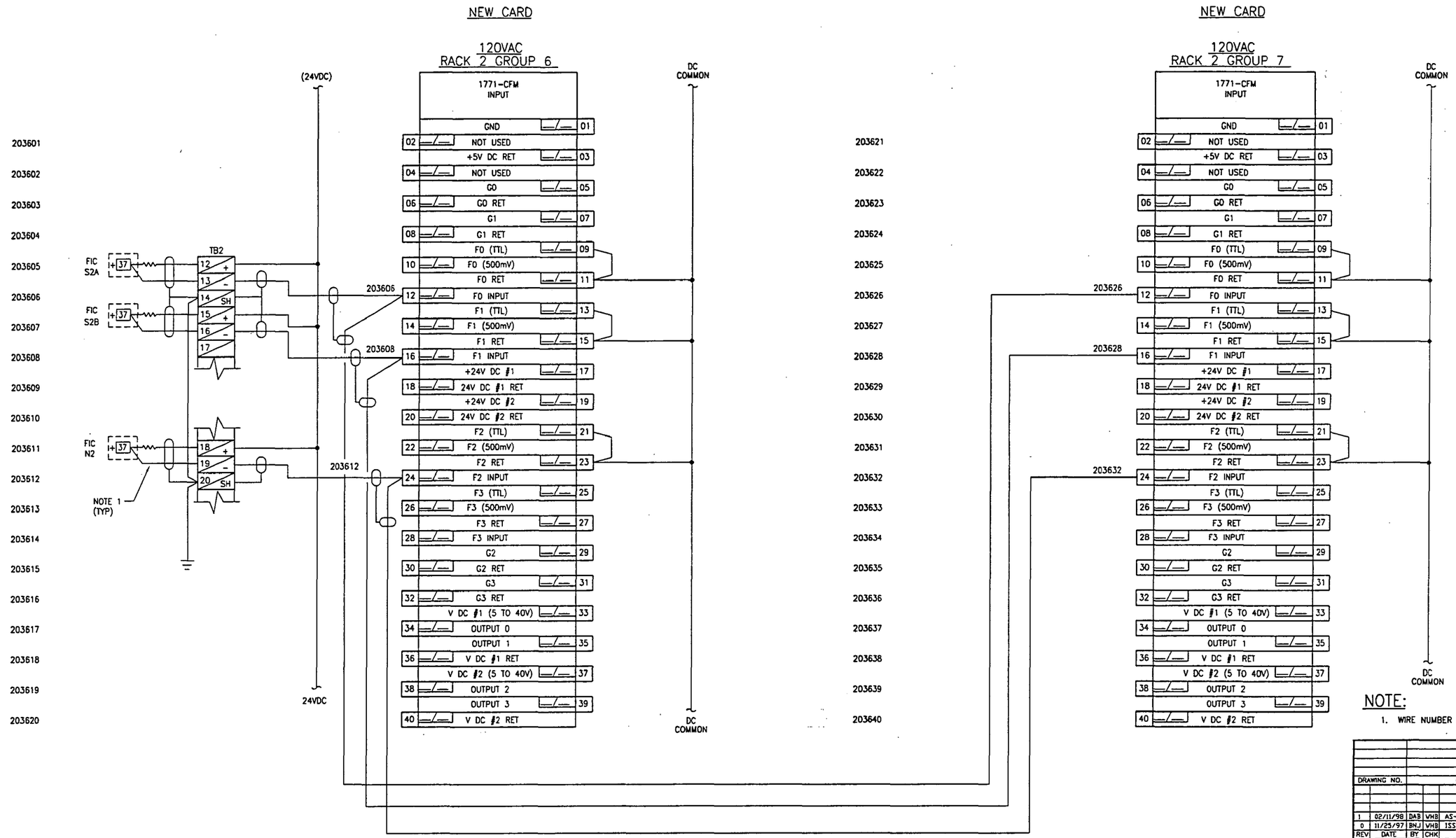

NOTE:

1. WIRE NUMBER IS THE SAME AS LOOP NUMBER.

DRAWING NO.				REFERENCE DRAWINGS
1	02/11/98	DAB	VHB	AS-BUILT
0	11/25/97	BNJ	VHB	ISSUED FOR CONSTRUCTION
REV	DATE	BY	CHK	REVISED

TOSCO
TOSCO Distribution Company
A Division of Tosco Corporation
5528 NW Doane St.
Portland, Oregon 97210

PORTLAND TERMINAL
PLC SCHEMATIC
LANE 2 – RACK 2

ALPHA ENGINEERS and CONSTRUCTORS, INC.
19 NW 5TH AVE.SUITE 204 PORTLAND, OR. 97209 Tel: 503-227-3317

SCALE:	NONE	DESIGNED BY:	AAB
DATE:	11/17/98	CHECKED BY:	VHB
DRAWN BY:	BNJ	ENG. APPR. BY:	VHB
CADD FILE/PLOT DATE: 25E20361.DWG		CPD: 02/18/98	TIME: 1:30 PM

DRAWING NUMBER	SHEET	REV
0608-E-2036	1 OF 1	1

COP0021528

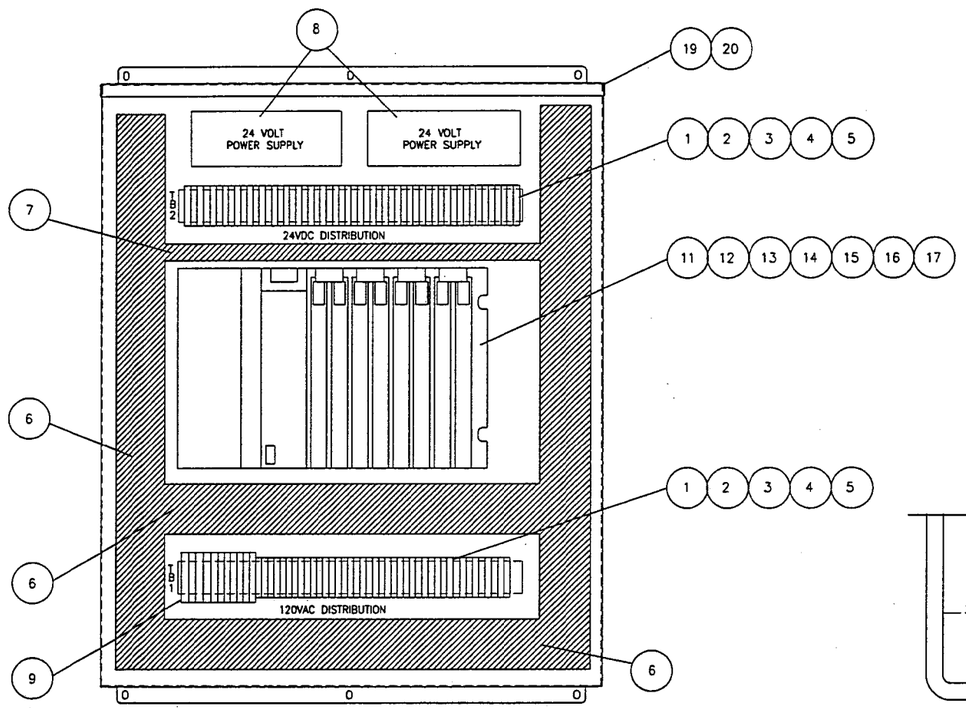

PANEL LAYOUT

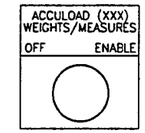

(XXX)=S3A
S3B
N3

ITEM 22 – ENGRAVING

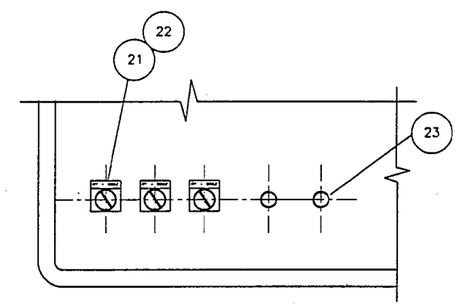

PANEL DOOR FRONT

BILL OF MATERIAL

ITEM	QUANTITY	DESCRIPTION
1	6'	ALLEN-BRADLEY CAT. #1492-DR5 DIN RAIL
2	80	ALLEN-BRADLEY CAT. #1492-W6 TERMINAL BLOCKS
3	4	ALLEN-BRADLEY CAT. #1492-CJ7-10 JUMPERS
4	4	ALLEN-BRADLEY CAT. #1492-EA35 END ANCHORS
5	10	ALLEN-BRADLEY CAT. #1492-GH050 CIRCUIT BREAKER (5A)
6	11'	3" X 3" PANDUIT
7	2'-6"	1" X 3" PANDUIT
8	2	POWER-ONE HD24-4.8-A
9	11	ALLEN-BRADLEY CAT. #1492-GH050
10	–	NOT USED
11	1	ALLEN-BRADLEY CAT. # 1771 – A2B RACK
12	1	ALLEN-BRADLEY CAT. # 1771 – ASB SER. D RI/O ADAPTER
13	1	ALLEN-BRADLEY CAT. # 1771 – P7 POWER SUPPLY
14	2	ALLEN-BRADLEY CAT. # 1771 – CFM FLOW MODULE
15	1	ALLEN-BRADLEY CAT. # 1771 – OAD OUTPUT MODULE
16	2	ALLEN-BRADLEY CAT. # 1771 – IAD INPUT MODULE
17	1	ALLEN-BRADLEY CAT. # 1771 – IBD DC INPUT MODULE
18	1	ALLEN-BRADLEY CAT. # 1771 – PC1 PS CABLE
19	1	HOFFMAN CAT. # A36H3012GORLP
20	1	HOFFMAN CAT. # A36P30
21	3	ALLEN-BRADLEY 2 POSITION SELECTOR SWITCH #800T-H31D1
22	3	ALLEN-BRADLEY JUMBO LEGEND PLATE #800T-X609E
23	2	ALLEN-BRADLEY CLOSING BUTTON #800T-N1

NOTES:

1. ALL NEW +24VDC POWER WIRE SHALL BE 16 GA. BLUE.
2. ALL NEW 24VDC COMMON WIRE SHALL BE 16 GA. WHITE W/BLUE STRIPE.
3. ALL EQPT. BY TOSCO; ALL CONDUIT AND WIRING BY CONTRACTOR.

DRAWING NO.				REFERENCE DRAWINGS
1	02/11/98	DAB	VHB	AS-BUILT
0	11/25/97	DAB	VHB	ISSUED FOR CONSTRUCTION
REV	DATE	BY	CHK	REVISED

TOSCO
TOSCO Distribution Company
A Division of Tosco Corporation
5528 NW Doane St.
Portland, Oregon 97210

PORTLAND TERMINAL
TRUCK LOADING RACK
ELECTRICAL PANEL LAYOUT
LANE 3

ALPHA ENGINEERS and CONSTRUCTORS, INC.
19 NW 5TH AVE.SUITE 204 PORTLAND, OR. 97209 Tel: 503-227-3317

SCALE:	NONE	DESIGNED BY:	AAB
DATE:	11/17/97	CHECKED BY:	VHB
DRAWN BY:	BNJ	ENG. APPR. BY:	VHB
CADD FILE/PLOT DATE: 25E20401.DWG	<CPD: 02/11/98	TIME: 3:18 PM	>

DRAWING NUMBER	SHEET	REV
0608-E-2040	1 OF 1	1

COP0021529

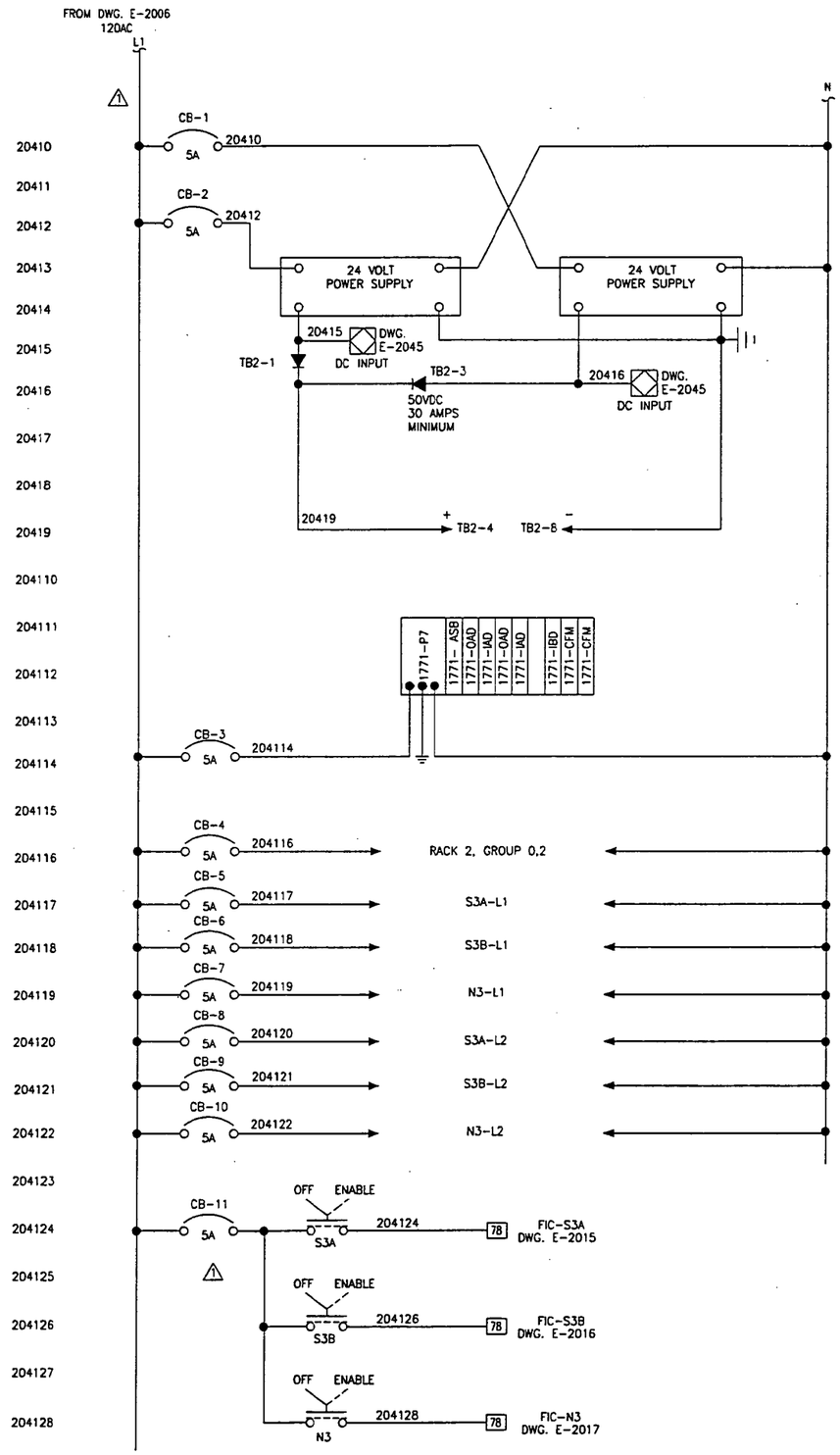

CONTROL POWER

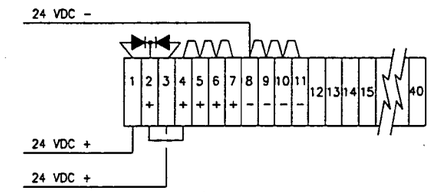

TB2 - 24VDC POWER

DRAWING NO.				REFERENCE DRAWINGS
2	02/11/98	DAB	VHB	AS-BUILT
1	12/24/97	DAB	VHB	ADDED CB-11, DEL. 20A CB
0	11/25/97	DAB	VHB	ISSUED FOR CONSTRUCTION
REV	DATE	BY	CHK	REVISED

TOSCO
TOSCO Distribution Company
A Division of Tosco Corporation
5528 NW Doane St.
Portland, Oregon 97210

PORTLAND TERMINAL
CONTROL POWER SCHEMATIC
LANE 3 - RACK 2

ALPHA ENGINEERS and CONSTRUCTORS, INC.
19 NW 5TH AVE.SUITE 204 PORTLAND, OR. 97209 Tel 503-227-3317

SCALE:	NONE	DESIGNED BY:	AAB
DATE:	11/05/97	CHECKED BY:	VHB
DRAWN BY:	BNJ	ENG. APPR. BY:	VHB
CADD FILE/PLOT DATE: 25E20412.DWG	<CPD: 02/11/98	TIME: 3:30 PM>	

DRAWING NUMBER	SHEET	REV
0608-E-2041	1 OF 1	2

COP00021530

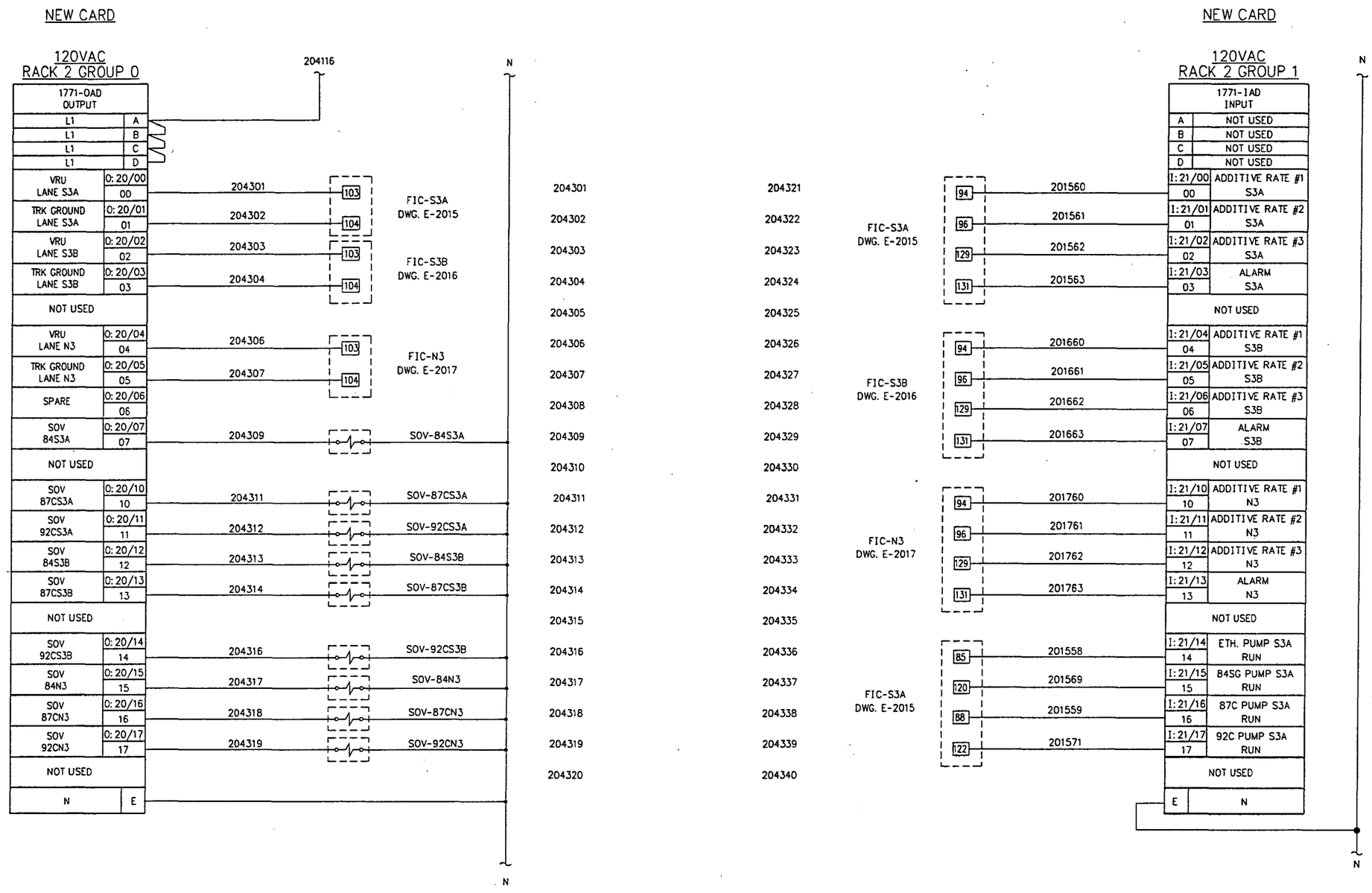

DRAWING NO.	REFERENCE DRAWINGS	REV. NO.	DATE	REVISED	DRAWN BY	CKD. BY
E-2015	ELECTRICAL LANE S2A SCHEMATIC	0	11/25/97	ISSUED FOR CONSTRUCTION	DAB	WHB
E-2016	ELECTRICAL LANE S2B SCHEMATIC	1	02/11/98	AS-BUILT	DAB	WHB
E-2017	ELECTRICAL LANE N2 SCHEMATIC					
E-2043	PLC SCHEMATIC RACK 2 - TRUCKLOADING					

TOSCO
Tosco Distribution Company
A Division of Tosco Corporation
5528 NW Doane St.
Portland, Oregon 97210

ALPHA ENGINEERS and CONSTRUCTORS, INC.
19 NW 5th AVE, SUITE 204, PORTLAND, OR. 97209 Tel:(503)227-3317/Fax:(503)227-3244

DRAWN BY	BNJ
CHKD BY	AAB
APPD BY	WHB
SCALE	NONE
DATE	11/17/97

PORTLAND TERMINAL
PORTLAND OREGON
PLC SCHEMATIC
RACK 2 - TRUCKLOADING

DRAWING NO.	SHEET	REV.
0608-E-2043	1 OF 1	1

2SE20431.DWG <CPD: 02/18/98 [TIME: 1:54 PM]>

COP0021531

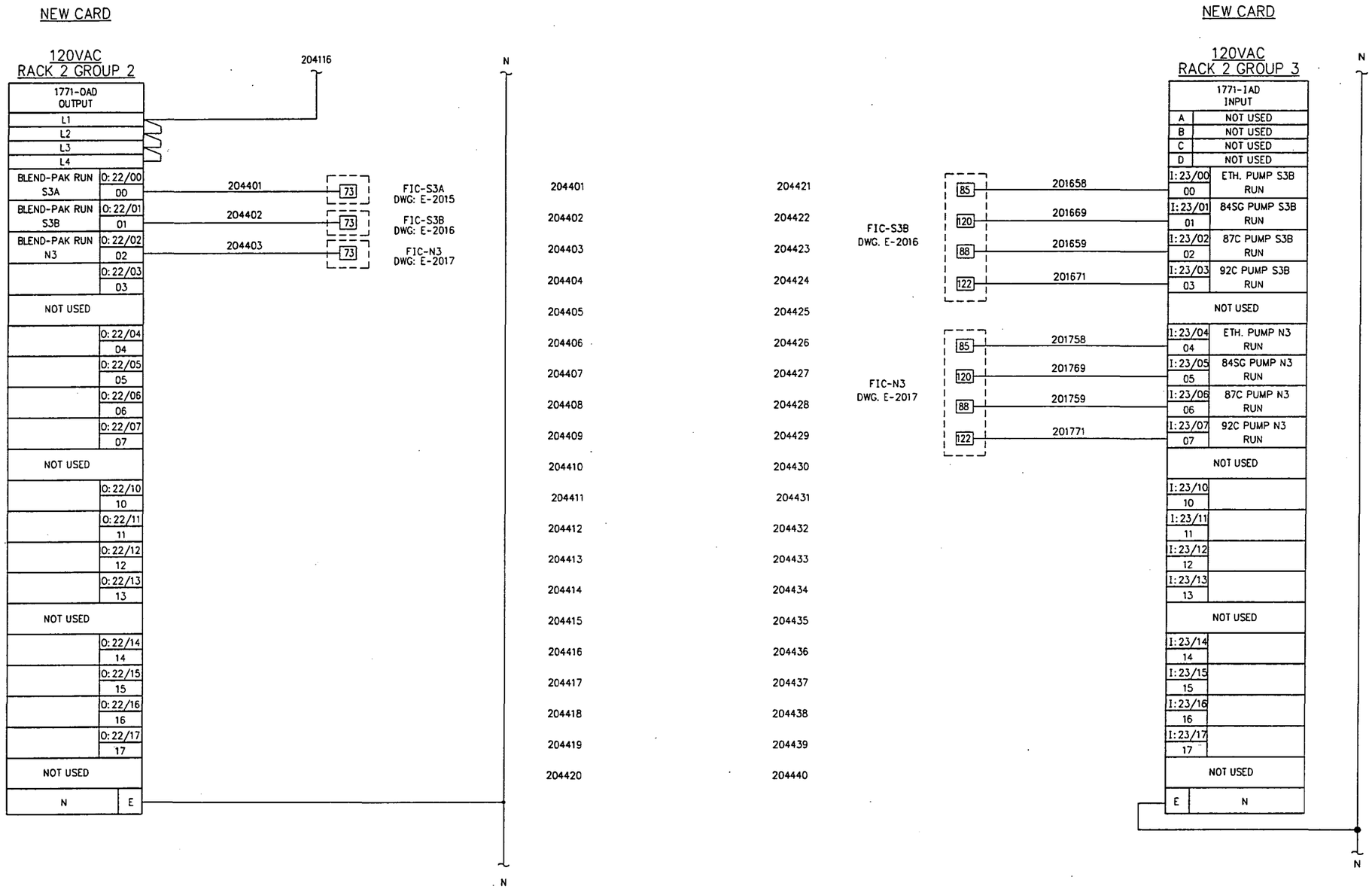

DRAWING NO.	REFERENCE DRAWINGS	REV. NO.	DATE	REVISED	DRAWN BY	CKD. BY
E-2015	ELECTRICAL LANE S3A SCHEMATIC	0	11/25/97	ISSUED FOR CONSTRUCTION	DAB	WHB
E-2016	ELECTRICAL LANE S3B SCHEMATIC	1	02/11/98	AS-BUILT	DAB	WHB
E-2017	ELECTRICAL LANE N3 SCHEMATIC					

TOSCO
Tosco Distribution Company
A Division of Tosco Corporation
5528 NW Doane St.
Portland, Oregon 97210

ALPHA ENGINEERS and CONSTRUCTORS, INC.
19 NW 5th AVE., SUITE 204, PORTLAND, OR. 97209 Tel:(503)227-3317/Fax:(503)227-3244

DRAWN BY	BNJ
CHKD BY	AAB
APPD BY	WHB
SCALE	NONE
DATE	11/17/97

PORTLAND TERMINAL
PORTLAND OREGON
PLC SCHEMATIC
LANE 3 - RACK 2

DRAWING NO.	SHEET	REV.
0608-E-2044	1 OF 1	1

25E2044I.DWG <CPD: 02/18/98 [TIME: 1:55 PM]>

COP0021532

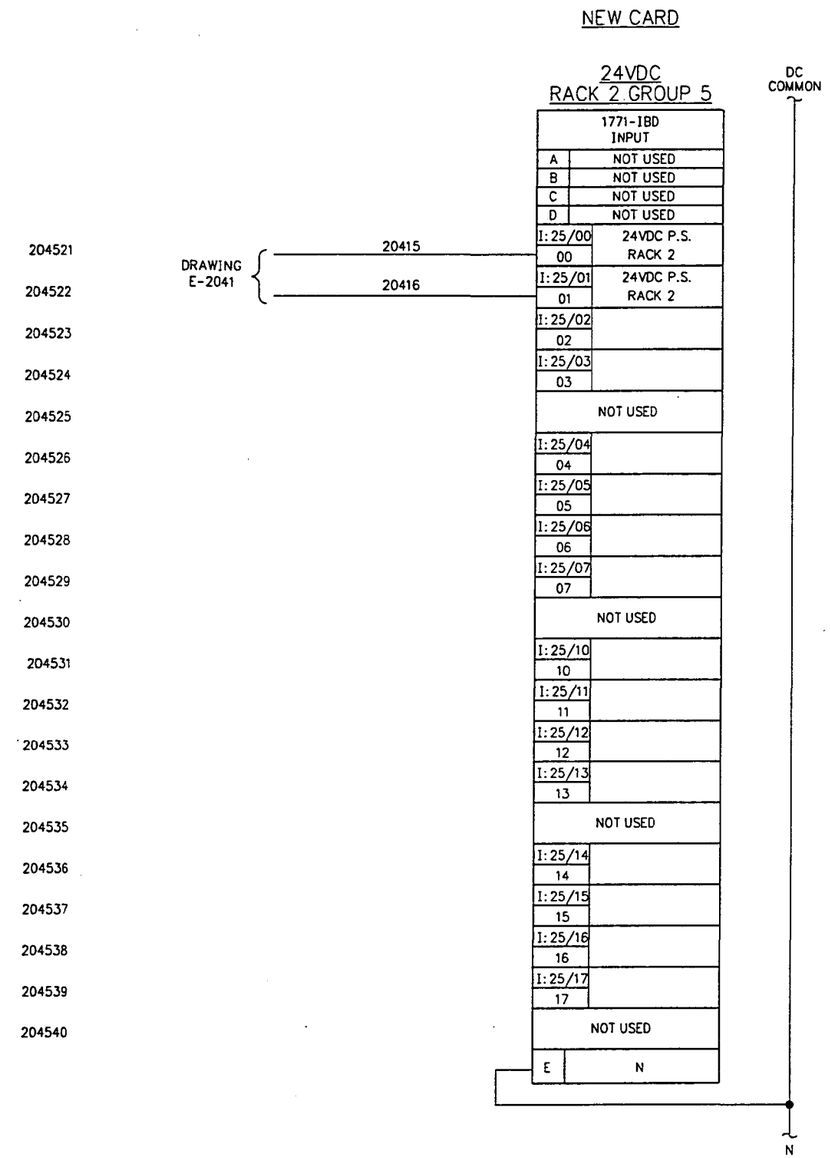

DRAWING NO.	REFERENCE DRAWINGS	REV. NO.	DATE	REVISED	DRAWN BY	CKD. BY
		0	11/25/97	ISSUED FOR CONSTRUCTION	DAB	WHB
		1	02/11/98	AS-BUILT	DAB	WHB

TOSCO
Tosco Distribution Company
A Division of Tosco Corporation
5528 NW Doane St.
Portland, Oregon 97210

ALPHA ENGINEERS and CONSTRUCTORS, INC.
19 NW 5th AVE., SUITE 204, PORTLAND, OR. 97209 Tel:(503)227-3317/Fax:(503)227-3244

DRAWN BY	BNJ
CHKD BY	AAB
APPD BY	WHB
SCALE	NONE
DATE	11/17/97

PORTLAND TERMINAL
PORTLAND OREGON
PLC SCHEMATIC
LANE 3 - RACK 2

DRAWING NO.	SHEET	REV.
0608-E-2045	1 OF 1	1

25E20451.DWG <CPD: 02/18/98 [TIME: 1:57 PM] >

COP0021533

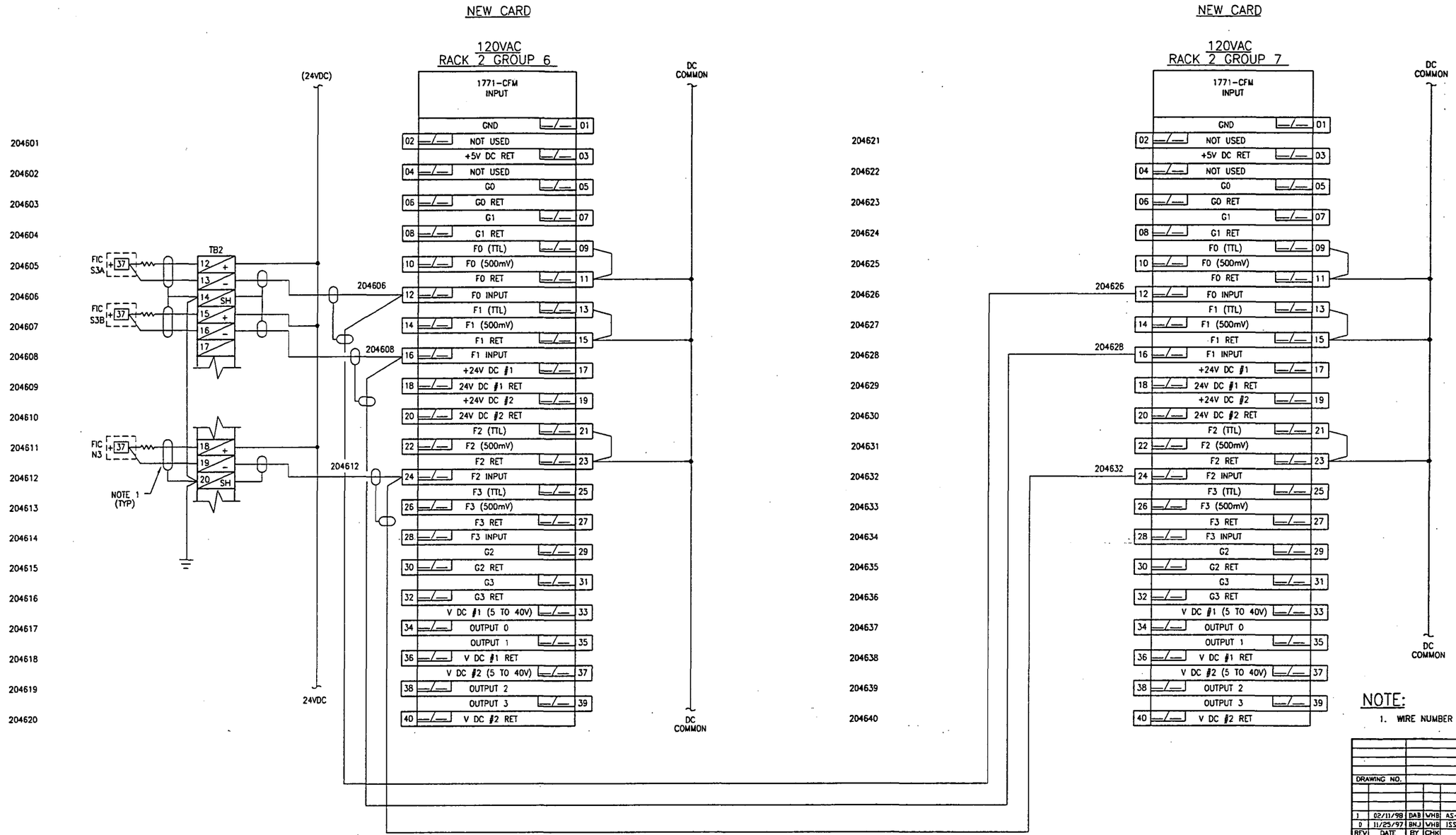

NOTE:

1. WIRE NUMBER IS THE SAME AS LOOP NUMBER.

DRAWING NO.				REFERENCE DRAWINGS
1	02/11/98	DAB	VHB	AS-BUILT
0	11/25/97	BNJ	VHB	ISSUED FOR CONSTRUCTION
REV	DATE	BY	CHK	REVISED

TOSCO
TOSCO Distribution Company
A Division of Tosco Corporation
5528 NW Doane St.
Portland, Oregon 97210

PORTLAND TERMINAL
PLC SCHEMATIC
LANE 3 - RACK 2

ALPHA ENGINEERS and CONSTRUCTORS, INC.
19 NW 5TH AVE.SUITE 204 PORTLAND, OR. 97209 Tel: 503-227-3317

SCALE:	NONE	DESIGNED BY:	AAB
DATE:	11/17/98	CHECKED BY:	VHB
DRAWN BY:	BNJ	ENG. APPR. BY:	VHB
CADD FILE/PLOT DATE:	25E20461.DWG	<DPD: 02/18/98	TIME: 1:33 PM >

DRAWING NUMBER	SHEET	REV
0608-E-2046	1 OF 1	1

COP0021534

ALPHA
ENGINEERS and
CONSTRUCTORS, INC.

19 N.W. 5TH AVENUE • SUITE 204 • PORTLAND, OR 97209
TEL 503.227.3317 • FAX 503.227.3244

TRANSMITTAL LETTER

No. 2503-003

To: Roger McGowne
Tosco Corporation
5528 N.W. Doane Ave.
Portland, OR 97210
(503) 248-1538

From: W. Bishop
Date: 02/18/98

Project: TOSCO Portland Terminal Truck Load Rack Upgrade Project

Item	Drawing No.	Document Title	Issued For:	Qty.	Rev.	Form
1	0608-E-1000	Site Plan - Electrical	As-Built	1	3	11x17
2	0608-E-1000A	Symbols & Legend	As-Built	1	1	11x17
3	0608-E-2002	Serial Communications Diagram Ln 1	As-Built	1	0	11x17
4	0608-E-2003	Serial Communications Diagram Ln 2	As-Built	1	1	11x17
5	0608-E-2004	Serial Communications Diagram Ln 3	As-Built	1	1	11x17
6	0608-E-2005	Serial Communications Diagram Ln 2&3	As-Built	1	1	11x17
7	0608-E-2006	System Power Distribution Ln 1,2,3	As-Built	1	1	11x17
8	0608-E-2010	Electrical Schematic Lane 2, FIC-S2A	As-Built	1	2	11x17
9	0608-E-2011	Electrical Schematic Lane 2, FIC-S2B	As-Built	1	2	11x17
10	0608-E-2012	Electrical Schematic Lane 2, FIC-N2	As-Built	1	2	11x17
11	0608-E-2015	Electrical Schematic Lane 2, FIC-S3A	As-Built	1	2	11x17
12	0608-E-2016	Electrical Schematic Lane 2, FIC-S3B	As-Built	1	2	11x17
13	0608-E-2017	Electrical Schematic Lane 2, FIC-N3	As-Built	1	2	11x17
14	0608-E-2030	Electrical Panel Layout Lane 2	As-Built	1	1	11x17
15	0608-E-2031	Control Power Schematic Ln 2 - Rack 2	As-Built	1	2	11x17
16	0608-E-2033	PLC Schematic Ln 2 Rack 2, Gp 0,1	As-Built	1	1	11x17
17	0608-E-2034	PLC Schematic Ln 2 Rack 2, Gp 2,3	As-Built	1	1	11x17
18	0608-E-2035	PLC Schematic Ln 2 Rack 2, Gp 4,5	As-Built	1	1	11x17
19	0608-E-2036	PLC Schematic Ln 2 - Rack 2	As-Built	1	1	11x17
20	0608-E-2040	Electrical Panel Layout Lane 3	As-Built	1	1	11x17
21	0608-E-2041	Control Power Schematic Ln 3 - Rack 2	As-Built	1	2	11x17
22	0608-E-2043	PLC Schematic Ln 3 Rack 2, Gp 0,1	As-Built	1	1	11x17
23	0608-E-2044	PLC Schematic Ln 2 Rack 2, Gp 2,3	As-Built	1	1	11x17
24	0608-E-2045	PLC Schematic Ln 2 Rack 2, Gp 4,5	As-Built	1	1	11x17
25	0608-E-2046	PLC Schematic Ln 3 - Rack 2	As-Built	1	1	11x17

Transmitted by:

William Bishop, P.E.

cc: Project File

2503T003.doc

COP0021535

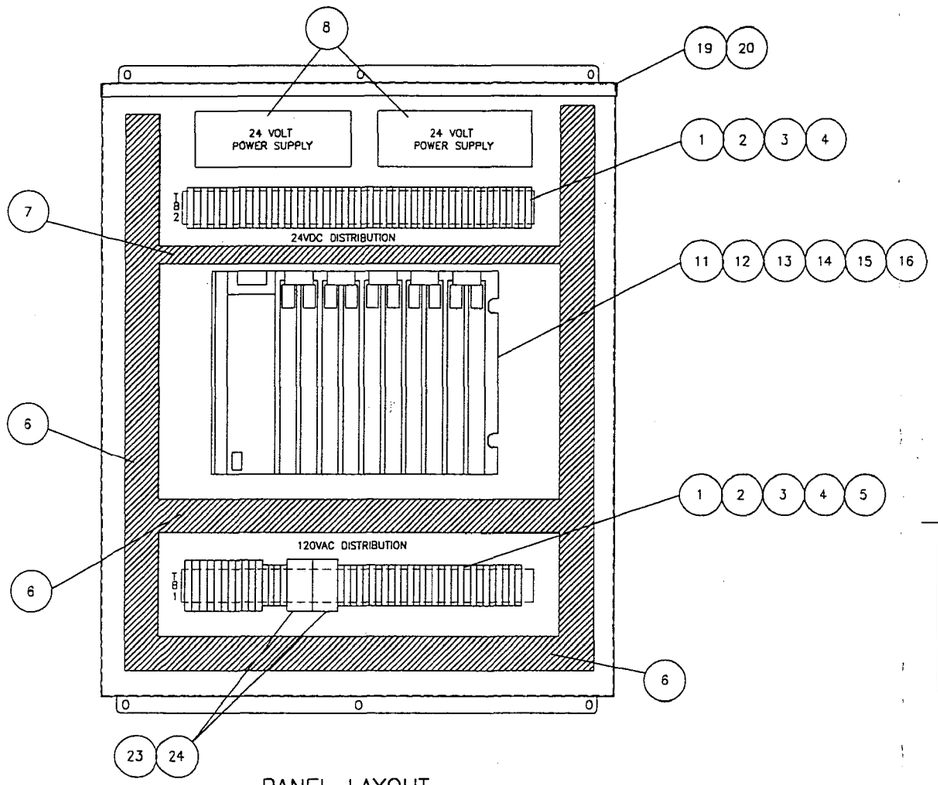

PANEL LAYOUT

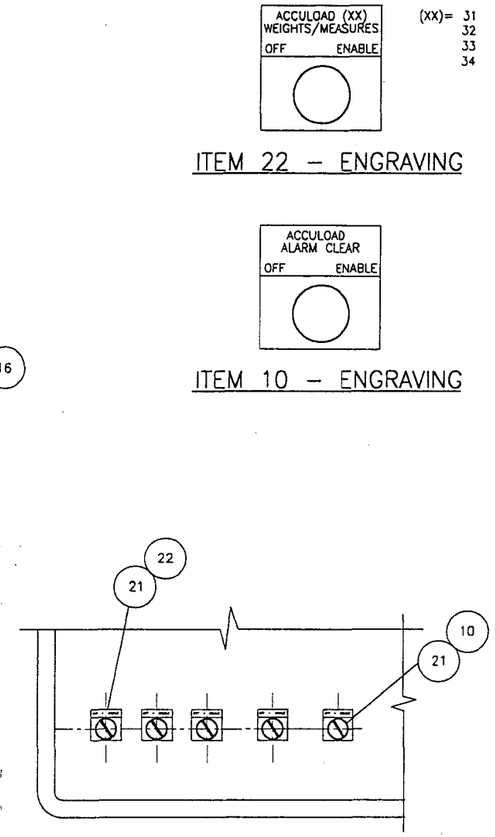

PANEL DOOR FRONT

BILL OF MATERIAL

ITEM	QUANTITY	DESCRIPTION
1	6'	ALLEN–BRADLEY CAT. #1492–DR5 DIN RAIL
2	80	ALLEN–BRADLEY CAT. #1492–W6 TERMINAL BLOCKS
3	4	ALLEN–BRADLEY CAT. #1492–CJ7–10 JUMPERS
4	4	ALLEN–BRADLEY CAT. #1492–EA35 END ANCHORS
5	13	ALLEN–BRADLEY CAT. #1492–GH050 CIRCUIT BREAKER (5A)
6	11'	2" X 3" PANDUIT
7	2'–6"	1" X 3" PANDUIT
8	2	POWER–ONE HD24–4.8–A, POWER SUPPLY
9	–	NOT USED
10	1	ALLEN–BRADLEY JUMBO LEGEND PLATE #800T–X609E
11	1	ALLEN–BRADLEY CAT. # 1771 – A2(PANEL MOUNTED CHASSIS)
12	1	ALLEN–BRADLEY CAT. # 1771 – ASB SER. D RI/O ADAPTER
13	1	ALLEN–BRADLEY CAT. # 1771 – P7 POWER SUPPLY
14	2	ALLEN–BRADLEY CAT. # 1771 – CFM FLOW MODULE
15	2	ALLEN–BRADLEY CAT. # 1771 – OAD OUTPUT MODULE
16	3	ALLEN–BRADLEY CAT. # 1771 – IAD INPUT MODULE
17	–	NOT USED
18	1	ALLEN–BRADLEY CAT. # 1771 – CT PS CABLE
19	1	HOFFMAN CAT. # A36H3012GQRLP
20	1	HOFFMAN CAT. # A36P30
21	5	ALLEN–BRADLEY 2 POSITION SELECTOR SWITCH #800T–H31D1
22	4	ALLEN–BRADLEY JUMBO LEGEND PLATE #800T–X609E
23	2	ALLEN–BRADLEY CAT. # 700–HK32Z24 24 VDC RELAY
24	2	ALLEN–BRADLEY CAT. # 700–HN122 RELAY BASE DIN RAIL MOUNT

NOTES:

1. ALL NEW +24VDC POWER WIRE SHALL BE 16 GA. BLUE.
2. ALL NEW 24VDC COMMON WIRE SHALL BE 16 GA. WHITE W/BLUE STRIPE.
3. ALL EQPT. BY TOSCO; ALL CONDUIT AND WIRING BY CONTRACTOR.

DRAWING NO.				REFERENCE DRAWINGS
3	10/06/99	DAB	VHB	ADD 1771-IAD & RELAYS, REMOVE 1771-IBD
2	09/10/99	DAB	VHB	ADDED 1771-OAD AND SWITCH
1	02/11/98	DAB	VHB	AS-BUILT
0	06/03/98	DAB	VHB	ISSUE FOR CONSTRUCTION
REV	DATE	BY	CHK	REVISED

TOSCO
TOSCO Corporation
5528 NW Doane St.
Portland, Oregon 97210

PORTLAND TERMINAL
TRUCK LOADING RACK
ELECTRICAL PANEL LAYOUT
LANE 3

ALPHA ENGINEERS and CONSTRUCTORS, INC.
2929 NW 29TH AVE, PORTLAND, OR. 97210 Tel: 503-227-1317

SCALE:	NONE	DESIGNED BY:	AAB
DATE:	05/19/98	CHECKED BY:	VHB
DRAWN BY:	DAB	ENG. APPR. BY:	

CAD FILE/PLOT DATE: 25x20403.dwg <CPO: 10/06/99 (TIME: 2:05 PM)>

DRAWING NUMBER	SHEET	REV
0608–E–2040	1 OF 1	3

COP00021536

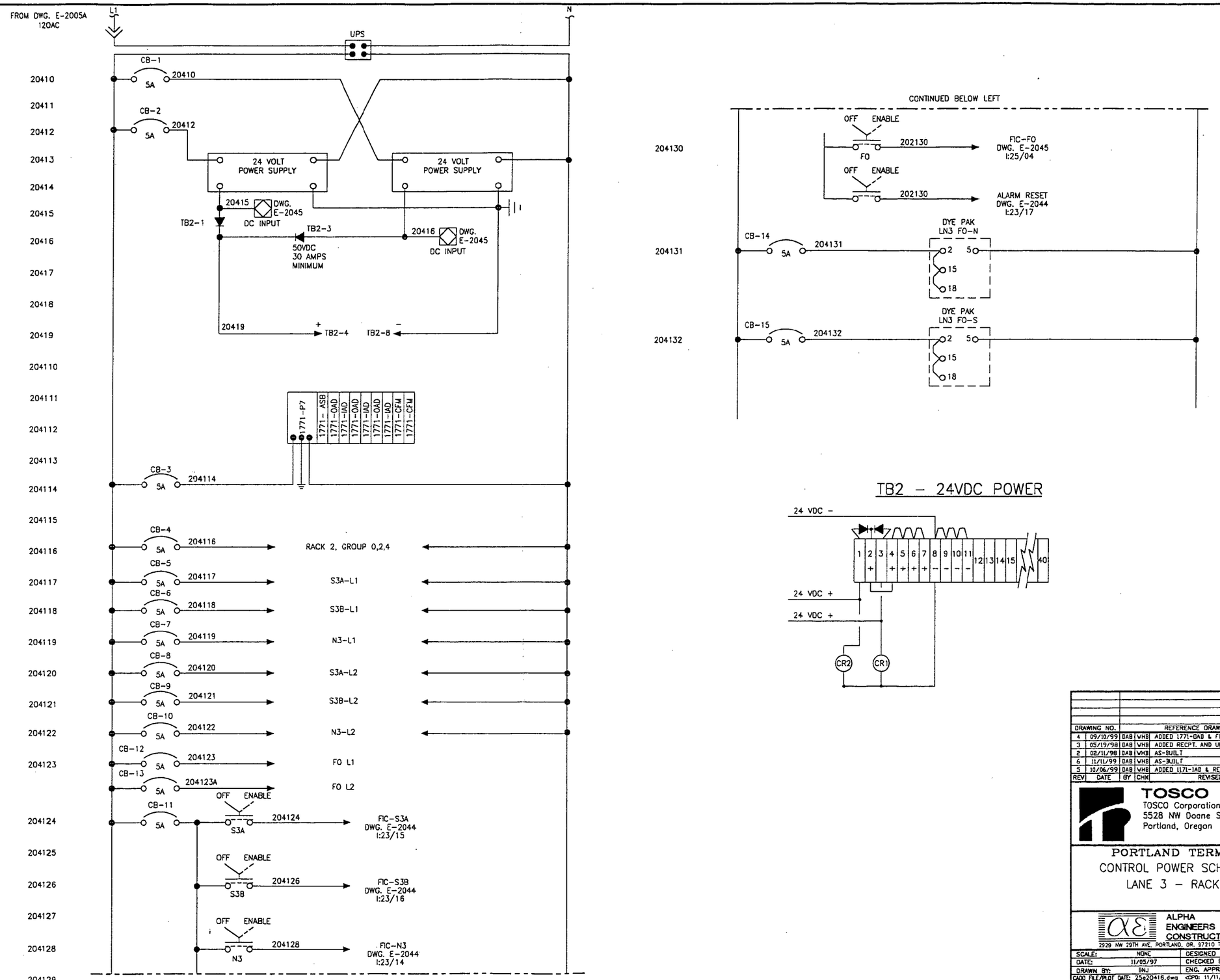

REV	DATE	BY	CHK	REVISED
4	09/10/99	DAB	WHB	ADDED 1771-OAD & FIC-FO, CB12&13
3	05/19/98	DAB	WHB	ADDED RECPT. AND UPS, ALARM RESET
2	02/11/98	DAB	WHB	AS-BUILT
6	11/11/99	DAB	WHB	AS-BUILT
5	10/06/99	DAB	WHB	ADDED 1171-IAD & RELAYS

DRAWING NO. | REFERENCE DRAWINGS

TOSCO
TOSCO Corporation
5528 NW Doane St.
Portland, Oregon 97210

PORTLAND TERMINAL
CONTROL POWER SCHEMATIC
LANE 3 - RACK 2

ALPHA ENGINEERS and CONSTRUCTORS, INC.
2929 NW 29TH AVE. PORTLAND, OR. 97210 Tel: 503-227-3317

SCALE:	NONE	DESIGNED BY:	AAB
DATE:	11/05/97	CHECKED BY:	WHB
DRAWN BY:	BNJ	ENG. APPR. BY:	WHB

CADD FILE/PLOT DATE: 25e20416.dwg <CP0: 11/11/99 (TIME: 12:58 AM) >

DRAWING NUMBER	SHEET	REV
0608-E-2041	1 OF 1	6

COP00021537

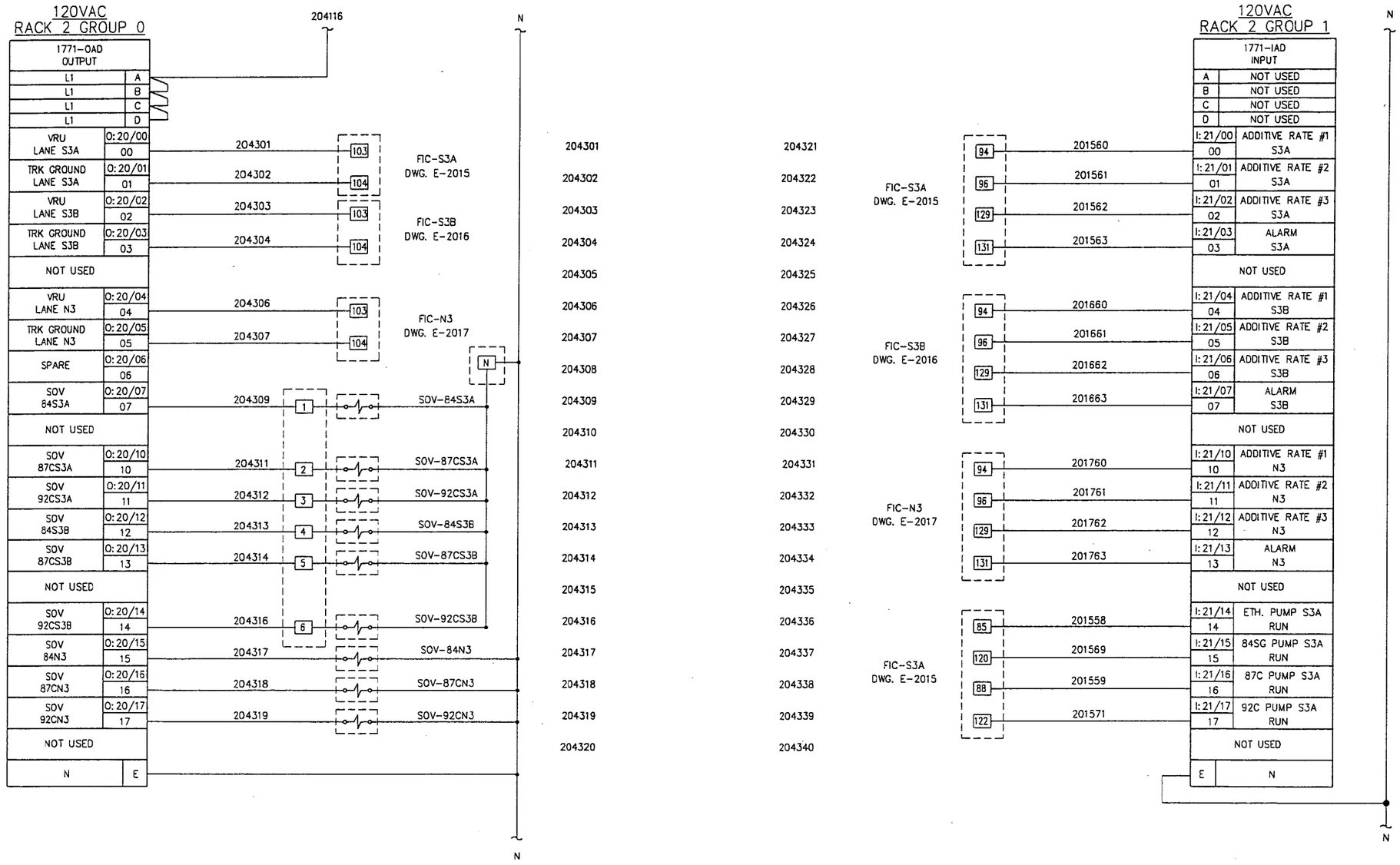

DRAWING NO.	REFERENCE DRAWINGS	REV. NO.	DATE	REVISED	DRAWN BY	CKD. BY
E-2015	ELECTRICAL LANE S2A SCHEMATIC	0	11/25/97	ISSUED FOR CONSTRUCTION	DAB	WHB
E-2016	ELEOTRICAL LANE S2B SCHEMATIC	1	02/11/98	AS-BUILT	DAB	WHB
E-2017	ELECTRICAL LANE N2 SCHEMATIC	2	06/24/98	ADD FIELD TB'S	DAB	AAB
E-2043	PLC SCHEMATIC RACK 2 – TRUCKLOADING					

TOSCO
Tosco Corporation
5528 NW Doane St.
Portland, Oregon 97210

ALPHA ENGINEERS and CONSTRUCTORS, INC.
2929 NW 29th AVE., PORTLAND, OR. 97210 Tel:(503)227-3317/Fax:(503)227-3244

DRAWN BY	BNJ
CHKD BY	AAB
APPD BY	WHB
SCALE	NONE
DATE	11/17/97

PORTLAND TERMINAL
PORTLAND OREGON
PLC SCHEMATIC
LANE 3 – RACK 2
GROUP 0,1

DRAWING NO.	SHEET	REV.
0608-E-2043	1 OF 1	2

25e20432.dwg <CPD: 11/10/99 [TIME: 3:36 PM]>

COP0021538

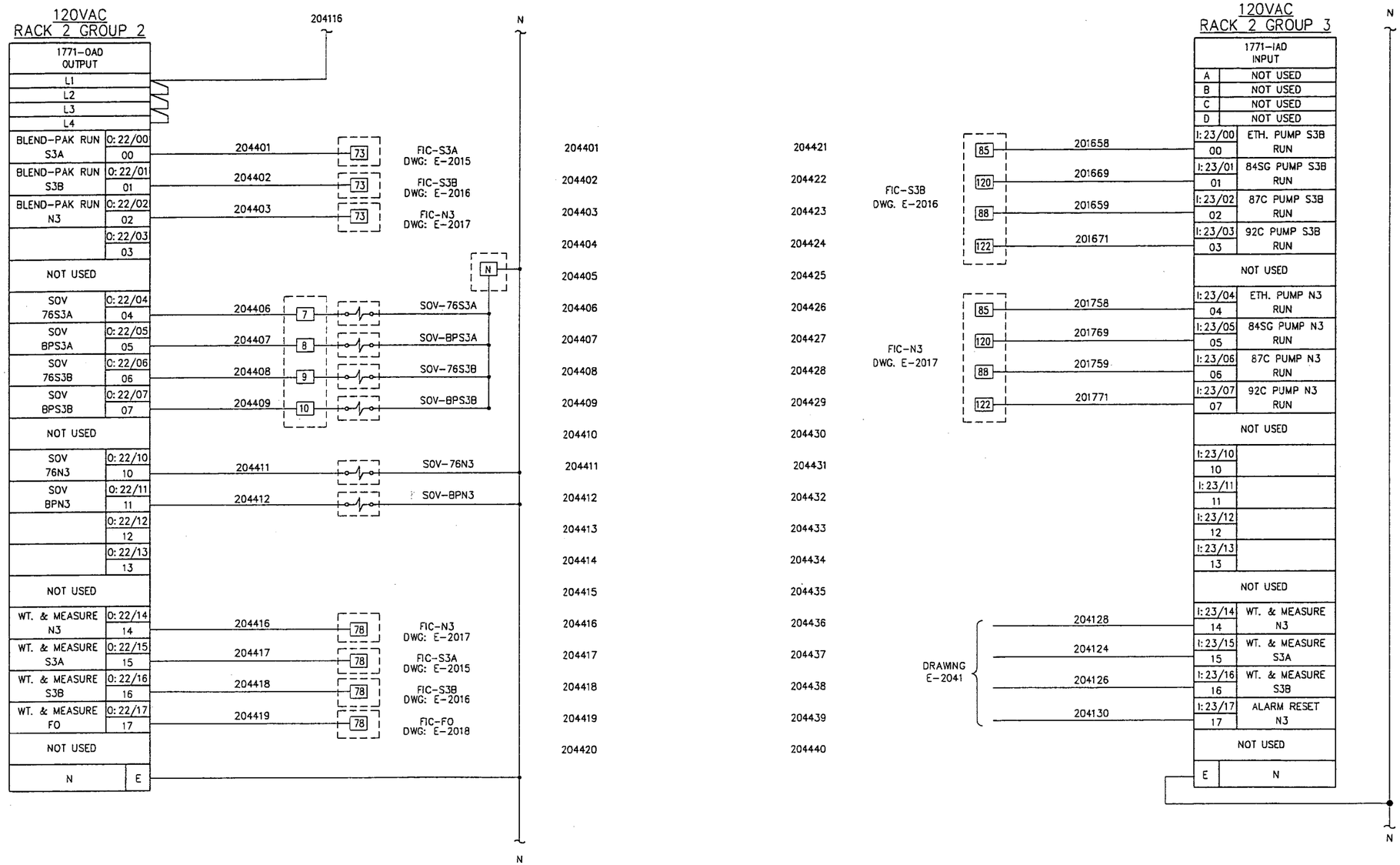

DRAWING NO.	REFERENCE DRAWINGS	REV. NO.	DATE	REVISED	DRAWN BY	CKD. BY
E-2015	ELECTRICAL LANE S3A SCHEMATIC	0	11/25/97	ISSUED FOR CONSTRUCTION	DAB	WHB
E-2016	ELECTRICAL LANE S3B SCHEMATIC	1	02/11/98	AS-BUILT	DAB	WHB
E-2017	ELECTRICAL LANE N3 SCHEMATIC	2	05/19/98	ADD WT. & MEASURES, ALARM RESET	DAB	AAB
		3	06/24/98	ADD 76 & BP ADDITIVE SOV'S	DAB	WHB
		4	09/10/99	ADDED CONNECTION TO FIC-FO	DAB	WHB

TOSCO
Tosco Corporation
5528 NW Doane St.
Portland, Oregon 97210

ALPHA ENGINEERS and CONSTRUCTORS, INC.
2929 NW 29th AVE, PORTLAND, OR. 97210 Tel:(503)227-3317/Fax:(503)227-3244

DRAWN BY	BNJ
CHKD BY	AAB
APPD BY	WHB
SCALE	NONE
DATE	11/17/97

PORTLAND TERMINAL
PORTLAND OREGON
PLC SCHEMATIC
LANE 3 - RACK 2
GROUP 2,3

DRAWING NO.	SHEET	REV.
0608-E-2044	1 OF 1	4

25s20444.dwg <CPD: 11/10/99 [TIME: 3:56 PM]>
COP0021539

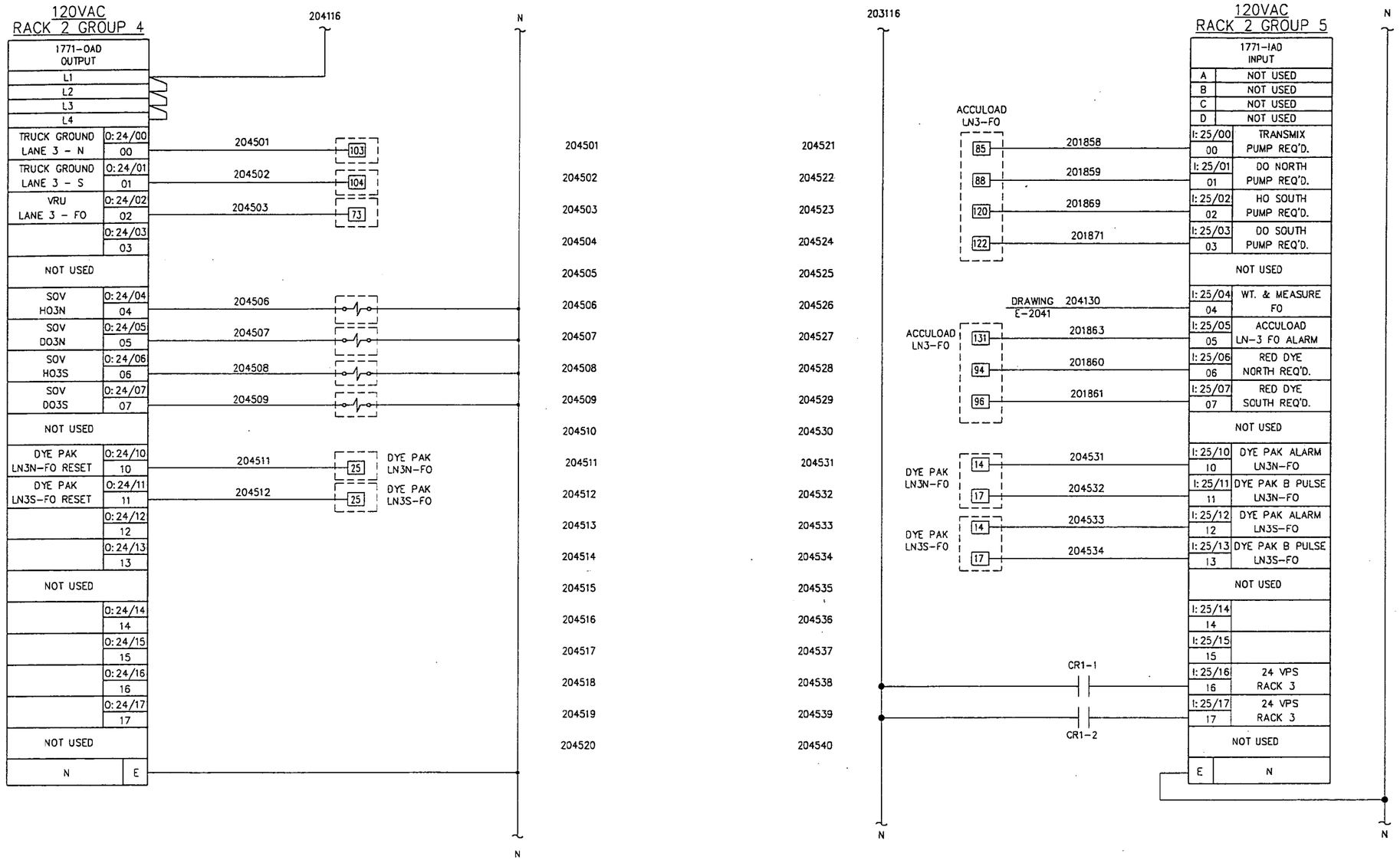

DRAWING NO.	REFERENCE DRAWINGS	REV. NO.	DATE	REVISED	DRAWN BY	CKD. BY
		0	11/25/97	ISSUED FOR CONSTRUCTION	DAB	WHB
		1	02/11/98	AS-BUILT	DAB	WHB
		2	10/06/99	ADDED 1771-OAD CARD, REPLACED 1771-ISB WITH 1771-IAD	DAB	WHB
		3	11/10/99	AS-BUILT	DAB	WHB

TOSCO
Tosco Corporation
5528 NW Doane St.
Portland, Oregon 97210

ALPHA ENGINEERS and CONSTRUCTORS, INC.
2929 NW 29th AVE., PORTLAND, OR. 97210 Tel:(503)227-3317/Fax:(503)227-3244

DRAWN BY	BNJ
CHKD BY	AAB
APPD BY	WHB
SCALE	NONE
DATE	11/17/97

PORTLAND TERMINAL
PORTLAND OREGON
PLC SCHEMATIC
LANE 3 - RACK 2
GROUP 4,5

DRAWING NO.	SHEET	REV.
0608-E-2045	1 OF 1	3

26e20453.dwg <CPD: 11/11/98 [TIME: 1:04 PM]>

COP0021540

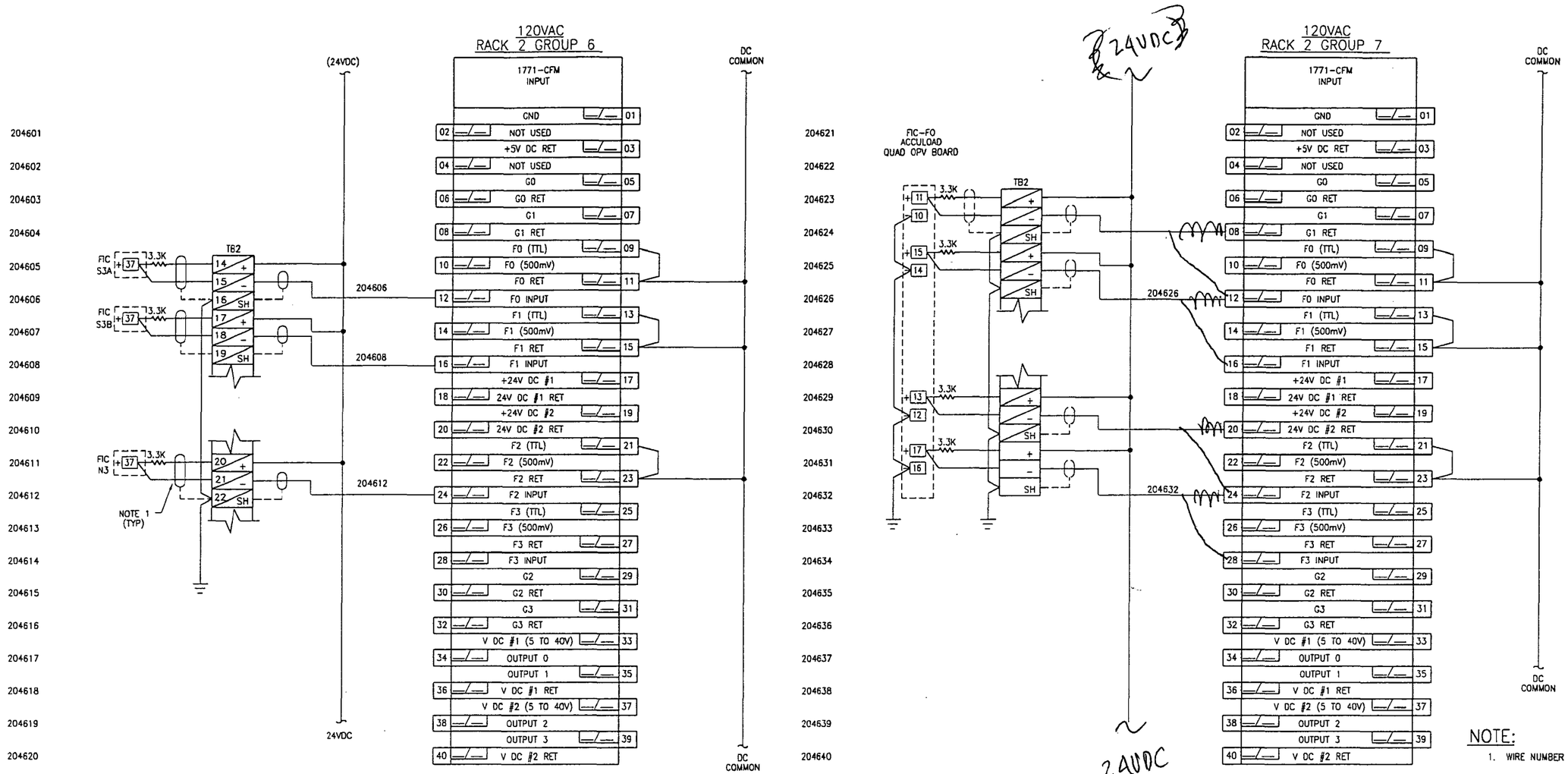

NOTE:

1. WIRE NUMBER IS THE SAME AS LOOP NUMBER.

REV	DATE	BY	CHK	REVISED
				DRAWING NO. / REFERENCE DRAWINGS
3	09/10/99	DAB	VHB	ADDED TERM. BLK'S
2	05/19/98	DAB	VHB	REVISED TB2
1	02/11/98	DAB	VHB	AS-BUILT
0	11/25/97	BNJ	VHB	ISSUED FOR CONSTRUCTION

TOSCO
TOSCO Corporation
5528 NW Doane St.
Portland, Oregon 97210

PORTLAND TERMINAL
PLC SCHEMATIC
LANE 3 – RACK 2
GROUP 6,7

ALPHA ENGINEERS and CONSTRUCTORS, INC.
2929 NW 29TH AVE, PORTLAND, OR. 97210 Tel: 503-227-3317

SCALE:	NONE	DESIGNED BY:	AAB
DATE:	11/17/98	CHECKED BY:	VHB
DRAWN BY:	BNJ	ENG. APPR. BY:	VHB

CADD FILE/PLOT DATE: 25e20463.dwg <CPO: 11/10/99 (TIME: 4:33 PM)>

DRAWING NUMBER	SHEET	REV
0608-E-2046	1 OF 1	3

COP0021541

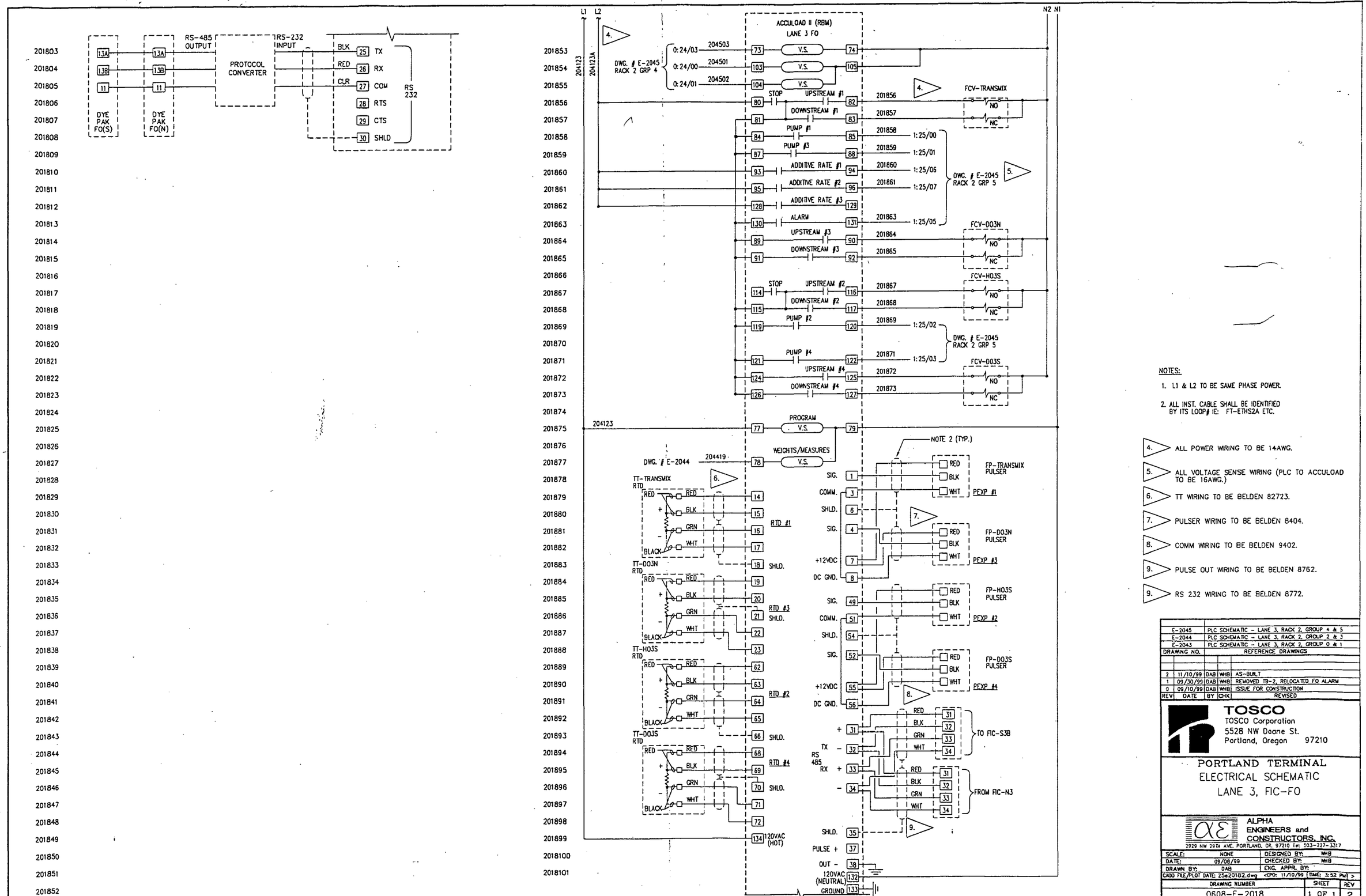

NOTES:

1. L1 & L2 TO BE SAME PHASE POWER.
2. ALL INST. CABLE SHALL BE IDENTIFIED BY ITS LOOP# IE: FT-ETHS2A ETC.

4. ALL POWER WIRING TO BE 14AWG.
5. ALL VOLTAGE SENSE WIRING (PLC TO ACCULOAD TO BE 16AWG.)
6. TT WIRING TO BE BELDEN 82723.
7. PULSER WIRING TO BE BELDEN 8404.
8. COMM WIRING TO BE BELDEN 9402.
9. PULSE OUT WIRING TO BE BELDEN 8762.
9. RS 232 WIRING TO BE BELDEN 8772.

DRAWING NO.	REFERENCE DRAWINGS
E-2045	PLC SCHEMATIC – LANE 3, RACK 2, GROUP 4 & 5
E-2044	PLC SCHEMATIC – LANE 3, RACK 2, GROUP 2 & 3
E-2043	PLC SCHEMATIC – LANE 3, RACK 2, GROUP 0 & 1

REV	DATE	BY	CHK	REVISED
2	11/10/99	DAB	WHB	AS-BUILT
1	09/30/99	DAB	WHB	REMOVED TB-2, RELOCATED FO ALARM
0	09/10/99	DAB	WHB	ISSUE FOR CONSTRUCTION

TOSCO
TOSCO Corporation
5528 NW Doane St.
Portland, Oregon 97210

PORTLAND TERMINAL
ELECTRICAL SCHEMATIC
LANE 3, FIC-FO

ALPHA ENGINEERS and CONSTRUCTORS, INC.
2929 NW 29TH AVE. PORTLAND, OR. 97210 Tel: 503-227-3317

SCALE:	NONE	DESIGNED BY:	WHB
DATE:	09/08/99	CHECKED BY:	WHB
DRAWN BY:	DAB	ENG. APPR. BY:	

CADD FILE/PLOT DATE: 25e20182.dwg <CPO: 11/10/99 [DWG: 3:52 PM] >

DRAWING NUMBER	SHEET	REV
0608-E-2018	1 OF 1	2

COP0021542

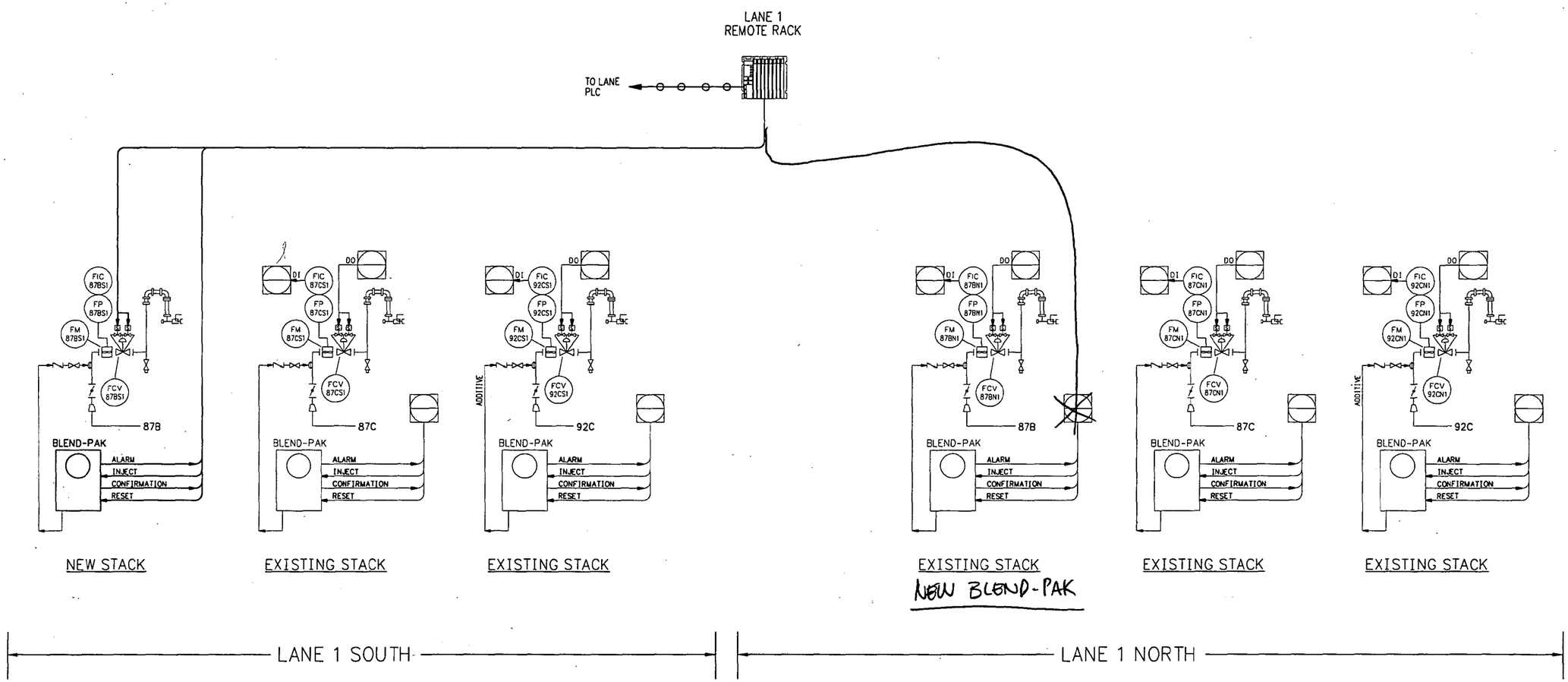

SYSTEM INTERFACE

NOTES:

DRAWING NO.	REFERENCE DRAWINGS	REV. NO.	DATE	REVISED	DRAWN BY	CKD. BY
		A	09/10/97	FOR REVIEW AND COMMENT	DAB	

TOSCO
Tosco Northwest Company
A Division of Tosco Corporation
5528 NW Doane St.
Portland, Oregon 97210

ALPHA ENGINEERS and CONSTRUCTORS, INC.
19 NW 5th AVE, SUITE 204, PORTLAND, OR. 97209 Tel:(503)227-3317/Fax:(503)227-3244

DRAWN BY	DAB
CHKD BY	
APPD BY	
SCALE	NONE
DATE	09/10/97

PORTLAND TERMINAL
PORTLAND, OREGON
ELECTRICAL
TYPICAL CONTROL SYSTEM DIAGRAM
TRUCK LOADING RACK
LANE 1

DRAWING NO.	SHEET	REV.
0608-E-2101	1 OF 1	A

6BE2101B.DWG <CPD: 09/26/97 [TIME: 11:47 AM] >

COP00215543

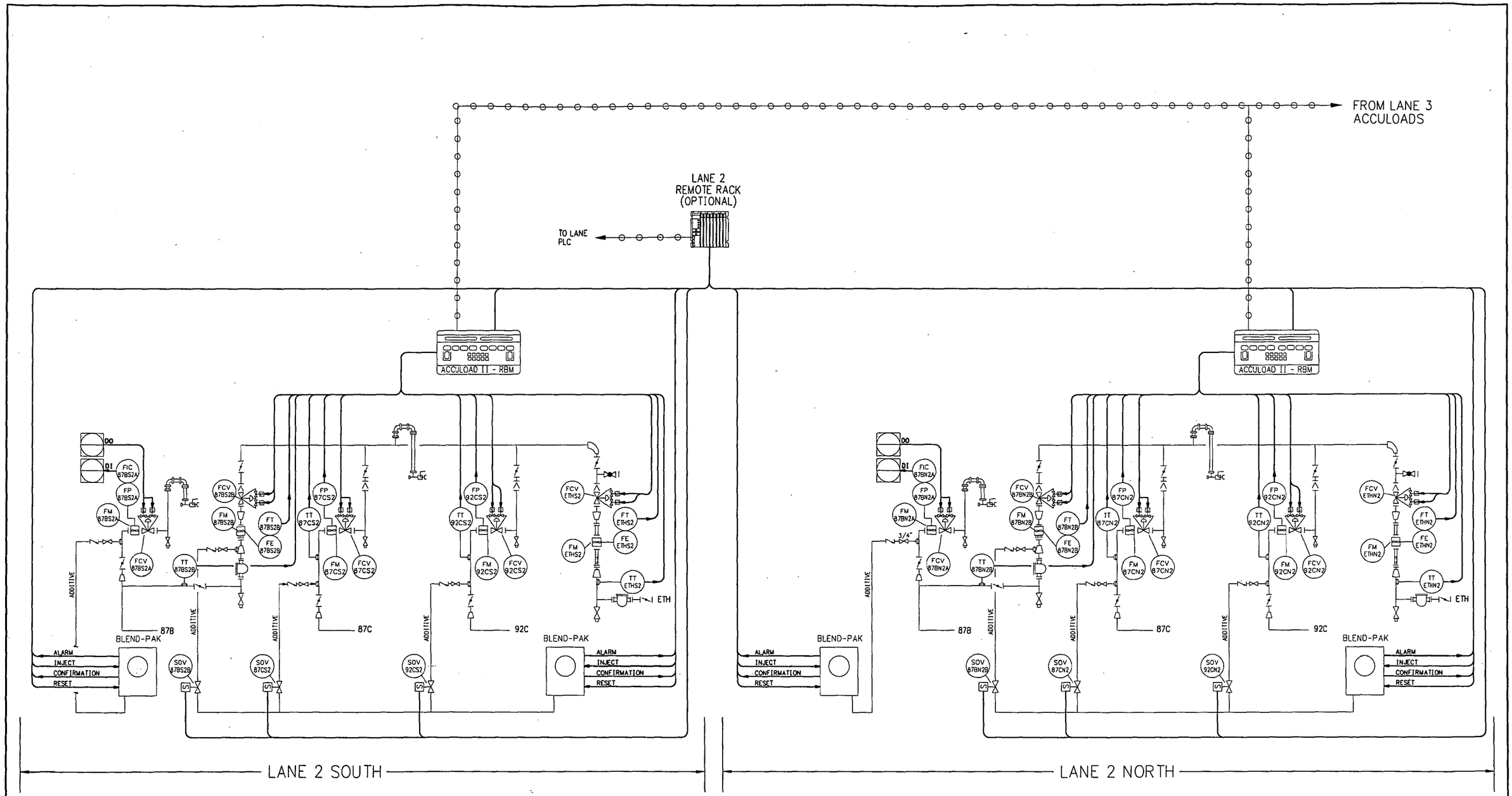

SYSTEM INTERFACE

NOTES:

DRAWING NO.	REFERENCE DRAWINGS	REV. NO.	DATE	REVISED	DRAWN BY	CKD. BY
		A	09/10/97	FOR REVIEW AND COMMENT	DAB	

TOSCO
Tosco Northwest Company
A Division of Tosco Corporation
5528 NW Doane St.
Portland, Oregon 97210

ALPHA ENGINEERS and CONSTRUCTORS, INC.
19 NW 5th AVE, SUITE 204, PORTLAND, OR. 97209 Tel:(503)227-3317/Fax:(503)227-3244

DRAWN BY	DAB
CHKD BY	
APPD BY	
SCALE	NONE
DATE	09/10/97

PORTLAND TERMINAL
PORTLAND, OREGON
ELECTRICAL
TYPICAL CONTROL SYSTEM DIAGRAM
TRUCK LOADING RACK
LANE 2

DRAWING NO.	SHEET	REV.
0608-E-2102	1 OF 1	A

68E2102B.DWG <CPD: 09/26/97 [TIME: 11:43 AM]>

COP00215442

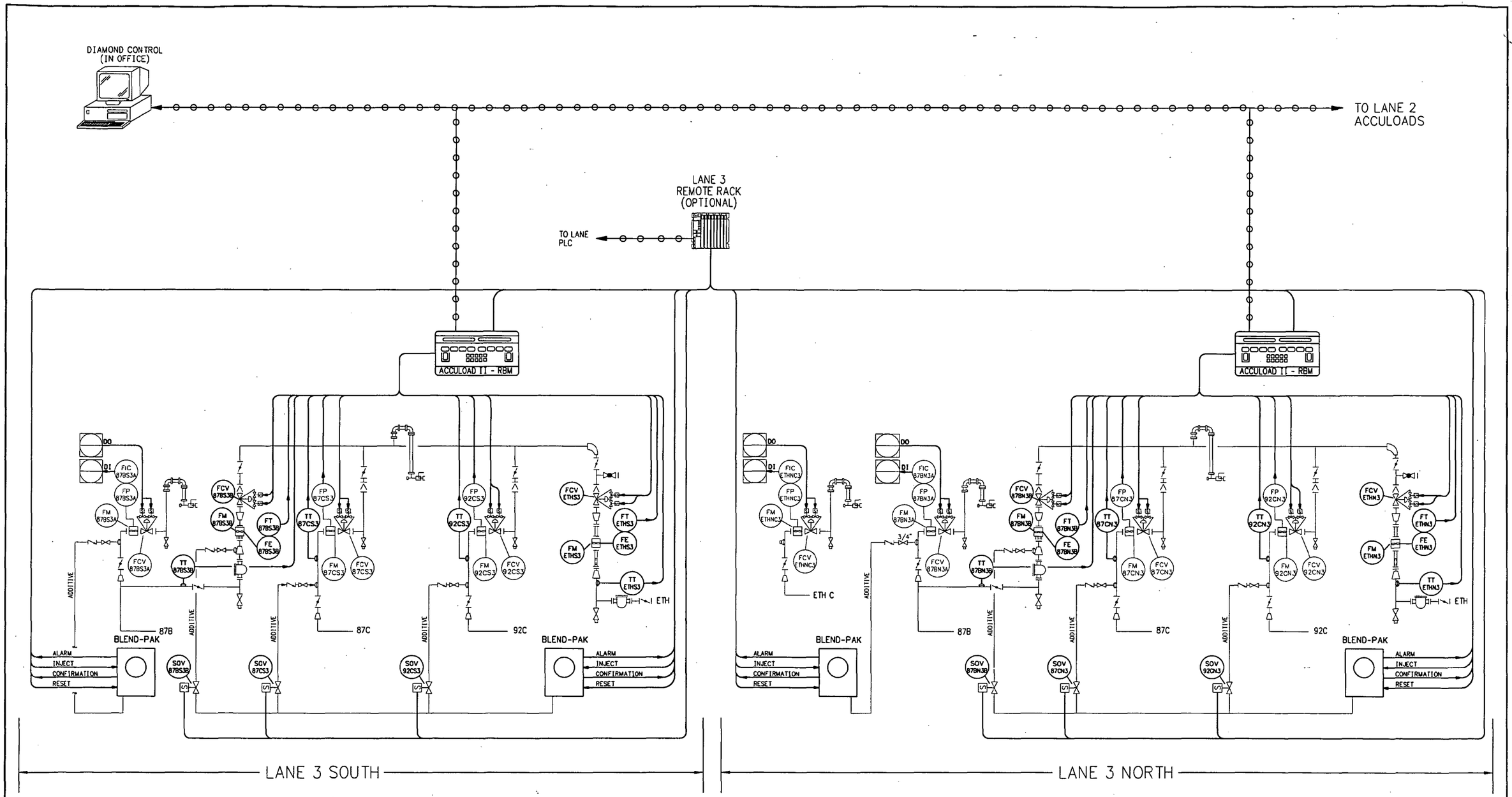

SYSTEM INTERFACE

NOTES:

DRAWING NO.	REFERENCE DRAWINGS	REV. NO.	DATE	REVISED	DRAWN BY	CKD. BY
		A	09/10/97	FOR REVIEW AND COMMENT	DAB	

TOSCO
Tosco Northwest Company
A Division of Tosco Corporation
5528 NW Doane St.
Portland, Oregon 97210

ALPHA ENGINEERS and CONSTRUCTORS, INC.
19 NW 5th AVE, SUITE 204, PORTLAND, OR. 97209 Tel:(503)227-3317/Fax:(503)227-3244

DRAWN BY	DAB
CHKD BY	
APPD BY	
SCALE	NONE
DATE	09/10/97

PORTLAND TERMINAL
PORTLAND, OREGON
ELECTRICAL
TYPICAL CONTROL SYSTEM DIAGRAM
TRUCK LOADING RACK
LANE 3

DRAWING NO.	SHEET	REV.
0608-E-2103	1 OF 1	A

68E21038.DWG <CPD: 09/26/97 [TIME: 11:12 AM] >

COP00215545

Item	Description	Advantage	Disadvantage
1	Blend Pak to receive pulses from Accuload	Simplified installation; No PLC work	Cannot clear alarms remotely
	Accuload to receive confirmation pulses from Blend Pak		
2	PLC to monitor Blend Pak and issue inject and reset commands	Remote monitor and reset capability	Not utilizing Accuload to capability
			Requires more PLC and MMI programming
3	Remote PLC rack at Lane 1 (2 & 3)	Simplified wiring; easy to expand/modify installation	Increased hardware and wiring costs; some extra PLC programming involved for Lane's 2 & 3
			No Lane Master PLC redundancy

COP0021546

LINE SYMBOLS

- MAIN PROCESS
- SECONDARY PROCESS
- CAPILLARY TUBE
- ELECTRICAL SIGNAL
- HYDRAULIC LINE
- PNUEMATIC SIGNAL
- ELECTROMAGNETIC OR SONIC SIGNAL
- INTERNAL SYSTEM LINK (SOFT WARE DATA LINK)
- PACKAGED EQUIPMENT
- SPEC BREAK OR PHYSICAL LOCATION BREAK
- DRAWING NO. COORDINATE — FLOW TO OR FROM ANOTHER DRAWING
- INSTRUMENTATION REFERENCE FLAG

INSULATION

THICKNESS IN INCHES — 2"H

TYPE	
A	ASBESTOS
H	HOT
C	COLD
PP	PERSONAL PROTECTION
FP	FREEZE PROTECTION

INSULATION WITH HEAT TRACE

E/T

TYPE	
E/T	ELECTRIC TRACE
S/T	STEAM TRACE

VALVE SYMBOLS

- GATE VALVE
- BUTTERFLY VALVE
- BALL VALVE
- GLOBE VALVE
- CHECK VALVE
- PLUG VALVE
- RELIEF VALVE
- THREE-WAY SOLENOID VALVE
- FOUR-WAY SOLENOID VALVE
- NEEDLE VALVE
- COCK VALVE
- SLIDE VALVE
- TWIN SEAL VALVE

VALVE OPERATORS

- CONTROL VALVE
- PISTION OPERATED VALVE
- SOLENOID OPERATED VALVE
- PRESSURE CONTROL VALVE INTERGRAL SENSING
- PRESSURE CONTROL VALVE EXTERNAL SENSING
- DIGITAL CONTROL VALVE

VALVE ACTUATORS

- DIAPHRAGM
- MOTOR
- SOLENOID
- CYLINDER
- HAND ACTUATOR
- FLOAT

MISC. SYMBOLS

- TURBINE METER
- POSITIVE DISPLACEMENT METER
- MIXER
- REDUCER
- Y-TYPE STAINER
- BASKET STRAINER
- HOSE
- UNION
- ORIFICE FLANGE
- FLANGES
- HOSE CONNECTION
- EXPANSION JOINT
- DIAPHRAGM SEAL
- TIE POINT — SP SPECIALITY ITEM
- HOSE
- FLEXIBLE COUPLING
- FLAT OR CONICAL SCREEN MOUNTED BETWEEN FLANGES
- IA-INSTRUMENT AIR PA-PROCESS AIR
- INLINE FILTER
- REMOVABLE SPOOL
- MANHOLE COVER
- CAP OR PLUG
- PIG LAUNCHER/ RETRIEVER STATION
- PIG TRIP INDICATOR
- VENT
- SPRAY NOZZLE
- TRAP
- FLOW SIGHT GLASS
- FLAME ARRESTOR
- DRAIN
- EXPANSION JOINT
- FLOW STRAIGTENER

INSTRUMENT IDENTIFICATION

- LOCAL MOUNTED,NO PANEL
- MAIN PANEL MOUNTED
- LOCAL PANEL MOUNTED
- INSIDE MAIN PANEL MOUNTED
- INSIDE LOCAL PANEL MOUNTED
- CRT SHARED DISPLAY, SHARED CONTROL
- NON-DISPLAYED INTERLOCK PERFORMED BY DCS OR PLC
- INTERLOCK
- INDICATOR LIGHT

FIRST LETTER — PCV 1000 — SUCCEEDING LETTERS; LOOP NUMBER

FIRST LETTER

A	ANALYSIS	K	TIME
B	BURNER/FLAME	L	LEVEL/PILOT LIGHT
C	CONDUCTIVITY	M	MOTOR
D	DENSITY	P	PRESSURE
E	VOLTAGE	Q	QUANTITY/EVENT
F	FLOW	S	SPEED
G	GAGING	T	TEMPERATURE
H	HAND	V	VISCOSITY/VIBRATION
I	CURRENT	W	WEIGHT
J	POWER	Y	EVENT, STATE OR PRESENCE
		Z	POSITION

SUCCEEDING LETTERS

A	ALARM	O	ORIFICE
C	CONTROL	Q	TOTALIZER
D	DIFFERENTIAL	S	SWITCH
E	PRIMARY ELEMENT	SE	SAFETY ELEMENT
F	RATIO	SV	SAFETY ELEMENT
G	GLASS	T	TRANSMITTER
H	HIGH/OPEN	V	VALVE/DAMPER/LOUVER
I	INDICATING	W	WELL
J	REMOTE AMPLIFIER	Y	TRANSDUCER
L	PILOT LIGHT/ LOW/CLOSED	Z	FINAL CONTROL DEVICE
P	PULSER		

COLOR CODING

GREEN	NORMAL OPERATION, START, OPEN, ON
RED	STOP, HIGHEST PRIORITY ALARM, CLOSED, OFF

EQUIPMENT

- HORIZONTAL CENTRIFUGAL PUMP
- INLINE CENTRIFUGAL PUMP
- POSITIVE DISPLACEMENT PUMP
- METERING PUMP
- DOUBLE DIAPHRAGM PUMP
- SUMP PUMP
- MIXER
- EJECTOR
- COMPRESSOR
- ATMOSPHERIC TANK
- FLOATING ROOF TANK
- VESSEL
- CONE BOTTOM TANK OR BIN

LINE IDENTIFICATION

2"-GA-1001-A — LINE IDENTIFICATION

- MATERIAL SPECIFICATION
- LINE NUMBER
- SERVICE
- SIZE

CODE	CLASS - MATERIAL
A1	CLASS 150 - C.S.
B	CLASS 300 - C.S.
C	CLASS 150 - C.S.
E	CLASS 150 - S.S.
K1	CLASS 150 - CPVC
L1	CLASS 150 - PVC

LINE SERVICE

IA	INSTRUMENT AIR
PA	PLANT AIR
GA	GASOLINE ADDITIVE
RD	RED DYE ADDITIVE
STM	STEAM
DO	DIESEL
87B	87 OCTANE BLENDEDGASOLINE
87C	87 OCTANE CLEAR GASOLINE
SUC	92 OCTANE CLEAR GASOLINE
84G	84 OCTANE SUBGRADE GASOLINE
HO	HEATING OIL
LO	LUBE OIL
AV	AVIATION GAS
ETH	ETHANOL
AP	PROCESS AIR
CW	TREATED WATER
OW	OILY WATER

- HV1001 — MANUAL VALVE TAG NUMBER
- CV1001 — CHECK VALVE TAG NUMBER

ABBREVIATIONS

AOV	AIR OPERATED VALVE
ATM	ATMOSHERE
BFP	BACK FLOW PREVENTER
BOP	BOTTOM OF PIPE
CONC	CONCENTRIC
CS	CARBON STEEL
ECC	ECCENTRIC
FC	FAIL CLOSED
FF	FLAT FACE
FO	FAIL OPEN
HOA	HAND-OFF-AUTO-SWITCH
LC	LOCK CLOSED
LG	LEVEL GAUGE
MOV	MOTOR OPERATED VALVE
NC	NORMALLY CLOSED
NO	NORMALLY OPEN
RF	RAISED FACE
SG	SIGHT GLASS
SP	SAMPLE PORT
ST	STEAM TRACED
TOS	TOP OF STEEL
TP	TEST PORT
TYP	TYPICAL

DRAWING NUMBER IDENTIFICATION

X-XXXX

- DRAWING NUMBER
- DISIPLINE CODE

A	ARCHITECTURAL
C	CIVIL
D	DIAGRAMS (PFD'S & PID'S)
E	ELECTRICAL
F	FIGURES
I	INSTRUMENTATION
L	LOOP DIAGRAMS
M	MECHANICAL
P	PIPING
R	REMOVAL/DEMOLITION
S	STRUCTURAL

DRAWING NO.	REFERENCE DRAWINGS	REV. NO.	DATE	REVISED	DRAWN BY	CKD. BY
		0	07/24/96	ISSUE FOR CONSTRUCTION	DAB	WHB
		1	09/23/96	GENERAL REVISION	DAB	WHB
		2	08/19/97	GENERAL REVISION	DAB	

TOSCO
Tosco Northwest Company
A Division of Tosco Corporation
5528 NW Doane St.
Portland, Oregon 97210

ALPHA ENGINEERS and CONSTRUCTORS, INC.
19 NW 5th AVE, SUITE 204, PORTLAND, OR. 97209 Tel:(503)227-3317/Fax:(503)227-3244

DRAWN BY	DAB
CHKD BY	WHB
APPD BY	KJP
SCALE	NONE
DATE	03/06/95

PORTLAND TERMINAL
PORTLAND, OREGON
PIPING & INSTRUMENTATION DIAGRAM
LEGEND & SYMBOLS

DRAWING NO.	SHEET	REV.
0608-D-1000	1 OF 1	2

\PD1000A.DWG <CPD: 08/26/97 [TIME: 08:37 AM]>

COP0021547

TK-2916
HEATING OIL #1 STORAGE TANK
TYPE: CONE ROOF
SIZE: 78'ø x 41' H
CAP: 40,880 BBL'S
DESIGN: ATMOS.
OP. TEMP: AMBIENT

G-141
INGERSOL RAND PUMP
625 GPM @ 265 FT. HD.
40 HP
3600 RPM
230/460 V, 3PH, 60 HZ

G-163
DEAN PUMP (3x 4x 13)
720 GPM @ 180 FT. HD.
30 HP
1750 RPM
230/460 V, 3PH, 60 HZ

TK-2982
HEATING OIL #1 STORAGE TANK
TYPE: CONE ROOF
SIZE: 48'ø x 36' H
CAP: 11,400 BARRELS
DESIGN: ATMOS.
OP. TEMP: AMBIENT

TK-3412
HEATING OIL #1 STORAGE TANK
TYPE: CONE ROOF W/INTERNAL FLOATING ROOF
SIZE: 35'ø x 42' H
CAP: 7,195 BARRELS
DESIGN: ATMOS.
OP. TEMP: AMBIENT

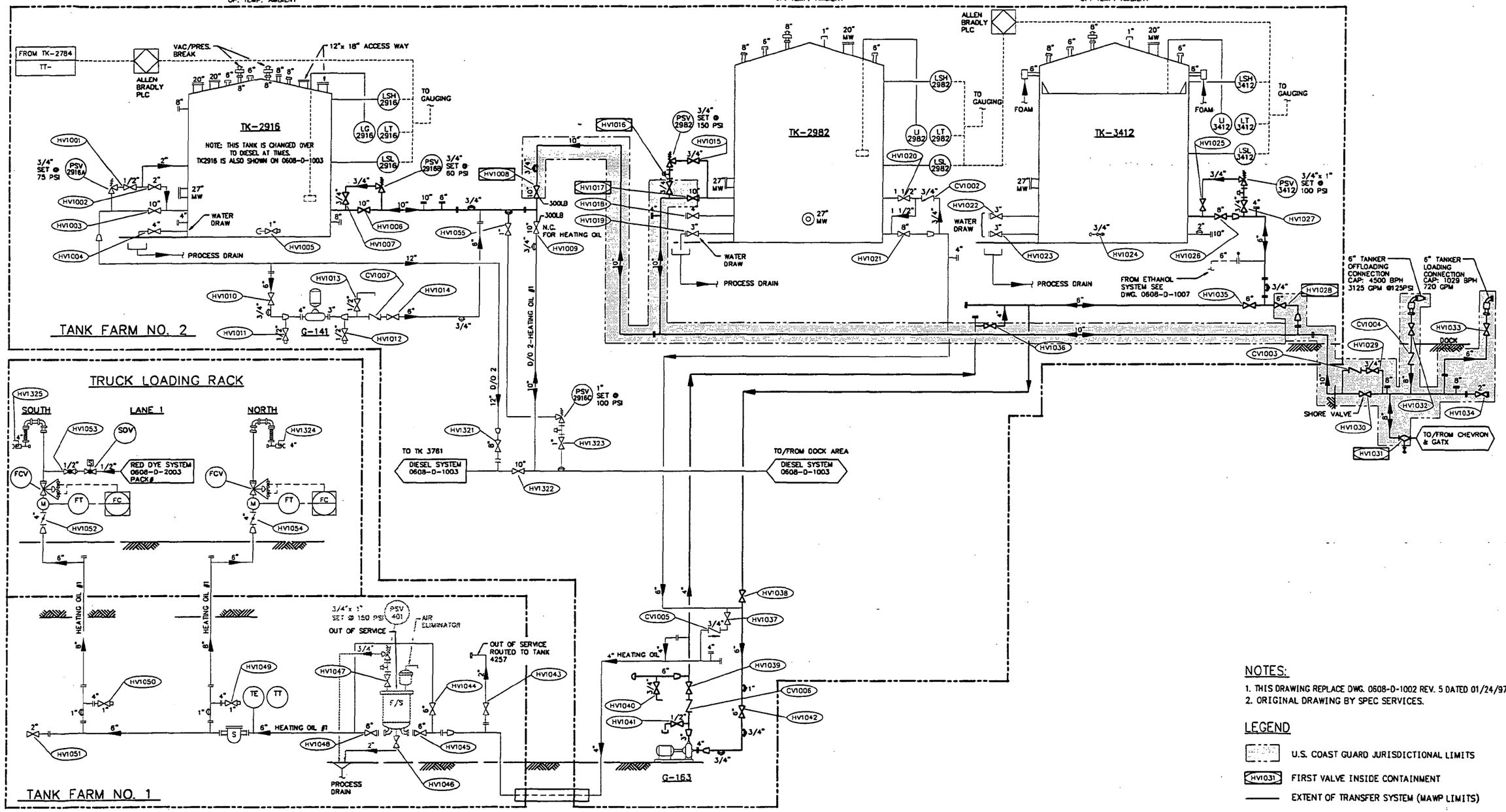

NOTES:

1. THIS DRAWING REPLACE DWG. 0608-D-1002 REV. 5 DATED 01/24/97.
2. ORIGINAL DRAWING BY SPEC SERVICES.

LEGEND

- U.S. COAST GUARD JURISDICTIONAL LIMITS
- HV1031 — FIRST VALVE INSIDE CONTAINMENT
- EXTENT OF TRANSFER SYSTEM (MAWP LIMITS)

DRAWING NO.	REFERENCE DRAWINGS	REV. NO.	DATE	REVISED	DRAWN BY	CKD. BY
0608-D-1000	LEGEND AND SYMBOLS	6	08/19/97	REVISED DRAWING NUMBER	DAB	
0608-D-1003	DIESEL SYSTEM	1	11/01/95	ADDED HO TIE-IN TO TANK 2916	DAB	WHB
0608-D-1007	REFINED PRODUCTS TANK FARM NO.2	2	12/07/95	ADDED TANK 2916, PUMP G-141 & DOCK PIPING	DAB	WHB
		3	04/12/96	ADDED VALVE NUMBERS	DAB	WHB
		4	12/04/96	ADDED PUMP AND TANKER CAPACITIES	DAB	WHB
		5	01/24/97	DEFINED COAST GUARD JURISDICTIONAL LIMITS	DAB	

TOSCO
Tosco Northwest Company
A Division of Tosco Corporation
5528 NW Doane St.
Portland, Oregon 97210

ALPHA ENGINEERS and CONSTRUCTORS, INC.
19 NW 5th AVE, SUITE 204, PORTLAND, OR. 97209 Tel:(503)227-3317 Fax:(503)227-3244

DRAWN BY	CGB
CHKD BY	ER
APPD BY	KJP
SCALE	NONE
DATE	03/14/95

PORTLAND TERMINAL
PORTLAND, OREGON
PIPING & INSTRUMENTATION DIAGRAM
HEATING OIL SYSTEM

DRAWING NO.	SHEET	REV.
0608-D-1001	1 OF 1	6

\P01001A.DWG <CPD: 08/27/97 [TIME: 11:45 AM]>

COP00215485

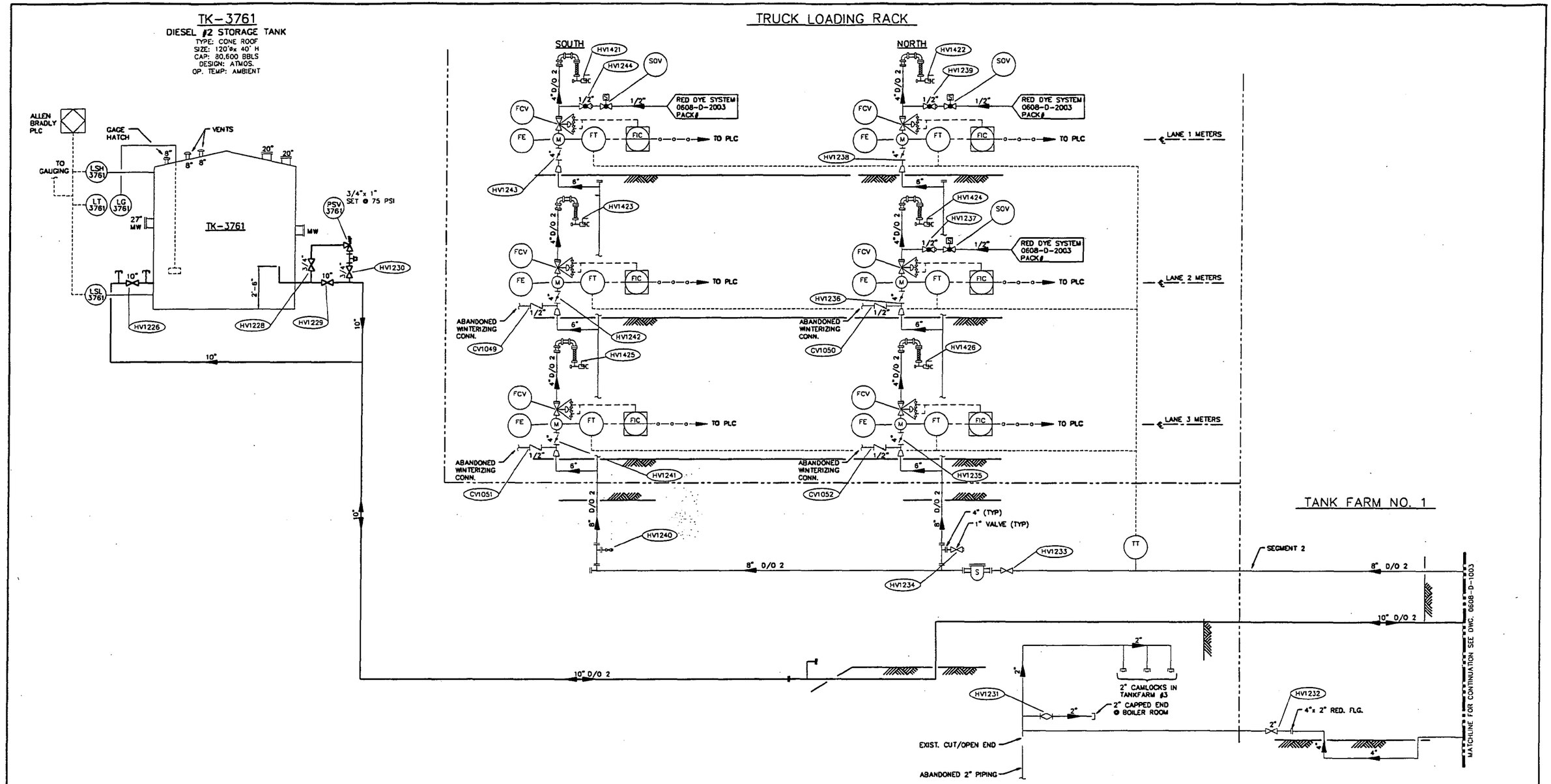

NOTES:

1. THIS DRAWING REPLACES DWG. 0608-D-1005 REV. 2 DATED 01/24/97
2. COAST GUARD LIMITS SHOWN ON DWG. 0608-D-1003
3. ORIGINAL DRAWING BY SPEC SERVICES.

LEGEND

——— EXTENT OF TRANSFER SYSTEM (MAWP LIMITS)

DRAWING NO.	REFERENCE DRAWINGS	REV. NO.	DATE	REVISED	DRAWN BY	CKD. BY
0608-D-1000	LEGEND AND SYMBOLS	0	06/30/95	UNDERGROUND LINE REPLACEMENT	NMD	ECR
0608-D-1003	DIESEL SYSTEM	1	04/15/96	ADDED VALVE NUMBERS	BNJ	DAB
		2	01/24/97	DEFINED COAST GUARD JURISDICATIONAL LIMITS	DAB	WHB
		3	08/19/97	REVISED DRAWING NUMBER	DAB	

TOSCO
Tosco Northwest Company
A Division of Tosco Corporation
5528 NW Doane St.
Portland, Oregon 97210

ALPHA ENGINEERS and CONSTRUCTORS, INC.
19 NW 5th AVE., SUITE 204, PORTLAND, OR. 97209 Tel:(503)227-3317/Fax:(503)227-3244

DRAWN BY	CGB
CHKD BY	ER
APPD BY	KJP
SCALE	NONE
DATE	03/31/95

PORTLAND TERMINAL
PORTLAND, OREGON
PIPING & INSTRUMENTATION DIAGRAM
DIESEL OIL SYSTEM

DRAWING NO.	SHEET	REV.
0608-D-1002	1 OF 1	3

V:\D1002A.DWG <CPD: 08/27/97 [TIME: 11:49 AM]>

COP0021549

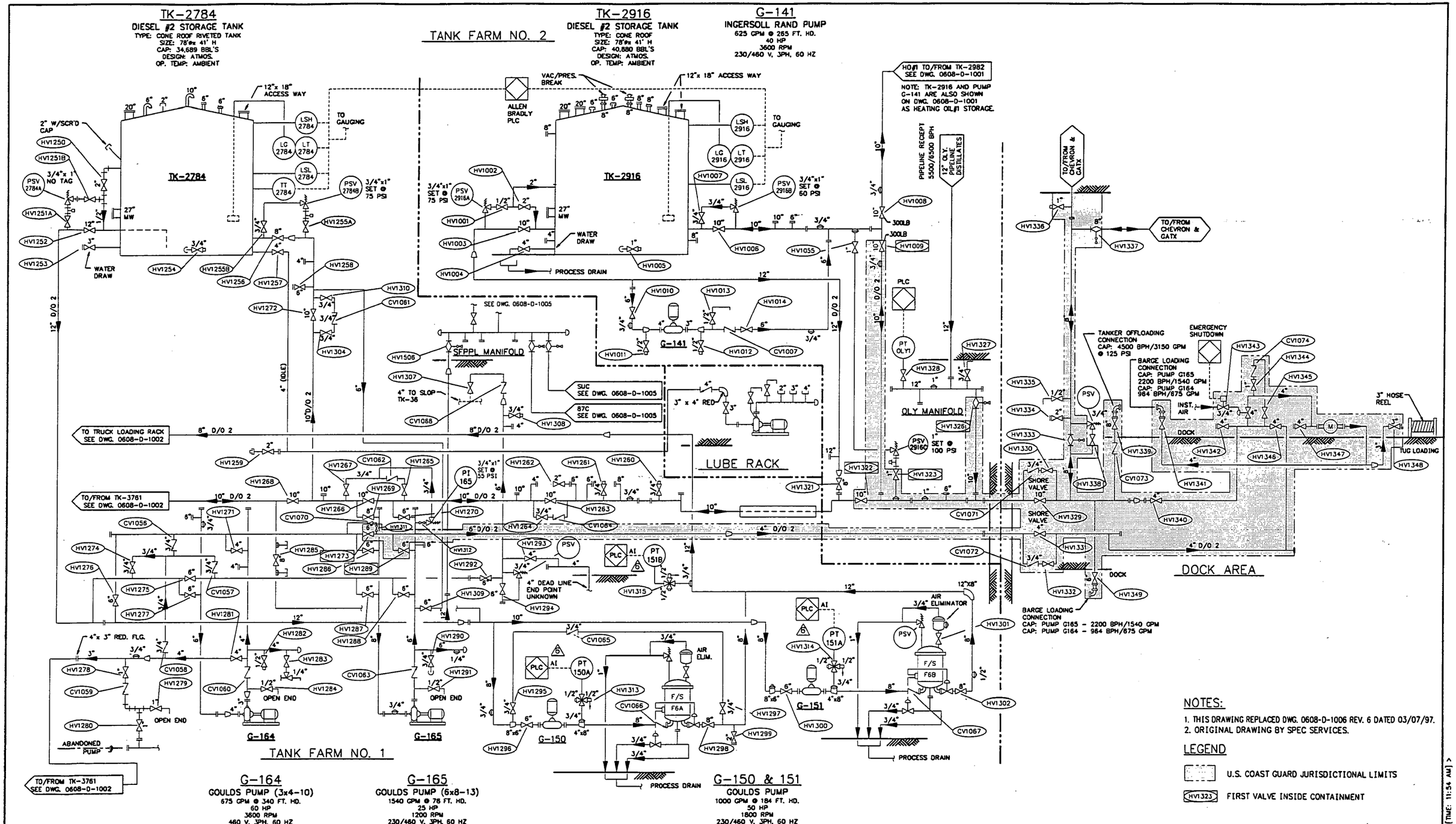

NOTES:

1. THIS DRAWING REPLACED DWG. 0608-D-1006 REV. 6 DATED 03/07/97.
2. ORIGINAL DRAWING BY SPEC SERVICES.

LEGEND

U.S. COAST GUARD JURISDICTIONAL LIMITS

HV1323 FIRST VALVE INSIDE CONTAINMENT

DRAWING NO.	REFERENCE DRAWINGS	REV. NO.	DATE	REVISED	DRAWN BY	CKD. BY
0608-D-1000	LEGEND AND SYMBOLS	7	08/19/97	REVISED DRAWING NUMBERS	DAB	
0608-D-1001	HEATING OIL SYSTEM	2	12/07/95	GENERAL REVISION, UPDATED PER HAZOP	DAB	WHB
0608-D-1002	DIESEL SYSTEM	3	04/15/96	ADDED VALVE NUMBERS	DAB	WHB
0608-D-1005	REFINED PRODUCTS SYTEM SFPPL YARD	4	08/09/96	ADDED CROSS OVER AT TANK 2784	DAB	WHB
		5	01/24/97	DEFINED COAST GUARD JURISDICTIONAL LIMITS	DAB	WHB
		6	03/07/97	ADDED PT150A, PT151A & B	DAB	WHB

TOSCO
Tosco Northwest Company
A Division of Tosco Corporation
5528 NW Doane St.
Portland, Oregon 97210

ALPHA ENGINEERS and CONSTRUCTORS, INC.
19 NW 5th AVE, SUITE 204, PORTLAND, OR. 97209 Tel:(503)227-3317/Fax:(503)227-3244

DRAWN BY	CGB
CHKD BY	ER
APPD BY	KJP
SCALE	NONE
DATE	03/31/95

PORTLAND TERMINAL
PORTLAND, OREGON
PIPING & INSTRUMENTATION DIAGRAM
DIESEL OIL SYSTEM

DRAWING NO.	SHEET	REV.
0608-D-1003	1 OF 1	7

\P01003A.DWG <CPD: 08/27/97 [TIME: 11:54 AM] >

COP00021550

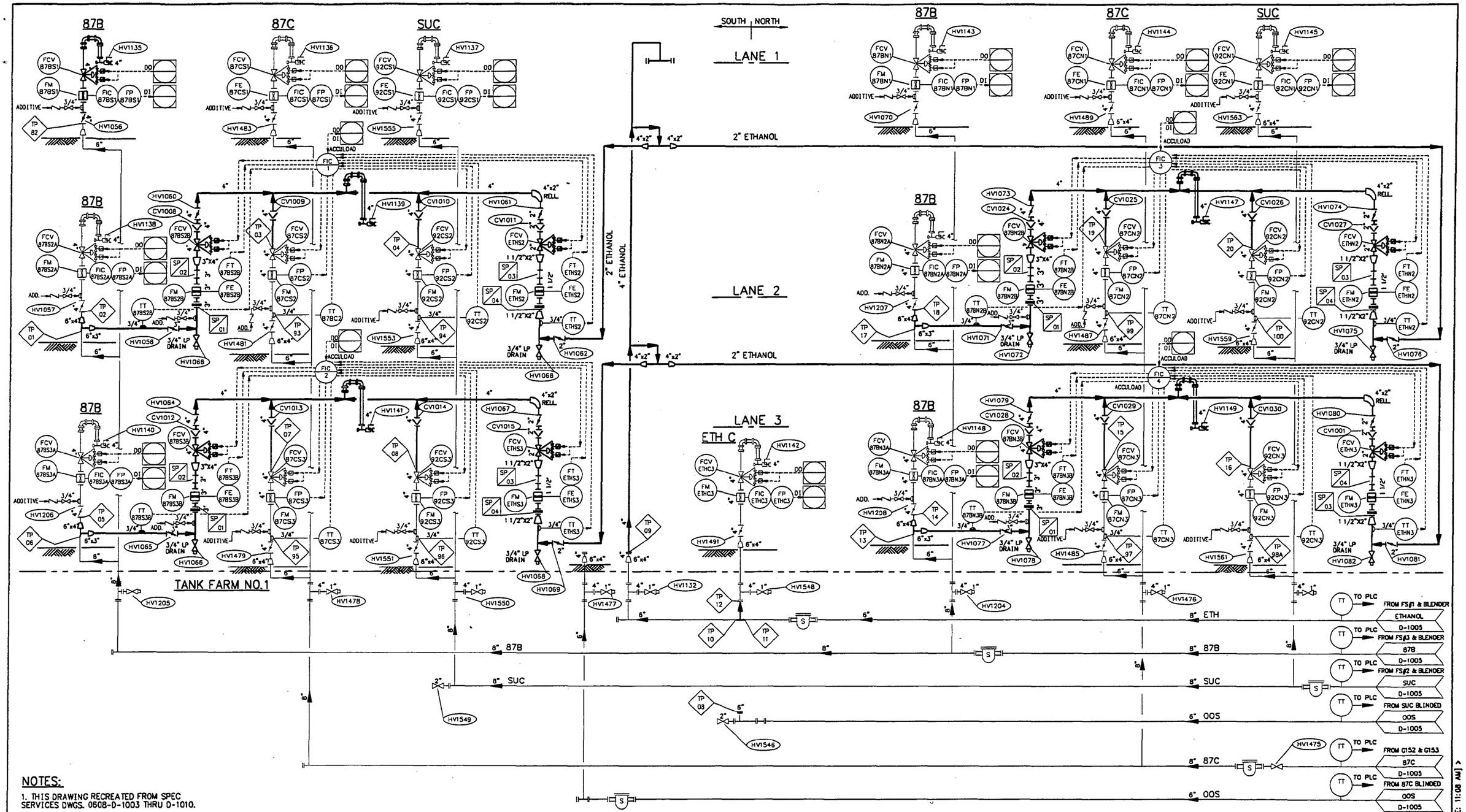

NOTES:

1. THIS DRAWING RECREATED FROM SPEC SERVICES DWGS. 0608-D-1003 THRU D-1010.
2. NEW WORK SHOWN BOLD

DRAWING NO.	REFERENCE DRAWINGS	REV. NO.	DATE	REVISED	DRAWN BY	CKD. BY
0608-D-1000	LEGEND AND SYMBOLS	A	08/19/97	ACCULOAD INSTALLATION - PRELIMINARY FOR HAZOP		
0608-D-1005	REFINED PRODUCTS SYSTEM SFPPL YARD					

TOSCO
Tosco Northwest Company
A Division of Tosco Corporation
5528 NW Doane St.
Portland, Oregon 97210

ALPHA ENGINEERS and CONSTRUCTORS, INC.
19 NW 5th AVE, SUITE 204, PORTLAND, OR. 97209 Tel:(503)227-3317/Fax:(503)227-3244

DRAWN BY	DAB
CHKD BY	
APPD BY	
SCALE	NONE
DATE	08/18/97

PORTLAND TERMINAL
PORTLAND, OREGON
PIPING & INSTRUMENTATION DIAGRAM
REFINED PRODUCTS SYSTEM
TRUCK LOADING RACK

DRAWING NO.	SHEET	REV.
0608-D-1004	1 OF 1	A

\P01004A.DWG <CPD: 08/27/97 [TIME: 11:08 AM]>

COP0021551

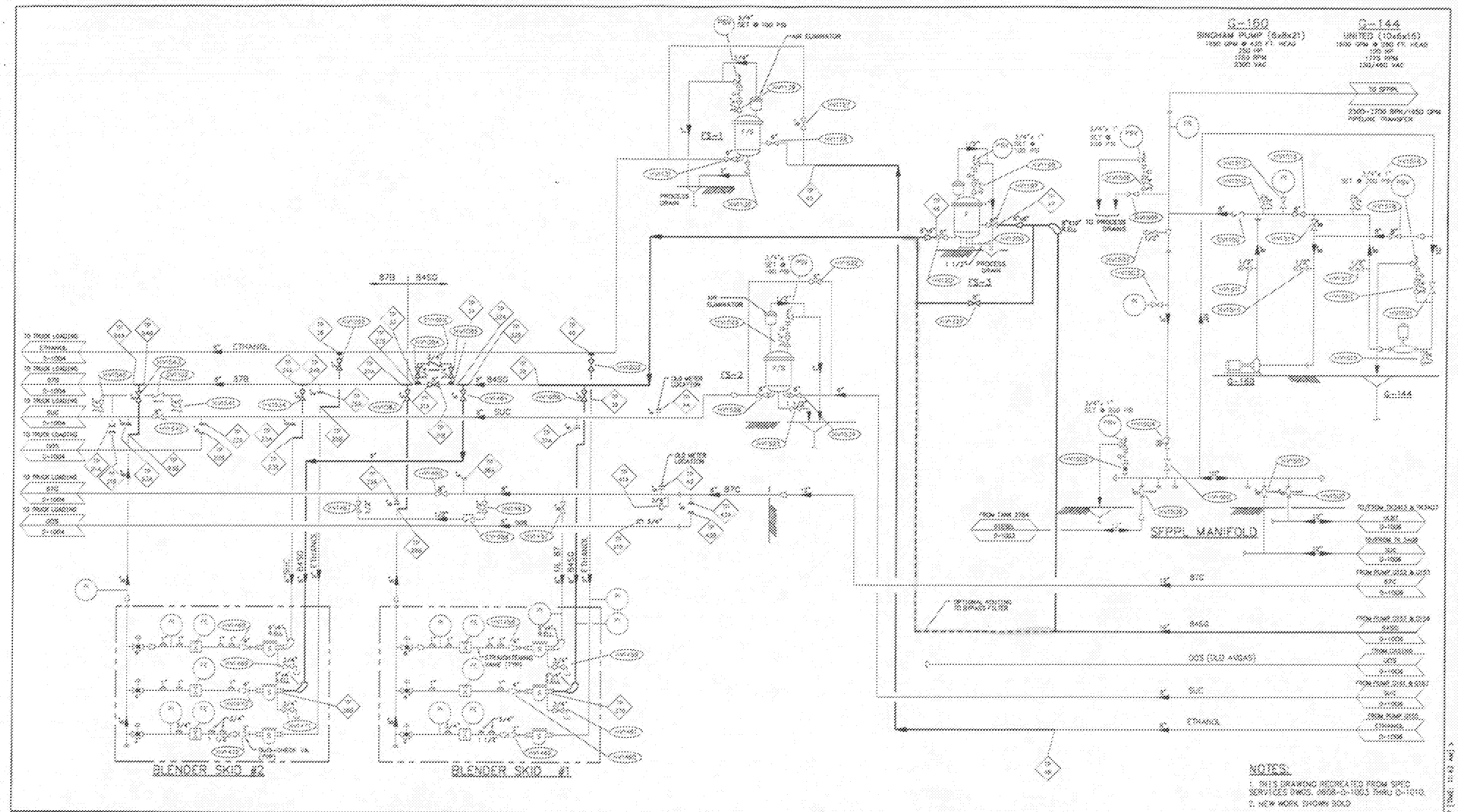

DRAWING NO.	REFERENCE DRAWINGS	REV. SYM.	DATE	REVISED	DRAWN BY	CHK. BY
0608-D-1000	LEGEND AND SYMBOLS	A	06/19/97	ADDLOAD INSTALLATION - PRELIMINARY FOR HAZOP	DAB	
0608-D-1003	DIESEL SYSTEM					
0608-D-1004	REFINED PRODUCTS SYSTEM TRUCK LOADING RACK					
0608-D-1005	REFINED PRODUCTS SYSTEM TANK FARM NO.2					

TOSCO
Tosco Marketing Company
A Division of Tosco Corporation
1700 SW Sixth St.
Portland, Oregon 97201

ALPHA ENGINEERS and CONSTRUCTORS, INC.

PORTLAND TERMINAL
PORTLAND, OREGON
PIPING & INSTRUMENTATION DIAGRAM
REFINED PRODUCTS SYSTEM
SEPPL YARD

DRAWN BY	DATE	SCALE	SIZE	DRAWING NO.	SHEET	REV.
		NONE		0608-D-1005	1 OF 1	A
	03/14/95					

COP00021552

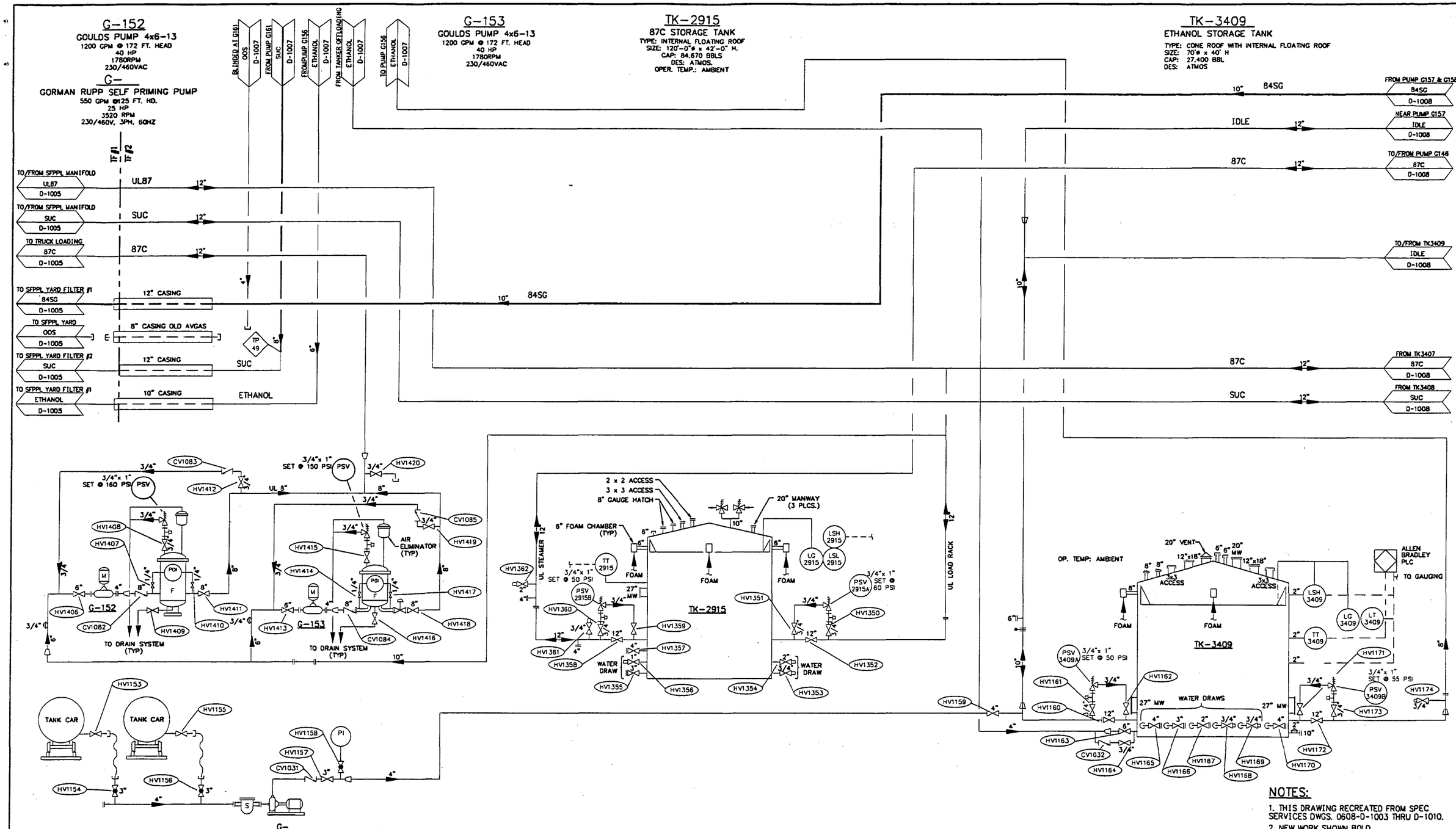

NOTES:

1. THIS DRAWING RECREATED FROM SPEC SERVICES DWGS. 0608-D-1003 THRU D-1010.
2. NEW WORK SHOWN BOLD

DRAWING NO.	REFERENCE DRAWINGS	REV. NO.	DATE	REVISED	DRAWN BY	CKD. BY
0608-D-1000	LEGEND AND SYMBOLS	A	08/19/97	ACCULOAD INSTALLATION - PRELIMINARY FOR HAZOP	DAB	
0608-D-1005	REFINED PRODUCTS SYSTEM SFPPL YARD					
0608-D-1007	REFINED PRODUCTS SYSTEM TANK FARM NO.2					
0608-D-1008	REFINED PRODUCTS SYSTEM TANK FARM NO.2					

TOSCO
Tosco Northwest Company
A Division of Tosco Corporation
5528 NW Doane St.
Portland, Oregon 97210

ALPHA ENGINEERS and CONSTRUCTORS, INC.
19 NW 5th AVE, SUITE 204, PORTLAND, OR. 97209 Tel:(503)227-3317/Fax:(503)227-3244

DRAWN BY	DAB
CHKD BY	
APPD BY	
SCALE	NONE
DATE	08/19/97

PORTLAND TERMINAL
PORTLAND, OREGON
PIPING & INSTRUMENTATION DIAGRAM
REFINED PRODUCTS SYSTEM
TANK FARM NO.2

DRAWING NO.	SHEET	REV.
0608-D-1006	1 OF 1	A

\PD1006A.DWG <CPD: 08/27/97 [TIME: 11:28 AM]>

COP00021553

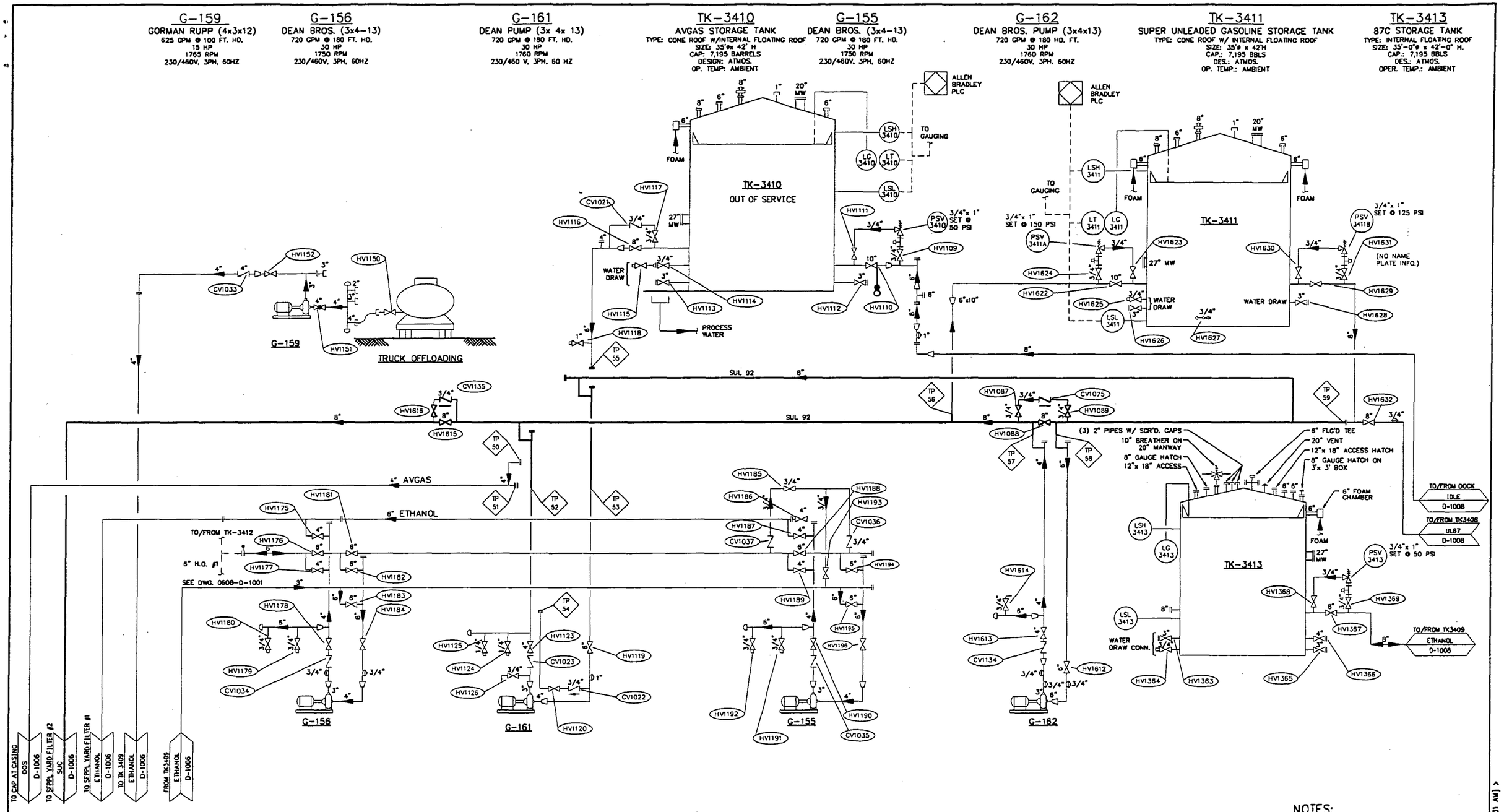

NOTES:

1. THIS DRAWING RECREATED FROM SPEC SERVICES DWGS. 0608-D-1003 THRU D-1010.
2. NEW WORK SHOWN BOLD

DRAWING NO.	REFERENCE DRAWINGS	REV. NO.	DATE	REVISED	DRAWN BY	CKD. BY
0608-D-1000	LEGEND AND SYMBOLS	A	08/19/97	ACCULOAD INSTALLATION - PRELIMINARY FOR HAZOP	DAB	
0608-D-1006	REFINED PRODUCTS SYSTEM TANK FARM NO.2					
0608-D-1008	REFINED PRODUCTS SYSTEM TANK FARM NO.2					
0608-D-1001	HEATING OIL SYSTEM					

TOSCO
Tosco Northwest Company
A Division of Tosco Corporation
5528 NW Doane St.
Portland, Oregon 97210

ALPHA ENGINEERS and CONSTRUCTORS, INC.
19 NW 5th AVE, SUITE 204, PORTLAND, OR 97209 Tel:(503)227-3317/Fax:(503)227-3244

DRAWN BY DAB
CHKD BY
APPD BY
SCALE NONE
DATE 08/19/97

PORTLAND TERMINAL
PORTLAND, OREGON
PIPING & INSTRUMENTATION DIAGRAM
REFINED PRODUCTS SYSTEM
TANK FARM NO.2

DRAWING NO. 0608-D-1007
SHEET 1 OF 1
REV. A

VPD1007A.DWG CCPD: 08/27/97 [TIME: 11:31 AM]

COP0021554

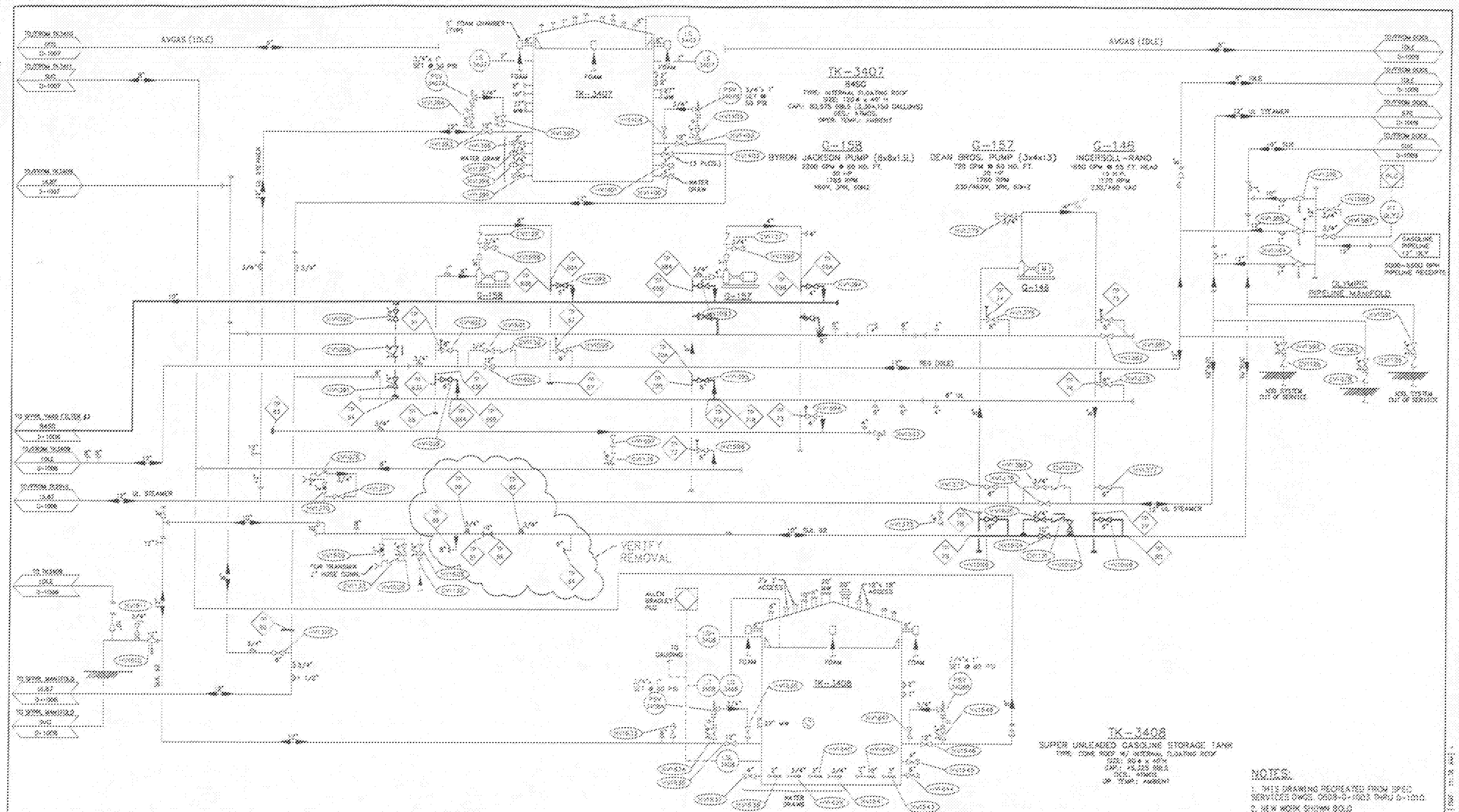

DRAWING NO.	REFERENCE DRAWINGS	REV. NO.	DATE	REVISED	DRAWN BY	REV. BY
0608-D-1000	LEGEND AND SYMBOLS	A	08/19/97	ACCELOAD INSTALLATION - PRELIMINARY FOR HAZOP	DAB	
0608-D-1005	REFINED PRODUCTS SYSTEM TANK FARM NO.2					
0608-D-1007	REFINED PRODUCTS SYSTEM TANK FARM NO.2					
0608-D-1009	REFINED PRODUCTS SYSTEM DOCK AREA					

TOSCO
Tosco Northwest Company
A Division of Tosco Corporation
2318 NW Raleigh St.
Portland, Oregon 97210

ALPHA ENGINEERS and CONSTRUCTORS, INC.
2318 NW RALEIGH ST. PORTLAND, OR 97210 (503) 223-8243

DRAWN BY	DAB
CHECKED BY	
APPROVED BY	
SCALE	NONE
DATE	08/19/97

PORTLAND TERMINAL
PORTLAND, OREGON
PIPING & INSTRUMENTATION DIAGRAM
REFINED PRODUCTS SYSTEM
TANK FARM NO.2

DRAWING NO.	SHEET	REV.
0608-D-1008	1 OF 1	A

COP00021555

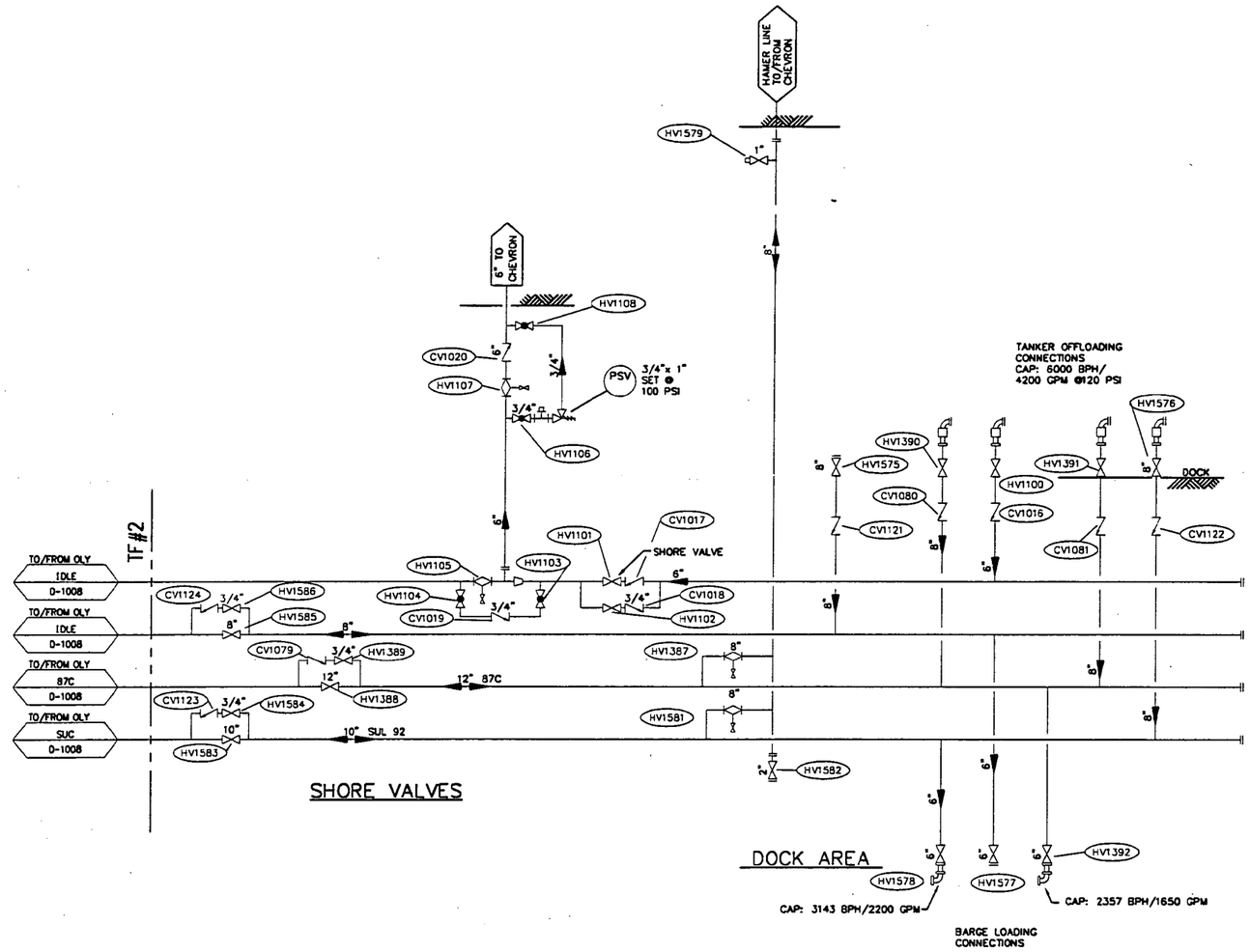

NOTES:

1. THIS DRAWING RECREATED FROM SPEC SERVICES DWGS. 0608-D-1003 THRU D-1010.

DRAWING NO.	REFERENCE DRAWINGS	REV. NO.	DATE	REVISED	DRAWN BY	CKD. BY
0608-D-1000	LEGEND AND SYMBOLS	A	08/19/97	ACCULOAD INSTALLATION - PRELIMINARY FOR HAZOP	DAB	
0608-D-1008	REFINED PRODUCTS SYSTEM TANK FARM NO.2					

TOSCO
Tosco Northwest Company
A Division of Tosco Corporation
5528 NW Doane St.
Portland, Oregon 97210

ALPHA ENGINEERS and CONSTRUCTORS, INC.
19 NW 5th AVE, SUITE 204, PORTLAND, OR. 97209 Tel:(503)227-3317/Fax:(503)227-3244

DRAWN BY	DAB
CHKD BY	
APPD BY	
SCALE	NONE
DATE	08/19/97

PORTLAND TERMINAL
PORTLAND, OREGON
PIPING & INSTRUMENTATION DIAGRAM
REFINED PRODUCTS SYSTEM
DOCK AREA

DRAWING NO.	SHEET	REV.
0608-D-1009	1 OF 1	A

\P01009A.DWG <CPD: 08/27/97 [TIME: 11:37 AM] >

COP00021556

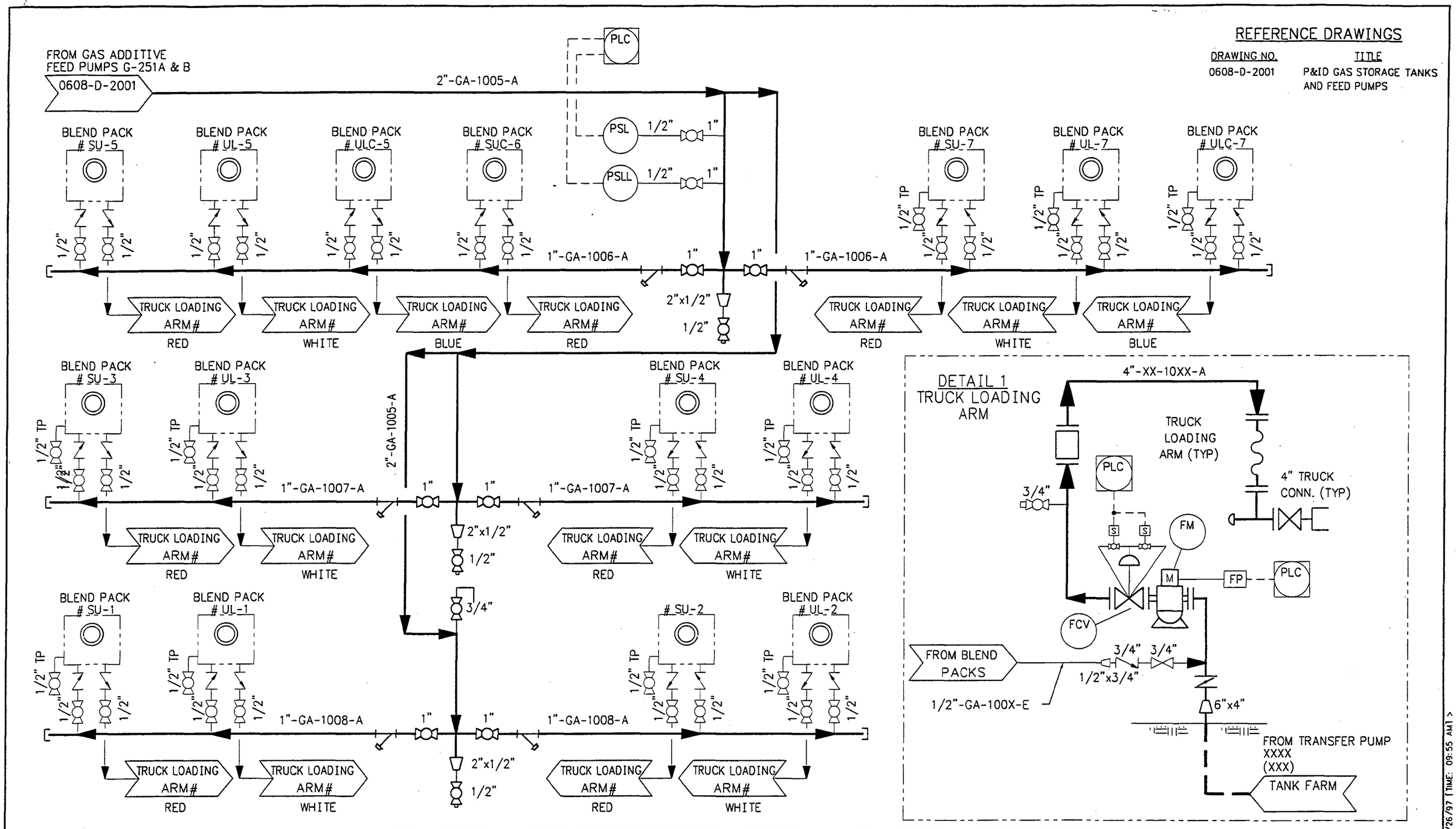

REFERENCE DRAWINGS

DRAWING NO.	TITLE
0608-D-2001	P&ID GAS STORAGE TANKS AND FEED PUMPS

REV. NO.	DATE	REVISED	BY	CKD. BY
0	03/24/95	AS-BUILT	DAB	WHB

TOSCO
Tosco Northwest Company
A Division of Tosco Corporation
5528 NW Doane St.
Portland, Oregon 97210

ALPHA ENGINEERS and CONSTRUCTORS, INC.
19 NW 5th AVE, SUITE 204, PORTLAND, OR. 97209 Tel:(503)227-3317/Fax:(503)227-3244

DRAWN BY	DAB
CHKD BY	WHB
APPD BY	
SCALE	NONE
DATE	03/07/95

PORTAND TERMINAL
PORTLAND, OREGON
PIPING & INSTRUMENTATION DIAGRAM
GASOLINE ADDITIVE SYSTEM
BLEND PACK MANIFOLD

DRAWING NO.	SHEET	REV.
0608-D-2002	1 OF 1	0

60B02020 DWG <CPD: 08/26/97 TIME: 09:55 AM1>

COP00021557

NEW 8-28-97

TOSCO

Tosco Northwest Company
A Division of Tosco Corporation

PORTLAND MARKETING TERMINAL

5528 NW DOANE AVE., PORTLAND, OREGON 97209

LIST OF PIPING & INSTRUMENTATION DIAGRAMS

DWG NO.	TITLE
GENERAL	
× 0608-D-0001	DRAWING INDEX
PIPING	
× 0608-D-1000	LEGEND & SYMBOLS
REFINED PRODUCTS	
× 0608-D-1001	HEATING OIL SYSTEM
× 0608-D-1002	DIESEL SYSTEM
× 0608-D-1003	DIESEL SYSTEM
× 0608-D-1004	REFINED PRODUCTS TRUCK LOADING RACK
× 0608-D-1005	REFINED PRODUCTS SPPL YARD
× 0608-D-1006	REFINED PRODUCTS TANK FARM NO.2
× 0608-D-1007	REFINED PRODUCTS TANK FARM NO.2
× 0608-D-1008	REFINED PRODUCTS TANK FARM NO.2
× 0608-D-1009	REFINED PRODUCTS SYSTEM DOCK AREA
× 0608-D-1010 SHT. 1 OF 2	COMBINED D-1003 AND D-1004
× 0608-D-1010 SHT. 2 OF 2	COMBINED D-1005 THRU D-1008
0608-D-1011	MOD & IFD SYSTEM SHEET 1 OF 3
0608-D-1012	MOD & IFD SYSTEM SHEET 2 OF 3
0608-D-1013	MOD & IFD SYSTEM SHEET 3 OF 3
0608-D-1025	TUG BOAT FUELING & LUBE OIL
0608-D-1030	TRANSMIX SYSTEM
ADDITIVES	
0608-D-2001	GASOLINE ADDITIVE SYSTEM FEED AND TRANSFER PUMPS
× 0608-D-2002	GASOLINE ADDITIVE SYSTEM BLEND PACK MANIFOLD
0608-D-2003	RED DYE ADDITIVE SYSTEM
0608-D-2004	GASOLINE ADDITIVE SYSTEM

DWG NO.	TITLE
LUBE OIL	
1608-D-3010	LOWER LUBE OIL TANKS 4405 THRU 4408
1608-D-3011	LOWER LUBE OIL TANKS 4401 THRU 4404
1608-D-3012	LOWER LUBE OIL TANKS 4397 THRU 4400
1608-D-3013	LOWER LUBE OIL TANKS 4392 THRU 4395
1608-D-3014	LOWER LUBE OIL TANKS 4388 THRU 4391
1608-D-3020	BLENDING
1608-D-3021	LUBE OIL BLENDER STREAM 2
1608-D-3100	LUBE OIL TANK CONVERSION (TANK 4320 & D-264)
1608-D-3103	LUBE OIL TANK CONVERSION (LUBE OIL TUR)
1608-D-3104	LUBE OIL TANK CONVERSION (TANK 4321 & D-265)
1608-D-3105	LUBE OIL TANK CONVERSION (LUBE OIL TUR)
1608-D-3106	LUBE OIL TANK CONVERSION (TANK 4322 & D-266)
1608-D-3107	LUBE OIL TANK CONVERSION (LUBE OIL TUR)
1608-D-3108	LUBE OIL TANK CONVERSION (TANK 4323 & D-267)
1608-D-3109	LUBE OIL TANK CONVERSION (LUBE OIL TUR)
VAPOR RECOVERY	
0608-D-5001	VAPOR RECOVERY SYSTEM
FIRE PROTECTION SYSTEM	
0608-D-6001	NOT ISSUED
PROCESS AND STORM WATER SYSTEM	
0608-D-7000	PW ID SYMBOLS
0608-D-7001	STORM WATER SYSTEM TANK FARM 1
0608-D-7002	STORM WATER SYSTEM TANK FARM 2 AND 3
0608-D-7003	PROCESS DRAIN SYSTEM TANK FARM 1
0608-D-7004	PROCESS DRAIN SYSTEM TANK FARM 2
0608-D-7005	PROCESS DRAIN SYSTEM TANK FARM 3

NOTES:

1. (X) INDICATES DRAWING INCLUDED FOR ACCELOAD PROJECT HAZOP REVIEW.

DRAWING NO.	REFERENCE DRAWINGS	REV. NO.	DATE	REVISED	DRAWN BY	CHK'D BY
		A	08/19/97	ISSUED FOR ACCELOAD PROJECT HAZOP REVIEW	DAB	DAB

TOSCO
Tosco Northwest Company
A Division of Tosco Corporation
5528 NW Doane St.
Portland, Oregon 97209

ALPHA ENGINEERS and CONSTRUCTORS, INC.
Portland, Oregon

DRAWN BY	D.A.BRYSON
CHK'D BY	DAB
APP'D BY	KJP
SCALE	NONE
DATE	08/19/97

PORTLAND TERMINAL
PORTLAND, OREGON
DRAWING INDEX

DRAWING NO.	SHEET	REV.
0608-D-0001	1 OF 1	A

COP00021558

TOSCO

Tosco Northwest Company
A Division of Tosco Corporation

PORTLAND MARKETING TERMINAL

5528 NW DOANE AVE., PORTLAND, OREGON 97209

LIST OF PIPING & INSTRUMENTATION DIAGRAMS

DWG NO.	TITLE
GENERAL	
* 0608-D-0001	DRAWING INDEX
P&ID'S	
* 0608-D-1000	LEGEND & SYMBOLS
REFINED PRODUCTS	
* 0608-D-1001	HEATING OIL SYSTEM
* 0608-D-1002	DIESEL SYSTEM
* 0608-D-1003	DIESEL SYSTEM
* 0608-D-1004	REFINED PRODUCTS TRUCK LOADING RACK
* 0608-D-1005	REFINED PRODUCTS SFPPL YARD
* 0608-D-1006	REFINED PRODUCTS TANK FARM NO.2
* 0608-D-1007	REFINED PRODUCTS TANK FARM NO.2
* 0608-D-1008	REFINED PRODUCTS TANK FARM NO.2
* 0608-D-1009	REFINED PRODUCTS SYSTEM DOCK AREA
* 0608-D-1010 SHT. 1 OF 2	COMBINED D-1003 AND D-1004
* 0608-D-1010 SHT. 2 OF 2	COMBINED D-1005 THRU D-1009
0608-D-1011	MDO & IFO SYSTEM SHEET 1 OF 3
0608-D-1012	MDO & IFO SYSTEM SHEET 2 OF 3
0608-D-1013	MDO & IFO SYSTEM SHEET 3 OF 3
0608-D-1025	TUG BOAT FUELING & LUBE OIL
0608-D-1030	TRANSMIX SYSTEM
ADDITIVES	
0608-D-2001	GASOLINE ADDITIVE SYSTEM FEED AND TRANSFER PUMPS
* 0608-D-2002	GASOLINE ADDITIVE SYSTEM BLEND PACK MANIFOLD
0608-D-2003	RED DYE ADDITIVE SYSTEM
0608-D-2004	GASOLINE ADDITIVE SYSTEM

DWG NO.	TITLE
LUBE OIL	
1608-D-3010	LOWER LUBE CELL TANKS 4405 THRU 4408
1608-D-3011	LOWER LUBE CELL TANKS 4401 THRU 4405
1608-D-3012	LOWER LUBE CELL TANKS 4397 THRU 4400
1608-D-3013	LOWER LUBE CELL TANKS 4392 THRU 4395
1608-D-3014	LOWER LUBE CELL TANKS 4388 THRU 4391
1608-D-3020	BLENDING
1608-D-3021	LUBE OIL BLENDER STREAM 2
1608-D-3102	LUBE OIL TANK CONVERSION (TANK 4320 & G-264)
1608-D-3103	LUBE OIL TANK CONVERSION (LUBE OIL TLR)
1608-D-3104	LUBE OIL TANK CONVERSION (TANK 4321 & G-265)
1608-D-3105	LUBE OIL TANK CONVERSION (LUBE OIL TLR)
1608-D-3106	LUBE OIL TANK CONVERSION (TANK 4322 & G-266)
1608-D-3107	LUBE OIL TANK CONVERSION (LUBE OIL TLR)
1608-D-3108	LUBE OIL TANK CONVERSION (TANK 4323 & G-267)
1608-D-3109	LUBE OIL TANK CONVERSION (LUBE OIL TLR)
VAPOR RECOVERY	
0608-D-5001	VAPOR RECOVERY SYSTEM
FIRE PROTECTION SYSTEM	
0608-D-6001	NOT ISSUED
PROCESS AND STORM WATER SYSTEM	
0608-D-7000	P& ID SYMBOLS
0608-D-7001	STORM WATER SYSTEM TANK FARM 1
0608-D-7002	STORM WATER SYSTEM TANK FARM 2 AND 3
0608-D-7003	PROCESS DRAIN SYSTEM TANK FARM 1
0608-D-7004	PROCESS DRAIN SYSTEM TANK FARM 2
0608-D-7005	PROCESS DRAIN SYSTEM TANK FARM 3

NOTES:

1. (*) INDICATES DRAWING INCLUDED FOR ACCULOAD PROJECT HAZOP REVIEW.

DRAWING NO.	REFERENCE DRAWINGS	REV. NO.	DATE	REVISED	DRAWN BY	CKD. BY
		A	08/19/97	ISSUED FOR ACCULOAD PROJECT HAZOP REVIEW	DAB	DAB

TOSCO
Tosco Northwest Company
A Division of Tosco Corporation
5528 NW Doane St.
Portland, Oregon 97210

ALPHA ENGINEERS and CONSTRUCTORS, INC.
19 NW 5th AVE. SUITE 204, PORTLAND, OR. 97209 Tel:(503)227-3317/Fax:(503)227-3244

DRAWN BY	D.A.BYNUM
CHKD BY	DAB
APPD BY	KJP
SCALE	NONE
DATE	08/19/97

PORTLAND TERMINAL
PORTLAND, OREGON
DRAWING INDEX

DRAWING NO.	SHEET	REV.
0608-D-0001	1 OF 1	A

COP00021559

LINE SYMBOLS

- MAIN PROCESS
- SECONDARY PROCESS
- CAPILLARY TUBE
- ELECTRICAL SIGNAL
- HYDRAULIC LINE
- PNUEMATIC SIGNAL
- ELECTROMAGNETIC OR SONIC SIGNAL
- INTERNAL SYSTEM LINK (SOFT WARE DATA LINK)
- PACKAGED EQUIPMENT
- SPEC BREAK OR PHYSICAL LOCATION BREAK
- DRAWING NO. COORDINATE — FLOW TO OR FROM ANOTHER DRAWING
- INSTRUMENTATION REFERENCE FLAG

INSULATION

THICKNESS IN INCHES — 2"H

TYPE	
A	ASBESTOS
H	HOT
C	COLD
PP	PERSONAL PROTECTION
FP	FREEZE PROTECTION

INSULATION WITH HEAT TRACE

E/T

TYPE	
E/T	ELECTRIC TRACE
S/T	STEAM TRACE

VALVE SYMBOLS

- GATE VALVE
- BUTTERFLY VALVE
- BALL VALVE
- GLOBE VALVE
- CHECK VALVE
- PLUG VALVE
- RELIEF VALVE
- THREE-WAY SOLENOID VALVE
- FOUR-WAY SOLENOID VALVE
- NEEDLE VALVE
- COCK VALVE
- SLIDE VALVE
- TWIN SEAL VALVE

VALVE OPERATORS

- CONTROL VALVE
- PISTION OPERATED VALVE
- SOLENOID OPERATED VALVE
- PRESSURE CONTROL VALVE INTERGRAL SENSING
- PRESSURE CONTROL VALVE EXTERNAL SENSING
- DIGITAL CONTROL VALVE

VALVE ACTUATORS

- DIAPHRAGM
- MOTOR
- SOLENOID
- CYLINDER
- HAND ACTUATOR
- FLOAT

MISC. SYMBOLS

- TURBINE METER
- POSITIVE DISPLACEMENT METER
- MIXER
- REDUCER
- Y-TYPE STAINER
- BASKET STRAINER
- HOSE
- UNION
- ORIFICE FLANGE
- FLANGES
- HOSE CONNECTION
- EXPANSION JOINT
- DIAPHRAGM SEAL
- TIE POINT — SP SPECIALITY ITEM
- HOSE
- FLEXIBLE COUPLING
- FLAT OR CONICAL SCREEN MOUNTED BETWEEN FLANGES
- IA-INSTRUMENT AIR PA-PROCESS AIR
- INLINE FILTER
- REMOVABLE SPOOL
- MANHOLE COVER
- CAP OR PLUG
- PIG LAUNCHER/ RETRIEVER STATION
- PIG TRIP INDICATOR
- VENT
- SPRAY NOZZLE
- TRAP
- FLOW SIGHT GLASS
- FLAME ARRESTOR
- DRAIN
- EXPANSION JOINT
- FLOW STRAIGTENER

INSTRUMENT IDENTIFICATION

- LOCAL MOUNTED,NO PANEL
- MAIN PANEL MOUNTED
- LOCAL PANEL MOUNTED
- INSIDE MAIN PANEL MOUNTED
- INSIDE LOCAL PANEL MOUNTED
- CRT SHARED DISPLAY, SHARED CONTROL
- NON-DISPLAYED INTERLOCK PERFORMED BY DCS OR PLC
- INTERLOCK
- INDICATOR LIGHT

FIRST LETTER — SUCCEEDING LETTERS

PCV 1000

LOOP NUMBER

FIRST LETTER

A	ANALYSIS	K	TIME
B	BURNER/FLAME	L	LEVEL/PILOT LIGHT
C	CONDUCTIVITY	M	MOTOR
D	DENSITY	P	PRESSURE
E	VOLTAGE	Q	QUANTITY/EVENT
F	FLOW	S	SPEED
G	GAGING	T	TEMPERATURE
H	HAND	V	VISCOSITY/VIBRATION
I	CURRENT	W	WEIGHT
J	POWER	Y	EVENT, STATE OR PRESENCE
		Z	POSITION

SUCCEEDING LETTERS

A	ALARM	O	ORIFICE
C	CONTROL	Q	TOTALIZER
D	DIFFERENTIAL	S	SWITCH
E	PRIMARY ELEMENT	SE	SAFETY ELEMENT
F	RATIO	SV	SAFETY ELEMENT
G	GLASS	T	TRANSMITTER
H	HIGH/OPEN	V	VALVE/DAMPER/LOUVER
I	INDICATING	W	WELL
J	REMOTE AMPLIFIER	Y	TRANSDUCER
L	PILOT LIGHT/ LOW/CLOSED	Z	FINAL CONTROL DEVICE
P	PULSER		

COLOR CODING

GREEN	NORMAL OPERATION, START, OPEN, ON
RED	STOP, HIGHEST PRIORITY ALARM, CLOSED, OFF

EQUIPMENT

- HORIZONTAL CENTRIFUGAL PUMP
- INLINE CENTRIFUGAL PUMP
- POSITIVE DISPLACEMENT PUMP
- METERING PUMP
- DOUBLE DIAPHRAGM PUMP
- SUMP PUMP
- MIXER
- EJECTOR
- COMPRESSOR
- ATMOSPHERIC TANK
- FLOATING ROOF TANK
- VESSEL
- CONE BOTTOM TANK OR BIN

LINE IDENTIFICATION

2"-GA-1001-A — LINE IDENTIFICATION

- MATERIAL SPECIFICATION
- LINE NUMBER
- SERVICE
- SIZE

CODE	CLASS - MATERIAL
A1	CLASS 150 - C.S.
B	CLASS 300 - C.S.
C	CLASS 150 - C.S.
E	CLASS 150 - S.S.
K1	CLASS 150 - CPVC
L1	CLASS 150 - PVC

LINE SERVICE

IA	INSTRUMENT AIR
PA	PLANT AIR
GA	GASOLINE ADDITIVE
RD	RED DYE ADDITIVE
STM	STEAM
DO	DIESEL
87B	87 OCTANE BLENDEDGASOLINE
87C	87 OCTANE CLEAR GASOLINE
SUC	92 OCTANE CLEAR GASOLINE
84G	84 OCTANE SUBGRADE GASOLINE
HO	HEATING OIL
LO	LUBE OIL
AV	AVIATION GAS
ETH	ETHANOL
AP	PROCESS AIR
CW	TREATED WATER
OW	OILY WATER

- HV1001 — MANUAL VALVE TAG NUMBER
- CV1001 — CHECK VALVE TAG NUMBER

ABBREVIATIONS

AOV	AIR OPERATED VALVE
ATM	ATMOSHERE
BFP	BACK FLOW PREVENTER
BOP	BOTTOM OF PIPE
CONC	CONCENTRIC
CS	CARBON STEEL
ECC	ECCENTRIC
FC	FAIL CLOSED
FF	FLAT FACE
FO	FAIL OPEN
HOA	HAND-OFF-AUTO-SWITCH
LC	LOCK CLOSED
LG	LEVEL GAUGE
MOV	MOTOR OPERATED VALVE
NC	NORMALLY CLOSED
NO	NORMALLY OPEN
RF	RAISED FACE
SG	SIGHT GLASS
SP	SAMPLE PORT
ST	STEAM TRACED
TOS	TOP OF STEEL
TP	TEST PORT
TYP	TYPICAL

DRAWING NUMBER IDENTIFICATION

X-XXXX

- DRAWING NUMBER
- DISIPLINE CODE

A	ARCHITECTURAL
C	CIVIL
D	DIAGRAMS (PFD'S & PID'S)
E	ELECTRICAL
F	FIGURES
I	INSTRUMENTATION
L	LOOP DIAGRAMS
M	MECHANICAL
P	PIPING
R	REMOVAL/DEMOLITION
S	STRUCTURAL

DRAWING NO.	REFERENCE DRAWINGS	REV. NO.	DATE	REVISED	DRAWN BY	CKD. BY
		0	07/24/96	ISSUE FOR CONSTRUCTION	DAB	WHB
		1	09/23/96	GENERAL REVISION	DAB	WHB
		2	08/19/97	GENERAL REVISION	DAB	

TOSCO
Tosco Northwest Company
A Division of Tosco Corporation
5528 NW Doane St.
Portland, Oregon 97210

ALPHA ENGINEERS and CONSTRUCTORS, INC.
19 NW 5th AVE, SUITE 204, PORTLAND, OR. 97209 Tel:(503)227-3317/Fax:(503)227-3244

DRAWN BY	DAB
CHKD BY	WHB
APPD BY	KJP
SCALE	NONE
DATE	03/06/95

PORTLAND TERMINAL

PORTLAND, OREGON

PIPING & INSTRUMENTATION DIAGRAM

LEGEND & SYMBOLS

DRAWING NO.	SHEET	REV.
0608-D-1000	1 OF 1	2

\P01000A.DWG <CPD: 08/26/97 [TIME: 08:37 AM] >

COP00021560

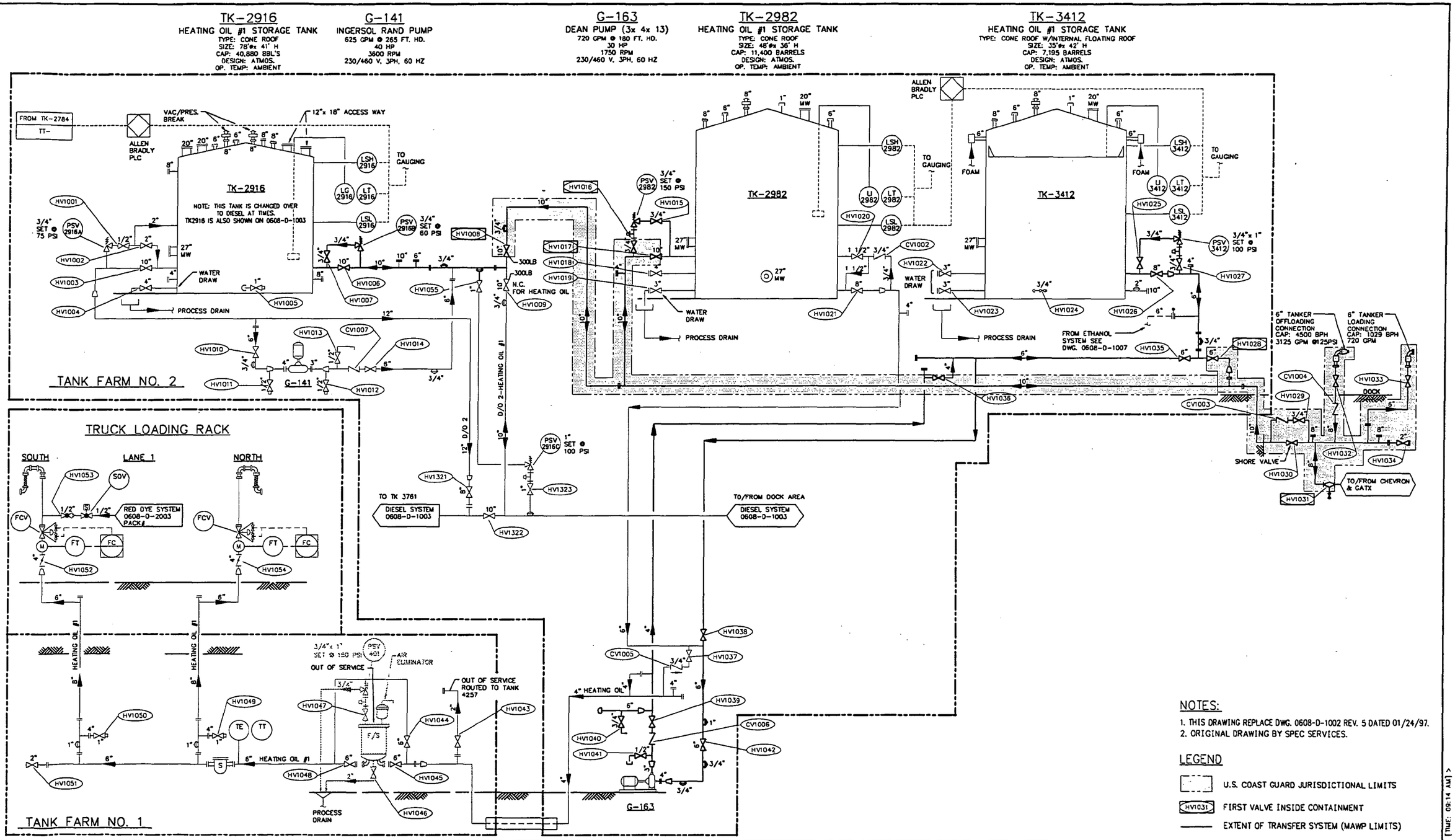

NOTES:

1. THIS DRAWING REPLACE DWG. 0608-D-1002 REV. 5 DATED 01/24/97.
2. ORIGINAL DRAWING BY SPEC SERVICES.

LEGEND

- U.S. COAST GUARD JURISDICTIONAL LIMITS
- HV1031 FIRST VALVE INSIDE CONTAINMENT
- EXTENT OF TRANSFER SYSTEM (MAWP LIMITS)

DRAWING NO.	REFERENCE DRAWINGS	REV. NO.	DATE	REVISED	DRAWN BY	CKD. BY
0608-D-1000	LEGEND AND SYMBOLS	6	08/19/97	REVISED DRAWING NUMBER	DAB	
0608-D-1003	DIESEL SYSTEM	1	11/01/95	ADDED HO TIE-IN TO TANK 2916	DAB	WHB
0608-D-1007	REFINED PRODUCTS TANK FARM NO.2	2	12/07/95	ADDED TANK 2916, PUMP G-141 & DOCK PIPING	DAB	WHB
		3	04/12/96	ADDED VALVE NUMBERS	DAB	WHB
		4	12/04/96	ADDED PUMP AND TANKER CAPACITIES	DAB	WHB
		5	01/24/97	DEFINED COAST GUARD JURISDICTIONAL LIMITS	DAB	

TOSCO
Tosco Northwest Company
A Division of Tosco Corporation
5528 NW Doane St.
Portland, Oregon 97210

ALPHA ENGINEERS and CONSTRUCTORS, INC.
19 NW 5th AVE. SUITE 204, PORTLAND, OR. 97209 Tel:(503)227-3317/Fax:(503)227-3244

DRAWN BY	CGB
CHKD BY	ER
APPD BY	KJP
SCALE	NONE
DATE	03/14/95

PORTLAND TERMINAL
PORTLAND, OREGON
PIPING & INSTRUMENTATION DIAGRAM
HEATING OIL SYSTEM

DRAWING NO.	SHEET	REV.
0608-D-1001	1 OF 1	6

\P01001A.DWG <CPD: 08/26/97 [TIME: 09:14 AM]>

COP0021561

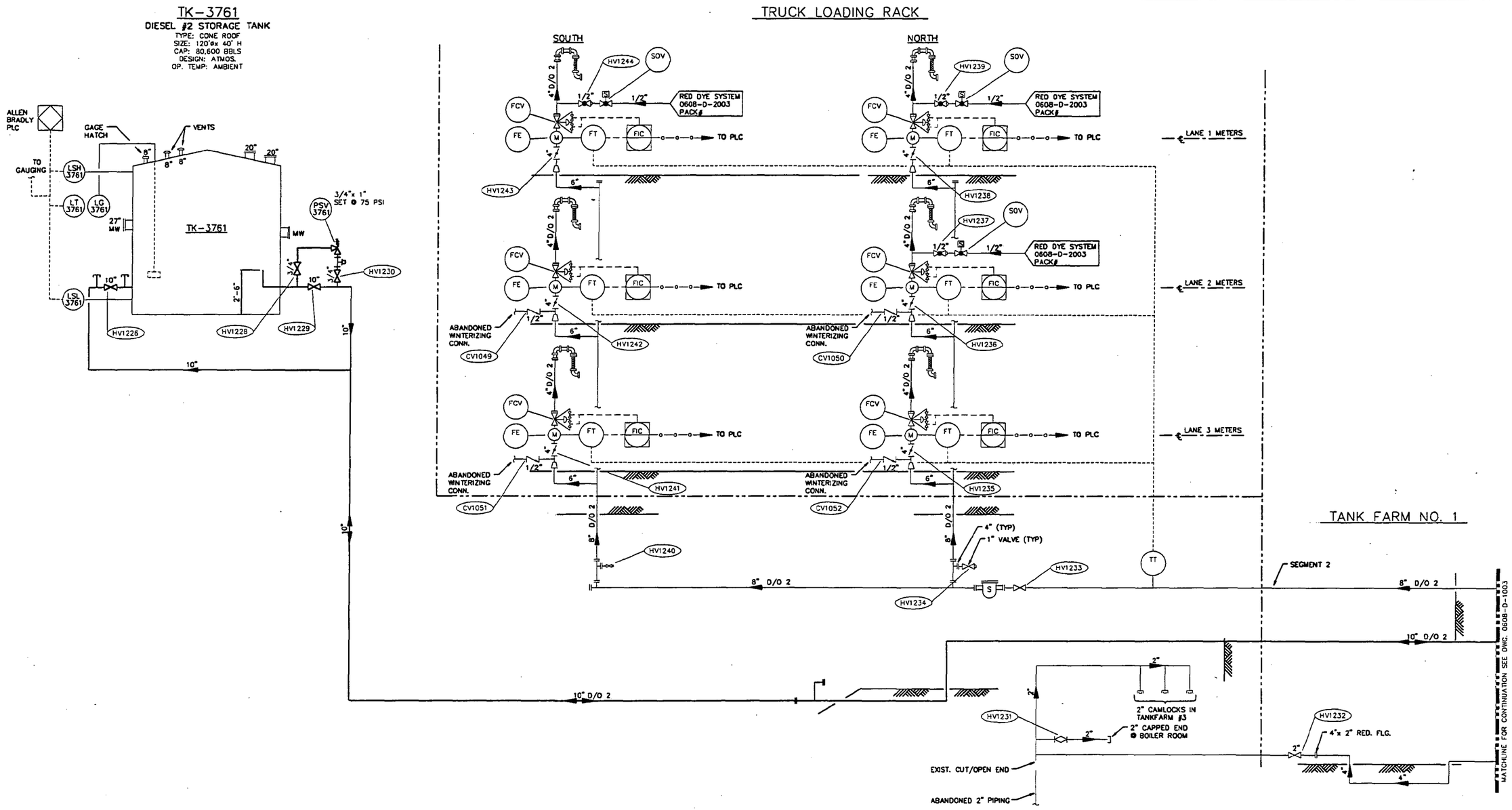

NOTES:

1. THIS DRAWING REPLACES DWG. 0608-D-1005 REV. 2 DATED 01/24/97
2. COAST GUARD LIMITS SHOWN ON DWG. 0608-D-1003
3. ORIGINAL DRAWING BY SPEC SERVICES.

LEGEND

——— EXTENT OF TRANSFER SYSTEM (MAWP LIMITS)

DRAWING NO.	REFERENCE DRAWINGS	REV. NO.	DATE	REVISED	DRAWN BY	CKD. BY
0608-D-1000	LEGEND AND SYMBOLS	0	06/30/95	UNDERGROUND LINE REPLACEMENT	NMD	ECR
0608-D-1003	DIESEL SYSTEM	1	04/15/96	ADDED VALVE NUMBERS	BNJ	DAB
		2	01/24/97	DEFINED COAST GUARD JURISDICATIONAL LIMITS	DAB	WHB
		3	08/19/97	REVISED DRAWING NUMBER	DAB	

TOSCO
Tosco Northwest Company
A Division of Tosco Corporation
5528 NW Doane St.
Portland, Oregon 97210

ALPHA ENGINEERS and CONSTRUCTORS, INC.
19 NW 5th AVE, SUITE 204, PORTLAND, OR. 97209 Tel:(503)227-3317/Fax:(503)227-3244

DRAWN BY	CGB
CHKD BY	ER
APPD BY	KJP
SCALE	NONE
DATE	03/31/95

PORTLAND TERMINAL
PORTLAND, OREGON
PIPING & INSTRUMENTATION DIAGRAM
DIESEL OIL SYSTEM

DRAWING NO.	SHEET	REV.
0608-D-1002	1 OF 1	3

\PD1002A.DWG <CPD: 08/28/97 [TIME: 09:10 AM]>

COP0021562

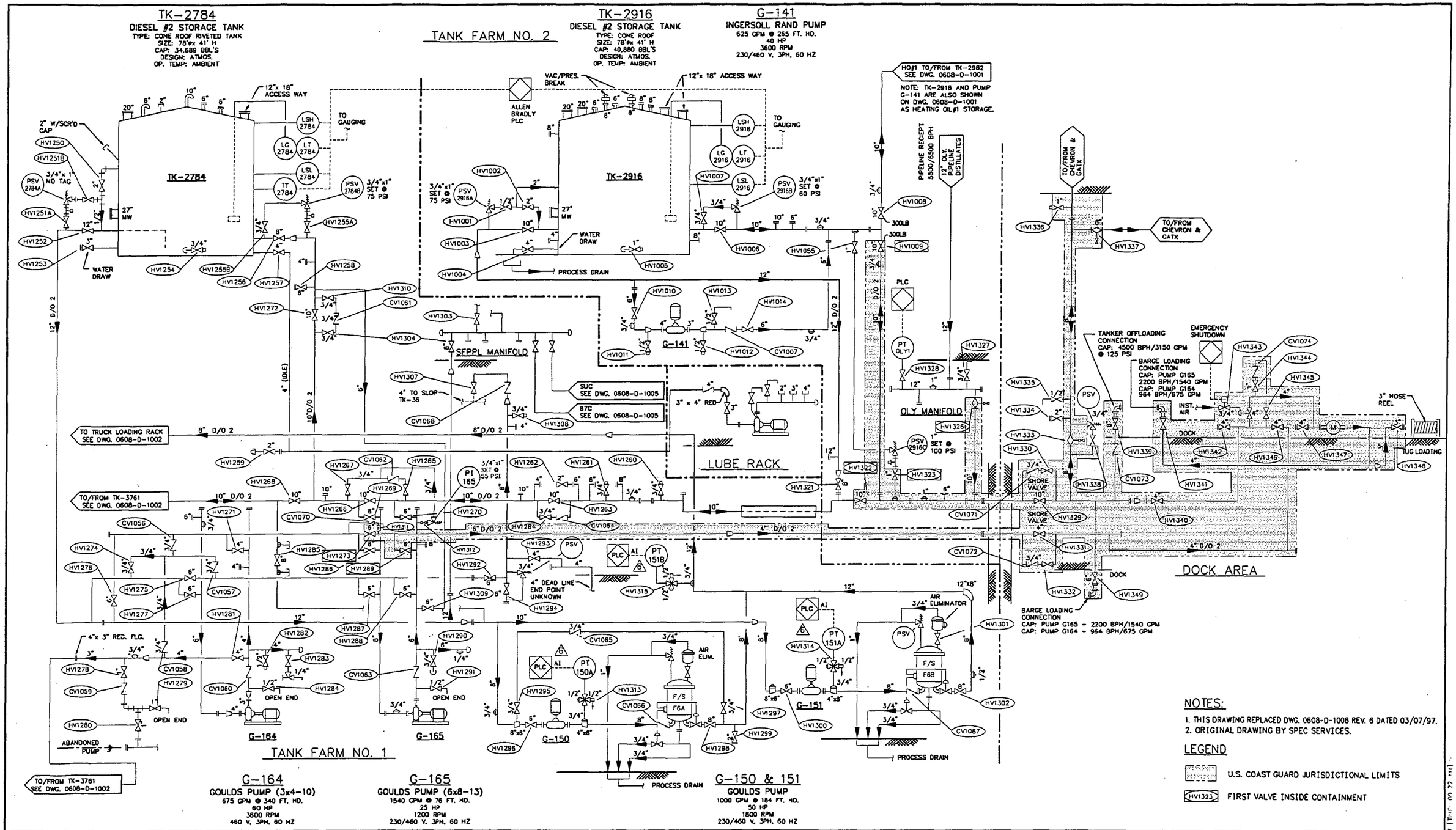

DRAWING NO.	REFERENCE DRAWINGS	REV. NO.	DATE	REVISED	DRAWN BY	CKD. BY
0608-D-1000	LEGEND AND SYMBOLS	7	08/19/97	REVISED DRAWING NUMBERS	DAB	
0608-D-1001	HEATING OIL SYSTEM	2	12/07/95	GENERAL REVISION, UPDATED PER HAZOP	DAB	WHB
0608-D-1002	DIESEL SYSTEM	3	04/15/96	ADDED VALVE NUMBERS	DAB	WHB
0608-D-1005	REFINED PRODUCTS SYTEM SFPPL YARD	4	08/09/96	ADDED CROSS OVER AT TANK 2784	DAB	WHB
		5	01/24/97	DEFINED COAST GUARD JURISDICTIONAL LIMITS	DAB	WHB
		6	03/07/97	ADDED PT150A, PT151A & B	DAB	WHB

TOSCO
Tosco Northwest Company
A Division of Tosco Corporation
5528 NW Doane St.
Portland, Oregon 97210

ALPHA ENGINEERS and CONSTRUCTORS, INC.
19 NW 5th AVE, SUITE 204, PORTLAND, OR. 97209 Tel:(503)227-3317/Fax:(503)227-3244

DRAWN BY	CGB
CHKD BY	ER
APPD BY	KJP
SCALE	NONE
DATE	03/31/95

PORTLAND TERMINAL
PORTLAND, OREGON
PIPING & INSTRUMENTATION DIAGRAM
DIESEL OIL SYSTEM

DRAWING NO.	SHEET	REV.
0608-D-1003	1 OF 1	7

\PORTLAND\ 0608-D-1003.DGN 03/31/95 07:14:11 Jul 22 09

COP00021563

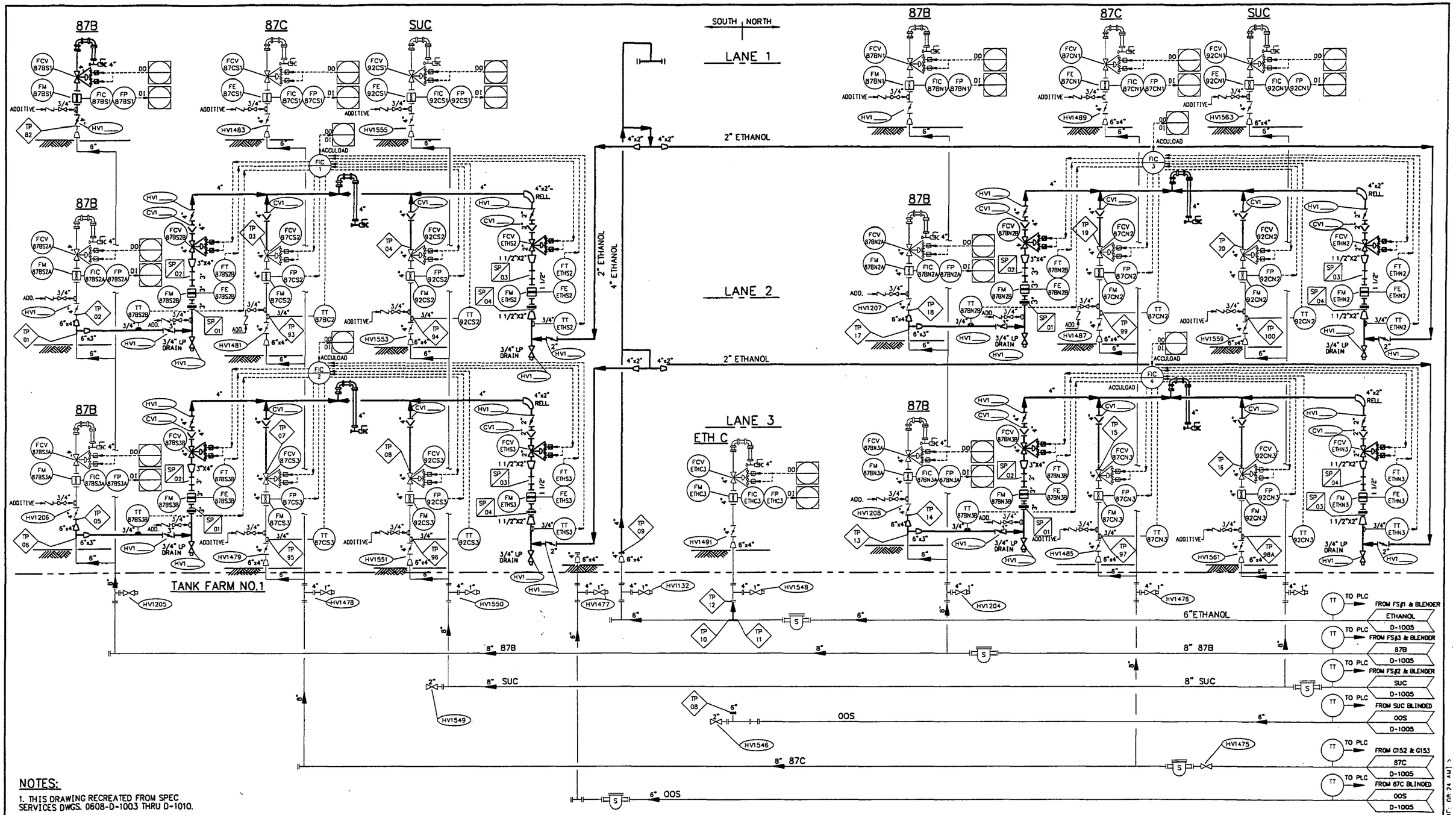

NOTES:

1. THIS DRAWING RECREATED FROM SPEC SERVICES DWGS. 0608-D-1003 THRU D-1010.
2. NEW WORK SHOWN BOLD

DRAWING NO.	REFERENCE DRAWINGS	REV. NO.	DATE	REVISED	DRAWN BY	CKD. BY
0608-D-1000	LEGEND AND SYMBOLS	A	08/19/97	ACCULOAD INSTALLATION - PRELIMINARY FOR HAZOP		
0608-D-1005	REFINED PRODUCTS SYSTEM SFPPL YARD					

TOSCO
Tosco Northwest Company
A Division of Tosco Corporation
5528 NW Doane St.
Portland, Oregon 97210

ALPHA ENGINEERS and CONSTRUCTORS, INC.
19 NW 5th AVE, SUITE 204, PORTLAND, OR. 97209 Tel:(503)227-3317/Fax:(503)227-3244

DRAWN BY DAB
CHKD BY
APPD BY
SCALE NONE
DATE 08/18/97

PORTLAND TERMINAL
PORTLAND, OREGON
PIPING & INSTRUMENTATION DIAGRAM
REFINED PRODUCTS SYSTEM
TRUCK LOADING RACK

DRAWING NO.	SHEET	REV.
0608-D-1004	1 OF 1	A

\P01DIA4.DWG, <CPD: 08/26/97 [THUR, 08:24 AM]>

COP0021564

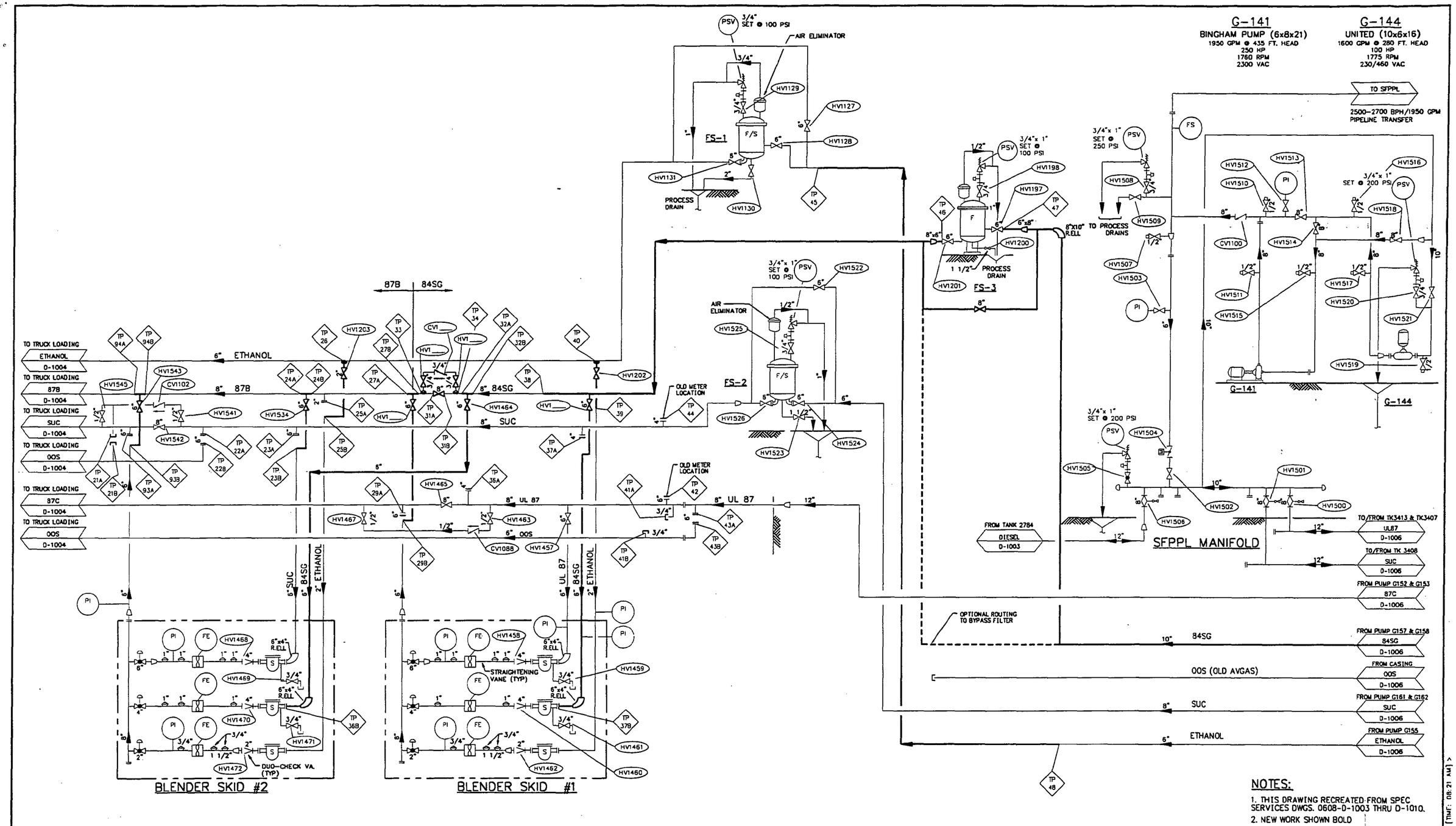

NOTES:

1. THIS DRAWING RECREATED FROM SPEC SERVICES DWGS. 0608-D-1003 THRU D-1010.
2. NEW WORK SHOWN BOLD

DRAWING NO.	REFERENCE DRAWINGS	REV. NO.	DATE	REVISED	DRAWN BY	CKD. BY
0608-D-1000	LEGEND AND SYMBOLS	A	08/19/97	ACCULOAD INSTALLATION - PRELIMINARY FOR HAZOP	DAB	
0608-D-1003	DIESEL SYSTEM					
0608-D-1004	REFINED PRODUCTS SYSTEM TRUCK LOADING RACK					
0608-D-1006	REFINED PRODUCTS SYSTEM TANK FARM NO.2					

TOSCO
Tosco Northwest Company
A Division of Tosco Corporation
5528 NW Doane St.
Portland, Oregon 97210

ALPHA ENGINEERS and CONSTRUCTORS, INC.
19 NW 5th AVE., SUITE 204, PORTLAND, OR. 97209 Tel:(503)227-3317/Fax:(503)227-3244

DRAWN BY	DAB
CHKD BY	
APPD BY	
SCALE	NONE
DATE	03/14/95

PORTLAND TERMINAL
PORTLAND, OREGON
PIPING & INSTRUMENTATION DIAGRAM
REFINED PRODUCTS SYSTEM
SFPPL YARD

DRAWING NO.	SHEET	REV.
0608-D-1005	1 OF 1	A

\PD1005A.DWG <CPD: 08/28/97 [TIME: 08:21 AM]>

COP00021565

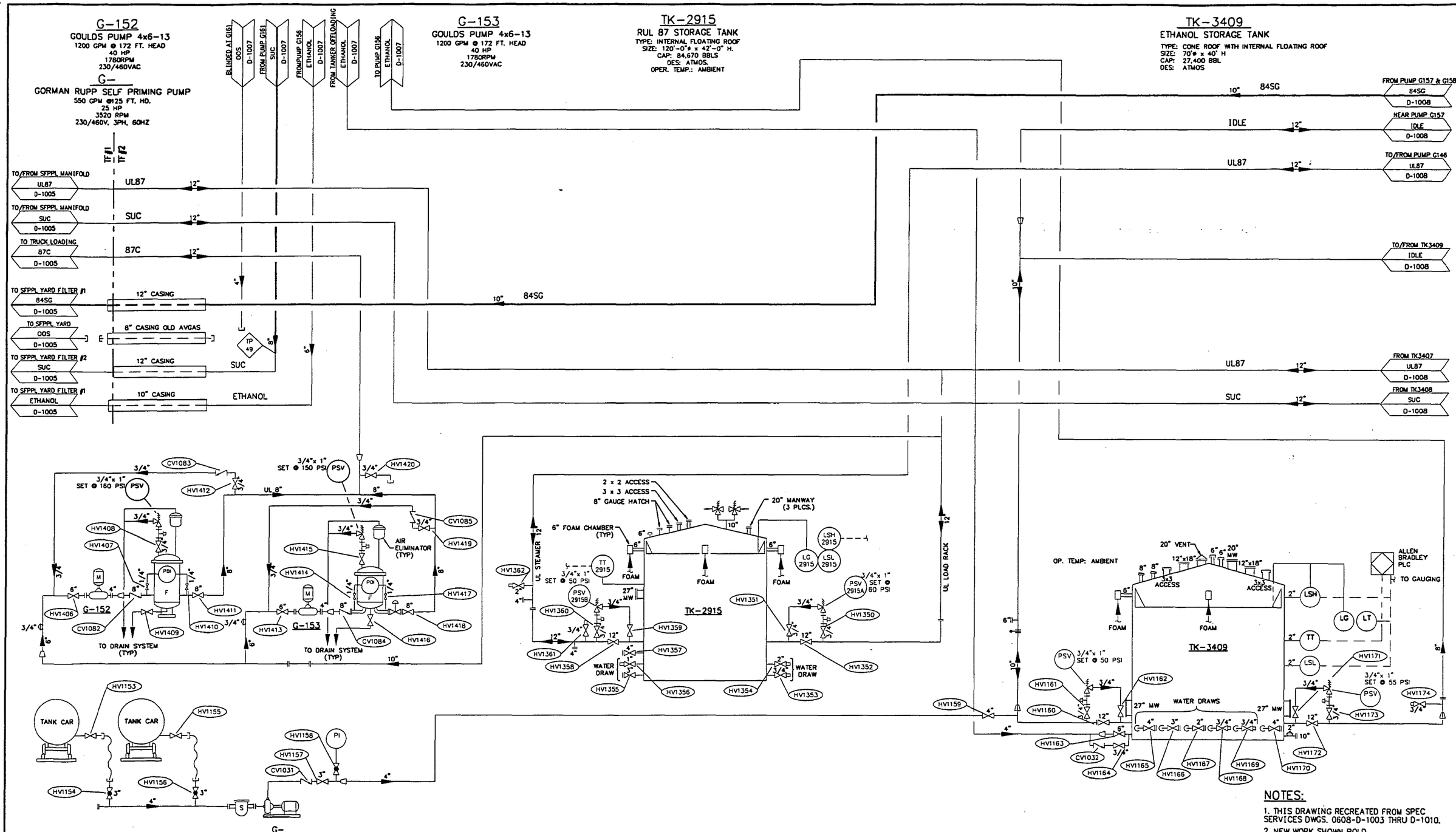

NOTES:

1. THIS DRAWING RECREATED FROM SPEC SERVICES DWGS. 0608-D-1003 THRU D-1010.
2. NEW WORK SHOWN BOLD

DRAWING NO.	REFERENCE DRAWINGS	REV. NO.	DATE	REVISED	DRAWN BY	CKD. BY
0608-D-1000	LEGEND AND SYMBOLS	A	08/19/97	ACCULOAD INSTALLATION - PRELIMINARY FOR HAZOP	DAB	
0608-D-1005	REFINED PRODUCTS SYSTEM SFPPL YARD					
0608-D-1007	REFINED PRODUCTS SYSTEM TANK FARM NO.2					
0608-D-1008	REFINED PRODUCTS SYSTEM TANK FARM NO.2					

TOSCO
Tosco Northwest Company
A Division of Tosco Corporation
5528 NW Doane St.
Portland, Oregon 97210

ALPHA ENGINEERS and CONSTRUCTORS, INC.
19 NW 5th AVE, SUITE 204, PORTLAND, OR. 97209 Tel:(503)227-3317/Fax:(503)227-3244

DRAWN BY	DAB
CHKD BY	
APPD BY	
SCALE	NONE
DATE	08/19/97

PORTLAND TERMINAL
PORTLAND, OREGON
PIPING & INSTRUMENTATION DIAGRAM
REFINED PRODUCTS SYSTEM
TANK FARM NO.2

DRAWING NO.	SHEET	REV.
0608-D-1006	1 OF 1	A

\PD1006A.DWG <CPD: 08/26/97 [TUE: 08:12 AM]>

COP00215666

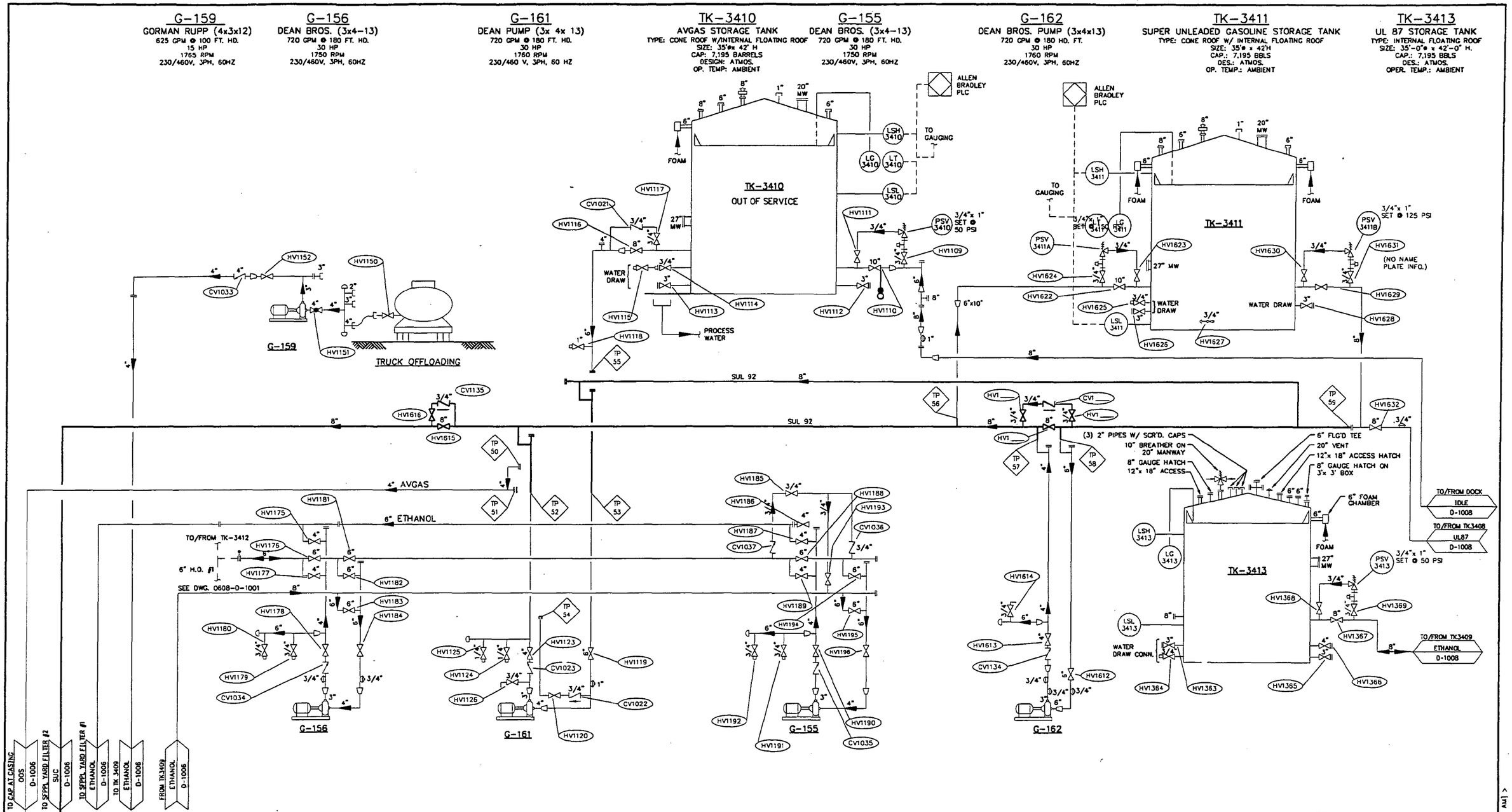

NOTES:

1. THIS DRAWING RECREATED FROM SPEC SERVICES DWGS. 0608-D-1003 THRU D-1010.
2. NEW WORK SHOWN BOLD

DRAWING NO.	REFERENCE DRAWINGS	REV. NO.	DATE	REVISED	DRAWN BY	CKD. BY
0608-D-1000	LEGEND AND SYMBOLS	A	08/19/97	ACCULOAD INSTALLATION - PRELIMINARY FOR HAZOP	DAB	
0608-D-1006	REFINED PRODUCTS SYSTEM TANK FARM NO.2					
0608-D-1008	REFINED PRODUCTS SYSTEM TANK FARM NO.2					
0608-D-1001	HEATING OIL SYSTEM					

TOSCO
Tosco Northwest Company
A Division of Tosco Corporation
5528 NW Doane St.
Portland, Oregon 97210

ALPHA ENGINEERS and CONSTRUCTORS, INC.
19 NW 5th AVE, SUITE 204, PORTLAND, OR. 97209 Tel:(503)227-3317/Fax:(503)227-3244

DRAWN BY	DAB
CHKD BY	
APPD BY	
SCALE	NONE
DATE	08/19/97

PORTLAND TERMINAL
PORTLAND, OREGON
PIPING & INSTRUMENTATION DIAGRAM
REFINED PRODUCTS SYSTEM
TANK FARM NO.2

DRAWING NO.	SHEET	REV.
0608-D-1007	1 OF 1	A

\PD1007A.DWG <CPD: 08/18/97 [TIME: 09:24 AM] >

COP0021567

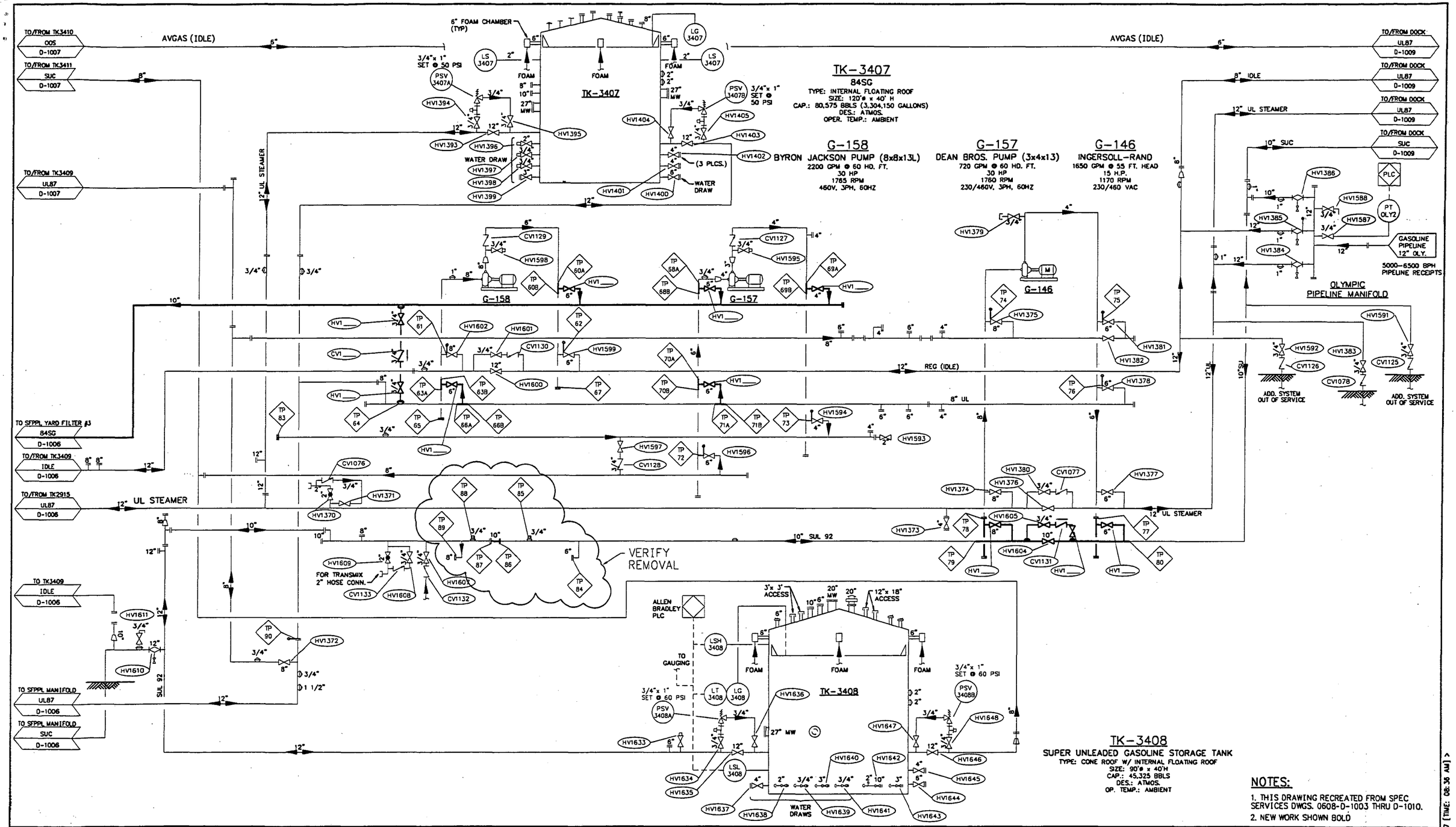

NOTES:

1. THIS DRAWING RECREATED FROM SPEC SERVICES DWGS. 0608-D-1003 THRU D-1010.
2. NEW WORK SHOWN BOLD

DRAWING NO.	REFERENCE DRAWINGS	REV. NO.	DATE	REVISED	DRAWN BY	CKD. BY
0608-D-1000	LEGEND AND SYMBOLS	A	08/19/97	ACCULOAD INSTALLATION - PRELIMINARY FOR HAZOP	DAB	
0608-D-1006	REFINED PRODUCTS SYSTEM TANK FARM NO.2					
0608-D-1007	REFINED PRODUCTS SYSTEM TANK FARM NO.2					
0608-D-1009	REFINED PRODUCTS SYSTEM DOCK AREA					

TOSCO
Tosco Northwest Company
A Division of Tosco Corporation
5528 NW Doane St.
Portland, Oregon 97210

ALPHA ENGINEERS and CONSTRUCTORS, INC.
19 NW 5th AVE, SUITE 204, PORTLAND, OR. 97209 Tel:(503)227-3317/Fax:(503)227-3244

DRAWN BY	DAB
CHKD BY	
APPD BY	
SCALE	NONE
DATE	08/19/97

PORTLAND TERMINAL
PORTLAND, OREGON
PIPING & INSTRUMENTATION DIAGRAM
REFINED PRODUCTS SYSTEM
TANK FARM NO.2

DRAWING NO.	SHEET	REV.
0608-D-1008	1 OF 1	A

\P01008A.DWG <CPD: 08/27/97 [TIME: 08:36 AM] >

COP00021568

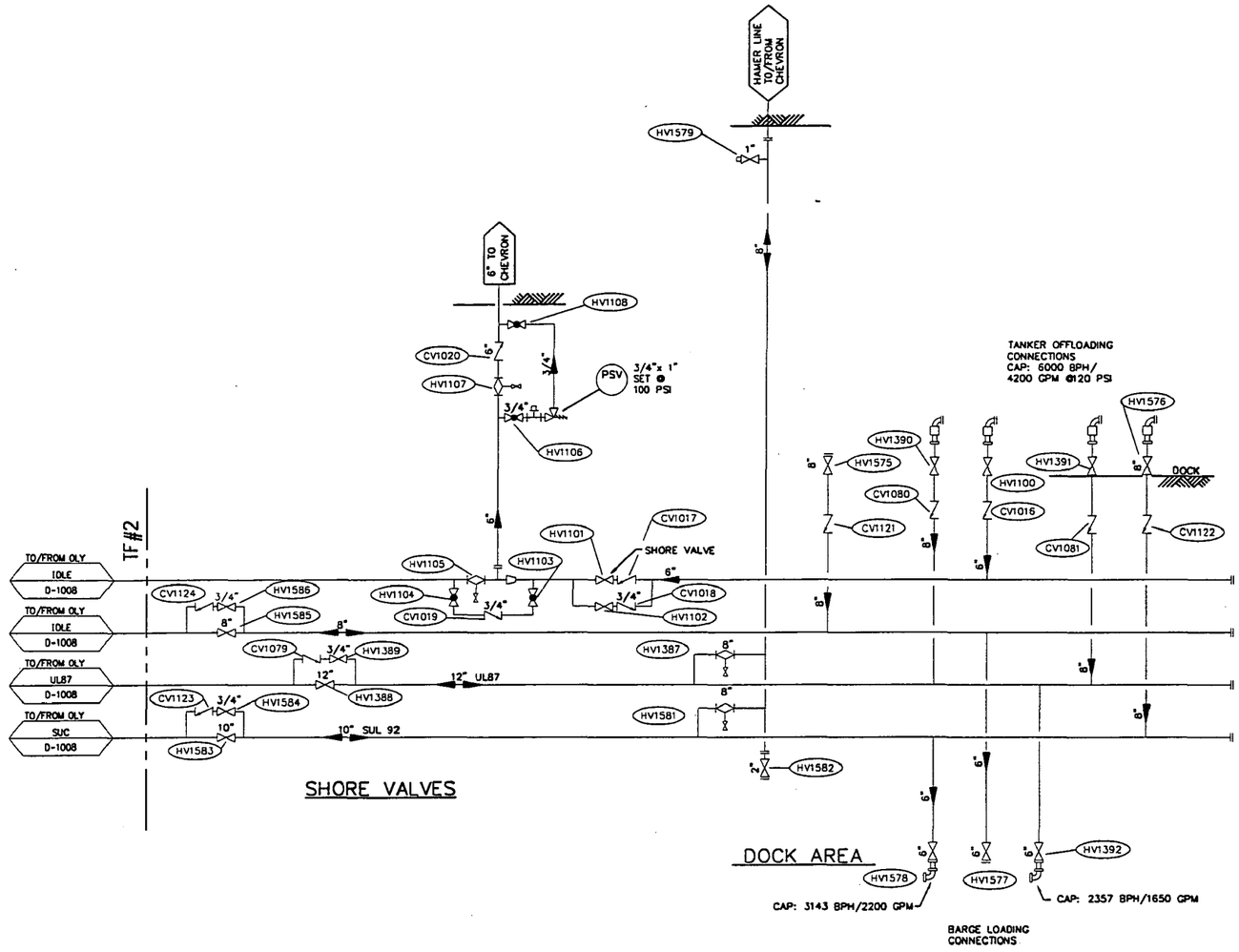

NOTES:

1. THIS DRAWING RECREATED FROM SPEC SERVICES DWGS. 0608-D-1003 THRU D-1010.

DRAWING NO.	REFERENCE DRAWINGS	REV. NO.	DATE	REVISED	DRAWN BY	CKD. BY
0608-D-1000	LEGEND AND SYMBOLS	A	08/19/97	ACCULOAD INSTALLATION - PRELIMINARY FOR HAZOP	DAB	
0608-D-1008	REFINED PRODUCTS SYSTEM TANK FARM NO.2					

TOSCO
Tosco Northwest Company
A Division of Tosco Corporation
5528 NW Doane St.
Portland, Oregon 97210

ALPHA ENGINEERS and CONSTRUCTORS, INC.
19 NW 5th AVE, SUITE 204, PORTLAND, OR. 97209 Tel:(503)227-3317/Fax:(503)227-3244

DRAWN BY	DAB
CHKD BY	
APPD BY	
SCALE	NONE
DATE	08/19/97

PORTLAND TERMINAL
PORTLAND, OREGON
PIPING & INSTRUMENTATION DIAGRAM
REFINED PRODUCTS SYSTEM
DOCK AREA

DRAWING NO.	SHEET	REV.
0608-D-1009	1 OF 1	A

\PD1009A.DWG, <CPP: 08/26/97 [Tue: 07:56 AM]>

COP00021569

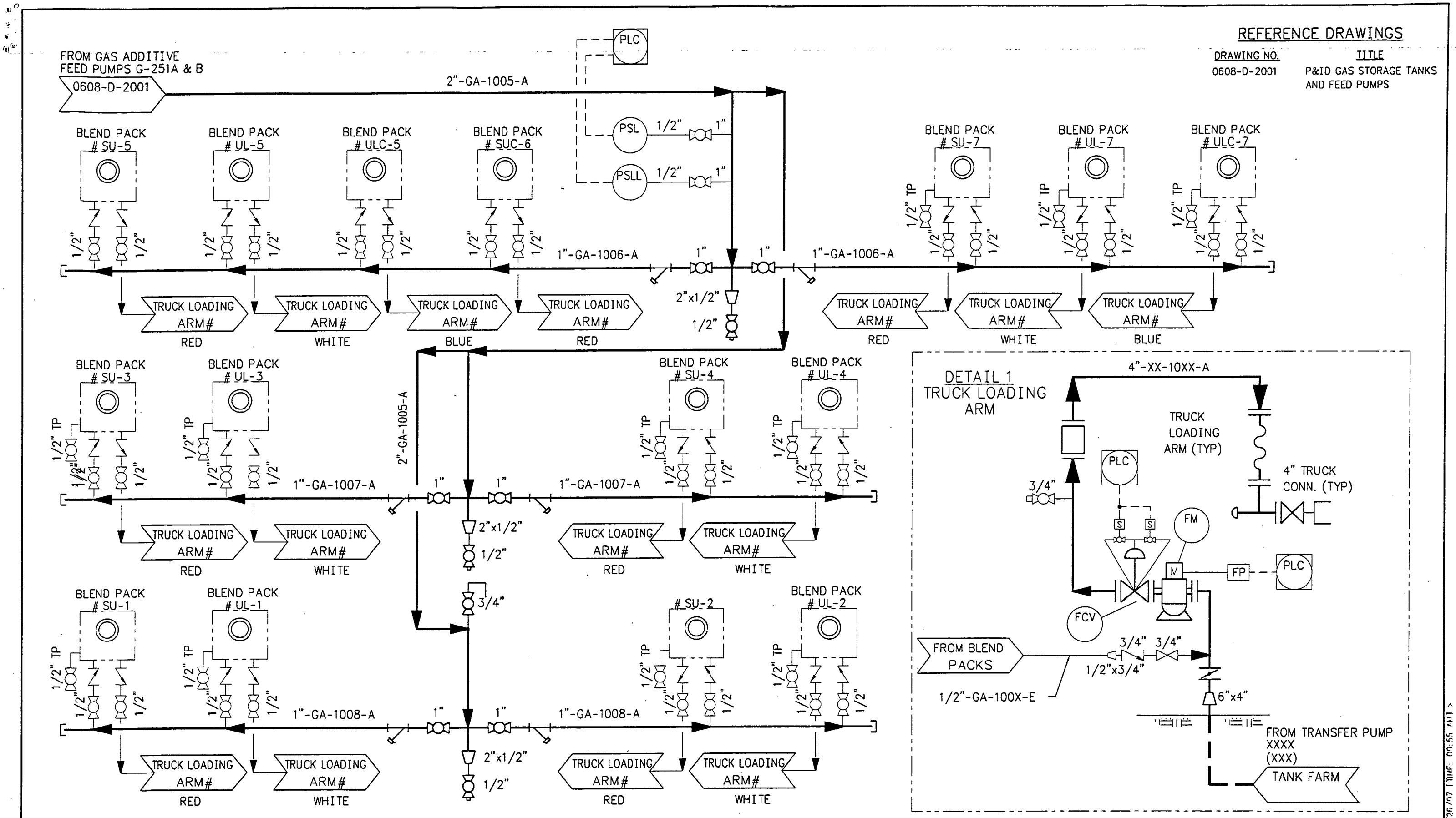

REV. NO.	DATE	REVISED	BY	CKD. BY
0	03/24/95	AS-BUILT	DAB	WHB

TOSCO
Tosco Northwest Company
A Division of Tosco Corporation
5528 NW Doane St.
Portland, Oregon 97210

ALPHA ENGINEERS and CONSTRUCTORS, INC.
19 NW 5th AVE. SUITE 204, PORTLAND, OR. 97209 Tel:(503)227-3317/Fax:(503)227-3244

DRAWN BY	DAB
CHKD BY	WHB
APPD BY	
SCALE	NONE
DATE	03/07/95

PORTAND TERMINAL
PORTLAND, OREGON
PIPING & INSTRUMENTATION DIAGRAM
GASOLINE ADDITIVE SYSTEM
BLEND PACK MANIFOLD

DRAWING NO.	SHEET	REV.
0608-D-2002	1 OF 1	0

0608D2020.DWG <CPD: 08/26/97 TIME: 09:55 AM>

COP00021570

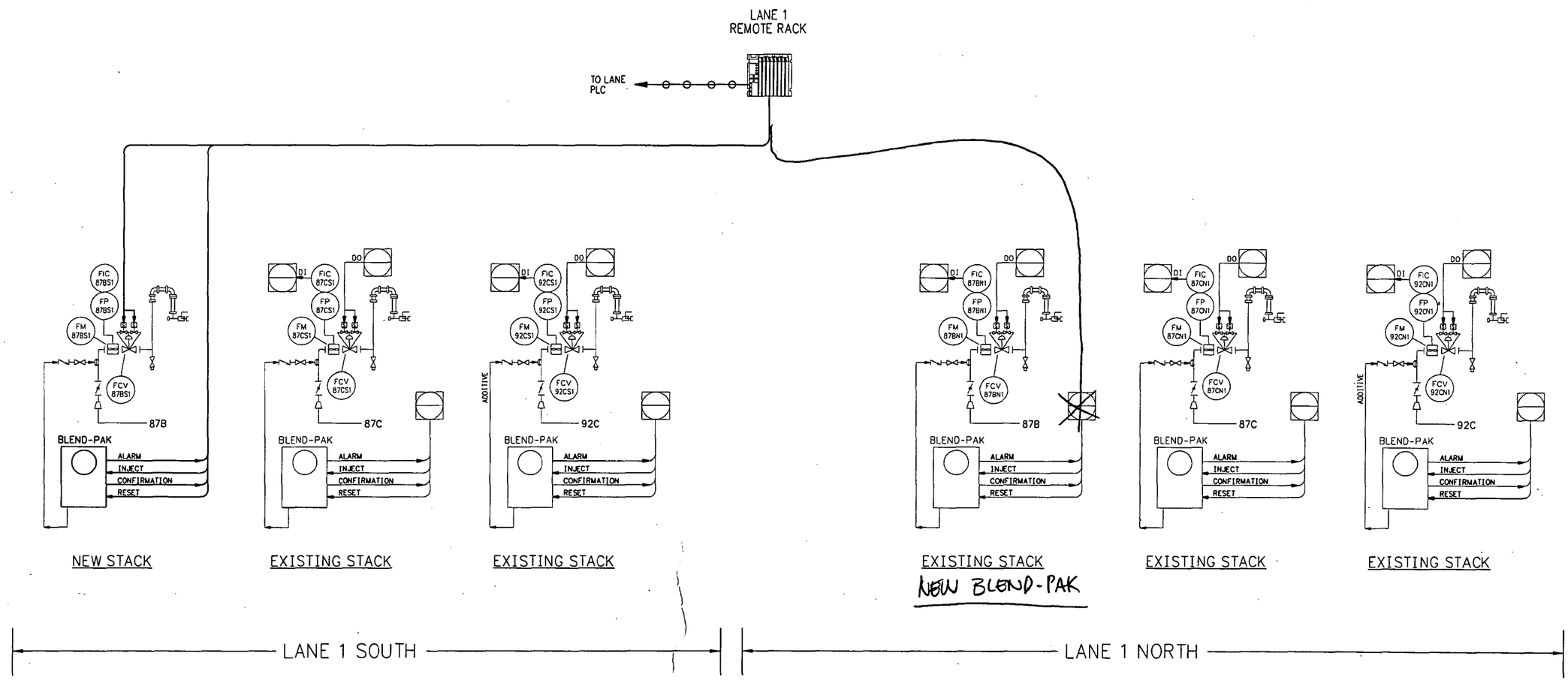

SYSTEM INTERFACE

NOTES:

DRAWING NO.	REFERENCE DRAWINGS	REV. NO.	DATE	REVISED	DRAWN BY	CKD. BY
		A	09/10/97	FOR REVIEW AND COMMENT	DAB	

TOSCO
Tosca Northwest Company
A Division of Tosca Corporation
5528 NW Doane St.
Portland, Oregon 97210

ALPHA ENGINEERS and CONSTRUCTORS, INC.
19 NW 5th AVE, SUITE 204, PORTLAND, OR. 97209 Tel:(503)227-3317/Fax:(503)227-3244

DRAWN BY	DAB
CHKD BY	
APPD BY	
SCALE	NONE
DATE	09/10/97

PORTLAND TERMINAL
PORTLAND, OREGON
ELECTRICAL
TYPICAL CONTROL SYSTEM DIAGRAM
TRUCK LOADING RACK
LANE 1

DRAWING NO.	SHEET	REV
0608-E-2101	1 OF 1	A

6BE2101B.DWG <CPD: 09/26/97 [TIME: 11:47 AM]>

COP00215711

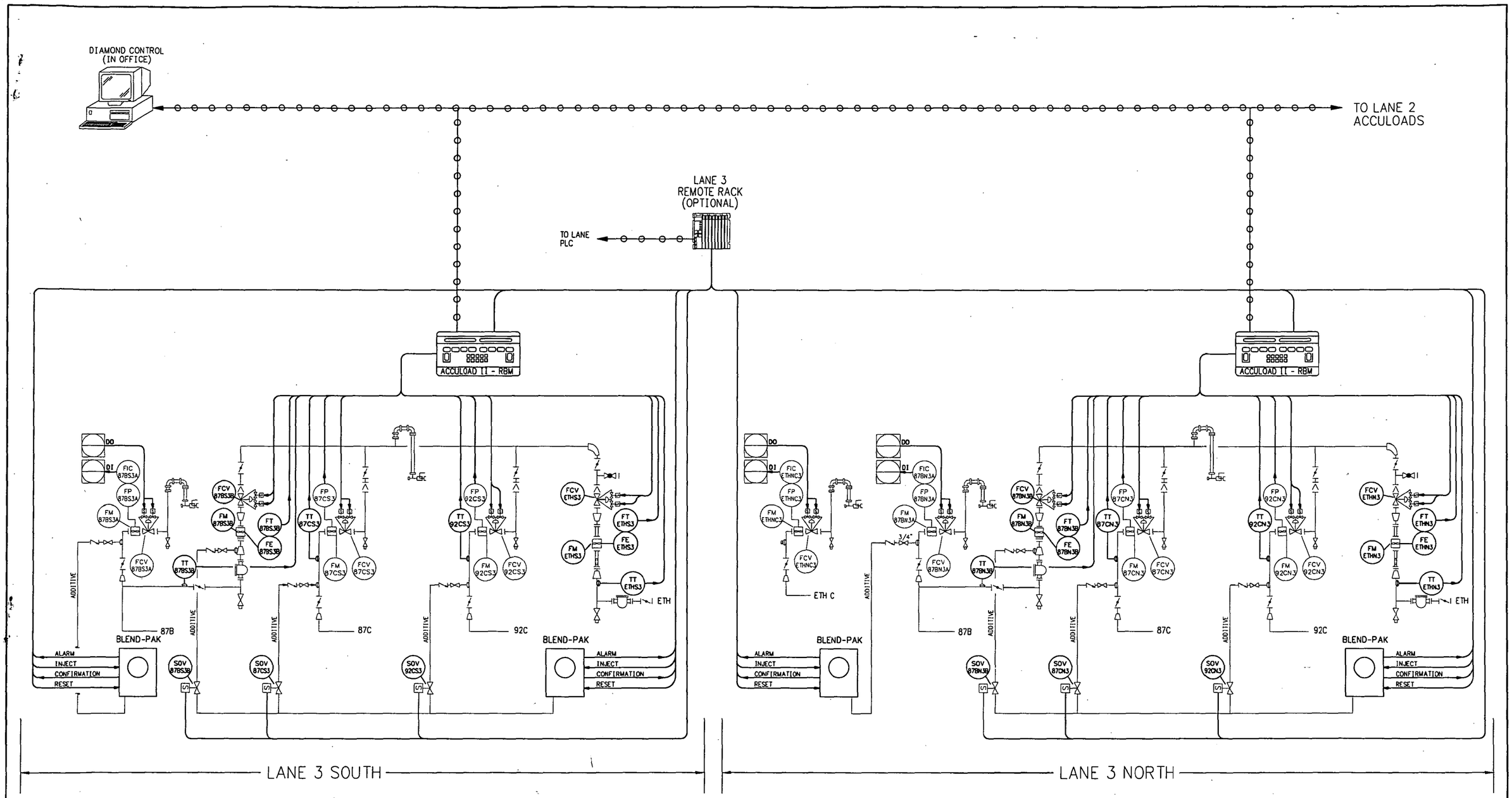

SYSTEM INTERFACE

NOTES:

DRAWING NO.	REFERENCE DRAWINGS	REV. NO.	DATE	REVISED	DRAWN BY	CKD. BY
		A	09/10/97	FOR REVIEW AND COMMENT	DAB	

TOSCO
Tosco Northwest Company
A Division of Tosco Corporation
5528 NW Doane St.
Portland, Oregon 97210

ALPHA ENGINEERS and CONSTRUCTORS, INC.
19 NW 5th AVE, SUITE 204, PORTLAND, OR. 97209 Tel:(503)227-3317/Fax:(503)227-3244

DRAWN BY	DAB
CHKD BY	
APPD BY	
SCALE	NONE
DATE	09/10/97

PORTLAND TERMINAL
PORTLAND, OREGON
ELECTRICAL
TYPICAL CONTROL SYSTEM DIAGRAM
TRUCK LOADING RACK
LANE 3

DRAWING NO.	SHEET	REV.
0608-E-2103	1 OF 1	A

68E2103B.DWG <CPD: 09/26/97 [TIME: 11:12 AM] >

COP00215723

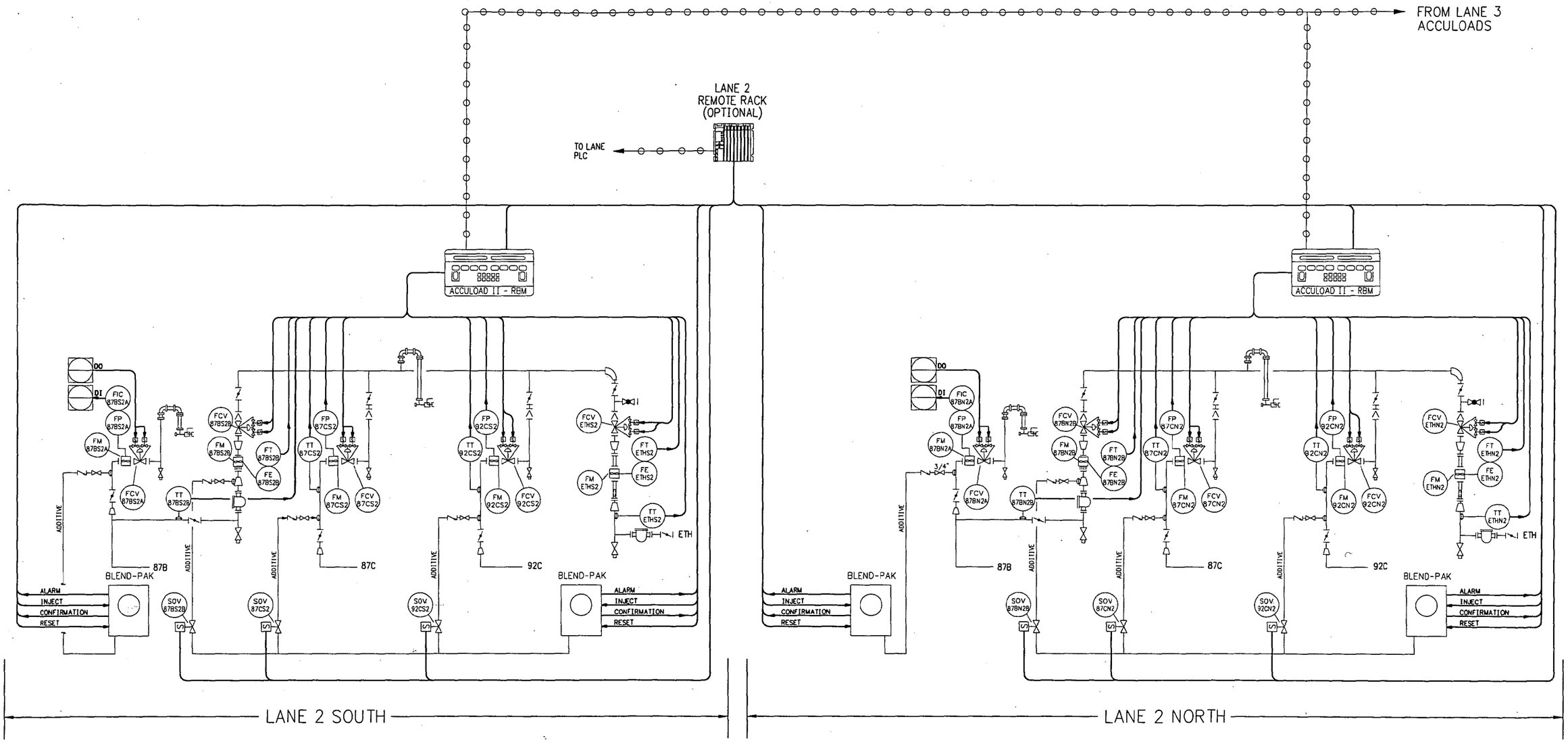

SYSTEM INTERFACE

NOTES:

DRAWING NO.	REFERENCE DRAWINGS	REV. NO.	DATE	REVISED	DRAWN BY	CKD. BY
		A	09/10/97	FOR REVIEW AND COMMENT	DAB	

TOSCO
Tosco Northwest Company
A Division of Tosco Corporation
5528 NW Doane St.
Portland, Oregon 97210

ALPHA ENGINEERS and CONSTRUCTORS, INC.
19 NW 5th AVE., SUITE 204, PORTLAND, OR. 97209 Tel:(503)227-3317/Fax:(503)227-3244

DRAWN BY	DAB
CHKD BY	
APPD BY	
SCALE	NONE
DATE	09/10/97

PORTLAND TERMINAL
PORTLAND, OREGON
ELECTRICAL
TYPICAL CONTROL SYSTEM DIAGRAM
TRUCK LOADING RACK
LANE 2

DRAWING NO.	SHEET	REV.
0608-E-2102	1 OF 1	A

68E2102B.DWG <CPD: 09/26/97 [TIME: 11:43 AM] >

COP00215573

Item	Description	Advantage	Disadvantage
1	Blend Pak to receive pulses from Accuload	Simplified installation; No PLC work	Cannot clear alarms remotely
	Accuload to receive confirmation pulses from Blend Pak		
2	PLC to monitor Blend Pak and issue inject and reset commands	Remote monitor and reset capability	Not utilizing Accuload to capability
			Requires more PLC and MMI programming
3	Remote PLC rack at Lane 1 (2 & 3)	Simplified wiring; easy to expand/modify installation	Increased hardware and wiring costs; some extra PLC programming involved for Lane's 2 & 3
			No Lane Master PLC redundancy

COP0021574

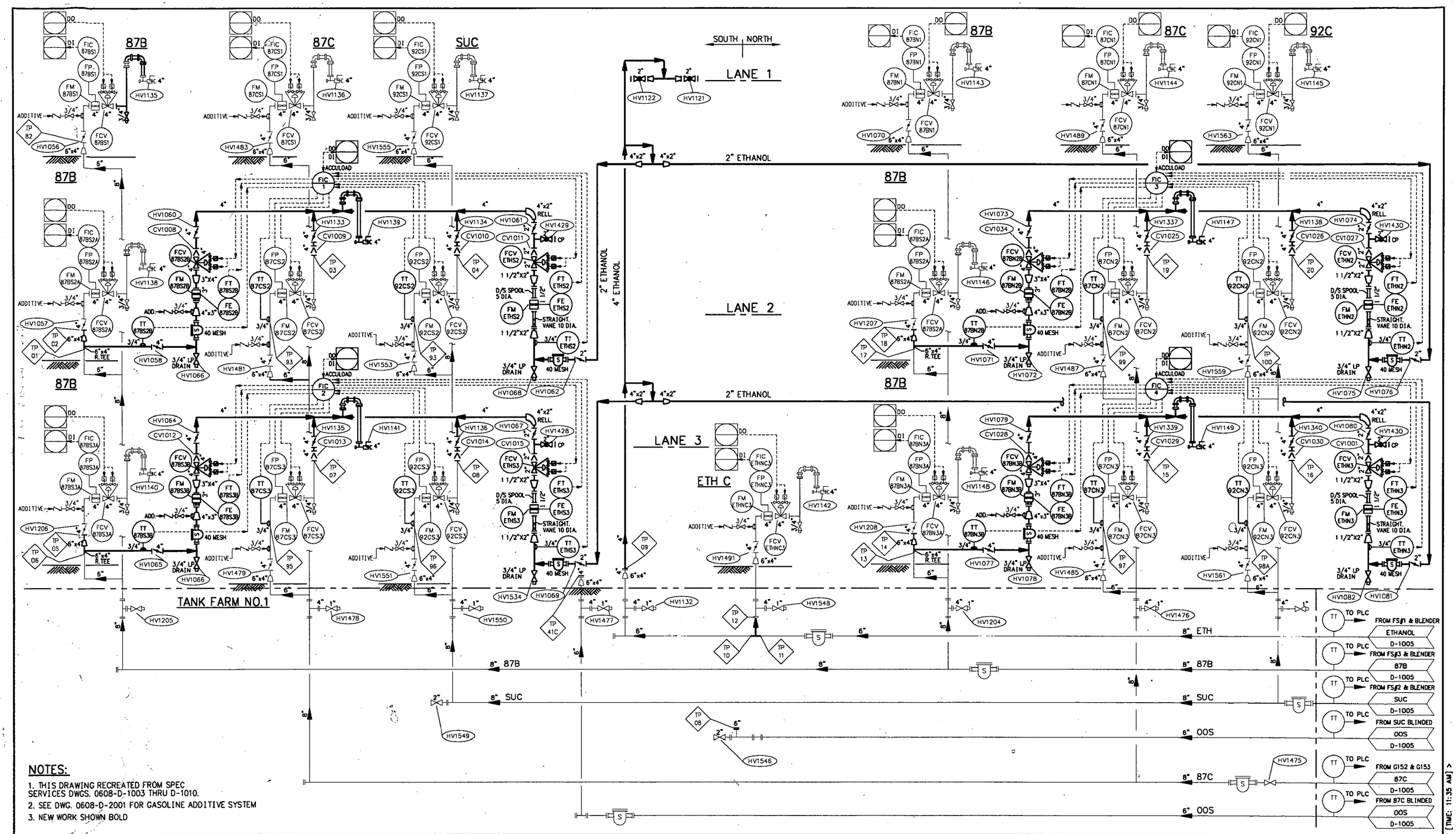

NOTES:

1. THIS DRAWING RECREATED FROM SPEC SERVICES DWGS. 0608-D-1003 THRU D-1010.
2. SEE DWG. 0608-D-2001 FOR GASOLINE ADDITIVE SYSTEM
3. NEW WORK SHOWN BOLD

DRAWING NO.	REFERENCE DRAWINGS	REV. NO.	DATE	REVISED	DRAWN BY	CKD. BY
0608-D-1000	LEGEND AND SYMBOLS	A	08/19/97	ACCULOAD INSTALLATION - PRELIMINARY FOR HAZOP	DAB	KJP
0608-D-1005	REFINED PRODUCTS SYSTEM SFPPL YARD	B	08/29/97	ADDED STRAINERS AND ETHANOL CALIBRATION PORTS	DAB	KJP
0608-D-2001	GASOLINE ADDITIVE SYSTEM	C	09/10/97	ADDED 4" BFV'S ON 87C AND 92C RISERS	DAB	
		D	09/19/97	REVISED 3" STRAINERS TO 4" STRAINERS, REMOVE 3" DS SPOOL		

TOSCO
Tosco Northwest Company
A Division of Tosco Corporation
5528 NW Doane St.
Portland, Oregon 97210

ALPHA ENGINEERS and CONSTRUCTORS, INC.
19 NW 5th AVE, SUITE 204, PORTLAND, OR. 97209 Tel:(503)227-3317/Fax:(503)227-3244

DRAWN BY	DAB
CHKD BY	KJP
APPD BY	WHB
SCALE	NONE
DATE	08/18/97

PORTLAND TERMINAL

PORTLAND, OREGON

PIPING & INSTRUMENTATION DIAGRAM
REFINED PRODUCTS SYSTEM
TRUCK LOADING RACK

DRAWING NO.	SHEET	REV.
0608-D-1004	1 OF 1	D

\PDI\0040.DWG <CPD: 09/19/97 [TIME: 11:35 AM]>

COP00215575

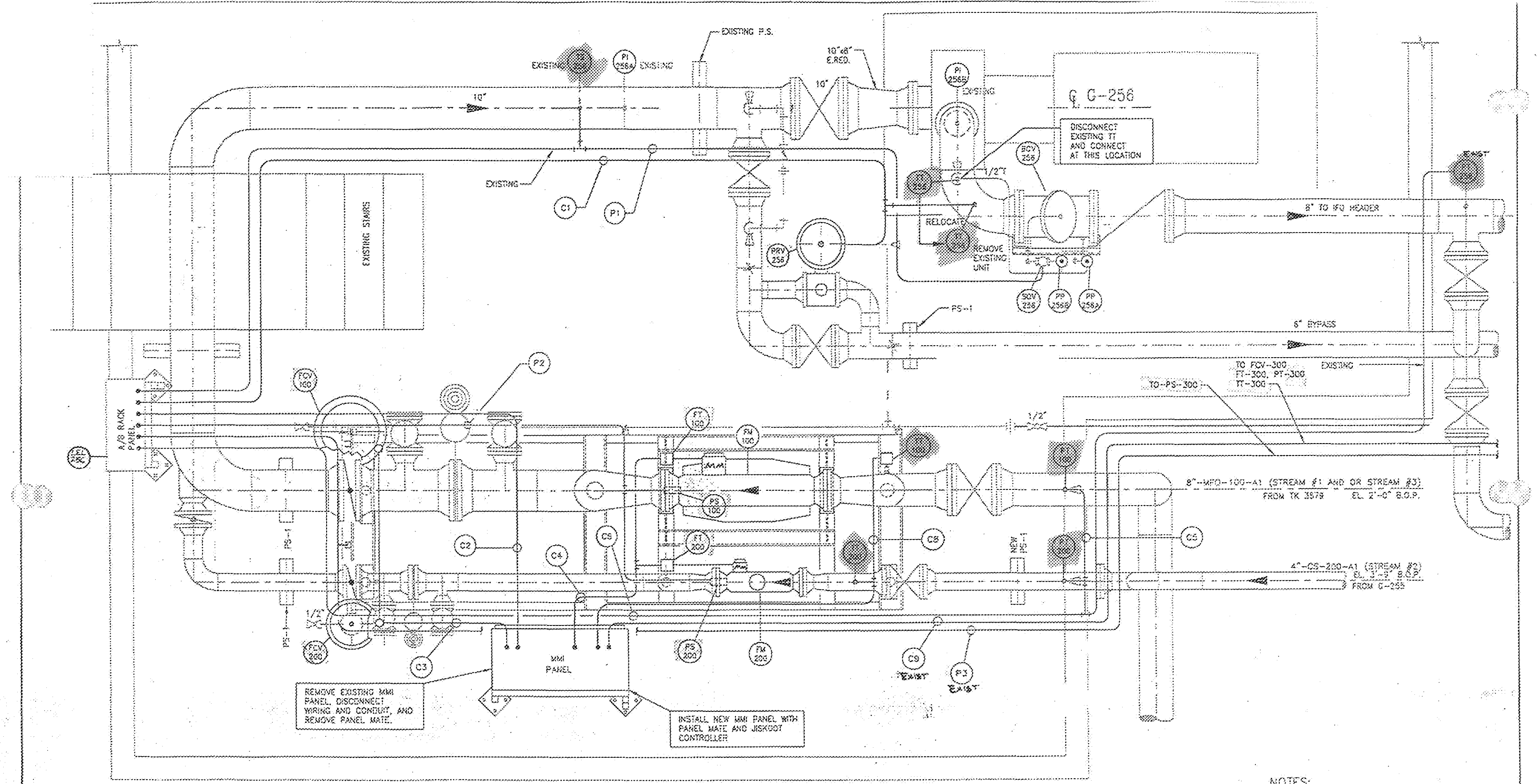

PLAN
SCALE 1/8"=1'-0"

NOTES:
1. VERIFY ALL DIMENSIONS PRIOR TO FABRICATION.
2. NEW WORK SHOWN BOLD

ALPHA ENGINEERS and CONSTRUCTORS, INC.
2828 NW 29th AVE, PORTLAND, OR 97210 Tel:(503)227-3317 Fax:(503)227-3344

AEC PROJECT NUMBER 25-23

D NO.	REFERENCE DRAWINGS	REV.	DATE	REVISED	DRAWN	DES.	CIV/STR.	MECH/PIPING	ELEC/INST.	SAFETY	P.E.
2523-E-01	SITE PLAN	0	06/09/00	ISSUE FOR CONSTRUCTION	DAB	WHB					

TOSCO
Tosco Refining Company
A Division of Tosco Corporation
5526 NW Doane St.
Portland, Oregon 97210

CLIENT APPROVALS		
REV	BY	DATE

SCALES SHOWN		DATE
DRAWN BY	DAB	06/15/00
DESIGNED BY	WHB	06/15/00
CHECKED BY	WHB	06/21/00
WORK ORDER	25-23	200054
DATE		
06/15/00		

PORTLAND TERMINAL
PORTLAND, OREGON
BLACK OIL BLENDING SYSTEM
ELECTRICAL
BLENDER SKID CONDUIT PLAN

DRAWING NO. 2523-EC-01
SHEET 1 OF 1
REV. 0

COP00021576

CONDUIT & CABLE SCHEDULE

FROM	CONDUIT NO.	SIZE	TO	VOLTAGE	CABLE TYPE	MFG. NO.
AB PANEL	C1	3/4" GRC	PRV-256, TT-256	____	2-2C/20GA SHLD	BELDEN 8762
AB PANEL	C2	3/4" GRC	MMI PANEL	____	1-4C/20GA SHLD, 1-2C/20GA SHLD	BELDEN 9402, 8762
MMI PANEL	C3	3/4" GRC	FCV-100, FCV-200	____	2-2C/20GA SHLD	BELDEN 8762
MMI PANEL	C4	3/4" GRC	FT-100, FT-200	____	2-2C/20GA SHLD	BELDEN 8762
CS	C5	3/4" GRC	PT-100, PT-200	____	2-2C/20GA SHLD	BELDEN 8762
PT-256, CS	C6	3/4" GRC	AB PANEL	____	3-2C/20GA SHLD	BELDEN 8762
NOT USED	C7					
MMI PANEL	C8	3/4" GRC	TT-100, TT-200	____	2-2C/20GA SHLD	BELDEN 8762
MMI PANEL	C9	EXIST.	PT-300, FCV-300 TT-300, FT-300	____	4-2C/20GA SHLD	BELDEN 8762
AB PANEL	C10	EXIST.	DOCK HOUSE PANEL	____	1-6C FO CABLE 1-2C/14GA SHLD 1-2C/20GA SHLD	BELDEN 225716 BELDEN 83752 BELDEN 9463 — HOLD
AB PANEL	P1	3/4" GRC	TS-256,SOV-256	120	2-#12 THHN W/1#14 GND	
AB PANEL	P2	3/4" GRC	PS-100, PS-200	120	3-#12 THHN W/1#14 GND	
AB PANEL	P3	3/4" GRC	PS-300	120	2-#12 THHN W/1#14 GND	
DOCK PANEL	P4	3/4" GRC	G500	480	3-#12 THHN W/1#14 GND	
PANEL P-1 HT RELAY	P5	3/4" GRC	SC-500,501, LS-500 HS-500 SAMPLE SKID	120 208	8-#12 THHN W/1#14 GND 2-#12 THHN W/1#14 GND	⚠
DOCK PANEL	P6	3/4"-GRC	G500 STARTER	480	3-#12 THHN W/1#14 GND	
NOT USED	P7					
DOCK PANEL	P8	3/4" GRC	SAMPLING SHACK SC-500, SC-501	24 24	1-2C/14GA SHLD 1-2C/20GA SHLD 4-#16THHN	BELDEN 83752 -ESD BELDEN 9463 - FUTURE PANEL VIEW ⚠

(*) CONDUIT RUN MUST BE MODIFIED TO ACCEPT FO CABLE - MIN. 4.5" RADIUS

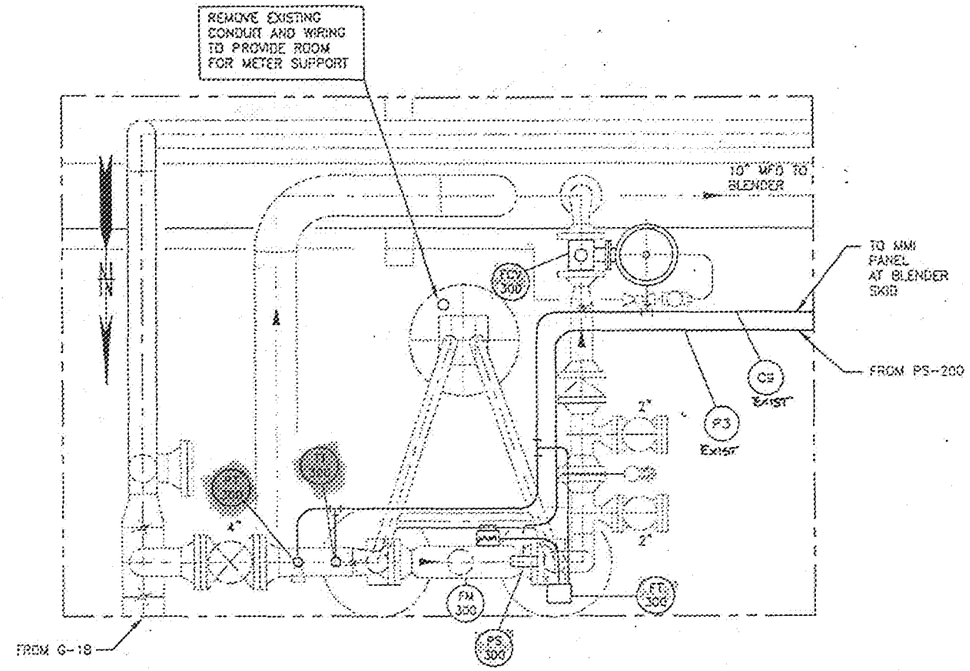

STREAM NO.3 METER NEAR TK-2783

PLAN

SCALE 1"=1'-0"

NOTES:

1. VERIFY ALL DIMENSIONS PRIOR TO FABRICATION.
2. NEW WORK SHOWN BOLD

ALPHA ENGINEERS and CONSTRUCTORS, INC.

AECI PROJECT NUMBER 25-23

NO.	REFERENCE DRAWINGS	REV.	DATE	REVISED	DRAWN	CKD.	CIV/STRL	MECH/PIPING	ELEC/INST	SAFETY	P.E.
-01	SITE PLAN	2	08/09/00	ISSUE FOR CONSTRUCTION	DAB	WHB					
		1	08/08/00	REVISED CONDUIT AND CABLE SCHEDULE	DAB	WHB					

TOSCO
Tosco Refining Company
A Division of Tosco Corporation
5528 NW Doane St.
Portland, Oregon 97210

CLIENT APPROVALS

REV	BY	DATE

SCALE 1"=1'-0"

		DATE
DRAWN BY	DAB	08/15/00
DESIGNED BY	WHB	06/08/00
CHECKED BY	WHB	06/01/00
WORK ORDER	25-23	22K34
DATE		08/15/00

PORTLAND TERMINAL
PORTLAND, OREGON
BLACK OIL BLENDING SYSTEM
ELECTRICAL
ELECTRICAL STREAM NO.3
CONDUIT PLAN AND SCHEDULE

DRAWING NO. 2523-EC-02 SHEET 1 OF 1 REV. 1

253.NE.0021.DWG 4CPS: 09/05/00 [TIME: 11:30 AM]

COP00021577

COP0021578

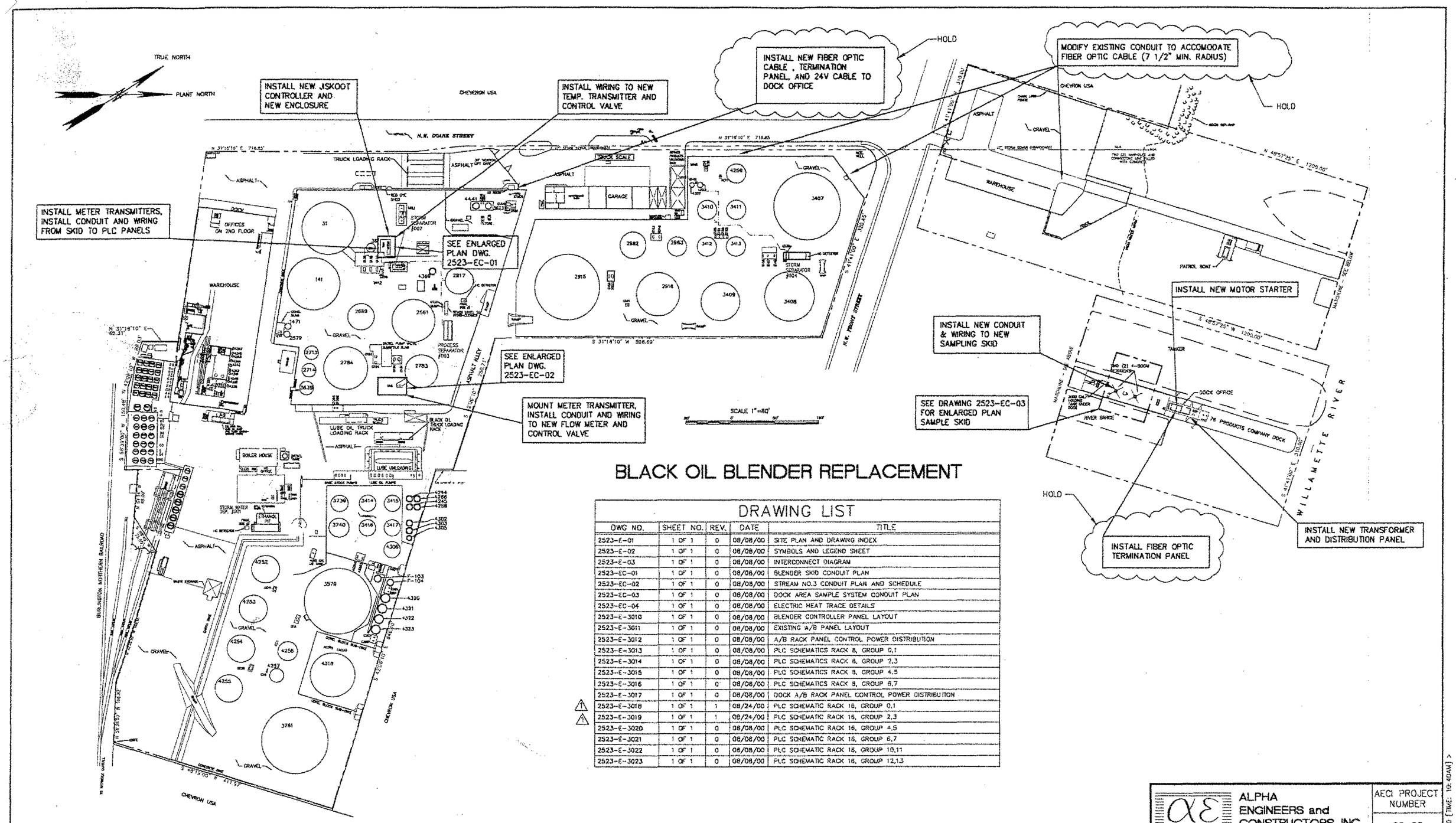

BLACK OIL BLENDER REPLACEMENT

DRAWING LIST

DWG NO.	SHEET NO.	REV.	DATE	TITLE
2523-E-01	1 OF 1	0	08/08/00	SITE PLAN AND DRAWING INDEX
2523-E-02	1 OF 1	0	08/08/00	SYMBOLS AND LEGEND SHEET
2523-E-03	1 OF 1	0	08/08/00	INTERCONNECT DIAGRAM
2523-EC-01	1 OF 1	0	08/08/00	BLENDER SKID CONDUIT PLAN
2523-EC-02	1 OF 1	0	08/08/00	STREAM NO.3 CONDUIT PLAN AND SCHEDULE
2523-EC-03	1 OF 1	0	08/08/00	DOCK AREA SAMPLE SYSTEM CONDUIT PLAN
2523-EC-04	1 OF 1	0	08/08/00	ELECTRIC HEAT TRACE DETAILS
2523-E-3010	1 OF 1	0	08/08/00	BLENDER CONTROLLER PANEL LAYOUT
2523-E-3011	1 OF 1	0	08/08/00	EXISTING A/B PANEL LAYOUT
2523-E-3012	1 OF 1	0	08/08/00	A/B RACK PANEL CONTROL POWER DISTRIBUTION
2523-E-3013	1 OF 1	0	08/08/00	PLC SCHEMATICS RACK 8, GROUP 0,1
2523-E-3014	1 OF 1	0	08/08/00	PLC SCHEMATICS RACK 8, GROUP 2,3
2523-E-3015	1 OF 1	0	08/08/00	PLC SCHEMATICS RACK 8, GROUP 4,5
2523-E-3016	1 OF 1	0	08/08/00	PLC SCHEMATICS RACK 8, GROUP 6,7
2523-E-3017	1 OF 1	0	08/08/00	DOCK A/B RACK PANEL CONTROL POWER DISTRIBUTION
2523-E-3018	1 OF 1	1	08/24/00	PLC SCHEMATIC RACK 16, GROUP 0,1
2523-E-3019	1 OF 1	1	08/24/00	PLC SCHEMATIC RACK 16, GROUP 2,3
2523-E-3020	1 OF 1	0	08/08/00	PLC SCHEMATIC RACK 16, GROUP 4,5
2523-E-3021	1 OF 1	0	08/08/00	PLC SCHEMATIC RACK 16, GROUP 6,7
2523-E-3022	1 OF 1	0	08/08/00	PLC SCHEMATIC RACK 16, GROUP 10,11
2523-E-3023	1 OF 1	0	08/08/00	PLC SCHEMATIC RACK 16, GROUP 12,13

ALPHA ENGINEERS and CONSTRUCTORS, INC.
2920 NW 29th AVE, PORTLAND, OR 97210 Tel:(503)227-3217/Fax:(503)227-3244

AECI PROJECT NUMBER 25-23

DRAWING NO.	REFERENCE DRAWINGS	REV.	DATE	REVISED	DRAWN	CKD.	CIV/STRL	MECH/PIPING	ELEC/INST	SAFETY	P.E.
		0	08/09/00	ISSUE FOR CONSTRUCTION	DAB	WHB					
		1	08/24/00	UPDATED DRAWING LIST	DAB	WHB					

TOSCO
Tosco Refining Company
A Division of Tosco Corporation
5528 NW Doane St.
Portland, Oregon 97210

CLIENT APPROVALS		
REV	BY	DATE

SCALE: 1"=80'		DATE
DRAWN BY	DAB	6/16/00
DESIGNED BY	WHB	6/20/00
CHECKED BY	WHB	6/21/00
WORK ORDER	25-23	22X34
DATE		
06/16/00		

PORTLAND TERMINAL
PORTLAND, OREGON
BLACK OIL BLENDING SYSTEM
ELECTRICAL
SITE PLAN & DRAWING INDEX

DRAWING NO.	SHEET	REV.
2523-E-01	1 OF 1	1

2523x011.DWG <CPD: 08/24/00 [TIME: 10:40AM]>

COP00215579

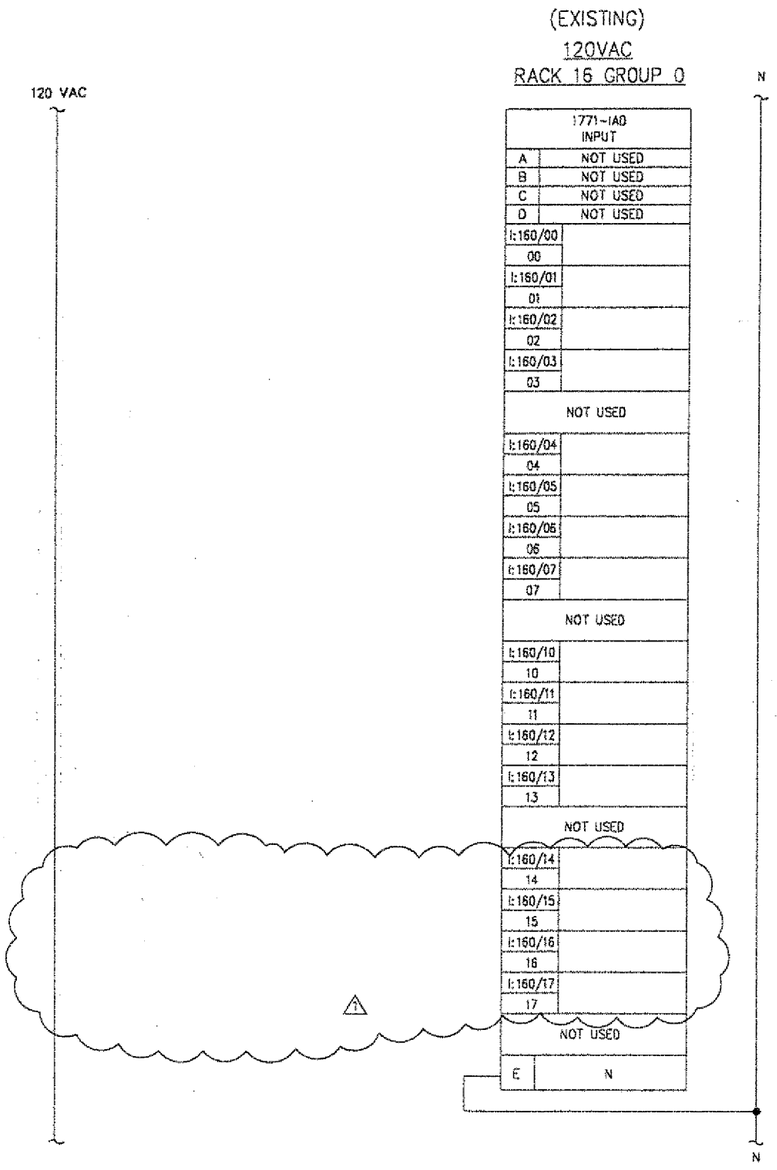

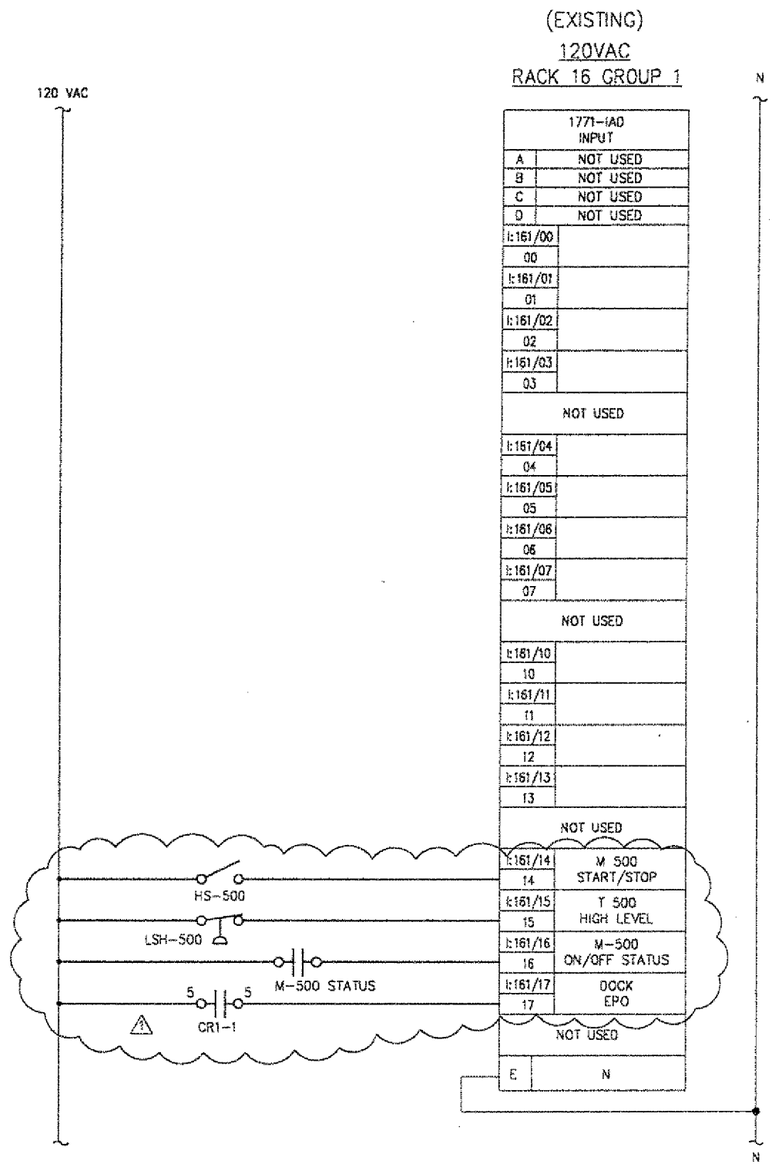

NOTES:

1. FIELD WIRING SHOWN BOLD.

ALPHA ENGINEERS and CONSTRUCTORS, INC.
2528 NW 29th AVE, PORTLAND, OR. 97210 Tel:(503)227-3317/Fax:(503)227-3244

AECI PROJECT NUMBER: 25-23

DRAWING NO.	REFERENCE DRAWINGS	REV.	DATE	REVISED	DRAWN	CKD.	CIV/STR.	MECH/PPING	ELEC/INST	SAFETY	P.E.
		0	08/09/00	ISSUE FOR CONSTRUCTION	DAB	WHB					
		1	08/24/00	MOVED CONTACTS TO RACK 16,GR.1, ADDED M500 STATUS	DAB	WHB					

TOSCO
Tosco Refining Company
A Division of Tosco Corporation
5528 NW Doane St.
Portland, Oregon 97210

CLIENT APPROVALS		
REV	BY	DATE

SCALE: NONE		DATE
DRAWN BY	DAB	06/26/00
DESIGNED BY	WHB	06/26/00
CHECKED BY	WHB	08/08/00
WORK ORDER	25-23	22X34
DATE 06/26/00		

PORTLAND TERMINAL
PORTLAND, OREGON
BLACK OIL BLENDING SYSTEM
PLC SCHEMATICS
RACK 16, GROUP 0,1

DRAWING NO. 2523-E-3018 | SHEET 1 OF 1 | REV. 1

2523E3018: DWGCPD: 08/23/00 [TIME: 10:22 AM] >

COP00021580

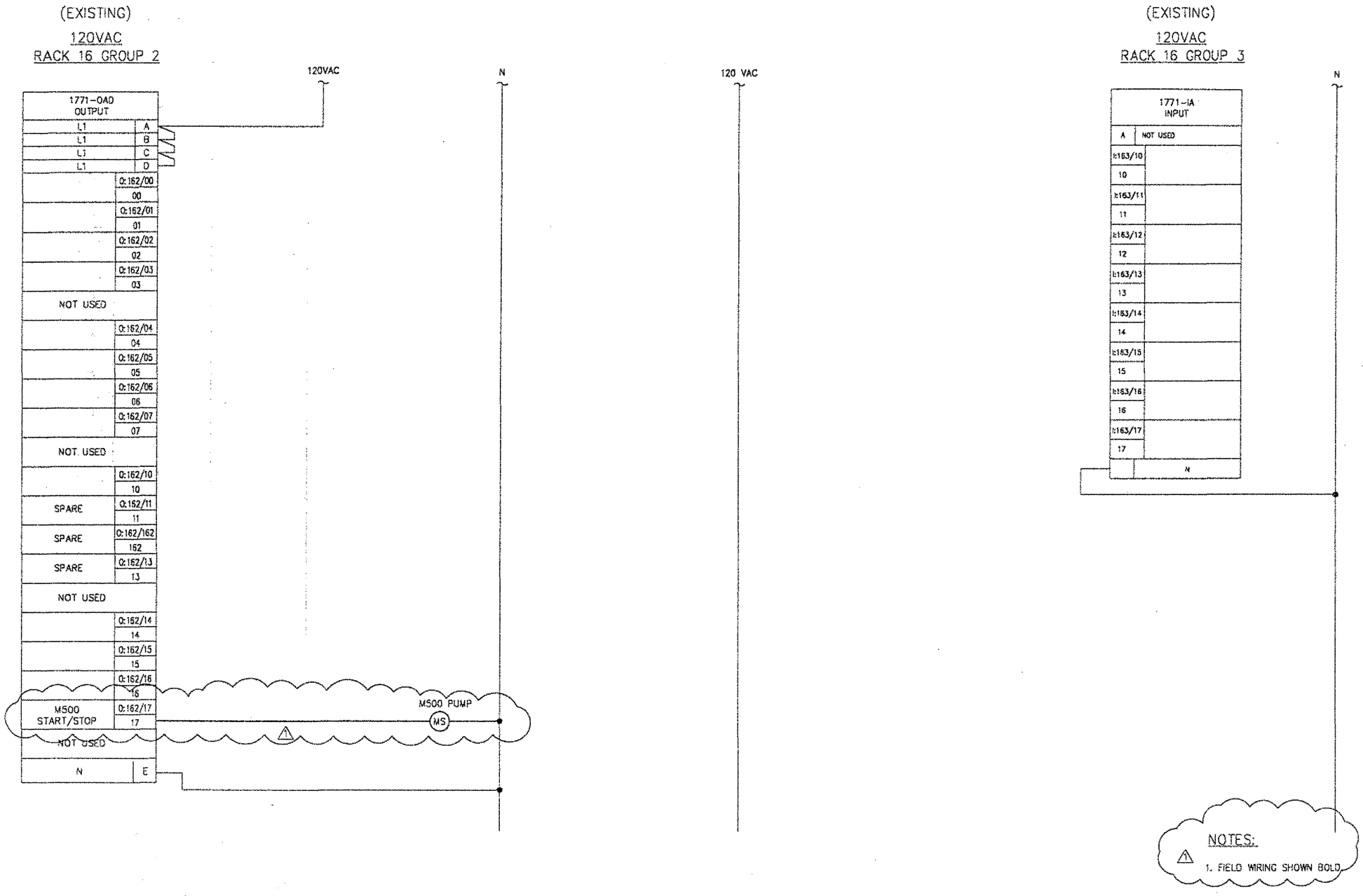

NOTES:

1. FIELD WIRING SHOWN BOLD.

ALPHA ENGINEERS and CONSTRUCTORS, INC.
2929 NW 25th AVE., PORTLAND, OR. 97210 Tel:(503)227-3317/Fax:(503)227-3244

AECI PROJECT NUMBER: 25-23

DRAWING NO.	REFERENCE DRAWINGS	REV.	DATE	REVISED	DRAWN	CKD.	QV/STRL	MECH/PRING	ELEC/INST	SAFETY	P.E.
		0	08/09/00	ISSUE FOR CONSTRUCTION	OAB	WHB					
		1	08/24/00	ADDED M500 START/STOP	OAB	WHB					

TOSCO
Tosco Refining Company
A Division of Tosco Corporation
5528 NW Doane St.
Portland, Oregon 97210

CLIENT APPROVALS		
REV	BY	DATE

SCALE: NONE		DATE
DRAWN BY	OAB	06/26/00
DESIGNED BY	WHB	06/26/00
CHECKED BY	WHB	08/08/00
WORK ORDER	25-23	22X34

PORTLAND TERMINAL
PORTLAND, OREGON
BLACK OIL BLENDING SYSTEM
PLC SCHEMATICS
RACK 16, GROUP 2,3

DATE	DRAWING NO.	SHEET	REV
06/26/00	2523-E-3019	1 OF 1	1

2523E30191.DWG<CPO: 08/23/00 [TIME: 10:29 AM]>

COP00021581

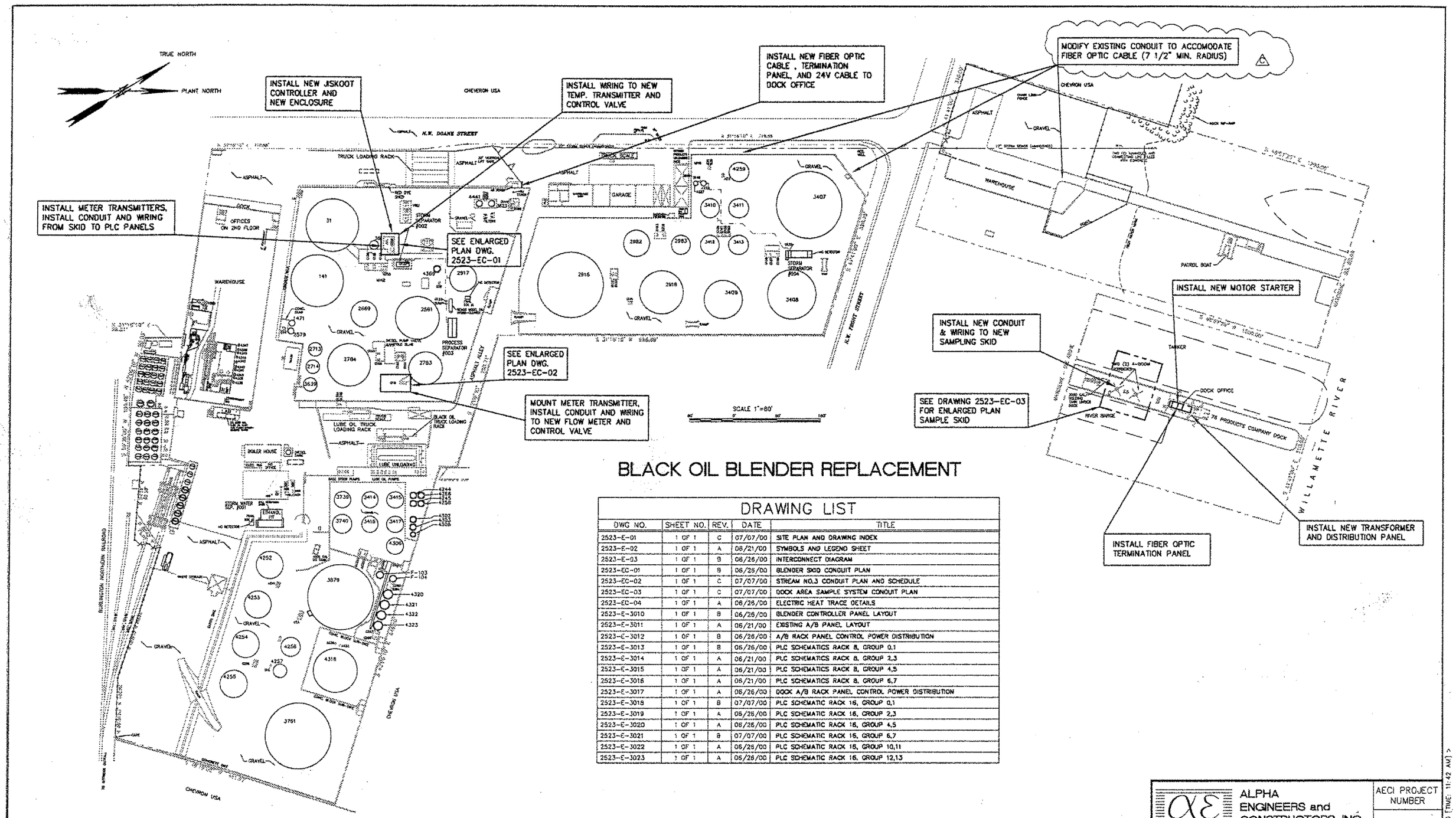

BLACK OIL BLENDER REPLACEMENT

DRAWING LIST

DWG NO.	SHEET NO.	REV.	DATE	TITLE
2523-E-01	1 OF 1	C	07/07/00	SITE PLAN AND DRAWING INDEX
2523-E-02	1 OF 1	A	06/21/00	SYMBOLS AND LEGEND SHEET
2523-E-03	1 OF 1	B	06/26/00	INTERCONNECT DIAGRAM
2523-EC-01	1 OF 1	B	06/26/00	BLENDER SKID CONDUIT PLAN
2523-EC-02	1 OF 1	C	07/07/00	STREAM NO.3 CONDUIT PLAN AND SCHEDULE
2523-EC-03	1 OF 1	C	07/07/00	DOCK AREA SAMPLE SYSTEM CONDUIT PLAN
2523-EC-04	1 OF 1	A	06/26/00	ELECTRIC HEAT TRACE DETAILS
2523-E-3010	1 OF 1	B	06/26/00	BLENDER CONTROLLER PANEL LAYOUT
2523-E-3011	1 OF 1	A	06/21/00	EXISTING A/B PANEL LAYOUT
2523-E-3012	1 OF 1	B	06/26/00	A/B RACK PANEL CONTROL POWER DISTRIBUTION
2523-E-3013	1 OF 1	B	06/26/00	PLC SCHEMATICS RACK 8, GROUP 0,1
2523-E-3014	1 OF 1	A	06/21/00	PLC SCHEMATICS RACK 8, GROUP 2,3
2523-E-3015	1 OF 1	A	06/21/00	PLC SCHEMATICS RACK 8, GROUP 4,5
2523-E-3016	1 OF 1	A	06/21/00	PLC SCHEMATICS RACK 8, GROUP 6,7
2523-E-3017	1 OF 1	A	06/26/00	DOCK A/B RACK PANEL CONTROL POWER DISTRIBUTION
2523-E-3018	1 OF 1	B	07/07/00	PLC SCHEMATIC RACK 16, GROUP 0,1
2523-E-3019	1 OF 1	A	06/26/00	PLC SCHEMATIC RACK 16, GROUP 2,3
2523-E-3020	1 OF 1	A	06/26/00	PLC SCHEMATIC RACK 16, GROUP 4,5
2523-E-3021	1 OF 1	B	07/07/00	PLC SCHEMATIC RACK 16, GROUP 6,7
2523-E-3022	1 OF 1	A	06/26/00	PLC SCHEMATIC RACK 16, GROUP 10,11
2523-E-3023	1 OF 1	A	06/26/00	PLC SCHEMATIC RACK 16, GROUP 12,13

ALPHA ENGINEERS and CONSTRUCTORS, INC.
2929 NW 29th AVE. PORTLAND, OR. 97210 Tel:(503)227-3317/Fax:(503)227-3244

AECI PROJECT NUMBER 25-23

DRAWING NO.	REFERENCE DRAWINGS	REV.	DATE	REVISED	DRAWN	CKD.	CIV/STRL	MECH/PIPING	ELEC/INST	SAFETY	P.E.
		A	06/21/00	BID SET	DAB	WHB					
		B	06/26/00	NEW XTMR & DISTRIBUTION PANEL AT DOCK OFFICE	DAB	WHB					
		C	07/07/00	UPDATED DRAWING LIST REVISIONS, FO CABLE 7 1/2" RADIUS	DAB	WHB					

TOSCO
Tosco Refining Company
A Division of Tosco Corporation
5528 NW Doane St.
Portland, Oregon 97210

CLIENT APPROVALS		
REV	BY	DATE

SCALE: 1"=80'		DATE
DRAWN BY	DAB	6/16/00
DESIGNED BY	WHB	6/20/00
CHECKED BY	WHB	6/21/00
WORK ORDER		
DATE		
06/16/00		

PORTLAND TERMINAL
PORTLAND, OREGON
BLACK OIL BLENDING SYSTEM
ELECTRICAL
SITE PLAN & DRAWING INDEX

DRAWING NO.	SHEET	REV.
2523-E-01	1 OF 1	C

2523E01C.DWG <CPD: 07/07/00 [TIME: 11:42 AM]>

ONE LINE DIAGRAM SYMBOLS

SYMBOL	DESCRIPTION
	– 1-PHASE, TWO-WINDING XFMR
	– 3-PHASE, TWO-WINDING XFMR WITH DELTA-WYE CONNECTIONS
	– 3-PHASE, 3 WIRE, WYE, GROUNDED
*	– CURRENT TRANSFORMER * INDICATES QUANTITY
*	– POTENTIAL TRANSFORMER WITH PRIMARY FUSE * INDICATES QUANTITY
	– SURGE ARRESTER
	– FUSE, THERMAL CURRENT
	– ISOLATING PRIMARY FUSE CUTOUT, DRY
	– ISOLATING FUSE SWITCH FOR ON-LOAD SWITCHING
*	– MEDIUM-VOLTAGE STARTER WITH CURRENT LIMITING FUSES * INDICATES FUSE AND STARTER SIZES
*	– FUSED SAFETY SWITCH * INDICATES SWITCH AND FUSE RATING
	– DISCONNECT SWITCH, GROUP OPERATED
	– DISCONNECT SWITCH, STICK OPERATED
	– DISCONNECT SWITCH, SELF OR DOUBLE-THROW
	– CIRCUIT BREAKER, LOW VOLTAGE, MOLDED CASE
	– POTHEAD
M	– WOUND-ROTOR INDUCTION MOTOR
	– SWITCHES (* INDICATES TYPE) SS – SELECTOR, AS – AMMETER VS – VOLTMETER SYN – SYNCHRONIZING
	– TRANSDUCER (* INDICATES TYPE)
	– GENERATOR, INSTRUMENT, METER, OR MOTOR (* INDICATES TYPE)

A	– AMMETER	PF	– POWER FACTOR
F	– FREQ METER	PI	– POSITION INDICATOR
SYS	– SYNCHROSCOPE	REC	– RECORDING METER
V	– VOLTMETER	T	– TEMP RECORDING METER
VAR	– VARMETER	VA	– VOLT-AMPERE METER
W	– WATTMETER	VARH	– VARHOUR METER
TT	– TOTAL TIME METER	WHD	– WATTHOUR-DETECTOR METER
GD	– GROUND DETECTOR	WH	– WATTHOUR METER
G	GENERATOR	M	– MOTOR

SCHEMATIC/WIRING DIAGRAM SYMBOLS

SYMBOL	DESCRIPTION
	– NORMALLY OPEN LIMIT SWITCH
	– NORMALLY OPEN LIMIT SWITCH HELD CLOSED
	– NORMALLY CLOSED LIMIT SWITCH
	– NORMALLY CLOSED LIMIT SWITCH HELD OPEN
	– FLOW ACTUATED SWITCH, CLOSES ON INCREASE IN FLOW
	– FLOW ACTUATED SWITCH, OPENS ON INCREASE IN FLOW
	– LEVEL ACTUATED SWITCH, CLOSES ON RISE IN LEVEL
	– LEVEL-ACTUATED SWITCH, OPEN ON RISE IN LEVEL
	– PRESSURE OR VACUUM-ACTUATED SWITCH, CLOSES ON RISING PRESSURE OR VACUUM
	– PRESSURE OR VACUUM-ACTUATED SWITCH, OPENS ON RISING PRESSURE OR VACUUM
	– DIFFERENTIAL PRESSURE SWITCH, CLOSES ON DIFFERENTIAL PRESSURE CHANGE
	– TEMPERATURE-ACTUATED SWITCH, CLOSES ON RISING TEMPERATURE
	– TEMPERATURE-ACTUATED SWITCH, OPENS ON RISING TEMPERATURE
*	– SPEED-ACTUATED SWITCH, OPERATES ON SHAFT ROTATION * INDICATES FUNCTION, ZS=ZERO SPEED, OS=OVERSPEED, US=UNDERSPEED
*	– RELAY OR OPERATING COIL * INDICATES FUNCTION, MS – MOTOR STARTER CR – CONTROL RELAY TDR – TIME-DELAY RELAY C – CONTACTOR ST – SHUNT TRIP COIL
	– NORMALLY OPEN CONTACT (MAKE)
	– NORMALLY CLOSED CONTACT (BREAK)
	– NORMALLY OPEN CONTACT WITH TIME DELAY CLOSING (TDC) AFTER COIL IS ENERGIZED
	– NORMALLY CLOSED CONTACT WITH TIME DELAY OPENING (TDO) AFTER COIL IS ENERGIZED
	– NORMALLY OPEN CONTACT WITH TIME DELAY OPENING (TDO) AFTER COIL IS DE-ENERGIZED
	– NORMALLY CLOSED CONTACT WITH TIME DELAY CLOSING (TDC) AFTER COIL IS DE-ENERGIZED
	– CIRCUIT – CLOSING PUSH BUTTON MOMENTARY OR SPRING RETURN

SYMBOL	DESCRIPTION
	– CIRCUIT-OPENING PUSHBUTTON MOMENTARY OR SPRING RETURN
	– TWO-CIRCUIT PUSHBUTTON MOMENTARY OR SPRING RETURN
	– MUSHROOM HEAD CIRCUIT OPENING PUSHBUTTON (FOR EMERGENCY APPLICATIONS)
	– CIRCUIT-CLOSING SWITCH
	– CIRCUIT-OPENING SWITCH
	– TWO-POSITION TRANSFER SWITCH
OFF	– THREE-POSITION TRANSFER SWITCH
	– CIRCUIT BREAKER, DOUBLE POLE
	– SOLENOID
	– SPACE HEATER
	– CROSSING OF PATH OR CONDUCTORS NOT CONNECTED
	– CONNECTION
	– TERMINAL CONNECTION
	PLUG AND RECEPTACLE
	– TWO CONDUCTORS WITH OVERALL SHIELD FOR GROUNDING CONNECTION
	– GROUNDING CONNECTION
	– CHASSIS CONNECTION
	– MULTICELL BATTERY (DC)
	– THERMAL ELEMENT
*	– PILOT LIGHT * INDICATES COLOR

A	– AMBER	OP	– OPALESCENT
B	– BLUE	P	– PURPLE
C	– CLEAR	R	– RED
G	– GREEN	W	– WHITE
O	– ORANGE	Y	– YELLOW

SYMBOL	DESCRIPTION
H1 H2 X1 X2	– CONTROL TRANSFORMER W/GROUND
OL'S	– OVERLOAD CONTACTS
AREA EPO	– EMERGENCY PROCESS OFF
	– POWER RECEPTACLE

PLAN DRAWING SYMBOLS

SYMBOL	DESCRIPTION
	– HORIZONTAL MOTOR OR GENERATOR
	– DRY-TYPE 1-PHASE TRANSFORMER
	– EXTERNALLY-OPERATED DISCONNECT SWITCH
	– COMBINATION CONTROLLER AND DISCONNECTING MEANS
S_{TH}	– MANUAL STARTER SWITCH WITH THERMAL OVERLOADS
	– JUNCTION BOX
	– THERMOSTAT
	– TELEPHONE RCPT, PUBLIC
	– SOUND SYSTEM DEVICE
	– SIGNAL OR ALARM HORN
5a B	– POLE – MOUNTED FLOODLIGHT, ARROW INDICATES AIMING DIRECTION
	– POLE-MOUNTED STREET LIGHT
5a B	– BRACKET-MOUNTED FLOODLIGHT ARROW INDICATES AIMING DIRECTION
5 B	– EMERGENCY LIGHTING FIXTURE, BATTERY OPERATED, ARROWS INDICATE AIMING
	– GROUNDING ROD

SWITCH OUTLET: SMALL LETTER BY THE SIDE OF SYMBOL INDICATES THE CONTROLLED FIXTURE

SYMBOL	DESCRIPTION
	– SINGLE RCPT
	– DOUBLE RCPT
	– SINGLE SPECIAL-PURPOSE
	– FLEXIBLE CONDUIT
	– CONDUIT W/ SEAL FITTING

SPECIAL IDENTIFICATION OF OUTLETS

WP	– WEATHERPROOF	DT	– DUSTTIGHT
VT	– VAPORTIGHT	RT	– RAINTIGHT
WT	– WEATHERTIGHT	XP	– EXPLOSIONPROOF

CEILING MTD	WALL MTD	DESCRIPTION
5a A	5a A	SURFACE OR PENDANT INCAN-DESCENT, MERCURY-VAPOR, OR SIMILAR LAMP FIXTURE
5a A	5a A	SURFACE OR PENDENT INDIVIDUAL FLUORESCENT FIXTURE
		– LIGHT. ARROWS INDICATE ROUTE OF EGRESS
		– JUNCTION BOX
S_a		– SINGLE-POLE SWITCH
S_3		– THREE-WAY SWITCH
S_4		– FOUR-WAY SWITCH
S_K		– KEY-OPERATED SWITCH

LIGHTING OUTLETS: CAPITAL LETTER OUTSIDE SYMBOL INDICATES FIXTURE TYPE AS SHOWN ON FIXTURE SCHEDULE. NUMERIC INDICATES CIRCUIT NO. SMALL LETTER DESIGNATES THE CONTROLLING SWITCH

RECEPTACLE OUTLETS: NUMERICAL BY THE SIDE OF SYMBOL INDICATES CIRCUIT NUMBER

SYMBOL	DESCRIPTION
*	– SWITCHES OR DEVICES * INDICATES TYPE

BRS	BELT RUN-OFF SWITCH	OS	OVERSPEED SWITCH
DPS	DIFFERENTIAL PRESSURE SWITCH	PCS	PLUGGED CHUTE SWITCH
		PNS	POSITION SWITCH
ES	EMERGENCY PULL-CORD SWITCH	PS	PRESSURE SWITCH
		RPS	BELT RIP SWITCH
FS	FLOW SWITCH	RS	ROTATION SWITCH
LS	LIMIT SWITCH	RTD	RESISTANCE TEMPERATURE DETECTOR
MTD	METAL DETECTOR		
HOA	HAND-OFF-AUTO	SV	SOLENOID VALVE
ESD	EMERGENCY SHUT-DOWN		

POLE LINE SYMBOLS

SYMBOL	DESCRIPTION
	–NEW CLASS 2 POLE
	–EXISTING POLES TO BE REPLACED
	–POLE MOUNTED TRANSFORMER

LOGIC DIAGRAM SYMBOLS

SYMBOL	DESCRIPTION
	– INPUT/OUTPUT INSTRUMENTATION DEVICE (FIELD MOUNTED)
	– INPUT/OUTPUT INSTRUMENTATION DEVICE (BOARD MOUNTED)
*	LOGIC CONTINUATION * INDICATES DRAWING NUMBER
	– TIME DELAY

ALPHA ENGINEERS and CONSTRUCTORS, INC.
3929 NW 29th AVE. PORTLAND, OR. 97210 Tel:(503)227-3317/Fax:(503)227-3244

AEC PROJECT NUMBER 25-23

DRAWING NO.	REFERENCE DRAWINGS	REV.	DATE	REVISED	DRAWN	CKD.	OV/STRL	MECH/PIPING	ELEC/INST	SAFETY	P.E.
		A	06/21/00	BID SET	DAB						

TOSCO
Tosco Refining Company
A Division of Tosco Corporation
5528 NW Doane St.
Portland, Oregon 97210

CLIENT APPROVALS		
REV	BY	DATE

SCALE: NONE		DATE
DRAWN BY	DAB	06/16/00
DESIGNED BY		
CHECKED BY		
WORK ORDER		
DATE		
06/16/00		

PORTLAND TERMINAL
PORTLAND, OREGON
BLACK OIL BLENDING SYSTEM
SYMBOLS AND LEGEND
SHEET

DRAWING NO.	SHEET	REV.
2523-E-02	1 OF 1	A

COP00021582

2523E02A.DWG, 2CPD, 06/16/00 [Tue, 4:27 PM] -

COP00021583

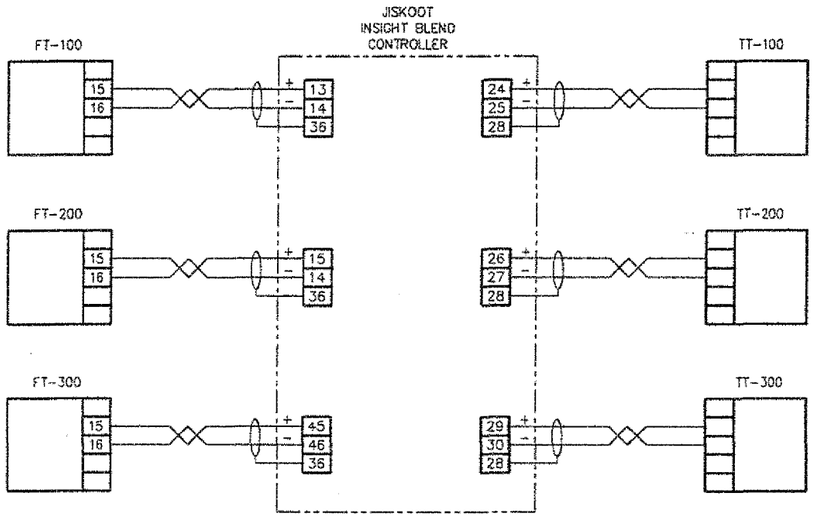

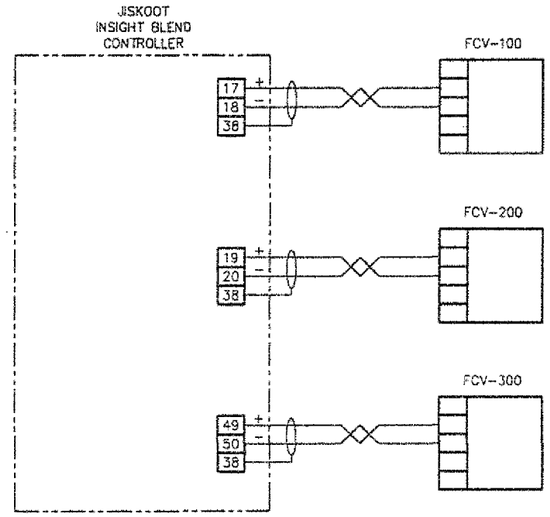

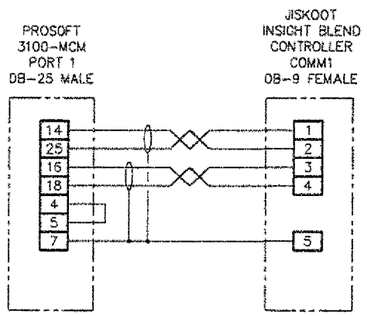

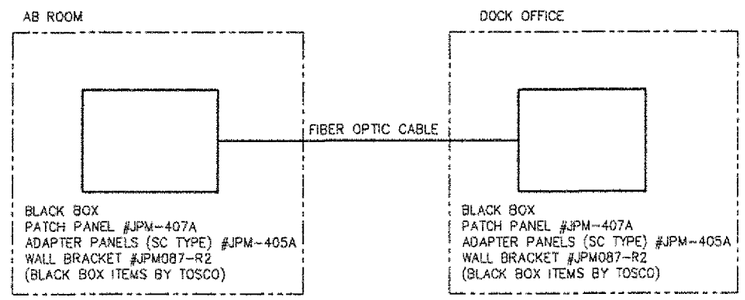

DRAWING NO.	REFERENCE DRAWINGS	REV.	DATE	REVISED	DRAWN	CKD.	CIV/STRL	MECH/PIPING	ELEC/INST	SAFETY	P.E.
		A	06/21/00	BID SET	DAB	WHB					
		B	06/26/00	REVISED DWG. NUMBER	DAB	WHB					

TOSCO
Tosco Refining Company
A Division of Tosco Corporation
5528 NW Doane St.
Portland, Oregon 97210

CLIENT APPROVALS		
REV	BY	DATE

ALPHA ENGINEERS and CONSTRUCTORS, INC.
2828 NW 29th AVE, PORTLAND, OR. 97210 Tel:(503)227-1317/Fax:(503)227-3244

AECI PROJECT NUMBER 25-23

SCALE: NONE		DATE
DRAWN BY	DAB	06/15/00
DESIGNED BY	WHB	06/15/00
CHECKED BY	WHB	06/21/00
WORK ORDER		

PORTLAND TERMINAL
PORTLAND, OREGON
BLACK OIL BLENDING SYSTEM
INTERCONNECT DIAGRAM

DATE	DRAWING NO.	SHEET	REV.
06/16/00	2523-E-03	1 OF 1	B

COP0021584

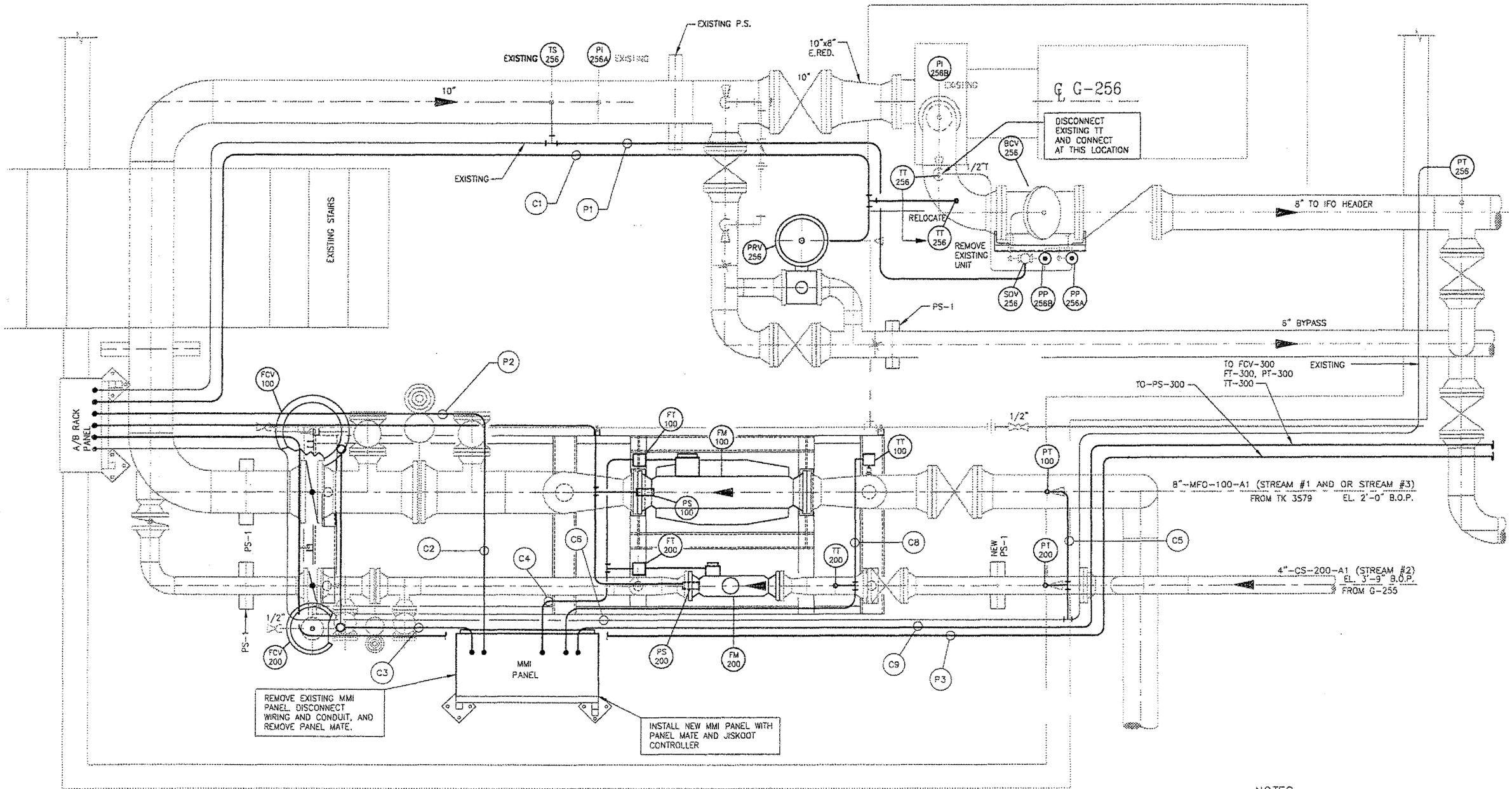

PLAN
SCALE 1"=1'-0"

NOTES:
1. VERIFY ALL DIMENSIONS PRIOR TO FABRICATION.
2. NEW WORK SHOWN BOLD

ALPHA ENGINEERS and CONSTRUCTORS, INC.
2925 NW 29th AVE, PORTLAND, OR. 97210 Tel:(503)227-1317/Fax:(503)227-3244

AECI PROJECT NUMBER 25-23

DRAWING NO.	REFERENCE DRAWINGS	REV.	DATE	REVISED	DRAWN	CKD.	CIV/STRL	MECH/PIPING	ELEC/INST	SAFETY	P.E.
2523-E-01	SITE PLAN	A	06/21/00	BID SET	DAB	WHB					
		A	05/26/00	ADDED MMI PANEL SUPPORT	DAB	WHB					

TOSCO
Tosco Refining Company
A Division of Tosco Corporation
5528 NW Doane St.
Portland, Oregon 97210

CLIENT APPROVALS		
REV	BY	DATE

SCALE AS SHOWN		DATE
DRAWN BY	DAB	06/16/00
DESIGNED BY	WHB	06/16/00
CHECKED BY	WHB	06/21/00
WORK ORDER		
DATE		06/16/00

PORTLAND TERMINAL
PORTLAND, OREGON
BLACK OIL BLENDING SYSTEM
ELECTRICAL
BLENDER SKID CONDUIT PLAN

DRAWING NO. 2523-EC-01 | SHEET 1 OF 1 | REV. B

2523ECNB.DWG -CFD: 06/26/00 [Tue: 08:07 AM]

COP00021585

CONDUIT & CABLE SCHEDULE

FROM	CONDUIT NO.	SIZE	TO	VOLTAGE	CABLE TYPE	MFG. NO.
AB PANEL	C1	3/4" GRC	PRV-256, TT-256	____	2-2C/20GA SHLD	BELDEN 8762
AB PANEL	C2	3/4" GRC	MMI PANEL	____	1-4C/20GA SHLD, 1-2C/20GA SHLD	BELDEN 9402, 8762
MMI PANEL	C3	3/4" GRC	FCV-100, FCV-200	____	2-2C/20GA SHLD	BELDEN 8762
MMI PANEL	C4	3/4" GRC	FT-100, FT-200	____	2-2C/20GA SHLD	BELDEN 8762
C6	C5	3/4" GRC	PT-100, PT-200	____	2-2C/20GA SHLD	BELDEN 8762
PT-256, C5	C6	3/4" GRC	AB PANEL	____	3-2C/20GA SHLD	BELDEN 8762
NOT USED	C7					
MMI PANEL	C8	3/4" GRC	TT-100, TT-200	____	2-2C/20GA SHLD	BELDEN 8762
MMI PANEL	C9	EXIST.	PT-300, FCV-300 TT-300, FT-300	____	4-2C/20GA SHLD	BELDEN 8762
AB PANEL	C10	EXIST.	DOCK HOUSE PANEL	____	1-4C FO CABLE 1-2C/14GA SHLD 1-2C/20GA SHLD	BELDEN 225716 BELDEN 83752 BELDEN 9463
AB PANEL	P1	3/4" GRC	TS-256,SOV-256	120	2-#12 THHN W/1#14 GND	
AB PANEL	P2	3/4" GRC	PS-100, PS-200	120	3-#12 THHN W/1#14 GND	
AB PANEL	P3	3/4" GRC	PS-300	120	2-#12 THHN W/1#14 GND	
AB PANEL	P4	3/4" GRC	G500	460	3-#12 THHN W/1#14 GND	
(*) AB PANEL	P5	3/4" GRC	SC-500,501, LS-500	120	10-#12 THHN W/1#14 GND	
DOCK PANEL	P6	3/4" GRC	G500 STARTER	460	3-#12 THHN W/1#14 GND	
P-1	P7	3/4" GRC	SAMPLING SKID	208	2-#12 THHN W/1#14 GND	
(*) DOCK PANEL	P8	3/4" GRC	SAMPLING SHACK SC-500, SC-501	24	1-2C/14GA SHLD 1-2C/20GA SHLD 4-#16THHN	BELDEN 83752 BELDEN 9463

(*) CONDUIT RUN MUST BE MODIFIED TO ACCEPT FO CABLE – MIN. 4.5" RADIUS

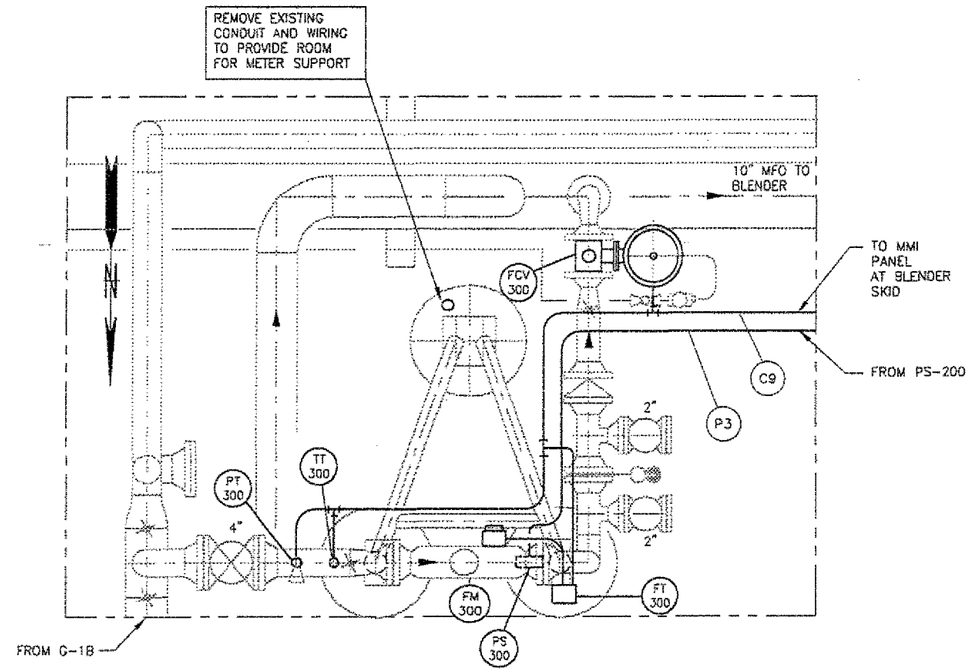

STREAM NO.3 METER NEAR TK-2783
PLAN
SCALE 1"=1'-0"

NOTES:
1. VERIFY ALL DIMENSIONS PRIOR TO FABRICATION.
2. NEW WORK SHOWN BOLD

ALPHA ENGINEERS and CONSTRUCTORS, INC.
2525 NW 29th AVE, PORTLAND, OR. 97210 Tel:(503)227-3317/Fax:(503)227-3244

AECI PROJECT NUMBER 25-23

DRAWING NO.	REFERENCE DRAWINGS	REV.	DATE	REVISED	DRAWN	CKD.	CIV/STRL	MECH/PIPING	ELEC/INST	SAFETY	P.E.
2523-E-01	SITE PLAN	A	06/21/00	BID SET	DAB	WHB					
		B	06/21/00	UPDATED CONDUIT & CABLE SCHEDULE	DAB	WHB					
		C	07/07/00	UPDATED CONDUIT & CABLE SCHEDULE	DAB	WHB					

TOSCO
Tosco Refining Company
A Division of Tosco Corporation
5528 NW Doane St.
Portland, Oregon 97210

CLIENT APPROVALS		
REV	BY	DATE

SCALE: 1"=1'-0"		DATE
DRAWN BY	DAB	06/16/00
DESIGNED BY	WHB	06/16/00
CHECKED BY	WHB	06/21/00
WORK ORDER		
DATE		
06/16/00		

PORTLAND TERMINAL
PORTLAND, OREGON
BLACK OIL BLENDING SYSTEM
ELECTRICAL
ELECTRICAL STREAM NO.3
CONDUIT PLAN AND SCHEDULE

DRAWING NO.	SHEET	REV.
2523-EC-02	1 OF 1	C

2523-EC-02.DWG 07/07/00 [PMF 10:18 AM]

COP00021586

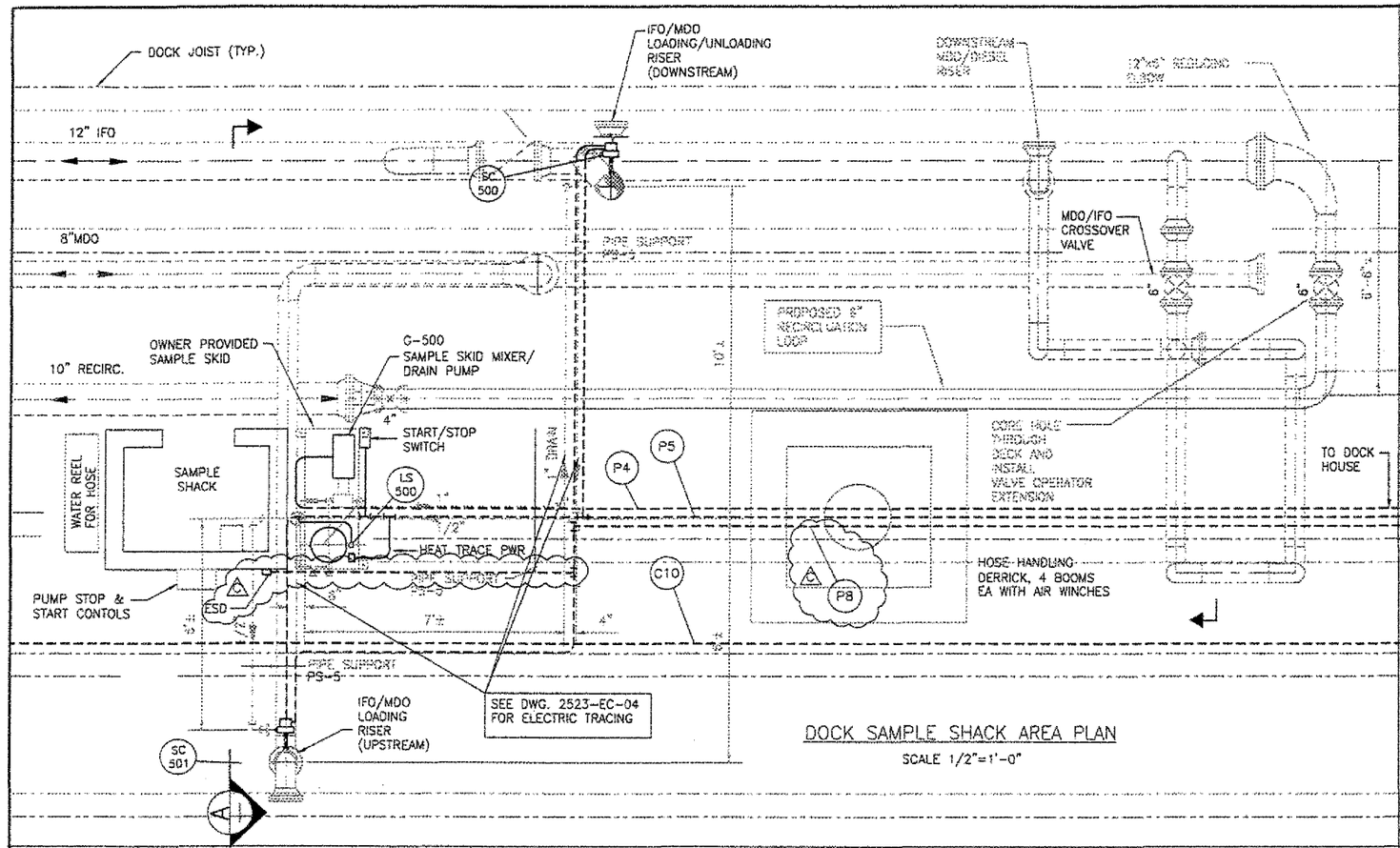

DOCK SAMPLE SHACK AREA PLAN

SCALE 1/2"=1'-0"

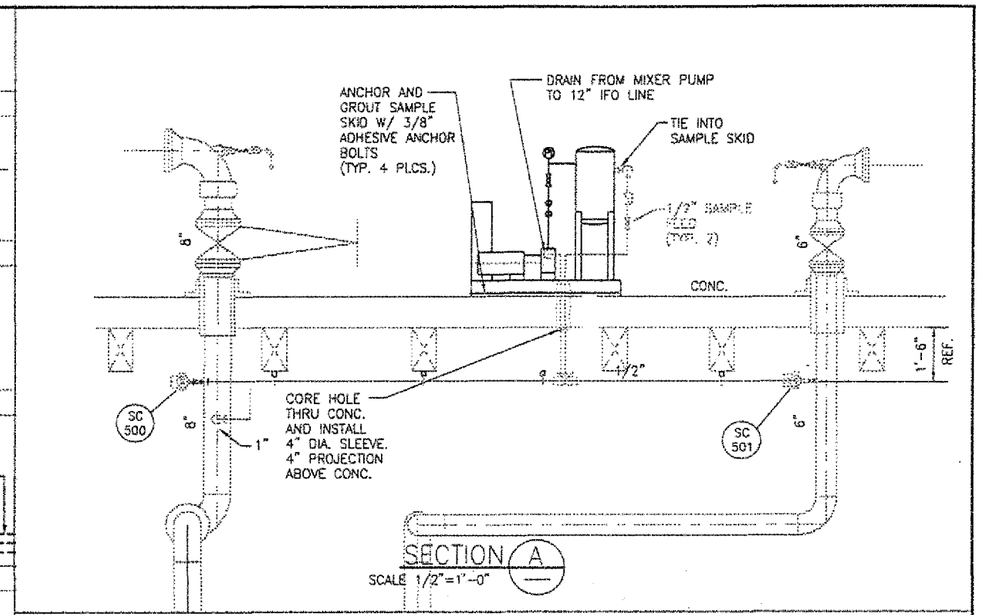

SECTION A

SCALE 1/2"=1'-0"

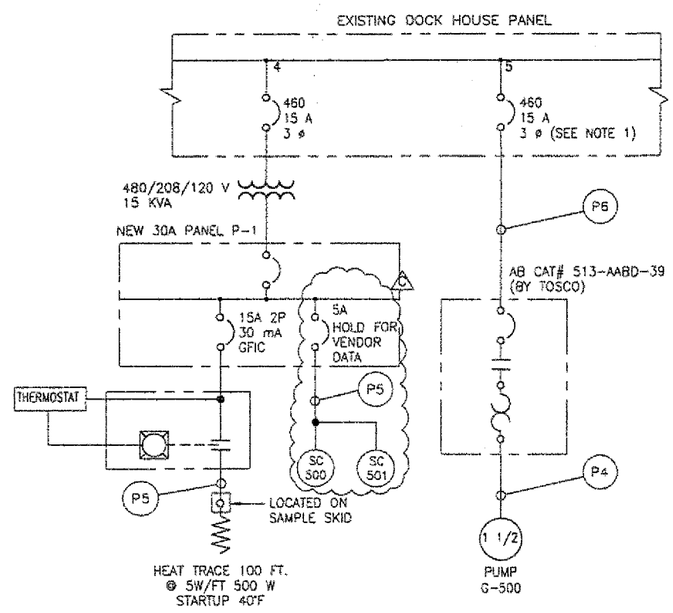

DOCK HOUSE ONE-LINE

ITEM	QUAN.	DESCRIPTION
40	1	LINE SENSING TEMPERATURE CONTROL RAYCHEM #E507S-2LS
41	1	ENCLOSURE, FIBERGLASS, NEMA 4, HOFFMAN A-1287JFGR
42	1	PILOT LIGHT, NEMA 4 PUSH TO TEST, ALLEN-BRADLEY #800H-QPT10G
43	1	PERMANENT MAGNET LATCH AC CONTACTOR ALLEN-BRADLEY #500L-AOA94(15A)
44	1	HOUSING, ALLEN-BRADLEY #800R-17Z

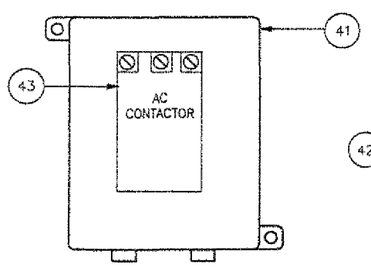

CONTACTOR

NOTE:
MOUNTING LOCATION ADJACENT TO SAMPLE SKID.

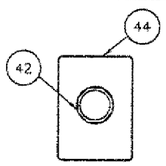

PILOT LIGHT

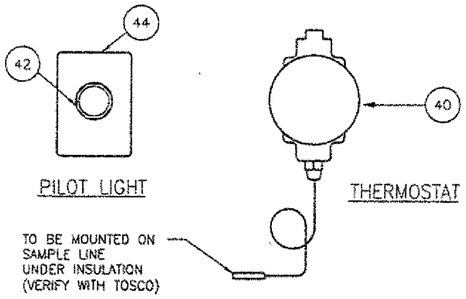

THERMOSTAT

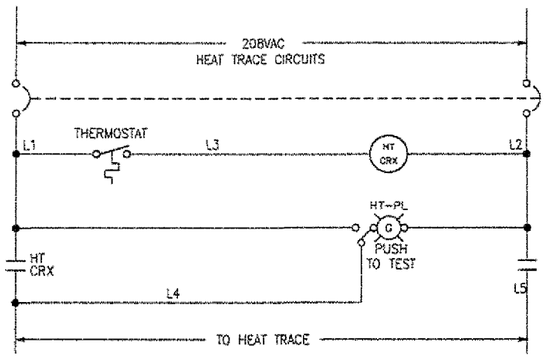

TYPICAL HEAT TRACE CONTROL

NOTE:

1. DISCONNECT WIRING TO WELDER OUTLET AND LAY UP IN PANEL.

DRAWING NO.	REFERENCE DRAWINGS	REV.	DATE	REVISED	DRAWN	CKD.	CIV/STRL	MECH/PIPING	ELEC/INST	SAFETY	P.E.
2523-E-01	SITE PLAN	A	06/21/00	BID SET	DAB	WHB					
		B	06/26/00	ADDED ELECTRIC TRACE & G-500 STARTER	DAB	WHB					
		C	07/07/00	ADDED PB AND ESD	DAB	WHB					

TOSCO
Tosco Refining Company
A Division of Tosco Corporation
5528 NW Doane St.
Portland, Oregon 97210

CLIENT APPROVALS		
REV	BY	DATE

SCALE AS SHOWN		DATE
DRAWN BY	DAB	06/16/00
DESIGNED BY	WHB	06/16/00
CHECKED BY	WHB	06/21/00
WORK ORDER		
DATE		
06/16/00		

ALPHA ENGINEERS and CONSTRUCTORS, INC.
2929 NW 29th AVE, PORTLAND, OR. 97210 Tel(503)227-3317/Fax(503)227-3244

AECI PROJECT NUMBER 25-23

PORTLAND TERMINAL
PORTLAND, OREGON
BLACK OIL BLENDING SYSTEM
ELECTRICAL
DOCK AREA SAMPLE SYSTEM
CONDUIT PLAN

DRAWING NO. 2523-EC-03 | SHEET 1 OF 1 | REV. C

COP0021587

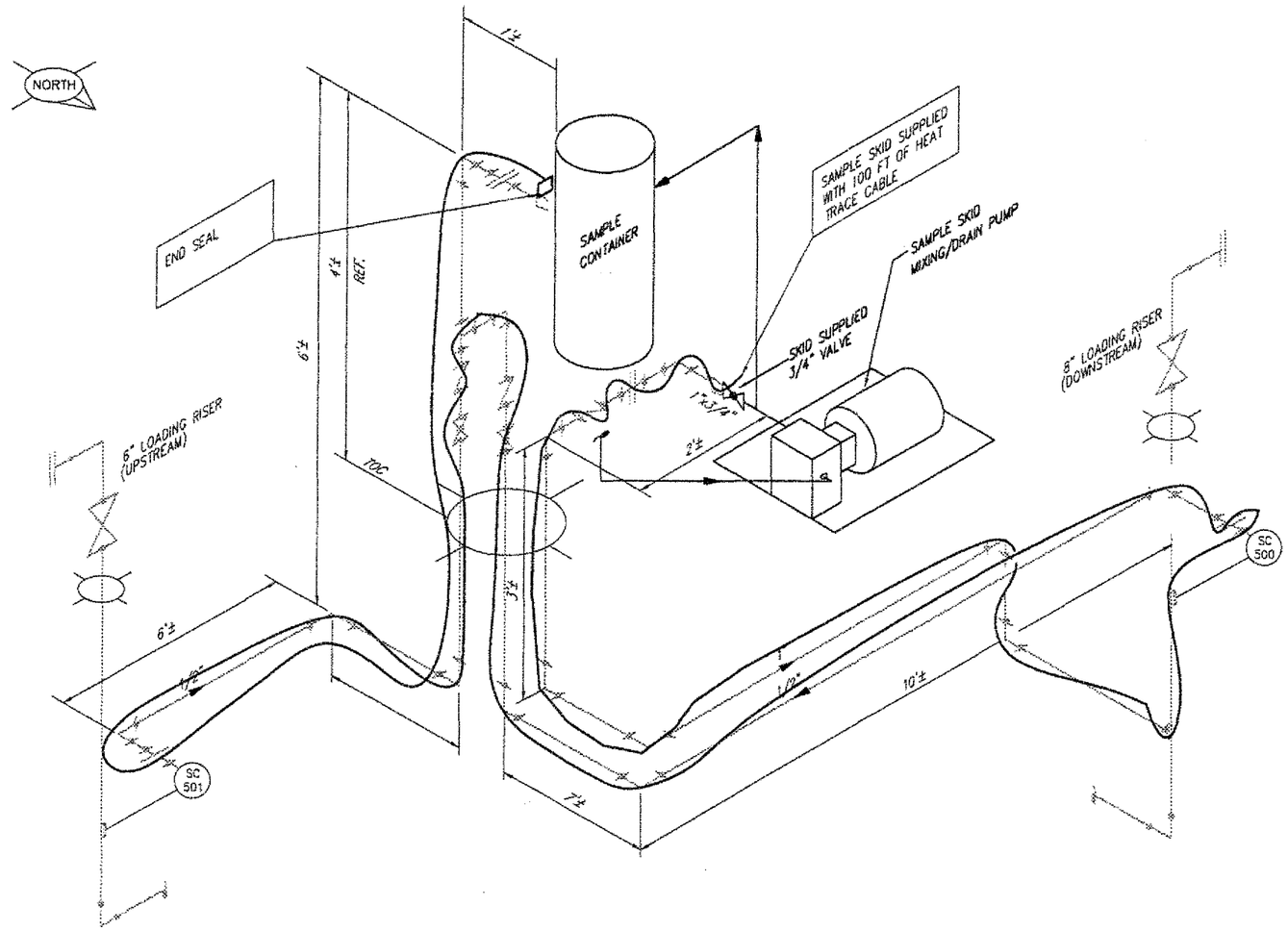

ELECTRIC TRACE ISOMETRIC

NOTE:

1. 100FT OF ELECTRIC HEAT TRACE CABLE TO BE PROVIDED WITH SAMPLE SKID. ROUTE ALONG SAMPLE AND DRAIN LINES AS SHOWN.

ALPHA ENGINEERS and CONSTRUCTORS, INC.
2929 NW 29th AVE, PORTLAND, OR. 97210 Tel:(503)227-3317/Fax:(503)227-3344

AECI PROJECT NUMBER: 25-23

DRAWING NO.	REFERENCE DRAWINGS	REV.	DATE	REVISED	DRAWN	CKD.	CIV/STRL	MECH/PIPING	ELEC/INST	SAFETY	P.E.
2523-EC-03	DOCK AREA SAMPLE SYSTEM CONDUIT PLAN	A	06/26/00	BID SET	DAB	WHB					

TOSCO
Tosco Refining Company
A Division of Tosco Corporation
5528 NW Doane St.
Portland, Oregon 97210

CLIENT APPROVALS		
REV	BY	DATE

SCALE: AS SHOWN		DATE
DRAWN BY	DAB	06/26/00
DESIGNED BY	DAB	06/26/00
CHECKED BY	WHB	06/26/00
WORK ORDER		
DATE		
06/26/00		

PORTLAND TERMINAL
PORTLAND, OREGON
BLACK OIL BLENDING SYSTEM
ELECTRICAL
ELECTRIC TRACE
DOCK SAMPLING SYSTEM

DRAWING NO.: 2523-EC-04 | SHEET: 1 OF 1 | REV.: A

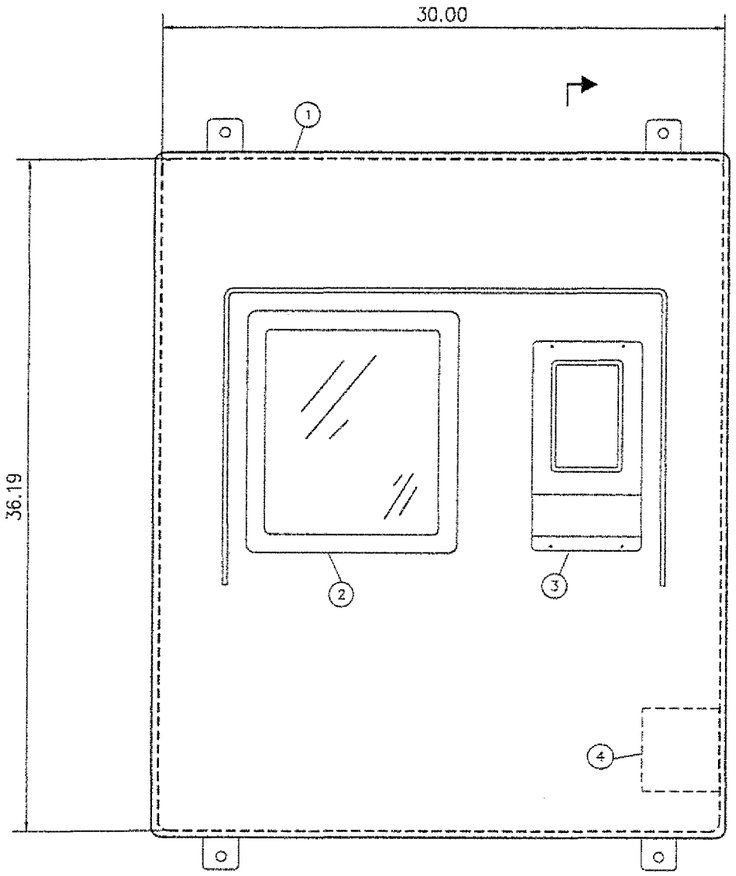

REAR VIEW

SCALE 3"=1'-0"

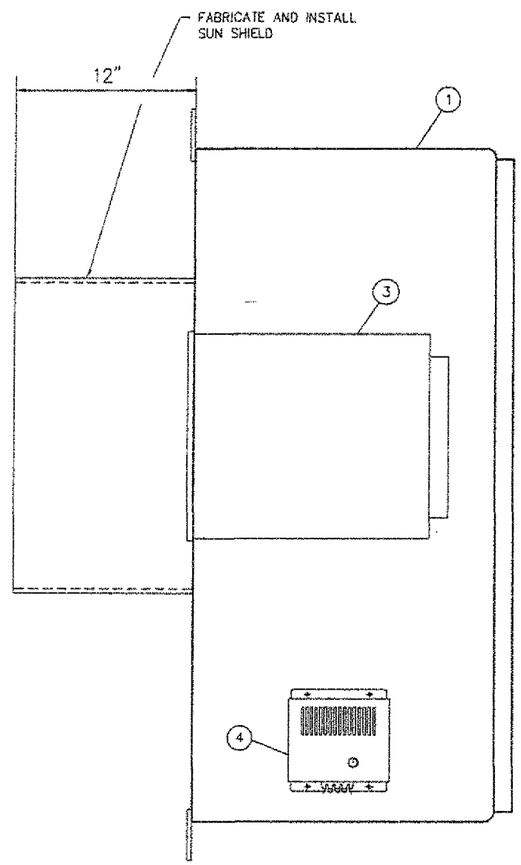

SECTION A

3"=1'-0"

BILL OF MATERIAL

ITEM	QUANTITY	DESCRIPTION
1	1	ENCLOSURE: NEMA 4X 36" X 30" HOFFMAN CAT. #A36H30FLP PROVIDED BY OWNER
2	1	PANEL MATE – BY OWNER
3	1	JISKOOT INSIGHT BLEND CONTROLLER – BY OWNER
4	1	HEATER: 115VAC, 200W – HOFFMAN CAT. #D-AH2001A (EXISTING)
5		
6		
7		
8		
9		
10		
11		
12		
13		
14		
15		
16		
17		
18		
19		

ALPHA ENGINEERS and CONSTRUCTORS, INC.
2929 NW 29th AVE, PORTLAND, OR. 97210 Tel:(503)227-3317/Fax:(503)227-3244

AECI PROJECT NUMBER 25-23

DRAWING NO.	REFERENCE DRAWINGS	REV.	DATE	REVISED	DRAWN	CKD.	CIV/STRL	MECH/PIPING	ELEC/INST	SAFETY	P.E.
		A	06/21/00	BID SET	DAB	WHB					
		B	06/26/00	BOM: ITEM 4 (EXISTING)	DAB	WHB					

TOSCO
Tosco Refining Company
A Division of Tosco Corporation
5528 NW Doane St.
Portland, Oregon 97210

CLIENT APPROVALS		
REV	BY	DATE

SCALE: NONE		DATE
DRAWN BY	DAB	06/16/00
DESIGNED BY	WHB	06/16/00
CHECKED BY	WHB	06/21/00
WORK ORDER		

PORTLAND TERMINAL
PORTLAND, OREGON
BLACK OIL BLENDING SYSTEM
BLENDER CONTROLLER
PANEL LAYOUT

DATE	DRAWING NO.	SHEET	REV.
06/16/00	2523-E-3010	1 OF 1	B

2523E3010A.DWG[2PD] 06/26/00 [TIME: 08:15 AM]

COP00021588

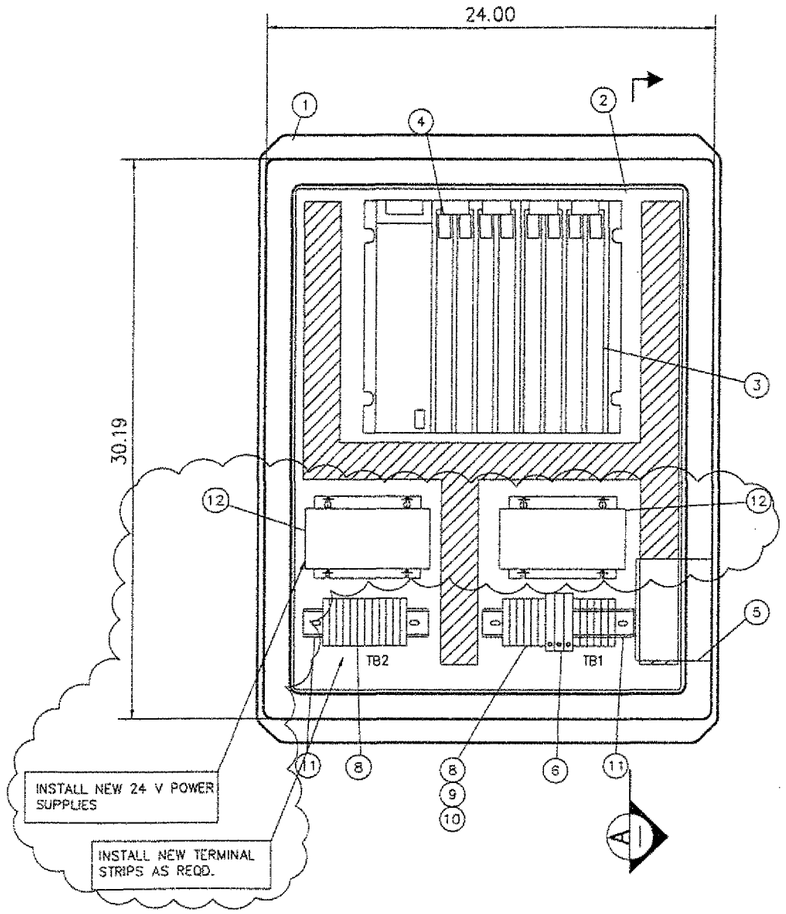

FRONT VIEW – DOOR REMOVED

SCALE 3"=1'-0"

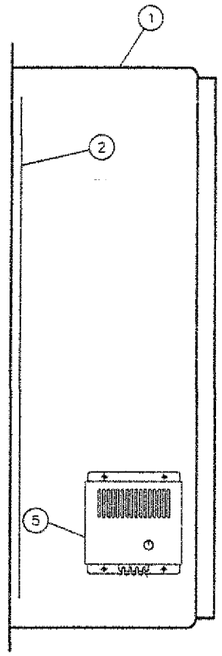

SECTION A

3"=1'-0"

BILL OF MATERIAL

ITEM	QUANTITY	DESCRIPTION
1	1	ENCLOSURE: NEMA 4X 30" X 24" HOFFMAN CAT. #A30H24120BL
2	1	PANEL: ALUMINUM 27" X 21" HOFFMAN CAT. #A30P24AL
3	1	PLC REMOTE RACK: ALLEN-BRADLEY 1771-A2B, 8 SLOT
4	1	RACK MTD. POWER SUPPLY: ALLEN-BRADLEY 1771-P4S
5	1	HEATER: 115VAC, 200W - HOFFMAN CAT. #D-AH2001A
6	4	CIRCUIT BREAKER: 5A, ALLEN-BRADLEY, #1492-CH050
7	A/R	WIRE DUCT: 2" X 3" PANDUIT
8	24	TERMINAL BLOCKS: ALLEN-BRADLEY, #1492-W4
9	2	END BARRIERS: ALLEN-BRADLEY, #1492-EB3
10	2	END ANCHORS: ALLEN-BRADLEY, #1492-EA35
11	1	DIN MOUNTING RAIL: 35 x 7.5mm, ALLEN-BRADLEY CAT. #199-DR1
12	2	POWER SUPPLY 24VDC, HC24-3.4-A
13		
14		
15		
16		
17		
18		
19		

ALPHA ENGINEERS and CONSTRUCTORS, INC.
2828 NW 29th AVE, PORTLAND, OR 97210 Tel:(503)227-3317/Fax:(503)227-3244

AECI PROJECT NUMBER 25-23

DRAWING NO.	REFERENCE DRAWINGS	REV.	DATE	REVISED	DRAWN	CKD.	CIV/STRL	MECH/PIPING	ELEC/INST	SAFETY	P.E.
		A	06/21/00	BID SET	DAB	WHB					

TOSCO
Tosco Refining Company
A Division of Tosco Corporation
5528 NW Doane St.
Portland, Oregon 97210

CLIENT APPROVALS		
REV	BY	DATE

SCALE: NONE		DATE
DRAWN BY	DAB	06/16/00
DESIGNED BY	WHB	06/16/00
CHECKED BY		
WORK ORDER		
DATE		
06/16/00		

PORTLAND TERMINAL
PORTLAND, OREGON
BLACK OIL BLENDING SYSTEM
EXISTING A/B PANEL LAYOUT

DRAWING NO.	SHEET	REV.
2523-E-3011	1 OF 1	A

2523E3011A.DWGCCPD: 06/20/00 [TIME: 7:54 PM] >

COP00021589

COP00021590

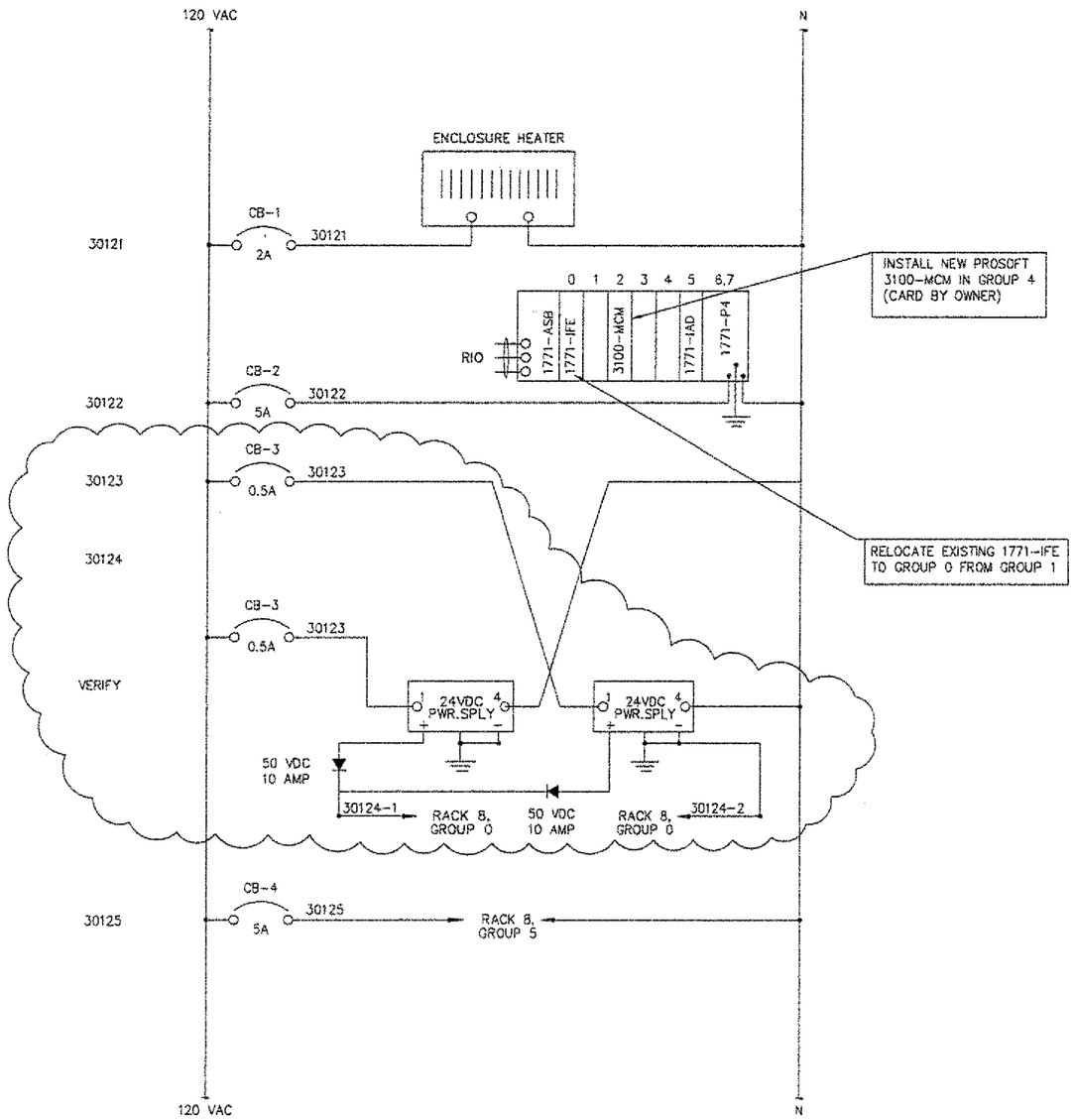

CONTROL POWER DISTRIBUTION

NOTES:

1. FIELD WIRING SHOWN BOLD.

ALPHA ENGINEERS and CONSTRUCTORS, INC.
2828 NW 29th AVE. PORTLAND, OR. 97210 Tel:(503)227-3317/Fax:(503)227-2244

AECI PROJECT NUMBER 25-23

DRAWING NO.	REFERENCE DRAWINGS	REV.	DATE	REVISED	DRAWN	CKD.	CIV/STRL	MECH/PPING	ELEC/INST	SAFETY	P.E.
		A	05/21/00	BID SET	DAB	WHB					
		B	06/26/00	ADDED 50VDC/10 AMP DIODES	DAB	WHB					

TOSCO
Tosco Refining Company
A Division of Tosco Corporation
5528 NW Doane St.
Portland, Oregon 97210

CLIENT APPROVALS		
REV	BY	DATE

SCALE: NONE		DATE
DRAWN BY	DAB	05/16/00
DESIGNED BY	WHB	05/16/00
CHECKED BY	WHB	05/21/00
WORK ORDER		
DATE		
06/16/00		

PORTLAND TERMINAL
PORTLAND, OREGON
BLACK OIL BLENDING SYSTEM
A/B RACK PANEL
CONTROL POWER DISTRIBUTION

DRAWING NO.	SHEET	REV.
2523-E-3012	1 OF 1	B

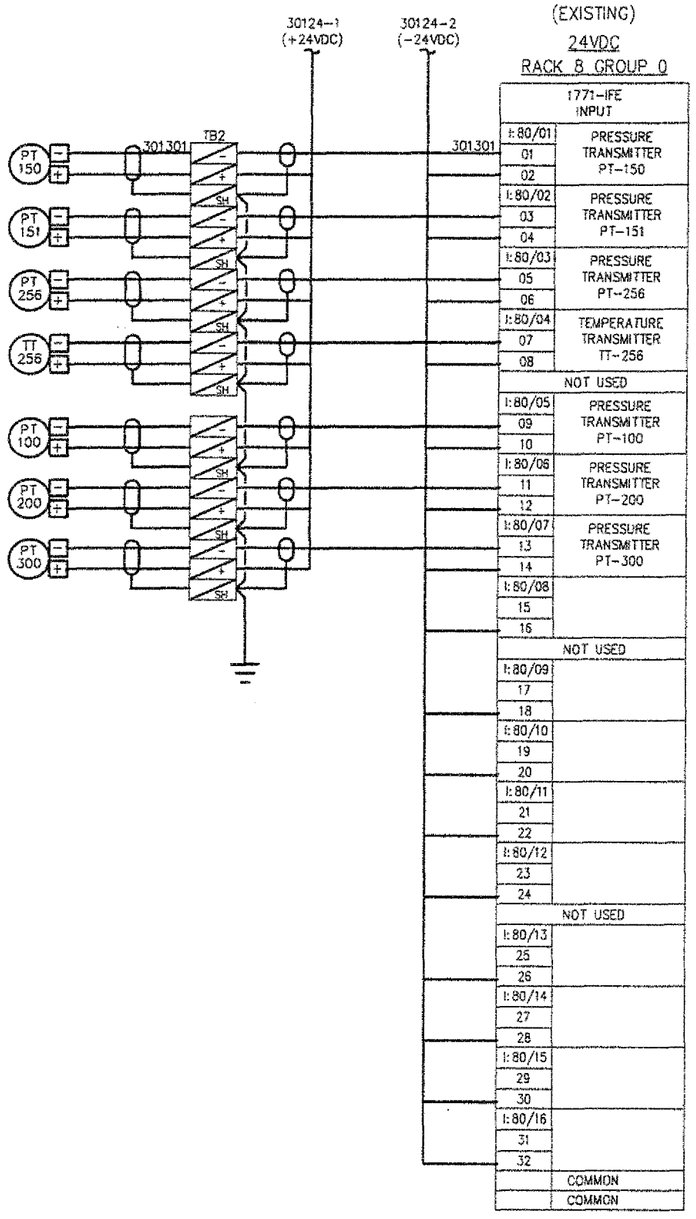

(SPARE)

RACK 8 GROUP 1

NOTES:

1. FIELD WIRING SHOWN BOLD.

ALPHA ENGINEERS and CONSTRUCTORS, INC.
2523 NW 29th AVE, PORTLAND, OR 97210 Tel:(503)227-1317/Fax:(503)227-3244

AECI PROJECT NUMBER 25-23

DRAWING NO.	REFERENCE DRAWINGS	REV.	DATE	REVISED	DRAWN	CKD.	CIV/STRL	MECH/PIPING	ELEC/INST	SAFETY	P.E.
		A	06/21/00	BID SET	DAB	WHB					
		B	06/26/00	ADDED GND. LINE NUMBERS	DAB	WHB					

TOSCO
Tosco Refining Company
A Division of Tosco Corporation
5528 NW Doane St.
Portland, Oregon 97210

CLIENT APPROVALS		
REV	BY	DATE

SCALE: NONE		DATE
DRAWN BY	DAB	06/16/00
DESIGNED BY	WHB	06/16/00
CHECKED BY	WHB	06/21/00
WORK ORDER		
DATE		
06/16/00		

PORTLAND TERMINAL
PORTLAND, OREGON
BLACK OIL BLENDING SYSTEM
PLC SCHEMATICS
RACK 8, GROUP 0, 1

DRAWING NO.	SHEET	REV.
2523-E-3013	1 OF 1	B

COP00021591

(SPARE)
24VDC
RACK 8 GROUP 2

(NEW)
24VDC
RACK 8 GROUP 3

PROSOFT
COMMUNICATIONS
MODULE

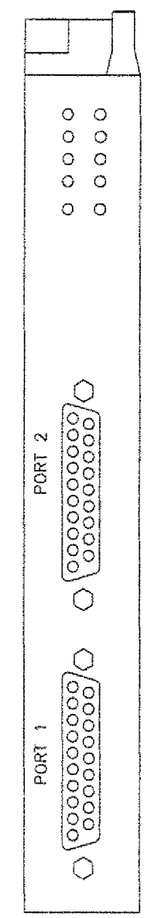

NOTES:

ALPHA
ENGINEERS and
CONSTRUCTORS, INC.
2929 NW 29th AVE, PORTLAND, OR. 97210 Tel:(503)227-3317/Fax:(503)227-3244

AECI PROJECT NUMBER
25-23

DRAWING NO.	REFERENCE DRAWINGS	REV.	DATE	REVISED	DRAWN	CKD.	CIV/STRL	MECH/PIPING	ELEC/INST	SAFETY	P.E.
		A	05/21/00	BID SET	DAB	WHB					

TOSCO
Tosco Refining Company
A Division of Tosco Corporation
5528 NW Doane St.
Portland, Oregon 97210

CLIENT APPROVALS		
REV	BY	DATE

SCALE: NONE		DATE
DRAWN BY	DAB	05/16/00
DESIGNED BY	WHB	05/16/00
CHECKED BY		
WORK ORDER		
DATE		
06/16/00		

PORTLAND TERMINAL
PORTLAND, OREGON
BLACK OIL BLENDING SYSTEM
PLC SCHEMATICS
RACK 8, GROUP 2,3

DRAWING NO.	SHEET	REV.
2523-E-3014	1 OF 1	A

2523E3014A.DWG:CPO: 06/20/00 [TIME: 7:54 PM] >

COP0021592

COP0021593

(SPARE)
RACK 8 GROUP 4

(EXISTING)
120VAC
RACK 8 GROUP 5

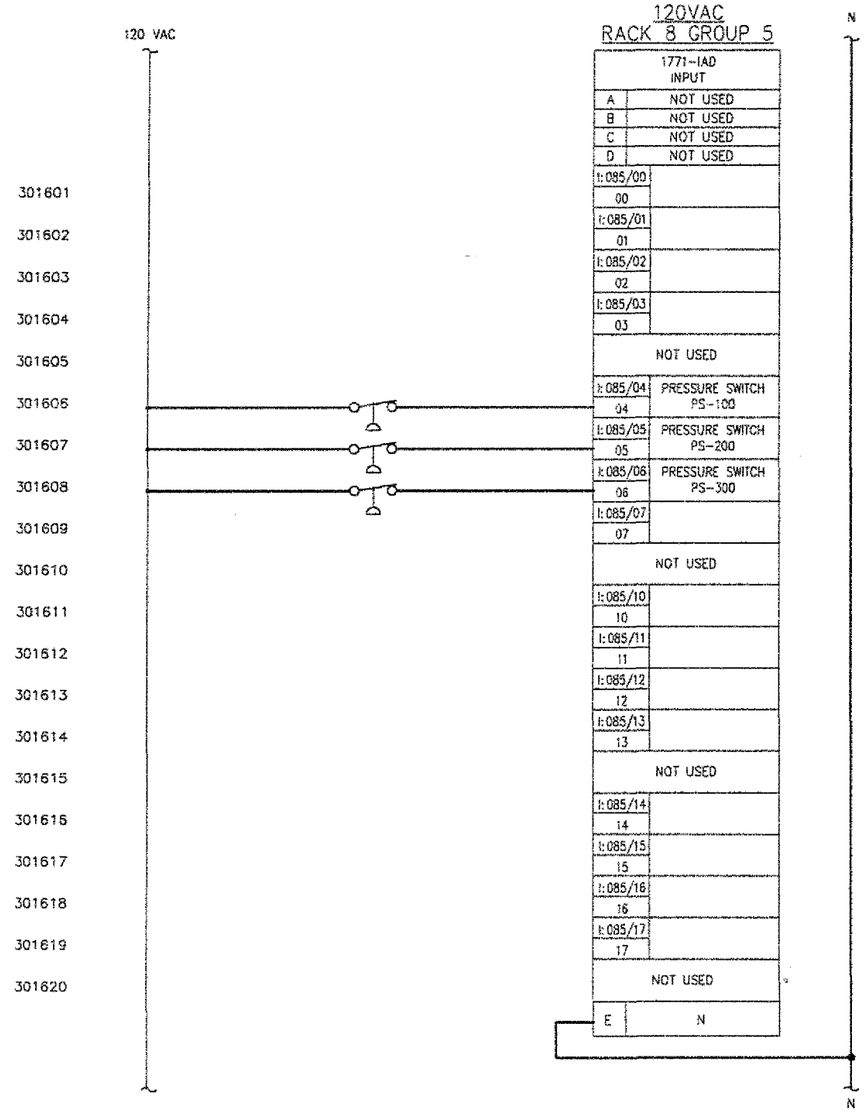

NOTES:

1. FIELD WIRING SHOWN BOLD.

ALPHA ENGINEERS and CONSTRUCTORS, INC.
2929 NW 29th AVE, PORTLAND, OR. 97210 Tel:(503)227-3313/Fax:(503)227-3244

AECI PROJECT NUMBER: 25-23

DRAWING NO.	REFERENCE DRAWINGS	REV.	DATE	REVISED	DRAWN	CKD.	CIV/STRL	MECH/PIPING	ELEC/INST	SAFETY	P.E.
		A	06/21/00	BID SET	DAB	WHB					

TOSCO
Tosco Refining Company
A Division of Tosco Corporation
5528 NW Doane St.
Portland, Oregon 97210

CLIENT APPROVALS		
REV	BY	DATE

SCALE: NONE		DATE
DRAWN BY	DAB	05/16/00
DESIGNED BY	WHB	05/16/00
CHECKED BY		
WORK ORDER		
DATE		
06/16/00		

PORTLAND TERMINAL
PORTLAND, OREGON
BLACK OIL BLENDING SYSTEM
PLC SCHEMATICS
RACK 8, GROUP 4,5

DRAWING NO.	SHEET	REV.
2523-E-3015	1 OF 1	A

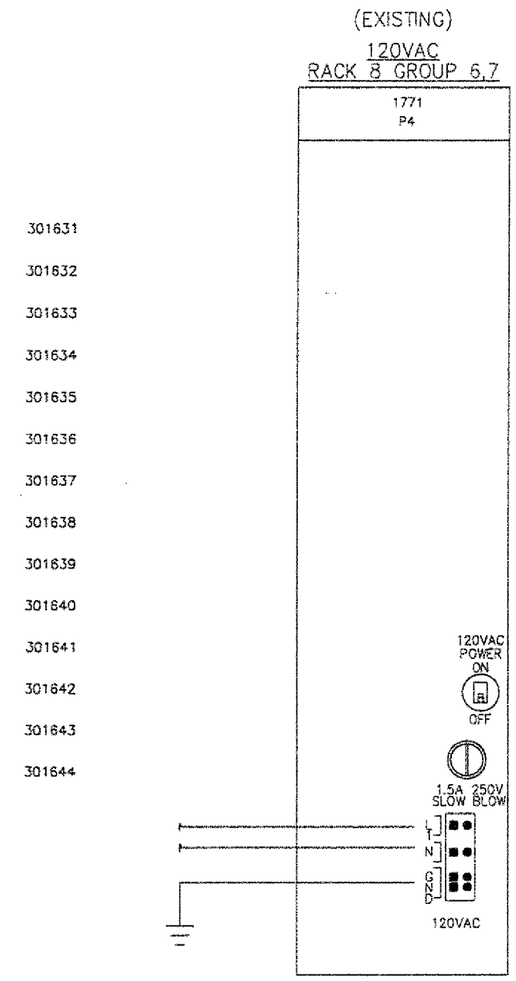

ALPHA ENGINEERS and CONSTRUCTORS, INC.
2929 NW 29th AVE., PORTLAND, OR. 97210 Tel:(503)227-3317/Fax:(503)227-3244

AECI PROJECT NUMBER: 25-23

DRAWING NO.	REFERENCE DRAWINGS	REV.	DATE	REVISED	DRAWN	CKD.	CIV/STRL	MECH/PPING	ELEC/INST	SAFETY	P.E.
		A	06/21/00	BID SET	OAB	WHB					

TOSCO
Tosco Refining Company
A Division of Tosco Corporation
5528 NW Doane St.
Portland, Oregon 97210

CLIENT APPROVALS		
REV	BY	DATE

SCALE: NONE		DATE
DRAWN BY	OAB	06/16/00
DESIGNED BY	WHB	06/16/00
CHECKED BY		
WORK ORDER		
DATE		
06/16/00		

PORTLAND TERMINAL
PORTLAND, OREGON
BLACK OIL BLENDING SYSTEM
PLC SCHEMATICS
RACK 8, GROUP 6,7

DRAWING NO.	SHEET	REV.
2523-E-3016	1 OF 1	A

COP00021594

ITEM	QUAN.	DESCRIPTION
1	3	CIRCUIT BREAKER, 5A, ALLEN-BRADLEY #1492-CH050 (BY TOSCO)
2	1	POWER SUPPLY, POWER ONE HN24-3.6-A (BY TOSCO)
3	1	ESD BUTTON WITH ENCLOSURE, ALLEN-BRADLEY #800R-1HK04RLG (BY TOSCO)
4	1	RELAY, ALLEN-BRADLEY #700-HC24Z24 (BY TOSCO)
5	1	RELAY BASE, ALLEN-BRADLEY #700HN-128 (BY TOSCO)

SEE NOTE 2

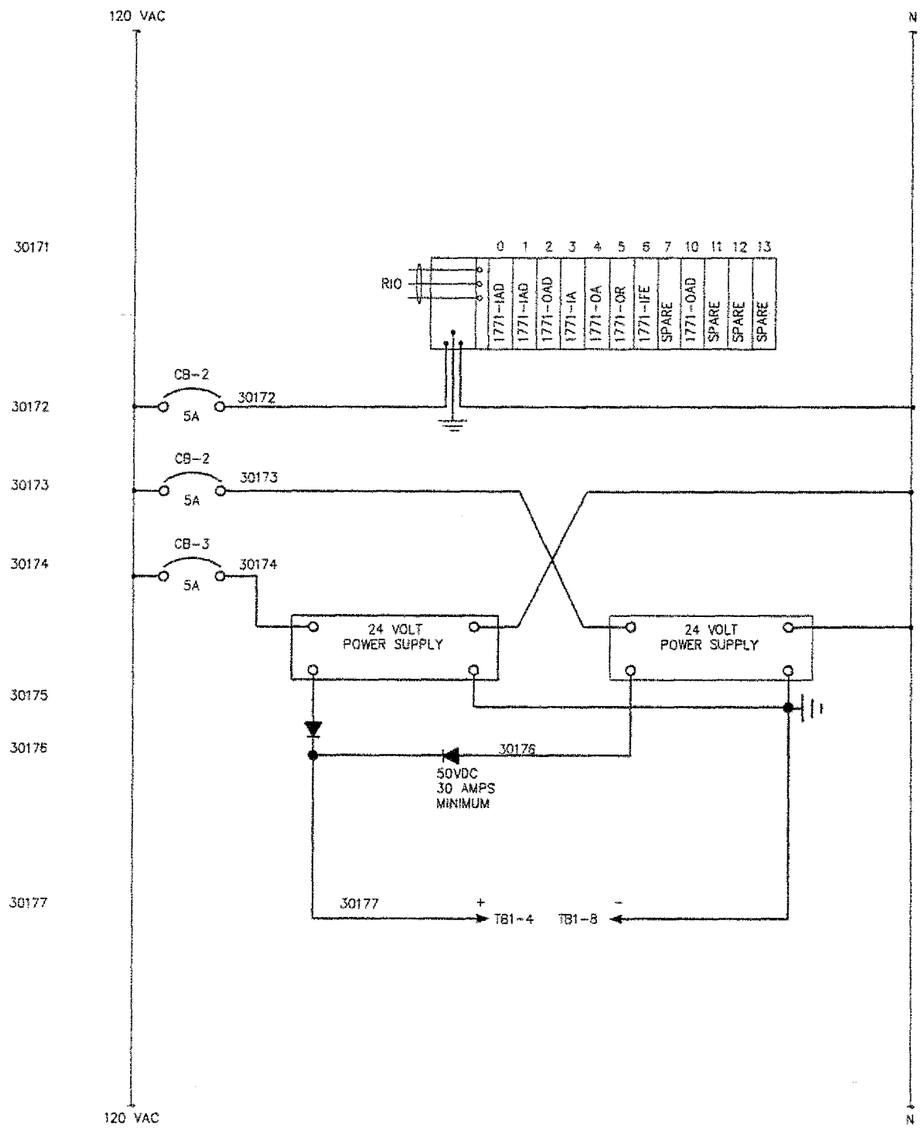

CONTROL POWER DISTRIBUTION

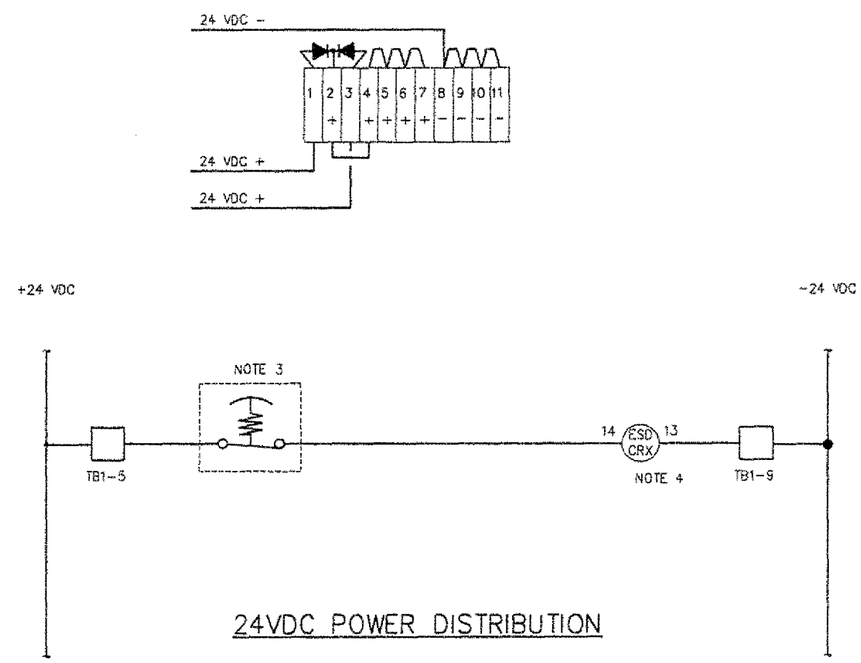

24VDC POWER DISTRIBUTION

NOTES:

1. FIELD WIRING SHOWN BOLD.
2. BOM SHOWN THIS DRAWING DUE TO EXISTING UNDOCUMENTED PANEL.
3. MOUNT OUTSIDE DOCK SAMPLE SHACK.
4. MOUNT INSIDE A/B ROOM.

ALPHA ENGINEERS and CONSTRUCTORS, INC.
2929 NW 29th AVE, PORTLAND, OR. 97210 Tel:(503)227-5317/Fax:(503)227-3244

AECI PROJECT NUMBER 25-23

DRAWING NO.	REFERENCE DRAWINGS	REV.	DATE	REVISED	DRAWN	CKD.	CIV/STRL	MECH/PIPING	ELEC/INST	SAFETY	P.E.
		A	06/26/00	BID SET	DAB	WHB					

TOSCO
Tosco Refining Company
A Division of Tosco Corporation
5528 NW Doane St.
Portland, Oregon 97210

CLIENT APPROVALS		
REV	BY	DATE

SCALE: NONE		DATE
DRAWN BY	DAB	06/26/00
DESIGNED BY	WHB	06/26/00
CHECKED BY	WHB	06/26/00
WORK ORDER		

PORTLAND TERMINAL
PORTLAND, OREGON
BLACK OIL BLENDING SYSTEM
DOCK A/B RACK PANEL
CONTROL POWER DISTRIBUTION

DATE	DRAWING NO.	SHEET	REV.
06/26/00	2523-E-3017	1 OF 1	A

2523E3017A.dwg;DWD: 06/30/00 [TIME: 11:41 AM] >

COP00021595

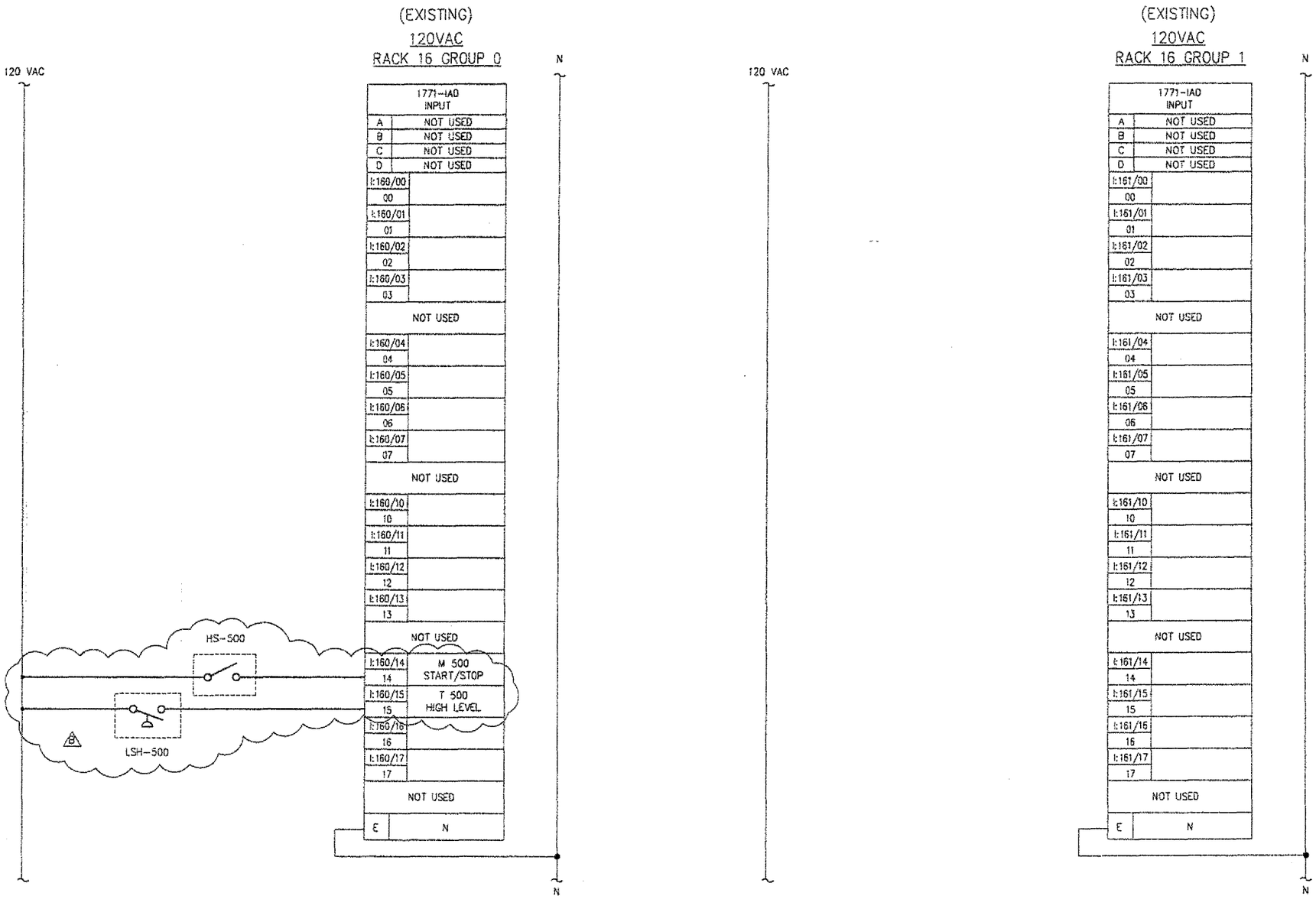

NOTES:

1. FIELD WIRING SHOWN BOLD.

ALPHA ENGINEERS and CONSTRUCTORS, INC.
2929 NW 29th AVE, PORTLAND, OR. 97210 Tel:(503)227-3317/Fax:(503)227-3244

AECI PROJECT NUMBER: 25-23

DRAWING NO.	REFERENCE DRAWINGS	REV.	DATE	REVISED	DRAWN	CKD.	CIV/STRL	MECH/PIPING	ELEC/INST	SAFETY	P.E.
		A	06/26/00	BID SET	DAB	WHB					
		B	07/07/00	ADDED LSH-500 AND M-500 START/STOP	DAB	WHB					

TOSCO
Tosco Refining Company
A Division of Tosco Corporation
5528 NW Doane St.
Portland, Oregon 97210

CLIENT APPROVALS		
REV	BY	DATE

SCALE: NONE		DATE
DRAWN BY	DAB	06/26/00
DESCHED BY	WHB	06/26/00
CHECKED BY		
WORK ORDER		
DATE		
06/26/00		

PORTLAND TERMINAL
PORTLAND, OREGON
BLACK OIL BLENDING SYSTEM
PLC SCHEMATICS
RACK 16, GROUP 0,1

DRAWING NO.	SHEET	REV.
2523-E-3018	1 OF 1	B

2523E3018B DWGCPD: 07/07/00 [TIME: 11:18 AM] >

COP00021596

COP0021597

(EXISTING)

120VAC

RACK 16 GROUP 2

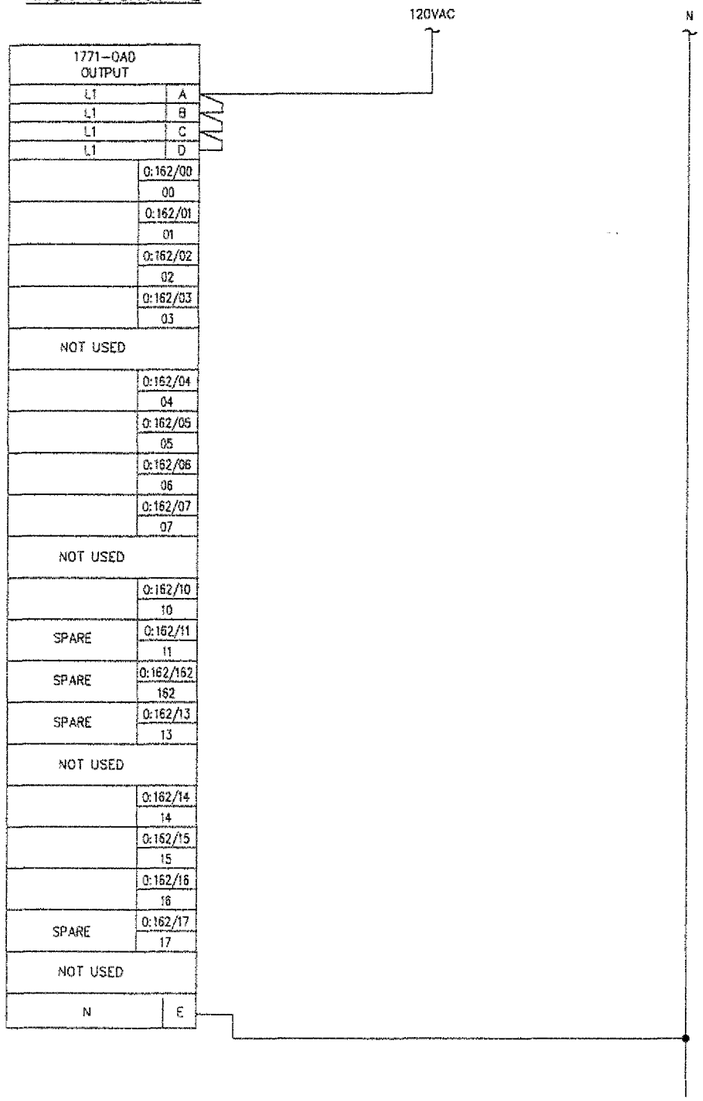

(EXISTING)

120VAC

RACK 16 GROUP 2

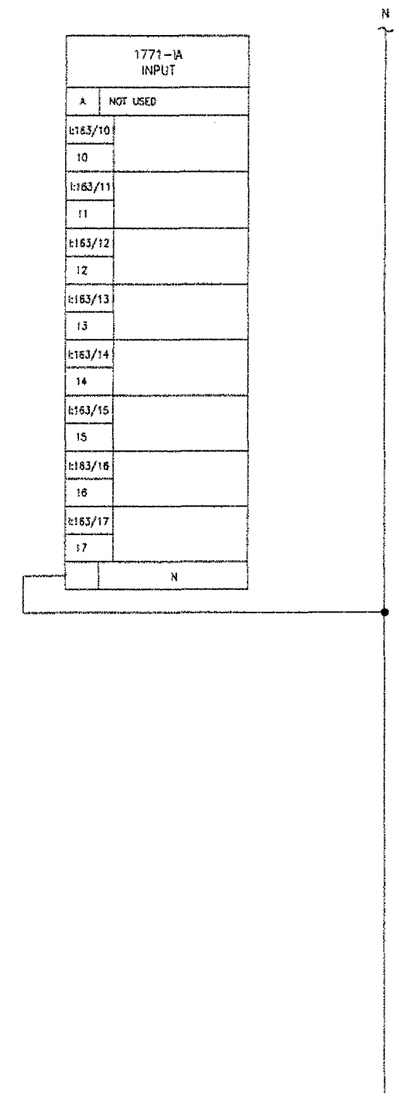

NOTES:

ALPHA ENGINEERS and CONSTRUCTORS, INC.
2929 NW 29th AVE. PORTLAND, OR. 97210 Tel:(503)227-3317/Fax:(503)227-3244

AECI PROJECT NUMBER 25-23

DRAWING NO.	REFERENCE DRAWINGS	REV.	DATE	REVISED	DRAWN	CKD.	CIV/STRL	MECH/PIPING	ELEC/INST	SAFETY	P.E.
		A	06/26/00	BID SET	DAB	WHB					

TOSCO
Tosco Refining Company
A Division of Tosco Corporation
5528 NW Doane St.
Portland, Oregon 97210

CLIENT APPROVALS		
REV	BY	DATE

SCALE: NONE		DATE
DRAWN BY	DAB	06/26/00
DESIGNED BY	WHB	06/26/00
CHECKED BY		
WORK ORDER		
DATE		
06/26/00		

PORTLAND TERMINAL

PORTLAND, OREGON

BLACK OIL BLENDING SYSTEM
PLC SCHEMATICS
RACK 16, GROUP 2,3

DRAWING NO.	SHEET	REV.
2523-E-3019	1 OF 1	A

2523E3019A.DWG PD: 06/20/00 TIME: 2:14 PM

COP00021598

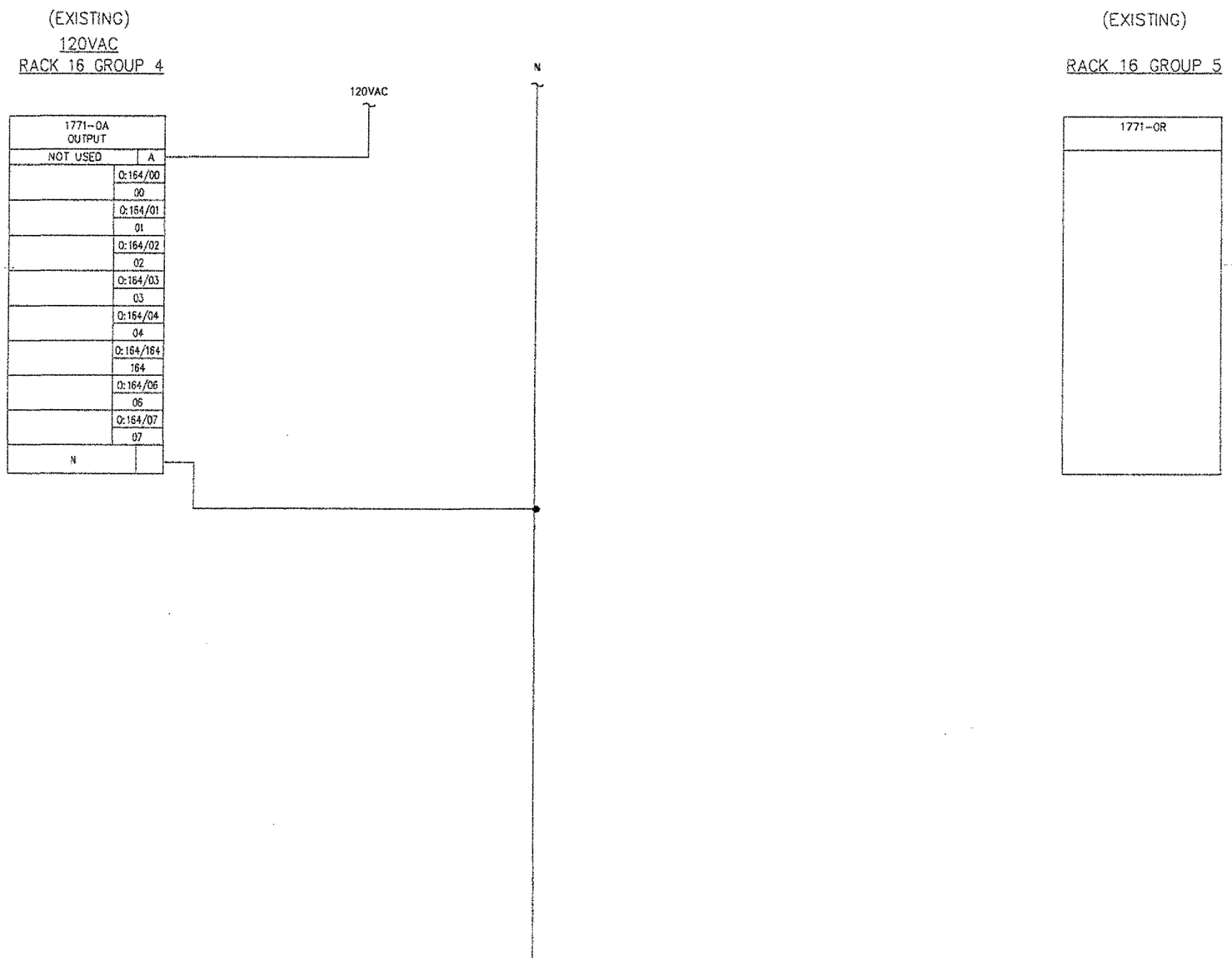

NOTES:

1. FIELD WIRING SHOWN BOLD.

ALPHA ENGINEERS and CONSTRUCTORS, INC.
2929 NW 29th AVE, PORTLAND, OR. 97210 Tel:(503)227-3317/Fax:(503)227-2244

AECI PROJECT NUMBER: 25-23

DRAWING NO.	REFERENCE DRAWINGS	REV.	DATE	REVISED	DRAWN	CKD.	CIV/STRL	MECH/PHNG	ELEC/INST	SAFETY	P.E.
		A	06/26/00	BID SET	DAB	WHB					

TOSCO
Tosco Refining Company
A Division of Tosco Corporation
5528 NW Doane St.
Portland, Oregon 97210

CLIENT APPROVALS		
REV	BY	DATE

SCALE: NONE		DATE
DRAWN BY	DAB	06/26/00
DESIGNED BY	WHB	06/26/00
CHECKED BY		
WORK ORDER		
DATE		
06/26/00		

PORTLAND TERMINAL
PORTLAND, OREGON
BLACK OIL BLENDING SYSTEM
PLC SCHEMATICS
RACK 16, GROUP 4,5

DRAWING NO.	SHEET	REV.
2523-E-3020	1 OF 1	A

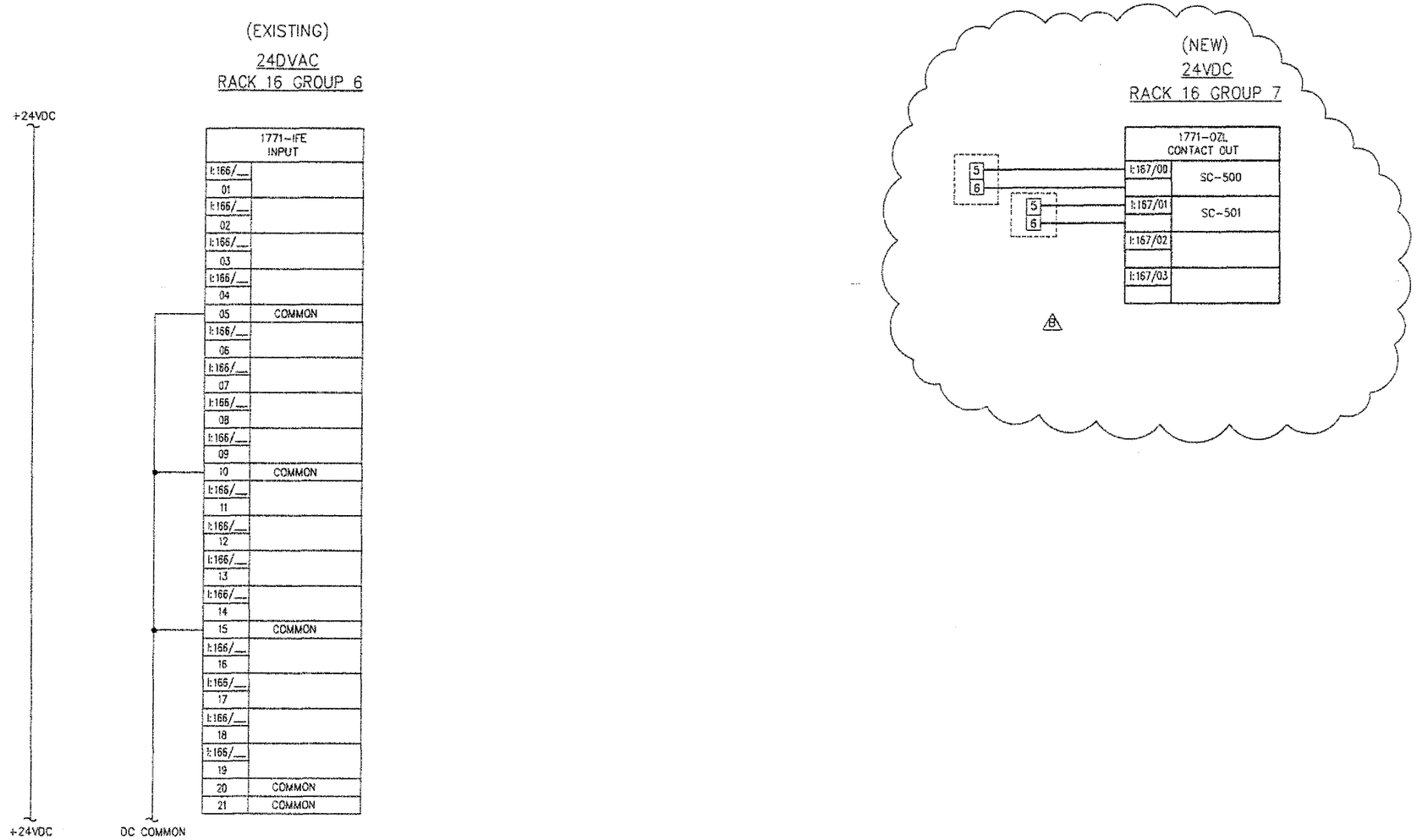

NOTES:

1. FIELD WIRING SHOWN BOLD

ALPHA ENGINEERS and CONSTRUCTORS, INC.
2925 NW 25th AVE, PORTLAND, OR, 97210 Tel:(503)227-3317/Fax:(503)227-3244

AECI PROJECT NUMBER 25-23

DRAWING NO.	REFERENCE DRAWINGS	REV.	DATE	REVISED	DRAWN	CKD.	CIV/STRL	MECH/PPING	ELEC/INST	SAFETY	P.E.
		A	06/26/00	BID SET	DAB	WHB					
		B	07/07/00	ADDED 1771-OZL CARD	DAB	WHB					

TOSCO
Tosco Refining Company
A Division of Tosco Corporation
5528 NW Doane St.
Portland, Oregon 97210

CLIENT APPROVALS		
REV	BY	DATE

SCALE: NONE		DATE
DRAWN BY	DAB	06/26/00
DESIGNED BY	WHB	06/26/00
CHECKED BY		
WORK ORDER		
DATE		
06/26/00		

PORTLAND TERMINAL
PORTLAND, OREGON
BLACK OIL BLENDING SYSTEM
PLC SCHEMATICS
RACK 16, GROUP 6,7

DRAWING NO.	SHEET	REV.
2523-E-3021	1 OF 1	B

2523E3021B.DWG<CR>: 07/07/00 [TIME: 11:31 AM] >

COP00021599

(SPARE)

RACK 16 GROUP 10

(SPARE)

RACK 16 GROUP 11

NOTES:

DRAWING NO.	REFERENCE DRAWINGS	REV.	DATE	REVISED	DRAWN	CKD.	CIV/STRL	MECH/PIPING	ELEC/INST	SAFETY	P.E.
		A	06/26/00	BID SET	DAB	WHB					

TOSCO
Tosco Refining Company
A Division of Tosco Corporation
5528 NW Doane St.
Portland, Oregon 97210

CLIENT APPROVALS		
REV	BY	DATE

ALPHA ENGINEERS and CONSTRUCTORS, INC.
2919 NW 25th AVE, PORTLAND, OR. 97210 Tel:(503)227-3317/Fax:(503)227-3344

AECI PROJECT NUMBER 25-23

SCALE: NONE		DATE
DRAWN BY	DAB	06/26/00
DESIGNED BY	WHB	06/26/00
CHECKED BY		
WORK ORDER		
DATE		
06/26/00		

PORTLAND TERMINAL
PORTLAND, OREGON
BLACK OIL BLENDING SYSTEM
PLC SCHEMATICS
RACK 16, GROUP 10,11

DRAWING NO.	SHEET	REV.
2523-E-3022	1 OF 1	A

COP00021600

(SPARE)

RACK 16 GROUP 12

(SPARE)

RACK 16 GROUP 13

NOTES:

ALPHA ENGINEERS and CONSTRUCTORS, INC.
2222 NW 29th AVE, PORTLAND, OR. 97210 Tel:(503)227-3317/Fax:(503)227-3244

AECI PROJECT NUMBER: 25--23

DRAWING NO.	REFERENCE DRAWINGS	REV.	DATE	REVISED	DRAWN	CKD.	CIV/STRL	MECH/PIPING	ELEC/INST	SAFETY	P.E.
		A	06/26/00	BID SET	DAB	WHB					

TOSCO
Tosco Refining Company
A Division of Tosco Corporation
5528 NW Doane St.
Portland, Oregon 97210

CLIENT APPROVALS		
REV	BY	DATE

SCALE: NONE		DATE
DRAWN BY	DAB	06/26/00
DESIGNED BY	WHB	06/26/00
CHECKED BY		
WORK ORDER		
DATE		
06/26/00		

PORTLAND TERMINAL
PORTLAND, OREGON
BLACK OIL BLENDING SYSTEM
PLC SCHEMATICS
RACK 16, GROUP 12,13

DRAWING NO.	SHEET	REV.
2523-E-3023	1 OF 1	A

COP00021601

COP0021602

ALPHA
ENGINEERS and
CONSTRUCTORS, INC.
2929 N.W. 29TH AVENUE, PORTLAND, OREGON 97210
TEL 503.227.3317 FAX 503.227.3244

TRANSMITTAL LETTER
No. 2523-E-01

To: Wagner Carey
5528 N.W. Doane St.
Portland, OR 97210

From: David Bynum
Date: 8/10/00

Project: TOSCO Portland Terminal Black Oil Blender Replacement

Item	Document No.	Document Title	Issued For:	Qty.	Rev.	Form
1	2523-E-01	Site Plan and Drawing Index	IFC	1	0	11X17
2	2523-E-02	Symbols and Legend Sheet	IFC	1	0	11X17
3	2523-E-03	Interconnect Diagram	IFC	1	0	11X17
4	2523-EC-01	Blender Skid Conduit Plan	IFC	1	0	11X17
5	2523-EC-02	Stream No. 3 Conduit Plan and Schedule	IFC	1	0	11X17
6	2523-EC-03	Dock Area Sample System Conduit Plan	IFC	1	0	11X17
7	2523-EC-04	Electric Heat Trace Details	IFC	1	0	11X17
8	2523-E-3010	Blender Controller Panel Layout	IFC	1	0	11X17
9	2523-E-3011	Existing A/B Panel Layout	IFC	1	0	11X17
10	2523-E-3012	A/B Rack Panel Control Power Distribution	IFC	1	0	11X17
11	2523-E-3013	PLC Schematics Rack 8, Group 0,1	IFC	1	0	11X17
12	2523-E-3014	PLC Schematics Rack 8, Group 2,3	IFC	1	0	11X17
13	2523-E-3015	PLC Schematics Rack 8, Group 4,5	IFC	1	0	11X17
14	2523-E-3016	PLC Schematics Rack 8, Group 6,7	IFC	1	0	11X17
15	2523-E-3017	Dock A/B Rack Panel Control Power Distribution	IFC	1	0	11X17
16	2523-E-3018	PLC Schematic Rack 16, Group 0,1	IFC	1	0	11X17
17	2523-E-3019	PLC Schematic Rack 16, Group 2,3	IFC	1	0	11X17
18	2523-E-3020	PLC Schematic Rack 16, Group 4,5	IFC	1	0	11X17
19	2523-E-3021	PLC Schematic Rack 16, Group 6,7	IFC	1	0	11X17
20	2523-E-3022	PLC Schematic Rack 16, Group 10,11	IFC	1	0	11X17
21	2523-E-3023	PLC Schematic Rack 16, Group 12,13	IFC	1	0	11X17
22	N/A	AutoCad Site Plan	Info	1		Floppy

Transmitted by:

David C. Bynum

David A. Bynum

cc: William Bishop - AECI
Project File

2523T1WC.DOC

COP00021603

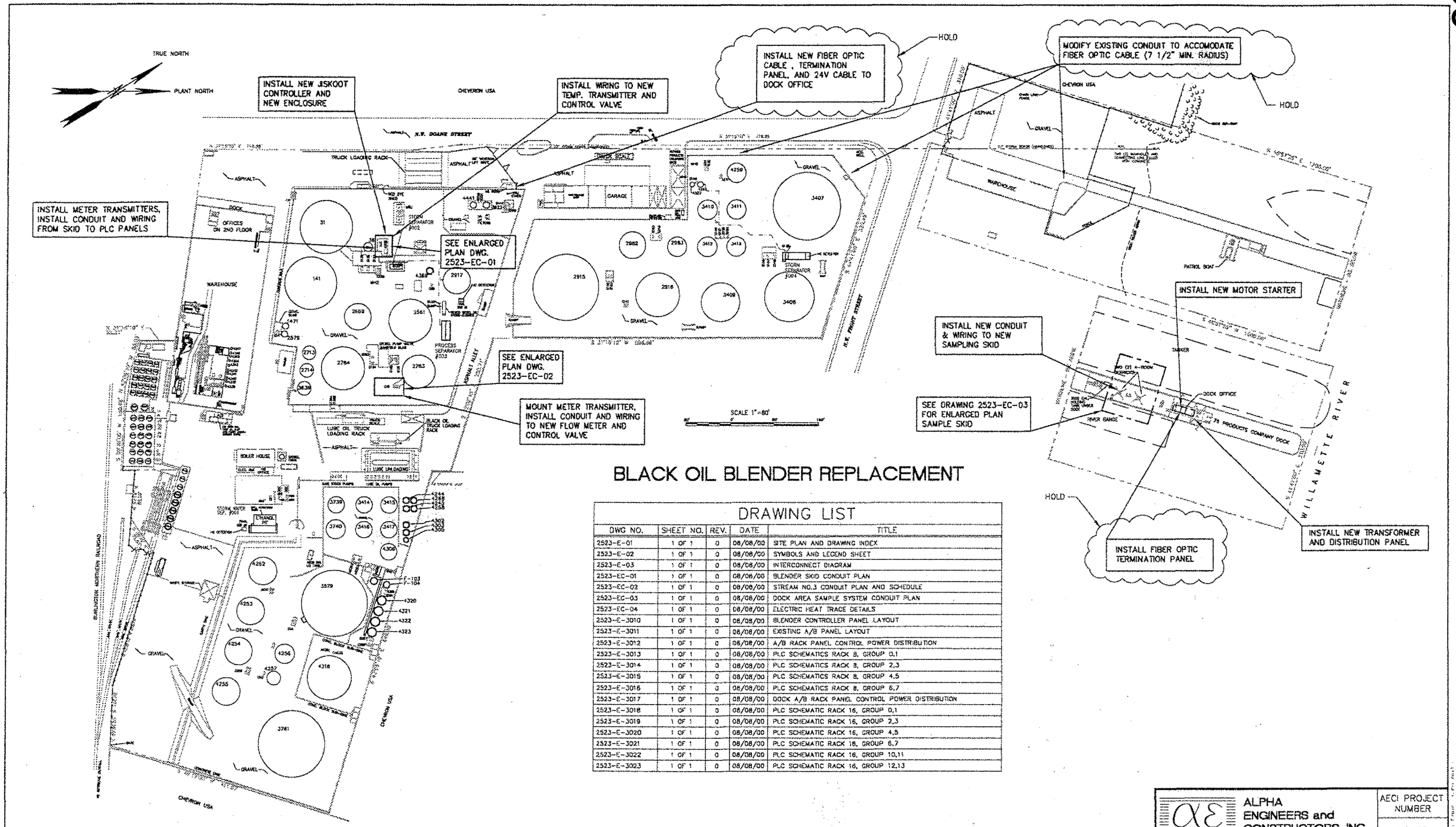

BLACK OIL BLENDER REPLACEMENT

DRAWING LIST

DWG NO.	SHEET NO.	REV.	DATE	TITLE
2523-E-01	1 OF 1	0	08/08/00	SITE PLAN AND DRAWING INDEX
2523-E-02	1 OF 1	0	08/08/00	SYMBOLS AND LEGEND SHEET
2523-E-03	1 OF 1	0	08/08/00	INTERCONNECT DIAGRAM
2523-EC-01	1 OF 1	0	08/08/00	BLENDER SKID CONDUIT PLAN
2523-EC-02	1 OF 1	0	08/08/00	STREAM NO.3 CONDUIT PLAN AND SCHEDULE
2523-EC-03	1 OF 1	0	08/08/00	DOCK AREA SAMPLE SYSTEM CONDUIT PLAN
2523-EC-04	1 OF 1	0	08/08/00	ELECTRIC HEAT TRACE DETAILS
2523-E-3010	1 OF 1	0	08/08/00	BLENDER CONTROLLER PANEL LAYOUT
2523-E-3011	1 OF 1	0	08/08/00	EXISTING A/B PANEL LAYOUT
2523-E-3012	1 OF 1	0	08/08/00	A/B RACK PANEL CONTROL POWER DISTRIBUTION
2523-E-3013	1 OF 1	0	08/08/00	PLC SCHEMATICS RACK 8, GROUP 0,1
2523-E-3014	1 OF 1	0	08/08/00	PLC SCHEMATICS RACK 8, GROUP 2,3
2523-E-3015	1 OF 1	0	08/08/00	PLC SCHEMATICS RACK 8, GROUP 4,5
2523-E-3016	1 OF 1	0	08/08/00	PLC SCHEMATICS RACK 8, GROUP 6,7
2523-E-3017	1 OF 1	0	08/08/00	DOCK A/B RACK PANEL CONTROL POWER DISTRIBUTION
2523-E-3018	1 OF 1	0	08/08/00	PLC SCHEMATIC RACK 16, GROUP 0,1
2523-E-3019	1 OF 1	0	08/08/00	PLC SCHEMATIC RACK 16, GROUP 2,3
2523-E-3020	1 OF 1	0	08/08/00	PLC SCHEMATIC RACK 16, GROUP 4,5
2523-E-3021	1 OF 1	0	08/08/00	PLC SCHEMATIC RACK 16, GROUP 6,7
2523-E-3022	1 OF 1	0	08/08/00	PLC SCHEMATIC RACK 16, GROUP 10,11
2523-E-3023	1 OF 1	0	08/08/00	PLC SCHEMATIC RACK 16, GROUP 12,13

ALPHA ENGINEERS and CONSTRUCTORS, INC.
2929 NW 29th AVE, PORTLAND, OR. 97210 Tel:(503)227-3317/Fax:(503)227-3244

AECI PROJECT NUMBER 25-23

DRAWING NO.	REFERENCE DRAWINGS	REV.	DATE	REVISED	DRAWN	CKD.	CIV/STRL	MECH/PIPING	ELEC/INST	SAFETY	P.E.
		0	06/09/00	ISSUE FOR CONSTRUCTION	DAB	WHB					

TOSCO
Tosco Refining Company
A Division of Tosco Corporation
5528 NW Doane St.
Portland, Oregon 97210

CLIENT APPROVALS		
REV	BY	DATE

SCALE: 1"=80'		DATE
DRAWN BY	DAB	6/16/00
DESIGNED BY	WHB	6/20/00
CHECKED BY	WHB	6/21/00
WORK ORDER	25-23	22X34
DATE		
06/16/00		

PORTLAND TERMINAL
PORTLAND, OREGON
BLACK OIL BLENDING SYSTEM
ELECTRICAL
SITE PLAN & DRAWING INDEX

DRAWING NO. 2523-E-01 | SHEET 1 OF 1 | REV. 0

COP0021604

ONE LINE DIAGRAM SYMBOLS

SYMBOL	DESCRIPTION
	– 1–PHASE, TWO–WINDING XFMR
	3–PHASE, TWO–WINDING XFMR – WITH DELTA–WYE CONNECTIONS
	3–PHASE, 3 WIRE, WYE, – GROUNDED
*	CURRENT TRANSFORMER – * INDICATES QUANTITY
*	POTENTIAL TRANSFORMER – WITH PRIMARY FUSE * INDICATES QUANTITY
	– SURGE ARRESTER
	– FUSE, THERMAL CURRENT
	– ISOLATING PRIMARY FUSE CUTOUT, DRY
	– ISOLATING FUSE SWITCH FOR ON–LOAD SWITCHING
*	MEDIUM–VOLTAGE STARTER WITH CURRENT LIMITING FUSES – * INDICATES FUSE AND STARTER SIZES
*	FUSED SAFETY SWITCH – * INDICATES SWITCH AND FUSE RATING
	– DISCONNECT SWITCH, GROUP OPERATED
	– DISCONNECT SWITCH, STICK OPERATED
	– DISCONNECT SWITCH, SELF OR DOUBLE–THROW
	– CIRCUIT BREAKER, LOW VOLTAGE, MOLDED CASE
	– POTHEAD
M	– WOUND–ROTOR INDUCTION MOTOR
*	SWITCHES (* INDICATES TYPE) – SS – SELECTOR, AS – AMMETER VS – VOLTMETER SYN – SYNCHRONIZING
*	– TRANSDUCER (* INDICATES TYPE)
	– GENERATOR, INSTRUMENT, METER, OR MOTOR (* INDICATES TYPE)

A	– AMMETER	PF	– POWER FACTOR
F	– FREQ METER	PI	– POSITION INDICATOR
SYS	– SYNCHROSCOPE	REC	– RECORDING METER
V	– VOLTMETER	T	– TEMP RECORDING METER
VAR	– VARMETER	VA	– VOLT–AMPERE METER
W	– WATTMETER	VARH	– VARHOUR METER
TT	– TOTAL TIME METER	WHD	– WATTHOUR–DETECTOR METER
GD	– GROUND DETECTOR	WH	– WATTHOUR METER
G	GENERATOR	M	– MOTOR

SCHEMATIC/WIRING DIAGRAM SYMBOLS

SYMBOL	DESCRIPTION
	– NORMALLY OPEN LIMIT SWITCH
	– NORMALLY OPEN LIMIT SWITCH HELD CLOSED
	– NORMALLY CLOSED LIMIT SWITCH
	– NORMALLY CLOSED LIMIT SWITCH HELD OPEN
	– FLOW ACTUATED SWITCH, CLOSES ON INCREASE IN FLOW
	– FLOW ACTUATED SWITCH, OPENS ON INCREASE IN FLOW
	– LEVEL ACTUATED SWITCH, CLOSES ON RISE IN LEVEL
	– LEVEL–ACTUATED SWITCH, OPEN ON RISE IN LEVEL
	– PRESSURE OR VACUUM–ACTUATED SWITCH, CLOSES ON RISING PRESSURE OR VACUUM
	– PRESSURE OR VACUUM–ACTUATED SWITCH, OPENS ON RISING PRESSURE OR VACUUM
	– DIFFERENTIAL PRESSURE SWITCH, CLOSES ON DIFFERENTIAL PRESSURE CHANGE
	– TEMPERATURE–ACTUATED SWITCH, CLOSES ON RISING TEMPERATURE
	– TEMPERATURE–ACTUATED SWITCH, OPENS ON RISING TEMPERATURE
	– SPEED–ACTUATED SWITCH, OPERATES ON SHAFT ROTATION * INDICATES FUNCTION, ZS=ZERO SPEED, OS=OVERSPEED, US=UNDERSPEED
*	– RELAY OR OPERATING COIL * INDICATES FUNCTION, MS – MOTOR STARTER CR – CONTROL RELAY TDR – TIME–DELAY RELAY C – CONTACTOR ST – SHUNT TRIP COIL
	– NORMALLY OPEN CONTACT (MAKE)
	– NORMALLY CLOSED CONTACT (BREAK)
	– NORMALLY OPEN CONTACT WITH TIME DELAY CLOSING (TDC) AFTER COIL IS ENERGIZED
	– NORMALLY CLOSED CONTACT WITH TIME DELAY OPENING (TDO) AFTER COIL IS ENERGIZED
	– NORMALLY OPEN CONTACT WITH TIME DELAY OPENING (TDO) AFTER COIL IS DE–ENERGIZED
	– NORMALLY CLOSED CONTACT WITH TIME DELAY CLOSING (TDC) AFTER COIL IS DE–ENERGIZED
	– CIRCUIT – CLOSING PUSH BUTTON MOMENTARY OR SPRING RETURN

SYMBOL	DESCRIPTION
	– CIRCUIT–OPENING PUSHBUTTON MOMENTARY OR SPRING RETURN
	– TWO–CIRCUIT PUSHBUTTON MOMENTARY OR SPRING RETURN
	– MUSHROOM HEAD CIRCUIT OPENING PUSHBUTTON (FOR EMERGENCY APPLICATIONS)
	– CIRCUIT–CLOSING SWITCH
	– CIRCUIT–OPENING SWITCH
	– TWO–POSITION TRANSFER SWITCH
OFF	– THREE–POSITION TRANSFER SWITCH
	– CIRCUIT BREAKER, DOUBLE POLE
	– SOLENOID
	– SPACE HEATER
	– CROSSING OF PATH OR CONDUCTORS NOT CONNECTED
	– CONNECTION
	– TERMINAL CONNECTION
	PLUG AND RECEPTACLE
	– TWO CONDUCTORS WITH OVERALL SHIELD FOR GROUNDING CONNECTION
	– GROUNDING CONNECTION
	– CHASSIS CONNECTION
+ −	– MULTICELL BATTERY (DC)
	– THERMAL ELEMENT
*	– PILOT LIGHT * INDICATES COLOR

A	– AMBER	OP	– OPALESCENT
B	– BLUE	P	– PURPLE
C	– CLEAR	R	– RED
G	– GREEN	W	– WHITE
O	– ORANGE	Y	– YELLOW

SYMBOL	DESCRIPTION
H1 H2 X1 X2	– CONTROL TRANSFORMER W/GROUND
OL'S	– OVERLOAD CONTACTS
AREA EPO	– EMERGENCY PROCESS OFF
	– POWER RECEPTACLE

PLAN DRAWING SYMBOLS

SYMBOL	DESCRIPTION
	– HORIZONTAL MOTOR OR GENERATOR
	– DRY–TYPE 1–PHASE TRANSFORMER
	– EXTERNALLY–OPERATED DISCONNECT SWITCH
	– COMBINATION CONTROLLER AND DISCONNECTING MEANS
S_{TH}	– MANUAL STARTER SWITCH WITH THERMAL OVERLOADS
	– JUNCTION BOX
	– THERMOSTAT
	– TELEPHONE RCPT, PUBLIC
	– SOUND SYSTEM DEVICE
	– SIGNAL OR ALARM HORN
5a B	– POLE – MOUNTED FLOODLIGHT, ARROW INDICATES AIMING DIRECTION
	– POLE–MOUNTED STREET LIGHT
5a B	– BRACKET–MOUNTED FLOODLIGHT ARROW INDICATES AIMING DIRECTION
S B	– EMERGENCY LIGHTING FIXTURE, BATTERY OPERATED, ARROWS INDICATE AIMING
	– GROUNDING ROD

SWITCH OUTLET: SMALL LETTER BY THE SIDE OF SYMBOL INDICATES THE CONTROLLED FIXTURE

SYMBOL	DESCRIPTION
	– SINGLE RCPT
	– DOUBLE RCPT
	– SINGLE SPECIAL–PURPOSE
	– FLEXIBLE CONDUIT
	– CONDUIT W/ SEAL FITTING

SPECIAL IDENTIFICATION OF OUTLETS

WP	– WEATHERPROOF	DT	– DUSTTIGHT
VT	– VAPORTIGHT	RT	– RAINTIGHT
WT	– WEATHERTIGHT	XP	– EXPLOSIONPROOF

CEILING MTD.	WALL MTD.	DESCRIPTION
5a A	5a A	– SURFACE OR PENDANT INCAN–DESCENT, MERCURY–VAPOR, OR SIMILAR LAMP FIXTURE
5a A	5a A	– SURFACE OR PENDENT INDIVIDUAL FLUORESCENT FIXTURE
		– LIGHT. ARROWS INDICATE ROUTE OF EGRESS
		– JUNCTION BOX
S_a		– SINGLE–POLE SWITCH
S_3		– THREE–WAY SWITCH
S_4		– FOUR–WAY SWITCH
S_K		– KEY–OPERATED SWITCH

LIGHTING OUTLETS: CAPITAL LETTER OUTSIDE SYMBOL INDICATES FIXTURE TYPE AS SHOWN ON FIXTURE SCHEDULE. NUMERIC INDICATES CIRCUIT NO. SMALL LETTER DESIGNATES THE CONTROLLING SWITCH

RECEPTACLE OUTLETS: NUMERICAL BY THE SIDE OF SYMBOL INDICATES CIRCUIT NUMBER

SYMBOL	DESCRIPTION
*	– SWITCHES OR DEVICES * INDICATES TYPE

BRS	BELT RUN–OFF SWITCH	OS	OVERSPEED SWITCH
DPS	DIFFERENTIAL PRESSURE SWITCH	PCS	PLUGGED CHUTE SWITCH
		PNS	POSITION SWITCH
ES	EMERGENCY PULL–CORD SWITCH	PS	PRESSURE SWITCH
		RPS	BELT RIP SWITCH
FS	FLOW SWITCH	RS	ROTATION SWITCH
LS	LIMIT SWITCH	RTD	RESISTANCE TEMPERATURE DETECTOR
MTD	METAL DETECTOR		
HOA	HAND–OFF–AUTO	SV	SOLENOID VALVE
ESD	EMERGENCY SHUT–DOWN		

POLE LINE SYMBOLS

SYMBOL	DESCRIPTION
	–NEW CLASS 2 POLE
	–EXISTING POLES TO BE REPLACED
	–POLE MOUNTED TRANSFORMER

LOGIC DIAGRAM SYMBOLS

SYMBOL	DESCRIPTION
* **	– INPUT/OUTPUT INSTRUMENTATION DEVICE (FIELD MOUNTED)
* **	– INPUT/OUTPUT INSTRUMENTATION DEVICE (BOARD MOUNTED)
* ** ***	LOGIC CONTINUATION * INDICATES DRAWING NUMBER
* **	– TIME DELAY

ALPHA ENGINEERS and CONSTRUCTORS, INC.
2929 NW 29th AVE, PORTLAND, OR. 97210 Tel:(503)227-3317/Fax:(503)227-3244

AEC PROJECT NUMBER 25-23

DRAWING NO.	REFERENCE DRAWINGS	REV.	DATE	REVISED	DRAWN	CKD.	CIV/STRL	MECH/PIPING	ELEC/INST	SAFETY	P.E.
		0	06/09/00	ISSUE FOR CONSTRUCTION	DAB	WHB					

TOSCO
Tosco Refining Company
A Division of Tosco Corporation
5528 NW Doane St.
Portland, Oregon 97210

CLIENT APPROVALS		
REV	BY	DATE

SCALE: NONE		DATE
DRAWN BY	DAB	06/16/00
DESIGNED BY	DAB	06/16/00
CHECKED BY	WHB	06/16/00
WORK ORDER		
DATE		
06/16/00		

PORTLAND TERMINAL
PORTLAND, OREGON
BLACK OIL BLENDING SYSTEM
SYMBOLS AND LEGEND
SHEET

DRAWING NO.	SHEET	REV.
2523–E–02	1 OF 1	0

COP00021605

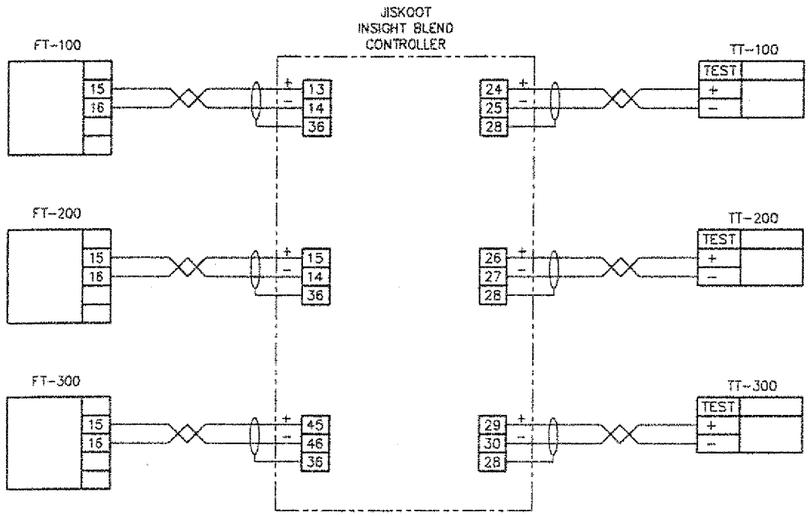

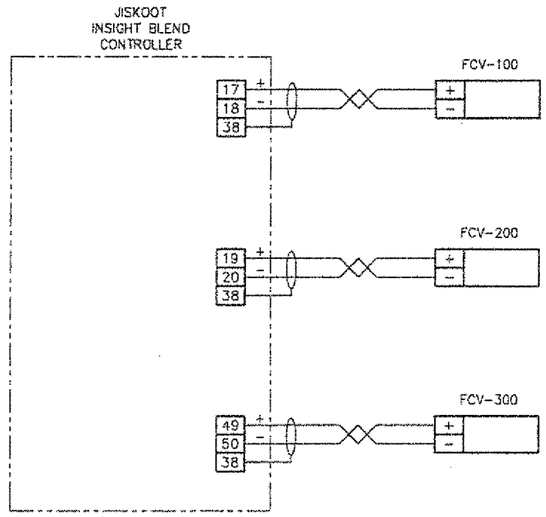

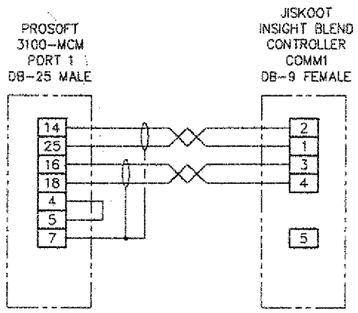

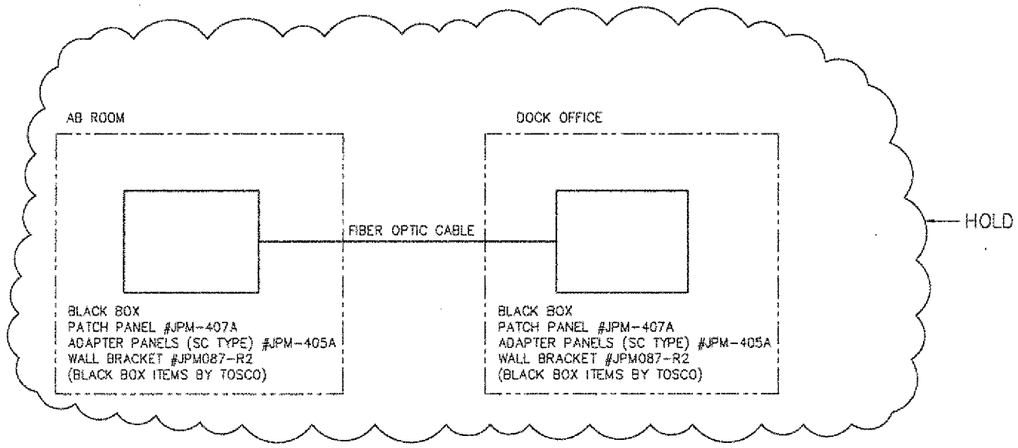

DRAWING NO.	REFERENCE DRAWINGS	REV.	DATE	REVISED	DRAWN	CKD.	CIV/STRL	MECH/PPING	ELEC/INST	SAFETY	P.E.
		0	08/09/00	ISSUE FOR CONSTRUCTION	DAB	WHB					

TOSCO
Tosco Refining Company
A Division of Tosco Corporation
5528 NW Doane St.
Portland, Oregon 97210

CLIENT APPROVALS		
REV	BY	DATE

ALPHA ENGINEERS and CONSTRUCTORS, INC.
2525 NW 29th AVE, PORTLAND, OR. 97210 Tel:(503)227-3317/Fax:(503)227-3244

AECI PROJECT NUMBER: 25-23

SCALE:	NONE	DATE
DRAWN BY	DAB	06/16/00
DESIGNED BY	WHB	06/16/00
CHECKED BY	WHB	06/21/00
WORK ORDER	25-23	22X34

PORTLAND TERMINAL
PORTLAND, OREGON
BLACK OIL BLENDING SYSTEM
INTERCONNECT DIAGRAM

DATE	DRAWING NO.	SHEET	REV
06/16/00	2523-E-03	1 OF 1	0

COP00021606

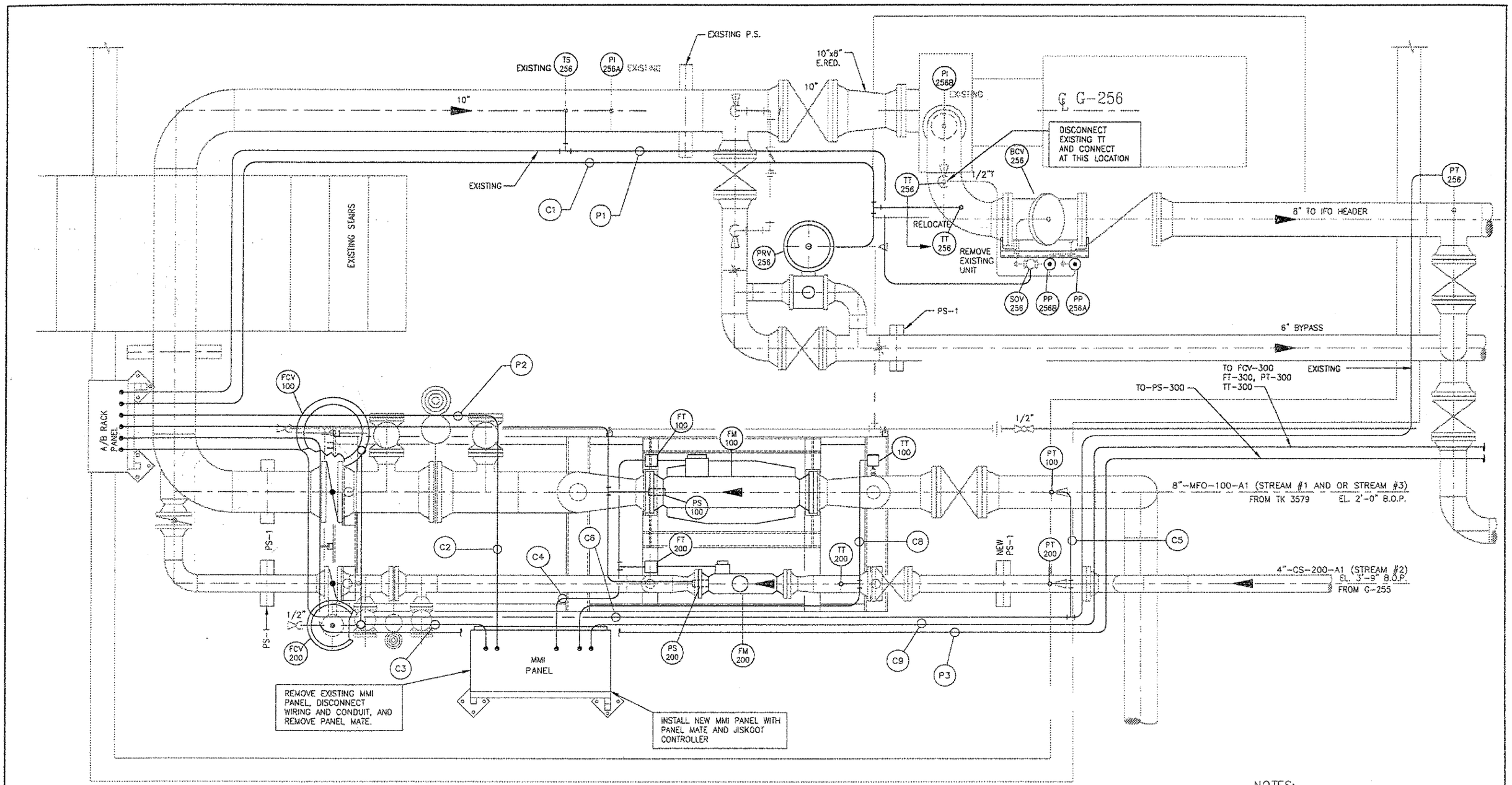

PLAN
SCALE 1"=1'-0"

NOTES:
1. VERIFY ALL DIMENSIONS PRIOR TO FABRICATION.
2. NEW WORK SHOWN BOLD

ALPHA ENGINEERS and CONSTRUCTORS, INC.
2929 NW 29th AVE, PORTLAND, OR. 97210 tel:(503)227-3317/fax:(503)227-3244

AEC PROJECT NUMBER 25-23

DRAWING NO.	REFERENCE DRAWINGS	REV.	DATE	REVISED	DRAWN	CKD.	CIV/STRL	MECH/PIPING	ELEC/INST	SAFETY	P.E.
2523-E-01	SITE PLAN	0	08/09/00	ISSUE FOR CONSTRUCTION	DAB	WHB					

TOSCO
Tosco Refining Company
A Division of Tosco Corporation
5528 NW Doane St.
Portland, Oregon 97210

CLIENT APPROVALS		
REV	BY	DATE

SCALE AS SHOWN		DATE
DRAWN BY	DAB	06/16/00
DESIGNED BY	WHB	06/16/00
CHECKED BY	WHB	06/21/00
WORK ORDER	25-23	22X34
DATE		
06/16/00		

PORTLAND TERMINAL
PORTLAND, OREGON
BLACK OIL BLENDING SYSTEM
ELECTRICAL
BLENDER SKID CONDUIT PLAN

DRAWING NO.	SHEET	REV.
2523-EC-01	1 OF 1	0

2523C010.DWG <CPC: 08/09/00 (TIME: 1:29 PM) >

COP0021607

CONDUIT & CABLE SCHEDULE

FROM	CONDUIT NO.	SIZE	TO	VOLTAGE	CABLE TYPE	MFG. NO.
AB PANEL	C1	3/4" GRC	PRV-256, TT-256	____	2-2C/20GA SHLD	BELDEN 8762
AB PANEL	C2	3/4" GRC	MMI PANEL	____	1-4C/20GA SHLD, 1-2C/20GA SHLD	BELDEN 9402, 8762
MMI PANEL	C3	3/4" GRC	FCV-100, FCV-200	____	2-2C/20GA SHLD	BELDEN 8762
MMI PANEL	C4	3/4" GRC	FT-100, FT-200	____	2-2C/20GA SHLD	BELDEN 8762
C6	C5	3/4" GRC	PT-100, PT-200	____	2-2C/20GA SHLD	BELDEN 8762
PT-256, C5	C6	3/4" GRC	AB PANEL	____	3-2C/20GA SHLD	BELDEN 8762
NOT USED	C7					
MMI PANEL	C8	3/4" GRC	TT-100, TT-200	____	2-2C/20GA SHLD	BELDEN 8762
MMI PANEL	C9	EXIST.	PT-300, FCV-300 TT-300, FT-300	____	4-2C/20GA SHLD	BELDEN 8762
AB PANEL	C10	EXIST.	DOCK HOUSE PANEL	____	1-6C FO CABLE 1-2C/14GA SHLD 1-2C/20GA SHLD	BELDEN 225716 BELDEN 83752 BELDEN 9463 — HOLD
AB PANEL	P1	3/4" GRC	TS-256,SOV-256	120	2-#12 THHN W/1#14 GND	
AB PANEL	P2	3/4" GRC	PS-100, PS-200	120	3-#12 THHN W/1#14 GND	
AB PANEL	P3	3/4" GRC	PS-300	120	2-#12 THHN W/1#14 GND	
AB PANEL	P4	3/4" GRC	G500	460	3-#12 THHN W/1#14 GND	
AB PANEL	P5	3/4" GRC	SC-500,501, LS-500	120	10-#12 THHN W/1#14 GND	
DOCK PANEL	P6	3/4" GRC	G500 STARTER	460	3-#12 THHN W/1#14 GND	
P-1	P7	3/4" GRC	SAMPLING SKID	208	2-#12 THHN W/1#14 GND	
DOCK PANEL	P8	3/4" GRC	SAMPLING SHACK SC-500, SC-501	24	1-2C/14GA SHLD 1-2C/20GA SHLD 4-#16THHN	BELDEN 83752 BELDEN 9463

(*) CONDUIT RUN MUST BE MODIFIED TO ACCEPT FO CABLE — MIN. 4.5" RADIUS

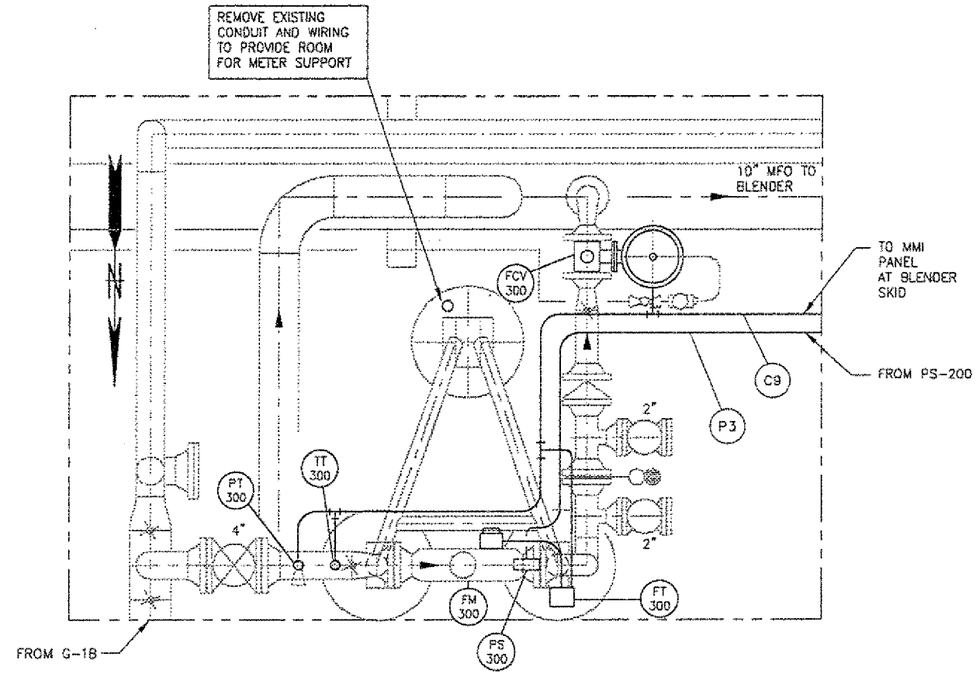

STREAM NO.3 METER NEAR TK-2783
PLAN
SCALE 1"=1'-0"

NOTES:
1. VERIFY ALL DIMENSIONS PRIOR TO FABRICATION.
2. NEW WORK SHOWN BOLD

ALPHA ENGINEERS and CONSTRUCTORS, INC.
2929 NW 29th AVE, PORTLAND, OR. 97210 Tel:(503)227-1317/Fax:(503)223-3244

AECI PROJECT NUMBER 25-23

DRAWING NO.	REFERENCE DRAWINGS	REV.	DATE	REVISED	DRAWN	CKD.	CIV/STRL	MECH/PIPING	ELEC/INST	SAFETY	P.E.
2523-E-01	SITE PLAN	0	08/09/00	ISSUE FOR CONSTRUCTION	DAB	WHB					

TOSCO
Tosco Refining Company
A Division of Tosco Corporation
5528 NW Doane St.
Portland, Oregon 97210

CLIENT APPROVALS		
REV	BY	DATE

SCALE: 1"=1'-0"		DATE
DRAWN BY	DAB	06/15/00
DESIGNED BY	WHB	06/16/00
CHECKED BY	WHB	06/21/00
WORK ORDER	25-23	22X34
DATE		
06/16/00		

PORTLAND TERMINAL
PORTLAND, OREGON
BLACK OIL BLENDING SYSTEM
ELECTRICAL
ELECTRICAL STREAM NO.3
CONDUIT PLAN AND SCHEDULE

DRAWING NO.	SHEET	REV
2523-EC-02	1 OF 1	0

COP00021608

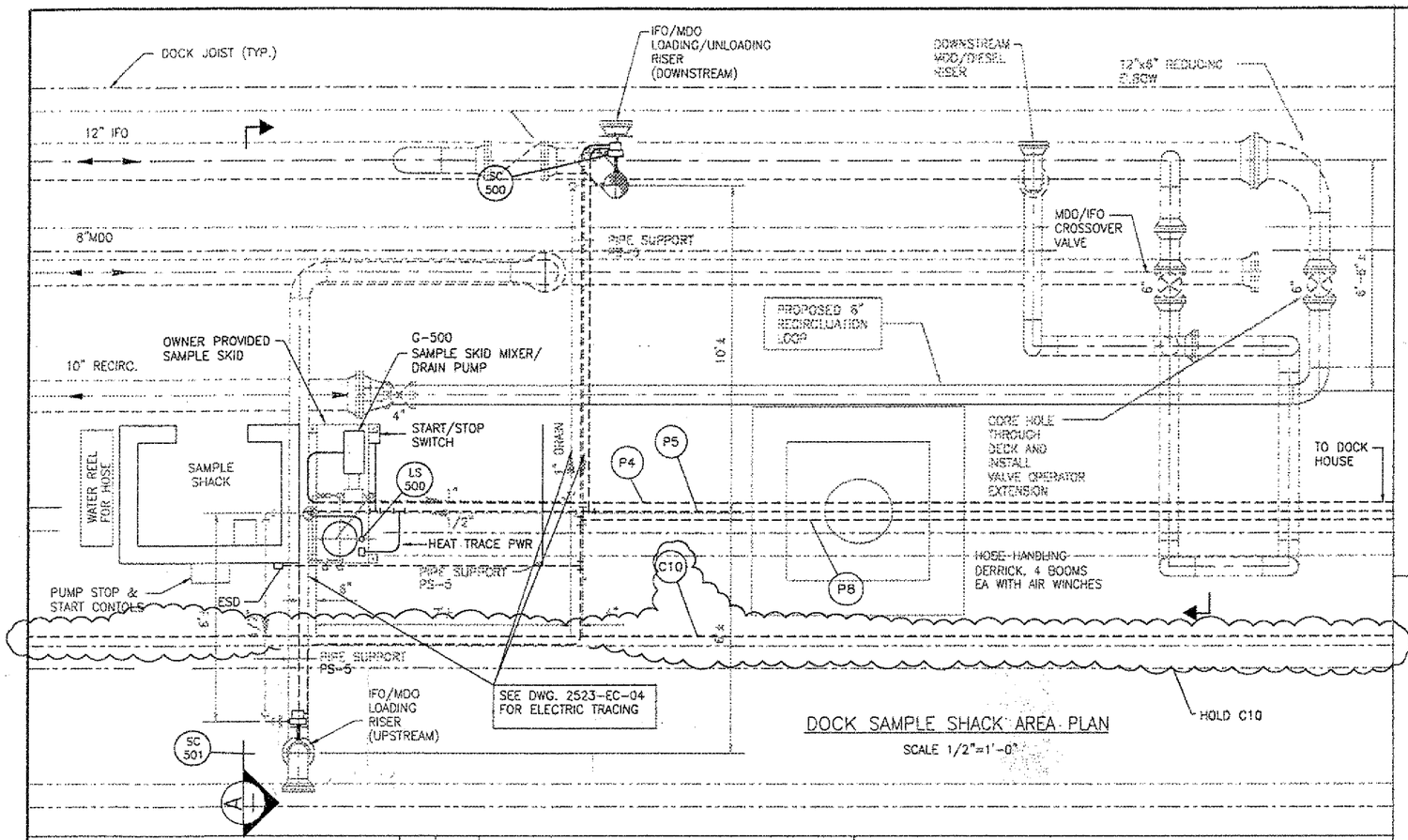

DOCK SAMPLE SHACK AREA PLAN

SCALE 1/2"=1'-0"

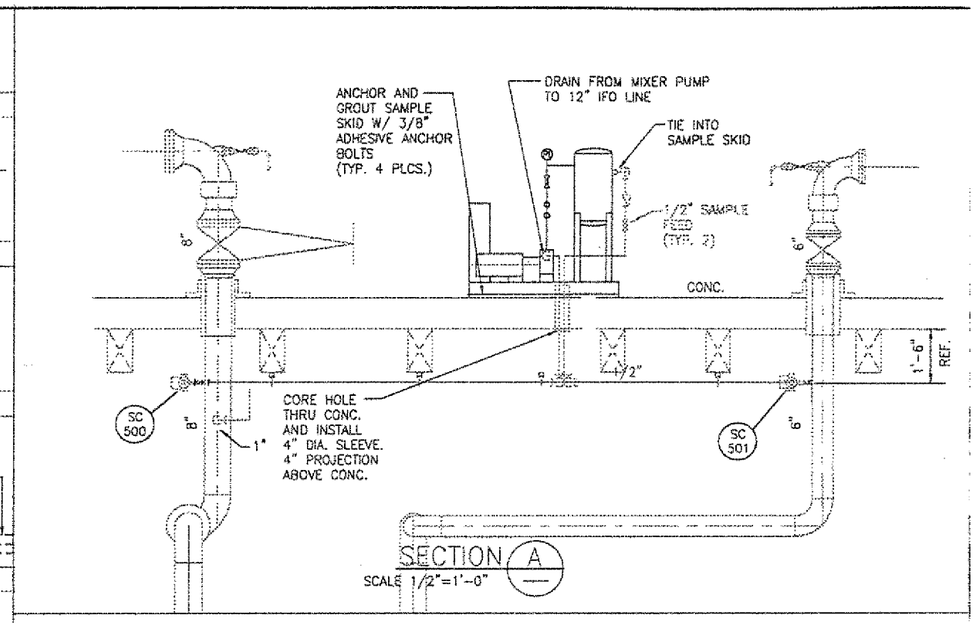

SECTION A

SCALE 1/2"=1'-0"

ITEM	QUAN.	DESCRIPTION
40	1	LINE SENSING TEMPERATURE CONTROL RAYCHEM #EC07S-2LS
41	1	ENCLOSURE, FIBERGLASS, NEMA 4, HOFFMAN A-1287JFGR
42	1	PILOT LIGHT, NEMA 4 PUSH TO TEST, ALLEN-BRADLEY #800H-DPT10G
43	1	PERMANENT MAGNET LATCH AC CONTACTOR ALLEN-BRADLEY #500L-AOA94(15A)
44	1	HOUSING, ALLEN-BRADLEY #800R-1TZ

NOTE: PARTS BY TOSCO

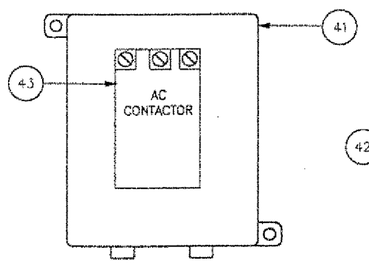

CONTACTOR

NOTE:
MOUNTING LOCATION ADJACENT TO SAMPLE SKID.

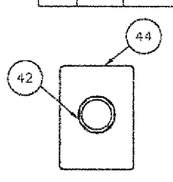

PILOT LIGHT

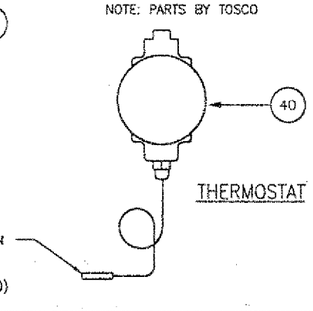

THERMOSTAT

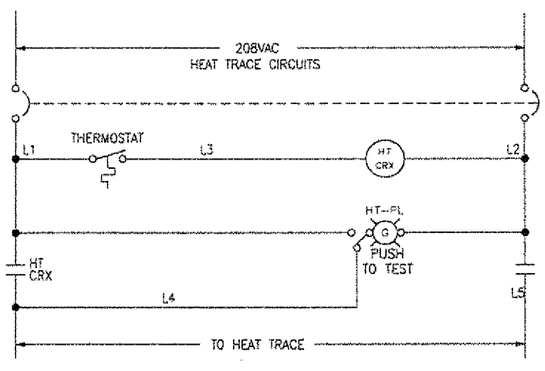

TYPICAL HEAT TRACE CONTROL

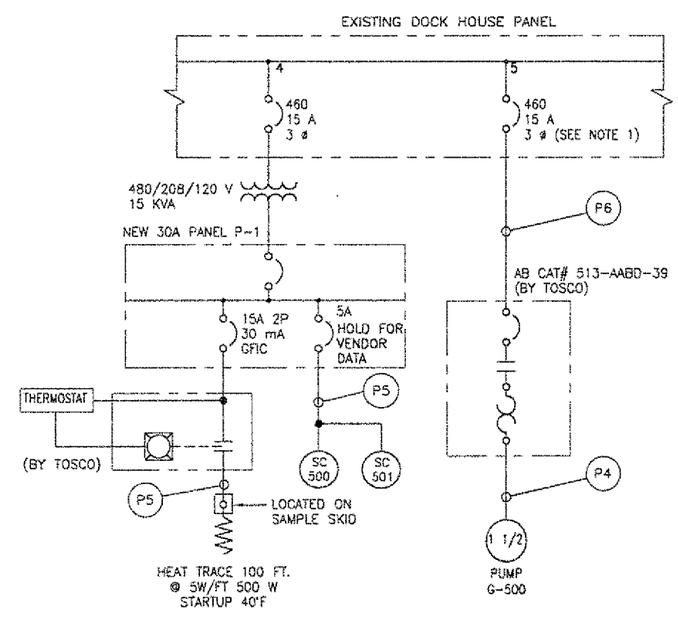

DOCK HOUSE ONE-LINE

NOTE:

1. DISCONNECT WIRING TO WELDER OUTLET AND LAY UP IN PANEL.

ALPHA ENGINEERS and CONSTRUCTORS, INC.
2929 NW 29th AVE, PORTLAND, OR. 97210 Tel:(503)227-3317/Fax:(503)227-3244

AECI PROJECT NUMBER: 25-23

DRAWING NO.	REFERENCE DRAWINGS	REV.	DATE	REVISED	DRAWN	CKD.	CIV/STRL	MECH/PIPING	ELEC/INST	SAFETY	P.E.
2523-E-01	SITE PLAN	0	08/09/00	ISSUE FOR CONSTRUCTION	DAB	WHB					

TOSCO
Tosco Refining Company
A Division of Tosco Corporation
5528 NW Doane St.
Portland, Oregon 97210

CLIENT APPROVALS		
REV	BY	DATE

SCALE AS SHOWN		DATE
DRAWN BY	DAB	06/16/00
DESIGNED BY	WHB	06/16/00
CHECKED BY	WHB	06/21/00
WORK ORDER	25-23	22X34
DATE		
06/16/00		

PORTLAND TERMINAL
PORTLAND, OREGON
BLACK OIL BLENDING SYSTEM
ELECTRICAL
DOCK AREA SAMPLE SYSTEM
CONDUIT PLAN

DRAWING NO.: 2523-EC-03 | SHEET: 1 OF 1 | REV.: 0

COP00021609

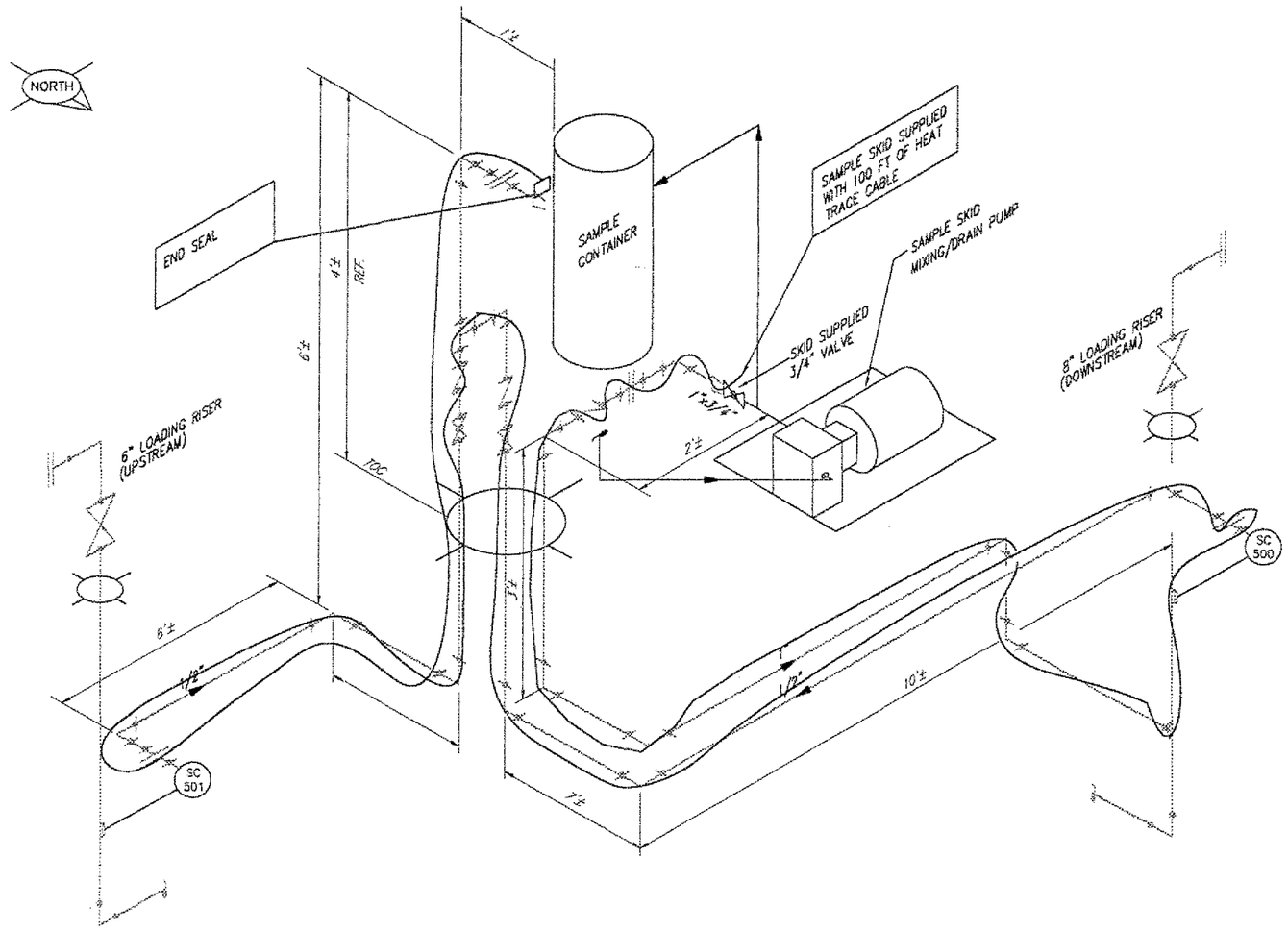

ELECTRIC TRACE ISOMETRIC

NOTE:

1. 100FT OF ELECTRIC HEAT TRACE CABLE TO BE PROVIDED WITH SAMPLE SKID, ROUTE ALONG SAMPLE AND DRAIN LINES AS SHOWN.

ALPHA ENGINEERS and CONSTRUCTORS, INC.
2929 NW 25th AVE, PORTLAND, OR. 97210 Tel(503)227-3317/Fax(503)227-3244

AECI PROJECT NUMBER: 25-23

DRAWING NO.	REFERENCE DRAWINGS	REV.	DATE	REVISED	DRAWN	CKD.	CIV/STRL	MECH/PIPING	ELEC/INST	SAFETY	P.E.
2523-EC-03	DOCK AREA SAMPLE SYSTEM CONDUIT PLAN	0	08/09/00	ISSUE FOR CONSTRUCTION	DAB	WHB					

TOSCO
Tosco Refining Company
A Division of Tosco Corporation
5528 NW Doane St.
Portland, Oregon 97210

CLIENT APPROVALS		
REV	BY	DATE

SCALE AS SHOWN		DATE
DRAWN BY	DAB	06/25/00
DESIGNED BY	DAB	06/26/00
CHECKED BY	WHB	06/26/00
WORK ORDER	25-23	22X34

PORTLAND TERMINAL
PORTLAND, OREGON
BLACK OIL BLENDING SYSTEM
ELECTRICAL
ELECTRIC TRACE
DOCK SAMPLING SYSTEM

DATE	DRAWING NO.	SHEET	REV.
06/26/00	2523-EC-04	1 OF 1	0

2523ECD40.DWG<CPD: 08/09/00 1:RMF: 11:30 PM>

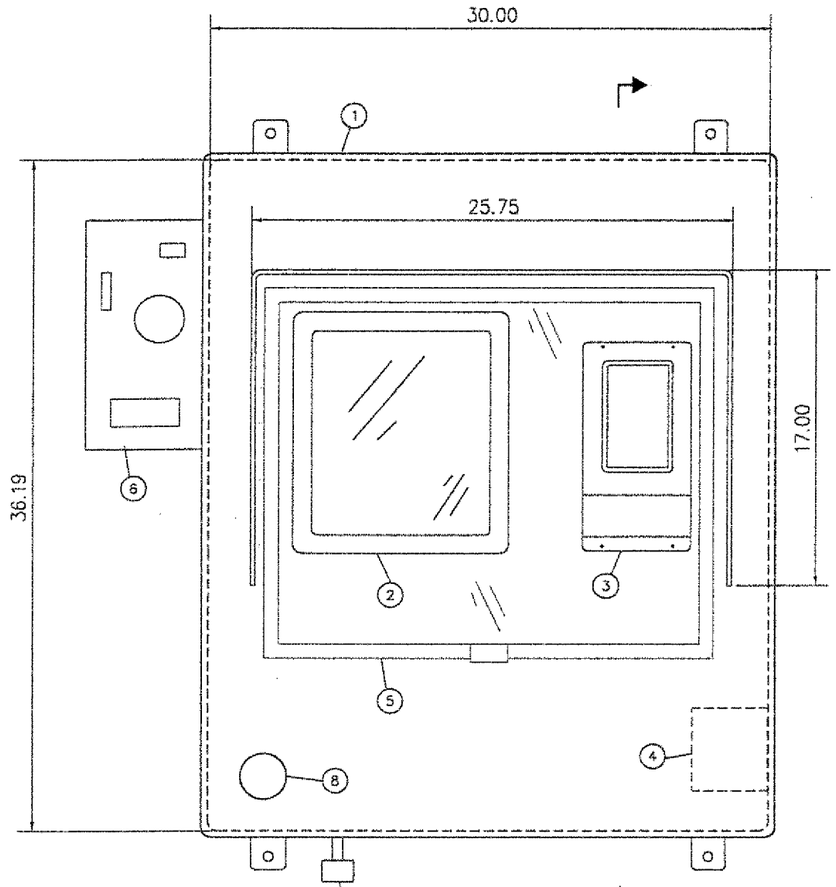

REAR VIEW
SCALE 3"=1'-0"

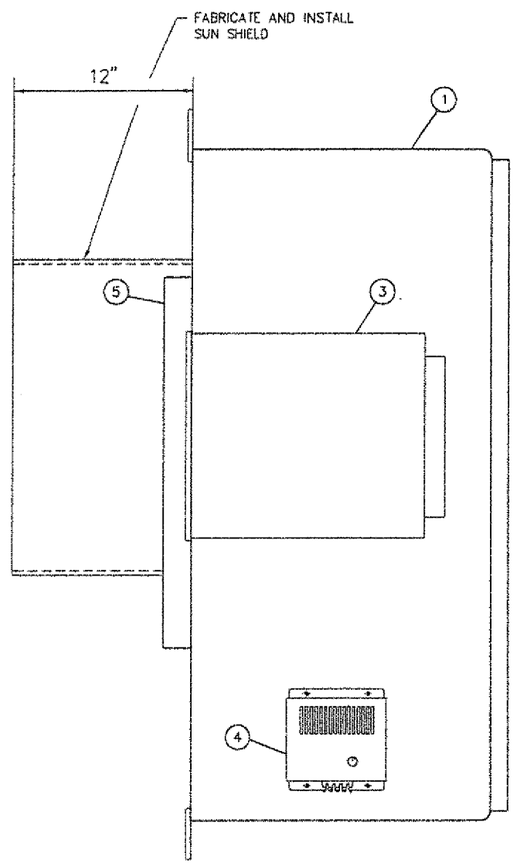

SECTION A
3"=1'-0"

BILL OF MATERIAL

ITEM	QUANTITY	DESCRIPTION
1	1	ENCLOSURE: NEMA 4X 36" X 30" HOFFMAN CAT. #A36H30FLP PROVIDED BY OWNER
2	1	PANEL MATE – BY OWNER
3	1	JISKOOT INSIGHT BLEND CONTROLLER – BY OWNER
4	1	HEATER: 115VAC, 200W – HOFFMAN CAT. #D-AH2001A (EXISTING)
5	1	WINDOW KIT: HOFFMAN A-PNK2420H – BY OWNER
6	1	PURGE PANEL: P & I # US-420100-1-YZ – BY OWNER
7	1	PURGE RELIEF VENT: P&F #US-335211 – BY OWNER
8	1	ESD BUTTON: ALLEN BRADLEY #800MR-FX6A – BY OWNER
9		
10		
11		
12		
13		
14		
15		
16		
17		
18		
19		

ALPHA ENGINEERS and CONSTRUCTORS, INC.
2929 NW 29th AVE, PORTLAND, OR 97210 Tel:(503)227-3317/Fax:(503)227-3244

AECI PROJECT NUMBER: 25-23

DRAWING NO.	REFERENCE DRAWINGS	REV.	DATE	REVISED	DRAWN	CKD.	CIV/STRL	MECH/PPING	ELEC/INST	SAFETY	P.E.
		0	08/09/00	ISSUE FOR CONSTRUCTION	DAB	WHB					

TOSCO
Tosco Refining Company
A Division of Tosco Corporation
5528 NW Doane St.
Portland, Oregon 97210

CLIENT APPROVALS

REV	BY	DATE

SCALE: NONE		DATE
DRAWN BY	DAB	08/16/00
DESIGNED BY	WHB	06/16/00
CHECKED BY	WHB	06/21/00
WORK ORDER	25-23	22X34
DATE		
06/16/00		

PORTLAND TERMINAL
PORTLAND, OREGON
BLACK OIL BLENDING SYSTEM
BLENDER CONTROLLER
PANEL LAYOUT

DRAWING NO.	SHEET	REV.
2523-E-3010	1 OF 1	0

2523E3010.DWG <PID: 08/09/00 THUR: 1:41 PM>

COP0021610

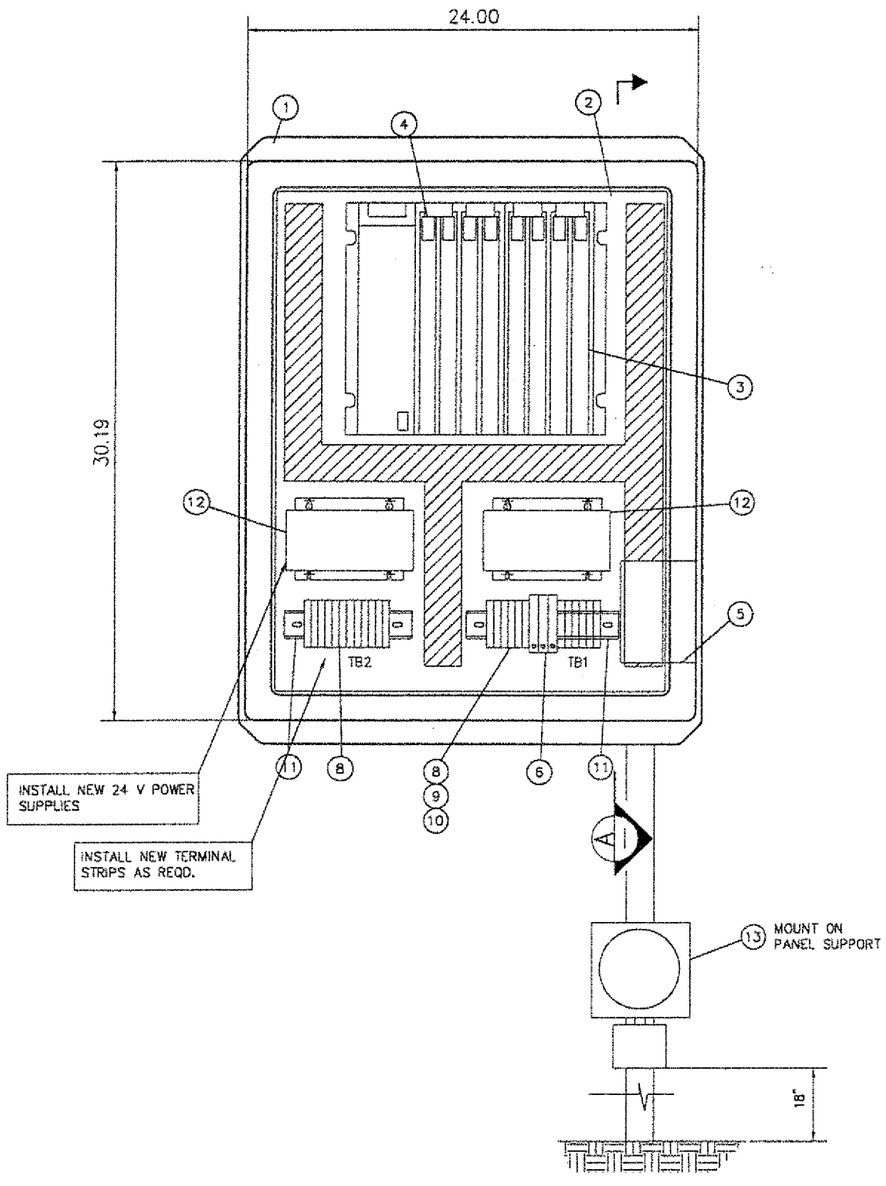

FRONT VIEW – DOOR REMOVED

SCALE 3"=1'-0"

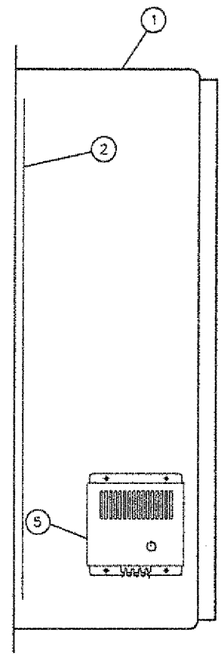

SECTION A

3"=1'-0"

BILL OF MATERIAL

ITEM	QUANTITY	DESCRIPTION
1	1	ENCLOSURE: NEMA 4X 30" X 24" HOFFMAN CAT. #A30H2412DSL
2	1	PANEL: ALUMINUM 27" X 21" HOFFMAN CAT. #A30P24AL
3	1	PLC REMOTE RACK: ALLEN-BRADLEY 1771-A2B, 8 SLOT
4	1	RACK MTD. POWER SUPPLY: ALLEN-BRADLEY 1771-P4S
5	1	HEATER: 115VAC, 200W – HOFFMAN CAT. #D-AH2001A
6	4	CIRCUIT BREAKER: 5A, ALLEN-BRADLEY, #1492-CH050
7	A/R	WIRE DUCT: 2" X 3" PANDUIT
8	24	TERMINAL BLOCKS: ALLEN-BRADLEY, #1492-W4
9	2	END BARRIERS: ALLEN-BRADLEY, #1492-EB3
10	2	END ANCHORS: ALLEN-BRADLEY, #1492-EA35
11	1	DIN MOUNTING RAIL: 35 x 7.5mm, ALLEN-BRADLEY CAT. #199-DR1
12	2	POWER SUPPLY 24VDC, HC24-3.4-A
13	1	LEL SENSOR: IDC# 7810-1540
14		
15		
16		
17		
18		
19		

ALPHA ENGINEERS and CONSTRUCTORS, INC.
2525 NW 29th AVE, PORTLAND, OR. 97210 Tel:(503)227-3717/Fax:(503)227-3244

AECI PROJECT NUMBER 25-23

DRAWING NO.	REFERENCE DRAWINGS	REV.	DATE	REVISED	DRAWN	CKD.	CIV/STRL	MECH/PPING	ELEC/INST	SAFETY	P.E.
		0	08/09/00	ISSUE FOR CONSTRUCTION	DAB	WHB					

TOSCO
Tosco Refining Company
A Division of Tosco Corporation
5528 NW Doane St.
Portland, Oregon 97210

CLIENT APPROVALS

REV	BY	DATE

SCALE:	NONE	DATE
DRAWN BY	DAB	06/16/00
DESIGNED BY	WHB	06/16/00
CHECKED BY	WHB	08/08/00
WORK ORDER	25-23	22X34
DATE		
06/16/00		

PORTLAND TERMINAL
PORTLAND, OREGON
BLACK OIL BLENDING SYSTEM
EXISTING A/B PANEL LAYOUT

DRAWING NO.	SHEET	REV.
2523-E-3011	1 OF 1	0

2523E3011D.DWG <CPD: 08/09/00 [TIME: 1:47 PM]>

COP0021611

COP00021612

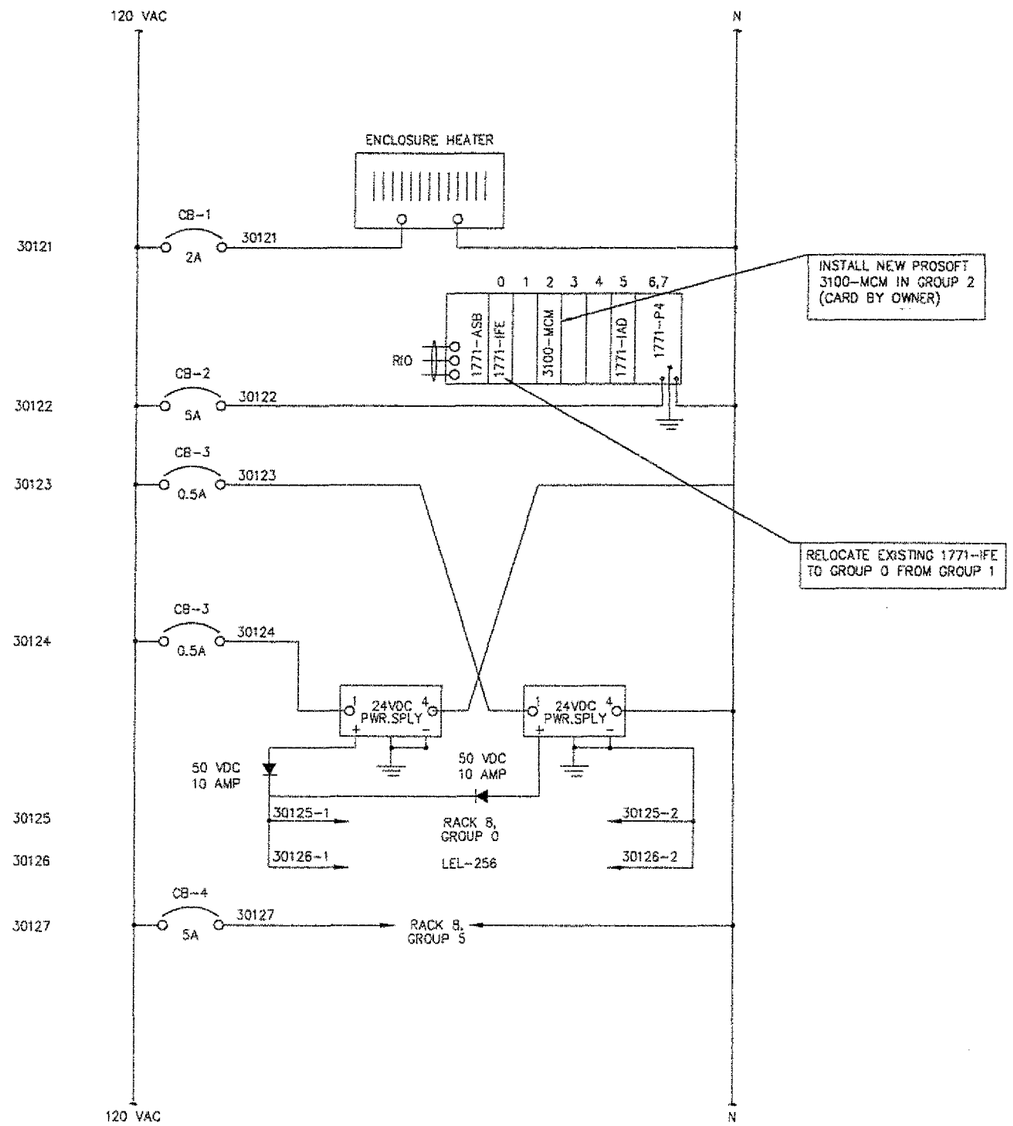

CONTROL POWER DISTRIBUTION

NOTES:

1. FIELD WIRING SHOWN BOLD.

ALPHA ENGINEERS and CONSTRUCTORS, INC.
2929 NW 29th AVE, PORTLAND, OR. 97210 Tel:(503)227-3317/Fax:(503)227-3344

AECI PROJECT NUMBER 25-23

DRAWING NO.	REFERENCE DRAWINGS	REV.	DATE	REVISED	DRAWN	CKD.	OV/STRL	MECH/PIPING	ELEC/INSTR	SAFETY	P.E.
		0	08/09/00	ISSUE FOR CONSTRUCTION	DAB	WHB					

TOSCO
Tosco Refining Company
A Division of Tosco Corporation
5528 NW Doane St.
Portland, Oregon 97210

CLIENT APPROVALS		
REV	BY	DATE

SCALE: NONE		DATE
DRAWN BY	DAB	06/16/00
DESIGNED BY	WHB	06/16/00
CHECKED BY	WHB	06/21/00
WORK ORDER	25-23	22X34
DATE		
06/16/00		

PORTLAND TERMINAL
PORTLAND, OREGON
BLACK OIL BLENDING SYSTEM
A/B RACK PANEL
CONTROL POWER DISTRIBUTION

DRAWING NO.	SHEET	REV.
2523-E-3012	1 OF 1	0

COP0021613

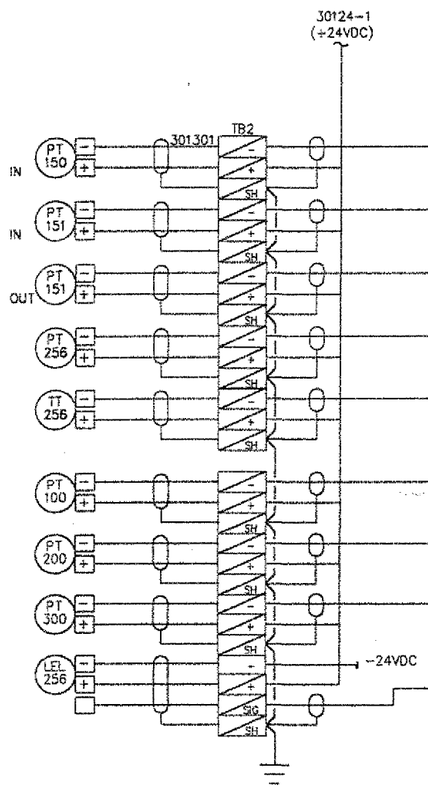

(EXISTING)

24VDC

RACK 8 GROUP 0

A 00 ROSS ?

1771-IFE INPUT		
I:80/01	PRESSURE TRANSMITTER PT-150	301301
01		301302
02		
I:80/02	PRESSURE TRANSMITTER PT-151	301303
03		301304
04		
I:80/03	PRESSURE TRANSMITTER PT-151	301305
05		301306
06		
I:80/04	PRESSURE TRANSMITTER PT-256	301307
07		301308
08		
NOT USED		
I:80/05	TEMPERATURE TRANSMITTER TT-256	301309
09		301310
10		
I:80/06	PRESSURE TRANSMITTER PT-100	301311
11		301312
12		
I:80/07	PRESSURE TRANSMITTER PT-200	301313
13		301314
14		
I:80/08	PRESSURE TRANSMITTER PT-300	301315
15		301316
16		
NOT USED		
I:80/09	LEL TRANSMITTER LEL-256	301317
17		301318
18		
I:80/10		301319
19		301320
20		
I:80/11		301321
21		301322
22		
I:80/12		301323
23		301324
24		
NOT USED		
I:80/13		301325
25		301326
26		
I:80/14		301327
27		301328
28		
I:80/15		301329
29		301330
30		
I:80/16		301331
31		301332
32		
	COMMON	
	COMMON	

(SPARE)

RACK 8 GROUP 1

1 PT-256
2 PTI-6A
3 PTI-6B
4 PTI 6C
5 G-256 TANK TT-256

6 ~~TT-256~~ PFT 100
7 PIT 200
8 PIT 300
9 LEL 256

NOTES:

1. FIELD WIRING SHOWN BOLD.

ALPHA ENGINEERS and CONSTRUCTORS, INC.
2528 NW 29th AVE, PORTLAND, OR. 97210 Tel:(503)223-3317/Fax:(503)227-3244

AEC1 PROJECT NUMBER 25-23

DRAWING NO.	REFERENCE DRAWINGS	REV.	DATE	REVISED	DRAWN	CKD.	CIV/STRL	MECH/PIPING	ELEC/INST	SAFETY	P.E.
		0	08/09/00	ISSUE FOR CONSTRUCTION	DAB	WHB					

TOSCO
Tosco Refining Company
A Division of Tosco Corporation
5528 NW Doane St.
Portland, Oregon 97210

CLIENT APPROVALS		
REV	BY	DATE

SCALE: NONE		DATE
DRAWN BY	DAB	06/16/00
DESIGNED BY	WHB	06/16/00
CHECKED BY	WHB	06/21/00
WORK ORDER	25-23	22X34

PORTLAND TERMINAL
PORTLAND, OREGON
BLACK OIL BLENDING SYSTEM
PLC SCHEMATICS
RACK 8, GROUP 0, 1

DATE	DRAWING NO.	SHEET	REV
06/16/00	2523-E-3013	1 OF 1	0

2523E013.DWG <CPU: 08/09/00 [TIME: 1:44 PM]>

COP0021614

(SPARE)
24VDC
RACK 8 GROUP 2

(NEW)
24VDC
RACK 8 GROUP 3

PROSOFT
COMMUNICATIONS
MODULE

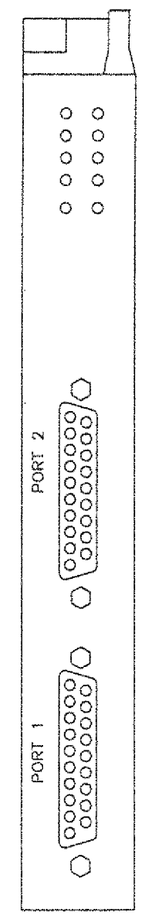

NOTES:

ALPHA ENGINEERS and CONSTRUCTORS, INC.
2929 NW 29th AVE, PORTLAND, OR. 97210 Tel:(503)227-3317/Fax:(503)227-3244

AECI PROJECT NUMBER
25-23

DRAWING NO.	REFERENCE DRAWINGS	REV.	DATE	REVISED	DRAWN	CKD.	CIV/STRL	MECH/PIPING	ELEC/INST	SAFETY	P.E.
		0	08/09/00	ISSUE FOR CONSTRUCTION	DAB	WHB					

TOSCO
Tosco Refining Company
A Division of Tosco Corporation
5528 NW Doane St.
Portland, Oregon 97210

CLIENT APPROVALS		
REV	BY	DATE

SCALE: NONE		DATE
DRAWN BY	DAB	06/16/00
DESIGNED BY	WHB	06/16/00
CHECKED BY	WHB	08/08/00
WORK ORDER	25-23	22X34

PORTLAND TERMINAL
PORTLAND, OREGON
BLACK OIL BLENDING SYSTEM
PLC SCHEMATICS
RACK 8, GROUP 2,3

DATE	DRAWING NO.	SHEET	REV.
06/16/00	2523-E-3014	1 OF 1	0

COP00021615

(SPARE)
RACK 8 GROUP 4

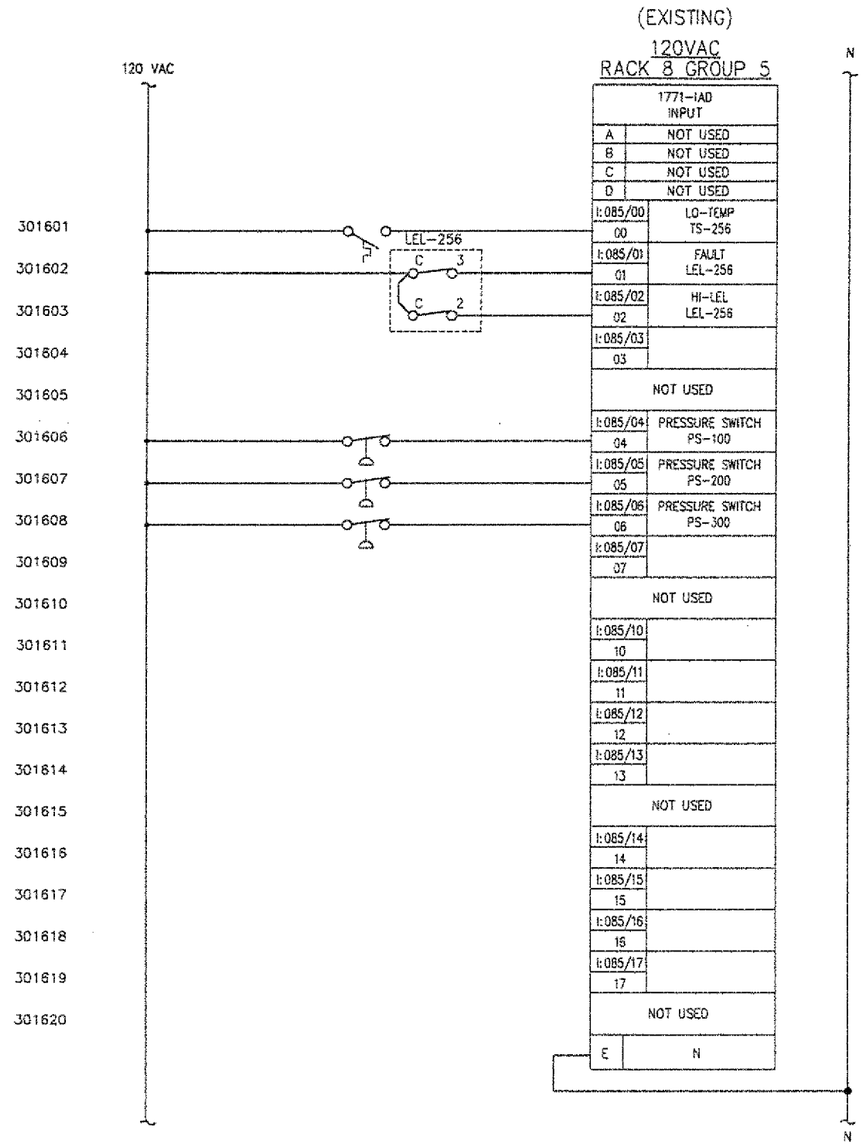

NOTES:

1. FIELD WIRING SHOWN BOLD.

ALPHA ENGINEERS and CONSTRUCTORS, INC.
2929 NW 29th AVE, PORTLAND, OR 97210 Tel:(503)227-3317/Fax:(503)227-3244

AECI PROJECT NUMBER 25-23

DRAWING NO.	REFERENCE DRAWINGS	REV.	DATE	REVISED	DRAWN	CKD.	CIV/STRL	MECH/PPING	ELEC/INST	SAFETY	P.E.
		0	08/09/00	ISSUE FOR CONSTRUCTION	DAB	WHB					

TOSCO
Tosco Refining Company
A Division of Tosco Corporation
5528 NW Doane St.
Portland, Oregon 97210

CLIENT APPROVALS		
REV	BY	DATE

SCALE: NONE		DATE
DRAWN BY	DAB	06/16/00
DESIGNED BY	WHB	06/16/00
CHECKED BY	WHB	08/08/00
WORK ORDER	25-23	22X34
DATE		
06/16/00		

PORTLAND TERMINAL
PORTLAND, OREGON
BLACK OIL BLENDING SYSTEM
PLC SCHEMATICS
RACK 8, GROUP 4,5

DRAWING NO. 2523-E-3015 | SHEET 1 OF 1 | REV. 0

2523E0150.DWG <CPD: 08/09/00 TIME: 1:46 PM1 >

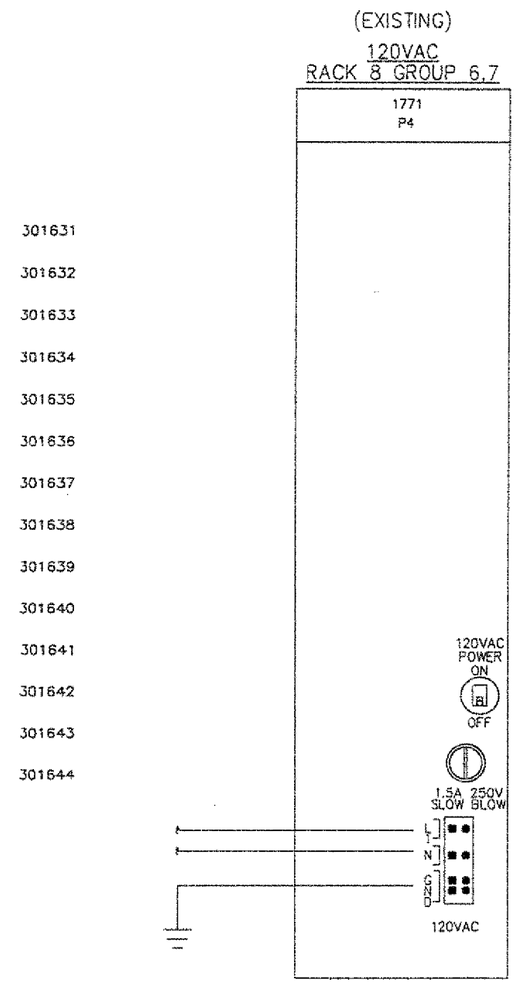

ALPHA ENGINEERS and CONSTRUCTORS, INC.
2829 NW 29th AVE, PORTLAND, OR. 97210 Tel:(503)227-1317/Fax:(503)227-3344

AECI PROJECT NUMBER: 25-23

DRAWING NO.	REFERENCE DRAWINGS	REV.	DATE	REVISED	DRAWN	CKD.	CIV/STRL	MECH/PIPING	ELEC/INST	SAFETY	P.E.
		0	08/09/00	ISSUE FOR CONSTRUCTION	DAB	WHB					

TOSCO
Tosco Refining Company
A Division of Tosco Corporation
5528 NW Doane St.
Portland, Oregon 97210

CLIENT APPROVALS		
REV	BY	DATE

SCALE:	NONE	DATE
DRAWN BY	DAB	08/16/00
DESIGNED BY	WHB	08/16/00
CHECKED BY	WHB	08/08/00
WORK ORDER	25-23	22X34
DATE		
06/16/00		

PORTLAND TERMINAL
PORTLAND, OREGON
BLACK OIL BLENDING SYSTEM
PLC SCHEMATICS
RACK 8, GROUP 6,7

DRAWING NO.	SHEET	REV.
2523-E-3016	1 OF 1	0

COP00021616

2523\D160.DWG <CPD: 08/09/00 1:47 PM>

COP0021617

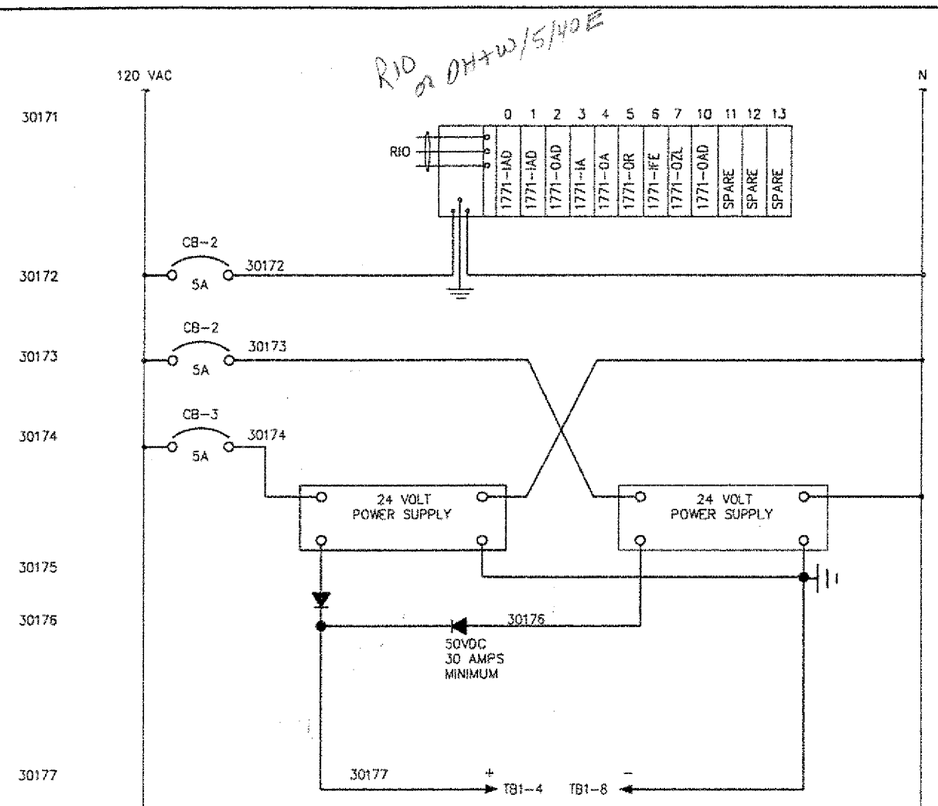

DOCK CONTROL POWER DISTRIBUTION

SEE NOTE 2

ITEM	QUAN.	DESCRIPTION
1	3	CIRCUIT BREAKER, 5A, ALLEN-BRADLEY #1492-CH050 (BY TOSCO)
2	1	POWER SUPPLY, POWER ONE HN24-3.6-A (BY TOSCO)
3	2	ESD BUTTON WITH ENCLOSURE, ALLEN-BRADLEY #800R-1HKG4RLG (BY TOSCO)
4	4	RELAY, ALLEN-BRADLEY #700-HC24Z24 (BY TOSCO)
5	4	RELAY BASE, ALLEN-BRADLEY #700HN-128 (BY TOSCO)

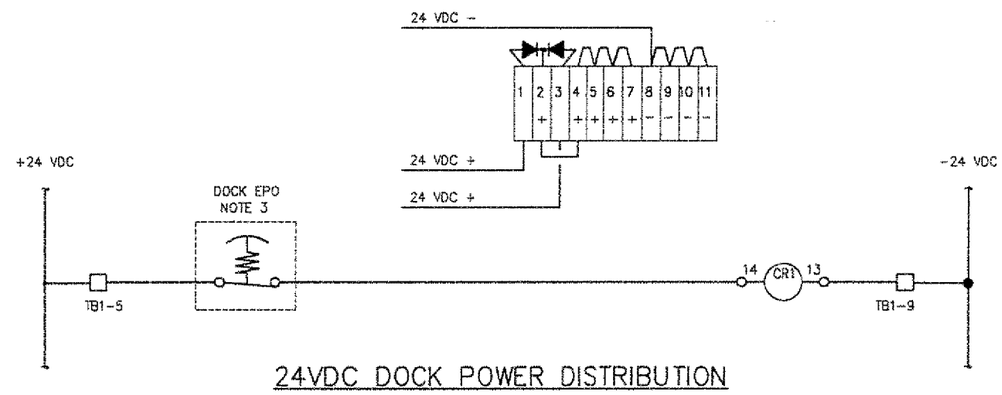

24VDC DOCK POWER DISTRIBUTION

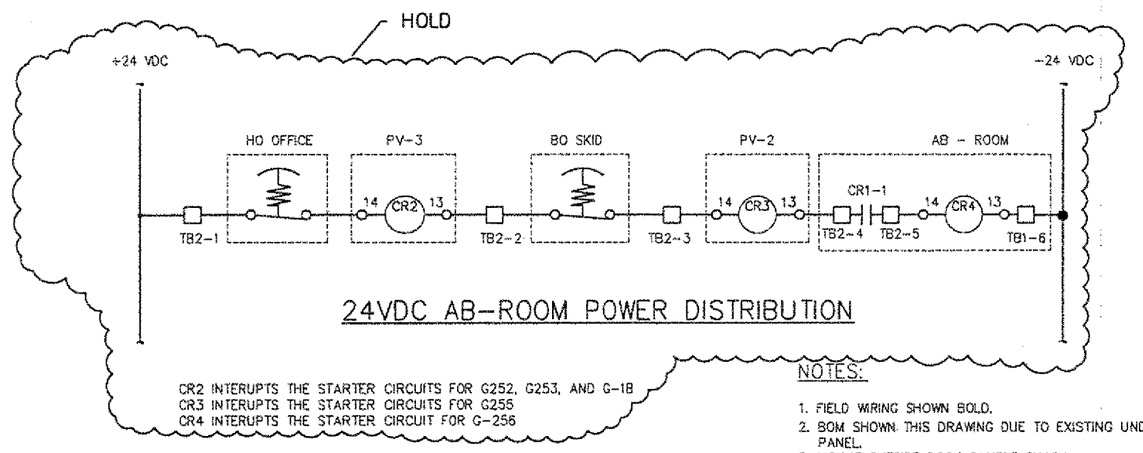

24VDC AB-ROOM POWER DISTRIBUTION

CR2 INTERUPTS THE STARTER CIRCUITS FOR G252, G253, AND G-18
CR3 INTERUPTS THE STARTER CIRCUITS FOR G255
CR4 INTERUPTS THE STARTER CIRCUIT FOR G-256

NOTES:

1. FIELD WIRING SHOWN BOLD.
2. BOM SHOWN THIS DRAWING DUE TO EXISTING UNDOCUMENTED PANEL.
3. MOUNT OUTSIDE DOCK SAMPLE SHACK.

ALPHA ENGINEERS and CONSTRUCTORS, INC.
2505 NW 29th AVE, PORTLAND, OR. 97210 Tel:(503)227-3317/Fax:(503)227-3244

AECI PROJECT NUMBER: 25-23

DRAWING NO.	REFERENCE DRAWINGS	REV.	DATE	REVISED	DRAWN	CKD.	OV/STRL	MECH/PRNG	ELEC/INST	SAFETY	P.E.
		0	08/09/00	ISSUE FOR CONSTRUCTION	DAB	WHB					

TOSCO
Tosco Refining Company
A Division of Tosco Corporation
5528 NW Doane St.
Portland, Oregon 97210

CLIENT APPROVALS		
REV	BY	DATE

SCALE: NONE		DATE
DRAWN BY	DAB	06/26/00
DESIGNED BY	WHB	06/26/00
CHECKED BY	WHB	06/26/00
WORK ORDER	25-23	22X34
DATE: 06/26/00		

PORTLAND TERMINAL
PORTLAND, OREGON
BLACK OIL BLENDING SYSTEM
DOCK A/B RACK PANEL
CONTROL POWER DISTRIBUTION

DRAWING NO. 2523-E-3017 | SHEET 1 OF 1 | REV. 0

COP00021618

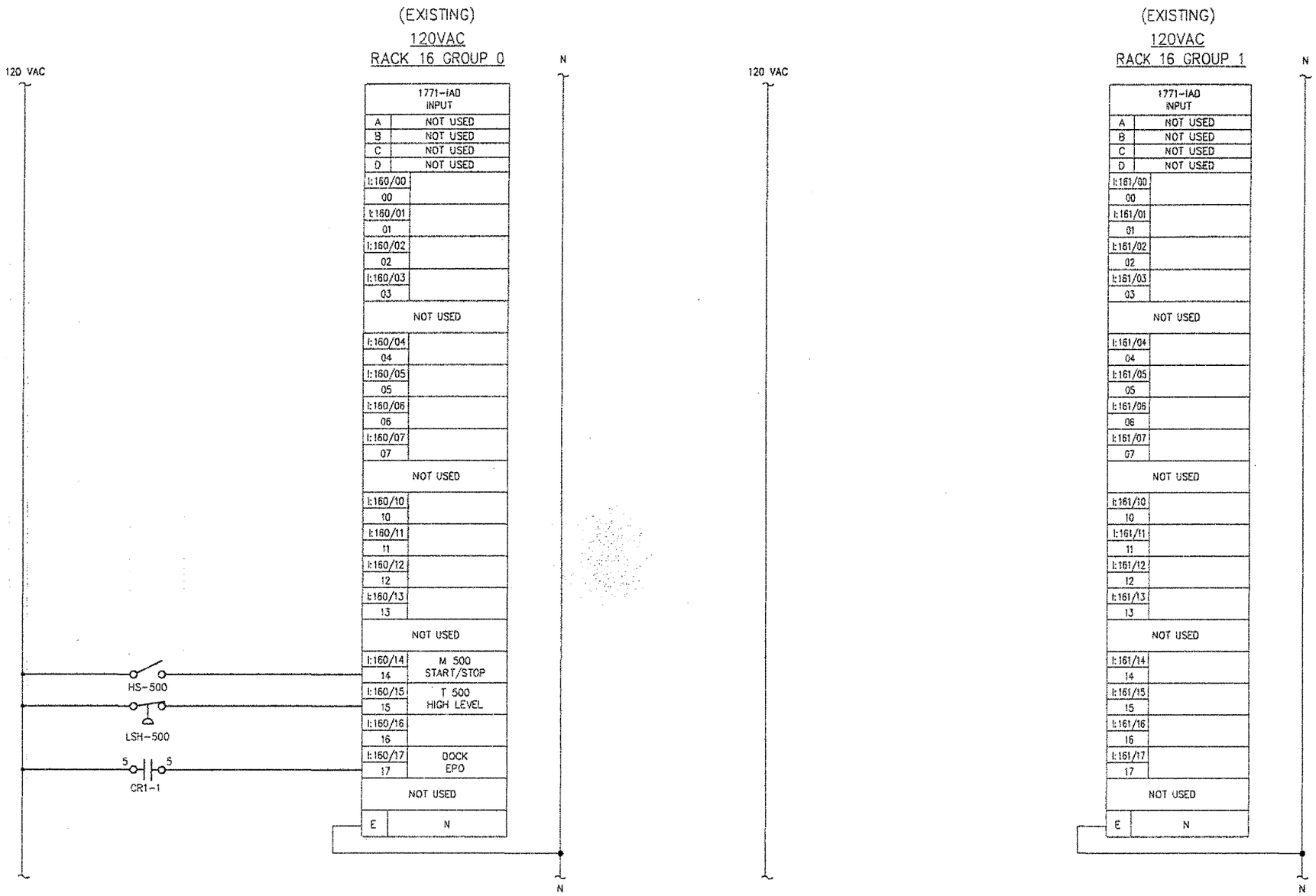

NOTES:

1. FIELD WIRING SHOWN BOLD.

ALPHA ENGINEERS and CONSTRUCTORS, INC.
2928 NW 29th AVE, PORTLAND, OR. 97210 Tel:(503)227-3317/Fax:(503)227-3344

AECI PROJECT NUMBER: 25-23

DRAWING NO.	REFERENCE DRAWINGS	REV.	DATE	REVISED	DRAWN	CKD.	CIV/STRL	MECH/PIPING	ELEC/INSTR	SAFETY	P.E.
		0	08/09/00	ISSUE FOR CONSTRUCTION	DAG	WHB					

TOSCO
Tosco Refining Company
A Division of Tosco Corporation
5528 NW Doane St.
Portland, Oregon 97210

CLIENT APPROVALS		
REV	BY	DATE

SCALE: NONE		DATE
DRAWN BY	DAG	06/26/00
DESIGNED BY	WHB	06/26/00
CHECKED BY	WHB	06/08/00
WORK ORDER	25-23	22X34

PORTLAND TERMINAL
PORTLAND, OREGON
BLACK OIL BLENDING SYSTEM
PLC SCHEMATICS
RACK 16, GROUP 0.1

DATE	DRAWING NO.	SHEET	REV.
06/26/00	2523--E-3018	1 OF 1	0

2523C01BO.DWG <CPD: 08/09/00 TIME: 1:43 PM>

COP00021619

(EXISTING)
120VAC
RACK 16 GROUP 2

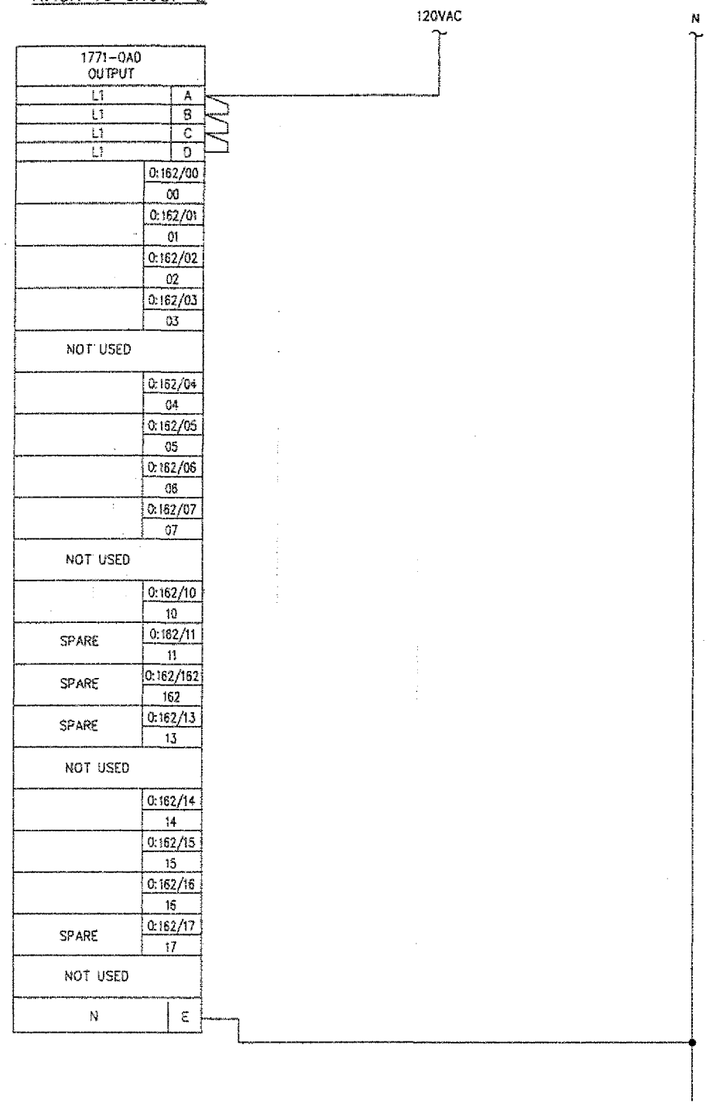

(EXISTING)
120VAC
RACK 16 GROUP 2

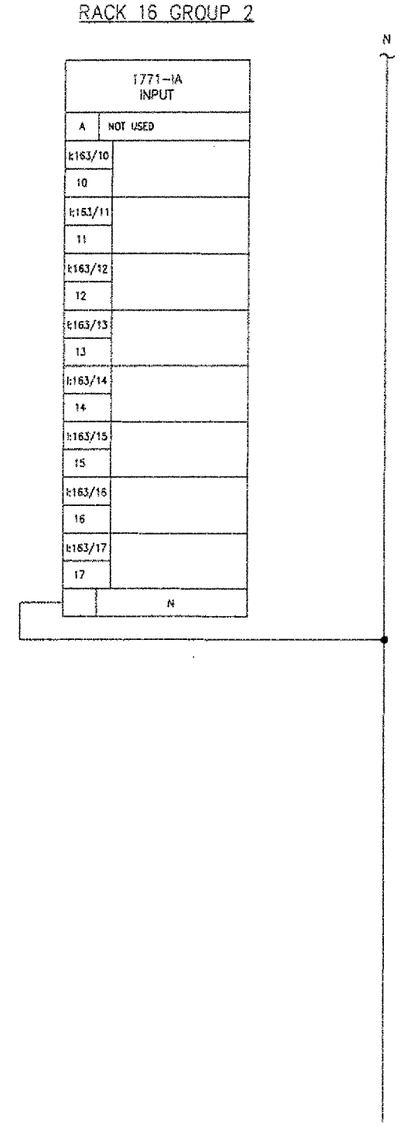

NOTES:

1. NO NEW WORK THIS DWG.

ALPHA ENGINEERS and CONSTRUCTORS, INC.
2529 NW 29th AVE., PORTLAND, OR. 97210 Tel:(503)227-3317/Fax:(503)227-3244

AECI PROJECT NUMBER 25-23

DRAWING NO.	REFERENCE DRAWINGS	REV.	DATE	REVISED	DRAWN	CKD.	CIV/STRL	MECH/PIPING	ELEC/INST	SAFETY	P.E.
		0	08/09/00	ISSUE FOR CONSTRUCTION	OAB	WHB					

TOSCO
Tosco Refining Company
A Division of Tosco Corporation
5528 NW Doane St.
Portland, Oregon 97210

CLIENT APPROVALS		
REV	BY	DATE

SCALE: NONE		DATE
DRAWN BY	OAB	06/26/00
DESIGNED BY	WHB	06/26/00
CHECKED BY	WHB	08/08/00
WORK ORDER	25-23	22X34

PORTLAND TERMINAL
PORTLAND, OREGON
BLACK OIL BLENDING SYSTEM
PLC SCHEMATICS
RACK 16, GROUP 2,3

DATE	DRAWING NO.	SHEET	REV.
06/26/00	2523-E-3019	1 OF 1	0

COP00021620

(EXISTING)
120VAC
RACK 16 GROUP 4

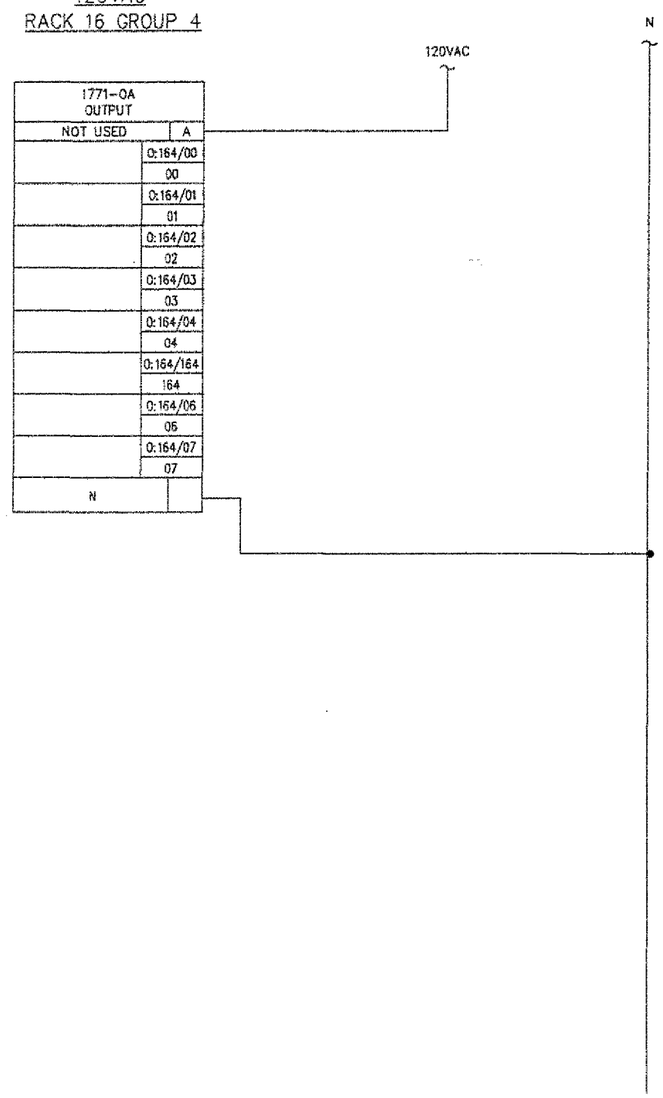

(EXISTING)
RACK 16 GROUP 5

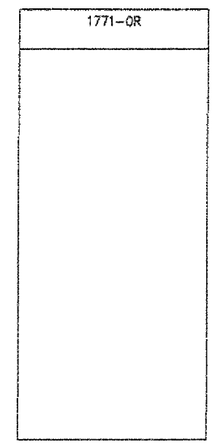

NOTES:

1. NO NEW WORK THIS DWG.

ALPHA ENGINEERS and CONSTRUCTORS, INC.
2929 NW 29th AVE, PORTLAND, OR. 97210 Tel:(503)227-3317/Fax:(503)227-2244

AECI PROJECT NUMBER: 25-23

DRAWING NO.	REFERENCE DRAWINGS	REV.	DATE	REVISED	DRAWN	CKD.	CIV/STRL	MECH/PIPING	ELEC/INST	SAFETY	P.E.
		0	08/09/00	ISSUE FOR CONSTRUCTION	OAB	WHB					

TOSCO
Tosco Refining Company
A Division of Tosco Corporation
5528 NW Doane St.
Portland, Oregon 97210

CLIENT APPROVALS		
REV	BY	DATE

SCALE: NONE		DATE
DRAWN BY	OAB	06/26/00
DESIGNED BY	WHB	06/26/00
CHECKED BY	WHB	08/08/00
WORK ORDER	25-23	22X34
DATE		
06/26/00		

PORTLAND TERMINAL
PORTLAND, OREGON
BLACK OIL BLENDING SYSTEM
PLC SCHEMATICS
RACK 16, GROUP 4,5

DRAWING NO.	SHEET	REV.
2523-E-3020	1 OF 1	0

2523E0200.DWG <CPD. 08/09/00 TIME: 1:59 PM1>

COP0021621

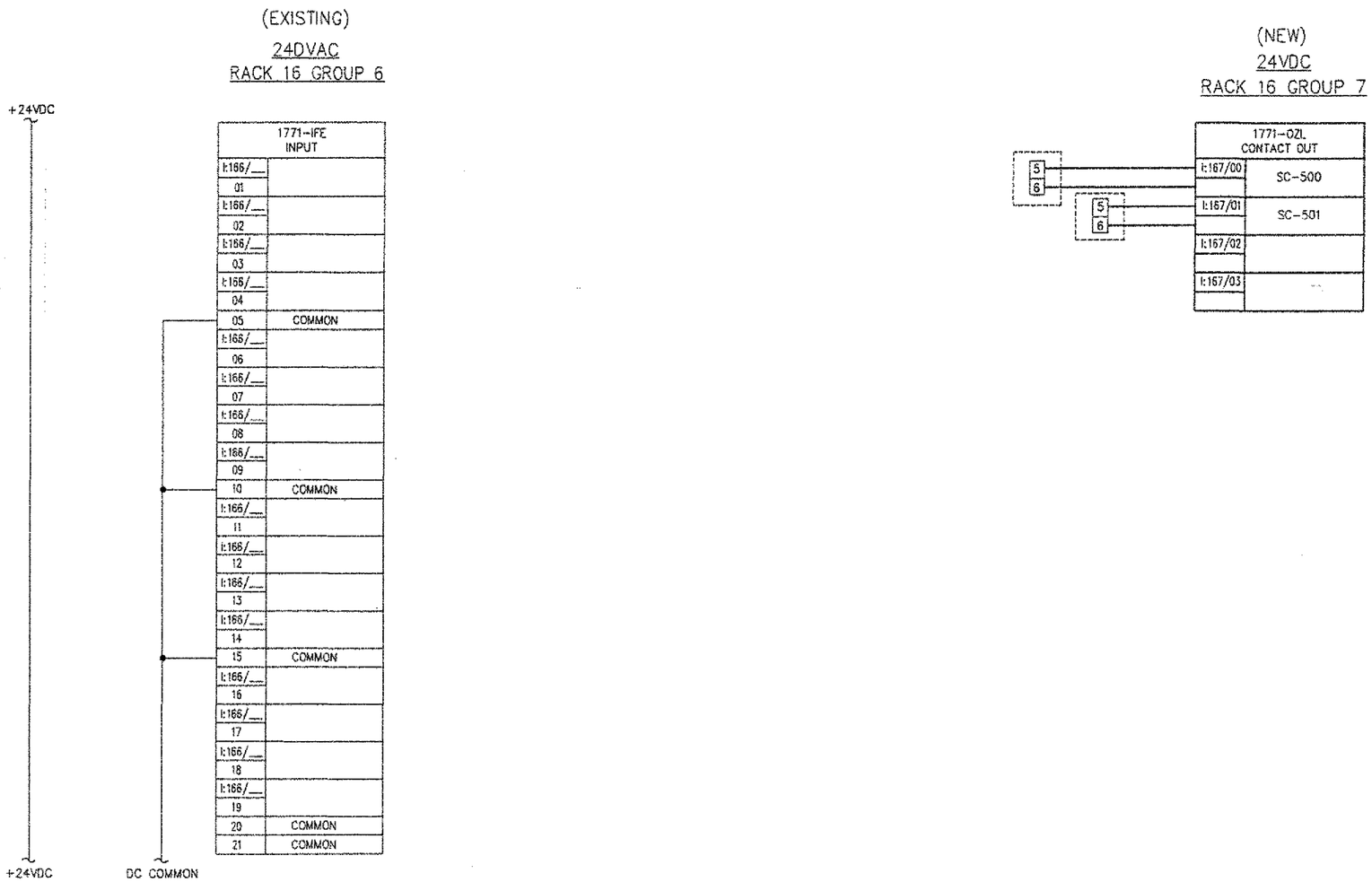

NOTES:

1. FIELD WIRING SHOWN BOLD

ALPHA ENGINEERS and CONSTRUCTORS, INC.
2929 NW 29th AVE. PORTLAND, OR. 97210 Tel:(503)227-3317/Fax:(503)227-3244

AECI PROJECT NUMBER: 25-23

DRAWING NO.	REFERENCE DRAWINGS	REV.	DATE	REVISED	DRAWN	CKD.	CIV/STRL	MECH/PPING	ELEC/INST	SAFETY	P.E.
		0	08/09/00	ISSUE FOR CONSTRUCTION	DAB	WHB					

TOSCO
Tosco Refining Company
A Division of Tosco Corporation
5528 NW Doane St.
Portland, Oregon 97210

CLIENT APPROVALS		
REV	BY	DATE

SCALE: NONE		DATE
DRAWN BY	DAB	06/26/00
DESIGNED BY	WHB	06/26/00
CHECKED BY	WHB	08/08/00
WORK ORDER	25-23	22X34
DATE		
06/26/00		

PORTLAND TERMINAL
PORTLAND, OREGON
BLACK OIL BLENDING SYSTEM
PLC SCHEMATICS
RACK 16, GROUP 6,7

DRAWING NO.	SHEET	REV.
2523-E-3021	1 OF 1	0

(EXISTING)

RACK 16 GROUP 10

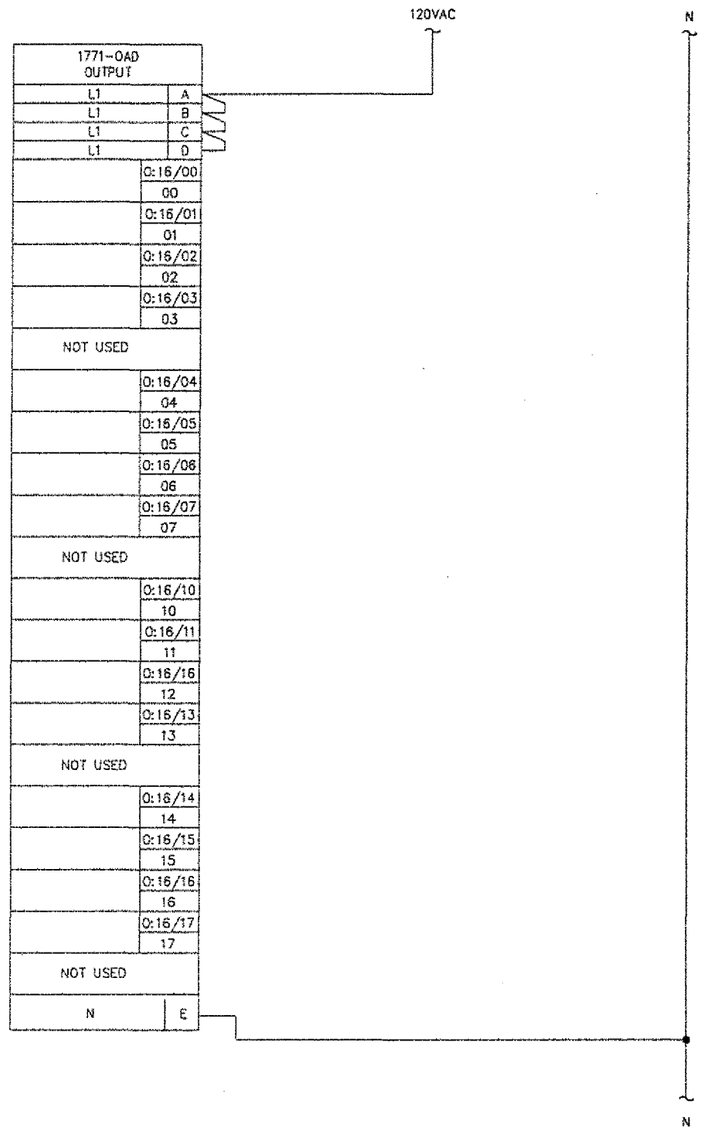

(SPARE)

RACK 16 GROUP 11

NOTES:

1. NO NEW WORK THIS DWG.

ALPHA ENGINEERS and CONSTRUCTORS, INC.
2828 NW 29th AVE. PORTLAND, OR. 97210 Tel:(503)227-3317/Fax:(503)227-3344

AECI PROJECT NUMBER 25-23

DRAWING NO.	REFERENCE DRAWINGS	REV.	DATE	REVISED	DRAWN	CKD.	CIV/STRL	MECH/PRWG	ELEC/INST	SAFETY	P.E.
		0	08/09/00	ISSUE FOR CONSTRUCTION	DAB	WHB					

TOSCO
Tosco Refining Company
A Division of Tosco Corporation
5528 NW Doane St.
Portland, Oregon 97210

CLIENT APPROVALS		
REV	BY	DATE

SCALE: NONE		DATE
DRAWN BY	DAB	06/26/00
DESIGNED BY	WHB	06/26/00
CHECKED BY	WHB	08/08/00
WORK ORDER	25-23	22X34

PORTLAND TERMINAL
PORTLAND, OREGON
BLACK OIL BLENDING SYSTEM
PLC SCHEMATICS
RACK 16, GROUP 10,11

DATE	DRAWING NO.	SHEET	REV.
06/26/00	2523-E-3022	1 OF 1	0

COP00021622

(SPARE)

RACK 16 GROUP 12

(SPARE)

RACK 16 GROUP 13

NOTES:

1. NO NEW WORK THIS DWG.

ALPHA ENGINEERS and CONSTRUCTORS, INC.
2929 NW 29th AVE, PORTLAND, OR 97210 Tel:(503)227-3217/Fax:(503)227-3244

AECI PROJECT NUMBER: 25-23

DRAWING NO.	REFERENCE DRAWINGS	REV.	DATE	REVISED	DRAWN	CKD.	CIV/STRL	MECH/PIPING	ELEC/INST	SAFETY	P.E.
		0	08/09/00	ISSUE FOR CONSTRUCTION	DAB	WHB					

TOSCO
Tosco Refining Company
A Division of Tosco Corporation
5528 NW Doane St.
Portland, Oregon 97210

CLIENT APPROVALS		
REV	BY	DATE

SCALE: NONE		DATE
DRAWN BY	DAB	06/26/00
DESIGNED BY	WHB	06/26/00
CHECKED BY	WHB	08/08/00
WORK ORDER	25-23	22X34

PORTLAND TERMINAL
PORTLAND, OREGON
BLACK OIL BLENDING SYSTEM
PLC SCHEMATICS
RACK 16, GROUP 12,13

DATE	DRAWING NO.	SHEET	REV.
06/26/00	2523--E-3023	1 OF 1	0

COP00021623

CAD: 08/09/00 TIME: 12:56 PM

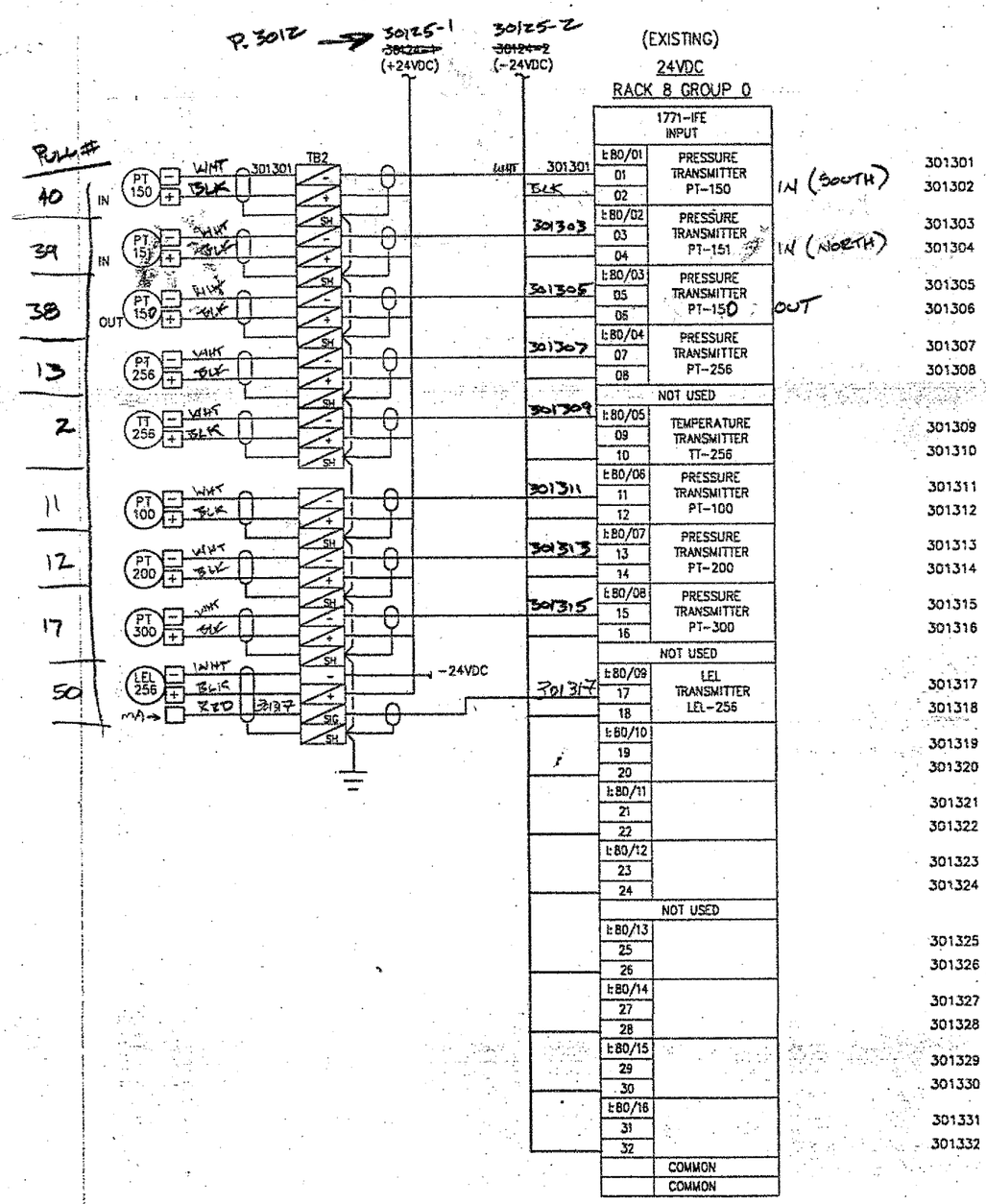

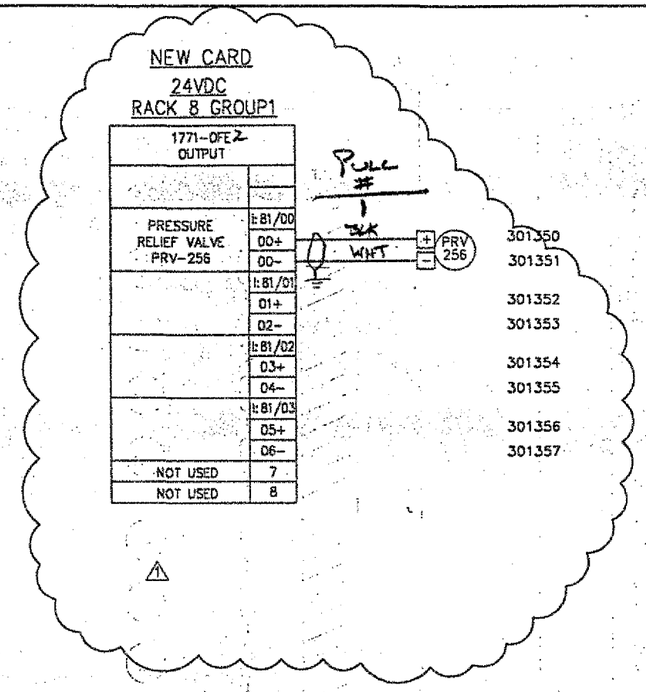

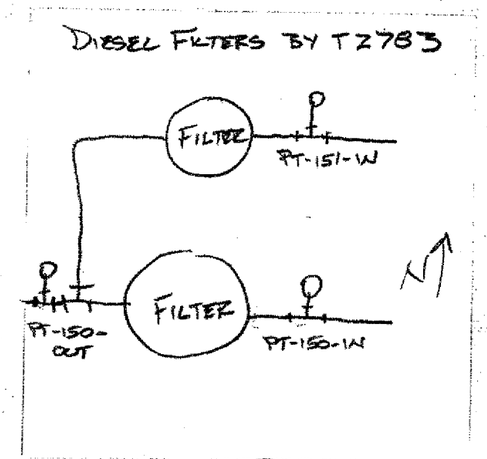

NOTES:

1. FIELD WIRING SHOWN BOLD.

ALPHA ENGINEERS and CONSTRUCTORS, INC.
2929 NW 29th AVE, PORTLAND, OR. 97210 Tel:(503)227-3317/Fax:(503)227-3744

AECI PROJECT NUMBER 25-23

DRAWING NO.	REFERENCE DRAWINGS	REV.	DATE	REVISED	DRAWN	CKD.	CIV/STRL	MECH/PIPING	ELEC/INST	SAFETY	P.E.
		0	08/09/00	ISSUE FOR CONSTRUCTION	DAB	WHB					
		1	09/27/00	ADDED 1771-OFE CARD	DAB	WHB					

TOSCO
Tosco Refining Company
A Division of Tosco Corporation
5528 NW Doane St.
Portland, Oregon 97210

CLIENT APPROVALS		
REV	BY	DATE

SCALE: NONE		DATE
DRAWN BY	DAB	06/16/00
DESIGNED BY	WHB	06/16/00
CHECKED BY	WHB	06/21/00
WORK ORDER	25-23	22X34

PORTLAND TERMINAL
PORTLAND, OREGON
BLACK OIL BLENDING SYSTEM
PLC SCHEMATICS
RACK 8, GROUP 0, 1

DATE	DRAWING NO.	SHEET	REV
06/16/00	2523-E-3013	1 OF 1	1

COP0021624

COP0021625

(SPARE)
RACK 8 GROUP 4

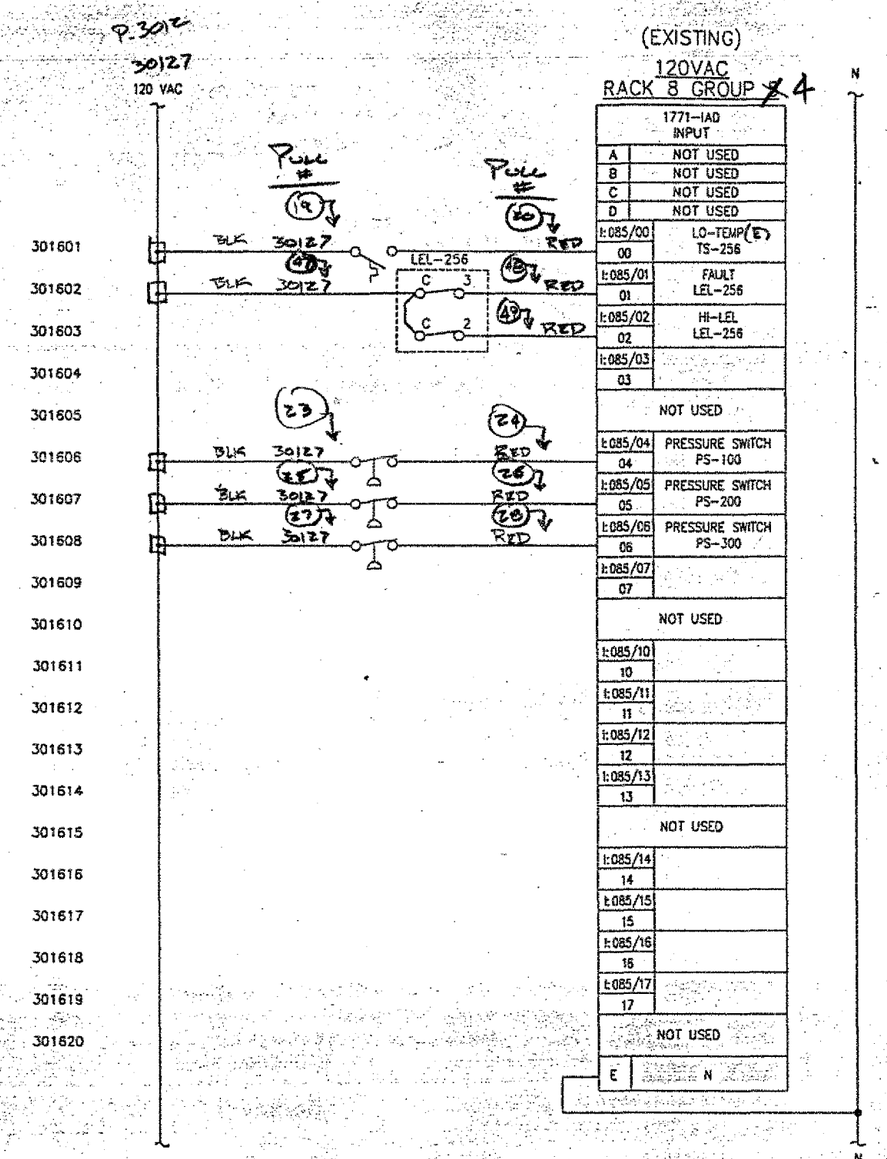

NOTES:

1. FIELD WIRING SHOWN BOLD.

ALPHA ENGINEERS and CONSTRUCTORS, INC.
2828 NW 29th AVE, PORTLAND, OR. 97210 Tel:(503)227-3317/Fax:(503)227-3244

AEC PROJECT NUMBER 25-23

DRAWING NO.	REFERENCE DRAWINGS	REV.	DATE	REVISED	DRAWN	CKD.	CIV/STRL	MECH/PPING	ELEC/INST	SAFETY	P.E.
		0	08/09/00	ISSUE FOR CONSTRUCTION	DAB	WHB					

TOSCO
Tosco Refining Company
A Division of Tosco Corporation
5528 NW Doane St.
Portland, Oregon 97210

CLIENT APPROVALS		
REV	BY	DATE

SCALE: NONE		DATE
DRAWN BY	DAB	06/16/00
DESIGNED BY	WHB	06/16/00
CHECKED BY	WHB	08/08/00
WORK ORDER	25-23	22X34
DATE		
06/16/00		

PORTLAND TERMINAL
PORTLAND, OREGON
BLACK OIL BLENDING SYSTEM
PLC SCHEMATICS
RACK 8, GROUP 4,5

DRAWING NO.	SHEET	REV.
2523-E-3015	1 OF 1	0

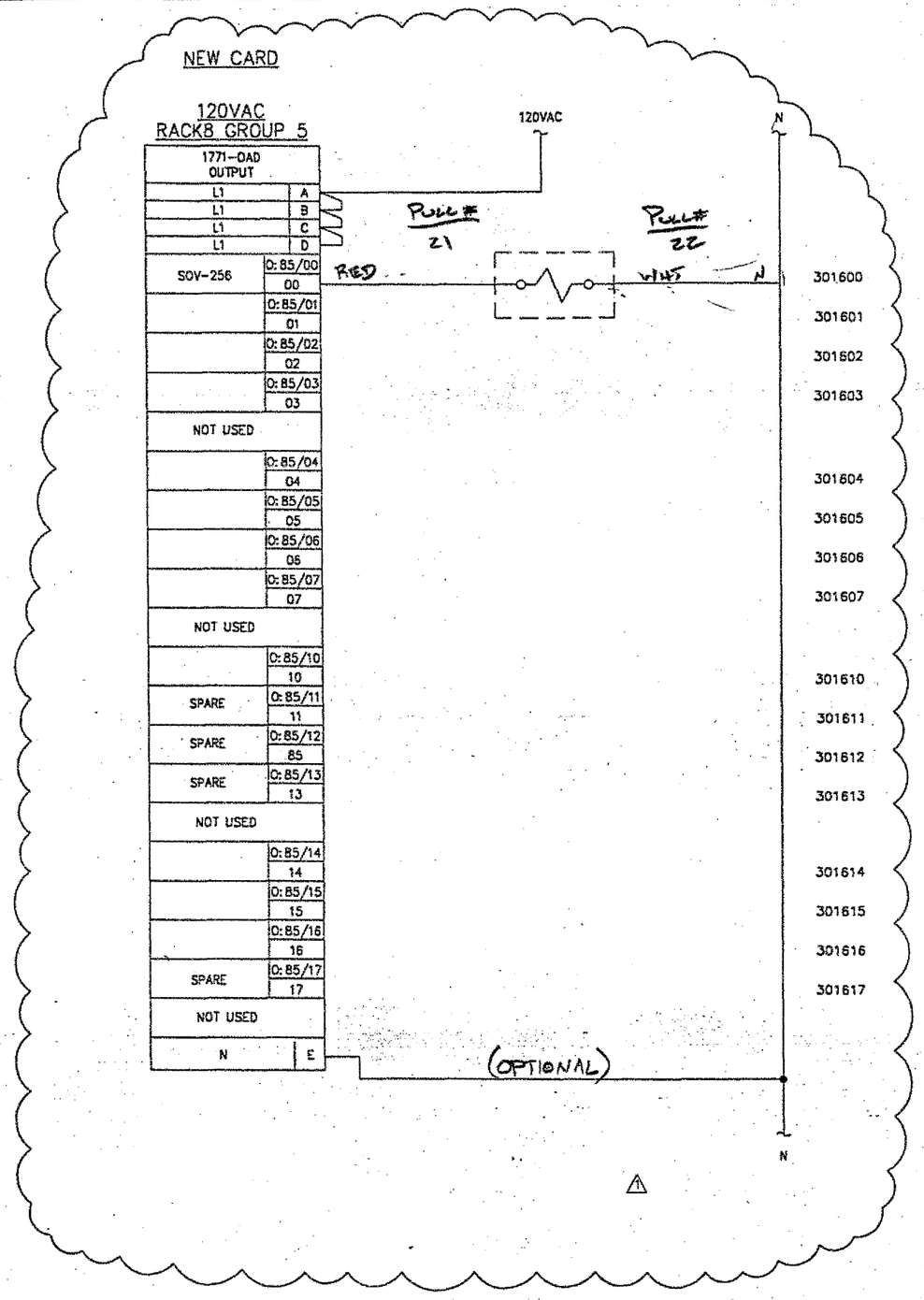

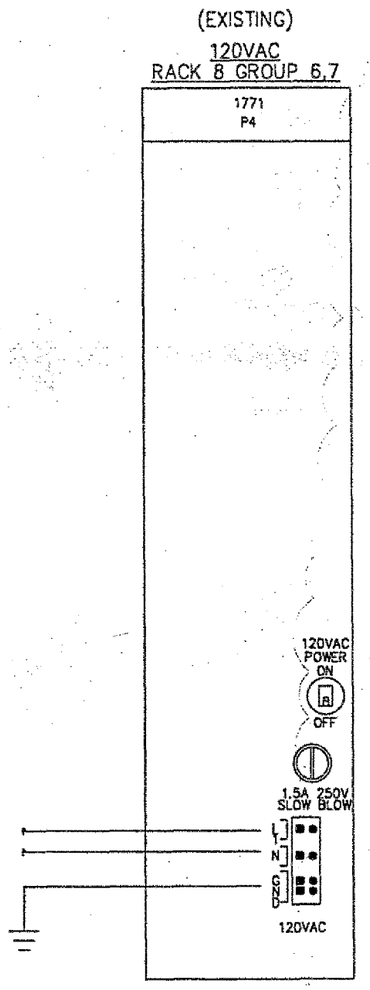

ALPHA ENGINEERS and CONSTRUCTORS, INC.
2828 NW 29th AVE, PORTLAND, OR. 97210 Tel:(503)227-3317/Fax:(503)227-3244

AECI PROJECT NUMBER 25-23

DRAWING NO.	REFERENCE DRAWINGS	REV.	DATE	REVISED	DRAWN	CKD.	CIV/STRL	MECH/PIPING	ELEC/INST	SAFETY	P.E.
		0	08/09/00	ISSUE FOR CONSTRUCTION	DAB	WHB					
		1	09/27/00	ADDED 1771-OAD CARD	DAB	WHB					

TOSCO
Tosco Refining Company
A Division of Tosco Corporation
5528 NW Doane St.
Portland, Oregon 97210

CLIENT APPROVALS		
REV	BY	DATE

SCALE: NONE		DATE
DRAWN BY	DAB	06/16/00
DESIGNED BY	WHB	06/16/00
CHECKED BY	WHB	08/08/00
WORK ORDER	25-23	22X34
DATE		
06/16/00		

PORTLAND TERMINAL
PORTLAND, OREGON
BLACK OIL BLENDING SYSTEM
PLC SCHEMATICS
RACK 8, GROUP 6,7

DRAWING NO. 2523-E-3016 | SHEET 1 OF 1 | REV. 1

COP00021626

COP00216275

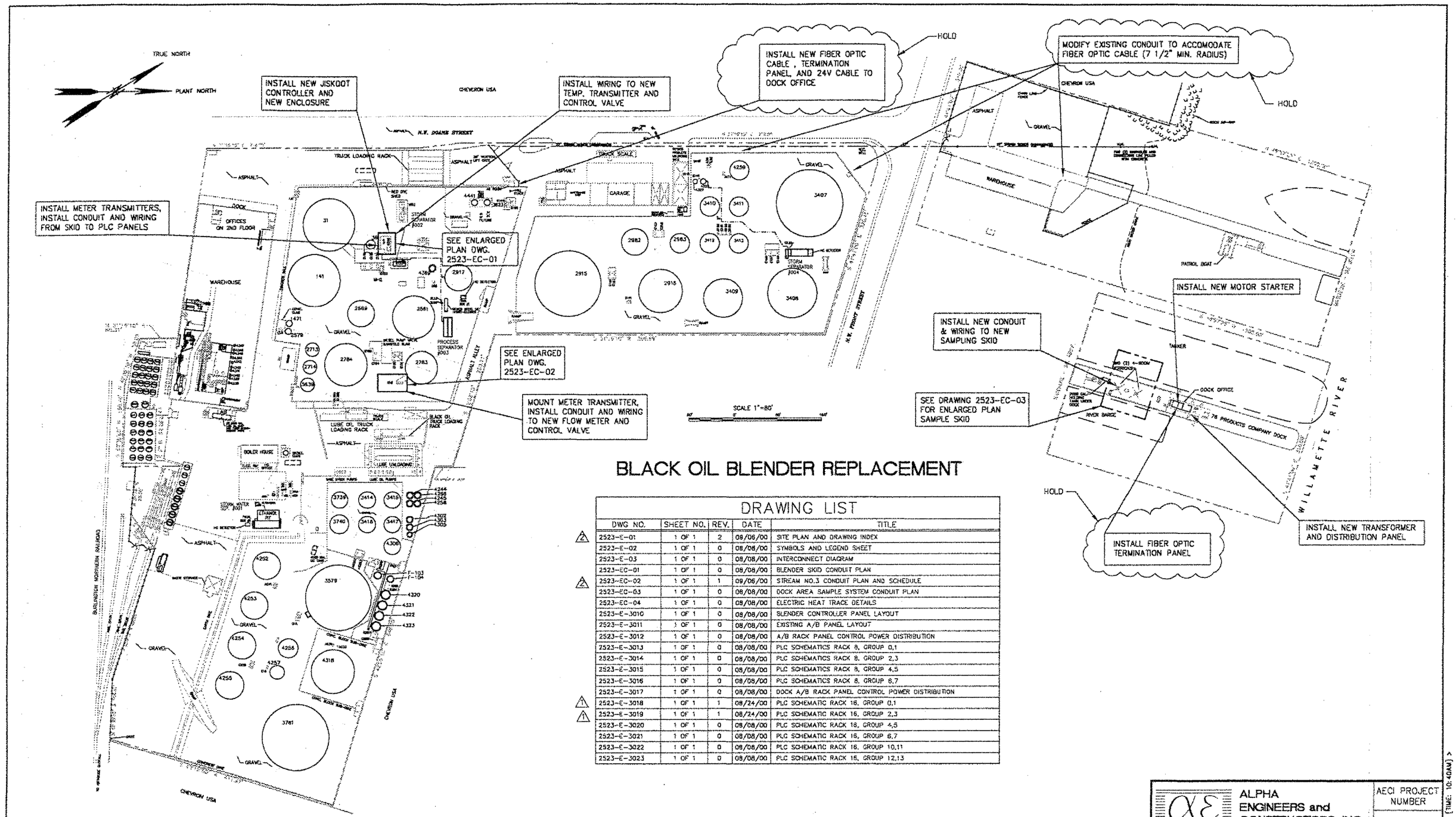

BLACK OIL BLENDER REPLACEMENT

DRAWING LIST

	DWG NO.	SHEET NO.	REV.	DATE	TITLE
2	2523-E-01	1 OF 1	2	09/06/00	SITE PLAN AND DRAWING INDEX
	2523-E-02	1 OF 1	0	08/08/00	SYMBOLS AND LEGEND SHEET
	2523-E-03	1 OF 1	0	08/08/00	INTERCONNECT DIAGRAM
	2523-EC-01	1 OF 1	0	08/08/00	BLENDER SKID CONDUIT PLAN
2	2523-EC-02	1 OF 1	1	09/06/00	STREAM NO.3 CONDUIT PLAN AND SCHEDULE
	2523-EC-03	1 OF 1	0	08/08/00	DOCK AREA SAMPLE SYSTEM CONDUIT PLAN
	2523-EC-04	1 OF 1	0	08/08/00	ELECTRIC HEAT TRACE DETAILS
	2523-E-3010	1 OF 1	0	08/08/00	BLENDER CONTROLLER PANEL LAYOUT
	2523-E-3011	1 OF 1	0	08/08/00	EXISTING A/B PANEL LAYOUT
	2523-E-3012	1 OF 1	0	08/08/00	A/B RACK PANEL CONTROL POWER DISTRIBUTION
	2523-E-3013	1 OF 1	0	08/08/00	PLC SCHEMATICS RACK 8, GROUP 0,1
	2523-E-3014	1 OF 1	0	08/08/00	PLC SCHEMATICS RACK 8, GROUP 2,3
	2523-E-3015	1 OF 1	0	08/08/00	PLC SCHEMATICS RACK 8, GROUP 4,5
	2523-E-3016	1 OF 1	0	08/08/00	PLC SCHEMATICS RACK 8, GROUP 6,7
	2523-E-3017	1 OF 1	0	08/08/00	DOCK A/B RACK PANEL CONTROL POWER DISTRIBUTION
1	2523-E-3018	1 OF 1	1	08/24/00	PLC SCHEMATIC RACK 16, GROUP 0,1
1	2523-E-3019	1 OF 1	1	08/24/00	PLC SCHEMATIC RACK 16, GROUP 2,3
	2523-E-3020	1 OF 1	0	08/08/00	PLC SCHEMATIC RACK 16, GROUP 4,5
	2523-E-3021	1 OF 1	0	08/08/00	PLC SCHEMATIC RACK 16, GROUP 6,7
	2523-E-3022	1 OF 1	0	08/08/00	PLC SCHEMATIC RACK 16, GROUP 10,11
	2523-E-3023	1 OF 1	0	08/08/00	PLC SCHEMATIC RACK 15, GROUP 12,13

ALPHA ENGINEERS and CONSTRUCTORS, INC.
2929 NW 29th AVE, PORTLAND, OR 97210 Tel:(503)227-3317/Fax:(503)227-3244

AECI PROJECT NUMBER 25-23

DRAWING NO.	REFERENCE DRAWINGS	REV.	DATE	REVISED	DRAWN	CKD.	CIV/STR.	MECH/PIPING	ELEC/INST.	SAFETY	P.E.
		0	08/09/00	ISSUE FOR CONSTRUCTION	DAB	WHB					
		1	08/24/00	UPDATED DRAWING LIST	DAB	WHB					
		2	09/06/00	UPDATED DRAWING LIST	DAB	WHB					

TOSCO
Tosco Refining Company
A Division of Tosco Corporation
5528 NW Doane St.
Portland, Oregon 97210

CLIENT APPROVALS		
REV	BY	DATE

SCALE: 1"=80'		DATE
DRAWN BY	DAB	6/16/00
DESIGNED BY	WHB	6/20/00
CHECKED BY	WHB	6/21/00
WORK ORDER	25-23	22X34
DATE		
06/16/00		

PORTLAND TERMINAL
PORTLAND, OREGON
BLACK OIL BLENDING SYSTEM
ELECTRICAL
SITE PLAN & DRAWING INDEX

DRAWING NO.	SHEET	REV.
2523-E-01	1 OF 1	2

2523e01.DWG <CPD: 08/24/00 [TIME: 10:40AM] >

COP00021628

CONDUIT & CABLE SCHEDULE

FROM	CONDUIT NO.	SIZE	TO	VOLTAGE	CABLE TYPE	MFG. NO.
AB PANEL	C1	3/4" GRC	PRV-256, TT-256	____	2-2C/20GA SHLD	BELDEN 8762
AB PANEL	C2	3/4" GRC	MMI PANEL	____	1-4C/20GA SHLD, 1-2C/20GA SHLD	BELDEN 9402, 8762
MMI PANEL	C3	3/4" GRC	FCV-100, FCV-200	____	2-2C/20GA SHLD	BELDEN 8762
MMI PANEL	C4	3/4" GRC	FT-100, FT-200	____	2-2C/20GA SHLD	BELDEN 8762
C6	C5	3/4" GRC	PT-100, PT-200	____	2-2C/20GA SHLD	BELDEN 8762
PT-256, C5	C6	3/4" GRC	AB PANEL	____	3-2C/20GA SHLD	BELDEN 8762
NOT USED	C7					
MMI PANEL	C8	3/4" GRC	TT-100, TT-200	____	2-2C/20GA SHLD	BELDEN 8762
MMI PANEL	C9	EXIST.	PT-300, FCV-300 TT-300, FT-300	____	4-2C/20GA SHLD	BELDEN 8762
AB PANEL	C10	EXIST.	DOCK HOUSE PANEL	____	1-6C FO CABLE 1-2C/14GA SHLD 1-2C/20GA SHLD	BELDEN 225716 BELDEN 83752 BELDEN 9463 — HOLD
AB PANEL	P1	3/4" GRC	TS-256,SOV-256	120	2-#12 THHN W/1#14 GND	
AB PANEL	P2	3/4" GRC	PS-100, PS-200	120	3-#12 THHN W/1#14 GND	
AB PANEL	P3	3/4" GRC	PS-300	120	2-#12 THHN W/1#14 GND	
DOCK PANEL	P4	3/4" GRC	G500	460	3-#12 THHN W/1#14 GND	
PANEL P-1 HT RELAY	P5	3/4" GRC	SC-500,501, LS-500 HS-500 SAMPLE SKID	120 208	8-#12 THHN W/1#14 GND 2-#12 THHN W/1#14 GND	⚠
DOCK PANEL	P6	3/4" GRC	G500 STARTER	460	3-#12 THHN W/1#14 GND	
NOT USED	P7					
DOCK PANEL	P8	3/4" GRC	SAMPLING SHACK SC-500, SC-501	24 24	1-2C/14GA SHLD 1-2C/20GA SHLD 4-#16THHN	BELDEN 83752 -ESD BELDEN 9463 - FUTURE PANEL VIEW ⚠

(*) CONDUIT RUN MUST BE MODIFIED TO ACCEPT FO CABLE - MIN. 4.5" RADIUS

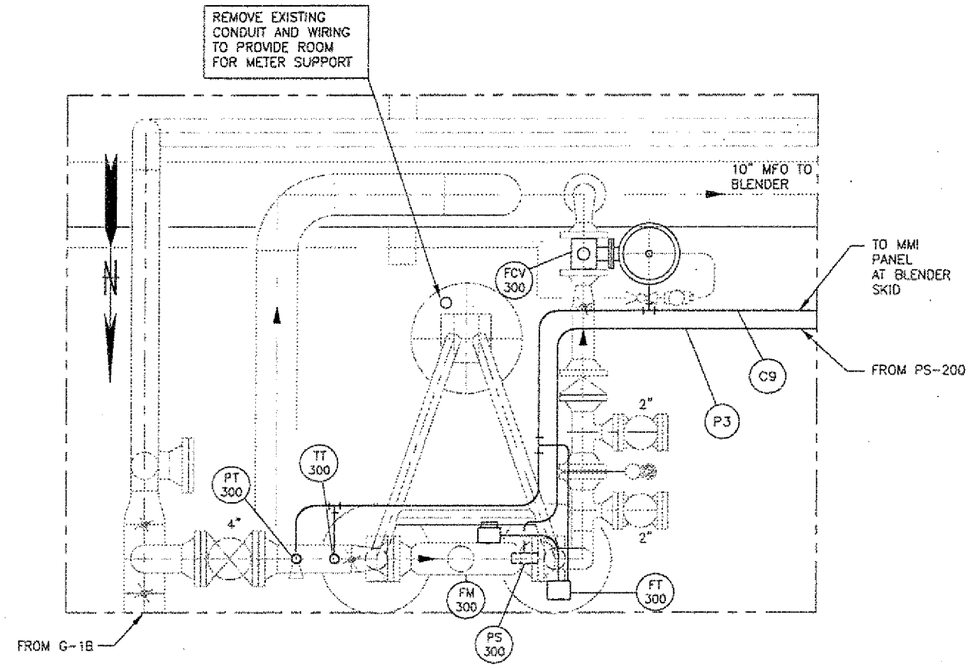

STREAM NO.3 METER NEAR TK-2783
PLAN
SCALE 1"=1'-0"

NOTES:
1. VERIFY ALL DIMENSIONS PRIOR TO FABRICATION.
2. NEW WORK SHOWN BOLD

ALPHA ENGINEERS and CONSTRUCTORS, INC.
2929 NW 29th AVE, PORTLAND, OR. 97210 Tel:(503)227-3317/Fax:(503)227-3244

AECI PROJECT NUMBER 25-23

DRAWING NO.	REFERENCE DRAWINGS	REV.	DATE	REVISED	DRAWN	CKD.	CIV/STRL	MECH/PIPING	ELEC/INST	SAFETY	P.E.
2523-E-01	SITE PLAN	0	08/09/00	ISSUE FOR CONSTRUCTION	DAB	WHB					
		1	09/06/00	REVISED CONDUIT AND CABLE SCHEDULE	DAB	WHB					

TOSCO
Tosco Refining Company
A Division of Tosco Corporation
5528 NW Doane St.
Portland, Oregon 97210

CLIENT APPROVALS: REV | BY | DATE

SCALE: 1"=1'-0"		DATE
DRAWN BY	DAB	06/16/00
DESIGNED BY	WHB	06/16/00
CHECKED BY	WHB	06/21/00
WORK ORDER	25-23	22X34

PORTLAND TERMINAL
PORTLAND, OREGON
BLACK OIL BLENDING SYSTEM
ELECTRICAL
ELECTRICAL STREAM NO.3
CONDUIT PLAN AND SCHEDULE

DATE	DRAWING NO.	SHEET	REV.
06/16/00	2523-EC-02	1 OF 1	1

2523ECO21.DWG <CPD: 09/06/00 [TIME: 11:30 AM]>

AOC 0922
WASTE

Soil Master (c) TPS Technologies, Inc.

Customer Job Report

Gross & Tare Weight Codes: M=Manual; S=Scale; T=Trk File

Job Number Name	SiteAddress	SiteCity	State	ZipCode
A09 -- 05745 TOSCO/PORTLAND TERMIN	5528 NW DOANE AVE.	PORTLAND	OR	97210

Load #	Date & Time Out	Transporter #	Truck & Trailer Number	Gross (lb)	Tare (lb)	Net (lb)	Net Wt (tons)
1	12/21/00 12:03			31,200M	18,520M	12,680	6.34
2	12/21/00 12:54			32,740M	18,340M	14,400	7.20
3	12/21/00 13:45			32,560M	18,560M	14,000	7.00
4	12/21/00 14:41			33,440M	18,600M	14,840	7.42
5	12/22/00 08:26			28,260M	18,780M	9,480	4.74
6	12/22/00 09:38			31,640M	19,960M	11,680	5.84
7	12/22/00 10:41			32,100M	19,600M	12,500	6.25
8	12/22/00 11:50			30,940M	19,240M	11,700	5.85
9	12/27/00 15:07			27,940M	16,300M	11,640	5.82
10	12/27/00 16:05			29,240M	13,280M	15,960	7.98
11	12/28/00 07:50			25,680M	13,260M	12,420	6.21
12	12/28/00 08:54			26,780M	13,260M	13,520	6.76
13	12/28/00 10:03			28,040M	13,300M	14,740	7.37
14	12/28/00 11:43			32,180M	13,280M	18,900	9.45

Completed Loads	Manifests Received	Completed Weight	Estimated Weight	TOTAL Net Wt:
100.00%	14	53.80%	175.00(tons)	94.23 (tons)

COP0021629

Manifest

TPS Technologies Soil Recycling
Non-Hazardous Soils

↓ Manifest # ↓

Date of Shipment:	Responsible for Payment:	Transporter Truck #:	Facility #:	Given by TPS:	Load #
12-21-00	Generator	PNE	A09	05745	001

Generator and/or Consultant

Generator's Name and Billing Address: TOSCO DISTRIBUTION CO. 5528 NW DOANE AVENUE PORTLAND, OR 97210 USA	Generator's Phone #: (503) 248-1517	Generator's US EPA ID No.
	Person to Contact: MARTY CRAMER	
	FAX #: (503) 248-1592	Customer Account Number with TPS: 1003586
Consultant's Name and Billing Address:	Consultant's Phone #:	
	Person to Contact:	
	FAX #:	Customer Account Number with TPS:
Generation Site (Transport from): *(name & address)* TOSCO/PORTLAND TERMINAL 5528 NW DOANE AVE. PORTLAND, OR 97210 USA	Site Phone #: (503) 248-1517	BTEX Levels
	Person to Contact: MARY CRAMER	TPH Levels
	FAX #: (503) -	AVG. Levels
Designated Facility (Transport to): *(name & address)* TPST SOIL RECYCLERS OF OREGON 9333 N HARBORGATE STREET PORTLAND, OR 97203 USA	Facility Phone #: 503-735-9525	Facility Permit Numbers
	Person to Contact: SHARON QUAST	
	FAX #: 503-240-1712	
Transporter Name and Mailing Address:	Transporter's Phone #:	Transporter's US EPA ID No.:
	Person to Contact:	Transporter's DOT No.:
	FAX #:	Customer Account Number with TPS:

Description of Soil	Moisture Content	Contaminated by:	Approx. Qty:	Description of Delivery	Gross Weight	Tare Weight	Net Weight
Sand ☐ Organic ☐ Clay ☐ Other ☐	0 - 10% ☐ 10 - 20% ☐ 20% - over ☐	Gas ☐ Diesel ☐ Other ☐		3	12000	18520	12680
Sand ☐ Organic ☐ Clay ☐ Other ☐	0 - 10% ☐ 10 - 20% ☐ 20% - over ☐	Gas ☐ Diesel ☐ Other ☐				6.34	

List any exception to items listed above:

Generator's and/or consultant's certification: I/We certify that the soil referenced herein is taken entirely from those soils described in the Soil Data Sheet completed and certified by me/us for the Generation Site shown above and nothing has been added or done to such soil that would alter it in any way.

Print or Type Name: Generator ☐ Consultant ☐ | Signature and date: | Month | Day | Year

Transporter

Transporter's certification: I/We acknowledge receipt of the soil described above and certify that such soil is being delivered in exactly the same condition as when received. I/We further certify that this soil is being directly transported from the Generation Site to the Designated Facility without off-loading, adding to, subtracting from or in any way delaying delivery to such site.

Print or Type Name: Jim Walters | Signature and date: Jim Walters | Month 12 | Day 21 | Year 00

Recycling Facility

Discrepancies:

Recycling Facility certifies the receipt of the soil covered by this manifest except as noted above:

Print or Type Name: SHARON QUAST / JOHN BARBAY | Signature and date: Sharon Quast

Please print or type.

TPS INVOICING COPY

COP0021630

Manifest

TPS Technologies Soil Recycling
Non-Hazardous Soils

↓ Manifest # ↓

Date of Shipment:	Responsible for Payment:	Transporter Truck #:	Facility #:	Given by TPS:	Load #
12-21-00	Generator	PNE AC	9 209	057,45	002

Generator and/or Consultant

Generator's Name and Billing Address: TOSCO DISTRIBUTION CO. 5528 NW DOANE AVENUE PORTLAND, OR 97210 USA	Generator's Phone #: (503) 248-1517	Generator's US EPA ID No.
	Person to Contact: MARTY CRAMER	
	FAX #: (503) 248-1592	Customer Account Number with TPS: 1003586
Consultant's Name and Billing Address:	Consultant's Phone #:	
	Person to Contact:	
	FAX #:	Customer Account Number with TPS:
Generation Site (Transport from): *(name & address)* TOSCO/PORTLAND TERMINAL 5528 NW DOANE AVE. PORTLAND, OR 97210 USA	Site Phone #: (503) 248-1517	BTEX Levels
	Person to Contact: MARY CRAMER	TPH Levels
	FAX #: (503) -	AVG. Levels
Designated Facility (Transport to): *(name & address)* TPST SOIL RECYCLERS OF OREGON 9333 N HARBORGATE STREET PORTLAND, OR 97203 USA	Facility Phone #: 503-735-9525	Facility Permit Numbers
	Person to Contact: SHARON QUAST	
	FAX #: 503-240-1712	
Transporter Name and Mailing Address:	Transporter's Phone #:	Transporter's US EPA ID No.:
	Person to Contact:	Transporter's DOT No.:
	FAX #:	Customer Account Number with TPS:

Description of Soil	Moisture Content	Contaminated by:	Approx. Qty:	Description of Delivery	Gross Weight	Tare Weight	Net Weight
Sand ☐ Organic ☐ Clay ☐ Other ☐	0 - 10% ☐ 10 - 20% ☐ 20% - over ☐	Gas ☐ Diesel ☐ Other ☐			32740	18340	14400
Sand ☐ Organic ☐ Clay ☐ Other ☐	0 - 10% ☐ 10 - 20% ☐ 20% - over ☐	Gas ☐ Diesel ☐ Other ☐				7.20	

List any exception to items listed above:

Generator's and/or consultant's certification: I/We certify that the soil referenced herein is taken entirely from those soils described in the Soil Data Sheet completed and certified by me/us for the Generation Site shown above and nothing has been added or done to such soil that would alter it in any way.

Print or Type Name: Generator ☐ Consultant ☐ | Signature and date: | Month | Day | Year

Transporter

Transporter's certification: I/We acknowledge receipt of the soil described above and certify that such soil is being delivered in exactly the same condition as when received. I/We further certify that this soil is being directly transported from the Generation Site to the Designated Facility without off-loading, adding to, subtracting from or in any way delaying delivery to such site.

Print or Type Name: Matt Brent | Signature and date: Matt Brent | Month 12 | Day 21 | Year 00

Recycling Facility

Discrepancies:

Recycling Facility certifies the receipt of the soil covered by this manifest except as noted above:

Print or Type Name: SHARON QUAST / JOHN BARBAY | Signature and date: Sharon Quast

Please print or type.

TPS INVOICING COPY

COP0021631

Manifest

TPS Technologies Soil Recycling
Non-Hazardous Soils

↓ Manifest # ↓

Date of Shipment:	Responsible for Payment:	Transporter Truck #:	Facility #:	Given by TPS:	Load #
12/21/00	Generator	PNE A2	A09	05745	003

Generator and/or Consultant

Generator's Name and Billing Address: TOSCO DISTRIBUTION CO. 5528 NW DOANE AVENUE PORTLAND, OR 97210 USA	Generator's Phone #: (503) 248-1517	Generator's US EPA ID No.
	Person to Contact: MARTY CRAMER	
	FAX #: (503) 248-1592	Customer Account Number with TPS: 1003586
Consultant's Name and Billing Address:	Consultant's Phone #:	
	Person to Contact:	
	FAX #:	Customer Account Number with TPS:
Generation Site (Transport from): *(name & address)* TOSCO/PORTLAND TERMINAL 5528 NW DOANE AVE. PORTLAND, OR 97210 USA	Site Phone #: (503) 248-1517	BTEX Levels
	Person to Contact: MARY CRAMER	TPH Levels
	FAX #: (503) -	AVG. Levels
Designated Facility (Transport to): *(name & address)* TPST SOIL RECYCLERS OF OREGON 9333 N HARBORGATE STREET PORTLAND, OR 97203 USA	Facility Phone #: 503-735-9525	Facility Permit Numbers
	Person to Contact: SHARON QUAST	
	FAX #: 503-240-1712	
Transporter Name and Mailing Address:	Transporter's Phone #:	Transporter's US EPA ID No.:
	Person to Contact:	Transporter's DOT No.:
	FAX #:	Customer Account Number with TPS:

Description of Soil	Moisture Content	Contaminated by:	Approx. Qty:	Description of Delivery	Gross Weight	Tare Weight	Net Weight
Sand ☐ Organic ☐ Clay ☐ Other ☐	0 - 10% ☐ 10 - 20% ☐ 20% - over ☐	Gas ☐ Diesel ☐ Other ☐			32560	8560	14000
Sand ☐ Organic ☐ Clay ☐ Other ☐	0 - 10% ☐ 10 - 20% ☐ 20% - over ☐	Gas ☐ Diesel ☐ Other ☐				7.00	

List any exception to items listed above:

Generator's and/or consultant's certification: I/We certify that the soil referenced herein is taken entirely from those soils described in the Soil Data Sheet completed and certified by me/us for the Generation Site shown above and nothing has been added or done to such soil that would alter it in any way.

Print or Type Name: Generator ☐ Consultant ☐ | Signature and date: | Month | Day | Year

Transporter

Transporter's certification: I/We acknowledge receipt of the soil described above and certify that such soil is being delivered in exactly the same condition as when received. I/We further certify that this soil is being directly transported from the Generation Site to the Designated Facility without off-loading, adding to, subtracting from or in any way delaying delivery to such site.

Print or Type Name: Jim Walters | Signature and date: Jim Walters | Month 12 | Day 21 | Year 00

Recycling Facility

Discrepancies:

Recycling Facility certifies the receipt of the soil covered by this manifest except as noted above:

Print or Type Name: SHARON QUAST / JOHN BARBAY | Signature and date: Sharon Quast

Please print or type.

TPS INVOICING COPY

COP0021632

Manifest

TPS Technologies Soil Recycling
Non-Hazardous Soils

↓ Manifest # ↓

Date of Shipment:	Responsible for Payment:	Transporter Truck #:	Facility #:	Given by TPS:	Load #
12/22/00	Generator	PNE	A09	05745	004

Generator and/or Consultant

Generator's Name and Billing Address: TOSCO DISTRIBUTION CO. 5528 NW DOANE AVENUE PORTLAND, OR 97210 USA	Generator's Phone #: (503) 248-1517	Generator's US EPA ID No.
	Person to Contact: MARTY CRAMER	
	FAX #: (503) 248-1592	Customer Account Number with TPS: 1003586
Consultant's Name and Billing Address:	Consultant's Phone #:	
	Person to Contact:	
	FAX #:	Customer Account Number with TPS:
Generation Site (Transport from): *(name & address)* TOSCO/PORTLAND TERMINAL 5528 NW DOANE AVE. PORTLAND, OR 97210 USA	Site Phone #: (503) 248-1517	BTEX Levels
	Person to Contact: MARY CRAMER	TPH Levels
	FAX #: (503) -	AVG. Levels
Designated Facility (Transport to): *(name & address)* TPST SOIL RECYCLERS OF OREGON 9333 N HARBORGATE STREET PORTLAND, OR 97203 USA	Facility Phone #: 503-735-9525	Facility Permit Numbers
	Person to Contact: SHARON QUAST	
	FAX #: 503-240-1712	
Transporter Name and Mailing Address:	Transporter's Phone #:	Transporter's US EPA ID No.:
	Person to Contact:	Transporter's DOT No.:
	FAX #:	Customer Account Number with TPS:

Description of Soil	Moisture Content	Contaminated by:	Approx. Qty:	Description of Delivery	Gross Weight	Tare Weight	Net Weight
Sand ☐ Organic ☐ Clay ☐ Other ☐	0 - 10% ☐ 10 - 20% ☐ 20% - over ☐	Gas ☐ Diesel ☐ Other ☐		28260		18780	9480
Sand ☐ Organic ☐ Clay ☐ Other ☐	0 - 10% ☐ 10 - 20% ☐ 20% - over ☐	Gas ☐ Diesel ☐ Other ☐				4.74	

List any exception to items listed above:

Generator's and/or consultant's certification: I/We certify that the soil referenced herein is taken entirely from those soils described in the Soil Data Sheet completed and certified by me/us for the Generation Site shown above and nothing has been added or done to such soil that would alter it in any way.

Print or Type Name: Generator ☐ Consultant ☐ | Signature and date: | Month | Day | Year

Transporter

Transporter's certification: I/We acknowledge receipt of the soil described above and certify that such soil is being delivered in exactly the same condition as when received. I/We further certify that this soil is being directly transported from the Generation Site to the Designated Facility without off-loading, adding to, subtracting from or in any way delaying delivery to such site.

Print or Type Name: Jim Brockway | Signature and date: J. N. Brockway | Month 12 | Day 22 | Year 00

Recycling Facility

Discrepancies:

Recycling Facility certifies the receipt of the soil covered by this manifest except as noted above:

Print or Type Name: SHARON QUAST / JOHN BARBAY | Signature and date: Sharon Quast

Please print or type.

TPS INVOICING COPY

COP0021633

Manifest

TPS Technologies Soil Recycling
Non-Hazardous Soils

↓ Manifest # ↓

Date of Shipment:	Responsible for Payment:	Transporter Truck #:	Facility #:	Given by TPS:	Load #
12-21-00	Generator	PNE	A09	05745	005

Generator and/or Consultant

Generator's Name and Billing Address: TOSCO DISTRIBUTION CO. 5528 NW DOANE AVENUE PORTLAND, OR 97210 USA	Generator's Phone #: (503) 248-1517	Generator's US EPA ID No.
	Person to Contact: MARTY CRAMER	
	FAX #: (503) 248-1592	Customer Account Number with TPS: 1003586
Consultant's Name and Billing Address:	Consultant's Phone #:	
	Person to Contact:	
	FAX #:	Customer Account Number with TPS:
Generation Site (Transport from): *(name & address)* TOSCO/PORTLAND TERMINAL 5528 NW DOANE AVE. PORTLAND, OR 97210 USA	Site Phone #: (503) 248-1517	BTEX Levels
	Person to Contact: MARY CRAMER	TPH Levels
	FAX #: (503) -	AVG Levels
Designated Facility (Transport to): *(name & address)* TPST SOIL RECYCLERS OF OREGON 9333 N HARBORGATE STREET PORTLAND, OR 97203 USA	Facility Phone #: 503-735-9525	Facility Permit Numbers
	Person to Contact: SHARON QUAST	
	FAX #: 503-240-1712	
Transporter Name and Mailing Address:	Transporter's Phone #:	Transporter's US EPA ID No.:
	Person to Contact:	Transporter's DOT No.:
	FAX #:	Customer Account Number with TPS:

Description of Soil	Moisture Content	Contaminated by:	Approx. Qty:	Description of Delivery	Gross Weight	Tare Weight	Net Weight
Sand ❑ Organic ❑ Clay ❑ Other ❑	0 - 10% ❑ 10 - 20% ❑ 20% - over ❑	Gas ❑ Diesel ❑ Other ❑			33440	18600	14840
Sand ❑ Organic ❑ Clay ❑ Other ❑	0 - 10% ❑ 10 - 20% ❑ 20% - over ❑	Gas ❑ Diesel ❑ Other ❑				7.42	

List any exception to items listed above:

Generator's and/or consultant's certification: I/We certify that the soil referenced herein is taken entirely from those soils described in the Soil Data Sheet completed and certified by me/us for the Generation Site shown above and nothing has been added or done to such soil that would alter it in any way.

Print or Type Name: Generator ❑ Consultant ❑ | Signature and date: | Month | Day | Year

Transporter

Transporter's certification: I/We acknowledge receipt of the soil described above and certify that such soil is being delivered in exactly the same condition as when received. I/We further certify that this soil is being directly transported from the Generation Site to the Designated Facility without off-loading, adding to, subtracting from or in any way delaying delivery to such site.

Print or Type Name: Jim Walters | Signature and date: Jim Walters | Month 12 | Day 21 | Year 00

Recycling Facility

Discrepancies:

Recycling Facility certifies the receipt of the soil covered by this manifest except as noted above:

Print or Type Name: SHARON QUAST / JOHN BARBAY | Signature and date: Sharon Quast

Please print or type.

TPS INVOICING COPY

COP0021634

Manifest

TPS Technologies Soil Recycling
Non-Hazardous Soils

↓ Manifest # ↓

Date of Shipment:	Responsible for Payment:	Transporter Truck #:	Facility #:	Given by TPS:	Load #
12/22/00	Generator	PNE	A09	05745	006

Generator and/or Consultant

Generator's Name and Billing Address: TOSCO DISTRIBUTION CO. 5528 NW DOANE AVENUE PORTLAND, OR 97210 USA	Generator's Phone #: (503) 248-1517	Generator's US EPA ID No.
	Person to Contact: MARTY CRAMER	
	FAX #: (503) 248-1592	Customer Account Number with TPS: 1003586
Consultant's Name and Billing Address:	Consultant's Phone #:	
	Person to Contact:	
	FAX #:	Customer Account Number with TPS:
Generation Site (Transport from): *(name & address)* TOSCO/PORTLAND TERMINAL 5528 NW DOANE AVE. PORTLAND, OR 97210 USA	Site Phone #: (503) 248-1517	BTEX Levels
	Person to Contact: MARY CRAMER	TPH Levels
	FAX #: (503) -	AVG. Levels
Designated Facility (Transport to): *(name & address)* TPST SOIL RECYCLERS OF OREGON 9333 N HARBORGATE STREET PORTLAND, OR 97203 USA	Facility Phone #: 503-735-9525	Facility Permit Numbers
	Person to Contact: SHARON QUAST	
	FAX #: 503-240-1712	
Transporter Name and Mailing Address:	Transporter's Phone #:	Transporter's US EPA ID No.:
	Person to Contact:	Transporter's DOT No.:
	FAX #:	Customer Account Number with TPS:

Description of Soil	Moisture Content	Contaminated by:	Approx. Qty:	Description of Delivery	Gross Weight	Tare Weight	Net Weight
Sand ❑ Organic ❑ Clay ❑ Other ❑	0 - 10% ❑ 10 - 20% ❑ 20% - over ❑	Gas ❑ Diesel ❑ Other ❑			31640	19960	11680
Sand ❑ Organic ❑ Clay ❑ Other ❑	0 - 10% ❑ 10 - 20% ❑ 20% - over ❑	Gas ❑ Diesel ❑ Other ❑				5.84	

List any exception to items listed above:

Generator's and/or consultant's certification: I/We certify that the soil referenced herein is taken entirely from those soils described in the Soil Data Sheet completed and certified by me/us for the Generation Site shown above and nothing has been added or done to such soil that would alter it in any way.

Print or Type Name: Generator ❑ Consultant ❑ | Signature and date: | Month | Day | Year

Transporter

Transporter's certification: I/We acknowledge receipt of the soil described above and certify that such soil is being delivered in exactly the same condition as when received. I/We further certify that this soil is being directly transported from the Generation Site to the Designated Facility without off-loading, adding to, subtracting from or in any way delaying delivery to such site.

Print or Type Name: Matt Brenes | Signature and date: Matt Brenes | Month 12 | Day 22 | Year 00

Recycling Facility

Discrepancies:

Recycling Facility certifies the receipt of the soil covered by this manifest except as noted above:

Print or Type Name: SHARON QUAST / JOHN BARBAY | Signature and date: Sharon Quast

Please print or type.

TPS INVOICING COPY

COP0021635

Manifest

TPS Technologies Soil Recycling
Non-Hazardous Soils

↓ Manifest # ↓

Date of Shipment:	Responsible for Payment:	Transporter Truck #:	Facility #:	Given by TPS:	Load #
12-22-00	Generator	PNE	A09	05745	007

Generator and/or Consultant

Generator's Name and Billing Address: TOSCO REFINING CO. 5528 NW DOANE AVENUE PORTLAND, OR 97210 USA	Generator's Phone #: (503) 248-1517 Person to Contact: MARTY CRAMER FAX #: (503) 248-1592	Generator's US EPA ID No. Customer Account Number with TPS: 1003586
Consultant's Name and Billing Address:	Consultant's Phone #: Person to Contact: FAX #:	Customer Account Number with TPS:
Generation Site (Transport from): *(name & address)* TOSCO/PORTLAND TERMINAL 5528 NW DOANE AVE. PORTLAND, OR 97210 USA	Site Phone #: (503) 248-1517 Person to Contact: MARY CRAMER FAX #: (503) –	BTEX Levels TPH Levels AVG. Levels
Designated Facility (Transport to): *(name & address)* TPST SOIL RECYCLERS OF OREGON 9333 N HARBORGATE STREET PORTLAND, OR 97203 USA	Facility Phone #: 503-735-9525 Person to Contact: SHARON QUAST FAX #: 503-240-1712	Facility Permit Numbers
Transporter Name and Mailing Address:	Transporter's Phone #: Person to Contact: FAX #:	Transporter's US EPA ID No.: Transporter's DOT No.: Customer Account Number with TPS:

Description of Soil	Moisture Content	Contaminated by:	Approx. Qty:	Description of Delivery	Gross Weight	Tare Weight	Net Weight
Sand ❑ Organic ❑ Clay ❑ Other ❑	0 - 10% ❑ 10 - 20% ❑ 20% - over ❑	Gas ❑ Diesel ❑ Other ❑		32/00	19600	12500	
Sand ❑ Organic ❑ Clay ❑ Other ❑	0 - 10% ❑ 10 - 20% ❑ 20% - over ❑	Gas ❑ Diesel ❑ Other ❑				6.25	

List any exception to items listed above:

Generator's and/or consultant's certification: I/We certify that the soil referenced herein is taken entirely from those soils described in the Soil Data Sheet completed and certified by me/us for the Generation Site shown above and nothing has been added or done to such soil that would alter it in any way.

Print or Type Name: Generator ❑ Consultant ❑ | Signature and date: | Month | Day | Year

Transporter

Transporter's certification: I/We acknowledge receipt of the soil described above and certify that such soil is being delivered in exactly the same condition as when received. I/We further certify that this soil is being directly transported from the Generation Site to the Designated Facility without off-loading, adding to, subtracting from or in any way delaying delivery to such site.

Print or Type Name: Matt Brenes | Signature and date: Matt Brenes | Month 12 | Day 22 | Year 00

Recycling Facility

Discrepancies:

Recycling Facility certifies the receipt of the soil covered by this manifest except as noted above:

Print or Type Name: SHARON QUAST / JOHN BARBAY | Signature and date: Sharon Quast

Please print or type.

TPS INVOICING COPY

COP0021636

Manifest

TPS Technologies Soil Recycling
Non-Hazardous Soils

↓ Manifest # ↓

Date of Shipment:	Responsible for Payment:	Transporter Truck #:	Facility #:	Given by TPS:	Load #
12-22-00	Generator	PNE	A09	05745	001

Generator and/or Consultant

Generator's Name and Billing Address: TOSCO REFINING CO. 5528 NW DOANE AVENUE PORTLAND, OR 97210 USA	Generator's Phone #: (503) 248-1517	Generator's US EPA ID No.
	Person to Contact: MARTY CRAMER	
	FAX #: (503) 248-1592	Customer Account Number with TPS: 1003586
Consultant's Name and Billing Address:	Consultant's Phone #:	
	Person to Contact:	
	FAX #:	Customer Account Number with TPS:
Generation Site (Transport from): *(name & address)* TOSCO/PORTLAND TERMINAL 5528 NW DOANE AVE. PORTLAND, OR 97210 USA	Site Phone #: (503) 248-1517	BTEX Levels
	Person to Contact: MARY CRAMER	TPH Levels
	FAX #: (503) -	AVG. Levels
Designated Facility (Transport to): *(name & address)* TPST SOIL RECYCLERS OF OREGON 9333 N HARBORGATE STREET PORTLAND, OR 97203 USA	Facility Phone #: 503-735-9525	Facility Permit Numbers
	Person to Contact: SHARON QUAST	
	FAX #: 503-240-1712	
Transporter Name and Mailing Address:	Transporter's Phone #:	Transporter's US EPA ID No.:
	Person to Contact:	Transporter's DOT No.:
	FAX #:	Customer Account Number with TPS:

Description of Soil	Moisture Content	Contaminated by:	Approx. Qty:	Description of Delivery	Gross Weight	Tare Weight	Net Weight
Sand ❑ Organic ❑ Clay ❑ Other ❑	0 - 10% ❑ 10 - 20% ❑ 20% - over ❑	Gas ❑ Diesel ❑ Other ❑			30940	19240	11,700
Sand ❑ Organic ☑ Clay ❑ Other ❑	0 - 10% ❑ 10 - 20% ❑ 20% - over ❑	Gas ❑ Diesel ❑ Other ❑				585	

List any exception to items listed above:

Generator's and/or consultant's certification: I/We certify that the soil referenced herein is taken entirely from those soils described in the Soil Data Sheet completed and certified by me/us for the Generation Site shown above and nothing has been added or done to such soil that would alter it in any way.

Print or Type Name: Generator ❑ Consultant ❑ | Signature and date: | Month | Day | Year

Transporter

Transporter's certification: I/We acknowledge receipt of the soil described above and certify that such soil is being delivered in exactly the same condition as when received. I/We further certify that this soil is being directly transported from the Generation Site to the Designated Facility without off-loading, adding to, subtracting from or in any way delaying delivery to such site.

Print or Type Name: Jim Brockman | Signature and date: | Month 12 | Day 22 | Year 00

Recycling Facility

Discrepancies:

Recycling Facility certifies the receipt of the soil covered by this manifest except as noted above.

Print or Type Name: SHARON QUAST / JOHN BARBAY | Signature and date:

Please print or type.

TPS INVOICING COPY

COP0021637

Manifest

TPS Technologies Soil Recycling
Non-Hazardous Soils

↓ Manifest # ↓

Date of Shipment:	Responsible for Payment:	Transporter Truck #:	Facility #:	Given by TPS:	Load #
12/27/00	Generator	PNE	A09	05745	008

Generator and/or Consultant

Generator's Name and Billing Address: TOSCO REFINING CO. 5528 NW DOANE AVENUE PORTLAND, OR 97210 USA	Generator's Phone #: (503) 248-1517 Person to Contact: MARTY CRAMER FAX #: (503) 248-1592	Generator's US EPA ID No. Customer Account Number with TPS: 1003586
Consultant's Name and Billing Address:	Consultant's Phone #: Person to Contact: FAX #:	Customer Account Number with TPS:
Generation Site (Transport from): *(name & address)* TOSCO/PORTLAND TERMINAL 5528 NW DOANE AVE. PORTLAND, OR 97210 USA	Site Phone #: (503) 248-1517 Person to Contact: MARY CRAMER FAX #: (503) –	BTEX Levels TPH Levels AVC. Levels
Designated Facility (Transport to): *(name & address)* TPST SOIL RECYCLERS OF OREGON 9333 N HARBORGATE STREET PORTLAND, OR 97203 USA	Facility Phone #: 503-735-9525 Person to Contact: SHARON QUAST FAX #: 503-240-1712	Facility Permit Numbers
Transporter Name and Mailing Address:	Transporter's Phone #: Person to Contact: FAX #:	Transporter's US EPA ID No.: Transporter's DOT No.: Customer Account Number with TPS:

Description of Soil	Moisture Content	Contaminated by:	Approx. Qty:	Description of Delivery	Gross Weight	Tare Weight	Net Weight
Sand ☐ Organic ☐ Clay ☐ Other ☐	0 - 10% ☐ 10 - 20% ☐ 20% - over ☐	Gas ☐ Diesel ☐ Other ☐			27980	16301	11640
Sand ☐ Organic ☐ Clay ☐ Other ☐	0 - 10% ☐ 10 - 20% ☐ 20% - over ☐	Gas ☐ Diesel ☐ Other ☐				5.82	

List any exception to items listed above:

Generator's and/or consultant's certification: I/We certify that the soil referenced herein is taken entirely from those soils described in the Soil Data Sheet completed and certified by me/us for the Generation Site shown above and nothing has been added or done to such soil that would alter it in any way.

Print or Type Name: Generator ☐ Consultant ☐ | Signature and date: Month Day Year

Transporter

Transporter's certification: I/We acknowledge receipt of the soil described above and certify that such soil is being delivered in exactly the same condition as when received. I/We further certify that this soil is being directly transported from the Generation Site to the Designated Facility without off-loading, adding to, subtracting from or in any way delaying delivery to such site.

Print or Type Name: Jim Barkley | Signature and date: Jim Barkley | Month 12 Day 27 Year 00

Recycling Facility

Discrepancies:

Recycling Facility certifies the receipt of the soil covered by this manifest except as noted above:

Print or Type Name: SHARON QUAST / JOHN BARBAY | Signature and date: Sharon Quast

Please print or type.

TPS INVOICING COPY

COP0021638

Manifest

TPS Technologies Soil Recycling
Non-Hazardous Soils

↓ Manifest # ↓

Date of Shipment:	Responsible for Payment:	Transporter Truck #:	Facility #:	Given by TPS:	Load #
12/27/00	Generator	PNE	A09	05745	010

Generator and/or Consultant

Generator's Name and Billing Address: TOSCO REFINING CO. 5528 NW DOANE AVENUE PORTLAND, OR 97210 USA	Generator's Phone #: (503) 248-1517	Generator's US EPA ID No.
	Person to Contact: MARTY CRAMER	
	FAX #: (503) 248-1592	Customer Account Number with TPS: 1003586
Consultant's Name and Billing Address:	Consultant's Phone #:	
	Person to Contact:	
	FAX #:	Customer Account Number with TPS:
Generation Site (Transport from): *(name & address)* TOSCO/PORTLAND TERMINAL 5528 NW DOANE AVE. PORTLAND, OR 97210 USA	Site Phone #: (503) 248-1517	BTEX Levels
	Person to Contact: MARY CRAMER	TPH Levels
	FAX #: (503) –	AVG. Levels
Designated Facility (Transport to): *(name & address)* TPST SOIL RECYCLERS OF OREGON 9333 N HARBORGATE STREET PORTLAND, OR 97203 USA	Facility Phone #: 503-735-9525	Facility Permit Numbers
	Person to Contact: SHARON QUAST	
	FAX #: 503-240-1712	
Transporter Name and Mailing Address:	Transporter's Phone #:	Transporter's US EPA ID No.:
	Person to Contact:	Transporter's DOT No.:
	FAX #:	Customer Account Number with TPS:

Description of Soil	Moisture Content	Contaminated by:	Approx. Qty:	Description of Delivery	Gross Weight	Tare Weight	Net Weight
Sand ☐ Organic ☐ Clay ☐ Other ☐	0 - 10% ☐ 10 - 20% ☐ 20% - over ☐	Gas ☐ Diesel ☐ Other ☐			29240	13280	15960
Sand ☐ Organic ☐ Clay ☐ Other ☐	0 - 10% ☐ 10 - 20% ☐ 20% - over ☐	Gas ☐ Diesel ☐ Other ☐				7.98	

List any exception to items listed above:

Generator's and/or consultant's certification: I/We certify that the soil referenced herein is taken entirely from those soils described in the Soil Data Sheet completed and certified by me/us for the Generation Site shown above and nothing has been added or done to such soil that would alter it in any way.

Print or Type Name: Generator ☐ Consultant ☐ | Signature and date: | Month | Day | Year

Transporter

Transporter's certification: I/We acknowledge receipt of the soil described above and certify that such soil is being delivered in exactly the same condition as when received. I/We further certify that this soil is being directly transported from the Generation Site to the Designated Facility without off-loading, adding to, subtracting from or in any way delaying delivery to such site.

Print or Type Name: Jim Brockway | Signature and date: [signature] | Month 12 | Day 27 | Year 00

Recycling Facility

Discrepancies:

Recycling Facility certifies the receipt of the soil covered by this manifest except as noted above:

Print or Type Name: SHARON QUAST / JOHN BARBAY | Signature and date: Sharon Quast

Please print or type.

TPS INVOICING COPY

COP0021639

Manifest

TPS Technologies Soil Recycling
Non-Hazardous Soils

↓ Manifest # ↓

Date of Shipment:	Responsible for Payment:	Transporter Truck #:	Facility #:	Given by TPS:	Load #
12/28/00	Generator	PNE	A09	05745	011

Generator and/or Consultant

Generator's Name and Billing Address: TOSCO REFINING CO. 5528 NW DOANE AVENUE PORTLAND, OR 97210 USA	Generator's Phone #: (503) 248-1517 Person to Contact: MARTY CRAMER FAX #: (503) 248-1592	Generator's US EPA ID No. Customer Account Number with TPS: 1003586
Consultant's Name and Billing Address:	Consultant's Phone #: Person to Contact: FAX #:	Customer Account Number with TPS:
Generation Site (Transport from): *(name & address)* TOSCO/PORTLAND TERMINAL 5528 NW DOANE AVE. PORTLAND, OR 97210 USA	Site Phone #: (503) 248-1517 Person to Contact: MARY CRAMER FAX #: (503) -	BTEX Levels TPH Levels AVG. Levels
Designated Facility (Transport to): *(name & address)* TPST SOIL RECYCLERS OF OREGON 9333 N HARBORGATE STREET PORTLAND, OR 97203 USA	Facility Phone #: 503-735-9525 Person to Contact: SHARON QUAST FAX #: 503-240-1712	Facility Permit Numbers
Transporter Name and Mailing Address:	Transporter's Phone #: Person to Contact: FAX #:	Transporter's US EPA ID No.: Transporter's DOT No.: Customer Account Number with TPS:

Description of Soil	Moisture Content	Contaminated by:	Approx. Qty:	Description of Delivery	Gross Weight	Tare Weight	Net Weight
Sand ☐ Organic ☐ Clay ☐ Other ☐	0 - 10% ☐ 10 - 20% ☐ 20% - over ☐	Gas ☐ Diesel ☐ Other ☐			25680	13260	12420
Sand ☐ Organic ☐ Clay ☐ Other ☐	0 - 10% ☐ 10 - 20% ☐ 20% - over ☐	Gas ☐ Diesel ☐ Other ☐				6.21	

List any exception to items listed above:

Generator's and/or consultant's certification: I/We certify that the soil referenced herein is taken entirely from those soils described in the Soil Data Sheet completed and certified by me/us for the Generation Site shown above and nothing has been added or done to such soil that would alter it in any way.

Print or Type Name: Generator ☐ Consultant ☐ | Signature and date: Month Day Year

Transporter

Transporter's certification: I/We acknowledge receipt of the soil described above and certify that such soil is being delivered in exactly the same condition as when received. I/We further certify that this soil is being directly transported from the Generation Site to the Designated Facility without off-loading, adding to, subtracting from or in any way delaying delivery to such site.

Print or Type Name: Jim Brockway | Signature and date: [signature] | Month 12 Day 28 Year 00

Recycling Facility

Discrepancies:

Recycling Facility certifies the receipt of the soil covered by this manifest except as noted above:

Print or Type Name: SHARON QUAST / JOHN BARBAY | Signature and date: [signature]

Please print or type.

TPS INVOICING COPY

COP0021640

Manifest

TPS Technologies Soil Recycling
Non-Hazardous Soils

↓ Manifest # ↓

Date of Shipment:	Responsible for Payment:	Transporter Truck #:	Facility #:	Given by TPS:	Load #
12/28/10	Generator	PNE	A09	05745	012

Generator and/or Consultant

Generator's Name and Billing Address: TOSCO REFINING CO. 5528 NW DOANE AVENUE PORTLAND, OR 97210 USA	Generator's Phone #: (503) 248-1517	Generator's US EPA ID No.
	Person to Contact: MARTY CRAMER	
	FAX #: (503) 248-1592	Customer Account Number with TPS: 1003586
Consultant's Name and Billing Address:	Consultant's Phone #:	
	Person to Contact:	
	FAX #:	Customer Account Number with TPS:
Generation Site (Transport from): *(name & address)* TOSCO/PORTLAND TERMINAL 5528 NW DOANE AVE. PORTLAND, OR 97210 USA	Site Phone #: (503) 248-1517	BTEX Levels
	Person to Contact: MARY CRAMER	TPH Levels
	FAX #: (503) -	AVG. Levels
Designated Facility (Transport to): *(name & address)* TPST SOIL RECYCLERS OF OREGON 9333 N HARBORGATE STREET PORTLAND, OR 97203 USA	Facility Phone #: 503-735-9525	Facility Permit Numbers
	Person to Contact: SHARON QUAST	
	FAX #: 503-240-1712	
Transporter Name and Mailing Address:	Transporter's Phone #:	Transporter's US EPA ID No.:
	Person to Contact:	Transporter's DOT No.:
	FAX #:	Customer Account Number with TPS:

Description of Soil	Moisture Content	Contaminated by:	Approx. Qty:	Description of Delivery	Gross Weight	Tare Weight	Net Weight
Sand ☐ Organic ☐ Clay ☐ Other ☐	0 - 10% ☐ 10 - 20% ☐ 20% - over ☐	Gas ☐ Diesel ☐ Other ☐			26780	13260	13520
Sand ☐ Organic ☐ Clay ☐ Other ☐	0 - 10% ☐ 10 - 20% ☐ 20% - over ☐	Gas ☐ Diesel ☐ Other ☐				6.76	

List any exception to items listed above:

Generator's and/or consultant's certification: I/We certify that the soil referenced herein is taken entirely from those soils described in the Soil Data Sheet completed and certified by me/us for the Generation Site shown above and nothing has been added or done to such soil that would alter it in any way.

Print or Type Name: Generator ☐ Consultant ☐ | Signature and date: | Month | Day | Year

Transporter

Transporter's certification: I/We acknowledge receipt of the soil described above and certify that such soil is being delivered in exactly the same condition as when received. I/We further certify that this soil is being directly transported from the Generation Site to the Designated Facility without off-loading, adding to, subtracting from or in any way delaying delivery to such site.

Print or Type Name: Jim Brockway | Signature and date: | Month 12 | Day 28 | Year 10

Recycling Facility

Discrepancies:

Recycling Facility certifies the receipt of the soil covered by this manifest except as noted above:

Print or Type Name: SHARON QUAST / JOHN BARBAY | Signature and date:

Please print or type.

TPS INVOICING COPY

COP0021641

Manifest

TPS Technologies Soil Recycling
Non-Hazardous Soils

↓ Manifest # ↓

Date of Shipment:	Responsible for Payment:	Transporter Truck #:	Facility #:	Given by TPS:	Load #
12/28/00	Generator	PNE	A09	05745	013

Generator and/or Consultant

Generator's Name and Billing Address: TOSCO REFINING CO. 5528 NW DOANE AVENUE PORTLAND, OR 97210 USA	Generator's Phone #: (503) 248-1517 Person to Contact: MARTY CRAMER FAX #: (503) 248-1592	Generator's US EPA ID No. Customer Account Number with TPS: 1003586
Consultant's Name and Billing Address:	Consultant's Phone #: Person to Contact: FAX #:	Customer Account Number with TPS:
Generation Site (Transport from): *(name & address)* TOSCO/PORTLAND TERMINAL 5528 NW DOANE AVE. PORTLAND, OR 97210 USA	Site Phone #: (503) 248-1517 Person to Contact: MARY CRAMER FAX #: (503) -	BTEX Levels TPH Levels AVG. Levels
Designated Facility (Transport to): *(name & address)* TPST SOIL RECYCLERS OF OREGON 9333 N HARBORGATE STREET PORTLAND, OR 97203 USA	Facility Phone #: 503-735-9525 Person to Contact: SHARON QUAST FAX #: 503-240-1712	Facility Permit Numbers
Transporter Name and Mailing Address:	Transporter's Phone #: Person to Contact: FAX #:	Transporter's US EPA ID No.: Transporter's DOT No.: Customer Account Number with TPS:

Description of Soil	Moisture Content	Contaminated by:	Approx. Qty:	Description of Delivery	Gross Weight	Tare Weight	Net Weight
Sand ☐ Organic ☐ Clay ☐ Other ☐	0 - 10% ☐ 10 - 20% ☐ 20% - over ☐	Gas ☐ Diesel ☐ Other ☐		28040	13300	14740	
Sand ☐ Organic ☐ Clay ☐ Other ☐	0 - 10% ☐ 10 - 20% ☐ 20% - over ☐	Gas ☐ Diesel ☐ Other ☐				7.37	

List any exception to items listed above:

Generator's and/or consultant's certification: I/We certify that the soil referenced herein is taken entirely from those soils described in the Soil Data Sheet completed and certified by me/us for the Generation Site shown above and nothing has been added or done to such soil that would alter it in any way.

Print or Type Name: Generator ☐ Consultant ☐ | Signature and date: | Month | Day | Year

Transporter

Transporter's certification: I/We acknowledge receipt of the soil described above and certify that such soil is being delivered in exactly the same condition as when received. I/We further certify that this soil is being directly transported from the Generation Site to the Designated Facility without off-loading, adding to, subtracting from or in any way delaying delivery to such site.

Print or Type Name: Jim Cockburn | Signature and date: | Month 12 | Day 28 | Year 00

Recycling Facility

Discrepancies:

Recycling Facility certifies the receipt of the soil covered by this manifest except as noted above:

Print or Type Name: SHARON QUAST / JOHN BARBAY | Signature and date: Sharon Quast

Please print or type.

TPS INVOICING COPY

COP0021642

Manifest

TPS Technologies Soil Recycling
Non-Hazardous Soils

↓ Manifest # ↓

Date of Shipment:	Responsible for Payment:	Transporter Truck #:	Facility #:	Given by TPS:	Load #
12/28/00	Generator	PNE	A09	05745	014

Generator and/or Consultant

Generator's Name and Billing Address: TOSCO REFINING CO. 5528 NW DOANE AVENUE PORTLAND, OR 97210 USA	Generator's Phone #: (503) 248-1517 Person to Contact: MARTY CRAMER FAX #: (503) 248-1592	Generator's US EPA ID No. Customer Account Number with TPS: 1003586
Consultant's Name and Billing Address:	Consultant's Phone #: Person to Contact: FAX #:	Customer Account Number with TPS:
Generation Site (Transport from): *(name & address)* TOSCO/PORTLAND TERMINAL 5528 NW DOANE AVE. PORTLAND, OR 97210 USA	Site Phone #: (503) 248-1517 Person to Contact: MARY CRAMER FAX #: (503) -	BTEX Levels TPH Levels AVG. Levels
Designated Facility (Transport to): *(name & address)* TPST SOIL RECYCLERS OF OREGON 9333 N HARBORGATE STREET PORTLAND, OR 97203 USA	Facility Phone #: 503-735-9525 Person to Contact: SHARON QUAST FAX #: 503-240-1712	Facility Permit Numbers
Transporter Name and Mailing Address:	Transporter's Phone #: Person to Contact: FAX #:	Transporter's US EPA ID No.: Transporter's DOT No.: Customer Account Number with TPS:

Description of Soil	Moisture Content	Contaminated by:	Approx. Qty:	Description of Delivery	Gross Weight	Tare Weight	Net Weight
Sand ☐ Organic ☐ Clay ☐ Other ☐	0 - 10% ☐ 10 - 20% ☐ 20% - over ☐	Gas ☐ Diesel ☐ Other ☐			32180		
Sand ☐ Organic ☐ Clay ☐ Other ☐	0 - 10% ☐ 10 - 20% ☐ 20% - over ☐	Gas ☐ Diesel ☐ Other ☐					

List any exception to items listed above:

Generator's and/or consultant's certification: I/We certify that the soil referenced herein is taken entirely from those soils described in the Soil Data Sheet completed and certified by me/us for the Generation Site shown above and nothing has been added or done to such soil that would alter it in any way.

Print or Type Name: Generator ☐ Consultant ☐ | Signature and date: | Month | Day | Year

Transporter

Transporter's certification: I/We acknowledge receipt of the soil described above and certify that such soil is being delivered in exactly the same condition as when received. I/We further certify that this soil is being directly transported from the Generation Site to the Designated Facility without off-loading, adding to, subtracting from or in any way delaying delivery to such site.

Print or Type Name: Jim Brockman | Signature and date: J. W. Brockman | Month 12 | Day 28 | Year 00

Recycling Facility

Discrepancies:

Recycling Facility certifies the receipt of the soil covered by this manifest except as noted above:

Print or Type Name: SHARON QUAST / JOHN BARBAY | Signature and date: Sharon Quast

Please print or type.

TPS INVOICING COPY

COP0021643

TPST SOIL RECYCLERS OF OREGON

9333 N. Harborgate Street Portland, OR 97203

OR 020915

WEIGHMASTER CERTIFICATE – LICENSE #68636

THIS IS TO CERTIFY that the following described soil commodity was weighed, measured, or counted by a weighmaster, whose signature is on this certificate, as prescribed by the Division of Measurement Standards of the Oregon Department of Agriculture.

Manifest # A09 -05745 -001 12/21/00

Generator Site Information
TOSCO/PORTLAND TERMINAL
5528 NW DOANE AVE.

PORTLAND, OR 97210 USA

Facility Information
TPST SOIL RECYCLERS OF OREGON
9333 N HARBORGATE STREET

PORTLAND, OR 97203 USA

				LBS	TONS	
0	IN --->	12:00:36pm	Gross Wt:	31,200	15.60	Manual Wt
0	OUT -->	12:02:33pm	Tare Wt:	18,520	09.26	Manual Wt
			NET WT:	12,680	06.34	

TRANSPORTER/DRIVER: PNE/WALTERS

Weighmaster

COP0021644

Manifest

TPS Technologies Soil Recycling
Non-Hazardous Soils

↓ Manifest # ↓

Date of Shipment:	Responsible for Payment:	Transporter Truck #:	Facility #:	Given by TPS:	Load #
12-21-00	Generator	PNE	A09	05745	

Generator and/or Consultant

Generator's Name and Billing Address: TOSCO DISTRIBUTION CO. 5528 NW DOANE AVENUE PORTLAND, OR 97210 USA	Generator's Phone #: (503) 248-1517 Person to Contact: MARTY CRAMER FAX #: (503) 248-1592	Generator's US EPA ID No.: Customer Account Number with TPS: 1003586
Consultant's Name and Billing Address:	Consultant's Phone #: Person to Contact: FAX #:	Customer Account Number with TPS:
Generation Site (Transport from): *(name & address)* TOSCO/PORTLAND TERMINAL 5528 NW DOANE AVE. PORTLAND, OR 97210 USA	Site Phone #: (503) 248-1517 Person to Contact: MARY CRAMER FAX #: (503) -	BTEX Levels TPH Levels AVG. Levels
Designated Facility (Transport to): *(name & address)* TPST SOIL RECYCLERS OF OREGON 9333 N HARBORGATE STREET PORTLAND, OR 97203 USA	Facility Phone #: 503-735-9525 Person to Contact: SHARON QUAST FAX #: 503-240-1712	Facility Permit Numbers
Transporter Name and Mailing Address:	Transporter's Phone #: Person to Contact: FAX #:	Transporter's US EPA ID No.: Transporter's DOT No.: Customer Account Number with TPS:

Description of Soil	Moisture Content	Contaminated by:	Approx. Qty:	Description of Delivery	Gross Weight	Tare Weight	Net Weight
Sand ☐ Organic ☐ Clay ☐ Other ☐	0 - 10% ☐ 10 - 20% ☐ 20% - over ☐	Gas ☐ Diesel ☐ Other ☐		3	12000	18520	12680
Sand ☐ Organic ☐ Clay ☐ Other ☐	0 - 10% ☐ 10 - 20% ☐ 20% - over ☐	Gas ☐ Diesel ☐ Other ☐				6340	

List any exception to items listed above:

Generator's and/or consultant's certification: I/We certify that the soil referenced herein is taken entirely from those soils described in the Soil Data Sheet completed and certified by me/us for the Generation Site shown above and nothing has been added or done to such soil that would alter it in any way.

Print or Type Name: Generator ☐ Consultant ☐ | Signature and date: | Month | Day | Year

Transporter

Transporter's certification: I/We acknowledge receipt of the soil described above and certify that such soil is being delivered in exactly the same condition as when received. I/We further certify that this soil is being directly transported from the Generation Site to the Designated Facility without off-loading, adding to, subtracting from or in any way delaying delivery to such site.

Print or Type Name:	Signature and date:	Month	Day	Year
Jim Walters	Jim Walters	12	21	00

Recycling Facility

Discrepancies:

Recycling Facility certifies the receipt of the soil covered by this manifest except as noted above:

Print or Type Name:	Signature and date:
SHARON QUAST / JOHN BARBAY	Sharon Quast

Please print or type.

TRANSPORTER'S COPY

COP0021645

Manifest

TPS Technologies Soil Recycling
Non-Hazardous Soils

↓ Manifest # ↓

Date of Shipment:	Responsible for Payment:	Transporter Truck #:	Facility #:	Given by TPS:	Load #
12-21-00	Generator	PNE	A09	05745	

Generator and/or Consultant

Generator's Name and Billing Address: TOSCO DISTRIBUTION CO. 5528 NW DOANE AVENUE PORTLAND, OR 97210 USA	Generator's Phone #: (503) 248-1517 Person to Contact: MARTY CRAMER FAX #: (503) 248-1592	Generator's US EPA ID No. Customer Account Number with TPS: 1003586
Consultant's Name and Billing Address:	Consultant's Phone #: Person to Contact: FAX #:	Customer Account Number with TPS:
Generation Site (Transport from): *(name & address)* TOSCO/PORTLAND TERMINAL 5528 NW DOANE AVE. PORTLAND, OR 97210 USA	Site Phone #: (503) 248-1517 Person to Contact: MARY CRAMER FAX #: (503) -	BTEX Levels TPH Levels AVC. Levels
Designated Facility (Transport to): *(name & address)* TPST SOIL RECYCLERS OF OREGON 9333 N HARBORGATE STREET PORTLAND, OR 97203 USA	Facility Phone #: 503-735-9525 Person to Contact: SHARON QUAST FAX #: 503-240-1712	Facility Permit Numbers
Transporter Name and Mailing Address:	Transporter's Phone #: Person to Contact: FAX #:	Transporter's US EPA ID No.: Transporter's DOT No.: Customer Account Number with TPS:

Description of Soil	Moisture Content	Contaminated by:	Approx. Qty:	Description of Delivery	Gross Weight	Tare Weight	Net Weight
Sand ❑ Organic ❑ Clay ❑ Other ❑	0 - 10% ❑ 10 - 20% ❑ 20% - over ❑	Gas ❑ Diesel ❑ Other ❑		3 12 OD	18 520	12680	
Sand ❑ Organic ❑ Clay ❑ Other ❑	0 - 10% ❑ 10 - 20% ❑ 20% - over ❑	Gas ❑ Diesel ❑ Other ❑			6-34		

List any exception to items listed above:

Generator's and/or consultant's certification: I/We certify that the soil referenced herein is taken entirely from those soils described in the Soil Data Sheet completed and certified by me/us for the Generation Site shown above and nothing has been added or done to such soil that would alter it in any way.

Print or Type Name: Generator ❑ Consultant ❑ | Signature and date: | Month | Day | Year

Transporter

Transporter's certification: I/We acknowledge receipt of the soil described above and certify that such soil is being delivered in exactly the same condition as when received. I/We further certify that this soil is being directly transported from the Generation Site to the Designated Facility without off-loading, adding to, subtracting from or in any way delaying delivery to such site.

Print or Type Name: Jim Walters | Signature and date: Jim Walters | Month 12 | Day 21 | Year 00

Recycling Facility

Discrepancies:

Recycling Facility certifies the receipt of the soil covered by this manifest except as noted above:

Print or Type Name: SHARON QUAST / JOHN PARRAY | Signature and date:

Please print or type.

GENERATOR/consultant's COPY

COP0021646

TPST SOIL RECYCLERS OF OREGON

9333 N. Harborgate Street Portland, OR 97203

OR 020916

WEIGHMASTER CERTIFICATE – LICENSE #68636

THIS IS TO CERTIFY that the following described soil commodity was weighed, measured, or counted by a weighmaster, whose signature is on this certificate, as prescribed by the Division of Measurement Standards of the Oregon Department of Agriculture.

Manifest # A09 -05745 -002 12/21/00

Generator Site Information
TOSCO/PORTLAND TERMINAL
5528 NW DOANE AVE.

PORTLAND, OR 97210 USA

Facility Information
TPST SOIL RECYCLERS OF OREGON
9333 N HARBORGATE STREET

PORTLAND, OR 97203 USA

				Lbs	TONS	
0	IN --->	12:49:37pm	Gross Wt:	32,740	16.37	Manual Wt
0	OUT -->	12:53:34pm	Tare Wt:	18,340	09.17	Manual Wt
			NET WT:	14,400	07.20	

TRANSPORTER/DRIVER: PNE/BRENES

Weighmaster _____

COP0021647

Manifest

TPS Technologies Soil Recycling
Non-Hazardous Soils

↓ Manifest # ↓

Date of Shipment:	Responsible for Payment:	Transporter Truck #:	Facility #:	Given by TPS:	Load #
12-21-00	Generator	PNE	A09	05745	002

Generator and/or Consultant

Generator's Name and Billing Address: TOSCO DISTRIBUTION CO. 5528 NW DOANE AVENUE PORTLAND, OR 97210 USA	Generator's Phone #: (503) 248-1517 Person to Contact: MARTY CRAMER FAX #: (503) 248-1592	Generator's US EPA ID No. Customer Account Number with TPS: 1003586
Consultant's Name and Billing Address:	Consultant's Phone #: Person to Contact: FAX #:	Customer Account Number with TPS:
Generation Site (Transport from): *(name & address)* TOSCO/PORTLAND TERMINAL 5528 NW DOANE AVE. PORTLAND, OR 97210 USA	Site Phone #: (503) 248-1517 Person to Contact: MARY CRAMER FAX #: (503) -	BTEX Levels TPH Levels AVG. Levels
Designated Facility (Transport to): *(name & address)* TPST SOIL RECYCLERS OF OREGON 9333 N HARBORGATE STREET PORTLAND, OR 97203 USA	Facility Phone #: 503-735-9525 Person to Contact: SHARON QUAST FAX #: 503-240-1712	Facility Permit Numbers
Transporter Name and Mailing Address:	Transporter's Phone #: Person to Contact: FAX #:	Transporter's US EPA ID No.: Transporter's DOT No.: Customer Account Number with TPS:

Description of Soil	Moisture Content	Contaminated by:	Approx. Qty:	Description of Delivery	Gross Weight	Tare Weight	Net Weight
Sand ☐ Organic ☐ Clay ☐ Other ☐	0 - 10% ☐ 10 - 20% ☐ 20% - over ☐	Gas ☐ Diesel ☐ Other ☐		32740	18340	14400	
Sand ☐ Organic ☐ Clay ☐ Other ☐	0 - 10% ☐ 10 - 20% ☐ 20% - over ☐	Gas ☐ Diesel ☐ Other ☐			720		

List any exception to items listed above:

Generator's and/or consultant's certification: I/We certify that the soil referenced herein is taken entirely from those soils described in the Soil Data Sheet completed and certified by me/us for the Generation Site shown above and nothing has been added or done to such soil that would alter it in any way.

Print or Type Name: Generator ☐ Consultant ☐ | Signature and date: | Month | Day | Year

Transporter

Transporter's certification: I/We acknowledge receipt of the soil described above and certify that such soil is being delivered in exactly the same condition as when received. I/We further certify that this soil is being directly transported from the Generation Site to the Designated Facility without off-loading, adding to, subtracting from or in any way delaying delivery to such site.

Print or Type Name: Matt Brent | Signature and date: Matt Brent | Month 12 | Day 21 | Year 00

Recycling Facility

Discrepancies:

Recycling Facility certifies the receipt of the soil covered by this manifest except as noted above:

Print or Type Name: SHARON QUAST / JOHN BARBAY | Signature and date: Sharon Quast

Please print or type.

TRANSPORTER'S COPY

COP0021648

Manifest

TPS Technologies Soil Recycling
Non-Hazardous Soils

↓ Manifest # ↓

Date of Shipment:	Responsible for Payment:	Transporter Truck #:	Facility #:	Given by TPS:	Load #
12/21/00	Generator	PNE	A09	05745	002

Generator and/or Consultant

Generator's Name and Billing Address: TOSCO DISTRIBUTION CO. 5528 NW DOANE AVENUE PORTLAND, OR 97210 USA	Generator's Phone #: (503) 248-1517	Generator's US EPA ID No.
	Person to Contact: MARTY CRAMER	
	FAX #: (503) 248-1592	Customer Account Number with TPS: 1003586
Consultant's Name and Billing Address:	Consultant's Phone #:	
	Person to Contact:	
	FAX #:	Customer Account Number with TPS:
Generation Site (Transport from): *(name & address)* TOSCO/PORTLAND TERMINAL 5528 NW DOANE AVE. PORTLAND, OR 97210 USA	Site Phone #: (503) 248-1517	BTEX Levels
	Person to Contact: MARY CRAMER	TPH Levels
	FAX #: (503) -	AVG. Levels
Designated Facility (Transport to): *(name & address)* TPST SOIL RECYCLERS OF OREGON 9333 N HARBORGATE STREET PORTLAND, OR 97203 USA	Facility Phone #: 503-735-9525	Facility Permit Numbers
	Person to Contact: SHARON QUAST	
	FAX #: 503-240-1712	
Transporter Name and Mailing Address:	Transporter's Phone #:	Transporter's US EPA ID No.:
	Person to Contact:	Transporter's DOT No.:
	FAX #:	Customer Account Number with TPS:

Description of Soil	Moisture Content	Contaminated by:	Approx. Qty:	Description of Delivery	Gross Weight	Tare Weight	Net Weight
Sand ☐ Organic ☐ Clay ☐ Other ☐	0 - 10% ☐ 10 - 20% ☐ 20% - over ☐	Gas ☐ Diesel ☐ Other ☐			32740	18340	14400
Sand ☐ Organic ☐ Clay ☐ Other ☐	0 - 10% ☐ 10 - 20% ☐ 20% - over ☐	Gas ☐ Diesel ☐ Other ☐				720	

List any exception to items listed above:

Generator's and/or consultant's certification: I/We certify that the soil referenced herein is taken entirely from those soils described in the Soil Data Sheet completed and certified by me/us for the Generation Site shown above and nothing has been added or done to such soil that would alter it in any way.

Print or Type Name: Generator ☐ Consultant ☐ | Signature and date: | Month | Day | Year

Transporter

Transporter's certification: I/We acknowledge receipt of the soil described above and certify that such soil is being delivered in exactly the same condition as when received. I/We further certify that this soil is being directly transported from the Generation Site to the Designated Facility without off-loading, adding to, subtracting from or in any way delaying delivery to such site.

Print or Type Name: Matt Brent | Signature and date: Matt Brent | Month 12 | Day 21 | Year 00

Recycling Facility

Discrepancies:

Recycling Facility certifies the receipt of the soil covered by this manifest except as noted above:

Print or Type Name: SHARON QUAST / JOHN BARBAY | Signature and date:

Please print or type.

GENERATOR/consultant's COPY

COP0021649

TPST SOIL RECYCLERS OF OREGON

9333 N. Harborgate Street Portland, OR 97203

OR 020918

WEIGHMASTER CERTIFICATE – LICENSE #68636

THIS IS TO CERTIFY that the following described soil commodity was weighed, measured, or counted by a weighmaster, whose signature is on this certificate, as prescribed by the Division of Measurement Standards of the Oregon Department of Agriculture.

Manifest # A09 -05745 -003 12/21/00

Generator Site Information
TOSCO/PORTLAND TERMINAL
5528 NW DOANE AVE.

PORTLAND, OR 97210 USA

Facility Information
TPST SOIL RECYCLERS OF OREGON
9333 N HARBORGATE STREET

PORTLAND, OR 97203 USA

				LBS	TONS	
0	IN --->	01:43:02pm	Gross Wt:	32,560	16.28	Manual Wt
0	OUT --->	01:43:14pm	Tare Wt:	18,560	09.28	Manual Wt
			NET WT:	14,000	07.00	

TRANSPORTER/DRIVER: PNE/WALTERS

Weighmaster

COP0021650

Manifest

TPS Technologies Soil Recycling
Non-Hazardous Soils

↓ Manifest # ↓

Date of Shipment:	Responsible for Payment:	Transporter Truck #:	Facility #:	Given by TPS:	Load #
12/21/00	Generator	PNE	A09	05745	001

Generator and/or Consultant

Generator's Name and Billing Address: TOSCO DISTRIBUTION CO. 5528 NW DOANE AVENUE PORTLAND, OR 97210 USA	Generator's Phone #: (503) 248-1517 Person to Contact: MARTY CRAMER FAX #: (503) 248-1592	Generator's US EPA ID No. Customer Account Number with TPS: 1003586
Consultant's Name and Billing Address:	Consultant's Phone #: Person to Contact: FAX #:	Customer Account Number with TPS:
Generation Site (Transport from): *(name & address)* TOSCO/PORTLAND TERMINAL 5528 NW DOANE AVE. PORTLAND, OR 97210 USA	Site Phone #: ~~(503) 248-1517~~ Person to Contact: MARY CRAMER FAX #: (503)	BTEX Levels TPH Levels AVG. Levels
Designated Facility (Transport to): *(name & address)* TPST SOIL RECYCLERS OF OREGON 9333 N HARBORGATE STREET PORTLAND, OR 97203 USA	Facility Phone #: 503-735-9525 Person to Contact: SHARON QUAST FAX #: 503-240-1712	Facility Permit Numbers
Transporter Name and Mailing Address:	Transporter's Phone #: Person to Contact: FAX #:	Transporter's US EPA ID No.: Transporter's DOT No.: Customer Account Number with TPS:

Description of Soil	Moisture Content	Contaminated by:	Approx. Qty:	Description of Delivery	Gross Weight	Tare Weight	Net Weight
Sand ☐ Organic ☐ Clay ☐ Other ☐	0 - 10% ☐ 10 - 20% ☐ 20% - over ☐	Gas ☐ Diesel ☐ Other ☐			32560	560	14000
Sand ☐ Organic ☐ Clay ☐ Other ☐	0 - 10% ☐ 10 - 20% ☐ 20% - over ☐	Gas ☐ Diesel ☐ Other ☐			7.00		

List any exception to items listed above:

Generator's and/or consultant's certification: I/We certify that the soil referenced herein is taken entirely from those soils described in the Soil Data Sheet completed and certified by me/us for the Generation Site shown above and nothing has been added or done to such soil that would alter it in any way.

Print or Type Name: Generator ☐ Consultant ☐ | Signature and date: | Month | Day | Year

Transporter

Transporter's certification: I/We acknowledge receipt of the soil described above and certify that such soil is being delivered in exactly the same condition as when received. I/We further certify that this soil is being directly transported from the Generation Site to the Designated Facility without off-loading, adding to, subtracting from or in any way delaying delivery to such site.

Print or Type Name: Jim Walters | Signature and date: Jim Walters | Month 12 | Day 21 | Year 00

Recycling Facility

Discrepancies:

Recycling Facility certifies the receipt of the soil covered by this manifest except as noted above:

Print or Type Name: SHARON QUAST / JOHN BARBAY | Signature and date: Sharon Quast

Please print or type.

TRANSPORTER'S COPY

COP0021651

Manifest

TPS Technologies Soil Recycling
Non-Hazardous Soils

↓ Manifest # ↓

Date of Shipment:	Responsible for Payment:	Transporter Truck #:	Facility #:	Given by TPS:	Load #
12/21/00	Generator	PNE	A09	05745	001

Generator and/or Consultant

Generator's Name and Billing Address: TOSCO DISTRIBUTION CO. 5528 NW DOANE AVENUE PORTLAND, OR 97210 USA	Generator's Phone #: (503) 248-1517 Person to Contact: MARTY CRAMER FAX #: (503) 248-1592	Generator's US EPA ID No. Customer Account Number with TPS: 1003586
Consultant's Name and Billing Address:	Consultant's Phone #: Person to Contact: FAX #:	Customer Account Number with TPS:
Generation Site (Transport from): *(name & address)* TOSCO/PORTLAND TERMINAL 5528 NW DOANE AVE. PORTLAND, OR 97210 USA	Site Phone #: ~~(503) 248-1517~~ Person to Contact: MARY CRAMER FAX #: (503)	BTEX Levels TPH Levels AVG. Levels
Designated Facility (Transport to): *(name & address)* TPST SOIL RECYCLERS OF OREGON 9333 N HARBORGATE STREET PORTLAND, OR 97203 USA	Facility Phone #: 503-735-9525 Person to Contact: SHARON QUAST FAX #: 503-240-1712	Facility Permit Numbers
Transporter Name and Mailing Address:	Transporter's Phone #: Person to Contact: FAX #:	Transporter's US EPA ID No.: Transporter's DOT No.: Customer Account Number with TPS:

Description of Soil	Moisture Content	Contaminated by:	Approx. Qty:	Description of Delivery	Gross Weight	Tare Weight	Net Weight
Sand ☐ Organic ☐ Clay ☐ Other ☐	0 - 10% ☐ 10 - 20% ☐ 20% - over ☐	Gas ☐ Diesel ☐ Other ☐			32560	5560	14000
Sand ☐ Organic ☐ Clay ☐ Other ☐	0 - 10% ☐ 10 - 20% ☐ 20% - over ☐	Gas ☐ Diesel ☐ Other ☐				7.00	

List any exception to items listed above:

Generator's and/or consultant's certification: I/We certify that the soil referenced herein is taken entirely from those soils described in the Soil Data Sheet completed and certified by me/us for the Generation Site shown above and nothing has been added or done to such soil that would alter it in any way.

Print or Type Name: Generator ☐ Consultant ☐ | Signature and date: | Month | Day | Year

Transporter

Transporter's certification: I/We acknowledge receipt of the soil described above and certify that such soil is being delivered in exactly the same condition as when received. I/We further certify that this soil is being directly transported from the Generation Site to the Designated Facility without off-loading, adding to, subtracting from or in any way delaying delivery to such site.

Print or Type Name: Jim Walters | Signature and date: Jim Walters | Month 12 | Day 21 | Year 00

Recycling Facility

Discrepancies:

Recycling Facility certifies the receipt of the soil covered by this manifest except as noted above:

Print or Type Name: SHARON QUAST / JOHN BARBAY | Signature and date:

Please print or type.

GENERATOR/consultant's COPY

COP0021652

TPST SOIL RECYCLERS OF OREGON

9333 N. Harborgate Street Portland, OR 97203

OR 020926

WEIGHMASTER CERTIFICATE – LICENSE #68636

THIS IS TO CERTIFY that the following described soil commodity was weighed, measured, or counted by a weighmaster, whose signature is on this certificate, as prescribed by the Division of Measurement Standards of the Oregon Department of Agriculture.

Manifest # A09 -05745 -005 12/22/00

Generator Site Information
TOSCO/PORTLAND TERMINAL
5528 NW DOANE AVE.

PORTLAND, OR 97210 USA

Facility Information
TPST SOIL RECYCLERS OF OREGON
9333 N HARBORGATE STREET

PORTLAND, OR 97203 USA

				LBS	TONS	
0	IN --->	08:21:44am	Gross Wt:	28,260	14.13	Manual Wt
0	OUT -->	08:26:16am	Tare Wt:	18,780	09.39	Manual Wt
			NET WT:	9,480	04.74	

TRANSPORTER/DRIVER: PNE/BROCKWAY

Weighmaster Sharon [illegible]

COP0021653

Manifest

TPS Technologies Soil Recycling
Non-Hazardous Soils

↓ Manifest # ↓

Date of Shipment:	Responsible for Payment:	Transporter Truck #:	Facility #:	Given by TPS:	Load #
12/22/03	Generator	PNE	A09	05745	001

Generator and/or Consultant

Generator's Name and Billing Address: TOSCO DISTRIBUTION CO. 5528 NW DOANE AVENUE PORTLAND, OR 97210 USA	Generator's Phone #: (503) 248-1517 Person to Contact: MARTY CRAMER FAX #: (503) 248-1592	Generator's US EPA ID No. Customer Account Number with TPS: 1003586
Consultant's Name and Billing Address:	Consultant's Phone #: Person to Contact: FAX #:	Customer Account Number with TPS:
Generation Site (Transport from): *(name & address)* TOSCO/PORTLAND TERMINAL 5528 NW DOANE AVE. PORTLAND, OR 97210 USA	Site Phone #: ~~(503) 248-1517~~ Person to Contact: MARY CRAMER FAX #: (503) -	BTEX Levels TPH Levels AVG. Levels
Designated Facility (Transport to): *(name & address)* TPST SOIL RECYCLERS OF OREGON 9333 N HARBORGATE STREET PORTLAND, OR 97203 USA	Facility Phone #: 503-735-9525 Person to Contact: SHARON QUAST FAX #: 503-240-1712	Facility Permit Numbers
Transporter Name and Mailing Address:	Transporter's Phone #: Person to Contact: FAX #:	Transporter's US EPA ID No.: Transporter's DOT No.: Customer Account Number with TPS:

Description of Soil	Moisture Content	Contaminated by:	Approx. Qty:	Description of Delivery	Gross Weight	Tare Weight	Net Weight
Sand ☐ Organic ☐ Clay ☐ Other ☐	0 - 10% ☐ 10 - 20% ☐ 20% - over ☐	Gas ☐ Diesel ☐ Other ☐		28260		18780	9480
Sand ☐ Organic ☐ Clay ☐ Other ☐	0 - 10% ☐ 10 - 20% ☐ 20% - over ☐	Gas ☐ Diesel ☐ Other ☐				4.74	

List any exception to items listed above:

Generator's and/or consultant's certification: I/We certify that the soil referenced herein is taken entirely from those soils described in the Soil Data Sheet completed and certified by me/us for the Generation Site shown above and nothing has been added or done to such soil that would alter it in any way.

Print or Type Name: Generator ☐ Consultant ☐ | Signature and date: | Month | Day | Year

Transporter

Transporter's certification: I/We acknowledge receipt of the soil described above and certify that such soil is being delivered in exactly the same condition as when received. I/We further certify that this soil is being directly transported from the Generation Site to the Designated Facility without off-loading, adding to, subtracting from or in any way delaying delivery to such site.

Print or Type Name: Jim Brockwin | Signature and date: | Month 12 | Day 22 | Year 03

Recycling Facility

Discrepancies:

Recycling Facility certifies the receipt of the soil covered by this manifest except as noted above:

Print or Type Name: SHARON QUAST / JOHN BARBAY | Signature and date: Sharon Quast

Please print or type.

TRANSPORTER'S COPY

COP0021654

Manifest

TPS Technologies Soil Recycling
Non-Hazardous Soils

↓ Manifest # ↓

Date of Shipment:	Responsible for Payment:	Transporter Truck #:	Facility #:	Given by TPS:	Load #
12/22/00	Generator	PVG	A09	05745	001

Generator and/or Consultant

Generator's Name and Billing Address: TOSCO DISTRIBUTION CO. 5528 NW DOANE AVENUE PORTLAND, OR 97210 USA	Generator's Phone #: (503) 248-1517 Person to Contact: MARTY CRAMER FAX #: (503) 248-1592	Generator's US EPA ID No. Customer Account Number with TPS: 1003586
Consultant's Name and Billing Address:	Consultant's Phone #: Person to Contact: FAX #:	Customer Account Number with TPS:
Generation Site (Transport from): *(name & address)* TOSCO/PORTLAND TERMINAL 5528 NW DOANE AVE. PORTLAND, OR 97210 USA	Site Phone #: ~~(503) 248-1517~~ Person to Contact: MARY CRAMER FAX #: ~~(503)~~	BTEX Levels TPH Levels AVG. Levels
Designated Facility (Transport to): *(name & address)* TPST SOIL RECYCLERS OF OREGON 9333 N HARBORGATE STREET PORTLAND, OR 97203 USA	Facility Phone #: 503-735-9525 Person to Contact: SHARON QUAST FAX #: 503-240-1712	Facility Permit Numbers
Transporter Name and Mailing Address:	Transporter's Phone #: Person to Contact: FAX #:	Transporter's US EPA ID No.: Transporter's DOT No.: Customer Account Number with TPS:

Description of Soil	Moisture Content	Contaminated by:	Approx. Qty:	Description of Delivery	Gross Weight	Tare Weight	Net Weight
Sand ❑ Organic ❑ Clay ❑ Other ❑	0 - 10% ❑ 10 - 20% ❑ 20% - over ❑	Gas ❑ Diesel ❑ Other ❑		28260	18780	9480	
Sand ❑ Organic ❑ Clay ❑ Other ❑	0 - 10% ❑ 10 - 20% ❑ 20% - over ❑	Gas ❑ Diesel ❑ Other ❑			4.74		

List any exception to items listed above:

Generator's and/or consultant's certification: I/We certify that the soil referenced herein is taken entirely from those soils described in the Soil Data Sheet completed and certified by me/us for the Generation Site shown above and nothing has been added or done to such soil that would alter it in any way.

Print or Type Name: Generator ❑ Consultant ❑ | Signature and date: Month Day Year

Transporter

Transporter's certification: I/We acknowledge receipt of the soil described above and certify that such soil is being delivered in exactly the same condition as when received. I/We further certify that this soil is being directly transported from the Generation Site to the Designated Facility without off-loading, adding to, subtracting from or in any way delaying delivery to such site.

Print or Type Name: | Signature and date: Month Day Year

Recycling Facility

Discrepancies:

Recycling Facility certifies the receipt of the soil covered by this manifest except as noted above:

Print or Type Name: SHARON QUAST / JOHN BARBAY | Signature and date:

Please print or type.

GENERATOR/consultant's COPY

COP0021655

TPST SOIL RECYCLERS OF OREGON

9333 N. Harborgate Street Portland, OR 97203

OR 020921

WEIGHMASTER CERTIFICATE – LICENSE #68636

THIS IS TO CERTIFY that the following described soil commodity was weighed, measured, or counted by a weighmaster, whose signature is on this certificate, as prescribed by the Division of Measurement Standards of the Oregon Department of Agriculture.

Manifest # A09 -05745 -004 12/21/00

Generator Site Information
TOSCO/PORTLAND TERMINAL
5528 NW DOANE AVE.

PORTLAND, OR 97210 USA

Facility Information
TPST SOIL RECYCLERS OF OREGON
9333 N HARBORGATE STREET

PORTLAND, OR 97203 USA

				LBS	TONS	
0	IN --->	02:37:25pm	Gross Wt:	33,440	16.72	Manual Wt
0	OUT -->	02:40:47pm	Tare Wt:	18,600	09.30	Manual Wt
			NET WT:	14,840	07.42	

TRANSPORTER/DRIVER: PNE/WALTERS

Weighmaster: Sharon [illegible]

COP0021656

Manifest

TPS Technologies Soil Recycling
Non-Hazardous Soils

↓ Manifest # ↓

Date of Shipment:	Responsible for Payment:	Transporter Truck #:	Facility #:	Given by TPS:	Load #
12-21-00	Generator	PNE	A09	05745	005

Generator and/or Consultant

Generator's Name and Billing Address: TOSCO DISTRIBUTION CO. 5528 NW DOANE AVENUE PORTLAND, OR 97210 USA	Generator's Phone #: (503) 248-1517 Person to Contact: MARTY CRAMER FAX #: (503) 248-1592	Generator's US EPA ID No. Customer Account Number with TPS: 1003586
Consultant's Name and Billing Address:	Consultant's Phone #: Person to Contact: FAX #:	Customer Account Number with TPS:
Generation Site (Transport from): *(name & address)* TOSCO/PORTLAND TERMINAL 5528 NW DOANE AVE. PORTLAND, OR 97210 USA	Site Phone #: ~~(503) 248-1517~~ Person to Contact: MARY CRAMER FAX #: (503)	BTEX Levels TPH Levels AVG. Levels
Designated Facility (Transport to): *(name & address)* TPST SOIL RECYCLERS OF OREGON 9333 N HARBORGATE STREET PORTLAND, OR 97203 USA	Facility Phone #: 503-735-9525 Person to Contact: SHARON QUAST FAX #: 503-240-1712	Facility Permit Numbers
Transporter Name and Mailing Address:	Transporter's Phone #: Person to Contact: FAX #:	Transporter's US EPA ID No.: Transporter's DOT No.: Customer Account Number with TPS:

Description of Soil	Moisture Content	Contaminated by:	Approx. Qty:	Description of Delivery	Gross Weight	Tare Weight	Net Weight
Sand ☐ Organic ☐ Clay ☐ Other ☐	0 - 10% ☐ 10 - 20% ☐ 20% - over ☐	Gas ☐ Diesel ☐ Other ☐		3	34400	18600	15840
Sand ☐ Organic ☐ Clay ☐ Other ☐	0 - 10% ☐ 10 - 20% ☐ 20% - over ☐	Gas ☐ Diesel ☐ Other ☐			7.42		

List any exception to items listed above:

Generator's and/or consultant's certification: I/We certify that the soil referenced herein is taken entirely from those soils described in the Soil Data Sheet completed and certified by me/us for the Generation Site shown above and nothing has been added or done to such soil that would alter it in any way.

Print or Type Name: Generator ☐ Consultant ☐ | Signature and date: | Month | Day | Year

Transporter

Transporter's certification: I/We acknowledge receipt of the soil described above and certify that such soil is being delivered in exactly the same condition as when received. I/We further certify that this soil is being directly transported from the Generation Site to the Designated Facility without off-loading, adding to, subtracting from or in any way delaying delivery to such site.

Print or Type Name: Jim Walters | Signature and date: Jim Walters | Month 12 | Day 21 | Year 00

Recycling Facility

Discrepancies:

Recycling Facility certifies the receipt of the soil covered by this manifest except as noted above:

Print or Type Name: SHARON QUAST / JOHN BARBAY | Signature and date: Sharon Quast

Please print or type.

TRANSPORTER'S COPY

COP0021657

Manifest

TPS Technologies Soil Recycling
Non-Hazardous Soils

↓ Manifest # ↓

Date of Shipment:	Responsible for Payment:	Transporter Truck #:	Facility #:	Given by TPS:	Load #
12-21-00	Generator	PNE	A09	05745	001

Generator and/or Consultant

Generator's Name and Billing Address: TOSCO DISTRIBUTION CO. 5528 NW DOANE AVENUE PORTLAND, OR 97210 USA	Generator's Phone #: (503) 248-1517	Generator's US EPA ID No.
	Person to Contact: MARTY CRAMER	
	FAX #: (503) 248-1592	Customer Account Number with TPS: 1003586
Consultant's Name and Billing Address:	Consultant's Phone #:	
	Person to Contact:	
	FAX #:	Customer Account Number with TPS:
Generation Site (Transport from): *(name & address)* TOSCO/PORTLAND TERMINAL 5528 NW DOANE AVE. PORTLAND, OR 97210 USA	Site Phone #: (503) 248-1517	BTEX Levels
	Person to Contact: MARY CRAMER	TPH Levels
	FAX #:	AVG. Levels
Designated Facility (Transport to): *(name & address)* TPST SOIL RECYCLERS OF OREGON 9333 N HARBORGATE STREET PORTLAND, OR 97203 USA	Facility Phone #: (503) 503-735-9525	Facility Permit Numbers
	Person to Contact: SHARON QUAST	
	FAX #: 503-240-1712	
Transporter Name and Mailing Address:	Transporter's Phone #:	Transporter's US EPA ID No.:
	Person to Contact:	Transporter's DOT No.:
	FAX #:	Customer Account Number with TPS:

Description of Soil	Moisture Content	Contaminated by:	Approx. Qty:	Description of Delivery	Gross Weight	Tare Weight	Net Weight
Sand ☐ Organic ☐ Clay ☐ Other ☐	0 - 10% ☐ 10 - 20% ☐ 20% - over ☐	Gas ☐ Diesel ☐ Other ☐			33440	15600	18440
Sand ☐ Organic ☐ Clay ☐ Other ☐	0 - 10% ☐ 10 - 20% ☐ 20% - over ☐	Gas ☐ Diesel ☐ Other ☐			77.42		

List any exception to items listed above:

Generator's and/or consultant's certification: I/We certify that the soil referenced herein is taken entirely from those soils described in the Soil Data Sheet completed and certified by me/us for the Generation Site shown above and nothing has been added or done to such soil that would alter it in any way.

Print or Type Name: Generator ☐ Consultant ☐ | Signature and date: | Month | Day | Year

Transporter

Transporter's certification: I/We acknowledge receipt of the soil described above and certify that such soil is being delivered in exactly the same condition as when received. I/We further certify that this soil is being directly transported from the Generation Site to the Designated Facility without off-loading, adding to, subtracting from or in any way delaying delivery to such site.

Print or Type Name: Jim Walters | Signature and date: Jim Walters | Month 12 | Day 21 | Year 00

Recycling Facility

Discrepancies:

Recycling Facility certifies the receipt of the soil covered by this manifest except as noted above:

Print or Type Name: SHARON QUAST / JOHN BARBAY | Signature and date:

Please print or type.

GENERATOR/consultant's COPY

COP0021658

TPST SOIL RECYCLERS OF OREGON

9333 N. Harborgate Street Portland, OR 97203

OR 020935

WEIGHMASTER CERTIFICATE – LICENSE #68636

THIS IS TO CERTIFY that the following described soil commodity was weighed, measured, or counted by a weighmaster, whose signature is on this certificate, as prescribed by the Division of Measurement Standards of the Oregon Department of Agriculture.

Manifest 0 A08 -05745 -006 12/22/00

Generator Site Information
TOSCO/PORTLAND TERMINAL
5528 NW DUANE AVE.

PORTLAND, OR 97210 USA

Facility Information
TPST SOIL RECYCLERS OF OREGON
9333 N HARBORGATE STREET

PORTLAND, OR 97203 USA

				LBS	TONS	
0	IN --->	09:28:22am	Gross Wt:	31,640	15.82	Manual Wt
0	OUT -->	09:38:14am	Tare Wt:	19,960	09.98	Manual Wt
			NET WT:	11,680	05.84	

TRANSPORTER/DRIVER: PNE/VRENES

Weighmaster

COP0021659

Manifest

TPS Technologies Soil Recycling
Non-Hazardous Soils

↓ Manifest # ↓

Date of Shipment:	Responsible for Payment:	Transporter Truck #:	Facility #:	Given by TPS:	Load #
12/22/00	Generator	PNE	A09	05745	006

Generator and/or Consultant

Generator's Name and Billing Address: TOSCO DISTRIBUTION CO. 5528 NW DOANE AVENUE PORTLAND, OR 97210 USA	Generator's Phone #: (503) 248-1517 Person to Contact: MARTY CRAMER FAX #: (503) 248-1592	Generator's US EPA ID No. Customer Account Number with TPS: 1003586
Consultant's Name and Billing Address:	Consultant's Phone #: Person to Contact: FAX #:	Customer Account Number with TPS:
Generation Site (Transport from): *(name & address)* TOSCO/PORTLAND TERMINAL 5528 NW DOANE AVE. PORTLAND, OR 97210 USA	Site Phone #: ~~(503) 248-1517~~ Person to Contact: MARY CRAMER FAX #: (503)	BTEX Levels TPH Levels AVG. Levels
Designated Facility (Transport to): *(name & address)* TPST SOIL RECYCLERS OF OREGON 9333 N HARBORGATE STREET PORTLAND, OR 97203 USA	Facility Phone #: 503-735-9525 Person to Contact: SHARON QUAST FAX #: 503-240-1712	Facility Permit Numbers
Transporter Name and Mailing Address:	Transporter's Phone #: Person to Contact: FAX #:	Transporter's US EPA ID No.: Transporter's DOT No.: Customer Account Number with TPS:

Description of Soil	Moisture Content	Contaminated by:	Approx. Qty:	Description of Delivery	Gross Weight	Tare Weight	Net Weight
Sand ❑ Organic ❑ Clay ❑ Other ❑	0 - 10% ❑ 10 - 20% ❑ 20% - over ❑	Gas ❑ Diesel ❑ Other ❑			31640	19960	11680
Sand ❑ Organic ❑ Clay ❑ Other ❑	0 - 10% ❑ 10 - 20% ❑ 20% - over ❑	Gas ❑ Diesel ❑ Other ❑				5.84	

List any exception to items listed above:

Generator's and/or consultant's certification: I/We certify that the soil referenced herein is taken entirely from those soils described in the Soil Data Sheet completed and certified by me/us for the Generation Site shown above and nothing has been added or done to such soil that would alter it in any way.

Print or Type Name: Generator ❑ Consultant ❑ | Signature and date: Month Day Year

Transporter

Transporter's certification: I/We acknowledge receipt of the soil described above and certify that such soil is being delivered in exactly the same condition as when received. I/We further certify that this soil is being directly transported from the Generation Site to the Designated Facility without off-loading, adding to, subtracting from or in any way delaying delivery to such site.

Print or Type Name: Will Brenes | Signature and date: Will Brenes | Month 12 Day 22 Year 00

Recycling Facility

Discrepancies:

Recycling Facility certifies the receipt of the soil covered by this manifest except as noted above:

Print or Type Name: SHARON QUAST / JOHN BARBAY | Signature and date: Sharon Quast

Please print or type.

TRANSPORTER'S COPY

COP0021660

Manifest

TPS Technologies Soil Recycling
Non-Hazardous Soils

↓ Manifest # ↓

Date of Shipment:	Responsible for Payment:	Transporter Truck #:	Facility #:	Given by TPS:	Load #
12/22/00	Generator	PUG	A09	05745	006

Generator and/or Consultant

Generator's Name and Billing Address: TOSCO DISTRIBUTION CO. 5528 NW DOANE AVENUE PORTLAND, OR 97210 USA	Generator's Phone #: (503) 248-1517 Person to Contact: ~~MARTY CRAMER~~ FAX #: (503) 248-1592	Generator's US EPA ID No. Customer Account Number with TPS: 1003586
Consultant's Name and Billing Address:	Consultant's Phone #: Person to Contact: FAX #:	Customer Account Number with TPS:
Generation Site (Transport from): *(name & address)* TOSCO/PORTLAND TERMINAL 5528 NW DOANE AVE. PORTLAND, OR 97210 USA	Site Phone #: (503) 248-1517 Person to Contact: ~~MARY CRAMER~~ FAX #: (503)	BTEX Levels TPH Levels AVG. Levels
Designated Facility (Transport to): *(name & address)* TPST SOIL RECYCLERS OF OREGON 9333 N HARBORGATE STREET PORTLAND, OR 97203 USA	Facility Phone #: 503-735-9525 Person to Contact: SHARON QUAST FAX #: 503-240-1712	Facility Permit Numbers
Transporter Name and Mailing Address:	Transporter's Phone #: Person to Contact: FAX #:	Transporter's US EPA ID No.: Transporter's DOT No.: Customer Account Number with TPS:

Description of Soil	Moisture Content	Contaminated by:	Approx. Qty:	Description of Delivery	Gross Weight	Tare Weight	Net Weight
Sand ☐ Organic ☐ Clay ☐ Other ☐	0 - 10% ☐ 10 - 20% ☐ 20% - over ☐	Gas ☐ Diesel ☐ Other ☐			21640	20160	1480
Sand ☐ Organic ☐ Clay ☐ Other ☐	0 - 10% ☐ 10 - 20% ☐ 20% - over ☐	Gas ☐ Diesel ☐ Other ☐				5,84	

List any exception to items listed above:

Generator's and/or consultant's certification: I/We certify that the soil referenced herein is taken entirely from those soils described in the Soil Data Sheet completed and certified by me/us for the Generation Site shown above and nothing has been added or done to such soil that would alter it in any way.

Print or Type Name: Generator ☐ Consultant ☐ | Signature and date: | Month | Day | Year

Transporter

Transporter's certification: I/We acknowledge receipt of the soil described above and certify that such soil is being delivered in exactly the same condition as when received. I/We further certify that this soil is being directly transported from the Generation Site to the Designated Facility without off-loading, adding to, subtracting from or in any way delaying delivery to such site.

Print or Type Name: Matt Brenes | Signature and date: Matt Brenes | Month 12 | Day 22 | Year 00

Recycling Facility

Discrepancies:

Recycling Facility certifies the receipt of the soil covered by this manifest except as noted above:

Print or Type Name: SHARON QUAST / JOHN BARBAY | Signature and date:

Please print or type.

GENERATOR/consultant's COPY

COP0021661

TPST SOIL RECYCLERS OF OREGON

9333 N. Harborgate Street Portland, OR 97203

OR 020939

WEIGHMASTER CERTIFICATE – LICENSE #68636

THIS IS TO CERTIFY that the following described soil commodity was weighed, measured, or counted by a weighmaster, whose signature is on this certificate, as prescribed by the Division of Measurement Standards of the Oregon Department of Agriculture.

Manifest #

Generator Site Information
TOSCO/PORTLAND TERMINAL
5528 NW DOANE AVE.

PORTLAND, OR 97210 USA

Facility Information
TPST SOIL RECYCLERS OF OREGON
9333 N HARBORGATE STREET

PORTLAND, OR 97203 USA

				LBS	TONS	
0	IN --->	10:33:24am	Gross Wt:	32,100	16.05	Manual Wt
0	OUT -->	10:40:51am	Tare Wt:	19,600	09.80	Manual Wt
			NET WT:	12,500	06.25	

TRANSPORTER/DRIVER: PNE/BRENES

Weighmaster

COP0021662

Manifest

TPS Technologies Soil Recycling
Non-Hazardous Soils

↓ Manifest # ↓

Date of Shipment:	Responsible for Payment:	Transporter Truck #:	Facility #:	Given by TPS:	Load #
12-27-00	Generator	PNE	A09	05745	001

Generator and/or Consultant

Generator's Name and Billing Address: TOSCO REFINING CO. 5528 NW DOANE AVENUE PORTLAND, OR 97210 USA	Generator's Phone #: (503) 248-1517 Person to Contact: MARTY CRAMER FAX #: (503) 248-1592	Generator's US EPA ID No. Customer Account Number with TPS: 1003586
Consultant's Name and Billing Address:	Consultant's Phone #: Person to Contact: FAX #:	Customer Account Number with TPS:
Generation Site (Transport from): *(name & address)* TOSCO/PORTLAND TERMINAL 5528 NW DOANE AVE. PORTLAND, OR 97210 USA	Site Phone #: ~~(503) 248-1517~~ Person to Contact: MARY CRAMER FAX #: (503) -	BTEX Levels TPH Levels AVG. Levels
Designated Facility (Transport to): *(name & address)* TPST SOIL RECYCLERS OF OREGON 9333 N HARBORGATE STREET PORTLAND, OR 97203 USA	Facility Phone #: 503-735-9525 Person to Contact: SHARON QUAST FAX #: 503-240-1712	Facility Permit Numbers
Transporter Name and Mailing Address:	Transporter's Phone #: Person to Contact: FAX #:	Transporter's US EPA ID No.: Transporter's DOT No.: Customer Account Number with TPS:

Description of Soil	Moisture Content	Contaminated by:	Approx. Qty:	Description of Delivery	Gross Weight	Tare Weight	Net Weight
Sand ❑ Organic ❑ Clay ❑ Other ❑	0 - 10% ❑ 10 - 20% ❑ 20% - over ❑	Gas ❑ Diesel ❑ Other ❑		32/00	19600	12500	
Sand ❑ Organic ❑ Clay ❑ Other ❑	0 - 10% ❑ 10 - 20% ❑ 20% - over ❑	Gas ❑ Diesel ❑ Other ❑				6.25	

List any exception to items listed above:

Generator's and/or consultant's certification: I/We certify that the soil referenced herein is taken entirely from those soils described in the Soil Data Sheet completed and certified by me/us for the Generation Site shown above and nothing has been added or done to such soil that would alter it in any way.

Print or Type Name: Generator ❑ Consultant ❑ | Signature and date: | Month | Day | Year

Transporter

Transporter's certification: I/We acknowledge receipt of the soil described above and certify that such soil is being delivered in exactly the same condition as when received. I/We further certify that this soil is being directly transported from the Generation Site to the Designated Facility without off-loading, adding to, subtracting from or in any way delaying delivery to such site.

Print or Type Name: Matt Breines | Signature and date: Matt Breines | Month 12 | Day 22 | Year 00

Recycling Facility

Discrepancies:

Recycling Facility certifies the receipt of the soil covered by this manifest except as noted above:

Print or Type Name: SHARON QUAST / JOHN BARBAY | Signature and date: Sharon Quast

Please print or type.

TRANSPORTER'S COPY

COP0021663

Manifest

TPS Technologies Soil Recycling
Non-Hazardous Soils

↓ Manifest # ↓

Date of Shipment:	Responsible for Payment:	Transporter Truck #:	Facility #:	Given by TPS:	Load #
12-27-00	Generator	PNE	A09	05745	001

Generator and/or Consultant

Generator's Name and Billing Address: TOSCO REFINING CO. 5528 NW DOANE AVENUE PORTLAND, OR 97210 USA	Generator's Phone #: (503) 248-1517 Person to Contact: MARTY CRAMER FAX #: (503) 248-1592	Generator's US EPA ID No. Customer Account Number with TPS: 1003586
Consultant's Name and Billing Address:	Consultant's Phone #: Person to Contact: FAX #:	Customer Account Number with TPS:
Generation Site (Transport from): *(name & address)* TOSCO/PORTLAND TERMINAL 5528 NW DOANE AVE. PORTLAND, OR 97210 USA	Site Phone #: ~~(503) 248-1517~~ Person to Contact: MARY CRAMER FAX #: (503)	BTEX Levels TPH Levels AVG. Levels
Designated Facility (Transport to): *(name & address)* TPST SOIL RECYCLERS OF OREGON 9333 N HARBORGATE STREET PORTLAND, OR 97203 USA	Facility Phone #: 503-735-9525 Person to Contact: SHARON QUAST FAX #: 503-240-1712	Facility Permit Numbers
Transporter Name and Mailing Address:	Transporter's Phone #: Person to Contact: FAX #:	Transporter's US EPA ID No.: Transporter's DOT No.: Customer Account Number with TPS:

Description of Soil	Moisture Content	Contaminated by:	Approx. Qty:	Description of Delivery	Gross Weight	Tare Weight	Net Weight
Sand ☐ Organic ☐ Clay ☐ Other ☐	0 - 10% ☐ 10 - 20% ☐ 20% - over ☐	Gas ☐ Diesel ☐ Other ☐		32 YD	19600	12500	
Sand ☐ Organic ☐ Clay ☐ Other ☐	0 - 10% ☐ 10 - 20% ☐ 20% - over ☐	Gas ☐ Diesel ☐ Other ☐				6.25	

List any exception to items listed above:

Generator's and/or consultant's certification: I/We certify that the soil referenced herein is taken entirely from those soils described in the Soil Data Sheet completed and certified by me/us for the Generation Site shown above and nothing has been added or done to such soil that would alter it in any way.

Print or Type Name: Generator ☐ Consultant ☐ | Signature and date: | Month | Day | Year

Transporter

Transporter's certification: I/We acknowledge receipt of the soil described above and certify that such soil is being delivered in exactly the same condition as when received. I/We further certify that this soil is being directly transported from the Generation Site to the Designated Facility without off-loading, adding to, subtracting from or in any way delaying delivery to such site.

Print or Type Name: Matt Brenes | Signature and date: Matt Brenes | Month 12 | Day 27 | Year 00

Recycling Facility

Discrepancies:

Recycling Facility certifies the receipt of the soil covered by this manifest except as noted above:

Print or Type Name: SHARON QUAST / JOHN BARBAY | Signature and date:

Please print or type.

GENERATOR/consultant's COPY

COP0021664

TPST SOIL RECYCLERS OF OREGON

9333 N. Harborgate Street Portland, OR 97203

OR 020946

WEIGHMASTER CERTIFICATE – LICENSE #68636

THIS IS TO CERTIFY that the following described soil commodity was weighed, measured, or counted by a weighmaster, whose signature is on this certificate, as prescribed by the Division of Measurement Standards of the Oregon Department of Agriculture.

Manifest 0 A09 -05745 -000 12/22/00

Generator Site Information
TOSCO/PORTLAND TERMINAL
5528 NW DUANE AVE.

PORTLAND, OR 97210 USA

Facility Information
TPST SOIL RECYCLERS OF OREGON
9333 N HARBORGATE STREET

PORTLAND, OR 97203 USA

				LBS	TONS	
0	IN --->	11:44:34am	Gross Wt:	30,940	15.47	Manual Wt
0	OUT -->	11:49:37am	Tare Wt:	19,240	09.62	Manual Wt
			NET WT:	11,700	05.85	

TRANSPORTER/DRIVER: PNE/BROCKWAY

Weighmaster: _____

COP0021665

Manifest

TPS Technologies Soil Recycling
Non-Hazardous Soils

↓ Manifest # ↓

Date of Shipment:	Responsible for Payment:	Transporter Truck #:	Facility #:	Given by TPS:	Load #
12-22-00	Generator	PNE	A09	05745	001

Generator and/or Consultant

Generator's Name and Billing Address: TOSCO REFINING CO. 5528 NW DOANE AVENUE PORTLAND, OR 97210 USA	Generator's Phone #: (503) 248-1517	Generator's US EPA ID No.
	Person to Contact: MARTY CRAMER	
	FAX #: (503) 248-1592	Customer Account Number with TPS: 1003586
Consultant's Name and Billing Address:	Consultant's Phone #:	
	Person to Contact:	
	FAX #:	Customer Account Number with TPS:
Generation Site (Transport from): *(name & address)* TOSCO/PORTLAND TERMINAL 5528 NW DOANE AVE. PORTLAND, OR 97210 USA	Site Phone #: ~~(503) 248-1517~~	BTEX Levels
	Person to Contact: MARY CRAMER	TPH Levels
	FAX #: (503)	AVG. Levels
Designated Facility (Transport to): *(name & address)* TPST SOIL RECYCLERS OF OREGON 9333 N HARBORGATE STREET PORTLAND, OR 97203 USA	Facility Phone #: 503-735-9525	Facility Permit Numbers
	Person to Contact: SHARON QUAST	
	FAX #: 503-240-1712	
Transporter Name and Mailing Address:	Transporter's Phone #:	Transporter's US EPA ID No.:
	Person to Contact:	Transporter's DOT No.:
	FAX #:	Customer Account Number with TPS:

Description of Soil	Moisture Content	Contaminated by:	Approx. Qty:	Description of Delivery	Gross Weight	Tare Weight	Net Weight
Sand ☐ Organic ☐ Clay ☐ Other ☐	0 - 10% ☐ 10 - 20% ☐ 20% - over ☐	Gas ☐ Diesel ☐ Other ☐			30940	19240	11.7 TN
Sand ☐ Organic ☐ Clay ☐ Other ☐	0 - 10% ☐ 10 - 20% ☐ 20% - over ☐	Gas ☐ Diesel ☐ Other ☐				5.85	

List any exception to items listed above:

Generator's and/or consultant's certification: I/We certify that the soil referenced herein is taken entirely from those soils described in the Soil Data Sheet completed and certified by me/us for the Generation Site shown above and nothing has been added or done to such soil that would alter it in any way.

Print or Type Name: Generator ☐ Consultant ☐ | Signature and date: | Month | Day | Year

Transporter

Transporter's certification: I/We acknowledge receipt of the soil described above and certify that such soil is being delivered in exactly the same condition as when received. I/We further certify that this soil is being directly transported from the Generation Site to the Designated Facility without off-loading, adding to, subtracting from or in any way delaying delivery to such site.

Print or Type Name: Jim Lockling | Signature and date: | Month 12 | Day 22 | Year 00

Recycling Facility

Discrepancies:

Recycling Facility certifies the receipt of the soil covered by this manifest except as noted above:

Print or Type Name: SHARON QUAST / JOHN BARBAY | Signature and date: Sharon Quast

Please print or type.

TRANSPORTER'S COPY

COP0021666

Manifest

TPS Technologies Soil Recycling
Non-Hazardous Soils

↓ Manifest # ↓

Date of Shipment:	Responsible for Payment:	Transporter Truck #:	Facility #:	Given by TPS:	Load #
12-22-00	Generator	PNE	A09	05745	001

Generator and/or Consultant

Generator's Name and Billing Address: TOSCO REFINING CO. 5528 NW DOANE AVENUE PORTLAND, OR 97210 USA	Generator's Phone #: (503) 248-1517 Person to Contact: MARTY CRAMER FAX #: (503) 248-1592	Generator's US EPA ID No. Customer Account Number with TPS: 1003586
Consultant's Name and Billing Address:	Consultant's Phone #: Person to Contact: FAX #:	Customer Account Number with TPS:
Generation Site (Transport from): *(name & address)* TOSCO/PORTLAND TERMINAL 5528 NW DOANE AVE. PORTLAND, OR 97210 USA	Site Phone #: (503) 248-1517 Person to Contact: MARTY CRAMER FAX #: (503)	BTEX Levels TPH Levels AVG. Levels
Designated Facility (Transport to): *(name & address)* TPST SOIL RECYCLERS OF OREGON 9333 N HARBORGATE STREET PORTLAND, OR 97203 USA	Facility Phone #: 503-735-9525 Person to Contact: SHARON QUAST FAX #: 503-240-1712	Facility Permit Numbers
Transporter Name and Mailing Address:	Transporter's Phone #: Person to Contact: FAX #:	Transporter's US EPA ID No.: Transporter's DOT No.: Customer Account Number with TPS:

Description of Soil	Moisture Content	Contaminated by:	Approx. Qty:	Description of Delivery	Gross Weight	Tare Weight	Net Weight
Sand ☐ Organic ☐ Clay ☐ Other ☐	0 - 10% ☐ 10 - 20% ☐ 20% - over ☐	Gas ☐ Diesel ☐ Other ☐			30940	19240	11700
Sand ☐ Organic ☐ Clay ☐ Other ☐	0 - 10% ☐ 10 - 20% ☐ 20% - over ☐	Gas ☐ Diesel ☐ Other ☐				585	

List any exception to items listed above:

Generator's and/or consultant's certification: I/We certify that the soil referenced herein is taken entirely from those soils described in the Soil Data Sheet completed and certified by me/us for the Generation Site shown above and nothing has been added or done to such soil that would alter it in any way.

Print or Type Name: Generator ☐ Consultant ☐ | Signature and date: | Month | Day | Year

Transporter

Transporter's certification: I/We acknowledge receipt of the soil described above and certify that such soil is being delivered in exactly the same condition as when received. I/We further certify that this soil is being directly transported from the Generation Site to the Designated Facility without off-loading, adding to, subtracting from or in any way delaying delivery to such site.

Print or Type Name: | Signature and date: | Month | Day | Year

Recycling Facility

Discrepancies:

Recycling Facility certifies the receipt of the soil covered by this manifest except as noted above:

Print or Type Name: SHARON QUAST JOHN BARRAY | Signature and date:

Please print or type.

GENERATOR/consultant's COPY

COP0021667

TPST SOIL RECYCLERS OF OREGON

9333 N. Harborgate Street Portland, OR 97203

OR 020970

WEIGHMASTER CERTIFICATE – LICENSE #68636

THIS IS TO CERTIFY that the following described soil commodity was weighed, measured, or counted by a weighmaster, whose signature is on this certificate, as prescribed by the Division of Measurement Standards of the Oregon Department of Agriculture.

Manifest # A09 -05745 -009 12/27/00

Generator Site Information
TOSCO/PORTLAND TERMINAL
5528 NW DOANE AVE.

PORTLAND, OR 97210 USA

Facility Information
TPST SOIL RECYCLERS OF OREGON
9333 N HARBORGATE STREET

PORTLAND, OR 97203 USA

				LBS	TONS	
0	IN --->	02:59:02pm	Gross Wt:	27,940	13.97	Manual Wt
0	OUT -->	03:06:37pm	Tare Wt:	16,300	08.15	Manual Wt
			NET WT:	11,640	05.82	

TRANSPORTER/DRIVER: PNE/BROCKWAY

Weighmaster Sharon [illegible]

COP0021668

Manifest

TPS Technologies Soil Recycling

Non-Hazardous Soils

↓ Manifest # ↓

Date of Shipment:	Responsible for Payment:	Transporter Truck #:	Facility #:	Given by TPS:	Load #
12/27/00	Generator	PNE	A09	05745	008

Generator and/or Consultant

Generator's Name and Billing Address: TOSCO REFINING CO. 5528 NW DOANE AVENUE PORTLAND, OR 97210 USA	Generator's Phone #: (503) 248-1517 Person to Contact: MARTY CRAMER FAX #: (503) 248-1592	Generator's US EPA ID No. Customer Account Number with TPS: 1003586
Consultant's Name and Billing Address:	Consultant's Phone #: Person to Contact: FAX #:	Customer Account Number with TPS:
Generation Site (Transport from): *(name & address)* TOSCO/PORTLAND TERMINAL 5528 NW DOANE AVE. PORTLAND, OR 97210 USA	Site Phone #: (503) 248-1517 Person to Contact: MARY CRAMER FAX #: (503) -	BTEX Levels TPH Levels AVG. Levels
Designated Facility (Transport to): *(name & address)* TPST SOIL RECYCLERS OF OREGON 9333 N HARBORGATE STREET PORTLAND, OR 97203 USA	Facility Phone #: 503-735-9525 Person to Contact: SHARON QUAST FAX #: 503-240-1712	Facility Permit Numbers
Transporter Name and Mailing Address:	Transporter's Phone #: Person to Contact: FAX #:	Transporter's US EPA ID No.: Transporter's DOT No.: Customer Account Number with TPS:

Description of Soil	Moisture Content	Contaminated by:	Approx. Qty:	Description of Delivery	Gross Weight	Tare Weight	Net Weight
Sand ☐ Organic ☐ Clay ☐ Other ☐	0 - 10% ☐ 10 - 20% ☐ 20% - over ☐	Gas ☐ Diesel ☐ Other ☐			27960	16300	11640
Sand ☐ Organic ☐ Clay ☐ Other ☐	0 - 10% ☐ 10 - 20% ☐ 20% - over ☐	Gas ☐ Diesel ☐ Other ☐				5.82	

List any exception to items listed above:

Generator's and/or consultant's certification: I/We certify that the soil referenced herein is taken entirely from those soils described in the Soil Data Sheet completed and certified by me/us for the Generation Site shown above and nothing has been added or done to such soil that would alter it in any way.

Print or Type Name: Generator ☐ Consultant ☐ | Signature and date: | Month | Day | Year

Transporter

Transporter's certification: I/We acknowledge receipt of the soil described above and certify that such soil is being delivered in exactly the same condition as when received. I/We further certify that this soil is being directly transported from the Generation Site to the Designated Facility without off-loading, adding to, subtracting from or in any way delaying delivery to such site.

Print or Type Name: | Signature and date: | Month 12 | Day 27 | Year 00

Recycling Facility

Discrepancies:

Recycling Facility certifies the receipt of the soil covered by this manifest except as noted above:

Print or Type Name: SHARON QUAST / JOHN BARBAY | Signature and date:

Please print or type.

TRANSPORTER'S COPY

COP0021669

Manifest

TPS Technologies Soil Recycling
Non-Hazardous Soils

↓ Manifest # ↓

Date of Shipment:	Responsible for Payment:	Transporter Truck #:	Facility #:	Given by TPS:	Load #
12/27/00	Generator	PNE	A09	06745	006

Generator and/or Consultant

Generator's Name and Billing Address: TOSCO REFINING CO. 5528 NW DOANE AVENUE PORTLAND, OR 97210 USA	Generator's Phone #: (503) 248-1517 Person to Contact: MARTY CRAMER FAX #: (503) 248-1592	Generator's US EPA ID No. Customer Account Number with TPS: 1003586
Consultant's Name and Billing Address:	Consultant's Phone #: Person to Contact: FAX #:	Customer Account Number with TPS:
Generation Site (Transport from): *(name & address)* TOSCO/PORTLAND TERMINAL 5528 NW DOANE AVE. PORTLAND, OR 97210 USA	Site Phone #: ~~(503) 248-1517~~ Person to Contact: MARY CRAMER FAX #: (503) -	BTEX Levels TPH Levels AVG. Levels
Designated Facility (Transport to): *(name & address)* TPST SOIL RECYCLERS OF OREGON 9333 N HARBORGATE STREET PORTLAND, OR 97203 USA	Facility Phone #: 503-735-9525 Person to Contact: SHARON QUAST FAX #: 503-240-1712	Facility Permit Numbers
Transporter Name and Mailing Address:	Transporter's Phone #: Person to Contact: FAX #:	Transporter's US EPA ID No.: Transporter's DOT No.: Customer Account Number with TPS:

Description of Soil	Moisture Content	Contaminated by:	Approx. Qty:	Description of Delivery	Gross Weight	Tare Weight	Net Weight
Sand ☐ Organic ☐ Clay ☐ Other ☐	0 - 10% ☐ 10 - 20% ☐ 20% - over ☐	Gas ☐ Diesel ☐ Other ☐			27980	16300	11640
Sand ☐ Organic ☐ Clay ☐ Other ☐	0 - 10% ☐ 10 - 20% ☐ 20% - over ☐	Gas ☐ Diesel ☐ Other ☐				5.82	

List any exception to items listed above:

Generator's and/or consultant's certification: I/We certify that the soil referenced herein is taken entirely from those soils described in the Soil Data Sheet completed and certified by me/us for the Generation Site shown above and nothing has been added or done to such soil that would alter it in any way.

Print or Type Name: Generator ☐ Consultant ☐ | Signature and date: | Month | Day | Year

Transporter

Transporter's certification: I/We acknowledge receipt of the soil described above and certify that such soil is being delivered in exactly the same condition as when received. I/We further certify that this soil is being directly transported from the Generation Site to the Designated Facility without off-loading, adding to, subtracting from or in any way delaying delivery to such site.

Print or Type Name: | Signature and date: | Month | Day | Year

Recycling Facility

Discrepancies:

Recycling Facility certifies the receipt of the soil covered by this manifest except as noted above:

Print or Type Name: SHARON QUAST & JOHN BARBAY | Signature and date:

Please print or type.

GENERATOR/consultant's COPY

COP0021670

TPST SOIL RECYCLERS OF OREGON

9333 N. Harborgate Street Portland, OR 97203

OR 020971

WEIGHMASTER CERTIFICATE – LICENSE #68636

THIS IS TO CERTIFY that the following described soil commodity was weighed, measured, or counted by a weighmaster, whose signature is on this certificate, as prescribed by the Division of Measurement Standards of the Oregon Department of Agriculture.

Manifest # A09 -05745 -010 12/27/00

Generator Site Information
TOSCO/PORTLAND TERMINAL
5528 NW DOANE AVE.

PORTLAND, OR 97210 USA

Facility Information
TPST SOIL RECYCLERS OF OREGON
9333 N HARBORGATE STREET

PORTLAND, OR 97203 USA

				LBS	TONS	
0	IN --->	03:59:09pm	Gross Wt:	29,240	14.62	Manual Wt
0	OUT -->	04:04:29pm	Tare Wt:	13,280	06.64	Manual Wt
			NET Wt:	15,960	07.98	

TRANSPORTER/DRIVER: PNE/BRUCKWAY

Weighmaster

COP0021671

Manifest

TPS Technologies Soil Recycling
Non-Hazardous Soils

↓ Manifest # ↓

Date of Shipment:	Responsible for Payment:	Transporter Truck #:	Facility #:	Given by TPS:	Load #
12/27/00	Generator	PNE	A09	05745	010

Generator and/or Consultant

Generator's Name and Billing Address: TOSCO REFINING CO. 5528 NW DOANE AVENUE PORTLAND, OR 97210 USA	Generator's Phone #: (503) 248-1517 Person to Contact: MARTY CRAMER FAX #: (503) 248-1592	Generator's US EPA ID No. Customer Account Number with TPS: 1003586
Consultant's Name and Billing Address:	Consultant's Phone #: Person to Contact: FAX #:	Customer Account Number with TPS:
Generation Site (Transport from): *(name & address)* TOSCO/PORTLAND TERMINAL 5528 NW DOANE AVE. PORTLAND, OR 97210 USA	Site Phone #: (503) 248-1517 Person to Contact: MARY CRAMER FAX #: (503) -	BTEX Levels TPH Levels AVG. Levels
Designated Facility (Transport to): *(name & address)* TPST SOIL RECYCLERS OF OREGON 9333 N. HARBORGATE STREET PORTLAND, OR 97203 USA	Facility Phone #: 503-735-9525 Person to Contact: SHARON QUAST FAX #: 503-240-1712	Facility Permit Numbers
Transporter Name and Mailing Address:	Transporter's Phone #: Person to Contact: FAX #:	Transporter's US EPA ID No.: Transporter's DOT No.: Customer Account Number with TPS:

Description of Soil	Moisture Content	Contaminated by:	Approx. Qty:	Description of Delivery	Gross Weight	Tare Weight	Net Weight
Sand ☐ Organic ☐ Clay ☐ Other ☐	0 - 10% ☐ 10 - 20% ☐ 20% - over ☐	Gas ☐ Diesel ☐ Other ☐			29240	13280	15960
Sand ☐ Organic ☐ Clay ☐ Other ☐	0 - 10% ☐ 10 - 20% ☐ 20% - over ☐	Gas ☐ Diesel ☐ Other ☐				7.98	

List any exception to items listed above:

Generator's and/or consultant's certification: I/We certify that the soil referenced herein is taken entirely from those soils described in the Soil Data Sheet completed and certified by me/us for the Generation Site shown above and nothing has been added or done to such soil that would alter it in any way.

Print or Type Name: Generator ☐ Consultant ☐ | Signature and date: | Month | Day | Year

Transporter

Transporter's certification: I/We acknowledge receipt of the soil described above and certify that such soil is being delivered in exactly the same condition as when received. I/We further certify that this soil is being directly transported from the Generation Site to the Designated Facility without off-loading, adding to, subtracting from or in any way delaying delivery to such site.

Print or Type Name: Jim Cuckenbury | Signature and date: | Month 12 | Day 27 | Year 00

Recycling Facility

Discrepancies:

Recycling Facility certifies the receipt of the soil covered by this manifest except as noted above:

Print or Type Name: SHARON QUAST / JOHN BARBAY | Signature and date: Sharon Quast

Please print or type.

TRANSPORTER'S COPY

COP0021672

Manifest

TPS Technologies Soil Recycling

Non-Hazardous Soils

↓ Manifest # ↓

Date of Shipment:	Responsible for Payment:	Transporter Truck #:	Facility #:	Given by TPS:	Load #
12/27/02	Generator	PNE	409	05745	

Generator and/or Consultant

Generator's Name and Billing Address: TOSCO REFINING CO. 5528 NW DOANE AVENUE PORTLAND, OR 97210 USA	Generator's Phone #: (503) 248-1517	Generator's US EPA ID No.
	Person to Contact: MARTY CRAMER	
	FAX #: (503) 248-1592	Customer Account Number with TPS: 1003586
Consultant's Name and Billing Address:	Consultant's Phone #:	
	Person to Contact:	
	FAX #:	Customer Account Number with TPS:
Generation Site (Transport from): *(name & address)* TOSCO/PORTLAND TERMINAL 5528 NW DOANE AVE. PORTLAND, OR 97210 USA	Site Phone #: (503) 248-1517	BTEX Levels
	Person to Contact: MARY CRAMER	TPH Levels
	FAX #: (503) -	AVG. Levels
Designated Facility (Transport to): *(name & address)* TPST SOIL RECYCLERS OF OREGON 9333 N. HARBORGATE STREET PORTLAND, OR 97203 USA	Facility Phone #: 503-735-9525	Facility Permit Numbers
	Person to Contact: SHARON QUAST	
	FAX #: 503-240-1712	
Transporter Name and Mailing Address:	Transporter's Phone #:	Transporter's US EPA ID No.:
	Person to Contact:	Transporter's DOT No.:
	FAX #:	Customer Account Number with TPS:

Description of Soil	Moisture Content	Contaminated by:	Approx. Qty:	Description of Delivery	Gross Weight	Tare Weight	Net Weight
Sand ❑ Organic ❑ Clay ❑ Other ❑	0 - 10% ❑ 10 - 20% ❑ 20% - over ❑	Gas ❑ Diesel ❑ Other ❑			29240	13280	15960
Sand ❑ Organic ❑ Clay ❑ Other ❑	0 - 10% ❑ 10 - 20% ❑ 20% - over ❑	Gas ❑ Diesel ❑ Other ❑				7.48	

List any exception to items listed above:

Generator's and/or consultant's certification: I/We certify that the soil referenced herein is taken entirely from those soils described in the Soil Data Sheet completed and certified by me/us for the Generation Site shown above and nothing has been added or done to such soil that would alter it in any way.

Print or Type Name: Generator ❑ Consultant ❑ | Signature and date: | Month | Day | Year

Transporter

Transporter's certification: I/We acknowledge receipt of the soil described above and certify that such soil is being delivered in exactly the same condition as when received. I/We further certify that this soil is being directly transported from the Generation Site to the Designated Facility without off-loading, adding to, subtracting from or in any way delaying delivery to such site.

Print or Type Name: | Signature and date: | Month 12 | Day 27 | Year 02

Recycling Facility

Discrepancies:

Recycling Facility certifies the receipt of the soil covered by this manifest except as noted above:

Print or Type Name: SHARON QUAST / JOHN BARRAY | Signature and date: Sharon Quast

Please print or type.

GENERATOR/consultant's COPY

COP0021673

TPST SOIL RECYCLERS OF OREGON

9333 N. Harborgate Street Portland, OR 97203

OR 020972

WEIGHMASTER CERTIFICATE – LICENSE #68636

THIS IS TO CERTIFY that the following described soil commodity was weighed, measured, or counted by a weighmaster, whose signature is on this certificate, as prescribed by the Division of Measurement Standards of the Oregon Department of Agriculture.

Manifest # A09 -05745 -011 12/28/00

Generator Site Information
TOSCO/PORTLAND TERMINAL
5528 NW DOANE AVE.

PORTLAND, OR 97210 USA

Facility Information
TPST SOIL RECYCLERS OF OREGON
9333 N HARBORGATE STREET

PORTLAND, OR 97203 USA

				LBS	TONS	
0	IN --->	07:44:55am	Gross Wt:	25,680	12.84	Manual Wt
0	OUT -->	07:49:54am	Tare Wt:	13,260	06.63	Manual Wt
			NET WT:	12,420	06.21	

TRANSPORTER/DRIVER: PNE/BROCKWAY

Weighmaster: Sharon Oar

COP0021674

Manifest

TPS Technologies Soil Recycling
Non-Hazardous Soils

↓ Manifest # ↓

Date of Shipment:	Responsible for Payment:	Transporter Truck #:	Facility #:	Given by TPS:	Load #
12/28/00	Generator	PNE	A09	05745	011

Generator and/or Consultant

Generator's Name and Billing Address: TOSCO REFINING CO. 5528 NW DOANE AVENUE PORTLAND, OR 97210 USA	Generator's Phone #: (503) 248-1517 Person to Contact: MARTY CRAMER FAX #: (503) 248-1592	Generator's US EPA ID No. Customer Account Number with TPS: 1003586
Consultant's Name and Billing Address:	Consultant's Phone #: Person to Contact: FAX #:	Customer Account Number with TPS:
Generation Site (Transport from): *(name & address)* TOSCO/PORTLAND TERMINAL 5528 NW DOANE AVE. PORTLAND, OR 97210 USA	Site Phone #: (503) 248-1517 Person to Contact: MARY CRAMER FAX #: (503) -	BTEX Levels TPH Levels AVG. Levels
Designated Facility (Transport to): *(name & address)* TPST SOIL RECYCLERS OF OREGON 9333 N HARBORGATE STREET PORTLAND, OR 97203 USA	Facility Phone #: 503-735-9525 Person to Contact: SHARON QUAST FAX #: 503-240-1712	Facility Permit Numbers
Transporter Name and Mailing Address:	Transporter's Phone #: Person to Contact: FAX #:	Transporter's US EPA ID No.: Transporter's DOT No.: Customer Account Number with TPS:

Description of Soil	Moisture Content	Contaminated by:	Approx. Qty:	Description of Delivery	Gross Weight	Tare Weight	Net Weight
Sand ❑ Organic ❑ Clay ❑ Other ❑	0 - 10% ❑ 10 - 20% ❑ 20% - over ❑	Gas ❑ Diesel ❑ Other ❑			25680	13260	12420
Sand ❑ Organic ❑ Clay ❑ Other ❑	0 - 10% ❑ 10 - 20% ❑ 20% - over ❑	Gas ❑ Diesel ❑ Other ❑				6.21	

List any exception to items listed above:

Generator's and/or consultant's certification: I/We certify that the soil referenced herein is taken entirely from those soils described in the Soil Data Sheet completed and certified by me/us for the Generation Site shown above and nothing has been added or done to such soil that would alter it in any way.

Print or Type Name: Generator ❑ Consultant ❑ | Signature and date: | Month | Day | Year

Transporter

Transporter's certification: I/We acknowledge receipt of the soil described above and certify that such soil is being delivered in exactly the same condition as when received. I/We further certify that this soil is being directly transported from the Generation Site to the Designated Facility without off-loading, adding to, subtracting from or in any way delaying delivery to such site.

Print or Type Name: Jimmie Kruse | Signature and date: | Month 12 | Day 28 | Year 00

Recycling Facility

Discrepancies:

Recycling Facility certifies the receipt of the soil covered by this manifest except as noted above:

Print or Type Name: SHARON QUAST / JOHN BARBAY | Signature and date: Sharon Quast

Please print or type.

TRANSPORTER'S COPY

COP0021675

Manifest

TPS Technologies Soil Recycling

Non-Hazardous Soils

↓ Manifest # ↓

Date of Shipment:	Responsible for Payment:	Transporter Truck #:	Facility #:	Given by TPS:	Load #
12/26/03	Generator	PNE	409	05745	011

Generator and/or Consultant

Generator's Name and Billing Address: TOSCO REFINING CO. 5528 NW DOANE AVENUE PORTLAND, OR 97210 USA	Generator's Phone #: (503) 248-1517	Generator's US EPA ID No.
	Person to Contact: MARTY CRAMER	
	FAX #: (503) 248-1592	Customer Account Number with TPS: 1003586
Consultant's Name and Billing Address:	Consultant's Phone #:	
	Person to Contact:	
	FAX #:	Customer Account Number with TPS:
Generation Site (Transport from): *(name & address)* TOSCO/PORTLAND TERMINAL 5528 NW DOANE AVE. PORTLAND, OR 97210 USA	Site Phone #: (503) 248-1517	BTEX Levels
	Person to Contact: MARY CRAMER	TPH Levels
	FAX #: (503) -	AVG. Levels
Designated Facility (Transport to): *(name & address)* TPST SOIL RECYCLERS OF OREGON 9333 N HARBORGATE STREET PORTLAND, OR 97203 USA	Facility Phone #: 503-735-9525	Facility Permit Numbers
	Person to Contact: SHARON QUAST	
	FAX #: 503-240-1712	
Transporter Name and Mailing Address:	Transporter's Phone #:	Transporter's US EPA ID No.:
	Person to Contact:	Transporter's DOT No.:
	FAX #:	Customer Account Number with TPS:

Description of Soil	Moisture Content	Contaminated by:	Approx. Qty:	Description of Delivery	Gross Weight	Tare Weight	Net Weight
Sand ❑ Organic ❑ Clay ❑ Other ❑	0 - 10% ❑ 10 - 20% ❑ 20% - over ❑	Gas ❑ Diesel ❑ Other ❑			25680	13260	12420
Sand ❑ Organic ❑ Clay ❑ Other ❑	0 - 10% ❑ 10 - 20% ❑ 20% - over ❑	Gas ❑ Diesel ❑ Other ❑				6.21	

List any exception to items listed above:

Generator's and/or consultant's certification: I/We certify that the soil referenced herein is taken entirely from those soils described in the Soil Data Sheet completed and certified by me/us for the Generation Site shown above and nothing has been added or done to such soil that would alter it in any way.

Print or Type Name: Generator ❑ Consultant ❑ | Signature and date: | Month | Day | Year

Transporter

Transporter's certification: I/We acknowledge receipt of the soil described above and certify that such soil is being delivered in exactly the same condition as when received. I/We further certify that this soil is being directly transported from the Generation Site to the Designated Facility without off-loading, adding to, subtracting from or in any way delaying delivery to such site.

Print or Type Name: | Signature and date: | Month | Day | Year

Recycling Facility

Discrepancies:

Recycling Facility certifies the receipt of the soil covered by this manifest except as noted above:

Print or Type Name: SHARON QUAST / JOHN BARBAY | Signature and date:

Please print or type.

GENERATOR/consultant's COPY

COP0021676

TPST SOIL RECYCLERS OF OREGON

9333 N. Harborgate Street Portland, OR 97203

OR 020974

WEIGHMASTER CERTIFICATE – LICENSE #68636

THIS IS TO CERTIFY that the following described soil commodity was weighed, measured, or counted by a weighmaster, whose signature is on this certificate, as prescribed by the Division of Measurement Standards of the Oregon Department of Agriculture.

Manifest # A09 -05745 -012 12/28/00

Generator Site Information
TOSCO/PORTLAND TERMINAL
5528 NW DOANE AVE.

PORTLAND, OR 97210 USA

Facility Information
TPST SOIL RECYCLERS OF OREGON
9333 N HARBORGATE STREET

PORTLAND, OR 97203 USA

				LBS	TONS	
0	IN --->	08:48:14am	Gross Wt:	26,780	13.39	Manual Wt
0	OUT -->	08:54:25am	Tare Wt:	13,260	06.63	Manual Wt
			NET WT:	13,520	06.76	

TRANSPORTER/DRIVER: PNE/BROCKWAY

Weighmaster

COP0021677

Manifest

TPS Technologies Soil Recycling

Non-Hazardous Soils

↓ Manifest # ↓

Date of Shipment:	Responsible for Payment:	Transporter Truck #:	Facility #:	Given by TPS:	Load #
12/28/10	Generator	PNE	109	05745	013

Generator and/or Consultant

Generator's Name and Billing Address: TOSCO REFINING CO. 5528 NW DOANE AVENUE PORTLAND, OR 97210 USA	Generator's Phone #: (503) 248-1517 Person to Contact: MARTY CRAMER FAX #: (503) 248-1592	Generator's US EPA ID No. Customer Account Number with TPS: 1003586
Consultant's Name and Billing Address:	Consultant's Phone #: Person to Contact: FAX #:	Customer Account Number with TPS:
Generation Site (Transport from): *(name & address)* TOSCO/PORTLAND TERMINAL 5528 NW DOANE AVE. PORTLAND, OR 97210 USA	Site Phone #: (503) 248-1517 Person to Contact: MARY CRAMER FAX #: (503) -	BTEX Levels TPH Levels AVG. Levels
Designated Facility (Transport to): *(name & address)* TPST SOIL RECYCLERS OF OREGON 9333 N HARBORGATE STREET PORTLAND, OR 97203 USA	Facility Phone #: 503-735-9525 Person to Contact: SHARON QUAST FAX #: 503-240-1712	Facility Permit Numbers
Transporter Name and Mailing Address:	Transporter's Phone #: Person to Contact: FAX #:	Transporter's US EPA ID No.: Transporter's DOT No.: Customer Account Number with TPS:

Description of Soil	Moisture Content	Contaminated by:	Approx. Qty:	Description of Delivery	Gross Weight	Tare Weight	Net Weight
Sand ❑ Organic ❑ Clay ❑ Other ❑	0 - 10% ❑ 10 - 20% ❑ 20% - over ❑	Gas ❑ Diesel ❑ Other ❑			26780	13260	13520
Sand ❑ Organic ❑ Clay ❑ Other ❑	0 - 10% ❑ 10 - 20% ❑ 20% - over ❑	Gas ❑ Diesel ❑ Other ❑				6.76	

List any exception to items listed above:

Generator's and/or consultant's certification: I/We certify that the soil referenced herein is taken entirely from those soils described in the Soil Data Sheet completed and certified by me/us for the Generation Site shown above and nothing has been added or done to such soil that would alter it in any way.

Print or Type Name: Generator ❑ Consultant ❑ | Signature and date: | Month | Day | Year

Transporter

Transporter's certification: I/We acknowledge receipt of the soil described above and certify that such soil is being delivered in exactly the same condition as when received. I/We further certify that this soil is being directly transported from the Generation Site to the Designated Facility without off-loading, adding to, subtracting from or in any way delaying delivery to such site.

Print or Type Name: Jim Gockering | Signature and date: | Month 12 | Day 28 | Year

Recycling Facility

Discrepancies:

Recycling Facility certifies the receipt of the soil covered by this manifest except as noted above:

Print or Type Name: SHARON QUAST / JOHN BARBAY | Signature and date:

Please print or type.

TRANSPORTER'S COPY

COP0021678

Manifest

TPS Technologies Soil Recycling

Non-Hazardous Soils

↓ Manifest # ↓

Generator and/or Consultant

Date of Shipment:	Responsible for Payment:	Transporter Truck #:	Facility #:	Given by TPS:	Load #
12/28/10	Generator	PNE	409	05745	

Generator's Name and Billing Address: TOSCO REFINING CO. 5528 NW DOANE AVENUE PORTLAND, OR 97210 USA	Generator's Phone #: (503) 248-1517 Person to Contact: MARTY CRAMER FAX #: (503) 248-1592	Generator's US EPA ID No. Customer Account Number with TPS: 1003586
Consultant's Name and Billing Address:	Consultant's Phone #: Person to Contact: FAX #:	Customer Account Number with TPS:
Generation Site (Transport from): *(name & address)* TOSCO/PORTLAND TERMINAL 5528 NW DOANE AVE. PORTLAND, OR 97210 USA	Site Phone #: (503) 248-1517 Person to Contact: MARY CRAMER FAX #: (503) -	BTEX Levels TPH Levels AVG. Levels
Designated Facility (Transport to): *(name & address)* TPST SOIL RECYCLERS OF OREGON 9333 N HARBORGATE STREET PORTLAND, OR 97203 USA	Facility Phone #: 503-735-9525 Person to Contact: SHARON QUAST FAX #: 503-240-1712	Facility Permit Numbers
Transporter Name and Mailing Address:	Transporter's Phone #: Person to Contact: FAX #:	Transporter's US EPA ID No.: Transporter's DOT No.: Customer Account Number with TPS:

Description of Soil	Moisture Content	Contaminated by:	Approx. Qty:	Description of Delivery	Gross Weight	Tare Weight	Net Weight
Sand ❑ Organic ❑ Clay ❑ Other ❑	0 - 10% ❑ 10 - 20% ❑ 20% - over ❑	Gas ❑ Diesel ❑ Other ❑			26780	12260	15520
Sand ❑ Organic ❑ Clay ❑ Other ❑	0 - 10% ❑ 10 - 20% ❑ 20% - over ❑	Gas ❑ Diesel ❑ Other ❑				16.76	

List any exception to items listed above:

Generator's and/or consultant's certification: I/We certify that the soil referenced herein is taken entirely from those soils described in the Soil Data Sheet completed and certified by me/us for the Generation Site shown above and nothing has been added or done to such soil that would alter it in any way.

Print or Type Name: Generator ❑ Consultant ❑ | Signature and date: Month Day Year

Transporter

Transporter's certification: I/We acknowledge receipt of the soil described above and certify that such soil is being delivered in exactly the same condition as when received. I/We further certify that this soil is being directly transported from the Generation Site to the Designated Facility without off-loading, adding to, subtracting from or in any way delaying delivery to such site.

Print or Type Name: | Signature and date: Month Day Year

Recycling Facility

Discrepancies:

Recycling Facility certifies the receipt of the soil covered by this manifest except as noted above:

Print or Type Name: SHARON QUAST / JOHN BARBAY | Signature and date:

Please print or type.

GENERATOR/consultant's COPY

COP0021679

TPST SOIL RECYCLERS OF OREGON

9333 N. Harborgate Street Portland, OR 97203

OR 020976

WEIGHMASTER CERTIFICATE – LICENSE #68636

THIS IS TO CERTIFY that the following described soil commodity was weighed, measured, or counted by a weighmaster, whose signature is on this certificate, as prescribed by the Division of Measurement Standards of the Oregon Department of Agriculture.

Manifest # A09 -05745 -013 12/28/00

Generator Site Information
TOSCO/PORTLAND TERMINAL
5528 NW DOANE AVE.

PORTLAND, OR 97210 USA

Facility Information
TPST SOIL RECYCLERS OF OREGON
9333 N HARBORGATE STREET

PORTLAND, OR 97203 USA

				LBS	TONS	
0	IN --->	09:55:27am	Gross Wt:	28,040	14.02	Manual Wt
0	OUT -->	10:02:33am	Tare Wt:	13,300	06.65	Manual Wt
			NET WT:	14,740	07.37	

TRANSPORTER/DRIVER: PNE/BROCKWAY

Weighmaster

COP0021680

Manifest

TPS Technologies Soil Recycling
Non-Hazardous Soils

↓ Manifest # ↓

Date of Shipment:	Responsible for Payment:	Transporter Truck #:	Facility #:	Given by TPS:	Load #
12/28/00	Generator	PNE	A09	05745	013

Generator and/or Consultant

Generator's Name and Billing Address: TOSCO REFINING CO. 5528 NW DOANE AVENUE PORTLAND, OR 97210 USA	Generator's Phone #: (503) 248-1517	Generator's US EPA ID No.
	Person to Contact: MARTY CRAMER	
	FAX #: (503) 248-1592	Customer Account Number with TPS: 1003586
Consultant's Name and Billing Address:	Consultant's Phone #:	
	Person to Contact:	
	FAX #:	Customer Account Number with TPS:
Generation Site (Transport from): *(name & address)* TOSCO/PORTLAND TERMINAL 5528 NW DOANE AVE. PORTLAND, OR 97210 USA	Site Phone #: (503) 248-1517	BTEX Levels
	Person to Contact: MARY CRAMER	TPH Levels
	FAX #: (503) -	AVG. Levels
Designated Facility (Transport to): *(name & address)* TPST SOIL RECYCLERS OF OREGON 9333 N HARBORGATE STREET PORTLAND, OR 97203 USA	Facility Phone #: 503-735-9525	Facility Permit Numbers
	Person to Contact: SHARON QUAST	
	FAX #: 503-240-1712	
Transporter Name and Mailing Address:	Transporter's Phone #:	Transporter's US EPA ID No.:
	Person to Contact:	Transporter's DOT No.:
	FAX #:	Customer Account Number with TPS:

Description of Soil	Moisture Content	Contaminated by:	Approx. Qty:	Description of Delivery	Gross Weight	Tare Weight	Net Weight
Sand ☐ Organic ☐ Clay ☐ Other ☐	0 - 10% ☐ 10 - 20% ☐ 20% - over ☐	Gas ☐ Diesel ☐ Other ☐		28	04013300	14740	
Sand ☐ Organic ☐ Clay ☐ Other ☐	0 - 10% ☐ 10 - 20% ☐ 20% - over ☐	Gas ☐ Diesel ☐ Other ☐				7.37	

List any exception to items listed above:

Generator's and/or consultant's certification: I/We certify that the soil referenced herein is taken entirely from those soils described in the Soil Data Sheet completed and certified by me/us for the Generation Site shown above and nothing has been added or done to such soil that would alter it in any way.

Print or Type Name: Generator ☐ Consultant ☐ | Signature and date: | Month | Day | Year

Transporter

Transporter's certification: I/We acknowledge receipt of the soil described above and certify that such soil is being delivered in exactly the same condition as when received. I/We further certify that this soil is being directly transported from the Generation Site to the Designated Facility without off-loading, adding to, subtracting from or in any way delaying delivery to such site.

Print or Type Name: Jim Cockrell | Signature and date: | Month 12 | Day 28 | Year 00

Recycling Facility

Discrepancies:

Recycling Facility certifies the receipt of the soil covered by this manifest except as noted above:

Print or Type Name: SHARON QUAST / JOHN BARBAY | Signature and date: Sharon Quast

Please print or type.

TRANSPORTER'S COPY

COP0021681

Manifest

TPS Technologies Soil Recycling
Non-Hazardous Soils

↓ Manifest # ↓

Date of Shipment:	Responsible for Payment:	Transporter Truck #:	Facility #:	Given by TPS:	Load #
12/28/00	Generator	Pine	A09	05745	013

Generator and/or Consultant

Generator's Name and Billing Address: TOSCO REFINING CO. 5528 NW DOANE AVENUE PORTLAND, OR 97210 USA	Generator's Phone #: (503) 248-1517	Generator's US EPA ID No.
	Person to Contact: MARTY CRAMER	
	FAX #: (503) 248-1592	Customer Account Number with TPS: 1003586
Consultant's Name and Billing Address:	Consultant's Phone #:	
	Person to Contact:	
	FAX #:	Customer Account Number with TPS:
Generation Site (Transport from): *(name & address)* TOSCO/PORTLAND TERMINAL 5528 NW DOANE AVE. PORTLAND, OR 97210 USA	Site Phone #: (503) 248-1517	BTEX Levels
	Person to Contact: MARY CRAMER	TPH Levels
	FAX #: (503) -	AVG. Levels
Designated Facility (Transport to): *(name & address)* TPST SOIL RECYCLERS OF OREGON 9333 N HARBORGATE STREET PORTLAND, OR 97203 USA	Facility Phone #: 503-735-9525	Facility Permit Numbers
	Person to Contact: SHARON QUAST	
	FAX #: 503-240-1712	
Transporter Name and Mailing Address:	Transporter's Phone #:	Transporter's US EPA ID No.:
	Person to Contact:	Transporter's DOT No.:
	FAX #:	Customer Account Number with TPS:

Description of Soil	Moisture Content	Contaminated by:	Approx. Qty:	Description of Delivery	Gross Weight	Tare Weight	Net Weight
Sand ❑ Organic ❑ Clay ❑ Other ❑	0 - 10% ❑ 10 - 20% ❑ 20% - over ❑	Gas ❑ Diesel ❑ Other ❑		28 cy	13.10	13.30	14.24
Sand ❑ Organic ❑ Clay ❑ Other ❑	0 - 10% ❑ 10 - 20% ❑ 20% - over ❑	Gas ❑ Diesel ❑ Other ❑				7.37	

List any exception to items listed above:

Generator's and/or consultant's certification: I/We certify that the soil referenced herein is taken entirely from those soils described in the Soil Data Sheet completed and certified by me/us for the Generation Site shown above and nothing has been added or done to such soil that would alter it in any way.

Print or Type Name: Generator ❑ Consultant ❑ | Signature and date: | Month | Day | Year

Transporter

Transporter's certification: I/We acknowledge receipt of the soil described above and certify that such soil is being delivered in exactly the same condition as when received. I/We further certify that this soil is being directly transported from the Generation Site to the Designated Facility without off-loading, adding to, subtracting from or in any way delaying delivery to such site.

Print or Type Name: | Signature and date: | Month | Day | Year

Recycling Facility

Discrepancies:

Recycling Facility certifies the receipt of the soil covered by this manifest except as noted above:

Print or Type Name: SHARON QUAST / JOHN BAPBAY | Signature and date:

Please print or type.

GENERATOR/consultant's COPY

COP0021682

TPST SOIL RECYCLERS OF OREGON

9333 N. Harborgate Street Portland, OR 97203

OR 020982

WEIGHMASTER CERTIFICATE – LICENSE #68636

THIS IS TO CERTIFY that the following described soil commodity was weighed, measured, or counted by a weighmaster, whose signature is on this certificate, as prescribed by the Division of Measurement Standards of the Oregon Department of Agriculture.

Manifest # A09 -05745 -014 12/28/00

Generator Site Information
TOSCO/PORTLAND TERMINAL
5528 NW DOANE AVE.

PORTLAND, OR 97210 USA

Facility Information
TPST SOIL RECYCLERS OF OREGON
9333 N HARBORGATE STREET

PORTLAND, OR 97203 USA

				LBS	TONS	
0	IN --->	11:33:15am	Gross Wt:	32,180	16.09	Manual Wt
0	OUT -->	11:40:20am	Tare Wt:	13,280	06.64	Manual Wt
			NET WT:	18,900	09.45	

TRANSPORTER/DRIVER: PNE/BROCKWAY

Weighmaster Sharon Ow

COP0021683

Manifest

TPS Technologies Soil Recycling
Non-Hazardous Soils

↓ Manifest # ↓

Date of Shipment:	Responsible for Payment:	Transporter Truck #:	Facility #:	Given by TPS:	Load #
12/28/00	Generator	PNE	A09	05745	11

Generator and/or Consultant

Generator's Name and Billing Address: TOSCO REFINING CO. 5528 NW DOANE AVENUE PORTLAND, OR 97210 USA	Generator's Phone #: (503) 248-1517 Person to Contact: MARTY CRAMER FAX #: (503) 248-1592	Generator's US EPA ID No. Customer Account Number with TPS: 1003586
Consultant's Name and Billing Address:	Consultant's Phone #: Person to Contact: FAX #:	Customer Account Number with TPS:
Generation Site (Transport from): *(name & address)* TOSCO/PORTLAND TERMINAL 5528 NW DOANE AVE. PORTLAND, OR 97210 USA	Site Phone #: (503) 248-1517 Person to Contact: MARY CRAMER FAX #: (503) -	BTEX Levels TPH Levels AVG. Levels
Designated Facility (Transport to): *(name & address)* TPST SOIL RECYCLERS OF OREGON 9333 N HARBORGATE STREET PORTLAND, OR 97203 USA	Facility Phone #: 503-735-9525 Person to Contact: SHARON QUAST FAX #: 503-240-1712	Facility Permit Numbers
Transporter Name and Mailing Address:	Transporter's Phone #: Person to Contact: FAX #:	Transporter's US EPA ID No.: Transporter's DOT No.: Customer Account Number with TPS:

Description of Soil	Moisture Content	Contaminated by:	Approx. Qty:	Description of Delivery	Gross Weight	Tare Weight	Net Weight
Sand ☐ Organic ☐ Clay ☐ Other ☐	0 - 10% ☐ 10 - 20% ☐ 20% - over ☐	Gas ☐ Diesel ☐ Other ☐		32180			
Sand ☐ Organic ☐ Clay ☐ Other ☐	0 - 10% ☐ 10 - 20% ☐ 20% - over ☐	Gas ☐ Diesel ☐ Other ☐					

List any exception to items listed above:

Generator's and/or consultant's certification: I/We certify that the soil referenced herein is taken entirely from those soils described in the Soil Data Sheet completed and certified by me/us for the Generation Site shown above and nothing has been added or done to such soil that would alter it in any way.

Print or Type Name: Generator ☐ Consultant ☐ | Signature and date: | Month | Day | Year

Transporter

Transporter's certification: I/We acknowledge receipt of the soil described above and certify that such soil is being delivered in exactly the same condition as when received. I/We further certify that this soil is being directly transported from the Generation Site to the Designated Facility without off-loading, adding to, subtracting from or in any way delaying delivery to such site.

Print or Type Name: Jim Lockman | Signature and date: | Month 12 | Day 28 | Year 00

Recycling Facility

Discrepancies:

Recycling Facility certifies the receipt of the soil covered by this manifest except as noted above:

Print or Type Name: SHARON QUAST / JOHN BARBAY | Signature and date: Sharon Quast

Please print or type.

TRANSPORTER'S COPY

COP0021684

Manifest

TPS Technologies Soil Recycling

Non-Hazardous Soils

↓ Manifest # ↓

Date of Shipment:	Responsible for Payment:	Transporter Truck #:	Facility #:	Given by TPS:	Load #
10/08/07	Generator	PNE	409	05745	

Generator and/or Consultant

Generator's Name and Billing Address: TOSCO REFINING CO. 5528 NW DOANE AVENUE PORTLAND, OR 97210 USA	Generator's Phone #: (503) 248-1517 Person to Contact: MARTY CRAMER FAX #: (503) 248-1592	Generator's US EPA ID No. Customer Account Number with TPS: 1003586
Consultant's Name and Billing Address:	Consultant's Phone #: Person to Contact: FAX #:	Customer Account Number with TPS:
Generation Site (Transport from): *(name & address)* TOSCO/PORTLAND TERMINAL 5528 NW DOANE AVE. PORTLAND, OR 97210 USA	Site Phone #: ~~(503) 248-1517~~ Person to Contact: MARY CRAMER FAX #: (503	BTEX Levels TPH Levels AVG. Levels
Designated Facility (Transport to): *(name & address)* TPST SOIL RECYCLERS OF OREGON 9333 N HARBORGATE STREET PORTLAND, OR 97203 USA	Facility Phone #: 503-735-9525 Person to Contact: SHARON QUAST FAX #: 503-240-1712	Facility Permit Numbers
Transporter Name and Mailing Address:	Transporter's Phone #: Person to Contact: FAX #:	Transporter's US EPA ID No.: Transporter's DOT No.: Customer Account Number with TPS:

Description of Soil	Moisture Content	Contaminated by:	Approx. Qty:	Description of Delivery	Gross Weight	Tare Weight	Net Weight
Sand ☐ Organic ☐ Clay ☐ Other ☐	0 - 10% ☐ 10 - 20% ☐ 20% - over ☐	Gas ☐ Diesel ☐ Other ☐		72) RD			
Sand ☐ Organic ☐ Clay ☐ Other ☐	0 - 10% ☐ 10 - 20% ☐ 20% - over ☐	Gas ☐ Diesel ☐ Other ☐					

List any exception to items listed above:

Generator's and/or consultant's certification: I/We certify that the soil referenced herein is taken entirely from those soils described in the Soil Data Sheet completed and certified by me/us for the Generation Site shown above and nothing has been added or done to such soil that would alter it in any way.

Print or Type Name: Generator ☐ Consultant ☐ | Signature and date: | Month | Day | Year

Transporter

Transporter's certification: I/We acknowledge receipt of the soil described above and certify that such soil is being delivered in exactly the same condition as when received. I/We further certify that this soil is being directly transported from the Generation Site to the Designated Facility without off-loading, adding to, subtracting from or in any way delaying delivery to such site.

Print or Type Name: | Signature and date: | Month | Day | Year

Recycling Facility

Discrepancies:

Recycling Facility certifies the receipt of the soil covered by this manifest except as noted above:

Print or Type Name: SHARON QUAST / JOHN BARBAY | Signature and date:

Please print or type.

GENERATOR/consultant's COPY

COP0021685

nca™
North Creek Analytical, Inc.
Environmental Laboratory Network
www.ncalabs.com

11720 North Creek Pkwy N, Suite 400, Bothell, WA 98011-8244 (425) 420-9200 FAX 420-9210
East 11115 Montgomery, Suite B, Spokane, WA 99206-4776 (509) 924-9200 FAX 924-9290
9405 S.W. Nimbus Avenue, Beaverton, OR 97008-7132 (503) 906-9200 FAX 906-9210 X
20332 Empire Avenue, Suite F-1, Bend, OR 97701-5711 (541) 383-9310 FAX 382-7588

CHAIN OF CUSTODY REPORT

Work Order #:

CLIENT: Tosco Refining Co.

REPORT TO: Marty Cramer

ADDRESS: 5528 NW Doane St. Portland OR 97210

PHONE: 503-248-1517 FAX: 248-1592

INVOICE TO: ← Same

P.O. NUMBER: 35060A

PROJECT NAME: TK 2669

PROJECT NUMBER:-

SAMPLED BY: Scott Gilfillan CCS

TURNAROUND REQUEST in Business Days*

Organic & Inorganic Analyses: 10 | 7 | 5 | 4 | 3 | 2 | 1 | <1

Petroleum Hydrocarbon Analyses: STD. 10 | 5 | 4 | 3 | 2 | 1 | <1 (STD.)

OTHER Please Specify

*Turnaround Requests less than standard may incur Rush Charges.

REQUESTED ANALYSES

CLIENT SAMPLE IDENTIFICATION	SAMPLING DATE/TIME	TPH D EXT (SEE REMARKS)													MATRIX (W, S, O)	# OF CONT.	COMMENTS	NCA WO ID
1. Hole A @ 2'9"	01/02/01 1240	x													Soil	1		
2. Hole A @ 5'6"	01/02/01 1251	x														1		
3. Hole A @ 8'1"	01/02/01 1306	x														1		
4. Hole A @ 9'6"	01/02/01 1318	x														1		
5. Hole A @ 10'5"	01/02/01 1330	x														1		
6. Hole B @ surface	01/02/01 1334	x														1		
7. Hole B @ 5"	01/02/01 1336	x														1		
8. Hole B @ 3'0"	01/02/01 1351	x														1		
9. Hole C @ surface	01/02/01 1354	x														1		
10. Hole C @ 6"	01/02/01 1359	x														1		
11. Hole C @ 2'10"	01/02/01 1417	x													Soil	1		
12.																		
13.																		
14.																		
15.																		

RELINQUISHED BY: Scott Gilfillan	DATE:	RECEIVED BY:	DATE: 010201
PRINT NAME: Scott Gilfillan FIRM: CCS	TIME:	PRINT NAME: Sarah Passage FIRM: NCA	TIME: 1620
RELINQUISHED BY:	DATE:	RECEIVED BY:	DATE:
PRINT NAME: FIRM:	TIME:	PRINT NAME: FIRM:	TIME:

ADDITIONAL REMARKS: PLEASE COMPARE TO SOURCE OIL SAMPLE, SUBMITTED 12/22 FOR TANK 2669 to SEE IF THEY ARE SAME

TEMP:

COC REV 3/99

PAGE OF

COP0021686

TPS TECHNOLOGIES INC.
A ThermoRetec Company

9333 N Harborgate Street
Portland, OR 97203
(503) 735-9525
(503) 240-1712 FAX

FAX TRANSMITTAL

DATE: 12/28/00

TO: Marty Cramer / Tosco

FAX NUMBER: 503-248-1592

FROM: Sharon Quast

NUMBER OF PAGES INCLUDING COVER: 2

MESSAGE Please print and sign your name at the "X"s on the attached manifest(s) and return to me via fax at 503-240-1712.
You are close on the wheel barrow loads — They are in 5yd truck. He says 1/2 load left so this should be the last one.
I'll have Scottsdale office get you invoice ASAP. Thanks — Sharon

Manifest

TPS Technologies Soil Recycling
Non-Hazardous Soils

↓ Manifest # ↓

Date of Shipment:	Responsible for Payment:	Transporter Truck #:	Facility #:	Given by TPS:	Load #:
	Generator		A09	05745	01

Generator and/or Consultant

Generator's Name and Billing Address: TOSCO REFINING CO. 5528 NW DOANE AVENUE PORTLAND, OR 97210 USA	Generator's Phone #: (503) 248-1517 Person to Contact: MARTY CRAMER FAX #: (503) 248-1592	Generator's US EPA ID No. Customer Account Number with TPS: 1003586
Consultant's Name and Billing Address:	Consultant's Phone #: Person to Contact: FAX #:	Customer Account Number with TPS:
Generation Site (Transport from): *(name & address)* TOSCO/PORTLAND TERMINAL 5528 NW DOANE AVE. PORTLAND, OR 97210 USA	Site Phone #: (503) 248-1517 Person to Contact: MARY CRAMER FAX #: (503) -	BTEX Levels TPH Levels AVC. Levels
Designated Facility (Transport to): *(name & address)* TPST SOIL RECYCLERS OF OREGON 9333 N HARBORGATE STREET PORTLAND, OR 97203 USA	Facility Phone #: 503-735-9525 Person to Contact: SHARON QUAST FAX #: 503-240-1712	Facility Permit Numbers
Transporter Name and Mailing Address:	Transporter's Phone #: Person to Contact: FAX #:	Transporter's US EPA ID No.: Transporter's DOT No.: Customer Account Number with TPS:

Description of Soil	Moisture Content	Contaminated by:	Approx. Qty:	Description of Delivery	Gross Weight	Tare Weight	Net Weight
Sand ☐ Organic ☐ Clay ☐ Other ☐	0 - 10% ☐ 10 - 20% ☐ 20% - over ☐	Gas ☐ Diesel ☐ Other ☐					
Sand ☐ Organic ☐ Clay ☐ Other ☐	0 - 10% ☐ 10 - 20% ☐ 20% - over ☐	Gas ☐ Diesel ☐ Other ☐					

List any exception to items listed above:

Generator's and/or consultant's certification: I/We certify that the soil referenced herein is taken entirely from those soils described in the Soil Data Sheet completed and certified by me/us for the Generation Site shown above and nothing has been added or done to such soil that would alter it in any way.

Print or Type Name: MARTY CRAMER Generator ☒ Consultant ☐ Signature and date: Month 12 Day 28 Year 00

Transporter

Transporter's certification: I/We acknowledge receipt of the soil described above and certify that such soil is being delivered in exactly the same condition as when received. I/We further certify that this soil is being directly transported from the Generation Site to the Designated Facility without off-loading, adding to, subtracting from or in any way delaying delivery to such site.

Print or Type Name: Signature and date: Month Day Year

Recycling Facility

Discrepancies:

Recycling Facility certifies the receipt of the soil covered by this manifest except as noted above:

Print or Type Name: SHARON QUAST / JOHN BARBAY Signature and date:

Please print or type.

DEC 28 '00 11:18AM TPS TECH/OREGON

TPS FACILITY COPY

COP0021688

Manifest

TPS Technologies Soil Recycling
Non-Hazardous Soils

↓ Manifest # ↓

Date of Shipment:	Responsible for Payment:	Transporter Truck #:	Facility #:	Given by TPS:	Load #
	Generator		A09	05745	01

Generator and/or Consultant

Generator's Name and Billing Address: TOSCO REFINING CO. 5528 NW DOANE AVENUE PORTLAND, OR 97210 USA	Generator's Phone #: (503) 248-1517	Generator's US EPA ID No.
	Person to Contact: MARTY CRAMER	
	FAX #: (503) 248-1592	Customer Account Number with TPS: 1003586
Consultant's Name and Billing Address:	Consultant's Phone #:	
	Person to Contact:	
	FAX #:	Customer Account Number with TPS:
Generation Site (Transport from): *(name & address)* TOSCO/PORTLAND TERMINAL 5528 NW DOANE AVE. PORTLAND, OR 97210 USA	Site Phone #: (503) 248-1517	BTEX Levels
	Person to Contact: MARY CRAMER	TPH Levels
	FAX #: (503) -	AVG. Levels
Designated Facility (Transport to): *(name & address)* TPST SOIL RECYCLERS OF OREGON 9333 N HARBORGATE STREET PORTLAND, OR 97203 USA	Facility Phone #: 503-735-9525	Facility Permit Numbers
	Person to Contact: SHARON QUAST	
	FAX #: 503-240-1712	
Transporter Name and Mailing Address:	Transporter's Phone #:	Transporter's US EPA ID No.:
	Person to Contact:	Transporter's DOT No.:
	FAX #:	Customer Account Number with TPS:

Description of Soil	Moisture Content	Contaminated by:	Approx. Qty:	Description of Delivery	Gross Weight	Tare Weight	Net Weight
Sand ☐ Organic ☐ Clay ☐ Other ☐	0 - 10% ☐ 10 - 20% ☐ 20% - over ☐	Gas ☐ Diesel ☐ Other ☐					
Sand ☐ Organic ☐ Clay ☐ Other ☐	0 - 10% ☐ 10 - 20% ☐ 20% - over ☐	Gas ☐ Diesel ☐ Other ☐					

List any exception to items listed above:

Generator's and/or consultant's certification: I/We certify that the soil referenced herein is taken entirely from those soils described in the Soil Data Sheet completed and certified by me/us for the Generation Site shown above and nothing has been added or done to such soil that would alter it in any way.

Print or Type Name: MARTIN CRAMER — Generator ☒ Consultant ☐ — Signature and date: — Month 12 Day 28 Year 00

Transporter

Transporter's certification: I/We acknowledge receipt of the soil described above and certify that such soil is being delivered in exactly the same condition as when received. I/We further certify that this soil is being directly transported from the Generation Site to the Designated Facility without off-loading, adding to, subtracting from or in any way delaying delivery to such site.

Print or Type Name: — Signature and date: — Month — Day — Year

Recycling Facility

Discrepancies:

Recycling Facility certifies the receipt of the soil covered by this manifest except as noted above:

Print or Type Name: SHARON QUAST / JOHN BARBAY — Signature and date:

Please print or type.

DEC 28 '00 09:00AM TPS TECH/OREGON P.3/3

COP0021689

Manifest

TPS Technologies Soil Recycling
Non-Hazardous Soils

↓ Manifest # ↓

Date of Shipment:	Responsible for Payment:	Transporter Truck #:	Facility #:	Given by TPS:	Load #
	Generator		A09	05745	013

Generator and/or Consultant

Generator's Name and Billing Address: TOSCO REFINING CO. 5528 NW DOANE AVENUE PORTLAND, OR 97210 USA	Generator's Phone #: (503) 248-1527	Generator's US EPA ID No.
	Person to Contact: MARTY CRAMER	
	FAX #: (503) 248-1592	Customer Account Number with TPS: 1003586
Consultant's Name and Billing Address:	Consultant's Phone #:	
	Person to Contact:	
	FAX #:	Customer Account Number with TPS:
Generation Site (Transport from): *(name & address)* TOSCO/PORTLAND TERMINAL 5528 NW DOANE AVE. PORTLAND, OR 97210 USA	Site Phone #: (503) 248-1527	BTEX Levels
	Person to Contact: MARY CRAMER	TPH Levels
	FAX #: (503) -	AVG. Levels
Designated Facility (Transport to): *(name & address)* TPST SOIL RECYCLERS OF OREGON 9333 N HARBORGATE STREET PORTLAND, OR 97203 USA	Facility Phone #: 503-735-9525	Facility Permit Numbers
	Person to Contact: SHARON QUAST	
	FAX #: 503-240-1712	
Transporter Name and Mailing Address:	Transporter's Phone #:	Transporter's US EPA ID No.:
	Person to Contact:	Transporter's DOT No.:
	FAX #:	Customer Account Number with TPS:

Description of Soil	Moisture Content	Contaminated by:	Approx. Qty:	Description of Delivery	Gross Weight	Tare Weight	Net Weight
Sand ☐ Organic ☐ Clay ☐ Other ☐	0 - 10% ☐ 10 - 20% ☐ 20% - over ☐	Gas ☐ Diesel ☐ Other ☐					
Sand ☐ Organic ☐ Clay ☐ Other ☐	0 - 10% ☐ 10 - 20% ☐ 20% - over ☐	Gas ☐ Diesel ☐ Other ☐					

List any exception to items listed above:

Generator's and/or consultant's certification: I/We certify that the soil referenced herein is taken entirely from those soils described in the Soil Data Sheet completed and certified by me/us for the Generation Site shown above and nothing has been added or done to such soil that would alter it in any way.

Print or Type Name: Generator ☒ Consultant ☐ Signature and date: Month 12 Day 28 Year 00

Transporter

Transporter's certification: I/We acknowledge receipt of the soil described above and certify that such soil is being delivered in exactly the same condition as when received. I/We further certify that this soil is being directly transported from the Generation Site to the Designated Facility without off-loading, adding to, subtracting from or in any way delaying delivery to such site.

Print or Type Name: Signature and date: Month Day Year

Recycling Facility

Discrepancies:

Recycling Facility certifies the receipt of the soil covered by this manifest except as noted above:

Print or Type Name: SHARON QUAST / JOHN BARBAY

Signature and date:

Please print or type.

Manifest

TPS Technologies Soil Recycling
Non-Hazardous Soils

↓ Manifest # ↓

Date of Shipment:	Responsible for Payment:	Transporter Truck #:	Facility #:	Given by TPS:	Load #
	Generator		A09	05745	011

Generator's Name and Billing Address:
TOSCO REFINING CO.
5528 NW DOANE AVENUE
PORTLAND, OR 97210 USA

Generator's Phone #: (503) 248-1517
Person to Contact: MARTY CRAMER
FAX #: (503) 248-1592
Generator's US EPA ID No.:
Customer Account Number with TPS: 1003586

Consultant's Name and Billing Address:

Consultant's Phone #:
Person to Contact:
FAX #:
Customer Account Number with TPS:

Generation Site (Transport from): *(name & address)*
TOSCO/PORTLAND TERMINAL
5528 NW DOANE AVE.
PORTLAND, OR 97210 USA

Site Phone #: (503) 248-1517
Person to Contact: MARY CRAMER
FAX #: (503) -
BTEX Levels
TPH Levels
AVG. Levels

Designated Facility (Transport to): *(name & address)*
TPST SOIL RECYCLERS OF OREGON
9333 N HARBORGATE STREET
PORTLAND, OR 97203 USA

Facility Phone #: 503-735-9525
Person to Contact: SHARON QUAST
FAX #: 503-240-1712
Facility Permit Numbers:

Transporter Name and Mailing Address:

Transporter's Phone #:
Person to Contact:
FAX #:
Transporter's US EPA ID No.:
Transporter's DOT No.:
Customer Account Number with TPS:

Description of Soil	Moisture Content	Contaminated by:	Approx. Qty:	Description of Delivery	Gross Weight	Tare Weight	Net Weight
Sand ☐ Organic ☐ Clay ☐ Other ☐	0 - 10% ☐ 10 - 20% ☐ 20% - over ☐	Gas ☐ Diesel ☐ Other ☐					
Sand ☐ Organic ☐ Clay ☐ Other ☐	0 - 10% ☐ 10 - 20% ☐ 20% - over ☐	Gas ☐ Diesel ☐ Other ☐					

List any exception to items listed above:

Generator's and/or consultant's certification: *I/We certify that the soil referenced herein is taken entirely from those soils described in the Soil Data Sheet completed and certified by me/us for the Generation Site shown above and nothing has been added or done to such soil that would alter it in any way.*

Print or Type Name: Generator ☒ Consultant ☐ Signature and date: Month 12 Day 27 Year 00

Transporter's certification: *I/We acknowledge receipt of the soil described above and certify that such soil is being delivered in exactly the same condition as when received. I/We further certify that this soil is being directly transported from the Generation Site to the Designated Facility without off-loading, adding to, subtracting from or in any way delaying delivery to such site.*

Print or Type Name: Signature and date: Month Day Year

Discrepancies:

Recycling Facility certifies the receipt of the soil covered by this manifest except as noted above:

Print or Type Name: SHARON QUAST / JOHN BARBAY Signature and date:

Generator and/or Consultant — Transporter — Recycling Facility

Please print or type.

TPS FACILITY COPY

DEC 27 '00 04:20PM TPS TECH/OREGON P.3/3

COP0021691

Manifest

TPS Technologies Soil Recycling
Non-Hazardous Soils

↓ Manifest # ↓

Date of Shipment:	Responsible for Payment:	Transporter Truck #:	Facility #:	Given by TPS:	Load #
	Generator		A09	05745	010

Generator and/or Consultant

Generator's Name and Billing Address: TOSCO REFINING CO. 5528 NW DOANE AVENUE PORTLAND, OR 97210 USA	Generator's Phone #: (503) 248-1517	Generator's US EPA ID No.
	Person to Contact: MARTY CRAMER	
	FAX #: (503) 248-1592	Customer Account Number with TPS: 1003586
Consultant's Name and Billing Address:	Consultant's Phone #:	
	Person to Contact:	
	FAX #:	Customer Account Number with TPS:
Generation Site (Transport from): *(name & address)* TOSCO/PORTLAND TERMINAL 5528 NW DOANE AVE. PORTLAND, OR 97210 USA	Site Phone #: (503) 248-1517	BTEX Levels
	Person to Contact: MARY CRAMER	TPH Levels
	FAX #: (503)	AVG. Levels
Designated Facility (Transport to): *(name & address)* TPST SOIL RECYCLERS OF OREGON 9333 N HARBORGATE STREET PORTLAND, OR 97203 USA	Facility Phone #: 503-735-9525	Facility Permit Numbers
	Person to Contact: SHARON QUAST	
	FAX #: 503-240-1712	
Transporter Name and Mailing Address:	Transporter's Phone #:	Transporter's US EPA ID No.:
	Person to Contact:	Transporter's DOT No.:
	FAX #:	Customer Account Number with TPS:

Description of Soil	Moisture Content	Contaminated by:	Approx. Qty:	Description of Delivery	Gross Weight	Tare Weight	Net Weight
Sand ☐ Organic ☐ Clay ☐ Other ☐	0 - 10% ☐ 10 - 20% ☐ 20% - over ☐	Gas ☐ Diesel ☐ Other ☐					
Sand ☐ Organic ☐ Clay ☐ Other ☐	0 - 10% ☐ 10 - 20% ☐ 20% - over ☐	Gas ☐ Diesel ☐ Other ☐					

List any exception to items listed above:

Generator's and/or consultant's certification: I/We certify that the soil referenced herein is taken entirely from those soils described in the Soil Data Sheet completed and certified by me/us for the Generation Site shown above and nothing has been added or done to such soil that would alter it in any way.

Print or Type Name: MARTIN CRAMER Generator ☒ Consultant ☐ Signature and date: Month 12 Day 27 Year 00

Transporter

Transporter's certification: I/We acknowledge receipt of the soil described above and certify that such soil is being delivered in exactly the same condition as when received. I/We further certify that this soil is being directly transported from the Generation Site to the Designated Facility without off-loading, adding to, subtracting from or in any way delaying delivery to such site.

Print or Type Name: Signature and date: Month Day Year

Recycling Facility

Discrepancies:

Recycling Facility certifies the receipt of the soil covered by this manifest except as noted above:

Print or Type Name: SHARON QUAST / JOHN BARBAY Signature and date:

Please print or type

Site	Date	Type of waste	Recycled	Manifest #	Copy of Manifest	Vol (gals.)	Wt (Lbs.)	Lbs. to Tons	St. Code	Fed. Code	LDR	# bins	Transporter	Disposal Facility	Material	Initial HW Mgmt Code	Final HW Mgmt Code	2nd Facility	Profile#	Comment
Portland	1/12/2010	HW		005379629JJK	Y	25	188	0.09		D001	Y	1 DM	CCS	Burlington Env - Kent	Hexane	H061	H050		410905-00	
Portland	5/4/2010	HW		005379738JJK	Y	23	173	0.09		D001	Y	1 DM	CCS	Burlington Env - Kent	Hexane	H061	H050		410905-00	Tanks 4258, 4302, 4303
							360													
Portland	9/24/2010	HW		005379096JJK	Y	55	413	0.21		D001		1 DM	CCS	Burlington Env - Kent	Waste Paint	H061	H050		374257-01	
				Total HW Disposed			**773**	**0.386405**												
Portland	2/9/2010	HW		002230703SKS	Y	15	101	0.05		D001, D018, D039, D040	Y	1 DM	Safety-Kleen	Safety-Kleen	Parts Cleaner	H141	H020			2/11/11 - confirmed final waste code with Gary at Safety Kleen. Per MSDS, solvent density is 6.4-6.7 lb/gal
Portland	4/8/2010	HW		002426024SKS	Y	15	101	0.05		D001, D018, D039, D040	Y	1 DM	Safety-Kleen	Safety-Kleen	Parts Cleaner	H141	H020			2/11/11 - confirmed final waste code with Gary at Safety Kleen
Portland	6/1/2010	HW		002459923SKS	Y	15	101	0.05		D001, D018, D039, D040	Y	1 DM	Safety-Kleen	Safety-Kleen	Parts Cleaner	H141	H020			2/11/11 - confirmed final waste code with Gary at Safety Kleen
Portland	7/23/2010	HW		002449888SKS	Y	15	101	0.05		D001, D018, D039, D040	Y	1 DM	Safety-Kleen	Safety-Kleen	Parts Cleaner	H141	H020			2/11/11 - confirmed final waste code with Gary at Safety Kleen
Portland	9/20/2010	HW		000344015CEX	Y	15	101	0.05		D001, D018, D039, D040	Y	1 DM	Safety-Kleen	Safety-Kleen	Parts Cleaner	H141	H020			2/11/11 - confirmed final waste code with Gary at Safety Kleen
Portland	11/15/2010	HW		002038831SKS	Y	18	121	0.06		D001, D018, D039, D040	Y	1 DM	Safety-Kleen	Safety-Kleen	Parts Cleaner	H141	H020			2/11/11 - confirmed final waste code with Gary at Safety Kleen
				Total HW Recycled			**623**	**0.31**												
				Total HW			**1396**	**0.70**												
Universal Waste																				
Portland	6/11/2010	UHW	Y	84163			576	0.29				48 each	CCS	Ecolights	Florescent lamps					8-foot. Assume 1.5 lbs/linear ft
Portland	6/11/2010	UHW	Y	84163			36	0.02				24 each	CCS	Ecolights	HID lamps					HID lamps
Portland	6/11/2010	UHW	Y	84163			10	0.01				1 gal pail	CCS	Ecolights	batteries					batteries
Portland	9/24/2010	UHW	Y	88906			264	0.13				44 each	CCS	Ecolights	Florescent lamps					4-foot
Portland	9/24/2010	UHW	Y	88906			5	0.00				3 each	CCS	Ecolights	Florescent lamps					compact fluorescent lamps
Portland	9/24/2010	UHW	Y	88906			63	0.03				42 each	CCS	Ecolights	HID lamps					HID lamps
Portland	9/24/2010	UHW	Y	88906			1	0.00				1 box	CCS	Ecolights						batteries
Portland	9/24/2010	UHW	Y	88906			2	0.00				1 each	CCS	Ecolights	non-PCB ballast					
				Total UW Recycled			**956**	**0.48**												

COP0021693

Site	Date	Type of waste	Recycled	Manifest #	Copy of Manifest	Vol (gals.)	Wt (Lbs.)	Lbs. to Tons	St. Code	Fed. Code	LDR	# bins	Transporter	Disposal Facility	Material	Initial HW Mgmt Code	Final HW Mgmt Code	2nd Facility	Profile#	Comment
Non-HW sent for Disposal																				
Portland	2/11/2010	NHW	N	8510013-01				19.17				1 CM	CCS	Hillsboro	petroleum contaminated soil				103765OR	
Portland	2/11/2010	NHW	N	8510013-01				22.50				1 CM	CCS	Hillsboro	petroleum contaminated soil				103765OR	
Portland	3/12/2010	NHW	N	9310017-01				20.00				13 CF	CCS	Hillsboro	spent carbon				106243OR	VRU
Portland	7/15/2011	NHW		8510414-01		825	6750	3.38				1 TT	CCS	CWM Arlington	AFFF, water, diesel, gasoline & lube oil					
Portland	9/24/2010	NHW		005379096JJK	Y	55	528	0.26	WT02			1 DM	CCS	Burlington Env - Kent	Suffix Scavenger 800	H111	H132		389242-01	Do not report - WA state dangerous waste
Portland	9/24/2010	NHW		005379102JJK	Y		5	0.00	X002			1 DM	CCS	Ecolights	PCB Ballasts	H141	H040		COP PDX9/24/10	10 PCB light ballasts. Assume 0.5 lbs per ballast Oregon does not require reporting of X002 on annual dangerous waste report.
Portland	9/27/2010	NHW		8510489-01				19.00					CCS	Hillsboro	Spent sandblast					Tank 3408, 3410
Portland	10/15/2010	NHW		9310263				39.00				1 DT	CCS	Hillsboro	petroleum contaminated soil					
Portland	12/6/2010	NHW		9310315				10.00				1 DT	CCS	Hillsboro	diesel contaminated soil				1074473OR	Dock hydrotesting
				Total NHW disposed				**133.31**												
				Total NHW disposed (excluding PCS)				**42.38**												
Recycled Matieral																				
Portland	1/7/2010	NHW	Y	122111		395	3294	1.65					CCS	ORRCO	Oily water					Fire pump
Portland	1/28/2010	NHW	Y	229137			400	0.20				1 bin	Fuel Processors Inc	ORRCO	Oily pads					
Portland	3/4/2010	NHW	Y	230691		50	467	0.23					ORRCO	ORRCO	spent anti-freeze					VRU. Assume specific gravity = 1.12 (9.34 lbs/gal) based on MSDS
Portland	3/17/2010	NHW	Y	231285			400	0.20				1 bin	ORRCO	ORRCO	Oily pads, filters					
Portland	4/7/2010	NHW	Y	122835		375	3128	1.56					CCS	ORRCO	Emulsified water & oil					Remediation system
Portland	4/30/2010	NHW	Y	122882		355	2961	1.48					CCS	ORRCO	Emulsified water & oil					Tk 3579
Portland	6/10/2010	NHW	Y	122900		2400	19296	9.65					CCS	ORRCO	Diesel; black oil					Tk 3579. Per Tom Lyons, use MSDS for residual fuel oil as basis for black oil and IFO.. Bulk density = 8.04 lbs/gal per MSDS.
Portland	6/10/2010	NHW	Y	122649		1500	12060	6.03					CCS	ORRCO	IFO/diesel					Tk 3579
Portland	6/10/2010	NHW	Y	122649		1500	12060	6.03					CCS	ORRCO	IFO/diesel					Tk 3579
Portland	6/10/2010	NHW	Y	122724		2383	19159	9.58					CCS	ORRCO	IFO/diesel					Tk 3579
Portland	6/10/2010	NHW	Y	122899		2340	18814	9.41					CCS	ORRCO	IFO/diesel					Tk 3579
Portland	6/14/2010	NHW	Y	122384		2900	23316	11.66					CCS	ORRCO	IFO/diesel					Tk 3579
Portland	6/15/2010	NHW	Y	122385		2500	20100	10.05					CCS	ORRCO	IFO/diesel					Tk 3579

COP0021694

Site	Date	Type of waste	Recycled	Manifest #	Copy of Manifest	Vol (gals.)	Wt (Lbs.)	Lbs. to Tons	St. Code	Fed. Code	LDR	# bins	Transporter	Disposal Facility	Material	Initial HW Mgmt Code	Final HW Mgmt Code	2nd Facility	Profile#	Comment
Portland	6/16/2010	NHW	Y	8510299		2467	19835	9.92					CCS	ORRCO	IFO/diesel					Tk 3579
Portland	6/16/2010	NHW	Y	8510299-02		1391	11184	5.59					CCS	ORRCO	IFO/diesel					Tk 3579
Portland	6/16/2010	NHW	Y	8510299-03		861	6922	3.46					CCS	ORRCO	IFO/diesel					Tk 3579
Portland	6/16/2010	NHW	Y	8510299-04		1221	9817	4.91					CCS	ORRCO	IFO/diesel					Tk 3579
Portland	6/21/2010	NHW	Y	122387		1200	9648	4.82					CCS	ORRCO	IFO/diesel					Tk 3579
Portland	6/23/2010	NHW	Y	122659		85	709	0.35					CCS	ORRCO	Oily tank bottom solids					Tk 3579
Portland	6/23/2010	NHW	Y	122670		360	2894	1.45				9 DM	CCS	ORRCO	IFO/diesel					Tk 3579
Portland	6/23/2010	NHW	Y	122671		360	2894	1.45				9 DM	CCS	ORRCO	IFO/diesel					Tk 3579
Portland	6/23/2010	NHW	Y	122482		240	1930	0.96				6 DM	CCS	ORRCO	IFO/diesel					Tk 3579
Portland	6/23/2010	NHW	Y	122482			300	0.15				2 DM	CCS	ORRCO	Oily PPE					Tk 3579 - assume 1 drum weighs 150 lbs
Portland	6/24/2010	NHW	Y	122672		400	3216	1.61				10 DM	CCS	ORRCO	IFO/diesel					
Portland	6/24/2010	NHW	Y	122672			150	0.08				1 DM	CCS	ORRCO	Oily PPE					
Portland	6/25/2010	NHW	Y	122481		120	965	0.48				3 DM	CCS	ORRCO	IFO/diesel					Tk 3579
Portland	6/25/2010	NHW	Y	122481			750	0.38				5 DM	CCS	ORRCO	Oily PPE					Tk 3579
Portland	6/25/2010	NHW	Y	122481			50	0.03				2 bags	CCS	ORRCO	Oily buckets					Tk 3579
Portland	6/25/2010	NHW	Y	122872			150	0.08					CCS	ORRCO	Oily PPE, rags					Tk 3579
Portland	7/13/2010	NHW	Y			152	1268	0.63				1 TT	CCS	ORRCO	emulsified oil & water					catch basin
Portland	7/21/2010	NHW	Y	237076			400	0.20				1 bin	CCS	ORRCO	filters					
Portland	7/21/2010	NHW	Y	237076			400	0.20				1 bin	CCS	ORRCO	Oily pads					
Portland	7/31/2010	NHW	Y	122661		2169	18089	9.04					CCS	ORRCO	Oily water					
Portland	7/31/2010	NHW		122661		291	2427	1.21					CCS	ORRCO	Oily solids					
Portland	8/11/2010	NHW		8510415		418	3486	1.74					CCS	ORRCO	Oily water					catch basins
Portland	8/11/2010	NHW		8510415		200	1668	0.83					CCS	ORRCO	Oily solids					catch basins
Portland	8/11/2010	NHW		8510415			100	0.05					CCS	ORRCO	Filter socks					catch basins
Portland	8/24/2010	NHW		8510466		2408	20083	10.04					CCS	ORRCO	IFO/water					Tank 3579
Portland	8/25/2010	NHW		8510466-2		1670	13928	6.96					CCS	ORRCO	IFO/water					Tank 3579
Portland	8/26/2010	NHW		8510466-3		2340	19516	9.76					CCS	ORRCO	IFO/water					Tank 3579
Portland	8/27/2010	NHW		8510466-3		1730	14428	7.21					CCS	ORRCO	IFO/water					Tank 3579
Portland	8/30/2010	NHW		237349		493	4605	2.30					CCS	ORRCO	spent ethylene glycol					
Portland	9/7/2010	NHW		8510466-5		1960	16346	8.17					CCS	ORRCO	emulsified oil & water					
Portland	9/8/2010	NHW	Y	8510466-6		2874	23969	11.98					CCS	ORRCO	emulsified oil & water					
Portland	9/9/2010	NHW	Y	8510466-7		2650	22101	11.05					CCS	ORRCO	emulsified oil & water					Tank 3579
Portland	9/10/2010	NHW	Y	8510466-8		3600	30024	15.01					CCS	ORRCO	emulsified oil & water					Tank 3579

COP0021695

Site	Date	Type of waste	Recycled	Manifest #	Copy of Manifest	Vol (gals.)	Wt (Lbs.)	Lbs. to Tons	St. Code	Fed. Code	LDR	# bins	Transporter	Disposal Facility	Material	Initial HW Mgmt Code	Final HW Mgmt Code	2nd Facility	Profile#	Comment
Portland	9/13/2010	NHW	Y	8510466-9		3680	30691	15.35					CCS	ORRCO	emulsified oil & water					Tank 3579
Portland	9/14/2010	NHW	Y	46610		3400	28356	14.18					CCS	ORRCO	emulsified oil & water					Tank 3579
Portland	9/14/2010	NHW	Y	46611		2700	22518	11.26					CCS	ORRCO	emulsified oil & water					Tank 3579
Portland	9/16/2010	NHW	Y	46612		3000	25020	12.51					CCS	ORRCO	emulsified oil & water					Tank 3579
Portland	9/17/2010	NHW	Y	8510466-13		2700	22518	11.26					CCS	ORRCO	emulsified oil & water					Tank 3579
Portland	9/17/2010	NHW	Y	8510466-14		1900	15846	7.92					CCS	ORRCO	emulsified oil & water					Tank 3579
Portland	9/24/2010	NHW	Y	9310242		330	2385	1.19					CCS	ORRCO	Paratone 8011					Bulk density = 0.866 kg/l = 7.227 lbs/gal
Portland	9/28/2010	NHW	Y	8510466-15		350	2919	1.46					CCS	ORRCO	tank bottom solids					Tank 3579
Portland	10/15/2010	NHW	Y	8510466-01		368	3069	1.53					CCS	ORRCO	water with citrus cleaner					Tank 3579
Portland	10/19/2010	NHW	Y	8510466		640	5338	2.67					CCS	ORRCO	wash water					Tank 3579
Portland	10/21/2010	NHW	Y	8510466-03		2400	20016	10.01					CCS	ORRCO	water with citrus cleaner					Tank 3579
Portland	10/22/2010	NHW	Y	8510466-04		2650	22101	11.05					CCS	ORRCO	water with citrus cleaner					Tank 3579
Portland	10/22/2010	NHW	Y	8510466-05		1780	14845	7.42					CCS	ORRCO	water with citrus cleaner					Tank 3579
Portland	11/15/2010	NHW	Y	239639			400	0.20				1 bin	CCS	ORRCO	Clean-up material					Tank 4259
Portland	11/22/2010	NHW	Y	240307			400	0.20				1 bin	CCS	ORRCO	Oily pads					Tank 4259
Portland	11/29/2010	NHW	Y	blank		2500	20100	10.05				1 TT	CCS	ORRCO	black oil/diesel					Tank 4253
Portland	11/30/2010	NHW	Y	8510644-02		2850	22914	11.46				1 TT	CCS	ORRCO	black oil/diesel					Tank 4253
Portland	12/2/2010	NHW	Y	8510644a		2950	23718	11.86				1 TT	CCS	ORRCO	black oil/diesel					Tank 4252
Portland	12/2/2010	NHW	Y	8510644b		2140	17206	8.60				1 TT	CCS	ORRCO	black oil/diesel					Tank 4253
Portland	12/2/2010	NHW	Y	8510644-01		2750	22110	11.06				1 TT	CCS	ORRCO	black oil/diesel					Tank 4253
Portland	12/2/2010	NHW	Y	8510572		2600	21684	10.84				1 TT	CCS	ORRCO	gasoline & water					
Portland	12/2/2010	NHW	Y	8510644-03		1565	12583	6.29				1 TT	CCS	ORRCO	black oil/diesel					Tank 4252
Portland	12/3/2010	NHW	Y	8510572-02		2600	21684	10.84				1 TT	CCS	ORRCO	gasoline & water					
Portland	12/3/2010	NHW	Y	8510572-03		2600	21684	10.84				1 TT	CCS	ORRCO	gasoline & water					
Portland	12/3/2010	NHW	Y	8510572-03		2500	20850	10.43				1 TT	CCS	ORRCO	gasoline & water					dock hydrotesting
Portland	12/2/2010	NHW	Y	8510644		2175	17487	8.74				1 TT	CCS	ORRCO	black oil/diesel					Tank 4252
Portland	12/8/2010	NHW	Y	240350			400	0.20				1 bin	CCS	ORRCO	cleanup material					dock hydrotesting
Portland	12/13/2010	NHW	Y	85104616		3000	25020	12.51				1 TT	CCS	ORRCO	fuel/water					Tank 4252
				Total NHW recycled			**863,567**	**431.78**												

COP0021696

Site	Date	Type of waste	Recycled	Manifest #	Copy of Manifest	Vol (gals.)	Wt (Lbs.)	Lbs. to Tons	St. Code	Fed. Code	LDR	# bins	Transporter	Disposal Facility	Material	Initial HW Mgmt Code	Final HW Mgmt Code	2nd Facility	Profile#	Comment
			HW - disposed					**0.3864**	**tons**											
			HW - recycled					**0.31**	**tons**											
			UHW - recycled					**0.48**	**tons**											
								1.18												
			NHW - disposed					**133.31**	**tons**											
			NHW disposed (excluding PCS)					**42.38**	**tons**											
			NHW - recycled					**431.78**	**tons**											
				Total recycled				**432.57**	**tons**											

COP0021697

Disposal Facility	EPA ID #
Burlington Env - Kent, WA	WAR000001743
Safety-Kleen	ORD981766124
Ecolights	WAH000026371

Transporter	EPA ID #
CCS	WAH000014944
Safety-Kleen	TXR0000050930
Total Reclaim	WAD009482803
Burlington Env	WAR000001743

Generator's Nonhazardous Waste Profile Sheet

0922

WASTE MANAGEMENT

Requested Disposal Facility _____ Profile Number WASTE MGT.

☐ Renewal for Profile Number _____ Waste Approval Expiration Date _____

A. Waste Generator Facility Information (must reflect location of waste generation/origin)

1. Generator Name: ConocoPhillips
2. Site Address: 5528 NW Doane Ave
3. City/ZIP: Portland 97210
4. State: Oregon
5. County: Multnomah
6. Contact Name/Title: Mr. Mike Noll
7. Email Address: Michael.D.Noll@conocophillips.com
8. Phone: 360.794.9523 9. FAX: _____
10. NAICS Code: _____
11. Generator USEPA ID #: _____
12. State ID# (if applicable): _____

B. Customer Information ☐ **same as above** P. O. Number: _____

1. Customer Name: _____
2. Billing Address: _____
3. City, State and ZIP: _____
4. Contact Name: _____
5. Contact Email: _____
6. Phone: _____ FAX: _____
7. Transporter Name: _____
8. Transporter ID # (if appl.): _____
9. Transporter Address: _____
10. City, State and ZIP: _____

C. Waste Stream Information

1. DESCRIPTION
   a. Common Waste Name: Well installation soil cuttings, spent carbon from remediation system
   State Waste Code(s): _____
   b. Describe Process Generating Waste or Source of Contamination:
   well installation soil cuttings and spent carbon from remediation system - petroleum hydrocarbon remediation system at bulk distribution facility
   c. Typical Color(s): Grey, brown, black
   d. Strong Odor? ☐ Yes ☒ No Describe: _____
   e. Physical State at 70°F: ☒ Solid ☐ Liquid ☐ Powder ☐ Semi-Solid or Sludge ☐ Other: _____
   f. Layers? ☐ Single layer ☒ Multi- layer ☐ NA
   g. Water Reactive? ☐ Yes ☒ No If Yes, Describe: _____
   h. Free Liquid Range (%): _____ to _____ ☒ NA(solid)
   i. pH Range: ☐ ≤2 ☒ 2.1-12.4 ☐ ≥12.5 ☐ NA(solid) ☐ Actual: _____
   j. Liquid Flash Point: ☐ < 140°F ☐ ≥ 140°F ☒ NA(solid) ☐ Actual: _____
   k. Flammable Solid: ☐ Yes ☒ No
   l. Physical Constituents: List all constituents of waste stream - (e.g. Soil 0-80%, Wood 0-20%): ☒ (See Attached)

Constituents *(Total Composition Must be > 100%)*	Lower Range	Unit of Measure	Upper Range	Unit of Measure
1. Soil				
2. Carbon				
3.				
4.				
5.				
6.				

2. ESTIMATED QUANTITY OF WASTE AND SHIPPING INFORMATION
   a. ☒ Event ☐ Base/Ongoing (Check One)
   b. Estimated Annual Quantity: 45 ☐ Tons ☐ Cubic Yards ☒ Drums ☐ Gallons ☐ Other (specify): _____
   c. Shipping Frequency: _____ Units per ☐ Month ☐ Quarter ☐ Year ☒ One Time ☐ Other
   d. Is this a U.S. Department of Transportation (USDOT) Hazardous Material? (If yes, answer e.) ☐ Yes ☐ No
   e. USDOT Shipping Description (if applicable): _____
3. SAFETY REQUIREMENTS (Handling, PPE, etc.): _____

©2007 Waste Management, Inc.

COP0021700

Generator's Nonhazardous Waste Profile Sheet

WASTE MANAGEMENT

D. Regulatory Status (Please check appropriate responses)

1. Is this a USEPA (40 CFR Part 261)/State hazardous waste? If yes, contact your sales representative. ☐ Yes ☒ No
2. Is this waste included in one or more of categories below (Check all that apply)? If yes, attach supporting documentation. ☐ Yes ☒ No
   - ☐ Delisted Hazardous Waste
   - ☐ Excluded Wastes Under 40 CFR 261.4
   - ☐ Treated Hazardous Waste Debris
   - ☐ Treated Characteristic Hazardous Waste
3. Is the waste from a Federal (40 CFR 300, Appendix B) or state mandated clean-up? If yes, see instructions. ☐ Yes ☐ No
4. Does the waste represented by this waste profile sheet contain radioactive material? ☐ Yes ☒ No
   a. If yes, is disposal regulated by the Nuclear Regulatory Commission? n/a ☐ Yes ☐ No
   b. If yes, is disposal regulated by a State Agency for radioactive waste/NORM? n/a ☐ Yes ☐ No
5. Does the waste represented by this waste profile sheet contain concentrations of regulated Polychlorinated Biphenyls (PCBs)? ☐ Yes ☒ No
   a. If yes, is disposal regulated under TSCA? n/a ☐ Yes ☐ No
6. Does the waste contain untreated, regulated, medical or infectious waste? ☐ Yes ☒ No
7. Does the waste contain asbestos? ☐ Yes ☒ No If Yes, ☐ Friable ☐ Non Friable
8. Is this profile for remediation waste from a facility that is a major source of Hazardous Air Pollutants (Site Remediation NESHAP, 40 CFR 63 subpart GGGGG)? ☐ Yes ☒ No
   If yes, does the waste contain <500 ppmw VOHAPs at the point of determination? ☐ Yes ☒ No

E. Generator Certification (Please read and certify by signature below)

By signing this Generator's Waste Profile Sheet, I hereby certify that all:

1. Information submitted in this profile and all attached documents contain true and accurate descriptions of the waste material;
2. Relevant information within the possession of the Generator regarding known or suspected hazards pertaining to this waste has been disclosed to WM/the Contractor;
3. Analytical data attached pertaining to the profiled waste was derived from testing a representative sample in accordance with 40 CFR 261.20(c) or equivalent rules; and
4. Changes that occur in the character of the waste (i.e. changes in the process or new analytical) will be identified by the Generator and disclosed to WM (and the Contractor if applicable) prior to providing the waste to WM (and the Contractor if applicable).
5. Check all that apply:
   - ☒ Attached analytical pertains to the waste. Identify laboratory & sample ID #'s and parameters tested: BTEX, RBDMVOCs, TCLP lead, Gasoline, PAHs, Diesel # Pages: _____
   - ☐ Only the analyses identified on the attachment pertain to the waste (identify by laboratory & sample ID #'s and parameters tested). Attachment #: _____
   - ☐ Additional information necessary to characterize the profiled waste has been attached (other than analytical). Indicate the number of attached pages: _____
   - ☐ I am an agent signing on behalf of the Generator, and the delegation of authority to me from the Generator for this signature is available upon request.
   - ☐ By Generator process knowledge, the following waste is not a listed waste and is below all TCLP regulatory limits.

Certification Signature: Steve Adams **Title:** Maint. Coord.

Company Name: Conoco Phillips **Name (Print):** Steve Adams

Date: 1-28-08

FOR WM USE ONLY

Management Method: ☐ Landfill ☐ Bioremediation ☐ Non-hazardous solidification ☐ Other: _____

Approval Decision: ☐ Approved ☐ Not Approved

Waste Approval Expiration Date: _____

Management Facility Precautions, Special Handling Procedures or Limitation on approval:

_____

_____

- ☐ Shall not contain free liquid
- ☐ Shipment must be scheduled into disposal facility
- ☐ Approval Number must accompany each shipment
- ☐ Waste Manifest must accompany load

WM Authorization Name / Title: _____ **Date:** _____

State Authorization (if Required): _____ **Date:** _____

©2007 Waste Management, Inc.

Generator's Nonhazardous Waste Profile Sheet

WASTE MANAGEMENT

Requested Disposal Facility _____ Profile Number
☐ Renewal for Profile Number _____ Waste Approval Expiration Date _____

A. Waste Generator Facility Information (must reflect location of waste generation/origin)

1. Generator Name: ConocoPhillips
2. Site Address: 5528 NW Doane Ave
3. City/ZIP: Portland 97210
4. State: Oregon
5. County: Multnomah
6. Contact Name/Title: Mr. Mike Noll
7. Email Address: Michael.D.Noll@conocophillips.com
8. Phone: 360.794.9523 9. FAX: _____
10. NAICS Code: _____
11. Generator USEPA ID #: _____
12. State ID# (if applicable): _____

B. Customer Information ☐ **same as above** P. O. Number: _____

1. Customer Name: _____
2. Billing Address: _____
3. City, State and ZIP: _____
4. Contact Name: _____
5. Contact Email: _____
6. Phone: _____ FAX: _____
7. Transporter Name: _____
8. Transporter ID # (if appl.): _____
9. Transporter Address: _____
10. City, State and ZIP: _____

C. Waste Stream Information

1. DESCRIPTION
   a. Common Waste Name: Well installation soil cuttings, spent carbon from remediation system
   State Waste Code(s): _____
   b. Describe Process Generating Waste or Source of Contamination: well installation soil cuttings and spent carbon from remediation system - petroleum hydrocarbon remediation system at bulk distribution facility
   c. Typical Color(s): Grey, brown, black
   d. Strong Odor? ☐ Yes ☒ No Describe: _____
   e. Physical State at 70°F: ☒ Solid ☐ Liquid ☐ Powder ☐ Semi-Solid or Sludge ☐ Other: _____
   f. Layers? ☐ Single layer ☒ Multi- layer ☐ NA
   g. Water Reactive? ☐ Yes ☒ No If Yes, Describe: _____
   h. Free Liquid Range (%): _____ to _____ ☒ NA(solid)
   i. pH Range: ☐ ≤2 ☒ 2.1-12.4 ☐ ≥12.5 ☐ NA(solid) ☐ Actual: _____
   j. Liquid Flash Point: ☐ < 140°F ☐ ≥ 140°F ☒ NA(solid) ☐ Actual: _____
   k. Flammable Solid: ☐ Yes ☒ No
   l. Physical Constituents: List all constituents of waste stream - (e.g. Soil 0-80%, Wood 0-20%): ☒ (See Attached)

Constituents (Total Composition Must be > 100%)	Lower Range	Unit of Measure	Upper Range	Unit of Measure
1. Soil				
2. Carbon				
3.				
4.				
5.				
6.				

2. ESTIMATED QUANTITY OF WASTE AND SHIPPING INFORMATION
   a. ☒ Event ☐ Base/Ongoing (Check One)
   b. Estimated Annual Quantity: 45 ☐ Tons ☐ Cubic Yards ☒ Drums ☐ Gallons ☐ Other (specify): _____
   c. Shipping Frequency: _____ Units per ☐ Month ☐ Quarter ☐ Year ☒ One Time ☐ Other
   d. Is this a U.S. Department of Transportation (USDOT) Hazardous Material? (If yes, answer e.) ☐ Yes ☐ No
   e. USDOT Shipping Description (if applicable): _____
3. SAFETY REQUIREMENTS (Handling, PPE, etc.): _____

©2007 Waste Management, Inc.

COP0021702

Generator's Nonhazardous Waste Profile Sheet

D. Regulatory Status (Please check appropriate responses)

1. Is this a USEPA (40 CFR Part 261)/State hazardous waste? If yes, contact your sales representative. ☐ Yes ☒ No
2. Is this waste included in one or more of categories below (Check all that apply)? If yes, attach supporting documentation. ☐ Yes ☒ No
   - ☐ Delisted Hazardous Waste
   - ☐ Excluded Wastes Under 40 CFR 261.4
   - ☐ Treated Hazardous Waste Debris
   - ☐ Treated Characteristic Hazardous Waste
3. Is the waste from a Federal (40 CFR 300, Appendix B) or state mandated clean-up? If yes, see instructions. ☐ Yes ☐ No
4. Does the waste represented by this waste profile sheet contain radioactive material? ☐ Yes ☒ No
   a. If yes, is disposal regulated by the Nuclear Regulatory Commission? n/a ☐ Yes ☐ No
   b. If yes, is disposal regulated by a State Agency for radioactive waste/NORM? n/a ☐ Yes ☐ No
5. Does the waste represented by this waste profile sheet contain concentrations of regulated Polychlorinated Biphenyls (PCBs)? ☐ Yes ☒ No
   a. If yes, is disposal regulated under TSCA? n/a ☐ Yes ☐ No
6. Does the waste contain untreated, regulated, medical or infectious waste? ☐ Yes ☒ No
7. Does the waste contain asbestos? ☐ Yes ☒ No If Yes, ☐ Friable ☐ Non Friable
8. Is this profile for remediation waste from a facility that is a major source of Hazardous Air Pollutants (Site Remediation NESHAP, 40 CFR 63 subpart GGGGG)? ☐ Yes ☒ No
   If yes, does the waste contain <500 ppmw VOHAPs at the point of determination? ☐ Yes ☒ No

E. Generator Certification (Please read and certify by signature below)

By signing this Generator's Waste Profile Sheet, I hereby certify that all:

1. Information submitted in this profile and all attached documents contain true and accurate descriptions of the waste material;
2. Relevant information within the possession of the Generator regarding known or suspected hazards pertaining to this waste has been disclosed to WM/the Contractor;
3. Analytical data attached pertaining to the profiled waste was derived from testing a representative sample in accordance with 40 CFR 261.20(c) or equivalent rules; and
4. Changes that occur in the character of the waste (i.e. changes in the process or new analytical) will be identified by the Generator and disclosed to WM (and the Contractor if applicable) prior to providing the waste to WM (and the Contractor if applicable).
5. Check all that apply:
   - ☒ Attached analytical pertains to the waste. Identify laboratory & sample ID #'s and parameters tested: BTEX, RBDMVOCs, TCLP lead, Gasoline, PAHs, Diesel # Pages: _____
   - ☐ Only the analyses identified on the attachment pertain to the waste (identify by laboratory & sample ID #'s and parameters tested). Attachment #: _____
   - ☐ Additional information necessary to characterize the profiled waste has been attached (other than analytical). Indicate the number of attached pages: _____
   - ☐ I am an agent signing on behalf of the Generator, and the delegation of authority to me from the Generator for this signature is available upon request.
   - ☐ By Generator process knowledge, the following waste is not a listed waste and is below all TCLP regulatory limits.

Certification Signature: Steve Williams **Title:** Maint. Coord.

Company Name: Conoco Phillips **Name (Print):** Steve Adams

Date: 1-28-08

FOR WM USE ONLY

Management Method: ☐ Landfill ☐ Bioremediation **Approval Decision:** ☐ Approved ☐ Not Approved

☐ Non-hazardous solidification ☐ Other: _____ Waste Approval Expiration Date: _____

Management Facility Precautions, Special Handling Procedures or Limitation on approval:

_____

_____

- ☐ Shall not contain free liquid
- ☐ Shipment must be scheduled into disposal facility
- ☐ Approval Number must accompany each shipment
- ☐ Waste Manifest must accompany load

WM Authorization Name / Title: _____ **Date:** _____

State Authorization (if Required): _____ **Date:** _____

©2007 Waste Management, Inc.

COP0021703

Hillsboro Landfill, Inc.

3205 SE MINTER BRIDGE ROAD HILLSBORO, OR 97123

PERMIT # 101016OR

Tracking Number 11676

PERMIT TO DISPOSE OF NON-HAZARDOUS MATERIALS

This permit authorizes disposal of Customer's waste materials in accordance with the Industrial Waste & Disposal Services Agreement dated *National*.

EXPIRES: 5/7/08

GENERATOR: CONOCOPHILLIPS	
DESCRIPTION: ***WELL INSTALLATION SOIL CUTTINGS AND CARBON***	**TONS:** ***20***
☒ **SPECIAL WASTE** ☐ **CS** ☐ **C&D** ☐ **CLEAN-UP**	
LOCATION: ***PORTLAND, OREGON 5528 NW DOANE AVE***	**COUNTY:** ***Multnomah***
CONTACT: ***JESSICA ECKART***	**PHONE:** ***503-691-2030***
	FAX: ***503-692-7074***

BILLING: ***Landfill account CONOCOPHILLIPS***	**PO#:** ***N/A***	**JOB#:** ***N/A***

We accept business checks, cash, VISA / Mastercard or charge(with prior approval)

SPECIAL HANDLING : ***NOTE: NO FREE LIQUIDS***

MK **TyT**

APPROVED: KC ***KRISTIN CASTNER*** DATE: ***02/11/08 10:06:02 AM***

A COPY OF THIS PERMIT MUST BE SHOWN BY EACH DRIVER

THERE IS A MINIMUM CHARGE OF $50-$60 FOR EACH LOAD OF SPECIAL WASTE

WASTE MANAGEMENT

HAZARDOUS WASTE IS STRICTLY PROHIBITED

TestAmerica
THE LEADER IN ENVIRONMENTAL TESTING

PORTLAND, OR 9405 S.W. NIMBUS AVENUE
BEAVERTON, OR 97008-7132
ph: (503) 906.9200 fax: (503) 906.9210

February 06, 2008

Jessica Eckart
Secor
7730 SW Mohawk Street
Tualatin, OR 97062

RE: Conoco Phillips

Enclosed are the results of analyses for samples received by the laboratory on 01/14/08 16:30. The following list is a summary of the Work Orders contained in this report, generated on 02/06/08 15:26.

If you have any questions concerning this report, please feel free to contact me.

Work Order	Project	ProjectNumber
PRA0372	Conoco Phillips	0922 Portland Terminal (COP)

TestAmerica Portland

Christina Woodcock, Project Manager

The results in this report apply to the samples analyzed in accordance with the chain of custody document. This analytical report shall not be reproduced except in full, without the written approval of the laboratory.

TestAmerica
THE LEADER IN ENVIRONMENTAL TESTING

PORTLAND, OR 9405 S.W. NIMBUS AVENUE
BEAVERTON, OR 97008-7132
ph: (503) 906.9200 fax: (503) 906.9210

Secor	Project Name:	**Conoco Phillips**	
7730 SW Mohawk Street	Project Number:	0922 Portland Terminal (COP)	Report Created:
Tualatin, OR 97062	Project Manager:	Jessica Eckart	02/06/08 15:26

ANALYTICAL REPORT FOR SAMPLES

Sample ID	Laboratory ID	Matrix	Date Sampled	Date Received
1-08-00RS-1	PRA0372-01	Other dry	01/14/08 13:50	01/14/08 16:30
1-08-00RS-2	PRA0372-02	Soil	01/14/08 14:00	01/14/08 16:30
1-08-00RS-11	PRA0372-03	Soil	01/14/08 13:50	01/14/08 16:30
1-08-00RS-22	PRA0372-04	Soil	01/14/08 14:00	01/14/08 16:30

TestAmerica Portland

Christina M. Woodcock

Christina Woodcock, Project Manager

The results in this report apply to the samples analyzed in accordance with the chain of custody document. This analytical report shall not be reproduced except in full, without the written approval of the laboratory.

TestAmerica
THE LEADER IN ENVIRONMENTAL TESTING

PORTLAND, OR 9405 S.W. NIMBUS AVENUE
BEAVERTON, OR 97008-7132
ph: (503) 906.9200 fax: (503) 906.9210

Secor	Project Name:	**Conoco Phillips**	
7730 SW Mohawk Street	Project Number:	0922 Portland Terminal (COP)	Report Created:
Tualatin, OR 97062	Project Manager:	Jessica Eckart	02/06/08 15:26

Gasoline Hydrocarbons per NW TPH-Gx Method

TestAmerica Portland

Analyte	Method	Result	MDL*	MRL	Units	Dil	Batch	Prepared	Analyzed	Notes
PRA0372-02 (1-08-00RS-2)		**Soil**			**Sampled: 01/14/08 14:00**					**Q8**
Gasoline Range Hydrocarbons	NW TPH-Gx	**133**	-----	9.49	mg/kg dry	1x	8010536	01/16/08 15:00	01/16/08 15:49	
Surrogate(s): a,a,a-TFT			*38.3%*		*50 - 150 %*	"			"	*Z*
PRA0372-03 (1-08-00RS-11)		**Soil**			**Sampled: 01/14/08 13:50**					**Q8**
Gasoline Range Hydrocarbons	NW TPH-Gx	**105**	-----	8.08	mg/kg dry	1x	8010536	01/16/08 15:00	01/16/08 16:16	
Surrogate(s): a,a,a-TFT			*38.4%*		*50 - 150 %*	"			"	*Z*
PRA0372-04 (1-08-00RS-22)		**Soil**			**Sampled: 01/14/08 14:00**					**Q8**
Gasoline Range Hydrocarbons	NW TPH-Gx	**120**	-----	9.26	mg/kg dry	1x	8010536	01/16/08 15:00	01/16/08 16:44	
Surrogate(s): a,a,a-TFT			*47.7%*		*50 - 150 %*	"			"	*Z*

TestAmerica Portland

Christina Woodcock, Project Manager

The results in this report apply to the samples analyzed in accordance with the chain of custody document. This analytical report shall not be reproduced except in full, without the written approval of the laboratory.

TestAmerica
THE LEADER IN ENVIRONMENTAL TESTING

PORTLAND, OR 9405 S.W. NIMBUS AVENUE
BEAVERTON, OR 97008-7132
ph: (503) 906.9200 fax: (503) 906.9210

Secor	Project Name:	**Conoco Phillips**	
7730 SW Mohawk Street	Project Number:	0922 Portland Terminal (COP)	Report Created:
Tualatin, OR 97062	Project Manager:	Jessica Eckart	02/06/08 15:26

Diesel and Heavy Range Hydrocarbons per NWTPH-Dx Method

TestAmerica Portland

Analyte	Method	Result	MDL*	MRL	Units	Dil	Batch	Prepared	Analyzed	Notes
PRA0372-02 (1-08-00RS-2)		**Soil**			**Sampled: 01/14/08 14:00**					
Diesel Range Organics	NWTPH-Dx	**2320**	-----	155	mg/kg dry	5x	8010606	01/18/08 11:30	01/21/08 09:57	Q9
Heavy Oil Range Hydrocarbons	"	**501**	-----	309	"	"	"	"	"	
Surrogate(s): 1-Chlorooctadecane			*32.1%*		*50 - 150 %*	"			"	*ZX*
PRA0372-03 (1-08-00RS-11)		**Soil**			**Sampled: 01/14/08 13:50**					
Diesel Range Organics	NWTPH-Dx	**6480**	-----	25.4	mg/kg dry	1x	8010606	01/18/08 11:30	01/18/08 21:29	Q9
Heavy Oil Range Hydrocarbons	"	**1380**	-----	50.9	"	"	"	"	"	
Surrogate(s): 1-Chlorooctadecane			*49.8%*		*50 - 150 %*	"			"	*ZX*
PRA0372-04 (1-08-00RS-22)		**Soil**			**Sampled: 01/14/08 14:00**					
Diesel Range Organics	NWTPH-Dx	**8760**	-----	29.3	mg/kg dry	1x	8010606	01/18/08 11:30	01/18/08 21:49	Q9
Heavy Oil Range Hydrocarbons	"	**1850**	-----	58.6	"	"	"	"	"	
Surrogate(s): 1-Chlorooctadecane			*32.9%*		*50 - 150 %*	"			"	*ZX*

TestAmerica Portland

Christina Woodcock, Project Manager

The results in this report apply to the samples analyzed in accordance with the chain of custody document. This analytical report shall not be reproduced except in full without the written approval of the laboratory.

TestAmerica
THE LEADER IN ENVIRONMENTAL TESTING

PORTLAND, OR 9405 S.W. NIMBUS AVENUE
BEAVERTON, OR 97008-7132
ph: (503) 906.9200 fax: (503) 906.9210

Secor	Project Name:	**Conoco Phillips**	
7730 SW Mohawk Street	Project Number:	0922 Portland Terminal (COP)	Report Created:
Tualatin, OR 97062	Project Manager:	Jessica Eckart	02/06/08 15:26

Total Metals per EPA 6000/7000 Series Methods

TestAmerica Portland

Analyte	Method	Result	MDL*	MRL	Units	Dil	Batch	Prepared	Analyzed	Notes
PRA0372-02 (1-08-00RS-2)		**Soil**			**Sampled: 01/14/08 14:00**					
Arsenic	EPA 6020	**135**	-----	1.21	mg/kg dry	1x	8010638	01/18/08 14:54	01/19/08 11:01	
Barium	"	**485**	-----	1.21	"	"	"	"	01/19/08 19:59	
Cadmium	"	ND	-----	1.21	"	"	"	"	01/19/08 11:01	
Chromium	"	**13.2**	-----	1.21	"	"	"	"	"	
Lead	"	**5.89**	-----	1.21	"	"	"	"	"	
Selenium	"	ND	-----	1.21	"	"	"	"	"	
Silver	"	ND	-----	1.21	"	"	"	"	"	
PRA0372-03 (1-08-00RS-11)		**Soil**			**Sampled: 01/14/08 13:50**					
Arsenic	EPA 6020	**133**	-----	1.02	mg/kg dry	1x	8010638	01/18/08 14:54	01/19/08 11:16	
Barium	"	**396**	-----	1.02	"	"	"	"	01/19/08 20:14	
Cadmium	"	ND	-----	1.02	"	"	"	"	01/19/08 11:16	
Chromium	"	**14.8**	-----	1.02	"	"	"	"	"	
Lead	"	**5.76**	-----	1.02	"	"	"	"	"	
Selenium	"	ND	-----	1.02	"	"	"	"	"	
Silver	"	ND	-----	1.02	"	"	"	"	"	
PRA0372-04 (1-08-00RS-22)		**Soil**			**Sampled: 01/14/08 14:00**					
Arsenic	EPA 6020	**123**	-----	1.24	mg/kg dry	1x	8010638	01/18/08 14:54	01/19/08 11:39	
Barium	"	**440**	-----	1.24	"	"	"	"	01/19/08 20:36	
Cadmium	"	ND	-----	1.24	"	"	"	"	01/19/08 11:39	
Chromium	"	**14.5**	-----	1.24	"	"	"	"	"	
Lead	"	**9.53**	-----	1.24	"	"	"	"	"	
Selenium	"	ND	-----	1.24	"	"	"	"	"	
Silver	"	ND	-----	1.24	"	"	"	"	"	

TestAmerica Portland

Christina Woodcock

Christina Woodcock, Project Manager

The results in this report apply to the samples analyzed in accordance with the chain of custody document. This analytical report shall not be reproduced except in full, without the written approval of the laboratory.

TestAmerica
THE LEADER IN ENVIRONMENTAL TESTING

PORTLAND, OR 9405 S.W. NIMBUS AVENUE
BEAVERTON, OR 97008-7132
ph: (503) 906.9200 fax: (503) 906.9210

Secor	Project Name:	**Conoco Phillips**	
7730 SW Mohawk Street	Project Number:	0922 Portland Terminal (COP)	Report Created:
Tualatin, OR 97062	Project Manager:	Jessica Eckart	02/06/08 15:26

TCLP Metals per EPA 1311/6000/7000 Series Methods

TestAmerica Portland

Analyte	Method	Result	MDL*	MRL	Units	Dil	Batch	Prepared	Analyzed	Notes
PRA0372-01 (1-08-00RS-1)		**Other dry**			**Sampled: 01/14/08 13:50**					
Lead	1311/6020	ND	-----	0.0500	mg/l	1x	8010545	01/16/08 15:29	01/17/08 18:34	
PRA0372-02 (1-08-00RS-2)		**Soil**			**Sampled: 01/14/08 14:00**					
Arsenic	1311/6020	ND	-----	0.0500	mg/l	1x	8020024	02/01/08 14:50	02/06/08 01:59	
PRA0372-03 (1-08-00RS-11)		**Soil**			**Sampled: 01/14/08 13:50**					
Arsenic	1311/6020	ND	-----	0.0500	mg/l	1x	8010643	01/18/08 16:52	01/19/08 08:20	
Lead	"	ND	-----	0.0500	"	"	"	"	"	
PRA0372-04 (1-08-00RS-22)		**Soil**			**Sampled: 01/14/08 14:00**					
Arsenic	1311/6020	ND	-----	0.0500	mg/l	1x	8020024	02/01/08 14:50	02/06/08 02:14	

TestAmerica Portland

Christina M. Woodcock

Christina Woodcock, Project Manager

The results in this report apply to the samples analyzed in accordance with the chain of custody document. This analytical report shall not be reproduced except in full, without the written approval of the laboratory.

TestAmerica
THE LEADER IN ENVIRONMENTAL TESTING

PORTLAND, OR 9405 S.W. NIMBUS AVENUE
BEAVERTON, OR 97008-7132
ph: (503) 906.9200 fax: (503) 906.9210

Secor	Project Name:	**Conoco Phillips**	
7730 SW Mohawk Street	Project Number:	0922 Portland Terminal (COP)	Report Created:
Tualatin, OR 97062	Project Manager:	Jessica Eckart	02/06/08 15:26

Total Mercury per EPA Method 7471A

TestAmerica Portland

Analyte	Method	Result	MDL*	MRL	Units	Dil	Batch	Prepared	Analyzed	Notes
PRA0372-02 (1-08-00RS-2)		**Soil**			**Sampled: 01/14/08 14:00**					
Mercury	EPA 7471A	ND	-----	0.121	mg/kg dry	1x	8010607	01/18/08 08:23	01/18/08 11:21	
PRA0372-03 (1-08-00RS-11)		**Soil**			**Sampled: 01/14/08 13:50**					
Mercury	EPA 7471A	ND	-----	0.155	mg/kg dry	1x	8010607	01/18/08 08:23	01/18/08 11:23	
PRA0372-04 (1-08-00RS-22)		**Soil**			**Sampled: 01/14/08 14:00**					
Mercury	EPA 7471A	ND	-----	0.149	mg/kg dry	1x	8010607	01/18/08 08:23	01/18/08 11:25	

TestAmerica Portland

Christina M. Woodcock

Christina Woodcock, Project Manager

The results in this report apply to the samples analyzed in accordance with the chain of custody document. This analytical report shall not be reproduced except in full, without the written approval of the laboratory.

TestAmerica
THE LEADER IN ENVIRONMENTAL TESTING

PORTLAND, OR 9405 S.W. NIMBUS AVENUE
BEAVERTON, OR 97008-7132
ph: (503) 906.9200 fax: (503) 906.9210

Secor	Project Name:	**Conoco Phillips**	
7730 SW Mohawk Street	Project Number:	0922 Portland Terminal (COP)	Report Created:
Tualatin, OR 97062	Project Manager:	Jessica Eckart	02/06/08 15:26

Selected Volatile Organic Compounds (Including BTEX) per EPA Method 8260B

TestAmerica Portland

Analyte	Method	Result	MDL*	MRL	Units	Dil	Batch	Prepared	Analyzed	Notes
PRA0372-02RE1 (1-08-00RS-2)		**Soil**			**Sampled: 01/14/08 14:00**					
Benzene	EPA 8260B	ND	-----	47.5	ug/kg dry	1x	8010916	01/25/08 16:39	01/25/08 22:41	
Toluene	"	ND	----	119	"	"	"	"	"	
Ethylbenzene	"	ND	----	119	"	"	"	"	"	
Xylenes (total)	"	ND	-----	237	"	"	"	"	"	
Methyl tert-butyl ether	"	**159**	-----	94.9	"	"	"	"	"	
Surrogate(s): 4-BFB		*103%*			*75 - 125 %*	*0.01x*			"	
1,2-DCA-d4		*83.0%*			*75 - 125 %*	"			"	
Dibromofluoromethane		*87.6%*			*75 - 125 %*	"			"	
Toluene-d8		*96.8%*			*75 - 125 %*	"			"	
PRA0372-03RE1 (1-08-00RS-11)		**Soil**			**Sampled: 01/14/08 13:50**					
Benzene	EPA 8260B	ND	-----	40.4	ug/kg dry	1x	8010916	01/25/08 16:39	01/25/08 23:08	
Toluene	"	ND	-----	101	"	"	"	"	"	
Ethylbenzene	"	ND	-----	101	"	"	"	"	"	
Xylenes (total)	"	ND	----	202	"	"	"	"	"	
Methyl tert-butyl ether	"	**95.0**	----	80.8	"	"	"	"	"	
Surrogate(s): 4-BFB		*104%*			*75 - 125 %*	*0.01x*			"	
1,2-DCA-d4		*82.4%*			*75 - 125 %*	"			"	
Dibromofluoromethane		*88.0%*			*75 - 125 %*	"			"	
Toluene-d8		*98.0%*			*75 - 125 %*	"			"	
PRA0372-04RE1 (1-08-00RS-22)		**Soil**			**Sampled: 01/14/08 14:00**					
Benzene	EPA 8260B	ND	-----	46.3	ug/kg dry	1x	8010916	01/25/08 16:39	01/25/08 23:36	
Toluene	"	ND	-----	116	"	"	"	"	"	
Ethylbenzene	"	ND	-----	116	"	"	"	"	"	
Xylenes (total)	"	ND	-----	232	"	"	"	"	"	
Methyl tert-butyl ether	"	**106**	-----	92.6	"	"	"	"	"	
Surrogate(s): 4-BFB		*104%*			*75 - 125 %*	*0.01x*			"	
1,2-DCA-d4		*78.0%*			*75 - 125 %*	"			"	
Dibromofluoromethane		*86.3%*			*75 - 125 %*	"			"	
Toluene-d8		*97.0%*			*75 - 125 %*	"			"	

TestAmerica Portland

Christine Woodcock

Christine Woodcock, Project Manager

The results in this report apply to the samples analyzed in accordance with the chain of custody document. This analytical report shall not be reproduced except in full, without the written approval of the laboratory.

TestAmerica
THE LEADER IN ENVIRONMENTAL TESTING

PORTLAND, OR 9405 S.W. NIMBUS AVENUE
BEAVERTON, OR 97008-7132
ph: (503) 906.9200 fax: (503) 906.9210

Secor	Project Name:	**Conoco Phillips**	
7730 SW Mohawk Street	Project Number:	0922 Portland Terminal (COP)	Report Created:
Tualatin, OR 97062	Project Manager:	Jessica Eckart	02/06/08 15:26

Polynuclear Aromatic Compounds per EPA 8270M-SIM

TestAmerica Portland

Analyte	Method	Result	MDL^A	MRL	Units	Dil	Batch	Prepared	Analyzed	Notes
PRA0372-03 (1-08-00RS-11)		Soil			Sampled: 01/14/08 13:50					RL3
Acenaphthene	EPA 8270m	**1340**	-----	273	ug/kg dry	10x	8010501	01/16/08 15:45	01/17/08 16:43	
Acenaphthylene	"	ND	-----	1360	"	50x	"	"	01/17/08 11:11	RL1
Anthracene	"	**1630**	-----	273	"	10x	"	"	01/17/08 16:43	
Benzo (a) anthracene	"	**320**	-----	273	"	"	"	"	"	
Benzo (a) pyrene	"	ND	-----	273	"	"	"	"	"	
Benzo (b) fluoranthene	"	ND	-----	273	"	"	"	"	"	
Benzo (ghi) perylene	"	ND	-----	273	"	"	"	"	"	
Benzo (k) fluoranthene	"	ND	-----	273	"	"	"	"	"	
Chrysene	"	**597**	-----	273	"	"	"	"	"	
Dibenzo (a,h) anthracene	"	ND	-----	273	"	"	"	"	"	
Fluoranthene	"	**528**	-----	273	"	"	"	"	"	
Fluorene	"	**2290**	-----	273	"	"	"	"	"	
Indeno (1,2,3-cd) pyrene	"	ND	-----	273	"	"	"	"	"	
Naphthalene	"	ND	-----	1360	"	50x	"	"	01/17/08 11:11	RL1
Phenanthrene	"	**5350**	-----	273	"	10x	"	"	01/17/08 16:43	
Pyrene	"	**1680**	-----	273	"	"	"	"	"	
Surrogate(s):	*Fluorene-d10*		*NR*		*24 - 125 %*	"			"	*Z9*
	Pyrene-d10		*62.5%*		*41 - 141 %*	"			"	
	Benzo (a) pyrene-d12		*85.2%*		*38 - 143 %*	"			"	

TestAmerica Portland

Christina M. Woodcock

Christina Woodcock, Project Manager

The results in this report apply to the samples analyzed in accordance with the chain of custody document. This analytical report shall not be reproduced except in full, without the written approval of the laboratory.

TestAmerica
THE LEADER IN ENVIRONMENTAL TESTING

PORTLAND, OR 9405 S.W. NIMBUS AVENUE
BEAVERTON, OR 97008-7132
ph: (503) 906.9200 fax: (503) 906.9210

Secor	Project Name:	Conoco Phillips	
7730 SW Mohawk Street	Project Number:	0922 Portland Terminal (COP)	Report Created:
Tualatin, OR 97062	Project Manager:	Jessica Eckart	02/06/08 15:26

TCLP Extraction Only

TestAmerica Portland

Analyte		Method	Result	MDL[A]	MRL	Units	Dil	Batch	Prepared	Analyzed	Notes
PRA0372-01	**(1-08-00RS-1)**		**Other dry**			**Sampled: 01/14/08 13:50**					
Extraction		EPA 1311	ND	-----	1.00	N/A	1x	8010498	01/15/08 21:15	01/16/08 15:21	
PRA0372-02	**(1-08-00RS-2)**		**Soil**			**Sampled: 01/14/08 14:00**					
Extraction		EPA 1311	ND	-----	1.00	N/A	1x	8011114	01/31/08 19:04	02/01/08 15:45	
PRA0372-03	**(1-08-00RS-11)**		**Soil**			**Sampled: 01/14/08 13:50**					
Extraction		EPA 1311	ND	-----	1.00	N/A	1x	8010600	01/17/08 20:39	01/18/08 16:14	
PRA0372-04	**(1-08-00RS-22)**		**Soil**			**Sampled: 01/14/08 14:00**					
Extraction		EPA 1311	ND	-----	1.00	N/A	1x	8011114	01/31/08 19:04	02/01/08 15:45	

TestAmerica Portland

Christina Woodcock, Project Manager

The results in this report apply to the samples analyzed in accordance with the chain of custody document. This analytical report shall not be reproduced except in full, without the written approval of the laboratory.

TestAmerica
THE LEADER IN ENVIRONMENTAL TESTING

PORTLAND, OR 9405 S.W. NIMBUS AVENUE
BEAVERTON, OR 97008-7132
ph: (503) 906.9200 fax: (503) 906.9210

Secor	Project Name:	**Conoco Phillips**	
7730 SW Mohawk Street	Project Number:	0922 Portland Terminal (COP)	Report Created:
Tualatin, OR 97062	Project Manager:	Jessica Eckart	02/06/08 15:26

Percent Dry Weight (Solids) per Standard Methods

TestAmerica Portland

Analyte	Method	Result	MDL[A]	MRL	Units	Dil	Batch	Prepared	Analyzed	Notes
PRA0372-02 (1-08-00RS-2)		**Soil**			**Sampled: 01/14/08 14:00**					
% Solids	NCA SOP	41.4	-----	0.0100	% by Weight	1x	8010544	01/16/08 15:04	01/16/08 15:04	
PRA0372-03 (1-08-00RS-11)		**Soil**			**Sampled: 01/14/08 13:50**					
% Solids	NCA SOP	49.0	-----	0.0100	% by Weight	1x	8010544	01/16/08 15:04	01/16/08 15:04	
PRA0372-04 (1-08-00RS-22)		**Soil**			**Sampled: 01/14/08 14:00**					
% Solids	NCA SOP	42.1	----	0.0100	% by Weight	1x	8010544	01/16/08 15:04	01/16/08 15:04	

TestAmerica Portland

Christina Woodcock, Project Manager

The results in this report apply to the samples analyzed in accordance with the chain of custody document. This analytical report shall not be reproduced except in full, without the written approval of the laboratory.

TestAmerica
THE LEADER IN ENVIRONMENTAL TESTING

PORTLAND, OR 9405 S.W. NIMBUS AVENUE
BEAVERTON, OR 97008-7132
ph: (503) 906.9200 fax: (503) 906.9210

Secor	Project Name:	**Conoco Phillips**	
7730 SW Mohawk Street	Project Number:	0922 Portland Terminal (COP)	Report Created:
Tualatin, OR 97062	Project Manager:	Jessica Eckart	02/06/08 15:26

Gasoline Hydrocarbons per NW TPH-Gx Method - Laboratory Quality Control Results

TestAmerica Portland

QC Batch: 8010536 **Soil Preparation Method: EPA 5035 Modified**

Analyte	Method	Result	MDL*	MRL	Units	Dil	Source Result	Spike Amt	% REC	(Limits)	% RPD	(Limits)	Analyzed	Notes
Blank (8010536-BLK1)								Extracted: 01/16/08 13:30						
Gasoline Range Hydrocarbons	NW TPH-Gx	ND	---	3.82	mg/kg wet	1x	--	--	--	--	--	--	01/16/08 14:37	
Surrogate(s): a,a,a-TFT		*Recovery: 94.8%*			*Limits: 50-150%*	"							*01/16/08 14:37*	
LCS (8010536-BS1)								Extracted: 01/16/08 13:30						
Gasoline Range Hydrocarbons	NW TPH-Gx	21.4	---	3.85	mg/kg wet	1x	--	24.0	89.2%	(70-130)	--	--	01/16/08 14:09	
Surrogate(s): a,a,a-TFT		*Recovery: 98.0%*			*Limits: 50-150%*	"							*01/16/08 14:09*	
Duplicate (8010536-DUP1)					QC Source: PQK0032-01			Extracted: 01/16/08 13:30						
Gasoline Range Hydrocarbons	NW TPH-Gx	ND	---	4.85	mg/kg dry	1x	ND	--	--	--	NR	(40)	01/18/08 10:52	
Surrogate(s): a,a,a-TFT		*Recovery: 85.6%*			*Limits: 50-150%*	"							*01/18/08 10:52*	
Matrix Spike (8010536-MS1)					QC Source: PQK0032-03			Extracted: 01/16/08 13:30						M8
Gasoline Range Hydrocarbons	NW TPH-Gx	14.8	---	4.19	mg/kg dry	1x	1.14	26.2	52.2%	(65-130)	--	--	01/18/08 11:20	
Surrogate(s): a,a,a-TFT		*Recovery: 90.9%*			*Limits: 50-150%*	"							*01/18/08 11:20*	

TestAmerica Portland

Christina Woodcock, Project Manager

The results in this report apply to the samples analyzed in accordance with the chain of custody document. This analytical report shall not be reproduced except in full, without the written approval of the laboratory.

TestAmerica
THE LEADER IN ENVIRONMENTAL TESTING

PORTLAND, OR 9405 S.W. NIMBUS AVENUE
BEAVERTON, OR 97008-7132
ph: (503) 906.9200 fax: (503) 906.9210

Secor	Project Name:	**Conoco Phillips**	
7730 SW Mohawk Street	Project Number:	0922 Portland Terminal (COP)	Report Created:
Tualatin, OR 97062	Project Manager:	Jessica Eckart	02/06/08 15:26

Diesel and Heavy Range Hydrocarbons per NWTPH-Dx Method - Laboratory Quality Control Results

TestAmerica Portland

QC Batch: 8010606 **Soil Preparation Method: EPA 3550 Fuels**

Analyte	Method	Result	MDL[A]	MRL	Units	Dil	Source Result	Spike Amt	% REC	(Limits)	% RPD	(Limits)	Analyzed	Notes
Blank (8010606-BLK1)								Extracted: 01/18/08 11:30						
Diesel Range Organics	NWTPH-Dx	ND	---	12.5	mg/kg wet	1x	--	--	--	--	--	--	01/18/08 15:34	
Heavy Oil Range Hydrocarbons	"	ND	---	25.0	"	"	--	--	--	--	--	--	"	
Surrogate(s): 1-Chlorooctadecane		*Recovery: 82.5%*			*Limits: 50-150%*	"							*01/18/08 15:34*	
LCS (8010606-BS1)								Extracted: 01/18/08 11:30						
Diesel Range Organics	NWTPH-Dx	122	---	12.5	mg/kg wet	1x	--	125	97.1%	(50-150)	--	--	01/18/08 15:54	
Heavy Oil Range Hydrocarbons	"	76.9	---	25.0	"	"	--	75.2	102%	"	--	--	"	
Surrogate(s): 1-Chlorooctadecane		*Recovery: 98.1%*			*Limits: 50-150%*	"							*01/18/08 15:54*	
Duplicate (8010606-DUP1)					QC Source: PRA0372-02			Extracted: 01/18/08 11:30						
Diesel Range Organics	NWTPH-Dx	3210	---	153	mg/kg dry	5x	2320	--	--	--	32.5%	(40)	01/21/08 09:40	Q9
Heavy Oil Range Hydrocarbons	"	705	---	306	"	"	501	--	--	--	33.9%	"	"	
Surrogate(s): 1-Chlorooctadecane		*Recovery: 12.5%*			*Limits: 50-150%*	"							*01/21/08 09:40*	*ZX*
Duplicate (8010606-DUP2)					QC Source: PRA0479-01			Extracted: 01/18/08 11:30						
Diesel Range Organics	NWTPH-Dx	ND	---	16.9	mg/kg dry	1x	23.6	--	--	--	50.1%	(40)	01/18/08 16:14	R3
Heavy Oil Range Hydrocarbons	"	36.2	---	33.8	"	"	65.5	--	--	--	57.7%	"	"	R3
Surrogate(s): 1-Chlorooctadecane		*Recovery: 87.9%*			*Limits: 50-150%*	"							*01/18/08 16:14*	
Matrix Spike (8010606-MS1)					QC Source: PQK0032-03			Extracted: 01/18/08 11:30						
Diesel Range Organics	NWTPH-Dx	118	---	14.0	mg/kg dry	1x	ND	141	83.8%	(50-150)	--	--	01/18/08 16:34	
Heavy Oil Range Hydrocarbons	"	78.5	---	28.1	"	"	ND	84.4	92.9%	"	--	--	"	
Surrogate(s): 1-Chlorooctadecane		*Recovery: 83.5%*			*Limits: 50-150%*	"							*01/18/08 16:34*	
Matrix Spike Dup (8010606-MSD1)					QC Source: PQK0032-03			Extracted: 01/18/08 11:30						
Diesel Range Organics	NWTPH-Dx	117	---	13.9	mg/kg dry	1x	ND	139	83.9%	(50-150)	1.05%	(40)	01/18/08 16:54	
Heavy Oil Range Hydrocarbons	"	76.4	---	27.7	"	"	ND	83.5	91.5%	"	2.67%	"	"	
Surrogate(s): 1-Chlorooctadecane		*Recovery: 82.3%*			*Limits: 50-150%*	"							*01/18/08 16:54*	

TestAmerica Portland

Christina M. Woodcock

Christina Woodcock, Project Manager

The results in this report apply to the samples analyzed in accordance with the chain of custody document. This analytical report shall not be reproduced except in full, without the written approval of the laboratory.

TestAmerica
THE LEADER IN ENVIRONMENTAL TESTING

PORTLAND, OR 9405 S.W. NIMBUS AVENUE
BEAVERTON, OR 97008-7132
ph: (503) 906.9200 fax: (503) 906.9210

Secor	Project Name:	**Conoco Phillips**	
7730 SW Mohawk Street	Project Number:	0922 Portland Terminal (COP)	Report Created:
Tualatin, OR 97062	Project Manager:	Jessica Eckart	02/06/08 15:26

Total Metals per EPA 6000/7000 Series Methods - Laboratory Quality Control Results

TestAmerica Portland

QC Batch: 8010638 **Soil Preparation Method: EPA 3050**

Analyte	Method	Result	MDL*	MRL	Units	Dil	Source Result	Spike Amt	% REC	(Limits)	% RPD	(Limits)	Analyzed	Notes
Blank (8010638-BLK1)								Extracted: 01/18/08 14:54						
Arsenic	EPA 6020	ND	---	0.495	mg/kg wet	1x	--	--	--	--	--	--	01/19/08 10:05	
Barium	"	ND	---	0.495	"	"	--	--	--	--	--	--	01/19/08 19:07	
Cadmium	"	ND	---	0.495	"	"	--	--	--	--	--	--	01/19/08 10:05	
Chromium	"	ND	---	0.495	"	"	--	--	--	--	--	--	"	
Lead	"	ND	---	0.495	"	"	--	--	--	--	--	--	"	
Selenium	"	ND	---	0.495	"	"	--	--	--	--	--	--	"	
Silver	"	ND	---	0.495	"	"	--	--	--	--	--	--	"	
LCS (8010638-BS1)								Extracted: 01/18/08 14:54						
Arsenic	EPA 6020	11.2	---	0.476	mg/kg wet	1x	--	9.52	118%	(80-120)	--	--	01/19/08 10:12	
Barium	"	9.59	---	0.476	"	"	--	"	101%	"	--	--	01/19/08 19:14	
Cadmium	"	10.6	---	0.476	"	"	--	"	111%	"	--	--	01/19/08 10:12	
Chromium	"	10.3	---	0.476	"	"	--	"	108%	"	--	--	01/19/08 13:32	
Lead	"	10.6	---	0.476	"	"	--	"	112%	"	--	--	01/19/08 10:12	
Selenium	"	9.15	---	0.476	"	"	--	"	96.1%	"	--	--	"	
Silver	"	5.24	---	0.476	"	"	--	4.76	110%	"	--	--	"	
Duplicate (8010638-DUP1)				QC Source: PRA0270-01				Extracted: 01/18/08 14:54						
Arsenic	EPA 6020	3.09	---	0.698	mg/kg dry	1x	3.21	--	--	--	3.84%	(40)	01/19/08 10:27	
Barium	"	151	---	0.698	"	"	159	--	--	--	5.58%	"	01/19/08 19:29	
Cadmium	"	ND	---	0.698	"	"	ND	--	--	--	9.52%	"	01/19/08 10:27	
Chromium	"	22.8	---	0.698	"	"	24.1	--	--	--	5.71%	"	"	
Lead	"	4.22	---	0.698	"	"	4.50	--	--	--	6.47%	"	"	
Selenium	"	ND	---	0.698	"	"	ND	--	--	--	NR	"	"	
Silver	"	ND	---	0.698	"	"	ND	--	--	--	14.4%	"	"	
Matrix Spike (8010638-MS1)				QC Source: PRA0270-02				Extracted: 01/18/08 14:54						
Arsenic	EPA 6020	16.4	---	0.665	mg/kg dry	1x	3.52	13.3	97.0%	(75-125)	--	--	01/19/08 10:54	
Barium	"	150	---	0.665	"	"	121	"	221%	"	--	--	01/19/08 19:52	M7
Cadmium	"	14.3	---	0.665	"	"	0.132	"	106%	"	--	--	01/19/08 10:54	
Chromium	"	34.1	---	0.665	"	"	15.7	"	139%	"	--	--	"	M7
Lead	"	19.6	---	0.665	"	"	5.78	"	104%	"	--	--	"	
Selenium	"	11.7	---	0.665	"	"	ND	"	88.2%	"	--	--	"	
Silver	"	6.77	---	0.665	"	"	ND	6.65	102%	"	--	--	"	

TestAmerica Portland

Christina Woodcock, Project Manager

The results in this report apply to the samples analyzed in accordance with the chain of custody document. This analytical report shall not be reproduced except in full, without the written approval of the laboratory.

TestAmerica
THE LEADER IN ENVIRONMENTAL TESTING

PORTLAND, OR 9405 S.W. NIMBUS AVENUE
BEAVERTON, OR 97008-7132
ph: (503) 906.9200 fax: (503) 906.9210

Secor	Project Name:	Conoco Phillips	
7730 SW Mohawk Street	Project Number:	0922 Portland Terminal (COP)	Report Created:
Tualatin, OR 97062	Project Manager:	Jessica Eckart	02/06/08 15:26

Total Metals per EPA 6000/7000 Series Methods - Laboratory Quality Control Results

TestAmerica Portland

QC Batch: 8010638 **Soil Preparation Method: EPA 3050**

Analyte	Method	Result	MDL*	MRL	Units	Dil	Source Result	Spike Amt	% REC	(Limits)	% RPD	(Limits)	Analyzed	Notes
Matrix Spike (8010638-MS2)				QC Source: PRA0372-02				Extracted: 01/18/08 14:54						
Arsenic	EPA 6020	139	---	1.23	mg/kg dry	1x	135	24.6	18.1%	(75-125)	--	--	01/19/08 11:09	M8
Barium	"	420	---	1.23	"	"	485	"	-262%	"	--	--	01/19/08 20:07	M8
Cadmium	"	26.9	---	1.23	"	"	0.338	"	108%	"	--	--	01/19/08 11:09	
Chromium	"	41.3	---	1.23	"	"	13.2	"	114%	"	--	--	"	
Lead	"	29.4	---	1.23	"	"	5.89	"	95.4%	"	--	--	"	
Selenium	"	21.5	---	1.23	"	"	ND	"	87.4%	"	--	--	"	
Silver	"	12.9	---	1.23	"	"	0.193	12.3	103%	"	--	--	"	

TestAmerica Portland

Christina M. Woodcock

Christina Woodcock, Project Manager

The results in this report apply to the samples analyzed in accordance with the chain of custody document. This analytical report shall not be reproduced except in full, without the written approval of the laboratory.

TestAmerica
THE LEADER IN ENVIRONMENTAL TESTING

PORTLAND, OR 9405 S.W. NIMBUS AVENUE
BEAVERTON, OR 97008-7132
ph: (503) 906.9200 fax: (503) 906.9210

Secor	Project Name:	**Conoco Phillips**	
7730 SW Mohawk Street	Project Number:	0922 Portland Terminal (COP)	Report Created:
Tualatin, OR 97062	Project Manager:	Jessica Eckart	02/06/08 15:26

TCLP Metals per EPA 1311/6000/7000 Series Methods - Laboratory Quality Control Results

TestAmerica Portland

QC Batch: 8010545 **Other dry Preparation Method: EPA 1311/3005**

Analyte	Method	Result	MDL*	MRL	Units	Dil	Source Result	Spike Amt	% REC	(Limits)	% RPD	(Limits)	Analyzed	Notes
Blank (8010545-BLK1)								Extracted: 01/16/08 15:29						
Lead	1311/6020	ND	---	0.0500	mg/l	1x	--	--	--	--	--	--	01/17/08 18:19	
LCS (8010545-BS1)								Extracted: 01/16/08 15:29						
Lead	1311/6020	0.193	---	0.0500	mg/l	1x	--	0.200	96.3%	(75-125)	--	--	01/17/08 18:27	
Duplicate (8010545-DUP1)				QC Source: PRA0372-01				Extracted: 01/16/08 15:29						
Lead	1311/6020	ND	---	0.0500	mg/l	1x	ND	--	--	--	NR	(20)	01/17/08 18:41	
Matrix Spike (8010545-MS1)				QC Source: PRA0372-01				Extracted: 01/16/08 15:29						
Lead	1311/6020	0.192	---	0.0500	mg/l	1x	ND	0.200	96.0%	(50-150)	--	--	01/17/08 18:56	

QC Batch: 8010643 **Soil Preparation Method: EPA 1311/3005**

Analyte	Method	Result	MDL*	MRL	Units	Dil	Source Result	Spike Amt	% REC	(Limits)	% RPD	(Limits)	Analyzed	Notes
Blank (8010643-BLK1)								Extracted: 01/18/08 16:52						
Arsenic	1311/6020	ND	---	0.0500	mg/l	1x	--	--	--	--	--	--	01/19/08 07:20	
Lead	"	ND	---	0.0500	"	"	--	--	--	--	--	--	"	
LCS (8010643-BS1)								Extracted: 01/18/08 16:52						
Arsenic	1311/6020	0.214	---	0.0500	mg/l	1x	--	0.200	107%	(75-125)	--	--	01/19/08 07:28	
Lead	"	0.176	---	0.0500	"	"	--	"	88.1%	"	--	--	"	
Duplicate (8010643-DUP1)				QC Source: PQL0744-01				Extracted: 01/18/08 16:52						
Arsenic	1311/6020	ND	---	0.0500	mg/l	1x	ND	--	--	--	5.19%	(20)	01/19/08 07:43	
Lead	"	ND	---	0.0500	"	"	ND	--	--	--	4.44%	"	"	
Matrix Spike (8010643-MS1)				QC Source: PRA0303-01				Extracted: 01/18/08 16:52						
Arsenic	1311/6020	0.229	---	0.0500	mg/l	1x	0.0188	0.200	105%	(50-150)	--	--	01/19/08 08:05	
Lead	"	0.179	---	0.0500	"	"	0.00200	"	88.6%	"	--	--	"	
Matrix Spike (8010643-MS2)				QC Source: PRA0372-03				Extracted: 01/18/08 16:52						
Arsenic	1311/6020	0.220	---	0.0500	mg/l	1x	ND	0.200	110%	(50-150)	--	--	01/19/08 08:28	
Lead	"	0.175	---	0.0500	"	"	ND	"	87.6%	"	--	--	"	
Matrix Spike (8010643-MS3)				QC Source: PRA0426-02				Extracted: 01/18/08 16:52						
Arsenic	1311/6020	0.482	---	0.0500	mg/l	1x	0.218	0.200	132%	(50-150)	--	--	01/19/08 08:57	
Lead	"	8.11	---	0.0500	"	"	7.83	"	139%	"	--	--	"	

TestAmerica Portland

Christina Woodcock, Project Manager

The results in this report apply to the samples analyzed in accordance with the chain of custody document. This analytical report shall not be reproduced except in full, without the written approval of the laboratory.

TestAmerica
THE LEADER IN ENVIRONMENTAL TESTING

PORTLAND, OR 9405 S.W. NIMBUS AVENUE
BEAVERTON, OR 97008-7132
ph: (503) 906.9200 fax: (503) 906.9210

Secor	Project Name:	**Conoco Phillips**	
7730 SW Mohawk Street	Project Number:	0922 Portland Terminal (COP)	Report Created:
Tualatin, OR 97062	Project Manager:	Jessica Eckart	02/06/08 15:26

TCLP Metals per EPA 1311/6000/7000 Series Methods - Laboratory Quality Control Results

TestAmerica Portland

QC Batch: 8020024 **Soil Preparation Method: EPA 1311/3005**

Analyte	Method	Result	MDL*	MRL	Units	Dil	Source Result	Spike Amt	% REC	(Limits)	% RPD	(Limits)	Analyzed	Notes
Blank (8020024-BLK1)								Extracted: 02/01/08 14:50						
Arsenic	1311/6020	ND	---	0.0500	mg/l	1x	--	--	--	--	--	--	02/06/08 01:43	
LCS (8020024-BS1)								Extracted: 02/01/08 14:50						
Arsenic	1311/6020	0.216	---	0.0500	mg/l	1x	--	0.200	108%	(75-125)	--	--	02/06/08 01:51	
Duplicate (8020024-DUP1)				QC Source: PRA0372-02				Extracted: 02/01/08 14:50						
Arsenic	1311/6020	ND	---	0.0500	mg/l	1x	ND	--	--	--	NR	(20)	02/06/08 02:06	
Matrix Spike (8020024-MS1)				QC Source: PRA0372-04				Extracted: 02/01/08 14:50						
Arsenic	1311/6020	0.215	---	0.0500	mg/l	1x	ND	0.200	107%	(50-150)	--	--	02/06/08 02:29	
Matrix Spike (8020024-MS2)				QC Source: PRA0600-01				Extracted: 02/01/08 14:50						
Arsenic	1311/6020	0.216	---	0.0500	mg/l	1x	ND	0.200	108%	(50-150)	--	--	02/06/08 02:44	

TestAmerica Portland

Christina Woodcock, Project Manager

The results in this report apply to the samples analyzed in accordance with the chain of custody document. This analytical report shall not be reproduced except in full, without the written approval of the laboratory.

TestAmerica
THE LEADER IN ENVIRONMENTAL TESTING

PORTLAND, OR 9405 S.W. NIMBUS AVENUE
BEAVERTON, OR 97008-7132
ph: (503) 906.9200 fax: (503) 906.9210

Secor	Project Name:	**Conoco Phillips**	
7730 SW Mohawk Street	Project Number:	0922 Portland Terminal (COP)	Report Created:
Tualatin, OR 97062	Project Manager:	Jessica Eckart	02/06/08 15:26

Total Mercury per EPA Method 7471A - Laboratory Quality Control Results

TestAmerica Portland

QC Batch: 8010607 **Soil Preparation Method: EPA 7471A**

Analyte	Method	Result	MDL*	MRL	Units	Dil	Source Result	Spike Amt	% REC	(Limits)	% RPD	(Limits)	Analyzed	Notes
Blank (8010607-BLK1)								Extracted: 01/18/08 08:23						
Mercury	EPA 7471A	ND	---	0.100	mg/kg wet	1x	--	--	--	--	--	--	01/18/08 11:01	
LCS (8010607-BS1)								Extracted: 01/18/08 08:23						
Mercury	EPA 7471A	1.02	---	0.100	mg/kg wet	1x	--	1.00	102%	(80-120)	--	--	01/18/08 11:03	
LCS Dup (8010607-BSD1)								Extracted: 01/18/08 08:23						
Mercury	EPA 7471A	1.02	---	0.100	mg/kg wet	1x	--	1.00	102%	(80-120)	0.535%	(20)	01/18/08 11:07	
Duplicate (8010607-DUP1)				QC Source: PRA0411-01				Extracted: 01/18/08 08:23						
Mercury	EPA 7471A	ND	---	0.149	mg/kg dry	1x	ND	--	--	--	NR	(40)	01/18/08 11:10	
Matrix Spike (8010607-MS1)				QC Source: PRA0411-01				Extracted: 01/18/08 08:23						
Mercury	EPA 7471A	1.08	---	0.140	mg/kg dry	1x	ND	1.40	77.2%	(75-125)	--	--	01/18/08 11:13	
Matrix Spike Dup (8010607-MSD1)				QC Source: PRA0411-01				Extracted: 01/18/08 08:23						
Mercury	EPA 7471A	1.18	---	0.148	mg/kg dry	1x	ND	1.48	79.8%	(75-125)	9.32%	(40)	01/18/08 11:17	

TestAmerica Portland

Christina M. Woodcock

Christina Woodcock, Project Manager

The results in this report apply to the samples analyzed in accordance with the chain of custody document. This analytical report shall not be reproduced except in full, without the written approval of the laboratory.

TestAmerica
THE LEADER IN ENVIRONMENTAL TESTING

PORTLAND, OR 9405 S.W. NIMBUS AVENUE
BEAVERTON, OR 97008-7132
ph: (503) 906.9200 fax: (503) 906.9210

Secor	Project Name:	**Conoco Phillips**	
7730 SW Mohawk Street	Project Number:	0922 Portland Terminal (COP)	Report Created:
Tualatin, OR 97062	Project Manager:	Jessica Eckart	02/06/08 15:26

Selected Volatile Organic Compounds (Including BTEX) per EPA Method 8260B - Laboratory Quality Control Results

TestAmerica Portland

QC Batch: 8010916 **Soil Preparation Method: EPA 5035A**

Analyte	Method	Result	MDL*	MRL	Units	Dil	Source Result	Spike Amt	% REC	(Limits)	% RPD	(Limits)	Analyzed	Notes
Blank (8010916-BLK1)								Extracted: 01/25/08 16:39						
1,2-Dibromoethane	EPA 8260B	ND	---	49.8	ug/kg wet	1x	--	--	--	--	--	--	01/25/08 21:46	
1,2-Dichloroethane	"	ND	---	49.8	"	"	--	--	--	--	--	--	"	
Benzene	"	ND	---	19.9	"	"	--	--	--	--	--	--	"	
Toluene	"	ND	---	49.8	"	"	--	--	--	--	--	--	"	
Ethylbenzene	"	ND	---	49.8	"	"	--	--	--	--	--	--	"	
Xylenes (total)	"	ND	---	99.5	"	"	--	--	--	--	--	--	"	
Methyl tert-butyl ether	"	ND	---	39.8	"	"	--	--	--	--	--	--	"	
Naphthalene	"	ND	---	199	"	"	--	--	--	--	--	--	"	
1,2,4-Trimethylbenzene	"	ND	---	99.5	"	"	--	--	--	--	--	--	"	
1,3,5-Trimethylbenzene	"	ND	---	49.8	"	"	--	--	--	--	--	--	"	
Isopropylbenzene	"	ND	---	199	"	"	--	--	--	--	--	--	"	
n-Propylbenzene	"	ND	---	49.8	"	"	--	--	--	--	--	--	"	
Surrogate(s): *4-BFB*		*Recovery:* *96.4%*		*Limits:* *75-125%*		*0.01x*							*01/25/08 21:46*	
1,2-DCA-d4		*83.8%*		*75-125%*		"							"	
Dibromofluoromethane		*87.8%*		*75-125%*		"							"	
Toluene-d8		*93.9%*		*75-125%*		"							"	
LCS (8010916-BS1)								Extracted: 01/25/08 16:39						
Benzene	EPA 8260B	1990	---	19.8	ug/kg wet	1x	--	1980	101%	(81.8-125)	--	--	01/25/08 19:26	
Toluene	"	1900	---	49.6	"	"	--	"	96.0%	(80-125)	--	--	"	
Ethylbenzene	"	2170	---	49.6	"	"	--	"	109%	(80-120)	--	--	"	
Xylenes (total)	"	6520	---	99.1	"	"	--	5950	110%	(70-130)	--	--	"	
Methyl tert-butyl ether	"	1850	---	39.6	"	"	--	1980	93.5%	(80-128)	--	--	"	
Naphthalene	"	1900	---	198	"	"	--	"	95.8%	(76.1-153)	--	--	"	
Surrogate(s): *4-BFB*		*Recovery:* *102%*		*Limits:* *75-125%*		*0.01x*							*01/25/08 19:26*	
1,2-DCA-d4		*86.9%*		*75-125%*		"							"	
Dibromofluoromethane		*94.1%*		*75-125%*		"							"	
Toluene-d8		*96.1%*		*75-125%*		"							"	
Matrix Spike (8010916-MS1)				QC Source: PRA0592-01RE1				Extracted: 01/25/08 16:39						
Benzene	EPA 8260B	1910	---	19.9	ug/kg wet	1x	ND	1990	95.7%	(68.5-125)	--	--	01/25/08 19:55	
Toluene	"	1860	---	49.8	"	"	12.9	"	92.7%	(70.3-125)	--	--	"	
Ethylbenzene	"	2090	---	49.8	"	"	8.91	"	105%	(80-124)	--	--	"	
Xylenes (total)	"	6240	---	99.6	"	"	27.7	5980	104%	(70-130)	--	--	"	
Methyl tert-butyl ether	"	1750	---	39.8	"	"	ND	1990	87.6%	(80-130)	--	--	"	
Naphthalene	"	1870	---	199	"	"	45.5	"	91.0%	(69-163)	--	--	"	
Surrogate(s): *4-BFB*		*Recovery:* *101%*		*Limits:* *75-125%*		*0.01x*							*01/25/08 19:55*	
1,2-DCA-d4		*83.8%*		*75-125%*		"							"	
Dibromofluoromethane		*91.8%*		*75-125%*		"							"	
Toluene-d8		*94.8%*		*75-125%*		"							"	

TestAmerica Portland

Christina Woodcock, Project Manager

The results in this report apply to the samples analyzed in accordance with the chain of custody document. This analytical report shall not be reproduced except in full, without the written approval of the laboratory.

TestAmerica
THE LEADER IN ENVIRONMENTAL TESTING

PORTLAND, OR 9405 S.W. NIMBUS AVENUE
BEAVERTON, OR 97008-7132
ph: (503) 906.9200 fax: (503) 906.9210

Secor	Project Name:	**Conoco Phillips**	
7730 SW Mohawk Street	Project Number:	0922 Portland Terminal (COP)	Report Created:
Tualatin, OR 97062	Project Manager:	Jessica Eckart	02/06/08 15:26

Selected Volatile Organic Compounds (Including BTEX) per EPA Method 8260B - Laboratory Quality Control Results

TestAmerica Portland

QC Batch: 8010916 **Soil Preparation Method: EPA 5035A**

Analyte	Method	Result	MDL*	MRL	Units	Dil	Source Result	Spike Amt	% REC	(Limits)	% RPD	(Limits)	Analyzed	Notes
Matrix Spike Dup (8010916-MSD1)					QC Source: PRA0592-01REI				Extracted: 01/25/08 16:39					
Benzene	EPA 8260B	1930	---	19.9	ug/kg wet	1x	ND	1990	96.9%	(68.5-125)	1.15%	(25)	01/25/08 20:23	
Toluene	"	1890	---	49.8	"	"	12.9	"	94.4%	(70.3-125)	1.71%	"	"	
Ethylbenzene	"	2200	---	49.8	"	"	8.91	"	110%	(80-124)	5.01%	"	"	
Xylenes (total)	"	6480	---	99.5	"	"	27.7	5970	108%	(70-130)	3.80%	"	"	
Methyl tert-butyl ether	"	1750	---	39.8	"	"	ND	1990	88.0%	(80-130)	0.356%	"	"	
Naphthalene	"	1930	---	199	"	"	45.5	"	94.6%	(69-163)	3.10%	"	"	
Surrogate(s): 4-BFB		*Recovery: 105%*			*Limits: 75-125%*	*0.01x*							*01/25/08 20:23*	
1,2-DCA-d4		*82.2%*			*75-125%*	"							"	
Dibromofluoromethane		*93.1%*			*75-125%*	"							"	
Toluene-d8		*96.7%*			*75-125%*	"							"	

TestAmerica Portland

Christina Woodcock, Project Manager

The results in this report apply to the samples analyzed in accordance with the chain of custody document. This analytical report shall not be reproduced except in full, without the written approval of the laboratory.

TestAmerica
THE LEADER IN ENVIRONMENTAL TESTING

PORTLAND, OR 9405 S.W. NIMBUS AVENUE
BEAVERTON, OR 97008-7132
ph: (503) 906.9200 fax: (503) 906.9210

Secor	Project Name:	**Conoco Phillips**	
7730 SW Mohawk Street	Project Number:	0922 Portland Terminal (COP)	Report Created:
Tualatin, OR 97062	Project Manager:	Jessica Eckart	02/06/08 15:26

Polynuclear Aromatic Compounds per EPA 8270M-SIM - Laboratory Quality Control Results

TestAmerica Portland

QC Batch: 8010501 **Soil Preparation Method: EPA 3550**

Analyte	Method	Result	MDL*	MRL	Units	Dil	Source Result	Spike Amt	% REC	(Limits)	% RPD	(Limits)	Analyzed	Notes
Blank (8010501-BLK1)								Extracted: 01/16/08 11:00						
Acenaphthene	EPA 8270m	ND	---	13.2	ug/kg wet	1x	--	--	--	--	--	--	01/17/08 14:41	
Acenaphthylene	"	ND	---	13.2	"	"	--	--	--	--	--	--	"	
Anthracene	"	ND	---	13.2	"	"	--	--	--	--	--	--	"	
Benzo (a) anthracene	"	ND	---	13.2	"	"	--	--	--	--	--	--	"	
Benzo (a) pyrene	"	ND	---	13.2	"	"	--	--	--	--	--	--	"	
Benzo (b) fluoranthene	"	ND	---	13.2	"	"	--	--	--	--	--	--	"	
Benzo (ghi) perylene	"	ND	---	13.2	"	"	--	--	--	--	--	--	"	
Benzo (k) fluoranthene	"	ND	---	13.2	"	"	--	--	--	--	--	--	"	
Chrysene	"	ND	---	13.2	"	"	--	--	--	--	--	--	"	
Dibenzo (a,h) anthracene	"	ND	---	13.2	"	"	--	--	--	--	--	--	"	
Fluoranthene	"	ND	---	13.2	"	"	--	--	--	--	--	--	"	
Fluorene	"	ND	---	13.2	"	"	--	--	--	--	--	--	"	
Indeno (1,2,3-cd) pyrene	"	ND	---	13.2	"	"	--	--	--	--	--	--	"	
Naphthalene	"	ND	---	13.2	"	"	--	--	--	--	--	--	"	
Phenanthrene	"	ND	---	13.2	"	"	--	--	--	--	--	--	"	
Pyrene	"	ND	---	13.2	"	"	--	--	--	--	--	--	"	
Surrogate(s): Fluorene-d10		*Recovery: 86.6%*			*Limits: 24-125%*	"							*01/17/08 14:41*	
Pyrene-d10		*85.4%*			*41-141%*	"							"	
Benzo (a) pyrene-d12		*92.0%*			*38-143%*	"							"	
LCS (8010501-BS1)								Extracted: 01/16/08 11:00						MNR
Acenaphthene	EPA 8270m	147	---	13.4	ug/kg wet	1x	--	166	88.2%	(33-139)	--	--	01/17/08 15:11	
Benzo (a) pyrene	"	160	---	13.4	"	"	--	"	96.0%	(45-149)	--	--	"	
Pyrene	"	147	---	13.4	"	"	--	"	88.3%	(39-138)	--	--	"	
Surrogate(s): Fluorene-d10		*Recovery: 91.3%*			*Limits: 24-125%*	"							*01/17/08 15:11*	
Pyrene-d10		*89.1%*			*41-141%*	"							"	
Benzo (a) pyrene-d12		*98.5%*			*38-143%*	"							"	

The results in this report apply to the samples analyzed in accordance with the chain of custody document. This analytical report shall not be reproduced except in full, without the written approval of the laboratory.

TestAmerica
THE LEADER IN ENVIRONMENTAL TESTING

PORTLAND, OR 9405 S.W. NIMBUS AVENUE
BEAVERTON, OR 97008-7132
ph: (503) 906.9200 fax: (503) 906.9210

Secor	Project Name:	**Conoco Phillips**	
7730 SW Mohawk Street	Project Number:	0922 Portland Terminal (COP)	Report Created:
Tualatin, OR 97062	Project Manager:	Jessica Eckart	02/06/08 15:26

TCLP Extraction Only - Laboratory Quality Control Results

TestAmerica Portland

QC Batch: 8010498 **Other dry Preparation Method: EPA 1311**

Analyte	Method	Result	MDL*	MRL	Units	Dil	Source Result	Spike Amt	% REC	(Limits)	% RPD	(Limits)	Analyzed	Notes
Blank (8010498-BLK1)								Extracted: 01/15/08 21:15						
Extraction	EPA 1311	ND	---	1.00	N/A	1x	--	--	--	--	--	--	01/16/08 15:21	

QC Batch: 8010600 **Soil Preparation Method: EPA 1311**

Analyte	Method	Result	MDL*	MRL	Units	Dil	Source Result	Spike Amt	% REC	(Limits)	% RPD	(Limits)	Analyzed	Notes
Blank (8010600-BLK1)								Extracted: 01/17/08 20:39						
Extraction	EPA 1311	ND	---	1.00	N/A	1x	--	--	--	--	--	--	01/18/08 16:14	

QC Batch: 8011114 **Soil Preparation Method: EPA 1311**

Analyte	Method	Result	MDL*	MRL	Units	Dil	Source Result	Spike Amt	% REC	(Limits)	% RPD	(Limits)	Analyzed	Notes
Blank (8011114-BLK1)								Extracted: 01/31/08 19:04						
Extraction	EPA 1311	ND	---	1.00	N/A	1x	--	--	--	--	--	--	02/01/08 15:45	

TestAmerica Portland

Christina M. Woodcock

Christina Woodcock, Project Manager

The results in this report apply to the samples analyzed in accordance with the chain of custody document. This analytical report shall not be reproduced except in full, without the written approval of the laboratory.

TestAmerica
THE LEADER IN ENVIRONMENTAL TESTING

PORTLAND, OR 9405 S.W. NIMBUS AVENUE
BEAVERTON, OR 97008-7132
ph: (503) 906.9200 fax: (503) 906.9210

Secor	Project Name:	**Conoco Phillips**	
7730 SW Mohawk Street	Project Number:	0922 Portland Terminal (COP)	Report Created:
Tualatin, OR 97062	Project Manager:	Jessica Eckart	02/06/08 15 26

Percent Dry Weight (Solids) per Standard Methods - Laboratory Quality Control Results

TestAmerica Portland

QC Batch: 8010544 **Soil Preparation Method: Dry Weight**

Analyte	Method	Result	MDL^	MRL	Units	Dil	Source Result	Spike Amt	% REC	(Limits)	% RPD	(Limits)	Analyzed	Notes
Duplicate (8010544-DUP1)				QC Source: PRA0446-01					Extracted: 01/16/08 15:04					
% Solids	NCA SOP	74.7	--	0.0100	% by Weight	1x	75.5	--	--	--	1.07%	(20)	01/16/08 15.04	

TestAmerica Portland

Christina Woodcock, Project Manager

The results in this report apply to the samples analyzed in accordance with the chain of custody document. This analytical report shall not be reproduced except in full, without the written approval of the laboratory.

PORTLAND, OR 9405 S.W. NIMBUS AVENUE
BEAVERTON, OR 97008-7132
ph: (503) 906.9200 fax: (503) 906.9210

Secor	Project Name:	**Conoco Phillips**	
7730 SW Mohawk Street	Project Number:	0922 Portland Terminal (COP)	Report Created:
Tualatin, OR 97062	Project Manager:	Jessica Eckart	02/06/08 15:26

Notes and Definitions

Report Specific Notes:

M7	-	The MS and/or MSD were above the acceptance limits. See Blank Spike (LCS).
M8	-	The MS and/or MSD were below the acceptance limits. See Blank Spike (LCS).
MNR	-	No results were reported for the MS/MSD. The sample used for the MS/MSD required dilution due to the sample matrix. Because of this, the spike compounds were diluted below the detection limit.
Q8	-	Detected hydrocarbons in the gasoline range appear to be due to overlap of diesel range hydrocarbons.
Q9	-	Hydrocarbon pattern most closely resembles weathered diesel.
R3	-	The RPD exceeded the acceptance limit due to sample matrix effects.
RL1	-	Reporting limit raised due to sample matrix effects.
RL3	-	Reporting limit raised due to high concentrations of non-target analytes.
Z	-	Due to sample matrix effects, the surrogate recovery was below the acceptance limits.
Z9	-	Unable to calculate surrogate recovery due to matrix interference.
ZX	-	Due to sample matrix effects, the surrogate recovery was outside the acceptance limits.

Laboratory Reporting Conventions:

DET	-	Analyte DETECTED at or above the Reporting Limit. Qualitative Analyses only.
ND	-	Analyte NOT DETECTED at or above the reporting limit (MDL or MRL, as appropriate).
NR/NA	-	Not Reported / Not Available
dry	-	Sample results reported on a Dry Weight Basis. Results and Reporting Limits have been corrected for Percent Dry Weight.
wet	-	Sample results and reporting limits reported on a Wet Weight Basis (as received). Results with neither 'wet' nor 'dry' are reported on a Wet Weight Basis.
RPD	-	RELATIVE PERCENT DIFFERENCE (RPDs calculated using Results, not Percent Recoveries).
MRL	-	METHOD REPORTING LIMIT. Reporting Level at, or above, the lowest level standard of the Calibration Table.
MDL*	-	METHOD DETECTION LIMIT. Reporting Level at, or above, the statistically derived limit based on 40CFR, Part 136, Appendix B *MDLs are listed on the report only if the data has been evaluated below the MRL. Results between the MDL and MRL are reported as Estimated Results.
Dil	-	Dilutions are calculated based on deviations from the standard dilution performed for an analysis, and may not represent the dilution found on the analytical raw data.
Reporting Limits	-	Reporting limits (MDLs and MRLs) are adjusted based on variations in sample preparation amounts, analytical dilutions and, percent solids, where applicable.
Electronic Signature	-	Electronic Signature added in accordance with TestAmerica's *Electronic Reporting and Electronic Signatures Policy*. Application of electronic signature indicates that the report has been reviewed and approved for release by the laboratory. Electronic signature is intended to be the legally binding equivalent of a traditionally handwritten signature.

TestAmerica Portland

Christina M. Woodcock

Christina Woodcock, Project Manager

The results in this report apply to the samples analyzed in accordance with the chain of custody document. This analytical report shall not be reproduced except in full, without the written approval of the laboratory

TestAmerica
ANALYTICAL TESTING CORPORATION

[illegible] North Creek Pkwy N Suite 400, Bothell WA 98011-8244 425-420-9200 FAX 420-9210
[illegible] Lip-1 Ave, Spokane, WA 99206-5302 509-924-9200 FAX 924-9290
[illegible] SW Nimbus Ave, Beaverton, OR 97008-7145 503-906-9200 FAX 906-9210
[illegible] FAX [illegible]

CHAIN OF CUSTODY REPORT

Work Order #: PRAC372

CLIENT: SECOR

REPORT TO: Jessica Eckart
ADDRESS: 7730 S.W Mohawk Blvd
Tualatin, OR 97062
PHONE: 503-691-2030 FAX: 503-692 7074

INVOICE TO:
SECOR
7730 SW Mohawk Blvd
Tualatin, OR 97062

P.O. NUMBER: Call Jessica Eckart

PROJECT NAME: 0922 Portland Terminal (COP)
PROJECT NUMBER: 0922
SAMPLED BY: Norman Swanson

PRESERVATIVE

REQUESTED ANALYSES

TURNAROUND REQUEST
in Business Days *
Organic & Inorganic Analyses: 10 (STD) | 7 | 5 | 4 | 3 | 2 | 1 | <1
Petroleum Hydrocarbon Analyses: 5 (STD) | 4 | 3 | 2 | 1 | <1
OTHER Specify
* Turnaround Requests less than standard may incur Rush Charges.

	CLIENT SAMPLE IDENTIFICATION	SAMPLING DATE TIME	TCLP lead								MATRIX (W, S, O)	# OF CONT	LOCATION COMMENTS	LA WO ID
1	1-08-00RS-1	1-14-08/1350									O	1		
2	1-08-00RS-2	1-14-08/1400									O	1	HOLD	
3	1-08-00RS-11	1-14-08/1350									O	1	HOLD	
4	1-08-00RS-22	1-14-08/1400									O	1	HOLD	
5														
6														
7														
8														
9														
10														

RELEASED BY: [signature]	DATE: 1-14-08	RECEIVED BY: [signature]	DATE: 1-14-08
PRINT NAME: Norman Swanson	FIRM: SECOR	TIME: 1533	PRINT NAME: [illegible]	FIRM: TAI	TIME: 1535
RELEASED BY: [signature]	DATE: 1-14-08	RECEIVED BY: Jamie Ireland	DATE: 1/14/08
PRINT NAME: [illegible]	FIRM: TAI	TIME: 1630	PRINT NAME: Jamie Ireland	FIRM: TAI	TIME: 16:30

ADDITIONAL REMARKS:

TEMP: 2.9

PAGE: OF

TAL-1000-0907

COP0021729

TestAmerica Sample Receipt Checklist

Cooler ID(s):

Received by: *(section A)*
Date: 1/14/08
Time: 16:30
Initials: JI

Unpacked by: *(section B)*
Date: 1/14/08
Initials: JI

Logged-in by:
Date: 1/14/08
Initials: JI

Work Order No. PRA0372
Client: Secor
Project: Conoco Phillips

Temperature out of range:
___Not enough Ice
___*No Ice*
___*Ice Melted*
___*W/in 4 Hours*
___Other:_____

***ESI Clients *(see Section C)*

Cooler Temperature (IR): 2.9 °C plastic glass NA *(oil/air samples, ESI client)* Temperature Blank: _____ °C

A

Custody Seals: (#____)

Signature: Y N Dated:_____
X None

Container Type:
___#Cooler(s)
___#Box(s)
___None (___#Other:_____)

Coolant Type:
___Gel Ice
X Loose Ice
___None

Packing Material:
___Bubble Bags
___Styrofoam Cubbies
X None (___Other:_____)

Received from:
X TA Courier
___Senvoy
___UPS
___Fed Ex
___Client
___TDP
___DHL
___SDS
___Mid-Valley
___GS/TA
___GS/Senvoy
___Other:
_____

B

Sample Status:
(If N circled, see NOD)

General:			
Intact?	Y	N	
# Containers Match COC?	Y	N	none given
IDs Match COC?	Y	N	
For Analyses Requested:			
Correct Type & Preservation?	Y	N	
Adequate Volume?	Y	N	
Within Hold Time?	Y	N	
Volatiles/ Oil Quality:			
VOAs/ Syringes free of Headspace?	Y	N	NA
TB on COC? not provided	Y	N	NA
Metals:			
HNO3 Preserved?	Y	N	NA
Dissolved Metals Filtered?	Y	N	NA

C

***ESI Clients Only:

Temperature Blank. _____ °C not provided

All preserved bottles checked Y N NA *(voas/soils/all unp.)*
All preserved accordingly? Y N *(see NOD)* NA *(voas/soils/all unp.)*

FED EX/ UPS: Was the tracking paper keepable? YES NO

If circled NO, what is the Tracking number? _____

FED EX Goldstreak UPS DHL Other: _____

Project Managers

Comments:_____

Pl... reviewed ...

COP0021730

TestAmerica
THE LEADER IN ENVIRONMENTAL TESTING

PORTLAND, OR 9405 S.W. NIMBUS AVENUE
BEAVERTON, OR 97008-7132
ph: (503) 906.9200 fax: (503) 906.9210

January 31, 2008

Jessica Eckart
Secor
7730 SW Mohawk Street
Tualatin, OR 97062

RE: ConocoPhillips

Enclosed are the results of analyses for samples received by the laboratory on 01/24/08 17:28. The following list is a summary of the Work Orders contained in this report, generated on 01/31/08 15:11.

If you have any questions concerning this report, please feel free to contact me.

Work Order	Project	ProjectNumber
PRA0686	ConocoPhillips	0922 Portland Terminal (COP)

Rem. system
Sump Sediment

TestAmerica
THE LEADER IN ENVIRONMENTAL TESTING

PORTLAND, OR 9405 S.W. NIMBUS AVENUE
BEAVERTON, OR 97008-7132
ph: (503) 906.9200 fax: (503) 906.9210

Secor	Project Name:	**ConocoPhillips**	
7730 SW Mohawk Street	Project Number:	0922 Portland Terminal (COP)	Report Created:
Tualatin, OR 97062	Project Manager:	Jessica Eckart	01/31/08 15:11

ANALYTICAL REPORT FOR SAMPLES

Sample ID	Laboratory ID	Matrix	Date Sampled	Date Received
WCV1-24-08	PRA0686-01	Soil	01/24/08 11:00	01/24/08 17:28

TestAmerica Portland

Callie Falsholz For Christina Woodcock, Project Manager

The results in this report apply to the samples analyzed in accordance with the chain of custody document. This analytical report shall not be reproduced except in full, without the written approval of the laboratory.

TestAmerica
THE LEADER IN ENVIRONMENTAL TESTING

PORTLAND, OR 9405 S.W. NIMBUS AVENUE
BEAVERTON, OR 97008-7132
ph: (503) 906.9200 fax: (503) 906.9210

Secor	Project Name:	**ConocoPhillips**	
7730 SW Mohawk Street	Project Number:	0922 Portland Terminal (COP)	Report Created:
Tualatin, OR 97062	Project Manager:	Jessica Eckart	01/31/08 15:11

TCLP Metals per EPA 1311/6000/7000 Series Methods

TestAmerica Portland

Analyte	Method	Result	MDL*	MRL	Units	Dil	Batch	Prepared	Analyzed	Notes
PRA0686-01 (WCV1-24-08)		**Soil**			**Sampled: 01/24/08 11:00**					
Lead	1311/6020	ND	-----	0.0500	mg/l	1x	8010918	01/28/08 11:27	01/29/08 02:12	

TestAmerica Portland

Callie Fahsholz For Christina Woodcock, Project Manager

The results in this report apply to the samples analyzed in accordance with the chain of custody document. This analytical report shall not be reproduced except in full, without the written approval of the laboratory.

TestAmerica
THE LEADER IN ENVIRONMENTAL TESTING

PORTLAND, OR 9405 S.W. NIMBUS AVENUE
BEAVERTON, OR 97008-7132
ph: (503) 906.9200 fax: (503) 906.9210

Secor	Project Name:	**ConocoPhillips**	
7730 SW Mohawk Street	Project Number:	0922 Portland Terminal (COP)	Report Created:
Tualatin, OR 97062	Project Manager:	Jessica Eckart	01/31/08 15:11

TCLP Volatile Organic Compounds per EPA Method 1311/8260B

TestAmerica Portland

Analyte	Method	Result	MDL*	MRL	Units	Dil	Batch	Prepared	Analyzed	Notes
PRA0686-01 (WCV1-24-08)		**Soil**			**Sampled: 01/24/08 11:00**					
Acetone	1311/8260B	ND	----	0.500	mg/l	1x	8010992	01/29/08 11:51	01/29/08 16:55	
Benzene	"	ND	----	0.0200	"	"	"	"	"	
Bromobenzene	"	ND	----	0.0200	"	"	"	"	"	
Bromochloromethane	"	ND	----	0.0200	"	"	"	"	"	
Bromodichloromethane	"	ND	----	0.0200	"	"	"	"	"	
Bromoform	"	ND	----	0.0200	"	"	"	"	"	
Bromomethane	"	ND	----	0.100	"	"	"	"	"	
n-Butylbenzene	"	ND	----	0.0200	"	"	"	"	"	
sec-Butylbenzene	"	ND	----	0.0200	"	"	"	"	"	
tert-Butylbenzene	"	ND	----	0.0200	"	"	"	"	"	
Carbon Tetrachloride	"	ND	----	0.0200	"	"	"	"	"	
Chlorobenzene	"	ND	----	0.0200	"	"	"	"	"	
Chloroethane	"	ND	----	0.0500	"	"	"	"	"	
Chloroform	"	ND	----	0.0200	"	"	"	"	"	
Chloromethane	"	ND	----	0.100	"	"	"	"	"	
2-Chlorotoluene	"	ND	----	0.0200	"	"	"	"	"	
4-Chlorotoluene	"	ND	----	0.0200	"	"	"	"	"	
1,2-Dibromo-3-chloropropane	"	ND	----	0.0500	"	"	"	"	"	
Dibromochloromethane	"	ND	----	0.0200	"	"	"	"	"	
1,2-Dibromoethane	"	ND	----	0.0200	"	"	"	"	"	
Dibromomethane	"	ND	----	0.0200	"	"	"	"	"	
1,2-Dichlorobenzene	"	ND	----	0.0200	"	"	"	"	"	
1,3-Dichlorobenzene	"	ND	----	0.0200	"	"	"	"	"	
1,4-Dichlorobenzene	"	ND	----	0.0200	"	"	"	"	"	
Dichlorodifluoromethane	"	ND	----	0.100	"	"	"	"	"	
1,1-Dichloroethane	"	ND	----	0.0200	"	"	"	"	"	
1,2-Dichloroethane	"	ND	----	0.0200	"	"	"	"	"	
1,1-Dichloroethene	"	ND	----	0.0200	"	"	"	"	"	
cis-1,2-Dichloroethene	"	ND	----	0.0200	"	"	"	"	"	
trans-1,2-Dichloroethene	"	ND	----	0.0200	"	"	"	"	"	
1,2-Dichloropropane	"	ND	----	0.0200	"	"	"	"	"	
1,3-Dichloropropane	"	ND	----	0.0200	"	"	"	"	"	
2,2-Dichloropropane	"	ND	----	0.0200	"	"	"	"	"	
1,1-Dichloropropene	"	ND	----	0.0200	"	"	"	"	"	
cis-1,3-Dichloropropene	"	ND	----	0.0200	"	"	"	"	"	
trans-1,3-Dichloropropene	"	ND	----	0.0200	"	"	"	"	"	
Ethylbenzene	"	ND	----	0.0200	"	"	"	"	"	
Hexachlorobutadiene	"	ND	----	0.0500	"	"	"	"	"	
2-Hexanone	"	ND	----	0.100	"	"	"	"	"	
Isopropylbenzene	"	ND	----	0.0200	"	"	"	"	"	
p-Isopropyltoluene	"	ND	----	0.0200	"	"	"	"	"	
4-Methyl-2-pentanone	"	ND	----	0.200	"	"	"	"	"	
2-Butanone (MEK)	"	ND	----	0.500	"	"	"	"	"	

TestAmerica Portland

The results in this report apply to the samples analyzed in accordance with the chain of custody document. This analytical report shall not be reproduced except in full without the written approval of the laboratory.

Callie Fahsholz For Christina Woodcock, Project Manager

TestAmerica
THE LEADER IN ENVIRONMENTAL TESTING

PORTLAND, OR 9405 S.W. NIMBUS AVENUE
BEAVERTON, OR 97008-7132
ph: (503) 906.9200 fax: (503) 906.9210

Secor	Project Name:	**ConocoPhillips**	
7730 SW Mohawk Street	Project Number:	0922 Portland Terminal (COP)	Report Created:
Tualatin, OR 97062	Project Manager:	Jessica Eckart	01/31/08 15:11

TCLP Volatile Organic Compounds per EPA Method 1311/8260B

TestAmerica Portland

Analyte	Method	Result	MDL*	MRL	Units	Dil	Batch	Prepared	Analyzed	Notes
PRA0686-01 (WCV1-24-08)		**Soil**			**Sampled: 01/24/08 11:00**					
Methylene chloride	1311/8260B	ND	-----	0.500	mg/l	1x	8010992	01/29/08 11:51	01/29/08 16:55	
Methyl tert-butyl ether	"	ND	-----	10.0	"	"	"	"	"	
Naphthalene	"	ND	-----	0.0200	"	"	"	"	"	
n-Propylbenzene	"	ND	-----	0.0200	"	"	"	"	"	
Styrene	"	ND	-----	0.0200	"	"	"	"	"	
1,1,1,2-Tetrachloroethane	"	ND	-----	0.0200	"	"	"	"	"	
1,1,2,2-Tetrachloroethane	"	ND	-----	0.0200	"	"	"	"	"	
Tetrachloroethene	"	ND	-----	0.0200	"	"	"	"	"	
Toluene	"	ND	-----	0.0200	"	"	"	"	"	
1,2,3-Trichlorobenzene	"	ND	-----	0.0200	"	"	"	"	"	
1,2,4-Trichlorobenzene	"	ND	-----	0.0200	"	"	"	"	"	
1,1,1-Trichloroethane	"	ND	-----	0.0200	"	"	"	"	"	
1,1,2-Trichloroethane	"	ND	-----	0.0200	"	"	"	"	"	
Trichloroethene	"	ND	-----	0.0200	"	"	"	"	"	
Trichlorofluoromethane	"	ND	-----	0.0500	"	"	"	"	"	
1,2,3-Trichloropropane	"	ND	-----	0.0200	"	"	"	"	"	
1,2,4-Trimethylbenzene	"	ND	-----	0.0200	"	"	"	"	"	
1,3,5-Trimethylbenzene	"	ND	-----	0.0200	"	"	"	"	"	
Vinyl chloride	"	ND	-----	0.0200	"	"	"	"	"	
o-Xylene	"	ND	-----	0.0200	"	"	"	"	"	
m,p-Xylene	"	ND	-----	0.0200	"	"	"	"	"	
Surrogate(s): 4-BFB		*89.5%*			*75 - 130 %*	*0.1x*			"	
Dibromofluoromethane		*108%*			*75 - 130 %*	"			"	
Toluene-d8		*106%*			*75 - 130 %*	"			"	
1,2-DCA-d4		*111%*			*79 - 123 %*	"			"	

TestAmerica Portland

The results in this report apply to the samples analyzed in accordance with the chain of custody document. This analytical report shall not be reproduced except in full, without the written approval of the laboratory.

Callie Fahsholz For Christina Woodcock, Project Manager

TestAmerica
THE LEADER IN ENVIRONMENTAL TESTING

PORTLAND, OR 9405 S.W. NIMBUS AVENUE
BEAVERTON, OR 97008-7132
ph: (503) 906.9200 fax: (503) 906.9210

Secor	Project Name:	**ConocoPhillips**	
7730 SW Mohawk Street	Project Number:	0922 Portland Terminal (COP)	Report Created:
Tualatin, OR 97062	Project Manager:	Jessica Eckart	01/31/08 15:11

TCLP Extraction Only

TestAmerica Portland

Analyte	Method	Result	MDL*	MRL	Units	Dil	Batch	Prepared	Analyzed	Notes
PRA0686-01 (WCV1-24-08)		**Soil**			**Sampled: 01/24/08 11:00**					
Extraction	EPA 1311	ND	-----	1.00	N/A	1x	8010865	01/24/08 21:03	01/25/08 17:26	

TestAmerica Portland

The results in this report apply to the samples analyzed in accordance with the chain of custody document. This analytical report shall not be reproduced except in full, without the written approval of the laboratory.

Callie Fahsholz For Christina Woodcock, Project Manager

TestAmerica
THE LEADER IN ENVIRONMENTAL TESTING

PORTLAND, OR 9405 S.W. NIMBUS AVENUE
BEAVERTON, OR 97008-7132
ph: (503) 906.9200 fax: (503) 906.9210

Secor	Project Name:	**ConocoPhillips**	
7730 SW Mohawk Street	Project Number:	0922 Portland Terminal (COP)	Report Created:
Tualatin, OR 97062	Project Manager:	Jessica Eckart	01/31/08 15:11

TCLP Metals per EPA 1311/6000/7000 Series Methods - Laboratory Quality Control Results

TestAmerica Portland

QC Batch: 8010918 **Soil Preparation Method: EPA 1311/3005**

Analyte	Method	Result	MDL*	MRL	Units	Dil	Source Result	Spike Amt	% REC	(Limits)	% RPD	(Limits)	Analyzed	Notes
Blank (8010918-BLK1)								Extracted: 01/28/08 11:27						
Lead	1311/6020	ND	---	0.0500	mg/l	1x	--	--	--	--	--	--	01/29/08 00:19	
LCS (8010918-BS1)								Extracted: 01/28/08 11:27						
Lead	1311/6020	0.191	---	0.0500	mg/l	1x	--	0.200	95.7%	(75-125)	--	--	01/29/08 00:27	
Duplicate (8010918-DUP1)				QC Source: PRA0481-01				Extracted: 01/28/08 11:27						
Lead	1311/6020	ND	---	0.0500	mg/l	1x	ND	--	--	--	3.35%	(20)	01/29/08 00:41	
Matrix Spike (8010918-MS1)				QC Source: PRA0481-02				Extracted: 01/28/08 11:27						
Lead	1311/6020	1.52	---	0.0500	mg/l	1x	1.14	0.200	190%	(50-150)	--	--	01/29/08 01:03	M7
Matrix Spike (8010918-MS2)				QC Source: PRA0662-01				Extracted: 01/28/08 11:27						
Lead	1311/6020	0.412	---	0.0500	mg/l	1x	0.185	0.200	113%	(50-150)	--	--	01/29/08 02:05	

TestAmerica Portland

Callie Falsholz For Christina Woodcock, Project Manager

The results in this report apply to the samples analyzed in accordance with the chain of custody document. This analytical report shall not be reproduced except in full, without the written approval of the laboratory.

TestAmerica
THE LEADER IN ENVIRONMENTAL TESTING

PORTLAND, OR 9405 S.W. NIMBUS AVENUE
BEAVERTON, OR 97008-7132
ph: (503) 906.9200 fax: (503) 906.9210

Secor	Project Name:	**ConocoPhillips**	
7730 SW Mohawk Street	Project Number:	0922 Portland Terminal (COP)	Report Created:
Tualatin, OR 97062	Project Manager:	Jessica Eckart	01/31/08 15:11

TCLP Volatile Organic Compounds per EPA Method 1311/8260B - Laboratory Quality Control Results

TestAmerica Portland

QC Batch: 8010992 **Water Preparation Method: EPA 1311/5030**

Analyte	Method	Result	MDL*	MRL	Units	Dil	Source Result	Spike Amt	% REC	(Limits)	% RPD	(Limits)	Analyzed	Notes
Blank (8010992-BLK1)								Extracted: 01/29/08 11:51						
Acetone	1311/8260B	ND	---	0.0500	mg/l	0.1x	--	--	--	--	--	--	01/29/08 14:27	
Benzene	"	ND	---	0.00200	"	"	--	--	--	--	--	--	"	
Bromobenzene	"	ND	---	0.00200	"	"	--	--	--	--	--	--	"	
Bromochloromethane	"	ND	---	0.00200	"	"	--	--	--	--	--	--	"	
Bromodichloromethane	"	ND	---	0.00200	"	"	--	--	--	--	--	--	"	
Bromoform	"	ND	---	0.00200	"	"	--	--	--	--	--	--	"	
Bromomethane	"	ND	---	0.0100	"	"	--	--	--	--	--	--	"	
n-Butylbenzene	"	ND	---	0.00200	"	"	--	--	--	--	--	--	"	
sec-Butylbenzene	"	ND	---	0.00200	"	"	--	--	--	--	--	--	"	
tert-Butylbenzene	"	ND	---	0.00200	"	"	--	--	--	--	--	--	"	
Carbon Tetrachloride	"	ND	---	0.00200	"	"	--	--	--	--	--	--	"	
Chlorobenzene	"	ND	---	0.00200	"	"	--	--	--	--	--	--	"	
Chloroethane	"	ND	---	0.00500	"	"	--	--	--	--	--	--	"	
Chloroform	"	ND	---	0.00200	"	"	--	--	--	--	--	--	"	
Chloromethane	"	ND	---	0.0100	"	"	--	--	--	--	--	--	"	
2-Chlorotoluene	"	ND	---	0.00200	"	"	--	--	--	--	--	--	"	
4-Chlorotoluene	"	ND	---	0.00200	"	"	--	--	--	--	--	--	"	
1,2-Dibromo-3-chloropropane	"	ND	---	0.00500	"	"	--	--	--	--	--	--	"	
Dibromochloromethane	"	ND	---	0.00200	"	"	--	--	--	--	--	--	"	
1,2-Dibromoethane	"	ND	---	0.00200	"	"	--	--	--	--	--	--	"	
Dibromomethane	"	ND	---	0.00200	"	"	--	--	--	--	--	--	"	
1,2-Dichlorobenzene	"	ND	---	0.00200	"	"	--	--	--	--	--	--	"	
1,3-Dichlorobenzene	"	ND	---	0.00200	"	"	--	--	--	--	--	--	"	
1,4-Dichlorobenzene	"	ND	---	0.00200	"	"	--	--	--	--	--	--	"	
Dichlorodifluoromethane	"	ND	---	0.0100	"	"	--	--	--	--	--	--	"	
1,1-Dichloroethane	"	ND	---	0.00200	"	"	--	--	--	--	--	--	"	
1,2-Dichloroethane	"	ND	---	0.00200	"	"	--	--	--	--	--	--	"	
1,1-Dichloroethene	"	ND	---	0.00200	"	"	--	--	--	--	--	--	"	
cis-1,2-Dichloroethene	"	ND	---	0.00200	"	"	--	--	--	--	--	--	"	
trans-1,2-Dichloroethene	"	ND	---	0.00200	"	"	--	--	--	--	--	--	"	
1,2-Dichloropropane	"	ND	---	0.00200	"	"	--	--	--	--	--	--	"	
1,3-Dichloropropane	"	ND	---	0.00200	"	"	--	--	--	--	--	--	"	
2,2-Dichloropropane	"	ND	---	0.00200	"	"	--	--	--	--	--	--	"	
1,1-Dichloropropene	"	ND	---	0.00200	"	"	--	--	--	--	--	--	"	
cis-1,3-Dichloropropene	"	ND	---	0.00200	"	"	--	--	--	--	--	--	"	
trans-1,3-Dichloropropene	"	ND	---	0.00200	"	"	--	--	--	--	--	--	"	
Ethylbenzene	"	ND	---	0.00200	"	"	--	--	--	--	--	--	"	
Hexachlorobutadiene	"	ND	---	0.00500	"	"	--	--	--	--	--	--	"	
2-Hexanone	"	ND	---	0.0100	"	"	--	--	--	--	--	--	"	

TestAmerica Portland

Callie Fahsholz For Christina Woodcock, Project Manager

The results in this report apply to the samples analyzed in accordance with the chain of custody document. This analytical report shall not be reproduced except in full, without the written approval of the laboratory.

TestAmerica
THE LEADER IN ENVIRONMENTAL TESTING

PORTLAND, OR 9405 S.W. NIMBUS AVENUE
BEAVERTON, OR 97008-7132
ph: (503) 906.9200 fax: (503) 906.9210

Secor	Project Name:	**ConocoPhillips**	
7730 SW Mohawk Street	Project Number:	0922 Portland Terminal (COP)	Report Created:
Tualatin, OR 97062	Project Manager:	Jessica Eckart	01/31/08 15:11

TCLP Volatile Organic Compounds per EPA Method 1311/8260B - Laboratory Quality Control Results

TestAmerica Portland

QC Batch: 8010992 **Water Preparation Method: EPA 1311/5030**

Analyte	Method	Result	MDL*	MRL	Units	Dil	Source Result	Spike Amt	% REC	(Limits)	% RPD	(Limits)	Analyzed	Notes
Blank (8010992-BLK1)									Extracted: 01/29/08 11:51					
Isopropylbenzene	1311/8260B	ND	---	0.00200	mg/l	0.1x	--	--	--	--	--	--	01/29/08 14:27	
p-Isopropyltoluene	"	ND	---	0.00200	"	"	--	--	--	--	--	--	"	
4-Methyl-2-pentanone	"	ND	---	0.0200	"	"	--	--	--	--	--	--	"	
2-Butanone (MEK)	"	ND	---	0.0500	"	"	--	--	--	--	--	--	"	
Methylene chloride	"	ND	---	0.0500	"	"	--	--	--	--	--	--	"	
Methyl tert-butyl ether	"	ND	---	1.00	"	"	--	--	--	--	--	--	"	
Naphthalene	"	ND	---	0.00200	"	"	--	--	--	--	--	--	"	
n-Propylbenzene	"	ND	---	0.00200	"	"	--	--	--	--	--	--	"	
Styrene	"	ND	---	0.00200	"	"	--	--	--	--	--	--	"	
1,1,1,2-Tetrachloroethane	"	ND	---	0.00200	"	"	--	--	--	--	--	--	"	
1,1,2,2-Tetrachloroethane	"	ND	---	0.00200	"	"	--	--	--	--	--	--	"	
Tetrachloroethene	"	ND	---	0.00200	"	"	--	--	--	--	--	--	"	
Toluene	"	ND	---	0.00200	"	"	--	--	--	--	--	--	"	
1,2,3-Trichlorobenzene	"	ND	---	0.00200	"	"	--	--	--	--	--	--	"	
1,2,4-Trichlorobenzene	"	ND	---	0.00200	"	"	--	--	--	--	--	--	"	
1,1,1-Trichloroethane	"	ND	---	0.00200	"	"	--	--	--	--	--	--	"	
1,1,2-Trichloroethane	"	ND	---	0.00200	"	"	--	--	--	--	--	--	"	
Trichloroethene	"	ND	---	0.00200	"	"	--	--	--	--	--	--	"	
Trichlorofluoromethane	"	ND	---	0.00500	"	"	--	--	--	--	--	--	"	
1,2,3-Trichloropropane	"	ND	---	0.00200	"	"	--	--	--	--	--	--	"	
1,2,4-Trimethylbenzene	"	ND	---	0.00200	"	"	--	--	--	--	--	--	"	
1,3,5-Trimethylbenzene	"	ND	---	0.00200	"	"	--	--	--	--	--	--	"	
Vinyl chloride	"	ND	---	0.00200	"	"	--	--	--	--	--	--	"	
o-Xylene	"	ND	---	0.00200	"	"	--	--	--	--	--	--	"	
m,p-Xylene	"	ND	---	0.00200	"	"	--	--	--	--	--	--	"	

Surrogate(s):	*4-BFB*	*Recovery:* *86.8%*	*Limits:* *75-130%*	"	*01/29/08 14:27*
	Dibromofluoromethane	*107%*	*75-130%*	"	"
	Toluene-d8	*103%*	*75-130%*	"	"
	1,2-DCA-d4	*105%*	*79-123%*	"	"

TestAmerica Portland

The results in this report apply to the samples analyzed in accordance with the chain of custody document. This analytical report shall not be reproduced except in full, without the written approval of the laboratory.

Callie Fahsholz For Christina Woodcock, Project Manager

TestAmerica
THE LEADER IN ENVIRONMENTAL TESTING

PORTLAND, OR 9405 S.W. NIMBUS AVENUE
BEAVERTON, OR 97008-7132
ph: (503) 906.9200 fax: (503) 906.9210

Secor	Project Name:	**ConocoPhillips**	
7730 SW Mohawk Street	Project Number:	0922 Portland Terminal (COP)	Report Created:
Tualatin, OR 97062	Project Manager:	Jessica Eckart	01/31/08 15:11

TCLP Volatile Organic Compounds per EPA Method 1311/8260B - Laboratory Quality Control Results

TestAmerica Portland

QC Batch: 8010992 ***Water Preparation Method: EPA 1311/5030***

Analyte	Method	Result	MDL*	MRL	Units	Dil	Source Result	Spike Amt	% REC	(Limits)	% RPD	(Limits)	Analyzed	Notes
LCS (8010992-BS1)								Extracted: 01/29/08 11:51						
Benzene	1311/8260B	0.215	---	0.0200	mg/l	1x	--	0.200	107%	(66-142)	--	--	01/29/08 13:06	
Carbon Tetrachloride	"	0.234	---	0.0200	"	"	--	"	117%	(50-150)	--	--	"	
Chlorobenzene	"	0.209	---	0.0200	"	"	--	"	105%	(60-133)	--	--	"	
Chloroform	"	0.217	---	0.0200	"	"	--	"	108%	(50-150)	--	--	"	
1,4-Dichlorobenzene	"	0.212	---	0.0200	"	"	--	"	106%	"	--	--	"	
1,2-Dichloroethane	"	0.214	---	0.0200	"	"	--	"	107%	"	--	--	"	
1,1-Dichloroethene	"	0.227	---	0.0200	"	"	--	"	113%	(59-172)	--	--	"	
2-Butanone (MEK)	"	0.438	---	0.500	"	"	--	0.400	110%	(40-180)	--	--	"	
Tetrachloroethene	"	0.214	---	0.0200	"	"	--	0.200	107%	(50-150)	--	--	"	
Trichloroethene	"	0.207	---	0.0200	"	"	--	"	104%	(62-137)	--	--	"	
Vinyl chloride	"	0.236	---	0.0200	"	"	--	"	118%	(40-180)	--	--	"	
Surrogate(s): 4-BFB		*Recovery: 103%*			*Limits: 75-130%*	*0.1x*							*01/29/08 13:06*	
Dibromofluoromethane		*115%*			*75-130%*	"							"	
Toluene-d8		*106%*			*75-130%*	"							"	
1,2-DCA-d4		*112%*			*79-123%*	"							"	
LCS Dup (8010992-BSD1)								Extracted: 01/29/08 11:51						
Benzene	1311/8260B	0.196	---	0.0200	mg/l	1x	--	0.200	98.2%	(66-142)	8.90%	(21)	01/29/08 14:54	
Carbon Tetrachloride	"	0.206	---	0.0200	"	"	--	"	103%	(50-150)	12.7%	(40)	"	
Chlorobenzene	"	0.194	---	0.0200	"	"	--	"	96.8%	(60-133)	7.79%	(21)	"	
Chloroform	"	0.192	---	0.0200	"	"	--	"	96.1%	(50-150)	12.1%	(40)	"	
1,4-Dichlorobenzene	"	0.187	---	0.0200	"	"	--	"	93.4%	"	12.7%	"	"	
1,2-Dichloroethane	"	0.192	---	0.0200	"	"	--	"	95.8%	"	10.9%	"	"	
1,1-Dichloroethene	"	0.202	---	0.0200	"	"	--	"	101%	(59-172)	11.5%	(22)	"	
2-Butanone (MEK)	"	0.426	---	0.500	"	"	--	0.400	106%	(40-180)	2.82%	(50)	"	
Tetrachloroethene	"	0.200	---	0.0200	"	"	--	0.200	99.9%	(50-150)	7.10%	"	"	
Trichloroethene	"	0.188	---	0.0200	"	"	--	"	94.0%	(62-137)	9.57%	(24)	"	
Vinyl chloride	"	0.210	---	0.0200	"	"	--	"	105%	(40-180)	11.4%	(50)	"	
Surrogate(s): 4-BFB		*Recovery: 98.1%*			*Limits: 75-130%*	*0.1x*							*01/29/08 14:54*	
Dibromofluoromethane		*108%*			*75-130%*	"							"	
Toluene-d8		*103%*			*75-130%*	"							"	
1,2-DCA-d4		*106%*			*79-123%*	"							"	

TestAmerica Portland

The results in this report apply to the samples analyzed in accordance with the chain of custody document. This analytical report shall not be reproduced except in full, without the written approval of the laboratory.

Callie Falsholz For Christina Woodcock, Project Manager

TestAmerica
THE LEADER IN ENVIRONMENTAL TESTING

PORTLAND, OR 9405 S.W. NIMBUS AVENUE
BEAVERTON, OR 97008-7132
ph: (503) 906.9200 fax: (503) 906.9210

Secor	Project Name:	**ConocoPhillips**	
7730 SW Mohawk Street	Project Number:	0922 Portland Terminal (COP)	Report Created:
Tualatin, OR 97062	Project Manager:	Jessica Eckart	01/31/08 15:11

TCLP Extraction Only - Laboratory Quality Control Results

TestAmerica Portland

QC Batch: 8010865 **Soil Preparation Method: EPA 1311**

Analyte	Method	Result	MDL*	MRL	Units	Dil	Source Result	Spike Amt	% REC	(Limits)	% RPD	(Limits)	Analyzed	Notes
Blank (8010865-BLK1)								Extracted: 01/24/08 21:03						
Extraction	EPA 1311	ND	---	1.00	N/A	1x	--	--	--	--	--	--	01/25/08 17:26	

TestAmerica Portland

Callie Fahsholz For Christina Woodcock, Project Manager

The results in this report apply to the samples analyzed in accordance with the chain of custody document. This analytical report shall not be reproduced except in full, without the written approval of the laboratory.

PORTLAND, OR 9405 S.W. NIMBUS AVENUE
BEAVERTON, OR 97008-7132
ph: (503) 906.9200 fax: (503) 906.9210

Secor	Project Name:	**ConocoPhillips**	
7730 SW Mohawk Street	Project Number:	0922 Portland Terminal (COP)	Report Created:
Tualatin, OR 97062	Project Manager:	Jessica Eckart	01/31/08 15:11

Notes and Definitions

Report Specific Notes:

M7 - The MS and/or MSD were above the acceptance limits. See Blank Spike (LCS).

Laboratory Reporting Conventions:

DET - Analyte DETECTED at or above the Reporting Limit. Qualitative Analyses only.

ND - Analyte NOT DETECTED at or above the reporting limit (MDL or MRL, as appropriate).

NR/NA - Not Reported / Not Available

dry - Sample results reported on a Dry Weight Basis. Results and Reporting Limits have been corrected for Percent Dry Weight.

wet - Sample results and reporting limits reported on a Wet Weight Basis (as received). Results with neither 'wet' nor 'dry' are reported on a Wet Weight Basis.

RPD - RELATIVE PERCENT DIFFERENCE (RPDs calculated using Results, not Percent Recoveries).

MRL - METHOD REPORTING LIMIT. Reporting Level at, or above, the lowest level standard of the Calibration Table.

MDL* - METHOD DETECTION LIMIT. Reporting Level at, or above, the statistically derived limit based on 40CFR, Part 136, Appendix B. *MDLs are listed on the report only if the data has been evaluated below the MRL. Results between the MDL and MRL are reported as Estimated Results.

Dil - Dilutions are calculated based on deviations from the standard dilution performed for an analysis, and may not represent the dilution found on the analytical raw data.

Reporting Limits - Reporting limits (MDLs and MRLs) are adjusted based on variations in sample preparation amounts, analytical dilutions and percent solids, where applicable.

Electronic Signature - Electronic Signature added in accordance with TestAmerica's *Electronic Reporting and Electronic Signatures Policy*. Application of electronic signature indicates that the report has been reviewed and approved for release by the laboratory. Electronic signature is intended to be the legally binding equivalent of a traditionally handwritten signature.

The results in this report apply to the samples analyzed in accordance with the chain of custody document. This analytical report shall not be reproduced except in full, without the written approval of the laboratory.

Callie Fahsholz For Christina Woodcock, Project Manager

COP0021742

PRA0686

TestAmerica Portland
9405 SW Nimbus Avenue

Beaverton, OR 97008
phone 503.906.9200 fax 503.906.9210

Chain of Custody Record

TestAmerica
THE LEADER IN ENVIRONMENTAL TESTING

TestAmerica Laboratories, Inc.

Client Contact	Project Manager: Jessica Eckart	Site Contact: Norman Swanson	Date: 01/24/08	COC No: 1
SECOR International, Inc.		Lab Contact: Christina	Carrier:	1 of 1 COCs
7730 SW Mohawk Blvd.	Analysis Turnaround Time			Job No. 15CP.00922
Tualtin, OR 97062	Calendar (C) or Work Days (W) _____			
(503) 691-2030 Phone	TAT if different from Below _____			
(503) 692-7074 FAX	☐ 2 weeks			SDG No.
Project Name: 0922 Portland Terminal (COP)	☐ 1 week			
Site: 0922	■ 2 days			
P O # None - Direct Bill to SECOR	☐ 1 day			

Sample Identification	Sample Date	Sample Time	Sample Type	Matrix	# of Cont.	Filtered Sample	TCLP 8260 (see comments)	TCLP Pb	Sample Specific Notes:
WCV1-24-08	1/24/2008	1100	Comp	Carbon	2		X	X	
									8260 TCLP:
									Vinyl Chloride; trichloroethene
									1,1-dichloroethene; chloroform;
									carbon tetrachloride; benzene;
									1,2-dichloroethane; tetrachloroethene;
									chlorobenzene; 2-butanone

Preservation Used: 1= Ice, 2= HCl; 3= H2SO4; 4=HNO3; 5=NaOH; 6= Other _____

Possible Hazard Identification
☐ *Non-Hazard* ☐ *Flammable* ☐ *Skin Irritant* *Poison B* ☐ *Unknown* ■

Sample Disposal (A fee may be assessed if samples are retained longer than 1 month)
☐ *Return To Client* ■ *Disposal By Lab* ☐ *Archive For* _____ *Months*

Special Instructions/QC Requirements & Comments:

Relinquished by:	Company:	Date/Time:	Received by:	Company:	Date/Time:
Norman Swanson	SECOR	1-24-8/1700	Mark Ormsby	SENVOY	124 1200
Mark Ormsby	SENVOY	124 1200	[illegible]	TAP	1/24/08 1728
Relinquished by:	Company:	Date/Time:	Received by:	Company:	Date/Time:

COP0021743

TestAmerica Sample Receipt Checklist

Received by: (section A)
Date: [illegible]
Time: [illegible]
Initials: [illegible]

Unpacked by: (section B)
Date: [illegible]
Initials: [illegible]

Logged-in by:
Date: [illegible]
Initials: JI

Work Order No. PRA0686
Client: [illegible]
Project: ConocoPhillips

Temperature out of range:
___Not enough Ice
___No Ice
___Ice Melted
___Wait 4 Hours
___Other ___

***ESI Clients (see Section C)

Cooler Temperature (IR): 1.2 °C plastic glass NA (oil/air samples. ESI client) Temperature Blank: _____ °C

A

Custody Seals: (#____)

Signature: Y N Dated:_____
X None

Container Type:
1 #Cooler(s)
____#Box(s)
____None (___#Other:_____)

Coolant Type:
____Gel Ice
X Loose Ice
____None

Packing Material:
X Bubble Bags
____Styrofoam Cubbies
____None (___Other:_____)

Received from:
____TA Courier
X Senvoy
____UPS
____Fed Ex
____Client
____TDP
____DHL
____SDS
____Mid-Valley
____GS/TA
____GS/Senvoy
____Other:
_____

B

Sample Status:
(If N circled, see NOD)

General:

Intact?	Y	N	
# Containers Match COC?	Y	N	none given
IDs Match COC?	Y	N	

For Analyses Requested:

Correct Type & Preservation?	Y	N	
Adequate Volume?	Y	N	
Within Hold Time?	Y	N	

Volatiles/ Oil Quality:

VOAs/ Syringes free of Headspace?	Y	N	NA
TB on COC? not provided	Y	N	NA

Metals:

HNO3 Preserved?	Y	N	NA
Dissolved Metals Filtered?	Y	N	NA

C

***ESI Clients Only:

Temperature Blank: _____ °C not provided

All preserved bottles checked Y N NA (voas/soils/all unp.)
All preserved accordingly? Y N (see NOD) NA (voas/soils/all unp.)

FED EX/ UPS: Was the tracking paper keepable? YES NO

If circled NO, what is the Tracking number? _____

FED EX Goldstreak UPS DHL Other: _____

Project Managers:

Comments. _____

PM Reviewed: _____ (Initial/Date)

COP0021744

TestAmerica
THE LEADER IN ENVIRONMENTAL TESTING

PORTLAND, OR 9405 S.W. NIMBUS AVENUE
BEAVERTON, OR 97008-7132
ph: (503) 906.9200 fax: (503) 906.9210

January 31, 2008

Jessica Eckart
Secor
7730 SW Mohawk Street
Tualatin, OR 97062

RE: ConocoPhillips

Enclosed are the results of analyses for samples received by the laboratory on 01/24/08 17:28. The following list is a summary of the Work Orders contained in this report, generated on 01/31/08 15:11.

If you have any questions concerning this report, please feel free to contact me.

Work Order	Project	ProjectNumber
PRA0686	ConocoPhillips	0922 Portland Terminal (COP)

The results in this report apply to the samples analyzed in accordance with the chain of custody document. This analytical report shall not be reproduced except in full, without the written approval of the laboratory.

Callie Fahsholz For Christina Woodcock, Project Manager

TestAmerica
THE LEADER IN ENVIRONMENTAL TESTING

PORTLAND, OR 9405 S.W. NIMBUS AVENUE
BEAVERTON, OR 97008-7132
ph: (503) 906.9200 fax: (503) 906.9210

Secor	Project Name:	**ConocoPhillips**	
7730 SW Mohawk Street	Project Number:	0922 Portland Terminal (COP)	Report Created:
Tualatin, OR 97062	Project Manager:	Jessica Eckart	01/31/08 15:11

ANALYTICAL REPORT FOR SAMPLES

Sample ID	Laboratory ID	Matrix	Date Sampled	Date Received
WCV1-24-08	PRA0686-01	Soil	01/24/08 11:00	01/24/08 17:28

TestAmerica Portland

Callie Fahsholz For Christina Woodcock, Project Manager

The results in this report apply to the samples analyzed in accordance with the chain of custody document. This analytical report shall not be reproduced except in full, without the written approval of the laboratory.

TestAmerica
THE LEADER IN ENVIRONMENTAL TESTING

PORTLAND, OR 9405 S.W. NIMBUS AVENUE
BEAVERTON, OR 97008-7137
ph: (503) 906.9200 fax: (503) 906.9210

Secor	Project Name:	**ConocoPhillips**	
7730 SW Mohawk Street	Project Number:	0922 Portland Terminal (COP)	Report Created:
Tualatin, OR 97062	Project Manager:	Jessica Eckart	01/31/08 15:11

TCLP Metals per EPA 1311/6000/7000 Series Methods

TestAmerica Portland

Analyte	Method	Result	MDL*	MRL	Units	Dil	Batch	Prepared	Analyzed	Notes
PRA0686-01 (WCV1-24-08)		**Soil**			**Sampled: 01/24/08 11:00**					
Lead	1311/6020	ND	-----	0.0500	mg/l	1x	8010918	01/28/08 11:27	01/29/08 02:12	

TestAmerica Portland

Callie Fahsholz For Christina Woodcock, Project Manager

The results in this report apply to the samples analyzed in accordance with the chain of custody document. This analytical report shall not be reproduced except in full, without the written approval of the laboratory.

COP0021747

TestAmerica
THE LEADER IN ENVIRONMENTAL TESTING

PORTLAND, OR 9405 S.W. NIMBUS AVENUE
BEAVERTON, OR 97008-7132
ph: (503) 906.9200 fax: (503) 906.9210

Secor	Project Name:	**ConocoPhillips**	
7730 SW Mohawk Street	Project Number:	0922 Portland Terminal (COP)	Report Created:
Tualatin, OR 97062	Project Manager:	Jessica Eckart	01/31/08 15:11

TCLP Volatile Organic Compounds per EPA Method 1311/8260B

TestAmerica Portland

Analyte	Method	Result	MDL[a]	MRL	Units	Dil	Batch	Prepared	Analyzed	Notes
PRA0686-01 (WCV1-24-08)		**Soil**			**Sampled: 01/24/08 11:00**					
Acetone	1311/8260B	ND	-----	0.500	mg/l	1x	8010992	01/29/08 11:51	01/29/08 16:55	
Benzene	"	ND	-----	0.0200	"	"	"	"	"	
Bromobenzene	"	ND	-----	0.0200	"	"	"	"	"	
Bromochloromethane	"	ND	-----	0.0200	"	"	"	"	"	
Bromodichloromethane	"	ND	-----	0.0200	"	"	"	"	"	
Bromoform	"	ND	-----	0.0200	"	"	"	"	"	
Bromomethane	"	ND	-----	0.100	"	"	"	"	"	
n-Butylbenzene	"	ND	-----	0.0200	"	"	"	"	"	
sec-Butylbenzene	"	ND	-----	0.0200	"	"	"	"	"	
tert-Butylbenzene	"	ND	-----	0.0200	"	"	"	"	"	
Carbon Tetrachloride	"	ND	-----	0.0200	"	"	"	"	"	
Chlorobenzene	"	ND	-----	0.0200	"	"	"	"	"	
Chloroethane	"	ND	-----	0.0500	"	"	"	"	"	
Chloroform	"	ND	-----	0.0200	"	"	"	"	"	
Chloromethane	"	ND	-----	0.100	"	"	"	"	"	
2-Chlorotoluene	"	ND	-----	0.0200	"	"	"	"	"	
4-Chlorotoluene	"	ND	-----	0.0200	"	"	"	"	"	
1,2-Dibromo-3-chloropropane	"	ND	-----	0.0500	"	"	"	"	"	
Dibromochloromethane	"	ND	-----	0.0200	"	"	"	"	"	
1,2-Dibromoethane	"	ND	-----	0.0200	"	"	"	"	"	
Dibromomethane	"	ND	-----	0.0200	"	"	"	"	"	
1,2-Dichlorobenzene	"	ND	-----	0.0200	"	"	"	"	"	
1,3-Dichlorobenzene	"	ND	-----	0.0200	"	"	"	"	"	
1,4-Dichlorobenzene	"	ND	-----	0.0200	"	"	"	"	"	
Dichlorodifluoromethane	"	ND	-----	0.100	"	"	"	"	"	
1,1-Dichloroethane	"	ND	-----	0.0200	"	"	"	"	"	
1,2-Dichloroethane	"	ND	-----	0.0200	"	"	"	"	"	
1,1-Dichloroethene	"	ND	-----	0.0200	"	"	"	"	"	
cis-1,2-Dichloroethene	"	ND	-----	0.0200	"	"	"	"	"	
trans-1,2-Dichloroethene	"	ND	-----	0.0200	"	"	"	"	"	
1,2-Dichloropropane	"	ND	-----	0.0200	"	"	"	"	"	
1,3-Dichloropropane	"	ND	-----	0.0200	"	"	"	"	"	
2,2-Dichloropropane	"	ND	-----	0.0200	"	"	"	"	"	
1,1-Dichloropropene	"	ND	-----	0.0200	"	"	"	"	"	
cis-1,3-Dichloropropene	"	ND	-----	0.0200	"	"	"	"	"	
trans-1,3-Dichloropropene	"	ND	-----	0.0200	"	"	"	"	"	
Ethylbenzene	"	ND	-----	0.0200	"	"	"	"	"	
Hexachlorobutadiene	"	ND	-----	0.0500	"	"	"	"	"	
2-Hexanone	"	ND	-----	0.100	"	"	"	"	"	
Isopropylbenzene	"	ND	-----	0.0200	"	"	"	"	"	
p-Isopropyltoluene	"	ND	-----	0.0200	"	"	"	"	"	
4-Methyl-2-pentanone	"	ND	-----	0.200	"	"	"	"	"	
2-Butanone (MEK)	"	ND	-----	0.500	"	"	"	"	"	

TestAmerica Portland

The results in this report apply to the samples analyzed in accordance with the chain of custody document. This analytical report shall not be reproduced except in full, without the written approval of the laboratory.

Callie Fahsholz For Christina Woodcock, Project Manager

TestAmerica
THE LEADER IN ENVIRONMENTAL TESTING

PORTLAND, OR 9405 S.W. NIMBUS AVENUE
BEAVERTON, OR 97008-7132
ph: (503) 906.9200 fax: (503) 906.9210

Secor	Project Name:	**ConocoPhillips**	
7730 SW Mohawk Street	Project Number:	0922 Portland Terminal (COP)	Report Created:
Tualatin, OR 97062	Project Manager:	Jessica Eckart	01/31/08 15:11

TCLP Volatile Organic Compounds per EPA Method 1311/8260B

TestAmerica Portland

Analyte	Method	Result	MDL*	MRL	Units	Dil	Batch	Prepared	Analyzed	Notes
PRA0686-01 (WCV1-24-08)		**Soil**			**Sampled: 01/24/08 11:00**					
Methylene chloride	1311/8260B	ND	-----	0.500	mg/l	1x	8010992	01/29/08 11:51	01/29/08 16:55	
Methyl tert-butyl ether	"	ND	-----	10.0	"	"	"	"	"	
Naphthalene	"	ND	-----	0.0200	"	"	"	"	"	
n-Propylbenzene	"	ND	-----	0.0200	"	"	"	"	"	
Styrene	"	ND	-----	0.0200	"	"	"	"	"	
1,1,1,2-Tetrachloroethane	"	ND	-----	0.0200	"	"	"	"	"	
1,1,2,2-Tetrachloroethane	"	ND	-----	0.0200	"	"	"	"	"	
Tetrachloroethene	"	ND	-----	0.0200	"	"	"	"	"	
Toluene	"	ND	-----	0.0200	"	"	"	"	"	
1,2,3-Trichlorobenzene	"	ND	-----	0.0200	"	"	"	"	"	
1,2,4-Trichlorobenzene	"	ND	-----	0.0200	"	"	"	"	"	
1,1,1-Trichloroethane	"	ND	-----	0.0200	"	"	"	"	"	
1,1,2-Trichloroethane	"	ND	-----	0.0200	"	"	"	"	"	
Trichloroethene	"	ND	-----	0.0200	"	"	"	"	"	
Trichlorofluoromethane	"	ND	-----	0.0500	"	"	"	"	"	
1,2,3-Trichloropropane	"	ND	-----	0.0200	"	"	"	"	"	
1,2,4-Trimethylbenzene	"	ND	-----	0.0200	"	"	"	"	"	
1,3,5-Trimethylbenzene	"	ND	-----	0.0200	"	"	"	"	"	
Vinyl chloride	"	ND	-----	0.0200	"	"	"	"	"	
o-Xylene	"	ND	-----	0.0200	"	"	"	"	"	
m,p-Xylene	"	ND	-----	0.0200	"	"	"	"	"	
Surrogate(s):	*4-BFB*		*89.5%*		*75 - 130 %*	*0.1x*			"	
	Dibromofluoromethane		*108%*		*75 - 130 %*	"			"	
	Toluene-d8		*106%*		*75 - 130 %*	"			"	
	1,2-DCA-d4		*111%*		*79 - 123 %*	"			"	

TestAmerica Portland

The results in this report apply to the samples analyzed in accordance with the chain of custody document. This analytical report shall not be reproduced except in full, without the written approval of the laboratory.

Callie Fuhsholz For Christina Woodcock, Project Manager

TestAmerica
THE LEADER IN ENVIRONMENTAL TESTING

PORTLAND, OR 9405 S.W. NIMBUS AVENUE
BEAVERTON, OR 97008-7132
ph: (503) 906.9200 fax: (503) 906.9210

Secor	Project Name:	**ConocoPhillips**	
7730 SW Mohawk Street	Project Number:	0922 Portland Terminal (COP)	Report Created:
Tualatin, OR 97062	Project Manager:	Jessica Eckart	01/31/08 15:11

TCLP Extraction Only

TestAmerica Portland

Analyte	Method	Result	MDL*	MRL	Units	Dil	Batch	Prepared	Analyzed	Notes
PRA0686-01 (WCV1-24-08)		**Soil**			**Sampled: 01/24/08 11:00**					
Extraction	EPA 1311	ND	-----	1.00	N/A	1x	8010865	01/24/08 21:03	01/25/08 17:26	

TestAmerica Portland

Callie Fabsholz For Christina Woodcock, Project Manager

The results in this report apply to the samples analyzed in accordance with the chain of custody document. This analytical report shall not be reproduced except in full, without the written approval of the laboratory.

TestAmerica
THE LEADER IN ENVIRONMENTAL TESTING

PORTLAND, OR 9405 S.W. NIMBUS AVENUE
BEAVERTON, OR 97008-7132
ph: (503) 906.9200 fax: (503) 906.9210

Secor	Project Name:	**ConocoPhillips**	
7730 SW Mohawk Street	Project Number:	0922 Portland Terminal (COP)	Report Created:
Tualatin, OR 97062	Project Manager:	Jessica Eckart	01/31/08 15:11

TCLP Metals per EPA 1311/6000/7000 Series Methods - Laboratory Quality Control Results

TestAmerica Portland

QC Batch: 8010918 **Soil Preparation Method: EPA 1311/3005**

Analyte	Method	Result	MDL*	MRL	Units	Dil	Source Result	Spike Amt	% REC	(Limits)	% RPD	(Limits)	Analyzed	Notes
Blank (8010918-BLK1)								Extracted: 01/28/08 11:27						
Lead	1311/6020	ND	---	0.0500	mg/l	1x	--	--	--	--	--	--	01/29/08 00:19	
LCS (8010918-BS1)								Extracted: 01/28/08 11:27						
Lead	1311/6020	0.191	---	0.0500	mg/l	1x	--	0.200	95.7%	(75-125)	--	--	01/29/08 00:27	
Duplicate (8010918-DUP1)				QC Source: PRA0481-01				Extracted: 01/28/08 11:27						
Lead	1311/6020	ND	---	0.0500	mg/l	1x	ND	--	--	--	3.35%	(20)	01/29/08 00:41	
Matrix Spike (8010918-MS1)				QC Source: PRA0481-02				Extracted: 01/28/08 11:27						
Lead	1311/6020	1.52	---	0.0500	mg/l	1x	1.14	0.200	190%	(50-150)	--	--	01/29/08 01:03	M7
Matrix Spike (8010918-MS2)				QC Source: PRA0662-01				Extracted: 01/28/08 11:27						
Lead	1311/6020	0.412	---	0.0500	mg/l	1x	0.185	0.200	113%	(50-150)	--	--	01/29/08 02:05	

TestAmerica Portland

Callie Falsholz For Christina Woodcock, Project Manager

The results in this report apply to the samples analyzed in accordance with the chain of custody document. This analytical report shall not be reproduced except in full, without the written approval of the laboratory.

TestAmerica
THE LEADER IN ENVIRONMENTAL TESTING

PORTLAND, OR 9405 S.W. NIMBUS AVENUE
BEAVERTON, OR 97008-7132
ph: (503) 906.9200 fax: (503) 906.9210

Secor	Project Name:	**ConocoPhillips**	
7730 SW Mohawk Street	Project Number:	0922 Portland Terminal (COP)	Report Created:
Tualatin, OR 97062	Project Manager:	Jessica Eckart	01/31/08 15:11

TCLP Volatile Organic Compounds per EPA Method 1311/8260B - Laboratory Quality Control Results

TestAmerica Portland

QC Batch: 8010992 **Water Preparation Method: EPA 1311/5030**

Analyte	Method	Result	MDL*	MRL	Units	Dil	Source Result	Spike Amt	% REC	(Limits)	% RPD	(Limits)	Analyzed	Notes
Blank (8010992-BLK1)								Extracted: 01/29/08 11:51						
Acetone	1311/8260B	ND	---	0.0500	mg/l	0.1x	--	--	--	--	--	--	01/29/08 14:27	
Benzene	"	ND	---	0.00200	"	"	--	--	--	--	--	--	"	
Bromobenzene	"	ND	---	0.00200	"	"	--	--	--	--	--	--	"	
Bromochloromethane	"	ND	---	0.00200	"	"	--	--	--	--	--	--	"	
Bromodichloromethane	"	ND	---	0.00200	"	"	--	--	--	--	--	--	"	
Bromoform	"	ND	---	0.00200	"	"	--	--	--	--	--	--	"	
Bromomethane	"	ND	---	0.0100	"	"	--	--	--	--	--	--	"	
n-Butylbenzene	"	ND	---	0.00200	"	"	--	--	--	--	--	--	"	
sec-Butylbenzene	"	ND	---	0.00200	"	"	--	--	--	--	--	--	"	
tert-Butylbenzene	"	ND	---	0.00200	"	"	--	--	--	--	--	--	"	
Carbon Tetrachloride	"	ND	---	0.00200	"	"	--	--	--	--	--	--	"	
Chlorobenzene	"	ND	---	0.00200	"	"	--	--	--	--	--	--	"	
Chloroethane	"	ND	---	0.00500	"	"	--	--	--	--	--	--	"	
Chloroform	"	ND	---	0.00200	"	"	--	--	--	--	--	--	"	
Chloromethane	"	ND	---	0.0100	"	"	--	--	--	--	--	--	"	
2-Chlorotoluene	"	ND	---	0.00200	"	"	--	--	--	--	--	--	"	
4-Chlorotoluene	"	ND	---	0.00200	"	"	--	--	--	--	--	--	"	
1,2-Dibromo-3-chloropropane	"	ND	---	0.00500	"	"	--	--	--	--	--	--	"	
Dibromochloromethane	"	ND	---	0.00200	"	"	--	--	--	--	--	--	"	
1,2-Dibromoethane	"	ND	---	0.00200	"	"	--	--	--	--	--	--	"	
Dibromomethane	"	ND	---	0.00200	"	"	--	--	--	--	--	--	"	
1,2-Dichlorobenzene	"	ND	---	0.00200	"	"	--	--	--	--	--	--	"	
1,3-Dichlorobenzene	"	ND	---	0.00200	"	"	--	--	--	--	--	--	"	
1,4-Dichlorobenzene	"	ND	---	0.00200	"	"	--	--	--	--	--	--	"	
Dichlorodifluoromethane	"	ND	---	0.0100	"	"	--	--	--	--	--	--	"	
1,1-Dichloroethane	"	ND	---	0.00200	"	"	--	--	--	--	--	--	"	
1,2-Dichloroethane	"	ND	---	0.00200	"	"	--	--	--	--	--	--	"	
1,1-Dichloroethene	"	ND	---	0.00200	"	"	--	--	--	--	--	--	"	
cis-1,2-Dichloroethene	"	ND	---	0.00200	"	"	--	--	--	--	--	--	"	
trans-1,2-Dichloroethene	"	ND	---	0.00200	"	"	--	--	--	--	--	--	"	
1,2-Dichloropropane	"	ND	---	0.00200	"	"	--	--	--	--	--	--	"	
1,3-Dichloropropane	"	ND	---	0.00200	"	"	--	--	--	--	--	--	"	
2,2-Dichloropropane	"	ND	---	0.00200	"	"	--	--	--	--	--	--	"	
1,1-Dichloropropene	"	ND	---	0.00200	"	"	--	--	--	--	--	--	"	
cis-1,3-Dichloropropene	"	ND	---	0.00200	"	"	--	--	--	--	--	--	"	
trans-1,3-Dichloropropene	"	ND	---	0.00200	"	"	--	--	--	--	--	--	"	
Ethylbenzene	"	ND	---	0.00200	"	"	--	--	--	--	--	--	"	
Hexachlorobutadiene	"	ND	---	0.00500	"	"	--	--	--	--	--	--	"	
2-Hexanone	"	ND	---	0.0100	"	"	--	--	--	--	--	--	"	

TestAmerica Portland

Callie Fahsholz For Christina Woodcock, Project Manager

The results in this report apply to the samples analyzed in accordance with the chain of custody document. This analytical report shall not be reproduced except in full, without the written approval of the laboratory.

TestAmerica
THE LEADER IN ENVIRONMENTAL TESTING

PORTLAND, OR 9405 S.W. NIMBUS AVENUE
BEAVERTON, OR 97008-7132
ph: (503) 906.9200 fax: (503) 906.9210

Secor	Project Name:	**ConocoPhillips**	
7730 SW Mohawk Street	Project Number:	0922 Portland Terminal (COP)	Report Created:
Tualatin, OR 97062	Project Manager:	Jessica Eckart	01/31/08 15:11

TCLP Volatile Organic Compounds per EPA Method 1311/8260B - Laboratory Quality Control Results

TestAmerica Portland

QC Batch: 8010992 **Water Preparation Method: EPA 1311/5030**

Analyte	Method	Result	MDL*	MRL	Units	Dil	Source Result	Spike Amt	% REC	(Limits)	% RPD	(Limits)	Analyzed	Notes
Blank (8010992-BLK1)								Extracted: 01/29/08 11:51						
Isopropylbenzene	1311/8260B	ND	---	0.00200	mg/l	0.1x	--	--	--	--	--	--	01/29/08 14:27	
p-Isopropyltoluene	"	ND	---	0.00200	"	"	--	--	--	--	--	--	"	
4-Methyl-2-pentanone	"	ND	---	0.0200	"	"	--	--	--	--	--	--	"	
2-Butanone (MEK)	"	ND	---	0.0500	"	"	--	--	--	--	--	--	"	
Methylene chloride	"	ND	---	0.0500	"	"	--	--	--	--	--	--	"	
Methyl tert-butyl ether	"	ND	---	1.00	"	"	--	--	--	--	--	--	"	
Naphthalene	"	ND	---	0.00200	"	"	--	--	--	--	--	--	"	
n-Propylbenzene	"	ND	---	0.00200	"	"	--	--	--	--	--	--	"	
Styrene	"	ND	---	0.00200	"	"	--	--	--	--	--	--	"	
1,1,1,2-Tetrachloroethane	"	ND	---	0.00200	"	"	--	--	--	--	--	--	"	
1,1,2,2-Tetrachloroethane	"	ND	---	0.00200	"	"	--	--	--	--	--	--	"	
Tetrachloroethene	"	ND	---	0.00200	"	"	--	--	--	--	--	--	"	
Toluene	"	ND	---	0.00200	"	"	--	--	--	--	--	--	"	
1,2,3-Trichlorobenzene	"	ND	---	0.00200	"	"	--	--	--	--	--	--	"	
1,2,4-Trichlorobenzene	"	ND	---	0.00200	"	"	--	--	--	--	--	--	"	
1,1,1-Trichloroethane	"	ND	---	0.00200	"	"	--	--	--	--	--	--	"	
1,1,2-Trichloroethane	"	ND	---	0.00200	"	"	--	--	--	--	--	--	"	
Trichloroethene	"	ND	---	0.00200	"	"	--	--	--	--	--	--	"	
Trichlorofluoromethane	"	ND	---	0.00500	"	"	--	--	--	--	--	--	"	
1,2,3-Trichloropropane	"	ND	---	0.00200	"	"	--	--	--	--	--	--	"	
1,2,4-Trimethylbenzene	"	ND	---	0.00200	"	"	--	--	--	--	--	--	"	
1,3,5-Trimethylbenzene	"	ND	---	0.00200	"	"	--	--	--	--	--	--	"	
Vinyl chloride	"	ND	---	0.00200	"	"	--	--	--	--	--	--	"	
o-Xylene	"	ND	---	0.00200	"	"	--	--	--	--	--	--	"	
m,p-Xylene	"	ND	---	0.00200	"	"	--	--	--	--	--	--	"	
Surrogate(s):	*4-BFB*	*Recovery:*	*86.8%*		*Limits:*	*75-130%*	"						*01/29/08 14:27*	
	Dibromofluoromethane		*107%*			*75-130%*	"						"	
	Toluene-d8		*103%*			*75-130%*	"						"	
	1,2-DCA-d4		*105%*			*79-123%*	"						"	

TestAmerica Portland

The results in this report apply to the samples analyzed in accordance with the chain of custody document. This analytical report shall not be reproduced except in full, without the written approval of the laboratory.

Callie Fahsholz For Christina Woodcock, Project Manager

COP0021753

TestAmerica
THE LEADER IN ENVIRONMENTAL TESTING

PORTLAND, OR 9405 S.W. NIMBUS AVENUE
BEAVERTON, OR 97008-7132
ph: (503) 906.9200 fax: (503) 906.9210

Secor	Project Name:	**ConocoPhillips**	
7730 SW Mohawk Street	Project Number:	0922 Portland Terminal (COP)	Report Created:
Tualatin, OR 97062	Project Manager:	Jessica Eckart	01/31/08 15:11

TCLP Volatile Organic Compounds per EPA Method 1311/8260B - Laboratory Quality Control Results

TestAmerica Portland

QC Batch: 8010992 **Water Preparation Method: EPA 1311/5030**

Analyte	Method	Result	MDL*	MRL	Units	Dil	Source Result	Spike Amt	% REC	(Limits)	% RPD	(Limits)	Analyzed	Notes
LCS (8010992-BS1)								Extracted: 01/29/08 11:51						
Benzene	1311/8260B	0.215	---	0.0200	mg/l	1x	--	0.200	107%	(66-142)	--	--	01/29/08 13:06	
Carbon Tetrachloride	"	0.234	---	0.0200	"	"	--	"	117%	(50-150)	--	--	"	
Chlorobenzene	"	0.209	---	0.0200	"	"	--	"	105%	(60-133)	--	--	"	
Chloroform	"	0.217	---	0.0200	"	"	--	"	108%	(50-150)	--	--	"	
1,4-Dichlorobenzene	"	0.212	---	0.0200	"	"	--	"	106%	"	--	--	"	
1,2-Dichloroethane	"	0.214	---	0.0200	"	"	--	"	107%	"	--	--	"	
1,1-Dichloroethene	"	0.227	---	0.0200	"	"	--	"	113%	(59-172)	--	--	"	
2-Butanone (MEK)	"	0.438	---	0.500	"	"	--	0.400	110%	(40-180)	--	--	"	
Tetrachloroethene	"	0.214	---	0.0200	"	"	--	0.200	107%	(50-150)	--	--	"	
Trichloroethene	"	0.207	---	0.0200	"	"	--	"	104%	(62-137)	--	--	"	
Vinyl chloride	"	0.236	---	0.0200	"	"	--	"	118%	(40-180)	--	--	"	
Surrogate(s): *4-BFB*		*Recovery:* *103%*			*Limits:* *75-130%*	*0.1x*							*01/29/08 13:06*	
Dibromofluoromethane		*115%*			*75-130%*	"							"	
Toluene-d8		*106%*			*75-130%*	"							"	
1,2-DCA-d4		*112%*			*79-123%*	"							"	
LCS Dup (8010992-BSD1)								Extracted: 01/29/08 11:51						
Benzene	1311/8260B	0.196	---	0.0200	mg/l	1x	--	0.200	98.2%	(66-142)	8.90%	(21)	01/29/08 14:54	
Carbon Tetrachloride	"	0.206	---	0.0200	"	"	--	"	103%	(50-150)	12.7%	(40)	"	
Chlorobenzene	"	0.194	---	0.0200	"	"	--	"	96.8%	(60-133)	7.79%	(21)	"	
Chloroform	"	0.192	---	0.0200	"	"	--	"	96.1%	(50-150)	12.1%	(40)	"	
1,4-Dichlorobenzene	"	0.187	---	0.0200	"	"	--	"	93.4%	"	12.7%	"	"	
1,2-Dichloroethane	"	0.192	---	0.0200	"	"	--	"	95.8%	"	10.9%	"	"	
1,1-Dichloroethene	"	0.202	---	0.0200	"	"	--	"	101%	(59-172)	11.5%	(22)	"	
2-Butanone (MEK)	"	0.426	---	0.500	"	"	--	0.400	106%	(40-180)	2.82%	(50)	"	
Tetrachloroethene	"	0.200	---	0.0200	"	"	--	0.200	99.9%	(50-150)	7.10%	"	"	
Trichloroethene	"	0.188	---	0.0200	"	"	--	"	94.0%	(62-137)	9.57%	(24)	"	
Vinyl chloride	"	0.210	---	0.0200	"	"	--	"	105%	(40-180)	11.4%	(50)	"	
Surrogate(s): *4-BFB*		*Recovery:* *98.1%*			*Limits:* *75-130%*	*0.1x*							*01/29/08 14:54*	
Dibromofluoromethane		*108%*			*75-130%*	"							"	
Toluene-d8		*103%*			*75-130%*	"							"	
1,2-DCA-d4		*106%*			*79-123%*	"							"	

TestAmerica Portland

Callie Fahsholz For Christina Woodcock, Project Manager

The results in this report apply to the samples analyzed in accordance with the chain of custody document. This analytical report shall not be reproduced except in full, without the written approval of the laboratory.

TestAmerica
THE LEADER IN ENVIRONMENTAL TESTING

PORTLAND, OR 9405 S.W. NIMBUS AVENUE
BEAVERTON, OR 97008-7132
ph: (503) 906.9200 fax: (503) 906.9210

Secor	Project Name:	**ConocoPhillips**	
7730 SW Mohawk Street	Project Number:	0922 Portland Terminal (COP)	Report Created:
Tualatin, OR 97062	Project Manager:	Jessica Eckart	01/31/08 15:11

TCLP Extraction Only - Laboratory Quality Control Results

TestAmerica Portland

QC Batch: 8010865 **Soil Preparation Method: EPA 1311**

Analyte	Method	Result	MDL*	MRL	Units	Dil	Source Result	Spike Amt	% REC	(Limits)	% RPD	(Limits)	Analyzed	Notes
Blank (8010865-BLK1)								Extracted: 01/24/08 21:03						
Extraction	EPA 1311	ND	---	1.00	N/A	1x	--	--	--	--	--	--	01/25/08 17:26	

TestAmerica Portland

The results in this report apply to the samples analyzed in accordance with the chain of custody document. This analytical report shall not be reproduced except in full, without the written approval of the laboratory.

Callie Falsholz For Christina Woodcock, Project Manager

PORTLAND, OR 9405 S.W. NIMBUS AVENUE
BEAVERTON, OR 97008-7132
ph: (503) 906.9200 fax: (503) 906.9210

Secor	Project Name:	**ConocoPhillips**	
7730 SW Mohawk Street	Project Number:	0922 Portland Terminal (COP)	Report Created:
Tualatin, OR 97062	Project Manager:	Jessica Eckart	01/31/08 15:11

Notes and Definitions

Report Specific Notes:

M7 - The MS and/or MSD were above the acceptance limits. See Blank Spike (LCS).

Laboratory Reporting Conventions:

DET - Analyte DETECTED at or above the Reporting Limit. Qualitative Analyses only.

ND - Analyte NOT DETECTED at or above the reporting limit (MDL or MRL, as appropriate).

NR/NA - Not Reported / Not Available

dry - Sample results reported on a Dry Weight Basis. Results and Reporting Limits have been corrected for Percent Dry Weight.

wet - Sample results and reporting limits reported on a Wet Weight Basis (as received). Results with neither 'wet' nor 'dry' are reported on a Wet Weight Basis.

RPD - RELATIVE PERCENT DIFFERENCE (RPDs calculated using Results, not Percent Recoveries).

MRL - METHOD REPORTING LIMIT. Reporting Level at, or above, the lowest level standard of the Calibration Table.

MDL* - METHOD DETECTION LIMIT. Reporting Level at, or above, the statistically derived limit based on 40CFR, Part 136, Appendix B. *MDLs are listed on the report only if the data has been evaluated below the MRL. Results between the MDL and MRL are reported as Estimated Results.

Dil - Dilutions are calculated based on deviations from the standard dilution performed for an analysis, and may not represent the dilution found on the analytical raw data.

Reporting Limits - Reporting limits (MDLs and MRLs) are adjusted based on variations in sample preparation amounts, analytical dilutions and percent solids, where applicable.

Electronic Signature - Electronic Signature added in accordance with TestAmerica's *Electronic Reporting and Electronic Signatures Policy*. Application of electronic signature indicates that the report has been reviewed and approved for release by the laboratory. Electronic signature is intended to be the legally binding equivalent of a traditionally handwritten signature.

The results in this report apply to the samples analyzed in accordance with the chain of custody document. This analytical report shall not be reproduced except in full, without the written approval of the laboratory.

Callie Fahlsholz For Christina Woodcock, Project Manager

COP0021756

PRA0686

TestAmerica Portland
9405 SW Nimbus Avenue
Beaverton, OR 97008
phone 503.906.9200 fax 503.906.9210

Chain of Custody Record

TestAmerica
THE LEADER IN ENVIRONMENTAL TESTING

TestAmerica Laboratories, Inc.

Client Contact	Project Manager: Jessica Eckart	Site Contact: Norman Swanson	Date: 01/24/08	COC No: 1
SECOR International, Inc.		Lab Contact: Christina	Carrier:	1 of 1 COCs
7730 SW Mohawk Blvd.	Analysis Turnaround Time			Job No. 15CP.00922
Tualtin, OR 97062	Calendar (C) or Work Days (W)			
(503) 691-2030 Phone	TAT if different from Below			
(503) 692-7074 FAX	☐ 2 weeks			SDG No.
Project Name: 0922 Portland Terminal (COP)	☐ 1 week			
Site: 0922	■ 2 days			
P O # None - Direct Bill to SECOR	☐ 1 day			

Sample Identification	Sample Date	Sample Time	Sample Type	Matrix	# of Cont.	Filtered Sample	TCLP 8260 (see comments)	TCLP Pb	Sample Specific Notes:
WCV1-24-08	1/24/2008	1100	Comp	Carbon	2		X	X	
									8260 TCLP:
									Vinyl Chloride; trichloroethene
									1,1-dichloroethene; chloroform;
									carbon tetrachloride; benzene;
									1,2-dichloroethane; tetrachloroethene;
									chlorobenzene; 2-butanone

Preservation Used: 1= Ice, 2= HCl; 3= H2SO4; 4=HNO3; 5=NaOH; 6= Other _____

Possible Hazard Identification
☐ *Non-Hazard* ☐ *Flammable* ☐ *Skin Irritant* *Poison B* ☐ *Unknown* ■

Sample Disposal (A fee may be assessed if samples are retained longer than 1 month)
☐ *Return To Client* ■ *Disposal By Lab* ☐ *Archive For _____ Months*

Special Instructions/QC Requirements & Comments:

Relinquished by:	Company:	Date/Time:	Received by:	Company:	Date/Time:
Norman Swanson	SECOR	1-24-8/1700	Mark Ortega	SENVOY	124 1200
Mark Ortega	SENVOY	124 1728	[illegible]	TAP	1/24/08 1728

COP0021757

TestAmerica Sample Receipt Checklist

Received by: (Section A)
Date: 1-24-12
Time: 1:25
Initials: JS

Unpacked by: (Section B)
Date: 1-24-12
Initials: JS

Logged-in by:
Date: 1-24-12
Initials: JS

Work Order No. PRA0086
Client: [illegible]
Project: ConocoPhillips

Temperature out of range
___Not enough Ice
___No Ice
___Ice Melted
___Wtn 4 Hours
___Other ___

***ESI Clients (see Section C)

Cooler Temperature (IR): 1.2 °C plastic glass NA (oil/air samples. ESI client) Temperature Blank: ___ °C

A

Custody Seals: (#___)

Signature: Y N Dated: ___
X None

Container Type:
1 #Cooler(s)
___#Box(s)
___None (___#Other: ___)

Coolant Type:
___Gel Ice
X Loose Ice
___None

Packing Material:
X Bubble Bags
___Styrofoam Cubbies
___None (___Other: ___)

Received from:
___TA Courier
X Senvoy
___UPS
___Fed Ex
___Client
___TDP
___DHL
___SDS
___Mid-Valley
___GS/TA
___GS/Senvoy
___Other: ___

B

Sample Status:
(If N circled, see NOD)

General:			
Intact?	Y	N	
# Containers Match COC?	Y	N	none given
IDs Match COC?	Y	N	
For Analyses Requested:			
Correct Type & Preservation?	Y	N	
Adequate Volume?	Y	N	
Within Hold Time?	Y	N	
Volatiles/ Oil Quality:			
VOAs/ Syringes free of Headspace?	Y	N	NA
TB on COC? not provided	Y	N	NA
Metals:			
HNO3 Preserved?	Y	N	NA
Dissolved Metals Filtered?	Y	N	NA

C

***ESI Clients Only:

Temperature Blank: ___ °C not provided

All preserved bottles checked Y N NA (voas/solids/all unp.)
All preserved accordingly? Y N (see NOD) NA (voas/solids/all unp.)

FED EX/ UPS. Was the tracking paper keepable? YES NO

If circled NO, what is the Tracking number? ___

FED EX Goldstreak UPS DHL Other: ___

Project Managers:

Comments: ___

PM Reviewed: ___ (Initial/Date)

COP0021758

TestAmerica
THE LEADER IN ENVIRONMENTAL TESTING

PORTLAND, OR 9405 S.W. NIMBUS AVENUE
BEAVERTON, OR 97008-7132
ph: (503) 906.9200 fax: (503) 906.9210

Soil cuttings.
Beach wells & U29 Cluster

January 17, 2008

Jessica Eckart
Secor
7730 SW Mohawk Street
Tualatin, OR 97062

RE: ConocoPhillips

Enclosed are the results of analyses for samples received by the laboratory on 12/19/07 15:50.
The following list is a summary of the Work Orders contained in this report, generated on 01/17/08 17:13.

If you have any questions concerning this report, please feel free to contact me.

Work Order	Project	ProjectNumber
PQL0764	ConocoPhillips	ISCP.00922.40

TestAmerica Portland

Christina M. Woodcock

Christina Woodcock, Project Manager

The results in this report apply to the samples analyzed in accordance with the chain of custody document. This analytical report shall not be reproduced except in full, without the written approval of the laboratory.

TestAmerica
THE LEADER IN ENVIRONMENTAL TESTING

PORTLAND, OR 9405 S.W. NIMBUS AVENUE
BEAVERTON, OR 97008-7132
ph: (503) 906.9200 fax: (503) 906.9210

Secor	Project Name:	**ConocoPhillips**	
7730 SW Mohawk Street	Project Number:	ISCP.00922.40	Report Created:
Tualatin, OR 97062	Project Manager:	Jessica Eckart	01/17/08 17:13

ANALYTICAL REPORT FOR SAMPLES

Sample ID	Laboratory ID	Matrix	Date Sampled	Date Received
U-29C-S-15	PQL0764-03	Soil	12/13/07 09:00	12/19/07 15:50
U-29C-S-20	PQL0764-04	Soil	12/13/07 09:05	12/19/07 15:50
U-29C-S-25	PQL0764-05	Soil	12/13/07 09:10	12/19/07 15:50
U-29C-S-70	PQL0764-14	Soil	12/14/07 11:05	12/19/07 15:50
U-29C-S-75	PQL0764-15	Soil	12/14/07 11:30	12/19/07 15:50

TestAmerica Portland

Christina M. Woodcock

Christina Woodcock, Project Manager

The results in this report apply to the samples analyzed in accordance with the chain of custody document. This analytical report shall not be reproduced except in full, without the written approval of the laboratory.

TestAmerica
THE LEADER IN ENVIRONMENTAL TESTING

PORTLAND, OR 9405 S.W. NIMBUS AVENUE
BEAVERTON, OR 97008-7132
ph: (503) 906.9200 fax: (503) 906.9210

Secor	Project Name:	**ConocoPhillips**	
7730 SW Mohawk Street	Project Number:	ISCP.00922.40	Report Created:
Tualatin, OR 97062	Project Manager:	Jessica Eckart	01/17/08 17:13

Gasoline Hydrocarbons per NW TPH-Gx Method

TestAmerica Portland

Analyte	Method	Result	MDL*	MRL	Units	Dil	Batch	Prepared	Analyzed	Notes
PQL0764-03 (U-29C-S-15)		**Soil**			**Sampled: 12/13/07 09:00**					**Q8**
Gasoline Range Hydrocarbons	NW TPH-Gx	ND	-----	3.97	mg/kg dry	1x	7120844	12/20/07 15:00	12/21/07 04:51	
Surrogate(s): a,a,a-TFT			*104%*		*50 - 150 %*	"			"	
PQL0764-04 (U-29C-S-20)		**Soil**			**Sampled: 12/13/07 09:05**					**Q8**
Gasoline Range Hydrocarbons	NW TPH-Gx	**473**	-----	49.3	mg/kg dry	10x	7120844	12/20/07 15:00	12/21/07 05:23	
Surrogate(s): a,a,a-TFT			*152%*		*50 - 150 %*	"			"	*Z3*
PQL0764-05 (U-29C-S-25)		**Soil**			**Sampled: 12/13/07 09:10**					
Gasoline Range Hydrocarbons	NW TPH-Gx	ND	-----	5.43	mg/kg dry	1x	7120844	12/20/07 15:00	12/21/07 04:19	
Surrogate(s): a,a,a-TFT			*99.6%*		*50 - 150 %*	"			"	
PQL0764-14 (U-29C-S-70)		**Soil**			**Sampled: 12/14/07 11:05**					
Gasoline Range Hydrocarbons	NW TPH-Gx	ND	-----	5.68	mg/kg dry	1x	7120844	12/20/07 15:00	12/21/07 03:15	
Surrogate(s): a,a,a-TFT			*98.6%*		*50 - 150 %*	"			"	
PQL0764-15 (U-29C-S-75)		**Soil**			**Sampled: 12/14/07 11:30**					
Gasoline Range Hydrocarbons	NW TPH-Gx	ND	-----	4.82	mg/kg dry	1x	7120844	12/20/07 15:00	12/21/07 03:47	
Surrogate(s): a,a,a-TFT			*103%*		*50 - 150 %*	"			"	

TestAmerica Portland

Christina M. Woodcock

Christina Woodcock, Project Manager

The results in this report apply to the samples analyzed in accordance with the chain of custody document. This analytical report shall not be reproduced except in full, without the written approval of the laboratory.

TestAmerica
THE LEADER IN ENVIRONMENTAL TESTING

PORTLAND, OR 9405 S.W. NIMBUS AVENUE
BEAVERTON, OR 97008-7132
ph: (503) 906.9200 fax: (503) 906.9210

Secor	Project Name:	**ConocoPhillips**	
7730 SW Mohawk Street	Project Number:	ISCP.00922.40	Report Created:
Tualatin, OR 97062	Project Manager:	Jessica Eckart	01/17/08 17:13

TCLP Metals per EPA 1311/6000/7000 Series Methods

TestAmerica Portland

Analyte	Method	Result	MDL*	MRL	Units	Dil	Batch	Prepared	Analyzed	Notes
PQL0764-04 (U-29C-S-20)		**Soil**			**Sampled: 12/13/07 09:05**					
Lead	1311/6020	ND	-----	0.0500	mg/l	1x	7121081	12/29/07 17:51	01/02/08 22:32	

TestAmerica Portland

Christina M. Woodcock

Christina Woodcock, Project Manager

The results in this report apply to the samples analyzed in accordance with the chain of custody document. This analytical report shall not be reproduced except in full, without the written approval of the laboratory.

TestAmerica
THE LEADER IN ENVIRONMENTAL TESTING

PORTLAND, OR 9405 S.W. NIMBUS AVENUE
BEAVERTON, OR 97008-7132
ph: (503) 906.9200 fax: (503) 906.9210

Secor	Project Name:	**ConocoPhillips**	
7730 SW Mohawk Street	Project Number:	ISCP.00922.40	Report Created:
Tualatin, OR 97062	Project Manager:	Jessica Eckart	01/17/08 17:13

Selected Volatile Organic Compounds (Including BTEX) per EPA Method 8260B

TestAmerica Portland

Analyte	Method	Result	MDL*	MRL	Units	Dil	Batch	Prepared	Analyzed	Notes
PQL0764-03 (U-29C-S-15)		**Soil**			**Sampled: 12/13/07 09:00**					
1,2-Dibromoethane	EPA 8260B	ND	-----	49.6	ug/kg dry	2x	7120921	12/22/07 11:08	12/22/07 22:00	
1,2-Dichloroethane	"	ND	-----	49.6	"	"	"	"	"	
Benzene	"	ND	-----	19.9	"	"	"	"	"	
Toluene	"	ND	-----	49.6	"	"	"	"	"	
Ethylbenzene	"	ND	-----	49.6	"	"	"	"	"	
Xylenes (total)	"	ND	-----	99.3	"	"	"	"	"	
Methyl tert-butyl ether	"	ND	-----	39.7	"	"	"	"	"	
Naphthalene	"	ND	-----	199	"	"	"	"	"	
1,2,4-Trimethylbenzene	"	ND	-----	99.3	"	"	"	"	"	
1,3,5-Trimethylbenzene	"	ND	-----	49.6	"	"	"	"	"	
Isopropylbenzene	"	ND	-----	199	"	"	"	"	"	
n-Propylbenzene	"	ND	-----	49.6	"	"	"	"	"	
Surrogate(s): 4-BFB			*98.8%*		*75 - 125 %*	*0.02x*			"	
1,2-DCA-d4			*94.4%*		*75 - 125 %*	"			"	
Dibromofluoromethane			*91.4%*		*75 - 125 %*	"			"	
Toluene-d8			*105%*		*75 - 125 %*	"			"	
PQL0764-04 (U-29C-S-20)		**Soil**			**Sampled: 12/13/07 09:05**					
1,2-Dibromoethane	EPA 8260B	ND	-----	61.7	ug/kg dry	2x	7120921	12/22/07 11:08	12/22/07 22:27	
1,2-Dichloroethane	"	ND	-----	61.7	"	"	"	"	"	
Benzene	"	ND	-----	24.7	"	"	"	"	"	
Toluene	"	ND	-----	61.7	"	"	"	"	"	
Ethylbenzene	"	ND	-----	61.7	"	"	"	"	"	
Xylenes (total)	"	ND	-----	123	"	"	"	"	"	
Methyl tert-butyl ether	"	ND	-----	49.3	"	"	"	"	"	
Naphthalene	"	ND	-----	247	"	"	"	"	"	
1,2,4-Trimethylbenzene	"	ND	-----	123	"	"	"	"	"	
1,3,5-Trimethylbenzene	"	ND	-----	61.7	"	"	"	"	"	
Isopropylbenzene	"	**565**	-----	247	"	"	"	"	"	
n-Propylbenzene	"	**1050**	-----	61.7	"	"	"	"	"	
Surrogate(s): 4-BFB			*99.2%*		*75 - 125 %*	*0.02x*			"	
1,2-DCA-d4			*97.0%*		*75 - 125 %*	"			"	
Dibromofluoromethane			*92.8%*		*75 - 125 %*	"			"	
Toluene-d8			*104%*		*75 - 125 %*	"			"	

TestAmerica Portland

Christina M. Woodcock

Christina Woodcock, Project Manager

The results in this report apply to the samples analyzed in accordance with the chain of custody document. This analytical report shall not be reproduced except in full, without the written approval of the laboratory.

TestAmerica
THE LEADER IN ENVIRONMENTAL TESTING

PORTLAND, OR 9405 S.W. NIMBUS AVENUE
BEAVERTON, OR 97008-7132
ph: (503) 906.9200 fax: (503) 906.9210

Secor	Project Name:	**ConocoPhillips**	
7730 SW Mohawk Street	Project Number:	ISCP.00922.40	Report Created:
Tualatin, OR 97062	Project Manager:	Jessica Eckart	01/17/08 17:13

Selected Volatile Organic Compounds (Including BTEX) per EPA Method 8260B

TestAmerica Portland

Analyte	Method	Result	MDL*	MRL	Units	Dil	Batch	Prepared	Analyzed	Notes
PQL0764-05 (U-29C-S-25)		**Soil**			**Sampled: 12/13/07 09:10**					
1,2-Dibromoethane	EPA 8260B	ND	-----	67.9	ug/kg dry	2x	7120921	12/22/07 11:08	12/22/07 22:54	
1,2-Dichloroethane	"	ND	-----	67.9	"	"	"	"	"	
Benzene	"	ND	-----	27.2	"	"	"	"	"	
Toluene	"	ND	-----	67.9	"	"	"	"	"	
Ethylbenzene	"	ND	-----	67.9	"	"	"	"	"	
Xylenes (total)	"	ND	-----	136	"	"	"	"	"	
Methyl tert-butyl ether	"	ND	-----	54.3	"	"	"	"	"	
Naphthalene	"	ND	-----	272	"	"	"	"	"	
1,2,4-Trimethylbenzene	"	ND	-----	136	"	"	"	"	"	
1,3,5-Trimethylbenzene	"	ND	-----	67.9	"	"	"	"	"	
Isopropylbenzene	"	ND	-----	272	"	"	"	"	"	
n-Propylbenzene	"	ND	-----	67.9	"	"	"	"	"	
Surrogate(s): 4-BFB			*97.0%*		*75 - 125 %*	*0.02x*			"	
1,2-DCA-d4			*97.2%*		*75 - 125 %*	"			"	
Dibromofluoromethane			*93.9%*		*75 - 125 %*	"			"	
Toluene-d8			*106%*		*75 - 125 %*	"			"	
PQL0764-14 (U-29C-S-70)		**Soil**			**Sampled: 12/14/07 11:05**					
1,2-Dibromoethane	EPA 8260B	ND	-----	71.0	ug/kg dry	2x	7120945	12/26/07 11:39	12/26/07 17:50	
1,2-Dichloroethane	"	ND	-----	71.0	"	"	"	"	"	
Benzene	"	ND	-----	28.4	"	"	"	"	"	
Toluene	"	ND	-----	71.0	"	"	"	"	"	
Ethylbenzene	"	ND	-----	71.0	"	"	"	"	"	
Xylenes (total)	"	ND	-----	142	"	"	"	"	"	
Methyl tert-butyl ether	"	ND	-----	56.8	"	"	"	"	"	
Naphthalene	"	ND	-----	284	"	"	"	"	"	
1,2,4-Trimethylbenzene	"	ND	-----	142	"	"	"	"	"	
1,3,5-Trimethylbenzene	"	ND	-----	71.0	"	"	"	"	"	
Isopropylbenzene	"	ND	-----	284	"	"	"	"	"	
n-Propylbenzene	"	ND	-----	71.0	"	"	"	"	"	
Surrogate(s): 4-BFB			*98.3%*		*75 - 125 %*	*0.02x*			"	
1,2-DCA-d4			*99.7%*		*75 - 125 %*	"			"	
Dibromofluoromethane			*95.0%*		*75 - 125 %*	"			"	
Toluene-d8			*108%*		*75 - 125 %*	"			"	

TestAmerica Portland

Christina M. Woodcock

Christina Woodcock, Project Manager

The results in this report apply to the samples analyzed in accordance with the chain of custody document. This analytical report shall not be reproduced except in full, without the written approval of the laboratory.

TestAmerica
THE LEADER IN ENVIRONMENTAL TESTING

PORTLAND, OR 9405 S.W. NIMBUS AVENUE
BEAVERTON, OR 97008-7132
ph: (503) 906.9200 fax: (503) 906.9210

Secor	Project Name:	**ConocoPhillips**	
7730 SW Mohawk Street	Project Number:	ISCP.00922.40	Report Created:
Tualatin, OR 97062	Project Manager:	Jessica Eckart	01/17/08 17:13

Selected Volatile Organic Compounds (Including BTEX) per EPA Method 8260B

TestAmerica Portland

Analyte	Method	Result	MDL*	MRL	Units	Dil	Batch	Prepared	Analyzed	Notes
PQL0764-15 (U-29C-S-75)		**Soil**			**Sampled: 12/14/07 11:30**					
1,2-Dibromoethane	EPA 8260B	ND	-----	60.3	ug/kg dry	2x	7120945	12/26/07 11:39	12/26/07 18:17	
1,2-Dichloroethane	"	ND	-----	60.3	"	"	"	"	"	
Benzene	"	ND	-----	24.1	"	"	"	"	"	
Toluene	"	ND	-----	60.3	"	"	"	"	"	
Ethylbenzene	"	ND	-----	60.3	"	"	"	"	"	
Xylenes (total)	"	ND	-----	121	"	"	"	"	"	
Methyl tert-butyl ether	"	ND	-----	48.2	"	"	"	"	"	
Naphthalene	"	ND	-----	241	"	"	"	"	"	
1,2,4-Trimethylbenzene	"	ND	-----	121	"	"	"	"	"	
1,3,5-Trimethylbenzene	"	ND	-----	60.3	"	"	"	"	"	
Isopropylbenzene	"	ND	-----	241	"	"	"	"	"	
n-Propylbenzene	"	ND	-----	60.3	"	"	"	"	"	
Surrogate(s):	*4-BFB*	*96.8%*			*75 - 125 %*	*0.02x*			"	
	1,2-DCA-d4	*103%*			*75 - 125 %*	"			"	
	Dibromofluoromethane	*97.3%*			*75 - 125 %*	"			"	
	Toluene-d8	*106%*			*75 - 125 %*	"			"	

TestAmerica Portland

Christina M. Woodcock

Christina Woodcock, Project Manager

The results in this report apply to the samples analyzed in accordance with the chain of custody document. This analytical report shall not be reproduced except in full, without the written approval of the laboratory.

TestAmerica
THE LEADER IN ENVIRONMENTAL TESTING

PORTLAND, OR 9405 S.W. NIMBUS AVENUE
BEAVERTON, OR 97008-7132
ph: (503) 906.9200 fax: (503) 906.9210

Secor	Project Name:	**ConocoPhillips**	
7730 SW Mohawk Street	Project Number:	ISCP.00922.40	Report Created:
Tualatin, OR 97062	Project Manager:	Jessica Eckart	01/17/08 17:13

Polynuclear Aromatic Compounds per EPA 8270M-SIM

TestAmerica Portland

Analyte	Method	Result	MDL*	MRL	Units	Dil	Batch	Prepared	Analyzed	Notes
PQL0764-03 (U-29C-S-15)		**Soil**			**Sampled: 12/13/07 09:00**					**RL3**
Acenaphthene	EPA 8270m	ND	-----	289	ug/kg dry	20x	7120873	12/21/07 12:20	12/28/07 17:45	RL1
Acenaphthylene	"	ND	-----	289	"	"	"	"	"	RL1
Anthracene	"	ND	-----	57.8	"	4x	"	"	12/28/07 00:01	
Benzo (a) anthracene	"	ND	-----	57.8	"	"	"	"	"	
Benzo (a) pyrene	"	ND	-----	57.8	"	"	"	"	"	
Benzo (b) fluoranthene	"	ND	-----	57.8	"	"	"	"	"	
Benzo (ghi) perylene	"	**413**	-----	57.8	"	"	"	"	"	
Benzo (k) fluoranthene	"	ND	-----	57.8	"	"	"	"	"	
Chrysene	"	ND	-----	57.8	"	"	"	"	"	
Dibenzo (a,h) anthracene	"	ND	-----	57.8	"	"	"	"	"	
Fluoranthene	"	ND	-----	57.8	"	"	"	"	"	
Fluorene	"	ND	-----	289	"	20x	"	"	12/28/07 17:45	RL1
Indeno (1,2,3-cd) pyrene	"	ND	-----	57.8	"	4x	"	"	12/28/07 00:01	
Naphthalene	"	ND	-----	57.8	"	"	"	"	"	
Phenanthrene	"	ND	-----	57.8	"	"	"	"	"	
Pyrene	"	ND	-----	57.8	"	"	"	"	"	
Surrogate(s): Fluorene-d10		*108%*		*24 - 125 %*		*20x*			*12/28/07 17:45*	
Pyrene-d10		*90.7%*		*41 - 141 %*		*4x*			*12/28/07 00:01*	
Benzo (a) pyrene-d12		*103%*		*38 - 143 %*		"			"	
PQL0764-04 (U-29C-S-20)		**Soil**			**Sampled: 12/13/07 09:05**					**RL3**
Acenaphthene	EPA 8270m	**2320**	-----	865	ug/kg dry	50x	7120873	12/21/07 12:20	12/28/07 18:17	
Acenaphthylene	"	ND	-----	865	"	"	"	"	"	RL1
Anthracene	"	**1630**	-----	173	"	10x	"	"	12/28/07 00:31	
Benzo (a) anthracene	"	ND	-----	173	"	"	"	"	"	
Benzo (a) pyrene	"	ND	-----	173	"	"	"	"	"	
Benzo (b) fluoranthene	"	ND	-----	173	"	"	"	"	"	
Benzo (ghi) perylene	"	**257**	-----	173	"	"	"	"	"	
Benzo (k) fluoranthene	"	ND	-----	173	"	"	"	"	"	
Chrysene	"	**298**	-----	173	"	"	"	"	"	
Dibenzo (a,h) anthracene	"	ND	-----	173	"	"	"	"	"	
Fluoranthene	"	**434**	-----	173	"	"	"	"	"	
Fluorene	"	**5150**	-----	865	"	50x	"	"	12/28/07 18:17	
Indeno (1,2,3-cd) pyrene	"	ND	-----	173	"	10x	"	"	12/28/07 00:31	
Naphthalene	"	ND	-----	1300	"	50x	"	"	12/28/07 18:17	RL1
Phenanthrene	"	**13600**	-----	865	"	"	"	"	"	
Pyrene	"	**1320**	-----	173	"	10x	"	"	12/28/07 00:31	
Surrogate(s): Fluorene-d10		*NR*		*24 - 125 %*		*50x*			*12/28/07 18:17*	*Z3*
Pyrene-d10		*80.6%*		*41 - 141 %*		*10x*			*12/28/07 00:31*	
Benzo (a) pyrene-d12		*120%*		*38 - 143 %*		"			"	

TestAmerica Portland

Christina M. Woodcock

Christina Woodcock, Project Manager

The results in this report apply to the samples analyzed in accordance with the chain of custody document. This analytical report shall not be reproduced except in full, without the written approval of the laboratory.

COP0021766

TestAmerica
THE LEADER IN ENVIRONMENTAL TESTING

PORTLAND, OR 9405 S.W. NIMBUS AVENUE
BEAVERTON, OR 97008-7132
ph: (503) 906.9200 fax: (503) 906.9210

Secor	Project Name:	**ConocoPhillips**	
7730 SW Mohawk Street	Project Number:	ISCP.00922.40	Report Created:
Tualatin, OR 97062	Project Manager:	Jessica Eckart	01/17/08 17:13

Polynuclear Aromatic Compounds per EPA 8270M-SIM

TestAmerica Portland

Analyte	Method	Result	MDL*	MRL	Units	Dil	Batch	Prepared	Analyzed	Notes
PQL0764-05 (U-29C-S-25)		**Soil**			**Sampled: 12/13/07 09:10**					
Acenaphthene	EPA 8270m	ND	-----	19.0	ug/kg dry	1x	7120873	12/21/07 12:20	12/27/07 06:22	
Acenaphthylene	"	ND	-----	19.0	"	"	"	"	"	
Anthracene	"	ND	-----	19.0	"	"	"	"	"	
Benzo (a) anthracene	"	ND	-----	19.0	"	"	"	"	"	
Benzo (a) pyrene	"	ND	-----	19.0	"	"	"	"	"	
Benzo (b) fluoranthene	"	ND	-----	19.0	"	"	"	"	"	
Benzo (ghi) perylene	"	ND	-----	19.0	"	"	"	"	"	
Benzo (k) fluoranthene	"	ND	-----	19.0	"	"	"	"	"	
Chrysene	"	ND	-----	19.0	"	"	"	"	"	
Dibenzo (a,h) anthracene	"	ND	-----	19.0	"	"	"	"	"	
Fluoranthene	"	ND	-----	19.0	"	"	"	"	"	
Fluorene	"	ND	-----	19.0	"	"	"	"	"	
Indeno (1,2,3-cd) pyrene	"	ND	-----	19.0	"	"	"	"	"	
Naphthalene	"	ND	-----	19.0	"	"	"	"	"	
Phenanthrene	"	ND	-----	19.0	"	"	"	"	"	
Pyrene	"	ND	-----	19.0	"	"	"	"	"	
Surrogate(s): Fluorene-d10			*101%*		*24 - 125 %*	"			"	
Pyrene-d10			*93.9%*		*41 - 141 %*	"			"	
Benzo (a) pyrene-d12			*89.6%*		*38 - 143 %*	"			"	
PQL0764-14 (U-29C-S-70)		**Soil**			**Sampled: 12/14/07 11:05**					
Acenaphthene	EPA 8270m	ND	-----	19.0	ug/kg dry	1x	7120873	12/21/07 12:20	12/27/07 06:55	
Acenaphthylene	"	ND	-----	19.0	"	"	"	"	"	
Anthracene	"	ND	-----	19.0	"	"	"	"	"	
Benzo (a) anthracene	"	ND	-----	19.0	"	"	"	"	"	
Benzo (a) pyrene	"	ND	-----	19.0	"	"	"	"	"	
Benzo (b) fluoranthene	"	ND	-----	19.0	"	"	"	"	"	
Benzo (ghi) perylene	"	ND	-----	19.0	"	"	"	"	"	
Benzo (k) fluoranthene	"	ND	-----	19.0	"	"	"	"	"	
Chrysene	"	ND	-----	19.0	"	"	"	"	"	
Dibenzo (a,h) anthracene	"	ND	-----	19.0	"	"	"	"	"	
Fluoranthene	"	ND	-----	19.0	"	"	"	"	"	
Fluorene	"	ND	-----	19.0	"	"	"	"	"	
Indeno (1,2,3-cd) pyrene	"	ND	-----	19.0	"	"	"	"	"	
Naphthalene	"	ND	-----	19.0	"	"	"	"	"	
Phenanthrene	"	ND	-----	19.0	"	"	"	"	"	
Pyrene	"	ND	-----	19.0	"	"	"	"	"	
Surrogate(s): Fluorene-d10			*106%*		*24 - 125 %*	"			"	
Pyrene-d10			*106%*		*41 - 141 %*	"			"	
Benzo (a) pyrene-d12			*97.9%*		*38 - 143 %*	"			"	

TestAmerica Portland

Christina M. Woodcock

Christina Woodcock, Project Manager

The results in this report apply to the samples analyzed in accordance with the chain of custody document. This analytical report shall not be reproduced except in full, without the written approval of the laboratory.

TestAmerica
THE LEADER IN ENVIRONMENTAL TESTING

PORTLAND, OR 9405 S.W. NIMBUS AVENUE
BEAVERTON, OR 97008-7132
ph: (503) 906.9200 fax: (503) 906.9210

Secor	Project Name:	**ConocoPhillips**	
7730 SW Mohawk Street	Project Number:	ISCP.00922.40	Report Created:
Tualatin, OR 97062	Project Manager:	Jessica Eckart	01/17/08 17:13

Polynuclear Aromatic Compounds per EPA 8270M-SIM

TestAmerica Portland

Analyte	Method	Result	MDL*	MRL	Units	Dil	Batch	Prepared	Analyzed	Notes
PQL0764-15 (U-29C-S-75)		**Soil**			**Sampled: 12/14/07 11:30**					
Acenaphthene	EPA 8270m	ND	-----	16.3	ug/kg dry	1x	7120873	12/21/07 12:20	12/27/07 07:29	
Acenaphthylene	"	ND	-----	16.3	"	"	"	"	"	
Anthracene	"	ND	-----	16.3	"	"	"	"	"	
Benzo (a) anthracene	"	ND	-----	16.3	"	"	"	"	"	
Benzo (a) pyrene	"	ND	-----	16.3	"	"	"	"	"	
Benzo (b) fluoranthene	"	ND	-----	16.3	"	"	"	"	"	
Benzo (ghi) perylene	"	ND	-----	16.3	"	"	"	"	"	
Benzo (k) fluoranthene	"	ND	-----	16.3	"	"	"	"	"	
Chrysene	"	ND	-----	16.3	"	"	"	"	"	
Dibenzo (a,h) anthracene	"	ND	-----	16.3	"	"	"	"	"	
Fluoranthene	"	ND	-----	16.3	"	"	"	"	"	
Fluorene	"	ND	-----	16.3	"	"	"	"	"	
Indeno (1,2,3-cd) pyrene	"	ND	-----	16.3	"	"	"	"	"	
Naphthalene	"	ND	-----	16.3	"	"	"	"	"	
Phenanthrene	"	ND	-----	16.3	"	"	"	"	"	
Pyrene	"	ND	-----	16.3	"	"	"	"	"	
Surrogate(s): Fluorene-d10			*100%*		*24 - 125 %*	"			"	
Pyrene-d10			*102%*		*41 - 141 %*	"			"	
Benzo (a) pyrene-d12			*105%*		*38 - 143 %*	"			"	

TestAmerica Portland

Christina M. Woodcock

Christina Woodcock, Project Manager

The results in this report apply to the samples analyzed in accordance with the chain of custody document. This analytical report shall not be reproduced except in full, without the written approval of the laboratory.

TestAmerica
THE LEADER IN ENVIRONMENTAL TESTING

PORTLAND, OR 9405 S.W. NIMBUS AVENUE
BEAVERTON, OR 97008-7132
ph: (503) 906.9200 fax: (503) 906.9210

Secor	Project Name:	**ConocoPhillips**	
7730 SW Mohawk Street	Project Number:	ISCP.00922.40	Report Created:
Tualatin, OR 97062	Project Manager:	Jessica Eckart	01/17/08 17:13

TCLP Extraction Only

TestAmerica Portland

Analyte	Method	Result	MDL*	MRL	Units	Dil	Batch	Prepared	Analyzed	Notes
PQL0764-04 (U-29C-S-20)		**Soil**			**Sampled: 12/13/07 09:05**					
Extraction	EPA 1311	ND	----	1.00	N/A	1x	7121075	12/28/07 21:34	12/29/07 16:50	

TestAmerica Portland

Christina Woodcock, Project Manager

The results in this report apply to the samples analyzed in accordance with the chain of custody document. This analytical report shall not be reproduced except in full, without the written approval of the laboratory.

TestAmerica
THE LEADER IN ENVIRONMENTAL TESTING

PORTLAND, OR 9405 S.W. NIMBUS AVENUE
BEAVERTON, OR 97008-7132
ph: (503) 906.9200 fax: (503) 906.9210

Secor	Project Name:	**ConocoPhillips**	
7730 SW Mohawk Street	Project Number:	ISCP.00922.40	Report Created:
Tualatin, OR 97062	Project Manager:	Jessica Eckart	01/17/08 17:13

Percent Dry Weight (Solids) per Standard Methods

TestAmerica Portland

Analyte	Method	Result	MDL*	MRL	Units	Dil	Batch	Prepared	Analyzed	Notes
PQL0764-03 (U-29C-S-15)		**Soil**			**Sampled: 12/13/07 09:00**					
% Solids	NCA SOP	92.5	-----	0.0100	% by Weight	1x	7120880	12/21/07 09:49	12/21/07 09:49	
PQL0764-04 (U-29C-S-20)		**Soil**			**Sampled: 12/13/07 09:05**					
% Solids	NCA SOP	77.0	-----	0.0100	% by Weight	1x	7120880	12/21/07 09:49	12/21/07 09:49	
PQL0764-05 (U-29C-S-25)		**Soil**			**Sampled: 12/13/07 09:10**					
% Solids	NCA SOP	70.4	-----	0.0100	% by Weight	1x	7120880	12/21/07 09:49	12/21/07 09:49	
PQL0764-14 (U-29C-S-70)		**Soil**			**Sampled: 12/14/07 11:05**					
% Solids	NCA SOP	70.0	-----	0.0100	% by Weight	1x	7120880	12/21/07 09:49	12/21/07 09:49	
PQL0764-15 (U-29C-S-75)		**Soil**			**Sampled: 12/14/07 11:30**					
% Solids	NCA SOP	82.2	-----	0.0100	% by Weight	1x	7120880	12/21/07 09:49	12/21/07 09:49	

TestAmerica Portland

Christina M. Woodcock

Christina Woodcock, Project Manager

The results in this report apply to the samples analyzed in accordance with the chain of custody document. This analytical report shall not be reproduced except in full, without the written approval of the laboratory.

TestAmerica
THE LEADER IN ENVIRONMENTAL TESTING

PORTLAND, OR 9405 S.W. NIMBUS AVENUE
BEAVERTON, OR 97008-7132
ph: (503) 906.9200 fax: (503) 906.9210

Secor	Project Name:	**ConocoPhillips**	
7730 SW Mohawk Street	Project Number:	ISCP.00922.40	Report Created:
Tualatin, OR 97062	Project Manager:	Jessica Eckart	01/17/08 17:13

Gasoline Hydrocarbons per NW TPH-Gx Method - Laboratory Quality Control Results

TestAmerica Portland

QC Batch: 7120844 **Soil Preparation Method: EPA 5035 Modified**

Analyte	Method	Result	MDL*	MRL	Units	Dil	Source Result	Spike Amt	% REC	(Limits)	% RPD	(Limits)	Analyzed	Notes
Blank (7120844-BLK1)								Extracted: 12/20/07 15:00						
Gasoline Range Hydrocarbons	NW TPH-Gx	ND	---	3.71	mg/kg wet	1x	--	--	--	--	--	--	12/20/07 18:30	
Surrogate(s): α,α,α-TFT		*Recovery: 112%*			*Limits: 50-150%*	"							*12/20/07 18:30*	
LCS (7120844-BS1)								Extracted: 12/20/07 15:00						
Gasoline Range Hydrocarbons	NW TPH-Gx	18.2	---	3.72	mg/kg wet	1x	--	23.3	78.1%	(70-130)	--	--	12/20/07 17:58	
Surrogate(s): α,α,α-TFT		*Recovery: 138%*			*Limits: 50-150%*	"							*12/20/07 17:58*	
Duplicate (7120844-DUP1)				QC Source: PQL0750-01				Extracted: 12/20/07 15:00						
Gasoline Range Hydrocarbons	NW TPH-Gx	ND	---	6.36	mg/kg dry	1x	ND	--	--	--		(40)	12/20/07 19:46	
Surrogate(s): α,α,α-TFT		*Recovery: 90.4%*			*Limits: 50-150%*	"							*12/20/07 19:46*	
Duplicate (7120844-DUP2)				QC Source: PQL0750-02				Extracted: 12/20/07 15:00						
Gasoline Range Hydrocarbons	NW TPH-Gx	ND	---	5.83	mg/kg dry	1x	ND	--	--	--	NR	(40)	12/21/07 01:39	
Surrogate(s): α,α,α-TFT		*Recovery: 89.8%*			*Limits: 50-150%*	"							*12/21/07 01:39*	
Matrix Spike (7120844-MS1)				QC Source: PQL0750-03				Extracted: 12/20/07 15:00						
Gasoline Range Hydrocarbons	NW TPH-Gx	26.8	---	5.74	mg/kg dry	1x	ND	35.9	74.6%	(65-130)	--	--	12/20/07 21:21	
Surrogate(s): α,α,α-TFT		*Recovery: 121%*			*Limits: 50-150%*	"							*12/20/07 21:21*	

TestAmerica Portland

Christina M. Woodcock

Christina Woodcock, Project Manager

The results in this report apply to the samples analyzed in accordance with the chain of custody document. This analytical report shall not be reproduced except in full, without the written approval of the laboratory.

TestAmerica
THE LEADER IN ENVIRONMENTAL TESTING

PORTLAND, OR 9405 S.W. NIMBUS AVENUE
BEAVERTON, OR 97008-7132
ph: (503) 906.9200 fax: (503) 906.9210

Secor	Project Name:	**ConocoPhillips**	
7730 SW Mohawk Street	Project Number:	ISCP.00922.40	Report Created:
Tualatin, OR 97062	Project Manager:	Jessica Eckart	01/17/08 17:13

TCLP Metals per EPA 1311/6000/7000 Series Methods - Laboratory Quality Control Results

TestAmerica Portland

QC Batch: 7121081 **Soil Preparation Method: EPA 1311/3005**

Analyte	Method	Result	MDL*	MRL	Units	Dil	Source Result	Spike Amt	% REC	(Limits)	% RPD	(Limits)	Analyzed	Notes
Blank (7121081-BLK1)								Extracted: 12/29/07 17:51						
Lead	1311/6020	ND	---	0.0500	mg/l	1x	--	--	--	--	--	--	01/02/08 22:03	
LCS (7121081-BS1)								Extracted: 12/29/07 17:51						
Lead	1311/6020	0.369	---	0.0556	mg/l	1x	--	0.444	83.1%	(75-125)	--	--	01/02/08 22:10	
Duplicate (7121081-DUP1)				QC Source: PQL0711-04				Extracted: 12/29/07 17:51						
Lead	1311/6020	0.215	---	0.0500	mg/l	1x	0.225	--	--	--	4.23%	(20)	01/02/08 22:25	
Matrix Spike (7121081-MS1)				QC Source: PQL0764-04				Extracted: 12/29/07 17:51						
Lead	1311/6020	0.396	---	0.0556	mg/l	1x	0.00180	0.444	88.7%	(50-150)	--	--	01/02/08 22:47	
Matrix Spike (7121081-MS2)				QC Source: PQL0848-02				Extracted: 12/29/07 17:51						
Lead	1311/6020	0.323	---	0.0556	mg/l	1x	0.00820	0.444	70.9%	(50-150)	--	--	01/02/08 23:01	
Matrix Spike (7121081-MS3)				QC Source: PQL0886-02				Extracted: 12/29/07 17:51						
Lead	1311/6020	0.382	---	0.0556	mg/l	1x	0.000600	0.444	85.9%	(50-150)	--	--	01/02/08 23:40	

TestAmerica Portland

Christina M. Woodcock

Christina Woodcock, Project Manager

The results in this report apply to the samples analyzed in accordance with the chain of custody document. This analytical report shall not be reproduced except in full, without the written approval of the laboratory.

TestAmerica
THE LEADER IN ENVIRONMENTAL TESTING

PORTLAND, OR 9405 S.W. NIMBUS AVENUE
BEAVERTON, OR 97008-7132
ph: (503) 906.9200 fax: (503) 906.9210

Secor	Project Name:	**ConocoPhillips**	
7730 SW Mohawk Street	Project Number:	ISCP.00922.40	Report Created:
Tualatin, OR 97062	Project Manager:	Jessica Eckart	01/17/08 17:13

Selected Volatile Organic Compounds (Including BTEX) per EPA Method 8260B - Laboratory Quality Control Results

TestAmerica Portland

QC Batch: 7120921 **Soil Preparation Method: EPA 5035A**

Analyte	Method	Result	MDL*	MRL	Units	Dil	Source Result	Spike Amt	% REC	(Limits)	% RPD	(Limits)	Analyzed	Notes
Blank (7120921-BLK1)								Extracted: 12/22/07 11:08						
1,2-Dibromoethane	EPA 8260B	ND	---	49.5	ug/kg wet	2x	--	--	--	--	--	--	12/22/07 16:30	
1,2-Dichloroethane	"	ND	---	49.5	"	"	--	--	--	--	--	--	"	
Benzene	"	ND	---	19.8	"	"	--	--	--	--	--	--	"	
Toluene	"	ND	---	49.5	"	"	--	--	--	--	--	--	"	
Ethylbenzene	"	ND	---	49.5	"	"	--	--	--	--	--	--	"	
Xylenes (total)	"	ND	---	99.0	"	"	--	--	--	--	--	--	"	
Methyl tert-butyl ether	"	ND	---	39.6	"	"	--	--	--	--	--	--	"	
Naphthalene	"	ND	---	198	"	"	--	--	--	--	--	--	"	
1,2,4-Trimethylbenzene	"	ND	---	99.0	"	"	--	--	--	--	--	--	"	
1,3,5-Trimethylbenzene	"	ND	---	49.5	"	"	--	--	--	--	--	--	"	
Isopropylbenzene	"	ND	---	198	"	"	--	--	--	--	--	--	"	
n-Propylbenzene	"	ND	---	49.5	"	"	--	--	--	--	--	--	"	
Surrogate(s): 4-BFB		*Recovery: 101%*			*Limits: 75-125%*	*0.02x*							*12/22/07 16:30*	
1,2-DCA-d4		*97.4%*			*75-125%*	"							"	
Dibromofluoromethane		*94.4%*			*75-125%*	"							"	
Toluene-d8		*102%*			*75-125%*	"							"	
LCS (7120921-BS1)								Extracted: 12/22/07 11:08						
Benzene	EPA 8260B	2100	---	19.7	ug/kg wet	2x	--	1970	106%	(81.8-125)	--	--	12/22/07 14:33	
Toluene	"	2020	---	49.3	"	"	--	"	102%	(80-125)	--	--	"	
Ethylbenzene	"	2020	---	49.3	"	"	--	"	102%	(80-120)	--	--	"	
Xylenes (total)	"	6120	---	98.6	"	"	--	5920	103%	(70-130)	--	--	"	
Methyl tert-butyl ether	"	2330	---	39.4	"	"	--	1970	118%	(80-128)	--	--	"	
Naphthalene	"	2270	---	197	"	"	--	"	115%	(76.1-153)	--	--	"	
Surrogate(s): 4-BFB		*Recovery: 103%*			*Limits: 75-125%*	*0.02x*							*12/22/07 14:33*	
1,2-DCA-d4		*108%*			*75-125%*	"							"	
Dibromofluoromethane		*109%*			*75-125%*	"							"	
Toluene-d8		*101%*			*75-125%*	"							"	
Matrix Spike (7120921-MS1)					QC Source: PQL0580-02			Extracted: 12/22/07 11:08						
Benzene	EPA 8260B	2460	---	23.7	ug/kg dry	2x	ND	2370	104%	(68.5-125)	--	--	12/22/07 15:07	
Toluene	"	2440	---	59.3	"	"	ND	"	103%	(70.3-125)	--	--	"	
Ethylbenzene	"	2420	---	59.3	"	"	ND	"	102%	(80-124)	--	--	"	
Xylenes (total)	"	7280	---	119	"	"	ND	7110	102%	(70-130)	--	--	"	
Methyl tert-butyl ether	"	2440	---	47.4	"	"	ND	2370	103%	(80-130)	--	--	"	
Naphthalene	"	2480	---	237	"	"	ND	"	104%	(69-163)	--	--	"	
Surrogate(s): 4-BFB		*Recovery: 98.0%*			*Limits: 75-125%*	*0.02x*							*12/22/07 15:07*	
1,2-DCA-d4		*101%*			*75-125%*	"							"	
Dibromofluoromethane		*104%*			*75-125%*	"							"	
Toluene-d8		*101%*			*75-125%*	"							"	

TestAmerica Portland

Christina M. Woodcock

Christina Woodcock, Project Manager

The results in this report apply to the samples analyzed in accordance with the chain of custody document. This analytical report shall not be reproduced except in full, without the written approval of the laboratory.

TestAmerica
THE LEADER IN ENVIRONMENTAL TESTING

PORTLAND, OR 9405 S.W. NIMBUS AVENUE
BEAVERTON, OR 97008-7132
ph: (503) 906.9200 fax: (503) 906.9210

Secor	Project Name:	**ConocoPhillips**	
7730 SW Mohawk Street	Project Number:	ISCP.00922.40	Report Created:
Tualatin, OR 97062	Project Manager:	Jessica Eckart	01/17/08 17:13

Selected Volatile Organic Compounds (Including BTEX) per EPA Method 8260B - Laboratory Quality Control Results

TestAmerica Portland

QC Batch: 7120921 **Soil Preparation Method: EPA 5035A**

Analyte	Method	Result	MDL*	MRL	Units	Dil	Source Result	Spike Amt	% REC	(Limits)	% RPD	(Limits)	Analyzed	Notes
Matrix Spike Dup (7120921-MSD1)					QC Source: PQL0580-02				Extracted: 12/22/07 11:08					
Benzene	EPA 8260B	2450	---	23.7	ug/kg dry	2x	ND	2370	103%	(68.5-125)	0.578%	(25)	12/22/07 15:34	
Toluene	"	2480	---	59.3	"	"	ND	"	104%	(70.3-125)	1.40%	"	"	
Ethylbenzene	"	2410	---	59.3	"	"	ND	"	102%	(80-124)	0.589%	"	"	
Xylenes (total)	"	7230	---	119	"	"	ND	7120	102%	(70-130)	0.637%	"	"	
Methyl tert-butyl ether	"	2460	---	47.5	"	"	ND	2370	104%	(80-130)	1.07%	"	"	
Naphthalene	"	2650	---	237	"	"	ND	"	111%	(69-163)	6.58%	"	"	

Surrogate(s):		*Recovery:*	*Limits:*		
4-BFB	*98.6%*	*75-125%*	*0.02x*		*12/22/07 15:34*
1,2-DCA-d4	*101%*	*75-125%*	"		"
Dibromofluoromethane	*104%*	*75-125%*	"		"
Toluene-d8	*104%*	*75-125%*	"		"

QC Batch: 7120945 **Soil Preparation Method: EPA 5035A**

Analyte	Method	Result	MDL*	MRL	Units	Dil	Source Result	Spike Amt	% REC	(Limits)	% RPD	(Limits)	Analyzed	Notes
Blank (7120945-BLK1)									Extracted: 12/26/07 11:39					
1,2-Dibromoethane	EPA 8260B	ND	---	49.5	ug/kg wet	2x	--	--	--	--	--	--	12/26/07 15:05	
1,2-Dichloroethane	"	ND	---	49.5	"	"	--	--	--	--	--	--	"	
Benzene	"	ND	---	19.8	"	"	--	--	--	--	--	--	"	
Toluene	"	ND	---	49.5	"	"	--	--	--	--	--	--	"	
Ethylbenzene	"	ND	---	49.5	"	"	--	--	--	--	--	--	"	
Xylenes (total)	"	ND	---	99.0	"	"	--	--	--	--	--	--	"	
Methyl tert-butyl ether	"	ND	---	39.6	"	"	--	--	--	--	--	--	"	
Naphthalene	"	ND	---	198	"	"	--	--	--	--	--	--	"	
1,2,4-Trimethylbenzene	"	ND	---	99.0	"	"	--	--	--	--	--	--	"	
1,3,5-Trimethylbenzene	"	ND	---	49.5	"	"	--	--	--	--	--	--	"	
Isopropylbenzene	"	ND	---	198	"	"	--	--	--	--	--	--	"	
n-Propylbenzene	"	ND	---	49.5	"	"	--	--	--	--	--	--	"	

Surrogate(s):		*Recovery:*	*Limits:*		
4-BFB	*98.7%*	*75-125%*	*0.02x*		*12/26/07 15:05*
1,2-DCA-d4	*106%*	*75-125%*	"		"
Dibromofluoromethane	*102%*	*75-125%*	"		"
Toluene-d8	*104%*	*75-125%*	"		"

TestAmerica Portland

Christina M. Woodcock

Christina Woodcock, Project Manager

The results in this report apply to the samples analyzed in accordance with the chain of custody document. This analytical report shall not be reproduced except in full, without the written approval of the laboratory.

TestAmerica
THE LEADER IN ENVIRONMENTAL TESTING

PORTLAND, OR 9405 S.W. NIMBUS AVENUE
BEAVERTON, OR 97008-7132
ph: (503) 906.9200 fax: (503) 906.9210

Secor	Project Name:	**ConocoPhillips**	
7730 SW Mohawk Street	Project Number:	ISCP.00922.40	Report Created:
Tualatin, OR 97062	Project Manager:	Jessica Eckart	01/17/08 17:13

Selected Volatile Organic Compounds (Including BTEX) per EPA Method 8260B - Laboratory Quality Control Results

TestAmerica Portland

QC Batch: 7120945 **Soil Preparation Method: EPA 5035A**

Analyte	Method	Result	MDL*	MRL	Units	Dil	Source Result	Spike Amt	% REC	(Limits)	% RPD	(Limits)	Analyzed	Notes
LCS (7120945-BS1)								Extracted: 12/26/07 11:39						
Benzene	EPA 8260B	2080	---	19.4	ug/kg wet	2x	--	1940	107%	(81.8-125)	--	--	12/26/07 12:48	
Toluene	"	2030	---	48.5	"	"	--	"	105%	(80-125)	--	--	"	
Ethylbenzene	"	2000	---	48.5	"	"	--	"	103%	(80-120)	--	--	"	
Xylenes (total)	"	6060	---	97.0	"	"	--	5820	104%	(70-130)	--	--	"	
Methyl tert-butyl ether	"	2330	---	38.8	"	"	--	1940	120%	(80-128)	--	--	"	
Naphthalene	"	2210	---	194	"	"	--	"	114%	(76.1-153)	--	--	"	
Surrogate(s): 4-BFB		*Recovery: 101%*			*Limits: 75-125%*	*0.02x*							*12/26/07 12:48*	
1,2-DCA-d4		*105%*			*75-125%*	"							"	
Dibromofluoromethane		*105%*			*75-125%*	"							"	
Toluene-d8		*101%*			*75-125%*	"							"	
Matrix Spike (7120945-MS1)					QC Source: PQL0627-01			Extracted: 12/26/07 11:39						
Benzene	EPA 8260B	2540	---	25.9	ug/kg dry	2x	40.5	2590	96.3%	(68.5-125)	--	--	12/26/07 13:15	
Toluene	"	2580	---	64.9	"	"	98.3	"	95.9%	(70.3-125)	--	--	"	
Ethylbenzene	"	2550	---	64.9	"	"	72.5	"	95.6%	(80-124)	--	--	"	
Xylenes (total)	"	7990	---	130	"	"	502	7780	96.3%	(70-130)	--	--	"	
Methyl tert-butyl ether	"	2750	---	51.9	"	"	ND	2590	106%	(80-130)	--	--	"	
Naphthalene	"	2470	---	259	"	"	51.6	"	93.4%	(69-163)	--	--	"	
Surrogate(s): 4-BFB		*Recovery: 100%*			*Limits: 75-125%*	*0.02x*							*12/26/07 13:15*	
1,2-DCA-d4		*105%*			*75-125%*	"							"	
Dibromofluoromethane		*106%*			*75-125%*	"							"	
Toluene-d8		*102%*			*75-125%*	"							"	
Matrix Spike Dup (7120945-MSD1)					QC Source: PQL0627-01			Extracted: 12/26/07 11:39						
Benzene	EPA 8260B	2720	---	24.7	ug/kg dry	2x	40.5	2470	109%	(68.5-125)	7.00%	(25)	12/26/07 13:42	
Toluene	"	2850	---	61.6	"	"	98.3	"	111%	(70.3-125)	9.64%	"	"	
Ethylbenzene	"	2760	---	61.6	"	"	72.5	"	109%	(80-124)	7.96%	"	"	
Xylenes (total)	"	8620	---	123	"	"	502	7400	110%	(70-130)	7.53%	"	"	
Methyl tert-butyl ether	"	2750	---	49.3	"	"	ND	2470	111%	(80-130)	0.195%	"	"	
Naphthalene	"	2540	---	247	"	"	51.6	"	101%	(69-163)	2.50%	"	"	
Surrogate(s): 4-BFB		*Recovery: 100%*			*Limits: 75-125%*	*0.02x*							*12/26/07 13:42*	
1,2-DCA-d4		*102%*			*75-125%*	"							"	
Dibromofluoromethane		*105%*			*75-125%*	"							"	
Toluene-d8		*104%*			*75-125%*	"							"	

TestAmerica Portland

Christina Woodcock, Project Manager

The results in this report apply to the samples analyzed in accordance with the chain of custody document. This analytical report shall not be reproduced except in full, without the written approval of the laboratory.

TestAmerica
THE LEADER IN ENVIRONMENTAL TESTING

PORTLAND, OR 9405 S.W. NIMBUS AVENUE
BEAVERTON, OR 97008-7132
ph: (503) 906.9200 fax: (503) 906.9210

Secor	Project Name:	**ConocoPhillips**	
7730 SW Mohawk Street	Project Number:	ISCP.00922.40	Report Created:
Tualatin, OR 97062	Project Manager:	Jessica Eckart	01/17/08 17:13

Polynuclear Aromatic Compounds per EPA 8270M-SIM - Laboratory Quality Control Results

TestAmerica Portland

QC Batch: 7120873 **Soil Preparation Method: EPA 3550**

Analyte	Method	Result	MDL*	MRL	Units	Dil	Source Result	Spike Amt	% REC	(Limits)	% RPD	(Limits)	Analyzed	Notes
Blank (7120873-BLK1)								Extracted: 12/21/07 12:20						
Acenaphthene	EPA 8270m	ND	---	13.4	ug/kg wet	1x	--	--	--	--	--	--	12/28/07 02:00	
Acenaphthylene	"	ND	---	13.4	"	"	--	--	--	--	--	--	"	
Anthracene	"	ND	---	13.4	"	"	--	--	--	--	--	--	"	
Benzo (a) anthracene	"	ND	---	13.4	"	"	--	--	--	--	--	--	"	
Benzo (a) pyrene	"	ND	---	13.4	"	"	--	--	--	--	--	--	"	
Benzo (b) fluoranthene	"	ND	---	13.4	"	"	--	--	--	--	--	--	"	
Benzo (ghi) perylene	"	ND	---	13.4	"	"	--	--	--	--	--	--	"	
Benzo (k) fluoranthene	"	ND	---	13.4	"	"	--	--	--	--	--	--	"	
Chrysene	"	ND	---	13.4	"	"	--	--	--	--	--	--	"	
Dibenzo (a,h) anthracene	"	ND	---	13.4	"	"	--	--	--	--	--	--	"	
Fluoranthene	"	ND	---	13.4	"	"	--	--	--	--	--	--	"	
Fluorene	"	ND	---	13.4	"	"	--	--	--	--	--	--	"	
Indeno (1,2,3-cd) pyrene	"	ND	---	13.4	"	"	--	--	--	--	--	--	"	
Naphthalene	"	ND	---	13.4	"	"	--	--	--	--	--	--	"	
Phenanthrene	"	ND	---	13.4	"	"	--	--	--	--	--	--	"	
Pyrene	"	ND	---	13.4	"	"	--	--	--	--	--	--	"	
Surrogate(s):	*Fluorene-d10*	*Recovery:*	*87.9%*		*Limits:*	*24-125%*	"						*12/28/07 02:00*	
	Pyrene-d10		*93.6%*			*41-141%*	"						"	
	Benzo (a) pyrene-d12		*104%*			*38-143%*	"						"	
LCS (7120873-BS1)								Extracted: 12/21/07 12:20						
Acenaphthene	EPA 8270m	147	---	13.4	ug/kg wet	1x	--	166	88.6%	(33-139)	--	--	12/26/07 20:48	
Benzo (a) pyrene	"	158	---	13.4	"	"	--	"	95.0%	(45-149)	--	--	"	
Pyrene	"	140	---	13.4	"	"	--	"	84.5%	(39-138)	--	--	"	
Surrogate(s):	*Fluorene-d10*	*Recovery:*	*97.9%*		*Limits:*	*24-125%*	"						*12/26/07 20:48*	
	Pyrene-d10		*92.7%*			*41-141%*	"						"	
	Benzo (a) pyrene-d12		*107%*			*38-143%*	"						"	
Matrix Spike (7120873-MS1)				QC Source: PQL0764-03				Extracted: 12/21/07 12:20						RL3
Acenaphthene	EPA 8270m	159	---	289	ug/kg dry	20x	ND	180	88.3%	(33-139)	--	--	12/28/07 01:02	
Benzo (a) pyrene	"	183	---	289	"	"	25.8	"	87.4%	(45-149)	--	--	"	
Pyrene	"	169	---	289	"	"	ND	"	93.7%	(39-138)	--	--	"	
Surrogate(s):	*Fluorene-d10*	*Recovery:*	*117%*		*Limits:*	*24-125%*	"						*12/28/07 01:02*	
	Pyrene-d10		*108%*			*41-141%*	"						"	
	Benzo (a) pyrene-d12		*122%*			*38-143%*	"						"	

TestAmerica Portland

Christina Woodcock, Project Manager

The results in this report apply to the samples analyzed in accordance with the chain of custody document. This analytical report shall not be reproduced except in full, without the written approval of the laboratory.

TestAmerica
THE LEADER IN ENVIRONMENTAL TESTING

PORTLAND, OR 9405 S.W. NIMBUS AVENUE
BEAVERTON, OR 97008-7132
ph: (503) 906.9200 fax: (503) 906.9210

Secor	Project Name:	**ConocoPhillips**	
7730 SW Mohawk Street	Project Number:	ISCP.00922.40	Report Created:
Tualatin, OR 97062	Project Manager:	Jessica Eckart	01/17/08 17:13

Polynuclear Aromatic Compounds per EPA 8270M-SIM - Laboratory Quality Control Results

TestAmerica Portland

QC Batch: 7120873 **Soil Preparation Method: EPA 3550**

Analyte	Method	Result	MDL*	MRL	Units	Dil	Source Result	Spike Amt	% REC	(Limits)	% RPD	(Limits)	Analyzed	Notes
Matrix Spike Dup (7120873-MSD1)					QC Source: PQL0764-03				Extracted: 12/21/07 12:20					RL3
Acenaphthene	EPA 8270m	157	---	289	ug/kg dry	20x	ND	180	87.3%	(33-139)	1.15%	(60)	12/28/07 01:34	
Benzo (a) pyrene	"	186	---	289	"	"	25.8	"	89.2%	(45-149)	1.77%	"	"	
Pyrene	"	177	---	289	"	"	ND	"	98.2%	(39-138)	4.64%	"	"	
Surrogate(s):	*Fluorene-d10*		*Recovery:*	*103%*		*Limits:*	*29-125%*	"					*12/28/07 01:34*	
	Pyrene-d10			*100%*			*41-141%*	"					"	
	Benzo (a) pyrene-d12			*113%*			*38-143%*	"					"	

TestAmerica Portland

Christina M. Woodcock

Christina Woodcock, Project Manager

The results in this report apply to the samples analyzed in accordance with the chain of custody document. This analytical report shall not be reproduced except in full, without the written approval of the laboratory.

TestAmerica
THE LEADER IN ENVIRONMENTAL TESTING

PORTLAND, OR 9405 S.W. NIMBUS AVENUE
BEAVERTON, OR 97008-7132
ph: (503) 906.9200 fax: (503) 906.9210

Secor	Project Name:	**ConocoPhillips**	
7730 SW Mohawk Street	Project Number:	ISCP.00922.40	Report Created:
Tualatin, OR 97062	Project Manager:	Jessica Eckart	01/17/08 17:13

Percent Dry Weight (Solids) per Standard Methods - Laboratory Quality Control Results

TestAmerica Portland

QC Batch: 7120880 **Soil Preparation Method: Dry Weight**

Analyte	Method	Result	MDL*	MRL	Units	Dil	Source Result	Spike Amt	% REC	(Limits)	% RPD	(Limits)	Analyzed	Notes
Duplicate (7120880-DUP1)				QC Source: PQL0768-01				Extracted: 12/21/07 09:49						
% Solids	NCA SOP	82.1	---	0.0100	% by Weight	1x	81.1	--	--	--	1.23%	(20)	12/21/07 09:49	

TestAmerica Portland

Christina Woodcock, Project Manager

The results in this report apply to the samples analyzed in accordance with the chain of custody document. This analytical report shall not be reproduced except in full, without the written approval of the laboratory.

PORTLAND, OR 9405 S.W. NIMBUS AVENUE
BEAVERTON, OR 97008-7132
ph: (503) 906.9200 fax: (503) 906.9210

Secor	Project Name:	**ConocoPhillips**	
7730 SW Mohawk Street	Project Number:	ISCP.00922.40	Report Created:
Tualatin, OR 97062	Project Manager:	Jessica Eckart	01/17/08 17:13

Notes and Definitions

Report Specific Notes:

Q8	-	Detected hydrocarbons in the gasoline range appear to be due to overlap of diesel range hydrocarbons.
RL1	-	Reporting limit raised due to sample matrix effects.
RL3	-	Reporting limit raised due to high concentrations of non-target analytes.
Z3	-	The sample required a dilution due to the nature of the sample matrix. Because of this dilution, the surrogate spike concentration in the sample was reduced to a level where the recovery calculation does not provide useful information.

Laboratory Reporting Conventions:

DET	-	Analyte DETECTED at or above the Reporting Limit. Qualitative Analyses only.
ND	-	Analyte NOT DETECTED at or above the reporting limit (MDL or MRL, as appropriate).
NR/NA	-	Not Reported / Not Available
dry	-	Sample results reported on a Dry Weight Basis. Results and Reporting Limits have been corrected for Percent Dry Weight.
wet	-	Sample results and reporting limits reported on a Wet Weight Basis (as received). Results with neither 'wet' nor 'dry' are reported on a Wet Weight Basis.
RPD	-	RELATIVE PERCENT DIFFERENCE (RPDs calculated using Results, not Percent Recoveries).
MRL	-	METHOD REPORTING LIMIT. Reporting Level at, or above, the lowest level standard of the Calibration Table.
MDL*	-	METHOD DETECTION LIMIT. Reporting Level at, or above, the statistically derived limit based on 40CFR, Part 136, Appendix B. *MDLs are listed on the report only if the data has been evaluated below the MRL. Results between the MDL and MRL are reported as Estimated Results.
Dil.	-	Dilutions are calculated based on deviations from the standard dilution performed for an analysis, and may not represent the dilution found on the analytical raw data.
Reporting Limits	-	Reporting limits (MDLs and MRLs) are adjusted based on variations in sample preparation amounts, analytical dilutions and percent solids, where applicable.
Electronic Signature	-	Electronic Signature added in accordance with TestAmerica's *Electronic Reporting and Electronic Signatures Policy*. Application of electronic signature indicates that the report has been reviewed and approved for release by the laboratory. Electronic signature is intended to be the legally binding equivalent of a traditionally handwritten signature.

Christina M. Woodcock

Christina Woodcock, Project Manager

The results in this report apply to the samples analyzed in accordance with the chain of custody document. This analytical report shall not be reproduced except in full, without the written approval of the laboratory.

ConocoPhillips Analysis Request/Chain of Custody

Lancaster Laboratories / Test America

007149

PQL0764

For Lancaster Labs Use ONLY Acct. #: _____ Group # _____ Sample#: _____ SCR#: _____

Site #: 15CP.00922.4C AOC#: _____

Site City: Portland State: OR

Enfos PO#: _____

ConocoPhillips PM: Mike Noll

Samplers Name: Joe Green

Matrix: ☐ Potable ☐ NPDES ☐ Oil ☐ Air

Analyses Requested — List total number of containers in the box under each analysis. Preservation Codes

Preservative Codes: H = HCl, N = HNO_3, S = H_2SO_4, T = Thiosulfate, B = NaOH, O = Other

Sample Identification	Date Collected	Time Collected	Grab	Composite	Soil	Water	Oil	NWTPH 6x	BTEX/VOCs 8260B	PAHs 8270 MSIM	TOC, HS: 1	TCLP Pb									Remarks
U-29C-5-5	12/13/07	08:50	X		X																1-8oz. jar / 1-4oz. jar
U-29C-5-10	12/13/07	08:55	X		X																
U-29C-5-15	12/13/07	09:00	X		X			X	X	X	X										
U-29C-5-20	12/13/07	09:05	X		X			X	X	X	X	X									
U-29C-5-25	12/13/07	09:10	X		X			X	X	X	X	[illegible]									No TCLP Pb
U-29C-5-30	12/13/07	09:15	X		X																
U-29C-5-35	12/14/07	10:00	X		X																
U-29C-5-40	12/14/07	10:05	X		X																
U-29C-5-45	12/14/07	10:10	X		X																
U-29C-5-50	12/14/07	10:15	X		X																
U-29C-5-55	12/14/07	10:45	X		X																
U-29C-5-60	12/14/07	10:50	X		X																
U-29C-5-65	12/14/07	11:00	X		X																

Consultant Information:

Office City: Portland State: OR

Project Manager: Jessica Eckart

Phone Number: _____ Fax: _____

Email: JEckart@secor.com

Electronic Data Deliverables (Circle One) Yes / No Format _____

Reporting Requirements (Circle One)

Standard Reports/QC Summary Full Validation (LLI Type I)

NJ Regulatory NJ Reduced NY ASP-A NY ASP-B Other _____

Turnaround Time Requested in Business Days (TAT) (Circle One):

STD. 5 day 48 hour 24 hour Other _____

Relinquished by:	Date	Time	Received by:	Date	Time
[signature]	12/19/07	15:50	[signature]	12/19	15:50
Relinquished by:	Date	Time	Received by:	Date	Time
Relinquished by:	Date	Time	Received by:	Date	Time

Relinquished by Commercial Carrier: UPS _____ FedEx _____ Other _____

Temperature Upon Receipt 3.9 C°

Lancaster Laboratories, Inc., 2425 New Holland Pike, PO Box 12425, Lancaster, PA 17605-2425 (717) 656-2300

Copies: White and yellow should accompany samples to Lancaster Laboratories. The pink copy should be retained by the client.

4531.02

COP0021780

ConocoPhillips Analysis Request/Chain of Custody

PQL0764

Lancaster Laboratories

For Lancaster Labs Use ONLY Acct. #: _____ Group # _____ Sample#: _____ SCR#: _____

007150

Site #: 15CP.00722.4C AOC#: _____

Site City: Portland State: OR

Enfos PO# _____

ConocoPhillips PM: Mike Noll

Samplers Name: Joe Green

Analyses Requested — List total number of containers in the box under each analysis.

Preservation Codes

Preservative Codes: H = HCl, T = Thiosulfate, N = HNO_3, B = NaOH, S = H_2SO_4, O = Other

Sample Identification	Date Collected	Time Collected	Grab	Composite	Matrix: Soil	Matrix: Water (☐ Potable ☐ NPDES)	Matrix: ☐ Oil ☐ Air	NWTPH-Gx	RSKMVOCs 8260	PAHs 8270SIM	TOC 415.1	Remarks
U-29C-5-70	12/14/07	11:05	X		X			X	X	X	X	1-8oz. jar / 1-4oz. jar
U-29C-5-75	12/14/07	11:30	X		X			X	X	X	X	↓
U-29C-5-80	12/14/07	11:35	X		X							

Consultant Information:

Office City: Portland State: OR

Project Manager: Jessica Eckert

Phone Number: _____ Fax: _____

Email: JEckart@secor.com

Electronic Data Deliverables (Circle One) Yes / No Format _____

Reporting Requirements (Circle One)

Standard Reports/QC Summary Full Validation (LLI Type I)

NJ Regulatory NJ Reduced NY ASP-A NY ASP-B Other _____

Turnaround Time Requested in Business Days (TAT) (Circle One):

STD. 5 day 48 hour 24 hour Other _____

Relinquished by:	Date	Time	Received by:	Date	Time
[signature]	12/14/07	15:50	[signature]	12/19	15:50
Relinquished by:	Date	Time	Received by:	Date	Time
Relinquished by:	Date	Time	Received by:	Date	Time

Relinquished by Commercial Carrier: UPS _____ FedEx _____ Other _____

Temperature Upon Receipt 3.9 C°

TestAmerica Sample Receipt Checklist

Cooler Out

Received by: (section A) Date: 12/19/07 Time: 1[illegible] Initials: [illegible]

Unpacked by: (section B) Date: 12/19/07 Initials: [illegible]

Logged-in by: Date: 12/19/07 Initials: [illegible]

Work Order No. PQL0764
Client: SECOR
Project: Conoco Phillips

Temperature out of range:
___ Not enough Ice
___ No Ice
___ Ice Melted
___ Win 4 Hours
___ Other: _____

***ESI Clients (see Section C)

Cooler Temperature (IR): 3.9 °C plastic glass NA (oil/air samples. ESI client)

Temperature Blank: _____ °C

A

Custody Seals: (#____)

Signature: Y N Dated: _____
X None

Container Type:
1 #Cooler(s)
___ #Box(s)
___ None (___#Other: _____)

Coolant Type:
___ Gel Ice
X Loose Ice
___ None

Packing Material:
___ Bubble Bags
___ Styrofoam Cubbies
X None (___Other: _____)

Received from:
___ TA Courier
___ Senvoy
___ UPS
___ Fed Ex
X Client
___ TDP
___ DHL
___ SDS
___ Mid-Valley
___ GS/TA
___ GS/Senvoy
___ Other: _____

B

Sample Status:
(If N circled, see NOD)

General:
Intact? Y N
Containers Match COC? Y N none given
IDs Match COC? Y N

For Analyses Requested:
Correct Type & Preservation? Y N
Adequate Volume? Y N
Within Hold Time? Y N

Volatiles/ Oil Quality:
VOAs/ Syringes free of Headspace? Y N NA
TB on COC? not provided Y N ~~NA~~

Metals:
HNO3 Preserved? Y N NA
Dissolved Metals Filtered? Y N NA

C

***ESI Clients Only:

Temperature Blank: _____ °C not provided

All preserved bottles checked Y N NA (voas/soils/all unp.)
All preserved accordingly? Y N (see NOD) NA (voas/soils/all unp.)

FED EX/ UPS: Was the tracking paper keepable? YES NO

If circled NO, what is the Tracking number? _____

FED EX Goldstreak UPS DHL Other: _____

Project Managers:

Comments: _____

PM Reviewed: _____ (Initial/Date)

COP0021782

TestAmerica
THE LEADER IN ENVIRONMENTAL TESTING

PORTLAND, OR 9405 S.W. NIMBUS AVENUE
BEAVERTON, OR 97008-7132
ph: (503) 906.9200 fax: (503) 906.9210

January 17, 2008

Christopher Sheridan
Delta Consultants - Portland
4640 SW Macadam Avenue, Suite 110
Portland, OR 97239

RE: Conoco Phillips

Enclosed are the results of analyses for samples received by the laboratory on 12/19/07 13:20. The following list is a summary of the Work Orders contained in this report, generated on 01/17/08 17:10.

If you have any questions concerning this report, please feel free to contact me.

Work Order	Project	ProjectNumber
PQL0750	Conoco Phillips	OR20922

TestAmerica Portland

Christina Woodcock, Project Manager

The results in this report apply to the samples analyzed in accordance with the chain of custody document. This analytical report shall not be reproduced except in full, without the written approval of the laboratory.

TestAmerica
THE LEADER IN ENVIRONMENTAL TESTING

PORTLAND, OR 9405 S.W. NIMBUS AVENUE
BEAVERTON, OR 97008-7132
ph: (503) 906.9200 fax: (503) 906.9210

Delta Consultants - Portland	Project Name:	**Conoco Phillips**	
4640 SW Macadam Avenue, Suite 110	Project Number:	OR20922	Report Created:
Portland, OR 97239	Project Manager:	Christopher Sheridan	01/17/08 17:10

ANALYTICAL REPORT FOR SAMPLES

Sample ID	Laboratory ID	Matrix	Date Sampled	Date Received
U-26.7.5	PQL0750-01	Soil	12/10/07 11:30	12/19/07 13:20
P-1A-8	PQL0750-02	Soil	12/11/07 10:00	12/19/07 13:20
U-28-8	PQL0750-03	Soil	12/10/07 15:00	12/19/07 13:20

TestAmerica Portland

Christina M. Woodcock

Christina Woodcock, Project Manager

The results in this report apply to the samples analyzed in accordance with the chain of custody document. This analytical report shall not be reproduced except in full without the written approval of the laboratory.

TestAmerica
THE LEADER IN ENVIRONMENTAL TESTING

PORTLAND, OR 9405 S.W. NIMBUS AVENUE
BEAVERTON, OR 97008-7132
ph: (503) 906.9200 fax: (503) 906.9210

Delta Consultants - Portland	Project Name:	**Conoco Phillips**	
4640 SW Macadam Avenue, Suite 110	Project Number:	OR20922	Report Created:
Portland, OR 97239	Project Manager:	Christopher Sheridan	01/17/08 17:10

Gasoline Hydrocarbons per NW TPH-Gx Method

TestAmerica Portland

Analyte	Method	Result	MDL*	MRL	Units	Dil	Batch	Prepared	Analyzed	Notes
PQL0750-01 (U-26.7.5)		**Soil**			**Sampled: 12/10/07 11:30**					
Gasoline Range Hydrocarbons	NW TPH-Gx	ND	—	6.36	mg/kg dry	1x	7120844	12/20/07 15:00	12/20/07 19:14	
Surrogate(s): a,a,a-TFT			*93.2%*		*50 - 150 %*	"			"	
PQL0750-02 (P-1A-8)		**Soil**			**Sampled: 12/11/07 10:00**					
Gasoline Range Hydrocarbons	NW TPH-Gx	ND	—	5.83	mg/kg dry	1x	7120844	12/20/07 15:00	12/21/07 01:07	
Surrogate(s): a,a,a-TFT			*87.5%*		*50 - 150 %*	"			"	
PQL0750-03 (U-28-8)		**Soil**			**Sampled: 12/10/07 15:00**					
Gasoline Range Hydrocarbons	NW TPH-Gx	ND	—	5.74	mg/kg dry	1x	7120844	12/20/07 15:00	12/20/07 20:18	
Surrogate(s): a,a,a-TFT			*96.4%*		*50 - 150 %*	"			"	

TestAmerica Portland

Christina M. Woodcock

Christina Woodcock, Project Manager

The results in this report apply to the samples analyzed in accordance with the chain of custody document. This analytical report shall not be reproduced except in full without the written approval of the laboratory.

TestAmerica
THE LEADER IN ENVIRONMENTAL TESTING

PORTLAND, OR 9405 S.W. NIMBUS AVENUE
BEAVERTON, OR 97008-7132
ph: (503) 906.9200 fax: (503) 906.9210

Delta Consultants - Portland	Project Name:	**Conoco Phillips**	
4640 SW Macadam Avenue, Suite 110	Project Number:	OR20922	Report Created:
Portland, OR 97239	Project Manager:	Christopher Sheridan	01/17/08 17:10

Diesel and Heavy Range Hydrocarbons per NWTPH-Dx Method

TestAmerica Portland

Analyte	Method	Result	MDL*	MRL	Units	Dil	Batch	Prepared	Analyzed	Notes
PQL0750-01 (U-26.7.5)		**Soil**			**Sampled: 12/10/07 11:30**					
Diesel Range Organics	NWTPH-Dx	ND	----	20.3	mg/kg dry	1x	7120830	12/20/07 14:15	12/21/07 00:50	
Heavy Oil Range Hydrocarbons	"	ND	----	40.6	"	"	"	"	"	
Surrogate(s): 1-Chlorooctadecane			*83.0%*		*50 - 150 %*	"			"	
PQL0750-02 (P-1A-8)		**Soil**			**Sampled: 12/11/07 10:00**					
Diesel Range Organics	NWTPH-Dx	ND	----	19.7	mg/kg dry	1x	7120830	12/20/07 14:15	12/21/07 01:25	
Heavy Oil Range Hydrocarbons	"	ND	----	39.4	"	"	"	"	"	
Surrogate(s): 1-Chlorooctadecane			*92.9%*		*50 - 150 %*	"			"	
PQL0750-03 (U-28-8)		**Soil**			**Sampled: 12/10/07 15:00**					
Diesel Range Organics	NWTPH-Dx	ND	----	18.2	mg/kg dry	1x	7120830	12/20/07 14:15	12/21/07 02:00	
Heavy Oil Range Hydrocarbons	"	ND	----	36.4	"	"	"	"	"	
Surrogate(s): 1-Chlorooctadecane			*90.3%*		*50 - 150 %*	"			"	

TestAmerica Portland

Christina M. Woodcock

Christina Woodcock, Project Manager

The results in this report apply to the samples analyzed in accordance with the chain of custody document. This analytical report shall not be reproduced except in full, without the written approval of the laboratory.

TestAmerica
THE LEADER IN ENVIRONMENTAL TESTING

PORTLAND, OR 9405 S.W. NIMBUS AVENUE
BEAVERTON, OR 97008-7132
ph: (503) 906.9200 fax: (503) 906.9210

Delta Consultants - Portland	Project Name:	**Conoco Phillips**	
4640 SW Macadam Avenue, Suite 110	Project Number:	OR20922	Report Created:
Portland, OR 97239	Project Manager:	Christopher Sheridan	01/17/08 17:10

Total Metals per EPA 6000/7000 Series Methods

TestAmerica Portland

Analyte	Method	Result	MDL*	MRL	Units	Dil	Batch	Prepared	Analyzed	Notes
PQL0750-01 (U-26.7.5)		Soil			Sampled: 12/10/07 11:30					
Arsenic	EPA 6020	4.24	----	0.831	mg/kg dry	1x	7120998	12/27/07 12:00	01/02/08 18:11	
Cadmium	"	ND	----	0.831	"	"	"	"	"	
Chromium	"	31.2	----	0.831	"	"	"	"	"	
Copper	"	35.2	----	3.32	"	"	"	"	01/03/08 03:34	
Lead	"	5.14	----	0.831	"	"	"	"	01/02/08 18:11	
Selenium	"	ND	----	0.831	"	"	"	"	"	
Silver	"	ND	----	0.831	"	"	"	"	"	
Zinc	"	60.5	----	3.32	"	"	"	"	"	
PQL0750-02 (P-1A-8)		Soil			Sampled: 12/11/07 10:00					
Arsenic	EPA 6020	3.40	----	0.764	mg/kg dry	1x	7120998	12/27/07 12:00	01/02/08 18:19	
Cadmium	"	ND	----	0.764	"	"	"	"	"	
Chromium	"	32.8	----	0.764	"	"	"	"	"	
Copper	"	33.2	----	3.06	"	"	"	"	01/03/08 03:41	
Lead	"	5.47	----	0.764	"	"	"	"	01/02/08 18:19	
Selenium	"	ND	----	0.764	"	"	"	"	"	
Silver	"	ND	----	0.764	"	"	"	"	"	
Zinc	"	62.2	----	3.06	"	"	"	"	"	
PQL0750-03 (U-28-8)		Soil			Sampled: 12/10/07 15:00					
Arsenic	EPA 6020	4.10	----	0.709	mg/kg dry	1x	7120998	12/27/07 12:00	01/02/08 18:26	
Cadmium	"	ND	----	0.709	"	"	"	"	"	
Chromium	"	32.9	----	0.709	"	"	"	"	"	
Copper	"	37.8	----	2.83	"	"	"	"	01/03/08 03:48	
Lead	"	5.65	----	0.709	"	"	"	"	01/02/08 18:26	
Selenium	"	ND	----	0.709	"	"	"	"	"	
Silver	"	ND	----	0.709	"	"	"	"	"	
Zinc	"	59.0	----	2.83	"	"	"	"	"	

TestAmerica Portland

Christina M. Woodcock

Christina Woodcock, Project Manager

The results in this report apply to the samples analyzed in accordance with the chain of custody document. This analytical report shall not be reproduced except in full, without the written approval of the laboratory.

TestAmerica
THE LEADER IN ENVIRONMENTAL TESTING

PORTLAND, OR 9405 S.W. NIMBUS AVENUE
BEAVERTON, OR 97008-7132
ph: (503) 906.9200 fax: (503) 906.9210

Delta Consultants - Portland	Project Name:	**Conoco Phillips**	
4640 SW Macadam Avenue, Suite 110	Project Number:	OR20922	Report Created:
Portland, OR 97239	Project Manager:	Christopher Sheridan	01/17/08 17:10

Total Mercury per EPA Method 7471A

TestAmerica Portland

Analyte	Method	Result	MDL*	MRL	Units	Dil	Batch	Prepared	Analyzed	Notes
PQL0750-01 (U-26.7.5)		**Soil**			**Sampled: 12/10/07 11:30**					
Mercury	EPA 7471A	ND	-----	0.125	mg/kg dry	1x	7120816	12/20/07 09:58	12/20/07 16:36	
PQL0750-02 (P-1A-8)		**Soil**			**Sampled: 12/11/07 10:00**					
Mercury	EPA 7471A	ND	-----	0.0932	mg/kg dry	1x	7120816	12/20/07 09:58	12/20/07 16:38	
PQL0750-03 (U-28-8)		**Soil**			**Sampled: 12/10/07 15:00**					
Mercury	EPA 7471A	ND	---	0.0963	mg/kg dry	1x	7120816	12/20/07 09:58	12/20/07 16:41	

TestAmerica Portland

Christina M. Woodcock

Christina Woodcock, Project Manager

The results in this report apply to the samples analyzed in accordance with the chain of custody document. This analytical report shall not be reproduced except in full, without the written approval of the laboratory.

TestAmerica
THE LEADER IN ENVIRONMENTAL TESTING

PORTLAND, OR 9405 S.W. NIMBUS AVENUE
BEAVERTON, OR 97008-7132
ph: (503) 906.9200 fax: (503) 906.9210

Delta Consultants - Portland	Project Name:	**Conoco Phillips**	
4640 SW Macadam Avenue, Suite 110	Project Number:	OR20922	Report Created:
Portland, OR 97239	Project Manager:	Christopher Sheridan	01/17/08 17:10

Selected Volatile Organic Compounds (Including BTEX) per EPA Method 8260B

TestAmerica Portland

Analyte	Method	Result	MDL*	MRL	Units	Dil	Batch	Prepared	Analyzed	Notes
PQL0750-01 (U-26.7.5)		**Soil**			**Sampled: 12/10/07 11:30**					
1,2-Dichloroethane	EPA 8260B	ND	----	79.4	ug/kg dry	2x	7120921	12/22/07 11:08	12/22/07 20:37	
Benzene	"	ND	----	31.8	"	"	"	"	"	
Toluene	"	ND	----	79.4	"	"	"	"	"	
Ethylbenzene	"	ND	----	79.4	"	"	"	"	"	
Xylenes (total)	"	ND	----	159	"	"	"	"	"	
Methyl tert-butyl ether	"	ND	----	63.6	"	"	"	"	"	
Naphthalene	"	ND	----	318	"	"	"	"	"	
1,2,4-Trimethylbenzene	"	ND	----	159	"	"	"	"	"	
1,3,5-Trimethylbenzene	"	ND	----	79.4	"	"	"	"	"	
Isopropylbenzene	"	ND	----	318	"	"	"	"	"	
n-Propylbenzene	"	ND	----	79.4	"	"	"	"	"	
Surrogate(s): 4-BFB		*101%*			*75 - 125 %*	*0.02x*			"	
1,2-DCA-d4		*92.5%*			*75 - 125 %*	"			"	
Dibromofluoromethane		*93.0%*			*75 - 125 %*	"			"	
Toluene-d8		*104%*			*75 - 125 %*	"			"	
PQL0750-02 (P-1A-8)		**Soil**			**Sampled: 12/11/07 10:00**					
1,2-Dibromoethane	EPA 8260B	ND	----	72.9	ug/kg dry	2x	7120921	12/22/07 11:08	12/22/07 21:05	
1,2-Dichloroethane	"	ND	----	72.9	"	"	"	"	"	
Benzene	"	ND	----	29.1	"	"	"	"	"	
Toluene	"	ND	----	72.9	"	"	"	"	"	
Ethylbenzene	"	ND	----	72.9	"	"	"	"	"	
Xylenes (total)	"	ND	----	146	"	"	"	"	"	
Methyl tert-butyl ether	"	ND	----	58.3	"	"	"	"	"	
Naphthalene	"	ND	----	291	"	"	"	"	"	
1,2,4-Trimethylbenzene	"	ND	----	146	"	"	"	"	"	
1,3,5-Trimethylbenzene	"	ND	----	72.9	"	"	"	"	"	
Isopropylbenzene	"	ND	----	291	"	"	"	"	"	
n-Propylbenzene	"	ND	----	72.9	"	"	"	"	"	
Surrogate(s): 4-BFB		*100%*			*75 - 125 %*	*0.02x*			"	
1,2-DCA-d4		*90.9%*			*75 - 125 %*	"			"	
Dibromofluoromethane		*91.2%*			*75 - 125 %*	"			"	
Toluene-d8		*104%*			*75 - 125 %*	"			"	

TestAmerica Portland

Christina Woodcock, Project Manager

The results in this report apply to the samples analyzed in accordance with the chain of custody document. This analytical report shall not be reproduced except in full, without the written approval of the laboratory.

COP0021789

TestAmerica
THE LEADER IN ENVIRONMENTAL TESTING

PORTLAND, OR 9405 S.W. NIMBUS AVENUE
BEAVERTON, OR 97008-7132
ph: (503) 906.9200 fax: (503) 906.9210

Delta Consultants - Portland	Project Name:	**Conoco Phillips**	
4640 SW Macadam Avenue, Suite 110	Project Number:	OR20922	Report Created:
Portland, OR 97239	Project Manager:	Christopher Sheridan	01/17/08 17:10

Selected Volatile Organic Compounds (Including BTEX) per EPA Method 8260B

TestAmerica Portland

Analyte	Method	Result	MDL*	MRL	Units	Dil	Batch	Prepared	Analyzed	Notes
PQL0750-03 (U-28-8)		**Soil**			**Sampled: 12/10/07 15:00**					
1,2-Dibromoethane	EPA 8260B	ND	----	71.8	ug/kg dry	2x	7120921	12/22/07 11:08	12/22/07 21:32	
1,2-Dichloroethane	"	ND	----	71.8	"	"	"	"	"	
Benzene	"	ND	----	28.7	"	"	"	"	"	
Toluene	"	ND	----	71.8	"	"	"	"	"	
Ethylbenzene	"	ND	----	71.8	"	"	"	"	"	
Xylenes (total)	"	ND	----	144	"	"	"	"	"	
Methyl tert-butyl ether	"	ND	----	57.4	"	"	"	"	"	
Naphthalene	"	ND	----	287	"	"	"	"	"	
1,2,4-Trimethylbenzene	"	ND	----	144	"	"	"	"	"	
1,3,5-Trimethylbenzene	"	ND	----	71.8	"	"	"	"	"	
Isopropylbenzene	"	ND	----	287	"	"	"	"	"	
n-Propylbenzene	"	ND	----	71.8	"	"	"	"	"	
Surrogate(s): 4-BFB		*101%*			*75 - 125 %*	*0.02x*			"	
1,2-DCA-d4		*95.2%*			*75 - 125 %*	"			"	
Dibromofluoromethane		*92.6%*			*75 - 125 %*	"			"	
Toluene-d8		*103%*			*75 - 125 %*	"			"	

TestAmerica Portland

Christina Woodcock, Project Manager

The results in this report apply to the samples analyzed in accordance with the chain of custody document. This analytical report shall not be reproduced except in full, without the written approval of the laboratory.

TestAmerica
THE LEADER IN ENVIRONMENTAL TESTING

PORTLAND, OR 9405 S.W. NIMBUS AVENUE
BEAVERTON, OR 97008-7132
ph: (503) 906.9200 fax: (503) 906.9210

Delta Consultants - Portland	Project Name:	**Conoco Phillips**	
4640 SW Macadam Avenue, Suite 110	Project Number:	OR20922	Report Created:
Portland, OR 97239	Project Manager:	Christopher Sheridan	01/17/08 17:10

Polynuclear Aromatic Compounds per EPA 8270M-SIM

TestAmerica Portland

Analyte	Method	Result	MDL*	MRL	Units	Dil	Batch	Prepared	Analyzed	Notes
PQL0750-01 (U-26.7.5)		**Soil**			**Sampled: 12/10/07 11:30**					
2-Methylnaphthalene	EPA 8270m	ND	---	21.8	ug/kg dry	1x	7120825	12/20/07 10:29	12/27/07 22:41	
Acenaphthene	"	ND	----	21.8	"	"	"	"	"	
Acenaphthylene	"	ND	----	21.8	"	"	"	"	"	
Anthracene	"	ND	----	21.8	"	"	"	"	"	
Benzo (a) anthracene	"	ND	----	21.8	"	"	"	"	"	
Benzo (a) pyrene	"	ND	---	21.8	"	"	"	"	"	
Benzo (b) fluoranthene	"	ND	----	21.8	"	"	"	"	"	
Benzo (ghi) perylene	"	ND	---	21.8	"	"	"	"	"	
Benzo (k) fluoranthene	"	ND	----	21.8	"	"	"	"	"	
Chrysene	"	ND	---	21.8	"	"	"	"	"	
Dibenzo (a,h) anthracene	"	ND	----	21.8	"	"	"	"	"	
Fluoranthene	"	ND	----	21.8	"	"	"	"	"	
Fluorene	"	ND	----	21.8	"	"	"	"	"	
Indeno (1,2,3-cd) pyrene	"	ND	----	21.8	"	"	"	"	"	
Naphthalene	"	ND	----	21.8	"	"	"	"	"	
Phenanthrene	"	ND	----	21.8	"	"	"	"	"	
Pyrene	"	ND	----	21.8	"	"	"	"	"	
Surrogate(s): Fluorene-d10			*88.4%*		*24 - 125 %*	"			"	
Pyrene-d10			*115%*		*41 - 141 %*	"			"	
Benzo (a) pyrene-d12			*104%*		*38 - 143 %*	"			"	
PQL0750-02 (P-1A-8)		**Soil**			**Sampled: 12/11/07 10:00**					
2-Methylnaphthalene	EPA 8270m	ND	---	20.5	ug/kg dry	1x	7120825	12/20/07 10:29	12/27/07 23:15	
Acenaphthene	"	ND	----	20.5	"	"	"	"	"	
Acenaphthylene	"	ND	---	20.5	"	"	"	"	"	
Anthracene	"	ND	----	20.5	"	"	"	"	"	
Benzo (a) anthracene	"	ND	----	20.5	"	"	"	"	"	
Benzo (a) pyrene	"	ND	---	20.5	"	"	"	"	"	
Benzo (b) fluoranthene	"	ND	----	20.5	"	"	"	"	"	
Benzo (ghi) perylene	"	ND	---	20.5	"	"	"	"	"	
Benzo (k) fluoranthene	"	ND	----	20.5	"	"	"	"	"	
Chrysene	"	ND	---	20.5	"	"	"	"	"	
Dibenzo (a,h) anthracene	"	ND	----	20.5	"	"	"	"	"	
Fluoranthene	"	ND	----	20.5	"	"	"	"	"	
Fluorene	"	ND	----	20.5	"	"	"	"	"	
Indeno (1,2,3-cd) pyrene	"	ND	----	20.5	"	"	"	"	"	
Naphthalene	"	ND	---	20.5	"	"	"	"	"	
Phenanthrene	"	ND	----	20.5	"	"	"	"	"	
Pyrene	"	ND	----	20.5	"	"	"	"	"	
Surrogate(s): Fluorene-d10			*80.3%*		*24 - 125 %*	"			"	
Pyrene-d10			*101%*		*41 - 141 %*	"			"	
Benzo (a) pyrene-d12			*102%*		*38 - 143 %*	"			"	

TestAmerica Portland

Christina M. Woodcock

Christina Woodcock, Project Manager

The results in this report apply to the samples analyzed in accordance with the chain of custody document. This analytical report shall not be reproduced except in full, without the written approval of the laboratory.

COP0021791

TestAmerica
THE LEADER IN ENVIRONMENTAL TESTING

PORTLAND, OR 9405 S.W. NIMBUS AVENUE
BEAVERTON, OR 97008-7132
ph: (503) 906.9200 fax: (503) 906.9210

Delta Consultants - Portland	Project Name:	**Conoco Phillips**	
4640 SW Macadam Avenue, Suite 110	Project Number:	OR20922	Report Created:
Portland, OR 97239	Project Manager:	Christopher Sheridan	01/17/08 17:10

Polynuclear Aromatic Compounds per EPA 8270M-SIM

TestAmerica Portland

Analyte	Method	Result	MDL*	MRL	Units	Dil	Batch	Prepared	Analyzed	Notes
PQL0750-03 (U-28-8)		**Soil**			**Sampled: 12/10/07 15:00**					
2-Methylnaphthalene	EPA 8270m	ND	---	19.4	ug/kg dry	1x	7120825	12/20/07 10:29	12/27/07 23:48	
Acenaphthene	"	ND	---	19.4	"	"	"	"	"	
Acenaphthylene	"	ND	---	19.4	"	"	"	"	"	
Anthracene	"	ND	---	19.4	"	"	"	"	"	
Benzo (a) anthracene	"	ND	---	19.4	"	"	"	"	"	
Benzo (a) pyrene	"	ND	---	19.4	"	"	"	"	"	
Benzo (b) fluoranthene	"	ND	---	19.4	"	"	"	"	"	
Benzo (ghi) perylene	"	ND	---	19.4	"	"	"	"	"	
Benzo (k) fluoranthene	"	ND	---	19.4	"	"	"	"	"	
Chrysene	"	ND	---	19.4	"	"	"	"	"	
Dibenzo (a,h) anthracene	"	ND	---	19.4	"	"	"	"	"	
Fluoranthene	"	ND	---	19.4	"	"	"	"	"	
Fluorene	"	ND	---	19.4	"	"	"	"	"	
Indeno (1,2,3-cd) pyrene	"	ND	---	19.4	"	"	"	"	"	
Naphthalene	"	ND	---	19.4	"	"	"	"	"	
Phenanthrene	"	ND	---	19.4	"	"	"	"	"	
Pyrene	"	ND	---	19.4	"	"	"	"	"	
Surrogate(s):	*Fluorene-d10*		*80.6%*		*24 - 125 %*	"			"	
	Pyrene-d10		*96.3%*		*41 - 141 %*	"			"	
	Benzo (a) pyrene-d12		*105%*		*38 - 143 %*	"			"	

TestAmerica Portland

Christina Woodcock, Project Manager

The results in this report apply to the samples analyzed in accordance with the chain of custody document. This analytical report shall not be reproduced except in full, without the written approval of the laboratory.

TestAmerica
THE LEADER IN ENVIRONMENTAL TESTING

PORTLAND, OR 9405 S.W. NIMBUS AVENUE
BEAVERTON, OR 97008-7132
ph: (503) 906.9200 fax: (503) 906.9210

Delta Consultants - Portland	Project Name:	**Conoco Phillips**	
4640 SW Macadam Avenue, Suite 110	Project Number:	OR20922	Report Created:
Portland, OR 97239	Project Manager:	Christopher Sheridan	01/17/08 17:10

Percent Dry Weight (Solids) per Standard Methods

TestAmerica Portland

Analyte	Method	Result	MDL*	MRL	Units	Dil	Batch	Prepared	Analyzed	Notes
PQL0750-01 (U-26.7.5)		**Soil**			**Sampled: 12/10/07 11:30**					
% Solids	NCA SOP	61.4	----	0.0100	% by Weight	1x	7120849	12/20/07 15:32	12/20/07 15:32	
PQL0750-02 (P-1A-8)		**Soil**			**Sampled: 12/11/07 10:00**					
% Solids	NCA SOP	64.8	---	0.0100	% by Weight	1x	7120849	12/20/07 15:32	12/20/07 15:32	
PQL0750-03 (U-28-8)		**Soil**			**Sampled: 12/10/07 15:00**					
% Solids	NCA SOP	68.5	---	0.0100	% by Weight	1x	7120849	12/20/07 15:32	12/20/07 15:32	

TestAmerica Portland

Christina M. Woodcock

Christina Woodcock, Project Manager

The results in this report apply to the samples analyzed in accordance with the chain of custody document. This analytical report shall not be reproduced except in full, without the written approval of the laboratory.

TestAmerica
THE LEADER IN ENVIRONMENTAL TESTING

PORTLAND, OR 9405 S.W. NIMBUS AVENUE
BEAVERTON, OR 97008-7132
ph: (503) 906.9200 fax: (503) 906.9210

Delta Consultants - Portland	Project Name:	**Conoco Phillips**	
4640 SW Macadam Avenue, Suite 110	Project Number:	OR20922	Report Created:
Portland, OR 97239	Project Manager:	Christopher Sheridan	01/17/08 17:10

Gasoline Hydrocarbons per NW TPH-Gx Method - Laboratory Quality Control Results

TestAmerica Portland

QC Batch: 7120844 **Soil Preparation Method: EPA 5035 Modified**

Analyte	Method	Result	MDL*	MRL	Units	Dil	Source Result	Spike Amt	% REC	(Limits)	% RPD	(Limits)	Analyzed	Notes
Blank (7120844-BLK1)								Extracted: 12/20/07 15:00						
Gasoline Range Hydrocarbons	NW TPH-Gx	ND	---	3.71	mg/kg wet	1x	--	--	--	--	--	--	12/20/07 18:30	
Surrogate(s): a,a,a-TFT		*Recovery: 112%*			*Limits: 50-150%*	"							*12/20/07 18:30*	
LCS (7120844-BS1)								Extracted: 12/20/07 15:00						
Gasoline Range Hydrocarbons	NW TPH-Gx	18.2	---	3.72	mg/kg wet	1x	--	23.3	78.1%	(70-130)	--	--	12/20/07 17:58	
Surrogate(s): a,a,a-TFT		*Recovery: 138%*			*Limits: 50-150%*	"							*12/20/07 17:58*	
Duplicate (7120844-DUP1)				QC Source: PQL0750-01				Extracted: 12/20/07 15:00						
Gasoline Range Hydrocarbons	NW TPH-Gx	ND	---	6.36	mg/kg dry	1x	ND	--	--	--		(40)	12/20/07 19:46	
Surrogate(s): a,a,a-TFT		*Recovery: 90.4%*			*Limits: 50-150%*	"							*12/20/07 19:46*	
Duplicate (7120844-DUP2)				QC Source: PQL0750-02				Extracted: 12/20/07 15:00						
Gasoline Range Hydrocarbons	NW TPH-Gx	ND	---	5.83	mg/kg dry	1x	ND	--	--	--	NR	(40)	12/21/07 01:39	
Surrogate(s): a,a,a-TFT		*Recovery: 89.8%*			*Limits: 50-150%*	"							*12/21/07 01:39*	
Matrix Spike (7120844-MS1)				QC Source: PQL0750-03				Extracted: 12/20/07 15:00						
Gasoline Range Hydrocarbons	NW TPH-Gx	26.8	---	5.74	mg/kg dry	1x	ND	35.9	74.6%	(65-130)	--	--	12/20/07 21:21	
Surrogate(s): a,a,a-TFT		*Recovery: 121%*			*Limits: 50-150%*	"							*12/20/07 21:21*	

TestAmerica Portland

Christina Woodcock, Project Manager

The results in this report apply to the samples analyzed in accordance with the chain of custody document. This analytical report shall not be reproduced except in full, without the written approval of the laboratory.

TestAmerica
THE LEADER IN ENVIRONMENTAL TESTING

PORTLAND, OR 9405 S.W. NIMBUS AVENUE
BEAVERTON, OR 97008-7132
ph: (503) 906.9200 fax: (503) 906.9210

Delta Consultants - Portland	Project Name:	**Conoco Phillips**	
4640 SW Macadam Avenue, Suite 110	Project Number:	OR20922	Report Created:
Portland, OR 97239	Project Manager:	Christopher Sheridan	01/17/08 17:10

Diesel and Heavy Range Hydrocarbons per NWTPH-Dx Method - Laboratory Quality Control Results

TestAmerica Portland

QC Batch: 7120830 **Soil Preparation Method: EPA 3550 Fuels**

Analyte	Method	Result	MDL[A]	MRL	Units	Dil	Source Result	Spike Amt	% REC	(Limits)	% RPD	(Limits)	Analyzed	Notes
Blank (7120830-BLK1)								Extracted: 12/20/07 14:15						
Diesel Range Organics	NWTPH-Dx	ND	---	12.5	mg/kg wet	1x	--	--	--	--	--	--	12/20/07 16:37	
Heavy Oil Range Hydrocarbons	"	ND	---	25.0	"	"	--	--	--	--	--	--	"	
Surrogate(s): 1-Chlorooctadecane		*Recovery: 96.7%*			*Limits: 50-150%*	"							*12/20/07 16:37*	
LCS (7120830-BS1)								Extracted: 12/20/07 14:15						
Diesel Range Organics	NWTPH-Dx	118	---	12.5	mg/kg wet	1x	--	125	94.5%	(50-150)	--	--	12/20/07 17:12	
Heavy Oil Range Hydrocarbons	"	70.0	---	25.0	"	"	--	75.0	93.4%	"	--	--	"	
Surrogate(s): 1-Chlorooctadecane		*Recovery: 106%*			*Limits: 50-150%*	"							*12/20/07 17:12*	
Duplicate (7120830-DUP1)					QC Source: PQL0554-01			Extracted: 12/20/07 14:15						
Diesel Range Organics	NWTPH-Dx	6240	---	66.9	mg/kg dry	5x	5760	--	--	--	7.90%	(40)	12/21/07 04:21	Q9
Heavy Oil Range Hydrocarbons	"	2680	---	134	"	"	2470	--	--	--	8.41%	"	"	Q9
Surrogate(s): 1-Chlorooctadecane		*Recovery: 143%*			*Limits: 50-150%*	"							*12/21/07 04:21*	
Duplicate (7120830-DUP2)					QC Source: PQL0555-01			Extracted: 12/20/07 14:15						
Diesel Range Organics	NWTPH-Dx	ND	---	14.0	mg/kg dry	1x	ND	--	--	--	4.70%	(40)	12/20/07 17:47	
Heavy Oil Range Hydrocarbons	"	ND	---	27.9	"	"	ND	--	--	--		"	"	
Surrogate(s): 1-Chlorooctadecane		*Recovery: 107%*			*Limits: 50-150%*	"							*12/20/07 17:47*	

TestAmerica Portland

Christina Woodcock, Project Manager

The results in this report apply to the samples analyzed in accordance with the chain of custody document. This analytical report shall not be reproduced except in full, without the written approval of the laboratory.

TestAmerica
THE LEADER IN ENVIRONMENTAL TESTING

PORTLAND, OR 9405 S.W. NIMBUS AVENUE
BEAVERTON, OR 97008-7132
ph: (503) 906.9200 fax: (503) 906.9210

Delta Consultants - Portland	Project Name:	**Conoco Phillips**	
4640 SW Macadam Avenue, Suite 110	Project Number:	OR20922	Report Created:
Portland, OR 97239	Project Manager:	Christopher Sheridan	01/17/08 17:10

Total Metals per EPA 6000/7000 Series Methods - Laboratory Quality Control Results

TestAmerica Portland

QC Batch: 7120998 **Soil Preparation Method: EPA 3050**

Analyte	Method	Result	MDL*	MRL	Units	Dil	Source Result	Spike Amt	% REC	(Limits)	% RPD	(Limits)	Analyzed	Notes
Blank (7120998-BLK1)								Extracted: 12/27/07 12:00						
Arsenic	EPA 6020	ND	---	0.476	mg/kg wet	1x	--	--	--	--	--	--	01/02/08 15:56	
Cadmium	"	ND	---	0.476	"	"	--	--	--	--	--	--	"	
Chromium	"	ND	---	0.476	"	"	--	--	--	--	--	--	"	
Copper	"	ND	---	1.90	"	"	--	--	--	--	--	--	01/03/08 01:57	
Lead	"	ND	---	0.476	"	"	--	--	--	--	--	--	01/02/08 15:56	
Selenium	"	ND	---	0.476	"	"	--	--	--	--	--	--	"	
Silver	"	ND	---	0.476	"	"	--	--	--	--	--	--	"	
Zinc	"	ND	---	1.90	"	"	--	--	--	--	--	--	"	
LCS (7120998-BS1)								Extracted: 12/27/07 12:00						
Arsenic	EPA 6020	8.89	---	0.500	mg/kg wet	1x	--	10.0	88.9%	(80-120)	--	--	01/02/08 16:03	
Cadmium	"	8.91	---	0.500	"	"	--	"	89.1%	"	--	--	"	
Chromium	"	9.39	---	0.500	"	"	--	"	93.9%	"	--	--	"	
Copper	"	10.5	---	2.00	"	"	--	"	105%	"	--	--	01/03/08 02:05	
Lead	"	9.11	---	0.500	"	"	--	"	91.1%	"	--	--	01/02/08 16:03	
Selenium	"	4.15	---	0.500	"	"	--	5.00	83.0%	"	--	--	"	
Silver	"	4.60	---	0.500	"	"	--	"	92.1%	"	--	--	"	
Zinc	"	8.68	---	2.00	"	"	--	10.0	86.8%	"	--	--	"	
Duplicate (7120998-DUP1)					QC Source: PQL0666-04			Extracted: 12/27/07 12:00						
Arsenic	EPA 6020	4.81	---	0.611	mg/kg dry	1x	4.54	--	--	--	5.74%	(40)	01/02/08 16:35	
Cadmium	"	2.47	---	0.611	"	"	2.63	--	--	--	6.47%	"	"	
Chromium	"	17.3	---	0.611	"	"	17.2	--	--	--	0.496%	"	"	
Copper	"	37.6	---	2.44	"	"	39.0	--	--	--	3.65%	"	01/03/08 02:19	
Lead	"	106	---	0.611	"	"	110	--	--	--	3.75%	"	01/02/08 16:35	
Selenium	"	ND	---	0.611	"	"	ND	--	--	--	NR	"	"	
Silver	"	ND	---	0.611	"	"	ND	--	--	--	NR	"	"	
Zinc	"	140	---	2.44	"	"	125	--	--	--	11.2%	"	"	
Matrix Spike (7120998-MS1)					QC Source: PQL0666-07			Extracted: 12/27/07 12:00						
Arsenic	EPA 6020	13.7	---	0.592	mg/kg dry	1x	4.20	11.8	80.5%	(75-125)	--	--	01/02/08 16:57	
Cadmium	"	10.8	---	0.592	"	"	0.136	"	89.7%	"	--	--	"	
Chromium	"	26.9	---	0.592	"	"	16.2	"	90.2%	"	--	--	"	
Copper	"	28.6	---	2.37	"	"	13.2	"	130%	"	--	--	01/03/08 02:40	M7
Lead	"	24.9	---	0.592	"	"	14.6	"	86.8%	"	--	--	01/02/08 16:57	
Selenium	"	4.59	---	0.592	"	"	ND	5.92	77.6%	"	--	--	"	
Silver	"	5.34	---	0.592	"	"	ND	"	90.3%	"	--	--	"	
Zinc	"	60.9	---	2.37	"	"	51.8	11.8	77.2%	"	--	--	"	

TestAmerica Portland

Christina M. Woodcock

Christina Woodcock, Project Manager

The results in this report apply to the samples analyzed in accordance with the chain of custody document. This analytical report shall not be reproduced except in full, without the written approval of the laboratory.

TestAmerica
THE LEADER IN ENVIRONMENTAL TESTING

PORTLAND, OR 9405 S.W. NIMBUS AVENUE
BEAVERTON, OR 97008-7132
ph: (503) 906.9200 fax: (503) 906.9210

Delta Consultants - Portland	Project Name:	**Conoco Phillips**	
4640 SW Macadam Avenue, Suite 110	Project Number:	OR20922	Report Created:
Portland, OR 97239	Project Manager:	Christopher Sheridan	01/17/08 17:10

Total Metals per EPA 6000/7000 Series Methods - Laboratory Quality Control Results

TestAmerica Portland

QC Batch: 7120998 **Soil Preparation Method: EPA 3050**

Analyte	Method	Result	MDL*	MRL	Units	Dil	Source Result	Spike Amt	% REC	(Limits)	% RPD	(Limits)	Analyzed	Notes
Matrix Spike (7120998-MS2)				QC Source: PQL0666-09				Extracted: 12/27/07 12:00						
Arsenic	EPA 6020	17.3	---	0.686	mg/kg dry	1x	6.20	13.7	80.7%	(75-125)	--	--	01/02/08 17:11	
Cadmium	"	12.3	---	0.686	"	"	ND	"	89.7%	"	--	--	"	
Chromium	"	40.0	---	0.686	"	"	27.4	"	91.5%	"	--	--	"	
Copper	"	41.5	---	2.74	"	"	22.8	"	136%	"	--	--	01/03/08 02:55	M7
Lead	"	22.6	---	0.686	"	"	9.62	"	94.3%	"	--	--	01/02/08 17:11	
Selenium	"	4.85	---	0.686	"	"	ND	6.86	70.7%	"	--	--	"	M8
Silver	"	6.12	---	0.686	"	"	ND	"	89.2%	"	--	--	"	
Zinc	"	71.0	---	2.74	"	"	59.2	13.7	85.8%	"	--	--	"	

TestAmerica Portland

Christina M. Woodcock

Christina Woodcock, Project Manager

The results in this report apply to the samples analyzed in accordance with the chain of custody document. This analytical report shall not be reproduced except in full, without the written approval of the laboratory.

TestAmerica
THE LEADER IN ENVIRONMENTAL TESTING

PORTLAND, OR 9405 S.W. NIMBUS AVENUE
BEAVERTON, OR 97008-7132
ph: (503) 906.9200 fax: (503) 906.9210

Delta Consultants - Portland	Project Name:	**Conoco Phillips**	
4640 SW Macadam Avenue, Suite 110	Project Number:	OR20922	Report Created:
Portland, OR 97239	Project Manager:	Christopher Sheridan	01/17/08 17:10

Total Mercury per EPA Method 7471A - Laboratory Quality Control Results

TestAmerica Portland

QC Batch: 7120816 **Soil Preparation Method: EPA 7471A**

Analyte	Method	Result	MDL*	MRL	Units	Dil	Source Result	Spike Amt	% REC	(Limits)	% RPD	(Limits)	Analyzed	Notes
Blank (7120816-BLK1)								Extracted: 12/20/07 09:58						
Mercury	EPA 7471A	ND	---	0.100	mg/kg wet	1x	--	--	--	--	--	--	12/20/07 15:47	
LCS (7120816-BS1)								Extracted: 12/20/07 09:58						
Mercury	EPA 7471A	0.976	---	0.100	mg/kg wet	1x	--	1.00	97.6%	(80-120)	--	--	12/20/07 15:49	
LCS Dup (7120816-BSD1)								Extracted: 12/20/07 09:58						
Mercury	EPA 7471A	0.999	---	0.100	mg/kg wet	1x	--	1.00	99.9%	(80-120)	2.38%	(20)	12/20/07 15:53	
Duplicate (7120816-DUP1)				QC Source: PQL0744-01				Extracted: 12/20/07 09:58						
Mercury	EPA 7471A	ND	---	0.467	mg/kg dry	1x	ND	--	--	--	NR	(40)	12/20/07 15:58	
Matrix Spike (7120816-MS1)				QC Source: PQL0744-01				Extracted: 12/20/07 09:58						
Mercury	EPA 7471A	4.17	---	0.515	mg/kg dry	1x	ND	5.15	80.9%	(75-125)	--	--	12/20/07 16:00	
Matrix Spike Dup (7120816-MSD1)				QC Source: PQL0744-01				Extracted: 12/20/07 09:58						
Mercury	EPA 7471A	4.19	---	0.498	mg/kg dry	1x	ND	4.98	84.2%	(75-125)	0.621%	(40)	12/20/07 16:04	

TestAmerica Portland

Christina M. Woodcock

Christina Woodcock, Project Manager

The results in this report apply to the samples analyzed in accordance with the chain of custody document. This analytical report shall not be reproduced except in full, without the written approval of the laboratory.

TestAmerica
THE LEADER IN ENVIRONMENTAL TESTING

PORTLAND, OR 9405 S.W. NIMBUS AVENUE
BEAVERTON, OR 97008-7132
ph: (503) 906.9200 fax: (503) 906.9210

Delta Consultants - Portland	Project Name:	**Conoco Phillips**	
4640 SW Macadam Avenue, Suite 110	Project Number:	OR20922	Report Created:
Portland, OR 97239	Project Manager:	Christopher Sheridan	01/17/08 17:10

Selected Volatile Organic Compounds (Including BTEX) per EPA Method 8260B - Laboratory Quality Control Results

TestAmerica Portland

QC Batch: 7120921 **Soil Preparation Method: EPA 5035A**

Analyte	Method	Result	MDL*	MRL	Units	Dil	Source Result	Spike Amt	% REC	(Limits)	% RPD	(Limits)	Analyzed	Notes
Blank (7120921-BLK1)								Extracted: 12/22/07 11:08						
1,2-Dibromoethane	EPA 8260B	ND	---	49.5	ug/kg wet	2x	--	--	--	--	--	--	12/22/07 16:30	
1,2-Dichloroethane	"	ND	---	49.5	"	"	--	--	--	--	--	--	"	
Benzene	"	ND	---	19.8	"	"	--	--	--	--	--	--	"	
Toluene	"	ND	---	49.5	"	"	--	--	--	--	--	--	"	
Ethylbenzene	"	ND	---	49.5	"	"	--	--	--	--	--	--	"	
Xylenes (total)	"	ND	---	99.0	"	"	--	--	--	--	--	--	"	
Methyl tert-butyl ether	"	ND	---	39.6	"	"	--	--	--	--	--	--	"	
Naphthalene	"	ND	---	198	"	"	--	--	--	--	--	--	"	
1,2,4-Trimethylbenzene	"	ND	---	99.0	"	"	--	--	--	--	--	--	"	
1,3,5-Trimethylbenzene	"	ND	---	49.5	"	"	--	--	--	--	--	--	"	
Isopropylbenzene	"	ND	---	198	"	"	--	--	--	--	--	--	"	
n-Propylbenzene	"	ND	---	49.5	"	"	--	--	--	--	--	--	"	
Surrogate(s): 4-BFB		*Recovery: 101%*			*Limits: 75-125%*	*0.02x*							*12/22/07 16:30*	
1,2-DCA-d4		*97.4%*			*75-125%*	"							"	
Dibromofluoromethane		*94.4%*			*75-125%*	"							"	
Toluene-d8		*102%*			*75-125%*	"							"	
LCS (7120921-BS1)								Extracted: 12/22/07 11:08						
Benzene	EPA 8260B	2100	---	19.7	ug/kg wet	2x	--	1970	106%	(81.8-125)	--	--	12/22/07 14:33	
Toluene	"	2020	---	49.3	"	"	--	"	102%	(80-125)	--	--	"	
Ethylbenzene	"	2020	---	49.3	"	"	--	"	102%	(80-120)	--	--	"	
Xylenes (total)	"	6120	---	98.6	"	"	--	5920	103%	(70-130)	--	--	"	
Methyl tert-butyl ether	"	2330	---	39.4	"	"	--	1970	118%	(80-128)	--	--	"	
Naphthalene	"	2270	---	197	"	"	--	"	115%	(76.1-153)	--	--	"	
Surrogate(s): 4-BFB		*Recovery: 103%*			*Limits: 75-125%*	*0.02x*							*12/22/07 14:33*	
1,2-DCA-d4		*108%*			*75-125%*	"							"	
Dibromofluoromethane		*109%*			*75-125%*	"							"	
Toluene-d8		*101%*			*75-125%*	"							"	
Matrix Spike (7120921-MS1)				QC Source: FQL0580-02				Extracted: 12/22/07 11:08						
Benzene	EPA 8260B	2460	---	23.7	ug/kg dry	2x	ND	2370	104%	(68.5-125)	--	--	12/22/07 15:07	
Toluene	"	2440	---	59.3	"	"	ND	"	103%	(70.3-125)	--	--	"	
Ethylbenzene	"	2420	---	59.3	"	"	ND	"	102%	(80-124)	--	--	"	
Xylenes (total)	"	7280	---	119	"	"	ND	7110	102%	(70-130)	--	--	"	
Methyl tert-butyl ether	"	2440	---	47.4	"	"	ND	2370	103%	(80-130)	--	--	"	
Naphthalene	"	2480	---	237	"	"	ND	"	104%	(69-163)	--	--	"	
Surrogate(s): 4-BFB		*Recovery: 98.0%*			*Limits: 75-125%*	*0.02x*							*12/22/07 15:07*	
1,2-DCA-d4		*101%*			*75-125%*	"							"	
Dibromofluoromethane		*104%*			*75-125%*	"							"	
Toluene-d8		*101%*			*75-125%*	"							"	

TestAmerica Portland

Christina M. Woodcock

Christina Woodcock, Project Manager

The results in this report apply to the samples analyzed in accordance with the chain of custody document. This analytical report shall not be reproduced except in full, without the written approval of the laboratory

TestAmerica
THE LEADER IN ENVIRONMENTAL TESTING

PORTLAND, OR 9405 S.W. NIMBUS AVENUE
BEAVERTON, OR 97008-7132
ph: (503) 906.9200 fax: (503) 906.9210

Delta Consultants - Portland	Project Name:	**Conoco Phillips**	
4640 SW Macadam Avenue, Suite 110	Project Number:	OR20922	Report Created:
Portland, OR 97239	Project Manager:	Christopher Sheridan	01/17/08 17:10

Selected Volatile Organic Compounds (Including BTEX) per EPA Method 8260B - Laboratory Quality Control Results

TestAmerica Portland

QC Batch: 7120921 **Soil Preparation Method: EPA 5035A**

Analyte	Method	Result	MDL*	MRL	Units	Dil	Source Result	Spike Amt	% REC	(Limits)	% RPD	(Limits)	Analyzed	Notes
Matrix Spike Dup (7120921-MSD1)				QC Source: PQL0580-02				Extracted: 12/22/07 11:08						
Benzene	EPA 8260B	2450	---	23.7	ug/kg dry	2x	ND	2370	103%	(68.5-125)	0.578%	(25)	12/22/07 15:34	
Toluene	"	2480	---	59.3	"	"	ND	"	104%	(70.3-125)	1.40%	"	"	
Ethylbenzene	"	2410	---	59.3	"	"	ND	"	102%	(80-124)	0.589%	"	"	
Xylenes (total)	"	7230	---	119	"	"	ND	7120	102%	(70-130)	0.637%	"	"	
Methyl tert-butyl ether	"	2460	---	47.5	"	"	ND	2370	104%	(80-130)	1.07%	"	"	
Naphthalene	"	2650	---	237	"	"	ND	"	111%	(69-163)	6.58%	"	"	

Surrogate(s):		*Recovery:*	*Limits:*		
4-BFB	*98.6%*		*75-125%*	*0.02x*	*12/22/07 15:34*
1,2-DCA-d4	*101%*		*75-125%*	"	"
Dibromofluoromethane	*104%*		*75-125%*	"	"
Toluene-d8	*104%*		*75-125%*	"	"

TestAmerica Portland

Christina M. Woodcock

Christina Woodcock, Project Manager

The results in this report apply to the samples analyzed in accordance with the chain of custody document. This analytical report shall not be reproduced except in full, without the written approval of the laboratory.

TestAmerica
THE LEADER IN ENVIRONMENTAL TESTING

PORTLAND, OR 9405 S.W. NIMBUS AVENUE
BEAVERTON, OR 97008-7132
ph: (503) 906.9200 fax: (503) 906.9210

Delta Consultants - Portland	Project Name:	**Conoco Phillips**	
4640 SW Macadam Avenue, Suite 110	Project Number:	OR20922	Report Created:
Portland, OR 97239	Project Manager:	Christopher Sheridan	01/17/08 17:10

Polynuclear Aromatic Compounds per EPA 8270M-SIM - Laboratory Quality Control Results

TestAmerica Portland

QC Batch: 7120825 **Soil Preparation Method: EPA 3550**

Analyte	Method	Result	MDL*	MRL	Units	Dil	Source Result	Spike Amt	% REC	(Limits)	% RPD	(Limits)	Analyzed	Notes
Blank (7120825-BLK1)								Extracted: 12/20/07 10:29						
2-Methylnaphthalene	EPA 8270m	ND	---	13.3	ug/kg wet	1x	--	--	--	--	--	--	12/21/07 19:42	
Acenaphthene	"	ND	---	13.3	"	"	--	--	--	--	--	--	"	
Acenaphthylene	"	ND	---	13.3	"	"	--	--	--	--	--	--	"	
Anthracene	"	ND	---	13.3	"	"	--	--	--	--	--	--	"	
Benzo (a) anthracene	"	ND	---	13.3	"	"	--	--	--	--	--	--	"	
Benzo (a) pyrene	"	ND	---	13.3	"	"	--	--	--	--	--	--	"	
Benzo (b) fluoranthene	"	ND	---	13.3	"	"	--	--	--	--	--	--	"	
Benzo (ghi) perylene	"	ND	---	13.3	"	"	--	--	--	--	--	--	"	
Benzo (k) fluoranthene	"	ND	---	13.3	"	"	--	--	--	--	--	--	"	
Chrysene	"	ND	---	13.3	"	"	--	--	--	--	--	--	"	
Dibenzo (a,h) anthracene	"	ND	---	13.3	"	"	--	--	--	--	--	--	"	
Fluoranthene	"	ND	---	13.3	"	"	--	--	--	--	--	--	"	
Fluorene	"	ND	---	13.3	"	"	--	--	--	--	--	--	"	
Indeno (1,2,3-cd) pyrene	"	ND	---	13.3	"	"	--	--	--	--	--	--	"	
Naphthalene	"	ND	---	13.3	"	"	--	--	--	--	--	--	"	
Phenanthrene	"	ND	---	13.3	"	"	--	--	--	--	--	--	"	
Pyrene	"	ND	---	13.3	"	"	--	--	--	--	--	--	"	
Surrogate(s): Fluorene-d10		*Recovery: 98.5%*			*Limits: 24-125%*	"							*12/21/07 19:42*	
Pyrene-d10		*102%*			*41-141%*	"							"	
Benzo (a) pyrene-d12		*112%*			*38-143%*	"							"	
LCS (7120825-BS1)								Extracted: 12/20/07 10:29						
Acenaphthene	EPA 8270m	149	---	13.4	ug/kg wet	1x	--	166	90.0%	(33-139)	--	--	12/21/07 20:12	
Benzo (a) pyrene	"	175	---	13.4	"	"	--	"	105%	(45-149)	--	--	"	
Pyrene	"	157	---	13.4	"	"	--	"	94.3%	(39-138)	--	--	"	
Surrogate(s): Fluorene-d10		*Recovery: 96.2%*			*Limits: 24-125%*	"							*12/21/07 20:12*	
Pyrene-d10		*99.1%*			*41-141%*	"							"	
Benzo (a) pyrene-d12		*112%*			*38-143%*	"							"	
Matrix Spike (7120825-MS1)					QC Source: PQL0759-02			Extracted: 12/20/07 10:29						
Acenaphthene	EPA 8270m	160	---	28.4	ug/kg dry	2x	ND	177	90.5%	(33-139)	--	--	12/26/07 17:41	
Benzo (a) pyrene	"	181	---	28.4	"	"	ND	"	102%	(45-149)	--	--	"	
Pyrene	"	159	---	28.4	"	"	ND	"	90.1%	(39-138)	--	--	"	
Surrogate(s): Fluorene-d10		*Recovery: 94.1%*			*Limits: 24-125%*	"							*12/26/07 17:41*	
Pyrene-d10		*91.0%*			*41-141%*	"							"	
Benzo (a) pyrene-d12		*106%*			*38-143%*	"							"	

TestAmerica Portland

Christina M. Woodcock

Christina Woodcock, Project Manager

The results in this report apply to the samples analyzed in accordance with the chain of custody document. This analytical report shall not be reproduced except in full, without the written approval of the laboratory.

TestAmerica
THE LEADER IN ENVIRONMENTAL TESTING

PORTLAND, OR 9405 S.W. NIMBUS AVENUE
BEAVERTON, OR 97008-7132
ph: (503) 906.9200 fax: (503) 906.9210

Delta Consultants - Portland	Project Name:	**Conoco Phillips**	
4640 SW Macadam Avenue, Suite 110	Project Number:	OR20922	Report Created:
Portland, OR 97239	Project Manager:	Christopher Sheridan	01/17/08 17:10

Polynuclear Aromatic Compounds per EPA 8270M-SIM - Laboratory Quality Control Results

TestAmerica Portland

QC Batch: 7120825 **Soil Preparation Method: EPA 3550**

Analyte	Method	Result	MDL*	MRL	Units	Dil	Source Result	Spike Amt	% REC	(Limits)	% RPD	(Limits)	Analyzed	Notes
Matrix Spike Dup (7120825-MSD1)					QC Source: PQL0759-02				Extracted: 12/20/07 10:29					
Acenaphthene	EPA 8270m	159	---	28.6	ug/kg dry	2x	ND	178	89.3%	(33-139)	0.774%	(60)	12/26/07 18:12	
Benzo (a) pyrene	"	171	---	28.6	"	"	ND	"	96.0%	(45-149)	5.90%	"	"	
Pyrene	"	153	---	28.6	"	"	ND	"	86.2%	(39-138)	3.92%	"	"	

Surrogate(s):	*Fluorene-d10*	*Recovery:*	*94.6%*	*Limits:* *24-125%*	"	*12/26/07 18:12*
	Pyrene-d10		*87.0%*	*41-141%*	"	"
	Benzo (a) pyrene-d12		*100%*	*38-143%*	"	"

TestAmerica Portland

Christina M. Woodcock

Christina Woodcock, Project Manager

The results in this report apply to the samples analyzed in accordance with the chain of custody document. This analytical report shall not be reproduced except in full, without the written approval of the laboratory.

TestAmerica
THE LEADER IN ENVIRONMENTAL TESTING

PORTLAND, OR 9405 S.W. NIMBUS AVENUE
BEAVERTON, OR 97008-7132
ph: (503) 906.9200 fax: (503) 906.9210

Delta Consultants - Portland	Project Name:	**Conoco Phillips**	
4640 SW Macadam Avenue, Suite 110	Project Number:	OR20922	Report Created:
Portland, OR 97239	Project Manager:	Christopher Sheridan	01/17/08 17:10

Percent Dry Weight (Solids) per Standard Methods - Laboratory Quality Control Results

TestAmerica Portland

QC Batch: 7120849 **Soil Preparation Method: Dry Weight**

Analyte	Method	Result	MDL*	MRL	Units	Dil	Source Result	Spike Amt	% REC	(Limits)	% RPD	(Limits)	Analyzed	Notes
Duplicate (7120849-DUP1)				QC Source: PQL0464-03				Extracted: 12/20/07 15:32						
% Solids	NCA SOP	75.8	---	0.0100	% by Weight	1x	75.0	--	--	--	1.06%	(20)	12/20/07 15:32	

TestAmerica Portland

Christina M. Woodcock

Christina Woodcock, Project Manager

The results in this report apply to the samples analyzed in accordance with the chain of custody document. This analytical report shall not be reproduced except in full, without the written approval of the laboratory.

PORTLAND, OR 9405 S.W. NIMBUS AVENUE
BEAVERTON, OR 97008-7132
ph: (503) 906.9200 fax: (503) 906.9210

Delta Consultants - Portland	Project Name:	**Conoco Phillips**	
4640 SW Macadam Avenue, Suite 110	Project Number:	OR20922	Report Created:
Portland, OR 97239	Project Manager:	Christopher Sheridan	01/17/08 17:10

Notes and Definitions

Report Specific Notes:

M7 - The MS and/or MSD were above the acceptance limits. See Blank Spike (LCS).

M8 - The MS and/or MSD were below the acceptance limits. See Blank Spike (LCS).

Q9 - Hydrocarbon pattern most closely resembles crude oil or similar product.

Laboratory Reporting Conventions:

DET - Analyte DETECTED at or above the Reporting Limit. Qualitative Analyses only.

ND - Analyte NOT DETECTED at or above the reporting limit (MDL or MRL, as appropriate).

NR/NA - Not Reported / Not Available

dry - Sample results reported on a Dry Weight Basis. Results and Reporting Limits have been corrected for Percent Dry Weight.

wet - Sample results and reporting limits reported on a Wet Weight Basis (as received). Results with neither 'wet' nor 'dry' are reported on a Wet Weight Basis.

RPD - RELATIVE PERCENT DIFFERENCE (RPDs calculated using Results, not Percent Recoveries).

MRL - METHOD REPORTING LIMIT. Reporting Level at, or above, the lowest level standard of the Calibration Table.

MDL* - METHOD DETECTION LIMIT. Reporting Level at, or above, the statistically derived limit based on 40CFR, Part 136, Appendix B. *MDLs are listed on the report only if the data has been evaluated below the MRL. Results between the MDL and MRL are reported as Estimated Results.

Dil - Dilutions are calculated based on deviations from the standard dilution performed for an analysis, and may not represent the dilution found on the analytical raw data.

Reporting Limits - Reporting limits (MDLs and MRLs) are adjusted based on variations in sample preparation amounts, analytical dilutions and percent solids, where applicable.

Electronic Signature - Electronic Signature added in accordance with TestAmerica's *Electronic Reporting and Electronic Signatures Policy*. Application of electronic signature indicates that the report has been reviewed and approved for release by the laboratory. Electronic signature is intended to be the legally binding equivalent of a traditionally handwritten signature.

The results in this report apply to the samples analyzed in accordance with the chain of custody document. This analytical report shall not be reproduced except in full, without the written approval of the laboratory.

TestAmerica
ANALYTICAL TESTING CORPORATION

[illegible] North Creek Pkwy N Suite 400, Bothell, WA 98011-8244 425-420-9200 FAX 420-9210
[illegible] East Alex, Spokane, WA 99202-5202 509-924-9200 FAX 924-9290
[illegible] SW Nimbus Ave, Beaverton, OR 97008-7145 503-906-9200 FAX 906-9210
[illegible]

CHAIN OF CUSTODY REPORT

Work Order #: PQL0750

CLIENT: Delta / COP

REPORT TO: Chris Sherlin @ csherlin@deltaenv.com
ADDRESS:
PHONE: 503.639.8098 FAX:

INVOICE TO: Delta

P.O. NUMBER:

PROJECT NAME: COP Cutoff wall Performance Evaluation
PROJECT NUMBER:
SAMPLED BY: CJJ

PRESERVATIVE:

REQUESTED ANALYSES

TURNAROUND REQUEST
in Business Days *
Organic & Inorganic Analyses: ~~10~~ 7 5 4 3 2 1 ~~.5~~ (TP)
Petroleum Hydrocarbon Analyses: ~~5~~ 4 3 2 1 ~~.5~~ (STD)
OTHER Specify:
* Turnaround Requests less than standard may incur Rush Charges

CLIENT SAMPLE IDENTIFICATION	SAMPLING DATE TIME	TPH-G	TPH-D/O	PAHs (including 2-methylnaphthalene)	RBDM VOCs	Metals		MATRIX (W, S, O)	# OF CONT.	LOCATION COMMENTS	TA WO ID
1 U-26.7.5	12/10/07 1130	X	X	X	X	X		S	2	*Metals*	
2 P-1A-8	12/11/07 1000	↓	↓	↓	↓	↓		S	2	As, Cd, Cr,	
3 U-28-8	12/10/07 1500	↓	↓	↓	↓	↓		S	2	Cu, Pb, Hg, Selenium, Ag, Zn.	
4											
5											
6											
7											
8											
9											
10											

RELEASED BY: Chris Sherlin		DATE: 12/12/07	RECEIVED BY:			DATE: 12-19-07
PRINT NAME:	FIRM: Delta	TIME: 1030	PRINT NAME: Jenny Angus	FIRM: TAP		TIME: 1030
RELEASED BY:		DATE: 12-19-07	RECEIVED BY:			DATE: 12/19/07
PRINT NAME:	FIRM: TAP	TIME: 1320	PRINT NAME: Jamie Ireland	FIRM: TAP		TIME: 1320

ADDITIONAL REMARKS: Pls. Be sure to meet holly tins. Thanks!

TEMP: 3.7°C

PAGE OF

Call: 503.475.6835

COP0021805

TestAmerica Sample Receipt Checklist

Cooler ID(s):

Received by: (section A) Date: [illegible] Time: [illegible] Initials: [illegible]

Unpacked by: (section B) Date: [illegible] Initials: [illegible]

Logged-in by: Date: [illegible] Initials: [illegible]

Work Order No. PQ L0750
Client: Delta
Project: Conoco Phillips

Temperature out of range:
___Not enough Ice
___No Ice
___Ice Melted
___Win 4 Hours
___Other ___

***ESI Clients (see Section C)

Cooler Temperature (IR): ___ °C plastic glass NA (oil/air samples, ESI client) Temperature Blank: 3.7 °C

A

Custody Seals: (#___)

Signature: Y N Dated: ___
X None

Container Type:
X #Cooler(s)
___#Box(s)
___None (___#Other: ___)

Coolant Type:
___Gel Ice
X Loose Ice
___None

Packing Material:
___Bubble Bags
___Styrofoam Cubbies
X None (___Other: ___)

Received from:
X TA Courier
___Senvoy
___UPS
___Fed Ex
___Client
___TDP
___DHL
___SDS
___Mid-Valley
___GS/TA
___GS/Senvoy
___Other: ___

B

Sample Status:
(If N circled, see NOD)

General:
Intact? Y N
Containers Match COC? Y N none given
IDs Match COC? Y N

For Analyses Requested:
Correct Type & Preservation? Y N
Adequate Volume? Y N
Within Hold Time? Y N

Volatiles/ Oil Quality:
VOAs/ Syringes free of Headspace? Y N NA
TB on COC? not provided Y N NA

Metals:
HNO3 Preserved? Y N NA
Dissolved Metals Filtered? Y N NA

C

***ESI Clients Only:

Temperature Blank: ___ °C not provided

All preserved bottles checked Y N NA (voas/soils/all unp.)
All preserved accordingly? Y N (see NOD) NA (voas/soils/all unp.)

FED EX/ UPS: Was the tracking paper keepable? YES NO

If circled NO, what is the Tracking number? ___

FED EX Goldstreak UPS DHL Other: ___

Project Managers:

Comments ___

PM Reviewed: ___ (Initial/Date)

COP0021806

TestAmerica
THE LEADER IN ENVIRONMENTAL TESTING

PORTLAND, OR 9405 S.W. NIMBUS AVENUE
BEAVERTON, OR 97008-7132
ph: (503) 906.9200 fax: (503) 906.9210

January 03, 2008

Christopher Sheridan
Delta Consultants - Tigard
7150 SW Hampton - Suite 220
Tigard, OR 97223

RE: Conoco Phillips

Enclosed are the results of analyses for samples received by the laboratory on 12/07/07 14:30. The following list is a summary of the Work Orders contained in this report, generated on 01/03/08 17:45.

If you have any questions concerning this report, please feel free to contact me.

Work Order	Project	ProjectNumber
PQL0319	Conoco Phillips	OR20922

TestAmerica Portland

Christina M. Woodcock

Christina Woodcock, Project Manager

The results in this report apply to the samples analyzed in accordance with the chain of custody document. This analytical report shall not be reproduced except in full, without the written approval of the laboratory.

TestAmerica
THE LEADER IN ENVIRONMENTAL TESTING

PORTLAND, OR 9405 S.W. NIMBUS AVENUE
BEAVERTON, OR 97008-7132
ph: (503) 906.9200 fax: (503) 906.9210

Delta Consultants - Tigard	Project Name:	**Conoco Phillips**	
7150 SW Hampton - Suite 220	Project Number:	OR20922	Report Created:
Tigard, OR 97223	Project Manager:	Christopher Sheridan	01/03/08 17:45

ANALYTICAL REPORT FOR SAMPLES

Sample ID	Laboratory ID	Matrix	Date Sampled	Date Received
U-24B-20	PQL0319-01	Soil	12/03/07 16:00	12/07/07 14:30
U-24A-8	PQL0319-02	Soil	12/04/07 11:15	12/07/07 14:30
U-23-8	PQL0319-03	Soil	12/05/07 10:45	12/07/07 14:30
U-22B-6.5	PQL0319-04	Soil	12/05/07 14:00	12/07/07 14:30
U-25-7.5	PQL0319-05	Soil	12/06/07 11:30	12/07/07 14:30
U-27-8	PQL0319-06	Soil	12/07/07 12:30	12/07/07 14:30

TestAmerica Portland

Christina M. Woodcock

Christina Woodcock, Project Manager

The results in this report apply to the samples analyzed in accordance with the chain of custody document. This analytical report shall not be reproduced except in full, without the written approval of the laboratory.

TestAmerica
THE LEADER IN ENVIRONMENTAL TESTING

PORTLAND, OR 9405 S.W. NIMBUS AVENUE
BEAVERTON, OR 97008-7132
ph: (503) 906.9200 fax: (503) 906.9210

Delta Consultants - Tigard	Project Name:	**Conoco Phillips**	
7150 SW Hampton - Suite 220	Project Number:	OR20922	Report Created:
Tigard, OR 97223	Project Manager:	Christopher Sheridan	01/03/08 17:45

Gasoline Hydrocarbons per NW TPH-Gx Method

TestAmerica Portland

Analyte	Method	Result	MDL[A]	MRL	Units	Dil	Batch	Prepared	Analyzed	Notes
PQL0319-01 (U-24B-20)		**Soil**			**Sampled: 12/03/07 16:00**					
Gasoline Range Hydrocarbons	NW TPH-Gx	ND	---	6.43	mg/kg dry	1x	7120465	12/12/07 12:50	12/12/07 18:40	
Surrogate(s): a,a,a-TFT			*101%*		*50 - 150 %*	"			"	
PQL0319-02 (U-24A-8)		**Soil**			**Sampled: 12/04/07 11:15**					
Gasoline Range Hydrocarbons	NW TPH-Gx	ND	---	6.23	mg/kg dry	1x	7120465	12/12/07 12:50	12/12/07 17:03	
Surrogate(s): a,a,a-TFT			*101%*		*50 - 150 %*	"			"	
PQL0319-03 (U-23-8)		**Soil**			**Sampled: 12/05/07 10:45**					
Gasoline Range Hydrocarbons	NW TPH-Gx	**1600**	---	57.6	mg/kg dry	10x	7120465	12/12/07 12:50	12/13/07 11:16	
Surrogate(s): a,a,a-TFT			*5320%*		*50 - 150 %*	"			"	*ZX*
PQL0319-04 (U-22B-6.5)		**Soil**			**Sampled: 12/05/07 14:00**					
Gasoline Range Hydrocarbons	NW TPH-Gx	**415**	---	19.0	mg/kg dry	4x	7120465	12/11/07 13:09	12/12/07 20:45	
Surrogate(s): a,a,a-TFT			*256%*		*50 - 150 %*	"			"	*ZX*
PQL0319-05 (U-25-7.5)		**Soil**			**Sampled: 12/06/07 11:30**					**Q8**
Gasoline Range Hydrocarbons	NW TPH-Gx	**106**	---	5.96	mg/kg dry	1x	7120465	12/11/07 13:09	12/12/07 19:42	
Surrogate(s): a,a,a-TFT			*219%*		*50 - 150 %*	"			"	*ZX*
PQL0319-06 (U-27-8)		**Soil**			**Sampled: 12/07/07 12:30**					
Gasoline Range Hydrocarbons	NW TPH-Gx	ND	---	5.56	mg/kg dry	1x	7120465	12/11/07 13:09	12/12/07 22:51	
Surrogate(s): a,a,a-TFT			*102%*		*50 - 150 %*	"			"	

TestAmerica Portland

Christina M. Woodcock

Christina Woodcock, Project Manager

The results in this report apply to the samples analyzed in accordance with the chain of custody document. This analytical report shall not be reproduced except in full, without the written approval of the laboratory.

TestAmerica
THE LEADER IN ENVIRONMENTAL TESTING

PORTLAND, OR 9405 S.W. NIMBUS AVENUE
BEAVERTON, OR 97008-7132
ph: (503) 906.9200 fax: (503) 906.9210

Delta Consultants - Tigard	Project Name:	**Conoco Phillips**	
7150 SW Hampton - Suite 220	Project Number:	OR20922	Report Created:
Tigard, OR 97223	Project Manager:	Christopher Sheridan	01/03/08 17:45

Diesel and Heavy Range Hydrocarbons per NWTPH-Dx Method

TestAmerica Portland

Analyte	Method	Result	MDL*	MRL	Units	Dil	Batch	Prepared	Analyzed	Notes
PQL0319-01 (U-24B-20)		**Soil**			**Sampled: 12/03/07 16:00**					
Diesel Range Organics	NWTPH-Dx	ND	----	20.0	mg/kg dry	1x	7120520	12/13/07 14:20	12/13/07 18:04	
Heavy Oil Range Hydrocarbons	"	ND	----	40.1	"	"	"	"	"	
Surrogate(s): 1-Chlorooctadecane			*91.3%*		*50 - 150 %*	"			"	
PQL0319-02 (U-24A-8)		**Soil**			**Sampled: 12/04/07 11:15**					
Diesel Range Organics	NWTPH-Dx	ND	----	20.0	mg/kg dry	1x	7120520	12/13/07 14:20	12/13/07 18:33	
Heavy Oil Range Hydrocarbons	"	ND	----	40.1	"	"	"	"	"	
Surrogate(s): 1-Chlorooctadecane			*93.8%*		*50 - 150 %*	"			"	
PQL0319-03 (U-23-8)		**Soil**			**Sampled: 12/05/07 10:45**					
Diesel Range Organics	NWTPH-Dx	**1460**	----	19.1	mg/kg dry	1x	7120520	12/13/07 14:20	12/13/07 19:07	Q9
Heavy Oil Range Hydrocarbons	"	**41.8**	----	38.2	"	"	"	"	"	Q7
Surrogate(s): 1-Chlorooctadecane			*103%*		*50 - 150 %*	"			"	
PQL0319-04 (U-22B-6.5)		**Soil**			**Sampled: 12/05/07 14:00**					
Diesel Range Organics	NWTPH-Dx	**11100**	----	159	mg/kg dry	10x	7120520	12/13/07 14:20	12/13/07 19:42	Q9
Heavy Oil Range Hydrocarbons	"	ND	----	318	"	"	"	"	"	RL7
Surrogate(s): 1-Chlorooctadecane			*84.2%*		*50 - 150 %*	"			"	
PQL0319-05 (U-25-7.5)		**Soil**			**Sampled: 12/06/07 11:30**					
Diesel Range Organics	NWTPH-Dx	**68.4**	----	18.9	mg/kg dry	1x	7120520	12/13/07 14:20	12/13/07 20:18	Q9
Heavy Oil Range Hydrocarbons	"	ND	----	37.8	"	"	"	"	"	
Surrogate(s): 1-Chlorooctadecane			*90.4%*		*50 - 150 %*	"			"	
PQL0319-06 (U-27-8)		**Soil**			**Sampled: 12/07/07 12:30**					
Diesel Range Organics	NWTPH-Dx	ND	----	18.3	mg/kg dry	1x	7120520	12/13/07 14:20	12/13/07 20:53	
Heavy Oil Range Hydrocarbons	"	ND	----	36.6	"	"	"	"	"	
Surrogate(s): 1-Chlorooctadecane			*99.8%*		*50 - 150 %*	"			"	

TestAmerica Portland

Christina M. Woodcock

Christina Woodcock, Project Manager

The results in this report apply to the samples analyzed in accordance with the chain of custody document. This analytical report shall not be reproduced except in full, without the written approval of the laboratory

TestAmerica
THE LEADER IN ENVIRONMENTAL TESTING

PORTLAND, OR 9405 S.W. NIMBUS AVENUE
BEAVERTON, OR 97008-7132
ph: (503) 906.9200 fax: (503) 906.9210

Delta Consultants - Tigard	Project Name:	**Conoco Phillips**	
7150 SW Hampton - Suite 220	Project Number:	OR20922	Report Created:
Tigard, OR 97223	Project Manager:	Christopher Sheridan	01/03/08 17:45

Total Metals per EPA 6000/7000 Series Methods

TestAmerica Portland

Analyte	Method	Result	MDL*	MRL	Units	Dil	Batch	Prepared	Analyzed	Notes
PQL0319-01 (U-24B-20)		**Soil**			**Sampled: 12/03/07 16:00**					
Arsenic	EPA 6020	**4.05**	---	0.788	mg/kg dry	1x	7120584	12/14/07 14:30	12/19/07 03:33	
Cadmium	"	ND	---	0.788	"	"	"	"	"	
Chromium	"	**35.9**	---	0.788	"	"	"	"	"	
Copper	"	**40.2**	---	3.15	"	"	"	"	"	
Lead	"	**6.60**	---	0.788	"	"	"	"	"	
Selenium	"	ND	---	0.788	"	"	"	"	12/19/07 13:40	
Silver	"	ND	---	0.788	"	"	"	"	12/19/07 03:33	
Zinc	"	**76.1**	---	3.15	"	"	"	"	"	
PQL0319-02 (U-24A-8)		**Soil**			**Sampled: 12/04/07 11:15**					
Arsenic	EPA 6020	**5.56**	---	0.795	mg/kg dry	1x	7120584	12/14/07 14:30	12/19/07 03:47	
Cadmium	"	ND	---	0.795	"	"	"	"	"	
Chromium	"	**31.5**	---	0.795	"	"	"	"	"	
Copper	"	**33.5**	---	3.18	"	"	"	"	"	
Lead	"	**6.38**	---	0.795	"	"	"	"	"	
Selenium	"	ND	---	0.795	"	"	"	"	12/19/07 18:22	
Silver	"	ND	---	0.795	"	"	"	"	12/19/07 03:47	
Zinc	"	**62.4**	---	3.18	"	"	"	"	"	
PQL0319-03 (U-23-8)		**Soil**			**Sampled: 12/05/07 10:45**					
Arsenic	EPA 6020	**5.80**	---	0.775	mg/kg dry	1x	7120584	12/14/07 14:30	12/19/07 04:09	
Cadmium	"	ND	---	0.775	"	"	"	"	"	
Chromium	"	**43.2**	---	0.775	"	"	"	"	"	
Copper	"	**44.4**	---	3.10	"	"	"	"	"	
Lead	"	**13.8**	---	0.775	"	"	"	"	"	
Selenium	"	ND	---	0.775	"	"	"	"	12/19/07 18:44	
Silver	"	ND	---	0.775	"	"	"	"	12/19/07 04:09	
Zinc	"	**83.7**	---	3.10	"	"	"	"	"	
PQL0319-04 (U-22B-6.5)		**Soil**			**Sampled: 12/05/07 14:00**					
Arsenic	EPA 6020	**4.71**	---	0.598	mg/kg dry	1x	7120584	12/14/07 14:30	12/19/07 04:38	
Cadmium	"	ND	---	0.598	"	"	"	"	"	
Chromium	"	**20.0**	---	0.598	"	"	"	"	"	
Copper	"	**19.4**	---	2.39	"	"	"	"	"	
Lead	"	**21.6**	---	0.598	"	"	"	"	"	
Selenium	"	ND	---	0.598	"	"	"	"	12/19/07 19:00	
Silver	"	ND	---	0.598	"	"	"	"	12/19/07 04:38	
Zinc	"	**78.8**	---	2.39	"	"	"	"	"	

TestAmerica Portland

Christina M. Woodcock

Christina Woodcock, Project Manager

The results in this report apply to the samples analyzed in accordance with the chain of custody document. This analytical report shall not be reproduced except in full, without the written approval of the laboratory.

COP0021811

TestAmerica
THE LEADER IN ENVIRONMENTAL TESTING

PORTLAND, OR 9405 S.W. NIMBUS AVENUE
BEAVERTON, OR 97008-7132
ph: (503) 906.9200 · fax: (503) 906.9210

Delta Consultants - Tigard	Project Name:	**Conoco Phillips**	
7150 SW Hampton - Suite 220	Project Number:	OR20922	Report Created:
Tigard, OR 97223	Project Manager:	Christopher Sheridan	01/03/08 17:45

Total Metals per EPA 6000/7000 Series Methods

TestAmerica Portland

Analyte	Method	Result	MDL*	MRL	Units	Dil	Batch	Prepared	Analyzed	Notes
PQL0319-05 (U-25-7.5)		**Soil**			**Sampled: 12/06/07 11:30**					
Arsenic	EPA 6020	**3.84**	----	0.745	mg/kg dry	1x	7120584	12/14/07 14:30	12/19/07 04:46	
Cadmium	"	ND	----	0.745	"	"	"	"	"	
Chromium	"	**44.0**	----	0.745	"	"	"	"	"	
Copper	"	**48.6**	----	2.98	"	"	"	"	"	
Lead	"	**14.7**	----	0.745	"	"	"	"	"	
Selenium	"	ND	----	0.745	"	"	"	"	12/19/07 19:07	
Silver	"	ND	----	0.745	"	"	"	"	12/19/07 04:46	
Zinc	"	**86.6**	----	2.98	"	"	"	"	"	
PQL0319-06 (U-27-8)		**Soil**			**Sampled: 12/07/07 12:30**					
Arsenic	EPA 6020	**3.63**	----	0.743	mg/kg dry	1x	7120584	12/14/07 14:30	12/19/07 04:53	
Cadmium	"	ND	----	0.743	"	"	"	"	"	
Chromium	"	**38.3**	----	0.743	"	"	"	"	"	
Copper	"	**37.7**	----	2.97	"	"	"	"	"	
Lead	"	**6.34**	----	0.743	"	"	"	"	"	
Selenium	"	ND	----	0.743	"	"	"	"	12/19/07 19:15	
Silver	"	ND	----	0.743	"	"	"	"	12/19/07 04:53	
Zinc	"	**77.5**	----	2.97	"	"	"	"	"	

TestAmerica Portland

Christina M. Woodcock

Christina Woodcock, Project Manager

The results in this report apply to the samples analyzed in accordance with the chain of custody document. This analytical report shall not be reproduced except in full, without the written approval of the laboratory.

TestAmerica
THE LEADER IN ENVIRONMENTAL TESTING

PORTLAND, OR 9405 S.W. NIMBUS AVENUE
BEAVERTON, OR 97008-7132
ph: (503) 906.9200 fax: (503) 906.9210

Delta Consultants - Tigard	Project Name:	**Conoco Phillips**	
7150 SW Hampton - Suite 220	Project Number:	OR20922	Report Created:
Tigard, OR 97223	Project Manager:	Christopher Sheridan	01/03/08 17:45

Total Mercury per EPA Method 7471A

TestAmerica Portland

Analyte		Method	Result	MDL*	MRL	Units	Dil	Batch	Prepared	Analyzed	Notes
PQL0319-01	**(U-24B-20)**		**Soil**			**Sampled: 12/03/07 16:00**					
Mercury		EPA 7471A	ND	-----	0.157	mg/kg dry	1x	7120411	12/11/07 13:23	12/11/07 15:08	
PQL0319-02	**(U-24A-8)**		**Soil**			**Sampled: 12/04/07 11:15**					
Mercury		EPA 7471A	ND	-----	0.140	mg/kg dry	1x	7120411	12/11/07 13:23	12/11/07 15:18	
PQL0319-03	**(U-23-8)**		**Soil**			**Sampled: 12/05/07 10:45**					
Mercury		EPA 7471A	ND	-----	0.127	mg/kg dry	1x	7120411	12/11/07 13:23	12/11/07 15:20	
PQL0319-04	**(U-22B-6.5)**		**Soil**			**Sampled: 12/05/07 14:00**					
Mercury		EPA 7471A	0.102	-----	0.0972	mg/kg dry	1x	7120411	12/11/07 13:23	12/11/07 15:23	
PQL0319-05	**(U-25-7.5)**		**Soil**			**Sampled: 12/06/07 11:30**					
Mercury		EPA 7471A	ND	-----	0.115	mg/kg dry	1x	7120411	12/11/07 13:23	12/11/07 15:25	
PQL0319-06	**(U-27-8)**		**Soil**			**Sampled: 12/07/07 12:30**					
Mercury		EPA 7471A	ND	-----	0.0786	mg/kg dry	1x	7120411	12/11/07 13:23	12/11/07 15:27	

TestAmerica Portland

Christina M. Woodcock

Christina Woodcock, Project Manager

The results in this report apply to the samples analyzed in accordance with the chain of custody document. This analytical report shall not be reproduced except in full, without the written approval of the laboratory.

TestAmerica
THE LEADER IN ENVIRONMENTAL TESTING

PORTLAND, OR 9405 S.W. NIMBUS AVENUE
BEAVERTON, OR 97008-7132
ph: (503) 906.9200 fax: (503) 906.9210

Delta Consultants - Tigard	Project Name:	**Conoco Phillips**	
7150 SW Hampton - Suite 220	Project Number:	OR20922	Report Created:
Tigard, OR 97223	Project Manager:	Christopher Sheridan	01/03/08 17:45

Selected Volatile Organic Compounds (Including BTEX) per EPA Method 8260B

TestAmerica Portland

Analyte	Method	Result	MDL*	MRL	Units	Dil	Batch	Prepared	Analyzed	Notes
PQL0319-01 (U-24B-20)		**Soil**			**Sampled: 12/03/07 16:00**					
1,2-Dibromoethane	EPA 8260B	ND	---	77.5	ug/kg dry	2x	7120351	12/10/07 11:51	12/10/07 23:05	
1,2-Dichloroethane	"	ND	---	77.5	"	"	"	"	"	
Benzene	"	ND	---	31.0	"	"	"	"	"	
Toluene	"	ND	---	77.5	"	"	"	"	"	
Ethylbenzene	"	ND	---	77.5	"	"	"	"	"	
Xylenes (total)	"	ND	---	155	"	"	"	"	"	
Methyl tert-butyl ether	"	ND	---	62.0	"	"	"	"	"	
Naphthalene	"	ND	---	310	"	"	"	"	"	
1,2,4-Trimethylbenzene	"	ND	---	155	"	"	"	"	"	
1,3,5-Trimethylbenzene	"	ND	---	77.5	"	"	"	"	"	
Isopropylbenzene	"	ND	---	310	"	"	"	"	"	
n-Propylbenzene	"	ND	---	77.5	"	"	"	"	"	
Surrogate(s): 4-BFB			*98.3%*		*75 - 125 %*	*0.02x*			"	
1,2-DCA-d4			*107%*		*75 - 125 %*	"			"	
Dibromofluoromethane			*101%*		*75 - 125 %*	"			"	
Toluene-d8			*109%*		*75 - 125 %*	"			"	
PQL0319-02 (U-24A-8)		**Soil**			**Sampled: 12/04/07 11:15**					
1,2-Dibromoethane	EPA 8260B	ND	---	77.0	ug/kg dry	2x	7120351	12/10/07 11:51	12/10/07 23:32	
1,2-Dichloroethane	"	ND	---	77.0	"	"	"	"	"	
Benzene	"	ND	---	30.8	"	"	"	"	"	
Toluene	"	ND	---	77.0	"	"	"	"	"	
Ethylbenzene	"	ND	---	77.0	"	"	"	"	"	
Xylenes (total)	"	ND	---	154	"	"	"	"	"	
Methyl tert-butyl ether	"	ND	---	61.6	"	"	"	"	"	
Naphthalene	"	ND	---	308	"	"	"	"	"	
1,2,4-Trimethylbenzene	"	ND	---	154	"	"	"	"	"	
1,3,5-Trimethylbenzene	"	ND	---	77.0	"	"	"	"	"	
Isopropylbenzene	"	ND	---	308	"	"	"	"	"	
n-Propylbenzene	"	ND	---	77.0	"	"	"	"	"	
Surrogate(s): 4-BFB			*99.7%*		*75 - 125 %*	*0.02x*			"	
1,2-DCA-d4			*104%*		*75 - 125 %*	"			"	
Dibromofluoromethane			*97.0%*		*75 - 125 %*	"			"	
Toluene-d8			*106%*		*75 - 125 %*	"			"	

TestAmerica Portland

Christina M. Woodcock

Christina Woodcock, Project Manager

The results in this report apply to the samples analyzed in accordance with the chain of custody document. This analytical report shall not be reproduced except in full, without the written approval of the laboratory.

TestAmerica
THE LEADER IN ENVIRONMENTAL TESTING

PORTLAND, OR 9405 S.W. NIMBUS AVENUE
BEAVERTON, OR 97008-7132
ph: (503) 906.9200 fax: (503) 906.9210

Delta Consultants - Tigard	Project Name:	**Conoco Phillips**	
7150 SW Hampton - Suite 220	Project Number:	OR20922	Report Created:
Tigard, OR 97223	Project Manager:	Christopher Sheridan	01/03/08 17:45

Selected Volatile Organic Compounds (Including BTEX) per EPA Method 8260B

TestAmerica Portland

Analyte	Method	Result	MDL*	MRL	Units	Dil	Batch	Prepared	Analyzed	Notes
PQL0319-03 (U-23-8)		**Soil**			**Sampled: 12/05/07 10:45**					
1,2-Dibromoethane	EPA 8260B	ND	----	74.9	ug/kg dry	2x	7120351	12/10/07 11:51	12/10/07 23:59	
1,2-Dichloroethane	"	ND	----	74.9	"	"	"	"	"	
Benzene	"	ND	----	29.9	"	"	"	"	"	
Toluene	"	ND	----	74.9	"	"	"	"	"	
Ethylbenzene	"	**278**	----	74.9	"	"	"	"	"	
Xylenes (total)	"	**404**	----	150	"	"	"	"	"	
Methyl tert-butyl ether	"	ND	----	59.9	"	"	"	"	"	
Naphthalene	"	ND	----	299	"	"	"	"	"	
1,2,4-Trimethylbenzene	"	ND	----	150	"	"	"	"	"	
1,3,5-Trimethylbenzene	"	ND	----	74.9	"	"	"	"	"	
Isopropylbenzene	"	**3650**	----	299	"	"	"	"	"	
n-Propylbenzene	"	**14300**	----	74.9	"	"	"	"	"	
Surrogate(s): 4-BFB		*99.4%*		*75 - 125 %*		*0.02x*			"	
1,2-DCA-d4		*118%*		*75 - 125 %*		"			"	
Dibromofluoromethane		*110%*		*75 - 125 %*		"			"	
Toluene-d8		*111%*		*75 - 125 %*		"			"	
PQL0319-04 (U-22B-6.5)		**Soil**			**Sampled: 12/05/07 14:00**					
1,2-Dibromoethane	EPA 8260B	ND	----	59.5	ug/kg dry	2x	7120404	12/11/07 13:09	12/12/07 00:28	
1,2-Dichloroethane	"	ND	----	59.5	"	"	"	"	"	
Benzene	"	ND	----	23.8	"	"	"	"	"	
Toluene	"	ND	----	59.5	"	"	"	"	"	
Ethylbenzene	"	ND	----	59.5	"	"	"	"	"	
Xylenes (total)	"	ND	----	119	"	"	"	"	"	
Methyl tert-butyl ether	"	ND	----	47.6	"	"	"	"	"	
Naphthalene	"	ND	----	238	"	"	"	"	"	
1,2,4-Trimethylbenzene	"	ND	----	119	"	"	"	"	"	
1,3,5-Trimethylbenzene	"	ND	----	59.5	"	"	"	"	"	
Isopropylbenzene	"	**452**	----	238	"	"	"	"	"	
n-Propylbenzene	"	**1110**	----	59.5	"	"	"	"	"	
Surrogate(s): 4-BFB		*109%*		*75 - 125 %*		*0.02x*			"	
1,2-DCA-d4		*99.7%*		*75 - 125 %*		"			"	
Dibromofluoromethane		*97.2%*		*75 - 125 %*		"			"	
Toluene-d8		*106%*		*75 - 125 %*		"			"	

TestAmerica Portland

Christina M. Woodcock

Christina Woodcock, Project Manager

The results in this report apply to the samples analyzed in accordance with the chain of custody document. This analytical report shall not be reproduced except in full, without the written approval of the laboratory.

TestAmerica
THE LEADER IN ENVIRONMENTAL TESTING

PORTLAND, OR 9405 S.W. NIMBUS AVENUE
BEAVERTON, OR 97008-7132
ph: (503) 906.9200 fax: (503) 906.9210

Delta Consultants - Tigard	Project Name:	**Conoco Phillips**	
7150 SW Hampton - Suite 220	Project Number:	OR20922	Report Created:
Tigard, OR 97223	Project Manager:	Christopher Sheridan	01/03/08 17:45

Selected Volatile Organic Compounds (Including BTEX) per EPA Method 8260B

TestAmerica Portland

Analyte	Method	Result	MDL*	MRL	Units	Dil	Batch	Prepared	Analyzed	Notes
PQL0319-05 (U-25-7.5)		**Soil**			**Sampled: 12/06/07 11:30**					
1,2-Dibromoethane	EPA 8260B	ND	----	74.5	ug/kg dry	2x	7120404	12/11/07 13:09	12/12/07 00:56	
1,2-Dichloroethane	"	ND	----	74.5	"	"	"	"	"	
Benzene	"	ND	----	29.8	"	"	"	"	"	
Toluene	"	ND	----	74.5	"	"	"	"	"	
Ethylbenzene	"	ND	----	74.5	"	"	"	"	"	
Xylenes (total)	"	ND	----	149	"	"	"	"	"	
Methyl tert-butyl ether	"	ND	----	59.6	"	"	"	"	"	
Naphthalene	"	ND	----	298	"	"	"	"	"	
1,2,4-Trimethylbenzene	"	ND	----	149	"	"	"	"	"	
1,3,5-Trimethylbenzene	"	ND	----	74.5	"	"	"	"	"	
Isopropylbenzene	"	ND	----	298	"	"	"	"	"	
n-Propylbenzene	"	ND	----	74.5	"	"	"	"	"	
Surrogate(s): 4-BFB		*99.0%*			*75 - 125 %*	*0.02x*			"	
1,2-DCA-d4		*103%*			*75 - 125 %*	"			"	
Dibromofluoromethane		*97.0%*			*75 - 125 %*	"			"	
Toluene-d8		*105%*			*75 - 125 %*	"			"	
PQL0319-06 (U-27-8)		**Soil**			**Sampled: 12/07/07 12:30**					
1,2-Dibromoethane	EPA 8260B	ND	----	69.5	ug/kg dry	2x	7120404	12/11/07 13:09	12/12/07 01:23	
1,2-Dichloroethane	"	ND	----	69.5	"	"	"	"	"	
Benzene	"	ND	----	27.8	"	"	"	"	"	
Toluene	"	ND	----	69.5	"	"	"	"	"	
Ethylbenzene	"	ND	----	69.5	"	"	"	"	"	
Xylenes (total)	"	ND	----	139	"	"	"	"	"	
Methyl tert-butyl ether	"	ND	----	55.6	"	"	"	"	"	
Naphthalene	"	ND	----	278	"	"	"	"	"	
1,2,4-Trimethylbenzene	"	ND	----	139	"	"	"	"	"	
1,3,5-Trimethylbenzene	"	ND	----	69.5	"	"	"	"	"	
Isopropylbenzene	"	ND	----	278	"	"	"	"	"	
n-Propylbenzene	"	ND	----	69.5	"	"	"	"	"	
Surrogate(s): 4-BFB		*102%*			*75 - 125 %*	*0.02x*			"	
1,2-DCA-d4		*102%*			*75 - 125 %*	"			"	
Dibromofluoromethane		*97.0%*			*75 - 125 %*	"			"	
Toluene-d8		*108%*			*75 - 125 %*	"			"	

TestAmerica Portland

Christina M. Woodcock

Christina Woodcock, Project Manager

The results in this report apply to the samples analyzed in accordance with the chain of custody document. This analytical report shall not be reproduced except in full, without the written approval of the laboratory.

PORTLAND, OR 9405 S.W. NIMBUS AVENUE
BEAVERTON, OR 97008-7132
ph: (503) 906.9200 fax: (503) 906.9210

Delta Consultants - Tigard	Project Name:	**Conoco Phillips**	
7150 SW Hampton - Suite 220	Project Number:	OR20922	Report Created:
Tigard, OR 97223	Project Manager:	Christopher Sheridan	01/03/08 17:45

Polynuclear Aromatic Compounds per EPA 8270M-SIM

TestAmerica Portland

Analyte	Method	Result	MDL*	MRL	Units	Dil	Batch	Prepared	Analyzed	Notes
PQL0319-01 (U-24B-20)		**Soil**			**Sampled: 12/03/07 16:00**					
2-Methylnaphthalene	EPA 8270m	ND	---	21.6	ug/kg dry	1x	7120342	12/10/07 16:50	12/21/07 21:44	
Acenaphthene	"	ND	---	21.6	"	"	"	"	"	
Acenaphthylene	"	ND	---	21.6	"	"	"	"	"	
Anthracene	"	ND	---	21.6	"	"	"	"	"	
Benzo (a) anthracene	"	ND	---	21.6	"	"	"	"	"	
Benzo (a) pyrene	"	ND	---	21.6	"	"	"	"	"	
Benzo (b) fluoranthene	"	ND	---	21.6	"	"	"	"	"	
Benzo (ghi) perylene	"	ND	---	21.6	"	"	"	"	"	
Benzo (k) fluoranthene	"	ND	---	21.6	"	"	"	"	"	
Chrysene	"	ND	---	21.6	"	"	"	"	"	
Dibenzo (a,h) anthracene	"	ND	---	21.6	"	"	"	"	"	
Fluoranthene	"	ND	---	21.6	"	"	"	"	"	
Fluorene	"	ND	---	21.6	"	"	"	"	"	
Indeno (1,2,3-cd) pyrene	"	ND	---	21.6	"	"	"	"	"	
Naphthalene	"	ND	---	21.6	"	"	"	"	"	
Phenanthrene	"	ND	---	21.6	"	"	"	"	"	
Pyrene	"	ND	---	21.6	"	"	"	"	"	
Surrogate(s): Fluorene-d10			*83.9%*		*24 - 125 %*	"			"	
Pyrene-d10			*81.6%*		*41 - 141 %*	"			"	
Benzo (a) pyrene-d12			*83.7%*		*38 - 143 %*	"			"	
PQL0319-02 (U-24A-8)		**Soil**			**Sampled: 12/04/07 11:15**					
2-Methylnaphthalene	EPA 8270m	ND	---	21.3	ug/kg dry	1x	7120342	12/10/07 16:50	12/21/07 22:15	
Acenaphthene	"	ND	---	21.3	"	"	"	"	"	
Acenaphthylene	"	ND	---	21.3	"	"	"	"	"	
Anthracene	"	ND	---	21.3	"	"	"	"	"	
Benzo (a) anthracene	"	ND	---	21.3	"	"	"	"	"	
Benzo (a) pyrene	"	ND	---	21.3	"	"	"	"	"	
Benzo (b) fluoranthene	"	ND	---	21.3	"	"	"	"	"	
Benzo (ghi) perylene	"	ND	---	21.3	"	"	"	"	"	
Benzo (k) fluoranthene	"	ND	---	21.3	"	"	"	"	"	
Chrysene	"	ND	---	21.3	"	"	"	"	"	
Dibenzo (a,h) anthracene	"	ND	---	21.3	"	"	"	"	"	
Fluoranthene	"	ND	---	21.3	"	"	"	"	"	
Fluorene	"	ND	---	21.3	"	"	"	"	"	
Indeno (1,2,3-cd) pyrene	"	ND	---	21.3	"	"	"	"	"	
Naphthalene	"	ND	---	21.3	"	"	"	"	"	
Phenanthrene	"	ND	---	21.3	"	"	"	"	"	
Pyrene	"	ND	---	21.3	"	"	"	"	"	
Surrogate(s): Fluorene-d10			*78.8%*		*24 - 125 %*	"			"	
Pyrene-d10			*76.1%*		*41 - 141 %*	"			"	
Benzo (a) pyrene-d12			*74.9%*		*38 - 143 %*	"			"	

TestAmerica Portland

Christina M. Woodcock

Christina Woodcock, Project Manager

The results in this report apply to the samples analyzed in accordance with the chain of custody document. This analytical report shall not be reproduced except in full, without the written approval of the laboratory.

TestAmerica
THE LEADER IN ENVIRONMENTAL TESTING

PORTLAND, OR 9405 S.W. NIMBUS AVENUE
BEAVERTON, OR 97008-7132
ph: (503) 906.9200 fax: (503) 906.9210

Delta Consultants - Tigard	Project Name:	**Conoco Phillips**	
7150 SW Hampton - Suite 220	Project Number:	OR20922	Report Created:
Tigard, OR 97223	Project Manager:	Christopher Sheridan	01/03/08 17:45

Polynuclear Aromatic Compounds per EPA 8270M-SIM

TestAmerica Portland

Analyte	Method	Result	MDL*	MRL	Units	Dil	Batch	Prepared	Analyzed	Notes
PQL0319-03 (U-23-8)		**Soil**			**Sampled: 12/05/07 10:45**					**RL3**
2-Methylnaphthalene	EPA 8270m	ND	----	202	ug/kg dry	10x	7120342	12/10/07 16:50	12/21/07 22:45	
Acenaphthene	"	**440**	----	202	"	"	"	"	"	
Acenaphthylene	"	ND	----	202	"	"	"	"	"	
Anthracene	"	ND	----	303	"	"	"	"	"	RL1
Benzo (a) anthracene	"	ND	----	202	"	"	"	"	"	
Benzo (a) pyrene	"	ND	----	202	"	"	"	"	"	
Benzo (b) fluoranthene	"	ND	----	202	"	"	"	"	"	
Benzo (ghi) perylene	"	ND	----	202	"	"	"	"	"	
Benzo (k) fluoranthene	"	ND	----	202	"	"	"	"	"	
Chrysene	"	ND	----	202	"	"	"	"	"	
Dibenzo (a,h) anthracene	"	ND	----	202	"	"	"	"	"	
Fluoranthene	"	ND	----	202	"	"	"	"	"	
Fluorene	"	**2000**	----	202	"	"	"	"	"	
Indeno (1,2,3-cd) pyrene	"	ND	----	202	"	"	"	"	"	
Naphthalene	"	ND	----	605	"	"	"	"	"	RL1
Phenanthrene	"	**3630**	----	202	"	"	"	"	"	
Pyrene	"	ND	----	202	"	"	"	"	"	
Surrogate(s): Fluorene-d10		*79.6%*			*24 - 125 %*	"			"	
Pyrene-d10		*77.6%*			*41 - 141 %*	"			"	
Benzo (a) pyrene-d12		*82.2%*			*38 - 143 %*	"			"	
PQL0319-04 (U-22B-6.5)		**Soil**			**Sampled: 12/05/07 14:00**					**RL3**
2-Methylnaphthalene	EPA 8270m	ND	----	333	ug/kg dry	20x	7120342	12/10/07 16:50	12/28/07 05:10	
Acenaphthene	"	**731**	----	333	"	"	"	"	"	
Acenaphthylene	"	ND	----	333	"	"	"	"	"	
Anthracene	"	ND	----	499	"	"	"	"	"	RL1
Benzo (a) anthracene	"	ND	----	333	"	"	"	"	"	
Benzo (a) pyrene	"	ND	----	333	"	"	"	"	"	
Benzo (b) fluoranthene	"	ND	----	333	"	"	"	"	"	
Benzo (ghi) perylene	"	ND	----	333	"	"	"	"	"	
Benzo (k) fluoranthene	"	ND	----	333	"	"	"	"	"	
Chrysene	"	ND	----	333	"	"	"	"	"	
Dibenzo (a,h) anthracene	"	ND	----	333	"	"	"	"	"	
Fluoranthene	"	ND	----	333	"	"	"	"	"	
Fluorene	"	**3010**	----	333	"	"	"	"	"	
Indeno (1,2,3-cd) pyrene	"	ND	----	333	"	"	"	"	"	
Naphthalene	"	ND	----	499	"	"	"	"	"	RL1
Phenanthrene	"	ND	----	499	"	"	"	"	"	RL1
Pyrene	"	ND	----	333	"	"	"	"	"	
Surrogate(s): Fluorene-d10		*NR*			*24 - 125 %*	"			"	*Z9*

TestAmerica Portland

Christina Woodcock, Project Manager

The results in this report apply to the samples analyzed in accordance with the chain of custody document. This analytical report shall not be reproduced except in full, without the written approval of the laboratory.

COP0021818

TestAmerica
THE LEADER IN ENVIRONMENTAL TESTING

PORTLAND, OR 9405 S.W. NIMBUS AVENUE
BEAVERTON, OR 97008-7132
ph: (503) 906.9200 fax: (503) 906.9210

Delta Consultants - Tigard	Project Name:	**Conoco Phillips**	
7150 SW Hampton - Suite 220	Project Number:	OR20922	Report Created:
Tigard, OR 97223	Project Manager:	Christopher Sheridan	01/03/08 17:45

Polynuclear Aromatic Compounds per EPA 8270M-SIM

TestAmerica Portland

Analyte	Method	Result	MDL*	MRL	Units	Dil	Batch	Prepared	Analyzed	Notes
PQL0319-04 (U-22B-6.5)		**Soil**			**Sampled: 12/05/07 14:00**					**RL3**
Pyrene-d10			*NR*		*41 - 141 %*	*20x*			*12/28/07 05:10*	*Z9*
Benzo (a) pyrene-d12			*43.8%*		*38 - 143 %*	"			"	*Z3*
PQL0319-05 (U-25-7.5)		**Soil**			**Sampled: 12/06/07 11:30**					
2-Methylnaphthalene	EPA 8270m	ND	----	20.3	ug/kg dry	1x	7120342	12/10/07 16:50	12/21/07 23:46	
Acenaphthene	"	ND	----	20.3	"	"	"	"	"	
Acenaphthylene	"	ND	----	20.3	"	"	"	"	"	
Anthracene	"	ND	----	20.3	"	"	"	"	"	
Benzo (a) anthracene	"	ND	----	20.3	"	"	"	"	"	
Benzo (a) pyrene	"	ND	----	20.3	"	"	"	"	"	
Benzo (b) fluoranthene	"	ND	----	20.3	"	"	"	"	"	
Benzo (ghi) perylene	"	ND	----	20.3	"	"	"	"	"	
Benzo (k) fluoranthene	"	ND	----	20.3	"	"	"	"	"	
Chrysene	"	ND	----	20.3	"	"	"	"	"	
Dibenzo (a,h) anthracene	"	ND	----	20.3	"	"	"	"	"	
Fluoranthene	"	ND	----	20.3	"	"	"	"	"	
Fluorene	"	**67.3**	----	20.3	"	"	"	"	"	
Indeno (1,2,3-cd) pyrene	"	ND	----	20.3	"	"	"	"	"	
Naphthalene	"	ND	----	40.6	"	"	"	"	"	RL1
Phenanthrene	"	**67.4**	----	20.3	"	"	"	"	"	
Pyrene	"	ND	----	20.3	"	"	"	"	"	
Surrogate(s): Fluorene-d10			*80.9%*		*24 - 125 %*	"			"	
Pyrene-d10			*79.2%*		*41 - 141 %*	"			"	
Benzo (a) pyrene-d12			*87.3%*		*38 - 143 %*	"			"	
PQL0319-06 (U-27-8)		**Soil**			**Sampled: 12/07/07 12:30**					
2-Methylnaphthalene	EPA 8270m	ND	----	19.5	ug/kg dry	1x	7120342	12/10/07 16:50	12/22/07 00:17	
Acenaphthene	"	ND	----	19.5	"	"	"	"	"	
Acenaphthylene	"	ND	----	19.5	"	"	"	"	"	
Anthracene	"	ND	----	19.5	"	"	"	"	"	
Benzo (a) anthracene	"	ND	----	19.5	"	"	"	"	"	
Benzo (a) pyrene	"	ND	----	19.5	"	"	"	"	"	
Benzo (b) fluoranthene	"	ND	----	19.5	"	"	"	"	"	
Benzo (ghi) perylene	"	ND	----	19.5	"	"	"	"	"	
Benzo (k) fluoranthene	"	ND	----	19.5	"	"	"	"	"	
Chrysene	"	ND	----	19.5	"	"	"	"	"	
Dibenzo (a,h) anthracene	"	ND	----	19.5	"	"	"	"	"	
Fluoranthene	"	ND	----	19.5	"	"	"	"	"	
Fluorene	"	ND	----	19.5	"	"	"	"	"	
Indeno (1,2,3-cd) pyrene	"	ND	----	19.5	"	"	"	"	"	
Naphthalene	"	ND	----	19.5	"	"	"	"	"	

TestAmerica Portland

Christina M. Woodcock

Christina Woodcock, Project Manager

The results in this report apply to the samples analyzed in accordance with the chain of custody document. This analytical report shall not be reproduced except in full, without the written approval of the laboratory.

TestAmerica
THE LEADER IN ENVIRONMENTAL TESTING

PORTLAND, OR 9405 S.W. NIMBUS AVENUE
BEAVERTON, OR 97008-7132
ph: (503) 906.9200 fax: (503) 906.9210

Delta Consultants - Tigard	Project Name:	**Conoco Phillips**	
7150 SW Hampton - Suite 220	Project Number:	OR20922	Report Created:
Tigard, OR 97223	Project Manager:	Christopher Sheridan	01/03/08 17:45

Polynuclear Aromatic Compounds per EPA 8270M-SIM

TestAmerica Portland

Analyte	Method	Result	MDL*	MRL	Units	Dil	Batch	Prepared	Analyzed	Notes
PQL0319-06 (U-27-8)		**Soil**			**Sampled: 12/07/07 12:30**					
Phenanthrene	EPA 8270m	ND	---	19.5	ug/kg dry	1x	7120342	12/10/07 16:50	12/22/07 00:17	
Pyrene	"	ND	---	19.5	"	"	"	"	"	
Surrogate(s): Fluorene-d10		*84.3%*			*24 - 125 %*	"			"	
Pyrene-d10		*80.1%*			*41 - 141 %*	"			"	
Benzo (a) pyrene-d12		*79.3%*			*38 - 143 %*	"			"	

TestAmerica Portland

Christina M. Woodcock

Christina Woodcock, Project Manager

The results in this report apply to the samples analyzed in accordance with the chain of custody document. This analytical report shall not be reproduced except in full, without the written approval of the laboratory.

TestAmerica
THE LEADER IN ENVIRONMENTAL TESTING

PORTLAND, OR 9405 S.W. NIMBUS AVENUE
BEAVERTON, OR 97008-7132
ph: (503) 906.9200 fax: (503) 906.9210

Delta Consultants - Tigard	Project Name:	**Conoco Phillips**	
7150 SW Hampton - Suite 220	Project Number:	OR20922	Report Created:
Tigard, OR 97223	Project Manager:	Christopher Sheridan	01/03/08 17:45

Percent Dry Weight (Solids) per Standard Methods

TestAmerica Portland

Analyte	Method	Result	MDL*	MRL	Units	Dil	Batch	Prepared	Analyzed	Notes
PQL0319-01 (U-24B-20)		**Soil**			**Sampled: 12/03/07 16:00**					
% Solids	NCA SOP	61.6	----	0.0100	% by Weight	1x	7120396	12/11/07 09:37	12/11/07 09:37	
PQL0319-02 (U-24A-8)		**Soil**			**Sampled: 12/04/07 11:15**					
% Solids	NCA SOP	62.9	----	0.0100	% by Weight	1x	7120396	12/11/07 09:37	12/11/07 09:37	
PQL0319-03 (U-23-8)		**Soil**			**Sampled: 12/05/07 10:45**					
% Solids	NCA SOP	65.8	----	0.0100	% by Weight	1x	7120396	12/11/07 09:37	12/11/07 09:37	
PQL0319-04 (U-22B-6.5)		**Soil**			**Sampled: 12/05/07 14:00**					
% Solids	NCA SOP	80.4	----	0.0100	% by Weight	1x	7120396	12/11/07 09:37	12/11/07 09:37	
PQL0319-05 (U-25-7.5)		**Soil**			**Sampled: 12/06/07 11:30**					
% Solids	NCA SOP	65.8	----	0.0100	% by Weight	1x	7120396	12/11/07 09:37	12/11/07 09:37	
PQL0319-06 (U-27-8)		**Soil**			**Sampled: 12/07/07 12:30**					
% Solids	NCA SOP	68.7	----	0.0100	% by Weight	1x	7120396	12/11/07 09:37	12/11/07 09:37	

TestAmerica Portland

Christina M. Woodcock

Christina Woodcock, Project Manager

The results in this report apply to the samples analyzed in accordance with the chain of custody document. This analytical report shall not be reproduced except in full, without the written approval of the laboratory.

TestAmerica
THE LEADER IN ENVIRONMENTAL TESTING

PORTLAND, OR 9405 S.W. NIMBUS AVENUE
BEAVERTON, OR 97008-7132
ph: (503) 906.9200 fax: (503) 906.9210

Delta Consultants - Tigard	Project Name:	**Conoco Phillips**	
7150 SW Hampton - Suite 220	Project Number:	OR20922	Report Created:
Tigard, OR 97223	Project Manager:	Christopher Sheridan	01/03/08 17:45

Gasoline Hydrocarbons per NW TPH-Gx Method - Laboratory Quality Control Results

TestAmerica Portland

QC Batch: 7120465 **Soil Preparation Method: EPA 5035 Modified**

Analyte	Method	Result	MDL[A]	MRL	Units	Dil	Source Result	Spike Amt	% REC	(Limits)	% RPD	(Limits)	Analyzed	Notes
Blank (7120465-BLK1)								Extracted: 12/12/07 12:50						
Gasoline Range Hydrocarbons	NW TPH-Gx	ND	---	3.88	mg/kg wet	1x	--	--	--	--	--	--	12/12/07 16:15	
Surrogate(s): a,a,a-TFT		*Recovery: 114%*			*Limits: 50-150%*	"							*12/12/07 16:15*	
LCS (7120465-BS1)								Extracted: 12/12/07 12:50						
Gasoline Range Hydrocarbons	NW TPH-Gx	21.0	---	3.78	mg/kg wet	1x	--	23.6	88.7%	(70-130)	--	--	12/12/07 15:43	
Surrogate(s): a,a,a-TFT		*Recovery: 134%*			*Limits: 50-150%*	"							*12/12/07 15:43*	
Duplicate (7120465-DUP1)				QC Source: FQL0319-02				Extracted: 12/12/07 12:50						
Gasoline Range Hydrocarbons	NW TPH-Gx	ND	---	6.23	mg/kg dry	1x	ND	--	--	--	NR	(40)	12/12/07 17:35	
Surrogate(s): a,a,a-TFT		*Recovery: 99.7%*			*Limits: 50-150%*	"							*12/12/07 17:35*	
Duplicate (7120465-DUP2)				QC Source: FQL0319-06				Extracted: 12/12/07 12:50						
Gasoline Range Hydrocarbons	NW TPH-Gx	ND	---	5.56	mg/kg dry	1x	ND	--	--	--	26.1%	(40)	12/12/07 23:23	
Surrogate(s): a,a,a-TFT		*Recovery: 104%*			*Limits: 50-150%*	"							*12/12/07 23:23*	
Matrix Spike (7120465-MS1)				QC Source: FQL0319-01				Extracted: 12/12/07 12:50						
Gasoline Range Hydrocarbons	NW TPH-Gx	32.4	---	6.43	mg/kg dry	1x	ND	40.2	80.6%	(65-130)	--	--	12/12/07 19:11	
Surrogate(s): a,a,a-TFT		*Recovery: 125%*			*Limits: 50-150%*	"							*12/12/07 19:11*	

TestAmerica Portland

Christina Woodcock, Project Manager

The results in this report apply to the samples analyzed in accordance with the chain of custody document. This analytical report shall not be reproduced except in full, without the written approval of the laboratory.

TestAmerica
THE LEADER IN ENVIRONMENTAL TESTING

PORTLAND, OR 9405 S.W. NIMBUS AVENUE
BEAVERTON, OR 97008-7132
ph: (503) 906.9200 fax: (503) 906.9210

Delta Consultants - Tigard	Project Name:	**Conoco Phillips**	
7150 SW Hampton - Suite 220	Project Number:	OR20922	Report Created:
Tigard, OR 97223	Project Manager:	Christopher Sheridan	01/03/08 17:45

Diesel and Heavy Range Hydrocarbons per NWTPH-Dx Method - Laboratory Quality Control Results

TestAmerica Portland

QC Batch: 7120520 **Soil Preparation Method: EPA 3550 Fuels**

Analyte	Method	Result	MDL*	MRL	Units	Dil	Source Result	Spike Amt	% REC	(Limits)	% RPD	(Limits)	Analyzed	Notes
Blank (7120520-BLK1)								Extracted: 12/13/07 14:20						
Diesel Range Organics	NWTPH-Dx	ND	---	12.5	mg/kg wet	1x	--	--	--	--	--	--	12/13/07 15:44	
Heavy Oil Range Hydrocarbons	"	ND	---	25.0	"	"	--	--	--	--	--	--	"	
Surrogate(s): 1-Chlorooctadecane		*Recovery: 106%*			*Limits: 50-150%*	"							*12/13/07 15:44*	
LCS (7120520-BS1)								Extracted: 12/13/07 14:20						
Diesel Range Organics	NWTPH-Dx	117	---	12.5	mg/kg wet	1x	--	125	93.7%	(50-150)	--	--	12/13/07 16:20	
Heavy Oil Range Hydrocarbons	"	64.2	---	25.0	"	"	--	75.0	85.6%	"	--	--	"	
Surrogate(s): 1-Chlorooctadecane		*Recovery: 108%*			*Limits: 50-150%*	"							*12/13/07 16:20*	
Duplicate (7120520-DUP1)					QC Source: PQL0319-01			Extracted: 12/13/07 14:20						
Diesel Range Organics	NWTPH-Dx	ND	---	20.5	mg/kg dry	1x	ND	--	--	--	NR	(50)	12/13/07 16:55	
Heavy Oil Range Hydrocarbons	"	ND	---	41.1	"	"	ND	--	--	--	NR	"	"	
Surrogate(s): 1-Chlorooctadecane		*Recovery: 91.2%*			*Limits: 50-150%*	"							*12/13/07 16:55*	
Duplicate (7120520-DUP2)					QC Source: PQL0319-02			Extracted: 12/13/07 14:20						
Diesel Range Organics	NWTPH-Dx	ND	---	19.8	mg/kg dry	1x	ND	--	--	--		(50)	12/13/07 17:30	
Heavy Oil Range Hydrocarbons	"	ND	---	39.5	"	"	ND	--	--	--	NR	"	"	
Surrogate(s): 1-Chlorooctadecane		*Recovery: 105%*			*Limits: 50-150%*	"							*12/13/07 17:30*	

TestAmerica Portland

Christina M. Woodcock

Christina Woodcock, Project Manager

The results in this report apply to the samples analyzed in accordance with the chain of custody document. This analytical report shall not be reproduced except in full, without the written approval of the laboratory.

TestAmerica
THE LEADER IN ENVIRONMENTAL TESTING

PORTLAND, OR 9405 S.W. NIMBUS AVENUE
BEAVERTON, OR 97008-7132
ph: (503) 906.9200 fax: (503) 906.9210

Delta Consultants - Tigard	Project Name:	**Conoco Phillips**	
7150 SW Hampton - Suite 220	Project Number:	OR20922	Report Created:
Tigard, OR 97223	Project Manager:	Christopher Sheridan	01/03/08 17:45

Total Metals per EPA 6000/7000 Series Methods - Laboratory Quality Control Results

TestAmerica Portland

QC Batch: 7120584 **Soil Preparation Method: EPA 3050**

Analyte	Method	Result	MDL*	MRL	Units	Dil	Source Result	Spike Amt	% REC	(Limits)	% RPD	(Limits)	Analyzed	Notes
Blank (7120584-BLK1)								Extracted: 12/14/07 14:30						
Arsenic	EPA 6020	ND	---	0.515	mg/kg wet	1x	--	--	--	--	--	--	12/19/07 03:11	
Cadmium	"	ND	---	0.515	"	"	--	--	--	--	--	--	"	
Chromium	"	ND	---	0.515	"	"	--	--	--	--	--	--	"	
Copper	"	ND	---	2.06	"	"	--	--	--	--	--	--	"	
Lead	"	ND	---	0.515	"	"	--	--	--	--	--	--	"	
Selenium	"	ND	---	0.515	"	"	--	--	--	--	--	--	12/19/07 13:18	
Silver	"	ND	---	0.515	"	"	--	--	--	--	--	--	12/19/07 03:11	
Zinc	"	ND	---	2.06	"	"	--	--	--	--	--	--	"	
LCS (7120584-BS1)								Extracted: 12/14/07 14:30						
Arsenic	EPA 6020	11.1	---	0.505	mg/kg wet	1x	--	10.1	110%	(80-120)	--	--	12/19/07 03:18	
Cadmium	"	10.2	---	0.505	"	"	--	"	101%	"	--	--	"	
Chromium	"	11.8	---	0.505	"	"	--	"	117%	"	--	--	"	
Copper	"	11.6	---	2.02	"	"	--	"	115%	"	--	--	"	
Lead	"	11.2	---	0.505	"	"	--	"	111%	"	--	--	"	
Selenium	"	4.19	---	0.505	"	"	--	5.05	83.0%	"	--	--	12/19/07 13:55	
Silver	"	5.31	---	0.505	"	"	--	"	105%	"	--	--	12/19/07 03:18	
Zinc	"	10.9	---	2.02	"	"	--	10.1	108%	"	--	--	"	
Duplicate (7120584-DUP1)					QC Source: PQL0319-01			Extracted: 12/14/07 14:30						
Arsenic	EPA 6020	4.18	---	0.837	mg/kg dry	1x	4.05	--	--	--	3.24%	(40)	12/19/07 03:40	
Cadmium	"	ND	---	0.837	"	"	ND	--	--	--	NR	"	"	
Chromium	"	37.6	---	0.837	"	"	35.9	--	--	--	4.68%	"	"	
Copper	"	41.9	---	3.35	"	"	40.2	--	--	--	4.10%	"	"	
Lead	"	6.88	---	0.837	"	"	6.60	--	--	--	4.19%	"	"	
Selenium	"	ND	---	0.837	"	"	ND	--	--	--	NR	"	12/19/07 13:48	
Silver	"	ND	---	0.837	"	"	ND	--	--	--	6.00%	"	12/19/07 03:40	
Zinc	"	79.9	---	3.35	"	"	76.1	--	--	--	4.94%	"	"	
Matrix Spike (7120584-MS1)					QC Source: PQL0319-02			Extracted: 12/14/07 14:30						
Arsenic	EPA 6020	19.3	---	0.803	mg/kg dry	1x	5.56	16.1	85.5%	(75-125)	--	--	12/19/07 04:02	
Cadmium	"	16.0	---	0.803	"	"	ND	"	99.8%	"	--	--	"	
Chromium	"	50.9	---	0.803	"	"	31.5	"	121%	"	--	--	"	
Copper	"	50.4	---	3.21	"	"	33.5	"	106%	"	--	--	"	
Lead	"	22.8	---	0.803	"	"	6.38	"	103%	"	--	--	"	
Selenium	"	4.75	---	0.803	"	"	ND	8.03	59.2%	"	--	--	12/19/07 18:37	M8
Silver	"	7.73	---	0.803	"	"	ND	"	96.3%	"	--	--	12/19/07 04:02	
Zinc	"	82.3	---	3.21	"	"	62.4	16.1	124%	"	--	--	"	

TestAmerica Portland

Christina M. Woodcock

Christina Woodcock, Project Manager

The results in this report apply to the samples analyzed in accordance with the chain of custody document. This analytical report shall not be reproduced except in full, without the written approval of the laboratory.

TestAmerica
THE LEADER IN ENVIRONMENTAL TESTING

PORTLAND, OR 9405 S.W. NIMBUS AVENUE
BEAVERTON, OR 97008-7132
ph: (503) 906.9200 fax: (503) 906.9210

Delta Consultants - Tigard	Project Name:	**Conoco Phillips**	
7150 SW Hampton - Suite 220	Project Number:	OR20922	Report Created:
Tigard, OR 97223	Project Manager:	Christopher Sheridan	01/03/08 17:45

Total Metals per EPA 6000/7000 Series Methods - Laboratory Quality Control Results

TestAmerica Portland

QC Batch: 7120584 **Soil Preparation Method: EPA 3050**

Analyte	Method	Result	MDL*	MRL	Units	Dil	Source Result	Spike Amt	% REC	(Limits)	% RPD	(Limits)	Analyzed	Notes
Matrix Spike (7120584-MS2)				QC Source: PQL0319-03				Extracted: 12/14/07 14:30						
Arsenic	EPA 6020	21.3	---	0.783	mg/kg dry	1x	5.80	15.7	99.0%	(75-125)	--	--	12/19/07 04:17	
Cadmium	"	18.0	---	0.783	"	"	ND	"	115%	"	--	--	"	
Chromium	"	60.4	---	0.783	"	"	43.2	"	110%	"	--	--	"	
Copper	"	61.7	---	3.13	"	"	44.4	"	110%	"	--	--	"	
Lead	"	34.6	---	0.783	"	"	13.8	"	132%	"	--	--	"	MHA
Selenium	"	4.70	---	0.783	"	"	ND	7.83	60.0%	"	--	--	12/19/07 18:52	M8
Silver	"	8.77	---	0.783	"	"	0.109	"	111%	"	--	--	12/19/07 04:17	
Zinc	"	98.7	---	3.13	"	"	83.7	15.7	95.5%	"	--	--	"	

TestAmerica Portland

Christina M. Woodcock

Christina Woodcock, Project Manager

The results in this report apply to the samples analyzed in accordance with the chain of custody document. This analytical report shall not be reproduced except in full, without the written approval of the laboratory.

TestAmerica
THE LEADER IN ENVIRONMENTAL TESTING

PORTLAND, OR 9405 S.W. NIMBUS AVENUE
BEAVERTON, OR 97008-7132
ph: (503) 906.9200 fax: (503) 906.9210

Delta Consultants - Tigard	Project Name:	**Conoco Phillips**	
7150 SW Hampton - Suite 220	Project Number:	OR20922	Report Created:
Tigard, OR 97223	Project Manager:	Christopher Sheridan	01/03/08 17:45

Total Mercury per EPA Method 7471A - Laboratory Quality Control Results

TestAmerica Portland

QC Batch: 7120411 **Soil Preparation Method: EPA 7471A**

Analyte	Method	Result	MDL[A]	MRL	Units	Dil	Source Result	Spike Amt	% REC	(Limits)	% RPD	(Limits)	Analyzed	Notes
Blank (7120411-BLK1)								Extracted: 12/11/07 13:23						
Mercury	EPA 7471A	ND	---	0.100	mg/kg wet	1x	--	--	--	--	--	--	12/11/07 14:10	
LCS (7120411-BS1)								Extracted: 12/11/07 13:23						
Mercury	EPA 7471A	0.989	---	0.100	mg/kg wet	1x	--	1.00	98.9%	(80-120)	--	--	12/11/07 14:13	
LCS Dup (7120411-BSD1)								Extracted: 12/11/07 13:23						
Mercury	EPA 7471A	1.01	---	0.100	mg/kg wet	1x	--	1.00	101%	(80-120)	1.83%	(20)	12/11/07 14:17	
Duplicate (7120411-DUP1)				QC Source: PQL0290-01				Extracted: 12/11/07 13:23						
Mercury	EPA 7471A	ND	---	0.118	mg/kg dry	1x	ND	--	--	--	NR	(40)	12/11/07 14:22	
Matrix Spike (7120411-MS1)				QC Source: PQL0290-01				Extracted: 12/11/07 13:23						
Mercury	EPA 7471A	1.16	---	0.114	mg/kg dry	1x	ND	1.14	102%	(75-125)	--	--	12/11/07 14:24	
Matrix Spike Dup (7120411-MSD1)				QC Source: PQL0290-01				Extracted: 12/11/07 13:23						
Mercury	EPA 7471A	1.13	---	0.112	mg/kg dry	1x	ND	1.12	100%	(75-125)	3.10%	(40)	12/11/07 14:28	

TestAmerica Portland

Christina M. Woodcock

Christina Woodcock, Project Manager

The results in this report apply to the samples analyzed in accordance with the chain of custody document. This analytical report shall not be reproduced except in full, without the written approval of the laboratory.

TestAmerica
THE LEADER IN ENVIRONMENTAL TESTING

PORTLAND, OR 9405 S.W. NIMBUS AVENUE
BEAVERTON, OR 97008-7132
ph: (503) 906.9200 fax: (503) 906.9210

Delta Consultants - Tigard	Project Name:	**Conoco Phillips**	
7150 SW Hampton - Suite 220	Project Number:	OR20922	Report Created:
Tigard, OR 97223	Project Manager:	Christopher Sheridan	01/03/08 17:45

Selected Volatile Organic Compounds (Including BTEX) per EPA Method 8260B - Laboratory Quality Control Results

TestAmerica Portland

QC Batch: 7120351 **Soil Preparation Method: EPA 5035A**

Analyte	Method	Result	MDL[A]	MRL	Units	Dil	Source Result	Spike Amt	% REC	(Limits)	% RPD	(Limits)	Analyzed	Notes
Blank (7120351-BLK1)								Extracted: 12/10/07 11:51						
1,2-Dibromoethane	EPA 8260B	ND	---	49.8	ug/kg wet	2x	--	--	--	--	--	--	12/10/07 16:15	
1,2-Dichloroethane	"	ND	---	49.8	"	"	--	--	--	--	--	--	"	
Benzene	"	ND	---	19.9	"	"	--	--	--	--	--	--	"	
Toluene	"	ND	---	49.8	"	"	--	--	--	--	--	--	"	
Ethylbenzene	"	ND	---	49.8	"	"	--	--	--	--	--	--	"	
Xylenes (total)	"	ND	---	99.5	"	"	--	--	--	--	--	--	"	
Methyl tert-butyl ether	"	ND	---	39.8	"	"	--	--	--	--	--	--	"	
Naphthalene	"	ND	---	199	"	"	--	--	--	--	--	--	"	
1,2,4-Trimethylbenzene	"	ND	---	99.5	"	"	--	--	--	--	--	--	"	
1,3,5-Trimethylbenzene	"	ND	---	49.8	"	"	--	--	--	--	--	--	"	
Isopropylbenzene	"	ND	---	199	"	"	--	--	--	--	--	--	"	
n-Propylbenzene	"	ND	---	49.8	"	"	--	--	--	--	--	--	"	
Surrogate(s): 4-BFB		*Recovery:*	*99.8%*		*Limits:*	*75-125%*	*0.02x*						*12/10/07 16:15*	
1,2-DCA-d4			*113%*			*75-125%*	"						"	
Dibromofluoromethane			*106%*			*75-125%*	"						"	
Toluene-d8			*107%*			*75-125%*	"						"	
LCS (7120351-BS1)								Extracted: 12/10/07 11:51						
Benzene	EPA 8260B	2060	---	19.8	ug/kg wet	2x	--	1980	104%	(81.8-125)	--	--	12/10/07 13:58	
Toluene	"	2130	---	49.6	"	"	--	"	108%	(80-125)	--	--	"	
Ethylbenzene	"	1990	---	49.6	"	"	--	"	100%	(80-120)	--	--	"	
Xylenes (total)	"	6020	---	99.1	"	"	--	5950	101%	(70-130)	--	--	"	
Methyl tert-butyl ether	"	2180	---	39.6	"	"	--	1980	110%	(80-128)	--	--	"	
Naphthalene	"	2390	---	198	"	"	--	"	120%	(76.1-153)	--	--	"	
Surrogate(s): 4-BFB		*Recovery:*	*101%*		*Limits:*	*75-125%*	*0.02x*						*12/10/07 13:58*	
1,2-DCA-d4			*116%*			*75-125%*	"						"	
Dibromofluoromethane			*113%*			*75-125%*	"						"	
Toluene-d8			*107%*			*75-125%*	"						"	
Matrix Spike (7120351-MS1)					QC Source: PQL0167-17			Extracted: 12/10/07 11:51						
Benzene	EPA 8260B	2250	---	23.9	ug/kg dry	2x	ND	2390	94.1%	(68.5-125)	--	--	12/10/07 14:26	
Toluene	"	2360	---	59.7	"	"	100	"	94.7%	(70.3-125)	--	--	"	
Ethylbenzene	"	2250	---	59.7	"	"	ND	"	94.2%	(80-124)	--	--	"	
Xylenes (total)	"	6730	---	119	"	"	ND	7160	94.0%	(70-130)	--	--	"	
Methyl tert-butyl ether	"	2300	---	47.8	"	"	ND	2390	96.2%	(80-130)	--	--	"	
Naphthalene	"	2430	---	239	"	"	ND	"	102%	(69-163)	--	--	"	
Surrogate(s): 4-BFB		*Recovery:*	*101%*		*Limits:*	*75-125%*	*0.02x*						*12/10/07 14:26*	
1,2-DCA-d4			*114%*			*75-125%*	"						"	
Dibromofluoromethane			*113%*			*75-125%*	"						"	
Toluene-d8			*107%*			*75-125%*	"						"	

TestAmerica Portland

Christina M. Woodcock

Christina Woodcock, Project Manager

The results in this report apply to the samples analyzed in accordance with the chain of custody document. This analytical report shall not be reproduced except in full, without the written approval of the laboratory.

TestAmerica
THE LEADER IN ENVIRONMENTAL TESTING

PORTLAND, OR 9405 S.W. NIMBUS AVENUE
BEAVERTON, OR 97008-7132
ph: (503) 906.9200 fax: (503) 906.9210

Delta Consultants - Tigard	Project Name:	**Conoco Phillips**	
7150 SW Hampton - Suite 220	Project Number:	OR20922	Report Created:
Tigard, OR 97223	Project Manager:	Christopher Sheridan	01/03/08 17:45

Selected Volatile Organic Compounds (Including BTEX) per EPA Method 8260B - Laboratory Quality Control Results

TestAmerica Portland

QC Batch: 7120351 **Soil Preparation Method: EPA 5035A**

Analyte	Method	Result	MDL*	MRL	Units	Dil	Source Result	Spike Amt	% REC	(Limits)	% RPD	(Limits)	Analyzed	Notes
Matrix Spike Dup (7120351-MSD1)					QC Source: PQL0167-17				Extracted: 12/10/07 11:51					
Benzene	EPA 8260B	2450	---	23.9	ug/kg dry	2x	ND	2390	103%	(68.5-125)	8.74%	(25)	12/10/07 14:53	
Toluene	"	2560	---	59.7	"	"	100	"	103%	(70.3-125)	8.01%	"	"	
Ethylbenzene	"	2460	---	59.7	"	"	ND	"	103%	(80-124)	9.02%	"	"	
Xylenes (total)	"	7390	---	119	"	"	ND	7160	103%	(70-130)	9.35%	"	"	
Methyl tert-butyl ether	"	2390	---	47.8	"	"	ND	2390	100%	(80-130)	4.18%	"	"	
Naphthalene	"	2530	---	239	"	"	ND	"	106%	(69-163)	3.90%	"	"	

Surrogate(s):		*Recovery:*	*Limits:*		
4-BFB	*102%*		*75-125%*	*0.02x*	*12/10/07 14:53*
1,2-DCA-d4	*110%*		*75-125%*	"	"
Dibromofluoromethane	*109%*		*75-125%*	"	"
Toluene-d8	*106%*		*75-125%*	"	"

QC Batch: 7120404 **Soil Preparation Method: EPA 5035A**

Analyte	Method	Result	MDL*	MRL	Units	Dil	Source Result	Spike Amt	% REC	(Limits)	% RPD	(Limits)	Analyzed	Notes
Blank (7120404-BLK1)									Extracted: 12/11/07 13:09					
1,2-Dibromoethane	EPA 8260B	ND	---	47.4	ug/kg wet	2x	--	--	--	--	--	--	12/11/07 20:49	
1,2-Dichloroethane	"	ND	---	47.4	"	"	--	--	--	--	--	--	"	
Benzene	"	ND	---	19.0	"	"	--	--	--	--	--	--	"	
Toluene	"	ND	---	47.4	"	"	--	--	--	--	--	--	"	
Ethylbenzene	"	ND	---	47.4	"	"	--	--	--	--	--	--	"	
Xylenes (total)	"	ND	---	94.8	"	"	--	--	--	--	--	--	"	
Methyl tert-butyl ether	"	ND	---	37.9	"	"	--	--	--	--	--	--	"	
Naphthalene	"	ND	---	190	"	"	--	--	--	--	--	--	"	
1,2,4-Trimethylbenzene	"	ND	---	94.8	"	"	--	--	--	--	--	--	"	
1,3,5-Trimethylbenzene	"	ND	---	47.4	"	"	--	--	--	--	--	--	"	
Isopropylbenzene	"	ND	---	190	"	"	--	--	--	--	--	--	"	
n-Propylbenzene	"	ND	---	47.4	"	"	--	--	--	--	--	--	"	

Surrogate(s):		*Recovery:*	*Limits:*		
4-BFB	*102%*		*75-125%*	*0.02x*	*12/11/07 20:49*
1,2-DCA-d4	*104%*		*75-125%*	"	"
Dibromofluoromethane	*101%*		*75-125%*	"	"
Toluene-d8	*106%*		*75-125%*	"	"

TestAmerica Portland

Christina M. Woodcock

Christina Woodcock, Project Manager

The results in this report apply to the samples analyzed in accordance with the chain of custody document. This analytical report shall not be reproduced except in full, without the written approval of the laboratory.

TestAmerica
THE LEADER IN ENVIRONMENTAL TESTING

PORTLAND, OR 9405 S.W. NIMBUS AVENUE
BEAVERTON, OR 97008-7132
ph: (503) 906.9200 fax: (503) 906.9210

Delta Consultants - Tigard	Project Name:	**Conoco Phillips**	
7150 SW Hampton - Suite 220	Project Number:	OR20922	Report Created:
Tigard, OR 97223	Project Manager:	Christopher Sheridan	01/03/08 17:45

Selected Volatile Organic Compounds (Including BTEX) per EPA Method 8260B - Laboratory Quality Control Results

TestAmerica Portland

QC Batch: 7120404 **Soil Preparation Method: EPA 5035A**

Analyte	Method	Result	MDL*	MRL	Units	Dil	Source Result	Spike Amt	% REC	(Limits)	% RPD	(Limits)	Analyzed	Notes
LCS (7120404-BS1)								Extracted: 12/11/07 13:09						
Benzene	EPA 8260B	2020	---	19.8	ug/kg wet	2x	--	1980	102%	(81.8-125)	--	--	12/11/07 18:31	
Toluene	"	2080	---	49.6	"	"	--	"	105%	(80-125)	--	--	"	
Ethylbenzene	"	1960	---	49.6	"	"	--	"	98.9%	(80-120)	--	--	"	
Xylenes (total)	"	6000	---	99.2	"	"	--	5950	101%	(70-130)	--	--	"	
Methyl tert-butyl ether	"	2090	---	39.7	"	"	--	1980	106%	(80-128)	--	--	"	
Naphthalene	"	2210	---	198	"	"	--	"	111%	(76.1-153)	--	--	"	
Surrogate(s): 4-BFB		*Recovery: 103%*			*Limits: 75-125%*	*0.02x*							*12/11/07 18:31*	
1,2-DCA-d4		*108%*			*75-125%*	"							"	
Dibromofluoromethane		*109%*			*75-125%*	"							"	
Toluene-d8		*105%*			*75-125%*	"							"	
Matrix Spike (7120404-MS1)					QC Source: PQL0259-30			Extracted: 12/11/07 13:09						
Benzene	EPA 8260B	2310	---	23.7	ug/kg dry	2x	ND	2370	97.8%	(68.5-125)	--	--	12/11/07 18:59	
Toluene	"	2370	---	59.1	"	"	10.8	"	99.9%	(70.3-125)	--	--	"	
Ethylbenzene	"	2260	---	59.1	"	"	ND	"	95.5%	(80-124)	--	--	"	
Xylenes (total)	"	6840	---	118	"	"	ND	7100	96.4%	(70-130)	--	--	"	
Methyl tert-butyl ether	"	2360	---	47.3	"	"	ND	2370	99.8%	(80-130)	--	--	"	
Naphthalene	"	2400	---	237	"	"	ND	"	102%	(69-163)	--	--	"	
Surrogate(s): 4-BFB		*Recovery: 104%*			*Limits: 75-125%*	*0.02x*							*12/11/07 18:59*	
1,2-DCA-d4		*110%*			*75-125%*	"							"	
Dibromofluoromethane		*111%*			*75-125%*	"							"	
Toluene-d8		*108%*			*75-125%*	"							"	
Matrix Spike Dup (7120404-MSD1)					QC Source: PQL0259-30			Extracted: 12/11/07 13:09						
Benzene	EPA 8260B	2650	---	24.1	ug/kg dry	2x	ND	2410	110%	(68.5-125)	13.7%	(25)	12/11/07 19:26	
Toluene	"	2730	---	60.1	"	"	10.8	"	113%	(70.3-125)	13.8%	"	"	
Ethylbenzene	"	2570	---	60.1	"	"	ND	"	107%	(80-124)	12.8%	"	"	
Xylenes (total)	"	7870	---	120	"	"	ND	7220	109%	(70-130)	14.0%	"	"	
Methyl tert-butyl ether	"	2580	---	48.1	"	"	ND	2410	107%	(80-130)	8.63%	"	"	
Naphthalene	"	2700	---	241	"	"	ND	"	112%	(69-163)	11.9%	"	"	
Surrogate(s): 4-BFB		*Recovery: 101%*			*Limits: 75-125%*	*0.02x*							*12/11/07 19:26*	
1,2-DCA-d4		*109%*			*75-125%*	"							"	
Dibromofluoromethane		*110%*			*75-125%*	"							"	
Toluene-d8		*107%*			*75-125%*	"							"	

TestAmerica Portland

Christina M. Woodcock

Christina Woodcock, Project Manager

The results in this report apply to the samples analyzed in accordance with the chain of custody document. This analytical report shall not be reproduced except in full, without the written approval of the laboratory.

TestAmerica
THE LEADER IN ENVIRONMENTAL TESTING

PORTLAND, OR 9405 S.W. NIMBUS AVENUE
BEAVERTON, OR 97008-7132
ph: (503) 906.9200 fax: (503) 906.9210

Delta Consultants - Tigard	Project Name:	**Conoco Phillips**	
7150 SW Hampton - Suite 220	Project Number:	OR20922	Report Created:
Tigard, OR 97223	Project Manager:	Christopher Sheridan	01/03/08 17:45

Polynuclear Aromatic Compounds per EPA 8270M-SIM - Laboratory Quality Control Results

TestAmerica Portland

QC Batch: 7120342 **Soil Preparation Method: EPA 3550**

Analyte	Method	Result	MDL*	MRL	Units	Dil	Source Result	Spike Amt	% REC	(Limits)	% RPD	(Limits)	Analyzed	Notes
Blank (7120342-BLK1)								Extracted: 12/10/07 16:50						
2-Methylnaphthalene	EPA 8270m	ND	---	13.3	ug/kg wet	1x	--	--	--	--	--	--	12/11/07 23 58	
Acenaphthene	"	ND	---	13.3	"	"	--	--	--	--	--	--	"	
Acenaphthylene	"	ND	---	13.3	"	"	--	--	--	--	--	--	"	
Anthracene	"	ND	---	13.3	"	"	--	--	--	--	--	--	"	
Benzo (a) anthracene	"	ND	---	13.3	"	"	--	--	--	--	--	--	"	
Benzo (a) pyrene	"	ND	---	13.3	"	"	--	--	--	--	--	--	"	
Benzo (b) fluoranthene	"	ND	---	13.3	"	"	--	--	--	--	--	--	"	
Benzo (ghi) perylene	"	ND	---	13.3	"	"	--	--	--	--	--	--	"	
Benzo (k) fluoranthene	"	ND	---	13.3	"	"	--	--	--	--	--	--	"	
Chrysene	"	ND	---	13.3	"	"	--	--	--	--	--	--	"	
Dibenzo (a,h) anthracene	"	ND	---	13.3	"	"	--	--	--	--	--	--	"	
Fluoranthene	"	ND	---	13.3	"	"	--	--	--	--	--	--	"	
Fluorene	"	ND	---	13.3	"	"	--	--	--	--	--	--	"	
Indeno (1,2,3-cd) pyrene	"	ND	---	13.3	"	"	--	--	--	--	--	--	"	
Naphthalene	"	ND	---	13.3	"	"	--	--	--	--	--	--	"	
Phenanthrene	"	ND	---	13.3	"	"	--	--	--	--	--	--	"	
Pyrene	"	ND	---	13.3	"	"	--	--	--	--	--	--	"	
Surrogate(s): Fluorene-d10		*Recovery: 89.0%*			*Limits: 24-125%*	"							*12/11/07 23:58*	
Pyrene-d10		*78.9%*			*41-141%*	"							"	
Benzo (a) pyrene-d12		*91.4%*			*38-143%*	"							"	
LCS (7120342-BS1)								Extracted: 12/10/07 16:50						MNR
Acenaphthene	EPA 8270m	153	---	13.3	ug/kg wet	1x	--	166	92.5%	(33-139)	--	--	12/12/07 00:30	
Benzo (a) pyrene	"	156	---	13.3	"	"	--	"	94.2%	(45-149)	--	--	"	
Pyrene	"	139	---	13.3	"	"	--	"	84.2%	(39-138)	--	--	"	
Surrogate(s): Fluorene-d10		*Recovery: 94.5%*			*Limits: 24-125%*	"							*12/12/07 00:30*	
Pyrene-d10		*84.1%*			*41-141%*	"							"	
Benzo (a) pyrene-d12		*96.6%*			*38-143%*	"							"	

TestAmerica Portland

Christina Woodcock, Project Manager

The results in this report apply to the samples analyzed in accordance with the chain of custody document. This analytical report shall not be reproduced except in full, without the written approval of the laboratory.

TestAmerica
THE LEADER IN ENVIRONMENTAL TESTING

PORTLAND, OR 9405 S.W. NIMBUS AVENUE
BEAVERTON, OR 97008-7132
ph: (503) 906.9200 fax: (503) 906.9210

Delta Consultants - Tigard	Project Name:	**Conoco Phillips**	
7150 SW Hampton - Suite 220	Project Number:	OR20922	Report Created:
Tigard, OR 97223	Project Manager:	Christopher Sheridan	01/03/08 17:45

Percent Dry Weight (Solids) per Standard Methods - Laboratory Quality Control Results

TestAmerica Portland

QC Batch: 7120396 **Soil Preparation Method: Dry Weight**

Analyte	Method	Result	MDL*	MRL	Units	Dil	Source Result	Spike Amt	% REC	(Limits)	% RPD	(Limits)	Analyzed	Notes
Duplicate (7120396-DUP1)				QC Source: PQL0314-02				Extracted: 12/11/07 09:37						
% Solids	NCA SOP	73.8	---	0.0100	% by Weight	1x	73.5	--	--	--	0.407%	(20)	12/11/07 09:37	

TestAmerica Portland

Christina M. Woodcock

Christina Woodcock, Project Manager

The results in this report apply to the samples analyzed in accordance with the chain of custody document. This analytical report shall not be reproduced except in full, without the written approval of the laboratory.

PORTLAND, OR 9405 S.W. NIMBUS AVENUE
BEAVERTON, OR 97008-7132
ph: (503) 906.9200 fax: (503) 906.9210

Delta Consultants - Tigard	Project Name:	**Conoco Phillips**	
7150 SW Hampton - Suite 220	Project Number:	OR20922	Report Created:
Tigard, OR 97223	Project Manager:	Christopher Sheridan	01/03/08 17:45

Notes and Definitions

Report Specific Notes:

M8	-	The MS and/or MSD were below the acceptance limits. See Blank Spike (LCS).
MHA	-	Due to high levels of analyte in the sample, the MS/MSD calculation does not provide useful spike recovery information. See Blank Spike (LCS).
MNR	-	No results were reported for the MS/MSD. The sample used for the MS/MSD required dilution due to the sample matrix. Because of this, the spike compounds were diluted below the detection limit.
Q7	-	The heavy oil range organics present are due to hydrocarbons eluting primarily in the diesel range.
Q8	-	Detected hydrocarbons in the gasoline range appear to be due to overlap of diesel range hydrocarbons.
Q9	-	Hydrocarbon pattern most closely resembles weathered diesel.
RL1	-	Reporting limit raised due to sample matrix effects.
RL3	-	Reporting limit raised due to high concentrations of non-target analytes.
RL7	-	Sample required dilution due to high concentrations of target analyte.
Z3	-	The sample required a dilution due to the nature of the sample matrix. Because of this dilution, the surrogate spike concentration in the sample was reduced to a level where the recovery calculation does not provide useful information.
Z9	-	Unable to calculate surrogate recovery due to matrix interference.
ZX	-	Due to sample matrix effects, the surrogate recovery was outside the acceptance limits.

Laboratory Reporting Conventions:

DET	-	Analyte DETECTED at or above the Reporting Limit. Qualitative Analyses only.
ND	-	Analyte NOT DETECTED at or above the reporting limit (MDL or MRL, as appropriate).
NR/NA	-	Not Reported / Not Available
dry	-	Sample results reported on a Dry Weight Basis. Results and Reporting Limits have been corrected for Percent Dry Weight.
wet	-	Sample results and reporting limits reported on a Wet Weight Basis (as received). Results with neither 'wet' nor 'dry' are reported on a Wet Weight Basis.
RPD	-	RELATIVE PERCENT DIFFERENCE (RPDs calculated using Results, not Percent Recoveries).
MRL	-	METHOD REPORTING LIMIT. Reporting Level at, or above, the lowest level standard of the Calibration Table.
MDL*	-	METHOD DETECTION LIMIT. Reporting Level at, or above, the statistically derived limit based on 40CFR, Part 136, Appendix B. *MDLs are listed on the report only if the data has been evaluated below the MRL. Results between the MDL and MRL are reported as Estimated Results.
Dil	-	Dilutions are calculated based on deviations from the standard dilution performed for an analysis, and may not represent the dilution found on the analytical raw data.
Reporting Limits	-	Reporting limits (MDLs and MRLs) are adjusted based on variations in sample preparation amounts, analytical dilutions and percent solids, where applicable.
Electronic Signature	-	Electronic Signature added in accordance with TestAmerica's *Electronic Reporting and Electronic Signatures Policy*. Application of electronic signature indicates that the report has been reviewed and approved for release by the laboratory. Electronic signature is intended to be the legally binding equivalent of a traditionally handwritten signature.

TestAmerica Portland

Christina M. Woodcock

Christina Woodcock, Project Manager

The results in this report apply to the samples analyzed in accordance with the chain of custody document. This analytical report shall not be reproduced except in full, without the written approval of the laboratory.

COP0021832

TestAmerica
ANALYTICAL TESTING CORPORATION

11720 North Creek Pkwy N, Suite 400, Bothell, WA 98011-8244 425-420-9200 FAX 420-9210
11922 E. First Ave, Spokane, WA 99206-5302 509-924-9200 FAX 924-9200
9405 SW Nimbus Ave, Beaverton, OR 97008-7145 503-906-9200 FAX 906-9210
[illegible] Anchorage, AK 99502-1119 907-563-9200 FAX [illegible]

CHAIN OF CUSTODY REPORT

Work Order #: PQL0319

CLIENT: Delta/COP

REPORT TO: Chris Sheridan @ csheridan@deltaenv.com
ADDRESS: 503 639 8018
PHONE: FAX:

INVOICE TO: Delta

P.O. NUMBER:

PROJECT NAME: COP Cutoff Wall Performance Monitoring

PROJECT NUMBER:

SAMPLED BY: CJS

TURNAROUND REQUEST (in Business Days*)
Organic & Inorganic Analyses: 10 (STD) | 7 | 5 | 4 | 3 | 2 | 1 | <1
Petroleum Hydrocarbon Analyses: 5 (STD) | 4 | 3 | 2 | 1 | <1
OTHER Specify: STD
* Turnaround Requests less than standard may incur Rush Charges.

PRESERVATIVE

REQUESTED ANALYSES

CLIENT SAMPLE IDENTIFICATION	SAMPLING DATE/TIME	TPH-G	TPH-DO	PAHs (include 2-methyl naphthalene)	RBDM VOCs	Metals*	MATRIX (W, S, O)	# OF CONT.	LOCATION COMMENTS	TA WO ID
U-24B-20	12/3/07 1600	X	X	X	X	X	S	2	*Metals =	
U-24A-8	12/4/07 1115	↓	↓	↓	↓	↓	S	2	As, Cd, Cr,	
U-23-8	12/5/07 1045						S	2	Cu, Pb, Hg,	
U-22B-6.5	12/5/07 1400						S	2	Selenium, Ag,	
U-25-7.5	12/6/07 1130						S	2	Zn	
U-27-8	12/7/07 1230	↓	↓	↓	↓	↓				

RELEASED BY: Chris Sheridan		DATE: 12/7/07	RECEIVED BY: Peggy Siegfried		DATE: 12/7/07
PRINT NAME:	FIRM: Delta	TIME: 1430	PRINT NAME:	FIRM: TAP	TIME: 1430
RELEASED BY:		DATE:	RECEIVED BY:		DATE:
PRINT NAME:	FIRM:	TIME:	PRINT NAME:	FIRM:	TIME:

ADDITIONAL REMARKS: Call w/ questions: Chris: 503-475-6835

TEMP: 2-1 PAGE OF

COP0021833

TestAmerica Sample Receipt Checklist

Cooler ID(s):

Received by: *(section A)*
Date: 12-7
Time: 14:30
Initials: _____

Unpacked by: *(section B)*
Date: 12-7
Initials: MP

Logged-in by:
Date: 12/07/07
Initials: [illegible]

Work Order No. PQL0319
Client: Delta Consultants
Project: Conoco Phillips

Temperature out of range
___Not enough Ice
___No Ice
___Ice Melted
___Win 4 Hours
___Other _____

***ESI Clients *(see Section C)*

Cooler Temperature (IR): 2-1 °C plastic (glass) NA *(oil/air samples, ESI client)* Temperature Blank: _____ °C

A

Custody Seals: (#___)

Signature: Y N ✓ Dated: _____
✓ None

Container Type:
✓ #Cooler(s)
___#Box(s)
___None (___#Other: _____)

Coolant Type:
___Gel Ice
✓ Loose Ice
___None

Packing Material:
___Bubble Bags
___Styrofoam Cubbies
✓ None (___Other: _____)

Received from:
___TA Courier
___Senvoy
___UPS
___Fed Ex
✓ Client
___TDP
___DHL
___SDS
___Mid-Valley
___GS/TA
___GS/Senvoy
___Other:
_____

B

Sample Status:
(If N circled, see NOD)

General:			
Intact?	Y	N	
# Containers Match COC?	Y	N	none given
IDs Match COC?	Y	N	
For Analyses Requested:			
Correct Type & Preservation?	Y	N	
Adequate Volume?	Y	N	
Within Hold Time?	Y	N	
Volatiles/ Oil Quality:			
VOAs/ Syringes free of Headspace?	Y	N	NA
TB on COC? not provided	Y	N	NA
Metals:			
HNO3 Preserved?	Y	N	NA
Dissolved Metals Filtered?	Y	N	NA

C

***ESI Clients Only:

Temperature Blank: _____ °C not provided

All preserved bottles checked Y N NA *(voas/soils/all unp.)*
All preserved accordingly? Y N *(see NOD)* NA *(voas/soils/all unp.)*

FED EX/ UPS: Was the tracking paper keepable? YES NO

If circled NO, what is the Tracking number? _____

FED EX Goldstreak UPS DHL Other: _____

Project Managers:

Comments: _____

PM Reviewed: _____ *(Initial/Date)*

COP0021834

TestAmerica
THE LEADER IN ENVIRONMENTAL TESTING

PORTLAND, OR 9405 S.W. NIMBUS AVENUE
BEAVERTON, OR 97008-7132
ph: (503) 906.9200 fax: (503) 906.9210

January 16, 2008

Jessica Eckart
Secor
7730 SW Mohawk Street
Tualatin, OR 97062

RE: ConocoPhillips

Enclosed are the results of analyses for samples received by the laboratory on 01/11/08 15:55. The following list is a summary of the Work Orders contained in this report, generated on 01/16/08 12:51.

If you have any questions concerning this report, please feel free to contact me.

Work Order	Project	ProjectNumber
PRA0330	ConocoPhillips	ConocoPhillips

TCLP Lead
Spent Carbon

TestAmerica
THE LEADER IN ENVIRONMENTAL TESTING

PORTLAND, OR 9405 S.W. NIMBUS AVENUE
BEAVERTON, OR 97008-7132
ph: (503) 906.9200 fax: (503) 906.9210

Secor	Project Name:	**ConocoPhillips**	
7730 SW Mohawk Street	Project Number:	ConocoPhillips	Report Created:
Tualatin, OR 97062	Project Manager:	Jessica Eckart	01/16/08 12:51

ANALYTICAL REPORT FOR SAMPLES

Sample ID	Laboratory ID	Matrix	Date Sampled	Date Received
SC-1-08	PRA0330-01	Soil	01/11/08 00:00	01/11/08 15:55

TestAmerica Portland

Christina M. Woodcock

Christina Woodcock, Project Manager

The results in this report apply to the samples analyzed in accordance with the chain of custody document. This analytical report shall not be reproduced except in full, without the written approval of the laboratory.

COP0021836

TestAmerica
THE LEADER IN ENVIRONMENTAL TESTING

PORTLAND, OR 9405 S.W. NIMBUS AVENUE
BEAVERTON, OR 97008-7132
ph: (503) 906.9200 fax: (503) 906.9210

Secor	Project Name:	**ConocoPhillips**	
7730 SW Mohawk Street	Project Number:	ConocoPhillips	Report Created:
Tualatin, OR 97062	Project Manager:	Jessica Eckart	01/16/08 12:51

TCLP Metals per EPA 1311/6000/7000 Series Methods

TestAmerica Portland

Analyte	Method	Result	MDL*	MRL	Units	Dil	Batch	Prepared	Analyzed	Notes
PRA0330-01 (SC-1-08)		**Soil**			**Sampled: 01/11/08 00:00**					
Lead	1311/6020	ND	-----	0.0500	mg/l	1x	8010477	01/15/08 13:20	01/15/08 20:47	

TestAmerica Portland

Christina Woodcock, Project Manager

The results in this report apply to the samples analyzed in accordance with the chain of custody document. This analytical report shall not be reproduced except in full without the written approval of the laboratory.

TestAmerica
THE LEADER IN ENVIRONMENTAL TESTING

PORTLAND, OR 9405 S.W. NIMBUS AVENUE
BEAVERTON, OR 97008-7132
ph: (503) 906.9200 fax: (503) 906.9210

Secor	Project Name:	**ConocoPhillips**	
7730 SW Mohawk Street	Project Number:	ConocoPhillips	Report Created:
Tualatin, OR 97062	Project Manager:	Jessica Eckart	01/16/08 12:51

TCLP Metals per EPA 1311/6000/7000 Series Methods - Laboratory Quality Control Results

TestAmerica Portland

QC Batch: 8010477 **Other wet Preparation Method: EPA 1311/3005**

Analyte	Method	Result	MDL*	MRL	Units	Dil	Source Result	Spike Amt	% REC	(Limits)	% RPD	(Limits)	Analyzed	Notes
Blank (8010477-BLK1)								Extracted: 01/15/08 13:20						
Lead	1311/6020	ND	---	0.0500	mg/l	1x	--	--	--	--	--	--	01/15/08 18:01	
LCS (8010477-BS1)								Extracted: 01/15/08 13:20						
Lead	1311/6020	0.156	---	0.0500	mg/l	1x	--	0.200	78.1%	(75-125)	--	--	01/15/08 18:08	
Duplicate (8010477-DUP1)				QC Source: PRA0239-01				Extracted: 01/15/08 13:20						
Lead	1311/6020	0.338	---	0.0500	mg/l	1x	0.332	--	--	--	1.82%	(20)	01/15/08 18:37	
Matrix Spike (8010477-MS1)				QC Source: PRA0239-02				Extracted: 01/15/08 13:20						
Lead	1311/6020	0.693	---	0.0500	mg/l	1x	0.536	0.200	78.6%	(50-150)	--	--	01/15/08 18:52	
Matrix Spike (8010477-MS2)				QC Source: PRA0334-01				Extracted: 01/15/08 13:20						
Lead	1311/6020	0.161	---	0.0500	mg/l	1x	0.00430	0.200	78.6%	(50-150)	--	--	01/15/08 21:09	

TestAmerica Portland

Christina M. Woodcock

Christina Woodcock, Project Manager

The results in this report apply to the samples analyzed in accordance with the chain of custody document. This analytical report shall not be reproduced except in full, without the written approval of the laboratory.

PORTLAND, OR 9405 S.W. NIMBUS AVENUE
BEAVERTON, OR 97008-7132
ph: (503) 906.9200 fax: (503) 906.9210

Secor	Project Name:	**ConocoPhillips**	
7730 SW Mohawk Street	Project Number:	ConocoPhillips	Report Created:
Tualatin, OR 97062	Project Manager:	Jessica Eckart	01/16/08 12:51

Notes and Definitions

Report Specific Notes:

None

Laboratory Reporting Conventions:

DET	-	Analyte DETECTED at or above the Reporting Limit. Qualitative Analyses only.
ND	-	Analyte NOT DETECTED at or above the reporting limit (MDL or MRL, as appropriate).
NR/NA	-	Not Reported / Not Available
dry	-	Sample results reported on a Dry Weight Basis. Results and Reporting Limits have been corrected for Percent Dry Weight.
wet	-	Sample results and reporting limits reported on a Wet Weight Basis (as received). Results with neither 'wet' nor 'dry' are reported on a Wet Weight Basis.
RPD	-	RELATIVE PERCENT DIFFERENCE (RPDs calculated using Results, not Percent Recoveries).
MRL	-	METHOD REPORTING LIMIT. Reporting Level at, or above, the lowest level standard of the Calibration Table.
MDL*	-	METHOD DETECTION LIMIT. Reporting Level at, or above, the statistically derived limit based on 40CFR, Part 136, Appendix B. *MDLs are listed on the report only if the data has been evaluated below the MRL. Results between the MDL and MRL are reported as Estimated Results.
Dil	-	Dilutions are calculated based on deviations from the standard dilution performed for an analysis, and may not represent the dilution found on the analytical raw data.
Reporting Limits	-	Reporting limits (MDLs and MRLs) are adjusted based on variations in sample preparation amounts, analytical dilutions and percent solids, where applicable.
Electronic Signature	-	Electronic Signature added in accordance with TestAmerica's *Electronic Reporting and Electronic Signatures Policy*. Application of electronic signature indicates that the report has been reviewed and approved for release by the laboratory. Electronic signature is intended to be the legally binding equivalent of a traditionally handwritten signature.

TestAmerica Portland

Christina M. Woodcock

Christina Woodcock, Project Manager

The results in this report apply to the samples analyzed in accordance with the chain of custody document. This analytical report shall not be reproduced except in full, without the written approval of the laboratory.

PRA0330

TestAmerica Portland
9405 SW Nimbus Avenue

Beaverton, OR 97008
phone 503.906.9200 fax 503.906.9210

Chain of Custody Record

TestAmerica
THE LEADER IN ENVIRONMENTAL TESTING

TestAmerica Laboratories, Inc.

Client Contact	Project Manager: Jessica Eckart	Site Contact: Norman Swanson	Date: 01/11/08	COC No: 1
SECOR International, Inc.		Lab Contact:	Carrier:	1 of 1 COCs
7730 SW Mohawk Blvd.	Analysis Turnaround Time			Job No. 15CP.00922
Tualtin, OR 97062	Calendar (C) or Work Days (W) _____			
(503) 691-2030 Phone	TAT if different from Below _____			
(503) 692-7074 FAX	☐ 2 weeks			SDG No.
Project Name: 0922 Portland Terminal (COP)	☐ 1 week			
Site: 0922	■ 2 days			
P O # Direct bill - call PM with questions	☐ 1 day			

Sample Identification	Sample Date	Sample Time	Sample Type	Matrix	# of Cont.	Filtered Sample	TCLP 8260 (see comments)	TCLP Pb	Sample Specific Notes:
SC-1-08	1/11/2008		Comp	Carbon	2		X	X	
									8260 TCLP:
									Vinyl Chloride; trichloroethene
									1,1-dichloroethene, chloroform;
									carbon tetrachloride; benzene;
									1,2-dichloroethane; tetrachloroethene;
									chlorobenzene; 2-butanone

Preservation Used: 1= Ice, 2= HCl; 3= H2SO4; 4=HNO3; 5=NaOH; 6= Other _____

Possible Hazard Identification
☐ *Non-Hazard* ☐ *Flammable* ☐ *Skin Irritant* *Poison B* ☐ *Unknown* ■

Sample Disposal (A fee may be assessed if samples are retained longer than 1 month)
☐ *Return To Client* ☐ *Disposal By Lab* ☐ *Archive For* _____ *Months*

Special Instructions/QC Requirements & Comments:

Relinquished by:	Company:	Date/Time:	Received by:	Company:	Date/Time:
[signature]	SECOR	1-11-08 1557	[signature]	TAP	1/11/08 1555
Relinquished by:	Company:	Date/Time:	Received by:	Company: 7.3°	Date/Time:
Relinquished by:	Company:	Date/Time:	Received by:	Company:	Date/Time:

COP0021840

TestAmerica Sample Receipt Checklist

Cooler ID#:

Received by: (section A)
Date: 1/11/08
Time: 1555
Initials: PJ

Unpacked by: (section B)
Date: 1/11/08
Initials: PJ

Logged-in by:
Date: 1/11/08
Initials: PJ

Work Order No. PRAC330
Client: SECOR
Project: Conoco Phillips

Temperature out of range:
___ Not enough Ice
___ No Ice
___ Ice Melted
X Wi/in 4 Hours
___ Other: _____

***ESI Clients (see Section C)

Cooler Temperature (IR): 7.3 °C plastic glass NA (oil/air samples, ESI client)

Temperature Blank: _____ °C

A

Custody Seals: (#____)

Signature: Y N Dated: _____
X None

Container Type:
____#Cooler(s)
____#Box(s)
____None (X #Other: tupperware)

Coolant Type:
____Gel Ice
X Loose Ice
____None

Packing Material:
____Bubble Bags
____Styrofoam Cubbies
X None (____Other: _____)

Received from:
____TA Courier
____Senvoy
____UPS
____Fed Ex
X Client
____TDP
____DHL
____SDS
____Mid-Valley
____GS/TA
____GS/Senvoy
____Other: _____

B

Sample Status:
(If N circled, see NOD)

General:			
Intact?	Y	N	
# Containers Match COC?	Y	N	none given
IDs Match COC?	Y	N	
For Analyses Requested:			
Correct Type & Preservation?	Y	N	
Adequate Volume?	Y	N	
Within Hold Time?	Y	N	
Volatiles/ Oil Quality:			
VOAs/ Syringes free of Headspace?	Y	N	NA
TB on COC? not provided	Y	N	NA
Metals:			
HNO3 Preserved?	Y	N	NA
Dissolved Metals Filtered?	Y	N	NA

C

***ESI Clients Only:

Temperature Blank: _____ °C not provided

All preserved bottles checked Y N NA (voas/soils/all unp.)
All preserved accordingly? Y N (see NOD) NA (voas/soils/all unp.)

FED EX/ UPS: Was the tracking paper keepable? YES NO

If circled NO, what is the Tracking number? _____

FED EX Goldstreak UPS DHL Other: _____

Project Managers:

Comments: _____

PM reviewed _____ (Initial/Date)

COP0021841

TestAmerica
THE LEADER IN ENVIRONMENTAL TESTING

PORTLAND, OR 9405 S.W. NIMBUS AVENUE
BEAVERTON, OR 97008-7132
ph: (503) 906.9200 fax: (503) 906.9210

January 21, 2008

Jessica Eckart
Secor
7730 SW Mohawk Street
Tualatin, OR 97062

RE: ConocoPhillips

Enclosed are the results of analyses for samples received by the laboratory on 01/14/08 16:30. The following list is a summary of the Work Orders contained in this report, generated on 01/21/08 15:34.

If you have any questions concerning this report, please feel free to contact me.

Work Order	Project	ProjectNumber
PRA0374	ConocoPhillips	0922 Portland Terminal (COP)

TCLP VOCS
Carbon

TestAmerica Portland

Christina M. Woodcock

Christina Woodcock, Project Manager

The results in this report apply to the samples analyzed in accordance with the chain of custody document. This analytical report shall not be reproduced except in full, without the written approval of the laboratory.

TestAmerica
THE LEADER IN ENVIRONMENTAL TESTING

PORTLAND, OR 9405 S.W. NIMBUS AVENUE
BEAVERTON, OR 97008-7132
ph: (503) 906.9200 fax: (503) 906.9210

Secor	Project Name:	**ConocoPhillips**	
7730 SW Mohawk Street	Project Number:	0922 Portland Terminal (COP)	Report Created:
Tualatin, OR 97062	Project Manager:	Jessica Eckart	01/21/08 15:34

ANALYTICAL REPORT FOR SAMPLES

Sample ID	Laboratory ID	Matrix	Date Sampled	Date Received
SC-1-08-2	PRA0374-01	Other dry	01/14/08 13:30	01/14/08 16:30

TestAmerica Portland

Christina Woodcock, Project Manager

The results in this report apply to the samples analyzed in accordance with the chain of custody document. This analytical report shall not be reproduced except in full, without the written approval of the laboratory.

TestAmerica
THE LEADER IN ENVIRONMENTAL TESTING

PORTLAND, OR 9405 S.W. NIMBUS AVENUE
BEAVERTON, OR 97008-7132
ph: (503) 906.9200 fax: (503) 906.9210

Secor	Project Name:	**ConocoPhillips**	
7730 SW Mohawk Street	Project Number:	0922 Portland Terminal (COP)	Report Created:
Tualatin, OR 97062	Project Manager:	Jessica Eckart	01/21/08 15:34

TCLP Volatile Organic Compounds per EPA Method 1311/8260B

TestAmerica Portland

Analyte	Method	Result	MDL[A]	MRL	Units	Dil	Batch	Prepared	Analyzed	Notes
PRA0374-01 (SC-1-08-2)		**Other dry**			**Sampled: 01/14/08 13:30**					
Acetone	1311/8260B	ND	----	0.500	mg/l	1x	8010598	01/17/08 17:13	01/18/08 01:47	
Benzene	"	ND	----	0.0200	"	"	"	"	"	
Bromobenzene	"	ND	----	0.0200	"	"	"	"	"	
Bromochloromethane	"	ND	----	0.0200	"	"	"	"	"	
Bromodichloromethane	"	ND	----	0.0200	"	"	"	"	"	
Bromoform	"	ND	----	0.0200	"	"	"	"	"	
Bromomethane	"	ND	----	0.100	"	"	"	"	"	
n-Butylbenzene	"	ND	----	0.0200	"	"	"	"	"	
sec-Butylbenzene	"	ND	----	0.0200	"	"	"	"	"	
tert-Butylbenzene	"	ND	----	0.0200	"	"	"	"	"	
Carbon Tetrachloride	"	ND	----	0.0200	"	"	"	"	"	
Chlorobenzene	"	ND	----	0.0200	"	"	"	"	"	
Chloroethane	"	ND	----	0.0500	"	"	"	"	"	
Chloroform	"	ND	----	0.0200	"	"	"	"	"	
Chloromethane	"	ND	----	0.100	"	"	"	"	"	
2-Chlorotoluene	"	ND	----	0.0200	"	"	"	"	"	
4-Chlorotoluene	"	ND	----	0.0200	"	"	"	"	"	
1,2-Dibromo-3-chloropropane	"	ND	----	0.0500	"	"	"	"	"	
Dibromochloromethane	"	ND	----	0.0200	"	"	"	"	"	
1,2-Dibromoethane	"	ND	----	0.0200	"	"	"	"	"	
Dibromomethane	"	ND	----	0.0200	"	"	"	"	"	
1,2-Dichlorobenzene	"	ND	----	0.0200	"	"	"	"	"	
1,3-Dichlorobenzene	"	ND	----	0.0200	"	"	"	"	"	
1,4-Dichlorobenzene	"	ND	----	0.0200	"	"	"	"	"	
Dichlorodifluoromethane	"	ND	----	0.100	"	"	"	"	"	
1,1-Dichloroethane	"	ND	----	0.0200	"	"	"	"	"	
1,2-Dichloroethane	"	ND	----	0.0200	"	"	"	"	"	
1,1-Dichloroethene	"	ND	----	0.0200	"	"	"	"	"	
cis-1,2-Dichloroethene	"	ND	----	0.0200	"	"	"	"	"	
trans-1,2-Dichloroethene	"	ND	----	0.0200	"	"	"	"	"	
1,2-Dichloropropane	"	ND	----	0.0200	"	"	"	"	"	
1,3-Dichloropropane	"	ND	----	0.0200	"	"	"	"	"	
2,2-Dichloropropane	"	ND	----	0.0200	"	"	"	"	"	
1,1-Dichloropropene	"	ND	----	0.0200	"	"	"	"	"	
cis-1,3-Dichloropropene	"	ND	----	0.0200	"	"	"	"	"	
trans-1,3-Dichloropropene	"	ND	----	0.0200	"	"	"	"	"	
Ethylbenzene	"	ND	----	0.0200	"	"	"	"	"	
Hexachlorobutadiene	"	ND	----	0.0500	"	"	"	"	"	
2-Hexanone	"	ND	----	0.100	"	"	"	"	"	
Isopropylbenzene	"	ND	----	0.0200	"	"	"	"	"	
p-Isopropyltoluene	"	ND	----	0.0200	"	"	"	"	"	
4-Methyl-2-pentanone	"	ND	----	0.200	"	"	"	"	"	
2-Butanone (MEK)	"	ND	----	0.500	"	"	"	"	"	

TestAmerica Portland

Christina Woodcock, Project Manager

The results in this report apply to the samples analyzed in accordance with the chain of custody document. This analytical report shall not be reproduced except in full, without the written approval of the laboratory.

TestAmerica
THE LEADER IN ENVIRONMENTAL TESTING

PORTLAND, OR 9405 S.W. NIMBUS AVENUE
BEAVERTON, OR 97008-7132
ph: (503) 906.9200 fax: (503) 906.9210

Secor	Project Name:	**ConocoPhillips**	
7730 SW Mohawk Street	Project Number:	0922 Portland Terminal (COP)	Report Created:
Tualatin, OR 97062	Project Manager:	Jessica Eckart	01/21/08 15:34

TCLP Volatile Organic Compounds per EPA Method 1311/8260B

TestAmerica Portland

Analyte	Method	Result	MDL*	MRL	Units	Dil	Batch	Prepared	Analyzed	Notes
PRA0374-01 (SC-1-08-2)			**Other dry**		**Sampled: 01/14/08 13:30**					
Methylene chloride	1311/8260B	ND	----	0.500	mg/l	1x	8010598	01/17/08 17:13	01/18/08 01:47	
Methyl tert-butyl ether	"	ND	----	10.0	"	"	"	"	"	
Naphthalene	"	ND	----	0.0200	"	"	"	"	"	
n-Propylbenzene	"	ND	----	0.0200	"	"	"	"	"	
Styrene	"	ND	----	0.0200	"	"	"	"	"	
1,1,1,2-Tetrachloroethane	"	ND	----	0.0200	"	"	"	"	"	
1,1,2,2-Tetrachloroethane	"	ND	----	0.0200	"	"	"	"	"	
Tetrachloroethene	"	ND	----	0.0200	"	"	"	"	"	
Toluene	"	ND	----	0.0200	"	"	"	"	"	
1,2,3-Trichlorobenzene	"	ND	----	0.0200	"	"	"	"	"	
1,2,4-Trichlorobenzene	"	ND	----	0.0200	"	"	"	"	"	
1,1,1-Trichloroethane	"	ND	----	0.0200	"	"	"	"	"	
1,1,2-Trichloroethane	"	ND	----	0.0200	"	"	"	"	"	
Trichloroethene	"	ND	----	0.0200	"	"	"	"	"	
Trichlorofluoromethane	"	ND	----	0.0500	"	"	"	"	"	
1,2,3-Trichloropropane	"	ND	----	0.0200	"	"	"	"	"	
1,2,4-Trimethylbenzene	"	ND	----	0.0200	"	"	"	"	"	
1,3,5-Trimethylbenzene	"	ND	----	0.0200	"	"	"	"	"	
Vinyl chloride	"	ND	----	0.0200	"	"	"	"	"	
o-Xylene	"	ND	----	0.0200	"	"	"	"	"	
m,p-Xylene	"	ND	----	0.0200	"	"	"	"	"	
Surrogate(s):	*4-BFB*		*89.2%*		*75 - 130 %*	*0.1x*			"	
	Dibromofluoromethane		*90.5%*		*75 - 130 %*	"			"	
	Toluene-d8		*87.4%*		*75 - 130 %*	"			"	
	1,2-DCA-d4		*106%*		*79 - 123 %*	"			"	

TestAmerica Portland

Christina M. Woodcock

Christina Woodcock, Project Manager

The results in this report apply to the samples analyzed in accordance with the chain of custody document. This analytical report shall not be reproduced except in full, without the written approval of the laboratory.

TestAmerica
THE LEADER IN ENVIRONMENTAL TESTING

PORTLAND, OR 9405 S.W. NIMBUS AVENUE
BEAVERTON, OR 97008-7132
ph: (503) 906.9200 fax: (503) 906.9210

Secor	Project Name:	**ConocoPhillips**	
7730 SW Mohawk Street	Project Number:	0922 Portland Terminal (COP)	Report Created:
Tualatin, OR 97062	Project Manager:	Jessica Eckart	01/21/08 15:34

TCLP Volatile Organic Compounds per EPA Method 1311/8260B - Laboratory Quality Control Results

TestAmerica Portland

QC Batch: 8010598 **Water Preparation Method: EPA 1311/5030**

Analyte	Method	Result	MDL*	MRL	Units	Dil	Source Result	Spike Amt	% REC	(Limits)	% RPD	(Limits)	Analyzed	Notes
Blank (8010598-BLK1)								Extracted: 01/17/08 17:13						
Acetone	1311/8260B	ND	---	0.500	mg/l	1x	--	--	--	--	--	--	01/18/08 00:20	
Benzene	"	ND	---	0.0200	"	"	--	--	--	--	--	--	"	
Bromobenzene	"	ND	---	0.0200	"	"	--	--	--	--	--	--	"	
Bromochloromethane	"	ND	---	0.0200	"	"	--	--	--	--	--	--	"	
Bromodichloromethane	"	ND	---	0.0200	"	"	--	--	--	--	--	--	"	
Bromoform	"	ND	---	0.0200	"	"	--	--	--	--	--	--	"	
Bromomethane	"	ND	---	0.100	"	"	--	--	--	--	--	--	"	
n-Butylbenzene	"	ND	---	0.0200	"	"	--	--	--	--	--	--	"	
sec-Butylbenzene	"	ND	---	0.0200	"	"	--	--	--	--	--	--	"	
tert-Butylbenzene	"	ND	---	0.0200	"	"	--	--	--	--	--	--	"	
Carbon Tetrachloride	"	ND	---	0.0200	"	"	--	--	--	--	--	--	"	
Chlorobenzene	"	ND	---	0.0200	"	"	--	--	--	--	--	--	"	
Chloroethane	"	ND	---	0.0500	"	"	--	--	--	--	--	--	"	
Chloroform	"	ND	---	0.0200	"	"	--	--	--	--	--	--	"	
Chloromethane	"	ND	---	0.100	"	"	--	--	--	--	--	--	"	
2-Chlorotoluene	"	ND	---	0.0200	"	"	--	--	--	--	--	--	"	
4-Chlorotoluene	"	ND	---	0.0200	"	"	--	--	--	--	--	--	"	
1,2-Dibromo-3-chloropropane	"	ND	---	0.0500	"	"	--	--	--	--	--	--	"	
Dibromochloromethane	"	ND	---	0.0200	"	"	--	--	--	--	--	--	"	
1,2-Dibromoethane	"	ND	---	0.0200	"	"	--	--	--	--	--	--	"	
Dibromomethane	"	ND	---	0.0200	"	"	--	--	--	--	--	--	"	
1,2-Dichlorobenzene	"	ND	---	0.0200	"	"	--	--	--	--	--	--	"	
1,3-Dichlorobenzene	"	ND	---	0.0200	"	"	--	--	--	--	--	--	"	
1,4-Dichlorobenzene	"	ND	---	0.0200	"	"	--	--	--	--	--	--	"	
Dichlorodifluoromethane	"	ND	---	0.100	"	"	--	--	--	--	--	--	"	
1,1-Dichloroethane	"	ND	---	0.0200	"	"	--	--	--	--	--	--	"	
1,2-Dichloroethane	"	ND	---	0.0200	"	"	--	--	--	--	--	--	"	
1,1-Dichloroethene	"	ND	---	0.0200	"	"	--	--	--	--	--	--	"	
cis-1,2-Dichloroethene	"	ND	---	0.0200	"	"	--	--	--	--	--	--	"	
trans-1,2-Dichloroethene	"	ND	---	0.0200	"	"	--	--	--	--	--	--	"	
1,2-Dichloropropane	"	ND	---	0.0200	"	"	--	--	--	--	--	--	"	
1,3-Dichloropropane	"	ND	---	0.0200	"	"	--	--	--	--	--	--	"	
2,2-Dichloropropane	"	ND	---	0.0200	"	"	--	--	--	--	--	--	"	
1,1-Dichloropropene	"	ND	---	0.0200	"	"	--	--	--	--	--	--	"	
cis-1,3-Dichloropropene	"	ND	---	0.0200	"	"	--	--	--	--	--	--	"	
trans-1,3-Dichloropropene	"	ND	---	0.0200	"	"	--	--	--	--	--	--	"	
Ethylbenzene	"	ND	---	0.0200	"	"	--	--	--	--	--	--	"	
Hexachlorobutadiene	"	ND	---	0.0500	"	"	--	--	--	--	--	--	"	
2-Hexanone	"	ND	---	0.100	"	"	--	--	--	--	--	--	"	

TestAmerica Portland

Christina Woodcock, Project Manager

The results in this report apply to the samples analyzed in accordance with the chain of custody document. This analytical report shall not be reproduced except in full, without the written approval of the laboratory.

TestAmerica
THE LEADER IN ENVIRONMENTAL TESTING

PORTLAND, OR 9405 S.W. NIMBUS AVENUE
BEAVERTON, OR 97008-7132
ph: (503) 906.9200 fax: (503) 906.9210

Secor	Project Name:	**ConocoPhillips**	
7730 SW Mohawk Street	Project Number:	0922 Portland Terminal (COP)	Report Created:
Tualatin, OR 97062	Project Manager:	Jessica Eckart	01/21/08 15:34

TCLP Volatile Organic Compounds per EPA Method 1311/8260B - Laboratory Quality Control Results

TestAmerica Portland

QC Batch: 8010598 **Water Preparation Method: EPA 1311/5030**

Analyte	Method	Result	MDL*	MRL	Units	Dil	Source Result	Spike Amt	% REC	(Limits)	% RPD	(Limits)	Analyzed	Notes
Blank (8010598-BLK1)								Extracted: 01/17/08 17:13						
Isopropylbenzene	1311/8260B	ND	---	0.0200	mg/l	1x	--	--	--	--	--	--	01/18/08 00:20	
p-Isopropyltoluene	"	ND	---	0.0200	"	"	--	--	--	--	--	--	"	
4-Methyl-2-pentanone	"	ND	---	0.200	"	"	--	--	--	--	--	--	"	
2-Butanone (MEK)	"	ND	---	0.500	"	"	--	--	--	--	--	--	"	
Methylene chloride	"	ND	---	0.500	"	"	--	--	--	--	--	--	"	
Methyl tert-butyl ether	"	ND	---	10.0	"	"	--	--	--	--	--	--	"	
Naphthalene	"	ND	---	0.0200	"	"	--	--	--	--	--	--	"	
n-Propylbenzene	"	ND	---	0.0200	"	"	--	--	--	--	--	--	"	
Styrene	"	ND	---	0.0200	"	"	--	--	--	--	--	--	"	
1,1,1,2-Tetrachloroethane	"	ND	---	0.0200	"	"	--	--	--	--	--	--	"	
1,1,2,2-Tetrachloroethane	"	ND	---	0.0200	"	"	--	--	--	--	--	--	"	
Tetrachloroethene	"	ND	---	0.0200	"	"	--	--	--	--	--	--	"	
Toluene	"	ND	---	0.0200	"	"	--	--	--	--	--	--	"	
1,2,3-Trichlorobenzene	"	ND	---	0.0200	"	"	--	--	--	--	--	--	"	
1,2,4-Trichlorobenzene	"	ND	---	0.0200	"	"	--	--	--	--	--	--	"	
1,1,1-Trichloroethane	"	ND	---	0.0200	"	"	--	--	--	--	--	--	"	
1,1,2-Trichloroethane	"	ND	---	0.0200	"	"	--	--	--	--	--	--	"	
Trichloroethene	"	ND	---	0.0200	"	"	--	--	--	--	--	--	"	
Trichlorofluoromethane	"	ND	---	0.0500	"	"	--	--	--	--	--	--	"	
1,2,3-Trichloropropane	"	ND	---	0.0200	"	"	--	--	--	--	--	--	"	
1,2,4-Trimethylbenzene	"	ND	---	0.0200	"	"	--	--	--	--	--	--	"	
1,3,5-Trimethylbenzene	"	ND	---	0.0200	"	"	--	--	--	--	--	--	"	
Vinyl chloride	"	ND	---	0.0200	"	"	--	--	--	--	--	--	"	
o-Xylene	"	ND	---	0.0200	"	"	--	--	--	--	--	--	"	
m,p-Xylene	"	ND	---	0.0200	"	"	--	--	--	--	--	--	"	

Surrogate(s):	*4-BFB*	*Recovery: 86.3%*	*Limits: 75-130%*	*0.1x*	*01/18/08 00:20*
	Dibromofluoromethane	*88.2%*	*75-130%*	"	"
	Toluene-d8	*86.3%*	*75-130%*	"	"
	1,2-DCA-d4	*106%*	*79-123%*	"	"

TestAmerica Portland

Christina M. Woodcock

Christina Woodcock, Project Manager

The results in this report apply to the samples analyzed in accordance with the chain of custody document. This analytical report shall not be reproduced except in full, without the written approval of the laboratory.

TestAmerica
THE LEADER IN ENVIRONMENTAL TESTING

PORTLAND, OR 9405 S.W. NIMBUS AVENUE
BEAVERTON, OR 97008-7132
ph: (503) 906.9200 fax: (503) 906.9210

Secor	Project Name:	**ConocoPhillips**	
7730 SW Mohawk Street	Project Number:	0922 Portland Terminal (COP)	Report Created:
Tualatin, OR 97062	Project Manager:	Jessica Eckart	01/21/08 15:34

TCLP Volatile Organic Compounds per EPA Method 1311/8260B - Laboratory Quality Control Results

TestAmerica Portland

QC Batch: 8010598 **Water Preparation Method: EPA 1311/5030**

Analyte	Method	Result	MDL[A]	MRL	Units	Dil	Source Result	Spike Amt	% REC	(Limits)	% RPD	(Limits)	Analyzed	Notes
LCS (8010598-BS1)								Extracted: 01/17/08 17:13						
Benzene	1311/8260B	0.0166	---	0.00200	mg/l	0.1x	--	0.0200	83.0%	(66-142)	--	--	01/17/08 22:29	
Carbon Tetrachloride	"	0.0157	---	0.00200	"	"	--	"	78.6%	(50-150)	--	--	"	
Chlorobenzene	"	0.0152	---	0.00200	"	"	--	"	76.1%	(60-133)	--	--	"	
Chloroform	"	0.0164	---	0.00200	"	"	--	"	82.2%	(50-150)	--	--	"	
1,4-Dichlorobenzene	"	0.0196	---	0.00200	"	"	--	"	98.2%	"	--	--	"	
1,2-Dichloroethane	"	0.0169	---	0.00200	"	"	--	"	84.4%	"	--	--	"	
1,1-Dichloroethene	"	0.0151	---	0.00200	"	"	--	"	75.7%	(59-172)	--	--	"	
2-Butanone (MEK)	"	0.0381	---	0.0500	"	"	--	0.0400	95.3%	(40-180)	--	--	"	
Tetrachloroethene	"	0.0145	---	0.00200	"	"	--	0.0200	72.7%	(50-150)	--	--	"	
Trichloroethene	"	0.0158	---	0.00200	"	"	--	"	78.8%	(62-137)	--	--	"	
Vinyl chloride	"	0.0146	---	0.00200	"	"	--	"	73.2%	(40-180)	--	--	"	
Surrogate(s): 4-BFB		*Recovery: 92.2%*			*Limits: 75-130%*	"							*01/17/08 22:29*	
Dibromofluoromethane		*92.8%*			*75-130%*	"							"	
Toluene-d8		*88.0%*			*75-130%*	"							"	
1,2-DCA-d4		*107%*			*79-123%*	"							"	
Matrix Spike (8010598-MS1)				QC Source: PRA0374-01				Extracted: 01/17/08 17:13						
Benzene	1311/8260B	0.185	---	0.0200	mg/l	1x	ND	0.200	92.4%	(66-142)	--	--	01/18/08 00:52	
Carbon Tetrachloride	"	0.177	---	0.0200	"	"	ND	"	88.6%	(50-150)	--	--	"	
Chlorobenzene	"	0.172	---	0.0200	"	"	ND	"	86.2%	(60-133)	--	--	"	
Chloroform	"	0.181	---	0.0200	"	"	ND	"	90.6%	(50-150)	--	--	"	
1,4-Dichlorobenzene	"	0.227	---	0.0200	"	"	ND	"	113%	"	--	--	"	
1,2-Dichloroethane	"	0.183	---	0.0200	"	"	ND	"	91.6%	"	--	--	"	
1,1-Dichloroethene	"	0.171	---	0.0200	"	"	ND	"	85.4%	(59-172)	--	--	"	
2-Butanone (MEK)	"	0.342	---	0.500	"	"	ND	0.400	85.4%	(40-180)	--	--	"	
Tetrachloroethene	"	0.170	---	0.0200	"	"	ND	0.200	85.2%	(50-150)	--	--	"	
Trichloroethene	"	0.174	---	0.0200	"	"	ND	"	87.2%	(62-137)	--	--	"	
Vinyl chloride	"	0.167	---	0.0200	"	"	ND	"	83.4%	(40-180)	--	--	"	
Surrogate(s): 4-BFB		*Recovery: 92.4%*			*Limits: 75-130%*	*0.1x*							*01/18/08 00:52*	
Dibromofluoromethane		*94.0%*			*75-130%*	"							"	
Toluene-d8		*87.8%*			*75-130%*	"							"	
1,2-DCA-d4		*107%*			*79-123%*	"							"	

TestAmerica Portland

Christina Woodcock, Project Manager

The results in this report apply to the samples analyzed in accordance with the chain of custody document. This analytical report shall not be reproduced except in full, without the written approval of the laboratory.

TestAmerica
THE LEADER IN ENVIRONMENTAL TESTING

PORTLAND, OR 9405 S.W. NIMBUS AVENUE
BEAVERTON, OR 97008-7132
ph: (503) 906.9200 fax: (503) 906.9210

Secor	Project Name:	**ConocoPhillips**	
7730 SW Mohawk Street	Project Number:	0922 Portland Terminal (COP)	Report Created:
Tualatin, OR 97062	Project Manager:	Jessica Eckart	01/21/08 15:34

TCLP Volatile Organic Compounds per EPA Method 1311/8260B - Laboratory Quality Control Results

TestAmerica Portland

QC Batch: 8010598 **Water Preparation Method: EPA 1311/5030**

Analyte	Method	Result	MDL*	MRL	Units	Dil	Source Result	Spike Amt	% REC	(Limits)	% RPD	(Limits)	Analyzed	Notes
Matrix Spike Dup (8010598-MSD1)				QC Source: PRA0374-01				Extracted: 01/17/08 17:13						
Benzene	1311/8260B	0.182	---	0.0200	mg/l	1x	ND	0.200	90.8%	(66-142)	1.69%	(21)	01/17/08 23:24	
Carbon Tetrachloride	"	0.169	---	0.0200	"	"	ND	"	84.6%	(50-150)	4.56%	(40)	"	
Chlorobenzene	"	0.169	---	0.0200	"	"	ND	"	84.4%	(60-133)	2.05%	(21)	"	
Chloroform	"	0.179	---	0.0200	"	"	ND	"	89.6%	(50-150)	1.05%	(40)	"	
1,4-Dichlorobenzene	"	0.219	---	0.0200	"	"	ND	"	109%	"	3.50%	"	"	
1,2-Dichloroethane	"	0.188	---	0.0200	"	"	ND	"	94.1%	"	2.69%	"	"	
1,1-Dichloroethene	"	0.166	---	0.0200	"	"	ND	"	83.0%	(59-172)	2.79%	(22)	"	
2-Butanone (MEK)	"	0.371	---	0.500	"	"	ND	0.400	92.8%	(40-180)	8.28%	(50)	"	
Tetrachloroethene	"	0.160	---	0.0200	"	"	ND	0.200	79.8%	(50-150)	6.48%	"	"	
Trichloroethene	"	0.176	---	0.0200	"	"	ND	"	88.1%	(62-137)	0.969%	(24)	"	
Vinyl chloride	"	0.158	---	0.0200	"	"	ND	"	79.0%	(40-180)	5.42%	(50)	"	

Surrogate(s):	*4-BFB*	*Recovery: 91.5%*	*Limits: 75-130%*	*0.1x*	*01/17/08 23:24*
	Dibromofluoromethane	*93.4%*	*75-130%*	"	"
	Toluene-d8	*89.0%*	*75-130%*	"	"
	1,2-DCA-d4	*107%*	*79-123%*	"	"

TestAmerica Portland

Christina M. Woodcock

Christina Woodcock, Project Manager

The results in this report apply to the samples analyzed in accordance with the chain of custody document. This analytical report shall not be reproduced except in full, without the written approval of the laboratory.

PORTLAND, OR 9405 S.W. NIMBUS AVENUE
BEAVERTON, OR 97008-7132
ph: (503) 906.9200 fax: (503) 906.9210

Secor	Project Name:	**ConocoPhillips**	
7730 SW Mohawk Street	Project Number:	0922 Portland Terminal (COP)	Report Created:
Tualatin, OR 97062	Project Manager:	Jessica Eckart	01/21/08 15:34

Notes and Definitions

Report Specific Notes:

None

Laboratory Reporting Conventions:

DET	-	Analyte DETECTED at or above the Reporting Limit. Qualitative Analyses only.
ND	-	Analyte NOT DETECTED at or above the reporting limit (MDL or MRL, as appropriate).
NR/NA	-	Not Reported / Not Available
dry	-	Sample results reported on a Dry Weight Basis. Results and Reporting Limits have been corrected for Percent Dry Weight.
wet	-	Sample results and reporting limits reported on a Wet Weight Basis (as received). Results with neither 'wet' nor 'dry' are reported on a Wet Weight Basis.
RPD	-	RELATIVE PERCENT DIFFERENCE (RPDs calculated using Results, not Percent Recoveries).
MRL	-	METHOD REPORTING LIMIT. Reporting Level at, or above, the lowest level standard of the Calibration Table.
MDL*	-	METHOD DETECTION LIMIT. Reporting Level at, or above, the statistically derived limit based on 40CFR, Part 136, Appendix B. *MDLs are listed on the report only if the data has been evaluated below the MRL. Results between the MDL and MRL are reported as Estimated Results.
Dil	-	Dilutions are calculated based on deviations from the standard dilution performed for an analysis, and may not represent the dilution found on the analytical raw data.
Reporting Limits	-	Reporting limits (MDLs and MRLs) are adjusted based on variations in sample preparation amounts, analytical dilutions and percent solids, where applicable.
Electronic Signature	-	Electronic Signature added in accordance with TestAmerica's *Electronic Reporting and Electronic Signatures Policy.* Application of electronic signature indicates that the report has been reviewed and approved for release by the laboratory. Electronic signature is intended to be the legally binding equivalent of a traditionally handwritten signature.

TestAmerica
ANALYTICAL TESTING CORPORATION

11720 North Creek Pkwy N Suite 400, Bothell, WA 98011-8244 425-420-9200 FAX 420-9210
11922 E. First Ave, Spokane, WA 99206-5302 509-924-9200 FAX 924-9290
9405 SW Nimbus Ave, Beaverton, OR 97008-7145 503-906-9200 FAX 906-9210

CHAIN OF CUSTODY REPORT

Work Order #: PRA0314

CLIENT: SECOR

REPORT TO: Jessica Eckhart
ADDRESS: 7730 SW Mohawk Blvd
Tualatin, OR 97062
PHONE: 503 691 2030 FAX: 503 692 7074

INVOICE TO: SECOR
7730 SW Mohawk Blvd
Tualatin OR 97062

P.O. NUMBER: call Jessica Eckhart

PROJECT NAME: 0422 Richland Terminal (ccp)
PROJECT NUMBER: 0422
SAMPLED BY: Norman Swanson

PRESERVATIVE

REQUESTED ANALYSES

TURNAROUND REQUEST
in Business Days *
Organic & Inorganic Analyses: 10 (STD) | 7 | 5 | 4 | 3 | 2 | 1 | <1
Petroleum Hydrocarbon Analyses: 5 (STD) | 4 | 3 | 2 | 1 | <1
OTHER Specify:
* Turnaround Requests less than standard may incur Rush Charges

	CLIENT SAMPLE IDENTIFICATION	SAMPLING DATE/TIME			MATRIX (W, S, O)	# OF CONT.	LOCATION/ COMMENTS	TA WO ID
1	SC-1-08-2	1-14-09/1330	TAP Soil	TAP Soil	Carbon	2	Vinyl Chloride, trichloroethene, 1,1-dichloroethane, chloroform, carbon tetrachloride, benzene, 1,2-dichloroethane, tetrachloroethene, chlorobenzene, 2-butanone	
2								
3								
4								
5								
6								
7								
8								
9								
10								

RELEASED BY: [signature]		DATE: 1-14-09	RECEIVED BY: [signature]			DATE: 1-14-09
PRINT NAME: Norman Swanson	FIRM: SECOR	TIME: 1533	PRINT NAME: Jerry Myers	FIRM: TAP		TIME: 1533
RELEASED BY: [signature]		DATE: 1-14-09	RECEIVED BY: Jamie Ficland			DATE: 1/14/09
PRINT NAME: [signature]	FIRM: TAP	TIME: 1630	PRINT NAME: Jamie Ficland	FIRM: TAP		TIME: 16:30

ADDITIONAL REMARKS:

TEMP: 2.9

PAGE OF

TAL 1000(0407)

COP0021851

TestAmerica Sample Receipt Checklist

(Order File)

Received by: (section A) Date: 1/14/08 Time: 16:30 Initials: JI

Unpacked by: (section B) Date: 1/14/08 Initials: JI

Logged-in by: Date: 1/14/08 Initials: JI

Work Order No. PRA0374
Client: SECOR
Project: Conoco Phillips

Temperature out of range:
___Not enough Ice
___No Ice
___Ice Melted
___W/in 4 Hours
___Other:

***ESI Clients (see Section C)

Cooler Temperature (IR): 2.9 °C plastic glass NA (oil/air samples, ESI client) Temperature Blank: _____ °C

A

Custody Seals: (#___)

Signature: Y N Dated:_____
X None

Container Type:
1 #Cooler(s)
___#Box(s)
___None (___#Other:_____)

Coolant Type:
___Gel Ice
X Loose Ice
___None

Packing Material:
___Bubble Bags
___Styrofoam Cubbies
X None (___Other:_____)

Received from:
X TA Courier
___Senvoy
___UPS
___Fed Ex
___Client
___TDP
___DHL
___SDS
___Mid-Valley
___GS/TA
___GS/Senvoy
___Other:
___ _____

B

Sample Status:
(If N circled, see NOD)

General:			
Intact?	Y	N	
# Containers Match COC?	Y	N	none given
IDs Match COC?	Y	N	
For Analyses Requested:			
Correct Type & Preservation?	Y	N	
Adequate Volume?	Y	N	
Within Hold Time?	Y	N	
Volatiles/ Oil Quality:			
VOAs/ Syringes free of Headspace?	Y	N	NA
TB on COC? not provided	Y	N	NA
Metals:			
HNO3 Preserved?	Y	N	NA
Dissolved Metals Filtered?	Y	N	NA

C

***ESI Clients Only:

Temperature Blank _____ °C not provided

All preserved bottles checked Y N NA (voas/soils/all unp.)
All preserved accordingly? Y N (see NOD) NA (voas/soils/all unp.)

FED EX/ UPS: Was the tracking paper keepable? YES NO

If circled NO, what is the Tracking number? _____

FED EX Goldstreak UPS DHL Other: _____

Project Managers:

Comments:_____

PM reviewed _____ (Initial/Date)

COP0021852

CITY OF PORTLAND
ENVIRONMENTAL SERVICES
1120 SW Fifth Avenue, Room 1000, Portland, Oregon 97204-1912 ▪ Sam Adams, Commissioner ▪ Dean Marriott, Director

April 23, 2009

Stratus Corporation
39515 SW Hartley Rd.
Gaston, OR 97119

RE: NW Doane & NW Front, Project No. 8554
Performance Bond Release

To Whom It May Concern:

The above referenced project is complete to the satisfaction of the City of Portland and final fees have been paid.

We have received your maintenance guarantee, and the City Attorney has approved it, so we are releasing your performance bond.

Please call me at 503-823-5332 if you have any questions.

Sincerely,

Katherine Freeman

Katherine Freeman
Engineering Services

Enclosure (1)

cc: Western Surety Co.
Erik Durshpek, Construction Permits Project Manager
Sun Noble, Development Engineering Manager
Project File

COP0021853

Bond No. 78283146

Job No. 8554

PERFORMANCE BOND

KNOW ALL MEN BY THESE PRESENTS that, we Stratus Corporation, as Principal, and WESTERN SURETY COMPANY, a corporation organized and existing under the laws of the State of South Dakota, and duly authorized to transact a surety business in the State of Oregon, as Surety, are held and firmly bound unto the CITY OF PORTLAND, a municipal corporation of the State of Oregon, in the penal sum of Thirty-Five Thousand Two Hundred Ninety-Eight and no/100 Dollars ($35,298.00), lawful money of the United States of America, for the payment whereof well and truly to be made, we and each of us, jointly and severally, bind ourselves, our and each of our heirs, executors, administrators, successors and assigns firmly by these presents.

THE CONDITION OF THIS BOND IS SUCH:

That whereas the Principal herein has made application to the Chief Engineer of the City of Portland Bureau of Environmental Services for a permit to construct: Project No. 8554, NW Doane & NW Front, Installation of A Cured in Place Liner in Existing Storm Sewer under the provisions of Ordinance No. 130672, Code of the City of Portland, and whereas said application was approved by the Chief Engineer of said City and a permit therefore issued, subject to and upon certain conditions, directions, stipulations, terms, provisions and requirements provided for in said permit, a copy of which permit is attached hereto and hereby made a part of this bond to the same extent and effect as if written herein and specific reference now made to all the terms, provisions, specifications and requirements set out, declared and provided for in said permit;

NOW THEREFORE, if the Principal herein shall faithfully and truly observe the terms, provisions, conditions, stipulations, directions and requirements of said permit and shall in all respects, whether the same be enumerated herein or not, faithfully comply with the same and shall assume the defense of, indemnify and save harmless the City of Portland, its officers, agents, and employees from all claims, liabilities, loss, damage or injury which may have been suffered or claimed to have been suffered to persons or property directly or indirectly resulting from or arising out of the operations or conduct of said Principal or any subcontractor in the performance of the work under said permit and shall indemnify and make whole the City for any injury or damage to any street, highway, avenue or road or any part thereof, resulting from the operations or conduct of said Principal or any subcontractor in connection with performance or conduct of the work under said permit, and shall in all respects faithfully keep and observe all of said terms, provisions, conditions, stipulations, directions and requirements, then this obligation is void, otherwise it shall remain in full force and effect.

WITNESS our hands and seals this 17th day of April, 20 07

STRATUS CORPORATION (Seal)

By (Seal)

(Seal)

PRINCIPAL

WESTERN SURETY COMPANY

By

SURETY Joseph Fulton Schultz

Countersigned by:

Oregon Resident Agent

S:\Services\Permit\Forms\Permit Packet\Perbond.doc

WESTERN SURETY COMPANY CORPORATE SEAL SOUTH DAKOTA

2006

APPROVED AS TO FORM

CITY ATTORNEY

COP0021854

Western Surety Company

POWER OF ATTORNEY - CERTIFIED COPY

Bond No. 70283146

Know All Men By These Presents, that WESTERN SURETY COMPANY, a corporation duly organized and existing under the laws of the State of South Dakota, and having its principal office in Sioux Falls, South Dakota (the "Company"), does by these presents make, constitute and appoint: Joseph Fulton Schultz

its true and lawful attorney(s)-in-fact, with full power and authority hereby conferred, to execute, acknowledge and deliver for and on its behalf as Surety, bonds for:

Principal: Stratus Corporation

Obligee: City of Portland

Amount: $500,000.00

and to bind the Company thereby as fully and to the same extent as if such bonds were signed by the Senior Vice President, sealed with the corporate seal of the Company and duly attested by its Secretary, hereby ratifying and confirming all that the said attorney(s)-in-fact may do within the above stated limitations. Said appointment is made under and by authority of the following bylaw of Western Surety Company which remains in full force and effect.

"Section 7. All bonds, policies, undertakings, Powers of Attorney or other obligations of the corporation shall be executed in the corporate name of the Company by the President, Secretary, any Assistant Secretary, Treasurer, or any Vice President or by such other officers as the Board of Directors may authorize. The President, any Vice President, Secretary, any Assistant Secretary, or the Treasurer may appoint Attorneys in Fact or agents who shall have authority to issue bonds, policies, or undertakings in the name of the Company. The corporate seal is not necessary for the validity of any bonds, policies, undertakings, Powers of Attorney or other obligations of the corporation. The signature of any such officer and the corporate seal may be printed by facsimile."

All authority hereby conferred shall expire and terminate, without notice, unless used before midnight of August 31, 2007, but until such time shall be irrevocable and in full force and effect.

In Witness Whereof, Western Surety Company has caused these presents to be signed by its Senior Vice President, Paul T. Bruflat, and its corporate seal to be affixed this 17th day of April, 2007.

WESTERN SURETY COMPANY

Paul T. Bruflat

Paul T. Bruflat, Senior Vice President

STATE OF SOUTH DAKOTA
COUNTY OF MINNEHAHA } ss

On this 17th day of April, in the year 2007, before me, a notary public, personally appeared Paul T. Bruflat, who being to me duly sworn, acknowledged that he signed the above Power of Attorney as the aforesaid officer of WESTERN SURETY COMPANY and acknowledged said instrument to be the voluntary act and deed of said corporation.

D. KRELL
NOTARY PUBLIC
SOUTH DAKOTA

D. Krell

Notary Public - South Dakota

My Commission Expires November 30, 2012

I the undersigned officer of Western Surety Company, a stock corporation of the State of South Dakota, do hereby certify that the attached Power of Attorney is in full force and effect and is irrevocable, and furthermore, that Section 7 of the bylaws of the Company as set forth in the Power of Attorney is now in force.

In testimony whereof, I have hereunto set my hand and seal of Western Surety Company this 17th day of April, 2007.

WESTERN SURETY COMPANY

Paul T. Bruflat

Paul T. Bruflat, Senior Vice President

Form F6305-6-2006

CORPORATION SERVICE COMPANY®

DXO / ALL
Transmittal Number: 5470028
Date Processed: 12/03/2007

Notice of Service of Process

Primary Contact: Ellen P. Hebert
ConocoPhillips
600 North Dairy Ashford Road
Houston, TX 77079

Entity:	ConocoPhillips Company Entity ID Number 0013132
Entity Served:	ConocoPhillips Company
Title of Action:	State of Oregon vs. ConocoPhillips Company
Document(s) Type:	Notice
Nature of Action:	Environmental
Court:	Department of Environmental Quality, Oregon
Case Number:	WQ/I-NWR-07-138
Jurisdiction Served:	Oregon
Date Served on CSC:	12/03/2007
Answer or Appearance Due:	20 Days
Originally Served On:	CSC
How Served:	Certified Mail
Sender Information:	Dick Pedersen 503-229-5696

Information contained on this transmittal form is for record keeping, notification and forwarding the attached document(s). It does not constitute a legal opinion. The recipient is responsible for interpreting the documents and taking appropriate action.

To avoid potential delay, please do not send your response to CSC

CSC is SAS70 Type II certified for its Litigation Management System.

2711 Centerville Road Wilmington, DE 19808 (888) 690-2882 | sop@cscinfo.com

COP0021857

Oregon
Theodore R. Kulongoski, Governor

Department of Environmental Quality
811 SW Sixth Avenue
Portland, OR 97204-1390
503-229-5696
TTY: 503-229-6993

November 30, 2007

CERTIFIED MAIL No. 7006 0100 0002 8261 6854

ConocoPhillips Company
c/o United States Corporation Company
285 Liberty Street NE
Salem, OR 97301

Re: Notice of Violation and Civil Penalty Assessment
Case No. WQ/I-NWR-07-138
Multnomah County

ConocoPhillips operates a petroleum products storage and distribution facility at 5528 NW Doane Avenue, in Portland, Oregon, pursuant to a General 1300J stormwater permit (the Permit) issued to ConocoPhillips by the Department of Environmental Quality (the Department). The Permit allows ConocoPhillips to discharge stormwater that meets certain effluent quality standards. The Permit also requires ConocoPhillips to monitor its discharges and report the results to the Department.

ConocoPhillips' Permit requires that ConocoPhillips maintain the pH of its stormwater discharges within the range of 6.0 to 9.0 standard units (SU). ConocoPhillips reported to the Department that it discharged stormwater with a pH of 3.07 SU on February 20, 2007.

ConocoPhillips' compliance with the terms of the Permit is essential to protecting the quality of our public waters. Releases of water with pH of less than 6.0 SU have been shown to have both short- and long-term toxic effects on fish and other aquatic species. Water with such low pH can accelerate the release of metals from sediments, and these metals can negatively affect the health of fish.

Because ConocoPhillips violated the terms of its Permit, ConocoPhillips is liable for a civil penalty assessment. In the enclosed Notice of Violation and Civil Penalty Assessment (Notice), the Department has assessed a civil penalty of $6,000 for violating the Permit effluent limitation for pH. The penalty was determined as set forth in Oregon Administrative Rule (OAR) 340-012-0045. The Department's findings and civil penalty determination are attached to the Notice as Exhibit No. 1. The Department appreciates the steps ConocoPhillips has taken to address the violation and ensure the violation will not be repeated, and has given credit for these steps in determining the amount of civil penalty.

The steps ConocoPhillips must follow to request a review of the Department's allegations and determinations in this matter in a contested case hearing are set forth in Section V of the enclosed Notice and in OAR 340-011-0530. ConocoPhillips needs to follow the rules to ensure that ConocoPhillips does not lose the opportunity to dispute the enclosed Notice.

If ConocoPhillips wishes to dispute the Notice, ConocoPhillips must send a written request for a contested case hearing, including a written response that admits or denies all of the facts alleged in

Sections III and IV of the enclosed Notice. The written response should also allege all affirmative defenses and explain why they apply in this matter. ConocoPhillips will not be allowed to raise these issues at a later time, unless ConocoPhillips can show good cause for that failure.

If the Department does not receive a request for a contested case hearing within **twenty calendar days** from the date ConocoPhillips receives the enclosed documents, the Department will issue a Default Order and the civil penalty assessment will become final and enforceable. ConocoPhillips can fax a request for a contested case hearing to the Department at 503-229-5100 or mail it to the address stated in Section V of the Notice.

If ConocoPhillips wishes to discuss this matter with the Department, or believes there are mitigating factors that the Department might not have considered in assessing the civil penalty, ConocoPhillips may include a request for an informal discussion in the request for a contested case hearing. If ConocoPhillips requests an informal discussion, ConocoPhillips still has the right to a contested case hearing.

I look forward to ConocoPhillips' cooperation in complying with Oregon environmental law in the future. If, however, any additional violations occur, ConocoPhillips may be assessed additional civil penalties.

Copies of referenced rules are enclosed. Also enclosed is a description of the Department's policy allowing partial mitigation of the civil penalty upon ConocoPhillips' completion of a Supplemental Environmental Project (SEP) approved by the Department. If ConocoPhillips is interested in having a portion of the civil penalty fund a SEP, ConocoPhillips should review the policy.

If ConocoPhillips has any questions about the Notice, please contact Sarah Greenley with the Department's Office of Compliance and Enforcement in Portland at 503-229-6927, or toll-free at 1-800-452-4011, extension 6927.

Sincerely,

Dick Pedersen
Deputy Director

Enclosures

cc: Tom Rosetta, Northwest Region Office, DEQ
Neil Mullane, Northwest Region Office, DEQ
Nina DeConcini, Northwest Region Office, DEQ
Water Quality Division, HQ, DEQ
Larry Knudsen, Oregon Department of Justice, Portland Office
U. S. Environmental Protection Agency
Multnomah County District Attorney

BEFORE THE ENVIRONMENTAL QUALITY COMMISSION

OF THE STATE OF OREGON

IN THE MATTER OF: CONOCOPHILLIPS COMPANY, a Delaware corporation, Respondent.	))))))	NOTICE OF VIOLATION AND CIVIL PENALTY ASSESSMENT NO. WQ/I-07-138 MULTNOMAH COUNTY

I. AUTHORITY

This Notice of Violation and Civil Penalty Assessment (Notice) is issued to Respondent, ConocoPhillips Company, a Delaware corporation, by the Department of Environmental Quality (Department) on behalf of the Environmental Quality Commission pursuant to Oregon Revised Statutes (ORS) 468.100 and 468.126 through 468.140, ORS Chapter 183 and Oregon Administrative Rules (OAR) Chapter 340, Divisions 011 and 012.

II. PERMIT

On December 23, 1997, the Department issued a National Pollutant Discharge Elimination System (NPDES) General 1300-J Permit (the Permit) to Respondent pursuant to ORS 468B.050. The Permit authorizes Respondent to discharge stormwater only in conformance with the requirements of the Permit. The Permit was in effect at all material times.

III. VIOLATION

On February 20, 2007, Respondent violated ORS 468B.025(2), by failing to meet a condition of a waste discharge permit issued under ORS 468B.050. Specifically, on February 20, 2007, Respondent discharged stormwater with a pH of 3.07 standard units (SU) from oil/water separator 004 at its Portland Terminal Facility in Portland, Oregon. Respondent operates this facility under a general 1300J stormwater permit issued by the Department pursuant to ORS 468B.050 (the Permit). Schedule A, Condition 4(a) of the Permit requires Respondent's discharged stormwater have a pH within the range of 6.0 to 9.0 SU. According to OAR 340-012-0055(1)(k)(B), this is a Class I violation.

///

COP0021860

IV. CIVIL PENALTY ASSESSMENT

The Department imposes a civil penalty of $6,000 for the violation cited in Section II. The findings and determination of Respondent's civil penalty, pursuant to OAR 340-012-0045, are attached and incorporated as Exhibit No. 1.

V. OPPORTUNITY FOR CONTESTED CASE HEARING

Respondent has the right to have a contested case hearing before an administrative law judge regarding the matters contained in this Notice, provided Respondent files a written request for a contested case hearing **within twenty (20) calendar days from the date of service of this Notice**. The request for a contested case hearing must be received by the Department within twenty (20) calendar days from the date of service of this Notice. Pursuant to OAR 340-011-0530(4), if Respondent fails to file a timely request for a hearing, the late filing will not be allowed unless the late filing was beyond Respondent's reasonable control.

The request for a hearing must include a written response to this Notice that admits or denies all factual matters alleged in this Notice. In the written response, Respondent must also allege any and all affirmative defenses and explain the reasoning in support of each affirmative defense. The contested case hearing will be limited to those issues raised in this Notice and in Respondent's request for a contested case hearing. Unless Respondent is able to show good cause:

1. Factual matters not denied in a timely manner will be considered admitted;
2. Failure to timely raise a defense will waive the ability to raise that defense at a later time;
3. New matters alleged in the request for a hearing are denied by the Department unless admitted in subsequent stipulation by the Department.

Send the request for hearing to: **Deborah Nesbit, Oregon Department of Environmental Quality, 811 S.W. 6th Avenue, Portland, Oregon 97204, or via fax at 503-229-5100**. Following the Department's receipt of a request for a contested case hearing, Respondent will be notified of the date, time and place of the contested case hearing.

///

COP0021861

If Respondent fails to file a timely request for contested case hearing, Respondent may lose the right to a contested case hearing, and the Department may enter a Default Order for the relief sought in this Notice.

Failure to appear at a scheduled contested case hearing may result in an entry of a Default Order.

The Department's case file at the time this Notice was issued will serve as the record for purposes of entering a Default Order.

VI. OPPORTUNITY FOR INFORMAL DISCUSSION

In addition to filing a request for a contested case hearing, Respondent may also request an informal discussion with the Department by including such a request in the request for a contested case hearing. Respondent's request for an informal discussion does not waive Respondent's right to a contested case hearing.

VII. PAYMENT OF CIVIL PENALTY

The civil penalty is due and payable ten (10) days after an Order imposing the civil penalty becomes final by operation of law or on appeal. Respondent may pay the penalty before that time. Respondent's check or money order in the amount of $6,000 should be made payable to **"State Treasurer, State of Oregon"** and sent to the **Business Office, Department of Environmental Quality, 811 S.W. Sixth Avenue, Portland, Oregon 97204.**

11-30-07
Date

Dick Pedersen
Deputy Director

COP0021862

COP0021863

EXHIBIT NO. 1

FINDINGS AND DETERMINATION OF RESPONDENT'S CIVIL PENALTY PURSUANT TO OREGON ADMINISTRATIVE RULE (OAR) 340-012-0045

VIOLATION: Failing to meet Condition 4(a) of Schedule A of a waste discharge permit issued under 486B.050, in violation of ORS 468B.025(2).

CLASSIFICATION: This is a Class I violation pursuant to OAR 340-012-0055(1)(k)(B).

MAGNITUDE: The magnitude of the violation is major pursuant to OAR 340-012-0135(2)(b)(A)(iv), as Respondent's effluent was 2.93 pH units below the standard.

CIVIL PENALTY FORMULA: The formula for determining the amount of penalty of each violation is:

$$BP + [(0.1 \times BP) \times (P + H + O + M + C)] + EB$$

"BP" is the base penalty, which is $6,000 for a Class I, major magnitude violation in the matrix listed in OAR 340-012-0140(3)(b)(A)(i) and applicable pursuant to OAR 340-012-0140(3)(a)(E)(iii).

"P" is whether Respondent has any prior significant actions, as defined in OAR 340-012-0030(16), in the same media as the violation at issue that occurred at a facility owned or operated by the same Respondent, and receives a value of 0 according to OAR 340-012-0145(2)(a)(A), because Respondent has not had any prior significant actions.

"H" is Respondent's history of correcting prior significant action(s) and receives a value of 0 according to OAR 340-012-0145(3)(a)(C), because Respondent has not had any prior significant actions.

"O" is whether the violation was repeated or ongoing and receives a value of 0 according to OAR 340-012-0145(4)(a)(A), because the violation occurred on one day (February 20, 2007).

"M" is the mental state of the Respondent and receives a value of 2 according to OAR 340-012-0145(5)(a)(B), because Respondent had constructive knowledge that discharging effluent with a pH of 3.07 would be a violation. Respondent's Permit prohibits Respondent from discharging effluent with a pH outside the range of 6.0 to 9.0.

"C" is Respondent's efforts to correct the violation and receives a value of -2 according to OAR 340-012-0145(6)(a)(B), because Respondent made extraordinary efforts to ensure the violation would not be repeated. Respondent is conducting pH monitoring beyond what is required by the Permit.

"EB" is the approximate economic benefit that an entity gained by not complying with the law. It is designed to "level the playing field" by taking away any economic advantage the entity gained and to deter potential violators from deciding it is cheaper to violate and pay the penalty than to pay the costs of compliance. In this case, "EB" receives a value of $0, as the Department has insufficient information on which to base a finding.

COP0021864

PENALTY CALCULATION:

Penalty = BP + [(0.1 x BP) x (P + H + O + M + C)] + EB
= $6,000 + [(0.1 x $6,000) x (0 + 0 + 0 + 2 – 2)] + $0
= $6,000 + [($600) x (0)] + $0
= $6,000 + $0 + $0
= $6,000

COP0021865

468B.025 Prohibited activities. (1) Except as provided in ORS 468B.050 or 468B.053, no person shall:

(a) Cause pollution of any waters of the state or place or cause to be placed any wastes in a location where such wastes are likely to escape or be carried into the waters of the state by any means.

(b) Discharge any wastes into the waters of the state if the discharge reduces the quality of such waters below the water quality standards established by rule for such waters by the Environmental Quality Commission.

(2) No person shall violate the conditions of any waste discharge permit issued under ORS 468B.050.

(3) Violation of subsection (1) or (2) of this section is a public nuisance. [Formerly 449.079 and then 468.720; 1997 c.286 §5]

OREGON SECRETARY OF STATE
Oregon State Archives
HOME SEARCH CONTACT US
OARs legislative records mgmt genealogy governors
holdings state agency local govt web exhibits tour

The Oregon Administrative Rules contain OARs filed through June 15, 2007

DEPARTMENT OF ENVIRONMENTAL QUALITY

DIVISION 12

ENFORCEMENT PROCEDURE AND CIVIL PENALTIES

340-012-0026

Policy

(1) The goals of enforcement are to:

(a) Protect the public health and the environment;

(b) Obtain and maintain compliance with applicable environmental statutes and the department's rules, permits and orders;

(c) Deter future violators and violations; and

(d) Ensure an appropriate and consistent statewide enforcement program.

(2) The department shall endeavor by conference, conciliation and persuasion to solicit compliance.

(3) The department endeavors to address all alleged violations in order of priority, based on the actual or potential impact to human health or the environment, using increasing levels of enforcement as necessary to achieve the goals set forth in section (1) of this rule.

COP0021868

(4) The department subjects violators who do not comply with an initial enforcement action to increasing levels of enforcement until they come into compliance.

(5) The department assesses civil penalties based on the class of violation, the magnitude of violation, the application of the penalty matrices and aggravating and mitigating factors, and the economic benefit realized by the respondent.

(a) Classification of Violation. Each violation is classified as Class I, Class II or Class III. Class I violations have the greatest likelihood of actual or potential impact to human health or the environment or are of the greatest significance to the regulatory structure of the given environmental program. Class II violations are less likely than Class I violations to have actual or potential impact to human health or the environment. Class III violations have the least likelihood of actual or potential impact to human health and the environment. (See OAR 340-012-0053 to 340-012-0097.)

(b) Magnitude of Violation. For Class I and Class II violations, the department uses a selected magnitude or determines the magnitude based on the impact to human health and the environment resulting from that particular violation. A magnitude is not determined for Class III violations. (See OAR 340-012-0130 and 340-012-0135.)

(c) Base Penalty Matrices. The department uses the base penalty matrices to determine an appropriate penalty based on the classification and magnitude of the violation. (See OAR 340-012-0140.)

(d) Aggravating and Mitigating Factors. The department uses the aggravating and mitigating factors to adjust the base penalty to reflect the particular circumstances surrounding the violation. These factors include the duration of the violation, the respondent's past compliance history, the mental state of the respondent, and the respondent's cooperativeness in achieving compliance or remedying the situation. (See OAR 340-012-0145.)

(e) Economic Benefit. The department adds the economic benefit gained by the respondent to the civil penalty to achieve deterrence and create equity between the respondent and those regulated persons who have borne the expense of maintaining compliance. (See OAR 340-012-0150.)

(6) The department endeavors to issue a formal enforcement action within six months from completion of the investigation of the violation.

Stat. Auth.: ORS 459.995, 466, 467, 468.020, 468.996, 468A & 468B
Stats. Implemented: ORS 183.090, 454.635, 454.645, 459.376, 459.995, 465.900, 466.210, 466.880-895, 468.090-140, 468A.990, 468.992, 468B.025, 468B.220 & 468B.450
Hist.: DEQ 4-1989, f. & cert. ef. 3-14-89; DEQ 15-1990, f. & cert. ef. 3-30-90; DEQ 21-1992, f. & cert. ef. 8-11-92; DEQ 4-2005, f. 5-13-05, cert. ef. 6-1-05

340-012-0027

COP0021869

Rule Effective Date

These rules will become effective on March 31, 2006.

Stat. Auth.: ORS 468.020
Stats. Implemented: ORS 183.355, 454, 459, 465, 466, 468, 468A & 468B
Hist.: DEQ 4-2005, f. 5-13-05, cert. ef. 6-1-05; DEQ 4-2006, f. 3-29-06, cert. ef. 3-31-06

340-012-0028

Scope of Applicability

Amendments to OAR 340-012-0026 to 340-012-0170 shall only apply to formal enforcement actions issued by the Department on or after the effective date of such amendments and not to any contested cases pending or formal enforcement actions issued prior to the effective date of such amendments.

Stat. Auth.: ORS 454, 459.995, 466, 467, 468.020 & 468.996
Stats. Implemented: ORS 183.090, 454.635, 454.645, 459.376, 459.995, 465.900, 466.210, 466.880-895, 468.090-140, 468A.990, 468.992, 468B.025, 468B.220 & 468B.450
Hist.: DEQ 4-1989, f. & cert. ef. 3-14-89; DEQ 15-1990, f. & cert. ef. 3-30-90; DEQ 21-1992, f. & cert. ef. 8-11-92; Renumbered from 340-012-0080; DEQ 4-2005, f. 5-13-05, cert. ef. 6-1-05

340-012-0030

Definitions

All terms used in this division have the meaning given to the term in the appropriate substantive statute or rule or, in the absence of such definition, their common and ordinary meaning unless otherwise required by context or defined below:

(1) "Alleged Violation" means any violation cited in a Notice of Noncompliance, Warning Letter or Pre-Enforcement Notice that the department or other government agency records after observation, investigation or data collection, or for which the department receives independent evidence sufficient to issue a Notice of Noncompliance, Warning Letter or Pre-Enforcement Notice.

(2) "Class I Equivalent," which is used to determine the value of the "P" factor in the civil penalty formula, means two Class II violations, one Class II and two Class III violations, or three Class III violations.

(3) "Commission" means the Environmental Quality Commission.

(4) "Compliance" means meeting the requirements of the applicable statutes, and commission or department rules, permits or orders.

COP0021870

(5) "Conduct" means an act or omission.

(6) "Director" means the director of the department or the director's authorized deputies or officers.

(7) "Department" means the Department of Environmental Quality.

(8) "Flagrant" or "flagrantly" means the respondent had actual knowledge that the conduct was unlawful and consciously set out to commit the violation.

(9) "Formal Enforcement Action" (FEA) means a proceeding initiated by the department that entitles a person to a contested case hearing or that settles such entitlement, including, but not limited to, Notices of Violation, Notices of Civil Penalty, Penalty Demand Notices, department orders, commission orders, Mutual Agreement and Orders, and other consent orders.

(10) "Intentional" means the respondent acted with a conscious objective to cause the result of the conduct.

(11) "Magnitude of the Violation" means the extent and effects of a respondent's deviation from statutory requirements, rules, standards, permits or orders.

(12) "Negligence" or "Negligent" means the respondent failed to take reasonable care to avoid a foreseeable risk of conduct constituting or resulting in a violation.

(13) "Penalty Demand Notice" (PDN) means a written notice issued to a respondent by the department demanding payment of a stipulated penalty pursuant to the terms of an agreement entered into between the respondent and the department.

(14) "Pre-Enforcement Notice" (PEN) means a written notice of an alleged violation that the department is considering for formal enforcement.

(15) "Person" includes, but is not limited to, individuals, corporations, associations, firms, partnerships, trusts, joint stock companies, public and municipal corporations, political subdivisions, states and their agencies, and the federal government and its agencies.

(16) "Prior Significant Action" (PSA) means any violation cited in an FEA, with or without admission of a violation, that becomes final by payment of a civil penalty, by a final order of the commission or the department, or by judgment of a court.

(17) "Reckless" or "Recklessly" means the respondent consciously disregarded a substantial and unjustifiable risk that the result would occur or that the circumstance existed. The risk must be of such a nature and degree that disregarding that risk constituted a gross deviation from the standard of care a reasonable person would observe in that situation.

COP0021871

(18) "Residential Owner-Occupant" means the person who owns or otherwise possesses a single family dwelling unit, and who occupies that dwelling at the time of the alleged violation. The violation must involve or relate to the normal uses of a dwelling unit.

(19) "Respondent" means the person to whom an FEA is issued.

(20) "Systematic" means any violation that occurred or occurs on a regular basis.

(21) "Violation" means a transgression of any statute, rule, order, license, permit, or any part thereof and includes both acts and omissions.

(22) "Warning Letter" (WL) means a written notice of an alleged violation for which formal enforcement is not anticipated.

(23) "Willful" means the respondent had a conscious objective to cause the result of the conduct and the respondent knew or had reason to know that the result was not lawful.

Stat. Auth.: ORS 468.020 & 468.130
Stats. Implemented: ORS 459.376, 459.995, 465.900, 468.090-140, 466.880-895, 468.996-997, 468A.990-992 & 468B.220
Hist.: DEQ 78, f. 9-6-74, ef. 9-25-74; DEQ 22-1984, f. & ef. 11-8-84; DEQ 22-1988, f. & cert. ef. 9-14-88; DEQ 4-1989, f. & cert. ef. 3-14-89; DEQ 15-1990, f. & cert. ef. 3-30-90; DEQ 21-1992, f. & cert. ef. 8-11-92; DEQ 4-1994, f. & cert. ef. 3-14-94; DEQ 19-1998, f. & cert. ef. 10-12-98; DEQ 4-2005, f. 5-13-05, cert. ef. 6-1-05

340-012-0035 [Renumbered to 340-011-0540]

340-012-0038

Warning Letters, Pre-Enforcement Notices and Notices of Permit Violation

(1) A Warning Letter (WL) is a written notice of an alleged violation for which formal enforcement is not anticipated. WLs may contain an opportunity to correct noncompliance as a means of avoiding formal enforcement. A WL generally will identify the alleged violation(s) found, what needs to be done to comply, and the consequences of further noncompliance. WLs will be issued under the direction of a manager or authorized representative. A person receiving a WL may provide information to the department to clarify the facts surrounding the alleged violation(s). If the department determines that the conduct identified in the WL did not occur, the department will withdraw or amend the WL, as appropriate, within 30 days. A WL is not an FEA and does not afford any person a right to a contested case hearing.

(2) A Pre-Enforcement Notice (PEN) is a written notice of an alleged violation that the department is considering for formal enforcement. A PEN generally will identify the alleged violations found, what

COP0021872

needs to be done to comply, the consequences of further noncompliance, and the formal enforcement process that may occur. PENs will be issued under the direction of a manager or authorized representative. A person receiving a PEN may provide information to the department to clarify the facts surrounding the alleged violations. If the department determines that the conduct identified in the PEN did not occur, the department will withdraw or amend the PEN, as appropriate, within 30 days. Failure to send a PEN does not preclude the department from issuing an FEA. A PEN is not a formal enforcement action and does not afford any person a right to a contested case hearing.

(3) Notice of Permit Violation (NPV):

(a) Except as provided in subsection (3)(e) below, an NPV will be issued for the first occurrence of an alleged Class I violation of an air, water or solid waste permit issued by the department, and for repeated or continuing alleged Class II or Class III violations of an air, water, or solid waste permit issued by the department when a Notice of Noncompliance or WL has failed to achieve compliance or satisfactory progress toward compliance.

(b) An NPV is in writing, specifies the violation and states that a civil penalty will be imposed for the permit violation unless the permittee submits one of the following to the department within five working days of receipt of the NPV:

(A) A written response from the permittee certifying that the permittee is complying with all terms and conditions of the permit from which the violation is cited. The response must include a description of the information on which the permittee's certification relies sufficient to enable the department to determine that compliance has been achieved. The certification must be signed by a Responsible Official based on information and belief after making reasonable inquiry. For purposes of this rule, "Responsible Official" means one of the following:

(i) For a corporation: a president, secretary, treasurer, or vice-president of the corporation in charge of a principal business function, or any other person who performs similar policy- or decision-making functions for the corporation; or the manager of one or more manufacturing, production, or operating facilities if authority to sign documents has been assigned or delegated to the manager in accordance with corporate procedures.

(ii) For a partnership or sole proprietorship: a general partner or the proprietor, respectively.

(iii) For a municipality, state, federal, or other public agency: either a principal executive officer or appropriate elected official.

(B) A written proposal, acceptable to the department, describing how the permittee will bring the facility into compliance with the permit. At a minimum, an acceptable proposal must include the following:

(i) A detailed plan and time schedule for achieving compliance in the shortest practicable time;

COP0021873

(ii) A description of the interim steps that will be taken to reduce the impact of the permit violation until the permittee is in compliance with the permit; and

(iii) A statement that the permittee has reviewed all other conditions and limitations of the permit and no other violations of the permit were discovered; or

(C) For a water quality permit violation, a written request to the department that the department follow procedures described in ORS 468B.032. Notwithstanding the requirement for a response to the department within five working days, the permittee may file a request under this paragraph within 20 days from the date of service of the NPV.

(c) If a compliance schedule approved by the department under paragraph (3)(b)(B) provides for a compliance period of more than six months, the compliance schedule must be incorporated into a final order that provides for stipulated penalties in the event of any failure to comply with the approved schedule. The stipulated penalties may be set at amounts equivalent to the base penalty amount appropriate for the underlying violation as set forth in OAR 340-012-0140;

(d) If the NPV is issued by a regional authority, the regional authority may require that the permittee submit information in addition to that described in subsection (3)(b).

(e) The department may assess a penalty without first issuing an NPV if:

(A) The violation is intentional;

(B) The water or air violation would not normally occur for five consecutive days;

(C) The permittee has received an NPV or an FEA with respect to any violation of the permit within the 36 months immediately preceding the alleged violation;

(D) The permittee is subject to the Oregon Title V operating permit program and violates any rule or standard adopted under ORS chapter 468A or any permit or order issued under ORS chapter 468A; or

(E) The requirement to provide an NPV would disqualify a state program from federal approval or delegation. The permits and permit conditions to which this NPV exception applies include:

(i) Air Contaminant Discharge Permit (ACDP) conditions that implement the State Implementation Plan under the federal Clean Air Act;

(ii) Water Pollution Control Facility (WPCF) permit conditions that implement the Underground Injection Control program under the federal Safe Drinking Water Act;

(iii) National Pollutant Discharge Elimination System (NPDES) Permit conditions; and

COP0021874

(iv) Municipal Landfill Solid Waste Disposal Permit conditions that implement Subtitle D of the federal Solid Waste Disposal Act.

(f) For purposes of section (3), a "permit" includes permit renewals and modifications. No such renewal or modification will result in the requirement that the department provide the permittee with an additional advance notice before formal enforcement if the permittee has received an NPV, or other FEA, with respect to the permit, within the 36 months immediately preceding the alleged violation.

[Publications: Publications referenced are available from the agency.]

Stat. Auth.: ORS 468.020
Stats. Implemented: ORS 459.376, 468.090-468.140, 468A.990 & 468B.025
Hist.: DEQ 78, f. 9-6-74, ef. 9-25-74; DEQ 25-1979, f. & ef. 7-5-79; DEQ 22-1984, f. & ef. 11-8-84; DEQ 16-1985, f. & ef. 12-3-85; DEQ 22-1988, f. & cert. ef. 9-14-88; DEQ 4-1989, f. & cert. ef. 3-14-89; DEQ 15-1990, f. & cert. ef. 3-30-90; DEQ 21-1992, f. & cert. ef. 8-11-92; DEQ 4-1994, f. & cert. ef. 3-14-94; DEQ 19-1998, f. & cert. ef. 10-12-98; Renumbered from 340-012-0040, DEQ 4-2005, f. 5-13-05, cert. ef. 6-1-05

340-012-0040 [Renumbered to 340-012-0038]

340-012-0041

Formal Enforcement Actions

(1) FEAs may require that the respondent take action within a specified timeframe or may assess civil penalties. The department may issue an NPV or FEA whether or not it has previously issued a Notice of Noncompliance, WL or PEN related to the issue or violation. Unless specifically prohibited by statute or rule, the department may issue an FEA without first issuing an NPV.

(2) A Notice of Civil Penalty Assessment (CPA) may be issued for the occurrence of any class of violation that is not limited by the NPV requirement of OAR 340-012-0038(3).

(3) An Order may be in the form of a commission or department order, including any written order that has been consented to in writing by the parties thereto, including but not limited to, a Mutual Agreement and Order (MAO).

(4) A Penalty Demand Notice (PDN) may be issued according to the terms of any written final order that has been consented to in writing by the parties thereto, including, but not limited to, a MAO.

(5) The enforcement actions described in sections (2) through (4) of this rule in no way limit the department or commission from seeking any other legal or equitable remedies, including revocation of any department-issued license or permit, provided by ORS Chapters 183, 454, 459, 465, 466, 467, 468, 468A, and 468B.

COP0021875

Stat. Auth.: ORS 454.625, 459.376, 465.400-410, 466.625, 467.030, 468.020, 468A.025, 468A.045 & 468B.035
Stats. Implemented: ORS 454.635, 454.645, 459.376, 459.995, 465.900, 466.210, 466.880-895, 468.090-140, 468A.990, 468.992, 468B.025, 468B.220 & 468B.450
Hist.: DEQ 4-1989, f. & cert. ef. 3-14-89; DEQ 15-1990, f. & cert. ef. 3-30-90; DEQ 21-1992, f. & cert. ef. 8-11-92; DEQ 4-1994, f. & cert. ef. 3-14-94; DEQ 19-1998, f. & cert. ef. 10-12-98; DEQ 4-2005, f. 5-13-05, cert. ef. 6-1-05

340-012-0042 [Renumbered to 340-012-0140]

340-012-0045

Civil Penalty Determination Procedure

Except as provided in OAR 340-012-0038(3), in addition to any other liability, duty, or other penalty provided by law, the department may assess a civil penalty for any violation. Except for civil penalties assessed under OAR 340-012-0155(2), the department determines the amount of the civil penalty using the following procedures:

(1) The classification of each violation is determined by consulting OAR 340-012-0053 to 340-012-0097;

(2) The magnitude of the violation is determined as follows:

(a) The selected magnitude categories in OAR 340-012-0135 are used.

(b) If a selected magnitude is not specified in OAR 340-012-0135, or if information is not reasonably available to determine which selected magnitude applies, OAR 340-012-0130 is used to determine the magnitude of the violation.

(c) The appropriate base penalty (BP) for each violation is determined by applying the classification and magnitude of each violation to the matrices in OAR 340-012-0140.

(d) The base penalty is adjusted by the application of aggravating or mitigating factors (P = prior significant actions, H = history in correcting prior significant actions, O = repeated or ongoing violation, M = mental state of the violator and C = efforts to correct) as set forth in OAR 340-012-0145.

(e) The appropriate economic benefit (EB) is determined as set forth in OAR 340-012-0150.(2) The results of the determinations made in section (1) are applied in the following formula to calculate the penalty: BP + [(0.1 x BP) x (P + H + O + M + C)] + EB.

(3) In addition to the factors listed in section (1) of this rule, the director may consider any other relevant rule of the commission in assessing a civil penalty and will state the effect that rule had on the penalty

COP0021876

amount.

Stat. Auth.: ORS 468.020
Stats. Implemented: ORS 454.635, 454.645, 459.376, 459.995, 465.900, 466.210, 466.880-895, 468.090-140, 468.992, 468A.990, 468B.025, 468B.220 & 468B.450
Hist.: DEQ 78, f. 9-6-74, ef. 9-25-74; DEQ 22-1984, f. & ef. 11-8-84; DEQ 22-1988, f. & cert. ef. 9-14-88; DEQ 4-1989, f. & cert. ef. 3-14-89; DEQ 15-1990, f. & cert. ef. 3-30-90; DEQ 21-1992, f. & cert. ef. 8-11-92; DEQ 4-1994, f. & cert. ef. 3-14-94; DEQ 19-1998, f. & cert. ef. 10-12-98; DEQ 1-2003, f. & cert. ef. 1-31-03; DEQ 4-2005, f. 5-13-05, cert. ef. 6-1-05

340-012-0047 [Renumbered to 340-012-0170]

340-012-0048 [Renumbered to 340-012-0165]

340-012-0049 [Renumbered to 340-012-0155]

340-012-0050 [Renumbered to 340-012-0054]

340-012-0053

Violations that Apply to all Programs

(1) **Class I:**

(a) Violating a requirement or condition of a commission or department order, consent order, agreement, consent judgment (formerly called judicial consent decree) or compliance schedule contained in a permit;

(b) Submitting false, inaccurate or incomplete information to the department where the submittal masked a violation, caused environmental harm, or caused the department to misinterpret any substantive fact;

(c) Failing to provide access to premises or records as required by statute, permit, order, consent order, agreement or consent judgment (formerly called judicial consent decree); or

(d) Using fraud or deceit to obtain department approval, permit or license.

(2) **Class II:** Violating any otherwise unclassified requirement.

Stat. Auth.: ORS 468.020 & 468.130
Stats. Implemented: ORS 459.376, 459.995, 465.900, 465.992, 466.990 - 466.994, 468.090 - 468.140 & 468B.450
Hist.: DEQ 4-2005, f. 5-13-05, cert. ef. 6-1-05; DEQ 4-2006, f. 3-29-06, cert. ef. 3-31-06

COP0021877

340-012-0054

Air Quality Classification of Violations

(1) **Class I**:

(a) Constructing a new source or modifying an existing source without first obtaining a required New Source Review/Prevention of Significant Deterioration (NSR/PSD) permit;

(b) Operating a major source, as defined in OAR 340-200-0020, without first obtaining the required permit;

(c) Exceeding a Plant Site Emission Limit (PSEL);

(d) Failing to install control equipment or meet performance standards as required by New Source Performance Standards under OAR 340 division 238 or National Emission Standards for Hazardous Air Pollutant Standards under OAR 340 division 244;

(e) Exceeding a hazardous air pollutant emission limitation;

(f) Failing to comply with an Emergency Action Plan;

(g) Exceeding an opacity or emission limit (including a grain loading standard) or violating an operational or process standard, that was established pursuant to New Source Review/Prevention of Significant Deterioration (NSR/PSD), or the Western Backstop SO2 Trading Program;

(h) Exceeding an emission limit or violating an operational or process standard that was established to limit emissions to avoid classification as a major source, as defined in OAR 340-200-0020;

(i) Exceeding an emission limit, including a grain loading standard, by a major source, as defined in OAR 340-200-0020, when the violation was detected during a reference method stack test;

(j) Failing to perform testing or monitoring, required by a permit, rule or order, that results in failure to show compliance with a Plant Site Emission Limit (PSEL) or with an emission limitation or a performance standard set pursuant to New Source Review/Prevention of Significant Deterioration (NSR/PSD), National Emission Standards for Hazardous Air Pollutants (NESHAP), New Source Performance Standards (NSPS), Reasonable Achievable Control Technology (RACT), Best Achievable Control Technology (BACT), Maximum Achievable Control Technology (MACT), Typically Achievable Control Technology (TACT), Lowest Achievable Emissions Rates (LAER) or adopted pursuant to section 111(d) of the Federal Clean Air Act;

(k) Causing emissions that are a hazard to public safety;

COP0021878

(l) Violating a work practice requirement for asbestos abatement projects;

(m) Storing or accumulating friable asbestos material or asbestos-containing waste material;

(n) Conducting an asbestos abatement project, by a person not licensed as an asbestos abatement contractor;

(o) Violating an OAR 340 division 248 disposal requirement for asbestos-containing waste material;

(p) Failing to hire a licensed contractor to conduct an asbestos abatement project;

(q) Openly burning materials which are prohibited from being open burned anywhere in the state by OAR 340-264-0060(3); or

(r) Failing to install certified vapor recovery equipment.

(s) Delivering for sale a noncompliant vehicle by an automobile manufacturer in violation of Oregon Low Emission Vehicle rules set forth in OAR 340 division 257.

(t) Exceeding an Oregon Low Emission Vehicle average emission limit set forth in OAR 340 division 257.

(u) Failing to comply with Zero Emission Vehicle (ZEV) sales requirements set forth in OAR 340 division 257.

(v) Failing to obtain a Motor Vehicle Indirect Source Permit as required in OAR 340 division 257.

(w) Selling, leasing, or renting a noncompliant vehicle by an automobile dealer or rental car agency in violation of Oregon Low Emission Vehicle rules set forth in OAR 340 division 257.

(2) **Class II:**

(a) Constructing or operating a source required to have an Air Contaminant Discharge Permit (ACDP) without first obtaining such permit, unless otherwise classified;

(b) Violating the terms or conditions of a permit or license, unless otherwise classified;

(c) Modifying a source in such a way as to require a permit modification from the department without first obtaining such approval from the department, unless otherwise classified;

(d) Exceeding an opacity limit, unless otherwise classified;

(e) Exceeding a Volatile Organic Compound (VOC) emission standard, operational requirement, control

COP0021879

requirement or VOC content limitation established by OAR 340 division 232;

(f) Failing to timely submit an ACDP annual report;

(g) Failing to timely submit a certification, report, or plan as required by rule or permit, unless otherwise classified;

(h) Failing to timely submit a permit application or permit renewal application;

(i) Failing to comply with the open burning requirements for commercial, construction, demolition, or industrial wastes in violation of OAR 340-264-0080 through 0180;

(j) Failing to comply with open burning requirements in violation of any provision of OAR 340 division 264, unless otherwise classified;

(k) Failing to replace, repair, or modify any worn or ineffective component or design element to ensure the vapor tight integrity and efficiency of a stage I or stage II vapor collection system;

(l) Failing to provide notification of an asbestos abatement project;

(m) Failing to perform a final air clearance test or submit an asbestos abatement project air clearance report for an asbestos abatement project; or

(n) Violating on road motor vehicle refinishing rules contained in OAR 340-242-0620.

(o) Failing to comply with an Oregon Low Emission Vehicle reporting, notification, or warranty requirement set forth in OAR division 257.

(3) **Class III**:

(a) Failing to perform testing or monitoring required by a permit, rule or order where missing data can be reconstructed to show compliance with standards, emission limitations or underlying requirements;

(b) Constructing or operating a source required to have a Basic Air Contaminant Discharge Permit without first obtaining the permit;

(c) Modifying a source in such a way as to require construction approval from the department without first obtaining such approval from the department, unless otherwise classified;

(d) Failing to provide proper notification of an asbestos abatement project or failing to revise a notification when necessary, unless otherwise classified;

(e) Submitting a late air clearance report that demonstrates compliance with the standards for an

COP0021880

asbestos abatement project; or

(f) Failing to display a temporary label on a certified woodstove.

(g) Licensing a noncompliant vehicle by an automobile dealer or rental car agency in violation of Oregon Low Emission Vehicle rules set forth in OAR 340 division 257.

[Publications: Publications referenced are available from the agency.]

Stat. Auth.: ORS 468.020, 468A.025 & 468A.045
Stats. Implemented: ORS 468.020 & 468A.025
Hist.: DEQ 78, f. 9-6-74, ef. 9-25-74; DEQ 5-1980, f. & ef. 1-28-80; DEQ 22-1984, f. & ef. 11-8-84; DEQ 22-1988, f. & cert. ef. 9-14-88; DEQ 4-1989, f. & cert. ef. 3-14-89; DEQ 15-1990, f. & cert. ef. 3-30-90; DEQ 31-1990, f. & cert. ef. 8-15-90; DEQ 2-1992, f. & cert. ef. 1-30-92; DEQ 21-1992, f. & cert. ef. 8-11-92; DEQ 19-1993, f. & cert. ef. 11-4-93; DEQ 20-1993(Temp), f. & cert. ef. 11-4-93; DEQ 4-1994, f. & cert. ef. 3-14-94; DEQ 13-1994, f. & cert. ef. 5-19-94; DEQ 21-1994, f. & cert. ef. 10-14-94; DEQ 22-1996, f. & cert. ef. 10-22-96; DEQ 19-1998, f. & cert. ef. 10-12-98; DEQ 6-2001, f. 6-18-01, cert. ef. 7-1-01; Renumbered from 340-012-0050, DEQ 4-2005, f. 5-13-05, cert. ef. 6-1-05; DEQ 4-2006, f. 3-29-06, cert. ef. 3-31-06; DEQ 6-2006, f. & cert. ef. 6-29-06

340-012-0055

Water Quality Classification of Violations

(1) **Class I:**

(a) Causing pollution of waters of the state;

(b) Reducing the water quality of waters of the state below water quality standards;

(c) Discharging any waste that enters waters of the state, either without a waste discharge permit or from a discharge point not authorized by a waste discharge permit;

(d) Operating a discharge source or conducting a disposal activity without first obtaining an individual permit or applying for coverage under a general permit for that discharge or disposal activity;

(e) Failing to comply with statute, rule, or permit requirements regarding notification of a spill or upset condition, which results in a non-permitted discharge to public waters;

(f) Failing to take appropriate action, as required by the municipal wastewater treatment works owner's department-approved pretreatment-compliance oversight program, against an industrial discharger to the municipal treatment works who violates any pretreatment standard or requirement, if the violation impairs or damages the treatment works, or causes major harm or poses a major risk of harm to public

COP0021881

health or the environment;

(g) Making unauthorized changes, modifications, or alterations to a facility operating under a Water Pollution Control Facility (WPCF) or National Pollutant Discharge Elimination System (NPDES) permit;

(h) Allowing operation or supervision of a wastewater treatment and collection system without proper certification, by the permittee and/or owner;

(i) Applying biosolids or domestic septage to a parcel of land that does not have department approval for land application;

(j) Applying biosolids that do not meet the pollutant, pathogen or one of the vector attraction reduction requirements of 40 CFR 503.33(b)(1) through (10);

(k) Violating a technology based effluent limitation, except for removal efficiency, in an NPDES or WPCF permit if:

(A) the discharge level (except for pH and bacteria) exceeds the limitation by 50 percent or more;

(B) the discharge is outside the permitted pH range by more than 2 pH units;

(C) the discharge exceeds a bacteria limit as a result of an inoperative disinfection system where there is no disinfection; or

(D) the discharge of reclaimed water exceeds a bacteria limit by more than five times the limit.

(l) Violating a water quality based effluent limitation in an NPDES permit;

(m) Violating a WPCF permit limitation in a designated groundwater management area if the exceedance is of a parameter for which the groundwater management area was established;

(n) Failing to report an effluent limitation exceedance;

(o) Failing to collect monitoring data required in Schedule B of the permit;

(p) Contracting for operation or operating a prohibited Underground Injection Control (UIC) system other than a cesspool that only disposes of human waste;

(q) Operating an Underground Injection Control (UIC) system that causes a data verifiable violation of federal drinking water standards in an aquifer used as an underground source of drinking water; or

(r) Failing to implement an erosion and sediment control plan in accordance with an NPDES permit.

COP0021882

(2) **Class II:**

(a) Violating a technology based effluent limitation, except for removal efficiency, in an NPDES or WPCF permit if:

(A) the discharge level (except for pH and bacteria) exceeds the limitation by 20 percent or more, but less than 50 percent, for biochemical oxygen demand (BOD), carbonaceous chemical oxygen demand (CBOD), and total suspended solids (TTS), or by 10 percent or more, but less than 50 percent, for all other limitations;

(B) the discharge is outside the permitted pH range by more than 1 pH unit but less than or equal to 2 pH units;

(C) the discharge exceeds a bacteria limit by a factor of five or more, unless otherwise classified; or

(D) the discharge of reclaimed water exceeds a bacteria limit by an amount equal to or less than five times the limit.

(b) Failing to timely submit a report or plan as required by rule, permit, or license, unless otherwise classified;

(c) Causing any wastes to be placed in a location where such wastes are likely to be carried into waters of the state by any means;

(d) Violating any management, monitoring, or operational plan established pursuant to a waste discharge permit, unless otherwise classified; or

(e) Failing to timely submit or implement a Total Maximum Daily Load (TMDL) Implementation Plan, by a Designated Management Agency (DMA), as required by department order.

(3) **Class III:**

(a) Failing to submit a complete discharge monitoring report;

(b) Violating a technology based effluent limitation, except for removal efficiency, in an NPDES or WPCF permit if:

(A) the discharge (except for pH and bacteria) exceeds the limitation by less than 20 percent for biochemical oxygen demand (BOD), carbonaceous chemical oxygen demand (CBOD), and total suspended solids (TSS), or by less than 10 percent for all other limitations;

(B) the discharge is outside the permitted pH range by 1 pH unit or less; or

COP0021883

(C) the discharge (except for reclaimed water) exceeds a bacteria limit by less than five times the limit.

(c) Failing to achieve a removal efficiency established in an NPDES or WPCF permit;

(d) Failing to register an Underground Injection Control (UIC) system, except for a UIC system prohibited by rule; or

(e) Failing to follow the owner's department-approved pretreatment program procedures, where such failure did not result in any harm to the treatment works and was not a threat to the public health or the environment.

Stat. Auth.: ORS 468.020 & 468B.015
Stats. Implemented: ORS 468.090 - 468.140, 468B.025, 468B.220 & 468B.305
Hist.: DEQ 78, f. 9-6-74, ef. 9-25-74; DEQ 22-1984, f. & ef. 11-8-84; DEQ 17-1986, f. & ef. 9-18-86; DEQ 22-1988, f. & cert. ef. 9-14-88; DEQ 4-1989, f. & cert ef. 3-14-89; DEQ 15-1990, f. & cert. ef. 3-30-90; DEQ 21-1992, f. & cert. ef. 8-11-92; DEQ 19-1998, f. & cert. ef. 10-12-98; DEQ 4-2005, f. 5-13-05, cert. ef. 6-1-05; DEQ 4-2006, f. 3-29-06, cert. ef. 3-31-06

340-012-0060

Onsite Sewage Disposal Classification of Violations

(1) **Class I:**

(a) Performing sewage disposal services without a current license;

(b) Installing or causing to be installed an onsite wastewater treatment system or any part thereof, or repairing or causing to be repaired any part thereof, without first obtaining a permit;

(c) Disposing of septic tank, holding tank, chemical toilet, privy or other treatment facility contents in a manner or location not authorized by the department; or

(d) Owning, operating or using an onsite wastewater treatment system that is discharging sewage or effluent to the ground surface or into waters of the state.

(2) **Class II:**

(a) Failing to meet the requirements for satisfactory completion within 30 days after written notification or posting of a Correction Notice at the site;

(b) Operating or using a nonwater-carried waste disposal facility without first obtaining a letter of authorization or permit;

COP0021884

(c) Operating or using an onsite wastewater treatment system or part thereof without first obtaining a Certificate of Satisfactory Completion;

(d) Advertising or representing oneself as being in the business of performing sewage disposal services without a current license;

(e) Placing into service, reconnecting to or changing the use of an onsite wastewater treatment system in a manner that increases the projected daily sewage flow into the system without first obtaining an authorization notice, construction permit, alteration permit, or repair permit;

(f) Failing to connect all plumbing fixtures to, or failing to discharge wastewater or sewage into, a department-approved system, unless failure results in sewage discharging to the ground surface or to waters of the state;

(g) Allowing, by a licensed sewage disposal business, an uncertified installer to supervise or be responsible for the construction or installation of a system or part thereof;

(h) Failing to submit an annual maintenance report, by a service provider of alternative treatment technologies; or

(i) Failing to report that a required operation and maintenance contract has been terminated, by a service provider of alternative treatment technologies.

(3) **Class III:**

(a) Failing to obtain an operation and maintenance contract from a certified service provider, by an owner of an alternative treatment technology, recirculating gravel filter or commercial sand filter; or

(b) Placing an existing onsite wastewater treatment system into service or changing the dwelling or type of commercial facility, without first obtaining an authorization notice, where the design flow of the system is not exceeded.

Stat. Auth.: ORS 454.050, 454.625 & 468.020
Stats. Implemented: ORS 454.635, 454.645 & 468.090 - 468.140
Hist.: DEQ 78, f. 9-6-74, ef. 9-25-74; DEQ 4-1981, f. & ef. 2-6-81; DEQ 22-1984, f. & ef. 11-8-84; DEQ 22-1988, f. & cert. ef. 9-14-88; DEQ 4-1989, f. & cert. ef. 3-14-89; DEQ 15-1990, f. & cert. ef. 3-30-90; DEQ 21-1992, f. & cert. ef. 8-11-92; DEQ 19-1998, f. & cert. ef. 10-12-98; DEQ 3-2005, f. 2-10-05, cert. ef. 3-1-05; DEQ 4-2006, f. 3-29-06, cert. ef. 3-31-06

340-012-0065

Solid Waste Management Classification of Violations

COP0021885

(1) **Class I:**

(a) Establishing or operating a disposal site without first obtaining a registration or permit;

(b) Accepting solid waste for disposal in a permitted solid waste unit or facility that has been expanded in area or capacity without first submitting plans to the department and obtaining department approval;

(c) Disposing of or authorizing the disposal of a solid waste at a location not permitted by the department to receive that solid waste;

(d) Violating a lagoon freeboard limit that results in the overflow of a sewage sludge or leachate lagoon;

(e) Accepting for treatment, storage, or disposal at a solid waste disposal site, without approval from the department, waste defined as hazardous waste, waste from another state which is hazardous under the laws of that state, or wastes prohibited from disposal by statute, rule, permit, or order;

(f) Failing to properly construct, maintain, or operate in good functional condition, groundwater, surface water, gas or leachate collection, containment, treatment, disposal or monitoring facilities in accordance with the facility permit, department approved plans, or department rules;

(g) Failing to collect, analyze or report groundwater, surface water or leachate quality data in accordance with the facility permit, the facility environmental monitoring plan, or department rules;

(h) Mixing for disposal or disposing of recyclable material that has been properly prepared and source separated for recycling;

(i) Failing to establish or maintain financial assurance as required by statute, rule, permit or order; or

(j) Failing to comply with the terms of a permit terminated due to a failure to submit a timely application for renewal.

(2) **Class II:**

(a) Failing to accurately report the amount of solid waste disposed, by a permitted disposal site or a metropolitan service district;

(b) Failing to timely or accurately report the weight and type of material recovered or processed from the solid waste stream;

(c) Failing to comply with landfill cover requirements, including but not limited to daily, intermediate, and final covers, or limitation of working face size;

(d) Operating a Household Hazardous Waste (HHW) collection event or temporary site without first

COP0021886

obtaining department approval or without complying with an approved plan for a HHW collection event; or

(e) Receiving or managing waste in violation of or without a department approved Special Waste Management Plan.

(3) **Class III:**

(a) Failing to post required signs;

(b) Failing to control litter;

(c) Failing to notify the department of any name or address change; or

(d) Violating any labeling requirement under ORS 459A.675-.685.

Stat. Auth.: ORS 459.045 & 468.020
Stats. Implemented: ORS 459.205, 459.376, 459.995 & 468.090 - 468.140
Hist.: DEQ 78, f. 9-6-74, ef. 9-25-74; DEQ 1-1982, f. & ef. 1-28-82; DEQ 22-1984, f. & ef. 11-8-84; DEQ 22-1988, f. & cert. ef. 9-14-88; DEQ 4-1989, f. & cert. ef. 3-14-89; DEQ 15-1990, f. & cert. ef. 3-30-90; DEQ 21-1992, f. & cert. ef. 8-11-92; DEQ 4-1994, f. & cert. ef. 3-14-94; DEQ 26-1994, f. & cert. ef. 11-2-94; DEQ 9-1996, f. & cert. ef. 7-10-96; DEQ 19-1998, f. & cert. ef. 10-12-98; DEQ 6-2001, f. 6-18-01, cert. ef. 7-1-01; DEQ 4-2005, f. 5-13-05, cert. ef. 6-1-05; DEQ 4-2006, f. 3-29-06, cert. ef. 3-31-06

340-012-0066

Solid Waste Tire Management Classification of Violations

(1) **Class I:**

(a) Establishing or operating a waste tire storage site without first obtaining a permit;

(b) Disposing of waste tires or tire-derived products at an unauthorized site;

(c) Violating the fire safety requirements of a waste tire storage site permit;

(d) Hauling waste tires without first obtaining a waste tire carrier permit; or

(e) Failing to establish and maintain financial assurance as required by statute, rule, permit or order.

(2) **Class II:** Failing to maintain written records of waste tire generation, storage, collection, transportation, or disposal.

COP0021887

(3) **Class III:**

(a) Failing to keep required records on use of vehicles;

(b) Failing to post required signs;

(c) Hiring or otherwise using an unpermitted waste tire carrier to transport waste tires; or

(d) Hauling waste tires in a vehicle not identified in a waste tire carrier permit or failing to display required decals as described in a permittee's waste tire carrier permit.

Stat. Auth.: ORS 459.785 & 468.020
Stats. Implemented: ORS 459.705 - 459.790, 459.992 & 468.090 - 468.140
Hist.: DEQ 4-1989, f. & cert. ef. 3-14-89; DEQ 15-1990, f. & cert. ef. 3-30-90; DEQ 21-1992, f. & cert. ef. 8-11-92; DEQ 19-1998, f. & cert. ef. 10-12-98; DEQ 4-2005, f. 5-13-05, cert. ef. 6-1-05; DEQ 4-2006, f. 3-29-06, cert. ef. 3-31-06

340-012-0067

Underground Storage Tank (UST) Classification of Violations

(1) **Class I:**

(a) Failing to investigate or confirm a suspected release;

(b) Failing to establish or maintain the required financial responsibility mechanism;

(c) Failing to obtain the appropriate general permit registration certificate before installing or operating an UST;

(d) Failing to install spill and overfill protection equipment that will prevent a release, or failing to demonstrate to the department that the equipment is properly functioning;

(e) Failing to install, operate or maintain a method or combination of methods for release detection such that the method can detect a release from any portion of the UST system;

(f) Failing to protect from corrosion any part of an UST system that routinely contains a regulated substance;

(g) Failing to permanently decommission an UST system;

(h) Failing to obtain approval from the department before installing or operating vapor or groundwater monitoring wells as part of a release detection method;

COP0021888

(i) Installing, repairing, replacing or modifying an UST system in violation of any rule adopted by the department;

(j) Failing to conduct testing or monitoring, or to keep records where the failure constitutes a significant operational compliance violation;

(k) Providing, offering or supervising tank services without the appropriate license;

(l) Demonstrating negligence or incompetence in performing tank services; or

(m) Failing to assess the excavation zone of a decommissioned or abandoned UST when directed to do so by the department.

(2) **Class II:**

(a) Continuing to use a method or methods of release detection after period allowed by rule has expired;

(b) Failing to have a trained UST system operator for an UST facility after March 1, 2004;

(c) Failing to apply for a modified general permit registration certificate;

(d) Failing to have an operation certificate for each compartment of a multi-chambered or multi-compartment UST when at least one compartment or chamber has an operation certificate;

(e) Installing, repairing, replacing or modifying an UST or UST equipment without providing the required notifications;

(f) Failing to decommission an UST in compliance with the statutes and rules adopted by the department, including, but not limited to, performance standards, procedures, notification, general permit registration and site assessment requirements;

(g) Providing tank services at an UST facility that does not have the appropriate general permit registration certificate;

(h) Failing to obtain the identification number and operation certificate number before depositing a regulated substance into an UST, by a distributor;

(i) Failing, by a distributor, to maintain a record of all USTs into which it deposited a regulated substance;

(j) Allowing tank services to be performed by a person not licensed by the department;

(k) Failing to submit checklists or reports for UST installation, modification or suspected release

COP0021889

confirmation activities;

(l) Failing to complete an integrity assessment before adding corrosion protection;

(m) Failing by an owner or permittee to pass the appropriate national examination before performing tank services; or

(n) Failing to provide the identification number or operation certificate number to persons depositing a regulated substance into an UST.

(3) **Class III:** Failing to notify the new owner or permittee of the department's general permit registration requirements, by a person who sells an UST.

Stat. Auth.: ORS 466.720, 466.746, 466.882, 466.994 & 468.020
Stats. Implemented: ORS 466.706 - 466.835, 466.994 & 468.090 - 468.140
Hist.: DEQ 2-1988, f. 1-27-88, cert. ef. 2-1-88; DEQ 22-1988, f. & cert. ef. 9-14-88; DEQ 4-1989, f. & cert. ef. 3-14-89; DEQ 15-1990, f. & cert. ef. 3-30-90; DEQ 15-1991, f. & cert. ef. 8-14-91; DEQ 21-1992, f. & cert. ef. 8-11-92; DEQ 4-1994, f. & cert. ef. 3-14-94; DEQ 19-1998, f. & cert. ef. 10-12-98; DEQ 6-2003, f. & cert. ef. 2-14-03; DEQ 4-2005, f. 5-13-05, cert. ef. 6-1-05; DEQ 4-2006, f. 3-29-06, cert. ef. 3-31-06

340-012-0068

Hazardous Waste Management and Disposal Classification of Violations

(1) **Class I:**

(a) Failing to make a complete and accurate hazardous waste determination of a residue as required by OAR 340-102-0011;

(b) Failing to meet Land Disposal Restriction (LDR) requirements when disposing of hazardous waste;

(c) Operating a hazardous waste treatment, storage or disposal facility (TSD) without first obtaining a permit or without having interim status;

(d) Treating, storing or accumulating hazardous waste in a hazardous waste management unit, as defined in 40 CFR 260.10, that does not meet the unit design or unit integrity assessment criteria for the hazardous waste management unit;

(e) Accepting, transporting or offering for transport hazardous waste without a uniform hazardous waste manifest;

(f) Transporting, delivering or designating on a manifest delivery of hazardous waste to a facility not

COP0021890

authorized or permitted to manage hazardous waste; or failing to submit an exception report;

(g) Failing to comply with management requirements for ignitable, reactive, or incompatible hazardous waste;

(h) Illegally treating or disposing of a hazardous waste;

(i) Failing to submit Land Disposal Restriction notifications;

(j) Failing to have and maintain a closure plan or post closure plan for a Treatment, Storage or Disposal (TSD) facility or for each regulated hazardous waste management unit, as defined in 40 CFR 260.10, by the owner or operator of facility or unit;

(k) Failing to carry out closure or post closure plan requirements, by an owner or operator of a TSD facility, such that the certification for completing closure or post closure work is not submitted, or is incomplete, inaccurate, or non-compliant with the approved plans;

(l) Failing to establish or maintain financial assurance or hazard liability requirements in 40 CFR 264.147 or 40 CFR 265.147, by an owner or operator of a TSD facility;

(m) Failing to follow emergency procedures in a Contingency Plan or other emergency response requirements during an incident in which a hazardous waste or hazardous waste constituent is released to the environment or the incident presents a risk of harm to employees, emergency responders or the public;

(n) Failing to comply with the export requirements in 40 CFR 262.52 for hazardous wastes;

(o) Failing to properly install a groundwater monitoring system in compliance with permit requirements, by an owner or operator of a TSD facility;

(p) Failing to properly control volatile organic hazardous waste emissions, by a large-quantity hazardous waste generator or TSD facility, when such failure could result in harm to employees, the public or the environment;

(q) Failing to inspect, operate, monitor, keep records or maintain in compliance with a permit: hazardous waste landfill units, incineration equipment, Subpart X treatment equipment, hazardous waste treatment units, pollution abatement equipment for hazardous waste treatment or disposal, or hazardous waste monitoring equipment; or

(r) Failing to immediately clean up spills or releases or threatened spills or releases of hazardous waste, by any person having ownership or control over hazardous waste.

(2) **Class II:**

COP0021891

(a) Failing to place an accumulation start date on a container used for accumulation or storage of hazardous waste;

(b) Failing to label a tank having a capacity of 100 gallons or more, or containers equaling more than 110 gallon capacity used for accumulation or storage of hazardous waste;

(c) Failing to post required emergency response information next to the telephone, by a small quantity generator;

(d) Accumulating hazardous waste more than thirty (30) days beyond the specified accumulation time frame;

(e) Failing to submit a manifest discrepancy report;

(f) Shipping hazardous waste on manifests that do not comply with department rules;

(g) Failing to prevent the unknown or unauthorized entry of a person or livestock into the waste management area of a treatment, storage or disposal facility;

(h) Failing to conduct required inspections at hazardous waste generator accumulation sites or hazardous waste permitted storage areas;

(i) Failing to prepare a contingency plan;

(j) Failing to follow the requirements of a groundwater monitoring program, unless otherwise classified;

(k) Failing to maintain adequate aisle space to allow the unobstructed movement of personnel, fire protection equipment, spill control equipment, and decontamination;

(l) Generating, treating, storing or disposing of hazardous waste without complying with the Personnel Training requirements;

(m) Failing to keep containers of hazardous waste closed, except when adding or removing wastes;

(n) Failing to comply with the requirements for management of containers, including satellite accumulation, other than the requirements for ignitable, reactive or incompatible waste, by a hazardous waste generator or storage facility;

(o) Failing to comply with the preparedness, prevention, contingency plan or emergency procedure requirements, unless otherwise classified;

(p) Failing to manage universal waste and waste pesticide residue in compliance with the universal waste management requirements or waste pesticide requirements;

COP0021892

(q) Failing to obtain a hazardous waste EPA identification number when required;

(r) Failing to comply with 40 CFR 264 or 265 Subparts J, W or DD standards, other than unit design or unit integrity assessment;

(s) Failing to comply with 40 CFR 264 or 265 Subparts AA, BB or CC standards for hazardous waste generator and TSD facilities, unless otherwise classified; or

(t) Failing to timely submit an annual report, by a hazardous waste generator, TSD facility, or hazardous waste recycling facility.

(3) **Class III:**

(a) Accumulating hazardous waste up to thirty (30) days beyond the specified accumulation time frame;

(b) Failing to label containers equaling 110 gallon capacity or less used for the accumulation or storage of hazardous waste;

(c) Failing to label a tank having less than 100 gallon capacity used for the accumulation or storage of hazardous waste;

(d) Failing to maintain on site a copy of the one-time notification regarding hazardous waste that meets treatment standards by a hazardous waste generator; or

(e) Failing to submit a contingency plan to all police, fire, hospital and local emergency responders.

[Publications: Publications referenced are available from the agency.]

Stat. Auth.: ORS 459.995, 466.070 - 466.080, 466.625 & 468.020
Stats. Implemented: ORS 466.635 - 466.680, 466.990 - 466.994 & 468.090 - 468.140
Hist.: DEQ 1-1982, f. & ef. 1-28-82; DEQ 22-1984, f. & ef. 11-8-84; DEQ 9-1986, f. & ef. 5-1-86; DEQ 17-1986, f. & ef. 9-18-86; DEQ 22-1988, f. & cert. ef. 9-14-88; DEQ 4-1989, f. & cert. ef. 3-14-89; DEQ 15-1990, f. & cert. ef. 3-30-90; DEQ 21-1992, f. & cert. ef. 8-11-92; DEQ 19-1998, f. & cert. ef. 10-12-98; DEQ 6-2001, f. 6-18-01, cert. ef. 7-1-01; DEQ 13-2002, f. & cert. ef. 10-9-02; DEQ 4-2005, f. 5-13-05, cert. ef. 6-1-05; DEQ 4-2006, f. 3-29-06, cert. ef. 3-31-06

340-012-0071

Polychlorinated Biphenyl (PCB) Classification of Violations

(1) **Class I:**

(a) Treating, storing or disposing of PCBs anywhere other than a permitted PCB disposal facility or a

COP0021893

location authorized by the department; or

(b) Establishing, constructing or operating a PCB disposal facility without first obtaining a permit or department authorization.

(2) **Class II:** Violating any other requirement related to the treatment, storage, generation or disposal of PCBs is classified under OAR 340-012-0053.

Stat. Auth.: ORS 459.995, 466.625, 467.030, 468.020 & 468.996
Stats. Implemented: ORS 466.255, 466.265 - 466.270, 466.530 & 466.990 - 466.994
Hist.: DEQ 22-1988, f. & cert. ef. 9-14-88; DEQ 4-1989, f. & cert. ef. 3-14-89; DEQ 15-1990, f. & cert. ef. 3-30-90; DEQ 21-1992, f. & cert. ef. 8-11-92; DEQ 19-1998, f. & cert. ef. 10-12-98; DEQ 6-2001, f. 6-18-01, cert. ef. 7-1-01; DEQ 4-2005, f. 5-13-05, cert. ef. 6-1-05; DEQ 4-2006, f. 3-29-06, cert. ef. 3-31-06

340-012-0072

Used Oil Management Classification of Violations

(1) **Class I:**

(a) Using used oil as a dust suppressant, pesticide, or otherwise spreading used oil directly in the environment;

(b) Burning a used oil mixture where the used oil mixture has less than 5,000 Btu/pound;

(c) Offering for sale used oil as specification used oil fuel when the used oil does not meet used oil fuel specifications;

(d) Selling off-specification used oil fuel to a facility not meeting the definition of an industrial boiler or furnace;

(e) Burning off-specification used oil in a device that does not meet the definition of an industrial boiler or furnace and is not otherwise exempt;

(f) Failing to make an on-specification used oil fuel determination when required, by a used oil generator, transporter, burner or processor;

(g) Storing or managing used oil in a surface impoundment;

(h) Failing to determine whether used oil exceeds the permissible halogen content, by a used oil transporter, burner or processor;

COP0021894

(i) Failing to perform required closure on a used oil tank or container, by a used oil processor or re-refiner;

(j) Failing to maintain required secondary containment at a used oil transfer facility or by a processor, burner, or marketer of used oil; or

(k) Failing to immediately clean up spills or releases or threatened spills or releases of used oil, by any person having ownership or control over the used oil.

(2) **Class II:**

(a) Failing to obtain a one time written notification from a burner before shipping off-specification used oil fuel, by a used oil generator, transporter, processor or re-refiner;

(b) Failing to develop, follow and maintain records of a written waste analysis plan, by a used oil processor;

(c) Failing to close or cover a used oil tank or container;

(d) Failing to timely submit annual used oil handling reports, by a used oil processor;

(e) Failing to label each container or tank used for the accumulation or storage of used oil on site, unless otherwise classified;

(f) Failing to keep a written operating record at the facility, by used oil processor;

(g) Failing to prepare and maintain an up-to-date preparedness and prevention plan, by a used oil processor; or

(h) Transporting, processing, re-refining, burning or marketing used oil without first obtaining an EPA ID number.

(3) **Class III:**

(a) Failing to label one container or tank in which used oil was accumulated on site, if five or more tanks or containers are present;

(b) Failing to label up to two containers used for the accumulation or storage of used oil on site; or

(c) Failing to label a tank having less than 100 gallon capacity when used for the accumulation or storage of used oil on site.

[Publications: Publications referenced are available from the agency.]

COP0021895

Stat. Auth.: ORS 459.995, 468.020, 468.869, 468.870 & 468.996
Stats. Implemented: ORS 459A.580 - 459A.585, 459A.590 & 468.090 - 468.140
Hist.: DEQ 33-1990, f. & cert. ef. 8-15-90; DEQ 21-1992, f. & cert. ef. 8-11-92; DEQ 19-1998, f. & cert. ef. 10-12-98; DEQ 4-2005, f. 5-13-05, cert. ef. 6-1-05; DEQ 4-2006, f. 3-29-06, cert. ef. 3-31-06

340-012-0073

Environmental Cleanup Classification of Violations

(1) **Class I:** Violating any otherwise unclassified environmental cleanup-related requirements are addressed under OAR 340-012-0053.

(2) **Class II:** Failing to provide information under ORS 465.250.

Stat. Auth.: ORS 465.280, 465.400 - 465.410, 465.435 & 468.020
Stats. Implemented: ORS 465.210 & 468.090 - 468.140
Hist.: DEQ 22-1988, f. & cert. ef. 9-14-88; DEQ 4-1989, f. & cert. ef. 3-14-89; DEQ 15-1990, f. & cert. ef. 3-30-90; DEQ 21-1992, f. & cert. ef. 8-11-92; DEQ 19-1998, f. & cert. ef. 10-12-98; DEQ 4-2005, f. 5-13-05, cert. ef. 6-1-05; DEQ 4-2006, f. 3-29-06, cert. ef. 3-31-06

340-012-0074

Underground Storage Tank (UST) Cleanup Classification of Violations

(1) **Class I:**

(a) Failing to report a confirmed release from an UST;

(b) Failing to initiate or complete the investigation or cleanup, or to perform required monitoring, of a release from an UST;

(c) Failing to conduct free product removal;

(d) Failing to properly manage petroleum contaminated soil;

(e) Failing to mitigate fire, explosion or vapor hazards;

(f) Demonstrating negligence or incompetence in performing soil matrix cleanup services; or

(g) Providing or supervising soil matrix cleanup services without obtaining the appropriate license.

(2) **Class II:**

COP0021896

(a) Failing to report a suspected release from an UST;

(b) Failing to timely submit reports or other documentation from the investigation or cleanup of a release from an UST; or

(c) Failing to timely submit a corrective action plan or submitting an incomplete corrective action plan.

Stat. Auth.: ORS 466.746, 466.994 & 468.020
Stats. Implemented: ORS 466.706 - 466.835 & 466.994
Hist.: DEQ 4-2005, f. 5-13-05, cert. ef. 6-1-05; DEQ 4-2006, f. 3-29-06, cert. ef. 3-31-06

340-012-0079

Heating Oil Tank (HOT) Classification of Violations

(1) **Class I:**

(a) Failing to report a release from an HOT when the failure is discovered by the department;

(b) Failing to initiate and complete the investigation or cleanup of a release from an HOT;

(c) Failing to initiate and complete free product removal;

(d) Failing to certify that heating oil tank services were conducted in compliance with all applicable regulations, by a service provider;

(e) Failing, by a responsible party or service provider, to conduct corrective action after the department rejects a certified report;

(f) Demonstrating negligence or incompetence in performing HOT services; or

(g) Providing or supervising HOT services without first obtaining the appropriate license.

(2) **Class II:**

(a) Failing to submit a corrective action plan;

(b) Failing to properly decommission an HOT;

(c) Failing to hold and continuously maintain errors and omissions or professional liability insurance, by a HOT service provider;

(d) Failing to have a supervisor present when performing HOT services;

COP0021897

(e) Failing to report a release from an HOT within 72 hours when the failure is reported to the department by the responsible person or the service provider; or

(f) Offering to provide heating oil tank services without first obtaining the appropriate service provider license.

Stat. Auth.: ORS 466.746, 466.858 - 466.994 & 468.020
Stats. Implemented: ORS 466.706, 466.858 - 466.882, 466.994 & 468.090 - 468.140
Hist.: DEQ 4-2005, f. 5-13-05, cert. ef. 6-1-05; DEQ 4-2006, f. 3-29-06, cert. ef. 3-31-06

340-012-0081

Oil and Hazardous Material Spill and Release Classification of Violations

(1) Class I:

(a) Failing to immediately clean up spills or releases or threatened spills or releases of oil or hazardous materials, by any person having ownership or control over the oil or hazardous materials;

(b) Failing to immediately notify the Oregon Emergency Response System (OERS) of the type, quantity and location of a spill of oil or hazardous material, and corrective and cleanup actions taken and proposed to be taken if the amount of oil or hazardous material released exceeds the reportable quantity, or will exceed the reportable quantity within 24 hours;

(c) Spilling or releasing any oil or hazardous materials which enters waters of the state;

(d) Failing to activate alarms, warn people in the immediate area, contain the oil or hazardous material or notify appropriate local emergency personnel;

(e) Failing to immediately implement a required plan; or

(f) Failing to take immediate preventative, repair, corrective or containment action in the event of a threatened spill or release.

(2) Class II:

(a) Failing to submit a complete and detailed written report to the department of a spill of oil or hazardous material;

(b) Failing to use the required sampling procedures and analytical testing protocols for oil and hazardous materials spills or releases;

(c) Failing to coordinate with the department during the emergency response to a spill after being

COP0021898

notified of the department's jurisdiction;

(d) Failing to immediately report spills or releases within containment areas when reportable quantities are exceeded and exemptions are not met under OAR 340-142-0040;

(e) Failing to immediately manage any spill or release of oil or hazardous materials consistent with the National Incident Management System (NIMS);

(f) Improperly or without approval of the Department, treating, diluting or disposing of spill, or spill-related waters or wastes; or

(g) Using chemicals to disperse, coagulate or otherwise treat a spill or release of oil or hazardous materials without prior department approval.

(3) **Class III:**

(a) Failing to provide maintenance and inspections records of the storage and transfer facilities to the department upon request; or

(b) Failing, by a vessel owner or operator, to make maintenance and inspection records, and oil transfer procedures available to the department upon request.

Stat. Auth.: ORS 466.625 & 468.020
Stats. Implemented: ORS 466.635 - 466.680, 466.992 & 468.090 - 468.140
Hist.: DEQ 1-2003, f. & cert. ef. 1-31-03; DEQ 7-2003, f. & cert. ef. 4-21-03; DEQ 4-2005, f. 5-13-05, cert. ef. 6-1-05; DEQ 4-2006, f. 3-29-06, cert. ef. 3-31-06

340-012-0082

Contingency Planning Classification of Violations

(1) **Class I:**

(a) Failing to immediately implement the oil spill prevention and emergency response contingency plan or other applicable contingency plan, after discovering a spill;

(b) Operating an onshore or offshore facility without an approved or conditionally approved oil spill prevention and emergency response contingency plan;

(c) Entering into the waters of the state, by a covered vessel without an approved or conditionally approved oil spill prevention and emergency response contingency plan or purchased coverage under an umbrella oil spill prevention and emergency response contingency plan;

COP0021899

(d) Failing to implement prevention measures identified in the facility or covered vessel spill prevention plan that directly results in a spill;

(e) Failing to maintain equipment, personnel and training at levels described in an approved or conditionally approved oil spill prevention and emergency response contingency plan;

(f) Failing to establish and maintain financial assurance as required by statute, rule or order; or

(g) Failing by the owner or operator of an oil terminal facility, or covered vessel, to take all appropriate measures to prevent spills or overfilling during transfer of petroleum or hazardous material products.

(2) **Class II:**

(a) Failing to submit an oil spill prevention and emergency response contingency plan to the department at least 90 calendar days before beginning operations in Oregon, by any onshore or offshore facility or covered vessel;

(b) Failing to have available on site a simplified field document summarizing key notification and action elements of a required vessel or facility contingency plan;

(c) Failing, by a plan holder, to submit and implement required changes to a required vessel or facility contingency plan following conditional approval;

(d) Failing, by a covered vessel or facility contingency plan holder, to submit the required vessel or facility contingency plan for re-approval at least ninety (90) days before the expiration date of the required vessel or facility contingency plan;

(e) Failing to submit spill prevention strategies as required; or

(f) Failing to obtain department approval of the management or disposal of spilled oil or hazardous materials, or materials contaminated with oil or hazardous material, that are generated during spill response.

(3) **Class III:**

(a) Failing to provide maintenance and inspections records of the storage and transfer facilities to the department upon request;

(b) Failing, by a vessel owner or operator, to make maintenance and inspection records and oil transfer procedures available to the department upon request;

(c) Failing to have at least one copy of the required vessel or facility contingency plan in a central location accessible at any time by the incident commander or spill response manager;

COP0021900

(d) Failing to have the covered vessel field document available to all appropriate personnel in a conspicuous and accessible location;

(e) Failing to notify the department within 24 hours of any significant changes that could affect implementation of a required vessel or facility contingency plan; or

(f) Failing to distribute amended page(s) of the plan changes to the department within thirty (30) calendar days of the amendment.

Stat. Auth.: ORS 468B.350
Stats. Implemented: ORS 468B.345
Hist.: DEQ 1-2003, f. & cert. ef. 1-31-03; DEQ 4-2005, f. 5-13-05, cert. ef. 6-1-05; DEQ 4-2006, f. 3-29-06, cert. ef. 3-31-06

340-012-0083

Ballast Water Management Classification of Violations

(1) **Class I:** Discharging of ballast water without authorization.

(2) **Class II:**

(a) Failing to report ballast water management information to the department at least 24 hours before entering the waters of this state; or

(b) Failing to file an amended ballast water management report after a change in the vessel's ballast water management plan.

Stat. Auth.: ORS 783.600 - 783.992
Stats. Implemented: ORS 783.620
Hist.: DEQ 1-2003, f. & cert. ef. 1-31-03; DEQ 4-2005, f. 5-13-05, cert. ef. 6-1-05; DEQ 4-2006, f. 3-29-06, cert. ef. 3-31-06

340-012-0090 [Renumbered to **340-012-0135**]

340-012-0097

Dry Cleaning Classification of Violations

(1) **Class I:**

(a) Discharging dry cleaning wastewater to a sanitary sewer, storm sewer, septic system, boiler or into waters of the state;

COP0021901

(b) Failing to have a secondary containment system under and around each dry cleaning machine or each tank or container of stored solvent;

(c) Failing to report a release outside of a containment system of more than one pound of dry cleaning solvent released in a 24-hour period;

(d) Failing to repair the cause of a release within a containment system of dry cleaning solvent;

(e) Failing to immediately clean up a release or repair the cause of a release outside of a containment system of dry cleaning solvents or waste water contaminated with solvent;

(f) Illegally treating or disposing hazardous waste generated at a dry cleaning facility;

(g) Transporting, delivering or designating on a manifest, delivery of hazardous waste generated at a dry cleaning facility to a destination facility not authorized or permitted to manage hazardous waste; or

(h) Failing to conduct weekly perchloroethylene leak inspections, and to measure the perchloroethylene refrigerated condenser outlet temperature and log the results, by a dry cleaning owner or operator.

(2) **Class II:**

(a) Failing to place or store hazardous waste generated at a dry cleaning facility in properly labeled and closed containers;

(b) Accumulating hazardous waste beyond the specified accumulation time period;

(c) Failing, by a dry cleaning owner or operator, to prominently post the Oregon Emergency Response System telephone number so the number is immediately available to all employees of the dry cleaning facility;

(d) Failing to immediately clean up a release within a containment system of dry cleaning solvent or hazardous waste;

(e) Failing to use closed, direct-coupled delivery, by a person delivering perchloroethylene to a dry cleaning facility;

(f) Failing to have closed, direct-coupled delivery for perchloroethylene, by a dry cleaning operator;

(g) Failing to remove all dry cleaning solvent or solvent containing residue or to disconnect utilities from the dry cleaning machine within 45 days of the last day of dry cleaning machine operations; or

(h) Failing to timely submit an annual report to the department, by a dry cleaning owner or operator.

COP0021902

(3) **Class III:** Failing to notify the department of change of ownership or operator or closure at a dry cleaning business or dry cleaning store.

Stat. Auth.: ORS 466.070 - 466.080, 466.625 & 468.020
Stats. Implemented: ORS 466.635 - 466.680, 466.990, 466.994 & 468.090 - 468.140
Hist.: DEQ 4-2005, f. 5-13-05, cert. ef. 6-1-05; DEQ 4-2006, f. 3-29-06, cert. ef. 3-31-06

340-012-0130

Determination of Violation Magnitude

(1) For each civil penalty assessed, the magnitude is moderate unless:

(a) A selected magnitude is specified in 340-012-0135 and information is reasonably available to the department to determine the application of that selected magnitude; or

(b) The department determines, using information reasonably available to it, that the magnitude should be major under section (3) or minor under section (4).

(2) If the department determines, using information reasonably available to the department, that a general or selected magnitude applies, the department's determination is the presumed magnitude of the violation, but the person against whom the violation is alleged has the opportunity and the burden to prove that another magnitude applies and is more probable than the presumed magnitude.

(3) The magnitude of the violation is major if the department finds that the violation had a significant adverse impact on human health or the environment. In making this finding, the department will consider all reasonably available information, including, but not limited to: the degree of deviation from applicable statutes or commission and department rules, standards, permits or orders; the extent of actual effects of the violation; the concentration, volume, or toxicity of the materials involved; and the duration of the violation. In making this finding, the department may consider any single factor to be conclusive.

(4) The magnitude of the violation is minor if the department finds that the violation had no more than a de minimis adverse impact on human health or the environment, and posed no more than a de minimis threat to human health or other environmental receptors. In making this finding, the department will consider all reasonably available information including, but not limited to: the degree of deviation from applicable statutes or commission and department rules, standards, permits or orders; the extent of actual or threatened effects of the violation; the concentration, volume, or toxicity of the materials involved; and the duration of the violation. In making this finding, the department may consider any single factor to be conclusive.

Stat. Auth.: ORS 468.020 & 468.130
Stats. Implemented: ORS 459.376, 459.995, 465.900, 465.992, 466.990 - 466.994, 468.090 - 468.140 & 468B.450

COP0021903

Hist.: DEQ 4-2005, f. 5-13-05, cert. ef. 6-1-05; DEQ 4-2006, f. 3-29-06, cert. ef. 3-31-06

340-012-0135

Selected Magnitude Categories

(1) Magnitudes for selected Air Quality violations will be determined as follows if sufficient information is reasonably available to the department to make a determination:

(a) Opacity limitation violations:

(A) Major -- Opacity measurements or readings of 20 percent opacity or more over the applicable limitation, or an opacity violation by a federal major source as defined in OAR 340-200-0020;

(B) Moderate -- Opacity measurements or readings greater than 10 percent and less than 20 percent over the applicable limitation; or

(C) Minor -- Opacity measurements or readings of 10 percent or less over the applicable limitation.

(b) Operation of a major source, as defined in OAR 340-200-0020, without first obtaining the required permit: Major -- The Best Achievable Control Technology (BACT) analysis shows need for additional controls and/or if offsets are required.

(c) Air contaminant emission limitation violations for selected air pollutants: Magnitude determinations under this subsection shall be made based upon significant emission rate amounts listed in OAR 340-200-0020 (Tables 2 and 3).

(A) Major:

(i) Exceeding the annual limit as established by permit, rule or order by more than the above amount;

(ii) Exceeding the monthly limit as established by permit, rule or order by more than ten percent of the above amount;

(iii) Exceeding the daily limit as established by permit, rule or order by more than 0.5 percent of the above amount; or

(iv) Exceeding the hourly limit as established by permit, rule or order by more than 0.1 percent of the above amount.

(B) Moderate:

(i) Exceeding the annual limit as established by permit, rule or order by an amount from 50 up to and

COP0021904

including 100 percent of the above amount;

(ii) Exceeding the monthly limit as established by permit, rule or order by an amount from five up to and including ten percent of the above amount;

(iii) Exceeding the daily limit as established by permit, rule or order by an amount from 0.25 up to and including 0.50 percent of the above amount; or

(iv) Exceeding the hourly limit as established by permit, rule or order by an amount from 0.05 up to and including 0.10 percent of the above amount.

(C) Minor:

(i) Exceeding the annual limit as established by permit, rule or order by an amount less than 50 percent of the above amount;

(ii) Exceeding the monthly limit as established by permit, rule or order by an amount less than five percent of the above amount;

(iii) Exceeding the daily limit as established by permit, rule or order by an amount less than 0.25 percent of the above amount; or

(iv) Exceeding the hourly limit as established by permit, rule or order by an amount less than 0.05 percent of the above amount.

(d) Violations of Emergency Action Plans: Major -- Major magnitude in all cases.

(e) Violations of on road motor vehicle refinishing rules contained in OAR 340-242-0620: Minor -- Refinishing 10 or fewer on road motor vehicles per year.

(f) Asbestos violations:

(A) Major -- More than 260 lineal feet or more than 160 square feet of asbestos-containing material;

(B) Moderate -- From 40 lineal feet up to and including 260 lineal feet or from 80 square feet up to and including 160 square feet of asbestos-containing material; or

(C) Minor -- Less than 40 lineal feet or 80 square feet of asbestos-containing material.

(D) The magnitude of the asbestos violation may be increased by one level if the material was comprised of more than five percent asbestos.

(g) Open burning violations:

COP0021905

(A) Major -- Initiating or allowing the initiation of open burning of 20 or more cubic yards of commercial, construction, demolition and/or industrial waste; or 5 or more cubic yards of prohibited materials (inclusive of tires); or 10 or more tires;

(B) Moderate -- Initiating or allowing the initiation of open burning of 5 or more, but less than 20 cubic yards of commercial, construction, demolition and/or industrial waste; or 2 or more, but less than 5 cubic yards of prohibited materials (inclusive of tires); or 3 to 9 tires; or if the department lacks sufficient information upon which to make a determination of the type of waste, number of cubic yards or number of tires burned; or

(C) Minor -- Initiating or allowing the initiation of open burning of less than 5 cubic yards of commercial, construction, demolition and/or industrial waste; or less than 2 cubic yards of prohibited materials (inclusive of tires); or 2 or less tires.

(D) The selected magnitude may be increased one level if the department finds that one or more of the following are true, or decreased one level if the department finds that none of the following are true:

(i) The burning took place in an open burning control area;

(ii) The burning took place in an area where open burning is prohibited;

(iii) The burning took place in a non-attainment or maintenance area for PM10 or PM2.5; or

(iv) The burning took place on a day when all open burning was prohibited due to meteorological conditions.

(h) Oregon Low Emission Vehicle Non-Methane Gas (NMOG) or Green House Gas (GHG) fleet average emission limit violations:

(A) Major -- Exceeding the limit by more than 10 percent; or

(B) Moderate -- Exceeding the limit by 10 percent or less.

(2) Magnitudes for selected violations pertaining to Water Quality will be determined as follows if sufficient information is reasonably available to the department to make a determination:

(a) Violating wastewater discharge permit effluent limitations:

(A) Major:

(i) The dilution (D) of the spill or technology based effluent limitation exceedance was less than two, when calculated as follows: $D = ((QR/4) + QI)/QI$, where QR is the estimated receiving stream flow and QI is the estimated quantity or discharge rate of the incident;

COP0021906

(ii) The receiving stream flow at the time of the water quality based effluent limitation (WQBEL) exceedance was at or below the flow used to calculate the WQBEL; or

(iii) The resulting water quality from the spill or discharge was as follows:

(I) For discharges of toxic pollutants: CS/D was more than CAcute, where CS is the concentration of the discharge, D is the dilution of the discharge as determined under (2)(a)(A)(i), and CAcute is the concentration for acute toxicity (as defined by the applicable water quality standard);

(II) For spills or discharges affecting temperature, when the discharge temperature is at or above 32 degrees centigrade after two seconds from the outfall; or

(III) For BOD5 discharges: (BOD5)/D is more than 10, where BOD5 is the concentration of the five day Biochemcial Oxygen Demand of the discharge and D is the dilution of the discharge as determined under (2)(a)(A)(i).

(B) Moderate:

(i) The dilution (D) of the spill or the technology based effluent limitation exceedance was two or more but less than 10 when calculated as follows: D = ((QR /4)+ QI)/ QI, where QR is the estimated receiving stream flow and QI is the estimated quantity or discharge rate of the discharge; or

(ii) The receiving stream flow at the time of the WQBEL exceedance was greater than, but less than twice, the flow used to calculate the WQBEL.

(C) Minor:

(i) The dilution (D) of the spill or the technology based effluent limitation exceedance was 10 or more when calculated as follows: D = ((QR/4) + QI)/ QI, where QR is the receiving stream flow and QI is the quantity or discharge rate of the incident; or

(ii) The receiving stream flow at the time of the WQBEL exceedance was twice the flow or more of the flow used to calculate the WQBEL.

(b) Violating numeric water-quality standards:

(A) Major:

(i) Increased the concentration of any pollutant except for toxics, dissolved oxygen, pH, and turbidity, by 25 percent or more of the standard;

(ii) Decreased the dissolved oxygen concentration by two or more milligrams per liter below the standard;

COP0021907

(iii) Increased the toxic pollutant concentration by any amount over the acute standard or by 100 percent or more of the chronic standard;

(iv) Increased or decreased pH by one or more pH units from the standard; or

(v) Increased turbidity by 50 or more nephelometric turbidity units (NTU) over background.

(B) Moderate:

(i) Increased the concentration of any pollutant except for toxics, pH, and turbidity by more than 10 percent but less than 25 percent of the standard;

(ii) Decreased dissolved oxygen concentration by one or more, but less than two, milligrams per liter below the standard;

(iii) Increased the concentration of toxics pollutants by more than 10 percent but less than 100 percent of the chronic standard;

(iv) Increased or decreased pH by more than 0.5 pH unit but less than 1.0 pH unit from the standard; or

(v) Increased turbidity by more than 20 but less than 50 NTU over background.

(C) Minor:

(i) Increased the concentration of any pollutant, except for toxics, pH, and turbidity, by 10 percent or less of the standard;

(ii) Decreased the dissolved oxygen concentration by less than one milligram per liter below the standard;

(iii) Increased the concentration of toxic pollutants by 10 percent or less of the chronic standard;

(iv) Increased or decreased pH by 0.5 pH unit or less from the standard; or

(v) Increased turbidity by 20 NTU or less over background.

(c) The selected magnitude under (2)(a) or (b) may be increased one level if the violation:

(i) Occurred in a water body that is water-quality limited (listed on the most current 303(d) list) and the discharge is the same pollutant for which the water body is listed;

(ii) Depressed oxygen levels or increased turbidity and/or sedimentation in a stream in which salmonids may be rearing or spawning as indicated by the beneficial use maps available at OAR 340-041-0101

COP0021908

through 0340;

(iii) Violated a bacteria standard either in shell-fish growing waters or during the period from June 1 through September 30; or

(iv) Resulted in a documented fish or wildlife kill.

(3) Magnitudes for selected violations pertaining to Solid Waste will be determined as follows if sufficient information is reasonably available to the department to make a determination:

(a) Operating a solid waste disposal facility without a permit:

(A) Major -- The volume of material disposed of exceeds 400 cubic yards;

(B) Moderate -- The volume of material disposed of is greater than or equal to 40 cubic yards and less than or equal to 400 cubic yards; or

(C) Minor -- The volume of materials disposed of is less than 40 cubic yards.

(D) The magnitude of the violation may be raised by one magnitude if the material disposed of was either in the floodplain of waters of the state or within 100 feet of waters of the state.

(b) Failing to accurately report the amount of solid waste disposed:

(A) Major -- The amount of solid waste is underreported by 15 percent or more of the amount received;

(B) Moderate -- The amount of solid waste is underreported by 5 percent or more, but less than 15 percent, of the amount received; or

(C) Minor -- The amount of solid waste is underreported by less than 5 percent of the amount received.

(4) Magnitudes for selected violations pertaining to Hazardous Waste will be determined as follows if sufficient information is reasonably available to the department to make a determination:

(a) Failure to make a hazardous waste determination:

(A) Major -- Failure to make the determination on five or more waste streams;

(B) Moderate -- Failure to make the determination on three or four waste streams; or

(C) Minor -- Failure to make the determination on one or two waste streams.

(b) Hazardous Waste treatment and disposal violations OAR 340-012-0068(1)(b), (c), (h), (k), (l), (m),

COP0021909

(p), (q) and (r):

(A) Major:

(i) Treatment or disposal of more than 55 gallons or 330 pounds of hazardous waste; or

(ii) Treatment or disposal of more than three gallons or 18 pounds of acutely hazardous waste.

(B) Moderate:

(i) Treatment or disposal of 55 gallons or 330 pounds or less of hazardous waste; or

(ii) Treatment or disposal of three gallons or 18 pounds or less of acutely hazardous waste.

(c) Hazardous waste management violations OAR 340-012-0068(1)(d), (e) (f), (g), (i), (j), (n), and (2) (a), (b), (d), (e), (h), (i), (k), (m), (n), (o), (p), (r) and (s):

(A) Major:

(i) Hazardous waste management violations involving more than 1,000 gallons or 6,000 pounds of hazardous waste; or

(ii) Hazardous waste management violations involving more than 20 gallons or 120 pounds of acutely hazardous waste.

(B) Moderate:

(i) Hazardous waste management violations involving more than 250 gallons or 1,500 pounds, up to and including 1,000 gallons or 6,000 pounds of hazardous waste; or

(ii) Hazardous waste management violations involving more than 5 gallons or 30 pounds, up to and including 20 gallons or 60 pounds of acutely hazardous waste.

(C) Minor:

(i) Hazardous waste management violations involving 250 gallons or 1,500 pounds or less of hazardous waste; or

(ii) Hazardous waste management violations involving 5 gallons or 30 pounds or less of acutely hazardous waste.

(5) Magnitudes for selected Used Oil violations (OAR 340-012-0072) will be determined as follows if sufficient information is reasonably available to the department to make a determination:

COP0021910

(a) Used Oil violations OAR 340-012-0072(1)(f), (h), (i), (j); and (2)(a) through (j):

(A) Major -- Used oil management violations involving more than 1,000 gallons or 7,000 pounds of used oil or used oil mixtures;

(B) Moderate -- Used oil management violations involving more than 250 gallons or 1,750 pounds, up to and including 1,000 gallons or 7,000 pounds of used oil or used oil mixture; or

(C) Minor -- Used oil management violations involving 250 gallons or 1,750 pounds or less of used oil or used oil mixtures.

(b) Used Oil spill or disposal violations OAR 340-012-0072(1)(a) through (e), (g) and (k):

(A) Major -- A spill or disposal involving more than 420 gallons or 2,940 pounds of used oil or used oil mixtures;

(B) Moderate -- A spill or disposal involving more than 42 gallons or 294 pounds, up to and including 420 gallons or 2,940 pounds of used oil or used oil mixtures; or

(C) Minor -- A spill or disposal of used oil involving 42 gallons or 294 pounds or less of used oil or used oil mixtures.

[ED. NOTE: Tables & Publications referenced are available from the agency.]

Stat. Auth.: ORS 468.065 & 468A.045

Stats. Implemented: ORS 468.090 - 468.140 & 468A.060

Hist.: DEQ 21-1992, f. & cert. ef. 8-11-92; DEQ 4-1994, f. & cert. ef. 3-14-94; DEQ 19-1998, f. & cert. ef. 10-12-98; DEQ 1-2003, f. & cert. ef. 1-31-03; Renumbered from 340-012-0090, DEQ 4-2005, f. 5-13-05, cert. ef. 6-1-05; DEQ 4-2006, f. 3-29-06, cert. ef. 3-31-06; DEQ 6-2006, f. & cert. ef. 6-29-06

340-012-0140

Determination of Base Penalty

(1) Except for Class III violations and for penalties assessed under OAR 340-012-0155, the base penalty (BP) is determined by applying the type, class and magnitude of the violation to the matrices set forth in this section. For Class III violations, no magnitude determination is required.

(2) $8,000 Penalty Matrix:

(a) The $8,000 penalty matrix applies to the following:

COP0021911

(A) Any violation of an air quality statute, rule, permit or related order committed by a person that has or should have a Title V permit or an Air Contaminant Discharge Permit (ACDP) issued pursuant to New Source Review (NSR) regulations or Prevention of Significant Deterioration (PSD) regulations, or section 112(g) of the federal Clean Air Act.

(B) Open burning violations as follows:

(i) Any violation of an open burning statute, rule, permit or related order committed by a permitted industrial facility.

(ii) Any violation of OAR 340-264-0060(3) in which 25 or more cubic yards of prohibited materials or more than 15 tires are burned, except when committed by a residential owner-occupant.

(C) Any violation of the Oregon Low Emission Vehicle rules (OAR 340-257) by an automobile manufacturer.

(D) Any violation of 468B.025(1)(a) or (1)(b), or of ORS 468B.050(1)(a) by a person without an National Pollutant Discharge Elimination System (NPDES) permit.

(E) Any violation of a water quality statute, rule, permit or related order by:

(i) A person that has a NPDES permit, or that has or should have a Water Pollution Control Facility (WPCF) permit, for a municipal or private utility sewage treatment facility with a permitted flow of five million or more gallons per day.

(ii) A person that has a major industrial source NPDES permit.

(iii) A person that has a population of 100,000 or more, as determined by the most recent national census, and either has or should have a WPCF Municipal Stormwater Underground Injection Control (UIC) System Permit, or has a NPDES Municipal Separated Storm Sewer Systems (MS4) Stormwater Discharge Permit.

(iv) A person that has or should have a WPCF permit for a major vegetable or fruit processing facility, for a major mining operation involving over 500,000 cubic yards per year, or for any mining operation using chemical leaching or froth flotation.

(v) A person that installs or operates a prohibited Class I, II, III, IV or V UIC system, except for a cesspool.

(F) Any violation of an underground storage tanks statute, rule, permit or related order committed by the owner, operator or permittee of 10 or more UST facilities or a person who is licensed or should be licensed by the department to perform tank services.

COP0021912

(G) Any violation of a heating oil tank statute, rule, permit, license or related order committed by a person who is licensed or should be licensed by the department to perform heating oil tank services.

(H) Any violation of ORS 468B.485, or related rules or orders regarding financial assurance for ships transporting hazardous materials or oil.

(I) Any violation of a used oil statute, rule, permit or related order committed by a person who is a used oil transporter, transfer facility, processor or re-refiner, off-specification used oil burner or used oil marketer.

(J) Any violation of a hazardous waste statute, rule, permit or related order by:

(i) A person that is a large quantity generator or hazardous waste transporter.

(ii) A person that has or should have a treatment, storage or disposal facility permit.

(K) Any violation of an oil and hazardous material spill and release statute, rule, or related order.

(L) Any violation of a polychlorinated biphenyls (PCBs) management and disposal statute, rule, permit or related order.

(M) Any violation of ORS Chapter 465, UST or environmental cleanup statute, rule, related order or related agreement.

(N) Unless specifically listed under another penalty matrix, any violation of ORS Chapter 459 or any violation of a solid waste statute, rule, permit, or related order committed by:

(i) A person that has or should have a solid waste disposal permit.

(ii) A person with a population of 25,000 or more, as determined by the most recent national census.

(b) The base penalty values for the $8,000 penalty matrix are as follows:

(A) Class I:

(i) Major -- $8000;

(ii) Moderate -- $4000;

(iii) Minor -- $2000.

(B) Class II:

COP0021913

(i) Major -- $4000;

(ii) Moderate -- $2000;

(iii) Minor -- $1000.

(C) Class III: $750.

(3) $6,000 Penalty Matrix:

(a) The $6,000 penalty matrix applies to the following:

(A) Any violation of an air quality statute, rule, permit or related order committed by a person that has or should have an ACDP permit, except for NSR, PSD and Basic ACDP permits.

(B) Any violation of an asbestos statute, rule, permit or related order except those violations listed in section (5) of this rule.

(C) Any violation of a vehicle inspection program statute, rule, permit or related order committed by an auto repair facility.

(D) Any violation of the Oregon Low Emission Vehicle rules (OAR 340-257) by an automobile dealer or an automobile rental agency.

(E) Any violation of a water quality statute, rule, permit or related order committed by:

(i) A person that has a NPDES Permit, or that has or should have a WPCF Permit, for a municipal or private utility sewage treatment facility with a permitted flow of two million or more, but less than five million, gallons per day.

(ii) A person that has a minor industrial source NPDES Permit, or has or should have a WPCF Permit, for an industrial source.

(iii) A person that has or should have applied for coverage under an NPDES or a WPCF General Permit, except an NPDES Stormwater Discharge 1200-C General Permit for a construction site of one acre or more, but less than five acres in size and except for an NPDES 700-PM General Permit for suction dredges.

(iv) A person that has a population of less than 100,000 but more than 10,000, as determined by the most recent national census, and has or should have a WPCF Municipal Stormwater UIC System Permit or has an NPDES MS4 Stormwater Discharge Permit.

(v) A person that has or should have a WPCF permit for a mining operation involving from 100,000 up

COP0021914

to 500,000 cubic yards other than those operations using chemical leachate or froth flotation.

(vi) A person that owns, and that has or should have registered, a UIC system that disposes of wastewater other than stormwater or sewage.

(F) Any violation of an UST statute, rule, permit or related order committed by a person who is the owner, operator or permittee of five to nine UST facilities.

(G) Unless specifically listed under another penalty matrix, any violation of ORS Chapter 459 or other solid waste statute, rule, permit, or related order committed by:

(i) A person that has or should have a waste tire permit; or

(ii) A person with a population of more than 5,000 but less than or equal to 25,000, as determined by the most recent national census.

(H) Any violation of a hazardous waste management statute, rule, permit or related order committed by a person that is a small quantity generator.

(b) The base penalty values for the $6,000 penalty matrix are as follows:

(A) Class I:

(i) Major -- $6,000.

(ii) Moderate -- $3,000.

(iii) Minor -- $1,500.

(B) Class II:

(i) Major -- $3,000.

(ii) Moderate -- $1,500.

(iii) Minor -- $750.

(C) Class III: $500.

(4) $2,500 Penalty Matrix:

(a) The $2,500 penalty matrix applies to the following:

COP0021915

(A) Any violation of any statute, rule, permit, license, or order committed by a person not listed under another penalty matrix.

(B) Any violation of an air quality statute, rule, permit or related order committed by a person not listed under another penalty matrix.

(C) Any violation of OAR 340-264-0060(3) in which 25 or more cubic yards of prohibited materials or more than 15 tires are burned by a residential owner-occupant.

(D) Any violation of a vehicle inspection program statute, rule, permit or related order committed by a natural person, except for those violations listed in section (5) of this rule.

(E) Any violation of a water quality statute, rule, permit, license or related order not listed under another penalty matrix and committed by:

(i) A person that has an NPDES permit, or has or should have a WPCF permit, for a municipal or private utility wastewater treatment facility with a permitted flow of less than two million gallons per day.

(ii) A person that has or should have applied for coverage under an NPDES Stormwater Discharge 1200-C General Permit for a construction site that is more than one, but less than five acres.

(iii) A person that has a population of 10,000 or less, as determined by the most recent national census, and either has an NPDES MS4 Stormwater Discharge Permit or has or should have a WPCF Municipal Stormwater UIC System Permit.

(iv) A person who is licensed to perform onsite sewage disposal services or who has performed sewage disposal services.

(v) A person, except for a residential owner-occupant, that owns and either has or should have registered a UIC system that disposes of stormwater or sewage.

(vi) A person that has or should have a WPCF individual stormwater UIC system permit.

(F) Any violation of an onsite sewage disposal statute, rule, permit or related order, except for a violation committed by the residential owner-occupant.

(G) Any violation of an UST statute, rule, permit or related order if the person is the owner, operator or permittee of two to four UST facilities.

(H) Any violation, except a violation related to a spill or release, of a used oil statute, rule, permit or related order committed by a person that is a used oil generator.

(I) Unless listed under another penalty matrix, any violation of a hazardous waste management statute,

COP0021916

rule, permit or related order committed by a person that is a conditionally exempt generator if the violation does not impact the person's generator status.

(J) Any violation of ORS Chapter 459 or other solid waste statute, rule, permit, or related order committed by a person with a population less than 5,000, as determined by the most recent national census.

(K) Any violation of the labeling requirements of ORS 459A.675 through 459A.685.

(L) Any violation of rigid pesticide container disposal requirements by a conditionally exempt generator of hazardous waste.

(b) The base penalty values for the $2,500 penalty matrix are as follows:

(A) Class I:

(i) Major -- $2500;

(ii) Moderate -- $1250;

(iii) Minor -- $625.

(B) Class II:

(i) Major -- $1250;

(ii) Moderate -- $625;

(iii) Minor -- $300.

(C) Class III: $200.

(5) $1,000 Penalty Matrix:

(a) The $1,000 penalty matrix applies to the following:

(A) Any violation of an open burning statute, rule, permit or related order committed by a residential owner-occupant at the residence, not listed under another penalty matrix.

(B) Any violation of visible emissions standards by operation of a vehicle.

(C) Any violation of an asbestos statute, rule, permit or related order committed by a residential owner-occupant.

COP0021917

(D) Any violation of an onsite sewage disposal statute, rule, permit or related order of OAR chapter 340, division 44 committed by a residential owner-occupant.

(E) Any violation of an UST statute, rule, permit or related order committed by a person who is the owner, operator or permittee of one UST facility.

(F) Any violation of an HOT statute, rule, permit or related order not listed under another penalty matrix.

(G) Any violation of a dry cleaning facility statute, rule, permit or related order.

(H) Any violation of a statute, rule, permit or order relating to rigid plastic containers, except for violation of the labeling requirements under OAR 459A.675 through 459A.685.

(I) Any violation of a statute, rule or order relating to the opportunity to recycle.

(J) Any violation of a statute, rule, permit or order relating to woodstoves, except a violation related to the sale of new or used woodstoves.

(K) Any violation of an UIC system statute, rule, permit or related order by a residential owner-occupant, when the UIC disposes of stormwater or sewage.

(L) Any violation by a person that has or should have applied for coverage under an NPDES 700-PM General Permit for Suction Dredges.

(b) The base penalty values for the $1,000 penalty matrix are as follows:

(A) Class I:

(i) Major -- $1000;

(ii) Moderate -- $500;

(iii) Minor -- $250.

(B) Class II:

(i) Major -- $500;

(ii) Moderate -- $250;

(iii) Minor -- $125.

COP0021918

(C) Class III: $100.

Stat. Auth.: ORS 468.020 & 468.090 - 468.140
Stats. Implemented: ORS 459.995, 459A.655, 459A.660, 459A.685 & 468.035
Hist.: DEQ 4-1989, f. & cert. ef. 3-14-89; DEQ 15-1990, f. & cert. ef. 3-30-90; DEQ 33-1990, f. & cert. ef. 8-15-90; DEQ 21-1992, f. & cert. ef. 8-11-92; DEQ 4-1994, f. & cert. ef. 3-14-94; DEQ 9-1996, f. & cert. ef. 7-10-96; DEQ 19-1998, f. & cert. ef. 10-12-98; DEQ 6-2001, f. 6-18-01, cert. ef. 7-1-01; Renumbered from 340-012-0042, DEQ 4-2005, f. 5-13-05, cert. ef. 6-1-05; DEQ 4-2006, f. 3-29-06, cert. ef. 3-31-06; DEQ 6-2006, f. & cert. ef. 6-29-06

340-012-0145

Determination of Aggravating or Mitigating Factors

(1) Each of the aggravating or mitigating factors is determined, as described below, and then applied to the civil penalty formula in OAR 340-012-0045(2).

(2) "P" is whether the respondent has any prior significant actions (PSAs). A violation becomes a PSA on the date the first FEA in which it is cited is issued.

(a) Except as otherwise provided in this section, the values for "P" and the finding that supports each are as follows:

(A) 0 if no PSAs or there is insufficient information on which to base a finding under this section.

(B) 1 if the PSA included one Class II violation or two Class III violations.

(C) 2 if the PSA (s) included one Class I violation or Class I equivalent.

(D) For each additional Class I violation or Class I equivalent, the value of "P" is increased by 1.

(b) The value of "P" will not exceed 10.

(c) If any of the PSAs were issued under ORS 468.996, the value of "P" will be 10.

(d) In determining the value of "P," the department will:

(A) Reduce the value of "P" by:

(i) 2 if all the formal enforcement actions in which PSAs were cited were issued more than three years before the date the current violation occurred.

(ii) 4 if all the formal enforcement actions in which PSAs were cited were issued more than five years

COP0021919

before the date the current violation occurred.

(B) Include the PSAs:

(i) At all facilities owned or operated by the same violator within the state of Oregon; and

(ii) That involved the same media (air, water or land) as the violations that are the subject of the current FEA.

(e) In applying subsection (2)(d)(A), the value of "P" may not be reduced below zero.

(f) PSAs that are more than ten years old are not included in determining the value of "P."

(3) "H" is the respondent's history of correcting PSAs.

(a) The values for "H" and the finding that supports each are as follows:

(A) -2 if the Respondent corrected all violations cited as PSAs.

(B) -1 if the violations were uncorrectable and the respondent took reasonable efforts to minimize the effects of the violations cited as PSAs; or

(C) 0 if there is no prior history or if there is insufficient information on which to base a finding under paragraphs (3)(a)(A) or (B).

(b) The sum of values for "P" and "H" may not be less than 1 unless the respondent took extraordinary efforts to correct or minimize the effects of all PSAs. In no case may the sum of the values of "P" and "H" be less than zero.

(4) "O" is whether the violation was repeated or ongoing.

(a) The values for "O" and the finding that supports each are as follows:

(A) 0 if the violation existed for one day or less and did not recur on the same day, or if there is insufficient information on which to base a finding under paragraphs (4)(a)(B) through (4)(a)(D).

(B) 2 if the violation recurred on the same day, or existed for or occurred on more than one day up to and including six days, which need not be consecutive days.

(C) 3 if the violation existed for or occurred from seven to 28 days, which need not be consecutive days.

(D) 4 if the violation existed for or occurred on more than 28 days, which need not be consecutive days.

COP0021920

(b) The department may, at its discretion, assess separate penalties for each day that a violation occurs. If the department does so, the O factor for each affected violation will be set at 0.

(5) "M" is the mental state of the respondent. For any violation where the findings support more than one mental state, the mental state with the highest value will apply.

(a) The values for "M" and the finding that supports each are as follows:

(A) 0 if there is insufficient information on which to base a finding under paragraphs (5)(a)(B) through (5)(a)(D).

(B) 2 if the respondent's conduct was negligent or the respondent had constructive knowledge (reasonably should have known) that the conduct would be a violation. Holding a permit that prohibits or requires conduct is presumed to constitute at least constructive knowledge and may be actual knowledge depending on the specific facts of the case.

(C) 6 if the respondent's conduct was reckless, or the respondent had actual knowledge that its conduct would be a violation and respondent's conduct was intentional. A respondent that previously received a Notice of Noncompliance, WL, PEN or any FEA for the same violation is presumed to have actual knowledge. Holding a permit that prohibits or requires conduct may be actual knowledge depending on the specific facts of the case.

(D) 10 if respondent acted flagrantly.

(6) "C" is the respondent's efforts to correct the violation.

(a) The values for "C" and the finding that supports each are as follows:

(A) -3 if the respondent made extraordinary efforts to correct the violation, or took extraordinary efforts to minimize the effects of the violation.

(B) -2 if the respondent made reasonable efforts to correct the violation, reasonable affirmative efforts to minimize the effects of the violation, or extraordinary efforts to ensure the violation would not be repeated.

(C) -1 if the respondent eventually made efforts to correct the violation, or took affirmative efforts to minimize the effects of the violation.

(D) 0 if there is insufficient information to make a finding under paragraphs (6)(a)(A) through (6)(a)(C), or (6)(a)(E), or if the violation or the effects of the violation could not be corrected or minimized.

(E) 2 if the respondent did not address the violation as described in paragraphs (6)(a)(A) through (6)(a)(C) and the facts do not support a finding under paragraph (6)(a)(D).

COP0021921

Stat. Auth.: ORS 468.020 & 468.130
Stats. Implemented: ORS 459.376, 459.995, 465.900, 465.992, 466.990 - 994, 468.090 - 140 & 468B.450 Hist.: DEQ 4-2005, f. 5-13-05, cert. ef. 6-1-05

340-012-0150

Determination of Economic Benefit

(1) The Economic Benefit (EB) is the approximate dollar value of the benefit gained and the costs avoided or delayed (without duplication) as a result of the respondent's noncompliance. The EB may be determined using the U.S. Environmental Protection Agency's BEN computer model. Upon request of the respondent, the department will provide the name of the version of the model used and respond to any reasonable request for information about the content or operation of the model. The model's standard values for income tax rates, inflation rate and discount rate are presumed to apply to all respondents unless a specific respondent can demonstrate that the standard value does not reflect that respondent's actual circumstance. Upon request of the Respondent, the department will use the model in determining the economic benefit component of a civil penalty.

(2) The department may make, for use in the applicable model, a reasonable estimate of the benefits gained and the costs avoided or delayed by the respondent. Economic benefit will be calculated without duplicating or double-counting the advantages realized by respondent as a result of its noncompliance.

(3) The department need not calculate EB if the department makes a reasonable determination that the EB is de minimis or if there is insufficient information reasonably available to the department on which to make an estimate under section (2) of this rule.

(4) The department may assess EB whether or not it assesses any other portion of the civil penalty using the formula in OAR 340-012-0045.

(5) The department's calculation of EB may not result in a civil penalty for a violation that exceeds the maximum civil penalty allowed by rule or statute. However, when a violation has occurred or been repeated for more than one day, the department may treat the violation as extending over at least as many days as necessary to recover the economic benefit of the violation. When the purpose of treating a violation as extending over more than one day is to recover the economic benefit, the department has the discretion not to impose the base penalty portion of the civil penalty. Nothing in this section precludes the department from assessing a penalty of up to the maximum allowed for the violation by statute.

Stat. Auth.: ORS 468.020 & 468.090 - 468.140
Stats. Implemented: ORS 459.376, 459.995, 465.900, 465.992, 466.210, 466.990, 466.994, 467.050, 467.990, 468.090 - 468.140 & 468.996
Hist.: DEQ 4-2005, f. 5-13-05, cert. ef. 6-1-05

340-012-0155

COP0021922

Additional or Alternate Civil Penalties

(1) The following violations and violators may be subject to additional civil penalties as specified below:

(a) In addition to any other penalty prescribed by these rules, any person who intentionally or recklessly violates any provisions of ORS 164.785, 459.205-459.426, 459.705-459.790, ORS Chapters 465, 466, 467, 468, or 468A or 468B or any rule or standard or order of the commission adopted or issued pursuant to ORS 459.205-459.426, 459.705-459.790, ORS Chapters 465, 466, 467, 468, 468A, or 468B, that results in or creates the imminent likelihood for an extreme hazard to the public health or that causes extensive damage to the environment, may incur a civil penalty of up to $100,000. When determining the civil penalty to be assessed under this subsection, the director will apply the following procedures:

(A) Select one of the following base penalties after evaluating the cause of the violation:

(i) $50,000 if the violation was caused intentionally;

(ii) $75,000 if the violation was caused recklessly;

(iii) $100,000 if the violation was caused flagrantly.

(B) Then determine the civil penalty through application of the following formula: BP + [(.1 x BP) (P + H + O + C)] + EB.

(b) In addition to any other penalty prescribed by these rules, any person who intentionally or negligently causes or permits the discharge of oil to waters of the state will incur a civil penalty not to exceed $20,000 dollars for each violation. The amount of the penalty is determined by doubling the penalty derived from application of the $8,000 penalty matrix in 340-012-0140(2) and the civil penalty formula contained in OAR 340-012-0045.

(c) In addition to any other penalty prescribed by these rules, any person who willfully or negligently causes or permits the discharge of oil to state waters will incur, in addition to any other penalty derived from application of the $8,000 penalty matrix in 340-012-0140(2) and the civil penalty formula contained in OAR 340-012-0045, a civil penalty commensurate with the amount of damage incurred. The amount of the penalty will be determined by the director with the advice of the director of the Oregon Department of Fish and Wildlife. In determining the amount of the penalty, the director may consider the gravity of the violation, the previous record of the violator in complying with the provisions of ORS 468B.450 to 468B.460, and such other considerations the director deems appropriate.

(d) In addition to any other penalty prescribed by these rules, any person who has care, custody or control of a hazardous waste or a substance that would be a hazardous waste except for the fact that it is not discarded, useless or unwanted will incur a civil penalty according to the schedule set forth in this subsection for the destruction, due to contamination of food or water supply by such waste or substance,

COP0021923

of any of the following wildlife that are property of the state:

(A) Each game mammal other than mountain sheep, mountain goat, elk or silver gray squirrel, $400.

(B) Each mountain sheep or mountain goat, $3,500.

(C) Each elk, $750.

(D) Each silver gray squirrel, $10.

(E) Each game bird other than wild turkey, $10.

(F) Each wild turkey, $50.

(G) Each game fish other than salmon or steelhead trout, $5.

(H) Each salmon or steelhead trout, $125.

(I) Each fur-bearing mammal other than bobcat or fisher, $50.

(J) Each bobcat or fisher, $350.

(K) Each specimen of any wildlife species whose survival is specified by the wildlife laws or the laws of the United States as threatened or endangered, $500.

(L) Each specimen of any wildlife species otherwise protected by the wildlife laws or the laws of the United States, but not otherwise referred to in this section, $25.

(2) The following violations are subject to the civil penalties specified below, in lieu of civil penalties calculated pursuant to OAR 340-012-0045:

(a) Until December 31, 2005, whenever an underground storage tank fee is due and owing under ORS 466.785 or 466.795, the director may issue a civil penalty of up to $100 for each day the fee is due and owing.

(b) Until December 31, 2005, the department will assess a field penalty as specified under OAR 340-150-0250 for Class I, Class II or Class III violations under OAR 340-012-0067 unless the department determines that an owner, operator or permittee is not eligible for the field penalty. In such cases of ineligibility, the penalty will be calculated according to the procedures in OAR chapter 340, division 12.

(c) Any owner or operator of a vessel discharging ballast water in violation of ORS 783.635 may incur a civil penalty not to exceed $5,000 for each violation. In determining the amount of the penalty, the director will consider whether the violation was intentional, negligent or without any fault and will

COP0021924

consider the quality and nature of risks created by the violation, the previous record of the violator in complying with the provisions of ORS 468B.450 to 468B.460, and such other considerations the director deems appropriate.

(d) Any owner or operator of a vessel violating the ballast water reporting requirements in ORS 783.640 will incur a civil penalty not to exceed $500 per violation.

(e) Air emission sources operating under the Western Backstop SO2 Trading Program will be assessed a civil penalty of at least $5,000 for each ton and each day of violation in excess of the applicable allowance limitation as determined by OAR chapter 340 division 228.

(f) Any owner or operator of a confined animal feeding operation that has not applied for or does not have a permit required by ORS 468B.050 will be assessed a civil penalty of $500.

(g) Any person that fails to comply with Toxics Use and Hazardous Waste Reduction Plan, system or summary requirements of ORS 465.003 to 465.034 may incur a civil penalty of $500 for each violation on each day.

Stat. Auth.: ORS 465, 466, 468.020, 468.130, 468.996 & 783.992
Stats. Implemented: ORS 465.021, 466.785, 466.835, 466.992, 468.090 - 468.140, 468.996, 468B.220, 468B.450 & 783.992
Hist.: DEQ 15-1990, f. & cert. ef. 3-30-90; DEQ 21-1992, f. & cert. ef. 8-11-92; DEQ 9-2000, f. & cert. ef. 7-21-00; DEQ 1-2003, f. & cert. ef. 1-31-03; Renumbered from 340-012-0049, DEQ 4-2005, f. 5-13-05, cert. ef. 6-1-05; DEQ 4-2006, f. 3-29-06, cert. ef. 3-31-06

340-012-0160

Department Discretion Regarding Penalty Assessment

(1) In addition to that described in section (3) below, the department has the discretion to increase a base penalty determined under OAR 340-012-0140 to that derived using the next highest penalty matrix. Factors that may be taken into consideration in increasing a base penalty include the respondent's compliance history, the likelihood of future violations, the degree of environmental or human health impact, the deterrence impact and other similar factors.

(2) In determining a civil penalty, the director may reduce any penalty by any amount the director deems appropriate if the respondent has voluntarily disclosed the violation to the department. In deciding whether a violation has been voluntarily disclosed, the director may take into account any considerations the director deems appropriate, including whether the violation was:

(a) Discovered through an environmental auditing program or a systematic compliance program;

(b) Voluntarily discovered;

COP0021925

(c) Promptly disclosed;

(d) Discovered and disclosed independent of the government or a third party;

(e) Corrected and remedied;

(f) Prevented from recurring;

(g) Not repeated;

(h) Not the cause of significant harm to human health or the environment; and

(i) Disclosed and corrected in a cooperative manner.

(3) Regardless of any other penalty amount listed in this division, the director has the discretion to increase the penalty to $10,000 per violation per day of violation based upon the facts and circumstances of the individual case.

(4) For violations of a department-issued permit with more than one permittee, the department may issue separate civil penalties to each permittee, given compliance objectives, including the level of deterrence needed.

Stat. Auth.: ORS 468.020, 468.130
Stats. Implemented: ORS 183.745, 459.376, 459.995, 465.900, 465.992, 466.990, 466.994, 468.090-468.140, 468.996, 468B.450
Hist.: DEQ 4-2005, f. 5-13-05, cert. ef. 6-1-05

340-012-0162

Inability to Pay the Penalty

(1) After a penalty is assessed, the department may reduce a penalty based on the respondent's inability to pay the full penalty amount. In order to do so, the department must receive information regarding the respondent's financial condition on a form required by the department along with any additional documentation requested by the department.

(2) If the respondent is currently unable to pay the full penalty amount, the first option is to place the respondent on a payment schedule with interest. The department may reduce the penalty only after determining that the respondent is unable to meet a payment schedule of a length the department determines is reasonable.

(3) In considering the respondent's ability to pay a civil penalty, the department may use the U.S. Environmental Protection Agency's ABEL, INDIPAY or MUNIPAY computer models to evaluate a

COP0021926

respondent's financial condition or ability to pay the full civil penalty amount. Upon request of the respondent, the department will provide the respondent the name of the version of the model used and respond to any reasonable request for information about the content or operation of the model;

(4) The department, at its discretion, may refuse to reduce an assessed civil penalty. In exercising this discretion, the department may take into consideration any factor related to the violations or the respondent, including but not limited to the respondent's mental state, whether the respondent has corrected the violation or taken efforts to ensure the violation will not be repeated, whether the respondent's financial condition poses a serious concern regarding the respondent's ability to remain in compliance, the respondent's future ability to pay, and the respondent's real property or other assets.

Stat. Auth.: ORS 468.020, 468.130
Stats. Implemented: ORS 454.635, 454.645, 459.376, 459.995, 465.900, 465.992, 466.990-466.994, 468.090-468.140, 468B.220-468B.450
Hist.: DEQ 4-2005, f. 5-13-05, cert. ef. 6-1-05

340-012-0165

Stipulated Penalties

Nothing in OAR chapter 340, division 12 affects the ability of the commission or department to include stipulated penalties in a Mutual Agreement and Order, Consent Order, Consent Judgment or any other order or agreement issued under ORS Chapters 183, 454, 459, 465, 466, 467, 468, 468A, or 468B.

Stat. Auth.: ORS 454.625, 459.995, 468.020 & 468.996
Stats. Implemented: ORS 183.090 & 183.415
Hist.: DEQ 4-1989, f. & cert. ef. 3-14-89; DEQ 15-1990, f. & cert. ef. 3-30-90; DEQ 21-1992, f. & cert. ef. 8-11-92; DEQ 19-1998, f. & cert. ef. 10-12-98; Renumbered from 340-012-0048, DEQ 4-2005, f. 5-13-05, cert. ef. 6-1-05

340-012-0170

Compromise or Settlement of Civil Penalty by Department

(1) Any time after service of the formal enforcement action, the department may compromise or settle a civil penalty at any amount that the department deems appropriate.

(2) In determining whether a penalty should be compromised or settled, the department may take into account the following:

(a) New information obtained through further investigation or provided by the respondent that relates to the penalty determination factors contained in OAR 340-012-0045;

COP0021927

(b) The effect of compromise or settlement on deterrence;

(c) Whether the respondent has or is willing to employ extraordinary means to correct the violation or maintain compliance;

(d) Whether the respondent has had any previous penalties which have been compromised or settled;

(e) Whether the respondent has the ability to pay the civil penalty as determined by OAR 340-012-0160;

(f) Whether the compromise or settlement would be consistent with the department's goal of protecting human health and the environment; and

(g) The relative strength or weakness of the department's evidence.

Stat. Auth.: ORS 459.995, 466, 467, 468.020 & 468.996
Stats. Implemented: ORS 183.090 & 183.415
Hist.: DEQ 78, f. 9-6-74, ef. 9-25-74; DEQ 22-1984, f. & ef. 11-8-84; DEQ 22-1988, f. & cert. ef. 9-14-88; Renumbered from 340-12-075; DEQ 4-1989, f. & cert. ef. 3-14-89; DEQ 15-1990, f. & cert. ef. 3-30-90; DEQ 21-1992, f. & cert. ef. 8-11-92; Renumbered from 340-012-0047, DEQ 4-2005, f. 5-13-05, cert. ef. 6-1-05

The official copy of an Oregon Administrative Rule is contained in the Administrative Order filed at the Archives Division, 800 Summer St. NE, Salem, Oregon 97310. Any discrepancies with the published version are satisfied in favor of the Administrative Order. The Oregon Administrative Rules and the Oregon Bulletin are copyrighted by the Oregon Secretary of State. Terms and Conditions of Use

Alphabetical Index by Agency Name

Numerical Index by OAR Chapter Number

Search the Text of the OARs

Questions about Administrative Rules?

Link to the Oregon Revised Statutes

Return to Oregon State Archives Home Page

COP0021928

(2) A respondent holding a license or permit issued by the department or commission, or who has submitted an application for a license or permit, will be conclusively presumed able to be served at the address given in the license or permit application, as it may be amended from time to time.

(3) Service by regular mail may be proven by a certificate executed by the person effecting service.

(4) Regardless of other provisions in this rule, documents sent by the department or commission through the U.S. Postal Service by regular mail to a person's last known address are presumed to have been received, subject to evidence to the contrary.

Stat. Auth.: ORS 183.341 & ORS 468.020
Stats. Implemented: ORS 183.413 & ORS 183.415
Hist.: DEQ 78, f. 9-6-74, ef. 9-25-74; DEQ 122, f. & ef. 9-13-76; DEQ 1-2000(Temp), f. 2-15-00, cert. ef. 2-15-00 thru 7-31-00; DEQ 9-2000, f. & cert. ef. 7-21-00; Renumbered from 340-011-0097 by DEQ 18-2003, f. & cert. ef. 12-12-03

340-011-0530

Requests for Hearing

(1) Unless a request for hearing is not required by statute or rule, or the requirement to file a request for hearing is waived in the formal enforcement action, a respondent has 20 calendar days from the date of service of the formal enforcement action in which to file a written request for hearing unless another timeframe is allowed by statute or rule.

(2) The request for hearing must include a written response to the formal enforcement action that admits or denies all factual matters alleged therein, and alleges any and all affirmative defenses and the reasoning in support thereof. Factual matters not denied will be considered admitted, and failure to raise a defense will be a waiver of the defense. New matters alleged in the request for hearing are denied by the department unless admitted in subsequent stipulation.

(3) An amended request for hearing may be accepted by the department if the department determines that the filing of an amended request will not unduly delay the proceeding or unfairly prejudice the participants. The respondent must provide the department with a written explanation why an amended request for hearing is needed with the amended request for hearing.

(4) A late request for hearing may be accepted by the department if the department determines that the cause for the late request was beyond the reasonable control of the respondent. The respondent must provide the department with a written explanation why the request for hearing was not filed in a timely manner. If the respondent fails to provide the written explanation, the department cannot accept the late request for hearing. The department may require that the explanation be supported by an affidavit.

(5) The filing of a late request for hearing does not stay the effect of any final order.

(6) The department will deny a late request for hearing that is filed more than 60 days after entry of a final order by default. A final order by default is considered entered when the order is signed by the director on behalf of the department or commission.

Stat. Auth.: ORS 183.341 & ORS 468.020
Stats. Implemented: ORS 183.415, 183.464, 183.482 & ORS 183.484

COP0021929

137-003-0525

Scheduling Hearings

(1) Subject to the approval of the agency, the Office of Administrative Hearings or assigned administrative law judge shall:

(a) Set the date and time of the hearing, including a postponed or continued hearing;

(b) Determine the location of the hearing; and

(c) Determine whether cases shall be consolidated or bifurcated.

(2) Unless otherwise provided by law, the Office of Administrative Hearings or assigned administrative law judge may postpone a hearing:

(a) For good cause; or

(b) By agreement of the parties and the agency, if the agency is participating in the hearing.

Stat. Auth.: ORS 183.341
Stats. Implemented: ORS 183.341 & OL 1999, Ch. 849
Hist.: DOJ 10-1999, f. 12-23-99, cert. ef. 1-1-00; DOJ 2-2000, f. & cert. ef. 3-27-00; DOJ 9-2001, f. & cert. ef. 10-3-01; DOJ 19-2003, f. 12-12-03, cert. ef. 1-1-04

137-003-0528

Late Hearing Requests

(1)(a) When a party requests a hearing after the time specified by the agency but before entry of a final order by default or, if a final order by default is entered, on or before 60 calendar days after the entry of the final order by default, the agency may accept the late request only if the cause for failure to timely request the hearing was beyond the reasonable control of the party, unless other applicable statutes or agency rule provides a different timeframe or standard.

(b) If a final order by default has already been entered, the party requesting the hearing shall deliver or mail within a reasonable time a copy of the hearing request to all persons and agencies required by statute, rule or order to receive notice of the proceeding.

(c) In determining whether to accept a late hearing request, the agency may require the request to be supported by an affidavit or other writing that explains why the request for hearing is late and may conduct such further inquiry as it deems appropriate.

(d) The agency by rule or in writing may provide a right to a hearing on whether the late filing of a hearing request should be accepted. If a hearing is held, it shall be conducted pursuant to these rules by an administrative law judge from the Office of Administrative Hearings.

(e) If the late hearing request is allowed by the agency, it shall enter an order granting the request and refer the matter to the Office of Administrative Hearings to hold a hearing on the underlying matter. If the late hearing request is denied by the agency, the agency shall enter an order setting forth reasons for

the denial.

(f) If the agency or another party disputes the facts contained in the explanation of why the request for hearing is late, the agency shall provide a right to a hearing on the reasons why the hearing request is late. The administrative law judge shall issue a proposed order recommending that the agency grant or deny the late hearing request.

(2) Except as otherwise provided by law, if a final order by default has been entered, that order remains in effect during consideration of a late hearing request unless the final order is stayed under OAR 137-003-0690.

(3) When a party requests a hearing more than 60 calendar days (or other time period set by statute) after the agency or administrative law judge has entered a final order by default, the agency shall not grant the request unless a statute or agency rule permits the agency to consider the request.

Stat. Auth: ORS 183.341
Stats. Implemented: ORS 183.341
Hist.: DOJ 9-2001, f. & cert. ef. 10-3-01; DOJ 7-2003, f. 7-11-03, cert. ef. 7-21-03; DOJ 19-2003, f. 12-12-03, cert. ef. 1-1-04

137-003-0530

Late Filing and Amendment of Documents

(1) Unless otherwise provided by law, when a party or agency fails to file any document for the contested case proceeding, except a hearing request, within the time specified by agency rules or these rules of procedure, the late filing may be accepted if the agency or administrative law judge determines that there was good cause for failure to file the document within the required time.

(2) The decision whether a late filing will be accepted shall be made:

(a) By the agency if OAR 137-003-0520 requires the document to be filed with the agency, or

(b) By the administrative law judge if OAR 137-003-0520 requires the document to be filed with the Office of Administrative Hearings or the assigned administrative law judge.

(3) The agency or administrative law judge may require a statement explaining the reasons for the late filing.

(4) Notwithstanding any other provision of these rules, at any time after the issuance of the notice required by ORS 183.415, an agency may issue an amended notice. If an agency issues an amended notice, any party may obtain, upon request, a continuance determined to be reasonably necessary to enable the party to file an amended response, if required by agency rules, or to respond to any new material contained in the amended notice. If the agency files an amended notice after the evidentiary record has been closed, the agency shall inform the administrative law judge, who will reopen the record and conduct any further hearing or listen to additional argument required by new matters in the amended notice. If the administrative law judge has issued a proposed order, the administrative law judge shall prepare an amended proposed order after completion of any further hearing.

(5) Unless otherwise provided by law, when a party or agency files any document for the contested case

DEPARTMENT OF ENVIRONMENTAL QUALITY
INTERNAL MANAGEMENT DIRECTIVE ON
SUPPLEMENTAL ENVIRONMENTAL PROJECTS

I. PURPOSE

This internal management directive (Directive) is designed to enhance human health and the environment by encouraging respondents to complete or provide for the completion of "Supplemental Environmental Projects" (SEPs) in settlement of civil penalty actions. SEPs reduce the risk of further pollution, benefit public health, restore and protect the environment, and/or promote environmental compliance. SEPs result in benefits that would not otherwise occur, either because the actions are not required by law or would not be seen by the respondent as economically viable, were it not for the impending penalty action. This Directive outlines the conditions under which the Oregon Department of Environmental Quality (Department) will consider mitigating a penalty with a SEP.

II. AUTHORITY

The Department may consider SEPs in settlement pursuant to Oregon Revised Statute 468.130(3) and (4) and Oregon Administrative Rule (OAR) 340-012-0170, which allow the Director to mitigate penalties when the respondent is willing to employ extraordinary means to maintain compliance and when the settlement is consistent with protecting public health and the environment.

III. APPLICABILITY

1) This Directive applies to assessment of penalties for violations of all of environmental statutes, rules, permits and orders administered by the Department.
2) This Directive sets forth factors for the Department to consider in exercising its prosecutorial and settlement discretion. The Directive is not final agency action and is intended as guidance for staff. The Department may take action at variance with this Directive.
3) The Directive does not create any rights, duties, obligations, or defenses, implied or otherwise, in any third parties. It is not intended for use in pleading, at hearing or at trial.

IV. DISCUSSION AND DIRECTIVE

The Department wishes to create a means through which respondents may reduce penalties by agreeing to fund projects that benefits public health and the environment in Oregon. The objective is to ensure deterrence through payment of the appropriate penalty, but to allow a respondent to supply a portion of the penalty in the form of the benefits of a SEP rather than cash. In order to ensure that performance of a SEP benefits the environment and deters violations of environmental laws, Department staff are directed to approve a SEP proposal only if it meets all of the Required Criteria listed in Section A below and to give preference to those SEPs meeting the Preference Criteria listed in Section B below.

COP0021932

A. To be approvable, a SEP must meet at least the following Required Criteria:

1) The SEP primarily benefits human health or the environment in Oregon;
2) The respondent's contribution to the SEP is worth at least as much as the penalty reduction;
3) The work and/or the environmental result under the SEP is not otherwise required by statute, rule, permit, or order; and is not set to become a future enforceable requirement as identified by a law, regulation or government register;
4) The portion of the SEP attributable to the penalty reduction will not be funded by state or federal government loans, contracts or grants;
5) The responsibilities of the respondent under the SEP are commensurate with the respondent's expertise and capabilities, if respondent is doing the work rather than conferring the funds on a third party to do the work;
6) The SEP must not call for the Department to manage or control funds; or to manage or administer the SEP (though it may involve the Department in an oversight role);
7) The SEP will not be used to satisfy any statutory obligation or circumvent any statutory prohibition applicable to the Department;
8) The SEP does not create a significant market or economic advantage for the respondent; however, an otherwise acceptable project that has incidental advantage to the respondent may be accepted by appropriately valuing the SEP (see Section C, below); and
9) The SEP must provide for a Final SEP Report to be submitted to the Department.

B. In deciding between alternative SEPs and whether to recommend approval of a penalty reduction for any particular SEP, staff should consider the extent to which the proposed SEP meets the following Preference Criteria:

1) Projects should have a higher monetary value than the penalty reduction, either because the respondent donates additional resources or money or because the respondent or recipient leverages the money to gain additional resources or money for the project;
2) SEPs done to mitigate penalties for violations done willfully, flagrantly, or with criminal intent or violations done by chronic or recalcitrant violators generally should be performed by third parties rather than the respondent;
3) The violation was self-disclosed;
4) The violation was corrected expeditiously;
5) The SEP proposal contains all the information described below in Section D. (Incomplete proposals may be rejected without further action);
6) The respondent submits a complete SEP proposal within 60 days of service of the Notice of Civil Penalty Assessment;
7) The SEP will not necessitate significant DEQ staff time to plan, review, implement, monitor, or follow up (*e.g.*, a project where the respondent arranges to have the project carried out by an organization that regularly performs the kind of work proposed would be preferable to having a respondent work outside its area of knowledge);
8) The penalty to be mitigated exceeds $2,000 if the project is to be handled by the respondent rather than a third party;

COP0021933

9) The SEP relates to the same environmental program as the violation and will be implemented in the same geographic area as the violation;[1]
10) The SEP has measurable, or tangible, environmental outcome; and
11) The project fits into at least one of the following categories:[2]
   a) Pollution Prevention – preventing waste or pollution at the source, by conserving energy or natural resources, or by making process changes (such as chemical substitutions) or by making a process more efficient so that less waste is created for a given amount of product;
   b) Pollution Reduction – reducing the amount and/or danger presented by some form of pollution, often by providing better treatment and disposal of the pollutant;
   c) Public Health Protection – for example, medical examinations of residents in a community to determine if anyone has experienced any health problems because of the violations;
   d) Environmental Restoration and Protection – improving the condition of the land, air or water in the area damaged by the violation. For example, by planting native riparian vegetation, a respondent could improve aquatic habitat by reducing water temperatures;
   e) Planning and Preparedness for Environmental Emergencies – providing assistance to a responsible state or local emergency response or planning entity. Such assistance may include the purchase of computers and/or software, communication systems, chemical emission detection and inactivation equipment, HAZMAT equipment, or training.
   f) Assessments and Audits to determine if the respondent is causing any other pollution problems or can run its operations better to avoid violations in the future.
   g) Environmental Compliance Promotion – providing training or technical support to other members of the regulated community to achieve, or go beyond, compliance with applicable environmental requirements.
   h) Other projects that have environmental merit but do not fit within the categories listed above. These types of projects must be fully consistent with all other provisions of the SEP Policy and be approved by the Department.

C. Determining the Amount of Penalty Mitigation

SEPs are valued by the following method:
1) Add all the qualifying costs of the SEP proposed by the respondent. Qualifying costs are all the reasonable costs of executing the SEP, which may include:
   (i) reasonable costs of preparing an approved SEP proposal;
   (ii) costs of materials and services;

---

[1] While DEQ prefers that SEPs have a "nexus" to the violation, this is not a state legal requirement as it is under EPA's final Supplemental Environmental Projects Policy, (April 10, 1998) which can be found at www.epa.gov/Compliance/resources/policies/civil/seps/sepfinal2.pdf.

[2] Additional information about these categories can be found in the EPA final SEP policy at the above website.

COP0021934

(iii) wages (appropriate to the work) paid to a respondent's employees for time spent on the SEP so long as the time is only spent on the SEP and the respondent documents the days and hours during which the employee worked on the SEP and includes that accounting in its final close-out report;

(iv) wages (appropriate to the work) and proportional overhead paid to employees of a third party executing the SEP; and

(v) any other reasonable and proper costs of preparing, organizing, and executing the SEP.

Under no circumstances may SEP monies be used for entertainment or refreshment costs.

2) In cases where the respondent will likely gain an economic benefit from the SEP, DEQ may reduce the value of the SEP accordingly. In making this determination, the Department may use the US EPA PROJECT computer model.[3]

3) When a SEP calls for payments to be made in the future, the value of the SEP may be adjusted to reflect the difference in value of present vs. future payments.

4) Department staff may consider a SEP that might not otherwise meet preference criteria if the value of the SEP exceeds the value of the penalty reduction, or if the SEP has components that benefit the public or environment at large, are innovative, address environmental justice concerns, incorporate community input, or have multimedia benefits.

5) Determine the final penalty as follows: Determine the settleable penalty which is the dollar value of the penalty after taking into consideration all information and agreements other than the value of the SEP. Subtract the amount respondent will contribute to the SEP from the settleable penalty. Generally, a settleable penalty may not be reduced by more than 80%.[4]

D. SEP Proposal Procedure

1) Proposals for SEPs are solely the responsibility of the respondent and must include the following:

   a) A description of expected benefits and results and how benefits and results will be measured or assessed;

   b) A summary of the estimated value of the SEP, listing the costs that will be paid by the respondent and crediting any leveraged amounts that will cover other related costs; and

   c) A proposed schedule including milestones for completion, culminating in the submission of a Final Close-out Report to DEQ.

Department staff may assist a respondent in identifying possible SEPs. However, staff should not advocate for a particular project or particular recipient of the funds without first

---

[3] The PROJECT model and user's manual can be found at www.eap.gov/oeca/models/.

[4] Example: Respondent receives a Notice of Civil Penalty Assessment for $10,000. During informal discussions, DEQ learns information leading it to believe the penalty should be reduced to $8,000. The maximum penalty mitigation would be 80% of the settleable penalty of $8,000 (=$6,400). The lowest final penalty, to which DEQ and respondent could agree, would be a final penalty of $1,600 and an SEP value of at least $6,400.

COP0021935

obtaining the approval of the Administrator of the Office of Compliance and Enforcement. The Administrator of the Office of Compliance and Enforcement has sole authority to reduce a penalty with a SEP and to commit DEQ to agreeing to a particular SEP.

2) A respondent may wish to submit a pre-proposal outlining a proposed project before doing the work necessary to create a final SEP proposal. A pre-proposal should contain sufficient information to show that the project is likely to meet the requirements set forth in this guidance. Once a pre-proposal is submitted to the Environmental Law Specialist (ELS) handling the case, the ELS will consult with the relevant regional and headquarters staff, manager and administrator, and make a recommendation to the Administrator of the Office of Compliance and Enforcement. Approval of a pre-proposal by the OCE Administrator indicates that the Department agrees that the concept appears to meet the SEP criteria and will likely approve that particular SEP. However, approval and acceptance is only made final upon full agreement with the respondent on the costs, benefits, schedules and other terms of the final SEP as incorporated into a Mutual Agreement and Order (MAO) described below.
3) A final SEP proposal must be submitted to the ELS handling the case. An address and phone number for that person will be listed on the cover letter of the Notice of Violation and Civil Penalty Assessment.
4) In determining whether any given SEP proposal fits within this Directive, the ELS will consult with the relevant regional staff, management and others as needed. Once the ELS has completed an evaluation, the ELS will make a recommendation to the Administrator of the Office of Compliance and Enforcement.
5) Proposed SEPs not incorporated into an executed MAO within six months of the date of the original Notice of Violation and Civil Penalty Assessment are presumed denied.

E. SEP Settlement Procedure

1) A SEP must be accurately and completely described in a MAO which may incorporate the SEP proposal if the proposal itself provides sufficient detail.
2) The MAO must include the following:
    a) Respondent must not use the value of a SEP as a tax deduction or as part of a tax credit application.
    b) Respondent must agree that whenever it publicizes a SEP or the results of the SEP, it will state in a prominent manner that the project is being undertaken as part of the settlement of an Oregon DEQ enforcement action.
    c) A requirement for a Final SEP Report to be submitted to the Department according to a schedule defined in the MAO. The Final SEP Report must include a detailed description of the expenses, copies of relevant receipts, explanation of measurable results, and a certification that the SEP is complete as described in the report.
    d) If respondent fails to complete the SEP as required, the penalty will become due (including the portion of the penalty that would have been mitigated because of the SEP, plus statutory interest (currently 9% annual) on the whole amount). At its discretion, DEQ may give credit for a partially completed project.
    e) If respondent is conveying the money to a third party for execution of the SEP, the Department may agree to have the payment of the penalty be the respondent's only

COP0021936

deliverable under the MAO, as long as the third party is required to carry out the work and provide the Final Close-out Report.

3) The Department's Office of Compliance and Enforcement will give information to the appropriate Communications and Outreach staff to generate a news release on every MAO that includes a SEP.

V. EFFECTIVE DATE

This Directive is effective on

10-15-07
Date

Dick Pedersen
Dick Pedersen, Deputy Director

COP0021937

7006 0100 0002 8261 6854

c 19J82035135

$06.79⁰

11/30/2007

Mailed From 97204

US POSTAGE

ConocoPhillips Company
c/o US Corp Co
285 Liberty St NE
Salem OR 97301

COP0021938

Portland Wastes - 2002

Date	Manifest ID#	Manifest Type	Manifest Comments	Description	Generation	Volume	Units	Pounds Disposed	Haz. Waste (yes/no)	Transportation
02/05/02	1156	Uniform Haz Waste		RQ Waste flammable liquid, n.o.s., (hexane), 3, UN1993, PG II	Lubricants lab	15	gallons	82.65	Yes	Cowlitz to Emerald in Tacoma WA
02/05/02	1200	Uniform Haz Waste		RQ Waste flammable liquid, n.o.s., (hexane), 3, UN1993, PG II	Lubricants lab	15	gallons	82.65	Yes	Cowlitz to Emerald in Tacoma WA
06/07/02	1222	Uniform Haz Waste		RQ Waste flammable liquid, n.o.s., (hexane), 3, UN1993, PG II	Lubricants lab	15	gallons	82.65	Yes	Cowlitz to Emerald in Tacoma WA
06/07/02	6604	TPS Non-Haz Soils		Petroleum contaminated soil	Sand lot soil	7.25	tons		No	Cowlitz to TPS, Portland, OR
06/07/02	6604	TPS Non-Haz Soils		Petroleum contaminated soil	Sand lot soil	6.94	tons		No	Cowlitz to TPS, Portland, OR
06/07/02	6604	TPS Non-Haz Soils		Petroleum contaminated soil	Sand lot soil	6.91	tons		No	Cowlitz to TPS, Portland, OR
06/07/02	6604	TPS Non-Haz Soils		Petroleum contaminated soil	Sand lot soil	7.06	tons		No	Cowlitz to TPS, Portland, OR
06/07/02	6604	TPS Non-Haz Soils		Petroleum contaminated soil	Sand lot soil	6.36	tons		No	Cowlitz to TPS, Portland, OR
06/10/02	6604	TPS Non-Haz Soils		Petroleum contaminated soil	Sand lot soil	7.03	tons		No	Cowlitz to TPS, Portland, OR
06/10/02	6604	TPS Non-Haz Soils		Petroleum contaminated soil	Sand lot soil	6.32	tons		No	Cowlitz to TPS, Portland, OR
06/10/02	6604	TPS Non-Haz Soils		Petroleum contaminated soil	Sand lot soil	4.78	tons		No	Cowlitz to TPS, Portland, OR
06/10/02	6604	TPS Non-Haz Soils		Petroleum contaminated soil	Sand lot soil	7.87	tons		No	Cowlitz to TPS, Portland, OR
06/10/02	6604	TPS Non-Haz Soils		Petroleum contaminated soil	Sand lot soil	8.10	tons		No	Cowlitz to TPS, Portland, OR
07/17/02	1236	Uniform Haz Waste		Flammable Liquid, N.O.S., (Contains heavy aromatic naphtha), 3, UN1993, PG III	Old fuel additive, Baker Petrolite TOLAD 3203 Fuel Additive	75	gallons	555.75	Yes	Cowlitz to Emerald in Tacoma WA
07/17/02	1256	Uniform Haz Waste		Paint related material, 3, UN1263, PG III	Old paint not being used. Aluminum molding	10	gallons	82.40	Yes	Cowlitz to Emerald in Tacoma WA
07/17/02	9907	BOL		Non-regulated material, oily filters and pads	remeidation, cleanup of small drips and spills	2	tons		No	Cowlitz to Waste Management Hillsboro Landfill
07/17/02	9908	BOL		Non-regulated material, light tubes	Housekeeping	208 (8 ft x 26 ft)	feet		No	Cowlitz to ECO Lites
07/17/02	9908	BOL		Non-regulated material, vapor lights	Housekeeping	51	lights		No	Cowlitz to ECO Lites
07/17/02	9908	BOL		Non-regulated material, light tubes	Housekeeping	208 (4 ft x 62 ft)	feet		No	Cowlitz to ECO Lites
07/17/02	9909	BOL		Non-regulated material, wet cell batteries	Housekeeping	3	batteries		No	Cowlitz to Waste Management Recycling

COP0021940

07/17/02	9910	BOL	Non-regulated material, 200 gallon steel tank	Housekeeping	1	200 gallon steel tank			NO	Cowlitz to Metro Metals
07/17/02	9911	BOL	Non-regulated material, latex paint	Housekeeping	3	gallons			No	Cowlitz to Waste Management Recycling
07/17/02	9911	BOL	Non-regulated material, wood preservative	Housekeeping	1	gallon			No	Cowlitz to Waste Management Recycling
07/31/02	1210	Uniform Haz Waste	RQ Waste flammable liquid, n.o.s., (hexane), 3, UN1993, PGII	Lubricants lab	11	gallons	12.05	Yes		Cowlitz to Emerald in Tacoma WA
08/12/02	6503	TPS Non-Haz Soils	Petroleum contaminated soil	Tank 4369 RLOP 200 spill	9.97	tons		No		Cowlitz to TPS, Portland, OR
08/12/02	7270	TPS Non-Haz Soils	Petroleum contaminated soil	Tank 4369 RLOP 200 spill	11.06	tons		No		Cowlitz to TPS, Portland, OR
09/21/02	8749	BOL	Non-regulated material; water-diesel-IFO mixture	Cleaning of Tank 4318	2,000	gallons			No	Cowlitz to Oil Re-Refining Inc.
09/24/02	1305	Uniform Haz Waste	RQ Waste flammable liquid, n.o.s., (hexane), 3, UN1993, PGII	Lubricants lab	15	gallons	12.05	Yes		Cowlitz to Emerald in Tacoma WA
10/04/02	9932	BOL	Non-regulated material, oily filters and pads	remeidation, cleanup of small drips and spills	1,000	pounds			No	Cowlitz to Waste Management Hillsboro Landfill
10/17/02	9942	BOL	Non-regulated material; Black oil tank bottoms		110	gallons			No	Cowlitz to Fuel Processors Inc.
10/17/02	9942	BOL	Non-regulated material; Black oil sludge		110	gallons			No	Cowlitz to Fuel Processors Inc.
10/17/02	9942	BOL	Non-regulated material; antifreeze		110	gallons			No	Cowlitz to Fuel Processors Inc.
10/25/02	NA	Receipt from Spencer Environmental	Used oil for recycling	Old lube oil/lube oil additive mixture	584	gal			No	Spencer Environmental to Spencer Environmental
11/07/02	1323	Uniform Haz Waste	RQ Waste flammable liquid, n.o.s., (hexane), 3, UN1993, PGII	Lubricants lab	11	gallons	12.05	Yes		Cowlitz to Emerald in Tacoma WA
11/07/02	9956	BOL	Non-regulated material; filters		1	pallet			No	Cowlitz to Waste Management Hillsboro Landfill
11/07/02	9956	BOL	Non-regulated material; oily pads		165 (3 drums)	gallons			No	Cowlitz to Waste Management Hillsboro Landfill
11/07/02	9956	BOL	Non-regulated material; oily sludgewater		5	gallons			No	Cowlitz to Waste Management Hillsboro Landfill
11/07/02	9957	BOL	Non-regulated material; oily water		55	gallons			No	Cowlitz to Fuel Processors Inc.

Lyons, Thomas:
From: Collins, Bill:
Sent: Thursday, November 15, 2001 9:12 AM
To: Lyons, Thomas:; Sherman, John:; DeBellis, Vito:; Gilfillan, Shawn:
Subject: RE: Sand Lot excavated soil

At least for now, we still need to segregate soil into three piles; 1) soil from above the pipes (i.e., the existing large pile in the sand lot); 2) soil from below the pipes (i.e., existing pile int Tank Farm 3); and 3) obviously affected soil. All obviously affected soil should be stockpiled on top of plastic and bermed.

-----Original Message-----
From: Lyons, Thomas:
Sent: Thursday, November 15, 2001 8:46 AM
To: Sherman, John:; Collins, Bill:; DeBellis, Vito:; Gilfillan, Shawn:
Subject: RE: Sand Lot excavated soil

Steve w/CCS believes there will be a large amount of soil to spread. For now, we can pile the soil in the back 40, and spread it in December.

Thanks,
Tom Lyons
Tosco Portland Terminal
Office: 503-248-1558
Fax: 503-248-1540

-----Original Message-----
From: **Sherman, John:**
Sent: Thursday, November 15, 2001 7:10 AM
To: Collins, Bill:; Lyons, Thomas:; DeBellis, Vito:; Gilfillan, Shawn:
Subject: Sand Lot excavated soil
Importance: High

After several conversations with Bill and Tom, how about we spread the soil evenly out in the back 40 behind the truck parking or in the back corner of tank farm 3. If after the spreading we need to lay down a layer of gravel, we can do that. Is there <u>any</u> reason we wouldn't want to spread this soil out on site?

Bill, Tom, Vito - Discuss among yourselves and if there isn't an environmental reason we can't do this, make sure there isn't an operational reason not to do it. We can save a lot of money if we keep it on site. If we are going to spread on site, send out an email to all the operators, Keith and LeFebvre and if they are affected by this, the company drivers letting them know what's going on.

Thanks.

John Sherman
Office: 503-248-1538
Fax: 503-248-1522

Make Safety your first idea, not your last.

Lyons, Thomas:
From: Collins, Bill:
Sent: Thursday, November 15, 2001 8:15 AM
To: Sherman, John:; Lyons, Thomas:; DeBellis, Vito:; Gilfillan, Shawn:
Cc: 'ksattler@geoengineers.com'
Subject: RE: Sand Lot excavated soil

Everyone, I should have final lab data and a summary of DEQ's and Ecology's positions on end uses of soil ready by tomorrow. I'll be more prepared to discuss environmental issues at that time. Until then, I hope CCS and Marty's contractors can work around the pile. Take care, Bill

-----Original Message-----
From: Sherman, John:
Sent: Thursday, November 15, 2001 7:10 AM
To: Collins, Bill:; Lyons, Thomas:; DeBellis, Vito:; Gilfillan, Shawn:
Subject: Sand Lot excavated soil
Importance: High

After several conversations with Bill and Tom, how about we spread the soil evenly out in the back 40 behind the truck parking or in the back corner of tank farm 3. If after the spreading we need to lay down a layer of gravel, we can do that. Is there <u>any</u> reason we wouldn't want to spread this soil out on site?

Bill, Tom, Vito - Discuss among yourselves and if there isn't an environmental reason we can't do this, make sure there isn't an operational reason not to do it. We can save a lot of money if we keep it on site. If we are going to spread on site, send out an email to all the operators, Keith and LeFebvre and if they are affected by this, the company drivers letting them know what's going on.

Thanks.

John Sherman
Office: 503-248-1538
Fax: 503-248-1522

Make Safety your first idea, not your last.

Lyons, Thomas:
From: Collins, Bill:
Sent: Thursday, February 14, 2002 10:11 AM
To: Lyons, Thomas:
Cc: Sherman, John:
Subject: Sand Lot

Tom, Sample results indicate that the pile of soil remaining at the sand lot is ok to use for backfill. The two bucket loads that Steve removed from the pile in the vicinity fo the where the one hot sample was originally taken should be placed with other soil to be treated or taken to the landfill. I think Steve has already done this. Let me know if otherwise. Call me with any questions. Bill

-----Original Message-----
From: Kyle Sattler [SMTP:ksattler@geoengineers.com]
Sent: Thursday, February 14, 2002 9:29 AM
To: Collins, Bill:
Subject: RE: Tosco Portland Terminal

I would think so. What did you do with the dirty soil??

> -----Original Message-----
> From: Collins, Bill: [mailto:bcollins@ppco.com]
> Sent: Thursday, February 14, 2002 9:20 AM
> To: 'Kyle Sattler'
> Subject: RE: Tosco Portland Terminal
>
>
> So, we can use as bacfill?
>
> > -----Original Message-----
> > From: Kyle Sattler [SMTP:ksattler@geoengineers.com]
> > Sent: Wednesday, February 13, 2002 3:53 PM
> > To: bcollins@ppco.com
> > Subject: FW: Tosco Portland Terminal
> >
> > Would you look at that - they turned up clean!
> > K
> > -----Original Message-----
> > From: Crystal Burkholder [mailto:CBurkholder@ncalabs.com]
> > Sent: Wednesday, February 13, 2002 3:06 PM
> > To: Kyle Sattler (E-mail)
> > Subject: Tosco Portland Terminal
> >
> >
> >
> > <<P2B0119.pdf>>
> >
> > Crystal Burkholder, Project Manager
> > North Creek Analytical - Beaverton
> > Direct: 503-906-9233
> > Phone: 503-906-9200 x0105
> > Fax: 503-906-9210 0105 (for faxing directly to desktop use the
> > sub-address or flash key followed by 0105)
> >
> >
> **********
> > **********

Pre Construction Meeting
NW Doane Ave. / NW Front St. – Outfall 22 Liner
BES Public Works Permit Project 8919
Precon Location – Project Site 12:30 PM
February 23rd, 2009

Notes:

1. **BES is inspecting all work and construction on outfall-22.**

1. **Introductions:**
   - Business Cards.
   - Please sign the precon sign in sheet.

Contacts:

A) Applicant: Conoco Phillips
1203 NW Washington, Suite 212
Tempe, AZ 85280
Myron Smith - 1.602.452.2505

B) Contractor: Stratus Corporation
39515 SW Hartley Rd.
Gaston, OR 97119
Scott Flaherty – 503.985.7912

C) Bureau of Environmental Services
1120 SW 5th Ave., Room 1000
Portland, OR 97204

- BES FAX No. (503) 823-7110.
- Note: Please include BES Job No. on all Faxes and correspondences.

2. **Chain of command**
   - Ray Taylor, Site Inspector (503) 318-9723
   - John Johnson, Senior Inspector (503) 823-8597
   - Erik A. Durshpek, Construction Manager (503) 823-5728

Email Addresses: (Email the tech assigned and the CM)
ErikD@BES.CI.PORTLAND.OR.US
Ay.Saechao@BES.CI.PORTLAND.OR.US

***Start with site inspector for questions concerning the project.**
*** Inspectors are available by cell phone.**

* **Walk-ins not advisable unless scheduled.**

3. **Inspections:**

a) Inspector needs 48-hours minimum notice for inspections and changes in the schedule.
b) Inspection hours – 7:00 AM – 3:30 PM. Contractor work hours _____ AM _____ PM.
c) Permit fees do not account for overtime work. BES and permittee need notification that OT is being worked.
d) Please note that the permit is estimated on completing project within permitted time frame of **90- days** and that additional inspection charges may be assessed against the project.
e) Please note, if the permit expires, the applicant will need to obtain a new permit and pay additional fees.

4. **Materials:**
   a) Need a set of City of Portland Standards onsite at all times and a set of stamped approved plans.

5. **Design Changes**
   a) Construct project per approved plans.
   b) The Engineer must submit request to change and the city must approve the change. Contractor needs to notify the engineer.
   c) Minimum time required for review of changes are 14-days.
   d) Design changes are costly.

6. **Testing:** [illegible]
   a) Liner sample
   b) Pre and a final TV Video Inspections Required.
   c) Density testing is required. The COP MTL lab will do the density testing.
   d) Site Inspector must be present for all testing.

7. **Safety –**
   a) PPE – personal protective equipment (hardhat, boots, vest, etc.).
   b) Shoring must be OHSA compliant. Shoring must also be used.
   c) BES considers safety is of utmost importance. Unsafe working practices will result in higher inspection fees and notification to the applicant.
   d) Inspection fees will run higher on projects with unsafe working practices.
   e) Must have a designated person onsite that is certified in trench excavation safety.
   - See OSHA web page for locations for training. Also, an onsite consultation may be performed with OSHA.

8. **Unanticipated Contaminated Media:**
   a) Please refer to the unanticipated contaminated media note front page of plan cover sheet. The developer/contractor is responsible for any contaminated media encountered in the city ROW or on private property.
   b) The developer must retain the services on an Industrial hygienist for analysis. An analysis report is required for disposal.

9. **Materials/submittals (14-day review on submittals)**
   – **Project Specific Submittals:**
   a) See attached submittal log.
   b) Any other submittals requested during the course of the project.
   c) Any conflicts or changes need to be approved by the engineer and the city.

10. **Erosion Control –**
   a) Must be installed prior to ground disturbing activities. No BES work will occur until all measures are in place.
   b) 24 Hr Emergency Contact: Name: _____
      Address: _____
      Phone #: _____
   c) Minimum requirements are in the back of the permitted plan set.
   d) Need to maintain/adjust esc measures daily.

11. **Schedule and Coordination –**

12. **Comments/Questions:**

JOB NO. 8919

CITY OF PORTLAND
BUREAU OF ENVIRONMENTAL SERVICES

APPLICATION FOR BES PUBLIC IMPROVEMENT PERMIT

TO THE CHIEF ENGINEER:

The undersigned hereby applies for a permit to construct the following public facilities:

365 FEET OF 60 INCH CIPP

Job Title: CONOCO PHILLIPS 60 INCH CIPP

in accordance with plans approved by the Chief Engineer and with the standard plans and specifications of the City of Portland, as provided by the provisions of the Charter, Codes, and Resolutions of the City of Portland pertaining to such work, the said improvement to consist of the following work:

AS DESCRIBED IN THE PRELIMINARY PLANS FOR SEWER CONSTRUCTION

and to be completed within 90 days after issue of Construction Permit.

Applicant: CONOCO PHILLIPS Phone: 602.452.2505

Signature: [illegible] Date: 4/29/08 Time: 8:40am MST

Address: 1230 W. WASHINGTON, SUITE 212, TEMPE, AZ 85280

Contractor: STRATUS CORPORATION Phone: 503.985.7912

Address: 39515 SW HARTLEY Rd, GASTON, OR 97119

COP0021947

BES PUBLIC IMPROVEMENT PERMIT JOB NO. 8919

This permit is issued by the City to the applicant/contractor. The applicant is the party who either owns the property to be served or a developer who is authorized by the owner to cause construction of the improvements. The contractor is the party responsible for completing the work provided for under this permit. Both the applicant and the contractor are subject to the terms of this permit, and shall jointly assure that the requirements of the permit are satisfied.

This Permit is hereby granted subject to the following:

The said (construction) is to be done in accordance with the plan attached hereto and made a part of this Permit, and with the Standard Plans and Specifications of the City of Portland, and under the direction and supervision of the Chief Engineer, this Permit being granted subject to the following further conditions:

(A) Before receipt of this Permit, the Applicant/Contractor shall pay to the City of Portland the balance of Engineering Fee the said amount being based on the Chief Engineer's Estimated construction cost of $ 590,000 .

(B) The Applicant/Contractor hereby agrees that all work provided for under this permit shall be performed in such good, skillful, and substantial manner that no repairs shall be necessary on the improvement covered by this permit for a period of two years after its completion and acceptance by the City. If during this two-year period any defects shall appear in said improvement which are attributable in any manner to defective materials or workmanship, and/or the existing natural drainage course suffers any degradation due to erosive stormwater runoff, the Applicant/Contractor hereby undertakes and guarantees to repair such defects at his own expense, when so ordered by the Chief Engineer. Any defects, which appear in said improvement and/or stream degradation within said two-year period, shall be prima facie evidence of defective material or workmanship.

(C) The Applicant/Contractor shall maintain all stormwater management features, including facilities, mitigation measures, and their associated vegetative components, in accordance with and as specified in the approved Operations and Maintenance Plan, for a period of two years after its completion and acceptance by the City. The applicant/contractor shall clean the facility at the end of the 2 year warranty period prior to the City's final acceptance of the project and release of the two year maintenance bond. Applicant/Contractor compliance with this requirement to clean and maintain the facility during the 2 year warranty period is subject to the guarantee of Applicant/Contractor's Maintenance Bond and surety.

(D) The Applicant/Contractor shall hold the City of Portland, the Chief Engineer, and each and all of the officers and employees of the said City free and harmless from any claims for damages to persons or property which may be occasioned by any construction and/or maintenance carried on under the permit granted.

(E) The Construction Inspection office of the Bureau of Environmental Services shall be notified prior to commencement of work.

(F) All utility companies shall be notified at least 48 hours prior to commencement of work.

COP0021948

(G) Applicant/Contractor hereby agrees to furnish liability and property damage insurance as approved by the City Attorney in an amount required by the City prior to issuance of this permit.

(H) Applicant/Contractor hereby agrees to furnish a performance bond, cash in lieu thereof, or other equivalent surety, as approved b the City Attorney prior to issuance of this permit. Applicant/Contractor's performance guarantee shall apply to all requirements of this permit, including all engineering fees, BES inspection punch list items, and any violation of permit requiring correction.

(I) Applicant/Contractor hereby agrees to furnish a maintenance bond, cash in lieu thereof, or other equivalent surety, as approved by the City Attorney, in an amount equal to 20 percent of the Chief Engineer's estimate for all work done under this permit prior to the Chief Engineer signing the Certificate of Completion. This surety shall be for a period of two years. This maintenance bond applies to all requirements of this permit, including maintenance and cleaning of the improvement and facility under this permit and as assurance against defective workmanship or materials employed in the improvement or maintenance.

(J) Applicant/Contractor hereby agrees that no sewer connection permits or building permits shall be approved by the Bureau of Environmental Services until the Certificate of Completion is signed by the Chief Engineer or approved in writing by the Chief engineer.

(K) Applicant/Contractor hereby agrees that any additional permit fees in excess of deposited funds shall be paid prior to the Chief Engineer signing the Certificate of Completion. If payment is not received by the Bureau of Environmental Services within 60 days of notification, the Chief Engineer shall demand payment through the performance bond, cash in lieu thereof, or equivalent surety as approved by the City Attorney and required as a condition of this permit. Applicant/Contractor also agrees to be liable for all costs, including attorney fees, incurred by City in exercising its rights under this section, and such costs if not promptly paid by Applicant/Contractor shall be payable from the performance bond,, cash in lieu thereof, or other equivalent surety. If the City resorts to the bond for payment of amounts provided for in this section, the surety is unconditionally obligated to pay the amount requested within ten days following the demand. The surety may obtain documentation of the City's charges, pursuant to the Bureau's public records policy.

(L) Applicant/Contractor hereby agrees that all work (construction) performed under this permit is located within existing public right of-way, public easement areas, or private property owned by applicant to be dedicated as public right-of-way or easement, and that all public easements to be dedicated shall contain standard terms and provisions of easement as written on file with the Bureau of Environmental Services. All public right-of-way and public easement shall be dedicated prior to issuance of notice of completion by Chief engineer.

(M) Applicant agrees to comply with the project's O & M Manual and to provide a revised engineer's operation and maintenance manual for the permitted stormwater management facility prior to final acceptance of project and release of the two year maintenance bond.

COP0021949

BES PUBLIC IMPROVEMENT PERMIT JOB NO. 8919

Terms accepted by Applicant: Tyrone W. Cass/Cass Phillips/Area Engr.
Print Name / Company Name / Title

Signature Date

Terms accepted by Contractor: SCOTT FLANEATY
STRAITS CORPORATION - PRESIDENT
Print Name / Company Name / Title

Signature 4-24-08
Date

Engineers Estimated Construction Cost	$ 590,000		
Estimated Engineering and Inspection Costs	$ 5,000		
Deposit of Engineering and Insp. Costs	$ 2,500	Date Paid	8/11/08
Balance of Engineering and Insp. Costs	$ 2,500	Date Paid	
Estimated Street Opening Permit	$ N/A	Date Paid	—

Date permit issued 2/15/09

This permit expires 90 after date of issue, unless renewed.

Chief Engineer 1/28/09
Date

(Initial)____ (Date)_____ Easement(s) acquired
(Initial)____ (Date)_____ Grading Permit acquired
(Initial)____ (Date)_____ CADD disc received

s services/permits/forms/permit app.doc 2006

COP0021950

OUTFALL 22 STORM WATER SEWER REPAIR

KEY CONTACTS:

PROJECT SITE
PORTLAND WILLBRIDGE TERMINAL
5555 NW FRONT AVENUE
PORTLAND, OR, 97210

ENGINEER
ARCADIS U.S., INC.
2000 EASTLAKE AVENUE EAST
SUITE 100
SEATTLE, WA 98102
TELEPHONE: 206.325.5254
CONTACT: KRISTOF FURMAN, P.E.

PERMITTEE:
CONOCO PHILLIPS
2555 WEST SUNSET BLVD
SUITE 102
TEMPE, AZ 85281
TELEPHONE: 602.921.7005
CONTACT: MYRON [illegible]

GENERAL NOTES:

1. ALL CONSTRUCTION SHALL CONFORM TO CITY OF PORTLAND STANDARD CONSTRUCTION SPECIFICATIONS, AS REVISED, DATED, AND/OR SUBCONTRACTOR SHALL HAVE A MINIMUM OF ONE SET OF APPROVED PLANS AND CITY OF PORTLAND STANDARD CONSTRUCTION SPECIFICATIONS ON THE JOB SITE AT ALL TIMES DURING CONSTRUCTION.

2. ALL PERSONS EXCAVATORS - OREGON LAW REQUIRES YOU TO FOLLOW RULES SUPPLIED BY OREGON UTILITY NOTIFICATION CENTER. THESE RULES ARE ONE FOR A 2 DAY WEEKDAY NOTICE TO BEGIN DAY WEEKEND NOTICE. YOU MAY OBTAIN COPIES OF THESE RULES FROM THE CENTER BY CALLING (503) 232-1987. IF YOU HAVE ANY QUESTIONS ABOUT THE RULES, YOU MAY CONTACT THE CALL CENTER. YOU MUST NOTIFY THE CENTER AT LEAST 2 BUSINESS DAYS, BUT NOT MORE THAN 10 BUSINESS DAYS BEFORE COMMENCING EXCAVATION. CALL 503-246-6699 (1-800-332-2344).

3. APPLICANT/CONTRACTOR TO HIRE OR A SUBCONTRACTOR PRE-QUALIFIED WITH REGARD TO CONSTRUCTION OF SEWERS A MINIMUM OF 2 BUSINESS DAYS PRIOR TO COMMENCEMENT OF CONSTRUCTION. CALL (503) 823-5128.

4. CITY OF PORTLAND MAINTENANCE OF HIGHWAY [illegible] ONLY AT THE CURB LINE IN THE PUBLIC RIGHT-OF-WAY AND AT THE END OF THE CITY LANDMARK.

5. BUREAU OF DEVELOPMENT SERVICES (BDS) PLUMBING DIVISION APPROVALS AND PERMITS REQUIRED FOR PRIVATELY MAINTAINED SEWER, INLETS, INLET LEADS, AND SERVICE LATERALS CONSTRUCTED OUTSIDE OF PUBLIC RIGHT-OF-WAY OR PUBLIC EASEMENT. ALL WORK APPROVED UNDER PLUMBING PERMITS SHALL BE PRIVATELY OWNED AND MAINTAINED.

6. A COPY OF THE CONSTRUCTION PLANS SHALL BE PROVIDED TO THE BUREAU OF ENVIRONMENTAL SERVICES (BES) CONSTRUCTION INSPECTOR AT THE PRE-CONSTRUCTION MEETING. ANY WORK OUTSIDE THE PUBLIC RIGHT-OF-WAY, INCLUDING [illegible], DRAINAGE AND OTHER [illegible] MAY REQUIRE PERMITS FROM BUREAU OF DEVELOPMENT SERVICES.

7. FOUNDATION STABILIZATION MAY BE REQUIRED AS PART OF THE PORTLAND [illegible] CONSTRUCTION SPECIFICATIONS AND APPROVED BY BES.

8. ALL STORM AND SANITARY SEWERS MUST BE AIR TESTED AND SHALL BE SUBJECT TO OTHER BES REQUIREMENTS AS OUTLINED IN THE CITY OF PORTLAND STANDARD CONSTRUCTION SPECIFICATIONS.

9. LOCATIONS OF EXISTING UTILITIES AND FEATURES ARE FOR INFORMATION PURPOSES ONLY. CONTRACTOR TO RESPONSIBLE FOR VERIFYING THE LOCATION OF EXISTING UTILITIES AND OTHER FIELD CONDITIONS PRIOR TO CONSTRUCTION.

10. MARK EDGE OF ALL SAWCUTS AND TRENCHES IN PAVEMENT [illegible] WITH A WHITE AND STENCILED WITH BLACK "ST" FOR STORM OR PLASTIC COVER AND STENCILED BLACK "SS" FOR SANITARY, AND WITH PIPE SIZE, MATERIAL TYPE AND PIPE DEPTH. SAME OF PAINT WILL BE USED FOR LATERAL.

11. SEWER SHALL BE VIDEO INSPECTED (PLEASE AT THE [illegible] OF THE CONTRACTOR).

12. MAINTAIN SANITARY SEWER AND STORM DRAINAGE IN EXISTING SEWERS AT ALL TIME. SUBMIT PLAN DETAILING METHODS OF YOUR PLUMBER NECESSARY TO MAINTAIN FLOWS TO BES 14 DAYS PRIOR TO CONSTRUCTION.

13. MAINTAIN MINIMUM OF 30" OF COVER OVER ALL PIPE IN UNPAVED EASEMENT AREAS.

14. CONTRACTOR TO SUBMIT A TRAFFIC CONTROL PLAN TO BES ENGINEER FOR REVIEW A MINIMUM OF 14 DAYS PRIOR TO COMMENCEMENT OF CONSTRUCTION.

15. THE CONTRACTOR SHALL INSTALL TO CAUSE TO BE CORE FIRST BURY TRACER WIRE ON ALL STORM SEWER MAINLINE PIPE AND LATERALS. A MINIMUM OF 3" OF TRACER WIRE SHALL BE COVERED IN THE MATERIALS.

16. ALL SEWER DRAINS, PIPES AND EXCAVATIONS SHALL BE PROPERLY SHORED AND MAINTAINED DURING AND FOLLOWING BY SERVICE DAILY, AS OF THE CITY OF PORTLAND STANDARD CONSTRUCTION SPECIFICATIONS.

17. [illegible] AND EXCAVATIONS SHALL BE PROPERLY SHORED AND MAINTAINED DURING AND FOLLOWING BY SERVICE DAILY, AS OF THE CITY OF PORTLAND STANDARD CONSTRUCTION SPECIFICATIONS.

18. [illegible] CONTRACTOR TO OBTAIN PERMITS [illegible] IN CITY RIGHT OF WAY.
FOR [illegible] IS RESPONSIBLE FOR ALL COSTS ASSOCIATED WITH PROPER CHAIN [illegible], DEWATERING, [illegible] MANAGEMENT, AND DISPOSAL TO DEMONSTRATE WHICH [illegible] WITHIN THE CITY RIGHT-OF-WAY FOR ON CITY PROPERTY. THE PERMITTEE IS ALSO RESPONSIBLE FOR ALL REGULATORY DELAYS.
FOR [illegible] ALL WORKING THE CITY ENGINEER AND INSPECTOR WITH CHANGE IN [illegible] FROM THE FORMER DISPOSAL FACILITY. [illegible] PERMITS LIKE TO OBTAIN ACCEPTANCE OF THE CONTAMINATED MEDIA AND DISPOSAL RECEIPTS/DAILY WORK SLIPS/DAILY WORK SLIPS AMOUNTS SHALL BE CHECKED AGAINST INSPECTIONS DAILY REPORTS. THE DEWATERED MUST USE AN OREGON DEPARTMENT OF ENVIRONMENTAL QUALITY-APPROVED DISPOSAL FACILITY FOR DISPOSAL. [illegible] THE CONTRACTOR [illegible].
19. CONTRACTOR TO ALL PROVIDE CHANGE NOTIFICATIONS WITHIN 14 DAYS OF PERMIT DRAWING SUBMITTAL. CONTRACTOR SHALL SUBMIT UNDER DESIGN SPECIFICATIONS WITHIN 14 DAYS OF PERMIT DRAWING SUBMITTAL.

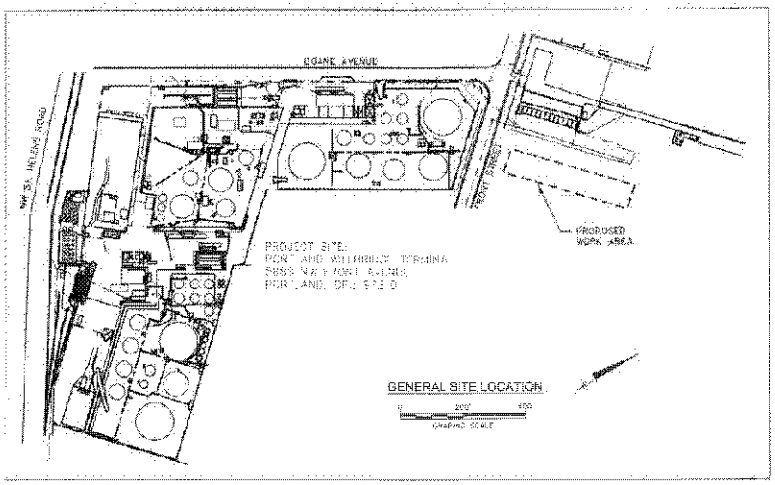

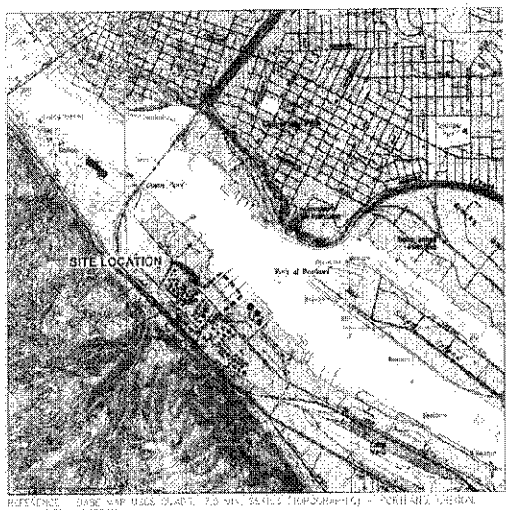

REFERENCE: USGS MAP USGS QUADS, 7.5 MIN. SERIES TOPOGRAPHIC - PORTLAND, OREGON AND VANCOUVER - OREGON

LOCATION MAP

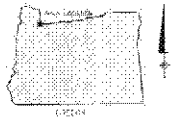

BASIC SCOPE OF PROPOSED WORK:

1. MODIFICATION OF PARKING:
   a. INSTALL SIDEWALK WITH A BUFFER WALL AROUND THE EXCAVATION.
   b. INSTALL TEMPORARY BYPASSING SYSTEM FOR INLET VALVES.
   c. REMOVE PARKING [illegible] TO THE TOP OF THE VALVE.
   d. REMOVE [illegible] MANHOLE FRAME COVER AND FRAME, AND FORM SECTION AND ALL NEW CONCRETE WORK.
   e. SAW CUT AND REMOVE [illegible] SECTION OF EXISTING VALVE FOR TUBE.
   f. [illegible] PIPE BALL AND [illegible] TEMPORARY BYPASS PUMPING PLANT IN PLACE.
   g. NEW VALVE. THE SLAB SHALL BE FABRICATED AS SHOWN IN DRAWING 3.
   h. PLACE NEW VALVE OF SLAB ON [illegible] PORTION OF [illegible] VALVE.
   i. [illegible] VALVE AND [illegible] THE SLAB SHALL BE TEST WITH NON-SHRINK GROUT AND AN [illegible] TO FILL THE GAP. GROUT AND [illegible] WITH [illegible] AS APPROVED BY CITY OF PORTLAND.
   j. INSTALL BAT CONCRETE REPORT ON TOP OF NEW VALVE FOR TO 1 DAYS.
2. BYPASS THE INSPECTION CHAMBER OF THE PUMP MANUFACTURER SPECIFICATIONS.
3. CONDUCT PRE-INSPECTION VIDEO DOCUMENTATION.
4. LIFT THE MANHOLE CONCRETE SEWER PIPE (CORE) WITH CORE IN PLACE AND TOPPING.
   BYPASS AND UNDERSIDE PROCESS FOR SEWER PIPELINE. [illegible] SHALL BE [illegible] AND A SAMPLE OF [illegible] SHALL BE PROVIDED TO BES.
5. CONDUCT POST INSPECTION VIDEO DOCUMENTATION.
6. RESTORE AGAIN:
   a. INSTALL NEW BATW PLAT TOP FRAME AND A 36" MANHOLE FRAME AND DOUBLE COVER PER CITY STANDARD SPEC. [illegible] AND [illegible] WITH 8" GRADE RING.
7. RESTORE WORK AREA:
   a. BACKFILL WITH EXCAVATION MATERIAL

STORMWATER NARRATIVE:

1. MANHOLE FRAME AND VALVE PREPARATION WILL OCCUR DURING DRY WEATHER (DURING [illegible] ZONE OR SEASONAL [illegible] PERIOD) AND [illegible] BY BES PERMITS. PRIOR TO PIPE MOVING, DRAINAGE LINE IS [illegible] PIPE PRIOR CONDITIONS [illegible].
2. PIPE LINES WILL OCCUR SOMETIME IN 2006 AS WEATHER CONDITIONS PERMITTING. WEATHER [illegible] WILL CONSIST OF THE MANHOLE AND VALVE PREPARATION.
3. MANHOLE AND VALVE PREPARATION CAN OCCUR UNDER [illegible] AS ONE AS POSSIBLE [illegible] PIPE LINES BYPASS CAPACITIES DESCRIBED IN THE BES AT HOUSE WATER JURISDICTION PLAN (AVAILABLE FROM [illegible] IN APPENDIX [illegible]).
4. PIPE UNDER INSTALLATION SHOULD ONLY OCCUR UNDER DRY WEATHER CONDITIONS. LINER INSTALLATION WILL REQUIRE TO CONTINUE [illegible] DRY WEATHER.
5. THE RIVER STAGE AT OUTFALL 22 IS A PRODUCT OF [illegible] INFLUENCE AND WATER [illegible] MANAGEMENT. [illegible] LOCATIONS UPSTREAM. THE RIVER STAGE CAN BE PREDICTED FOR UP TO 10 CALENDAR DAYS BY [illegible] THE NATIONAL WEATHER SERVICE PORTLAND [illegible] PROGRAM. [illegible] AVAILABLE AT
http://www.nwrfc.noaa.gov/rfc/ahps/index.cgi?RFC=ptr&id=pdxo1&wfo=pqr&ts=ALL
DEPENDING UPON WHICHEVER THE RIVER STAGE EXCEEDS 6 FEET.

NOTICE TO EXCAVATORS
ATTENTION: OREGON LAW REQUIRES YOU TO FOLLOW RULES SUPPLIED BY THE OREGON UTILITY NOTIFICATION CENTER. THESE RULES ARE NOTE FOR A 2 BAR 800-332-2344 WEEKDAY NOTICE TO BEGIN DAY WEEKEND NOTICE. YOU MAY OBTAIN COPIES OF THESE RULES FROM THE CENTER BY CALLING THE CENTER (NOTE: THE TELEPHONE NUMBER FOR THE OREGON UTILITY CENTER IS 503-232-1987). IF YOU HAVE ANY QUESTIONS ABOUT THE RULES, YOU MAY CONTACT THE CALL CENTER. YOU MUST NOTIFY THE CENTER AT LEAST 2 BUSINESS DAYS, BUT NOT MORE THAN 10 BUSINESS DAYS, BEFORE COMMENCING AN EXCAVATION. CALL 503-246-6699.

POTENTIAL UNDERGROUND FACILITY OWNER
DIG SAFELY
CALL THE OREGON UNDERGROUND FACILITY
1-800-332-2344

EMERGENCY TELEPHONE NUMBERS

NW NATURAL GAS	
M-F 7AM-4PM	503-226-4211 EXT. 4361
AFTER HOURS	503-226-4211
	503-464-7777
FIRE	911
POLICE	911 or 503-823-3333
CITY BUREAU OF MAINTENANCE	503-823-1700
CITY WATER	503-823-4874
PORTLAND GENERAL	1-800-122-1202

LEGEND:
- PROPERTY BOUNDARY
- EXISTING BUILDING
- CURB OF PAVEMENT
- CENTER LINE
- 24 DIAM. STORM WATER LINE
- ABANDONED STORMWATER LINE

INDEX TO DRAWINGS

1/3 COVER SHEET AND GENERAL NOTES
2/3 CROSS SECTION AND PLAN VIEW
3/3 SOIL EROSION CONTROL AND CONSTRUCTION DETAILS

REGISTERED PROFESSIONAL ENGINEER 74186PE OREGON JULY 19, 2005 KRISTOF FURMAN

RW NAVIGATION 1 SM RATION

PERMIT JOB
ORDINANCE NO. 130672
EXHIBIT "A"

NO.	DATE	DESCRIPTION	APPR.

REVISION

CONTRACTOR #
PROJECT ENGINEER
BAS CORRECTED BY
DATA ENTERED ON FILE BY ENTERED BY
DATA SUPPLIED ON DISC FOR BY PROCESSED BY
ELECTRONIC FILE NAME

DESIGNED BY | DATE APPROVED
DRAWN BY | BY (SIGNATURE)
CHECKED BY

FINAL MAP DATA

APPROVALS:
CHIEF ENGINEER | DATE

CITY OF PORTLAND, OREGON
BUREAU OF ENVIRONMENTAL SERVICES
SAM ADAMS — COMMISSIONER
WILLIAM F. RYAN, P.E. — CHIEF ENGINEER

ARCADIS
ARCADIS U.S., INC.

CHEVRON/CONOCO PHILLIPS
OUTFALL 22 STORM WATER SEWER REPAIR
WILLBRIDGE TERMINALS
COVER SHEET AND GENERAL NOTES

FILE SECTION	2423
JOB NO.	2919
SHEET NO.	1 OF 3

COP0021951

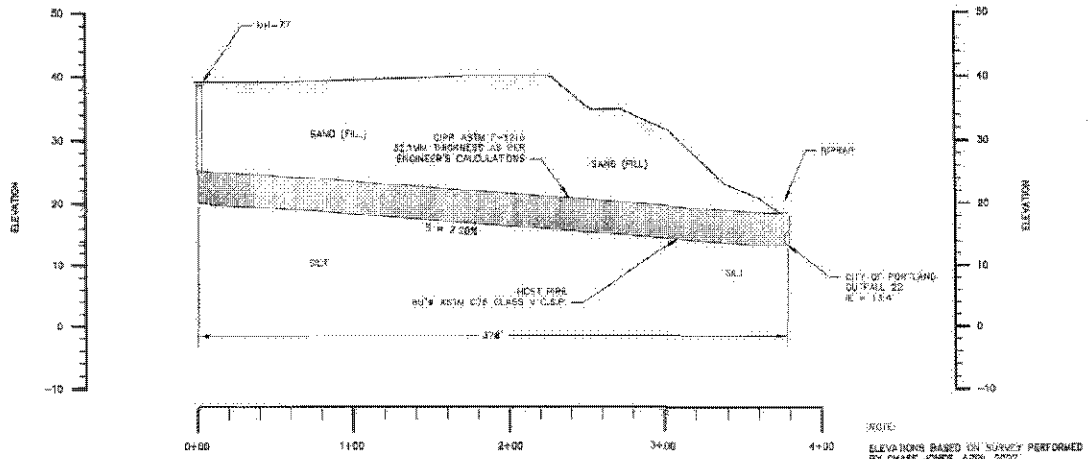

NOTE:
ELEVATIONS BASED ON SURVEY PERFORMED BY CHASE JONES, APRIL 2007, CITY OF PORTLAND BENCHMARK 2828.

60" DIAMETER PIPELINE PROFILE

HORIZONTAL SCALE: 1" = 40'
VERTICAL SCALE: 1" = 10'

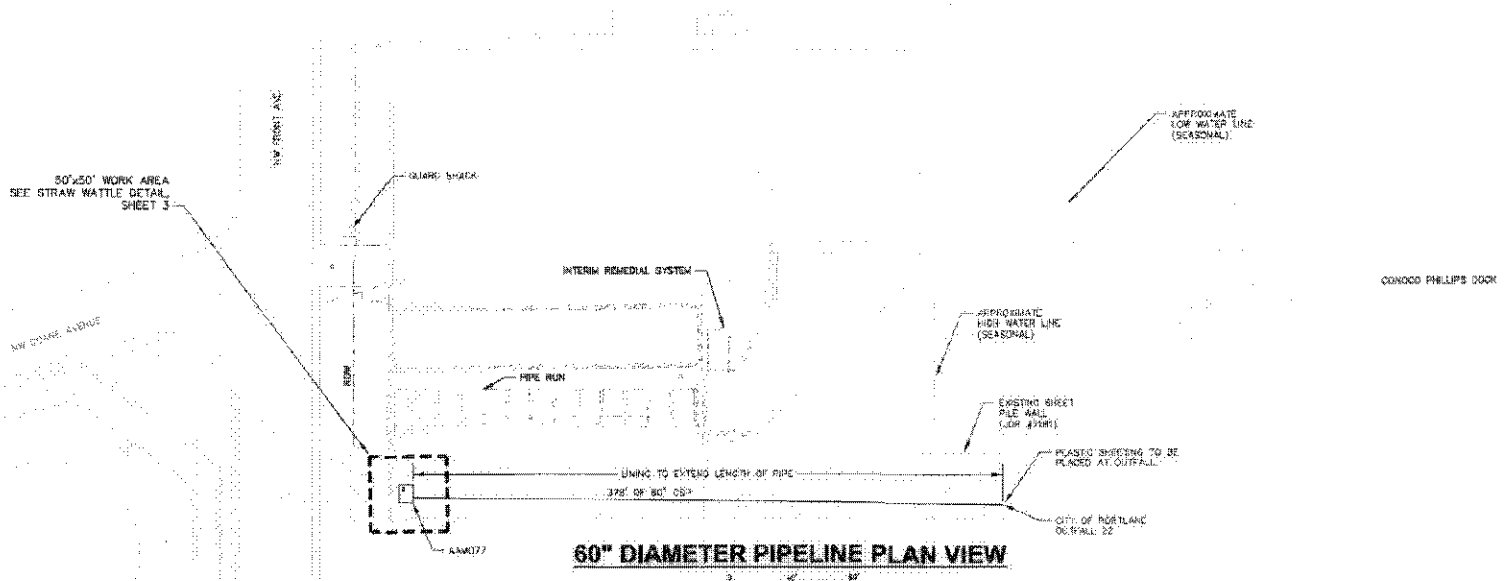

60" DIAMETER PIPELINE PLAN VIEW

1" = 40'

PERMIT: 08
ORDINANCE NO. 135672
EXHIBIT "A"

NO.	DATE	DESCRIPTION	APPD.
		REVISION	

FINAL MAP DATA

DESIGNED BY | DATE (REVISED)
DRAWN BY | CHECKED BY
CHECKED BY

APPROVALS:
CHIEF ENGINEER | DIR. BUR. ENVIR. SERVICES

CITY OF PORTLAND, OREGON
BUREAU OF ENVIRONMENTAL SERVICES
SAM ADAMS — COMMISSIONER
WILLIAM F. RYAN, P.E. — CHIEF ENGINEER

ARCADIS
ARCADIS U.S., INC.

CHEVRON/CONOCO PHILLIPS
OUTFALL 22 STORM WATER
SEWER REPAIR
WILLBRIDGE TERMINALS
CROSS SECTION AND PLAN VIEW

U.S. BROWN	2423
JOB NO.	8919
SHEET NO.	2
OF	3

COP00021952

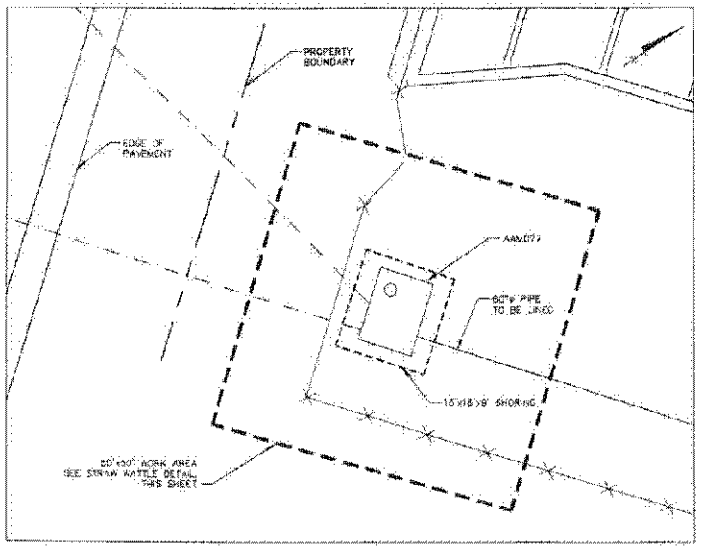

WORK AREA PLAN DETAIL

0 10' 20'
GRAPHIC SCALE

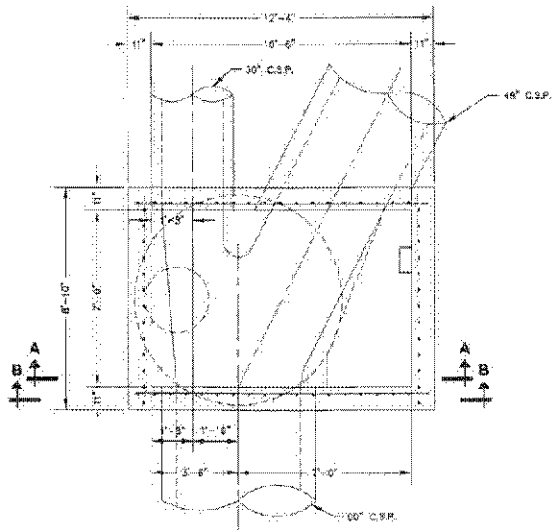

SECTIONAL PLAN AAM077

NTS

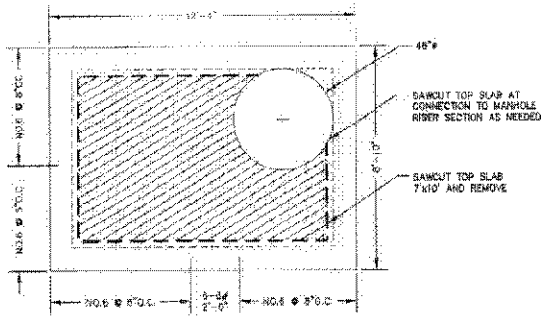

SAWCUT AT EXISTING VAULT TOP SLAB AAM077

NTS

EXISTING VAULT TOP SLAB SAWCUT DETAIL AAM077

NTS

EROSION CONTROL NOTES:

1. APPROVAL OF THIS PROPOSED SEDIMENT AND POLLUTION CONTROL PLAN (ESCP) DOES NOT CONSTITUTE AN APPROVAL OF PERMANENT ROAD OR DRAINAGE DESIGN (E.G., SIZE AND LOCATION OF ROADS, PIPES, RESTRICTORS, CHANNELS, RETENTION FACILITIES, ETC.).
2. THE IMPLEMENTATION OF THE ESCP AND THE CONTINUOUS MAINTENANCE, REPAIR, AND IMPROVEMENT OF THE ESCP FACILITIES IS THE RESPONSIBILITY OF THE APPLICANT/CONTRACTOR UNTIL ALL CONSTRUCTION IS COMPLETED AND APPROVED VEGETATION IS ESTABLISHED.
3. THE BOUNDARIES OF THE CLEARING LIMITS SHOWN ON THIS PLAN SHALL BE CLEARLY FLAGGED IN THE FIELD PRIOR TO CONSTRUCTION. DURING THE CONSTRUCTION PERIOD, NO MAINTENANCE BEYOND THE FLAGGED CLEARING LIMITS SHALL BE PERMITTED. THE FLAGGING SHALL BE MAINTAINED BY THE APPLICANT/CONTRACTOR FOR THE DURATION OF CONSTRUCTION.
4. THE ESCP FACILITIES SHOWN ON THIS PLAN MUST BE CONSTRUCTED IN CONJUNCTION WITH ALL CLEARING AND GRADING ACTIVITIES, AND IN SUCH A MANNER AS TO ENSURE THAT SEDIMENT AND SEDIMENT LADEN WATER DO NOT EXIT THE DRAINAGE SYSTEM, BOUNDARY OR WATER APPURTENANT WATER STANDARDS.
5. THE ESCP FACILITIES SHOWN ON THIS PLAN ARE THE MINIMUM REQUIREMENTS FOR ANTICIPATED SITE CONDITIONS DURING THE CONSTRUCTION PERIOD. THESE ESCP FACILITIES SHALL BE UPGRADED AS NEEDED FOR UNPREDICTED STORM EVENTS, AND TO ENSURE THAT SEDIMENT AND SEDIMENT LADEN WATER DOES NOT LEAVE THE SITE.
6. THE ESCP FACILITIES SHALL BE INSPECTED DAILY BY THE APPLICANT/CONTRACTOR AND MAINTAINED AS NECESSARY TO ENSURE THEIR CONTINUED FUNCTIONING.
7. THE ESCP FACILITIES ON INACTIVE SITES SHALL BE INSPECTED AND MAINTAINED A MINIMUM OF ONCE A WEEK OR WITHIN THE 24 HOURS FOLLOWING A STORM EVENT.
8. STABILIZED CONSTRUCTION ENTRANCES SHALL BE INSTALLED AT THE BEGINNING OF CONSTRUCTION AND MAINTAINED FOR THE DURATION OF THE PROJECT. ADDITIONAL MEASURES MAY BE REQUIRED TO INSURE THAT THAT ALL PAVED AREAS ARE KEPT CLEAN FOR THE DURATION OF THE PROJECT.
9. EMERGENCY CONTACT: SI CONTS PLANKITY, DRAINS CORPORATION, 3939 SW HARLEY ROAD, CASTON, OREGON 97115 (503) 985 7512

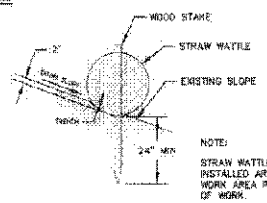

NOTE:
STRAW WATTLES SHALL BE INSTALLED AROUND 60'x60' WORK AREA PRIOR START OF WORK.

STRAW WATTLE AND STAKE DETAIL

NTS

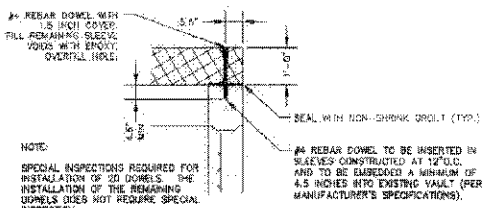

NOTE:
SPECIAL INSPECTIONS REQUIRED FOR INSTALLATION OF 20 DOWELS. THE INSTALLATION OF THE REMAINING DOWELS DOES NOT REQUIRE SPECIAL INSPECTION.

DOWEL INSTALLATION DETAIL

NTS

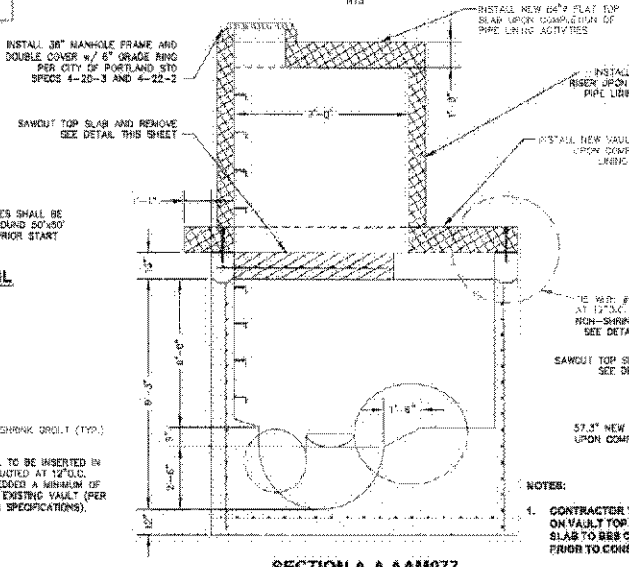

SECTION A-A AAM077

NTS

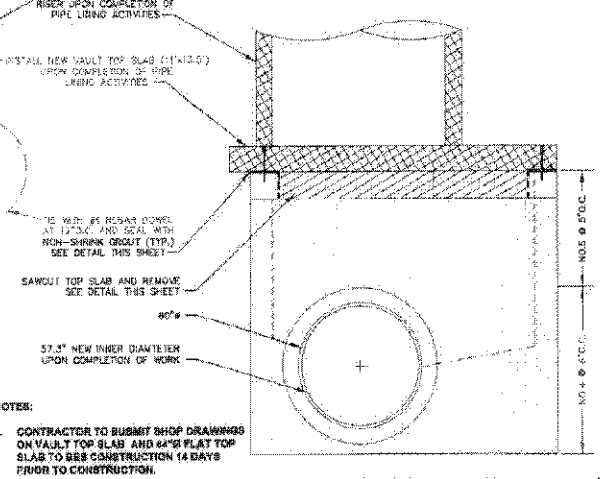

NOTES:

1. CONTRACTOR TO SUBMIT SHOP DRAWINGS ON VAULT TOP SLAB AND 64"ø FLAT TOP SLAB TO BES CONSTRUCTION 14 DAYS PRIOR TO CONSTRUCTION.
2. CONTRACTOR TO SUBMIT ON A VAULT SLAB REMOVAL PLAN TO BES CONSTRUCTION 14 DAYS PRIOR TO CONSTRUCTION.

SECTION B-B AAM077

NTS

REGISTERED PROFESSIONAL ENGINEER
74180PE
Van Fischer
OREGON
JULY 21, 1989
RENEWAL DATE 12/31/09

PERMIT JOB
ORDINANCE NO. 130672
EXHIBIT "A"

NO.	DATE	DESCRIPTION	APPD	REVISION	FINAL MAP DATA

DESIGNED BY | DATE JANUARY 22, 2009 | DRAWN BY | REV. YEAR/MONTH | CHECKED BY

APPROVALS:
CITY ENGINEER — 1/22/09 — MAP PROJECT MANAGER

CITY OF PORTLAND, OREGON
BUREAU OF ENVIRONMENTAL SERVICES
SAM ADAMS — COMMISSIONER
WILLIAM F. RYAN, P.E. — CHIEF ENGINEER

ARCADIS
ARCADIS U.S., INC.

CHEVRON/CONOCO PHILLIPS
OUTFALL 22 STORM WATER SEWER REPAIR
WILLBRIDGE TERMINALS
SOIL EROSION CONTROL AND CONSTRUCTION DETAILS

CITY DESIGN 2433 | JOB NO. 8919 | SHEET NO. 3 OF 3

COP0021953

Memorandum

TOSCO

AOC 0922
CORRESP.

January 7, 2002

To: Max Boone

From: Marty Cramer

cc:

Subject: **Spill Reports for Portland Terminal**

Per our discussion the other day, enclosed are the reports for two relatively recent spills at the Portland Terminal. The reports are:

- "June 2000 Kerosene Release Soil Sampling", GeoEngineers November 8, 2000
- "Supplement Remedial Activities Associated with June 2000 Kerosene Release in Tank Farm 2", Internal Tosco Letter to John Sherman, November 24, 2001
- "June 2001 MDO Release Delineation Assessment", GeoEngineers, November 27, 2001

I didn't realize it but June appears to be a bad month for the terminal here and November seems to be a good month for reports. Anyway, both spills were reported to DEQ who have just wrapped them into the overall remediation project for the terminal and the consent order for the Willbridge Terminals (Chevron, Kinder Morgan and Unocal/Tosco/Phillips are doing a combined RI/FS for the area around the terminals here in Portland. To date there has not been any additional work conducted as part of the RI/FS that is related to the spills, hence there has not been an incremental increase in the remedial costs. The initial spill response costs were covered by the terminal and we removed as much contaminated soil as was feasible in each case. Additional work may, however, be required with respect to the MDO release but that will likely be limited to installation of recovery well and pump which can then be tied into our existing recovery system. The terminal would pay for the well and pump system but the recovery system operation would still be billed to the Unocal account.

Call me if you have questions.

Portland Wastes - 2001

Date	Manifest ID#	Manifest Type	Manifest Comments	Description	Generation	Volume	Units	Haz. Waste (yes/no)	Transportation
03/01/01	10384	Non-Haz.Waste	Approval #99117156	Non-Regulated Material (Diesel sludge)	From Tank 2669	55 (1 drum)	gal	No	Cowlitz Clean Sweep to Prime Environmental Services to SLT Express toPollution Control Ind., E. Chicago, IN
05/01/01	0376	Texas RCC Uni. Haz. Waste		PG Waste flammable liquid, n.o.s., (xylene), 3, UN1993, PGII	From cleanout of haz waste storage area	110 (2 drums)	gal	Yes	Cowlitz Clean Sweep to Hazco Transportation to 21st Century Soil to Polly Reclamation Services, Houston, TX
	0376	Texas RCC Uni. Haz. Waste		PG Waste flammable liquid, n.o.s., (petroleum oil), 3, UN1993, PGII	From cleanout of haz waste storage area	330 (4 drums)	gal	Yes	Cowlitz Clean Sweep to Hazco Transportation to 21st Century Soil to Polly Reclamation Services, Houston, TX
	0376	Texas RCC Uni. Haz. Waste		Waste corrosive liquid, n.o.s., (sodium hydroxide), 8, UN1760, PGIII	From cleanout of haz waste storage area	5	gal	Yes	Cowlitz Clean Sweep to Hazco Transportation to 21st Century Soil to Polly Reclamation Services, Houston, TX
05/01/01	0478	Uni. Haz. Waste		Mercury contained in manufactured articles (lamps), 8, UN2809, PGIII	From cleanout of haz waste storage area	5	lbs	No - This is a universal waste and Portland Terminal is a "small quantity universal waste handler"	Cowlitz Clean Sweep to Hazco Transportation to Superior Special Services, Pocahontas, AR
08/23/01	06503	TPS Non-Haz Soils		Petroleum contaminated soil	Cleaning of oil/water separators; Solidified by Cowlitz and then sent to TPS	9.68	tons	No	Cowlitz to TPS, Portland, OR
09/27/01	06604	TPS Non-Haz Soils	Load #6	Petroleum contaminated soil	MDO line leak	42,302	lbs	No	Cowlitz Clean Sweep to TPS Technologies, Portland, OR
	06604	TPS Non-Haz Soils	Load #5	Petroleum contaminated soil	MDO line leak	48,280	lbs	No	Cowlitz Clean Sweep to TPS Technologies, Portland, OR
	06604	TPS Non-Haz Soils	Load #4	Petroleum contaminated soil	MDO line leak	44,460	lbs	No	Cowlitz Clean Sweep to TPS Technologies, Portland, OR
	06604	TPS Non-Haz Soils	Load #3	Petroleum contaminated soil	MDO line leak	43,140	lbs	No	Cowlitz Clean Sweep to TPS Technologies, Portland, OR
	06604	TPS Non-Haz Soils	Load #2	Petroleum contaminated soil	MDO line leak	49,180	lbs	No	Cowlitz Clean Sweep to TPS Technologies, Portland, OR
	06604	TPS Non-Haz Soils	Load #1	Petroleum contaminated soil	MDO line leak	35,120	lbs	No	Cowlitz Clean Sweep to TPS Technologies, Portland, OR
10/01/01	01076	Non-Haz.Waste		Non-Regulated Material (oily dirt, oily pads, old hose w/oil residue)	From outfall remediation job; Hose from MDO line cleanup job	5,200	lbs	No	Cowlitz Clean Sweep to Columbia Ridge Landfill, Arlington, OR
10/01/01	01077	Non-Haz.Waste		1) Straight Fluorescent Bulbs; 2) H I D Vapor Light Bulbs		1) 6 boxes 2) 15 total		No - This is a universal waste and Portland Terminal is a "small quantity universal waste handler"	Cowlitz Clean Sweep to ECO Lights, Seattle WA
10/25/01	01078	Non-Haz.Waste		Asbestos material	Generated during housekeeping; Old asbestos pipe	1300 (3 drums and 6 BA?)	lbs	No	Cowlitz Clean Sweep to Columbia Ridge Landfill, Arlington, OR
10/31/2001	01091	Uni. Haz. Waste	Profile CS2840	Environmentally Hazardous Substenaces, Liquid 9, UN3082, X004	3 drums of Reomat 38 to color oil; Found during routine house keeping	45 (3 drums)	gal	No; X004 is state-only waste code for industrial waste; Guidance says not to report these wastes if you only generate the wastes	Cowlitz Clean Sweep to CWMNW in Arlington, Or
11/06/01	01107	Uni. Haz. Waste	Approval # AF 803611	PG, Waste flammable liquid, N.O.S. (Gasoline, Benzene), 3, UN1993, PGIII	Abandoned Part	250 (5 drums)	gal	Yes	Cowlitz Clean Sweep to Emerald Services, Inc. to Safety-Kleen Corp. Alsipondie, IL
11/08/01	01107	Uni. Haz. Waste	Approval # 1321FE	PG, Waste Flammable Liquid, N.O.S. (Hexane), 3, UN1993, PGII	Used release agent	400 (8 drum)	gal	Yes	Cowlitz Clean Sweep to Emerald Services to Emerald Services

COP0021955

Hillsboro Landfill, Inc.

3205 SE MINTER BRIDGE ROAD HILLSBORO, OR 97123

PERMIT # 5893

PERMIT TO DISPOSE OF NON-HAZARDOUS MATERIALS

EXPIRES: 10/3/02

GENERATOR: TOSCO PETROLEUM	
DESCRIPTION: *PADS AND BOOMS W/ DIESEL*	**TONS:** *25*
☒ SPECIAL WASTE ☐ CS ☐ CLEAN-UP MATERIAL	
LOCATION: *PORTLAND, OREGON*	**COUNTY:** *Multnomah*
CONTACT: *KEN PARTRIDGE*	**PHONE:** *360-423-6316*

BILLING: *Landfill account COWLITZ CLEAN SWEEP*	**PO#:** *N/A*	**JOB#:** *N/A*

We accept business checks, cash, VISA / Mastercard or charge(with prior approval)

SPECIAL HANDLING : *NONE:*
HAULER: COWLITZ CLEAN SWEEP

DL MK

APPROVED: *KRISTIN CASTNER* DATE: *10/03/01 8:32:15 AM*

A COPY OF THIS PERMIT MUST BE SHOWN BY EACH DRIVER

THERE IS A MINIMUM CHARGE OF $50-$60 FOR EACH LOAD OF SPECIAL WASTE

WASTE MANAGEMENT

COP0021956

Attn: Kem P.

WASTE MANAGEMENT COMPANIES

GRAHAM ROAD LANDFILL, HILLSBORO LANDFILL, RIVERBEND LANDFILL, WENATCHEE LANDFILL, CHANNEL LANDFILL

3893
10-3-01

WASTE DISPOSAL REQUEST FOR SERVICES
AGREEMENT TERMS AND CONDITIONS

- DESCRIBE WASTE TYPE: Oily Pads & Booms with diesel/oil
- DESCRIBE HOW WASTE WAS GENERATED: Clean up of oil spilled in tank farm
- WHAT PERSON OR ENTITY OWNS OR CONTROLS THE WASTE? Tosco Petroleum
- WHO CAN WE CONTACT ABOUT THE WASTE? (name/company/full address/voice/fax) Cowlitz Clean Sweep Inc.
  55 International Way Longview,WA 98632 (360)423-6316 Fax (360)423-3409
- WHERE WAS THE WASTE GENERATED? (site name/address/city/state/county)
  5528 NW Doane St Portland,OR 97210 Multh
- QUANTITY OF WASTE? (both estimated weight and volume) 2000lbs to 3000lbs
- DOES THE WASTE PRODUCE ANY ODOR? PLEASE DESCRIBE: Mild
- DESCRIBE THE FREQUENCY OF TRANSPORT TO THE SITE (One Time, On-Going): 3 to 5 times per year
- IS THE WASTE CLASSIFIED AS HAZARDOUS, DANGEROUS OR TOXIC BY FEDERAL STATE OR LOCAL REGULATION: NO
- WHO WILL TRANSPORT THE WASTE TO LANDFILL? (name, company, phone, fax) Cowlitz Clean Sweep Inc.
- (360)423-6316 Fax (360)423-3409
- TRANSPORT VIA: ____roll-off box ____dump truck ____end dump ____drums ____pickup / trailer
- PAYMENT INFORMATION: X **LANDFILL ACCOUNT ____CASH ____BUSINESS CHECK ____VISA/MASTERCARD
  For Landfill Account Provide The Following:** Account # or Name Cowlitz Clean Sweep P.O. # ____
- DESIGNATE THE LANDFILL WHERE WASTE WILL BE DISPOSED: (CIRCLE ONE)
  GRAHAM ROAD LANDFILL, HILLSBORO LANDFILL, RIVERBEND LANDFILL, WENATCHEE LANDFILL, CHANNEL ANDFILL

APPROVAL INFORMATION

FAX COMPLETED FORM, AS SIGNED ON SECOND PAGE, AND LABORATORY RESULTS AND CHAIN OF CUSTODY TO KRISTIN CASTNER AT: **OREGON** (503) 493-7822 **WASHINGTON** (800) 583-5263

FOR INFORMATION ON CHARACTERIZING YOUR WASTE CONTACT KRISTIN CASTNER at: OREGON - (503) 493-7834 WASHINGTON - (800) 685-8001 OR E-MAIL: kclayton@wm.com

Klastner 10-3-01

TERMS AND CONDITIONS OF DISPOSAL

1. ACCEPTABLE WASTE. Customer shall deliver and Company shall accept for disposal only Acceptable Waste. Customer shall deliver the full quantity of Acceptable Waste generated, handled and/or collected by Customer as estimated above. Acceptable Waste means and includes only such waste as is described above and which is approved and permitted for disposal at the Designated Landfill and shall not include any Excluded Waste. As used herein, Excluded Waste means waste that: (a) is not in conformance with the description of the waste set forth above; (b) is or contains any infectious waste, or radioactive volatile, corrosive, highly flammable, explosive, biomedical, biohazardous material or hazardous, dangerous, or toxic substances, as defined pursuant to or listed or regulated under applicable federal, state or local law above regulated levels permitted for disposal as the Designated Landfill; (c) is prohibited from being received or disposed of at the Designated Landfill by federal, state or local law, regulation, rule, code, ordinance, order, permit or permit condition; (d) Company reasonably believes would, as a result of or upon disposal, be a violation of local, state or federal law, regulation or ordinance, including land use restrictions or conditions applicable to the Designated Landfill; or (e) in Company's opinion would present a significant risk to human health or the environment, cause a nuisance or otherwise create or expose Company or Customer to potential liability.

1. **ACCEPTABLE WASTE.** Customer shall deliver and Company shall accept for disposal or other management purpose only Acceptable Waste. As used herein "Customer" shall mean both Customer and Generator listed on the reverse hereof. Customer shall deliver the full quantity of Acceptable Waste generated and/o handled by Customer as estimated on the reverse hereof. Acceptable Waste means and includes only such waste as is described on the reverse and which is approved and permitted for management at the Designated Facility listed on the reverse, and shall not include any Nonconforming Waste. As used herein Nonconforming Waste means waste that (a) is not in conformance with the description and/or estimated quantity of the waste set forth on the reverse; (b) is o contains any infectious waste, or radioactive, volatile, corrosive, highly flammable, explosive, biomedical, biohazardous material or hazardous, dangerous, or toxi substances, as defined pursuant to or listed or regulated under applicable federal, state or local law, except as stated on the reverse; or (c) is prohibited from bein received, managed or disposed of at the Designated Facility by federal, state or local law, regulation, rule code, ordinance, order permit or permit condition;

2. **REPRESENTATIONS & WARRANTIES.** Customer represents and warrants that: (a) the description of the waste set forth on the reverse hereof is true an correct in all material respects; (b) all waste delivered to the Designated Facility by Customer shall be Acceptable Waste as defined above and shall not be or contai Nonconforming Waste; (c) Customer shall, and shall cause any carrier with which it contracts to, handle and transport the waste in a safe and workmanlike manne in full compliance with all applicable federal, state and local laws, ordinances, decisions, orders, rules or regulations; and (d) Customer has advised its drivers o Company's prohibition on delivery of Nonconforming Waste, of the definitions and listing of hazardous waste and hazardous substances under applicable federal an state law and regulations and of the definition of Acceptable Waste herein. Company represents and warrants that it shall manage the Acceptable Waste in a safe an workmanlike manner in full compliance with all applicable federal, state and local laws, ordinances, decisions orders, rules or regulations

3. **WASTE REJECTION.** Company may inspect, analyze or test any waste delivered by Customer and/or may reject, refuse or revoke acceptance of any waste if, i the opinion of Company, the waste or tender of delivery fails to conform to or Customer fails to comply with the terms of this Agreement, including by delivery o Nonconforming Waste. Company may also reject any waste which (a) Company reasonably believes would, as a result of or upon disposal or other management, b a violation of local, state or federal law, regulation, ordinance or permits, including land use restrictions or conditions applicable to the Designated Facility; or (b) i Company's opinion would present a significant risk to human health or the environment, cause a nuisance or otherwise create or expose Company or Customer t potential liability. Company also shall have the right to refuse to accept or to reject any Acceptable Waste in the event of Customer's failure to pay fees owed b Customer hereunder. In the event Company rejects or revokes acceptance of waste hereunder, Customer shall, at its sole cost, immediately remove or arrange t have the rejected waste removed from Company's control or property. Customer shall pay and/or reimburse Company for any and all costs, damages and/or fine incurred as a result of or relating to Customer's tender or delivery of Nonconforming Waste or other failure to comply or conform to this Agreement, including costs o inspection, testing and analysis.

4. **SPECIAL HANDLING; TITLE.** If Company elects, in its sole discretion, to handle, rather than reject, Nonconforming Waste, Company shall have the right t manage such Nonconforming Waste in the manner deemed most appropriate by Company given the characteristics of the Nonconforming Waste. Company ma assess and Customer shall pay additional fees associated with delivery of Nonconforming Waste, including, but not limited to, special handling or disposal charges and costs associated with different quantities of waste, different delivery dates, modifications in operations, specialized equipment, and other operational environmental, health, safety or regulatory requirements. Title to and ownership of Acceptable Waste shall transfer to Company upon its final acceptance o Acceptable Waste. Title to, ownership of and liability for Nonconforming Waste shall at all times remain with Customer. Revocation of acceptance by Compan shall operate to re-vest all incidents of ownership in Customer.

5. **INDEMNITY.** Each party hereto (the "Indemnitor") hereby agrees to indemnify, hold harmless and defend the other party, and its owners, officers, directors employees and agents (collectively, the "Indemnitees"), from and against any and all liabilities, penalties, fines, forfeitures, fees, demands, claims, causes of action suits, judgments and costs and expenses incidental thereto, including attorneys' fees (collectively, "Damages"), which any or all of the Indemnitees may hereafte suffer incur, be responsible for or pay out, including for personal injuries, property damage, or contamination of or adverse effects on the environment, to the exten caused by, or arising from or in connection with the breach of any representations or warranties of the Indemnitor set forth in this Agreement, or any negligent action or omissions or willful misconduct of the Indemnitor, its employees, officers, owners, directors or agents, or the violation of any law, ordinance or regulation including, without limitation, the Comprehensive Environmental Response, Compensation and Liability Act, 42 U.S.C. § 9601 et seq., as amended. Such Indemnit shall exclude Damages to the extent they arise as a result of any negligent actions or omissions or willful misconduct of the Indemnitees or their employees, officers owners, directors or agents. The indemnification obligation hereunder shall arise only in excess of any available and collectible insurance proceeds and the Indemnitor shall be liable hereunder to pay only its share of the amount of Damages, if any, that exceeds the total amount that all insurance has paid for the Damages plus the total of all deductible and self-insured expenses paid under all insurance policies. The obligations in this Section 5 shall survive the performance an termination of this Agreement.

6. **UNCONTROLLABLE CIRCUMSTANCES; TERMINATION.** Except for the obligation to pay fees hereunder, the performance of this Agreement may b discontinued or temporarily suspended by either party, and neither party shall be deemed to be in breach of this Agreement, in the event performance is prevented by a cause or causes beyond the reasonable control of the affected party. Such causes shall include, but not be limited to, acts of God, acts of war, riot, fire, explosion accident, flood or sabotage, governmental laws (including nuisance), permit conditions, regulations, restrictions (including land use), condition of the waste, injunctio or actions or omissions of third party transporters or other contractors, suppliers or vendors. Company may immediately terminate management services hereunde upon written notice to Customer in the event Customer breaches any term, provision or obligation under this Agreement, in which case, Customer shall be liable to and shall pay to Company all costs and losses incurred by Company as a result of or relating to any such termination.

7. **MISCELLANEOUS.** This Agreement shall be governed by the laws of the state in which the Designated Facility is located. Every provision of this Agreemen shall be severable. This Agreement represents the entire understanding and Agreement between the parties relating to the management of waste, except that, if the parties, or their parent companies, are parties to a national service agreement, the terms of such national service agreement shall govern over any inconsistent term in this Agreement. No representations, statements or Agreements, unless agreed to by the parties in writing, shall modify, change, amend or otherwise affect the obligations undertaken in this Agreement. No waiver by either party of any one or more defaults or breaches by the other in the performance of this Agreement shal operate or be construed as a waiver of any future defaults or breaches. Customer may not assign this Agreement without the prior written consent of Company. Thi Agreement shall be binding upon and shall inure to the benefit of the parties' successors and assigns.

THIS IS A LEGALLY BINDING CONTRACT. EACH UNDERSIGNED INDIVIDUAL ACKNOWLEDGES THAT HE/SHE HAS READ AND UNDERSTANDS THE TERMS AND CONDITIONS OF THIS AGREEMENT SET FORTH ABOVE AND ON THE REVERSE HEREOF AND THAT HE/SHE HAS THE AUTHORITY TO SIGN ON BEHALF OF CUSTOMER/GENERATOR AND COMPANY. BY SIGNING BELOW CUSTOMER AND GENERATOR INDICATE A FIRST HAND KNOWLEDGE OF THE WASTE'S CHARACTERISTICS AND CERTIFY THE TRUTH OF THE INFORMATION ON THE REVERSE HEREOF. AGREED TO AS OF THE DATES BELOW.

CUSTOMER:	GENERATOR:	COMPANY:
(AUTHORIZED SIGNATURE)	(AUTHORIZED SIGNATURE)	(AUTHORIZED SIGNATURE)
KEN PARTRIDGE MGR	KEN PARTRIDGE	
(NAME, TITLE)	(NAME, TITLE)	(NAME, TITLE)
DATE: 10-02-01	DATE: 10-2-01	DATE:

106447 v04.SE (2@4V04!.DOC) (#106447 v4 - Landfill Services Waste Profile and Terms)
09/19/00 4:10 PM

COP0021958

WASTE MANAGEMENT

Hillsboro Landfill, Inc
3205 SE Minter Bridge
Hillsboro, OR, 97123
Ph: (503) 640-9427

Original
Ticket# 1035222

Customer Name COWLITZCLEAN COWLITZ CLEAN SW
Ticket Date 01/15/2007
Payment Type Credit Account
Manual Ticket#
Hauling Ticket#
Route
State Waste Code
Manifest n/a
Destination
PO
Profile 5893 (OIL PADS & BOOMS W/ DIESEL)
Generator 168-PHILCHEV PHILLIP PETROLEUM/CHEVRON USA

Carrier SELFHLD SELF HAULED
Vehicle# 102
Volume
Container
Driver Jason
Check#
Billing # 0000068
Gen EPA ID
Grid

	Time	Scale	Operator	Inbound			
In	01/15/2007 10:58:34	Inbound 2	cc		Gross	9680	lb
Out	01/15/2007 11:16:00	Outbound	SDM		Tare	8400	lb
					Net	1280	lb
					Tons	0.64	

Comments

Consumer Comments? We want to know. Please call.

pad up only sheen around
and fall on 7/6

	Product	LDM	Qty	UOM	Rate	Tax	Amount	Origin
1	WM-Special Misc-Sp	100	0.64	Tons	40.06	16.81	$29.24	MULT-IN
2	EVL-Env Fee Lg.	100	1	Load	4.00		$4.00	MULT-IN

Total Tax $16.81
Total Ticket $50.05

Driver's Signature

COP002

WASTE MANAGEMENT

Hillsboro Landfill, Inc
3205 SE Minter Bridge
Hillsboro, OR, 97123
Ph: (503)-640-9427

Original
Ticket# 1040825

Customer Name	COWLITZCLEAN COWLITZ CLEAN SW	Carrier	SELFHLD SELF HAULED		
Ticket Date	02/13/2007	Vehicle#	109	Volume	
Payment Type	Credit Account	Container			
Manual Ticket#		Driver	arby		
Hauling Ticket#		Check#			
Route		Billing #	0000068		
State Waste Code		Gen EPA ID			
Manifest	na				
Destination		Grid			
PO	na.				
Profile	5893 (OIL PADS & BOOMS W/ DIESEL)				
Generator	168-PHILCHEV PHILLIP PETROLEUM/CHEVRON USA				

	Time	Scale	Operator	Inbound			
In	02/13/2007 14:32:56	Inbound 2	bml		Gross	11100	lb
Out	02/13/2007 14:48:51	Outbound	bml		Tare	10360	lb
					Net	740	lb
					Tons	0.37	

Comments

Consumer Comments? We want to know. Please call.

	Product	LD%	Qty	UOM	Rate	Tax	Amount	Origin
1	WM-Special Misc Sp	100	0.37	Tons	40.06	10.10	$29.24	MULT-IN
2	EVL-Env Fee Lg.	100	1	Load	4.00		$4.00	MULT-IN

Total Tax $10.10
Total Ticket $43.34

Driver's Signature

403WM

COP0021960

114350

CCS
A DIVISION OF PNE CORP
55 International Way
Longview, WA 98632
Office: (360) 423-6316
Fax: (360) 423-3409
24-Hours: 1-888-423-6316
www.pnecorp.com

B.O.L. / FREIGHT BILL

ALL ABOUT Solutions

DATE 2/13/07

STATEMENT

PLEASE PAY LAST AMOUNT IN BALANCE COLUMN

Combination Bill of Lading and Freight Bill

Generation: Conoco Phillips Portland

Receiving Facility: Hillsboro Landfill

Operator: Arby Lewis | W.O.#: | Unit #: 136 | Received by (TSD): [illegible]

Customer warrants that the waste material being transferred by the above collector does not contain any contaminants including, without limitations; pesticides, chlorinated solvents at concentrations greater than 1,000 PPM, PCB's at greater concentrations than 2 PPM (or PPM with manifest), or any other material classified as hazardous by 40 CFR part 261, customer subparts C and D (implementing the Federal Resource Conservation and Recovery Act, or by any equivalent state hazardous waste or hazardous substance classification program). Should laboratory tests find this waste product not in compliance with 40 CFR part 261, customer (generator) agrees to pay for all disposal costs incurred.

Signature X [illegible] Date 2/13/07

QUANTITY	DESCRIPTION	CHARGES	BALANCE
1000 lbs	Oily Boom		
	Thank You for your Business!!!		
		SUBTOTAL	
		TAX	
		TOTAL	

A FINANCE CHARGE OF 1.5% per month may be applied to any past due amount. Past due accounts may be placed on C.O.D. without notification. If outside collection action is necessary, purchaser shall pay all costs of collection including reasonable attorney's fees.

EPA ID# WAH000014944 CCB#78140 USDOT 492568

WHITE - TRANSPORTER YELLOW - [illegible]

COP0021961

November 2001 Soil Stockpile

Assessment

Tosco Portland Terminal

Portland, Oregon

September 3, 2002

For

Tosco Corporation

GeoEngineers

September 3, 2002

Tosco Corporation
5528 Northwest Doane Avenue
Portland, Oregon 97210

Attention: Bill Collins

November 2001 Soil Stockpile
Assessment
Tosco Portland Terminal
Portland, Oregon
File No. 4823-520-01

INTRODUCTION

GeoEngineers is pleased to provide this report describing the results of excavation monitoring and soil sampling services conducted at the Tosco Corporation (Tosco) Portland Terminal (site), located at 5528 Northwest Doane Avenue, in Portland, Oregon. Our services were requested by Bill Collins on November 2, 2001. The location of the site relative to surrounding features is shown in Figure 1. Our services were performed in general accordance with, and under the terms and conditions of our service agreement dated November 2, 2001 and Tosco Purchase Order No. 175373.

BACKGROUND

GENERAL

Four soil stockpiles were generated during construction improvements in the "Sand Lot" area of the terminal. The Sand Lot is located on the east side of Front Avenue, south of the asphalt shed and the terminal's dock. Cowlitz Clean Sweep (CCS) of Portland, Oregon began removing soil surrounding the underground pipelines in the Sand Lot on June 25, 2001 using a combination of excavator, high-suction vacuum truck, and manual removal. GeoEngineers did not observe the excavation activities that generated stockpiles 1 through 4. The limits of the excavation shown in Figure 2 are estimated. The maximum depth of the excavation was approximately 8 feet below ground surface.

GeoEngineers, Inc.
7504 SW Bridgeport Road
Portland, OR 97224
Telephone (503) 624-9274

"Stockpile 1" is located in the Sand Lot area, adjacent to the construction excavation (Figure 2). Stockpiles 2, 3 and 4 are located at Tank Farm No. 3, on the west side of Front Avenue (Figure 3). Volume estimates were determined by multiplying each stockpiles' approximate length, width and height.

STOCKPILE OBSERVATIONS

"Stockpile 1" consists of approximately 800 cubic yards of soil that were removed above the terminals underground pipelines. "Stockpile 2" was divided into two individual stockpiles of soil with a combined volume of approximately 590 cubic yards. Stockpile 2 consists of soil that was removed above and along the sides of the terminal's underground pipelines. "Stockpile 3" also was divided into two individual stockpiles of soil with a combined volume of approximately 290 cubic yards. Stockpile 3 consists of soil that was removed from beneath the terminal's underground pipelines. "Stockpile 4" consists of approximately 70 cubic yards of soil that were removed from beneath the terminal's underground pipelines in an area identified by Tosco personnel as potentially contaminated.

SCOPE OF SERVICES

GeoEngineers' specific scope of services at the site included the following tasks.

1. Obtain a total of 22 discrete soil samples from four stockpiles of soil generated during construction improvements at the terminal.
2. Screen soil samples in the field for the presence of hydrocarbons using visual, water sheen and headspace vapor testing methods.
3. Visually classify the soil samples in general accordance with American Society for Testing and Materials (ASTM) D 2488-90, the Standard Practice for Description for Identification of Soils.
4. Submit each of the soil samples for chemical analysis of gasoline-range petroleum hydrocarbons by Northwest Method NWTPH-Gx; diesel- and heavy oil-range petroleum hydrocarbons by Northwest Method NWTPH-Dx (with acid/silica gel cleanup) and benzene, ethylbenzene, toluene and xylenes (BETX) by U.S. Environmental Protection Agency (EPA) Method 8021B. Submit two soil samples for chemical analysis of volatile organic compounds (VOCs) by EPA Method 8260B and three soil samples for polycyclic aromatic hydrocarbons (PAHs) by EPA Method 8270M-SIM and polychlorinated biphenyls (PCBs) by EPA Method 8082. Submit 15 soil samples for total lead by EPA 6000/7000 Series Methods.
5. Evaluate the analytical data from the soil stockpile samples with respect to Oregon Department of Environmental Quality (DEQ) and the Washington State Department of Ecology (Ecology) Model Toxics Control Act (MTCA) policies on reuse of petroleum-contaminated soil (PCS).
6. Contact several potential recipients regarding their need for fill material.

REGULATORY CRITERIA

For screening purposes, concentrations of petroleum-related contaminants in the soil samples from the soil stockpiles were compared to both the DEQ and the MTCA criteria on reuse of PCS. Both DEQ and MTCA have developed policies that define cleanup criteria for the reuse of PCS. Each policy is briefly summarized below.

DEQ'S POLICY

DEQ's Policy 550 (intended as guidance for employees of DEQ only) applies to soils contaminated by releases of petroleum products only and states that:

1. Soils that will be used as backfill in the excavation from which they were removed are required to be treated to the matrix cleanup standard applicable to the site of origin in accordance with Oregon Administrative Rules (OAR) 340-122-335.
2. Soils that will be used off site should meet the appropriate level one matrix cleanup standard for the substance released. If the soils are used off site, the property owner receiving the PCS should acknowledge in writing that the soils have been placed in accordance with this policy. This acknowledgement should also indicate that the owner of the property accepting the PCS understands the nature and origin of the soils.
3. In all cases, reuse of the treated PCS should be such that soils are placed above the seasonal high ground water level and are isolated from human contact or possible exposure. Treated PCS should not be placed in wetlands or within the 100-year floodplain.
4. In all cases, disposition of soils (including reuse on site or off site) must be reported to DEQ in accordance with OAR 340-122-360.
5. In accordance with OAR 340-122-250 (corrective action plan requirements), DEQ will consider alternate cleanup standards for reuse of PCS on a case by case basis; under no circumstances will DEQ approve of cleanup standards which do not adequately protect human health, safety, welfare, and the environment.

Although these treatment standards and reuse control measures are considered adequate to protect human health, safety, welfare and the environment, DEQ strongly supports and encourages efforts to attain the lowest practicable treatment levels and thereby reduce the impact to the environment.

ECOLOGY'S POLICY

Ecology's policy under the rules for Solid Waste Management law (RCW 70.95) and MTCA (RCW 70.105D) states that both treated and untreated soils may be disposed based upon their classification (classifications 1 through 4). The following table summarizes Ecology's end use criteria for PCSs.

Table 1
End Use Criteria for Petroleum-Contaminated Soils

Analyte	Analytical Method	Soil Classification (mg/kg)			
		1	2	3	4
Heavy Fuel Hydrocarbons (C24-C30)	WTPH-418.1 Mod.	<60	60-200	200-2,000	>2,000
Diesel (C12-C24)	WTPH-D	<25	25-200	200-500	>500
Gasoline (C6-C12)	WTPH-G	<5	5-100	100-250	>250
Benzene	8020	<0.005	0.005-0.5	≤0.5	>0.5
Ethylbenzene	8020	<0.005	0.005-20	≤20	>20
Toluene	8020	<0.005	0.005-40	≤40	>40
Xylenes (total)	8020	<0.005	0.005-20	≤20	>20

mg/kg = milligrams per kilogram

The MTCA Policy lists examples of appropriate uses for these soils. Appropriate uses for Class 1 and Class 2 soils include: fill underneath pavements; fill at industrial or commercial facilities; backfill at the cleanup site; and cover at landfills or any other uses which would not cause threat to human health or the environment. Ecology recommends that they not be used in or adjacent to wetlands, surface water, ground water, drinking water wells or utility trenches. Ecology also recommends that they not be used as residential topsoil. Treatment is strongly recommended prior to disposal for all Class 3 and 4 soils.

Since the impacted soil is petroleum-related, from an underground source (underground pipelines) and neither DEQ's Level 1 Soil Matrix Cleanup levels or MTCA's soil classification criteria have established cleanup levels for PAH constituent soil data, the stockpile sample results were also compared to DEQ's Generic Risk-Based Concentrations (RBCs). The RBCs are presented in Appendix A of DEQ's "Risk-Based Decision Making for the Remediation of Petroleum-Contaminated Sites" (OAR 340-122-0244). The RBCs are cleanup standards considered protective of human health that may be applied to simple petroleum-contaminated sites for a variety of exposure scenarios.

SOIL STOCKPILE SAMPLING RESULTS

GENERAL

GeoEngineers obtained eight soil samples from Stockpile 1 on November 2, 2001 and 14 soil samples from stockpiles 2, 3 and 4 on November 30, 2001. The samples were collected using a hand auger or a trowel. The analytical results of the stockpile samples are summarized in Tables 1, 2 and 3. The locations of the soil samples obtained from each soil stockpile are shown

in Figures 2 and 3. The sample identification numbers shown in the tables and figures include the stockpile number, sample number and depth of sample. For example, sample SP2-1-3 was the first sample obtained from Stockpile 2, at a depth of approximately 3 feet into the stockpile.

FIELD SCREENING RESULTS

Headspace vapors were less than 100 ppm in all of the samples obtained from the stockpiles, with the exception of one sample obtained from Stockpile 3 (SP3-4-2, 140 ppm). Sheen testing of the soil samples revealed no sheens in the samples obtained from Stockpile 1 to slight sheens in the samples obtained from stockpiles 2 and 3. Heavy sheens were observed in the samples obtained from Stockpile 4. The field screening results for the soil samples collected from the stockpiles are presented in Table 1.

CHEMICAL ANALYSES

Data Quality

Laboratory analytical data obtained during this investigation were reviewed to assess data quality. Our review of the laboratory data quality is summarized in Attachment B. Based on our data quality review, it is our opinion that the chemical analytical data are of acceptable quality for their intended use.

Stockpile 1 Analytical Results

Petroleum-related contaminants either were not detected or were detected at concentrations less than DEQ's Level 1 Soil Matrix Cleanup levels and meet MTCA's Class 1 and/or Class 2 designations in the soil samples obtained from Stockpile 2, with the exception of sample SP1-3-2. Diesel- and heavy oil-range hydrocarbons were detected at concentrations of 141 milligrams per kilogram (mg/kg) and 507 mg/kg in sample SP1-3-2. Soil represented by sample SP1-3-2 is greater than DEQ's Level 1 Soil Matrix Cleanup levels and is designated as a MTCA Class 3 soil.

Total lead was detected at a concentration of 27.5 mg/kg. VOCs and PCBs were not detected in sample SP1-3-2. Three PAHs, including benzo(g,h,i)perylene, chrysene and indeno(1,2,3-cd)pyrene also were detected in soil sample SP1-3-2 at concentrations of 0.203 mg/kg, 0.071 mg/kg and 0.0854 mg/kg, respectively. Each of these concentrations are less than established DEQ RBCs.

Stockpile 2 Analytical Results

Petroleum-related contaminants either were not detected or were detected at concentrations less than DEQ's Level 1 Soil Matrix Cleanup levels in all of the samples obtained from Stockpile 2. Also, all of the soil samples obtained from Stockpile 2 meet MTCA's Class 1 designation, except sample SP2-3-2. Heavy oil-range hydrocarbons were detected in sample SP2-3-2 at a concentration of 66 mg/kg, which designates it as Class 2 soil. Total lead was detected in the soil samples obtained from Stockpile 2 at concentrations ranging from 3.75 mg/kg to 10 mg/kg.

Stockpile 3 Analytical Results

Petroleum-related contaminants either were not detected or were detected at concentrations less than DEQ's Level 1 Soil Matrix Cleanup levels and meet MTCA's Class 1 and/or Class 2 designations in the soil samples obtained from Stockpile 3, with the exception of sample SP3-2-2. Heavy oil-range hydrocarbons were detected at a concentration of 1,180 mg/kg in sample SP3-2-2. Soil represented by sample SP3-2-2 is greater than DEQ's Level 1 Soil Matrix Cleanup levels and is designated as a MTCA Class 3 soil.

Total lead was detected at concentrations ranging from 5.17 mg/kg to 15.6 mg/kg. BETX compounds and PCBs were not detected in sample SP3-2-2. Eight PAHs, including benzo(a)anthracene (0.0332 mg/kg), benzo(a)pyrene (0.0458 mg/kg), benzo(b)fluoranthene, benzo(g,h,i)perylene (0.0317 mg/kg), benzo(k)fluoranthene (0.0341 mg/kg), chrysene (0.0427 mg/kg), fluoranthene (0.0507 mg/kg) and pyrene (0.0638 mg/kg) also were detected in soil sample SP3-2-2. Each of these concentrations are less than DEQ's RBCs, with the exception of benzo(a)pyrene. Benzo(a)pyrene exceeds the generic RBC for the residential receptor scenario under the direct contact, soil ingestion and inhalation pathway.

Stockpile 4 Analytical Results

Petroleum-related contaminants were detected at concentrations greater than DEQ's Level 1 Soil Matrix Cleanup levels and meet MTCA's Class 3 and/or Class 4 designations in the soil samples obtained from Stockpile 4, with the exception of sample SP4-2-2. Soil represented by sample SP4-2-2 indicate petroleum-related contamination less than DEQ's Level 1 Soil Matrix Cleanup levels and meet MTCA's Class 2 designation.

BETX compounds and PCBs were not detected in sample SP4-3-2. VOCs were not detected in sample SP4-1-2. Two PAHs, including chrysene and pyrene were detected in soil sample SP4-3-2 at concentrations of 0.187 mg/kg and 0.495 mg/kg, respectively. Each of these concentrations are less than established DEQ RBCs.

CONCLUSIONS AND RECOMMENDATIONS

Based on the results of our soil sampling activities, Stockpile 1 (with the exception of soil represented by sample SP1-3-2), Stockpile 2 and Stockpile 3 (with the exception of soil represented by sample SP3-2-2) meet DEQ Level 1 Soil Matrix Cleanup levels and MTCA Class 1 and/or Class 2 designations. Only soil represented by sample SP4-2-2 from Stockpile 4 meet DEQ Level 1 Soil Matrix Cleanup levels and MTCA Class 2 designations. Soil identified as having met Level 1 Soil Matrix cleanup standards or Class 1 and/or Class 2 designations may be reused on site as fill material (provided it is not placed below the seasonal high ground water level, in or adjacent to wetlands, surface water, drinking water wells or utility trenches). GeoEngineers contacted Mr. Dave Belyea of the DEQ on August 22, 2002 regarding DEQ's policy on reuse of petroleum-contaminated soil. Mr. Belyea stated that, based on the site-specific information provided during the August 22 telephone conversation, reusing the soil on site as fill

material is warranted even though it is within the 100-year floodplain. The fill may also be used at off-site locations under specific conditions (such as at industrial or commercial facilities).

Whether or not Tosco chooses to dispose of the soil that meet DEQ Level 1 Soil Matrix Cleanup levels on site or off site (in Oregon), we recommend the disposition of the soil be reported to DEQ in accordance with OAR 340-122-360. Should the soil that meet MTCA Class 1 and/or Class 2 designations be disposed at a site in Washington, we recommend Ecology be notified in accordance with WAC 173-340. The following information should also be obtained and kept on record:

1. Origin owner and address of contaminated soil,
2. Owner name, address and telephone number,
3. Engineering consultant name, project manager, address and telephone number,
4. Type of facility,
5. Total volume of contaminated soil,
6. Type(s) and concentration of contaminant originally in soil (include analytical results from laboratory),
7. Name, address and contact name of firm providing treatment,
8. Type of treatment,
9. Final concentrations of contaminants in soil (include analytical results from the laboratory), and
10. Final disposition of soil including address, property owner and operator, exact location of soil with map showing placement and depth.

Soil that did not meet DEQ Level 1 Soil Matrix Cleanup levels or MTCA Class 1 and/or Class 2 designations was transported to TPST Soil Recyclers of Oregon (TPST) on June 7 and 10, 2002 by CCS for recycling. CCS removed a total of 68.2 tons of impacted soil from portions of stockpiles 1, 3 and 4 (represented by samples SP1-3-2, SP3-2-2, SP4-1-2 and SP4-3-2). Manifests of each transported load and a Customer Job Report from TPST were provided by Tosco and are included in Attachment C.

LIMITATIONS

We have prepared this report for use by Tosco Corporation. Within the limitations of scope, schedule and budget, our services have been executed in accordance with generally accepted environmental science practices in this area at the time this report was prepared. No warranty or other conditions, express or implied, should be understood.

Please refer to Attachment D titled "Report Limitations and Guidelines for Use" for additional information pertaining to use of this report.

GeoEngineers appreciates the opportunity to provide Tosco Corporation with professional environmental services. If you have questions concerning the information presented in this report, or require additional information, please contact one of the undersigned.

Yours very truly,

GeoEngineers, Inc.

Marjan A. Rotting
Environmental Scientist

Kyle R. Sattler
Project Manager

FOR: Sean K. Ragain, R.G.
Principal

MAR:KRS:SKR:mln
Document ID: 482352001R.doc

Attachments

Two copies submitted

TABLE 1 (Page 1 of 2)
SUMMARY OF SOIL CHEMICAL ANALYTICAL DATA[1]
STOCKPILE SOIL SAMPLES

TOSCO PORTLAND TERMINAL - SAND LOT
PORTLAND, OREGON

Sample Identification	Date Sampled	Depth of Sample (feet)	Gasoline-range Hydrocarbons (Northwest Method NWTPH-Gx) (mg/kg)	Diesel- and Oil-range Hydrocarbons (Northwest Method NWTPH-Dx with Acid/Silica Gel Cleanup) (mg/kg)		BETX Compounds[2] (EPA Method 8021B) (mg/kg)				PCBs[3] (EPA Method 8082) (mg/kg)	Total Lead (EPA 6000/ 7000 Series Methods) (mg/kg)
				Diesel	Oil	B	E	T	X		
Stockpile No. 1											
SP1-1-2	11/02/01	2.0	<2.00	<25.0	<50.0	<0.0500	<0.0500	<0.0500	<0.0500	--	--
SP1-2-2	11/02/01	2.0	<2.00	<25.0	99.1	<0.0500	<0.0500	<0.0500	<0.0500	--	--
SP1-3-2	11/02/01	2.0	<2.00	141.0	507.0	<0.0500	<0.0500	<0.0500	<0.0500	ND	27.5
SP1-4-1	11/02/01	1.0	<2.00	<25.0	67.7	<0.0500	<0.0500	<0.0500	<0.0500	--	--
SP1-5-2	11/02/01	2.0	<2.00	<25.0	<50.0	<0.0500	<0.0500	<0.0500	<0.0500	--	--
SP1-6-2	11/02/01	2.0	<2.00	<25.0	61.3	<0.0500	<0.0500	<0.0500	<0.0500	--	--
SP1-7-2	11/02/01	2.0	<2.00	<25.0	<50.0	<0.0500	<0.0500	<0.0500	<0.0500	--	--
SP1-8-2	11/02/01	2.0	<2.00	<25.0	<50.0	<0.0500	<0.0500	<0.0500	<0.0500	--	--
Stockpile No. 2											
SP2-1-2	11/30/01	2.0	<2.00	<25.0	<50.0	<0.0500	<0.0500	<0.0500	<0.0500	--	4.55
SP2-2-2	11/30/01	2.0	<2.00	<25.0	<50.0	<0.0500	<0.0500	<0.0500	<0.0500	--	4.13
SP2-3-2	11/30/01	2.0	<2.00	<25.0	66.0	<0.0500	<0.0500	<0.0500	<0.0500	--	4.28
SP2-4-2	11/30/01	2.0	<2.00	<25.0	<50.0	<0.0500	<0.0500	<0.0500	<0.0500	--	5.47
SP2-5-1.5	11/30/01	1.5	<2.00	<25.0	<50.0	<0.0500	<0.0500	<0.0500	<0.0500	--	3.75
SP2-6-2	11/30/01	2.0	<2.00	<25.0	<50.0	<0.0500	<0.0500	<0.0500	<0.0500	--	10.0
SP2-7-2	11/30/01	2.0	<2.00	<25.0	<50.0	<0.0500	<0.0500	<0.0500	<0.0500	--	6.66
Stockpile No. 3											
SP3-1-2	11/30/01	2.0	<2.00	<25.0	88.9	<0.0500	<0.0500	<0.0500	<0.0500	--	14.4
SP3-2-2	11/30/01	2.0	<2.00	<125.0	1,100	<0.0500	<0.0500	<0.0500	<0.0500	ND	10.4
SP3-3-2	11/30/01	2.0	<2.00	<25.0	74.8	<0.0500	<0.0500	<0.0500	<0.0500	--	5.17
SP3-4-2	11/30/01	2.0	<2.00	<25.0	<50.0	<0.0500	<0.0500	<0.0500	<0.0500	--	15.6
Stockpile No. 4											
SP4-1-2	11/30/01	2.0	19.2	742	315	<0.0500	<0.0500	<0.0500	<0.0500	--	7.35
SP4-2-2	11/30/01	2.0	6.58	80.4	96.6	<0.0500	<0.0500	<0.0500	<0.0500	--	15.7
SP4-3-2	11/30/01	2.0	18.5	950	479	<0.0500	<0.0500	<0.0500	<0.0500	ND	10.1

Notes appear on page 2 of 2.

COP0021971

TABLE 1 (Page 2 of 2)

Sample Identification	Date Sampled	Depth of Sample (feet)	Gasoline-range Hydrocarbons (Northwest Method NWTPH-Gx) (mg/kg)	Diesel- and Oil-range Hydrocarbons (Northwest Method NWTPH-Dx with Acid/Silica Gel Cleanup) (mg/kg)		BETX Compounds[2] (EPA Method 8021B) (mg/kg)				PCBs[3] (EPA Method 8082) (mg/kg)	Total Lead (EPA 6000/ 7000 Series Methods) (mg/kg)
				Diesel	Oil	B	E	T	X		
DEQ Risk-Based Concentrations (Generic Values from Appendix A of OAR 340-122-0244)											
Ingestion, Dermal Contact, and Inhalation											
Residential			NE	NE	NE	8.2	2,000	1,700	4,100	NE	NE
Occupational			NE	NE	NE	29	47,000	31,000	63,000	NE	NE
Excavation Worker			NE	NE	NE	1,100	85,000	40,000	72,000	NE	NE
Volatilization to Outdoor Air											
Residential			NE	NE	NE	11	330	540	360	NE	NE
Occupational			NE	NE	NE	21	330	540	360	NE	NE
Vapor Intrusion into Buildings											
Residential			NE	NE	NE	0.091	330	190	360	NE	NE
Occupational			NE	NE	NE	0.5	330	540	360	NE	NE
Leaching to Ground Water											
Residential			NE	NE	NE	0.044	330	390	360	NE	NE
Occupational			NE	NE	NE	0.10	330	540	360	NE	NE
DEQ Level 1 Soil Matrix Cleanup Levels			40	100	100	NE	NE	NE	NE	NE	NE
MTCA End Use Criteria for Petroleum Contaminated Soil											
Class 1			<5.0	<25.0	<60.0	<0.0050	<0.0050	<0.0050	<0.0050	NE	NE
Class 2			5-100	25-200	60-200	0.005-0.5	0.005-20	0.005-40	0.005-20	NE	NE
Class 3			100-250	200-500	200-2,000	<0.500	<20.0	<40.0	<20.0	NE	NE
Class 4			>250	>500	>2,000	0.5	20	40	20	NE	NE

Notes:

[1]Chemical analyses were conducted by North Creek Analytical, Inc. of Portland, Oregon.

[2]B = benzene, E = ethylbenzene, T = toluene, X = xylenes.

[3]PCBs = polychlorinated biphenyls.

[4]Detected hydrocarbons in the diesel range do not have a distinct diesel pattern and may be due to heavily weathered diesel.

mg/kg = milligrams per kilogram

"--" = not analyzed

ND = not detected

NE = not established

"<0.0500" indicates that the analyte was not detected at a concentration greater than the concentration indicated.

Shading indicates concentration greater than the DEQ Level 1 Soil Matrix Cleanup Levels and/or MTCA Class 1 soil designation.

No. 482352001A.xls

COP0021972

TABLE 2 (Page 1 of 2)
SUMMARY OF SOIL CHEMICAL ANALYTICAL DATA[1]
POLYCYCLIC AROMATIC HYDROCARBONS
TOSCO PORTLAND TERMINAL - SAND LOT
PORTLAND, OREGON

Sample Identification	Date Sampled	Polycyclic Aromatic Hydrocarbons (EPA Method 8270M-SIM) (mg/kg)															
		Acenaphthene	Acenaphthylene	Anthracene	Benzo(a)anthracene	Benzo(a)pyrene	Benzo(b)fluoranthene	Benzo(g,h,i)perylene	Benzo(k)fluoranthene	Chrysene	Dibenzo(a,h)anthracene	Fluoranthene	Fluorene	Indeno(1,2,3-cd)pyrene	Naphthalene	Phenanthrene	Pyrene
Stockpile No. 1																	
SP1-1-2	06/21/01	--	--	--	--	--	--	--	--	--	--	--	--	--	--	--	--
SP1-2-2	06/21/01	--	--	--	--	--	--	--	--	--	--	--	--	--	--	--	--
SP1-3-2	06/22/01	<0.067	<0.067	<0.067	<0.067	<0.067	<0.134	0.203	<0.067	0.071	<0.067	<0.067	<0.067	0.0854	<0.067	<0.067	<0.067
SP1-4-1	06/29/01	--	--	--	--	--	--	--	--	--	--	--	--	--	--	--	--
SP1-5-2	06/29/01	--	--	--	--	--	--	--	--	--	--	--	--	--	--	--	--
SP1-6-2	06/29/01	--	--	--	--	--	--	--	--	--	--	--	--	--	--	--	--
SP1-7-2	06/29/01	--	--	--	--	--	--	--	--	--	--	--	--	--	--	--	--
SP1-8-2	06/29/01	--	--	--	--	--	--	--	--	--	--	--	--	--	--	--	--
Stockpile No. 2																	
SP2-1-2	11/30/01	--	--	--	--	--	--	--	--	--	--	--	--	--	--	--	--
SP2-2-2	11/30/01	--	--	--	--	--	--	--	--	--	--	--	--	--	--	--	--
SP2-3-2	11/30/01	--	--	--	--	--	--	--	--	--	--	--	--	--	--	--	--
SP2-4-2	11/30/01	--	--	--	--	--	--	--	--	--	--	--	--	--	--	--	--
SP2-5-1.5	11/30/01	--	--	--	--	--	--	--	--	--	--	--	--	--	--	--	--
SP2-6-2	11/30/01	--	--	--	--	--	--	--	--	--	--	--	--	--	--	--	--
SP2-7-2	11/30/01	--	--	--	--	--	--	--	--	--	--	--	--	--	--	--	--
Stockpile No. 3																	
SP3-1-2	11/30/01	--	--	--	--	--	--	--	--	--	--	--	--	--	--	--	--
SP3-2-2	11/30/01	<0.0268	<0.0268	<0.0268	0.0332	0.0458	0.0416	0.0317	0.0341	0.0427	<0.0268	0.0507	<0.0268	<0.0268	<0.0670	<0.0268	0.0638
SP3-3-2	11/30/01	--	--	--	--	--	--	--	--	--	--	--	--	--	--	--	--
SP3-4-2	11/30/01	--	--	--	--	--	--	--	--	--	--	--	--	--	--	--	--

Notes appear on page 2 of 2.

COP0021973

TABLE 2 (Page 2 of 2)

Sample Identification	Date Sampled	Polycyclic Aromatic Hydrocarbons (EPA Method 8270M) (mg/kg)															
		Acenaphthene	Acenaphthylene	Anthracene	Benzo(a)anthracene	Benzo(a)pyrene	Benzo(b)fluoranthene	Benzo(g,h,i)perylene	Benzo(k)fluoranthene	Chrysene	Dibenzo(a,h)anthracene	Fluoranthene	Fluorene	Indeno(1,2,3-cd)pyrene	Naphthalene	Phenanthrene	Pyrene
Stockpile No. 4																	
SP4-1-2	11/30/01	--	--	--	--	--	--	--	--	--	--	--	--	--	--	--	--
SP4-2-2	11/30/01	--	--	--	--	--	--	--	--	--	--	--	--	--	--	--	--
SP4-3-2	11/30/01	<0.268	<0.134	<0.268	<0.134	<0.134	<0.134	<0.134	<0.134	0.187	<0.134	<0.134	<0.134	<0.134	<0.0536	<0.134	0.495
DEQ Risk-Based Concentrations (Generic Values from Appendix A of OAR 340-122-0244)																	
Surface Soil Ingestion, Dermal Contact and Inhalation																	
Residential		800[2]	NE	4,400[2]	0.21	0.021	0.21	NE	2.1	21[2]	0.021	600[2]	570[2]	0.21	24	NE	450[2]
Occupational		25,000[2]	NE	180,000[2]	2.7	0.27	2.7	NE	27[2]	270[2]	0.27	29,000[2]	23,000[2]	2.7[2]	270	NE	21,000[2]
Excavation		110,000[2]	NE	750,000[2]	270[2]	27[2]	270[2]	NE	2,700[2]	27,000[2]	27[2]	110,000[2]	94,000[2]	270[2]	1,000[2]	NE	84,000[2]
Volatilization to Outdoor Air																	
Residential		100[3]	NE	6.4[3]	19[3]	8.3[3]	9.2[3]	NE	4.9[3]	3.2[3]	4.7[3]	110[3]	140[3]	0.38[3]	230	NE	71[3]
Occupational		100[3]	NE	6.4[3]	19[3]	8.3[3]	9.2[3]	NE	4.9[3]	3.2[3]	4.7[3]	110[3]	140[3]	0.38[3]	310[3]	NE	71[3]
Vapor Intrusion into Buildings																	
Residential		100[3]	NE	6.4[3]	19[3]	8.3[3]	9.2[3]	NE	4.9[3]	3.2[3]	4.7[3]	110[3]	140[3]	0.38[3]	290	NE	71[3]
Occupational		100[3]	NE	6.4[3]	19[3]	8.3[3]	9.2[3]	NE	4.9[3]	3.2[3]	4.7[3]	110[3]	140[3]	0.38[3]	310[3]	NE	71[3]
Leachate to Ground Water																	
Residential		100[3]	NE	6.4[3]	8.6	2.2	9.2[3]	NE	4.9[3]	3.2[3]	4.7[3]	110[3]	140[3]	0.38[3]	310[3]	NE	71[3]
Occupational		100[3]	NE	6.4[3]	19[3]	5.2	9.2[3]	NE	4.9[3]	3.2[3]	4.7[3]	110[3]	140[3]	0.38[3]	310[3]	NE	71[3]

Notes:

[1] Chemical analyses were conducted by North Creek Analytical, Inc. of Portland, Oregon.

[2] Value exceeds limit of three phase partitioning. Results greater than this value may indicate free product.

[3] Value is not a risk-based number, but rather represents a saturation concentration (partitioning limit). Concentrations in excess of this value indicate that free product might be present.

mg/kg = milligrams per kilogram

"--" = not analyzed

NE = not established

Shading indicates concentration greater than DEQ risk-based concentration.

No. 482352001B.xls

COP00021974

TABLE 3 (Page 1 of 2)
SUMMARY OF SOIL CHEMICAL ANALYTICAL DATA[1]
VOLATILE ORGANIC COMPOUNDS
TOSCO PORTLAND TERMINAL - SAND LOT
PORTLAND, OREGON

		Selected Volatile Organic Compounds (EPA Method 8260B) (mg/kg)										
Sample Identification	Date Sampled	1,2-Dibromoethane (EDB)	1,2-Dichloroethane (EDC)	Benzene	Toluene	Ethylbenzene	Xylenes (total)	Naphthalene	1,2,4-Trimethylbenzene	1,3,5-Trimethylbenzene	Isopropylbenzene	n-Propylbenzene
Stockpile No. 1												
SP1-1-2	06/21/01	--	--	--	--	--	--	--	--	--	--	--
SP1-2-2	06/21/01	--	--	--	--	--	--	--	--	--	--	--
SP1-3-2	06/22/01	<0.100	<0.100	<0.100	<0.100	<0.100	<0.200	<0.200	<0.100	<0.100	<0.100	<0.200
SP1-4-1	06/29/01	--	--	--	--	--	--	--	--	--	--	--
SP1-5-2	06/29/01	--	--	--	--	--	--	--	--	--	--	--
SP1-6-2	06/29/01	--	--	--	--	--	--	--	--	--	--	--
SP1-7-2	06/29/01	--	--	--	--	--	--	--	--	--	--	--
SP1-8-2	06/29/01	--	--	--	--	--	--	--	--	--	--	--
Stockpile No. 2												
SP2-1-2	11/30/01	--	--	--	--	--	--	--	--	--	--	--
SP2-2-2	11/30/01	--	--	--	--	--	--	--	--	--	--	--
SP2-3-2	11/30/01	--	--	--	--	--	--	--	--	--	--	--
SP2-4-2	11/30/01	--	--	--	--	--	--	--	--	--	--	--
SP2-5-1.5	11/30/01	--	--	--	--	--	--	--	--	--	--	--
SP2-6-2	11/30/01	--	--	--	--	--	--	--	--	--	--	--
SP2-7-2	11/30/01	--	--	--	--	--	--	--	--	--	--	--
Stockpile No. 3												
SP3-1-2	11/30/01	--	--	--	--	--	--	--	--	--	--	--
SP3-2-2	11/30/01	--	--	--	--	--	--	--	--	--	--	--
SP3-3-2	11/30/01	--	--	--	--	--	--	--	--	--	--	--
SP3-4-2	11/30/01	--	--	--	--	--	--	--	--	--	--	--

Notes appear on page 2 of 2.

COP00219975

TABLE 3 (Page 2 of 2)

Sample Identification	Date Sampled	1,2-Dibromoethane (EDB)	1,2-Dichloroethane (EDC)	Benzene	Toluene	Ethylbenzene	Xylenes (total)	Naphthalene	1,2,4-Trimethylbenzene	1,3,5-Trimethylbenzene	Isopropylbenzene	n-Propylbenzene
Stockpile No. 4												
SP4-1-2	11/30/01	<0.100	<0.100	<0.100	<0.100	<0.100	<0.200	<0.200	<0.100	<0.100	<0.200	<0.100
SP4-2-2	11/30/01	--	--	--	--	--	--	--	--	--	--	--
SP4-3-2	11/30/01	--	--	--	--	--	--	--	--	--	--	--
DEQ Risk-Based Concentrations (Generic Values from Appendix A of OAR 340-122-0244)												
Surface Soil Ingestion, Dermal Contact and Inhalation												
Residential		0.003	2.2	8.2	1,700[2]	2,000[2]	4,100[2]	24	47[2]	47	140	140
Occupational		0.03	9	29	31,000[2]	47,000[2]	63,000[2]	270	720[2]	720[2]	2,900[2]	2,900[2]
Excavation		3.6	330	1,100[2]	40,000[2]	85,000[2]	72,000[2]	1,000[2]	960[2]	810[2]	4,300[2]	4,300[2]
Volatilization to Outdoor Air												
Residential		0.43	3.6	11	540[3]	330[3]	360[3]	230	4.8[3]	210[2]	330[3]	200[3]
Occupational		0.78	6.6	21	540[3]	330[3]	360[3]	310[3]	4.8[3]	210[3]	330[3]	200[3]
Vapor Intrusion into Buildings												
Residential		0.026	0.039	0.091	190	330[3]	360[3]	290	4.8[3]	15	140	180
Occupational		0.17	0.26	0.05	540[3]	330[3]	360[3]	310[3]	4.8[3]	65	330[3]	200[3]
Leaching to Ground Water												
Residential		0.0000079	0.0067	0.044	390	330[3]	360[3]	310[3]	4.8[3]	210[3]	210	200[3]
Occupational		0.000019	0.013	0.1	540[3]	330[3]	360[3]	310[3]	4.8[3]	210[3]	300[3]	200[3]

Notes:

[1]Chemical analyses were conducted by North Creek Analytical, Inc. of Portland, Oregon. Only target analytes are presented in the table. See the laboratory report for the full list of analytes.

[2]Value exceeds limit of three phase partitioning. Results greater than this value may indicate free product.

[3]Value is not a risk-based number, but rather represents a saturation concentration (partitioning limit). Concentrations in excess of this value indicate that free product might be present.

mg/kg = milligrams per kilogram

"--" = not analyzed

No. 482352001C.xls

COP0021976

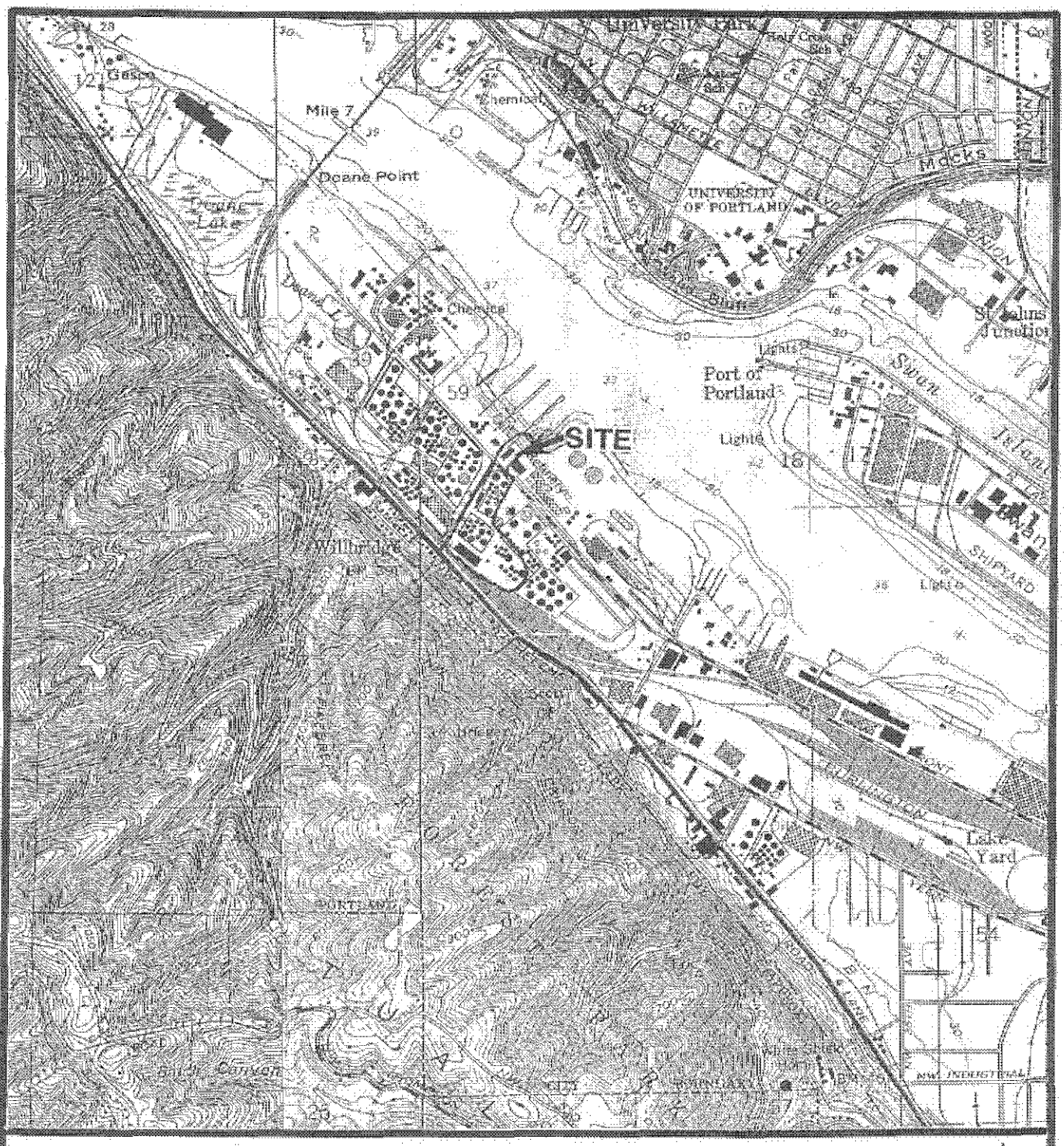

0 2000 4000
SCALE IN FEET

N

References: USGS 7.5' topographic quadrangle maps, "Portland, OR–WA," dated 1961 photorevised 1977, and "Linnton, OR," dated 1990.

Portland/P:/4/4823520/01/cad/vicinity.dwg KRS:MWJ 02/08/02

Geo Engineers

VICINITY MAP

FIGURE 1

COP0021977

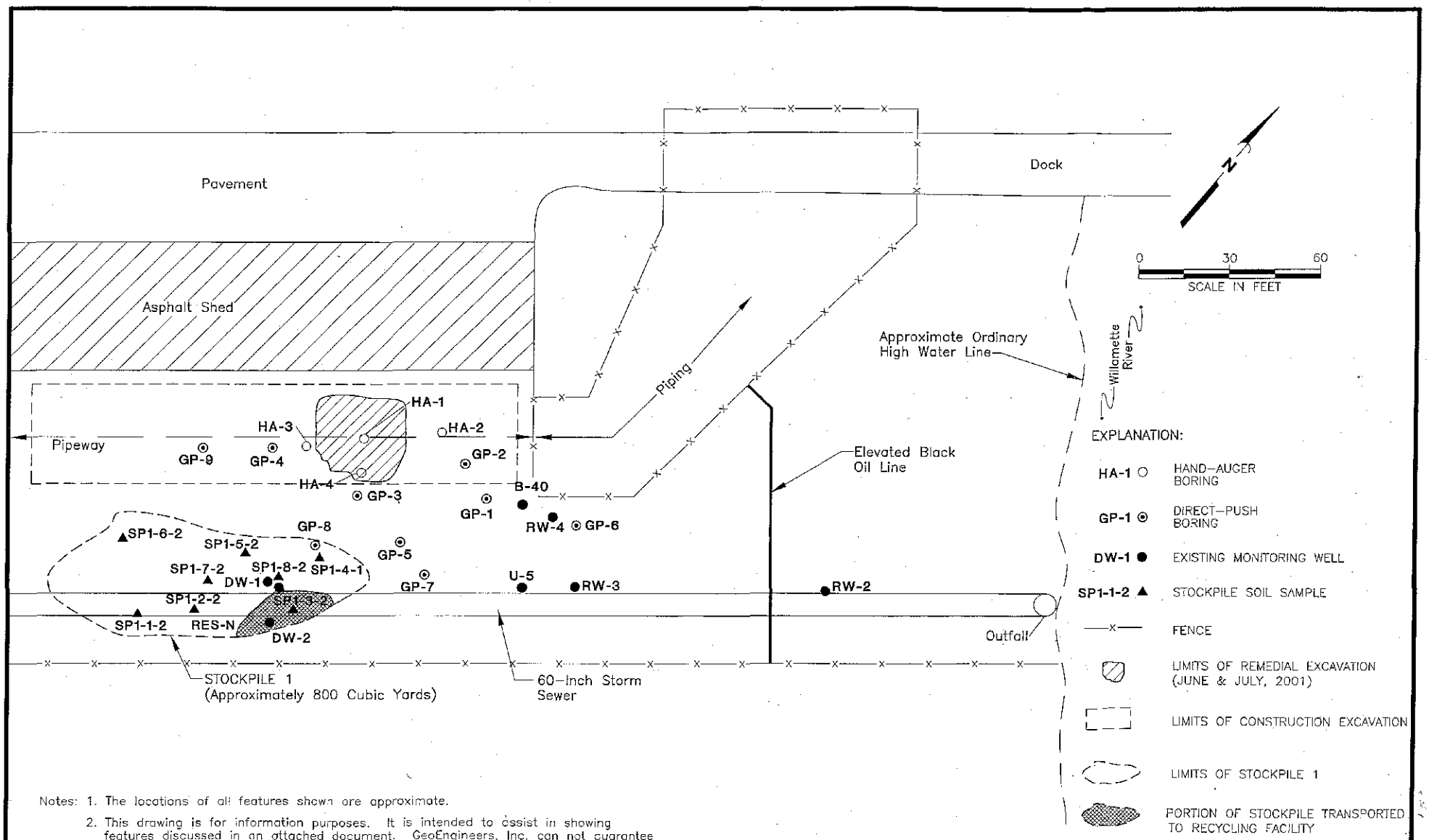

Notes: 1. The locations of all features shown are approximate.

2. This drawing is for information purposes. It is intended to assist in showing features discussed in an attached document. GeoEngineers, Inc. can not guarantee the accuracy and content of electronic files. The master file is stored by GeoEngineers, Inc. and will serve as the official record.

Reference: KHM Environmental management INC., "Riverfront Area Site Plan," dated April 23, 2001.

Portland\P:\4823520\01\CAD\Fig_2.dwg KRS:RLF 08/23/02

GeoEngineers

GENERAL LAYOUT OF SAND LOT

FIGURE 2

COP0021978

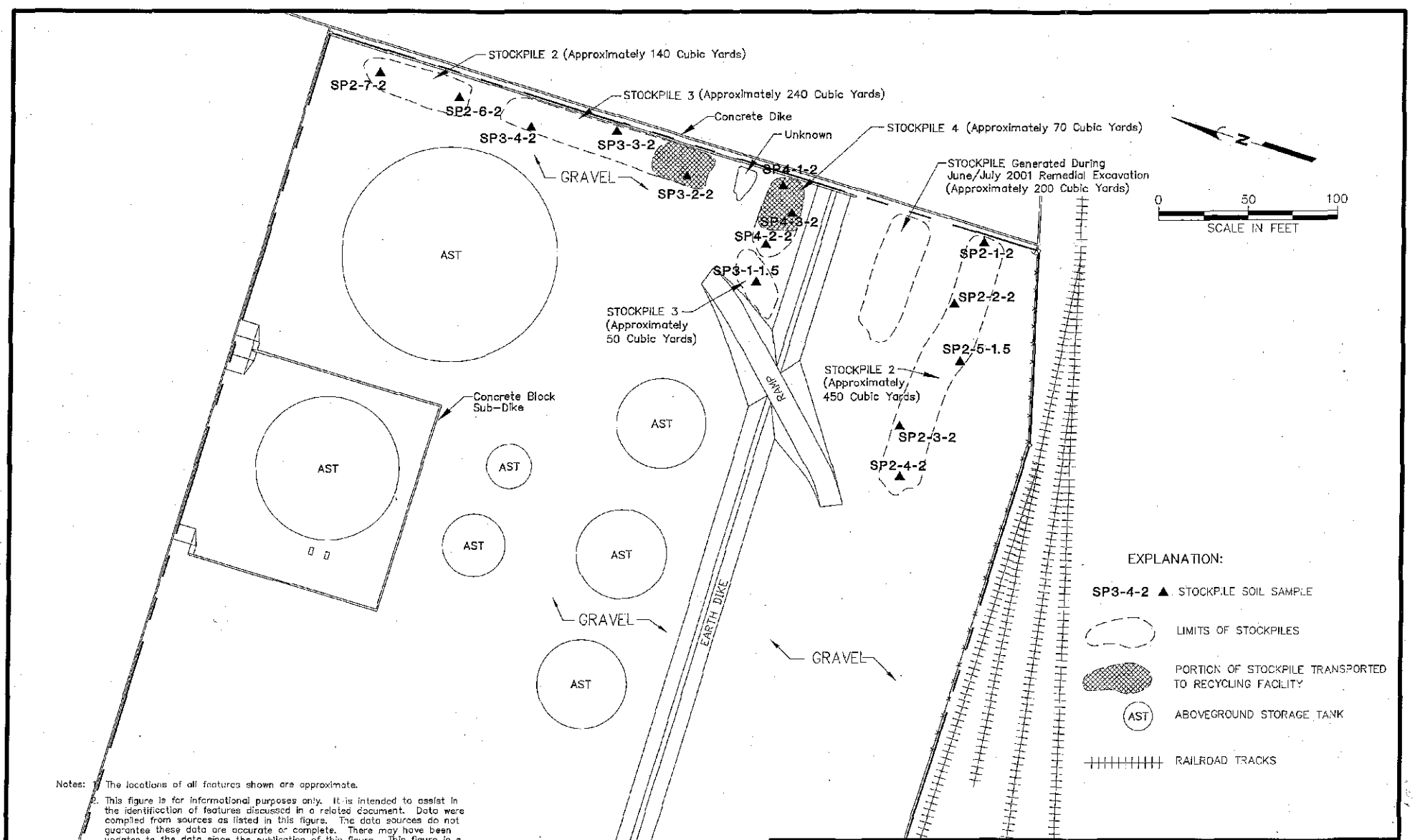

Notes: 1. The locations of all features shown are approximate.

2. This figure is for informational purposes only. It is intended to assist in the identification of features discussed in a related document. Data were compiled from sources as listed in this figure. The data sources do not guarantee these data are accurate or complete. There may have been updates to the data since the publication of this figure. This figure is a copy of a master document. The master hard copy is stored by GeoEngineers, Inc. and will serve as the official document of record.

Reference: Base drawing dated 1/23/02 entitled "68c70004.dwg" provided by Tosco Refining Company.

Portland\P:\4\4823520\01\CAD\drawing2.dwg KRS:RLF 08/23/02

GeoEngineers

GENERAL LAYOUT OF TANK FARM 3

FIGURE 3

COP0021979

ATTACHMENT A

STOCKPILE SAMPLING PROGRAM

ATTACHMENT A

STOCKPILE SAMPLING PROGRAM

GENERAL

GeoEngineers conducted stockpile soil sampling activities at the Tosco Portland Terminal on November 2 and November 30, 2002. The soil sampling activities consisted of the following:

- A total of 22 discrete soil samples were obtained from stockpiled soil generated during construction improvements in the Sand Lot. Four stockpiles of soil were generated based on areas of excavation:
  - Eight samples from Stockpile 1, excavated from above the product lines.
  - Seven samples from Stockpile 2, excavated above and along the sides of the product lines.
  - Four samples from Stockpile 3, excavated from under the product lines.
  - Three samples from Stockpile 4, soil identified by Tosco with possible contamination.

The soil samples were obtained from a hand auger or a trowel. Our representative wore clean, disposable nitrile gloves during sample collection. Soil samples selected for possible chemical analysis were placed in laboratory-supplied sample jars. The jars were completely filled to minimize the potential for headspace.

Soil sampling equipment was cleaned with a Liquinox wash, tap water rinse, and a distilled water rinse between each sampling event. Soil samples were placed in an ice chest containing frozen blue-ice for storage prior to delivery to the laboratory. Standard chain-of-custody procedures were observed during transport of the samples to the testing laboratory.

FIELD SCREENING OF SOIL SAMPLES

A GeoEngineers representative conducted field screening of soil samples obtained from the borings. The field screening results were used to aid in the selection of soil samples for laboratory analysis. The screening methods used during sampling activities included: (1) visual screening; (2) water sheen screening; and (3) headspace vapor screening.

Visual screening consists of inspecting the soil for stains indicative of petroleum-related contamination. Visual screening is generally more effective when contamination is related to heavy petroleum hydrocarbons, such as motor oil, or when hydrocarbon concentrations are relatively high. Water sheen screening and headspace screening are more sensitive methods that have been effective in detecting contamination at concentrations less than regulatory cleanup guidelines. Sheen screening and headspace vapor screening are more sensitive methods that have been effective in detecting contamination at concentrations less than regulatory cleanup levels. Field screening results are site specific. The effectiveness of field screening varies with temperature, moisture content, organic content, soil type, and age of the contaminant. The presence or absence of a sheen or headspace vapors does not necessarily indicate the presence or absence of petroleum hydrocarbons.

Water sheen screening involves placing soil in water and observing the water surface for signs of sheen. Sheen classifications are as follows:

No Sheen (NS)	No visible sheen on the water surface;
Slight Sheen (SS)	Light, colorless, dull sheen; spread is irregular, not rapid; sheen dissipates rapidly. Natural organic matter in the soil may produce a slight sheen;
Moderate Sheen (MS)	Light to heavy sheen; may have some color/iridescence; spread is irregular to flowing, may be rapid; few remaining areas of no sheen on water surface; and
Heavy Sheen (HS)	Heavy sheen with color/iridescence; spread is rapid; entire water surface may be covered with sheen.

Headspace vapor screening involves placing a soil sample in a plastic bag. Air is captured in the bag, and the bag is shaken to expose the soil to the air trapped in the bag. The probe of a Bacharach TLV Sniffer is inserted into the bag, and the TLV Sniffer measures the concentrations of combustible vapor in parts per million (ppm). The TLV Sniffer is calibrated to hexane. The TLV Sniffer is designed to quantify combustible gas concentrations in the range between 100 ppm and 10,000 ppm in this application.

Field screening results are site- and sample-specific. The results may vary with temperature, soil moisture content, soil type, and type of contaminant.

COP0021982

November 2001 Soil Stockpile

Assessment

Tosco Portland Terminal

Portland, Oregon

September 3, 2002

For

Tosco Corporation

GeoEngineers

September 3, 2002

Tosco Corporation
5528 Northwest Doane Avenue
Portland, Oregon 97210

Attention: Bill Collins

November 2001 Soil Stockpile
Assessment
Tosco Portland Terminal
Portland, Oregon
File No. 4823-520-01

INTRODUCTION

GeoEngineers is pleased to provide this report describing the results of excavation monitoring and soil sampling services conducted at the Tosco Corporation (Tosco) Portland Terminal (site), located at 5528 Northwest Doane Avenue, in Portland, Oregon. Our services were requested by Bill Collins on November 2, 2001. The location of the site relative to surrounding features is shown in Figure 1. Our services were performed in general accordance with, and under the terms and conditions of our service agreement dated November 2, 2001 and Tosco Purchase Order No. 175373.

BACKGROUND

GENERAL

Four soil stockpiles were generated during construction improvements in the "Sand Lot" area of the terminal. The Sand Lot is located on the east side of Front Avenue, south of the asphalt shed and the terminal's dock. Cowlitz Clean Sweep (CCS) of Portland, Oregon began removing soil surrounding the underground pipelines in the Sand Lot on June 25, 2001 using a combination of excavator, high-suction vacuum truck, and manual removal. GeoEngineers did not observe the excavation activities that generated stockpiles 1 through 4. The limits of the excavation shown in Figure 2 are estimated. The maximum depth of the excavation was approximately 8 feet below ground surface.

GeoEngineers, Inc.
7504 SW Bridgeport Road
Portland, OR 97224
Telephone (503) 624-9274

"Stockpile 1" is located in the Sand Lot area, adjacent to the construction excavation (Figure 2). Stockpiles 2, 3 and 4 are located at Tank Farm No. 3, on the west side of Front Avenue (Figure 3). Volume estimates were determined by multiplying each stockpiles' approximate length, width and height.

STOCKPILE OBSERVATIONS

"Stockpile 1" consists of approximately 800 cubic yards of soil that were removed above the terminals underground pipelines. "Stockpile 2" was divided into two individual stockpiles of soil with a combined volume of approximately 590 cubic yards. Stockpile 2 consists of soil that was removed above and along the sides of the terminal's underground pipelines. "Stockpile 3" also was divided into two individual stockpiles of soil with a combined volume of approximately 290 cubic yards. Stockpile 3 consists of soil that was removed from beneath the terminal's underground pipelines. "Stockpile 4" consists of approximately 70 cubic yards of soil that were removed from beneath the terminal's underground pipelines in an area identified by Tosco personnel as potentially contaminated.

SCOPE OF SERVICES

GeoEngineers' specific scope of services at the site included the following tasks.

1. Obtain a total of 22 discrete soil samples from four stockpiles of soil generated during construction improvements at the terminal.
2. Screen soil samples in the field for the presence of hydrocarbons using visual, water sheen and headspace vapor testing methods.
3. Visually classify the soil samples in general accordance with American Society for Testing and Materials (ASTM) D 2488-90, the Standard Practice for Description for Identification of Soils.
4. Submit each of the soil samples for chemical analysis of gasoline-range petroleum hydrocarbons by Northwest Method NWTPH-Gx; diesel- and heavy oil-range petroleum hydrocarbons by Northwest Method NWTPH-Dx (with acid/silica gel cleanup) and benzene, ethylbenzene, toluene and xylenes (BETX) by U.S. Environmental Protection Agency (EPA) Method 8021B. Submit two soil samples for chemical analysis of volatile organic compounds (VOCs) by EPA Method 8260B and three soil samples for polycyclic aromatic hydrocarbons (PAHs) by EPA Method 8270M-SIM and polychlorinated biphenyls (PCBs) by EPA Method 8082. Submit 15 soil samples for total lead by EPA 6000/7000 Series Methods.
5. Evaluate the analytical data from the soil stockpile samples with respect to Oregon Department of Environmental Quality (DEQ) and the Washington State Department of Ecology (Ecology) Model Toxics Control Act (MTCA) policies on reuse of petroleum-contaminated soil (PCS).
6. Contact several potential recipients regarding their need for fill material.

REGULATORY CRITERIA

For screening purposes, concentrations of petroleum-related contaminants in the soil samples from the soil stockpiles were compared to both the DEQ and the MTCA criteria on reuse of PCS. Both DEQ and MTCA have developed policies that define cleanup criteria for the reuse of PCS. Each policy is briefly summarized below.

DEQ'S POLICY

DEQ's Policy 550 (intended as guidance for employees of DEQ only) applies to soils contaminated by releases of petroleum products only and states that:

1. Soils that will be used as backfill in the excavation from which they were removed are required to be treated to the matrix cleanup standard applicable to the site of origin in accordance with Oregon Administrative Rules (OAR) 340-122-335.
2. Soils that will be used off site should meet the appropriate level one matrix cleanup standard for the substance released. If the soils are used off site, the property owner receiving the PCS should acknowledge in writing that the soils have been placed in accordance with this policy. This acknowledgement should also indicate that the owner of the property accepting the PCS understands the nature and origin of the soils.
3. In all cases, reuse of the treated PCS should be such that soils are placed above the seasonal high ground water level and are isolated from human contact or possible exposure. Treated PCS should not be placed in wetlands or within the 100-year floodplain.
4. In all cases, disposition of soils (including reuse on site or off site) must be reported to DEQ in accordance with OAR 340-122-360.
5. In accordance with OAR 340-122-250 (corrective action plan requirements), DEQ will consider alternate cleanup standards for reuse of PCS on a case by case basis; under no circumstances will DEQ approve of cleanup standards which do not adequately protect human health, safety, welfare, and the environment.

Although these treatment standards and reuse control measures are considered adequate to protect human health, safety, welfare and the environment, DEQ strongly supports and encourages efforts to attain the lowest practicable treatment levels and thereby reduce the impact to the environment.

ECOLOGY'S POLICY

Ecology's policy under the rules for Solid Waste Management law (RCW 70.95) and MTCA (RCW 70.105D) states that both treated and untreated soils may be disposed based upon their classification (classifications 1 through 4). The following table summarizes Ecology's end use criteria for PCSs.

Table 1
End Use Criteria for Petroleum-Contaminated Soils

Analyte	Analytical Method	Soil Classification (mg/kg)			
		1	2	3	4
Heavy Fuel Hydrocarbons (C24-C30)	WTPH-418.1 Mod.	<60	60-200	200-2,000	>2,000
Diesel (C12-C24)	WTPH-D	<25	25-200	200-500	>500
Gasoline (C6-C12)	WTPH-G	<5	5-100	100-250	>250
Benzene	8020	<0.005	0.005-0.5	≤0.5	>0.5
Ethylbenzene	8020	<0.005	0.005-20	≤20	>20
Toluene	8020	<0.005	0.005-40	≤40	>40
Xylenes (total)	8020	<0.005	0.005-20	≤20	>20

mg/kg = milligrams per kilogram

The MTCA Policy lists examples of appropriate uses for these soils. Appropriate uses for Class 1 and Class 2 soils include: fill underneath pavements; fill at industrial or commercial facilities; backfill at the cleanup site; and cover at landfills or any other uses which would not cause threat to human health or the environment. Ecology recommends that they not be used in or adjacent to wetlands, surface water, ground water, drinking water wells or utility trenches. Ecology also recommends that they not be used as residential topsoil. Treatment is strongly recommended prior to disposal for all Class 3 and 4 soils.

Since the impacted soil is petroleum-related, from an underground source (underground pipelines) and neither DEQ's Level 1 Soil Matrix Cleanup levels or MTCA's soil classification criteria have established cleanup levels for PAH constituent soil data, the stockpile sample results were also compared to DEQ's Generic Risk-Based Concentrations (RBCs). The RBCs are presented in Appendix A of DEQ's "Risk-Based Decision Making for the Remediation of Petroleum-Contaminated Sites" (OAR 340-122-0244). The RBCs are cleanup standards considered protective of human health that may be applied to simple petroleum-contaminated sites for a variety of exposure scenarios.

SOIL STOCKPILE SAMPLING RESULTS

GENERAL

GeoEngineers obtained eight soil samples from Stockpile 1 on November 2, 2001 and 14 soil samples from stockpiles 2, 3 and 4 on November 30, 2001. The samples were collected using a hand auger or a trowel. The analytical results of the stockpile samples are summarized in Tables 1, 2 and 3. The locations of the soil samples obtained from each soil stockpile are shown

in Figures 2 and 3. The sample identification numbers shown in the tables and figures include the stockpile number, sample number and depth of sample. For example, sample SP2-1-3 was the first sample obtained from Stockpile 2, at a depth of approximately 3 feet into the stockpile.

FIELD SCREENING RESULTS

Headspace vapors were less than 100 ppm in all of the samples obtained from the stockpiles, with the exception of one sample obtained from Stockpile 3 (SP3-4-2, 140 ppm). Sheen testing of the soil samples revealed no sheens in the samples obtained from Stockpile 1 to slight sheens in the samples obtained from stockpiles 2 and 3. Heavy sheens were observed in the samples obtained from Stockpile 4. The field screening results for the soil samples collected from the stockpiles are presented in Table 1.

CHEMICAL ANALYSES

Data Quality

Laboratory analytical data obtained during this investigation were reviewed to assess data quality. Our review of the laboratory data quality is summarized in Attachment B. Based on our data quality review, it is our opinion that the chemical analytical data are of acceptable quality for their intended use.

Stockpile 1 Analytical Results

Petroleum-related contaminants either were not detected or were detected at concentrations less than DEQ's Level 1 Soil Matrix Cleanup levels and meet MTCA's Class 1 and/or Class 2 designations in the soil samples obtained from Stockpile 2, with the exception of sample SP1-3-2. Diesel- and heavy oil-range hydrocarbons were detected at concentrations of 141 milligrams per kilogram (mg/kg) and 507 mg/kg in sample SP1-3-2. Soil represented by sample SP1-3-2 is greater than DEQ's Level 1 Soil Matrix Cleanup levels and is designated as a MTCA Class 3 soil.

Total lead was detected at a concentration of 27.5 mg/kg. VOCs and PCBs were not detected in sample SP1-3-2. Three PAHs, including benzo(g,h,i)perylene, chrysene and indeno(1,2,3-cd)pyrene also were detected in soil sample SP1-3-2 at concentrations of 0.203 mg/kg, 0.071 mg/kg and 0.0854 mg/kg, respectively. Each of these concentrations are less than established DEQ RBCs.

Stockpile 2 Analytical Results

Petroleum-related contaminants either were not detected or were detected at concentrations less than DEQ's Level 1 Soil Matrix Cleanup levels in all of the samples obtained from Stockpile 2. Also, all of the soil samples obtained from Stockpile 2 meet MTCA's Class 1 designation, except sample SP2-3-2. Heavy oil-range hydrocarbons were detected in sample SP2-3-2 at a concentration of 66 mg/kg, which designates it as Class 2 soil. Total lead was detected in the soil samples obtained from Stockpile 2 at concentrations ranging from 3.75 mg/kg to 10 mg/kg.

Stockpile 3 Analytical Results

Petroleum-related contaminants either were not detected or were detected at concentrations less than DEQ's Level 1 Soil Matrix Cleanup levels and meet MTCA's Class 1 and/or Class 2 designations in the soil samples obtained from Stockpile 3, with the exception of sample SP3-2-2. Heavy oil-range hydrocarbons were detected at a concentration of 1,180 mg/kg in sample SP3-2-2. Soil represented by sample SP3-2-2 is greater than DEQ's Level 1 Soil Matrix Cleanup levels and is designated as a MTCA Class 3 soil.

Total lead was detected at concentrations ranging from 5.17 mg/kg to 15.6 mg/kg. BETX compounds and PCBs were not detected in sample SP3-2-2. Eight PAHs, including benzo(a)anthracene (0.0332 mg/kg), benzo(a)pyrene (0.0458 mg/kg), benzo(b)fluoranthene, benzo(g,h,i)perylene (0.0317 mg/kg), benzo(k)fluoranthene (0.0341 mg/kg), chrysene (0.0427 mg/kg), fluoranthene (0.0507 mg/kg) and pyrene (0.0638 mg/kg) also were detected in soil sample SP3-2-2. Each of these concentrations are less than DEQ's RBCs, with the exception of benzo(a)pyrene. Benzo(a)pyrene exceeds the generic RBC for the residential receptor scenario under the direct contact, soil ingestion and inhalation pathway.

Stockpile 4 Analytical Results

Petroleum-related contaminants were detected at concentrations greater than DEQ's Level 1 Soil Matrix Cleanup levels and meet MTCA's Class 3 and/or Class 4 designations in the soil samples obtained from Stockpile 4, with the exception of sample SP4-2-2. Soil represented by sample SP4-2-2 indicate petroleum-related contamination less than DEQ's Level 1 Soil Matrix Cleanup levels and meet MTCA's Class 2 designation.

BETX compounds and PCBs were not detected in sample SP4-3-2. VOCs were not detected in sample SP4-1-2. Two PAHs, including chrysene and pyrene were detected in soil sample SP4-3-2 at concentrations of 0.187 mg/kg and 0.495 mg/kg, respectively. Each of these concentrations are less than established DEQ RBCs.

CONCLUSIONS AND RECOMMENDATIONS

Based on the results of our soil sampling activities, Stockpile 1 (with the exception of soil represented by sample SP1-3-2), Stockpile 2 and Stockpile 3 (with the exception of soil represented by sample SP3-2-2) meet DEQ Level 1 Soil Matrix Cleanup levels and MTCA Class 1 and/or Class 2 designations. Only soil represented by sample SP4-2-2 from Stockpile 4 meet DEQ Level 1 Soil Matrix Cleanup levels and MTCA Class 2 designations. Soil identified as having met Level 1 Soil Matrix cleanup standards or Class 1 and/or Class 2 designations may be reused on site as fill material (provided it is not placed below the seasonal high ground water level, in or adjacent to wetlands, surface water, drinking water wells or utility trenches). GeoEngineers contacted Mr. Dave Belyea of the DEQ on August 22, 2002 regarding DEQ's policy on reuse of petroleum-contaminated soil. Mr. Belyea stated that, based on the site-specific information provided during the August 22 telephone conversation, reusing the soil on site as fill

material is warranted even though it is within the 100-year floodplain. The fill may also be used at off-site locations under specific conditions (such as at industrial or commercial facilities).

Whether or not Tosco chooses to dispose of the soil that meet DEQ Level 1 Soil Matrix Cleanup levels on site or off site (in Oregon), we recommend the disposition of the soil be reported to DEQ in accordance with OAR 340-122-360. Should the soil that meet MTCA Class 1 and/or Class 2 designations be disposed at a site in Washington, we recommend Ecology be notified in accordance with WAC 173-340. The following information should also be obtained and kept on record:

1. Origin owner and address of contaminated soil,
2. Owner name, address and telephone number,
3. Engineering consultant name, project manager, address and telephone number,
4. Type of facility,
5. Total volume of contaminated soil,
6. Type(s) and concentration of contaminant originally in soil (include analytical results from laboratory),
7. Name, address and contact name of firm providing treatment,
8. Type of treatment,
9. Final concentrations of contaminants in soil (include analytical results from the laboratory), and
10. Final disposition of soil including address, property owner and operator, exact location of soil with map showing placement and depth.

Soil that did not meet DEQ Level 1 Soil Matrix Cleanup levels or MTCA Class 1 and/or Class 2 designations was transported to TPST Soil Recyclers of Oregon (TPST) on June 7 and 10, 2002 by CCS for recycling. CCS removed a total of 68.2 tons of impacted soil from portions of stockpiles 1, 3 and 4 (represented by samples SP1-3-2, SP3-2-2, SP4-1-2 and SP4-3-2). Manifests of each transported load and a Customer Job Report from TPST were provided by Tosco and are included in Attachment C.

LIMITATIONS

We have prepared this report for use by Tosco Corporation. Within the limitations of scope, schedule and budget, our services have been executed in accordance with generally accepted environmental science practices in this area at the time this report was prepared. No warranty or other conditions, express or implied, should be understood.

Please refer to Attachment D titled "Report Limitations and Guidelines for Use" for additional information pertaining to use of this report.

GeoEngineers appreciates the opportunity to provide Tosco Corporation with professional environmental services. If you have questions concerning the information presented in this report, or require additional information, please contact one of the undersigned.

Yours very truly,

GeoEngineers, Inc.

Marjan A. Rotting
Environmental Scientist

Kyle R. Sattler
Project Manager

FOR: Sean K. Ragain, R.G.
Principal

MAR:KRS:SKR:mln
Document ID: 482352001R.doc

Attachments

Two copies submitted

TABLE 1 (Page 1 of 2)
SUMMARY OF SOIL CHEMICAL ANALYTICAL DATA[1]
STOCKPILE SOIL SAMPLES

TOSCO PORTLAND TERMINAL - SAND LOT
PORTLAND, OREGON

Sample Identification	Date Sampled	Depth of Sample (feet)	Gasoline-range Hydrocarbons (Northwest Method NWTPH-Gx) (mg/kg)	Diesel- and Oil-range Hydrocarbons (Northwest Method NWTPH-Dx with Acid/Silica Gel Cleanup) (mg/kg)		BETX Compounds[2] (EPA Method 8021B) (mg/kg)				PCBs[3] (EPA Method 8082) (mg/kg)	Total Lead (EPA 6000/ 7000 Series Methods) (mg/kg)
				Diesel	Oil	B	E	T	X		
Stockpile No. 1											
SP1-1-2	11/02/01	2.0	<2.00	<25.0	<50.0	<0.0500	<0.0500	<0.0500	<0.0500	--	--
SP1-2-2	11/02/01	2.0	<2.00	<25.0	99.1	<0.0500	<0.0500	<0.0500	<0.0500	--	--
SP1-3-2	11/02/01	2.0	<2.00	141.0	507.0	<0.0500	<0.0500	<0.0500	<0.0500	ND	27.5
SP1-4-1	11/02/01	1.0	<2.00	<25.0	67.7	<0.0500	<0.0500	<0.0500	<0.0500	--	--
SP1-5-2	11/02/01	2.0	<2.00	<25.0	<50.0	<0.0500	<0.0500	<0.0500	<0.0500	--	--
SP1-6-2	11/02/01	2.0	<2.00	<25.0	61.3	<0.0500	<0.0500	<0.0500	<0.0500	--	--
SP1-7-2	11/02/01	2.0	<2.00	<25.0	<50.0	<0.0500	<0.0500	<0.0500	<0.0500	--	--
SP1-8-2	11/02/01	2.0	<2.00	<25.0	<50.0	<0.0500	<0.0500	<0.0500	<0.0500	--	--
Stockpile No. 2											
SP2-1-2	11/30/01	2.0	<2.00	<25.0	<50.0	<0.0500	<0.0500	<0.0500	<0.0500	--	4.55
SP2-2-2	11/30/01	2.0	<2.00	<25.0	<50.0	<0.0500	<0.0500	<0.0500	<0.0500	--	4.13
SP2-3-2	11/30/01	2.0	<2.00	<25.0	66.0	<0.0500	<0.0500	<0.0500	<0.0500	--	4.28
SP2-4-2	11/30/01	2.0	<2.00	<25.0	<50.0	<0.0500	<0.0500	<0.0500	<0.0500	--	5.47
SP2-5-1.5	11/30/01	1.5	<2.00	<25.0	<50.0	<0.0500	<0.0500	<0.0500	<0.0500	--	3.75
SP2-6-2	11/30/01	2.0	<2.00	<25.0	<50.0	<0.0500	<0.0500	<0.0500	<0.0500	--	10.0
SP2-7-2	11/30/01	2.0	<2.00	<25.0	<50.0	<0.0500	<0.0500	<0.0500	<0.0500	--	6.66
Stockpile No. 3											
SP3-1-2	11/30/01	2.0	<2.00	<25.0	88.9	<0.0500	<0.0500	<0.0500	<0.0500	--	14.4
SP3-2-2	11/30/01	2.0	<2.00	<125.0	1,100	<0.0500	<0.0500	<0.0500	<0.0500	ND	10.4
SP3-3-2	11/30/01	2.0	<2.00	<25.0	74.8	<0.0500	<0.0500	<0.0500	<0.0500	--	5.17
SP3-4-2	11/30/01	2.0	<2.00	<25.0	<50.0	<0.0500	<0.0500	<0.0500	<0.0500	--	15.6
Stockpile No. 4											
SP4-1-2	11/30/01	2.0	19.2	742	315	<0.0500	<0.0500	<0.0500	<0.0500	--	7.35
SP4-2-2	11/30/01	2.0	6.58	80.4	96.6	<0.0500	<0.0500	<0.0500	<0.0500	--	15.7
SP4-3-2	11/30/01	2.0	18.5	950	479	<0.0500	<0.0500	<0.0500	<0.0500	ND	10.1

Notes appear on page 2 of 2.

TABLE 1 (Page 2 of 2)

Sample Identification	Date Sampled	Depth of Sample (feet)	Gasoline-range Hydrocarbons (Northwest Method NWTPH-Gx) (mg/kg)	Diesel- and Oil-range Hydrocarbons (Northwest Method NWTPH-Dx with Acid/Silica Gel Cleanup) (mg/kg)		BETX Compounds[2] (EPA Method 8021B) (mg/kg)				PCBs[3] (EPA Method 8082) (mg/kg)	Total Lead (EPA 6000/ 7000 Series Methods) (mg/kg)
				Diesel	Oil	B	E	T	X		
DEQ Risk-Based Concentrations (Generic Values from Appendix A of OAR 340-122-0244)											
Ingestion, Dermal Contact, and Inhalation											
Residential			NE	NE	NE	8.2	2,000	1,700	4,100	NE	NE
Occupational			NE	NE	NE	29	47,000	31,000	63,000	NE	NE
Excavation Worker			NE	NE	NE	1,100	85,000	40,000	72,000	NE	NE
Volatilization to Outdoor Air											
Residential			NE	NE	NE	11	330	540	360	NE	NE
Occupational			NE	NE	NE	21	330	540	360	NE	NE
Vapor Intrusion into Buildings											
Residential			NE	NE	NE	0.091	330	190	360	NE	NE
Occupational			NE	NE	NE	0.5	330	540	360	NE	NE
Leaching to Ground Water											
Residential			NE	NE	NE	0.044	330	390	360	NE	NE
Occupational			NE	NE	NE	0.10	330	540	360	NE	NE
DEQ Level 1 Soil Matrix Cleanup Levels			40	100	100	NE	NE	NE	NE	NE	NE
MTCA End Use Criteria for Petroleum Contaminated Soil											
Class 1			<5.0	<25.0	<60.0	<0.0050	<0.0050	<0.0050	<0.0050	NE	NE
Class 2			5-100	25-200	60-200	0.005-0.5	0.005-20	0.005-40	0.005-20	NE	NE
Class 3			100-250	200-500	200-2,000	<0.500	<20.0	<40.0	<20.0	NE	NE
Class 4			>250	>500	>2,000	0.5	20	40	20	NE	NE

Notes:

[1]Chemical analyses were conducted by North Creek Analytical, Inc. of Portland, Oregon.

[2]B = benzene, E = ethylbenzene, T = toluene, X = xylenes.

[3]PCBs = polychlorinated biphenyls.

[4]Detected hydrocarbons in the diesel range do not have a distinct diesel pattern and may be due to heavily weathered diesel.

mg/kg = milligrams per kilogram

"--" = not analyzed

ND = not detected

NE = not established

"<0.0500" indicates that the analyte was not detected at a concentration greater than the concentration indicated.

Shading indicates concentration greater than the DEQ Level 1 Soil Matrix Cleanup Levels and/or MTCA Class 1 soil designation.

No. 482352001A.xls

COP0021993

TABLE 2 (Page 1 of 2)
SUMMARY OF SOIL CHEMICAL ANALYTICAL DATA[1]
POLYCYCLIC AROMATIC HYDROCARBONS
TOSCO PORTLAND TERMINAL - SAND LOT
PORTLAND, OREGON

Sample Identification	Date Sampled	Polycyclic Aromatic Hydrocarbons (EPA Method 8270M-SIM) (mg/kg)															
		Acenaphthene	Acenaphthylene	Anthracene	Benzo(a)anthracene	Benzo(a)pyrene	Benzo(b)fluoranthene	Benzo(g,h,i)perylene	Benzo(k)fluoranthene	Chrysene	Dibenzo(a,h)anthracene	Fluoranthene	Fluorene	Indeno(1,2,3-cd)pyrene	Naphthalene	Phenanthrene	Pyrene
Stockpile No. 1																	
SP1-1-2	06/21/01	--	--	--	--	--	--	--	--	--	--	--	--	--	--	--	--
SP1-2-2	06/21/01	--	--	--	--	--	--	--	--	--	--	--	--	--	--	--	--
SP1-3-2	06/22/01	<0.067	<0.067	<0.067	<0.067	<0.067	<0.134	0.203	<0.067	0.071	<0.067	<0.067	<0.067	0.0854	<0.067	<0.067	<0.067
SP1-4-1	06/29/01	--	--	--	--	--	--	--	--	--	--	--	--	--	--	--	--
SP1-5-2	06/29/01	--	--	--	--	--	--	--	--	--	--	--	--	--	--	--	--
SP1-6-2	06/29/01	--	--	--	--	--	--	--	--	--	--	--	--	--	--	--	--
SP1-7-2	06/29/01	--	--	--	--	--	--	--	--	--	--	--	--	--	--	--	--
SP1-8-2	06/29/01	--	--	--	--	--	--	--	--	--	--	--	--	--	--	--	--
Stockpile No. 2																	
SP2-1-2	11/30/01	--	--	--	--	--	--	--	--	--	--	--	--	--	--	--	--
SP2-2-2	11/30/01	--	--	--	--	--	--	--	--	--	--	--	--	--	--	--	--
SP2-3-2	11/30/01	--	--	--	--	--	--	--	--	--	--	--	--	--	--	--	--
SP2-4-2	11/30/01	--	--	--	--	--	--	--	--	--	--	--	--	--	--	--	--
SP2-5-1.5	11/30/01	--	--	--	--	--	--	--	--	--	--	--	--	--	--	--	--
SP2-6-2	11/30/01	--	--	--	--	--	--	--	--	--	--	--	--	--	--	--	--
SP2-7-2	11/30/01	--	--	--	--	--	--	--	--	--	--	--	--	--	--	--	--
Stockpile No. 3																	
SP3-1-2	11/30/01	--	--	--	--	--	--	--	--	--	--	--	--	--	--	--	--
SP3-2-2	11/30/01	<0.0268	<0.0268	<0.0268	0.0332	0.0458	0.0416	0.0317	0.0341	0.0427	<0.0268	0.0507	<0.0268	<0.0268	<0.0670	<0.0268	0.0638
SP3-3-2	11/30/01	--	--	--	--	--	--	--	--	--	--	--	--	--	--	--	--
SP3-4-2	11/30/01	--	--	--	--	--	--	--	--	--	--	--	--	--	--	--	--

Notes appear on page 2 of 2.

COP00021994

TABLE 2 (Page 2 of 2)

Sample Identification	Date Sampled	Polycyclic Aromatic Hydrocarbons (EPA Method 8270M) (mg/kg)															
		Acenaphthene	Acenaphthylene	Anthracene	Benzo(a)anthracene	Benzo(a)pyrene	Benzo(b)fluoranthene	Benzo(g,h,i)perylene	Benzo(k)fluoranthene	Chrysene	Dibenzo(a,h)anthracene	Fluoranthene	Fluorene	Indeno(1,2,3-cd)pyrene	Naphthalene	Phenanthrene	Pyrene
Stockpile No. 4																	
SP4-1-2	11/30/01	--	--	--	--	--	--	--	--	--	--	--	--	--	--	--	--
SP4-2-2	11/30/01	--	--	--	--	--	--	--	--	--	--	--	--	--	--	--	--
SP4-3-2	11/30/01	<0.268	<0.134	<0.268	<0.134	<0.134	<0.134	<0.134	<0.134	0.187	<0.134	<0.134	<0.134	<0.134	<0.0536	<0.134	0.495
DEQ Risk-Based Concentrations (Generic Values from Appendix A of OAR 340-122-0244)																	
Surface Soil Ingestion, Dermal Contact and Inhalation																	
Residential		800[2]	NE	4,400[2]	0.21	0.021	0.21	NE	2.1	21[2]	0.021	600[2]	570[2]	0.21	24	NE	450[2]
Occupational		25,000[2]	NE	180,000[2]	2.7	0.27	2.7	NE	27[2]	270[2]	0.27	29,000[2]	23,000[2]	2.7[2]	270	NE	21,000[2]
Excavation		110,000[2]	NE	750,000[2]	270[2]	27[2]	270[2]	NE	2,700[2]	27,000[2]	27[2]	110,000[2]	94,000[2]	270[2]	1,000[2]	NE	84,000[2]
Volatilization to Outdoor Air																	
Residential		100[3]	NE	6.4[3]	19[3]	8.3[3]	9.2[3]	NE	4.9[3]	3.2[3]	4.7[3]	110[3]	140[3]	0.38[3]	230	NE	71[3]
Occupational		100[3]	NE	6.4[3]	19[3]	8.3[3]	9.2[3]	NE	4.9[3]	3.2[3]	4.7[3]	110[3]	140[3]	0.38[3]	310[3]	NE	71[3]
Vapor Intrusion into Buildings																	
Residential		100[3]	NE	6.4[3]	19[3]	8.3[3]	9.2[3]	NE	4.9[3]	3.2[3]	4.7[3]	110[3]	140[3]	0.38[3]	290	NE	71[3]
Occupational		100[3]	NE	6.4[3]	19[3]	8.3[3]	9.2[3]	NE	4.9[3]	3.2[3]	4.7[3]	110[3]	140[3]	0.38[3]	310[3]	NE	71[3]
Leachate to Ground Water																	
Residential		100[3]	NE	6.4[3]	8.6	2.2	9.2[3]	NE	4.9[3]	3.2[3]	4.7[3]	110[3]	140[3]	0.38[3]	310[3]	NE	71[3]
Occupational		100[3]	NE	6.4[3]	19[3]	5.2	9.2[3]	NE	4.9[3]	3.2[3]	4.7[3]	110[3]	140[3]	0.38[3]	310[3]	NE	71[3]

Notes:

[1] Chemical analyses were conducted by North Creek Analytical, Inc. of Portland, Oregon.

[2] Value exceeds limit of three phase partitioning. Results greater than this value may indicate free product.

[3] Value is not a risk-based number, but rather represents a saturation concentration (partitioning limit). Concentrations in excess of this value indicate that free product might be present.

mg/kg = milligrams per kilogram

"--" = not analyzed

NE = not established

Shading indicates concentration greater than DEQ risk-based concentration.

No. 482352001B.xls

COP00021995

TABLE 3 (Page 1 of 2)
SUMMARY OF SOIL CHEMICAL ANALYTICAL DATA[1]
VOLATILE ORGANIC COMPOUNDS
TOSCO PORTLAND TERMINAL - SAND LOT
PORTLAND, OREGON

		Selected Volatile Organic Compounds (EPA Method 8260B) (mg/kg)										
Sample Identification	Date Sampled	1,2-Dibromoethane (EDB)	1,2-Dichloroethane (EDC)	Benzene	Toluene	Ethylbenzene	Xylenes (total)	Naphthalene	1,2,4-Trimethylbenzene	1,3,5-Trimethylbenzene	Isopropylbenzene	n-Propylbenzene
Stockpile No. 1												
SP1-1-2	06/21/01	--	--	--	--	--	--	--	--	--	--	--
SP1-2-2	06/21/01	--	--	--	--	--	--	--	--	--	--	--
SP1-3-2	06/22/01	<0.100	<0.100	<0.100	<0.100	<0.100	<0.200	<0.200	<0.100	<0.100	<0.100	<0.200
SP1-4-1	06/29/01	--	--	--	--	--	--	--	--	--	--	--
SP1-5-2	06/29/01	--	--	--	--	--	--	--	--	--	--	--
SP1-6-2	06/29/01	--	--	--	--	--	--	--	--	--	--	--
SP1-7-2	06/29/01	--	--	--	--	--	--	--	--	--	--	--
SP1-8-2	06/29/01	--	--	--	--	--	--	--	--	--	--	--
Stockpile No. 2												
SP2-1-2	11/30/01	--	--	--	--	--	--	--	--	--	--	--
SP2-2-2	11/30/01	--	--	--	--	--	--	--	--	--	--	--
SP2-3-2	11/30/01	--	--	--	--	--	--	--	--	--	--	--
SP2-4-2	11/30/01	--	--	--	--	--	--	--	--	--	--	--
SP2-5-1.5	11/30/01	--	--	--	--	--	--	--	--	--	--	--
SP2-6-2	11/30/01	--	--	--	--	--	--	--	--	--	--	--
SP2-7-2	11/30/01	--	--	--	--	--	--	--	--	--	--	--
Stockpile No. 3												
SP3-1-2	11/30/01	--	--	--	--	--	--	--	--	--	--	--
SP3-2-2	11/30/01	--	--	--	--	--	--	--	--	--	--	--
SP3-3-2	11/30/01	--	--	--	--	--	--	--	--	--	--	--
SP3-4-2	11/30/01	--	--	--	--	--	--	--	--	--	--	--

Notes appear on page 2 of 2.

COP0021996

TABLE 3 (Page 2 of 2)

Sample Identification	Date Sampled	1,2-Dibromoethane (EDB)	1,2-Dichloroethane (EDC)	Benzene	Toluene	Ethylbenzene	Xylenes (total)	Naphthalene	1,2,4-Trimethylbenzene	1,3,5-Trimethylbenzene	Isopropylbenzene	n-Propylbenzene
Stockpile No. 4												
SP4-1-2	11/30/01	<0.100	<0.100	<0.100	<0.100	<0.100	<0.200	<0.200	<0.100	<0.100	<0.200	<0.100
SP4-2-2	11/30/01	--	--	--	--	--	--	--	--	--	--	--
SP4-3-2	11/30/01	--	--	--	--	--	--	--	--	--	--	--
DEQ Risk-Based Concentrations (Generic Values from Appendix A of OAR 340-122-0244)												
Surface Soil Ingestion, Dermal Contact and Inhalation												
Residential		0.003	2.2	8.2	1,700[2]	2,000[2]	4,100[2]	24	47[2]	47	140	140
Occupational		0.03	9	29	31,000[2]	47,000[2]	63,000[2]	270	720[2]	720[2]	2,900[2]	2,900[2]
Excavation		3.6	330	1,100[2]	40,000[2]	85,000[2]	72,000[2]	1,000[2]	960[2]	810[2]	4,300[2]	4,300[2]
Volatilization to Outdoor Air												
Residential		0.43	3.6	11	540[3]	330[3]	360[3]	230	4.8[3]	210[2]	330[3]	200[3]
Occupational		0.78	6.6	21	540[3]	330[3]	360[3]	310[3]	4.8[3]	210[3]	330[3]	200[3]
Vapor Intrusion into Buildings												
Residential		0.026	0.039	0.091	190	330[3]	360[3]	290	4.8[3]	15	140	180
Occupational		0.17	0.26	0.05	540[3]	330[3]	360[3]	310[3]	4.8[3]	65	330[3]	200[3]
Leaching to Ground Water												
Residential		0.0000079	0.0067	0.044	390	330[3]	360[3]	310[3]	4.8[3]	210[3]	210	200[3]
Occupational		0.000019	0.013	0.1	540[3]	330[3]	360[3]	310[3]	4.8[3]	210[3]	300[3]	200[3]

Notes:

[1]Chemical analyses were conducted by North Creek Analytical, Inc. of Portland, Oregon. Only target analytes are presented in the table. See the laboratory report for the full list of analytes.

[2]Value exceeds limit of three phase partitioning. Results greater than this value may indicate free product.

[3]Value is not a risk-based number, but rather represents a saturation concentration (partitioning limit). Concentrations in excess of this value indicate that free product might be present.

mg/kg = milligrams per kilogram

"--" = not analyzed

No. 482352001C.xls

COP00219977

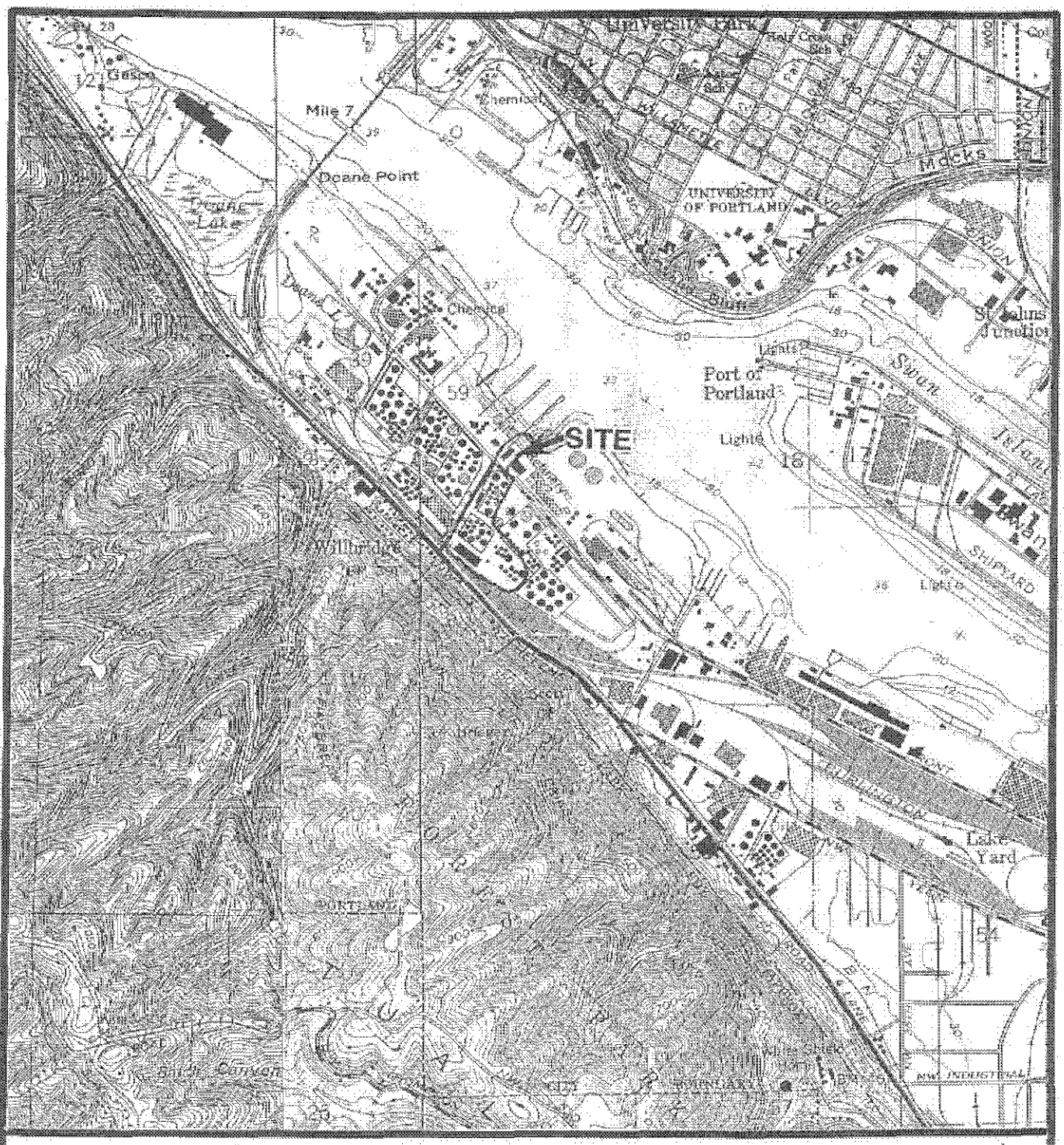

0 2000 4000
SCALE IN FEET

N

References: USGS 7.5' topographic quadrangle maps, "Portland, OR–WA," dated 1961 photorevised 1977, and "Linnton, OR," dated 1990.

Portland/P:/4/4823520/01/cad/vicinity.dwg KRS:MWJ 02/08/02

Geo Engineers

VICINITY MAP

FIGURE 1

COP0021998

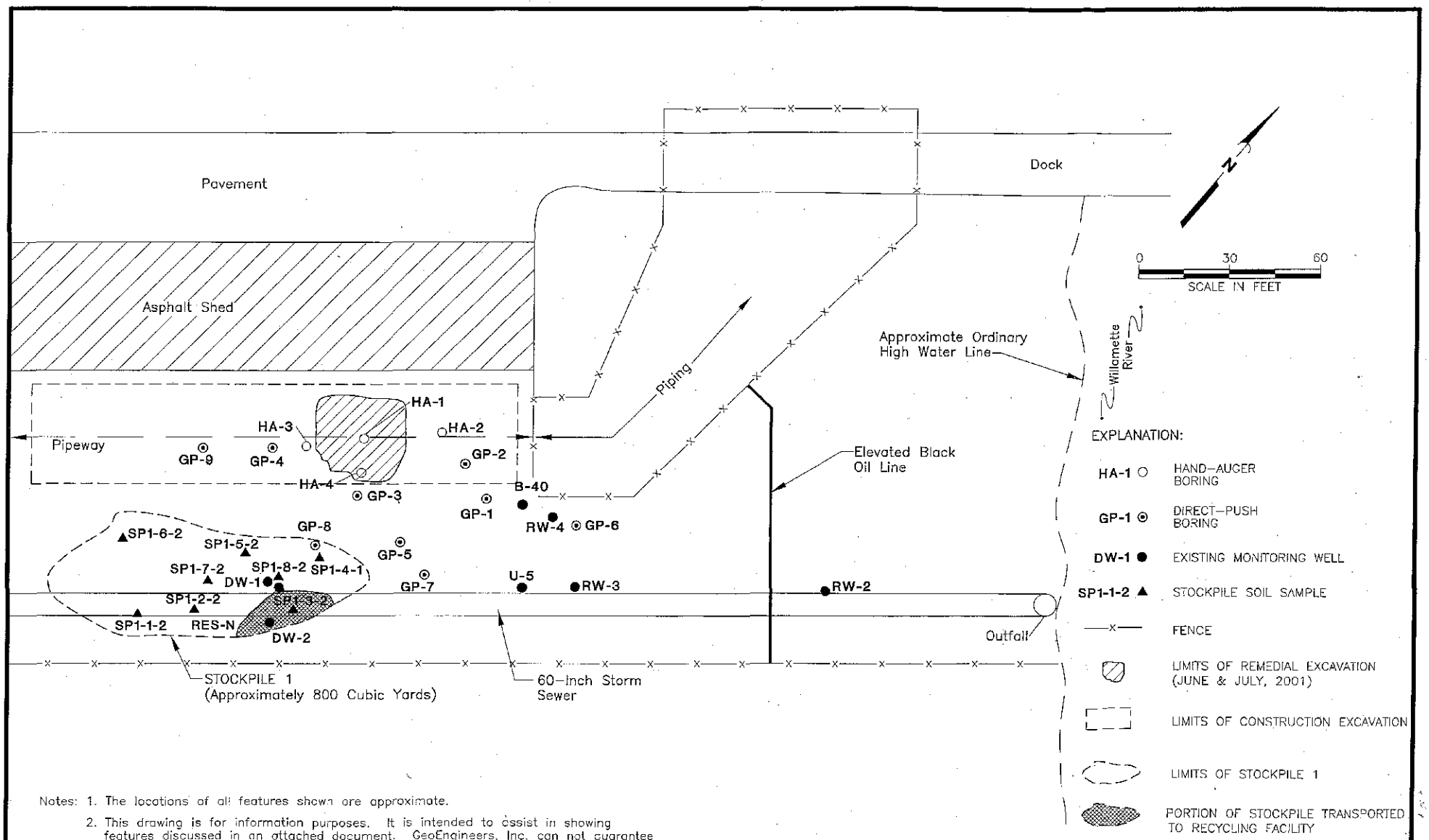

Notes: 1. The locations of all features shown are approximate.

2. This drawing is for information purposes. It is intended to assist in showing features discussed in an attached document. GeoEngineers, Inc. can not guarantee the accuracy and content of electronic files. The master file is stored by GeoEngineers, Inc. and will serve as the official record.

Reference: KHM Environmental management INC., "Riverfront Area Site Plan," dated April 23, 2001.

Portland\P:\4823520\01\CAD\Fig_2.dwg KRS:RLF 08/23/02

GeoEngineers

GENERAL LAYOUT OF SAND LOT

FIGURE 2

COP0021999

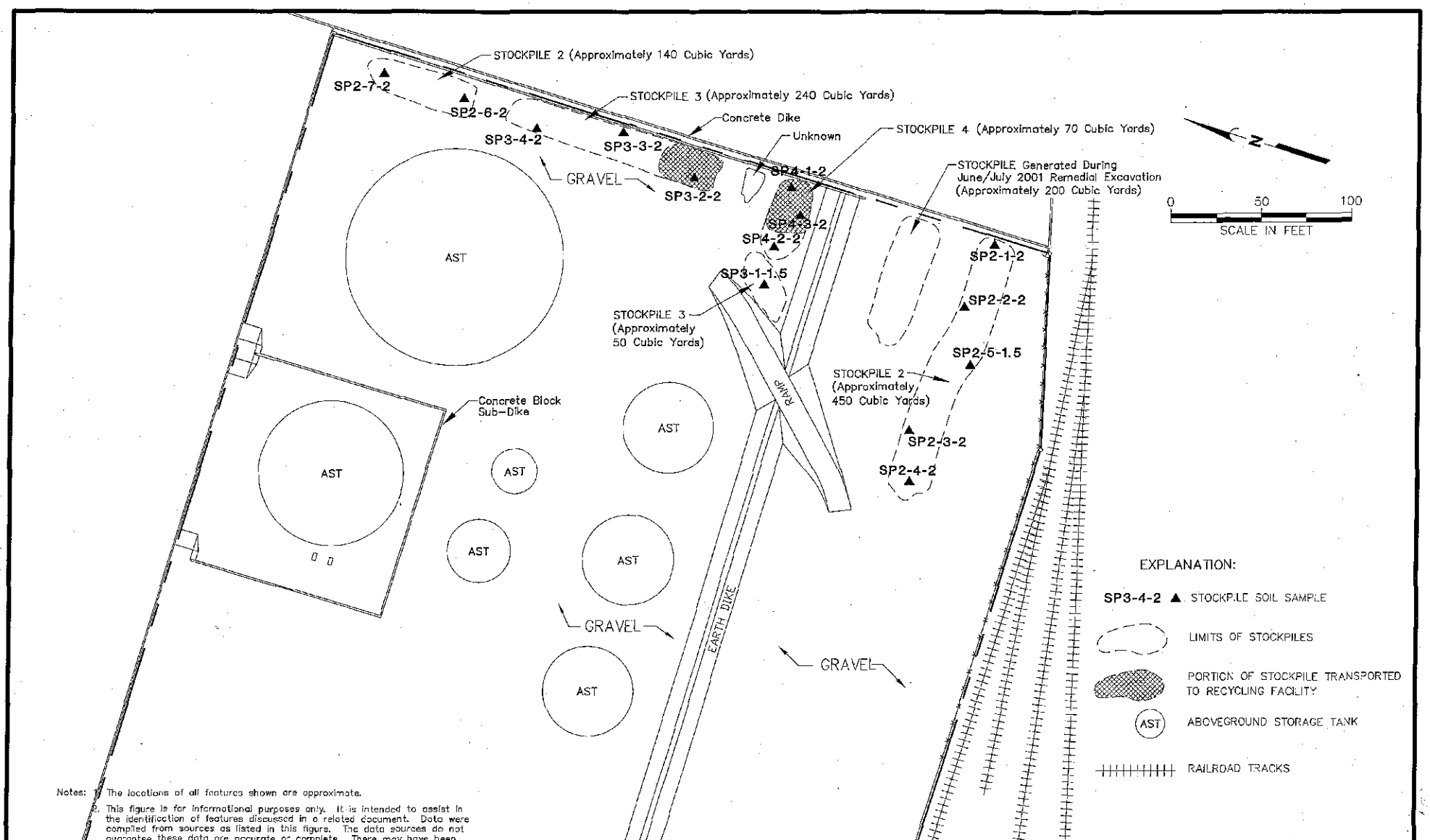

Notes: 1. The locations of all features shown are approximate.

2. This figure is for informational purposes only. It is intended to assist in the identification of features discussed in a related document. Data were compiled from sources as listed in this figure. The data sources do not guarantee these data are accurate or complete. There may have been updates to the data since the publication of this figure. This figure is a copy of a master document. The master hard copy is stored by GeoEngineers, Inc. and will serve as the official document of record.

Reference: Base drawing dated 1/23/02 entitled "68c70004.dwg" provided by Tosco Refining Company.

Portland\P:\4\4823520\01\CAD\drawing2.dwg KRS:RLF 08/23/02

GeoEngineers

GENERAL LAYOUT OF TANK FARM 3

FIGURE 3

COP002000

ATTACHMENT A

STOCKPILE SAMPLING PROGRAM

ATTACHMENT A

STOCKPILE SAMPLING PROGRAM

GENERAL

GeoEngineers conducted stockpile soil sampling activities at the Tosco Portland Terminal on November 2 and November 30, 2002. The soil sampling activities consisted of the following:

- A total of 22 discrete soil samples were obtained from stockpiled soil generated during construction improvements in the Sand Lot. Four stockpiles of soil were generated based on areas of excavation:
  - Eight samples from Stockpile 1, excavated from above the product lines.
  - Seven samples from Stockpile 2, excavated above and along the sides of the product lines.
  - Four samples from Stockpile 3, excavated from under the product lines.
  - Three samples from Stockpile 4, soil identified by Tosco with possible contamination.

The soil samples were obtained from a hand auger or a trowel. Our representative wore clean, disposable nitrile gloves during sample collection. Soil samples selected for possible chemical analysis were placed in laboratory-supplied sample jars. The jars were completely filled to minimize the potential for headspace.

Soil sampling equipment was cleaned with a Liquinox wash, tap water rinse, and a distilled water rinse between each sampling event. Soil samples were placed in an ice chest containing frozen blue-ice for storage prior to delivery to the laboratory. Standard chain-of-custody procedures were observed during transport of the samples to the testing laboratory.

FIELD SCREENING OF SOIL SAMPLES

A GeoEngineers representative conducted field screening of soil samples obtained from the borings. The field screening results were used to aid in the selection of soil samples for laboratory analysis. The screening methods used during sampling activities included: (1) visual screening; (2) water sheen screening; and (3) headspace vapor screening.

Visual screening consists of inspecting the soil for stains indicative of petroleum-related contamination. Visual screening is generally more effective when contamination is related to heavy petroleum hydrocarbons, such as motor oil, or when hydrocarbon concentrations are relatively high. Water sheen screening and headspace screening are more sensitive methods that have been effective in detecting contamination at concentrations less than regulatory cleanup guidelines. Sheen screening and headspace vapor screening are more sensitive methods that have been effective in detecting contamination at concentrations less than regulatory cleanup levels. Field screening results are site specific. The effectiveness of field screening varies with temperature, moisture content, organic content, soil type, and age of the contaminant. The presence or absence of a sheen or headspace vapors does not necessarily indicate the presence or absence of petroleum hydrocarbons.

Water sheen screening involves placing soil in water and observing the water surface for signs of sheen. Sheen classifications are as follows:

No Sheen (NS)	No visible sheen on the water surface;
Slight Sheen (SS)	Light, colorless, dull sheen; spread is irregular, not rapid; sheen dissipates rapidly. Natural organic matter in the soil may produce a slight sheen;
Moderate Sheen (MS)	Light to heavy sheen; may have some color/iridescence; spread is irregular to flowing, may be rapid; few remaining areas of no sheen on water surface; and
Heavy Sheen (HS)	Heavy sheen with color/iridescence; spread is rapid; entire water surface may be covered with sheen.

Headspace vapor screening involves placing a soil sample in a plastic bag. Air is captured in the bag, and the bag is shaken to expose the soil to the air trapped in the bag. The probe of a Bacharach TLV Sniffer is inserted into the bag, and the TLV Sniffer measures the concentrations of combustible vapor in parts per million (ppm). The TLV Sniffer is calibrated to hexane. The TLV Sniffer is designed to quantify combustible gas concentrations in the range between 100 ppm and 10,000 ppm in this application.

Field screening results are site- and sample-specific. The results may vary with temperature, soil moisture content, soil type, and type of contaminant.

COP0022003

nca™
www.ncalabs.com

Seattle 11720 North Creek Pkwy N, Suite 400, Bothell, WA 98011-8244
425.420.9200 fax 425.420.9210
Spokane East 11115 Montgomery, Suite B, Spokane, WA 99206-4776
509.924.9200 fax 509.924.9290
Portland 9405 SW Nimbus Avenue, Beaverton, OR 97008-7132
503.906.9200 fax 503.906.9210
Bend 20332 Empire Avenue, Suite F-1, Bend, OR 97701-5711
541.383.9310 fax 541.382.7588

DEC 20 2001
Routing File
File 4823-520-01

GeoEngineers, Inc. 7504 S.W. Bridgeport Road Portland, OR 97224	Project: Tosco Portland Terminal Project Number: 4823-030-00 Project Manager: Kyle Sattler	Reported: 12/13/01 15:48

ANALYTICAL REPORT FOR SAMPLES

Sample ID	Laboratory ID	Matrix	Date Sampled	Date Received
SP2-1-2	P1L0036-01	Soil	11/30/01 13:50	12/03/01 12:00
SP2-2-2	P1L0036-02	Soil	11/30/01 14:00	12/03/01 12:00
SP2-3-2	P1L0036-03	Soil	11/30/01 14:05	12/03/01 12:00
SP2-4-2	P1L0036-04	Soil	11/30/01 14:10	12/03/01 12:00
SP2-5-1.5	P1L0036-05	Soil	11/30/01 14:15	12/03/01 12:00
SP2-6-2	P1L0036-06	Soil	11/30/01 14:40	12/03/01 12:00
SP2-7-2	P1L0036-07	Soil	11/30/01 14:45	12/03/01 12:00
SP3-1-2	P1L0036-08	Soil	11/30/01 15:15	12/03/01 12:00
SP3-2-2	P1L0036-09	Soil	11/30/01 15:10	12/03/01 12:00
SP3-3-2	P1L0036-10	Soil	11/30/01 15:00	12/03/01 12:00
SP3-4-2	P1L0036-11	Soil	11/30/01 14:50	12/03/01 12:00
SP4-1-2	P1L0036-12	Soil	11/30/01 15:20	12/03/01 12:00
SP4-2-2	P1L0036-13	Soil	11/30/01 15:30	12/03/01 12:00
SP4-3-2	P1L0036-14	Soil	11/30/01 15:40	12/03/01 12:00

North Creek Analytical - Portland

The results in this report apply to the samples analyzed in accordance with the chain of custody document. This analytical report must be reproduced in its entirety.

Crystal Buckholder, Project Manager

www.ncalabs.com

Seattle 11720 North Creek Pkwy N, Suite 400, Bothell, WA 98011-8244
425.420.9200 fax 425.420.9210
Spokane East 11115 Montgomery, Suite B, Spokane, WA 99206-4776
509.924.9200 fax 509.924.9290
Portland 9405 SW Nimbus Avenue, Beaverton, OR 97008-7132
503.906.9200 fax 503.906.9210
Bend 20332 Empire Avenue, Suite F-1, Bend, OR 97701-5711
541.383.9310 fax 541.382.7588

GeoEngineers, Inc.	Project: Tosco Portland Terminal	
7504 S.W. Bridgeport Road	Project Number: 4823-030-00	**Reported:**
Portland, OR 97224	Project Manager: Kyle Sattler	12/13/01 15:48

Gasoline Hydrocarbons per NW TPH-Gx Method and BTEX per EPA Method 8021B

North Creek Analytical - Portland

Analyte	Result	Reporting Limit	Units	Dilution	Method	Prepared	Analyzed	Batch	Notes
SP2-1-2 (P1L0036-01) Soil					Sampled: 11/30/01	Received: 12/03/01			
Benzene	ND	0.0500	mg/kg dry	1	NW-G, 8021B	12/04/01	12/04/01	1120083	
Toluene	ND	0.0500	"	"	"	"	"	"	
Ethylbenzene	ND	0.0500	"	"	"	"	"	"	
Xylenes (total)	ND	0.0500	"	"	"	"	"	"	
Gasoline Range Hydrocarbons	ND	2.00	"	"	"	"	"	"	
Surr: a,a,a-TFT (PID)	*53.9 %*	*75-120*							*S-09*
Surr: a,a,a-TFT (FID)	*63.0 %*	*50-150*							
SP2-2-2 (P1L0036-02) Soil					Sampled: 11/30/01	Received: 12/03/01			
Benzene	ND	0.0500	mg/kg dry	1	NW-G, 8021B	12/04/01	12/05/01	1120083	
Toluene	ND	0.0500	"	"	"	"	"	"	
Ethylbenzene	ND	0.0500	"	"	"	"	"	"	
Xylenes (total)	ND	0.0500	"	"	"	"	"	"	
Gasoline Range Hydrocarbons	ND	2.00	"	"	"	"	"	"	
Surr: a,a,a-TFT (PID)	*75.9 %*	*75-120*							
Surr: a,a,a-TFT (FID)	*72.3 %*	*50-150*							
SP2-3-2 (P1L0036-03) Soil					Sampled: 11/30/01	Received: 12/03/01			
Benzene	ND	0.0500	mg/kg dry	1	NW-G, 8021B	12/04/01	12/04/01	1120083	
Toluene	ND	0.0500	"	"	"	"	"	"	
Ethylbenzene	ND	0.0500	"	"	"	"	"	"	
Xylenes (total)	ND	0.0500	"	"	"	"	"	"	
Gasoline Range Hydrocarbons	ND	2.00	"	"	"	"	"	"	
Surr: a,a,a-TFT (PID)	*67.8 %*	*75-120*							*S-09*
Surr: a,a,a-TFT (FID)	*76.9 %*	*50-150*							

Seattle 11720 North Creek Pkwy N, Suite 400, Bothell, WA 98011-8244
425.420.9200 fax 425.420.9210
Spokane East 11115 Montgomery, Suite B, Spokane, WA 99206-4776
509.924.9200 fax 509.924.9290
Portland 9405 SW Nimbus Avenue, Beaverton, OR 97008-7132
503.906.9200 fax 503.906.9210
Bend 20332 Empire Avenue, Suite F-1, Bend, OR 97701-5711
541.383.9310 fax 541.382.7588

www.ncalabs.com

GeoEngineers, Inc.	Project: Tosco Portland Terminal	
7504 S.W. Bridgeport Road	Project Number: 4823-030-00	Reported:
Portland, OR 97224	Project Manager: Kyle Sattler	12/13/01 15:48

Gasoline Hydrocarbons per NW TPH-Gx Method and BTEX per EPA Method 8021B

North Creek Analytical - Portland

Analyte	Result	Reporting Limit	Units	Dilution	Method	Prepared	Analyzed	Batch	Notes
SP2-4-2 (P1L0036-04) Soil					Sampled: 11/30/01	Received: 12/03/01			
Benzene	ND	0.0500	mg/kg dry	1	NW-G, 8021B	12/04/01	12/04/01	1120083	
Toluene	ND	0.0500	"	"	"	"	"	"	
Ethylbenzene	ND	0.0500	"	"	"	"	"	"	
Xylenes (total)	ND	0.0500	"	"	"	"	"	"	
Gasoline Range Hydrocarbons	ND	2.00	"	"	"	"	"	"	
Surr: a,a,a-TFT (PID)	*51.7 %*	*75-120*							*S-09*
Surr: a,a,a-TFT (FID)	*60.0 %*	*50-150*							
SP2-5-1.5 (P1L0036-05) Soil					Sampled: 11/30/01	Received: 12/03/01			
Benzene	ND	0.0500	mg/kg dry	1	NW-G, 8021B	12/04/01	12/04/01	1120083	
Toluene	ND	0.0500	"	"	"	"	"	"	
Ethylbenzene	ND	0.0500	"	"	"	"	"	"	
Xylenes (total)	ND	0.0500	"	"	"	"	"	"	
Gasoline Range Hydrocarbons	ND	2.00	"	"	"	"	"	"	
Surr: a,a,a-TFT (PID)	*59.3 %*	*75-120*							*S-09*
Surr: a,a,a-TFT (FID)	*67.0 %*	*50-150*							
SP2-6-2 (P1L0036-06) Soil					Sampled: 11/30/01	Received: 12/03/01			
Benzene	ND	0.0500	mg/kg dry	1	NW-G, 8021B	12/04/01	12/04/01	1120083	
Toluene	ND	0.0500	"	"	"	"	"	"	
Ethylbenzene	ND	0.0500	"	"	"	"	"	"	
Xylenes (total)	ND	0.0500	"	"	"	"	"	"	
Gasoline Range Hydrocarbons	ND	2.00	"	"	"	"	"	"	
Surr: a,a,a-TFT (PID)	*62.5 %*	*75-120*							*S-09*
Surr: a,a,a-TFT (FID)	*70.8 %*	*50-150*							

North Creek Analytical - Portland

The results in this report apply to the samples analyzed in accordance with the chain of custody document. This analytical report must be reproduced in its entirety.

Crystal Burkholder, Project Manager

www.ncalabs.com

Seattle 11720 North Creek Pkwy N, Suite 400, Bothell, WA 98011-8244
425.420.9200 fax 425.420.9210
Spokane East 11115 Montgomery, Suite B, Spokane, WA 99206-4776
509.924.9200 fax 509.924.9290
Portland 9405 SW Nimbus Avenue, Beaverton, OR 97008-7132
503.906.9200 fax 503.906.9210
Bend 20332 Empire Avenue, Suite F-1, Bend, OR 97701-5711
541.383.9310 fax 541.382.7588

GeoEngineers, Inc.	Project: Tosco Portland Terminal	
7504 S.W. Bridgeport Road	Project Number: 4823-030-00	Reported:
Portland, OR 97224	Project Manager: Kyle Sattler	12/13/01 15:48

Gasoline Hydrocarbons per NW TPH-Gx Method and BTEX per EPA Method 8021B

North Creek Analytical - Portland

Analyte	Result	Reporting Limit	Units	Dilution	Method	Prepared	Analyzed	Batch	Notes
SP2-7-2 (P1L0036-07) Soil					Sampled: 11/30/01	Received: 12/03/01			
Benzene	ND	0.0500	mg/kg dry	1	NW-G, 8021B	12/04/01	12/04/01	1120083	
Toluene	ND	0.0500	"	"	"	"	"	"	
Ethylbenzene	ND	0.0500	"	"	"	"	"	"	
Xylenes (total)	ND	0.0500	"	"	"	"	"	"	
Gasoline Range Hydrocarbons	ND	2.00	"	"	"	"	"	"	
Surr: a,a,a-TFT (PID)	*54.8 %*	*75-120*							*S-09*
Surr: a,a,a-TFT (FID)	*62.6 %*	*50-150*							
SP3-1-2 (P1L0036-08) Soil					Sampled: 11/30/01	Received: 12/03/01			
Benzene	ND	0.0500	mg/kg dry	1	NW-G, 8021B	12/04/01	12/04/01	1120083	
Toluene	ND	0.0500	"	"	"	"	"	"	
Ethylbenzene	ND	0.0500	"	"	"	"	"	"	
Xylenes (total)	ND	0.0500	"	"	"	"	"	"	
Gasoline Range Hydrocarbons	ND	2.00	"	"	"	"	"	"	
Surr: a,a,a-TFT (PID)	*61.3 %*	*75-120*							*S-09*
Surr: a,a,a-TFT (FID)	*70.7 %*	*50-150*							
SP3-2-2 (P1L0036-09) Soil					Sampled: 11/30/01	Received: 12/03/01			
Benzene	ND	0.0500	mg/kg dry	1	NW-G, 8021B	12/04/01	12/04/01	1120083	
Toluene	ND	0.0500	"	"	"	"	"	"	
Ethylbenzene	ND	0.0500	"	"	"	"	"	"	
Xylenes (total)	ND	0.0500	"	"	"	"	"	"	
Gasoline Range Hydrocarbons	ND	2.00	"	"	"	"	"	"	
Surr: a,a,a-TFT (PID)	*61.6 %*	*75-120*							*S-09*
Surr: a,a,a-TFT (FID)	*70.5 %*	*50-150*							

Seattle 11720 North Creek Pkwy N, Suite 400, Bothell, WA 98011-8244
425.420.9200 fax 425.420.9210
Spokane East 11115 Montgomery, Suite B, Spokane, WA 99206-4776
509.924.9200 fax 509.924.9290
Portland 9405 SW Nimbus Avenue, Beaverton, OR 97008-7132
503.906.9200 fax 503.906.9210
Bend 20332 Empire Avenue, Suite F-1, Bend, OR 97701-5711
541.383.9310 fax 541.382.7588

www.ncalabs.com

GeoEngineers, Inc.	Project: Tosco Portland Terminal	
7504 S.W. Bridgeport Road	Project Number: 4823-030-00	Reported:
Portland, OR 97224	Project Manager: Kyle Sattler	12/13/01 15:48

Gasoline Hydrocarbons per NW TPH-Gx Method and BTEX per EPA Method 8021B

North Creek Analytical - Portland

Analyte	Result	Reporting Limit	Units	Dilution	Method	Prepared	Analyzed	Batch	Notes
SP3-3-2 (P1L0036-10) Soil					Sampled: 11/30/01	Received: 12/03/01			
Benzene	ND	0.0500	mg/kg dry	1	NW-G, 8021B	12/04/01	12/04/01	1120083	
Toluene	ND	0.0500	"	"	"	"	"	"	
Ethylbenzene	ND	0.0500	"	"	"	"	"	"	
Xylenes (total)	ND	0.0500	"	"	"	"	"	"	
Gasoline Range Hydrocarbons	ND	2.00	"	"	"	"	"	"	
Surr: a,a,a-TFT (PID)	*63.1 %*	*75-120*							*S-09*
Surr: a,a,a-TFT (FID)	*72.2 %*	*50-150*							
SP3-4-2 (P1L0036-11) Soil					Sampled: 11/30/01	Received: 12/03/01			
Benzene	ND	0.0500	mg/kg dry	1	NW-G, 8021B	12/04/01	12/04/01	1120083	
Toluene	ND	0.0500	"	"	"	"	"	"	
Ethylbenzene	ND	0.0500	"	"	"	"	"	"	
Xylenes (total)	ND	0.0500	"	"	"	"	"	"	
Gasoline Range Hydrocarbons	ND	2.00	"	"	"	"	"	"	
Surr: a,a,a-TFT (PID)	*68.3 %*	*75-120*							*S-09*
Surr: a,a,a-TFT (FID)	*77.9 %*	*50-150*							
SP4-1-2 (P1L0036-12) Soil					Sampled: 11/30/01	Received: 12/03/01			
Benzene	ND	0.0500	mg/kg dry	1	NW-G, 8021B	12/04/01	12/05/01	1120083	
Toluene	ND	0.0500	"	"	"	"	"	"	
Ethylbenzene	ND	0.0500	"	"	"	"	"	"	
Xylenes (total)	ND	0.0500	"	"	"	"	"	"	
Gasoline Range Hydrocarbons	**19.2**	2.00	"	"	"	"	"	"	
Surr: a,a,a-TFT (PID)	*75.7 %*	*75-120*							
Surr: a,a,a-TFT (FID)	*90.7 %*	*50-150*							

North Creek Analytical - Portland

The results in this report apply to the samples analyzed in accordance with the chain of custody document. This analytical report must be reproduced in its entirety.

Crystal Burkholder, Project Manager

Seattle 11720 North Creek Pkwy N, Suite 400, Bothell, WA 98011-8244
425.420.9200 fax 425.420.9210
Spokane East 11115 Montgomery, Suite B, Spokane, WA 99206-4776
509.924.9200 fax 509.924.9290
Portland 9405 SW Nimbus Avenue, Beaverton, OR 97008-7132
503.906.9200 fax 503.906.9210
Bend 20332 Empire Avenue, Suite F-1, Bend, OR 97701-5711
541.383.9310 fax 541.382.7588

www.ncalabs.com

GeoEngineers, Inc.	Project: Tosco Portland Terminal	
7504 S.W. Bridgeport Road	Project Number: 4823-030-00	**Reported:**
Portland, OR 97224	Project Manager: Kyle Sattler	12/13/01 15:48

Gasoline Hydrocarbons per NW TPH-Gx Method and BTEX per EPA Method 8021B

North Creek Analytical - Portland

Analyte	Result	Reporting Limit	Units	Dilution	Method	Prepared	Analyzed	Batch	Notes
SP4-2-2 (P1L0036-13) Soil					Sampled: 11/30/01	Received: 12/03/01			
Benzene	ND	0.0500	mg/kg dry	1	NW-G, 8021B	12/04/01	12/05/01	1120083	
Toluene	ND	0.0500	"	"	"	"	"	"	
Ethylbenzene	ND	0.0500	"	"	"	"	"	"	
Xylenes (total)	ND	0.0500	"	"	"	"	"	"	
Gasoline Range Hydrocarbons	**6.58**	2.00	"	"	"	"	"	"	
Surr: a,a,a-TFT (PID)	*59.0 %*	*75-120*							*S-09*
Surr: a,a,a-TFT (FID)	*72.7 %*	*50-150*							
SP4-3-2 (P1L0036-14) Soil					Sampled: 11/30/01	Received: 12/03/01			
Benzene	ND	0.0500	mg/kg dry	1	NW-G, 8021B	12/04/01	12/05/01	1120083	
Toluene	ND	0.0500	"	"	"	"	"	"	
Ethylbenzene	ND	0.0500	"	"	"	"	"	"	
Xylenes (total)	ND	0.0500	"	"	"	"	"	"	
Gasoline Range Hydrocarbons	**18.5**	2.00	"	"	"	"	"	"	
Surr: a,a,a-TFT (PID)	*104 %*	*75-120*							
Surr: a,a,a-TFT (FID)	*114 %*	*50-150*							

Seattle 11720 North Creek Pkwy N, Suite 400, Bothell, WA 98011-8244
425.420.9200 fax 425.420.9210
Spokane East 11115 Montgomery, Suite B, Spokane, WA 99206-4776
509.924.9200 fax 509.924.9290
Portland 9405 SW Nimbus Avenue, Beaverton, OR 97008-7132
503.906.9200 fax 503.906.9210
Bend 20332 Empire Avenue, Suite F-1, Bend, OR 97701-5711
541.383.5310 fax 541.382.7588

www.ncalabs.com

GeoEngineers, Inc.	Project: Tosco Portland Terminal	
7504 S.W. Bridgeport Road	Project Number: 4823-030-00	Reported:
Portland, OR 97224	Project Manager: Kyle Sattler	12/13/01 15:48

Diesel and Heavy Range Hydrocarbons per NWTPH-Dx Method with Acid/Silica Gel Cleanup

North Creek Analytical - Portland

Analyte	Result	Reporting Limit	Units	Dilution	Method	Prepared	Analyzed	Batch	Notes
SP2-1-2 (P1L0036-01) Soil					Sampled: 11/30/01	Received: 12/03/01			
Diesel Range Organics	ND	25.0	mg/kg dry	1	NWTPH-Dx	12/05/01	12/05/01	1120125	
Heavy Oil Range Hydrocarbons	ND	50.0	"	"	"	"	"	"	
Surr: 1-Chlorooctadecane	*87.9 %*	*50-150*							
SP2-2-2 (P1L0036-02) Soil					Sampled: 11/30/01	Received: 12/03/01			
Diesel Range Organics	ND	25.0	mg/kg dry	1	NWTPH-Dx	12/05/01	12/05/01	1120125	
Heavy Oil Range Hydrocarbons	ND	50.0	"	"	"	"	"	"	
Surr: 1-Chlorooctadecane	*89.3 %*	*50-150*							
SP2-3-2 (P1L0036-03) Soil					Sampled: 11/30/01	Received: 12/03/01			
Diesel Range Organics	ND	25.0	mg/kg dry	1	NWTPH-Dx	12/05/01	12/05/01	1120125	
Heavy Oil Range Hydrocarbons	**66.0**	50.0	"	"	"	"	"	"	
Surr: 1-Chlorooctadecane	*59.6 %*	*50-150*							
SP2-4-2 (P1L0036-04) Soil					Sampled: 11/30/01	Received: 12/03/01			
Diesel Range Organics	ND	25.0	mg/kg dry	1	NWTPH-Dx	12/05/01	12/05/01	1120125	
Heavy Oil Range Hydrocarbons	ND	50.0	"	"	"	"	"	"	
Surr: 1-Chlorooctadecane	*85.3 %*	*50-150*							
SP2-5-1.5 (P1L0036-05) Soil					Sampled: 11/30/01	Received: 12/03/01			
Diesel Range Organics	ND	25.0	mg/kg dry	1	NWTPH-Dx	12/05/01	12/05/01	1120125	
Heavy Oil Range Hydrocarbons	ND	50.0	"	"	"	"	"	"	
Surr: 1-Chlorooctadecane	*84.3 %*	*50-150*							
SP2-6-2 (P1L0036-06) Soil					Sampled: 11/30/01	Received: 12/03/01			
Diesel Range Organics	ND	25.0	mg/kg dry	1	NWTPH-Dx	12/05/01	12/05/01	1120125	
Heavy Oil Range Hydrocarbons	ND	50.0	"	"	"	"	"	"	
Surr: 1-Chlorooctadecane	*85.7 %*	*50-150*							

Seattle 11720 North Creek Pkwy N, Suite 400, Bothell, WA 98011-8244
425.420.9200 fax 425.420.9210
Spokane East 11115 Montgomery, Suite B, Spokane, WA 99206-4776
509.924.9200 fax 509.924.9290
Portland 9405 SW Nimbus Avenue, Beaverton, OR 97008-7132
503.906.9200 fax 503.906.9210
Bend 20332 Empire Avenue, Suite F-1, Bend, OR 97701-5711
541.383.9310 fax 541.382.7588

www.ncalabs.com

GeoEngineers, Inc.	Project: Tosco Portland Terminal	
7504 S.W. Bridgeport Road	Project Number: 4823-030-00	Reported:
Portland, OR 97224	Project Manager: Kyle Sattler	12/13/01 15:48

Diesel and Heavy Range Hydrocarbons per NWTPH-Dx Method with Acid/Silica Gel Cleanup

North Creek Analytical - Portland

Analyte	Result	Reporting Limit	Units	Dilution	Method	Prepared	Analyzed	Batch	Notes
SP2-7-2 (P1L0036-07) Soil					Sampled: 11/30/01	Received: 12/03/01			
Diesel Range Organics	ND	25.0	mg/kg dry	1	NWTPH-Dx	12/05/01	12/05/01	1120125	
Heavy Oil Range Hydrocarbons	ND	50.0	"	"	"	"	"	"	
Surr: 1-Chlorooctadecane	*85.5 %*	*50-150*							
SP3-1-2 (P1L0036-08) Soil					Sampled: 11/30/01	Received: 12/03/01			
Diesel Range Organics	ND	25.0	mg/kg dry	1	NWTPH-Dx	12/05/01	12/06/01	1120125	
Heavy Oil Range Hydrocarbons	**88.9**	50.0	"	"	"	"	"	"	
Surr: 1-Chlorooctadecane	*84.2 %*	*50-150*							
SP3-2-2 (P1L0036-09) Soil					Sampled: 11/30/01	Received: 12/03/01			
Diesel Range Organics	ND	125	mg/kg dry	5	NWTPH-Dx	12/05/01	12/06/01	1120125	R-02
Heavy Oil Range Hydrocarbons	**1180**	250	"	"	"	"	"	"	R-02
Surr: 1-Chlorooctadecane	*93.6 %*	*50-150*							
SP3-3-2 (P1L0036-10) Soil					Sampled: 11/30/01	Received: 12/03/01			
Diesel Range Organics	ND	25.0	mg/kg dry	1	NWTPH-Dx	12/05/01	12/06/01	1120125	
Heavy Oil Range Hydrocarbons	**74.8**	50.0	"	"	"	"	"	"	
Surr: 1-Chlorooctadecane	*96.0 %*	*50-150*							
SP3-4-2 (P1L0036-11) Soil					Sampled: 11/30/01	Received: 12/03/01			
Diesel Range Organics	ND	25.0	mg/kg dry	1	NWTPH-Dx	12/05/01	12/06/01	1120125	
Heavy Oil Range Hydrocarbons	ND	50.0	"	"	"	"	"	"	
Surr: 1-Chlorooctadecane	*90.3 %*	*50-150*							
SP4-1-2 (P1L0036-12) Soil					Sampled: 11/30/01	Received: 12/03/01			
Diesel Range Organics	**742**	25.0	mg/kg dry	1	NWTPH-Dx	12/05/01	12/06/01	1120125	
Heavy Oil Range Hydrocarbons	**315**	50.0	"	"	"	"	"	"	
Surr: 1-Chlorooctadecane	*109 %*	*50-150*							

North Creek Analytical - Portland

The results in this report apply to the samples analyzed in accordance with the chain of custody document. This analytical report must be reproduced in its entirety.

Crystal Burkholder, Project Manager

www.ncalabs.com

Seattle 11720 North Creek Pkwy N, Suite 400, Bothell, WA 98011-8244
425.420.9200 fax 425.420.9210
Spokane East 11115 Montgomery, Suite B, Spokane, WA 99206-4776
509.924.9200 fax 509.924.9290
Portland 9405 SW Nimbus Avenue, Beaverton, OR 97008-7132
503.906.9200 fax 503.906.9210
Bend 20332 Empire Avenue, Suite F-1, Bend, OR 97701-5711
541.383.9310 fax 541.382.7588

GeoEngineers, Inc.	Project: Tosco Portland Terminal	
7504 S.W. Bridgeport Road	Project Number: 4823-030-00	Reported:
Portland, OR 97224	Project Manager: Kyle Sattler	12/13/01 15:48

Diesel and Heavy Range Hydrocarbons per NWTPH-Dx Method with Acid/Silica Gel Cleanup

North Creek Analytical - Portland

Analyte	Result	Reporting Limit	Units	Dilution	Method	Prepared	Analyzed	Batch	Notes
SP4-2-2 (P1L0036-13) Soil					Sampled: 11/30/01	Received: 12/03/01			
Diesel Range Organics	80.4	25.0	mg/kg dry	1	NWTPH-Dx	12/05/01	12/06/01	1120125	
Heavy Oil Range Hydrocarbons	96.6	50.0	"	"	"	"	"	"	
Surr: 1-Chlorooctadecane	*100 %*	*50-150*							
SP4-3-2 (P1L0036-14) Soil					Sampled: 11/30/01	Received: 12/03/01			
Diesel Range Organics	950	25.0	mg/kg dry	1	NWTPH-Dx	12/05/01	12/06/01	1120125	
Heavy Oil Range Hydrocarbons	479	50.0	"	"	"	"	"	"	
Surr: 1-Chlorooctadecane	*115 %*	*50-150*							

Seattle 11720 North Creek Pkwy N, Suite 400, Bothell, WA 98011-8244
425.420.9200 fax 425.420.9210
Spokane East 11115 Montgomery, Suite B, Spokane, WA 99206-4776
509.924.9200 fax 509.924.9290
Portland 9405 SW Nimbus Avenue, Beaverton, OR 97008-7132
503.906.9200 fax 503.906.9210
Bend 20332 Empire Avenue, Suite F-1, Bend, OR 97701-5711
541.383.9310 fax 541.382.7588

www.ncalabs.com

GeoEngineers, Inc.	Project: Tosco Portland Terminal	
7504 S.W. Bridgeport Road	Project Number: 4823-030-00	Reported:
Portland, OR 97224	Project Manager: Kyle Sattler	12/13/01 15:48

Total Metals per EPA 6000/7000 Series Methods

North Creek Analytical - Portland

Analyte	Result	Reporting Limit	Units	Dilution	Method	Prepared	Analyzed	Batch	Notes
SP2-1-2 (P1L0036-01) Soil					Sampled: 11/30/01	Received: 12/03/01			
Lead	**4.55**	0.500	mg/kg dry	1	EPA 6020	12/05/01	12/05/01	1120143	
SP2-2-2 (P1L0036-02) Soil					Sampled: 11/30/01	Received: 12/03/01			
Lead	4.13	0.500	mg/kg dry	1	EPA 6020	12/05/01	12/05/01	1120143	
SP2-3-2 (P1L0036-03) Soil					Sampled: 11/30/01	Received: 12/03/01			
Lead	4.28	0.500	mg/kg dry	1	EPA 6020	12/05/01	12/05/01	1120143	
SP2-4-2 (P1L0036-04) Soil					Sampled: 11/30/01	Received: 12/03/01			
Lead	**5.47**	0.500	mg/kg dry	1	EPA 6020	12/05/01	12/05/01	1120143	
SP2-5-1.5 (P1L0036-05) Soil					Sampled: 11/30/01	Received: 12/03/01			
Lead	**3.75**	0.500	mg/kg dry	1	EPA 6020	12/05/01	12/05/01	1120143	
SP2-6-2 (P1L0036-06) Soil					Sampled: 11/30/01	Received: 12/03/01			
Lead	10.0	0.500	mg/kg dry	1	EPA 6020	12/05/01	12/05/01	1120143	
SP2-7-2 (P1L0036-07) Soil					Sampled: 11/30/01	Received: 12/03/01			
Lead	**6.66**	0.500	mg/kg dry	1	EPA 6020	12/05/01	12/05/01	1120143	
SP3-1-2 (P1L0036-08) Soil					Sampled: 11/30/01	Received: 12/03/01			
Lead	14.4	0.500	mg/kg dry	1	EPA 6020	12/05/01	12/05/01	1120143	
SP3-2-2 (P1L0036-09) Soil					Sampled: 11/30/01	Received: 12/03/01			
Lead	10.4	0.500	mg/kg dry	1	EPA 6020	12/05/01	12/05/01	1120143	

Seattle 11720 North Creek Pkwy N, Suite 400, Bothell, WA 98011-8244
425.420.9200 fax 425.420.9210
Spokane East 11115 Montgomery, Suite B, Spokane, WA 99206-4776
509.924.9200 fax 509.924.9290
Portland 9405 SW Nimbus Avenue, Beaverton, OR 97008-7132
503.906.9200 fax 503.906.9210
Bend 20332 Empire Avenue, Suite F-1, Bend, OR 97701-5711
541.383.9310 fax 541.382.7588

www.ncalabs.com

GeoEngineers, Inc.	Project: Tosco Portland Terminal	
7504 S.W. Bridgeport Road	Project Number: 4823-030-00	Reported:
Portland, OR 97224	Project Manager: Kyle Sattler	12/13/01 15:48

Total Metals per EPA 6000/7000 Series Methods

North Creek Analytical - Portland

Analyte	Result	Reporting Limit	Units	Dilution	Method	Prepared	Analyzed	Batch	Notes
SP3-3-2 (P1L0036-10) Soil					Sampled: 11/30/01	Received: 12/03/01			
Lead	**5.17**	0.500	mg/kg dry	1	EPA 6020	12/05/01	12/05/01	1120143	
SP3-4-2 (P1L0036-11) Soil					Sampled: 11/30/01	Received: 12/03/01			
Lead	**15.6**	0.500	mg/kg dry	1	EPA 6020	12/05/01	12/05/01	1120143	
SP4-1-2 (P1L0036-12) Soil					Sampled: 11/30/01	Received: 12/03/01			
Lead	**7.35**	0.500	mg/kg dry	1	EPA 6020	12/05/01	12/05/01	1120143	
SP4-2-2 (P1L0036-13) Soil					Sampled: 11/30/01	Received: 12/03/01			
Lead	**15.7**	0.500	mg/kg dry	1	EPA 6020	12/05/01	12/05/01	1120143	
SP4-3-2 (P1L0036-14) Soil					Sampled: 11/30/01	Received: 12/03/01			
Lead	**10.1**	0.500	mg/kg dry	1	EPA 6020	12/05/01	12/05/01	1120143	

Seattle 11720 North Creek Pkwy N, Suite 400, Bothell, WA 98011-8244
425.420.9200 fax 425.420.9210
Spokane East 11115 Montgomery, Suite B, Spokane, WA 99206-4776
509.924.9200 fax 509.924.9290
Portland 9405 SW Nimbus Avenue, Beaverton, OR 97008-7132
503.906.9200 fax 503.906.9210
Bend 20332 Empire Avenue, Suite F-1, Bend, OR 97701-5711
541.383.9310 fax 541.382.7588

www.ncalabs.com

GeoEngineers, Inc.	Project: Tosco Portland Terminal	
7504 S.W. Bridgeport Road	Project Number: 4823-030-00	**Reported:**
Portland, OR 97224	Project Manager: Kyle Sattler	12/13/01 15:48

Polychlorinated Biphenyls per EPA Method 8082

North Creek Analytical - Portland

Analyte	Result	Reporting Limit	Units	Dilution	Method	Prepared	Analyzed	Batch	Notes
SP3-2-2 (P1L0036-09) Soil					Sampled: 11/30/01	Received: 12/03/01			
Aroclor 1016	ND	67.0	ug/kg dry	1	EPA 8082	12/10/01	12/10/01	1120287	
Aroclor 1221	ND	134	"	"	"	"	"	"	
Aroclor 1232	ND	67.0	"	"	"	"	"	"	
Aroclor 1242	ND	67.0	"	"	"	"	"	"	
Aroclor 1248	ND	67.0	"	"	"	"	"	"	
Aroclor 1254	ND	67.0	"	"	"	"	"	"	
Aroclor 1260	ND	67.0	"	"	"	"	"	"	
Surr: 2,4,5,6-Tetrachloro-m-xylene	*94.1 %*	*36-140*							
Surr: Decachlorobiphenyl	*86.7 %*	*16-149*							
SP4-3-2 (P1L0036-14) Soil					Sampled: 11/30/01	Received: 12/03/01			
Aroclor 1016	ND	67.0	ug/kg dry	1	EPA 8082	12/10/01	12/10/01	1120287	
Aroclor 1221	ND	134	"	"	"	"	"	"	
Aroclor 1232	ND	67.0	"	"	"	"	"	"	
Aroclor 1242	ND	67.0	"	"	"	"	"	"	
Aroclor 1248	ND	67.0	"	"	"	"	"	"	
Aroclor 1254	ND	67.0	"	"	"	"	"	"	
Aroclor 1260	ND	67.0	"	"	"	"	"	"	
Surr: 2,4,5,6-Tetrachloro-m-xylene	*81.1 %*	*36-140*							
Surr: Decachlorobiphenyl	*81.4 %*	*16-149*							

North Creek Analytical - Portland

The results in this report apply to the samples analyzed in accordance with the chain of custody document. This analytical report must be reproduced in its entirety.

Crystal Burkholder, Project Manager

Seattle 11720 North Creek Pkwy N, Suite 400, Bothell, WA 98011-8244
425.420.9200 fax 425.420.9210
Spokane East 11115 Montgomery, Suite B, Spokane, WA 99206-4776
509.924.9200 fax 509.924.9290
Portland 9405 SW Nimbus Avenue, Beaverton, OR 97008-7132
503.906.9200 fax 503.906.9210
Bend 20332 Empire Avenue, Suite F-1, Bend, OR 97701-5711
541.383.9310 fax 541.382.7588

www.ncalabs.com

GeoEngineers, Inc.	Project: Tosco Portland Terminal	
7504 S.W. Bridgeport Road	Project Number: 4823-030-00	Reported:
Portland, OR 97224	Project Manager: Kyle Sattler	12/13/01 15:48

Volatile Organic Compounds per EPA Method 8260B

North Creek Analytical - Portland

Analyte	Result	Reporting Limit	Units	Dilution	Method	Prepared	Analyzed	Batch	Notes
SP4-1-2 (P1L0036-12) Soil					Sampled: 11/30/01	Received: 12/03/01			
Acetone	ND	2500	ug/kg dry	1	EPA 8260B	12/10/01	12/12/01	1120258	
Benzene	ND	100	"	"	"	"	"	"	
Bromobenzene	ND	100	"	"	"	"	"	"	
Bromochloromethane	ND	100	"	"	"	"	"	"	
Bromodichloromethane	ND	100	"	"	"	"	"	"	
Bromoform	ND	100	"	"	"	"	"	"	
Bromomethane	ND	500	"	"	"	"	"	"	
2-Butanone	ND	1000	"	"	"	"	"	"	
n-Butylbenzene	ND	500	"	"	"	"	"	"	
sec-Butylbenzene	ND	100	"	"	"	"	"	"	
tert-Butylbenzene	ND	100	"	"	"	"	"	"	
Carbon disulfide	ND	1000	"	"	"	"	"	"	
Carbon tetrachloride	ND	100	"	"	"	"	"	"	
Chlorobenzene	ND	100	"	"	"	"	"	"	
Chloroethane	ND	100	"	"	"	"	"	"	
Chloroform	ND	100	"	"	"	"	"	"	
Chloromethane	ND	500	"	"	"	"	"	"	
2-Chlorotoluene	ND	100	"	"	"	"	"	"	
4-Chlorotoluene	ND	100	"	"	"	"	"	"	
1,2-Dibromo-3-chloropropane	ND	500	"	"	"	"	"	"	
Dibromochloromethane	ND	100	"	"	"	"	"	"	
1,2-Dibromoethane	ND	100	"	"	"	"	"	"	
Dibromomethane	ND	100	"	"	"	"	"	"	
1,2-Dichlorobenzene	ND	100	"	"	"	"	"	"	
1,3-Dichlorobenzene	ND	100	"	"	"	"	"	"	
1,4-Dichlorobenzene	ND	100	"	"	"	"	"	"	
Dichlorodifluoromethane	ND	500	"	"	"	"	"	"	
1,1-Dichloroethane	ND	100	"	"	"	"	"	"	
1,2-Dichloroethane	ND	100	"	"	"	"	"	"	
1,1-Dichloroethene	ND	100	"	"	"	"	"	"	
cis-1,2-Dichloroethene	ND	100	"	"	"	"	"	"	
trans-1,2-Dichloroethene	ND	100	"	"	"	"	"	"	
1,2-Dichloropropane	ND	100	"	"	"	"	"	"	
1,3-Dichloropropane	ND	100	"	"	"	"	"	"	
2,2-Dichloropropane	ND	100	"	"	"	"	"	"	
1,1-Dichloropropene	ND	100	"	"	"	"	"	"	
cis-1,3-Dichloropropene	ND	100	"	"	"	"	"	"	
trans-1,3-Dichloropropene	ND	100	"	"	"	"	"	"	
Ethylbenzene	ND	100	"	"	"	"	"	"	

North Creek Analytical - Portland

The results in this report apply to the samples analyzed in accordance with the chain of custody document. This analytical report must be reproduced in its entirety.

Crystal Burkholder, Project Manager

Seattle 11720 North Creek Pkwy N, Suite 400, Bothell, WA 98011-8244
425.420.9200 fax 425.420.9210
Spokane East 11115 Montgomery, Suite B, Spokane, WA 99206-4776
509.924.9200 fax 509.924.9290
Portland 9405 SW Nimbus Avenue, Beaverton, OR 97008-7132
503.906.9200 fax 503.906.9210
Bend 20332 Empire Avenue, Suite F-1, Bend, OR 97701-5711
541.383.9310 fax 541.382.7588

www.ncalabs.com

GeoEngineers, Inc.	Project: Tosco Portland Terminal	
7504 S.W. Bridgeport Road	Project Number: 4823-030-00	Reported:
Portland, OR 97224	Project Manager: Kyle Sattler	12/13/01 15:48

Volatile Organic Compounds per EPA Method 8260B

North Creek Analytical - Portland

Analyte	Result	Reporting Limit	Units	Dilution	Method	Prepared	Analyzed	Batch	Notes
SP4-1-2 (P1L0036-12) Soil					Sampled: 11/30/01	Received: 12/03/01			
Hexachlorobutadiene	ND	200	ug/kg dry	1	EPA 8260B	12/10/01	12/12/01	1120258	
2-Hexanone	ND	1000	"	"	"	"	"	"	
Isopropylbenzene	ND	200	"	"	"	"	"	"	
p-Isopropyltoluene	ND	200	"	"	"	"	"	"	
4-Methyl-2-pentanone	ND	500	"	"	"	"	"	"	
Methyl tert-butyl ether	ND	100	"	"	"	"	"	"	
Methylene chloride	ND	500	"	"	"	"	"	"	
Naphthalene	ND	200	"	"	"	"	"	"	
n-Propylbenzene	ND	100	"	"	"	"	"	"	
Styrene	ND	100	"	"	"	"	"	"	
1,1,1,2-Tetrachloroethane	ND	100	"	"	"	"	"	"	
1,1,2,2-Tetrachloroethane	ND	100	"	"	"	"	"	"	
Tetrachloroethene	ND	100	"	"	"	"	"	"	
Toluene	ND	100	"	"	"	"	"	"	
1,2,3-Trichlorobenzene	ND	100	"	"	"	"	"	"	
1,2,4-Trichlorobenzene	ND	100	"	"	"	"	"	"	
1,1,1-Trichloroethane	ND	100	"	"	"	"	"	"	
1,1,2-Trichloroethane	ND	100	"	"	"	"	"	"	
Trichloroethene	ND	100	"	"	"	"	"	"	
Trichlorofluoromethane	ND	100	"	"	"	"	"	"	
1,2,3-Trichloropropane	ND	100	"	"	"	"	"	"	
1,2,4-Trimethylbenzene	ND	100	"	"	"	"	"	"	
1,3,5-Trimethylbenzene	ND	100	"	"	"	"	"	"	
Vinyl chloride	ND	100	"	"	"	"	"	"	
o-Xylene	ND	100	"	"	"	"	"	"	
m,p-Xylene	ND	200	"	"	"	"	"	"	
Surr: 4-BFB	*104 %*	*70-130*							
Surr: 1,2-DCA-d4	*101 %*	*70-130*							
Surr: Dibromofluoromethane	*92.4 %*	*70-130*							
Surr: Toluene-d8	*113 %*	*70-130*							

North Creek Analytical - Portland

The results in this report apply to the samples analyzed in accordance with the chain of custody document. This analytical report must be reproduced in its entirety.

Crystal Burkholder, Project Manager

Seattle 11720 North Creek Pkwy N, Suite 400, Bothell, WA 98011-8244
425.420.9200 fax 425.420.9210
Spokane East 11115 Montgomery, Suite B, Spokane, WA 99206-4776
509.924.9200 fax 509.924.9290
Portland 9405 SW Nimbus Avenue, Beaverton, OR 97008-7132
503.906.9200 fax 503.906.9210
Bend 20332 Empire Avenue, Suite F-1, Bend, OR 97701-5711
541.383.9310 fax 541.382.7588

www.ncalabs.com

GeoEngineers, Inc.	Project: Tosco Portland Terminal	
7504 S.W. Bridgeport Road	Project Number: 4823-030-00	Reported:
Portland, OR 97224	Project Manager: Kyle Sattler	12/13/01 15:48

Polynuclear Aromatic Compounds per EPA 8270M-SIM

North Creek Analytical - Portland

Analyte	Result	Reporting Limit	Units	Dilution	Method	Prepared	Analyzed	Batch	Notes
SP3-2-2 (P1L0036-09) Soil					Sampled: 11/30/01	Received: 12/03/01			R-05
Acenaphthene	ND	26.8	ug/kg dry	2	EPA 8270m	12/10/01	12/11/01	1120290	
Acenaphthylene	ND	26.8	"	"	"	"	"	"	
Anthracene	ND	26.8	"	"	"	"	"	"	
Benzo (a) anthracene	**33.2**	26.8	"	"	"	"	"	"	
Benzo (a) pyrene	**45.8**	26.8	"	"	"	"	"	"	
Benzo (b) fluoranthene	**41.6**	26.8	"	"	"	"	"	"	
Benzo (ghi) perylene	**31.7**	26.8	"	"	"	"	"	"	
Benzo (k) fluoranthene	**34.1**	26.8	"	"	"	"	"	"	
Chrysene	**42.7**	26.8	"	"	"	"	"	"	
Dibenzo (a,h) anthracene	ND	26.8	"	"	"	"	"	"	
Fluoranthene	**50.7**	26.8	"	"	"	"	"	"	
Fluorene	ND	26.8	"	"	"	"	"	"	
Indeno (1,2,3-cd) pyrene	ND	26.8	"	"	"	"	"	"	
Naphthalene	ND	67.0	"	5	"	"	12/10/01	"	R-02
Phenanthrene	ND	26.8	"	2	"	"	12/11/01	"	
Pyrene	**63.8**	26.8	"	"	"	"	"	"	
Surr: Fluorene-d10	*62.3 %*	*40-150*							
Surr: Pyrene-d10	*107 %*	*40-150*							
Surr: Benzo (a) pyrene-d12	*78.4 %*	*40-150*							
SP4-3-2 (P1L0036-14) Soil					Sampled: 11/30/01	Received: 12/03/01			R-05
Acenaphthene	ND	268	ug/kg dry	10	EPA 8270m	12/10/01	12/11/01	1120290	R-03
Acenaphthylene	ND	134	"	"	"	"	"	"	
Anthracene	ND	268	"	"	"	"	"	"	R-03
Benzo (a) anthracene	ND	134	"	"	"	"	"	"	
Benzo (a) pyrene	ND	134	"	"	"	"	"	"	
Benzo (b) fluoranthene	ND	134	"	"	"	"	"	"	R-08
Benzo (ghi) perylene	ND	134	"	"	"	"	"	"	
Benzo (k) fluoranthene	ND	134	"	"	"	"	"	"	R-08
Chrysene	**187**	134	"	"	"	"	"	"	
Dibenzo (a,h) anthracene	ND	134	"	"	"	"	"	"	
Fluoranthene	ND	134	"	"	"	"	"	"	
Fluorene	ND	134	"	"	"	"	"	"	
Indeno (1,2,3-cd) pyrene	ND	134	"	"	"	"	"	"	
Naphthalene	ND	53.6	"	2	"	"	12/10/01	"	R-03
Phenanthrene	ND	134	"	10	"	"	12/11/01	"	
Pyrene	**495**	134	"	"	"	"	"	"	
Surr: Fluorene-d10	*146 %*	*40-150*							

North Creek Analytical - Portland

The results in this report apply to the samples analyzed in accordance with the chain of custody document. This analytical report must be reproduced in its entirety.

Crystal Burkholder, Project Manager

Seattle 11720 North Creek Pkwy N, Suite 400, Bothell, WA 98011-8244
425.420.9200 fax 425.420.9210
Spokane East 11115 Montgomery, Suite B, Spokane, WA 99206-4776
509.924.9200 fax 509.924.9290
Portland 9405 SW Nimbus Avenue, Beaverton, OR 97008-7132
503.906.9200 fax 503.906.9210
Bend 20332 Empire Avenue, Suite F-1, Bend, OR 97701-5711
541.383.9310 fax 541.382.7588

www.ncalabs.com

GeoEngineers, Inc.	Project: Tosco Portland Terminal	
7504 S.W. Bridgeport Road	Project Number: 4823-030-00	**Reported:**
Portland, OR 97224	Project Manager: Kyle Sattler	12/13/01 15:48

Polynuclear Aromatic Compounds per EPA 8270M-SIM

North Creek Analytical - Portland

Analyte	Result	Reporting Limit	Units	Dilution	Method	Prepared	Analyzed	Batch	Notes
SP4-3-2 (P1L0036-14) Soil						Sampled: 11/30/01	Received: 12/03/01		R-05
Surr: Pyrene-d10	*178 %*	*40-150*							S-09
Surr: Benzo (a) pyrene-d12	*84.8 %*	*40-150*							

North Creek Analytical - Portland

The results in this report apply to the samples analyzed in accordance with the chain of custody document. This analytical report must be reproduced in its entirety.

Crystal Burkholder, Project Manager

North Creek Analytical, Inc.
Environmental Laboratory Network

COP0022019

Seattle 11720 North Creek Pkwy N, Suite 400, Bothell, WA 98011-8244
425.420.9200 fax 425.420.9210
Spokane East 11115 Montgomery, Suite B, Spokane, WA 99206-4776
509.924.9200 fax 509.924.9290
Portland 9405 SW Nimbus Avenue, Beaverton, OR 97008-7132
503.906.9200 fax 503.906.9210
Bend 20332 Empire Avenue, Suite F-1, Bend, OR 97701-5711
541.383.9310 fax 541.382.7588

www.ncalabs.com

GeoEngineers, Inc.	Project: Tosco Portland Terminal	
7504 S.W. Bridgeport Road	Project Number: 4823-030-00	Reported:
Portland, OR 97224	Project Manager: Kyle Sattler	12/13/01 15:48

Percent Dry Weight (Solids) per Standard Methods

North Creek Analytical - Portland

Analyte	Result	Reporting Limit	Units	Dilution	Method	Prepared	Analyzed	Batch	Notes
SP2-1-2 (P1L0036-01) Soil					Sampled: 11/30/01	Received: 12/03/01			
% Solids	89.0	1.00	% by Weight	1	NCA SOP	12/05/01	12/06/01	1120119	
SP2-2-2 (P1L0036-02) Soil					Sampled: 11/30/01	Received: 12/03/01			
% Solids	88.8	1.00	% by Weight	1	NCA SOP	12/05/01	12/06/01	1120119	
SP2-3-2 (P1L0036-03) Soil					Sampled: 11/30/01	Received: 12/03/01			
% Solids	87.4	1.00	% by Weight	1	NCA SOP	12/05/01	12/06/01	1120119	
SP2-4-2 (P1L0036-04) Soil					Sampled: 11/30/01	Received: 12/03/01			
% Solids	87.9	1.00	% by Weight	1	NCA SOP	12/05/01	12/06/01	1120119	
SP2-5-1.5 (P1L0036-05) Soil					Sampled: 11/30/01	Received: 12/03/01			
% Solids	87.8	1.00	% by Weight	1	NCA SOP	12/05/01	12/06/01	1120119	
SP2-6-2 (P1L0036-06) Soil					Sampled: 11/30/01	Received: 12/03/01			
% Solids	86.7	1.00	% by Weight	1	NCA SOP	12/05/01	12/06/01	1120119	
SP2-7-2 (P1L0036-07) Soil					Sampled: 11/30/01	Received: 12/03/01			
% Solids	86.0	1.00	% by Weight	1	NCA SOP	12/05/01	12/06/01	1120119	
SP3-1-2 (P1L0036-08) Soil					Sampled: 11/30/01	Received: 12/03/01			
% Solids	85.2	1.00	% by Weight	1	NCA SOP	12/05/01	12/06/01	1120119	
SP3-2-2 (P1L0036-09) Soil					Sampled: 11/30/01	Received: 12/03/01			
% Solids	85.5	1.00	% by Weight	1	NCA SOP	12/05/01	12/06/01	1120119	

North Creek Analytical - Portland

The results in this report apply to the samples analyzed in accordance with the chain of custody document. This analytical report must be reproduced in its entirety.

Crystal Burkholder, Project Manager

Seattle 11720 North Creek Pkwy N, Suite 400, Bothell, WA 98011-8244
425.420.9200 fax 425.420.9210
Spokane East 11115 Montgomery, Suite B, Spokane, WA 99206-4776
509.924.9200 fax 509.924.9290
Portland 9405 SW Nimbus Avenue, Beaverton, OR 97008-7132
503.906.9200 fax 503.906.9210
Bend 20332 Empire Avenue, Suite F-1, Bend, OR 97701-5711
541.383.9310 fax 541.382.7588

www.ncalabs.com

GeoEngineers, Inc.	Project: Tosco Portland Terminal	
7504 S.W. Bridgeport Road	Project Number: 4823-030-00	**Reported:**
Portland, OR 97224	Project Manager: Kyle Sattler	12/13/01 15:48

Percent Dry Weight (Solids) per Standard Methods

North Creek Analytical - Portland

Analyte	Result	Reporting Limit	Units	Dilution	Method	Prepared	Analyzed	Batch	Notes
SP3-3-2 (P1L0036-10) Soil					Sampled: 11/30/01	Received: 12/03/01			
% Solids	86.8	1.00	% by Weight	1	NCA SOP	12/05/01	12/06/01	1120119	
SP3-4-2 (P1L0036-11) Soil					Sampled: 11/30/01	Received: 12/03/01			
% Solids	86.2	1.00	% by Weight	1	NCA SOP	12/05/01	12/06/01	1120119	
SP4-1-2 (P1L0036-12) Soil					Sampled: 11/30/01	Received: 12/03/01			
% Solids	89.0	1.00	% by Weight	1	NCA SOP	12/05/01	12/06/01	1120119	
SP4-2-2 (P1L0036-13) Soil					Sampled: 11/30/01	Received: 12/03/01			
% Solids	87.5	1.00	% by Weight	1	NCA SOP	12/05/01	12/06/01	1120119	
SP4-3-2 (P1L0036-14) Soil					Sampled: 11/30/01	Received: 12/03/01			
% Solids	89.9	1.00	% by Weight	1	NCA SOP	12/05/01	12/06/01	1120119	

Seattle 11720 North Creek Pkwy N, Suite 400, Bothell, WA 98011-8244
425.420.9200 fax 425.420.9210
Spokane East 11115 Montgomery, Suite B, Spokane, WA 99206-4776
509.924.9200 fax 509.924.9290
Portland 9405 SW Nimbus Avenue, Beaverton, OR 97008-7132
503.906.9200 fax 503.906.9210
Bend 20332 Empire Avenue, Suite F-1, Bend, OR 97701-5711
541.383.9310 fax 541.382.7588

www.ncalabs.com

GeoEngineers, Inc.	Project: Tosco Portland Terminal	
7504 S.W. Bridgeport Road	Project Number: 4823-030-00	Reported:
Portland, OR 97224	Project Manager: Kyle Sattler	12/13/01 15:48

Gasoline Hydrocarbons per NW TPH-Gx Method and BTEX per EPA Method 8021B - Quality Control

North Creek Analytical - Portland

Analyte	Result	Reporting Limit	Units	Spike Level	Source Result	%REC	%REC Limits	RPD	RPD Limit	Notes
Batch 1120083 - EPA 5030										
Blank (1120083-BLK1)				Prepared & Analyzed: 12/04/01						
Benzene	ND	0.0500	mg/kg							
Toluene	ND	0.0500	"							
Ethylbenzene	ND	0.0500	"							
Xylenes (total)	ND	0.0500	"							
Gasoline Range Hydrocarbons	ND	2.00	"							
Surr: a,a,a-TFT (PID)	*1.16*		"	*1.25*		*92.8*	*75-120*			
Surr: a,a,a-TFT (FID)	*1.27*		"	*1.25*		*102*	*50-150*			
LCS (1120083-BS1)				Prepared & Analyzed: 12/04/01						
Gasoline Range Hydrocarbons	39.9	2.00	mg/kg	31.2		128	65-130			
Surr: a,a,a-TFT (FID)	*1.45*		"	*1.25*		*116*	*50-150*			
LCS (1120083-BS2)				Prepared: 12/04/01 Analyzed: 12/05/01						
Benzene	0.443	0.0500	mg/kg	0.500		88.6	65-130			
Toluene	0.561	0.0500	"	0.500		112	65-130			
Ethylbenzene	0.604	0.0500	"	0.500		121	65-130			
Xylenes (total)	1.84	0.0500	"	1.50		123	65-130			
Surr: a,a,a-TFT (PID)	*1.13*		"	*1.25*		*90.4*	*75-120*			
Duplicate (1120083-DUP1)		**Source: P1L0036-01**		Prepared & Analyzed: 12/04/01						
Gasoline Range Hydrocarbons	ND	2.00	mg/kg dry		ND				50	
Surr: a,a,a-TFT (FID)	*1.18*		"	*1.40*		*84.3*	*50-150*			
Duplicate (1120083-DUP2)		**Source: P1L0036-02**		Prepared & Analyzed: 12/04/01						
Gasoline Range Hydrocarbons	ND	2.00	mg/kg dry		ND				50	
Surr: a,a,a-TFT (FID)	*1.14*		"	*1.41*		*80.9*	*50-150*			
Matrix Spike (1120083-MS1)		**Source: P1L0036-03**		Prepared & Analyzed: 12/04/01						
Benzene	0.678	0.0500	mg/kg dry	0.572	ND	119	65-130			
Toluene	0.666	0.0500	"	0.572	ND	115	65-130			
Ethylbenzene	0.693	0.0500	"	0.572	ND	121	65-130			
Xylenes (total)	1.97	0.0500	"	1.72	ND	115	65-130			
Surr: a,a,a-TFT (PID)	*0.906*		"	*1.43*		*63.4*	*75-120*			*S-09*

Seattle 11720 North Creek Pkwy N, Suite 400, Bothell, WA 98011-8244
425.420.9200 fax 425.420.9210
Spokane East 11115 Montgomery, Suite B, Spokane, WA 99206-4776
509.924.9200 fax 509.924.9290
Portland 9405 SW Nimbus Avenue, Beaverton, OR 97008-7132
503.906.9200 fax 503.906.9210
Bend 20332 Empire Avenue, Suite F-1, Bend, OR 97701-5711
541.383.9310 fax 541.382.7588

www.ncalabs.com

GeoEngineers, Inc.	Project: Tosco Portland Terminal	
7504 S.W. Bridgeport Road	Project Number: 4823-030-00	**Reported:**
Portland, OR 97224	Project Manager: Kyle Sattler	12/13/01 15:48

Gasoline Hydrocarbons per NW TPH-Gx Method and BTEX per EPA Method 8021B - Quality Control

North Creek Analytical - Portland

Analyte	Result	Reporting Limit	Units	Spike Level	Source Result	%REC	%REC Limits	RPD	RPD Limit	Notes
Batch 1120083 - EPA 5030										
Matrix Spike Dup (1120083-MSD1)		**Source: P1L0036-03**		Prepared & Analyzed: 12/04/01						
Benzene	0.653	0.0500	mg/kg dry	0.572	ND	114	65-130	3.76	20	
Toluene	0.636	0.0500	"	0.572	ND	110	65-130	4.61	20	
Ethylbenzene	0.656	0.0500	"	0.572	ND	115	65-130	5.49	20	
Xylenes (total)	1.86	0.0500	"	1.72	ND	108	65-130	5.74	20	
Surr: a,a,a-TFT (PID)	*0.983*		"	*1.43*		*68.7*	*75-120*			*S-09*

Seattle 11720 North Creek Pkwy N, Suite 400, Bothell, WA 98011-8244
425.420.9200 fax 425.420.9210
Spokane East 11115 Montgomery, Suite B, Spokane, WA 99206-4776
509.924.9200 fax 509.924.9290
Portland 9405 SW Nimbus Avenue, Beaverton, OR 97008-7132
503.906.9200 fax 503.906.9210
Bend 20332 Empire Avenue, Suite F-1, Bend, OR 97701-5711
541.383.9310 fax 541.382.7588

www.ncalabs.com

GeoEngineers, Inc.	Project: Tosco Portland Terminal	
7504 S.W. Bridgeport Road	Project Number: 4823-030-00	Reported:
Portland, OR 97224	Project Manager: Kyle Sattler	12/13/01 15:48

Diesel and Heavy Range Hydrocarbons per NWTPH-Dx Method with Acid/Silica Gel Cleanup - Quality Control

North Creek Analytical - Portland

Analyte	Result	Reporting Limit	Units	Spike Level	Source Result	%REC	%REC Limits	RPD	RPD Limit	Notes
Batch 1120125 - EPA 3550 Fuels										
Blank (1120125-BLK1)				Prepared & Analyzed: 12/05/01						
Diesel Range Organics	ND	25.0	mg/kg							
Heavy Oil Range Hydrocarbons	ND	50.0	"							
Surr: 1-Chlorooctadecane	*4.24*		"	*4.80*		*88.3*	*50-150*			
LCS (1120125-BS1)				Prepared & Analyzed: 12/05/01						
Diesel Range Organics	112	25.0	mg/kg	129		86.8	50-150			
Heavy Oil Range Hydrocarbons	77.1	50.0	"	79.0		97.6	50-150			
Surr: 1-Chlorooctadecane	*4.87*		"	*4.80*		*101*	*50-150*			
Duplicate (1120125-DUP1)		**Source: P1L0089-03**		Prepared: 12/05/01 Analyzed: 12/07/01						
Diesel Range Organics	11000	1250	mg/kg dry		11300			2.69	50	
Heavy Oil Range Hydrocarbons	33000	2500	"		33700			2.10	50	
Surr: 1-Chlorooctadecane	*0.00*		"	*5.29*			*50-150*			*S-01*
Duplicate (1120125-DUP2)		**Source: P1L0089-09**		Prepared: 12/05/01 Analyzed: 12/07/01						
Diesel Range Organics	ND	250	mg/kg dry		ND				50	
Heavy Oil Range Hydrocarbons	1800	500	"		1810			0.554	50	
Surr: 1-Chlorooctadecane	*4.18*		"	*5.14*		*81.3*	*50-150*			

North Creek Analytical - Portland

The results in this report apply to the samples analyzed in accordance with the chain of custody document. This analytical report must be reproduced in its entirety.

Crystal Burkholder, Project Manager

Seattle 11720 North Creek Pkwy N, Suite 400, Bothell, WA 98011-8244
425.420.9200 fax 425.420.9210
Spokane East 11115 Montgomery, Suite B, Spokane, WA 99206-4776
509.924.9200 fax 509.924.9290
Portland 9405 SW Nimbus Avenue, Beaverton, OR 97008-7132
503.906.9200 fax 503.906.9210
Bend 20332 Empire Avenue, Suite F-1, Bend, OR 97701-5711
541.383.9310 fax 541.382.7588

www.ncalabs.com

GeoEngineers, Inc.	Project: Tosco Portland Terminal	
7504 S.W. Bridgeport Road	Project Number: 4823-030-00	Reported:
Portland, OR 97224	Project Manager: Kyle Sattler	12/13/01 15:48

Total Metals per EPA 6000/7000 Series Methods - Quality Control

North Creek Analytical - Portland

Analyte	Result	Reporting Limit	Units	Spike Level	Source Result	%REC	%REC Limits	RPD	RPD Limit	Notes
Batch 1120143 - EPA 3050										
Blank (1120143-BLK1)				Prepared & Analyzed: 12/05/01						
Lead	ND	0.500	mg/kg							
LCS (1120143-BS1)				Prepared & Analyzed: 12/05/01						
Lead	10.2	0.500	mg/kg	10.0		102	80-120			
Duplicate (1120143-DUP1)		Source: P1L0036-01		Prepared & Analyzed: 12/05/01						
Lead	4.18	0.500	mg/kg dry		4.55			8.48	40	
Matrix Spike (1120143-MS1)		Source: P1L0036-01		Prepared & Analyzed: 12/05/01						
Lead	15.9	0.500	mg/kg dry	11.2	4.55	101	75-125			
Matrix Spike (1120143-MS2)		Source: P1L0036-11		Prepared & Analyzed: 12/05/01						
Lead	28.3	0.500	mg/kg dry	11.6	15.6	109	75-125			

Seattle 11720 North Creek Pkwy N, Suite 400, Bothell, WA 98011-8244
425.420.9200 fax 425.420.9210
Spokane East 11115 Montgomery, Suite B, Spokane, WA 99206-4776
509.924.9200 fax 509.924.9290
Portland 9405 SW Nimbus Avenue, Beaverton, OR 97008-7132
503.906.9200 fax 503.906.9210
Bend 20332 Empire Avenue, Suite F-1, Bend, OR 97701-5711
541.383.9310 fax 541.382.7588

www.ncalabs.com

GeoEngineers, Inc.	Project: Tosco Portland Terminal	
7504 S.W. Bridgeport Road	Project Number: 4823-030-00	Reported:
Portland, OR 97224	Project Manager: Kyle Sattler	12/13/01 15:48

Polychlorinated Biphenyls per EPA Method 8082 - Quality Control

North Creek Analytical - Portland

Analyte	Result	Reporting Limit	Units	Spike Level	Source Result	%REC	%REC Limits	RPD	RPD Limit	Notes
Batch 1120287 - EPA 3550										
Blank (1120287-BLK1)				Prepared & Analyzed: 12/10/01						
Aroclor 1016	ND	67.0	ug/kg							
Aroclor 1221	ND	134	"							
Aroclor 1232	ND	67.0	"							
Aroclor 1242	ND	67.0	"							
Aroclor 1248	ND	67.0	"							
Aroclor 1254	ND	67.0	"							
Aroclor 1260	ND	67.0	"							
Surr: 2,4,5,6-Tetrachloro-m-xylene	*30.4*		"	*33.3*		*91.3*	*36-140*			
Surr: Decachlorobiphenyl	*29.9*		"	*33.3*		*89.8*	*16-149*			
LCS (1120287-BS1)				Prepared & Analyzed: 12/10/01						
Aroclor 1016	333	67.0	ug/kg	333		100	57-135			
Aroclor 1260	340	67.0	"	333		102	60-135			
Surr: 2,4,5,6-Tetrachloro-m-xylene	*32.8*		"	*33.3*		*98.5*	*36-140*			
Surr: Decachlorobiphenyl	*31.6*		"	*33.3*		*94.9*	*16-149*			
Matrix Spike (1120287-MS1)		**Source: P1L0036-14**		Prepared & Analyzed: 12/10/01						
Aroclor 1016	210	67.0	ug/kg dry	371	ND	56.6	37-145			
Aroclor 1260	175	67.0	"	371	ND	47.2	25-144			
Surr: 2,4,5,6-Tetrachloro-m-xylene	*24.5*		"	*37.1*		*66.0*	*36-140*			
Surr: Decachlorobiphenyl	*18.5*		"	*37.1*		*49.9*	*16-149*			
Matrix Spike Dup (1120287-MSD1)		**Source: P1L0036-14**		Prepared: 12/10/01 Analyzed: 12/11/01						
Aroclor 1016	214	67.0	ug/kg dry	371	ND	57.7	37-145	1.89	26	
Aroclor 1260	179	67.0	"	371	ND	48.2	25-144	2.26	30	
Surr: 2,4,5,6-Tetrachloro-m-xylene	*24.3*		"	*37.1*		*65.5*	*36-140*			
Surr: Decachlorobiphenyl	*19.0*		"	*37.1*		*51.2*	*16-149*			

Seattle 11720 North Creek Pkwy N, Suite 400, Bothell, WA 98011-8244
425.420.9200 fax 425.420.9210
Spokane East 11115 Montgomery, Suite B, Spokane, WA 99206-4776
509.924.9200 fax 509.924.9290
Portland 9405 SW Nimbus Avenue, Beaverton, OR 97008-7132
503.906.9200 fax 503.906.9210
Bend 20332 Empire Avenue, Suite F-1, Bend, OR 97701-5711
541.383.9310 fax 541.382.7588

www.ncalabs.com

GeoEngineers, Inc.	Project: Tosco Portland Terminal	
7504 S.W. Bridgeport Road	Project Number: 4823-030-00	**Reported:**
Portland, OR 97224	Project Manager: Kyle Sattler	12/13/01 15:48

Volatile Organic Compounds per EPA Method 8260B - Quality Control

North Creek Analytical - Portland

Analyte	Result	Reporting Limit	Units	Spike Level	Source Result	%REC	%REC Limits	RPD	RPD Limit	Notes
Batch 1120258 - EPA 5035										
Blank (1120258-BLK1)				Prepared: 12/10/01 Analyzed: 12/12/01						
Acetone	ND	2500	ug/kg							
Benzene	ND	100	"							
Bromobenzene	ND	100	"							
Bromochloromethane	ND	100	"							
Bromodichloromethane	ND	100	"							
Bromoform	ND	100	"							
Bromomethane	ND	500	"							
2-Butanone	ND	1000	"							
n-Butylbenzene	ND	500	"							
sec-Butylbenzene	ND	100	"							
tert-Butylbenzene	ND	100	"							
Carbon disulfide	ND	1000	"							
Carbon tetrachloride	ND	100	"							
Chlorobenzene	ND	100	"							
Chloroethane	ND	100	"							
Chloroform	ND	100	"							
Chloromethane	ND	500	"							
2-Chlorotoluene	ND	100	"							
4-Chlorotoluene	ND	100	"							
1,2-Dibromo-3-chloropropane	ND	500	"							
Dibromochloromethane	ND	100	"							
1,2-Dibromoethane	ND	100	"							
Dibromomethane	ND	100	"							
1,2-Dichlorobenzene	ND	100	"							
1,3-Dichlorobenzene	ND	100	"							
1,4-Dichlorobenzene	ND	100	"							
Dichlorodifluoromethane	ND	500	"							
1,1-Dichloroethane	ND	100	"							
1,2-Dichloroethane	ND	100	"							
1,1-Dichloroethene	ND	100	"							
cis-1,2-Dichloroethene	ND	100	"							
trans-1,2-Dichloroethene	ND	100	"							
1,2-Dichloropropane	ND	100	"							
1,3-Dichloropropane	ND	100	"							
2,2-Dichloropropane	ND	100	"							
1,1-Dichloropropene	ND	100	"							

The results in this report apply to the samples analyzed in accordance with the chain of custody document. This analytical report must be reproduced in its entirety.

Crystal Burkholder, Project Manager

COP0022027

Seattle 11720 North Creek Pkwy N, Suite 400, Bothell, WA 98011-8244
425.420.9200 fax 425.420.9210
Spokane East 11115 Montgomery, Suite B, Spokane, WA 99206-4776
509.924.9200 fax 509.924.9290
Portland 9405 SW Nimbus Avenue, Beaverton, OR 97008-7132
503.906.9200 fax 503.906.9210
Bend 20332 Empire Avenue, Suite F-1, Bend, OR 97701-5711
541.383.9310 fax 541.382.7588

www.ncalabs.com

GeoEngineers, Inc.	Project: Tosco Portland Terminal	
7504 S.W. Bridgeport Road	Project Number: 4823-030-00	Reported:
Portland, OR 97224	Project Manager: Kyle Sattler	12/13/01 15:48

Volatile Organic Compounds per EPA Method 8260B - Quality Control

North Creek Analytical - Portland

Analyte	Result	Reporting Limit	Units	Spike Level	Source Result	%REC	%REC Limits	RPD	RPD Limit	Notes
Batch 1120258 - EPA 5035										
Blank (1120258-BLK1)				Prepared: 12/10/01 Analyzed: 12/12/01						
cis-1,3-Dichloropropene	ND	100	ug/kg							
trans-1,3-Dichloropropene	ND	100	"							
Ethylbenzene	ND	100	"							
Hexachlorobutadiene	ND	200	"							
2-Hexanone	ND	1000	"							
Isopropylbenzene	ND	200	"							
p-Isopropyltoluene	ND	200	"							
4-Methyl-2-pentanone	ND	500	"							
Methyl tert-butyl ether	ND	100	"							
Methylene chloride	ND	500	"							
Naphthalene	ND	200	"							
n-Propylbenzene	ND	100	"							
Styrene	ND	100	"							
1,1,1,2-Tetrachloroethane	ND	100	"							
1,1,2,2-Tetrachloroethane	ND	100	"							
Tetrachloroethene	ND	100	"							
Toluene	ND	100	"							
1,2,3-Trichlorobenzene	ND	100	"							
1,2,4-Trichlorobenzene	ND	100	"							
1,1,1-Trichloroethane	ND	100	"							
1,1,2-Trichloroethane	ND	100	"							
Trichloroethene	ND	100	"							
Trichlorofluoromethane	ND	100	"							
1,2,3-Trichloropropane	ND	100	"							
1,2,4-Trimethylbenzene	ND	100	"							
1,3,5-Trimethylbenzene	ND	100	"							
Vinyl chloride	ND	100	"							
o-Xylene	ND	100	"							
m,p-Xylene	ND	200	"							
Surr: 4-BFB	*2280*		"	*2000*		*114*	*70-130*			
Surr: 1,2-DCA-d4	*2290*		"	*2000*		*114*	*70-130*			
Surr: Dibromofluoromethane	*2210*		"	*2000*		*110*	*70-130*			
Surr: Toluene-d8	*2510*		"	*2000*		*126*	*70-130*			

The results in this report apply to the samples analyzed in accordance with the chain of custody document. This analytical report must be reproduced in its entirety.

Crystal Burkholder, Project Manager

COP0022028

www.ncalabs.com

Seattle 11720 North Creek Pkwy N, Suite 400, Bothell, WA 98011-8244
425.420.9200 fax 425.420.9210
Spokane East 11115 Montgomery, Suite B, Spokane, WA 99206-4776
509.924.9200 fax 509.924.9290
Portland 9405 SW Nimbus Avenue, Beaverton, OR 97008-7132
503.906.9200 fax 503.906.9210
Bend 20332 Empire Avenue, Suite F-1, Bend, OR 97701-5711
541.383.9310 fax 541.382.7588

GeoEngineers, Inc.	Project: Tosco Portland Terminal	
7504 S.W. Bridgeport Road	Project Number: 4823-030-00	**Reported:**
Portland, OR 97224	Project Manager: Kyle Sattler	12/13/01 15:48

Volatile Organic Compounds per EPA Method 8260B - Quality Control

North Creek Analytical - Portland

Analyte	Result	Reporting Limit	Units	Spike Level	Source Result	%REC	%REC Limits	RPD	RPD Limit	Notes
Batch 1120258 - EPA 5035										
LCS (1120258-BS1)				Prepared: 12/10/01		Analyzed: 12/12/01				
Benzene	2620	100	ug/kg	2500		105	80-135			
Chlorobenzene	2320	100	"	2500		92.8	80-135			
1,1-Dichloroethene	2480	100	"	2500		99.2	60-150			
Toluene	2420	100	"	2500		96.8	80-130			
Trichloroethene	2360	100	"	2500		94.4	70-135			
Surr: 4-BFB	*2270*		"	*2000*		*114*	*70-130*			
Surr: 1,2-DCA-d4	*1970*		"	*2000*		*98.5*	*70-130*			
Surr: Dibromofluoromethane	*1880*		"	*2000*		*94.0*	*70-130*			
Surr: Toluene-d8	*2360*		"	*2000*		*118*	*70-130*			
LCS Dup (1120258-BSD1)				Prepared: 12/10/01		Analyzed: 12/12/01				
Benzene	2590	100	ug/kg	2500		104	80-135	1.15	25	
Chlorobenzene	2360	100	"	2500		94.4	80-135	1.71	25	
1,1-Dichloroethene	2470	100	"	2500		98.8	60-150	0.404	25	
Toluene	2440	100	"	2500		97.6	80-130	0.823	25	
Trichloroethene	2320	100	"	2500		92.8	70-135	1.71	25	
Surr: 4-BFB	*2210*		"	*2000*		*110*	*70-130*			
Surr: 1,2-DCA-d4	*1940*		"	*2000*		*97.0*	*70-130*			
Surr: Dibromofluoromethane	*1850*		"	*2000*		*92.5*	*70-130*			
Surr: Toluene-d8	*2370*		"	*2000*		*118*	*70-130*			
Matrix Spike (1120258-MS1)		**Source: P1L0167-03**		Prepared: 12/10/01		Analyzed: 12/12/01				
Benzene	2680	100	ug/kg dry	2860	ND	93.1	60-135			
Chlorobenzene	2360	100	"	2860	ND	82.5	65-125			
1,1-Dichloroethene	2430	100	"	2860	ND	84.2	60-135			
Toluene	2510	100	"	2860	ND	86.6	60-125			
Trichloroethene	2510	100	"	2860	ND	87.8	60-125			
Surr: 4-BFB	*2230*		"	*2290*		*97.4*	*70-130*			
Surr: 1,2-DCA-d4	*2270*		"	*2290*		*99.1*	*70-130*			
Surr: Dibromofluoromethane	*2190*		"	*2290*		*95.6*	*70-130*			
Surr: Toluene-d8	*2440*		"	*2290*		*107*	*70-130*			

North Creek Analytical - Portland

The results in this report apply to the samples analyzed in accordance with the chain of custody document. This analytical report must be reproduced in its entirety.

Crystal Burkholder, Project Manager

Seattle 11720 North Creek Pkwy N, Suite 400, Bothell, WA 98011-8244
425.420.9200 fax 425.420.9210
Spokane East 11115 Montgomery, Suite B, Spokane, WA 99206-4779
509.924.9200 fax 509.924.9290
Portland 9405 SW Nimbus Avenue, Beaverton, OR 97008-7132
503.906.9200 fax 503.906.9210
Bend 20332 Empire Avenue, Suite F-1, Bend, OR 97701-5711
541.383.9310 fax 541.382.7588

www.ncalabs.com

GeoEngineers, Inc.	Project: Tosco Portland Terminal	
7504 S.W. Bridgeport Road	Project Number: 4823-030-00	Reported:
Portland, OR 97224	Project Manager: Kyle Sattler	12/13/01 15:48

Volatile Organic Compounds per EPA Method 8260B - Quality Control

North Creek Analytical - Portland

Analyte	Result	Reporting Limit	Units	Spike Level	Source Result	%REC	%REC Limits	RPD	RPD Limit	Notes
Batch 1120258 - EPA 5035										
Matrix Spike Dup (1120258-MSD1)		**Source: P1L0167-03**		Prepared: 12/10/01 Analyzed: 12/12/01						
Benzene	2770	100	ug/kg dry	2860	ND	96.3	60-135	3.30	25	
Chlorobenzene	2380	100	"	2860	ND	83.2	65-125	0.844	25	
1,1-Dichloroethene	2630	100	"	2860	ND	91.2	60-135	7.91	25	
Toluene	2550	100	"	2860	ND	88.0	60-125	1.58	25	
Trichloroethene	2590	100	"	2860	ND	90.6	60-125	3.14	25	
Surr: 4-BPB	*2170*		"	*2290*		*94.8*	*70-130*			
Surr: 1,2-DCA-d4	*2320*		"	*2290*		*101*	*70-130*			
Surr: Dibromofluoromethane	*2220*		"	*2290*		*96.9*	*70-130*			
Surr: Toluene-d8	*2470*		"	*2290*		*108*	*70-130*			

North Creek Analytical - Portland

The results in this report apply to the samples analyzed in accordance with the chain of custody document. This analytical report must be reproduced in its entirety.

Crystal Burkholder, Project Manager

Seattle 11720 North Creek Pkwy N, Suite 400, Bothell, WA 98011-8244
425.420.9200 fax 425.420.9210
Spokane East 11115 Montgomery, Suite B, Spokane, WA 99206-4776
509.924.9200 fax 509.924.9290
Portland 9405 SW Nimbus Avenue, Beaverton, OR 97008-7132
503.906.9200 fax 503.906.9210
Bend 20332 Empire Avenue, Suite F-1, Bend, OR 97701-5711
541.383.9310 fax 541.383.7586

www.ncalabs.com

GeoEngineers, Inc.	Project: Tosco Portland Terminal	
7504 S.W. Bridgeport Road	Project Number: 4823-030-00	**Reported:**
Portland, OR 97224	Project Manager: Kyle Sattler	12/13/01 15:48

Polynuclear Aromatic Compounds per EPA 8270M-SIM - Quality Control

North Creek Analytical - Portland

Analyte	Result	Reporting Limit	Units	Spike Level	Source Result	%REC	%REC Limits	RPD	RPD Limit	Notes
Batch 1120290 - EPA 3550										
Blank (1120290-BLK1)				Prepared & Analyzed: 12/10/01						
Acenaphthene	ND	13.4	ug/kg							
Acenaphthylene	ND	13.4	"							
Anthracene	ND	13.4	"							
Benzo (a) anthracene	ND	13.4	"							
Benzo (a) pyrene	ND	13.4	"							
Benzo (b) fluoranthene	ND	13.4	"							
Benzo (ghi) perylene	ND	13.4	"							
Benzo (k) fluoranthene	ND	13.4	"							
Chrysene	ND	13.4	"							
Dibenzo (a,h) anthracene	ND	13.4	"							
Fluoranthene	ND	13.4	"							
Fluorene	ND	13.4	"							
Indeno (1,2,3-cd) pyrene	ND	13.4	"							
Naphthalene	ND	13.4	"							
Phenanthrene	ND	13.4	"							
Pyrene	ND	13.4	"							
Surr: Fluorene-d10	*67.5*		"	*83.3*		*81.0*	*40-150*			
Surr: Pyrene-d10	*102*		"	*83.3*		*122*	*40-150*			
Surr: Benzo (a) pyrene-d12	*65.4*		"	*83.3*		*78.5*	*40-150*			
LCS (1120290-BS1)				Prepared & Analyzed: 12/10/01						
Acenaphthene	149	13.4	ug/kg	167		89.2	33-139			
Benzo (a) pyrene	154	13.4	"	167		92.2	45-149			
Pyrene	164	13.4	"	167		98.2	39-138			
Surr: Fluorene-d10	*70.1*		"	*83.3*		*84.2*	*40-150*			
Surr: Pyrene-d10	*109*		"	*83.3*		*131*	*40-150*			
Surr: Benzo (a) pyrene-d12	*68.4*		"	*83.3*		*82.1*	*40-150*			

North Creek Analytical - Portland

The results in this report apply to the samples analyzed in accordance with the chain of custody document. This analytical report must be reproduced in its entirety.

Crystal Burkholder, Project Manager

Seattle 11720 North Creek Pkwy N, Suite 400, Bothell, WA 98011-8244
425.420.9200 fax 425.420.9210
Spokane East 11115 Montgomery, Suite B, Spokane, WA 99206-4776
509.924.9200 fax 509.924.9290
Portland 9405 SW Nimbus Avenue, Beaverton, OR 97008-7132
503.906.9200 fax 503.906.9210
Bend 20332 Empire Avenue, Suite F-1, Bend, OR 97701-5711
541.383.9310 fax 541.382.7588

www.ncalabs.com

GeoEngineers, Inc.	Project: Tosco Portland Terminal	
7504 S.W. Bridgeport Road	Project Number: 4823-030-00	Reported:
Portland, OR 97224	Project Manager: Kyle Sattler	12/13/01 15:48

Polynuclear Aromatic Compounds per EPA 8270M-SIM - Quality Control

North Creek Analytical - Portland

Analyte	Result	Reporting Limit	Units	Spike Level	Source Result	%REC	%REC Limits	RPD	RPD Limit	Notes
Batch 1120290 - EPA 3550										
Matrix Spike (1120290-MS1)		Source: P1L0036-09		Prepared: 12/10/01		Analyzed: 12/11/01				R-05
Acenaphthene	167	26.8	ug/kg dry	195	ND	85.6	33-139			
Benzo (a) pyrene	208	26.8	"	195	45.8	83.2	45-149			
Pyrene	209	26.8	"	195	63.8	74.5	39-138			
Surr: Fluorene-d10	*64.4*		"	*97.4*		*66.1*	*40-150*			
Surr: Pyrene-d10	*108*		"	*97.4*		*111*	*40-150*			
Surr: Benzo (a) pyrene-d12	*78.7*		"	*97.4*		*80.8*	*40-150*			
Matrix Spike Dup (1120290-MSD1)		Source: P1L0036-09		Prepared: 12/10/01		Analyzed: 12/11/01				R-05
Acenaphthene	164	26.8	ug/kg dry	195	ND	84.1	33-139	1.81	60	
Benzo (a) pyrene	269	26.8	"	195	45.8	114	45-149	25.6	60	
Pyrene	276	26.8	"	195	63.8	109	39-138	27.6	60	
Surr: Fluorene-d10	*63.1*		"	*97.4*		*64.8*	*40-150*			
Surr: Pyrene-d10	*103*		"	*97.4*		*106*	*40-150*			
Surr: Benzo (a) pyrene-d12	*82.2*		"	*97.4*		*84.4*	*40-150*			

Seattle 11720 North Creek Pkwy N, Suite 400, Bothell, WA 98011-8244
425.420.9200 fax 425.420.9210
Spokane East 11115 Montgomery, Suite B, Spokane, WA 99206-4776
509.924.9200 fax 509.924.9290
Portland 9405 SW Nimbus Avenue, Beaverton, OR 97008-7132
503.906.9200 fax 503.906.9210
Bend 20332 Empire Avenue, Suite F-1, Bend, OR 97701-5711
541.383.9310 fax 541.382.7588

www.ncalabs.com

GeoEngineers, Inc.	Project: Tosco Portland Terminal	
7504 S.W. Bridgeport Road	Project Number: 4823-030-00	**Reported:**
Portland, OR 97224	Project Manager: Kyle Sattler	12/13/01 15:48

Percent Dry Weight (Solids) per Standard Methods - Quality Control

North Creek Analytical - Portland

Analyte	Result	Reporting Limit	Units	Spike Level	Source Result	%REC	%REC Limits	RPD	RPD Limit	Notes
Batch 1120119 - Dry Weight										
Duplicate (1120119-DUP1)		**Source: P1K0703-01**		Prepared: 12/05/01 Analyzed: 12/06/01						
% Solids	71.1	1.00	% by Weight		79.6			11.3	20	
Duplicate (1120119-DUP2)		**Source: P1L0024-08**		Prepared: 12/05/01 Analyzed: 12/06/01						
% Solids	77.5	1.00	% by Weight		77.9			0.515	20	
Duplicate (1120119-DUP3)		**Source: P1L0036-06**		Prepared: 12/05/01 Analyzed: 12/06/01						
% Solids	87.7	1.00	% by Weight		86.7			1.15	20	

Seattle 11720 North Creek Pkwy N, Suite 400, Bothell, WA 98011-8244
425.420.9200 fax 425.420.9210
Spokane East 11115 Montgomery, Suite B, Spokane, WA 99206-4776
509.924.9200 fax 509.924.9290
Portland 9405 SW Nimbus Avenue, Beaverton, OR 97008-7132
503.906.9200 fax 503.906.9210
Bend 20332 Empire Avenue, Suite F-1, Bend, OR 97701-5711
541.383.9310 fax 541.382.7588

www.ncalabs.com

GeoEngineers, Inc.	Project: Tosco Portland Terminal	
7504 S.W. Bridgeport Road	Project Number: 4823-030-00	Reported:
Portland, OR 97224	Project Manager: Kyle Sattler	12/13/01 15:48

Notes and Definitions

R-02	The reporting limit for this analyte was raised due to the high analyte concentration present in the sample.
R-03	The reporting limit for this analyte was raised due to matrix interference.
R-05	Reporting limits raised due to dilution necessary for analysis. Sample contains high levels of reported analyte, non-target analyte, and/or matrix interference.
R-08	Due to matrix unable to resolve Benzofluoranthene isomers. Value reported only in Benzo(b) category represents Total Benzo(b+k)fluoranthene.
S-01	The surrogate recovery for this sample is not available due to sample dilution required from high analyte concentration and/or matrix interferences.
S-09	Surrogate recovery is outside control limits due to matrix interference.
DET	Analyte DETECTED
ND	Analyte NOT DETECTED at or above the reporting limit
NR	Not Reported
dry	Sample results reported on a dry weight basis. MRLs are adjusted if %Solids are less than 50%.
wet	Sample results reported on a wet weight basis (as received)
RPD	Relative Percent Difference

nca™
North Creek Analytical, Inc.
Environmental Laboratory Network
www.nwtabs.com

11720 North Creek Pkwy N, Suite 400, Bothell, WA 98011-8223 (425) 420-9200 FAX 420-9210
East 11115 Montgomery, Suite B, Spokane, WA 98206-4776 (509) 924-9200 FAX 924-9290
9405 S.W. Nimbus Avenue, Beaverton, OR 97008-7132 (503) 906-9200 FAX 906-9210
20332 Empire Avenue, Suite E-1, Bend, OR 97701-5711 (541) 383-9310 FAX 382-7588

TOSCO CHAIN OF CUSTODY REPORT

P1L0036

TOSCO INFORMATION

Facility Number: Tosco Portland Terminal
Site Address: 5528 NW Doane Ave
City, State, ZIP: Portland, OR 97210
Project/AWO Code
Tosco Manager: Bill Collins
FACILITY TYPE: (check one) ☐ BP/Ⓚ ☑ Terminal/Bulk Plant
☐ Brown Bear ☐ Former 76 Site ☐ Other

CONSULTANT INFORMATION

Firm: GEI Project#: 4823-520-01
Address: 7504 SW Bridgeport Rd.
Portland, OR 97224
Phone: 503-624-9274 Fax:
Project Manager: Kyle Sattler E-mail:
Sample Collection by: M. Rotting

Quality Assurance Data Level: A B
A: Standard Summary
B: Standard + Chromatograms

Laboratory Turnaround Days: 10 X 3 2 1
10 Day - Standard

○ OR ○ WA ○ AK ☑ NW Series ○ ID

SAMPLE IDENTIFICATION	SAMPLING DATE / TIME	MATRIX (W,S,O)	# OF CONTAINERS	TPH-HCID	TPH-Gas	BTEX EPA 8021 Mod.	TPH-Gas + BTEX	TPH-Diesel	TPH-Diesel Extended	TPH-Diesel Ext. w/SG Cleanup	Halogen. Volatiles	EPA 8260	EPA 8021	Pesticides/PCBs	or PCBs Only	GC/MS Volatiles	EPA 8260	GC/MS Semi-Vols.	EPA 8270	PAHs	8270 SIM or 8310	Lead	Toxic or Dissolved	TCLP or RCRA Metals (8)	NCA SAMPLE NUMBER
1. SP2-1-2	11/30/01 1350	S	1				X			X												X			
2. SP2-2-2	1400						X			X												X			
3. SP2-3-2	1405						X			X												X			
4. SP2-4-2	1410						X			X												X			
5. SP2-5-1.5	1415						X			X												X			
6. SP2-6-2	1440						X			X												X			
7. SP2-7-2	1445						X			X												X			
8. SP3-1-2	1515						X			X												X			
9. SP3-2-2	1510						X			X												X			
10. SP3-3-2	1500						X			X												X			

Relinquished by:	Firm:	Date & Time	Received by:	Firm:	Date & Time
1. M Rotting	GEI	12/3/01 11.45	Sarah Tassing	NCA	12-03-01 1200
2.					
3.					

Comments:

Page 1 of 2
Rev. Tos3.3.3/99

Comments: Anticipate additional analyses on samples w/highest TPH (w/ 3 day turnaround)
4.2°C @ client

Distribution: White - Laboratory Yellow - Consultant Photocopy - Tosco

COP0022035

nca™
North Creek Analytical, Inc.
Environmental Laboratory Network
www.ncalabs.com

11720 North Creek Pkwy N, Suite 400, Bothell, WA 98011-8223 (425) 420-9200 FAX 420-9210
East 11115 Montgomery, Suite B, Spokane, WA 98206-4776 (509) 924-9200 FAX 924-9290
9405 S.W. Nimbus Avenue, Beaverton, OR 97008-7132 (503) 906-9200 FAX 906-9210
20332 Empire Avenue, Suite F-1, Bend, OR 97701-5711 (541) 383-9310 FAX 382-7588

TOSCO CHAIN OF CUSTODY REPORT

P1L003L

TOSCO INFORMATION

Facility Number: Tosco Portland Terminal
Site Address: 5528 NW Doane Ave
City, State, ZIP: Portland, OR 97210
Project/AWO Code
Tosco Manager: Bill Collins
FACILITY TYPE: (check one) ☐ BP/⓪ ☑ Terminal/Bulk Plant ☐ Brown Bear ☐ Former 76 Site ☐ Other

CONSULTANT INFORMATION

Firm: GEI Project# 4823-520-01
Address: 7504 SW Bridgeport Rd
Portland, OR 97224
Phone: 503-624-9274 Fax:
Project Manager: Kyle Sattler E-mail:
Sample Collection by: M. Rotting

Quality Assurance Data Level: A B
A: Standard Summary
B: Standard + Chromatograms

Laboratory Turnaround Days: 10 5 3 2 1
10 Day - Standard

○ OR ○ WA ○ AK ☒ NW Series ○ ID

SAMPLE IDENTIFICATION	SAMPLING DATE / TIME	MATRIX (W,S,O)	# OF CONTAINERS	TPH-HCID	TPH-Gas	BTEX EPA 8021 Mod. TPH-Gas + BTEX	TPH-Diesel	TPH-Diesel Extended	TPH-Diesel Ext. w/SG Cleanup	Halogen. Volatiles EPA 8021	Pesticides/PCBs or PCBs Only	GCMS Volatiles EPA 8260	GCMS Semi-Vols. EPA 8270	PAHs: 8270 SIM or 8310	Lead: 6020/7000 Total or Dissolved	TCLP for RCRA Metals (8)				NCA SAMPLE NUMBER
1. SP3-4-2	12/3/01 1450	S	1			X			X						X					
2. SP4-1-2	1520					X			X						X					
3. SP4-2-2	1530					X			X						X					
4. SP4-3-2	1540					X			X						X					
5.																				
6.																				
7.																				
8.																				
9.																				
10.																				

Relinquished by:	Firm:	Date & Time	Received by:	Firm:	Date & Time
1. M Rotting	GEI	12/3/01 11:45	Sarah Passinger	NCA	12-03-01 1200
2.					
3.					

Comments:

Page 2 of 2
Rev. Oct 3, 2000

Comments: Anticipate additional analyses on samples w/ highest TPH (on 3 day turnaround)
4.2°C (w client #)

Distribution: White - Laboratory Yellow - Consultant Pink - Tosco

COP0022036

ATTACHMENT C

TPST SOIL RECYCLERS OF OREGON MANIFESTS AND

CUSTOMER JOB REPORT

Customer Job Report

Gross & Tare Weight Codes: M=Manual; S=Scale; T=Trk File

Job Number Name	SiteAddress	SiteCity	State	ZipCode
A09 -- 06604 TOSCO MARKETING COMPA	5528 NORTHWEST DOANE AVE	PORTLAND	OR	97210

Load #	Date & Time Out	Transporter #	Truck & Trailer Number	Gross (lb)	Tare (lb)	Net (lb)	Net Wt (tons)
7	06/07/02 15:07			30,880M	18,160M	12,720	6.36
8	06/07/02 15:07			32,240M	18,120M	14,120	7.06
9	06/07/02 15:10			31,920M	18,100M	13,820	6.91
10	06/07/02 15:13			32,640M	18,140M	14,500	7.25
11	06/07/02 15:15			32,020M	18,140M	13,880	6.94
12	06/10/02 15:18			34,220M	18,020M	16,200	8.10
13	06/10/02 15:21			33,740M	18,000M	15,740	7.87
14	06/10/02 15:27			48,920M	39,360M	9,560	4.78
15	06/10/02 15:30			30,680M	18,040M	12,640	6.32
16	06/10/02 15:32			32,080M	18,020M	14,060	7.03

Completed Loads	Manifests Received	Completed Weight	Estimated Weight	TOTAL Net Wt:
94.10%	16	133.20%	150.00(tons)	68.62 (tons)

COP0022038

Manifest

TPS Technologies Soil Recycling
Non-Hazardous Soils

↓ Manifest # ↓

Date of Shipment	Responsible for Payment:	Transporter Truck #:	Facility #:	Given by TPS:	Load #
Colu 12	GENERATOR	[illegible]	409	06604	016

Generator and/or Consultant

Generator's Name and Billing Address: TOSCO MARKETING CO. 3977 LEARY WAY NW SEATTLE, WA 98107 USA	Generator's Phone #: (206) 706-2267 Person to Contact: JIM HANSEN FAX #: (206) 706-2339	Generator's US EPA ID No. Customer Account Number with TPS: 1002189
Consultant's Name and Billing Address: COWLITZ CLEAN SWEEP 55 INTERNATIONAL WAY LONGVIEW, WA 98632 USA	Consultant's Phone #: (360) 423-2245 Person to Contact: DAVE JOHNSON FAX #: (360) 423-3408	Customer Account Number with TPS: 1002579
Generation Site (Transport from): *(name & address)* TOSCO MARKETING COMPANY 5528 NORTHWEST DOANE AVE PORTLAND, OR 97210 USA	Site Phone #: (503) 248-1515 Person to Contact: MARTY CRAMER FAX #: (503) 248-1500	BTEX Levels TPH Levels AVG. Levels
Designated Facility (Transport to): *(name & address)* TEST SOIL RECYCLERS OF OREGON 9333 N HARBORGATE STREET PORTLAND, OR 97203 USA	Facility Phone #: 503-735-9333 Person to Contact: SHARON QUAST FAX #: 503-240-1712	Facility Permit Numbers
Transporter Name and Mailing Address:	Transporter's Phone #: Person to Contact: FAX #:	Transporter's US EPA ID No.: Transporter's DOT No.: Customer Account Number with TPS:

Description of Soil	Moisture Content	Contaminated by:	Approx. Qty:	Description of Delivery	Gross Weight	Tare Weight	Net Weight
Sand ☐ Organic ☐ Clay ☐ Other ☐	0 - 10% ☐ 10 - 20% ☐ 20% - over ☐	Gas ☐ Diesel ☐ Other ☐			30080	18070	
Sand ☐ Organic ☐ Clay ☐ Other ☐	0 - 10% ☐ 10 - 20% ☐ 20% - over ☐	Gas ☐ Diesel ☐ Other ☐			17080	7055	

List any exception to items listed above:

Generator's and/or consultant's certification: I/We certify that the soil referenced herein is taken entirely from those soils described in the Soil Data Sheet completed and certified by me/us for the Generation Site shown above and nothing has been added or done to such soil that would alter it in any way.

Print or Type Name: Generator ☐ Consultant ☐ | Signature and date | Month | Day | Year

Transporter

Transporter's certification: I/We acknowledge receipt of the soil described above and certify that such soil is being delivered in exactly the same condition as when received. I/We further certify that this soil is being directly transported from the Generation Site to the Designated Facility without off-loading, adding to, subtracting from or in any way delaying delivery to such site.

Print or Type Name: | Signature and date | Month | Day | Year

Recycling Facility

Discrepancies: [illegible]

Recycling Facility certifies the receipt of the soil covered by this manifest except as noted above.

Print or Type Name: SHARON QUAST / JULI BERT | Signature and date: [illegible]

Please print or type.

COP002203

Manifest

TPS Technologies Soil Recycling
Non-Hazardous Soils

↓ Manifest # ↓

Date of Shipment:	Responsible for Payment:	Transporter Truck #:	Facility #:	Given by TPS:	Load #
6/10/02	GENERATOR	PIVE 25	109	06604	015

Generator's Name and Billing Address:	Generator's Phone #:	Generator's US EPA ID No.
TOSCO MARKETING CO. 3977 LEARY WAY NW SEATTLE, WA 98107 USA	(206) 706-2267	
	Person to Contact: JIM HANSEN	
	FAX #: (206) 706-2339	Customer Account Number with TPS: 1002189

Consultant's Name and Billing Address:	Consultant's Phone #:	
CONLITZ CLEAN ENERG 55 INTERNATIONAL WAY LONGVIEW, WA 98632 USA	(360) 423-2245	
	Person to Contact: DAVE JOHNSON	
	FAX #: (360) 423-2409	Customer Account Number with TPS: 1002579

Generation Site (Transport from): (name & address)	Site Phone #:	BTEX Levels
TOSCO MARKETING COMPANY 5528 NORTHWEST DOANE AVE PORTLAND, OR 97210 USA	(503) 248-1537	
	Person to Contact: HARRY CRAMER	TPH Levels
	FAX #: (503) 248-1560	AVG. Levels

Designated Facility (Transport to): (name & address)	Facility Phone #:	Facility Permit Numbers
TRST SOIL RECYCLERS OF OREGON 9339 N KARMORGATE STREET PORTLAND, OR 97203 USA	503-735-9525	
	Person to Contact: SHARON QUAST	
	FAX #: 503-240-1712	

Transporter Name and Mailing Address:	Transporter's Phone #:	Transporter's US EPA ID No.:
	Person to Contact:	Transporter's DOT No.:
	FAX #:	Customer Account Number with TPS:

Description of Soil	Moisture Content	Contaminated by:	Approx. Qty:	Description of Delivery	Gross Weight	Tare Weight	Net Weight
Sand ☐ Organic ☐ Clay ☐ Other ☐	0-10% ☐ 10-20% ☐ 20%-over ☐	Gas ☐ Diesel ☐ Other ☐			31680	18040	
Sand ☐ Organic ☐ Clay ☐ Other ☐	0-10% ☐ 10-20% ☐ 20%-over ☐	Gas ☐ Diesel ☐ Other ☐			18640	6332	

List any exception to items listed above:

Generator's and/or consultant's certification: I/We certify that the soil referenced herein is taken entirely from those soils described in the Soil Data Sheet completed and certified by me/us for the Generation Site shown above and nothing has been added or done to such soil that would alter it in any way.

Print or Type Name: Generator ☐ Consultant ☐ | Signature and date: | Month | Day | Year

Transporter's certification: I/We acknowledge receipt of the soil described above and certify that such soil is being delivered in exactly the same condition as when received. I/We further certify that this soil is being directly transported from the Generation Site to the Designated Facility without off-loading, adding to, subtracting from or in any way delaying delivery to such site.

Print or Type Name: Ernie Quesada | Signature and date: | Month | Day | Year

Discrepancies:

Recycling Facility certifies the receipt of the soil covered by this manifest except as noted above:

Print or Type Name: SHARON QUAST / JULI BENT | Signature and date: Sharon Quast

Generator and/or Consultant

COP0022040

Manifest

TPS Technologies Soil Recycling

Non-Hazardous Soils

↓ Manifest # ↓

Date of Shipment:	Responsible for Payment:	Transporter Truck #:	Facility #:	Given by TPS:	Load #
1/20/10	Generator	1016	A09	06609	014

Generator's Name and Billing Address:
TOSCO MARKETING CO.
3977 LEARY WAY NW
SEATTLE, WA 98107 USA

Generator's Phone #: (206) 706-2267
Person to Contact: JIM HENSEN
FAX #: (206) 706-2339
Generator's US EPA ID No.:
Customer Account Number with TPS: 1002189

Consultant's Name and Billing Address:
COWLITZ CLEAN SWEEP
55 INTERNATIONAL WAY
LONGVIEW, WA 98632 USA

Consultant's Phone #: (360) 423-2245
Person to Contact: DAVE JOHNSON
FAX #: (360) 423-3409
Customer Account Number with TPS: 1002879

Generation Site (Transport from): *(name & address)*
TOSCO MARKETING COMPANY
5528 NORTHWEST DOANE AVE
PORTLAND, OR 97210 USA

Site Phone #: (503) 249-1547
Person to Contact: MARTY CRAMER
FAX #: (503) 249-1507
BTEX Levels
TPH Levels
AVG Levels

Designated Facility (Transport to): *(name & address)*
TAST SOIL RECYCLERS OF OREGON
9332 N HARBORGATE STREET
PORTLAND, OR 97203 USA

Facility Phone #: 503-726-3525
Person to Contact: SHARON QUAST
FAX #: 503-240-1712
Facility Permit Numbers:

Transporter Name and Mailing Address:

Transporter's Phone #:
Person to Contact:
FAX #:
Transporter's US EPA ID No.:
Transporter's DOT No.:
Customer Account Number with TPS:

Description of Soil	Moisture Content	Contaminated by:	Approx. Qty:	Description of Delivery	Gross Weight	Tare Weight	Net Weight
Sand ☐ Organic ☐ Clay ☐ Other ☐	0 - 10% ☐ 10 - 20% ☐ 20% - over ☐	Gas ☐ Diesel ☐ Other ☐			48 820	39 740	
Sand ☐ Organic ☐ Clay ☐ Other ☐	0 - 10% ☐ 10 - 20% ☐ 20% - over ☐	Gas ☐ Diesel ☐ Other ☐			95 [illegible]	4/ 7[illegible]	

List any exception to items listed above:

Generator's and/or consultant's certification: I/We certify that the soil referenced herein is taken entirely from those soils described in the Soil Data Sheet completed and certified by me/us for the Generation Site shown above and nothing has been added or done to such soil that would alter it in any way.

Print or Type Name: Generator ☐ Consultant ☐
Signature and date: Month Day Year

Transporter's certification: I/We acknowledge receipt of the soil described above and certify that such soil is being delivered in exactly the same condition as when received. I/We further certify that this soil is being directly transported from the Generation Site to the Designated Facility without off-loading, adding to, subtracting from or in any way delaying delivery to such site.

Print or Type Name: [illegible]
Signature and date: Month Day Year

Discrepancies: [illegible]

Recycling Facility certifies the receipt of the soil covered by this manifest except as noted above:

Print or Type Name: SHARON QUAST / JULI BENT
Signature and date:

Generator and/or Consultant — Transporter — Recycling Facility

COP002204

Manifest

TPS Technologies Soil Recycling

Non-Hazardous Soils

↓ Manifest # ↓

Date of Shipment:	Responsible for Payment:	Transporter Truck #:	Facility #:	Given by TPS:	Load #
6/10/02	Generator	PME 85	A09	06604	013

Generator's Name and Billing Address: TOSCO MARKETING CO. 1977 LEARY WAY NW SEATTLE, WA 98107 USA	Generator's Phone #: (206) 706-2267 Person to Contact: JIM HANSEN FAX #: (206) 706-2339	Generator's US EPA ID No. Customer Account Number with TPS: 1002189
Consultant's Name and Billing Address: COWLITZ CLEAN SWEEP 55 INTERNATIONAL WAY LONGVIEW, WA 98632 USA	Consultant's Phone #: (360) 423-2245 Person to Contact: DAVE JOHNSON FAX #: (360) 423-3499	Customer Account Number with TPS: 1002579
Generation Site (Transport from): *(name & address)* TOSCO MARKETING COMPANY 5528 NORTHWEST DOANE AVE PORTLAND, OR 97210 USA	Site Phone #: (503) 249-1613 Person to Contact: MARTY CRAMER FAX #: (503) 249-1560	BTEX Levels TPH Levels AVG. Levels
Designated Facility (Transport to): *(name & address)* TRAT SOIL RECYCLERS OF OREGON 9320 N HARBORGATE STREET PORTLAND, OR 97203 USA	Facility Phone #: 503-735-9525 Person to Contact: SHARON QUAST FAX #: 503-240-1712	Facility Permit Numbers
Transporter Name and Mailing Address:	Transporter's Phone #: Person to Contact: FAX #:	Transporter's US EPA ID No.: Transporter's DOT No.: Customer Account Number with TPS:

Description of Soil	Moisture Content	Contaminated by:	Approx. Qty:	Description of Delivery	Gross Weight	Tare Weight	Net Weight
Sand ☐ Organic ☐ Clay ☐ Other ☐	0-10% ☐ 10-20% ☐ 20% - over ☐	Gas ☐ Diesel ☐ Other ☐			33790	18000	
Sand ☐ Organic ☐ Clay ☐ Other ☐	0-10% ☐ 10-20% ☐ 20% - over ☐	Gas ☐ Diesel ☐ Other ☐			15790	9880	

List any exception to items listed above:

Generator's and/or consultant's certification: I/We certify that the soil referenced herein is taken entirely from those soils described in the Soil Data Sheet completed and certified by me/us for the Generation Site shown above and nothing has been added or done to such soil that would alter it in any way.

Print or Type Name: Generator ☐ Consultant ☐ | Signature and date: Month Day Year

Transporter's certification: I/We acknowledge receipt of the soil described above and certify that such soil is being delivered in exactly the same condition as when received. I/We further certify that this soil is being directly transported from the Generation Site to the Designated Facility without off-loading, adding to, subtracting from or in any way delaying delivery to such site.

Print or Type Name: Frank Quesada | Signature and date: Month Day Year

Discrepancies:

Recycling Facility certifies the receipt of the soil covered by this manifest except as noted above:

Print or Type Name: SHARON QUAST / JULI BENT | Signature and date:

Generator and/or Consultant

COP0022042

Manifest

TPS Technologies Soil Recycling
Non-Hazardous Soils

Manifest #

Date of Shipment:	Responsible for Payment:	Transporter Truck #:	Facility #:	Given by TPS:	Load #
10/10/02	Generator	Dave Sr	A09	06604	012

Generator's Name and Billing Address:
TOSCO MARKETING CO.
3977 LEARY WAY NW
SEATTLE, WA 98107 USA

Generator's Phone #: (206) 706-2267
Person to Contact: JIM HANSEN
FAX #: (206) 706-2339
Generator's US EPA ID No.:
Customer Account Number with TPS: 1002189

Consultant's Name and Billing Address:
COWLITZ CLEAN SWEEP
55 INTERNATIONAL WAY
LONGVIEW, WA 98632 USA

Consultant's Phone #: (360) 423-2245
Person to Contact: DAVE JOHNSON
FAX #: (360) 423-3409
Customer Account Number with TPS: 1002579

Generation Site (Transport from): *(name & address)*
TOSCO MARKETING COMPANY
5528 NORTHWEST DOANE AVE
PORTLAND, OR 97210 USA

Site Phone #: (503) 248-1587
Person to Contact: MARTY CRAMER
FAX #: (503) 248-1588
BTEX Levels
TPH Levels
AVG. Levels

Designated Facility (Transport to): *(name & address)*
TRST SOIL RECYCLERS OF OREGON
9333 N HARBORGATE STREET
PORTLAND, OR 97203 USA

Facility Phone #: 503-735-9525
Person to Contact: SHARON QUAST
FAX #: 503-240-1712
Facility Permit Numbers:

Transporter Name and Mailing Address:

Transporter's Phone #:
Person to Contact:
FAX #:
Transporter's US EPA ID No.:
Transporter's DOT No.:
Customer Account Number with TPS:

Description of Soil	Moisture Content	Contaminated by:	Approx. Qty:	Description of Delivery	Gross Weight	Tare Weight	Net Weight
Sand ☐ Organic ☐ Clay ☐ Other ☐	0 - 10% ☐ 10 - 20% ☐ 20% - over ☐	Gas ☐ Diesel ☐ Other ☐			34230	18000	16230
Sand ☐ Organic ☐ Clay ☐ Other ☐	0 - 10% ☐ 10 - 20% ☐ 20% - over ☐	Gas ☐ Diesel ☐ Other ☐					

8.10

List any exception to items listed above:

Generator's and/or consultant's certification: I/We certify that the soil referenced herein is taken entirely from those soils described in the Soil Data Sheet completed and certified by me/us for the Generation Site shown above and nothing has been added or done to such soil that would alter it in any way.

Print or Type Name: Generator ☐ Consultant ☐
Signature and date: Month Day Year

Transporter's certification: I/We acknowledge receipt of the soil described above and certify that such soil is being delivered in exactly the same condition as when received. I/We further certify that this soil is being directly transported from the Generation Site to the Designated Facility without off-loading, adding to, subtracting from or in any way delaying delivery to such site.

Print or Type Name:
Signature and date: Month Day Year

Discrepancies:

Recycling Facility certifies the receipt of the soil covered by this manifest except as noted above.

Print or Type Name: SHARON QUAST / JULI BENT
Signature and date:

Generator and/or Consultant

Transporter

Recycling Facility

COP002204

Manifest

TPS Technologies Soil Recycling
Non-Hazardous Soils

↓ Manifest # ↓

Date of Shipment:	Responsible for Payment:	Transporter Truck #:	Facility #:	Given by TPS:	Load #
01/7/02	Generator	PAE 85	109	06604	011

Generator and/or Consultant

Generator's Name and Billing Address: TOSCO MARKETING CO. 3977 LEARY WAY NW SEATTLE, WA 98107 USA	Generator's Phone #: (206) 706-2267 Person to Contact: JIM HANSEN FAX #: (206) 706-2339	Generator's US EPA ID No.: Customer Account Number with TPS: 1002189
Consultant's Name and Billing Address: COWLITZ CLEAN SWEEP 53 INTERNATIONAL WAY LONGVIEW, WA 98632 USA	Consultant's Phone #: (360) 423-2245 Person to Contact: DAVE JOHNSON FAX #: (360) 423-3408	Customer Account Number with TPS: 1002579
Generation Site (Transport from): *(name & address)* TOSCO MARKETING COMPANY 5628 NORTHWEST DORNE AVE PORTLAND, OR 97210 USA	Site Phone #: (503) 248-1517 Person to Contact: HARRY CRAMER FAX #: (503) 248-1567	BTEX Levels: TPH Levels: AVG. Levels:
Designated Facility (Transport to): *(name & address)* TPST SOIL RECYCLERS OF OREGON 9333 N HARBORGATE STREET PORTLAND, OR 97203 USA	Facility Phone #: 503-735-9525 Person to Contact: SHARON QUAST FAX #: 503-240-1712	Facility Permit Numbers:
Transporter Name and Mailing Address:	Transporter's Phone #: Person to Contact: FAX #:	Transporter's US EPA ID No.: Transporter's DOT No.: Customer Account Number with TPS:

Description of Soil	Moisture Content	Contaminated by:	Approx. Qty:	Description of Delivery	Gross Weight	Tare Weight	Net Weight
Sand ☐ Organic ☐ Clay ☐ Other ☐	0 - 10% ☐ 10 - 20% ☐ 20% - over ☐	Gas ☐ Diesel ☐ Other ☐			32620	18140	
Sand ☐ Organic ☐ Clay ☐ Other ☐	0 - 10% ☐ 10 - 20% ☐ 20% - over ☐	Gas ☐ Diesel ☐ Other ☐			13880	6924	

List any exception to items listed above:

Generator's and/or consultant's certification: I/We certify that the soil referenced herein is taken entirely from those soils described in the Soil Data Sheet completed and certified by me/us for the Generation Site shown above and nothing has been added or done to such soil that would alter it in any way.

Print or Type Name: Generator ☐ Consultant ☐ | Signature and date: | Month | Day | Year

Transporter

Transporter's certification: I/We acknowledge receipt of the soil described above and certify that such soil is being delivered in exactly the same condition as when received. I/We further certify that this soil is being directly transported from the Generation Site to the Designated Facility without off-loading, adding to, subtracting from or in any way delaying delivery to such site.

Print or Type Name: Ernie Quesada | Signature and date: | Month | Day | Year

Recycling Facility

Discrepancies:

Recycling Facility certifies the receipt of the soil covered by this manifest except as noted above:

Print or Type Name: SHARON QUAST / JULI BENT | Signature and date: Sharon Quast

COP0022044

Manifest

TPS Technologies Soil Recycling

Non-Hazardous Soils

Manifest #

Date of Shipment:	Responsible for Payment:	Transporter Truck #:	Facility #:	Given by TPS:	Load #
10/9/02	Generator	PNE #55	409	06604	019

Generator's Name and Billing Address: TOSCO MARKETING CO. 3977 LEARY WAY NW SEATTLE, WA 98107 USA	Generator's Phone #: (206) 706-2267 Person to Contact: JIM HANSEN FAX #: (206) 706-2339	Generator's US EPA ID No. Customer Account Number with TPS: 1002189
Consultant's Name and Billing Address: COWLITZ CLEAN SWEEP 55 INTERNATIONAL WAY LONGVIEW, WA 98632 USA	Consultant's Phone #: (360) 423-2245 Person to Contact: DAVE JOHNSON FAX #: (360) 423-3409	Customer Account Number with TPS: 1002573
Generation Site (Transport from): *(name & address)* TOSCO MARKETING COMPANY 5528 NORTHWEST DOANE AVE PORTLAND, OR 97210 USA	Site Phone #: (503) 248-1537 Person to Contact: MARTY CRAMER FAX #: (503) 248-1592	BTEX Levels TPH Levels AVG. Levels
Designated Facility (Transport to): *(name & address)* TPST SOIL RECYCLERS OF OREGON 9330 N HARBORGATE STREET PORTLAND, OR 97203 USA	Facility Phone #: 503-735-9525 Person to Contact: SHARON QUAST FAX #: 503-240-1712	Facility Permit Numbers
Transporter Name and Mailing Address:	Transporter's Phone #: Person to Contact: FAX #:	Transporter's US EPA ID No.: Transporter's DOT No.: Customer Account Number with TPS:

Description of Soil	Moisture Content	Contaminated by:	Approx. Qty:	Description of Delivery	Gross Weight	Tare Weight	Net Weight
Sand ☐ Organic ☐ Clay ☐ Other ☐	0 - 10% ☐ 10 - 20% ☐ 20% - over ☐	Gas ☐ Diesel ☐ Other ☐			37640	15140	
Sand ☐ Organic ☐ Clay ☐ Other ☐	0 - 10% ☐ 10 - 20% ☐ 20% - over ☐	Gas ☐ Diesel ☐ Other ☐			14500	7025	

List any exception to items listed above:

Generator's and/or consultant's certification: I/We certify that the soil referenced herein is taken entirely from those soils described in the Soil Data Sheet completed and certified by me/us for the Generation Site shown above and nothing has been added or done to such soil that would alter it in any way.

Print or Type Name: Generator ☐ Consultant ☐ | Signature and date: | Month | Day | Year

Transporter

Transporter's certification: I/We acknowledge receipt of the soil described above and certify that such soil is being delivered in exactly the same condition as when received. I/We further certify that this soil is being directly transported from the Generation Site to the Designated Facility without off-loading, adding to, subtracting from or in any way delaying delivery to such site.

Print or Type Name: Frank Dispot | Signature and date: | Month | Day | Year

Recycling Facility

Discrepancies:

Recycling Facility certifies the receipt of the soil covered by this manifest except as noted above:

Print or Type Name: SHARON QUAST / JULI SENT | Signature and date:

Please print or type.

COP002204

Manifest

TPS Technologies Soil Recycling

Non-Hazardous Soils

↓ Manifest # ↓

Date of Shipment:	Responsible for Payment:	Transporter Truck #:	Facility #:	Given by TPS:	Load #
6/7/02	Generator	DN 85	509	06604	009

Generator's Name and Billing Address: TOSCO MARKETING CO. 3977 LEARY WAY NW SEATTLE, WA 98107 USA	Generator's Phone #: (206) 706-2267	Generator's US EPA ID No.
	Person to Contact: JIM HANSEN	
	FAX #: (206) 706-3339	Customer Account Number with TPS: 1002189
Consultant's Name and Billing Address: COWLITZ CLEAN SWEEP 55 INTERNATIONAL WAY LONGVIEW, WA 98632 USA	Consultant's Phone #: (360) 423-2245	
	Person to Contact: DAVE JOHNSON	
	FAX #: (360) 423-3409	Customer Account Number with TPS: 1002579
Generation Site (Transport from): *(name & address)* TOSCO MARKETING COMPANY 2528 NORTHWEST DOANE AVE PORTLAND, OR 97210 USA	Site Phone #: (503) 248-1517	BTEX Levels
	Person to Contact: MARTY CRAMER	TPH Levels
	FAX #: (503) 248-1592	AVG. Levels
Designated Facility (Transport to): *(name & address)* TPST SOIL RECYCLERS OF OREGON 9933 N HARBORGATE STREET PORTLAND, OR 97203 USA	Facility Phone #: 503-735-9525	Facility Permit Numbers
	Person to Contact: SHARON QUAST	
	FAX #: 503-240-1712	
Transporter Name and Mailing Address:	Transporter's Phone #:	Transporter's US EPA ID No.:
	Person to Contact:	Transporter's DOT No.:
	FAX #:	Customer Account Number with TPS:

Description of Soil	Moisture Content	Contaminated by:	Approx. Qty:	Description of Delivery	Gross Weight	Tare Weight	Net Weight
Sand ☐ Organic ☐ Clay ☐ Other ☐	0 - 10% ☐ 10 - 20% ☐ 20% - over ☐	Gas ☐ Diesel ☐ Other ☐		3	1820	18100	
Sand ☐ Organic ☐ Clay ☐ Other ☐	0 - 10% ☐ 10 - 20% ☐ 20% - over ☐	Gas ☐ Diesel ☐ Other ☐		1	3820	6-11	

List any exception to items listed above:

Generator's and/or consultant's certification: I/We certify that the soil referenced herein is taken entirely from those soils described in the Soil Data Sheet completed and certified by me/us for the Generation Site shown above and nothing has been added or done to such soil that would alter it in any way.

Print or Type Name: Generator ☐ Consultant ☐ | Signature and date: Month Day Year

Transporter's certification: I/We acknowledge receipt of the soil described above and certify that such soil is being delivered in exactly the same condition as when received. I/We further certify that this soil is being directly transported from the Generation Site to the Designated Facility without off-loading, adding to, subtracting from or in any way delaying delivery to such site.

Print or Type Name: Ernie Quesada | Signature and date: Month Day Year

Discrepancies:

Recycling Facility certifies the receipt of the soil covered by this manifest except as noted above:

Print or Type Name: SHARON QUAST / JULI BENT | Signature and date: Sharon Quast

Generator and/or Consultant

Transporter

Recycling Facility

COP0022046

Manifest

TPS Technologies Soil Recycling

Non-Hazardous Soils

↓ Manifest # ↓

Date of Shipment:	Responsible for Payment:	Transporter Truck #:	Facility #:	Given by TPS:	Load #
01/10/02	Generator	AVE 185	409	06604	008

Generator and/or Consultant

Generator's Name and Billing Address: TOSCO MARKETING CO. 3977 LEARY WAY NW SEATTLE, WA 98107 USA	Generator's Phone #: (206) 706-2267 Person to Contact: JIM HANSEN FAX #: (206) 706-2339	Generator's US EPA ID No. Customer Account Number with TPS: 1002159
Consultant's Name and Billing Address: COMLITE CLEAN SWEEP 55 INTERNATIONAL WAY LONGVIEW, WA 98632 USA	Consultant's Phone #: (360) 423-2245 Person to Contact: DAVE JOHNSON FAX #: (360) 423-3409	Customer Account Number with TPS: 1002579
Generation Site (Transport from): (name & address) TOSCO MARKETING COMPANY 5528 NORTHWEST DOANE AVE PORTLAND, OR 97210 USA	Site Phone #: (503) 248-1517 Person to Contact: MARTY CRAMER FAX #: (503) 248-1592	BTEX Levels TPH Levels AVG. Levels
Designated Facility (Transport to): (name & address) TPST SOIL RECYCLERS OF OREGON 9333 N HARBOR/GATE STREET PORTLAND, OR 97203 USA	Facility Phone #: 503-735-9525 Person to Contact: SHARON QUAST FAX #: 503-240-1712	Facility Permit Numbers
Transporter Name and Mailing Address:	Transporter's Phone #: Person to Contact: FAX #:	Transporter's US EPA ID No.: Transporter's DOT No.: Customer Account Number with TPS:

Description of Soil	Moisture Content	Contaminated by:	Approx. Qty:	Description of Delivery	Gross Weight	Tare Weight	Net Weight
Sand ☐ Organic ☐ Clay ☐ Other ☐	0 - 10% ☐ 10 - 20% ☐ 20% - over ☐	Gas ☐ Diesel ☐ Other ☐			32240	18120	
Sand ☐ Organic ☐ Clay ☐ Other ☐	0 - 10% ☐ 10 - 20% ☐ 20% - over ☐	Gas ☐ Diesel ☐ Other ☐			14120	7060	

List any exception to items listed above:

Generator's and/or consultant's certification: I/We certify that the soil referenced herein is taken entirely from those soils described in the Soil Data Sheet completed and certified by me/us for the Generation Site shown above and nothing has been added or done to such soil that would alter it in any way.

Print or Type Name: Generator ☐ Consultant ☐ | Signature and date: | Month | Day | Year

Transporter

Transporter's certification: I/We acknowledge receipt of the soil described above and certify that such soil is being delivered in exactly the same condition as when received. I/We further certify that this soil is being directly transported from the Generation Site to the Designated Facility without off-loading, adding to, subtracting from or in any way delaying delivery to such site.

Print or Type Name: Frank Owsley | Signature and date: | Month | Day | Year

Recycling Facility

Discrepancies:

Recycling Facility certifies the receipt of the soil covered by this manifest except as noted above:

Print or Type Name: SHARON QUAST / JULI BETT | Signature and date:

COP002204

Manifest

TPS Technologies Soil Recycling
Non-Hazardous Soils

↓ Manifest # ↓

Date of Shipment:	Responsible for Payment:	Transporter Truck #:	Facility #:	Given by TPS:	Load #
4/7/02	Generator	PNC #85	109	06604	007

Generator's Name and Billing Address: TOSCO MARKETING CO. 3977 LEARY WAY NW SEATTLE, WA 98107 USA	Generator's Phone #: (206) 706-2267	Generator's US EPA ID No.:
	Person to Contact: JIM HANSEN	
	FAX #: (206) 706-2339	Customer Account Number with TPS: 1002189
Consultant's Name and Billing Address: COWLITZ CLEAN SWEEP 55 INTERNATIONAL WAY LONGVIEW, WA 98632 USA	Consultant's Phone #: (360) 423-2245	
	Person to Contact: DAVE JOHNSON	
	FAX #: (360) 423-3409	Customer Account Number with TPS: 1002579
Generation Site (Transport from): *(name & address)* TOSCO MARKETING COMPANY 5528 NORTHWEST DOANE AVE PORTLAND, OR 97210 USA	Site Phone #: (503) 248-1317	BTEX Levels
	Person to Contact: MARTY CRAMER	TPH Levels
	FAX #: (503) 248-1692	AVC Levels
Designated Facility (Transport to): *(name & address)* WEST SOIL RECYCLERS OF OREGON 9333 N HARBORGATE STREET PORTLAND, OR 97203 USA	Facility Phone #: 503-735-9926	Facility Permit Numbers:
	Person to Contact: SHARON QUAST	
	FAX #: 503-240-1712	
Transporter Name and Mailing Address:	Transporter's Phone #:	Transporter's US EPA ID No.:
	Person to Contact:	Transporter's DOT No.:
	FAX #:	Customer Account Number with TPS:

Description of Soil	Moisture Content	Contaminated by:	Approx. Qty:	Description of Delivery	Gross Weight	Tare Weight	Net Weight
Sand ☐ Organic ☐ Clay ☐ Other ☐	0 - 10% ☐ 10 - 20% ☐ 20% - over ☐	Gas ☐ Diesel ☐ Other ☐			30880	18140	
Sand ☐ Organic ☐ Clay ☐ Other ☐	0 - 10% ☐ 10 - 20% ☐ 20% - over ☐	Gas ☐ Diesel ☐ Other ☐			12720	6636	

List any exception to items listed above:

Generator's and/or consultant's certification: I/We certify that the soil referenced herein is taken entirely from those soils described in the Soil Data Sheet completed and certified by me/us for the Generation Site shown above and nothing has been added or done to such soil that would alter it in any way.

Print or Type Name: Generator ☐ Consultant ☐ | Signature and date: | Month | Day | Year

Transporter's certification: I/We acknowledge receipt of the soil described above and certify that such soil is being delivered in exactly the same condition as when received. I/We further certify that this soil is being directly transported from the Generation Site to the Designated Facility without off-loading, adding to, subtracting from or in any way delaying delivery to such site.

Print or Type Name: Bursda | Signature and date: | Month | Day | Year

Discrepancies:

Recycling Facility certifies the receipt of the soil covered by this manifest except as noted above:

Print or Type Name: SHARON QUAST / JULI BENT | Signature and date:

Generator and/or Consultant — Transporter — Recycling Facility

Please print or type.

COP0022048

ATTACHMENT D

REPORT LIMITATIONS AND GUIDELINES FOR USE

ATTACHMENT D

REPORT LIMITATIONS AND GUIDELINES FOR USE[1]

This attachment provides information to help you manage your risks with respect to the use of this report.

ENVIRONMENTAL SERVICES ARE PERFORMED FOR SPECIFIC PURPOSES, PERSONS AND PROJECTS

This report has been prepared for use by Tosco Corporation. This report is not intended for use by others, and the information contained herein is not applicable to other sites.

GeoEngineers structures our services to meet the specific needs of our clients. For example, an environmental site assessment study conducted for a property owner may not fulfill the needs of a prospective purchaser of the same property. Because each environmental study is unique, each environmental report is unique, prepared solely for the specific client and project site. No one except Tosco Corporation should rely on this environmental report without first conferring with GeoEngineers. This report should not be applied for any purpose or project except the one originally contemplated.

THIS ENVIRONMENTAL REPORT IS BASED ON A UNIQUE SET OF PROJECT-SPECIFIC FACTORS

This report has been prepared for Tosco Portland Terminal. GeoEngineers considered a number of unique, project-specific factors when establishing the scope of services for this project and report. Unless GeoEngineers specifically indicates otherwise, do not rely on this report if it was:

- not prepared for you,
- not prepared for your project,
- not prepared for the specific site explored, or
- completed before important project changes were made.

If important changes are made after the date of this report, GeoEngineers should be given the opportunity to review our interpretations and recommendations and provide written modifications or confirmation, as appropriate.

RELIANCE CONDITIONS FOR THIRD PARTIES

If a lending agency or other parties intend to place legal reliance on the product of our services, we require that those parties indicate in writing their acknowledgement that the scope of services provided, and the general conditions under which the services were rendered including

[1] Developed based on material provided by ASFE, Professional Firms Practicing in the Geosciences; www.asfe.org.

the limitation of professional liability, are understood and accepted by them. This is to provide our firm with reasonable protection against open-ended liability claims by third parties with whom there would otherwise be no contractual limits to their actions.

ENVIRONMENTAL REGULATIONS ARE ALWAYS EVOLVING

Some substances may be present in the site vicinity in quantities or under conditions that may have led, or may lead, to contamination of the subject site, but are not included in current local, state or federal regulatory definitions of hazardous substances or do not otherwise present current potential liability. GeoEngineers cannot be responsible if the standards for appropriate inquiry, or regulatory definitions of hazardous substance, change or if more stringent environmental standards are developed in the future.

UNCERTAINTY MAY REMAIN EVEN AFTER THIS PHASE IS COMPLETED

No investigation can wholly eliminate uncertainty regarding the potential for contamination in connection with a property. Our interpretation of subsurface conditions in this study is based on field observations and chemical analytical data from widely spaced sampling locations. It is always possible that contamination exists in areas that were not explored, sampled or analyzed.

SUBSURFACE CONDITIONS CAN CHANGE

This environmental report is based on conditions that existed at the time the study was performed. The findings and conclusions of this report may be affected by the passage of time, by man-made events such as construction on or adjacent to the site, by new releases of hazardous substances, or by natural events such as floods, earthquakes, slope instability or ground water fluctuations. Always contact GeoEngineers before applying this report to determine if it is still applicable.

MOST ENVIRONMENTAL FINDINGS ARE PROFESSIONAL OPINIONS

Our interpretations of subsurface conditions are based on field observations and chemical analytical data from widely spaced sampling locations at the site. Site exploration identifies subsurface conditions only at those points where subsurface tests are conducted or samples are taken. GeoEngineers reviewed field and laboratory data and then applied our professional judgment to render an opinion about subsurface conditions throughout the site. Actual subsurface conditions may differ – sometimes significantly – from those indicated in this report. Our report, conclusions and interpretations should not be construed as a warranty of the subsurface conditions.

DO NOT REDRAW THE EXPLORATION LOGS

Environmental scientists prepare final boring and testing logs based upon their interpretation of field logs and laboratory data. To prevent errors or omissions, the logs included in an

environmental report should never be redrawn for inclusion in other design drawings. Only photographic or electronic reproduction is acceptable, but recognize that separating logs from the report can elevate risk.

READ THESE PROVISIONS CLOSELY

Some clients, design professionals and contractors may not recognize that the geoscience practices (geotechnical engineering, geology and environmental science) are far less exact than other engineering and natural science disciplines. This lack of understanding can create unrealistic expectations that could lead to disappointments, claims and disputes. GeoEngineers includes these explanatory "limitations" provisions in our reports to help reduce such risks. Please confer with GeoEngineers if you are unclear how these "Report Limitations and Guidelines for Use" apply to your project or site.

GEOTECHNICAL, GEOLOGIC AND GEOENVIRONMENTAL REPORTS SHOULD NOT BE INTERCHANGED

The equipment, techniques and personnel used to perform an environmental study differ significantly from those used to perform a geotechnical or geologic study and vice versa. For that reason, a geotechnical engineering or geologic report does not usually relate any environmental findings, conclusions or recommendations; e.g., about the likelihood of encountering underground storage tanks or regulated contaminants. Similarly, environmental reports are not used to address geotechnical or geologic concerns regarding a specific project.

COP0022053

COP0022054

COP0022055

COP0022056

COP0022057

COP0022058

05.10.2010 14:43

COP0022060

TestAmerica
THE LEADER IN ENVIRONMENTAL TESTING

PORTLAND, OR 9405 S.W. NIMBUS AVENUE
BEAVERTON, OR 97008-7132
ph: (503) 906.9200 fax: (503) 906.9210

ORELAP#: OR100021

May 24, 2010

Alice Larsen
Stantec
7730 SW Mohawk Street
Tualatin, OR 97062

RE: Portland Terminal

Enclosed are the results of analyses for samples received by the laboratory on 05/10/10 17:40. The following list is a summary of the Work Orders contained in this report, generated on 05/24/10 15:59.

If you have any questions concerning this report, please feel free to contact me.

Work Order	Project	ProjectNumber
PTE0253	Portland Terminal	0922 - ConocoPhillips

TestAmerica Portland

Estella K Rieben

Estella Rieben, Project Manager

The results in this report apply to the samples analyzed in accordance with the chain of custody document. This analytical report shall not be reproduced except in full, without the written approval of the laboratory.

TestAmerica
THE LEADER IN ENVIRONMENTAL TESTING

PORTLAND, OR 9405 S.W. NIMBUS AVENUE
BEAVERTON, OR 97008-7132
ph: (503) 906.9200 fax: (503) 906.9210

Stantec	Project Name:	**Portland Terminal**	
7730 SW Mohawk Street	Project Number:	0922 - ConocoPhillips	Report Created:
Tualatin, OR 97062	Project Manager:	Alice Larsen	05/24/10 15:59

ANALYTICAL REPORT FOR SAMPLES

Sample ID	Laboratory ID	Matrix	Date Sampled	Date Received
922-MC/CP-SS-1	PTE0253-01	Soil	05/10/10 15:00	05/10/10 17:40
922-MC/CP-SS-2	PTE0253-02	Soil	05/10/10 15:10	05/10/10 17:40
922-MC/CP-SS-3	PTE0253-03	Soil	05/10/10 15:20	05/10/10 17:40
922-MC/CP-SS-4	PTE0253-04	Soil	05/10/10 15:30	05/10/10 17:40
922-MC/CP-SS-5	PTE0253-05	Soil	05/10/10 14:10	05/10/10 17:40
922-MC/CP-Drum-1	PTE0253-06	Soil	05/10/10 15:25	05/10/10 17:40
922-MC/CP-Drum-2	PTE0253-07	Soil	05/10/10 14:00	05/10/10 17:40

TestAmerica Portland

Estella K Rieben

Estella Rieben, Project Manager

The results in this report apply to the samples analyzed in accordance with the chain of custody document. This analytical report shall not be reproduced except in full, without the written approval of the laboratory.

TestAmerica
THE LEADER IN ENVIRONMENTAL TESTING

PORTLAND, OR 9405 S.W. NIMBUS AVENUE
BEAVERTON, OR 97008-7132
ph: (503) 906.9200 fax: (503) 906.9210

Stantec	Project Name:	**Portland Terminal**	
7730 SW Mohawk Street	Project Number:	0922 - ConocoPhillips	Report Created:
Tualatin, OR 97062	Project Manager:	Alice Larsen	05/24/10 15:59

Gasoline Hydrocarbons per NW TPH-Gx Method

TestAmerica Portland

Analyte	Method	Result	MDL*	MRL	Units	Dil	Batch	Prepared	Analyzed	Notes
PTE0253-06 (922-MC/CP-Drum-1)			**Soil**			**Sampled: 05/10/10 15:25**				
Gasoline Range Hydrocarbons	NW TPH-Gx	**2720**	---	86.4	mg/kg dry	20x	10E0304	05/11/10 07:00	05/11/10 10:28	Q1
Surrogate(s): a,a,a-TFT (FID)				*166%*		*50 - 150 %*	"		"	*Z3*
PTE0253-07 (922-MC/CP-Drum-2)			**Soil**			**Sampled: 05/10/10 14:00**				
Gasoline Range Hydrocarbons	NW TPH-Gx	**1310**	---	87.0	mg/kg dry	20x	10E0304	05/11/10 07:00	05/11/10 11:03	Q1
Surrogate(s): a,a,a-TFT (FID)				*133%*		*50 - 150 %*	"		"	

TestAmerica Portland

Estella K Rieben

Estella Rieben, Project Manager

The results in this report apply to the samples analyzed in accordance with the chain of custody document. This analytical report shall not be reproduced except in full, without the written approval of the laboratory.

TestAmerica
THE LEADER IN ENVIRONMENTAL TESTING

PORTLAND, OR 9405 S.W. NIMBUS AVENUE
BEAVERTON, OR 97008-7132
ph: (503) 906.9200 fax: (503) 906.9210

Stantec	Project Name:	**Portland Terminal**	
7730 SW Mohawk Street	Project Number:	0922 - ConocoPhillips	Report Created:
Tualatin, OR 97062	Project Manager:	Alice Larsen	05/24/10 15:59

Diesel and Heavy Range Hydrocarbons per NWTPH-Dx Method with Acid/Silica Gel Cleanup

TestAmerica Portland

Analyte	Method	Result	MDL*	MRL	Units	Dil	Batch	Prepared	Analyzed	Notes
PTE0253-01 (922-MC/CP-SS-1)			**Soil**			**Sampled: 05/10/10 15:00**				
Diesel Range Organics	NWTPH-Dx	ND	----	13.6	mg/kg dry	1x	10E0352	05/11/10 22:00	05/12/10 08:24	
Residual Range/Heavy Oil Organics	"	ND	----	27.3	"	"	"	"	"	
Surrogate(s): 1-Chlorooctadecane				*86.7%*		*50 - 150 %*	"		"	
PTE0253-02 (922-MC/CP-SS-2)			**Soil**			**Sampled: 05/10/10 15:10**				
Diesel Range Organics	NWTPH-Dx	**19900**	----	277	mg/kg dry	20x	10E0352	05/11/10 22:00	05/12/10 11:05	
Residual Range/Heavy Oil Organics	"	ND	----	554	"	"	"	"	"	RL7
Surrogate(s): 1-Chlorooctadecane				*NR*		*50 - 150 %*	"		"	*Z3*
PTE0253-03 (922-MC/CP-SS-3)			**Soil**			**Sampled: 05/10/10 15:20**				
Diesel Range Organics	NWTPH-Dx	**8840**	----	137	mg/kg dry	10x	10E0352	05/11/10 22:00	05/12/10 11:24	
Residual Range/Heavy Oil Organics	"	ND	----	274	"	"	"	"	"	RL7
Surrogate(s): 1-Chlorooctadecane				*NR*		*50 - 150 %*	"		"	*ZX*
PTE0253-04 (922-MC/CP-SS-4)			**Soil**			**Sampled: 05/10/10 15:30**				
Diesel Range Organics	NWTPH-Dx	**38.6**	----	13.8	mg/kg dry	1x	10E0352	05/11/10 22:00	05/12/10 09:17	
Residual Range/Heavy Oil Organics	"	ND	----	27.7	"	"	"	"	"	
Surrogate(s): 1-Chlorooctadecane				*86.3%*		*50 - 150 %*	"		"	
PTE0253-05 (922-MC/CP-SS-5)			**Soil**			**Sampled: 05/10/10 14:10**				
Diesel Range Organics	NWTPH-Dx	**53.8**	----	14.6	mg/kg dry	1x	10E0352	05/11/10 22:00	05/12/10 09:34	
Residual Range/Heavy Oil Organics	"	ND	----	29.3	"	"	"	"	"	
Surrogate(s): 1-Chlorooctadecane				*88.1%*		*50 - 150 %*	"		"	
PTE0253-06 (922-MC/CP-Drum-1)			**Soil**			**Sampled: 05/10/10 15:25**				
Diesel Range Organics	NWTPH-Dx	**47300**	----	695	mg/kg dry	50x	10E0352	05/11/10 22:00	05/12/10 11:41	
Residual Range/Heavy Oil Organics	"	ND	----	1390	"	"	"	"	"	RL7
Surrogate(s): 1-Chlorooctadecane				*206%*		*50 - 150 %*	"		"	*Z3*
PTE0253-07 (922-MC/CP-Drum-2)			**Soil**			**Sampled: 05/10/10 14:00**				

TestAmerica Portland

Estella K Rieben

Estella Rieben, Project Manager

The results in this report apply to the samples analyzed in accordance with the chain of custody document. This analytical report shall not be reproduced except in full, without the written approval of the laboratory.

TestAmerica
THE LEADER IN ENVIRONMENTAL TESTING

PORTLAND, OR 9405 S.W. NIMBUS AVENUE
BEAVERTON, OR 97008-7132
ph: (503) 906.9200 fax: (503) 906.9210

Stantec	Project Name:	**Portland Terminal**	
7730 SW Mohawk Street	Project Number:	0922 - ConocoPhillips	Report Created:
Tualatin, OR 97062	Project Manager:	Alice Larsen	05/24/10 15:59

Diesel and Heavy Range Hydrocarbons per NWTPH-Dx Method with Acid/Silica Gel Cleanup

TestAmerica Portland

Analyte	Method	Result	MDL*	MRL	Units	Dil	Batch	Prepared	Analyzed	Notes
PTE0253-07 (922-MC/CP-Drum-2)			**Soil**			**Sampled: 05/10/10 14:00**				
Diesel Range Organics	NWTPH-Dx	**17800**	---	276	mg/kg dry	20x	10E0352	05/11/10 22:00	05/12/10 11:57	
Residual Range/Heavy Oil Organics	"	ND	---	552	"	"	"	"	"	RL7
Surrogate(s): 1-Chlorooctadecane				*75.3%*		*50 - 150 %*	"		"	*Z3*

TestAmerica Portland

Estella K Rieben

Estella Rieben, Project Manager

The results in this report apply to the samples analyzed in accordance with the chain of custody document. This analytical report shall not be reproduced except in full, without the written approval of the laboratory.

TestAmerica
THE LEADER IN ENVIRONMENTAL TESTING

PORTLAND, OR 9405 S.W. NIMBUS AVENUE
BEAVERTON, OR 97008-7132
ph: (503) 906.9200 fax: (503) 906.9210

Stantec	Project Name:	**Portland Terminal**	
7730 SW Mohawk Street	Project Number:	0922 - ConocoPhillips	Report Created:
Tualatin, OR 97062	Project Manager:	Alice Larsen	05/24/10 15:59

TCLP Metals per EPA 1311/6000/7000 Series Methods

TestAmerica Portland

Analyte	Method	Result	MDL*	MRL	Units	Dil	Batch	Prepared	Analyzed	Notes
PTE0253-06 (922-MC/CP-Drum-1)			**Soil**			**Sampled: 05/10/10 15:25**				
Lead	1311/6020	**0.0257**	---	0.0100	mg/l	1x	10E0422	05/13/10 12:41	05/14/10 05:22	
PTE0253-07 (922-MC/CP-Drum-2)			**Soil**			**Sampled: 05/10/10 14:00**				
Lead	1311/6020	ND	---	0.0100	mg/l	1x	10E0422	05/13/10 12:41	05/14/10 05:46	

TestAmerica Portland

Estella K Rieben

Estella Rieben, Project Manager

The results in this report apply to the samples analyzed in accordance with the chain of custody document. This analytical report shall not be reproduced except in full, without the written approval of the laboratory.

TestAmerica
THE LEADER IN ENVIRONMENTAL TESTING

PORTLAND, OR 9405 S.W. NIMBUS AVENUE
BEAVERTON, OR 97008-7132
ph: (503) 906.9200 fax: (503) 906.9210

Stantec	Project Name:	**Portland Terminal**	
7730 SW Mohawk Street	Project Number:	0922 - ConocoPhillips	Report Created:
Tualatin, OR 97062	Project Manager:	Alice Larsen	05/24/10 15:59

TCLP Volatile Organic Compounds per EPA Method 1311/8260B

TestAmerica Portland

Analyte	Method	Result	MDL*	MRL	Units	Dil	Batch	Prepared	Analyzed	Notes
PTE0253-06 (922-MC/CP-Drum-1)			**Soil**			**Sampled: 05/10/10 15:25**				
Benzene	1311/8260B	**0.0137**	---	0.0100	mg/l	1x	10E0726	05/21/10 14:33	05/22/10 14:22	
Surrogate(s): 4-BFB				*108%*		*75 - 130 %*	*0.1x*			"
Dibromofluoromethane				*96.1%*		*75 - 130 %*	"			"
Toluene-d8				*102%*		*75 - 130 %*	"			"
PTE0253-07 (922-MC/CP-Drum-2)			**Soil**			**Sampled: 05/10/10 14:00**				
Benzene	1311/8260B	ND	---	0.0100	mg/l	1x	10E0726	05/21/10 14:33	05/22/10 14:00	
Surrogate(s): 4-BFB				*108%*		*75 - 130 %*	*0.1x*			"
Dibromofluoromethane				*97.3%*		*75 - 130 %*	"			"
Toluene-d8				*102%*		*75 - 130 %*	"			"

TestAmerica Portland

Estella K Rieben

Estella Rieben, Project Manager

The results in this report apply to the samples analyzed in accordance with the chain of custody document. This analytical report shall not be reproduced except in full, without the written approval of the laboratory.

TestAmerica
THE LEADER IN ENVIRONMENTAL TESTING

PORTLAND, OR 9405 S.W. NIMBUS AVENUE
BEAVERTON, OR 97008-7132
ph: (503) 906.9200 fax: (503) 906.9210

Stantec	Project Name:	**Portland Terminal**	
7730 SW Mohawk Street	Project Number:	0922 - ConocoPhillips	Report Created:
Tualatin, OR 97062	Project Manager:	Alice Larsen	05/24/10 15:59

TCLP Extraction Only

TestAmerica Portland

Analyte	Method	Result	MDL*	MRL	Units	Dil	Batch	Prepared	Analyzed	Notes
PTE0253-06 (922-MC/CP-Drum-1)			**Soil**			**Sampled: 05/10/10 15:25**				
Extraction	EPA 1311	ND	---	1.00	N/A	1x	10E0421	05/12/10 18:00	05/13/10 12:34	
PTE0253-07 (922-MC/CP-Drum-2)			**Soil**			**Sampled: 05/10/10 14:00**				
Extraction	EPA 1311	ND	---	1.00	N/A	1x	10E0421	05/12/10 18:00	05/13/10 12:34	

TestAmerica Portland

Estella K Rieben

Estella Rieben, Project Manager

The results in this report apply to the samples analyzed in accordance with the chain of custody document. This analytical report shall not be reproduced except in full, without the written approval of the laboratory.

TestAmerica
THE LEADER IN ENVIRONMENTAL TESTING

PORTLAND, OR 9405 S.W. NIMBUS AVENUE
BEAVERTON, OR 97008-7132
ph: (503) 906.9200 fax: (503) 906.9210

Stantec	Project Name:	**Portland Terminal**	
7730 SW Mohawk Street	Project Number:	0922 - ConocoPhillips	Report Created:
Tualatin, OR 97062	Project Manager:	Alice Larsen	05/24/10 15:59

Percent Dry Weight (Solids) per ASTM D2216-80

TestAmerica Portland

Analyte	Method	Result	MDL*	MRL	Units	Dil	Batch	Prepared	Analyzed	Notes
PTE0253-01 (922-MC/CP-SS-1)			**Soil**			**Sampled: 05/10/10 15:00**				
% Solids	ASTM D2216-80	**91.3**	---	0.0100	% by Weight	1x	10E0297	05/10/10 19:01	05/10/10 19:01	
PTE0253-02 (922-MC/CP-SS-2)			**Soil**			**Sampled: 05/10/10 15:10**				
% Solids	ASTM D2216-80	**89.3**	---	0.0100	% by Weight	1x	10E0297	05/10/10 19:01	05/10/10 19:01	
PTE0253-03 (922-MC/CP-SS-3)			**Soil**			**Sampled: 05/10/10 15:20**				
% Solids	ASTM D2216-80	**89.6**	---	0.0100	% by Weight	1x	10E0297	05/10/10 19:01	05/10/10 19:01	
PTE0253-04 (922-MC/CP-SS-4)			**Soil**			**Sampled: 05/10/10 15:30**				
% Solids	ASTM D2216-80	**89.9**	---	0.0100	% by Weight	1x	10E0297	05/10/10 19:01	05/10/10 19:01	
PTE0253-05 (922-MC/CP-SS-5)			**Soil**			**Sampled: 05/10/10 14:10**				
% Solids	ASTM D2216-80	**86.1**	---	0.0100	% by Weight	1x	10E0297	05/10/10 19:01	05/10/10 19:01	
PTE0253-06 (922-MC/CP-Drum-1)			**Soil**			**Sampled: 05/10/10 15:25**				
% Solids	ASTM D2216-80	**89.7**	---	0.0100	% by Weight	1x	10E0297	05/10/10 19:01	05/10/10 19:01	
PTE0253-07 (922-MC/CP-Drum-2)			**Soil**			**Sampled: 05/10/10 14:00**				
% Solids	ASTM D2216-80	**89.4**	---	0.0100	% by Weight	1x	10E0309	05/11/10 07:58	05/11/10 07:58	

TestAmerica Portland

Estella K Rieben

Estella Rieben, Project Manager

The results in this report apply to the samples analyzed in accordance with the chain of custody document. This analytical report shall not be reproduced except in full, without the written approval of the laboratory.

TestAmerica
THE LEADER IN ENVIRONMENTAL TESTING

PORTLAND, OR 9405 S.W. NIMBUS AVENUE
BEAVERTON, OR 97008-7132
ph: (503) 906.9200 fax: (503) 906.9210

Stantec	Project Name:	**Portland Terminal**	
7730 SW Mohawk Street	Project Number:	0922 - ConocoPhillips	Report Created:
Tualatin, OR 97062	Project Manager:	Alice Larsen	05/24/10 15:59

Gasoline Hydrocarbons per NW TPH-Gx Method - Laboratory Quality Control Results

TestAmerica Portland

QC Batch: 10E0304 **Soil Preparation Method: EPA 5035 Modified**

Analyte	Method	Result	MDL*	MRL	Units	Dil	Source Result	Spike Amt	% REC	(Limits)	% RPD	(Limits)	Analyzed	Notes
Blank (10E0304-BLK1)								Extracted: 05/11/10 07:00						
Gasoline Range Hydrocarbons	NW TPH-Gx	ND	---	3.78	mg/kg wet	1x	--	--	--	--	--	--	05/11/10 09:27	
Surrogate(s): a,a,a-TFT (FID)		*Recovery: 115%*			*Limits: 50-150%*	"							*05/11/10 09:27*	
LCS (10E0304-BS1)								Extracted: 05/11/10 07:00						
Gasoline Range Hydrocarbons	NW TPH-Gx	28.8	---	3.97	mg/kg wet	1x	--	24.8	116%	(70-130)	--	--	05/11/10 08:51	
Surrogate(s): a,a,a-TFT (FID)		*Recovery: 123%*			*Limits: 50-150%*	"							*05/11/10 08:51*	
Duplicate (10E0304-DUP1)					QC Source: PTE0253-06			Extracted: 05/11/10 07:00						
Gasoline Range Hydrocarbons	NW TPH-Gx	2840	---	86.4	mg/kg dry	20x	2720	--	--	--	4.25%	(40)	05/11/10 12:44	Q1
Surrogate(s): a,a,a-TFT (FID)		*Recovery: 148%*			*Limits: 50-150%*	"							*05/11/10 12:44*	
Matrix Spike (10E0304-MS1)					QC Source: PTE0253-07			Extracted: 05/11/10 07:00						
Gasoline Range Hydrocarbons	NW TPH-Gx	1940	---	87.0	mg/kg dry	20x	1310	544	115%	(65-130)	--	--	05/11/10 12:09	Q1
Surrogate(s): a,a,a-TFT (FID)		*Recovery: 877%*			*Limits: 50-150%*	"							*05/11/10 12:09*	*Z3*

TestAmerica Portland

Estella K Rieben

Estella Rieben, Project Manager

The results in this report apply to the samples analyzed in accordance with the chain of custody document. This analytical report shall not be reproduced except in full, without the written approval of the laboratory.

TestAmerica
THE LEADER IN ENVIRONMENTAL TESTING

PORTLAND, OR 9405 S.W. NIMBUS AVENUE
BEAVERTON, OR 97008-7132
ph: (503) 906.9200 fax: (503) 906.9210

Stantec	Project Name:	**Portland Terminal**	
7730 SW Mohawk Street	Project Number:	0922 - ConocoPhillips	Report Created:
Tualatin, OR 97062	Project Manager:	Alice Larsen	05/24/10 15:59

Diesel and Heavy Range Hydrocarbons per NWTPH-Dx Method with Acid/Silica Gel Cleanup - Laboratory Quality Control Results

TestAmerica Portland

QC Batch: 10E0352 **Soil Preparation Method: EPA 3550 Fuels**

Analyte	Method	Result	MDL*	MRL	Units	Dil	Source Result	Spike Amt	% REC	(Limits)	% RPD	(Limits)	Analyzed	Notes
Blank (10E0352-BLK1)								Extracted: 05/11/10 22:00						
Diesel Range Organics	NWTPH-Dx	ND	---	12.5	mg/kg wet	1x	--	--	--	--	--	--	05/12/10 06:18	
Residual Range/Heavy Oil Organics	"	ND	---	25.0	"	"	--	--	--	--	--	--	"	
Surrogate(s): 1-Chlorooctadecane		*Recovery: 78.6%*			*Limits: 50-150%*	"							*05/12/10 06:18*	
LCS (10E0352-BS1)								Extracted: 05/11/10 22:00						
Diesel Range Organics	NWTPH-Dx	127	---	12.5	mg/kg wet	1x	--	125	102%	(50-150)	--	--	05/12/10 06:36	
Residual Range/Heavy Oil Organics	"	68.8	---	25.0	"	"	--	75.0	91.7%	"	--	--	"	
Surrogate(s): 1-Chlorooctadecane		*Recovery: 101%*			*Limits: 60-120%*	"							*05/12/10 06:36*	
Duplicate (10E0352-DUP1)					QC Source: PTE0253-01			Extracted: 05/11/10 22:00						
Diesel Range Organics	NWTPH-Dx	ND	---	13.8	mg/kg dry	1x	ND	--	--	--	14.8%	(40)	05/12/10 06:55	
Residual Range/Heavy Oil Organics	"	ND	---	27.5	"	"	ND	--	--	--	NR	"	"	
Surrogate(s): 1-Chlorooctadecane		*Recovery: 84.7%*			*Limits: 50-150%*	"							*05/12/10 06:55*	

TestAmerica Portland

Estella K Rieben

Estella Rieben, Project Manager

The results in this report apply to the samples analyzed in accordance with the chain of custody document. This analytical report shall not be reproduced except in full, without the written approval of the laboratory.

TestAmerica
THE LEADER IN ENVIRONMENTAL TESTING

PORTLAND, OR 9405 S.W. NIMBUS AVENUE
BEAVERTON, OR 97008-7132
ph: (503) 906.9200 fax: (503) 906.9210

Stantec	Project Name:	**Portland Terminal**	
7730 SW Mohawk Street	Project Number:	0922 - ConocoPhillips	Report Created:
Tualatin, OR 97062	Project Manager:	Alice Larsen	05/24/10 15:59

TCLP Metals per EPA 1311/6000/7000 Series Methods - Laboratory Quality Control Results

TestAmerica Portland

QC Batch: 10E0422 **Soil Preparation Method: EPA 1311/3005**

Analyte	Method	Result	MDL*	MRL	Units	Dil	Source Result	Spike Amt	% REC	(Limits)	% RPD	(Limits)	Analyzed	Notes
Blank (10E0422-BLK1)								Extracted: 05/13/10 12:41						
Lead	1311/6020	ND	---	0.0100	mg/l	1x	--	--	--	--	--	--	05/14/10 05:07	
LCS (10E0422-BS1)								Extracted: 05/13/10 12:41						
Lead	1311/6020	0.898	---	0.0100	mg/l	1x	--	1.00	89.8%	(80-120)	--	--	05/14/10 05:15	
Matrix Spike (10E0422-MS1)				QC Source: PTE0253-06				Extracted: 05/13/10 12:41						
Lead	1311/6020	0.914	---	0.0100	mg/l	1x	0.0257	1.00	88.9%	(75-125)	--	--	05/14/10 05:38	
Matrix Spike (10E0422-MS2)				QC Source: PTE0295-01				Extracted: 05/13/10 12:41						
Lead	1311/6020	0.898	---	0.0100	mg/l	1x	0.00120	1.00	89.6%	(75-125)	--	--	05/14/10 06:01	

TestAmerica Portland

Estella K Rieben

Estella Rieben, Project Manager

The results in this report apply to the samples analyzed in accordance with the chain of custody document. This analytical report shall not be reproduced except in full, without the written approval of the laboratory.

TestAmerica
THE LEADER IN ENVIRONMENTAL TESTING

PORTLAND, OR 9405 S.W. NIMBUS AVENUE
BEAVERTON, OR 97008-7132
ph: (503) 906.9200 fax: (503) 906.9210

Stantec	Project Name:	**Portland Terminal**	
7730 SW Mohawk Street	Project Number:	0922 - ConocoPhillips	Report Created:
Tualatin, OR 97062	Project Manager:	Alice Larsen	05/24/10 15:59

TCLP Volatile Organic Compounds per EPA Method 1311/8260B - Laboratory Quality Control Results

TestAmerica Portland

QC Batch: 10E0726 **Soil Preparation Method: EPA 1311/5030**

Analyte	Method	Result	MDL*	MRL	Units	Dil	Source Result	Spike Amt	% REC	(Limits)	% RPD	(Limits)	Analyzed	Notes
Blank (10E0726-BLK1)								Extracted: 05/21/10 14:33						
Benzene	1311/8260B	ND	---	0.0100	mg/l	1x	--	--	--	--	--	--	05/22/10 13:15	
Carbon tetrachloride	"	ND	---	0.0100	"	"	--	--	--	--	--	--	"	
Chlorobenzene	"	ND	---	0.0100	"	"	--	--	--	--	--	--	"	
Chloroform	"	ND	---	0.0100	"	"	--	--	--	--	--	--	"	
1,4-Dichlorobenzene	"	ND	---	0.0100	"	"	--	--	--	--	--	--	"	
1,2-Dichloroethane	"	ND	---	0.0100	"	"	--	--	--	--	--	--	"	
1,1-Dichloroethene	"	ND	---	0.0100	"	"	--	--	--	--	--	--	"	
2-Butanone (MEK)	"	ND	---	0.100	"	"	--	--	--	--	--	--	"	
Tetrachloroethene	"	ND	---	0.0100	"	"	--	--	--	--	--	--	"	
Trichloroethene	"	ND	---	0.0100	"	"	--	--	--	--	--	--	"	
Vinyl chloride	"	ND	---	0.0100	"	"	--	--	--	--	--	--	"	
Surrogate(s): 4-BFB		*Recovery: 103%*			*Limits: 75-130%*	*0.1x*							*05/22/10 13:15*	
Dibromofluoromethane		*94.8%*			*75-130%*	"							"	
Toluene-d8		*98.8%*			*75-130%*	"							"	
LCS (10E0726-BS1)								Extracted: 05/21/10 14:33						
Benzene	1311/8260B	0.167	---	0.0100	mg/l	1x	--	0.200	83.6%	(66-142)	--	--	05/22/10 12:08	
Carbon tetrachloride	"	0.171	---	0.0100	"	"	--	"	85.5%	(50-150)	--	--	"	
Chlorobenzene	"	0.173	---	0.0100	"	"	--	"	86.4%	(60-133)	--	--	"	
Chloroform	"	0.171	---	0.0100	"	"	--	"	85.6%	(50-150)	--	--	"	
1,4-Dichlorobenzene	"	0.153	---	0.0100	"	"	--	"	76.3%	"	--	--	"	
1,2-Dichloroethane	"	0.182	---	0.0100	"	"	--	"	91.2%	"	--	--	"	
1,1-Dichloroethene	"	0.169	---	0.0100	"	"	--	"	84.6%	(59-172)	--	--	"	
2-Butanone (MEK)	"	0.999	---	0.100	"	"	--	1.00	99.9%	(40-180)	--	--	"	
Tetrachloroethene	"	0.173	---	0.0100	"	"	--	0.200	86.4%	(50-150)	--	--	"	
Trichloroethene	"	0.173	---	0.0100	"	"	--	"	86.6%	(62-137)	--	--	"	
Vinyl chloride	"	0.172	---	0.0100	"	"	--	"	86.1%	(40-180)	--	--	"	
Surrogate(s): 4-BFB		*Recovery: 98.4%*			*Limits: 75-130%*	*0.1x*							*05/22/10 12:08*	
Dibromofluoromethane		*93.6%*			*75-130%*	"							"	
Toluene-d8		*96.6%*			*75-130%*	"							"	

TestAmerica Portland

Estella K Rieben

Estella Rieben, Project Manager

The results in this report apply to the samples analyzed in accordance with the chain of custody document. This analytical report shall not be reproduced except in full, without the written approval of the laboratory.

TestAmerica
THE LEADER IN ENVIRONMENTAL TESTING

PORTLAND, OR 9405 S.W. NIMBUS AVENUE
BEAVERTON, OR 97008-7132
ph: (503) 906.9200 fax: (503) 906.9210

Stantec	Project Name:	**Portland Terminal**	
7730 SW Mohawk Street	Project Number:	0922 - ConocoPhillips	Report Created:
Tualatin, OR 97062	Project Manager:	Alice Larsen	05/24/10 15:59

TCLP Volatile Organic Compounds per EPA Method 1311/8260B - Laboratory Quality Control Results

TestAmerica Portland

QC Batch: 10E0726 **Soil Preparation Method: EPA 1311/5030**

Analyte	Method	Result	MDL*	MRL	Units	Dil	Source Result	Spike Amt	% REC	(Limits)	% RPD	(Limits)	Analyzed	Notes
Matrix Spike (10E0726-MS1)				QC Source: PTE0536-01				Extracted: 05/21/10 14:33						
Benzene	1311/8260B	0.186	---	0.0100	mg/l	1x	ND	0.200	92.8%	(66-142)	--	--	05/22/10 12:30	
Carbon tetrachloride	"	0.190	---	0.0100	"	"	ND	"	94.8%	(50-150)	--	--	"	
Chlorobenzene	"	0.190	---	0.0100	"	"	ND	"	95.0%	(60-133)	--	--	"	
Chloroform	"	0.186	---	0.0100	"	"	ND	"	93.2%	(50-150)	--	--	"	
1,4-Dichlorobenzene	"	0.170	---	0.0100	"	"	ND	"	85.2%	"	--	--	"	
1,2-Dichloroethane	"	0.197	---	0.0100	"	"	ND	"	98.4%	"	--	--	"	
1,1-Dichloroethene	"	0.186	---	0.0100	"	"	ND	"	93.0%	(59-172)	--	--	"	
2-Butanone (MEK)	"	1.02	---	0.100	"	"	ND	1.00	102%	(40-180)	--	--	"	
Tetrachloroethene	"	0.195	---	0.0100	"	"	ND	0.200	97.4%	(50-150)	--	--	"	
Trichloroethene	"	0.192	---	0.0100	"	"	ND	"	96.2%	(62-137)	--	--	"	
Vinyl chloride	"	0.191	---	0.0100	"	"	ND	"	95.6%	(40-180)	--	--	"	

Surrogate(s):	*4-BFB*	*Recovery:*	*103%*	*Limits: 75-130%*	*0.1x*	*05/22/10 12:30*
	Dibromofluoromethane		*97.2%*	*75-130%*	*"*	*"*
	Toluene-d8		*101%*	*75-130%*	*"*	*"*

TestAmerica Portland

Estella K Rieben

Estella Rieben, Project Manager

The results in this report apply to the samples analyzed in accordance with the chain of custody document. This analytical report shall not be reproduced except in full, without the written approval of the laboratory.

TestAmerica
THE LEADER IN ENVIRONMENTAL TESTING

PORTLAND, OR 9405 S.W. NIMBUS AVENUE
BEAVERTON, OR 97008-7132
ph: (503) 906.9200 fax: (503) 906.9210

Stantec	Project Name:	**Portland Terminal**	
7730 SW Mohawk Street	Project Number:	0922 - ConocoPhillips	Report Created:
Tualatin, OR 97062	Project Manager:	Alice Larsen	05/24/10 15:59

TCLP Extraction Only - Laboratory Quality Control Results

TestAmerica Portland

QC Batch: 10E0421 **Soil Preparation Method: EPA 1311**

Analyte	Method	Result	MDL*	MRL	Units	Dil	Source Result	Spike Amt	% REC	(Limits)	% RPD	(Limits)	Analyzed	Notes
Blank (10E0421-BLK1)								Extracted: 05/12/10 18:00						
Extraction	EPA 1311	ND	---	1.00	N/A	1x	--	--	--	--	--	--	05/13/10 12:34	
Blank (10E0421-BLK2)								Extracted: 05/12/10 18:00						
Extraction	EPA 1311	ND	---	1.00	N/A	1x	--	--	--	--	--	--	05/13/10 12:34	

TestAmerica Portland

Estella K Rieben

Estella Rieben, Project Manager

The results in this report apply to the samples analyzed in accordance with the chain of custody document. This analytical report shall not be reproduced except in full, without the written approval of the laboratory.

TestAmerica
THE LEADER IN ENVIRONMENTAL TESTING

PORTLAND, OR 9405 S.W. NIMBUS AVENUE
BEAVERTON, OR 97008-7132
ph: (503) 906.9200 fax: (503) 906.9210

Stantec	Project Name:	**Portland Terminal**	
7730 SW Mohawk Street	Project Number:	0922 - ConocoPhillips	Report Created:
Tualatin, OR 97062	Project Manager:	Alice Larsen	05/24/10 15:59

Percent Dry Weight (Solids) per ASTM D2216-80 - Laboratory Quality Control Results

TestAmerica Portland

QC Batch: 10E0297 **Soil Preparation Method: Dry Weight**

Analyte	Method	Result	MDL*	MRL	Units	Dil	Source Result	Spike Amt	% REC	(Limits)	% RPD	(Limits)	Analyzed	Notes
Duplicate (10E0297-DUP1)				QC Source: PTE0253-04				Extracted: 05/10/10 19:01						
% Solids	ASTM D2216-80	89.9	---	0.0100	% by Weight	1x	89.9	--	--	--	0.00%	(20)	05/10/10 19:01	

QC Batch: 10E0309 **Soil Preparation Method: Dry Weight**

Analyte	Method	Result	MDL*	MRL	Units	Dil	Source Result	Spike Amt	% REC	(Limits)	% RPD	(Limits)	Analyzed	Notes
Duplicate (10E0309-DUP1)				QC Source: PTE0201-03				Extracted: 05/11/10 07:58						
% Solids	ASTM D2216-80	96.3	---	0.0100	% by Weight	1x	96.4	--	--	--	0.104%	(20)	05/11/10 07:58	

TestAmerica Portland

Estella K Rieben

Estella Rieben, Project Manager

The results in this report apply to the samples analyzed in accordance with the chain of custody document. This analytical report shall not be reproduced except in full, without the written approval of the laboratory.

TestAmerica
THE LEADER IN ENVIRONMENTAL TESTING

PORTLAND, OR 9405 S.W. NIMBUS AVENUE
BEAVERTON, OR 97008-7132
ph: (503) 906.9200 fax: (503) 906.9210

Stantec	Project Name:	**Portland Terminal**	
7730 SW Mohawk Street	Project Number:	0922 - ConocoPhillips	Report Created:
Tualatin, OR 97062	Project Manager:	Alice Larsen	05/24/10 15:59

Notes and Definitions

Report Specific Notes:

Q1	-	Does not match typical pattern
RL7	-	Sample required dilution due to high concentrations of target analyte.
Z3	-	The sample required a dilution due to the nature of the sample matrix. Because of this dilution, the surrogate spike concentration in the sample was reduced to a level where the recovery calculation does not provide useful information.
ZX	-	Due to sample matrix effects, the surrogate recovery was outside the acceptance limits.

Laboratory Reporting Conventions:

DET	-	Analyte DETECTED at or above the Reporting Limit. Qualitative Analyses only.
ND	-	Analyte NOT DETECTED at or above the reporting limit (MDL or MRL, as appropriate).
NR/NA	-	Not Reported / Not Available
dry	-	Sample results reported on a Dry Weight Basis. Results and Reporting Limits have been corrected for Percent Dry Weight.
wet	-	Sample results and reporting limits reported on a Wet Weight Basis (as received). Results with neither 'wet' nor 'dry' are reported on a Wet Weight Basis.
RPD	-	RELATIVE PERCENT DIFFERENCE (RPDs calculated using Results, not Percent Recoveries).
MRL	-	METHOD REPORTING LIMIT. Reporting Level at, or above, the lowest level standard of the Calibration Table.
MDL*	-	METHOD DETECTION LIMIT. Reporting Level at, or above, the statistically derived limit based on 40CFR, Part 136, Appendix B. *MDLs are listed on the report only if the data has been evaluated below the MRL. Results between the MDL and MRL are reported as Estimated Results.
Dil	-	Dilutions are calculated based on deviations from the standard dilution performed for an analysis, and may not represent the dilution found on the analytical raw data.
Reporting Limits	-	Reporting limits (MDLs and MRLs) are adjusted based on variations in sample preparation amounts, analytical dilutions and percent solids, where applicable.
Electronic Signature	-	Electronic Signature added in accordance with TestAmerica's *Electronic Reporting and Electronic Signatures Policy.* Application of electronic signature indicates that the report has been reviewed and approved for release by the laboratory. Electronic signature is intended to be the legally binding equivalent of a traditionally handwritten signature.

TestAmerica Portland

Estella K Rieben

Estella Rieben, Project Manager

The results in this report apply to the samples analyzed in accordance with the chain of custody document. This analytical report shall not be reproduced except in full, without the written approval of the laboratory.

TestAmerica

THE LEADER IN ENVIRONMENTAL TESTING

11720 North Creek Pkwy N Suite 400, Bothell, WA 98011-8244 425-420-9200 FAX 420-9210
11922 E. First Ave, Spokane, WA 99206-5302 509-924-9200 FAX 924-9290
9405 SW Nimbus Ave,Beaverton, OR 97008-7145 503-906-9200 FAX 906-9210
2000 W International Airport Rd Ste A10, Anchorage, AK 99502-1119 907-563-9200 FAX 563-9210

CHAIN OF CUSTODY REPORT

Work Order #: PTE0253

CLIENT: Stantec

REPORT TO: 7730 SW Mohawk St.
ADDRESS: Tualatin, OR 97062

PHONE: 503 6912030 FAX: 503 692 7074

PROJECT NAME: 922-MC/CP Soil Samples

PROJECT NUMBER:

SAMPLED BY: Chris Carlton-Franco (CCF)

INVOICE TO: Alice Larsen
alice.larsen@stantec.com
Chris Carlton-Franco
chris.carlton-franco@stantec.com

P.O. NUMBER:

TURNAROUND REQUEST in Business Days *

Organic & Inorganic Analyses: 10 (STD.) 7 5 4 3 2 1 <1

Petroleum Hydrocarbon Analyses: 5 (STD.) 4 3 2 1 <1

OTHER Specify: see comments

* Turnaround Requests less than standard may incur Rush Charges.

		PRESERVATIVE															
		None	None			None	None										
		REQUESTED ANALYSES															
CLIENT SAMPLE IDENTIFICATION	SAMPLING DATE/TIME	NW TPH Dx	NW TPH Dx			TCLP Lead	TCLP benzene							MATRIX (W, S, O)	# OF CONT.	LOCATION/ COMMENTS	TA WO ID
1 922-MC/CP-SS-1	10 May 2010 - 1500	X	X											S	2	24 hour rush	
2 922-MC/CP-SS-2	10 May 2010 - 1510	X	X											S	2	24 hour rush	
922-MC/CP-SS-3	10 May 2010 - 1520	X	X											S	2	24 hour rush	
922-MC/CP-SS-4	10 May 2010 - 1530	X	X											S	2	24 hour rush	
5 922-MC/CP-SS-5	10 May 2010 - 1410	X	X											S	2	24 hour rush	
6 922-MC/CP-Drum-1	10 May 2010 - 1525	X	X			X	X							S	2	STD turnaround	
922-MC/CP-Drum-2	10 May 2010 - 1400	X	X			X	X							S	1	STD turnaround	
8																	
9																	
10																	

RELEASED BY:	DATE: 10 May 2010	RECEIVED BY: Megan Henning	DATE: 05/10/10
PRINT NAME: Chris Carlton-Franco FIRM:	TIME: 1740	PRINT NAME: Megan Henning FIRM: TAP	TIME: 1740
RELEASED BY:	DATE:	RECEIVED BY:	DATE:
PRINT NAME: FIRM:	TIME:	PRINT NAME: FIRM:	TIME:

ADDITIONAL REMARKS: dispose of soil in plastic bags.

TEMP: 15.7

PAGE 1 OF 1

TAL-1000(0408)

COP0022078

TestAmerica Portland

Sample Receiving Checklist

Work Order #: PTE0253 Date/Time Received: 05/10/10 1740

Client Name and Project: Stantec

722 - MCPP 5075

Time Zone:

☐EDT/EST ☐CDT/CST ☐MDT/MST ☒PDT/PST ☐AK ☐OTHER

Unpacking Checks:

Cooler #(s): 1

Temperatures: 5.7

Digi #1 ☐ Digi #2 ☐ IR Gun ☒ (☐Plastic ☒Glass)

Temperature out of Range:

__Not enough or No Ice

__Ice Melted

☒W/in 4 Hrs of collection

__Other:

Initials: CMY

N/A	Yes	No	
☒	☐	☐	1. If ESI client, were temp blanks received? If no, document on NOD.
☒	☐	☐	2. Cooler Seals intact? (N/A if hand delivered) if no, document on NOD.
	☒	☐	3. Chain of Custody present? If no, document on NOD.
	☒	☐	4. Bottles received intact? If no, document on NOD.
	☒	☐	5. Sample is not multiphasic? If no, document on NOD.
	☒	☐	6. Proper Container and preservatives used? If no, document on NOD.
☒	☐	☐	7. pH of all samples checked and meet requirements? If no, document on NOD.
☒	☐	☐	8. Cyanide samples checked for sulfides and meet requirements? If no, notify PM.
☒	☐	☐	9. HF Dilution required?
	☒	☐	10. Sufficient volume provided for all analysis? If no, document on NOD and consult PM before proceeding.
	☒	☐	11. Did chain of custody agree with samples received? If no, document on NOD.
	☒	☐	12. Is the "Sampled by" section of the COC completed?
☒	☐	☐	13. Were VOA/Oil Syringe samples without headspace?
☒	☐	☐	14. Were VOA vials preserved? ☐HCl ☐Sodium Thiosulfate ☐Ascorbic Acid
	☐	☒	15. Did samples require preservation with sodium thiosulfate?
☒	☐	☐	16. If yes to #15, was the residual chlorine test negative? If no, document on NOD.
☒	☐	☐	17. Are dissolved/field filtered metals bottles sediment-free? If no, document on NOD.
☒	☐	☐	18. Is sufficient volume provided for client requested MS/MSD or matrix duplicates? If no, document on NOD and contact PM before proceeding.
☒	☐	☐	19. Are analyses with short holding times received in hold?
	☐	☒	20. Was Standard Turn Around (TAT) requested? 2 day
☒	☐	☐	21. Receipt date(s) < 48 hours past the collection date(s)? If no, notify PM.

TestAmerica Portland

Sample Receiving Checklist

Work Order #: PTE0253

Login Checks:

Initials: MAD

N/A	Yes	No	
	☒	☐	22. Sufficient volume provided for all analysis? If no, document on NOD & contact PM.
☒	☐	☐	23. Sufficient volume provided for client requested MS/MSD or matrix duplicates? If no, document on NOD and contact PM.
	☒	☐	24. Did the chain of custody include "received by" and "relinquished by" signatures, dates and times?
☐	☒	☐	25. Were special log in instructions read and followed?
	☒	☐	26. Were tests logged checked against the COC?
☐	☒	☐	27. Were rush notices printed and delivered?
☒	☐	☐	28. Were short hold notices printed and delivered?
☒	☐	☐	29. Were subcontract COCs printed?
☒	☐	☐	30. Was HF dilution logged?

Labeling and Storage Checks:

Initials: MAD

N/A	Yes	No	
☒	☐	☐	31. Were the subcontracted samples/containers put in Sx fridge?
☒	☐	☐	32. Were sample bottles and COC double checked for dissolved/filtered metals?
	☒	☐	33. Did the sample ID, Date, and Time from label match what was logged?
☒	☐	☐	34. Were Foreign sample stickers affixed to each container and containers stored in foreign fridge?
☒	☐	☐	35. Were HF stickers affixed to each container, and containers stored in Sx fridge?
☐	☒	☐	36. Was an NOD for created for noted discrepancies and placed in folder?

Document any problems or discrepancies and the actions taken to resolve them on a Notice of Discrepancy form (NOD).

Coey, Dennis

From: Coey, Dennis
Sent: Wednesday, December 10, 1997 12:16 PM
To: Cramer, Marty A.
Cc: Rogers, Anita K.
Subject: RE: Dredging
Importance: High

I spoke with Jerry Hedrick from DSL this morning & he will revise our permit to include inwater disposal. They need a written request from us detailing inwater disposal in the Ross Island lagoon using the "approved reclamation plan".

This does not secure approval from Ross Island, as you mentioned below.

I have read the Port requirements of which I have itemized the main points below:

1) Measure turbidity during dredging & disposal. I am not sure how the Port proposed to conduct this measurement.
2) Cap final disposal with a 3 to 5 foot fill of sand & rock slurry provided by Ross Island. (The Port proposed 1 foot, DEQ increased it)
3) Sampling of Disposal Site
   - Pre-disposal sediment
   - Post-disposal sediment...DEQ suggesting TCLP
   - Water quality...measure during & after disposal
4) Survey of disposal site including hydrographic mapping before & after disposal & again 6 months after capping. Reports to DEQ.
5) A pipe/downspout must be used to drop the sediment & cap to the bottom of the lagoon. The Port designed a floating tube called a Tremie for this purpose. This directs the sediment to the bottom preventing leaching. The tube coordinates must be monitored with a GPS to ensure accurate deposit location.
6)The sediment must be handled with a front end loader to deliver into the Tremie, this requires a flatdeck barge with sides be used to handle dredge material.
7)The dredge must have a tightly configured clambucket and be fitted with a shroud to prevent loss during the lifting of spoils from the dredge site bottom.

I will contact Ross Island & Hickey, have them give us estimates on the above, based on a per yard calculation. (Not sure who is handling the cap requirements.)The one memo from the DEQ suggests that non-confinement (no cap) inwater disposal can be done conducted based on biological analysis. We may want to proceed in that direction based on the above. The Port requirements are very tight & each case is being reviewed independently at Ross Island until such time the DEQ builds further data at the site.

Anita: I placed a copy of the Port documents in your mailbox.

I think we should hold on the DSL request until we have approval from Ross Island.

From: Cramer, Marty A.
Sent: Tuesday, December 09, 1997 4:19 PM
To: Coey, Dennis; Rogers, Anita K.
Subject: Dredging
Importance: High

COP0022081

Dennis and Anita:

As you may be aware Ross Island has refused to accept our dredge spoils and, according to Judy Linton, Chevron's for their upland disposal site. Greg Speyer apparently told Judy that Ross Island agreed to take our (Chevron and Tosco) sediment at their lagoon site (in water disposal) although Paul Godsel told Dennis and I that he would look into but wouldn't give us any assurances at this time.

Based on what Speyer told her, Judy was getting ready to modify our permits for the lagoon disposal provided we agree to the same stipulations that the Port and DEQ agreed to for the disposal of the Port's sediments in the lagoon. I mentioned that Godsel told us they were digging a very deep hole to put the Port's material in which the Port was paying extra for. Judy said all they were requiring was that Ross Island cap the material with 3 ft of clean material and didn't know anything about the hole.

Judy would like a letter from Tosco stating that we will agree to the same restrictions the Corps/DEQ put on the Port when we dispose of our spoils in the lagoon. She will then write an addendum to our permit and work with DEQ to get their approval which she felt should only take a week or so. She said we still need to work with State Lands to get their permit modified and suggested calling Jerry Hedrick at 503-378-3805. I called Jerry but he was out so I left a message for him to call me back today or Dennis tomorrow. Judy said if we abide by the Port's restrictions, we will not have to do any more testing.

I suggest that you, Dennis or Anita, keep the pressure up on Godsel and also try and get a cost out of him and Hickey perhaps before we commit to abiding by the new restrictions. I also asked Judy about the chances of disposing of it at Morgan's Bar in the Columbia or other in-water sites if Ross Island rejects our material for the lagoon site. She said she would check into it. Judy is faxing over the Port's restrictions right now which I will give to Dennis.

I will be in the Seattle area Wednesday and Thursday and back here on Friday but can be reached by pager at 1-800-817-5794.

Cheers,

Marty

COP0022082

Coey, Dennis

From: Cramer, Marty A.
Sent: Tuesday, December 09, 1997 4:19 PM
To: Coey, Dennis; Rogers, Anita K.
Subject: Dredging
Importance: High

Dennis and Anita:

As you may be aware Ross Island has refused to accept our dredge spoils and, according to Judy Linton, Chevron's for their upland disposal site. Greg Speyer apparently told Judy that Ross Island agreed to take our (Chevron and Tosco) sediment at their lagoon site (in water disposal) although Paul Godsel told Dennis and I that he would look into but wouldn't give us any assurances at this time.

Based on what Speyer told her, Judy was getting ready to modify our permits for the lagoon disposal provided we agree to the same stipulations that the Port and DEQ agreed to for the disposal of the Port's sediments in the lagoon. I mentioned that Godsel told us they were digging a very deep hole to put the Port's material in which the Port was paying extra for. Judy said all they were requiring was that Ross Island cap the material with 3 ft of clean material and didn't know anything about the hole.

Judy would like a letter from Tosco stating that we will agree to the same restrictions the Corps/DEQ put on the Port when we dispose of our spoils in the lagoon. She will then write an addendum to our permit and work with DEQ to get their approval which she felt should only take a week or so. She said we still need to work with State Lands to get their permit modified and suggested calling Jerry Hedrick at 503-378-3805. I called Jerry but he was out so I left a message for him to call me back today or Dennis tomorrow. Judy said if we abide by the Port's restrictions, we will not have to do any more testing.

I suggest that you, Dennis or Anita, keep the pressure up on Godsel and also try and get a cost out of him and Hickey perhaps before we commit to abiding by the new restrictions. I also asked Judy about the chances of disposing of it at Morgan's Bar in the Columbia or other in-water sites if Ross Island rejects our material for the lagoon site. She said she would check into it. Judy is faxing over the Port's restrictions right now which I will give to Dennis.

I will be in the Seattle area Wednesday and Thursday and back here on Friday but can be reached by pager at 1-800-817-5794.

Cheers,

Marty

COP0022083

12-10-97

Port Disposal Requirements - In water lagoon

1.) Measure turbidity during dredging & disposal

2.) Cap disposal - 3 to 5 feet of rock slurry provided by Ross Island. (Port proposed 1 foot)

3.) Sampling @ Disposal Site
- Pre-disposal sediment (for establishing baseline)
- Post-disposal sediment
- Water quality samples during & after disposal

4.) Disposal site must be surveyed before & after disposal & again after CAP is placed, hydrographic mapping. Final reports to be submitted to DEQ.
(The port has suggested annual surveys of the site.)

5.) A pipe/downspout must be used to drop the disposal sediment to the bottom of the lagoon (Tremie tube). This ensures dredge material lands directly on bottom, does not slurry into water. G.P.S. must be used to provide precise location

Designed by Port engineers

6.) Clambucket must be shrouded to prevent loss during dredging

7.) Material to be offloaded with a front end loader from a flat deck barge.

Division of State Lands
775 Summer Street NE
Salem, OR 97310
☎ 503-378-3805

Permit No.:	14424
Permit Type:	Removal
Waterway:	Willamette River
County:	Multnomah
Expiration Date:	November 25, 1998
Corps No.:	97-854

TOSCO DISTRIBUTION COMPANY

IS AUTHORIZED IN ACCORDANCE WITH ORS 196.800 TO 196.990 TO PERFORM THE OPERATIONS DESCRIBED IN THE ATTACHED COPY OF THE APPLICATION, SUBJECT TO THE SPECIAL CONDITIONS LISTED ON ATTACHMENT A AND TO THE FOLLOWING GENERAL CONDITIONS:

1. This permit does not authorize trespass on the lands of others. The permit holder shall obtain all necessary access permits or rights-of-way before entering lands owned by another.
2. This permit does not authorize any work that is not in compliance with local zoning or other local, state, or federal regulation pertaining to the operations authorized by this permit. The permit holder is responsible for obtaining the necessary approvals and permits before proceeding under this permit.
3. All work done under this permit must comply with Oregon Administrative Rules, Chapter 340; Standards of Quality for Public Waters of Oregon. Specific water quality provisions for this project are set forth on Attachment A.
4. Violations of the terms and conditions of this permit are subject to administrative and/or legal action which may result in revocation of the permit or damages. The permit holder is responsible for the activities of all contractors or other operators involved in work done at the site or under this permit.
5. A copy of the permit shall be available at the work site whenever operations authorized by the permit are being conducted.
6. Employees of the Division of State Lands and all duly authorized representatives of the Director shall be permitted access to the project area at all reasonable times for the purpose of inspecting work performed under this permit.
7. Any permit holder who objects to the conditions of this permit may request a hearing from the Director, in writing, within 10 days of the date this permit was issued.
8. In issuing this permit, the Division of State Lands makes no representation regarding the quality or adequacy of the permitted project design, materials, construction, or maintenance, except to approve the project's design and materials, as set forth in the permit application, as satisfying the resource protection, scenic, safety, recreation, and public access requirements of ORS Chapters 196, 390 and related administrative rules.
9. Permittee shall defend and hold harmless the State of Oregon, and its officers, agents, and employees from any claim, suit, or action for property damage or personal injury or death arising out of the design, material, construction, or maintenance of the permitted improvements.

NOTICE: If removal is from state-owned submerged and submersible land, the applicant must comply with leasing and royalty provisions of ORS 274.530. If the project involves creation of new lands by filling on state-owned submerged or submersible lands, you must comply with ORS 274.905 - 274.940. This permit does not relieve the permittee of an obligation to secure appropriate leases from the Division of State Lands, to conduct activities on state-owned submerged or submersible lands. Failure to comply with these requirements may result in civil or criminal liability. For more information about these requirements, please contact the Division of State Lands, 378-3805.

Earle A. Johnson, Manager
Western Region Field Operations
Oregon Division of State Lands

Authorized Signature

November 25, 1997
Date Issued

\\salem1\fo\forms\letters\face.doc

ATTACHMENT A

Special Conditions for Removal Permit No. 14424

1. This permit authorizes the removal of up to 20,000 cubic yards of material in Section 12, T 1 N, R 1E (Willamette Rivermile 7.8) for Maintenance Dredging as outlined in the attached permit application, map and drawings.

2. The operation shall be conducted in a manner that will minimize any turbidity increase.

3. Petroleum products, chemicals, or other deleterious materials shall not be allowed to enter the water.

4. Waste materials and spoils shall be placed above the bankline and not in any wetland areas.

5. In water work shall be conducted between July 1 to October 31 and December 1 to January 31.

6. The Division of State Lands retains the authority to temporarily halt or modify the project in case of excessive turbidity or damage to natural resources.

November 25, 1997

fo\AttachmentAwest\RP-14424.doc

US Army Corps of Engineers
Portland District

JOINT PERMIT APPLICATION FORM

THIS APPLICATION WILL MEET THE REQUIREMENTS OF BOTH AGENCIES

RECEIVED
JUN 19 1997
REG ENV RES BR

STATE OF OREGON 1859

AGENCIES WILL ASSIGN NUMBERS

Corps Action ID Number 97-854 Oregon Division of State Lands Number RP 14424

SEND ONE SIGNED COPY OF YOUR APPLICATION TO EACH AGENCY

District Engineer	State of Oregon
ATTN: CENPP-OP-GP	Division of State Lands
P O Box 2946	775 Summer Street NE
Portland, OR 97208-2946	Salem OR 97310
503-326-7730	503-378-3805

① Applicant Name and Address: TOSCO DISTRIBUTION COMPANY, 5528 N.W DOANE AVENUE, PORTLAND, OR. 97210 ROGER McGOWNE
business phone #(503) 248-1558
home phone #
FAX #

O Co-Applicant
⊗ Authorized Agent
O Contractor
Name and Address: GREGORY SPEYER, 6305 N.W. LOWER RIVER ROAD, VANCOUVER, WA. 98660
business phone #(503) 284-2850
home phone #
FAX #(360) 695-3731

Property Owner (if different than applicant) Name and Address
business phone #
home phone #
FAX #

② **PROJECT LOCATION**

Street, Road or other descriptive location	Legal Description			
5528 N.W. DOANE AVENUE PORTLAND	Quarter	Section	Township	Range
		12	1N	1E

In or Near (City or Town)	County	Tax Map #	Tax Lot #
PORTLAND	MULTNOMAH	2423	4

Waterway	River Mile	Latitude	Longitude
WILLAMETTE RIVER	7.8		

Is consent to enter property granted to the Corps and the Division of State Lands? O Yes O No

③ **PROPOSED PROJECT INFORMATION**

Activity Type: O Fill ⊗ Excavation (removal) O In-Water Structure O Maintain/Repair an Existing Structure

Brief Description: _____

Fill will involve ✓ cubic yards annually and/or _____ cubic yards for the total project
✓ cubic yards in a wetland or below the ordinary high water or high tide line

Fill will be O Riprap O Rock O Gravel O Sand O Silt O Clay O Organics O Other _____.

Fill Impact Area is _____ Acres; _____ length; _____ width; _____ depth

Removal will involve 20,000 cubic yards annually and/or _____ cubic yards for the total project
_____ cubic yards below the ordinary high water or high tide line

Removal will be O Riprap O Rock O Gravel ⊗ Sand ⊗ Silt O Clay O Organics O Other _____.

Removal Impact Area is 1.75 Acres; 600' length; 125' width; 0-10' depth

Is the Disposal area: Upland? ⊗ Yes O No Wetland / Waterway? O Yes ⊗ No

Are you aware of any Endangered Species on the project site? O Yes ⊗ No
Are you aware of any Cultural Resources on the project site? O Yes ⊗ No
Is the project site near a Wild and Scenic River? O Yes ⊗ No

If Yes, please explain in the project description (on page 2, block 4).

COP0022087

④ **PROPOSED PROJECT PURPOSE & DESCRIPTION**

Project Purpose and Need: THE PURPOSE OF THE PROPOSED ACTIVITY IS TO RESTORE THE MOORAGE DEPTH AT THE EXISTING PIER TO ACCOMODATE THE CLASS OF VESSELS THAT CALL AT THE PIER.

Project Description: PROPOSE TO CLAMSHELL DREDGE APPROX. 20,000 CY OF MATERIAL FROM THE DOWNSTREAM SIDE OF THE DOCK FACILITY TO EL -40' CRD. MATERIAL WILL BE PLACED ONTO FLATDECK BARGES, TRANSPORTED AND DISPOSED OF AT ROSS ISLAND UPLAND DISPOSAL SITE.

How many project drawing sheets are included with this application? 1

NOTE: A complete application must include drawings and a location map submitted on separate $8^1/_2$ X 11 sheets.

Will any material, construction debris, runoff, etc. enter a wetland or waterway? ○ Yes ⊗ No

If yes, describe the type of discharge (above) and show the discharge location on the site plan.

Estimated Start Date UPON ISSUANCE Estimated Completion Date 5 YEAR MAINT.

⑤ **PROJECT IMPACTS AND ALTERNATIVES**

Describe alternative sites and project designs that were considered to avoid impacts to the waterway or wetland.

NONE. DREDGING IS REQUIRED TO PROVIDE ADEQUATE DEPTHS FOR VARIOUS VESSELS.

Describe what measures you will use (before and after construction) to minimize impacts to the waterway or wetland.

DREDGEING WILL BE PERFORMED DURING INWATER WORK WINDOWS. DREDGE SPOILS WILL BE PLACED ONTO BARGES AND DISPOSED OF IN AN APPROVED DISPOSAL SITE.

NOTE: If necessary, use additional sheets.

⑥ **ADDITIONAL INFORMATION**

Adjoining Property Owners and Their Addresses and Phone Numbers

CHEVRON U.S.A. INC.
5531 N.W. DOANE AVE.
PORTLAND, OR 97207
(503) 221-7863

MCCALL OIL AND CHEMICAL CO.
5480 NW. FRONT AVE.
PORTLAND, OR. 97210
(503) 221-5755

Has the proposed activity or any related activity received the attention of the Corps of Engineers or the State of Oregon in the past, *e.g.*, wetland delineation, violation, permit, lease request, etc.? ⊗ YES ○ NO

If yes, what identification number(s) were assigned by the respective agencies: PREVIOUS PERMITS

Corps # 071-OYA-1-005582 EXPIRED 31 DEC 1989

State of Oregon# 4090

⑦

Y / County Planning Department Aff VIT
(to be completed by local planning officia)

○ This project is not regulated by the local comprehensive plan and zoning ordinance.

○ This project has been reviewed and is consistent with the local comprehensive plan and zoning ordinance.

○ This project has been reviewed and is **not** consistent with the local comprehensive plan and zoning ordinance.

○ Consistency of this project with the local planning ordinance cannot be determined until the following local approval(s) are obtained:

○ Conditional Use Approval ○ Development Permit
○ Plan Amendment ○ Zone Change
○ Other _____

An application ○ has ○ has not been made for local approvals checked above.

Signature (of local planning official) | Title | City / County | Date

⑧

Coastal Zone Certification

If the proposed activity described in your permit application is within the Oregon coastal zone, the following certification is required before your application can be processed. A public notice will be issued with the certification statement which will be forwarded to the Oregon Department of Land Conservation and Development (DLCD) for its concurrence or objection. For additional information on the Oregon Coastal Zone Management Program, contact the department at 1175 Court Street NE, Salem, Oregon 97310 or call 503-373-0050.

Certification Statement

I certify that, to the best of my knowledge and belief, the proposed activity described in this application complies with the approved Oregon Coastal Zone Management Program and will be completed in a manner consistent with the program.

Print/Type Name | Title

Applicant Signature | Date

⑨

Signature for Joint Application
(REQUIRED)

Application is hereby made for the activities described herein. I certify that I am familiar with the information contained in the application, and, to the best of my knowledge and belief, this information is true, complete, and accurate. I further certify that I possess the authority including the necessary requisite property interests to undertake the proposed activities. I understand that the granting of other permits by local, county, state or federal agencies does not release me from the requirement of obtaining the permits requested before commencing the project. I understand that local permits may be required before the state removal-fill permit is issued. I understand that payment of the required state processing fee does not guarantee permit issuance.

Walter B. Eisenmann — MAINT. DEPT.
Print/Type Name (coapplicant) Title

Walter B. Eisenmann — 6-19-97
Applicant Signature (coapplicant) Date

I certify that I may act as the duly authorized agent of the applicant.

GREGORY SPEYER — AGENT
Print/Type Name Title

Gregory Speyer — 6-18-97
Authorized Agent Signature Date

COP0022089

Supplemental Wetland Impact Information*
(For Wetland Fills Only)

Site Conditions of impact area

Impact area is ○ Ocean ○ Estuary ○ River ○ Lake ○ Stream ○ Freshwater Wetland

Note: Estuarian Resource Replacement is required by state law for projects involving intertidal or tidal marsh alterations. A separate Wetlands Resource Compensation Plan may be appended to the application.

Has a wetland delineation been completed for this site? ○ Yes ○ No
If yes, by whom:

Describe the existing Physical and biological character of the wetland/waterway site by area and type of resource (use separate sheets and photos, if necessary)

Resource Replacement Mitigation

Describe measures to be taken to replace unavoidably impacted wetland resources

* Because this information is not necessary for a complete application, you may submit this sheet and other environmental information after submitting your applic n.

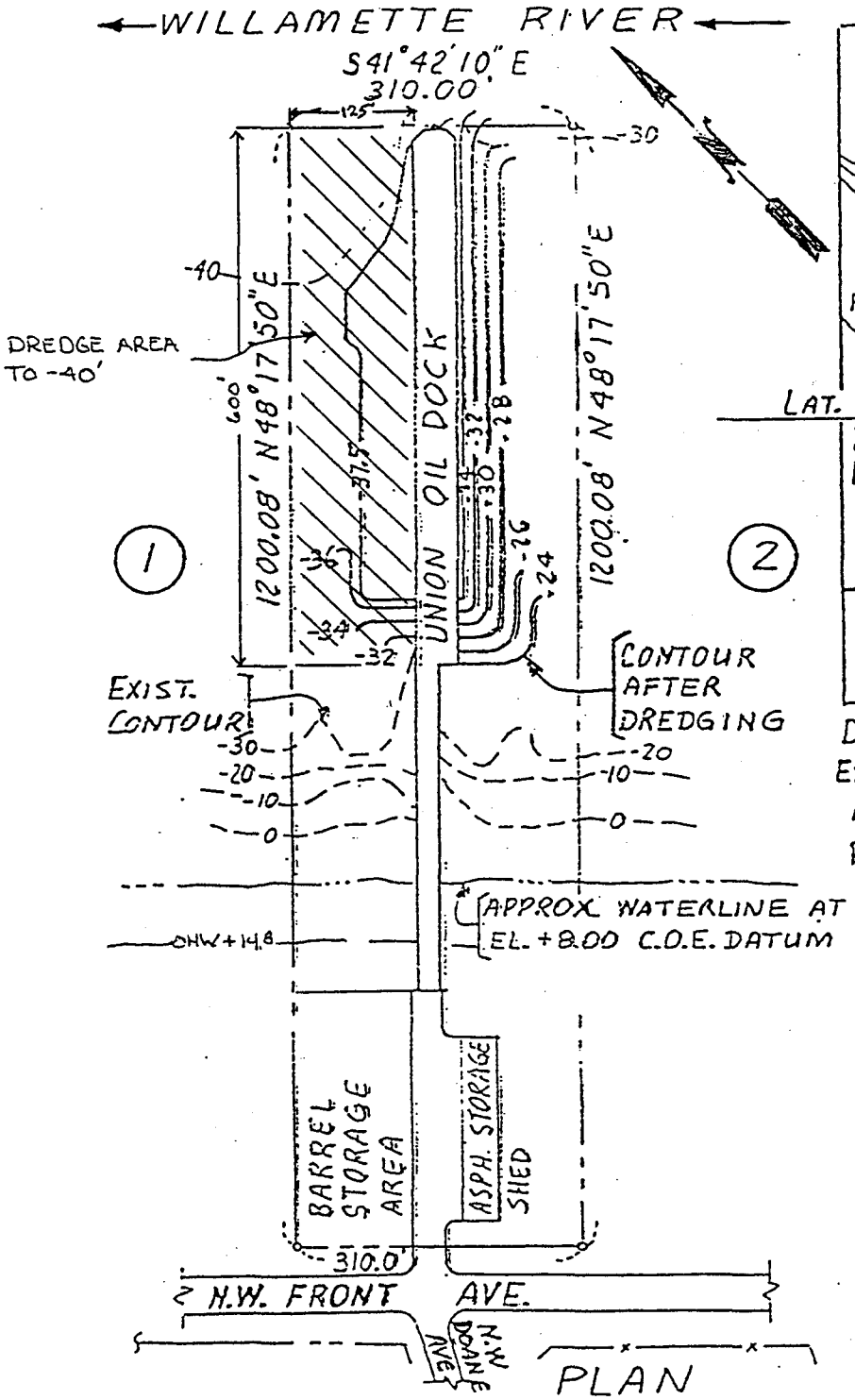

PLAN

SCALE: 1" = 200'

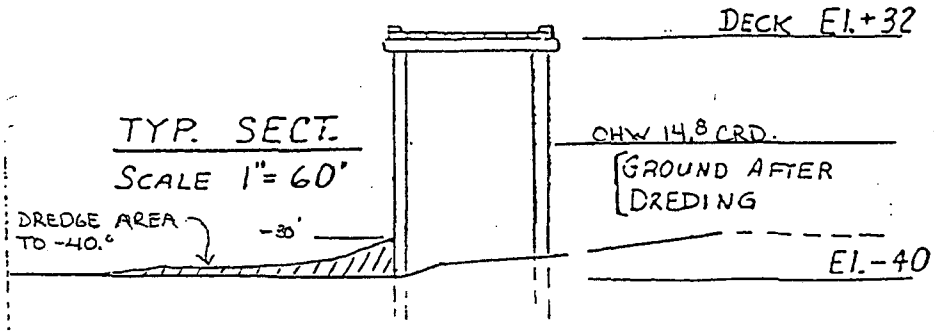

TYP. SECT.

SCALE 1" = 60'

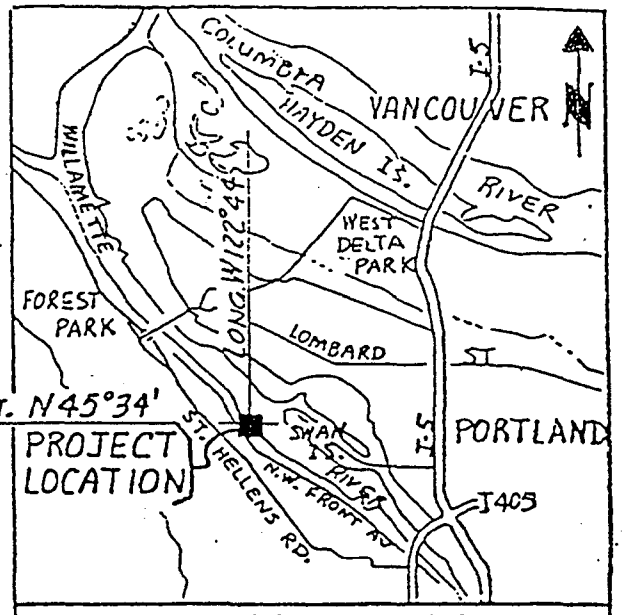

VICINITY MAP

0 1 2 3

SCALE IN MILES

DREDGING METHOD : CLAM SHELL

ESTIMATED QUANTITY : ,000 C.Y.

MATERIAL : SANDY SILT

PURPOSE : TO RESTORE MOORAGE DEPTH AT PIER

ADJACENT PROPERTY OWNERS :

1. CHEVRON USA, INC.
2. McCALL OIL & CHEMICAL Co.

DATUM : C.R.D.

PROPOSED MAINTENANCE DREDGING

IN

WILLAMETTE RIVER AT PORTLAND OREGON MULTNOMAH COUNTY

APPLICATION BY : TOSCO

SHT. 1 OF 1 JUNE 18, 1997

COP0022091

TOSCO

Tosco Distribution Company
A Division of Tosco Corporation
Portland Terminal
5528 Northwest Doane Avenue
Portland, Oregon 97210
P.O. Box 76
Portland, Oregon 97207

Mr. Greg Speyer
Hickey Marine
6305 NW Lower River Rd
Vancouver, WA. 98660

Dear Greg,

Enclosed is a copy of the "Army Corps of Engineers" permit for dredging our marine berth scheduled to begin on December 1, 1997. Please ensure that Hickey Marine complies with all aspects of the permit while conducting the dredging process. Of special note, the dredged materials must be disposed on land at the Ross Island upland site and shall be capped with clean fill upon completion. Roger McGowne, Tosco Portland terminal Maintenance Supervisor, will be your contact for the project. He will be issuing a P.O. detailing the scope of work to be completed in the next few days. Roger can be reached at 503-248-1558. If you have any questions I can be reached at 503-248-1538.

Thank you

Dennis R. Coey
Terminal Manager
Portland Terminal

Cc: R. McGowen / Tosco Portland

DEPARTMENT OF THE ARMY
PORTLAND DISTRICT, CORPS OF ENGINEERS
P.O. BOX 2946
PORTLAND, OREGON 97208-2946

November 10, 1997

REPLY TO
ATTENTION OF:

Operations, Construction,
and Readiness Division

SUBJECT: Permit Application ID No: 97-854

Tosco Distribution Company
Attn: Roger McGowne
5528 NW Doane Avenue
Portland, Oregon 97210

Dear Mr. McGowne:

Enclosed are your fully executed Department of the Army Permit and a notice of authorization which must be posted at the work site.

Please carefully read the permit and its conditions. In addition, if you have a contractor and/or agent, please review these conditions with them to ensure that the work is performed in accordance with the permit terms. Also be aware that other authorizations from Federal, state, or local governments may be required by law. If the work is not completed prior to the permit expiration date, you may apply for a time extension. We recommend you apply for a time extension at least 90 days before the expiration date of the permit.

If you have any questions, please contact me, at the above address or telephone (503) 808-4382.

Sincerely,

Judy L. Linton

Judy L. Linton
Regulatory Specialist
Regulatory Branch

Enclosures

This notice of authorization must be conspicuously displayed at the site of work.

United States Army Corps of Engineers

November 10, 1997

A permit to dredge up to 20,000 cubic yards of sediment.

at River Mile 7.8 of the Willamette River, 5528 Northwest Doane Avenue, Portland, Oregon

has been issued to Tosco Distribution Company on Nov. 10, 1997

Address of Permittee 5528 NW Doane Avenue, Portland, Oregon 97210

Permit Number

ID NO: 97-854

Judy L. Linton

Judy L. Linton
For *District Commander*
Robert T. Slusar
Colonel, Corps of Engineers
District Engineer

ENG FORM 4336, Jul 81 (33 CFR 320-330) EDITION OF JUL 70 MAY BE USED (Proponent: CECW-O)

COP0022094

DEPARTMENT OF THE ARMY PERMIT

Permittee: TOSCO DISTRIBUTION COMPANY

Permit No: 97-00854

Issuing Office: U.S. Army Corps of Engineers, Portland District

NOTE: The term "you" and its derivatives, as used in this permit, means the permittee or any future transferee. The term "this office" refers to the appropriate district or division office of the Corps of Engineers having jurisdiction over the permitted activity or the appropriate official of that office acting under the authority of the commanding officer.

You are authorized to perform work in accordance with the terms and conditions specified below.

Project Description: Remove by clamshell dredge, to a depth of -40 feet Columbia River Datum (CRD), up to 20,000 cubic yards of sediment. No additional dredging is expected to be necessary for a period of five to seven years. The material will be placed on flatdeck barges, transported to Ross Island and placed in the upland disposal site. Once at the disposal site, the sediments will be capped with clean material.

Purpose: Provide adequate moorage depths at the existing facility.

Project Location: 5528 N.W. Doane Avenue, Willamette River Mile 7.8 (Section 12, T1N, R1E), Portland, Multnomah County, Oregon.

Drawing: One drawing labeled 97-854 (Willamette River - Maintenance Dredging).

General Conditions:

1. The time limit for completing the work authorized ends on October 31, 2002. If you find that you need more time to complete the authorized activity, submit your request for a time extension to this office for consideration at least one month before the above date is reached.

2. You must maintain the activity authorized by this permit in good condition and in conformance with the terms and conditions of this permit. You are not relieved of this requirement if you abandon the permitted activity, although you may make a good faith transfer to a third party in compliance with General Condition 4 below. Should you wish to cease to maintain the authorized activity or should you desire to abandon it without a good faith transfer, you must obtain a modification of this permit from this office, which may require restoration of the area.

3. If you discover any previously unknown historic or archeological remains while accomplishing the activity authorized by this permit, you must immediately notify this office of what you have found. We will initiate the Federal and state coordination required to determine if the remains warrant a recovery effort or if the site is eligible for listing in the National Register of Historic Places.

COP0022095

4. If you sell the property associated with this permit, you must obtain the signature of the new owner in the space provided and forward a copy of the permit to this office to validate the transfer of this authorization.

5. If a conditioned water quality certification has been issued for your project, you must comply with the conditions specified in the certification as special conditions to this permit. For your convenience, a copy of the certification is attached if it contains such conditions.

6. You must allow representatives from this office to inspect the authorized activity at any time deemed necessary to ensure that it is being or has been accomplished in accordance with the terms and conditions of your permit.

Special Conditions a. through f.:

a. Work in the waterway shall be done so as to minimize turbidity increases in the water that tend to degrade water quality and damage aquatic life.

b. Land disposal of dredged material shall be accomplished behind adequately maintained protective berms, which will prevent the material from returning to the waterway.

c. If a bucket dredge of any type, including but not limited to grab or clamshell, dipper, dragline, or backhaul bucket, is used, all digging passes of the bucket shall be completed without any material, once in the bucket, being returned to the wetted area.

d. When the District Engineer has been notified by a fishery agency that a filling activity is adversely affecting fish or wildlife resources or the harvest thereof, and when the District Engineer subsequently directs remedial measures, the permittee shall comply with such directions as may be received to suspend or modify the activity, to the extent required to mitigate or eliminate the adverse effect.

e. The dredged material will be capped with clean material once disposal activities have been completed.

f. Inwater disposal is not authorized by this permit.

Further Information:

1. Congressional Authorities: You have been authorized to undertake the activity described above pursuant to:

(X) Section 10 of the Rivers and Harbors Act of 1899 (33 U.S.C. 403).
( ) Section 404 of the Clean Water Act (33 U.S.C. 1344).
( ) Section 103 of the Marine Protection, Research and Sanctuaries Act of 1972 (33 U.S.C. 1413).

2. Limits of this authorization.

a. This permit does not obviate the need to obtain other Federal, state, or local authorizations required by law.

b. This permit does not grant any property rights or exclusive privileges.

c. This permit does not authorize any injury to the property or rights of others.

d. This permit does not authorize interference with any existing or proposed Federal project.

COP0022096

3. Limits of Federal Liability. In issuing this permit, the Federal Government does not assume any liability for the following:

a. Damages to the permitted project or uses thereof as a result of other permitted or unpermitted activities or from natural causes.

b. Damages to the permitted project or uses thereof as a result of current or future activities undertaken by or on behalf of the United States in the public interest.

c. Damages to persons, property, or to other permitted or unpermitted activities or structures caused by the activity authorized by this permit.

d. Design or construction deficiencies associated with the permitted work.

e. Damage claims associated with any future modification, suspension, or revocation of this permit.

4. Reliance on Applicant's Data: The determination of this office that issuance of this permit is not contrary to the public interest was made in reliance on the information you provided.

5. Reevaluation of Permit Decision. This office may reevaluate its decision on this permit at any time the circumstances warrant. Circumstances that could require a reevaluation include, but are not limited to, the following:

a. You fail to comply with the terms and conditions of this permit.

b. The information provided by you in support of your permit application proves to have been false, incomplete, or inaccurate (See 4 above).

c. Significant new information surfaces which this office did not consider in reaching the original public interest decision.

Such a reevaluation may result in a determination that it is appropriate to use the suspension, modification, and revocation procedures contained in 33 CFR 325.7 or enforcement procedures such as those contained in 33 CFR 326.4 and 326.5. The referenced enforcement procedures provide for the issuance of an administrative order requiring you to comply with the terms and conditions of your permit and for the initiation of legal action where appropriate. You will be required to pay for any corrective measures ordered by this office, and if you fail to comply with such directive, this office may in certain situations (such as those specified in 33 CFR 209.170) accomplish the corrective measures by contract or otherwise and bill you for the cost.

COP0022097

6. Extensions. General condition 1 establishes a time limit for the completion of the activity authorized by this permit. Unless there are circumstances requiring either a prompt completion of the authorized activity or a reevaluation of the public interest decision, the Corps will normally give favorable consideration to a request for an extension of this time limit.

Your signature below, as permittee, indicates that you accept and agree to comply with the terms and conditions of this permit.

(PERMITTEE SIGNATURE)	October 31, 1997 *(DATE)*
Dennis R. Coey *(PRINTED NAME)*	Terminal Manager *(TITLE)*

This permit becomes effective when the Federal official, designated to act for the Secretary of the Army, has signed below.

Judy L. Linton *(DISTRICT ENGINEER)* Byron K. Blankenship FOR Robert T. Slusar Colonel, Corps of Engineers District Engineer	November 10, 1997 *(DATE)*

When the structures or work authorized by this permit are still in existence at the time the property is transferred, the terms and conditions of this permit will continue to be binding on the new owner(s) of the property. To validate the transfer of this permit and the associated liabilities associated with compliance with its terms and conditions, have the transferee sign and date below.

(TRANSFEREE)	*(DATE)*

COP0022098

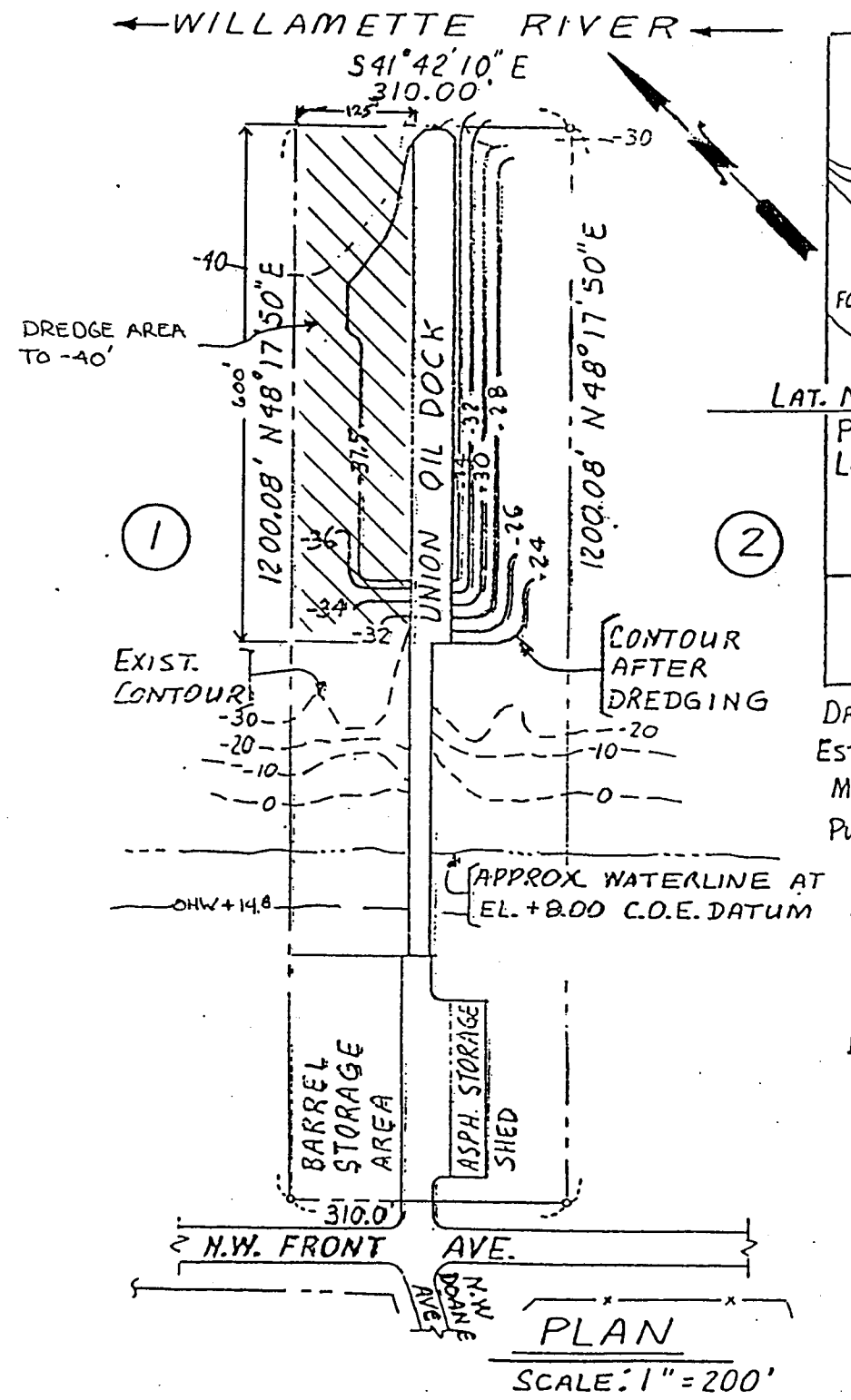

PLAN

SCALE: 1" = 200'

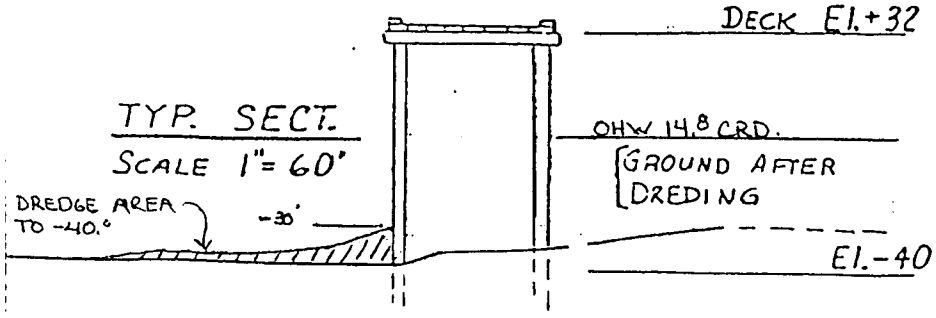

TYP. SECT.

SCALE 1" = 60'

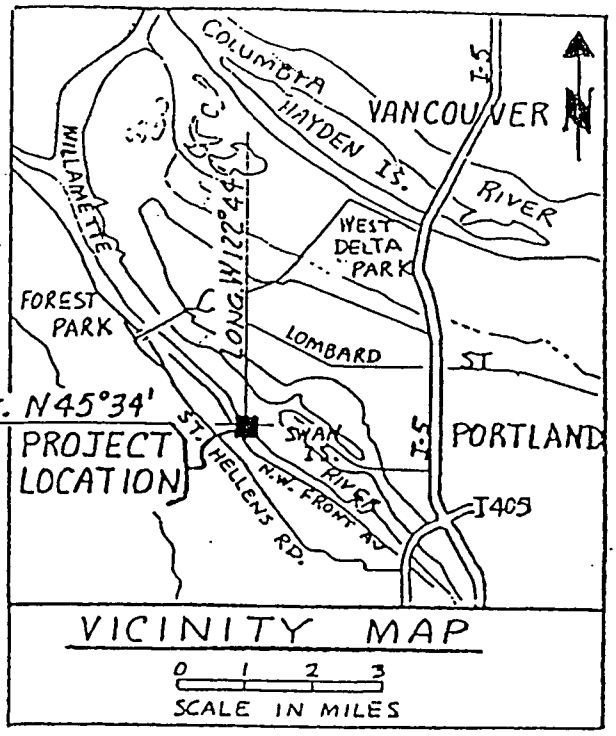

VICINITY MAP

0 1 2 3

SCALE IN MILES

DREDGING METHOD : CLAM SHELL

ESTIMATED QUANTITY : 20,000 C.Y.

MATERIAL : SANDY SILT

PURPOSE : TO RESTORE MOORAGE DEPTH AT PIER

ADJACENT PROPERTY OWNERS :

1. CHEVRON USA, INC.
2. McCALL OIL & CHEMICAL CO.

DATUM : C.R.D.

PROPOSED MAINTENANCE DREDGING

IN

WILLAMETTE RIVER AT PORTLAND OREGON MULTNOMAH COUNTY

APPLICATION BY : TOSCO

SHT. 1 OF 1 JUNE 18, 1997

TOSCO

Tosco Distribution Company
A Division of Tosco Corporation
Portland Terminal
5528 Northwest Doane Avenue
Portland, Oregon 97210
P.O. Box 76
Portland, Oregon 97207

Mr. Greg Speyer
Hickey Marine
6305 NW Lower River Rd
Vancouver, WA. 98660

Dear Greg,

Enclosed is the "Ross Island Sand & Gravel, Fill Deposit Agreement" executed by Tosco for the disposal of dredge spoils from our marine berth dredging project scheduled to begin on December 1, 1997. Please complete your portion as contractor and return a copy to my attention prior to commencement of dredging. The original should be forwarded to Ross Island Sand & Gravel in care of Paul Godsil. If you have any questions I can be reached at 503-248-1538.

Thank you

Dennis R. Coey
Terminal Manager
Portland Terminal

Cc: R. McGowen / Tosco Portland

ROSS ISLAND SAND & GRAVEL CO.

FILL DEPOSIT AGREEMENT

RECITALS:

A. Ross Island Sand & Gravel Co. (the "Company") accepts selected fill material for deposit into the lagoon of Ross Island in the Willamette River in Portland, Oregon.

B. _____ (the "Contractor") has agreed with Tosco Corp. (the "Owner") to dispose of the material described below.

AGREEMENT:

1. Acceptance of Fill Material. The Company agrees to accept from Contractor the materials from the Tosco Portland Marine Berth project and to deposit the material as fill material in the lagoon of Ross Island. The Company will unload the dredged material from Contractor's barges and provide a disposal area marked with buoys within the Ross Island lagoon. Contractor agrees to enter, approach and use the disposal area at Contractor's own risk. The Company does not guarantee any elevation or water depths.

2. Price and Payment Terms. Contractor agrees to pay the Company at the disposal rate agreed upon by them in a separate written agreement. Payment shall be made by Contractor within _____ days after the date of the invoice from Company. In the event that any payment is not made by Contractor when due, the Company may terminate this Agreement. Contractor agrees to pay a late fee of 1 1/2 % Simple interest per month on all past due amounts.

3. Hazardous Waste Warranty. Owner and Contractor warrant that the materials delivered to the Company hereunder will not contain any hazardous, or toxic waste or substance as defined by applicable federal, state or local laws or regulations. Contractor and Owner agree to indemnify and defend the Company against all claims, liabilities, losses and costs which the Company may hereafter incur or pay out as a result of contamination or adverse effects on the environment caused in whole or in party by breach of the foregoing warranty. Owner and Contractor acknowledge that the Company does not hold a permit authorizing the disposal of hazardous wastes or other contaminants and is not authorized as a solid waste landfill or hazardous waste depository.

4. Insurance. Contractor will obtain and keep in force a comprehensive general liability insurance policy with limits not less than $1,000,000 per injury and

4315 South East McLoughlin Blvd. • P.O. Box 82249 • Portland, Oregon 97282-0249 • 239-5504

COP002210

$2,000,000 per occurrence, naming the Company as an additional insured. Contractor will provide the Company with evidence of such insurance as well as evidence of worker's compensation insurance. Contractor agrees to indemnify and defend the Company against all claims, liabilities, losses and costs incurred by the Company as a result of death or bodily injury to any person, destruction or damage to any property or violation of any governmental law, regulation or order caused by the negligent or willful acts or omissions of Contractor's employees or its subcontractors in the performance of this Agreement.

5. Miscellaneous.

(a) In the event any action is commenced to enforce or declare the rights of the parties under this Agreement, the prevailing party shall be entitled to recover its reasonable attorneys' fees and costs at trial and on appeal.

(b) This Agreement shall be governed by the laws of Oregon.

(c) The Company may terminate this Agreement if the Contractor fails to pay when due any amounts owing to the Company or if the Company has reasonable grounds to believe the Owner and the Contractor has breached or is breaching any agreement or warranty stated herein. The parties' indemnity obligations shall survive the termination.

(d) This Fill Deposit Agreement and the separate disposal rate agreement referred to in paragraph 2 above constitute the entire agreement between the parties concerning the subject matter. There are no different or additional agreements, and this Fill Deposit Agreement may be amended only in writing signed by all parties.

Dated: _____.

ROSS ISLAND SAND & GRAVEL CO

By:_____

CONTRACTOR

By:_____

OWNER

By: Ken Coey
Dennis R. Coey

H:\HUMANRES\WORDDATA\FORMS\FILLDEP.DOC

Coey, Dennis

From: Cramer, Marty A.
Sent: Monday, November 03, 1997 11:20 AM
To: Coey, Dennis; Rogers, Anita K.; McGowne, Roger W.
Cc: Silva, Larry B.
Subject: Portland Sediments
Importance: High

Dennis et. al.:

I spoke with Pacific on the dredge sediment disposal issue and in a nut shell, the concern was if the material was a hazardous waste and if we disposed of it at Ross Island, could we have to clean it up some day if the land use changed at the site. The PAH levels in the sediment are well below the current state cleanup levels for either industrial or residential areas so they are of no concern unless the cleanup levels change drastically in the future which I doubt they will.

There were some minor heavy metal hits in the samples with arsenic being the only one above the industrial area cleanup level (4 ppm vs. 3 ppm) and well above the residential cleanup level. This does not make it a hazardous waste but if the landfill was ever converted to industrial or residential uses, the state could conceivably require some cleanup. This is very unlikely as the landfill will be capped minimizing the exposure pathways and arsenic occurs naturally in the local soils so these could be background levels. To be safe, I have asked Pacific to submit the sample with the highest arsenic level for a TCLP analysis which estimates the amount of a substance which can leach out of the sediments and potentially migrate offsite. Even though the total arsenic is above the state cleanup level, the cleanup levels associated with the TCLP concentrations are different and more definitive. Therefore, if the TCLP arsenic is below the state TCLP cleanup levels then our concerns will be minimized.

I do not see any problem at the moment with sending it to Ross Island, even if the TCLP exceeds the state cleanup level. I believe the potential future liability is minimal and the costs for ocean disposal or disposal at a secure (haz waste) landfill would be substantially greater.

If you have questions, please call me.

Thanks,

Marty

If you have any questions, please call me

COP0022103