US EPA RECORDS CENTER REGION 5
474302

NPDES Permit No. IL0002674

Illinois Environmental Protection Agency

Division of Water Pollution Control

2200 Churchill Road

Springfield, Illinois 62706

NATIONAL POLLUTANT DISCHARGE ELIMINATION SYSTEM

Modified (NPDES) Permit

Expiration Date: September 19, 1979

Issue Date: JUN 21 1979
Effective Date: JUN 21 1979
Modified Date: JUN 21 1979

Permittee: United States Steel Corporation

Facility Name and Address: United States Steel Corporation
Joliet Plant, 927 Collins Street
Joliet, Illinois 60432

Receiving Waters: 001 - Illinois and Michigan Canal
002 - The Des Plaines River via the east wall sewer via the Penitentiary Ditch

In compliance with the provisions of the Illinois Environmental Protection Act, the Chapter 3 Rules and Regulations of the Illinois Pollution Control Board, and the FWPCA, the above-named permittee is hereby authorized to discharge at the above location to the above-named receiving stream in accordance with the standard conditions and attachments herein.

Permittee is not authorized to discharge after the above expiration date. In order to receive authorization to discharge beyond the expiration date, the permittee shall submit the proper application as required by the Illinois Environmental Protection Agency (IEPA) not later than 180 days prior to the expiration date.

Thomas G. McSwiggin, P.E.
Manager, Permit Section
Division of Water Pollution Control

TGM:YS:sh/sp/8746a

ATTACHMENT TO FORM I

JOLIET WORKS

STATE AIR PERMITS	STATE SPECIAL WASTE DISPOSAL AUTHORIZATION NUMBERS
04070100	998543
04070247	998544.
04070249	
04080155	
04080156	
04080157	
04080158	
04080159	
04080160	
04080161	
07050017	

R5-8410-01

IL-0333-08

NPDES Permit No. IL0002574

Illinois Environmental Protection Agency

Division of Water Pollution Control

2200 Churchill Road

Springfield, Illinois 62706

PROPOSED
Subject to Revision

NATIONAL POLLUTANT DISCHARGE ELIMINATION SYSTEM

Reissued (NPDES) Permit

Expiration Date: May 1, 1990

Issue Date:
Effective Date:

Name and Address of Permittee:

United States Steel Corporation
Corporation
600 Grant Street
Pittsburgh, Pennsylvania 15230

Facility Name and Address:

United States Steel

Joliet Works
1807 East 28th Street
Joliet, Illinois 60432
Will County

Discharge Number and Name:	Receiving Waters
001 Blowdown from recirculation system of treated process wastewater and non-contact cooling water	Illinois and Michigan Canal
002 Overflow from combined sewer for non-contact cooling water and storm runoff	Des Plaines River via East Wall sewer via the Penitentiary Ditch

In compliance with the provisions of the Illinois Environmental Protection Act, Subtitle C and/or Subtitle D Rules and Regulations of the Illinois Pollution Control Board, and the FWPCA, the above-named permittee is hereby authorized to discharge at the above location to the above-named receiving stream in accordance with the standard conditions and attachments herein.

Permittee is not authorized to discharge after the above expiration date. In order to receive authorization to discharge beyond the expiration date, the permittee shall submit the proper application as required by the Illinois Environmental Protection Agency (IEPA) not later than 180 days prior to the expiration date.

Thomas G. McSwiggin, P.E.
Manager, Permit Section
Division of Water Pollution Control

TGM:REP:bv/sp/0504E

NPDES Permit No. IL0002674

Effluent Limitations and Monitoring

PARAMETER	LOAD LIMITS lbs/day 30 DAY AVG.	LOAD LIMITS lbs/day DAILY MAX.	CONCENTRATION LIMITS mg/l 30 DAY AVG.	CONCENTRATION LIMITS mg/l DAILY MAX.	SAMPLE FREQUENCY	SAMPLE TYPE
From the effective date of this permit until May 1, 1990, the effluent of the following discharge(s) shall be monitored and limited at all times as follows:						
	Outfall(s): 001					
Flow (MGD)						Continuous
	Shall be in the range 6.0 to 9.0				1/Week	Grab
TSS	58.0	144.1	12	24	1/Week	Composite
Oils, Fats, and Grease	72.6	180.1	15	30	1/Week	Mathematical Composite
Temperature	See Special Condition #1				1/Week	Grab
	Outfall: 002				If Discharge Occurs	
Flow (MGD)					1/Week	Estimate
pH	Shall be in the range 6.0 to 9.0				1/Week	Grab
TSS			12	24	1/Week	Grab
Oils, Fats, and Grease			15	30	1/Week	Grab
Temperature	See Special Condition #3				1/Week	Grab

*See Special Condition No. 2

NPDES Permit No. IL0002674

Special Conditions

1. Discharge of wastewater from this facility must not alone or in combination with other sources cause the receiving stream to violate the following thermal limitations at the edge of the mixing zone which is defined by Section 302.211, Illinois Administration Code, Title 35, Chapter 1, Subtitle C, as amended:

A. Maximum temperature rise above natural temperature must not exceed 5°F (2.8°C).

B. Water temperature at representative locations in the main river shall not exceed the maximum limits in the following table during more than one (1) percent of the hours in the 12-month period ending with any month. Moreover, at no time shall the water temperature at such locations exceed the maximum limits in the following table by more than 3°F (1.7°C). (Main river temperatures are temperatures of those portions of the river essentially similar to and following the same thermal regime as the temperatures of the main flow of the river.)

	Jan.	Feb.	Mar.	Apr.	May	June	July	Aug.	Sept.	Oct.	Nov.	Dec.
°F	60	60	60	90	90	90	90	90	90	90	90	60
°C	16	16	16	32	32	32	32	32	32	32	32	16

2. Mathematical composites for oil, fats and greases shall consist of a series of grab samples collected over any 24-hour consecutive period. Each sample shall be analyzed separately and the arithmetic mean of all grab samples collected during a 24-hour period shall constitute a mathematical composite. No single grab sample shall exceed a concentration of 75 mg/l.

3. The receiving waters are designated as Secondary Contact and Indigenous Aquatic Life Waters by Section 302.408, Illinois Administration Code, Title 35, Chapter 1, Subtitle C, as amended. These waters shall meet the following standard:

> Temperatures shall not exceed 93°F (34°C) more than 5% of the time, or 100°F (37.8°C) at any time at the edge of the mixing zone which is defined by Rule 302.102 of the above regulations.

4. The effluent ammonia-nitrogen concentration shall be limited to a level that will comply with the provisions of Illinois Pollution Control Board Rules and Regulations, Chapter 1, Subtitle C, Section 304.301 during its period of effectiveness, and thereafter to a level that will not cause the receiving stream to exceed the water quality standard in Section 302.212, Chapter 1, Subtitle C.

NPDES Permit No. IL0002074

Special Conditions

5. Samples taken in compliance with the effluent monitoring requirements for Outfalls 001 and 002 shall be taken at a point representative of the discharge, but prior to entry into the receiving stream and the Penitentiary Ditch, respectively.

6. For the purpose of this permit, Outfall 001 is limited to blowdown from the recirculation system of treated process water and noncontact cooling water, free from any other wastewater discharges.

7. For the purpose of this permit, Outfall 002 is limited solely to noncontact cooling water and uncontaminated storm water free from process and other wastewater discharges. Discharge shall occur only during storm conditions.

8. The permittee shall record monitoring results on Discharge Monitoring Report Forms using one such form for each discharge each month.

The completed Discharge Monitoring Report forms shall be submitted to IEPA no later than the 15th day of the following month, unless otherwise specified by the permitting authority.

Discharge Monitoring Reports shall be mailed to the IEPA at the following address:

Illinois Environmental Protection Agency
Division of Water Pollution Control
2200 Churchill Road
Springfield, Illinois 62706

Attention: Compliance Assurance Section

Additionally, Discharge Monitoring Report forms shall be mailed to United States Environmental Protection Agency in Chicago on a quarterly basis. The permittee shall submit the reports as follows, unless otherwise specified by the permitting authority.

Period	Report Due At U.S. Environmental Protection Agency
Jan, Feb, Mar	April 28th
April, May, June	July 28th
July, Aug, Sept	October 28th
Oct, Nov, Dec	January 28th

Reports shall be addressed to United States Environmental Protection Agency as follows:

NPDES Water Division - Compliance Section
United States Environmental Protection Agency
Region V
230 South Dearborn Street
Chicago, Illinois 60604

Rockdale Junction
CREST HILL
Chaney Sch
Lidice
Anne Sch
Mile 290
Fairmont
Raynor Park
St Joseph Park
Raynor Park Sch
Mt Moriah Cem
PERMIT No. IL0002674
DISCHARGE 001
Cunningham Sch
Holy Cross Sch
Lincoln Sch
St Thaddeus Sch
Parks Sch
St Raymonds Sch
College of St Francis
St Johns Sch
Farrsgut Sch
Hospital
St Peters Sch
JOLIET
RIVER
Shopping Ctr
Marsh Sch
Water Tank
Joliet Jr College
St Patrick Sch
Woodland Sch
Brickwood Sch
Kelly Sch
Michigan Beach
Hickory

a. Two discharges under permit No. IL0002674
b. Permittee - United States Steel Corporation
c. Discharge point - Joliet Works
d. Type of discharge - overflow
e. Effluent sampling location - at discharge 002
f. Influent sampling location - 150 ft. southwest of discharge 001
g. Frequency of discharge - storm water discharge
h. Latitude - 41° 32' 24" N
i. Longitude - 88° 04' 47" W
j. Quarter section - S-W
k. Section -3
l. Township - 35N
m. Range - 10E
n. P.M. - 3
o. County - Will
p. Receiving stream - DesPlaines River via eastwall sewer via the Penitentiary Ditch

PERMIT No. IL0002674
DISCHARGE 002
Rockdale Junction
CREST HILL
Lidice
Raynor Park
Fairmont
Forest
JOLIET
RIVER
Cunningham Sch
Holy Cross Sch
College of St Francis
St Patrick Sch
Lincoln Sch
St Thaddeus Sch
Parks Sch
Shopping Center
Juliet Jr College
Courthouse
Hospital
Farragut Sch
St Peters Sch
St Johns Sch
Water Tank
Woodland Sch
Michigan Beach
Hickory
Mile 290
STATE PRISON
Quarry
Fairmont Sch
Chaney Sch
Anne Sch
St Joseph Park
Raynor Park Sch
Joseph Cem
Josian Cem
Reedswood Sch
Kelly Sch
Washington Sch
Gaging Station
Marsh Sch
Lincoln Sch
CHICAGO
SANITARY
JOLIET
EASTERN
PACIFIC
TOPEKA
SANTA FE
ILLINOIS
CENTRAL
GULF
COLUMBIA
OHIO
JACKSON
CHASE
WILLIAMSON
BARRY
RUSSELL
KEELEY
INGALLS
MORAN
DOUGLAS
WESTERN
WEST JEFFERSON
WASHINGTON
CASS
YOUNGS
COLLINS
HENDERSON
CLEMENT
CENTER
HAYNOR
PLAINFIELD
ROAD
BROADWAY
WILLIAM
REED
MARION
MORGAN
WHEELER
IOWA
GARVIN
ANTHONY
GREEN GARDEN
ELSIE
AVE
ST
BM 550
600
650
550
535
J O L I E T

a. Two discharges under permit No. IL0002674
b. Permittee - United States Steel Corporation
c. Discharge point - Joliet Works
d. Type of discharge - overflow
e. Effluent sampling location - at discharge 002
f. Influent sampling location - 150 ft. southwest of discharge 001
g. Frequency of discharge - storm water discharge
h. Latitude - 40° 32' 24" N
i. Longitude - 88° 04' 47" W
j. Quarter section - S-W
k. Section -3
l. Township - 35N
m. Range - 10E
n. P.M. - 3
o. County - Will
p. Receiving stream - DesPlaines River via eastwall sewer via the Penitentiary Ditch

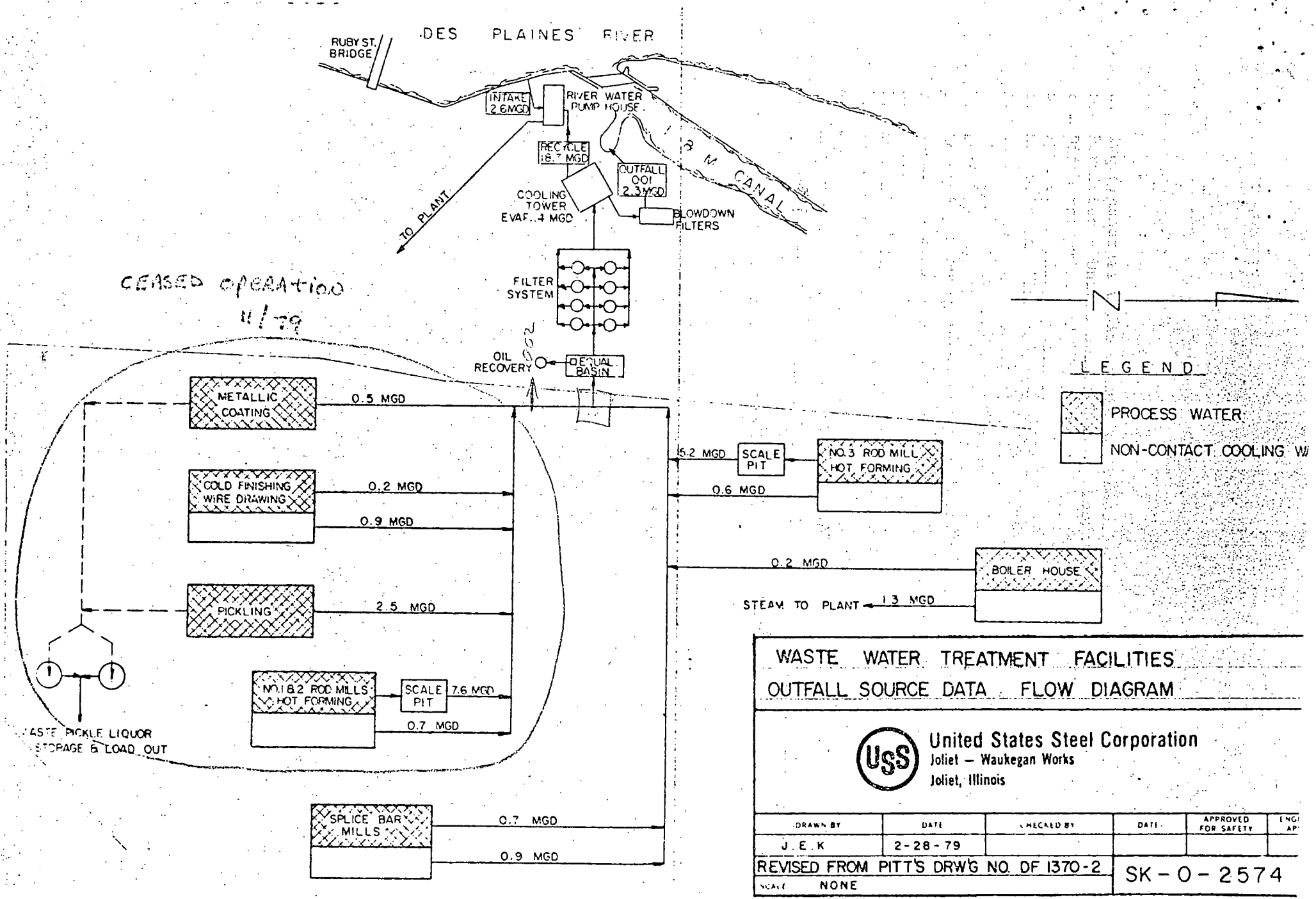
DES PLAINES RIVER
RUBY ST. BRIDGE
INTAKE 2.6 MGD
RIVER WATER PUMP HOUSE
RECYCLE 18.7 MGD
OUTFALL 001 2.3 MGD
COOLING TOWER EVAP. .4 MGD
BLOWDOWN FILTERS
TO PLANT
CANAL
FILTER SYSTEM
OIL RECOVERY
EQUAL BASIN
CEASED operation 11/79
METALLIC COATING
0.5 MGD
COLD FINISHING WIRE DRAWING
0.2 MGD
0.9 MGD
PICKLING
2.5 MGD
NO.1 & 2 ROD MILLS HOT FORMING
SCALE PIT
7.6 MGD
0.7 MGD
WASTE PICKLE LIQUOR STORAGE & LOAD OUT
SPLICE BAR MILLS
0.7 MGD
0.9 MGD
5.2 MGD
SCALE PIT
NO.3 ROD MILL HOT FORMING
0.6 MGD
0.2 MGD
BOILER HOUSE
STEAM TO PLANT
1.3 MGD
N
LEGEND
PROCESS WATER
NON-CONTACT COOLING W
WASTE WATER TREATMENT FACILITIES
OUTFALL SOURCE DATA FLOW DIAGRAM
USS
United States Steel Corporation
Joliet – Waukegan Works
Joliet, Illinois
DRAWN BY
DATE
CHECKED BY
DATE
APPROVED FOR SAFETY
J. E. K
2-28-79
REVISED FROM PITT'S DRW'G NO. DF 1370-2
SCALE NONE
SK-0-2574

CI-007

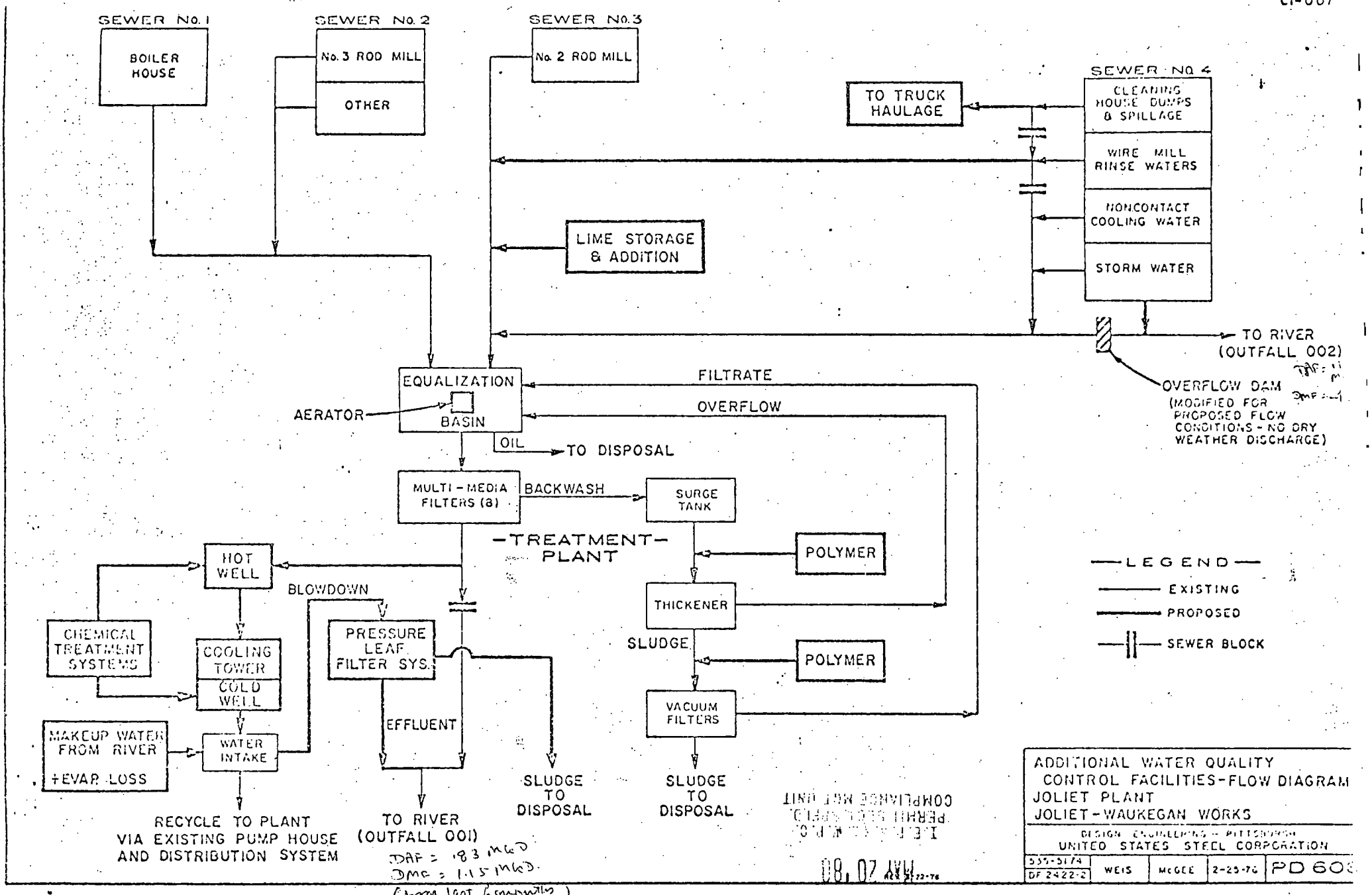

DAF = .83 MGD
DMF = 1.15 MGD
(from last 6 months DMR)

ADDITIONAL WATER QUALITY CONTROL FACILITIES-FLOW DIAGRAM
JOLIET PLANT
JOLIET-WAUKEGAN WORKS

DESIGN ENGINEERING - PITTSBURGH
UNITED STATES STEEL CORPORATION

535-5174 / DF 2422-2	WEIS	McGEE	2-25-76	PD 603

RECEIVED

CI-0076

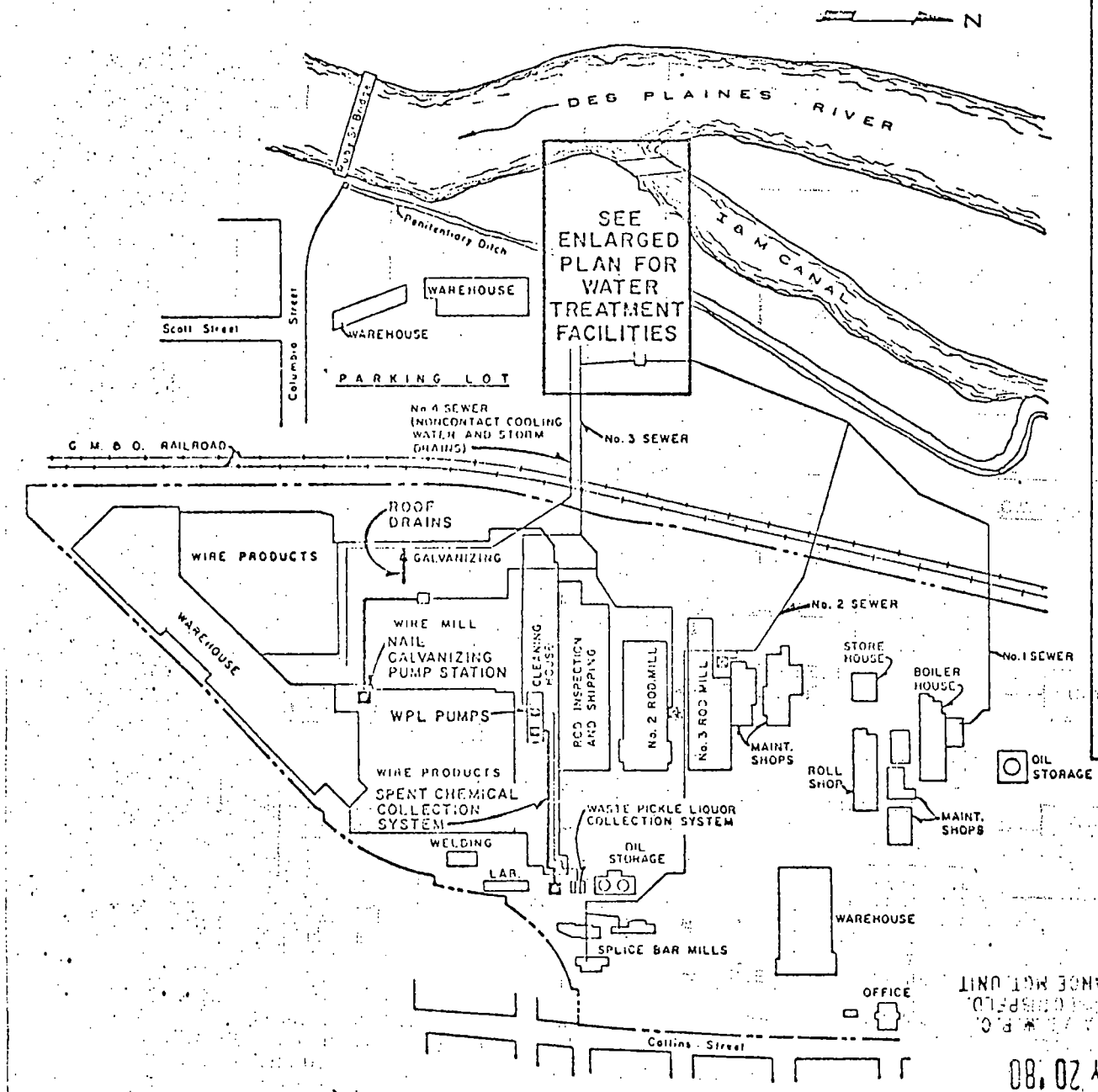

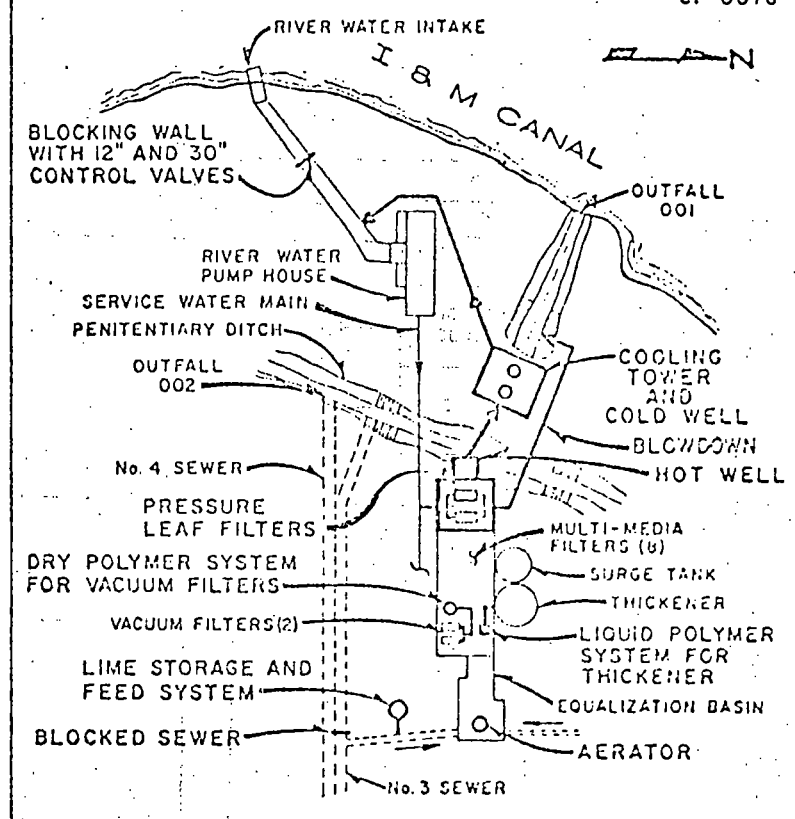

ENLARGED PLAN – WATER TREATMENT FACILITIES

—LEGEND—

EXISTING

NEW

ADDITIONAL WATER QUALITY CONTROL FACILITIES
JOLIET PLANT
JOLIET-WAUKEGAN WORKS

DESIGN ENGINEERING - PITTSBURGH
UNITED STATES STEEL CORPORATION

535-5174 DF 2422-1	CARROLL	McGEE	2-24-76	PD6C

REV. 3-22-76

MAY 20 '80
I.E.P.A./I.W.P.C.
PERMIT CONSPFLD.
COMPLIANCE MGT. UNIT
RECEIVED

UNITED STATES STEEL CORPORATION

JOLIET WORKS

N.P.D.E.S. SURVEY

February 28, 1980

RECEIVED
MAY 20 '80
PERMIT & COMPLIANCE MGT. UNIT

001

	INLET			OUTFALL		
SAMPLE DATE	1/21/80	1/22/80	1/23/80	1/21/80	1/22/80	1/23/80
ERG #	6441	6448	6454	6442	6449	6455
PARAMETER						
TOC	14	7	13	6	8	10
BOD	7	8	4	<1	[illegible]	<1
COD	310	180	250	240	200	210
pH	7.3	7.3	7.1	8.9	9.1	8.7
T.S.S.	16	10	15	<1	1	2
T.K.N.	6.0	5.8	4.8	2.1	1.8	1.7
CN^-	.021	.026	.019	.027	.027	.020
PHENOLS	.006	<.005	.005	<.005	.029	.017
Sb	<.05	<.05	<.05	<.05	<.05	<.05
As *	1.9	2.4	1.4	1.9	2.2	2.4
Be	<.002	<.002	<.002	<.002	<.002	<.002
Cd	.003	.002	.003	.003	.002	.003
Cr	<.006	<.006	.017	<.006	<.006	.010
Cu	.010	.010	.008	.007	.005	.006
Pb	.024	.054	.035	.018	.041	.030
Hg	<.0002	<.0002	<.0002	.0002	<.0002	<.0002
Ni	.068	.065	.054	.035	.034	.034

Results in parts per million, unless otherwise noted.
* Parts per billion.
** Radioactivity - Results in Picocuries/l.
*** Results in Colonies/100 ml.

ENVIRONMENTAL RESEARCH GROUP, INC.

UNITED STATES STEEL CORPORATION

JOLIET WORKS

N.P.D.E.S. SURVEY

February 28, 1980

	INLET			OUTFALL 001		
SAMPLE DATE	1/21/80	1/22/80	1/23/80	1/21/80	1/22/80	1/23/80
ERG #	6441	6448	6454	6442	6449	6455
PARAMETER						
Se *	<1	<1	4	1.2	<1	7
Ag	.002	<.002	<.002	<.002	.002	<.002
Tl	<.03	<.03	<.03	<.03	<.03	<.03
NH_3-N	1.7	5.1	4.5	1.0	1.2	1.1
Br	<.1	.17	<.1	<.1	<.1	.17
COLOR UNITS	25	25	25	20	15	20
*** FECAL COLI.	104	300	28	<4	4	<4
F^-	.93	1.0	.87	.84	.86	.86
NO_3^-	2.3	2.9	3.3	4.5	4.3	5.0
$NO_2^=$	.24	.24	.20	.41	.30	.35
OIL & GREASE	2	2	<1	2	<1	<1
T-P	.92	.83	.86	.41	.40	.40
** GROSS ALPHA	<12	<12	<12	<12	<12	<12
GROSS BETA	29	<5	<5	7	43	10
$SO_4^=$	140	110	140	180	150	160
$SO_3^=$	<1	<1	<1	<1	<1	<1
S=	.020	.032	.016	<.01	<.01	.021
MBAS	.14	.085	.15	.060	.068	.056

Results in parts per million, unless otherwise noted.

* Parts per billion.

** Radioactivity - Results in Picocuries/l.

*** Results in Colonies/100 ml.

ENVIRONMENTAL RESEARCH GROUP, INC.

UNITED STATES STEEL CORPORATION

JOLIET WORKS

N.P.D.E.S. SURVEY

February 28, 1980

	INLET			OUTFALL 001		
SAMPLE DATE	1/21/80	1/22/80	1/23/80	1/21/80	1/22/80	1/23/80
ERG #	6441	6448	6454	6442	6449	6455
PARAMETER						
Al	.30	.43	.37	<.05	<.05	.06
Ba	.05	.03	.03	<.02	<.02	<.02
B	.38	.31	.28	.58	.46	.40
Co	<.005	<.005	<.005	<.005	<.005	<.005
Fe	.70	.66	.70	1.1	.14	.16
Mg	26	26	27	28	28	29
Mo	<.10	<.10	<.10	<.10	<.10	<.10
Mn	.069	.056	.039	.021	.019	.018
Sn	<.27	<.27	<.27	<.27	<.27	<.27
Ti	<.4	<.4	<.4	<.4	<.4	<.4
V BY AA	<.02	<.02	<.02	.03	<.02	<.02
BY NA	<.002	.0024	<.002	<.002	<.002	<.002
RESIDUAL CHLORINE	1.7	.7	.1	2.9	.6	.4
Zn	.14	.12	.10	.075	.018	.051

Results in parts per million, unless otherwise noted.

* Parts per billion.

** Radioactivity - Results in Picocuries/l.

*** Results in Colonies/100 ml.

ENVIRONMENTAL RESEARCH GROUP, INC.

UNITED STATES STEEL CORPORATION

JOLIET WORKS

N.P.D.E.S. SURVEY

February 28, 1980

GC/MS

SAMPLE I.D. INLET

SAMPLE DATE 1/21-1/23/80

ERG # 6456

ACID FRACTION

NONE DETECTABLE

BASE NEUTRAL FRACTION

*.016	PPM	DIBUTLY PHTHALATE
*.13	PPM	ETHYL HEXYL PHTHALATE

VOLATILE FRACTION

.018	PPM	CHLOROFORM
<.01	PPM	TRICHLOROETHANE
<.01	PPM	TRICHLOROETHYLENE
<.01	PPM	TETRACHLOROETHENE

SAMPLE I.D. OUTFALL

SAMPLE DATE 1/21-1/23/80

ERG # 6457

ACID FRACTION

NONE DETECTABLE

BASE NEUTRAL FRACTION

*.01	PPM	DIETHYL PHTHALATE
*.023	PPM	DIBUTYL PHTHALATE
*.013	PPM	ETHYL HEXYL PHTHALATE

VOLATILE FRACTION

<.01	PPM	CHLOROFORM
<.01	PPM	TRICHLOROETHANE
<.01	PPM	TRICHLOROETHYLENE
<.01	PPM	TETRACHLOROETHENE

*PHTHALATE LEVELS REPORTED BELOW A CONCENTRATION OF 5.0 PPM SHOULD BE CONSIDERED AMBIGUOUS DUE TO RESIDUAL PHTHALATE LEVELS FOUND IN THE ANALYTICAL BLANKS. THEY ARE REPORTED FOR YOUR INFORMATION ONLY.

UNITED STATES STEEL CORPORATION

JOLIET WORKS

N.P.D.E.S. SURVEY

February 28, 1980

PRIORITY POLLUTANT - PESTICIDES AND PCB

SAMPLE I.D. INLET

SAMPLE DATE 1/21-23/80

ERG # 6456

PARAMETER	CONCENTRATION	DETECTION LIMITS (PPB)
ALDRIN	N/D	.01
HEPTACHLOR	N/D	.01
HEPTACHLOR EPOXIDE	N/D	.01
a - ENDOSULFAN - ALPHA	N/D	.01
DIELDRIN	N/D	.03
4, 4, - DDE	N/D	.01
4, 4, - DDD	N/D	.03
4, 4, - DDT	N/D	.05
ENDRIN	N/D	.02
ENDOSULFAN SULFATE	N/D	.05
TOXAPHENE	N/D	1.5
CHLORDANE	N/D	.11
PCB - 1016 (AROCHLOR 1016)	N/D	.10
PCB - 1221 (AROCHLOR 1221)	N/D	.12
PCB - 1232 (AROCHLOR 1232)	N/D	.13
PCB - 1242 (AROCHLOR 1242)	N/D	.07
PCB - 1248 (AROCHLOR 1248)	N/D	.15
PCB - 1254 (AROCHLOR 1254)	N/D	.16
PCB - 1260 (AROCHLOR 1260)	N/D	.23
BETA ENDOSULFAN	N/D	.03
ALPHA BHC	N/D	.02
BETA BHC	N/D	.01
DELTA BHC	N/D	.01
GAMMA BHC (LINDANE)	N/D	.20

N/D = NON DETECTABLE

UNITED STATES STEEL CORPORATION

JOLIET WORKS

N.P.D.E.S. SURVEY

February 28, 1980

PRIORITY POLLUTANT - PESTICIDES AND PCB

SAMPLE I.D. OUTFALL

SAMPLE DATE 1/21-23/80

ERG # 6457

PARAMETER	CONCENTRATION	DETECTION LIMITS (PPB)
ALDRIN	N/D	.02
HEPTACHLOR	N/D	.01
HEPTACHLOR EPOXIDE	N/D	.01
a - ENDOSULFAN - ALPHA	N/D	.01
DIELDRIN	N/D	.03
4, 4, - DDE	N/D	.01
4, 4, - DDD	N/D	.03
4, 4, - DDT	N/D	.05
ENDRIN	N/D	.02
ENDOSULFAN SULFATE	N/D	.05
TOXAPHENE	N/D	1.5
CHLORDANE	N/D	.11
PCB - 1016 (AROCHLOR 1016)	N/D	.10
PCB - 1221 (AROCHLOR 1221)	N/D	.12
PCB - 1232 (AROCHLOR 1232)	N/D	.13
PCB - 1242 (AROCHLOR 1242)	N/D	.07
PCB - 1248 (AROCHLOR 1248)	N/D	.15
PCB - 1254 (AROCHLOR 1254)	N/D	.16
PCB - 1260 (AROCHLOR 1260)	N/D	.23
BETA ENDOSULFAN	N/D	.03
ALPHA BHC	N/D	.01
BETA BHC	N/D	.01
DELTA BHC	N/D	.01
GAMMA BHC (LINDANE)	N/D	.25

N/D = NON DETECTABLE

ENVIRONMENTAL RESEARCH GROUP, INC.