US EPA RECORDS CENTER REGION 5
474298

United States Steel Corporation

February 21, 1985

RECEIVED
MAR 04 1985
Environmental Protection Agency
Division of Water Pollution Control
Permit Section-Springfield
State of Illinois

Illinois Environmental Protection Agency
Division of Water Pollution Control
Permit Section No. 15
2200 Churchill Road
Springfield, IL 62706

Gentlemen:

IL0002674

Subject: U. S. Steel - Joliet Works
NPDES Permit Applications

Enclosed please find one set of the completed NPDES Permit applications for subject Joliet Works Outfalls 001 and 002.

We believe the Agency will find all the data necessary to grant a NPDES Permit for the coming period. Please call if you have any questions.

Sincerely,

Philip X. Masciantonio

Philip X. Masciantonio
Vice President,
Environmental Affairs
USSC Tech Center
One Tech Center Drive
Monroeville, PA 15146

PXM:ce
(108B-20)

Attachment

Fill—in areas are spaced for elite type, i.e., 12 characters/inch

FORM 1 GENERAL

EPA

U.S. ENVIRONMENTAL PROTECTION AGENCY

GENERAL INFORMATION

Consolidated Permits Program

(Read the "General Instructions" before starting.)

I. EPA I.D. NUMBER: F I L D 0 0 5 4 5 4 5 6 6

LABEL ITEMS

I. EPA I.D. NUMBER

III. FACILITY NAME

V. FACILITY MAILING ADDRESS

VI. FACILITY LOCATION

PLEASE PLACE LABEL IN THIS SPACE

GENERAL INSTRUCTIONS

If a preprinted label has been provided, affix it in the designated space. Review the information carefully; if any of it is incorrect, cross through it and enter the correct data in the appropriate fill—in area below. Also, if any of the preprinted data is absent *(the area to the left of the label space lists the information that should appear)*, please provide it in the proper fill—in area*(s)* below. If the label is complete and correct, you need not complete Items I, III, V, and VI *(except VI-B which must be completed regardless)*. Complete all items if no label has been provided. Refer to the instructions for detailed item descriptions and for the legal authorizations under which this data is collected.

II. POLLUTANT CHARACTERISTICS

INSTRUCTIONS: Complete A through J to determine whether you need to submit any permit application forms to the EPA. If you answer "yes" to any questions, you must submit this form and the supplemental form listed in the parenthesis following the question. Mark "X" in the box in the third column if the supplemental form is attached. If you answer "no" to each question, you need not submit any of these forms. You may answer "no" if your activity is excluded from permit requirements; see Section C of the instructions. See also, Section D of the instructions for definitions of bold—faced terms.

SPECIFIC QUESTIONS	MARK 'X' YES	NO	FORM ATTACHED	SPECIFIC QUESTIONS	MARK 'X' YES	NO	FORM ATTACHED
A. Is this facility a **publicly owned treatment works** which results in a **discharge to waters of the U.S.**? (FORM 2A)		X		B. Does or will this facility *(either existing or proposed)* include a **concentrated animal feeding operation** or **aquatic animal production facility** which results in a **discharge to waters of the U.S.**? (FORM 2B)		X	
C. Is this a facility which currently results in **discharges to waters of the U.S.** other than those described in A or B above? (FORM 2C)	X			D. Is this a proposed facility *(other than those described in A or B above)* which will result in a **discharge to waters of the U.S.**? (FORM 2D)		X	
E. Does or will this facility treat, store, or dispose of **hazardous wastes**? (FORM 3)		X		F. Do you or will you inject at this facility industrial or municipal effluent below the lowermost stratum containing, within one quarter mile of the well bore, underground sources of drinking water? (FORM 4)		X	
G. Do you or will you inject at this facility any produced water or other fluids which are brought to the surface in connection with conventional oil or natural gas production, inject fluids used for enhanced recovery of oil or natural gas, or inject fluids for storage of liquid hydrocarbons? (FORM 4)		X		H. Do you or will you inject at this facility fluids for special processes such as mining of sulfur by the Frasch process, solution mining of minerals, in situ combustion of fossil fuel, or recovery of geothermal energy? (FORM 4)		X	
I. Is this facility a proposed **stationary source** which is one of the 28 industrial categories listed in the instructions and which will potentially emit 100 tons per year of any air pollutant regulated under the Clean Air Act and may affect or be located in an attainment area? (FORM 5)		X		J. Is this facility a proposed **stationary source** which is NOT one of the 28 industrial categories listed in the instructions and which will potentially emit 250 tons per year of any air pollutant regulated under the Clean Air Act and may affect or be located in an attainment area? (FORM 5)		X	

III. NAME OF FACILITY

1 SKIP UNITED STATES STEEL CORP JOLIET WORKS

IV. FACILITY CONTACT

A. NAME & TITLE *(last, first, & title)*	B. PHONE *(area code & no.)*		
2 FRAVEL ROBERT K GENERAL MNGR	216	277	2500

V. FACILITY MAILING ADDRESS

A. STREET OR P.O. BOX

3 1807 E 28TH STREET

B. CITY OR TOWN	C. STATE	D. ZIP CODE
4 LORAIN	OH	44055

RECEIVED

MAR 04 1985

Permit Section Springfield State of Illinois

VI. FACILITY LOCATION

A. STREET, ROUTE NO. OR OTHER SPECIFIC IDENTIFIER

5 927 COLLINS STREET

B. COUNTY NAME

WILL

C. CITY OR TOWN	D. STATE	E. ZIP CODE	F. COUNTY CODE *(if known)*
6 JOLIET	IL	60432	

EPA Form 3510-1 (6-80)

CONTINUE ON REVER

CONTINUED FROM THE FRONT

VII. SIC CODES (4-digit, in order of priority)

A. FIRST	B. SECOND
C 7: 3312 (specify) STEEL MILLS	C 7: (specify)
C. THIRD	**D. FOURTH**
C 7: (specify)	C 7: (specify)

VIII. OPERATOR INFORMATION

A. NAME: C 8 UNITED STATES STEEL CORPORATION

B. Is the name listed in Item VIII-A also the owner? [X] YES [ ] NO (66)

C. STATUS OF OPERATOR (Enter the appropriate letter into the answer box; if "Other", specify.)

F = FEDERAL
S = STATE
P = PRIVATE
M = PUBLIC (other than federal or state)
O = OTHER (specify)

P (specify)

D. PHONE (area code & no.): C A 412 433 6012

E. STREET OR P.O. BOX: 600 GRANT STREET

F. CITY OR TOWN: C B PITTSBURGH

G. STATE: PA

H. ZIP CODE: 15230

IX. INDIAN LAND

Is the facility located on Indian lands? [ ] YES [X] NO (52)

X. EXISTING ENVIRONMENTAL PERMITS

A. NPDES (Discharges to Surface Water): C 9 T N I ILO002674	D. PSD (Air Emissions from Proposed Sources): C 9 T P I
B. UIC (Underground Injection of Fluids): C 9 T U I	E. OTHER (specify): C 9 T I 1970450024 (specify) ILLINOIS EPA-FACILITY IDENTIFICATION NUMBER
C. RCRA (Hazardous Wastes): C 9 T R I ILD-005454566	E. OTHER (specify): C 9 T I (specify)

XI. MAP

Attach to this application a topographic map of the area extending to at least one mile beyond property bounderies. The map must show the outline of the facility, the location of each of its existing and proposed intake and discharge structures, each of its hazardous waste treatment, storage, or disposal facilities, and each well where it injects fluids underground. Include all springs, rivers and other surface water bodies in the map area. See instructions for precise requirements.

XII. NATURE OF BUSINESS (provide a brief description)

The Facility produces Steel Rods & Wire Fabrics.

XIII. CERTIFICATION (see instructions)

I certify under penalty of law that I have personally examined and am familiar with the information submitted in this application and all attachments and that, based on my inquiry of those persons immediately responsible for obtaining the information contained in the application, I believe that the information is true, accurate and complete. I am aware that there are significant penalties for submitting false information, including the possibility of fine and imprisonment.

A. NAME & OFFICIAL TITLE (type or print)	B. SIGNATURE	C. DATE SIGNED
P. X. MASCIANTONIO VICE PRESIDENT ENVIRONMENTAL AFFAIRS	P. X. Masciantonio	2/25/85

COMMENTS FOR OFFICIAL USE ONLY

C

Please print or type in the unshaded areas only. | ILD005454566 | OMB No. 2060-0059 Approval expires 3-31-84

FORM 2C NPDES

U.S. ENVIRONMENTAL PROTECTION AGENCY
APPLICATION FOR PERMIT TO DISCHARGE WASTEWATER
EXISTING MANUFACTURING, COMMERCIAL, MINING AND SILVICULTURAL OPERATIONS
Consolidated Permits Program

I. OUTFALL LOCATION

For each outfall, list the latitude and longitude of its location to the nearest 15 seconds and the name of the receiving water.

A. OUTFALL NUMBER (list)	B. LATITUDE			C. LONGITUDE			D. RECEIVING WATER (name)
	1. DEG.	2. MIN.	3. SEC.	1. DEG.	2. MIN.	3. SEC.	
001	41	32	24	88	04	47	ILLINOIS AND MICHIGAN CANAL
002	41	32	26	88	04	40	DES PLAINES RIVER VIA EAST WALL SEWER VIA THE PENITENIARY DITCH

II. FLOWS, SOURCES OF POLLUTION, AND TREATMENT TECHNOLOGIES

A. Attach a line drawing showing the water flow through the facility. Indicate sources of intake water, operations contributing wastewater to the effluent, and treatment units labeled to correspond to the more detailed descriptions in Item B. Construct a water balance on the line drawing by showing average flows between intakes, operations, treatment units, and outfalls. If a water balance cannot be determined *(e.g., for certain mining activities)*, provide a pictorial description of the nature and amount of any sources of water and any collection or treatment measures.

B. For each outfall, provide a description of: (1) All operations contributing wastewater to the effluent, including process wastewater, sanitary wastewater, cooling water, and storm water runoff; (2) The average flow contributed by each operation; and (3) The treatment received by the wastewater. Continue on additional sheets if necessary.

1. OUTFALL NO (list)	2. OPERATION(S) CONTRIBUTING FLOW		3. TREATMENT		
	a. OPERATION (list)	b. AVERAGE FLOW (include units)	a. DESCRIPTION	b. LIST CODES FROM TABLE 2C-1	
001	BLOWDOWN FROM RECIRCULATION		MIXING	1	O
	SYSTEM OF TREATED PROCESS		NEUTRALIZATION	2	K
	WASTEWATER AND NON-CONTACT		COAGULATION	2	D
	COOLING WATER		GRAVITY THICKENING	5	L
			MULTIMEDIA FILTRATION	1	O
			VACUUM FILTRATION	5	U
			DIATOMECEOUS EARTH FILTRATION	1	C
002	OVERFLOW FROM COMBINED SEWER				
	FOR NON-CONTACT COOLING WATER		NONE	X	X
	AND STORM RUNOFF				

RECEIVED
MAY 04 1985
Environmental Protection Agency
Division of Water Pollution Control
Permit Section-Springfield
State of Illinois

OFFICIAL USE ONLY *(effluent guidelines sub-categories)*

CONTINUED FROM THE FRONT

C. Except for storm runoff, leaks, or spills, are any of the discharges described in Items II-A or B intermittent or seasonal?

[X] YES *(complete the following table)* [ ] NO *(go to Section III)*

1. OUTFALL NUMBER *(list)*	2. OPERATION(s) CONTRIBUTING FLOW *(list)*	3. FREQUENCY a. DAYS PER WEEK *(specify average)*	3. FREQUENCY b. MONTHS PER YEAR *(specify average)*	4. FLOW a. FLOW RATE *(in mgd)* 1. LONG TERM AVERAGE	4. FLOW a. FLOW RATE *(in mgd)* 2. MAXIMUM DAILY	4. FLOW b. TOTAL VOLUME *(specify with units)* 1. LONG TERM AVERAGE	4. FLOW b. TOTAL VOLUME *(specify with units)* 2. MAXIMUM DAILY	4. FLOW c. DUR ATIO *(in day*
001	BLOWDOWN FROM TREATED WASTEWATER RECIRCULATION SYSTEM	1	12	0.43	0.72	22.36 mgy	0.72 mgd	52 DA (24hr/
002	OVERFLOW FROM COMBINED SEWER FOR NON-CONTACT COOLING WATER (ONLY IN EMERGENCIES)	1	12	0.08	0.196	4.16 mgy	0.196 mgd	52 DA (Once/ Avera

III. MAXIMUM PRODUCTION

A. Does an effluent guideline limitation promulgated by EPA under Section 304 of the Clean Water Act apply to your facility?

[X] YES *(complete Item III-B)* [ ] NO *(to to Section IV)*

B. Are the limitations in the applicable effluent guideline expressed in terms of production *(or other measure of operation)*?

[X] YES *(complete Item III-C)* [ ] NO *(go to Section IV)*

C. If you answered "Yes" to Item III-B, list the quantity which represents an actual measurement of your maximum level of production, expressed in the term and units used in the applicable effluent guideline, and indicate the affected outfalls.

1. MAXIMUM QUANTITY a. QUANTITY PER DAY	b. UNITS OF MEASURE	c. OPERATION, PRODUCT, MATERIAL, ETC. *(specify)*	2. AFFECTED OUTFALLS *(list outfall numbers)*
1,500	TONS/DAY	ROD MILL OPERATION, PRODUCT: STEEL RODS, MILL SCALE, SCARF, & SWARF	001
5.0	TONS/DAY	WIRE MILL OPERATION, PRODUCT: WIRE FABRICS	001

IV. IMPROVEMENTS

A. Are you now required by any Federal, State or local authority to meet any implementation schedule for the construction, upgrading or operation of wast water treatment equipment or practices or any other environmental programs which may affect the discharges described in this application? This include but is not limited to, permit conditions, administrative or enforcement orders, enforcement compliance schedule letters, stipulations, court orders, and gra or loan conditions.

[ ] YES *(complete the following table)* [X] NO *(go to Item IV-B)*

1. IDENTIFICATION OF CONDITION, AGREEMENT, ETC.	2. AFFECTED OUTFALLS a. NO.	2. AFFECTED OUTFALLS b. SOURCE OF DISCHARGE	3. BRIEF DESCRIPTION OF PROJECT	4. FINAL COM PLIANCE DAT a. REQUIRED	4. FINAL COM PLIANCE DAT b. PROJECTE

B. OPTIONAL: You may attach additional sheets describing any additional water pollution control programs *(or other environmental projects which may affec your discharges)* you now have underway or which you plan. Indicate whether each program is now underway or planned, and indicate your actual c planned schedules for construction. [ ] MARK "X" IF DESCRIPTION OF ADDITIONAL CONTROL PROGRAMS IS ATTACHED

 CONTINUE ON PAG

CONTINUED FROM PAGE 2

EPA I.D. NUMBER (copy from Item 1 of Form 1)
ILD005454566

Form Approved
OMB No. 2000-0059
Approval expires 3-31-84

V. INTAKE AND EFFLUENT CHARACTERISTICS

A, B, & C: See instructions before proceeding — Complete one set of tables for each outfall — Annotate the outfall number in the space provided. NOTE: Tables V-A, V-B, and V-C are included on separate sheets numbered V-1 through V-9.

D. Use the space below to list any of the pollutants listed in Table 2c-3 of the instructions, which you know or have reason to believe is discharged or may be discharged from any outfall. For every pollutant you list, briefly describe the reasons you believe it to be present and report any analytical data in your possession. NONE OF THE POLLUTANTS LISTED ARE PRESENT IN THIS FACILITY'S DISCHARGE

1. POLLUTANT	2. SOURCE	1. POLLUTANT	2. SOURCE

VI. POTENTIAL DISCHARGES NOT COVERED BY ANALYSIS

A. Is any pollutant listed in Item V-C a substance or a component of a substance which you do or expect that you will over the next 5 years use or manufactur as an intermediate or final product or byproduct?

☐ YES *(list all such pollutants below)* ☒ NO *(go to Item VI-B)*

B. Are your operations such that your raw materials, processes, or products can reasonably be expected to vary so that your discharges of pollutants may durin the next 5 years exceed two times the maximum values reported in Item V?

☐ YES *(complete Item VI-C below)* ☒ NO *(go to Section VII)*

C. If you answered "Yes" to Item VI-B, explain below and describe in detail the sources and expected levels of such pollutants which you anticipate will be discharged from each outfall over the next 5 years, to the best of your ability at this time. Continue on additional sheets if you need more space.

CONTINUED FROM THE FRONT

VII. BIOLOGICAL TOXICITY TESTING DATA

Do you have any knowledge or reason to believe that any biological test for acute or chronic toxicity has been made on any of your discharges or on a receiving water in relation to your discharge within the last 3 years?

☐ YES *(identify the test(s) and describe their purposes below)* ☒ NO *(go to Section VIII)*

VIII. CONTRACT ANALYSIS INFORMATION

Were any of the analyses reported in Item V performed by a contract laboratory or consulting firm?

☒ YES *(list the name, address, and telephone number of, and pollutants analyzed by, each such laboratory or firm below)* ☐ NO *(go to Section IX)*

A. NAME	B. ADDRESS	C. TELEPHONE *(area code & no.)*	D. POLLUTANTS ANALYZED *(list)*
NORTHERN LABORATORIES, INC.	158 NAPOLEON VALPARAISO, IN 46383	(219) 464-2389	MOST OF THE POLLUTANTS FROM ITEM V
ARRO LABORATORIES, INC.	P. O. BOX 686 CANTON FARM ROAD JOLIET, IL 60434	(815) 727-5436	pH, TEMPERATURE, TOTAL SUSPENDED SOLIDS, GREASE & OIL
EPA DIV. OF WATER POLLUTION CONTROL	1701 FIRST AVENUE MAYWOOD, IL 60153	(312) 345-9780 (312) 886-6100	METALS, BOD, COD, AMMONIA, PHENOLS, CYANIDE TSS, O&G, pH

IX. CERTIFICATION

I certify under penalty of law that I have personally examined and am familiar with the information submitted in this application and all attachments and that, based on my inquiry of those individuals immediately responsible for obtaining the information, I believe that the information is true, accurate and complete. I am aware that there are significant penalties for submitting false information, including the possibility of fine and imprisonment.

A. NAME & OFFICIAL TITLE *(type or print)*	B. PHONE NO. *(area code & no.)*
P. X. MASCIANTONIO VICE PRESIDENT ENVIRONMENTAL AFFAIRS	(412) 825-2793
C. SIGNATURE P. X. Masciantonio	D. DATE SIGNED 2/25/85

PLEASE PRINT OR TYPE IN THE UNSHADED AREAS ONLY. You may report some or all of this information on separate sheets *(use the same format)* instead of completing these pages. SEE INSTRUCTIONS.

EPA I.D. NUMBER *(copy from Item 1 of Form 1)*: ILD005454566

Form Approved
OMB No. 2040-0059
Approval expires 3-31-84

V. INTAKE AND EFFLUENT CHARACTERISTICS *(continued from page 3 of Form 2-C)*

OUTFALL NO 001

PART A - You must provide the results of at least one analysis for every pollutant in this table. Complete one table for each outfall. See instructions for additional details.

1. POLLUTANT	2. EFFLUENT a. MAXIMUM DAILY VALUE (1) CONCENTRATION	a. MAXIMUM DAILY VALUE (2) MASS	b. MAXIMUM 30 DAY VALUE *(if available)* (1) CONCENTRATION	b. MAXIMUM 30 DAY VALUE (2) MASS	c. LONG TERM AVRG. VALUE *(if available)* (1) CONCENTRATION	c. LONG TERM AVRG. VALUE (2) MASS	d. NO. OF ANALYSES	3. UNITS *(specify if blank)* a. CONCENTRATION	3. UNITS b. MASS	4. INTAKE *(optional)* a. LONG TERM AVERAGE VALUE (1) CONCENTRATION	4. INTAKE a. LONG TERM AVERAGE VALUE (2) MASS	4. INTAKE b. NO. OF ANALYSES
a. Biochemical Oxygen Demand *(BOD)*	4.0	24					1	mg/l	lbs/day			
b. Chemical Oxygen Demand *(COD)*	22	132					1	mg/l	lbs/day			
c. Total Organic Carbon *(TOC)*	10	60					1	mg/l	lbs/day			
d. Total Suspended Solids *(TSS)*	32	192	16.2	72	5.6	19.9	41	mg/l	lbs/day			
e. Ammonia *(as N)*	0.59	3.5					1	mg/l	lbs/day			
f. Flow	VALUE 0.72		VALUE 0.58		VALUE 0.43		23		gpd	VALUE		
g. Temperature *(winter)*	VALUE 20.0		VALUE 16.9		VALUE 16.1		3	°C		VALUE		
h. Temperature *(summer)*	VALUE 26.7		VALUE 20.8		VALUE 18.7		5	°C		VALUE		
i. pH	MINIMUM 7.5	MAXIMUM 9.0	MINIMUM 7.8	MAXIMUM 8.3			44	STANDARD UNITS				

PART B - Mark "X" in column 2-a for each pollutant you know or have reason to believe is present. Mark "X" in column 2-b for each pollutant you believe to be absent. If you mark column 2-a for any pollutant, you must provide the results of at least one analysis for that pollutant. Complete one table for each outfall. See the instructions for additional details and requirements.

1. POLLUTANT AND CAS NO. *(if available)*	2. MARK 'X' a. BELIEVED PRESENT	2. MARK 'X' b. BELIEVED ABSENT	3. EFFLUENT a. MAXIMUM DAILY VALUE (1) CONCENTRATION	a. MAXIMUM DAILY VALUE (2) MASS	b. MAXIMUM 30 DAY VALUE *(if available)* (1) CONCENTRATION	b. MAXIMUM 30 DAY VALUE (2) MASS	c. LONG TERM AVRG. VALUE *(if available)* (1) CONCENTRATION	c. LONG TERM AVRG. VALUE (2) MASS	d. NO. OF ANALYSES	4. UNITS a. CONCENTRATION	4. UNITS b. MASS	5. INTAKE *(optional)* a. LONG TERM AVERAGE VALUE (1) CONCENTRATION	5. INTAKE a. LONG TERM AVERAGE VALUE (2) MASS	5. INTAKE b. NO. OF ANALYSES
a. Bromide (24959-67-9)		X												
b. Chlorine, Total Residual		X												
c. Color		X												
d. Fecal Coliform		X												
e. Fluoride (16984-48-8)		X												
f. Nitrate-Nitrite *(as N)*	X		2.0	12.0					1	mg/l	lbs/day	X		

CONTINUE ON REVERSE

ITEM V-B CONTINUED FROM FRONT

1. POLLUTANT AND CAS NO. (if available)	2. MARK 'X' a. BELIEVED PRESENT	b. BELIEVED ABSENT	3. EFFLUENT a. MAXIMUM DAILY VALUE (1) CONCENTRATION	(2) MASS	b. MAXIMUM 30 DAY VALUE (if available) (1) CONCENTRATION	(2) MASS	c. LONG TERM AVRG. VALUE (if available) (1) CONCENTRATION	(2) MASS	d. NO. OF ANALYSES	4. UNITS a. CONCENTRATION	b. MASS	5. INTAKE (optional) a. LONG TERM AVERAGE VALUE (1) CONCENTRATION	(2) MASS	b. NO. OF ANALYSES
g. Nitrogen, Total Organic (as N)		X												
h. Oil and Grease	X		27.2	163	13.9	67.2	6.5	23.3	43	mg/l	lbs/day	X		
i. Phosphorus (as P), Total (7723-14-0)	X		0.31	1.9					1	mg/l	lbs/day	X		
j. Radioactivity														
(1) Alpha, Total		X												
(2) Beta, Total		X												
(3) Radium, Total		X												
(4) Radium 226, Total		X												
k. Sulfate (as SO_4) (14808-79-8)		X												
l. Sulfide (as S)		X												
m. Sulfite (as SO_3) (14265-45-3)		X												
n. Surfactants		X												
o. Aluminum, Total (7429-90-5)		X												
p. Barium, Total (7440-39-3)		X	0.0	0.0					1	mg/l	lbs/day			
q. Boron, Total (7440-42-8)		X												
r. Cobalt, Total (7440-48-4)		X												
s. Iron, Total (7439-89-6)	X		0.1	0.6					1	mg/l	lbs/day	X		
t. Magnesium, Total (7439-95-4)		X												
u. Molybdenum, Total (7439-98-7)		X												
v. Manganese, Total (7439-96-5)	X		0.01	0.06					1	mg/l	lbs/day	X		
w. Tin, Total (7440-31-5)		X												
x. Titanium, Total (7440-32-6)		X												

CONTINUE ON PAGE V-3

EPA I.D. NUMBER (copy from Item 1 of Form 1)	OUTFALL NUMBER
ILD005454566	001

Form Approved
OMB No. 2000-0659
Approval expires 3-31-84

CONTINUED FROM PAGE 3 OF FORM 2-C

PART C - If you are a primary industry and this outfall contains process wastewater, refer to Table 2c-2 in the instructions to determine which of the GC/MS fractions you must test for. Mark "X" in column 2-a for all such GC/MS fractions that apply to your industry and for ALL toxic metals, cyanides, and total phenols. If you are not required to mark column 2-a *(secondary industries, non–process wastewater outfalls, and non–required GC/MS fractions)*, mark "X" in column 2-b for each pollutant you know or have reason to believe is present. Mark "X" in column 2-c for each pollutant you believe to be absent. If you mark either columns 2-a or 2-b for any pollutant, you must provide the results of at least one analysis for that pollutant. Note that there are seven pages to this part; please review each carefully. Complete one table *(all seven pages)* for each outfall. See instructions for additional details and requirements.

1. POLLUTANT AND CAS NUMBER (if available)	2. MARK 'X'			3. EFFLUENT							4. UNITS		5. INTAKE (optional)		
	a. TESTING REQUIRED	b. BELIEVED PRESENT	c. BELIEVED ABSENT	a. MAXIMUM DAILY VALUE		b. MAXIMUM 30 DAY VALUE (if available)		c. LONG TERM AVRG. VALUE (if available)		d. NO. OF ANALYSES	a. CONCENTRATION	b. MASS	a. LONG TERM AVERAGE VALUE		b. NO. OF ANALYSES
				(1) CONCENTRATION	(2) MASS	(1) CONCENTRATION	(2) MASS	(1) CONCENTRATION	(2) MASS				(1) CONCENTRATION	(2) MASS	
METALS, CYANIDE, AND TOTAL PHENOLS															
1M. Antimony, Total (7440-36-0)	X			< 0.020	< 0.01					1	mg/l	lbs/day	X		
2M. Arsenic, Total (7440-38-2)	X			0.004	0.02					1	mg/l	lbs/day	X		
3M. Beryllium, Total, 7440-41-7)	X			< 0.005	< 0.03					1	mg/l	lbs/day	X		
4M. Cadmium, Total (7440-43-9)	X			0.00	0.00					1	mg/l	lbs/day			
5M. Chromium, Total (7440-47-3)	X			0.00	0.00					1	mg/l	lbs/day			
6M. Copper, Total (7550-50-8)	X			0.00	0.00					1	mg/l	lbs/day			
7M. Lead, Total (7439-97-6)	X			0.00	0.00					1	mg/l	lbs/day			
8M. Mercury, Total (7439-97-6)	X			< 0.10	< 0.6					1	mg/l	lbs/day	X		
9M. Nickel, Total (7440-02-0)	X			0.00	0.00					1	mg/l	lbs/day			
10M. Selenium, Total (7782-49-2)	X			< 0.004	< 0.02					1	mg/l	lbs/day	X		
11M. Silver, Total (7440-22-4)	X			< 0.05	< 0.3					1	mg/l	lbs/day	X		
12M. Thallium, Total (7440-28-0)	X			< 0.010	< 0.06					1	mg/l	lbs/day	X		
13M. Zinc, Total (7440-66-6)	X			0.00	0.00					1	mg/l	lbs/day			
14M. Cyanide, Total (57-12-5)	X			0.00	0.00					1	mg/l	lbs/day			
15M. Phenols, Total	X			0.01	0.06					1	mg/l	lbs/day	X		
DIOXIN															
2,3,7,8-Tetrachlorodibenzo-P-Dioxin (1764-01-6)	X			DESCRIBE RESULTS NOT DETECTED											

CONTINUED FROM THE FRONT

1. POLLUTANT AND CAS NUMBER (if available)	2. MARK 'X'			3. EFFLUENT							4. UNITS		5. INTAKE (optional)		
	a. TESTING REQUIRED	b. BELIEVED PRESENT	c. BELIEVED ABSENT	a. MAXIMUM DAILY VALUE		b. MAXIMUM 30 DAY VALUE (if available)		c. LONG TERM AVRG. VALUE (if available)		d. NO. OF ANALYSES	a. CONCENTRATION	b. MASS	a. LONG TERM AVERAGE VALUE		b. NO. OF ANALYSES
				(1) CONCENTRATION	(2) MASS	(1) CONCENTRATION	(2) MASS	(1) CONCENTRATION	(2) MASS				(1) CONCENTRATION	(2) MASS	
GC/MS FRACTION – VOLATILE COMPOUNDS															
1V. Acrolein (107-02-8)	X			N O T		D E T	E C	T E D		1					
2V. Acrylonitrile (107-13-1)	X									1					
3V. Benzene (71-43-2)	X									1					
4V. Bis (Chloromethyl) Ether (542-88-1)	X									1					
5V. Bromoform (75-25-2)	X									1					
6V. Carbon Tetrachloride (56-23-5)	X									1					
7V. Chlorobenzene (108-90-7)	X									1					
8V. Chlorodibromomethane (124-48-1)	X									1					
9V. Chloroethane (75-00-3)	X									1					
10V. 2-Chloroethylvinyl Ether (110-75-8)	X									1					
11V. Chloroform (67-66-3)	X									1					
12V. Dichlorobromomethane (75-27-4)	X									1					
13V. Dichlorodifluoromethane (75-71-8)	X									1					
14V. 1,1-Dichloroethane (75-34-3)	X									1					
15V. 1,2-Dichloroethane (107-06-2)	X									1					
16V. 1,1-Dichloroethylene (75-35-4)	X									1					
17V. 1,2-Dichloropropane (78-87-5)	X									1					
18V. 1,3-Dichloropropylene (542-75-6)	X									1					
19V. Ethylbenzene (100-41-4)	X									1					
20V. Methyl Bromide (74-83-9)	X									1					
21V. Methyl Chloride (74-87-3)	X									1					

CONTINUE ON PAGE V-

CONTINUED FROM PAGE V-4

EPA I.D. NUMBER (copy from Item 1 of Form 1): ILD005454566

OUTFALL NUMBER: 001

Form Approved
OMB No. 2000-0059
Approval expires 3-31-84

1. POLLUTANT AND CAS NUMBER (if available)	2. MARK 'X' a. TESTING REQUIRED	b. BELIEVED PRESENT	c. BELIEVED ABSENT	3. EFFLUENT a. MAXIMUM DAILY VALUE (1) CONCENTRATION	(2) MASS	b. MAXIMUM 30 DAY VALUE (if available) (1) CONCENTRATION	(2) MASS	c. LONG TERM AVRG. VALUE (if available) (1) CONCENTRATION	(2) MASS	d. NO. OF ANALYSES	4. UNITS a. CONCENTRATION	b. MASS	*5. INTAKE (optional) a. LONG TERM AVERAGE VALUE (1) CONCENTRATION	(2) MASS	b. NO. OF ANALYSES
GC/MS FRACTION – VOLATILE COMPOUNDS (continued)															
22V. Methylene Chloride (75-09-2)	X			N O T		D E T	E C	T E D		1					
23V. 1,1,2,2-Tetrachloroethane (79-34-5)	X									1					
24V. Tetrachloroethylene (127-18-4)	X									1					
25V. Toluene (108-88-3)	X									1					
26V. 1,2-Trans-Dichloroethylene (156-60-5)	X									1					
27V. 1,1,1-Trichloroethane (71-55-6)	X									1					
28V. 1,1,2-Trichloroethane (79-00-5)	X									1					
29V. Trichloroethylene (79-01-6)	X									1					
30V. Trichlorofluoromethane (75-69-4)	X									1					
31V. Vinyl Chloride (75-01-4)	X									1					
GC/MS FRACTION – ACID COMPOUNDS															
1A. 2-Chlorophenol (95-57-8)	X			N O T		D E T	E C	T E D		1					
2A. 2,4-Dichlorophenol (120-83-2)	X									1					
3A. 2,4-Dimethylphenol (105-67-9)	X									1					
4A. 4,6-Dinitro-O-Cresol (534-52-1)	X									1					
5A. 2,4-Dinitrophenol (51-28-5)	X									1					
6A. 2-Nitrophenol (88-75-5)	X									1					
7A. 4-Nitrophenol (100-02-7)	X									1					
8A. P-Chloro-M-Cresol (59-50-7)	X									1					
9A. Pentachlorophenol (87-86-5)	X									1					
10A. Phenol (108-95-2)	X									1					
11A. 2,4,6-Trichlorophenol (88-06-2)	X									1					

CONTINUED FROM THE FRONT

1. POLLUTANT AND CAS NUMBER (if available)	2. MARK 'X'			3. EFFLUENT							4. UNITS		5. INTAKE (optional)		
	a. TESTING REQUIRED	b. BELIEVED PRESENT	c. BELIEVED ABSENT	a. MAXIMUM DAILY VALUE		b. MAXIMUM 30 DAY VALUE (if available)		c. LONG TERM AVRG. VALUE (if available)		d. NO. OF ANALYSES	a. CONCENTRATION	b. MASS	a. LONG TERM AVERAGE VALUE		b. NO. OF ANALYSES
				(1) CONCENTRATION	(2) MASS	(1) CONCENTRATION	(2) MASS	(1) CONCENTRATION	(2) MASS				(1) CONCENTRATION	(2) MASS	
GC/MS FRACTION – BASE/NEUTRAL COMPOUNDS															
1B. Acenaphthene (83-32-9)	X			N O T		D E T	E C	T E D		1					
2B. Acenaphtylene (208-96-8)	X									1					
3B. Anthracene (120-12-7)	X									1					
4B. Benzidine (92-87-5)	X									1					
5B. Benzo *(a)* Anthracene (56-55-3)	X									1					
6B. Benzo *(a)* Pyrene (50-32-8)	X									1					
7B. 3,4-Benzo-fluoranthene (205-99-2)	X									1					
8B. Benzo *(ghi)* Perylene (191-24-2)	X									1					
9B. Benzo *(k)* Fluoranthene (207-08-9)	X									1					
10B. Bis *(2-Chloro-ethoxy)* Methane (111-91-1)	X									1					
11B. Bis *(2-Chloro-ethyl)* Ether (111-44-4)	X									1					
12B. Bis *(2-Chloro-isopropyl)* Ether (39638-32-9)	X									1					
13B. Bis *(2-Ethyl-hexyl)* Phthalate (117-81-7)	X									1					
14B. 4-Bromo-phenyl Phenyl Ether (101-55-3)	X									1					
15B. Butyl Benzyl Phthalate (85-68-7)	X									1					
16B. 2-Chloro-naphthalene (91-58-7)	X									1					
17B. 4-Chloro-phenyl Phenyl Ether (7005-72-3)	X									1					
18B. Chrysene (218-01-9)	X									1					
19B. Dibenzo *(a,h)* Anthracene (53-70-3)	X									1					
20B. 1,2-Dichloro-benzene (95-50-1)	X									1					
21B. 1,3-Dichloro-benzene (541-73-1)	X									1					

CONTINUE ON PAGE V-7

ONTINUED FROM PAGE V-6

EPA I.D. NUMBER (copy from Item 1 of Form 1)	OUTFALL NUMBER
ILD005454566	001

Form Approved
OMB No. 2000-0059
Approval expires 3-31-84

1. POLLUTANT AND CAS NUMBER (if available)	2. MARK 'X' a. TESTING REQUIRED	b. BELIEVED PRESENT	c. BELIEVED ABSENT	3. EFFLUENT a. MAXIMUM DAILY VALUE (1) CONCENTRATION	(2) MASS	b. MAXIMUM 30 DAY VALUE (if available) (1) CONCENTRATION	(2) MASS	c. LONG TERM AVRG. VALUE (if available) (1) CONCENTRATION	(2) MASS	d. NO. OF ANALYSES	4. UNITS a. CONCENTRATION	b. MASS	5. INTAKE (optional) a. LONG TERM AVERAGE VALUE (1) CONCENTRATION	(2) MASS	b. NO. OF ANALYSES
C/MS FRACTION – BASE/NEUTRAL COMPOUNDS (continued)															
2B. 1,4-Dichlorobenzene (106-46-7)	X			N O T		D E T	E C	T E D		1					
3B. 3,3'-Dichlorobenzidine (91-94-1)	X									1					
4B. Diethyl phthalate (84-66-2)	X									1					
5B. Dimethyl phthalate (131-11-3)	X									1					
6B. Di-N-Butyl phthalate (84-74-2)	X									1					
7B. 2,4-Dinitrotoluene (121-14-2)	X									1					
8B. 2,6-Dinitrotoluene (606-20-2)	X									1					
9B. Di-N-Octyl phthalate (117-84-0)	X									1					
0B. 1,2-Diphenylhydrazine (as Azobenzene) (122-66-7)	X									1					
1B. Fluoranthene (206-44-0)	X									1					
2B. Fluorene (86-73-7)	X									1					
3B. Hexachlorobenzene (118-71-1)	X									1					
4B. Hexachlorobutadiene (87-68-3)	X									1					
5B. Hexachlorocyclopentadiene (77-47-4)	X									1					
6B. Hexachloroethane (67-72-1)	X									1					
7B. Indeno (1,2,3-cd) Pyrene (193-39-5)	X									1					
8B. Isophorone (78-59-1)	X									1					
9B. Naphthalene (91-20-3)	X									1					
0B. Nitrobenzene (98-95-3)	X									1					
1B. N-Nitrosodimethylamine (62-75-9)	X									1					
2B. N-Nitrosodi-n-Propylamine (621-64-7)	X									1					

CONTINUED FROM THE FRONT

1. POLLUTANT AND CAS NUMBER (if available)	2. MARK 'X'			3. EFFLUENT							4. UNITS		5. INTAKE (optional)		
	a. TESTING REQUIRED	b. BELIEVED PRESENT	c. BELIEVED ABSENT	a. MAXIMUM DAILY VALUE (1) CONCENTRATION	a. MAXIMUM DAILY VALUE (2) MASS	b. MAXIMUM 30 DAY VALUE (if available) (1) CONCENTRATION	b. MAXIMUM 30 DAY VALUE (if available) (2) MASS	c. LONG TERM AVRG. VALUE (if available) (1) CONCENTRATION	c. LONG TERM AVRG. VALUE (if available) (2) MASS	d. NO. OF ANALYSES	a. CONCENTRATION	b. MASS	a. LONG TERM AVERAGE VALUE (1) CONCENTRATION	a. LONG TERM AVERAGE VALUE (2) MASS	b. NO. OF ANALYSES
GC/MS FRACTION – BASE/NEUTRAL COMPOUNDS (continued)															
33B. N-Nitrosodiphenylamine (86-30-6)	X			N	O T	D E T	E C	T E D		1					
34B. Phenanthrene (85-01-8)	X									1					
35B. Pyrene (129-00-0)	X									1					
36B. 1,2,4 - Trichlorobenzene (120-82-1)	X									1					
GC/MS FRACTION – PESTICIDES															
1P. Aldrin (309-00-2)			X												
2P. α-BHC (319-84-6)			X												
3P. β-BHC (319-85-7)			X												
4P. γ-BHC (58-89-9)			X												
5P. δ-BHC (319-86-8)			X												
6P. Chlordane (57-74-9)			X												
7P. 4,4'-DDT (50-29-3)			X												
8P. 4,4'-DDE (72-55-9)			X												
9P. 4,4'-DDD (72-54-8)			X												
10P. Dieldrin (60-57-1)			X												
11P. α-Endosulfan (115-29-7)			X												
12P. β-Endosulfan (115-29-7)			X												
13P. Endosulfan sulfate (1031-07-8)			X												
14P. Endrin (72-20-8)			X												
15P. Endrin aldehyde (7421-93-4)			X												
16P. Heptachlor (76-44-8)			X												

CONTINUED FROM PAGE V-8

EPA I.D. NUMBER (copy from Item 1 of Form 1)	OUTFALL NUMBER
ILD005454566	001

Form Approved
OMB No. 2000-0059
Approval expires 3-31-84

1. POLLUTANT AND CAS NUMBER (if available)	2. MARK 'X'			3. EFFLUENT							4. UNITS		5. INTAKE (optional)		
	a. TESTING REQUIRED	b. BELIEVED PRESENT	c. BELIEVED ABSENT	a. MAXIMUM DAILY VALUE		b. MAXIMUM 30 DAY VALUE (if available)		c. LONG TERM AVRG. VALUE (if available)		d. NO. OF ANALYSES	a. CONCENTRATION	b. MASS	a. LONG TERM AVERAGE VALUE		b. NO. OF ANALYSES
				(1) CONCENTRATION	(2) MASS	(1) CONCENTRATION	(2) MASS	(1) CONCENTRATION	(2) MASS				(1) CONCENTRATION	(2) MASS	
GC/MS FRACTION – PESTICIDES (continued)															
17P. Heptachlor Epoxide (1024-57-3)			X												
18P. PCB-1242 (53469-21-9)			X												
19P. PCB-1254 (11097-69-1)			X												
20P. PCB-1221 (11104-28-2)			X												
21P. PCB-1232 (11141-16-5)			X												
22P. PCB-1248 (12672-29-6)			X												
23P. PCB-1260 (11096-82-5)			X												
24P. PCB-1016 (12674-11-2)			X												
25P. Toxaphene (8001-35-2)			X												

☆ U. S. GOVERNMENT PRINTING OFFICE: 1983--661-935/121

PLEASE PRINT OR TYPE IN THE UNSHADED AREAS ONLY. You may report some or all of this information on separate sheets *(use the same format)* instead of completing these pages. SEE INSTRUCTIONS

EPA I.D. NUMBER *(copy from Item I of Form 1)*
ILD005454566

Form Approved
OMB No. 2000-0059
Approval expires 3-31-84

V. INTAKE AND EFFLUENT CHARACTERISTICS *(continued from page 3 of Form 2-C)*

OUTFALL NO. 002

PART A - You must provide the results of at least one analysis for every pollutant in this table. Complete one table for each outfall. See instructions for additional details.

1. POLLUTANT	2. EFFLUENT a. MAXIMUM DAILY VALUE (1) CONCENTRATION	a. MAXIMUM DAILY VALUE (2) MASS	b. MAXIMUM 30 DAY VALUE *(if available)* (1) CONCENTRATION	b. MAXIMUM 30 DAY VALUE (2) MASS	c. LONG TERM AVRG. VALUE *(if available)* (1) CONCENTRATION	c. LONG TERM AVRG. VALUE (2) MASS	d. NO. OF ANALYSES	3. UNITS *(specify if blank)* a. CONCENTRATION	b. MASS	4. INTAKE *(optional)* a. LONG TERM AVERAGE VALUE (1) CONCENTRATION	a. LONG TERM AVERAGE VALUE (2) MASS	b. NO. OF ANALYSES
a. Biochemical Oxygen Demand *(BOD)*	2.3	3.8					1	mg/l	lbs/day			
b. Chemical Oxygen Demand *(COD)*	25	40.8					1	mg/l	lbs/day			
c. Total Organic Carbon *(TOC)*	2.0	3.8					1	mg/l	lbs/day			
d. Total Suspended Solids *(TSS)*	32	52.3	22	25.1	6.9	4.6	25	mg/l	lbs/day			
e. Ammonia *(as N)*	0.1	0.16					1	mg/l	lbs/day			
f. Flow	VALUE 0.196		VALUE 0.137		VALUE 0.08		14		gpd	VALUE		
g. Temperature *(winter)*	VALUE 19.4		VALUE 14.2		VALUE 10.7		7	°C		VALUE		
h. Temperature *(summer)*	VALUE 20.0		VALUE 17.8		VALUE 16.8		4	°C		VALUE		
i. pH	MINIMUM 6.2	MAXIMUM 8.4	MINIMUM 7.0	MAXIMUM 7.8			22	STANDARD UNITS				

PART B - Mark "X" in column 2-a for each pollutant you know or have reason to believe is present. Mark "X" in column 2-b for each pollutant you believe to be absent. If you mark column 2-a for any pollutant, you must provide the results of at least one analysis for that pollutant. Complete one table for each outfall. See the instructions for additional details and requirements.

1. POLLUTANT AND CAS NO. *(if available)*	2. MARK 'X' a. BELIEVED PRESENT	b. BELIEVED ABSENT	3. EFFLUENT a. MAXIMUM DAILY VALUE (1) CONCENTRATION	a. MAXIMUM DAILY VALUE (2) MASS	b. MAXIMUM 30 DAY VALUE *(if available)* (1) CONCENTRATION	b. MAXIMUM 30 DAY VALUE (2) MASS	c. LONG TERM AVRG. VALUE *(if available)* (1) CONCENTRATION	c. LONG TERM AVRG. VALUE (2) MASS	d. NO. OF ANALYSES	4. UNITS a. CONCENTRATION	b. MASS	5. INTAKE *(optional)* a. LONG TERM AVERAGE VALUE (1) CONCENTRATION	a. LONG TERM AVERAGE VALUE (2) MASS	b. NO. OF ANALYSES
a. Bromide (24959-67-9)		X												
b. Chlorine, Total Residual		X												
c. Color		X												
d. Fecal Coliform		X												
e. Fluoride (16984-48-8)		X												
f. Nitrate-Nitrite *(as N)*		X												

CONTINUE ON REVERSE

ITEM V-B CONTINUED FROM FRONT

1. POLLUTANT AND CAS NO. (if available)	2. MARK 'X'		3. EFFLUENT							4. UNITS		5. INTAKE (optional)		
	a. BELIEVED PRESENT	b. BELIEVED ABSENT	a. MAXIMUM DAILY VALUE		b. MAXIMUM 30 DAY VALUE (if available)		c. LONG TERM AVRG. VALUE (if available)		d. NO. OF ANALYSES	a. CONCENTRATION	b. MASS	a. LONG TERM AVERAGE VALUE		b. NO. OF ANALYSES
			(1) CONCENTRATION	(2) MASS	(1) CONCENTRATION	(2) MASS	(1) CONCENTRATION	(2) MASS				(1) CONCENTRATION	(2) MASS	
g. Nitrogen, Total Organic (as N)		X												
h. Oil and Grease	X		26	42.5	17.7	20.2	6.7	4.5	28	mg/l	lbs/day	X		
i. Phosphorus (as P), Total (7723-14-0)		X												
j. Radioactivity														
(1) Alpha, Total		X												
(2) Beta, Total		X												
(3) Radium, Total		X												
(4) Radium 226, Total		X												
k. Sulfate (as SO_4) (14808-79-8)		X												
l. Sulfide (as S)		X												
m. Sulfite (as SO_3) (14265-45-3)		X												
n. Surfactants		X												
o. Aluminum, Total (7429-90-5)		X												
p. Barium, Total (7440-39-3)		X												
q. Boron, Total (7440-42-8)		X												
r. Cobalt, Total (7440-48-4)		X												
s. Iron, Total (7439-89-6)		X												
t. Magnesium, Total (7439-95-4)		X												
u. Molybdenum, Total (7439-98-7)		X												
v. Manganese, Total (7439-96-5)		X												
w. Tin, Total (7440-31-5)		X												
x. Titanium, Total (7440-32-6)		X												

CONTINUED FROM PAGE 3 OF FORM 2-C

EPA I.D. NUMBER (copy from Item 1 of Form 1)	OUTFALL NUMBER
ILD005454566	002

Form Approved
OMB No. 2000-0059
Approval expires 3-31-84

PART C - If you are a primary industry and this outfall contains process wastewater, refer to Table 2c-2 in the instructions to determine which of the GC/MS fractions you must test for. Mark "X" in column 2-a for all such GC/MS fractions that apply to your industry and for ALL toxic metals, cyanides, and total phenols. If you are not required to mark column 2-a *(secondary industries, non–process wastewater outfalls, and non–required GC/MS fractions)*, mark "X" in column 2-b for each pollutant you know or have reason to believe is present. Mark "X" in column 2-c for each pollutant you believe to be absent. If you mark either columns 2-a or 2-b for any pollutant, you must provide the results of at least one analysis for that pollutant. Note that there are seven pages to this part; please review each carefully. Complete one table *(all seven pages)* for each outfall. See instructions for additional details and requirements.

1. POLLUTANT AND CAS NUMBER (if available)	2. MARK 'X'			3. EFFLUENT							4. UNITS		5. INTAKE (optional)		
	a. TESTING REQUIRED	b. BELIEVED PRESENT	c. BELIEVED ABSENT	a. MAXIMUM DAILY VALUE		b. MAXIMUM 30 DAY VALUE (if available)		c. LONG TERM AVRG. VALUE (if available)		d. NO. OF ANALYSES	a. CONCENTRATION	b. MASS	a. LONG TERM AVERAGE VALUE		b. NO. OF ANALYSES
				(1) CONCENTRATION	(2) MASS	(1) CONCENTRATION	(2) MASS	(1) CONCENTRATION	(2) MASS				(1) CONCENTRATION	(2) MASS	
METALS, CYANIDE, AND TOTAL PHENOLS															
1M. Antimony, Total (7440-36-0)			X												
2M. Arsenic, Total (7440-38-2)			X												
3M. Beryllium, Total, 7440-41-7)			X												
4M. Cadmium, Total (7440-43-9)			X												
5M. Chromium, Total (7440-47-3)			X												
6M. Copper, Total (7550-50-8)			X												
7M. Lead, Total (7439-97-6)			X												
8M. Mercury, Total (7439-97-6)			X												
9M. Nickel, Total (7440-02-0)			X												
10M. Selenium, Total (7782-49-2)			X												
11M. Silver, Total (7440-22-4)			X												
12M. Thallium, Total (7440-28-0)			X												
13M. Zinc, Total (7440-66-6)			X												
14M. Cyanide, Total (57-12-5)			X												
15M. Phenols, Total			X												
DIOXIN															
2,3,7,8-Tetrachlorodibenzo-P-Dioxin (1764-01-6)				DESCRIBE RESULTS											

CONTINUE ON REVERSE

CONTINUED FROM THE FRONT

1. POLLUTANT AND CAS NUMBER (if available)	2. MARK 'X'			3. EFFLUENT							4. UNITS		5. INTAKE (optional)		
	a. TEST INFO. REQUIRED	b. BELIEVED PRESENT	c. BELIEVED ABSENT	a. MAXIMUM DAILY VALUE		b. MAXIMUM 30 DAY VALUE (if available)		c. LONG TERM AVRG. VALUE (if available)		d. NO. OF ANALYSES	a. CONCENTRATION	b. MASS	a. LONG TERM AVERAGE VALUE		b. NO. OF ANALYSES
				(1) CONCENTRATION	(2) MASS	(1) CONCENTRATION	(2) MASS	(1) CONCENTRATION	(2) MASS				(1) CONCENTRATION	(2) MASS	
GC/MS FRACTION – VOLATILE COMPOUNDS															
1V. Acrolein (107-02-8)			X												
2V. Acrylonitrile (107-13-1)			X												
3V. Benzene (71-43-2)			X												
4V. Bis (Chloromethyl) Ether (542-88-1)			X												
5V. Bromoform (75-25-2)			X												
6V. Carbon Tetrachloride (56-23-5)			X												
7V. Chlorobenzene (108-90-7)			X												
8V. Chlorodibromomethane (124-48-1)			X												
9V. Chloroethane (75-00-3)			X												
10V. 2-Chloroethylvinyl Ether (110-75-8)			X												
11V. Chloroform (67-66-3)			X												
12V. Dichlorobromomethane (75-27-4)			X												
13V. Dichlorodifluoromethane (75-71-8)			X												
14V. 1,1-Dichloroethane (75-34-3)			X												
15V. 1,2-Dichloroethane (107-06-2)			X												
16V. 1,1-Dichloroethylene (75-35-4)			X												
17V. 1,2-Dichloropropane (78-87-5)			X												
18V. 1,3-Dichloropropylene (542-75-6)			X												
19V. Ethylbenzene (100-41-4)			X												
20V. Methyl Bromide (74-83-9)			X												
21V. Methyl Chloride (74-87-3)			X												

CONTINUE ON PAGE V-5

CONTINUED FROM PAGE V-4

1. POLLUTANT AND CAS NUMBER (if available)	2. MARK "X" a. TEST PROD. REQUIRED	b. BELIEVED PRESENT	c. BELIEVED ABSENT	3. EFFLUENT a. MAXIMUM DAILY VALUE (1) CONCENTRATION	(2) MASS	b. MAXIMUM 30 DAY VALUE (if available) (1) CONCENTRATION	(2) MASS	c. LONG TERM AVRG. VALUE (if available) (1) CONCENTRATION	(2) MASS	d. NO. OF ANALYSES	4. UNITS a. CONCENTRATION	b. MASS	5. INTAKE (optional) a. LONG TERM AVERAGE VALUE (1) CONCENTRATION	(2) MASS	b. NO. OF ANALYSES
GC/MS FRACTION – VOLATILE COMPOUNDS (continued)															
22V. Methylene Chloride (75-09-2)			X												
23V. 1,1,2,2-Tetrachloroethane (79-34-5)			X												
24V. Tetrachloroethylene (127-18-4)			X												
25V. Toluene (108-88-3)			X												
26V. 1,2-Trans-Dichloroethylene (156-60-5)			X												
27V. 1,1,1-Trichloroethane (71-55-6)			X												
28V. 1,1,2-Trichloroethane (79-00-5)			X												
29V. Trichloroethylene (79-01-6)			X												
30V. Trichlorofluoromethane (75-69-4)			X												
31V. Vinyl Chloride (75-01-4)			X												
GC/MS FRACTION – ACID COMPOUNDS															
1A. 2-Chlorophenol (95-57-8)			X												
2A. 2,4-Dichlorophenol (120-83-2)			X												
3A. 2,4-Dimethylphenol (105-67-9)			X												
4A. 4,6-Dinitro-O-Cresol (534-52-1)			X												
5A. 2,4-Dinitrophenol (51-28-5)			X												
6A. 2-Nitrophenol (88-75-5)			X												
7A. 4-Nitrophenol (100-02-7)			X												
8A. P-Chloro-M-Cresol (59-50-7)			X												
9A. Pentachlorophenol (87-86-5)			X												
10A. Phenol (108-95-2)			X												
11A. 2,4,6-Trichlorophenol (88-06-2)			X												

CONTINUE ON REVERSE

CONTINUED FROM THE FRONT

1. POLLUTANT AND CAS NUMBER (if available)	2. MARK 'X'			3. EFFLUENT							4. UNITS		5. INTAKE (optional)		
	a. TESTING REQUIRED	b. BELIEVED PRESENT	c. BELIEVED ABSENT	a. MAXIMUM DAILY VALUE		b. MAXIMUM 30 DAY VALUE (if available)		c. LONG TERM AVRG. VALUE (if available)		d. NO. OF ANALYSES	a. CONCENTRATION	b. MASS	a. LONG TERM AVERAGE VALUE		b. NO. OF ANALYSES
				(1) CONCENTRATION	(2) MASS	(1) CONCENTRATION	(2) MASS	(1) CONCENTRATION	(2) MASS				(1) CONCENTRATION	(2) MASS	
GC/MS FRACTION – BASE/NEUTRAL COMPOUNDS															
1B. Acenaphthene (83-32-9)			X												
2B. Acenaphtylene (208-96-8)			X												
3B. Anthracene (120-12-7)			X												
4B. Benzidine (92-87-5)			X												
5B. Benzo *(a)* Anthracene (56-55-3)			X												
6B. Benzo *(a)* Pyrene (50-32-8)			X												
7B. 3,4-Benzo-fluoranthene (205-99-2)			X												
8B. Benzo *(ghi)* Perylene (191-24-2)			X												
9B. Benzo *(k)* Fluoranthene (207-08-9)			X												
10B. Bis *(2-Chloro-ethoxy)* Methane (111-91-1)			X												
11B. Bis *(2-Chloro-ethyl)* Ether (111-44-4)			X												
12B. Bis *(2-Chloro-isopropyl)* Ether (39638-32-9)			X												
13B. Bis *(2-Ethyl-hexyl)* Phthalate (117-81-7)			X												
14B. 4-Bromo-phenyl Phenyl Ether (101-55-3)			X												
15B. Butyl Benzyl Phthalate (85-68-7)			X												
16B. 2-Chloro-naphthalene (91-58-7)			X												
17B. 4-Chloro-phenyl Phenyl Ether (7005-72-3)			X												
18B. Chrysene (218-01-9)			X												
19B. Dibenzo *(a,h)* Anthracene (53-70-3)			X												
20B. 1,2-Dichloro-benzene (95-50-1)			X												
21B. 1,3-Dichloro-benzene (541-73-1)			X												

CONTINUE ON PAGE V-7

CONTINUED FROM PAGE V-6

EPA I.D. NUMBER (copy from Item 1 of Form 1): ILD005454566 | OUTFALL NUMBER: 002

OMB No. 2000-0059
Approval expires 3-31-84

1. POLLUTANT AND CAS NUMBER (if available)	2. MARK 'X' a. TESTING REQUIRED	b. BELIEVED PRESENT	c. BELIEVED ABSENT	3. EFFLUENT a. MAXIMUM DAILY VALUE (1) CONCENTRATION	(2) MASS	b. MAXIMUM 30 DAY VALUE (if available) (1) CONCENTRATION	(2) MASS	c. LONG TERM AVRG. VALUE (if available) (1) CONCENTRATION	(2) MASS	d. NO. OF ANALYSES	4. UNITS a. CONCENTRATION	b. MASS	5. INTAKE (optional) a. LONG TERM AVERAGE VALUE (1) CONCENTRATION	(2) MASS	b. NO. OF ANALYSES
GC/MS FRACTION – BASE/NEUTRAL COMPOUNDS (continued)															
22B. 1,4-Dichlorobenzene (106-46-7)			X												
23B. 3,3'-Dichlorobenzidine (91-94-1)			X												
24B. Diethyl Phthalate (84-66-2)			X												
25B. Dimethyl Phthalate (131-11-3)			X												
26B. Di-N-Butyl Phthalate (84-74-2)			X												
27B. 2,4-Dinitrotoluene (121-14-2)			X												
28B. 2,6-Dinitrotoluene (606-20-2)			X												
29B. Di-N-Octyl Phthalate (117-84-0)			X												
30B. 1,2-Diphenylhydrazine (as Azobenzene) (122-66-7)			X												
31B. Fluoranthene (206-44-0)			X												
32B. Fluorene (86-73-7)			X												
33B. Hexachlorobenzene (118-71-1)			X												
34B. Hexachlorobutadiene (87-68-3)			X												
35B. Hexachlorocyclopentadiene (77-47-4)			X												
36B. Hexachloroethane (67-72-1)			X												
37B. Indeno (1,2,3-cd) Pyrene (193-39-5)			X												
38B. Isophorone (78-59-1)			X												
39B. Naphthalene (91-20-3)			X												
40B. Nitrobenzene (98-95-3)			X												
41B. N-Nitrosodimethylamine (62-75-9)			X												
42B. N-Nitrosodi-N-Propylamine (621-64-7)			X												

CONTINUE ON REVERSE

CONTINUED FROM THE FRONT

1. POLLUTANT AND CAS NUMBER (if available)	2. MARK 'X' a. TEST IN REQUIRED	b. BELIEVED PRESENT	c. BELIEVED ABSENT	3. EFFLUENT a. MAXIMUM DAILY VALUE (1) CONCENTRATION	(2) MASS	b. MAXIMUM 30 DAY VALUE (if available) (1) CONCENTRATION	(2) MASS	c. LONG TERM AVRG. VALUE (if available) (1) CONCENTRATION	(2) MASS	d. NO. OF ANALYSES	4. UNITS a. CONCENTRATION	b. MASS	5. INTAKE (optional) a. LONG TERM AVERAGE VALUE (1) CONCENTRATION	(2) MASS	b. NO. OF ANALYSES
GC/MS FRACTION – BASE/NEUTRAL COMPOUNDS (continued)															
43B. N-Nitrosodiphenylamine (86-30-6)			X												
44B. Phenanthrene (85-01-8)			X												
45B. Pyrene (129-00-0)			X												
46B. 1,2,4-Trichlorobenzene (120-82-1)			X												
GC/MS FRACTION – PESTICIDES															
1P. Aldrin (309-00-2)			X												
2P. α-BHC (319-84-6)			X												
3P. β-BHC (319-85-7)			X												
4P. γ-BHC (58-89-9)			X												
5P. δ-BHC (319-86-8)			X												
6P. Chlordane (57-74-9)			X												
7P. 4,4'-DDT (50-29-3)			X												
8P. 4,4'-DDE (72-55-9)			X												
9P. 4,4'-DDD (72-54-8)			X												
10P. Dieldrin (60-57-1)			X												
11P. α-Endosulfan (115-29-7)			X												
12P. β-Endosulfan (115-29-7)			X												
13P. Endosulfan Sulfate (1031-07-8)			X												
14P. Endrin (72-20-8)			X												
15P. Endrin Aldehyde (7421-93-4)			X												
16P. Heptachlor (76-44-8)			X												

CONTINUE ON PAGE V-9

CONTINUED FROM PAGE V-8

EPA I.D. NUMBER (copy from Item 1 of Form 1): ILD005454566

OUTFALL NUMBER: 002

Form Approved
OMB No. 2000-0059
Approval expires 3-31-84

1. POLLUTANT AND CAS NUMBER (if available)	2. MARK "X" a. TESTING REQUIRED	b. BELIEVED PRESENT	c. BELIEVED ABSENT	3. EFFLUENT a. MAXIMUM DAILY VALUE (1) CONCENTRATION	(2) MASS	b. MAXIMUM 30 DAY VALUE (if available) (1) CONCENTRATION	(2) MASS	c. LONG TERM AVRG. VALUE (if available) (1) CONCENTRATION	(2) MASS	d. NO. OF ANALYSES	4. UNITS a. CONCENTRATION	b. MASS	5. INTAKE (optional) a. LONG TERM AVERAGE VALUE (1) CONCENTRATION	(2) MASS	b. NO. OF ANALYSES
GC/MS FRACTION – PESTICIDES (continued)															
17P. Heptachlor Epoxide (1024 57-3)			X												
18P. PCB-1242 (53469-21-9)			X												
19P. PCB-1254 (11097-69-1)			X												
20P. PCB-1221 (11104-28-2)			X												
21P. PCB-1232 (11141-16-5)			X												
22P. PCB-1248 (12672-29-6)			X												
23P. PCB-1260 (11096-82-5)			X												
24P. PCB-1016 (12674-11-2)			X												
25P. Toxaphene (8001-35-2)			X												

ES ENGINEERING-SCIENCE

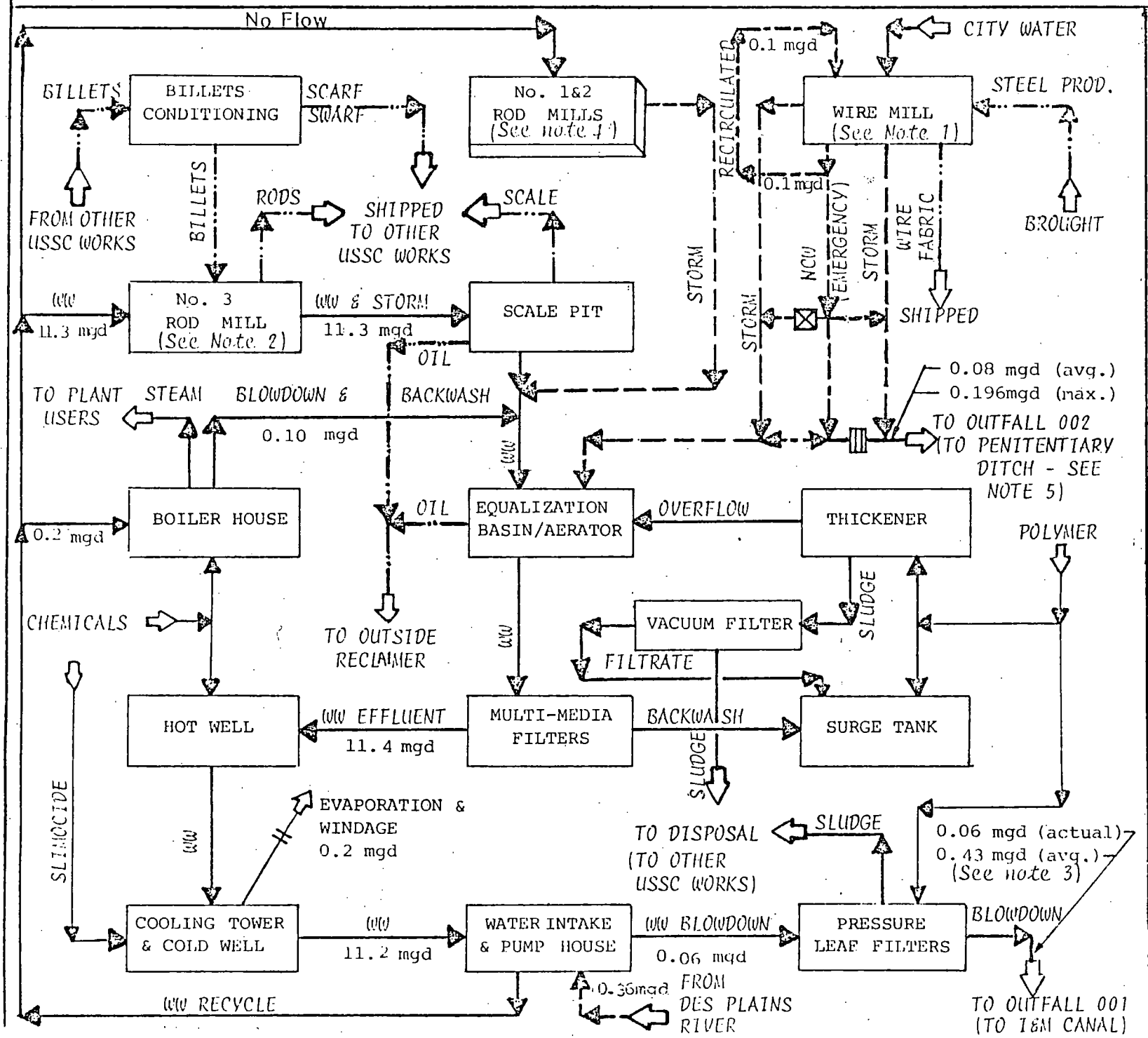

NOTES:

1. Wire Mill is leased to an outside contractor.
2. #3 Rod Mill operates one shift five days per week.
3. Blowdown is performed once per week in duration of 24 hours, and at the rate of 300 gpm = 0.43 mgd (actual dayly blowdown is 0.43/ 7 days = 0.06 mgd).
4. No. 1&2 Rod Mills are abandoned.
5. Nancontact Cooling Water Discharge-in Emergency. Storm Water Overflows-During Heavy Rainstorms.

LEGEND:

- Abandoned or Non-operating Facility
- Bulkhead
- Overflow Weir
- Product Flow
- Wastewater Flow
- Storm Flow
- Non-contact Cooling Water Flow
- Secondary Flow
- NCW Non-contact Cooling
- WW Wastewater

UNITED STATES STEEL CORP.
JOLIET PLANT-Joliet, ILL.
OUTFALS 001 & 002
FLOW DIAGRAM

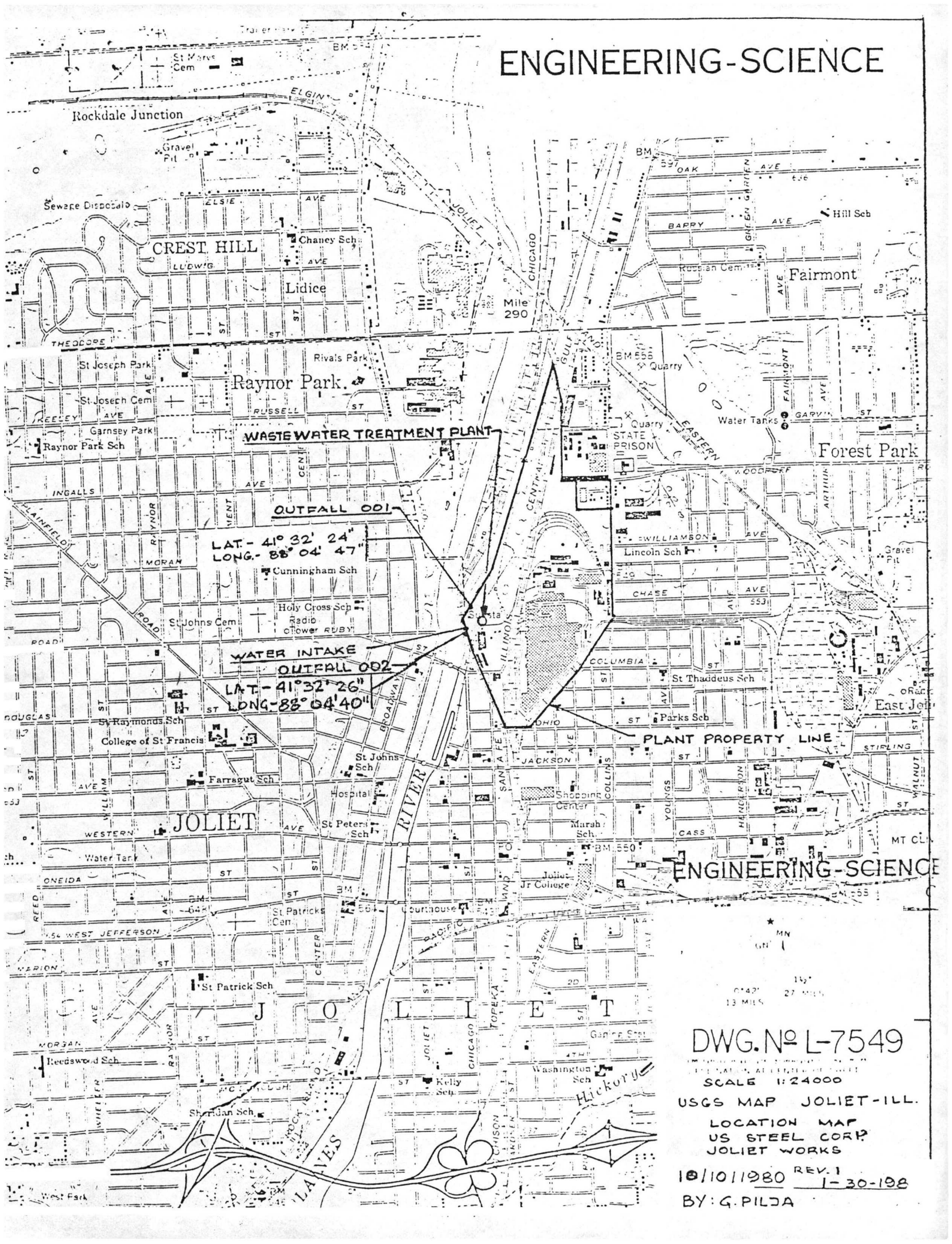
ENGINEERING-SCIENCE
Rockdale Junction
Gravel Pit
Sewage Disposal
CREST HILL
Chaney Sch
Lidice
Mile 290
Fairmont
Hill Sch
Russian Cem
St Joseph Park
Rivals Park
Raynor Park
St Joseph Cem
Garnsey Park
Raynor Park Sch
WASTE WATER TREATMENT PLANT
OUTFALL 001
LAT.- 41° 32' 24"
LONG.- 88° 04' 47"
Cunningham Sch
Holy Cross Sch
St Johns Cem
Radio Tower
WATER INTAKE
OUTFALL 002
LAT.- 41°32' 26"
LONG.- 88° 04' 40"
PLANT PROPERTY LINE
Quarry
STATE PRISON
Water Tanks
Forest Park
Lincoln Sch
St Thaddeus Sch
Parks Sch
St Raymonds Sch
College of St Francis
St Johns Sch
Farragut Sch
Hospital
JOLIET
St Peters Sch
Shopping Center
Marsh Sch
Water Tank
Joliet Jr College
St Patricks Cem
Courthouse
St Patrick Sch
Reedswood Sch
Kelly Sch
Washington Sch
Sheridan Sch
Hickory
ENGINEERING-SCIENCE
DWG. № L-7549
SCALE 1:24000
USGS MAP JOLIET-ILL.
LOCATION MAP
US STEEL CORP.
JOLIET WORKS
10/10/1980 REV. 1 1-30-198
BY: G. PILJA