WARZYN

Report
Appendices
60251

Volume 2 of 2
Remedial Investigation Report
Baseline Risk Assessment
ACS NPL Site
Griffith, Indiana

Prepared for:
Steering Committee
ACS PRP Group

Prepared by:
Warzyn Inc.
Madison, Wisconsin

June 1991

Appendix S

Identification of Chemicals of Potential Concern

Appendix S

IDENTIFICATION OF CHEMICALS OF POTENTIAL CONCERN

Chemicals of potential concern to be considered in the Baseline Risk Assessment are those which are present as a result of chemical releases which have occurred at the Site. To identify these, chemicals present in soil and groundwater samples are distinguished from those which may be naturally present and those which may be unintentionally introduced into samples through sample collection or laboratory analysis.

CHEMICAL ANALYSES OF SITE MEDIA

A detailed characterization of contaminants identified at the Site is presented in the RI report, including a description of the number and location of soil, groundwater, surface water, and sediment samples collected (RI Report Section 2) and a discussion of the results of chemical analyses of the samples (RI Report Section 5). The results of these analyses are presented in Appendix R.

The chemical analyses of samples were performed by CLP laboratories. The analytical data generated has been evaluated as to usability in accordance with U.S. EPA guidelines for validation of organic and inorganic analyses of environmental samples (EPA 1988a and b). Data used in risk assessment include both unqualified data and data which represent estimated quantities (qualified as J). A description of the evaluation of data quality is presented in Appendix Q.

Three general contaminant source areas were identified during the investigation. The physical characteristics and contaminants present in each of these areas differs. For the purpose of the risk assessment, discrete areas within the Site have been designated as follows:

- On-Site Containment Area
- Still Bottoms/Treatment Lagoon Area
- Off-Site Containment Area
- Kapica-Pazmey Area
- Groundwaters
- Surface waters and Sediments

Groundwater samples have been further divided into upper and lower aquifer samples. Soil samples from Kapica-Pazmey have been separated into surface (0-3 ft) and sub-surface groups. Sample descriptions for each area are presented in table 7-1. Recall that not all samples had full TAL and TCL analyses.

DEVELOPMENT OF A CHEMICAL DATA SET AND INFORMATION FOR USE IN THE RISK ASSESSMENT

The following describes the rationale for selection or exclusion of identified chemicals in the data set as chemicals of potential concern for further evaluation in the risk assessment. Which samples to include in the exposure concentration estimate for each chemical is determined. The process of identifying chemicals of potential concern and which samples to include is an integrated procedure. Most of the rationale used to identify chemicals of concern is also used to identify the samples included.

Chemicals that exhibit the following are included in the quantitative risk assessment:

- Positively detected in at least one sample from a given discrete area.
- Determined to be present at the Site and not due to contamination introduced during sampling or analysis.
- Determined to be the result of chemical releases from the Site and not natural background levels.
- Tentatively identified compounds associated with the site.
- Transformation products of chemicals demonstrated to be present.

Positively detected chemicals include both unqualified results and results qualified as estimated but with known identities (J qualified Target Compound List data).

Each chemical of potential concern is usually not detected in all samples from a Site area. Samples where a chemical is not detected are evaluated to determine the proxy concentration most representative of potential exposures at the Site area. Given the complexity of the Site, if a compound was detected in at least one sample from an area, it is reasonable to believe the chemical may be present below the detection limit in the non-detect samples. A value of one-half the non-detect Sample Quantitation Limit (SQL) is used as a proxy concentration to estimate exposure concentration. For samples requiring dilutions due to high levels of some organic chemicals, non-detect chemicals will have elevated SQLs. In this case, the proxy concentration would cause a high bias if included in the exposure concentration. If the maximum detected concentration in an area for a given medium is less than the one-half SQL proxy concentration, then the sample is eliminated from consideration in the exposure concentration estimate for that chemical.

Some analytical results may not be representative of Site conditions. Potential contamination during sampling and analysis is monitored through the use of field and laboratory blanks carried through the analysis. Chemical concentrations determined to be the result of contamination are qualified during data validation, generally by raising the SQL of the affected samples above that of the blank contamination. On occasion, common laboratory contaminants will not be qualified during validation, when the contaminant was present in a sample, but not the blank. These are usually acetone, methylene chloride, 2-butanone or phthalates found infrequently near the SQL. These have been discussed on a site by site basis below.

If inorganic chemicals were present at the Site area at naturally occurring background levels, they were eliminated from further consideration in the risk assessment. No background samples were taken at the site. Results from background samples collected in July, 1987 from the Ninth Avenue Dump Site, approximately ten miles north of the ACS Site, were used to determine naturally occurring background levels, as presented in table S-1 of this Appendix. For each metal, the arithmetic mean of the concentration of ten background samples was assumed to represent background concentrations. If a metal was not positively detected, the average common range as presented in U.S. EPA

Office of Solid Waste and Emergency Response, Hazardous Waste Land Treatment, SW-874 (April,1983) Page 273, Table 6.46, was used. If there is no reported common range, the average of the detection limits from the Ninth Avenue Dump background samples was used. If the arithmetic mean of the concentrations from each source area was less than this background concentration, the metal was eliminated from further consideration as a Chemical of Potential Concern for the Source Area, as summarized in Table S-2 of this Appendix.

Averaged results for both rounds of sampling from background wells GWMW11 for upper aquifer water samples and GWMW07 for lower aquifer water samples were used to evaluate groundwater samples, as summarized in table S-3 of this Appendix. No background levels were available for surface waters; all chemicals detected in surface water samples are included as chemicals of potential concern.

Over 450 Tentatively Identified Compounds (TICs) were reported for the Site. TICs were grouped as discussed in Section 7.1.2.2. The maximum concentration of any of the detected compounds within a TIC group for each source area was carried forward as the Exposure Point Concentration.

Transformation products of chemicals present in each area were considered for inclusion in the risk assessment. Volatile chlorinated ethane and ethene transformation sequences are present in most areas.

A large number of compounds were detected in samples from the Site areas. The following discussion summarizes the evaluation of identified analytes as chemicals of potential concern.

ACS GROUNDWATERS -UPPER AQUIFER

Twenty-four samples were taken from the upper groundwater aquifer. Chemical concentrations ranged from 2 to 200,000 ug/L. 17 volatiles, 18 semi-volatiles, 2 PCBs, and 15 inorganic analytes were detected in these samples.

Of the chemicals detected in at least one sample, methylene chloride is the only chemical to be dropped as a chemical of potential concern due to blank contamination. Methylene chloride was qualified during data validation as undetected (U) due to blank contamination in all but two samples. These two samples, at 1 and 7 ug/L, are less than other qualified results, and are likely due to laboratory contamination also, though not strictly fitting the validation criteria for qualifying the results.

ACS GROUNDWATERS - LOWER AQUIFER

Four monitoring wells were screened in the lower aquifer. Relatively few analytes were detected in the samples. Chloroethane and 4-methyl-2-pentanone for the volatiles, and bis(2-chloroethyl)ether for the semi-volatiles are the only organic chemicals detected.

Methylene chloride is present at 3, 8, and 14 ug/L in these samples, within levels found in blanks run one day before and after sample analysis, and as such, are likely the result of lab contamination.

ACS SURFACE WATERS

Five surface water samples were collected. Chemicals detected include 10 volatiles, 9 semi-volatiles, and one PCB. Seventeen of the 23 metals were detected.

No background surface water was available near the site. All detected analytes are to be carried through the risk assessment.

ACS SEDIMENTS

The eighteen sediment samples analyzed contained 10 volatiles, 26 semi-volatiles, 1 pesticide and three PCBs, as well as 20 of the 23 metals.

Methylene chloride was detected in 14 of the samples at concentrations of 13 to 120 ug/kg, and was qualified as blank contamination in 13 of the samples. The remaining sample at 44 ug/kg, is most likely also the result of laboratory blank contamination. Chloroform, also a common laboratory contaminant, was present in 8 samples at 2-8 ug/kg, and was qualified as blank contamination in two samples. The remaining samples, with concentrations of 2-8 ug/kg, are likely also the result of contamination. Both methylene chloride and chloroform are eliminated from further consideration.

ON SITE CONTAINMENT AREA

Forty three soil and test pit samples were analyzed from the On Site containment area. Detected chemicals include 20 volatiles, 27 semi-volatiles, 2 pesticides and 3 PCBs, as well as 20 metals and cyanide.

Methylene chloride detects were determined to be the result of laboratory contamination, and were qualified as non-detected during data validation. No other TCL analytes were eliminated from consideration due to blanks.

STILL BOTTOMS & TREATMENT LAGOON

The twenty-nine soil and test pit samples collected contained 20 volatiles, 45 semi-volatiles, 4 pesticides and 3 PCBs, and all 24 TAL parameters.

No chemicals were eliminated from consideration due to blank contamination, although some individual sample results were qualified during validation.

OFF SITE CONTAINMENT AREA

Forty three soil samples and one waste were analyzed. A total of 24 volatiles, 42 semi-volatiles, 7 pesticides and 4 PCBs, and all 24 TAL parameters were detected in these samples.

No chemicals of potential concern were eliminated due to blank contamination.

KAPICA-PAZMEY AREA - SURFACE SOILS

Sixteen soil and test pit samples were collected and analyzed for at least one of the four CLP analyses. In those analyses 16 volatiles, 32 semi-volatiles, 2 pesticides and 4 PCBs, and 23 inorganic parameters were detected.

No chemicals were eliminated due to blank contamination.

KAPICA-PAZMEY - SUB SURFACE SOILS

Sixteen soil and test pit samples were collected and analyzed for at least one of the four CLP analyses. In those analyses 20 volatiles, 31 semi-volatiles, 3 PCBs, and 23 inorganic parameters were detected.

No chemicals were eliminated due to blank contamination.

JAH/jah/ccf/KJD/BJC
[ccf-600-97j]
60251.17-MD

Table S-1

Determination of Metals Background Concentrations
Used in Determination of Chemicals of Potential Concern

SAMPLE ID:	SX60	SX61	SX62	SX63	SX64	SX65	SX66	SX67	SX68	SX69	Statistical Analysis					SOIL BACKGROUND CONC.	a
SAMPLE DATE:	7/9/87	7/9/87	7/9/87	7/9/87	7/9/87	7/9/87	7/9/87	7/9/87	7/9/87	7/9/87	MIN	MAX	AVE	n	STD	(mg/kg)	
Results in mg/kg																	
Aluminum	16800	4700	7520	11200	4170	3880	5400	3920	5200	7840	3880	16,800	7063	10	4,122	7.06e+03	
Antimony	No Detects															9.70e+00	c
Arsenic	21.3	12.1	10.6	14.9	6.3	8	5.5	7.3	7.9	15.8	5.5	21.3	10.97	10	5.06	1.10e+01	
Barium	126	37	72.5	67	60.2	39.3	100	52	50.5	117	37	126	72.15	10	31.70	7.22e+01	
Beryllium	No Detects															6.00e+00	b
Cadmium	3.4	2.1	1.4	2.8	3	1.8	3.5	2.7	2.1	3.6	1.4	3.6	2.64	10	0.76	2.64e+00	
Calcium	6970	4380	5710	5950	3820	5630	10300	7280	15100	17100	3820	17,100	8224	10	4,537	8.22e+03	
Chromium,total	24	12.8	18.5	20	17.2	12.1	21.7	11.2	10.5	30.2	10.5	30.2	17.82	10	6.39	1.78e+01	
Cobalt	7.7	3.4	4.1	6.2	2.9	2.8	3.2	2.8	4	3.8	2.8	7.7	4.09	10	1.62	4.09e+00	
Copper	28.9	24	22.6	26	29	24.7	42	26.9	13.5	29.4	13.5	42	26.7	10	7.11	2.67e+01	
Iron	20400	10400	9820	17300	9190	6480	15000	15300	11600	13700	6480	20,400	12,919	10	4,201	1.29e+04	
Lead	42	66	64	55.9	194	134	291	190	16.2	117	16.2	291	117.01	10	86.12	1.17e+02	
Magnesium	3380	1840	2980	3340	1060	1460	3000	1730	2890	2460	1060	3380	2414	10	831.59	2.41e+03	
Manganese	No Detects															6.00e+02	b
Mercury		0.34		0.55	0.26	0.13		0.34			0.13	0.55	0.324	5	0.15	3.24e-01	
Nickel	30.6	11.5	14	20	25	5.8	15.2	12	10.1	15.6	5.8	30.6	15.98	10	7.38	1.60e+01	
Potassium	2190	677	786	1450	439	315	356	410	659	803	315	2190	808.5	10	587.26	8.09e+02	
Selenium	No Detects															3.00e-01	b
Silver	No Detects															5.00e-02	b
Sodium	No Detects															6.30e+03	b
Thallium	No Detects															2.30e+00	c
Vanadium	34	17	21	26.1	9.8	15.5	25.3	10.3	11.4	19	9.8	34	18.94	10	7.84	1.89e+01	
Zinc	121	288	269	155	330	283	608	360	69.3	292	69.3	608	277.53	10	149.84	2.78e+02	
Cyanide, total	No Detects															3.70e+00	c

a = Background soil analytical results from samples collected July 1987 are reported in the "Remedial Investigation Report - Ninth Avenue Dump RI/FS Gary, Indiana (June 1988)"

Background levels for compounds without positive detected concentrations are footnoted as follows:

b = Background value is the average concentration of natural soils as presented in U.S. EPA Office of Solid Waste and Emergency Response, Hazarous Waste Land Treatment, SW-874 (April, 1983) Page 273, Table 6.46

c = No values for natural soils available. Reported background concentration is the average of the calculated sample detection limits.

JAH/jah/KJD
[acs.2020]background.w20

Table S-2

Background Values Used to Eliminate Chemicals
From Consideration as Chemicals of Potential Concern

CHEMICAL	UNITS	SOILS BACKGROUND [a] AVE		SOILS AVERAGE CONCENTRATIONS [b] SB-TL AVE	ONSITE AVE	OFFSITE AVE	KP-SUB AVE	KP-SURFACE AVE	SEDIMENT AVE
Aluminum	mg/kg	7.1e+03		3.6e+03 < Bkgd	3.2e+03 < Bkgd	4.5e+03 < Bkgd	3.4e+03 < Bkgd	7.7e+03	6.7e+03 < Bkgd
Antimony	mg/kg	9.7e+00	d	2.9e+01	5.3e+00 < Bkgd	4.6e+01	1.1e+01	5.0e+01	4.0e+00 < Bkgd
Arsenic	mg/kg	1.1e+01		2.4e+00 < Bkgd	3.7e+00 < Bkgd	3.3e+00 < Bkgd	2.0e+00 < Bkgd	1.0e+01 < Bkgd	7.0e+00 < Bkgd
Barium	mg/kg	7.2e+01		4.7e+02	5.2e+02	1.5e+03	1.5e+03	2.5e+03	7.9e+01
Beryllium	mg/kg	6.0e+00	c	2.5e-01 < Bkgd	1.6e-01 < Bkgd	2.1e-01 < Bkgd	1.5e-01 < Bkgd	5.3e-01 < Bkgd	4.6e-01 < Bkgd
Cadmium	mg/kg	2.6e+00		1.5e+01	7.2e-01 < Bkgd	1.0e+02	1.0e+01	1.1e+02	1.0e+00 < Bkgd
Calcium	mg/kg	8.2e+03		1.1e+04	8.8e+03	1.9e+04	3.5e+03 < Bkgd	5.0e+04	1.6e+04
Chromium, Total	mg/kg	1.8e+01		2.0e+02	3.2e+01	2.5e+02	2.6e+02	1.3e+03	3.1e+01
Cobalt	mg/kg	4.1e+00		4.2e+01	2.2e+01	3.0e+01	1.2e+01	8.2e+01	
Copper	mg/kg	2.7e+01		7.3e+01	2.2e+01 < Bkgd	4.2e+02	4.8e+02	1.6e+03	4.8e+01
Iron	mg/kg	1.3e+04		3.9e+03 < Bkgd	5.3e+03 < Bkgd	8.2e+03 < Bkgd	4.3e+03 < Bkgd	2.5e+04	1.2e+04 < Bkgd
Lead	mg/kg	1.2e+02		8.4e+02	1.1e+02 < Bkgd	1.1e+03	1.0e+03	8.3e+03	1.0e+02 < Bkgd
Magnesium	mg/kg	2.4e+03		3.4e+03	4.4e+03	8.3e+03	2.9e+03	1.6e+04	5.8e+03
Manganese	mg/kg	6.0e+02	c	2.0e+02 < Bkgd	1.5e+02 < Bkgd	1.4e+02 < Bkgd	5.8e+01 < Bkgd	6.7e+02	1.7e+02 < Bkgd
Mercury	mg/kg	3.2e-01		2.0e+00	1.2e+01	5.2e+00	1.2e+00	7.0e+00	2.1e+00
Nickel	mg/kg	1.6e+01		1.7e+01	1.2e+01 < Bkgd	3.4e+01	1.3e+01 < Bkgd	7.1e+01	2.5e+01
Potassium	mg/kg	8.1e+02		3.5e+02 < Bkgd	4.8e+02 < Bkgd	1.1e+03	3.1e+02 < Bkgd	7.1e+02 < Bkgd	7.2e+02 < Bkgd
Selenium	mg/kg	3.0e-01	c	1.4e+00	4.5e-01	3.4e+01	1.5e+00	8.4e+00	1.0e+00
Silver	mg/kg	5.0e-02	c			3.1e+02	6.4e+01	2.5e+01	
Sodium	mg/kg	6.3e+03	c	7.6e+02 < Bkgd		7.0e+02 < Bkgd	2.1e+02 < Bkgd	1.4e+03 < Bkgd	
Thallium	mg/kg	2.3e+00	d			1.1e+00 < Bkgd			1.4e+00 < Bkgd
Vanadium	mg/kg	1.9e+01		7.4e+00 < Bkgd	1.1e+01 < Bkgd	1.1e+01 < Bkgd	7.5e+00 < Bkgd	2.4e+01	2.1e+01
Zinc	mg/kg	2.8e+02		3.6e+02	7.2e+01 < Bkgd	4.6e+02	6.5e+02	8.7e+03	1.1e+02 < Bkgd
Cyanide, Total	mg/kg	3.7e+00	d	2.7e+01	8.7e+00	1.4e+01	2.1e+01	3.5e+01	

a = Backgound values are average concentration from 9th Ave. Dump Site Background samples.
b = Source Area values are arithmetic mean of all detected concentrations.

c = No data from Ninth Ave Dump; background value is average from EPA common range.
d = No EPA common range available; Not detected at Ninth Ave. Dump. Background value is average of detection limits from Ninth Ave. Dump.
<Bkgd = Average concentration for Source Area is less than background; the chemical is eliminated from further consideration as a Chemical of Potential Concern.

1/17/91
JAH/jah/KJD
[ACS.2020]MTL-BKG.W20

Table S-3

Background Values Used to Eliminate Chemicals
From Consideration as Chemicals of Potential Concern

CHEMICAL		Upper Aquifer Bckgrd Ave. [a]	Upper Aquifer Results Ave. [d]	Lower Aquifer Bckgrd. Ave. [b]	Lower Aquifer Results Ave. [d]	Surface Waters Bckgrd. Ave. [c]	Surface Waters Results Ave. [d]	
Aluminum	ug/l	2.7e+02	2.7e+02				7.3e+02	NA
Antimony	ug/l							NA
Arsenic	ug/l		1.4e+01	2.4e+00	4.1e+00		2.4e+01	NA
Barium	ug/l		6.1e+02		2.6e+02		3.3e+02	NA
Beryllium	ug/l		2.5e-01				2.8e-01	NA
Cadmium	ug/l	3.2e-01	9.8e-01				5.5e-01	NA
Calcium	ug/l	5.1e+04	1.8e+05	5.7e+04	1.1e+05		1.1e+05	NA
Chromium, Total	ug/l		2.4e+00				1.2e+01	NA
Cobalt	ug/l							NA
Copper	ug/l			2.0e+01			2.2e+01	NA
Iron	ug/l	5.5e+02	2.5e+04	1.5e+02	1.0e+03		5.0e+03	NA
Lead	ug/l		3.9e+00				1.1e+01	NA
Magnesium	ug/l	1.8e+04	3.4e+04	1.5e+04	3.6e+04		2.5e+04	NA
Manganese	ug/l	3.1e+02	2.1e+03	1.0e+02	3.4e+02		7.7e+02	NA
Mercury	ug/l		1.7e+00		4.7e-01			NA
Nickel	ug/l		5.0e+01				6.8e+01	NA
Potassium	ug/l	1.2e+03	1.4e+04	1.1e+03	1.9e+03		1.3e+04	NA
Selenium	ug/l		3.5e+00				2.1e+00	NA
Silver	ug/l							NA
Sodium	ug/l	4.8e+03	1.5e+05	1.3e+04	4.1e+04		5.5e+04	NA
Thallium	ug/l		3.6e+00					NA
Vanadium	ug/l	2.0e+00	8.3e+00	2.4e+00	2.0e+00			NA
Zinc	ug/l	4.2e+01	1.1e+02		1.6e+01		6.4e+01	NA
Cyanide, Total	ug/l		1.0e+01					NA

a = Backgound values are taken GWMW11 for Upper Aquifer Groundwater samples
b = Backgound values are taken GWMW07 for Lower Aquifer Groundwater samples
c = No background values available for surface waters
d = Source Area values are arithmetic mean of all detected concentrations.

< Bkgd = Average concentration for Source Area is less than background; the chemical is eliminated from further consideration as a Chemical of Potential Concern.

1/16/91
JAH/jah/KJD
[ACS.2020]MTL-BKG.W20

Appendix T

Equations Used to Estimate Chronic Daily Chemical Intakes

Appendix T

Table of Contents

Land Use Scenario	Exposed Population	Exposure Medium	Route of Intake	Table Number
Current	Adult off-site resident	Groundwater, lower aquifer	Ingestion	T-1
			Dermal absorption	T-2
			Inhalation	T-3
		Ambient air, VOC	Inhalation	T-4
		Ambient air, dust	Inhalation	T-4
Current	Child off-site resident	Groundwater, upper aquifer	Ingestion	T-5
			Dermal absorption	T-6
Current	Child trespasser	Surface soil, Kapica-Pazmey	Ingestion	T-7
			Dermal absorption	T-8
		Surface water	Ingestion	T-9
			Dermal absorption	T-10
		Sediment	Ingestion	T-7
			Dermal absorption	T-8
		Ambient air, VOC	Inhalation	T-11
		Ambient air, dust	Inhalation	T-11
Current	ACS worker	Ambient air, VOC	Inhalation	T-12
		Ambient air, dust	Inhalation	T-12

Appendix T

Table of Contents
(Continued)

Land Use Scenario	Exposed Population	Exposure Medium	Route of Intake	Table Number
Future	Adult on-site resident	Groundwater, lower aquifer	Ingestion	T-13
			Dermal absorption	T-14
			Inhalation	T-15
		Groundwater, upper aquifer	Ingestion	T-13
			Dermal absorption	T-14
		Ambient air, VOC	Inhalation	T-16
		Soil, on-site containment area	Ingestion	T-17
			Dermal absorption	T-18
		Soil, still bottoms and treatment lagoons	Ingestion	T-17
			Dermal absorption	T-18
		Soil, off-site containment area	Ingestion	T-17
			Dermal absorption	T-18
		Surface soil,	Ingestion	T-17
		Kapica-Pazmey	Dermal absorption	T-18
		Subsurface soil,	Ingestion	T-17
		Kapica-Pazmey	Dermal absorption	T-18
	Child on-site resident	Surface water	Ingestion	T-19
			Dermal absorption	T-20
		Sediment	Ingestion	T-21
			Dermal absorption	T-22

Table T-1

CURRENT USE EXPOSURE

American Chemical Services NPL Site
Remedial Investigation
Griffith, Indiana

- Adult off-Site resident
- Ingestion of groundwater (lower aquifer only)

$$\text{Intake (mg/kg-day)} = \frac{CW \times IR \times EF \times ED}{BW \times AT}$$

CW = Contaminant concentration in water (mg/L)
IR = Ingestion rate (L/day)
EF = Exposure frequency (day/year)
ED = Exposure duration (years)
BW = Body weight (kg)
AT = Averaging time (period over which exposure is averaged--days)

CW - Site-specific
IR - 2 L/day (U.S. EPA, 1989)
EF - 365 days/year (by convention)
ED - 30 years (national upper-bound time at one residence; U.S. EPA, 1989)
BW - 70 kg (U.S. EPA, 1989)
AT - 10,950 days (noncarcinogenic effects), 25,550 days (carcinogenic effects)

Table T-2

CURRENT USE EXPOSURE

American Chemical Services NPL Site
Remedial Investigation
Griffith, Indiana

- Adult off-Site resident
- Dermal absorption of chemicals in water (lower aquifer only) while bathing

$$\text{Absorbed Dose (mg/kg-day)} = \frac{CW \times SA \times PC \times ET \times EF \times ED \times CF \times AV}{BW \times AT}$$

CW = Chemical concentration in water (mg/L)
SA = Skin surface area available for contact (cm^2)
PC = Chemical-specific dermal permeability constant (cm/hour)
ET = Exposure time (hours/day)
EF = Exposure frequency (day/year)
ED = Exposure duration (years)
CF = Volumetric conversion factor for water (L/cm^3)
AV = Adjustment for contaminants released via volatilization (unitless)
BW = Body weight (kg)
AT = Averaging time (period over which exposure is averaged--days)

CW - Site-specific
SA - 19,400 cm^2; 50th percentile value for male adult - total body surface area (U.S. EPA, 1989)
PC - Chemical-specific (Table 7-17)
ET - 0.2 hrs/day (U.S. EPA, 1989)
EF - 365 days/year (by convention)
ED - 30 years (national upper-bound time at one residence; U.S. EPA, 1989)
CF - 1L/1000 cm^3
AV - Volatiles - 90% volatized, 10% available for absorption; semi-volatiles - 50% volatilized, 50% available for absorption (see Appendix Y).
BW - 70 kg; (U.S. EPA, 1989)
AT - 10,950 days (noncarcinogenic effects), 25,550 (carcinogenic effects)

Table T-3

CURRENT USE EXPOSURE

American Chemical Services NPL Site
Remedial Investigation
Griffith, Indiana

- Adult off-Site resident
- Inhalation of volatiles released from groundwater while showering (lower aquifer only)

$$\text{Intake (mg/kg-day)} = \frac{CA \times IR \times EF \times ED}{BW \times AT}$$

CA = Contaminant concentration in air (mg/m^3)
IR = Inhalation rate (m^3/day)
ET = Exposure time (hours/day)
EF = Exposure frequency (days/year)
ED = Exposure duration (years)
BW = Body weight (kg)
AT = Averaging time (period over which exposure is averaged--days)

CA - Modeled - see Appendix Y
IR - 20 m^3/day (U.S. EPA, 1989)
ET - .28 hours/day (U.S. EPA, 1991 - see Appendix Y)
EF - 365 days/year (by convention)
ED - 30 years (national upper-bound time at one residence; U.S. EPA, 1989)
BW - 70 kg (U.S. EPA, 1989)
AT - 10,950 days (noncarcinogenic effects), 25,550 days (carcinogenic effects)

Table T-4

CURRENT USE EXPOSURE

American Chemical Services NPL Site
Remedial Investigation
Griffith, Indiana

- Adult off-Site resident
- Inhalation of volatile chemicals released to air from subsurface contaminants or inhalation of fugitive dusts from Kapica-Pazmey surface soils

$$\text{Intake (mg/kg-day)} = \frac{CA \times IR \times EF \times ED}{BW \times AT}$$

CA = Contaminant concentration in air (mg/m^3)
IR = Inhalation rate (m^3/day)
EF = Exposure frequency (days/year)
ED = Exposure duration (years)
BW = Body weight (kg)
AT = Averaging time (period over which exposure is averaged--days)

CA - Modeled concentration
IR - 20 m^3/day (U.S. EPA, 1989)
EF - 182 days/year (professional judgement)
ED - 30 years (national upper-bound time at one residence; U.S. EPA, 1989)
BW - 70 kg (U.S. EPA, 1989)
AT - 10,950 days (noncarcinogenic effects), 25,550 days (carcinogenic effects)

Table T-5

CURRENT USE EXPOSURE

American Chemical Services NPL Site
Remedial Investigation
Griffith, Indiana

- Child off-Site resident
- Incidental ingestion of water (upper aquifer) while swimming in pool

$$\text{Intake (mg/kg-day)} = \frac{CW \times CR \times ET \times EF \times ED}{BW \times AT}$$

CW = Chemical concentration in water (mg/L)
CR = Contact rate (L/hour)
ET = Exposure time (hours/day)
EF = Exposure frequency (day/year)
ED = Exposure duration (years)
BW = Body weight (kg)
AT = Averaging time (period over which exposure is averaged--days)

CW - Site-specific
CR - 0.05 L/hour (U.S. EPA, 1989)
ET - 2.6 hours/day (professional judgement)
EF - 2 days/wk x 26 wk/year = 52 days/year (professional judgement)
ED - 10 years (professional judgement)
BW - 30 kg; 50th percentile for male child 9 to 10 years old (U.S. EPA, 1989)
AT - 3,650 days (noncarcinogenic effects) 25,550 days (carcinogenic effects)

Table T-6

CURRENT USE EXPOSURE

American Chemical Services NPL Site
Remedial Investigation
Griffith, Indiana

- Child off-Site resident
- Dermal absorption of contaminants in water (upper aquifer) while swimming in pool.

$$\text{Absorbed Dose (mg/kg-day)} = \frac{CW \times SA \times PC \times ET \times EF \times ED \times CF}{BW \times AT}$$

CW = Chemical concentration in water (mg/L)
SA = Skin surface area available for contact (cm^2)
PC = Chemical-specific dermal permeability constant (cm/hour)
ET = Exposure time (hours/day)
EF = Exposure frequency (day/year)
ED = Exposure duration (years)
CF = Volumetric conversion factor for water (L/cm^3)
BW = Body weight (kg)
AT = Averaging time (period over which exposure is averaged--days)

CW - Site-specific
SA - 11,600 cm^2; 50th percentile for male child 9-12 years old - total body surface area (U.S. EPA, 1989)
PC - Chemical-specific (Table 7-17)
ET - 2.6 hrs/day (U.S. EPA, 1989)
EF - 2 days/wk x 26 wk/year = 52 days/year (professional judgement)
ED - 10 years (professional judgement)
CF - 1L/1000 cm^3
BW - 30 kg; 50th percentile for male child 9 to 10 years old (U.S. EPA, 1989)
AT - 3,650 days (noncarcinogenic effects), 25,550 days (carcinogenic effects)

Table T-7

CURRENT USE EXPOSURE

American Chemical Services NPL Site
Remedial Investigation
Griffith, Indiana

- Child playing (trespassing) on-Site
- Incidental ingestion of surface soils or wetland sediments

$$\text{Intake (mg/kg-day)} = \frac{CS \times IR \times CF \times FI \times EF \times ED}{BW \times AT}$$

CS = Chemical concentration in soil (mg/kg)
IR = Ingestion rate (mg soil/day)
CF = Conversion factor (kg/mg)
FI = Fraction ingested from contaminated source (unitless)
EF = Exposure frequency (days/year)
ED = Exposure duration (years)
BW = Body weight (kg)
AT = Averaging time (period over which exposure is averaged--days)

CS - Site-specific
IR - 200 mg soil/day (U.S. EPA, 1989)
CF - 10^{-6} kg/mg
FI - 50%, assume 50% from Site soils and 50% from wetland sediments
EF - 2 days/wk x 26 wk/year = 52 days/year (professional judgement)
ED - 10 years (professional judgement)
BW - 30 kg; 50th percentile for male child 9 to 10 years old (U.S. EPA, 1989)
AT - 3,650 days (noncarcinogenic effects), 25,550 days (carcinogenic effects)

Table T-8

CURRENT USE EXPOSURE

American Chemical Services NPL Site
Remedial Investigation
Griffith, Indiana

- Child playing (trespassing) on-Site
- Dermal absorption of chemicals in surface soils or wetland sediments

$$\text{Absorbed dose (mg/kg-day)} = \frac{CS \times CF \times SA \times AF \times ABS \times EF \times ED}{BW \times AT}$$

CS = Chemical concentration in soil (mg/kg)
CF = Conversion factor (kg/mg)
SA = Skin surface area available for contact (cm^2)
AF = Soil to skin adherence factor (mg/cm^2)
ABS = Absorption factor (unitless)
EF = Exposure frequency (days/year)
ED = Exposure duration (years)
BW = Body weight (kg)
AT = Averaging time (period over which exposure is averaged--days)

CS - Site specific
CF - 10^{-6} kg/mg
SA - 4,870 cm^2; 9 to 10 year old male arms, hands, legs-50th percentile (U.S. EPA, 1989)
AF - 2.11 mg/cm^2; Average potting soil and kaolin clay (U.S. EPA, 1989)
EF - 2 days/wk x 26 wk/year = 52 days/year (professional judgement)
ED - 10 years (professional judgement)
BW - 30 kg; 50th percentile for male child 9 to 10 years old (U.S. EPA, 1989)
AT - 3,650 days (noncarcinogenic effects) 25,550 days (carcinogenic effects)
ABS - Assume 30% for organic compounds and 1% for inorganic compounds

Table T-9

CURRENT USE EXPOSURE

American Chemical Services NPL Site
Remedial Investigation
Griffith, Indiana

- Child playing (trespassing) on-Site
- Incidental ingestion of surface water while playing in wetlands

$$\text{Intake (mg/kg-day)} = \frac{CW \times CR \times ET \times EF \times ED}{BW \times AT}$$

CW = Chemical concentration in water (mg/L)
CR = Contact rate (L/hour)
ET = Exposure time (hours/day)
EF = Exposure frequency (days/year)
ED = Exposure duration (years)
BW = Body weight (kg)
AT = Averaging time (period over which exposure is averaged--days)

CW - Site-specific
CR - 0.005L/hr (professional judgement)
ET - 3 hours/day (professional judgement)
EF - 2 days/wk x 26 wk/year = 52 days/year (professional judgement)
ED - 10 years (professional judgement)
BW - 30 kg; 50th percentile for male child 9 to 10 years old (U.S. EPA, 1989)
AT - 3,650 days (noncarcinogenic effects) 25,550 days (carcinogenic effects)

Table T-10

CURRENT USE EXPOSURE

American Chemical Services NPL Site
Remedial Investigation
Griffith, Indiana

- Child playing (trespassing) on-Site
- Dermal absorption of chemicals in surface water while playing in wetlands

$$\text{Absorbed dose (mg/kg-day)} = \frac{CW \times SA \times PC \times ET \times EF \times ED \times CF}{BW \times AT}$$

CW = Chemical concentration in water (mg/L)
SA = Skin surface area available for contact (cm^2)
PC = Chemical-specific dermal permeability constant (cm/hour)
ET = Exposure time (hours/day)
EF = Exposure frequency (days/year)
ED = Exposure duration (years)
CF = Volumetric conversion factor for water (L/cm^3)
BW = Body weight (kg)
AT = Averaging time (period over which exposure is averaged--days)

CW - Site-specific
SA - 4,970 cm^2/event; 9 to 10 year old male arms, hands, legs-50th percentile (U.S. EPA, 1989)
RC - Chemical-specific (Table 7-17)
ET - 3 hours/day (professional judgement)
EF - 2 days/wk x 26 wk/year = 52 days/year (professional judgement)
ED - 10 years (professional judgement)
CF - 1L/1000 cm^3
BW - 30 kg; 50th percentile for male child 9 to 10 years old (U.S. EPA, 1989)
AT - 3,650 days (noncarcinogenic effects) 25,550 days (carcinogenic effects)

Table T-11

CURRENT USE EXPOSURE

American Chemical Services NPL Site
Remedial Investigation
Griffith, Indiana

- Child playing (trespassing) on-Site
- Inhalation of volatile chemicals or fugitive dusts while on-Site

$$\text{Intake (mg/kg-day)} = \frac{CA \times IR \times ET \times EF \times ED}{BW \times AT}$$

CA = Contaminant concentration in air (mg/m^3)
IR = Inhalation rate (m^3/hour)
ET = Exposure time (hours/day)
EF = Exposure frequency (days/year)
ED = Exposure duration (years)
BW = Body weight (kg)
AT = Averaging time (period over which exposure is averaged--days)

CA - Modeled concentration
IR - 3.2 m^3/hour, child age 10 (U.S. EPA, 1989)
ET - 3 hours/day (professional judgement)
EF - 2 days/wk x 26 wk/year = 52 days/year (professional judgement)
ED - 10 years (professional judgement)
BW - 30 kg; 50th percentile for male child 9 to 10 years old (U.S. EPA, 1989)
AT - 3,650 days (noncarcinogenic effects), 25,550 days (carcinogenic effects)

Table T-12

CURRENT USE EXPOSURE

American Chemical Services NPL Site
Remedial Investigation
Griffith, Indiana

- On-Site workers at the ACS facility or Kapica-Pazmey facility
- Inhalation of volatile chemicals or dust

$$\text{Intake (mg/kg-day)} = \frac{CA \times IR \times ET \times EF \times ED}{BW \times AT}$$

CA = Contaminant concentration in air (mg/m^3)
IR = Inhalation rate (m^3/hours)
ET = Exposure time (hours/day)
EF = Exposure frequency (day/year)
ED = Exposure duration (years)
BW = Body weight (kg)
AT = Averaging time (period over which exposure is averaged--days)

CA - Modeled concentration
IR - 2.1 m^3/hr, adult average (U.S. EPA, 1989)
ET - 8 hrs/day (standard work day)
EF - 130 days/year (5 days/week, 6 months/year)
ED - 30 years (U.S. EPA, 1989)
BW - 70 kg (U.S. EPA, 1989)
AT - 10,950 days (noncarcinogenic effects) 25,550 days (carcinogenic effects)

Table T-13

FUTURE USE EXPOSURE

American Chemical Services NPL Site
Remedial Investigation
Griffith, Indiana

- Hypothetical adult resident living on-Site
- Ingestion of groundwater (lower or upper aquifer)

$$\text{Intake (mg/kg-day)} = \frac{CW \times IR \times EF \times ED}{BW \times AT}$$

CW = Chemical concentration in water (mg/kg)
IR = Ingestion rate (L/day)
EF = Exposure frequency (days/year)
ED = Exposure duration (years)
BW = Body weight (kg)
AT = Averaging time (period over which exposure is averaged--days)

CW - Site-specific
IR - 2 L/day (U.S. EPA, 1989)
EF - 365 days/year (by convention)
ED - 30 years (national upper-bound time at one residence; U.S. EPA, 1989)
BW - 70 kg (U.S. EPA, 1989)
AT - 10,950 days (noncarcinogenic effects), 25,550 days (carcinogenic effects)

Table T-14

FUTURE USE EXPOSURE

American Chemical Services NPL Site
Remedial Investigation
Griffith, Indiana

- Hypothetical adult resident living on-Site
- Dermal absorption of chemicals in water (lower or upper aquifer) while bathing

$$\text{Absorbed Dose (mg/kg-day)} = \frac{CW \times SA \times PC \times ET \times EF \times ED \times CF \times AV}{BW \times AT}$$

CW = Chemical concentration in water (mg/L)
SA = Skin surface area available for contact (cm^2)
PC = Chemical-specific dermal permeability constant (cm/hour)
ET = Exposure time (hours/day)
EF = Exposure frequency (day/year)
ED = Exposure duration (years)
CF = Volumetric conversion factor for water (L/cm^3)
AV = Adjustment for contaminants released via volatilization (unitless)
BW = Body weight (kg)
AT = Averaging time (period over which exposure is averaged--days)

CW - Site-specific
SA - 19,400 cm^2; 50th percentile value for male adult - total body surface area (U.S. EPA, 1989)
PC - Chemical-specific (Table 7-17)
ET - 0.2 hrs/day (U.S. EPA, 1989)
EF - 365 days/year (professional judgement)
ED - 30 years (U.S. EPA, 1989)
CF - 1L/1000 cm^3
AV - Volatiles - 90% volatilized, 10% available for dermal absorption; semivolatiles - 50% volatilized, 50% available for dermal absorption (see Appendix Y).
BW - 70 kg (U.S. EPA 1989)
AT - 10,950 days (noncarcinogenic effects), 25,550 (carcinogenic effects)

Table T-15

FUTURE USE EXPOSURE

American Chemical Services NPL Site
Remedial Investigation
Griffith, Indiana

- Adult off-Site resident
- Inhalation of volatiles released from groundwater while showering (upper or lower aquifers)

$$\text{Intake (mg/kg-day)} = \frac{CA \times IR \times EF \times ED}{BW \times AT}$$

CA = Contaminant concentration in air (mg/m^3)
IR = Inhalation rate (m^3/day)
ET = Exposure time (hours/day)
EF = Exposure frequency (days/year)
ED = Exposure duration (years)
BW = Body weight (kg)
AT = Averaging time (period over which exposure is averaged--days)

CA - Modeled - see Appendix Y
IR - 20 m^3/day (U.S. EPA, 1989)
ET - .28 hours/day (U.S. EPA, 1991 - see Appendix Y)
EF - 365 days/year (by convention)
ED - 30 years (national upper-bound time at one residence; U.S. EPA, 1989)
BW - 70 kg (U.S. EPA, 1989)
AT - 10,950 days (noncarcinogenic effects), 25,550 days (carcinogenic effects)

Table T-16

FUTURE USE EXPOSURE

American Chemical Services NPL Site
Remedial Investigation
Griffith, Indiana

- Hypothetical adult resident living on-Site
- Inhalation of volatile chemicals released from subsurface wastes/soils

$$\text{Intake (mg/kg-day)} = \frac{CA \times IR \times EF \times ED}{BW \times AT}$$

CA = Contaminant concentration in air (mg/m^3)
IR = Inhalation rate (m^3/day)
EF = Exposure frequency (days/year)
ED = Exposure duration (years)
BW = Body weight (kg)
AT = Averaging time (period over which exposure is averaged--days)

CA - Modeled concentration
IR - 20 m^3/day (U.S. EPA, 1989)
EF - 182 days/year (professional judgement)
ED - 30 years (U.S. EPA, 1989)
BW - 70 kg (U.S. EPA, 1989)
AT - 10,950 days (noncarcinogenic effects), 25,550 days (carcinogenic effects)

Table T-17

FUTURE USE EXPOSURE

American Chemical Services NPL Site
Remedial Investigation
Griffith, Indiana

- Hypothetical adult resident living on-Site
- Incidental ingestion of unearthed soils

$$\text{Intake (mg/kg-day)} = \frac{CS \times IR \times CF \times FI \times EF \times ED}{BW \times AT}$$

CS = Chemical concentration in soil (mg/kg)
IR = Ingestion rate (mg/soil/day)
CF = Conversion factor (10^{-6} kg/mg)
FI = Fraction ingested from contaminated source (unitless)
EF = Exposure frequency (days/year)
ED = Exposure duration (years)
BW = Body weight (kg)
AT = Averaging time (period over which exposure is averaged--days)

CS - Site-specific
IR - 100 mg soil/day (U.S. EPA, 1989)
CF - 10^{-6} kg/mg
FI - 100% (professional judgement)
EF - 182 days/year, assume daily for 6 months/year (professional judgement)
ED - 30 years (U.S. EPA, 1989)
BW - 70 kg; (U.S. EPA, 1989)
AT - 10,950 days (noncarcinogenic effects), 25,550 days (carcinogenic effects)

Table T-18

FUTURE USE EXPOSURE

American Chemical Services NPL Site
Remedial Investigation
Griffith, Indiana

- Hypothetical adult resident living on-Site
- Dermal absorption of chemicals in unearthed soils

$$\text{Absorbed dose (mg/kg-day)} = \frac{CS \times CF \times SA \times AF \times ABS \times EF \times ED}{BW \times AT}$$

CS = Chemical concentration in soil (mg/kg)
CF = Conversion factor (kg/mg)
SA = Skin surface area available for contact (cm^2/event)
AF = Soil to skin adherence factor (mg/cm^2)
ABS = Absorption factor (unitless)
EF = Exposure frequency (days/year)
ED = Exposure duration (years)
BW = Body weight (kg)
AT = Averaging time (period over which exposure is averaged--days)

CS - Site specific
CF - 10^{-6} kg/mg
SA - 8,620 cm^2; Adult arms, hands, legs-50th percentile (U.S. EPA, 1989)
AF - 2.11 mg/cm^2; Average potting soil and kaolin clay (U.S. EPA, 1989)
EF - 182 days/year, assume daily for 6 months/year (professional judgement)
ED - 30 years (U.S. EPA, 1989)
BW - 70 kg (U.S. EPA, 1989)
AT - 10,950 days (noncarcinogenic effects) 25,550 days (carcinogenic effects)
ABS - Assume 30% for organic chemicals and 1% for inorganic chemicals

Table T-19

FUTURE USE EXPOSURE

American Chemical Services NPL Site
Remedial Investigation
Griffith, Indiana

- Child playing on-Site
- Incidental ingestion of surface water while playing in wetlands

$$\text{Intake (mg/kg-day)} = \frac{CW \times CR \times ET \times EF \times ED}{BW \times AT}$$

CW = Chemical concentration in water (mg/L)
CR = Contact rate (L/hour)
ET = Exposure time (hours/day)
EF = Exposure frequency (days/year)
ED = Exposure duration (years)
BW = Body weight (kg)
AT = Averaging time (period over which exposure is averaged--days)

CW - Site-specific
CR - 0.005L/hr (professional judgement)
ET - 3 hours/day (professional judgement)
EF - 2 days/wk x 26 wk/year = 52 days/year (professional judgement)
ED - 10 years (professional judgement)
BW - 30 kg; 50th percentile for male child 9 to 10 years old (U.S. EPA, 1989)
AT - 3,650 days (noncarcinogenic effects) 25,550 days (carcinogenic effects)

Table T-20

FUTURE USE EXPOSURE

American Chemical Services NPL Site
Remedial Investigation
Griffith, Indiana

- Child playing on-Site
- Dermal absorption of chemicals in surface water while playing in wetlands

$$\text{Absorbed dose (mg/kg-day)} = \frac{CW \times SA \times PC \times ET \times EF \times ED \times CF}{BW \times AT}$$

CW = Chemical concentration in water (mg/L)
SA = Skin surface area available for contact (cm^2)
PC = Chemical-specific dermal permeability constant (cm/hour)
ET = Exposure time (hours/day)
EF = Exposure frequency (days/year)
ED = Exposure duration (years)
CF = Volumetric conversion factor for water (L/cm^3)
BW = Body weight (kg)
AT = Averaging time (period over which exposure is averaged--days)

CW - Site-specific
SA - 4,970 cm^2/event; 9 to 10 year old male arms, hands, legs-50th percentile (U.S. EPA, 1989)
RC - Chemical-specific (Table 7-17)
ET - 3 hours/day (professional judgement)
EF - 2 days/wk x 26 wk/year = 52 days/year (professional judgement)
ED - 10 years (professional judgement)
CF - 1L/1000 cm^3
BW - 30 kg; 50th percentile for male child 9 to 10 years old (U.S. EPA, 1989)
AT - 3,650 days (noncarcinogenic effects) 25,550 days (carcinogenic effects)

Table T-21

FUTURE USE EXPOSURE

American Chemical Services NPL Site
Remedial Investigation
Griffith, Indiana

- Child playing on-Site
- Incidental ingestion of wetland sediments

$$\text{Intake (mg/kg-day)} = \frac{CS \times IR \times CF \times FI \times EF \times ED}{BW \times AT}$$

CS = Chemical concentration in soil (mg/kg)
IR = Ingestion rate (mg soil/day)
CF = Conversion factor (kg/mg)
FI = Fraction ingested from contaminated source (unitless)
EF = Exposure frequency (days/year)
ED = Exposure duration (years)
BW = Body weight (kg)
AT = Averaging time (period over which exposure is averaged--days)

CS - Site-specific
IR - 100 mg soil/day (U.S. EPA, 1989)
CF - 10^{-6} kg/mg
FI - 50%, assume 50% from Site soils and 50% from wetland sediments
EF - 2 days/wk x 26 wk/year = 52 days/year (professional judgement)
ED - 10 years (professional judgement)
BW - 30 kg; 50th percentile for male child 9 to 10 years old (U.S. EPA, 1989)
AT - 3,650 days (noncarcinogenic effects), 25,550 days (carcinogenic effects)

Table T-22

FUTURE EXPOSURE

American Chemical Services NPL Site
Remedial Investigation
Griffith, Indiana

- Child playing on-Site
- Dermal absorption of chemicals in wetland sediments

$$\text{Absorbed dose (mg/kg-day)} = \frac{CS \times CF \times SA \times AF \times ABS \times EF \times ED}{BW \times AT}$$

CS = Chemical concentration in soil (mg/kg)
CF = Conversion factor (kg/mg)
SA = Skin surface area available for contact (cm^2)
AF = Soil to skin adherence factor (mg/cm^2)
ABS = Absorption factor (unitless)
EF = Exposure frequency (days/year)
ED = Exposure duration (years)
BW = Body weight (kg)
AT = Averaging time (period over which exposure is averaged--days)

CS - Site specific
CF - 10^{-6} kg/mg
SA - 4,870 cm^2; 9 to 10 year old male arms, hands, legs-50th percentile (U.S. EPA, 1989)
AF - 2.11 mg/cm^2; Average potting soil and kaolin clay (U.S. EPA, 1989)
EF - 2 days/wk x 26 wk/year = 52 days/year (professional judgement)
ED - 10 years (professional judgement)
BW - 30 kg; 50th percentile for male child 9 to 10 years old (U.S. EPA, 1989)
AT - 3,650 days (noncarcinogenic effects) 25,550 days (carcinogenic effects)
ABS - Assume 30% for organic compounds and 1% for inorganic compounds

BC/vlr/KJD
[ccf-600-97]
60251.17

Appendix U

Evaluation of Analytical Data For Calculation of Exposure Point Concentrations

Appendix U

EVALUATION OF ANALYTICAL DATA FOR CALCULATION OF EXPOSURE POINT CONCENTRATIONS

The analytical data collected from the ASC site has been organized into a form appropriate for the baseline risk assessment using the procedures outlined in "Risk Assessment Guidance for Superfund, Volume I: Human Health Evaluation Manual" (U.S. EPA., September 1989). Although the following methods were applied to all media, groundwater concentrations were used in the BRA, in a manner consistent with U.S. EPA's March 1991 Supplemental Guidance, and as discussed with the Region V RPM. The following seven criteria were used in evaluating the data.

1. All analytical results are tabulated by medium (soils, sediments, groundwater, and surface water), and grouped into source area identified by the following locations:

   - On-Site Containment Area
   - Still bottoms / Treatment lagoon
   - Off-Site Containment Area
   - Kapica-Pazmey
   - Groundwaters (upper and lower aquifer)
   - Surface waters
   - Sediments

   In addition, results for Kapica-Pazmey are further divided into surface (0-3 ft) and sub-surface soil samples.

2. All analyses were performed using Contract Laboratory Program (CLP) methodology.

3. Qualifiers applied both by the performing laboratory and during data validation are evaluated.

   All results qualified as unusable (U) are eliminated from further consideration.

   Target list compounds qualified as estimated (J) are considered to be positively identified, but with the concentration estimated, and are included for further evaluation. Tentatively identified compounds (TICs) from the volatile and semi-volatile analyses are also qualified as estimated, but both the quantity and the identity are uncertain.

   Compounds reported as undetected (U) are evaluated to determine if the sample quantitation limits were accurately calculated.

4. Sample Quantitation Limits (SQLs) are evaluated. All compounds detected in at least one sample from a given source area are evaluated.

Sample results for each compound detected are evaluated to determine the value to be included in the exposure concentration value for the quantitative risk assessment. For a given compound, all positive results are included. For samples where the compound was not detected, one half the SQL is included. If one half the SQL is greater than the maximum detected concentration for the source area, that result is eliminated from the quantitative risk assessment.

5. Blank results are reviewed to identify and eliminate sample results that represent sampling, transportation, or laboratory introduced contamination.

6. Tentatively identified compounds (TICs) are grouped according to chemical structure. Since TICs do not have detection limits, it is not possible to calculate UCL values. Instead, the maximum concentration of any TIC from within a TIC group from each given source area, is used as the exposure point concentration.

7. Background levels are compared to sample results. Inorganic chemicals present at the Site at naturally occurring levels are eliminated from further consideration, as described in Appendix S.

8. Potential transformation products of compounds detected in the sample operable unit are determined and included in the evaluation.

After the data has been evaluated using these criteria, a list of the samples by source area is made that will be used to estimate exposure concentration of the compounds detected. All compounds detected in a source area are included in the data evaluation (no screening procedure is employed).

QUANTITATION OF REASONABLE MAXIMUM EXPOSURE CONCENTRATION

The list of chemicals of potential concern for each source area as discussed in Appendix S is used to determine the exposure point concentrations. The data has been assumed to be log-normally distributed. This has been confirmed through analysis of covariance (Table U-19). The arithmetic mean of the log-transformed data has been calculated. The 95 percent upper confidence limit has been calculated for this log-transformed data and considered in determining exposure point concentrations.

CALCULATIONS

For each compound detected in a source area, the following calculation routine is performed:

1. DATA EVALUATION

1.1 Determine the maximum detected concentration.

1.2 For non-detect results, calculate 1/2 the SQL

$$1/2\ SQL = CRQL \times DF \times 0.5$$

where

CRQL = contract required detection limit
DF = CRQL factor (as presented in the analytical results) to correct for dilutions, percent moisture, or changes in the sample analytical dilution/concentration procedure.

For non-detect results where a specific SQL is presented in the analytical results, use 1/2 that value.

1.3 Compare the 1/2 SQL value to the maximum detected concentration. Eliminate 1/2 SQL values that exceed the maximum detected concentration.

1.4 Prepare a data set table of the positive detects and 1/2 SQLs as evaluated above for each media of interest.

2. EXPOSURE CONCENTRATION CALCULATION

The 95% UCL is calculated on the log normally distributed data. This requires the data set to be transformed before the 95% UCL can be calculated. For each compound:

2.1 Transformed Data set. Calculate the natural log of each value in the data set.

2.2 Calculate the arithmetic average of the transformed data set.

2.3 Calculate the standard deviation of the transformed data set.

2.4 Calculate the variance for the transformed data set.

2.5 Determine the number of data points (n) included in the data sets.

2.6 Determine the Hv statistic. This value is taken from statistical tables for a one-sided upper 95% confidence limit on a log normal mean (geometric mean; the geometric mean was used to estimate the "true" mean) as presented in Gilbert (1987). The standard deviation and the number of data points (n) are required to determine this value.

2.7 Calculate the 95% UCL:

$$EXP(AVE + (0.5\ VAR) + ((STD * Hv) / SQRT(n-1)))$$

where

EXP	=	inverse base e logarithm
AVE	=	arithmetic average of the transformed data set
STD	=	standard deviation of the transformed data set
VAR	=	variance (STD * STD)
Hv	=	as determined in #6 above
SQRT	=	square root

2.8 Determine the value to be used for the exposure point concentration. Compare the 95% UCL value (section 2.7 above) to the maximum detected concentration (section 1.1). The 95% UCL value is used unless it exceeds the maximum detected concentration. The exception to this is for the future use groundwater scenario where the maximum concentration has been used.

The exposure point concentration calculations are presented in tables at the end of this appendix. A summary of exposure point concentrations for all source areas is presented in Table 7-16

Table U - 1

Determination of Exposure Point Concentration:
95% UCLM vs Maximum Detected Concentration

Media: Groundwater
Source Area: lower Aquifer

Chemical Of Potential Concern	95% UCLM Calculation: Ave. of LN Data	Std Dev. of LN Data	H value	Variance	n	UCLM (95%)	Max. Det. Conc. (ug/L)	Exposure Point Conc. (ug/L)	Exposure Point Conc. (mg/L)
Arsenic	0.91	0.70	2.90	0.49	8	6.82e+00	8.60e+00	8.60e+00	8.60e-03
Barium	5.07	0.51	2.47	0.26	8	2.89e+02	3.10e+02	3.10e+02	3.10e-01
Calcium	11.42	0.45	2.28	0.20	8	1.49e+05	1.51e+05	1.51e+05	1.51e+02
Copper	2.39	0.25	1.99	0.06	8	1.35e+01	2.00e+01	2.00e+01	2.00e-02
Iron	5.84	1.32	4.43	1.74	8	7.44e+03	3.16e+03	3.16e+03	3.16e+00
Magnesium	10.20	0.54	2.47	0.29	8	5.16e+04	5.31e+04	5.31e+04	5.31e+01
Manganese	5.31	0.80	3.16	0.65	8	7.29e+02	8.66e+02	8.66e+02	8.66e-01
Mercury	-1.68	0.49	2.47	0.24	8	3.31e-01	4.70e-01	4.70e-01	4.70e-04
Potassium	7.33	0.52	2.47	0.27	8	2.84e+03	3.42e+03	3.42e+03	3.42e+00
Selenium	0.69	0.00	1.89	0.00	8	2.00e+00	2.00e+00	2.00e+00	2.00e-03
Sodium	10.11	0.85	3.16	0.72	8	9.68e+04	9.62e+04	9.62e+04	9.62e+01
Vanadium	0.24	0.36	2.28	0.13	8	1.85e+00	2.40e+00	2.40e+00	2.40e-03
Zinc	1.88	0.55	2.47	0.30	8	1.27e+01	2.20e+01	2.20e+01	2.20e-02

Notes:

Ave. of LN Data = The arithmatic mean of the natural logs of the detected concentration or the 1/2 SQL.
Std Dev. of LN Data = The standard deviation of the natural log of the detected concentration or the 1/2 SQL.
H Value = H statistic for computing a one-sided upper 95% confidence limit on a lognormal mean (Gilbert 1987, table A12)
Variance = Variance of the natural log of the detected concentration or the 1/2 SQL
n = Number of data points
UCLM (95%) = EXP(Ave. + 0.5 * Variance + ((Std Dev. * H value) / SQRT (n-1)))
Max. Det. Conc. = Maximum detected concentration of the chemical in the Source Area sample group.
Exposure Point Conc. = The 95% UCLM or the Max. Det. Conc. , whichever is lower.
For groundwater, residents are assumed to be exposed to a single contaminant concentration, not an average of the entire aquifer. As such, the maximum concentration is used as the exposure concentration.

[acs.2020]um-a-2.w20

Table U - 2

Determination of Exposure Point Concentration:
95% UCLM vs Maximum Detected Concentration

Media: Groundwater
Source Area: lower Aquifer

Chemical Of Potential Concern	95% UCLM Calculation: Ave. of LN Data	Std Dev. of LN Data	H value	Variance	n	UCLM (95%)	Max. Det. Conc. (ug/L)	Exposure Point Conc. (ug/L)	Exposure Point Conc. (mg/L)
Chloroethane	2.46	1.85	4.80	3.43	9	1.50e+03	4.40e+02	4.40e+02	4.40e-01
4-Methyl-2-Pentanone	1.10	ERR	2.75	ERR	1	ERR	3.00e+00	3.00e+00	3.00e-03
bis(2-Chloroethyl)ether	1.79	0.37	2.09	0.14	9	8.44e+00	1.20e+01	1.20e+01	1.20e-02

Notes:

Ave. of LN Data = The arithmatic mean of the natural logs of the detected concentration or the 1/2 SQL.
Std Dev. of LN Data = The standard deviation of the natural log of the detected concentration or the 1/2 SQL.
H Value = H statistic for computing a one-sided upper 95% confidence limit on a lognormal mean (Gilbert 1987, table A12)
Variance = Variance of the natural log of the detected concentration or the 1/2 SQL
n = Number of data points
UCLM (95%) = EXP(Ave. + 0.5 * Variance + ((Std Dev. * H value) / SQRT (n-1)))
Max. Det. Conc. = Maximum detected concentration of the chemical in the Source Area sample group.
Exposure Point Conc. = The 95% UCLM or the Max. Det. Conc. , whichever is lower.
For groundwater, residents are assumed to be exposed to a single contaminant concentration,
not an average of the entire aquifer. As such, the maximum concentration is used as the exposure concentration.
ERR = Statistical operations cannot be performed on a single data point.

[acs.2020]uo-a-2.w20

Table U - 3

Determination of Exposure Point Concentration:
95% UCLM vs Maximum Detected Concentration

Media: Groundwater
Source Area: Upper Aquifer

Chemical	95% UCLM Calculation: Ave. of LN Data	Std Dev. of LN Data	H value	Varience	n	UCLM (95%)	Max. Det. Conc. (ug/L)	Exposure Point Conc. (ug/L)	Exposure Point Conc. (mg/L)
Arsenic	1.48	1.32	2.92	1.74	26	2.27e+01	4.32e+01	4.32e+01	4.32e-02
Barium	5.56	0.94	2.43	0.88	26	6.36e+02	1.84e+03	1.84e+03	1.84e+00
Beryllium	-2.27	0.18	1.77	0.03	26	1.12e-01	2.50e-01	2.50e-01	2.50e-04
Cadmium	-1.85	0.84	2.31	0.71	26	3.30e-01	3.10e+00	3.10e+00	3.10e-03
Chromium, Total	-0.46	0.87	2.43	0.75	26	1.40e+00	3.90e+00	3.90e+00	3.90e-03
Lead	0.48	0.26	1.83	0.07	26	1.83e+00	4.60e+00	4.60e+00	4.60e-03
Manganese	7.05	1.35	2.92	1.81	26	6.26e+03	4.25e+03	4.25e+03	4.25e+00
Mercury	-1.77	0.66	2.19	0.43	26	2.81e-01	1.70e+00	1.70e+00	1.70e-03
Nickel	3.10	0.30	1.83	0.09	26	2.59e+01	5.30e+01	5.30e+01	5.30e-02
Selenium	0.13	0.40	1.91	0.16	26	1.43e+00	6.20e+00	6.20e+00	6.20e-03
Sodium	10.84	1.46	3.31	2.12	26	3.85e+05	4.44e+05	4.44e+05	4.44e+02
Thallium	0.59	0.30	1.83	0.09	26	2.10e+00	4.00e+00	4.00e+00	4.00e-03
Vanadium	0.94	0.93	2.43	0.87	26	6.26e+00	2.59e+01	2.59e+01	2.59e-02
Zinc	3.43	1.34	2.92	1.79	26	1.64e+02	8.86e+02	8.86e+02	8.86e-01
Cyanide, Total	1.64	0.14	1.72	0.02	26	5.43e+00	1.00e+01	1.00e+01	1.00e-02
Aluminum	5.33	0.09	1.72	0.01	26	2.15e+02	2.80e+02	2.80e+02	2.80e-01
Calcium	11.69	0.80	2.31	0.65	26	2.38e+05	1.04e+06	1.04e+06	1.04e+03
Iron	7.54	2.32	5.01	5.39	26	2.85e+05	2.18e+05	2.18e+05	2.18e+02
Magnesium	10.22	0.56	2.09	0.31	26	4.08e+04	7.88e+04	7.88e+04	7.88e+01
Potassium	8.73	1.09	2.56	1.18	26	1.96e+04	9.58e+04	9.58e+04	9.58e+01

Notes:

Ave. of LN Data = The arithmatic mean of the natural logs of the detected concentration or the 1/2 SQL.
Std Dev. of LN Data = The standard deviation of the natural log of the detected concentration or the 1/2 SQL.
H Value = H statistic for computing a one-sided upper 95% confidence limit on a lognormal mean (Gilbert 1987, table A12)
Variance = Variance of the natural log of the detected concentration or the 1/2 SQL
n = Number of data points
UCLM (95%) = EXP(Ave. + 0.5 * Variance + ((Std Dev. * H value) / SQRT (n-1)))
Max. Det. Conc. = Maximum detected concentration of the chemical in the Source Area sample group.
Exposure Point Conc. = The 95% UCLM or the Max. Det. Conc. , whichever is lower.
For groundwater, residents are assumed to be exposed to a single contaminant concentration, not an average of the entire aquifer. As such, the maximum concentration is used as the exposure concentration.

[acs.2020]um-b-2.w20

Table U - 4

Determination of Exposure Point Concentration:
95% UCLM vs Maximum Detected Concentration

Media: Groundwater
Source Area: Upper Aquifer

Chemical Of Potential Concern	95% UCLM Calculation: Ave. of LN Data	Std Dev. of LN Data	H value	Variance	n	UCLM (95%)	Max. Det. Conc. (ug/L)	Exposure Point Conc. (ug/L)	Exposure Point Conc. (mg/L)
Chloromethane	1.97	0.82	2.31	0.67	23	1.51e+01	6.80e+01	6.80e+01	6.80e-02
Vinyl Chloride	2.26	1.42	3.31	2.03	23	7.25e+01	7.20e+02	7.20e+02	7.20e-01
Chloroethane	3.44	2.22	4.14	4.92	24	2.47e+03	2.00e+03	2.00e+03	2.00e+00
Methylene Chloride	2.23	1.83	3.72	3.35	23	2.12e+02	3.80e+02	3.80e+02	3.80e-01
Acetone	2.85	2.79	5.91	7.76	23	2.80e+04	9.90e+04	9.90e+04	9.90e+01
1,1-Dichloroethane	1.98	2.23	4.14	4.95	24	5.87e+02	2.40e+03	2.40e+03	2.40e+00
Total 1,2-Dichloroethene	1.72	1.64	3.72	2.70	23	7.94e+01	4.00e+02	4.00e+02	4.00e-01
2-Butanone	3.46	3.64	7.60	13.24	17	2.40e+07	2.20e+05	2.20e+05	2.20e+02
Trichloroethene	1.31	0.87	2.31	0.76	22	8.35e+00	4.50e+01	4.50e+01	4.50e-02
Benzene	3.48	3.29	6.82	10.84	24	7.87e+05	1.00e+05	1.00e+05	1.00e+02
4-Methyl-2-Pentanone	2.85	2.77	5.01	7.66	24	1.45e+04	5.40e+04	5.40e+04	5.40e+01
2-Hexanone	2.35	1.69	3.72	2.86	23	1.68e+02	1.80e+03	1.80e+03	1.80e+00
Tetrachloroethene	1.52	1.30	2.92	1.68	23	2.38e+01	2.00e+02	2.00e+02	2.00e-01
Toluene	1.92	1.89	4.14	3.59	24	2.11e+02	2.30e+03	2.30e+03	2.30e+00
Chlorobenzene	1.45	1.10	2.56	1.20	22	1.43e+01	9.60e+01	9.60e+01	9.60e-02
Ethylbenzene	2.23	2.20	4.14	4.84	24	7.04e+02	1.10e+03	1.10e+03	1.10e+00
Total Xylenes	2.27	2.27	4.14	5.14	24	9.00e+02	3.00e+03	3.00e+03	3.00e+00
Phenol	1.98	0.93	2.43	0.87	24	1.80e+01	2.40e+02	2.40e+02	2.40e-01
bis(2-Chloroethyl)ether	2.22	1.19	2.92	1.41	24	3.82e+01	2.50e+02	2.50e+02	2.50e-01
1,3-Dichlorobenzene	1.10	ERR	2.75	ERR	1	ERR	3.00e+00	3.00e+00	3.00e-03
1,4-Dichlorobenzene	1.60	0.21	1.77	0.04	24	5.50e+00	1.00e+01	1.00e+01	1.00e-02
1,2-Dichlorobenzene	1.88	0.61	2.09	0.37	24	1.03e+01	3.30e+01	3.30e+01	3.30e-02
2-Methylphenol	1.70	0.52	1.99	0.27	22	7.88e+00	3.80e+01	3.80e+01	3.80e-02
bis(2-Chloroisopropyl)ether	2.27	1.35	2.92	1.81	24	5.46e+01	3.00e+02	3.00e+02	3.00e-01
4-Methylphenol	2.15	1.44	3.31	2.08	22	6.91e+01	2.20e+03	2.20e+03	2.20e+00
Isophorone	1.81	0.56	2.09	0.31	24	9.13e+00	3.50e+01	3.50e+01	3.50e-02
2,4-Dimethylphenol	1.78	0.66	2.19	0.44	22	1.01e+01	1.10e+02	1.10e+02	1.10e-01
Benzoic acid	3.03	1.21	2.92	1.46	24	9.00e+01	1.90e+03	1.90e+03	1.90e+00
Naphthalene	1.91	0.86	2.43	0.73	24	1.51e+01	7.10e+01	7.10e+01	7.10e-02
4-Chloro-3-methylphenol	1.15	0.65	7.81	0.42	2	6.14e+02	5.00e+00	5.00e+00	5.00e-03
2-Methylnaphthalene	1.75	0.41	1.91	0.17	24	7.38e+00	2.70e+01	2.70e+01	2.70e-02
Diethylphthalate	1.61	0.16	1.77	0.03	24	5.40e+00	9.00e+00	9.00e+00	9.00e-03
Pentachlorophenol	0.90	0.29	4.11	0.08	2	8.29e+00	3.00e+00	3.00e+00	3.00e-03
Di-n-butylphthalate	0.69	ERR	2.75	ERR	1	ERR	2.00e+00	2.00e+00	2.00e-03
bis(2-Ethylhexyl)phthalate	1.71	0.67	2.19	0.45	24	9.40e+00	5.00e+01	5.00e+01	5.00e-02
AROCLOR-1248	-1.19	0.66	2.19	0.44	24	5.11e-01	2.60e+00	2.60e+00	2.60e-03

Table U - 4

Determination of Exposure Point Concentration:
95% UCLM vs Maximum Detected Concentration

Media: Groundwater
Source Area: Upper Aquifer

Chemical Of Potential Concern	95% UCLM Calculation: Ave. of LN Data	Std Dev. of LN Data	H value	Variance	n	UCLM (95%)	Max. Det. Conc. (ug/L)	Exposure Point Conc. (ug/L)	Exposure Point Conc. (mg/L)
AROCLOR-1260	-0.53	0.81	2.31	0.66	24	1.22e+00	2.70e+01	2.70e+01	2.70e-02

Notes:

Ave. of LN Data = The arithmatic mean of the natural logs of the detected concentration or the 1/2 SQL.
Std Dev. of LN Data = The standard deviation of the natural log of the detected concentration or the 1/2 SQL.
H Value = H statistic for computing a one-sided upper 95% confidence limit on a lognormal mean (Gilbert 1987, table A12)
Variance = Variance of the natural log of the detected concentration or the 1/2 SQL
n = Number of data points
UCLM (95%) = EXP(Ave. + 0.5 * Variance + ((Std Dev. * H value) / SQRT (n-1)))
Max. Det. Conc. = Maximum detected concentration of the chemical in the Source Area sample group.
Exposure Point Conc. = The 95% UCLM or the Max. Det. Conc. , whichever is lower.
For groundwater, residents are assumed to be exposed to a single contaminant concentration,
not an average of the entire aquifer. As such, the maximum concentration is used as the exposure concentration.
ERR = Statistical operations cannot be performed on a single data point.

[acs.2020]uo-b-2.w20

Table U - 5

Determination of Exposure Point Concentration:
95% UCLM vs Maximum Detected Concentration

Media: Surface Water
Source Area: ACS

Chemical	95% UCLM Calculation: Ave. of LN Data	Std Dev. of LN Data	H value	Variance	n	UCLM (95%)	Max. Det. Conc. (ug/L)	Exposure Point Conc. (ug/L)	(mg/L)
Aluminum	5.77	1.10	4.91	1.20	5	8.63e+03	9.60e+02	9.60e+02	9.60e-01
Arsenic	0.93	1.65	8.25	2.72	5	8.87e+03	4.50e+01	4.50e+01	4.50e-02
Barium	4.84	0.53	2.95	0.29	5	3.22e+02	3.30e+02	3.22e+02	3.22e-01
Beryllium	-2.10	0.46	2.95	0.21	5	2.69e-01	2.80e-01	2.69e-01	2.69e-04
Cadmium	-1.65	0.93	4.48	0.86	5	2.38e+00	7.20e-01	7.20e-01	7.20e-04
Calcium	10.96	1.41	7.12	1.98	5	2.33e+07	3.34e+05	3.34e+05	3.34e+02
Chromium, Total	1.89	1.08	4.91	1.16	5	1.67e+02	2.80e+01	2.80e+01	2.80e-02
Copper	2.46	0.35	2.40	0.12	5	1.90e+01	2.20e+01	1.90e+01	1.90e-02
Iron	7.76	1.58	7.12	2.51	5	2.31e+06	1.43e+04	1.43e+04	1.43e+01
Lead	2.15	0.78	4.06	0.61	5	5.69e+01	2.38e+01	2.38e+01	2.38e-02
Magnesium	9.25	1.63	8.25	2.65	5	3.23e+07	6.17e+04	6.17e+04	6.17e+01
Manganese	5.68	1.97	9.39	3.87	5	2.08e+07	1.85e+03	1.85e+03	1.85e+00
Nickel	3.48	0.67	3.66	0.45	5	1.38e+02	8.00e+01	8.00e+01	8.00e-02
Potassium	8.54	1.57	7.12	2.48	5	4.78e+06	3.00e+04	3.00e+04	3.00e+01
Selenium	0.15	0.33	2.40	0.11	5	1.83e+00	2.10e+00	1.83e+00	1.83e-03
Sodium	9.35	2.14	9.39	4.60	5	2.70e+09	8.23e+04	8.23e+04	8.23e+01
Zinc	3.95	0.46	2.95	0.21	5	1.14e+02	8.80e+01	8.80e+01	8.80e-02

Notes:

Ave. of LN Data = The arithmatic mean of the natural logs of the detected concentration or the 1/2 SQL.
Std Dev. of LN Data = The standard deviation of the natural log of the detected concentration or the 1/2 SQL.
H Value = H statistic for computing a one-sided upper 95% confidence limit on a lognormal mean (Gilbert 1987, table A12)
Variance = Variance of the natural log of the detected concentration or the 1/2 SQL
n = Number of data points
UCLM (95%) = EXP(Ave. + 0.5 * Variance + ((Std Dev. * H value) / SQRT (n-1)))
Max. Det. Conc. = Maximum detected concentration of the chemical in the Source Area sample group.
Exposure Point Conc. = The 95% UCLM or the Max. Det. Conc. , whichever is lower.

[acs.2020]um-c-2.w20

Table U - 6

Determination of Exposure Point Concentration:
95% UCLM vs Maximum Detected Concentration

Media: Surface Water
Source Area: ACS

Chemical Of Potential Concern	95% UCLM Calculation: Ave. of LN Data	Std Dev. of LN Data	H value	Variance	n	UCLM (95%)	Max. Det. Conc. (ug/L)	Exposure Point Conc. (ug/L)	Exposure Point Conc. (mg/L)
Chloroethane	2.17	0.82	4.06	0.67	5	6.47e+01	3.00e+01	3.00e+01	3.00e-02
Acetone	2.48	1.94	9.39	3.75	5	6.88e+05	3.80e+02	3.80e+02	3.80e-01
1,1-Dichloroethane	0.35	0.49	6.50	0.24	2	3.85e+01	2.00e+00	2.00e+00	2.00e-03
Total 1,2-Dichloroethene	0.77	0.44	2.65	0.19	5	4.24e+00	3.00e+00	3.00e+00	3.00e-03
2-Butanone	2.65	1.52	7.12	2.30	5	9.99e+03	1.40e+02	1.40e+02	1.40e-01
Benzene	1.96	2.33	11.67	5.44	5	8.75e+07	4.60e+02	4.60e+02	4.60e-01
4-Methyl-2-Pentanone	2.07	1.02	4.91	1.04	5	1.62e+02	4.90e+01	4.90e+01	4.90e-02
Toluene	1.35	0.60	3.29	0.36	5	1.25e+01	8.00e+00	8.00e+00	8.00e-03
Ethylbenzene	1.09	0.39	2.65	0.15	5	5.40e+00	6.00e+00	5.40e+00	5.40e-03
Total Xylenes	1.44	1.18	6.00	1.39	5	2.93e+02	3.50e+01	3.50e+01	3.50e-02
Phenol	2.35	1.05	4.91	1.10	5	2.37e+02	4.50e+01	4.50e+01	4.50e-02
bis(2-Chloroethyl)ether	2.16	1.22	6.00	1.50	5	7.16e+02	7.70e+01	7.70e+01	7.70e-02
2-Methylphenol	1.61	0.00	2.04	0.00	5	5.00e+00	5.00e+00	5.00e+00	5.00e-03
bis(2-Chloroisopropyl)ether	1.96	0.79	4.06	0.62	5	4.78e+01	2.90e+01	2.90e+01	2.90e-02
4-Methylphenol	2.68	2.08	9.39	4.34	5	2.26e+06	5.90e+02	5.90e+02	5.90e-01
Isophorone	1.61	0.00	2.04	0.00	5	5.00e+00	5.00e+00	5.00e+00	5.00e-03
2,4-Dimethylphenol	1.78	0.39	2.65	0.15	5	1.08e+01	1.20e+01	1.08e+01	1.08e-02
Benzoic acid	3.46	0.55	2.95	0.30	5	8.31e+01	8.50e+01	8.31e+01	8.31e-02
4-Chloro-3-methylphenol	0.69	ERR	2.75	ERR	1	ERR	2.00e+00	2.00e+00	2.00e-03
AROCLOR-1248	-1.01	0.55	2.95	0.31	5	9.63e-01	8.40e-01	8.40e-01	8.40e-04

Notes:

Ave. of LN Data = The arithmatic mean of the natural logs of the detected concentration or the 1/2 SQL.
Std Dev. of LN Data = The standard deviation of the natural log of the detected concentration or the 1/2 SQL.
H Value = H statistic for computing a one-sided upper 95% confidence limit on a lognormal mean (Gilbert 1987, table A12)
Variance = Variance of the natural log of the detected concentration or the 1/2 SQL
n = Number of data points
UCLM (95%) = EXP(Ave. + 0.5 * Variance + ((Std Dev. * H value) / SQRT (n-1)))
Max. Det. Conc. = Maximum detected concentration of the chemical in the Source Area sample group.
Exposure Point Conc. = The 95% UCLM or the Max. Det. Conc. , whichever is lower.
ERR = Statistical operations cannot be performed on a single data point.

[acs.2020]uo-c-2.w20

Table U - 7

Determination of Exposure Point Concentration:
95% UCLM vs Maximum Detected Concentration

Media: Soils
Source Area: Onsite Containment Area

Chemical of Potential Concern	95% UCLM Calculation: Ave. of LN Data	Std Dev. of LN Data	H value	Varience	n	UCLM (95%)	Max. Det. Conc. (mg/kg)	Exp. Pnt. Conc. (mg/kg)
Barium	3.37	0.83	2.44	0.68	14	7.18e+01	5.15e+02	7.18e+01
Calcium	7.53	2.08	4.56	4.33	14	2.26e+05	3.83e+04	3.83e+04
Chromium,total	1.91	1.32	3.16	1.73	14	5.09e+01	2.71e+02	5.09e+01
Cobalt	1.66	0.52	2.07	0.27	14	8.10e+00	2.24e+01	8.10e+00
Magnesium	7.68	1.22	3.16	1.49	14	1.33e+04	1.74e+04	1.33e+04
Mercury	-3.40	1.71	4.08	2.94	14	1.01e+00	1.24e+01	1.01e+00
Selenium	-1.38	0.18	1.81	0.03	14	2.80e-01	4.50e-01	2.80e-01
Cyanide, total	0.50	0.48	2.07	0.23	14	2.43e+00	8.70e+00	2.43e+00

Notes:
Ave. of LN Data = The arithmatic mean of the natural logs of the detected concentration or the 1/2 SQL.
Std Dev. of LN Data = The standard deviation of the natural log of the detected concentration or the 1/2 SQL.
H Value = H statistic for computing a one-sided upper 95% confidence limit on a lognormal mean (Gilbert 1987, table A12)
Variance = Variance of the natural log of the detected concentration or the 1/2 SQL
n = Number of data points
UCLM (95%) = EXP(Ave. + 0.5 * Variance + ((Std Dev. * H value) / SQRT (n-1)))
Max. Det. Conc. = Maximum detected concentration of the chemical in the Source Area sample group.
Exposure Point Conc. = The 95% UCLM or the Max. Det. Conc. , whichever is lower.

[acs.2020]um-d-2.w20

Table U - 8

Determination of Exposure Point Concentration:
95% UCLM vs Maximum Detected Concentration

Media: Soils
Source Area: Onsite Containment Area

Chemical Of Potential Concern	95% UCLM Calculation: Ave. of LN Data	Std Dev. of LN Data	H value	Variance	n	UCLM (95%)	Max. Det. Conc. (ug/kg)	Exposure Point Conc. (ug/kg)	Exposure Point Conc. (mg/kg)
Chloroethane	6.83	6.84	32.43	46.79	5	ERR	1.60e+07	1.60e+07	1.60e+04
Acetone	5.06	1.96	3.81	3.83	40	3.51e+03	7.40e+03	3.51e+03	3.51e+00
1,1-Dichloroethane	1.39	1.03	2.56	1.05	23	1.19e+01	2.50e+02	1.19e+01	1.19e-02
Total 1,2-Dichloroethene	3.92	2.51	4.59	6.30	40	7.40e+03	5.20e+03	5.20e+03	5.20e+00
Chloroform	2.53	2.35	4.59	5.53	30	1.48e+03	6.40e+03	1.48e+03	1.48e+00
1,2-Dichloroethane	3.20	2.44	4.59	5.96	38	3.06e+03	9.70e+02	9.70e+02	9.70e-01
2-Butanone	3.23	1.44	3.31	2.07	22	2.01e+02	2.10e+02	2.01e+02	2.01e-01
1,1,1-Trichloroethane	4.31	3.62	5.68	13.12	42	1.31e+06	2.00e+07	1.31e+06	1.31e+03
1,2-Dichloropropane	2.52	2.24	3.81	5.03	30	7.51e+02	1.50e+03	7.51e+02	7.51e-01
Trichloroethene	3.63	2.75	4.59	7.56	41	1.22e+04	4.00e+04	1.22e+04	1.22e+01
1,1,2-Trichloroethane	1.60	1.43	3.31	2.04	24	3.67e+01	7.40e+02	3.67e+01	3.67e-02
Benzene	5.12	3.22	4.95	10.37	42	3.61e+05	7.10e+06	3.61e+05	3.61e+02
4-Methyl-2-Pentanone	2.95	1.88	4.14	3.52	26	5.23e+02	7.50e+02	5.23e+02	5.23e-01
Tetrachloroethene	4.81	4.03	6.42	16.25	42	2.38e+07	5.90e+06	5.90e+06	5.90e+03
1,1,2,2-Tetrachloroethane	3.57	2.64	4.59	6.95	40	7.95e+03	3.90e+03	3.90e+03	3.90e+00
Toluene	6.10	4.01	6.42	16.11	42	7.93e+07	2.00e+08	7.93e+07	7.93e+04
Chlorobenzene	1.68	1.48	3.31	2.20	25	4.40e+01	3.00e+02	4.40e+01	4.40e-02
Ethylbenzene	5.34	3.81	6.42	14.52	42	1.36e+07	6.70e+06	6.70e+06	6.70e+03
Styrene	3.49	2.68	4.59	7.17	40	8.46e+03	6.20e+03	6.20e+03	6.20e+00
Total Xylenes	7.05	4.07	6.42	16.58	42	2.74e+08	2.50e+07	2.50e+07	2.50e+04
Phenol	5.36	0.69	2.41	0.47	13	4.32e+02	7.80e+02	4.32e+02	4.32e-01
1,3-Dichlorobenzene	5.27	0.25	1.84	0.06	12	2.30e+02	3.50e+02	2.30e+02	2.30e-01
1,4-Dichlorobenzene	5.63	0.67	2.41	0.44	12	5.63e+02	1.20e+03	5.63e+02	5.63e-01
1,2-Dichlorobenzene	6.57	1.66	4.08	2.76	14	1.86e+04	9.90e+03	9.90e+03	9.90e+00
2-Methylphenol	5.39	1.24	3.39	1.53	13	1.58e+03	9.20e+03	1.58e+03	1.58e+00
4-Methylphenol	5.66	1.32	3.39	1.74	13	2.51e+03	1.70e+04	2.51e+03	2.51e+00
2,4-Dimethylphenol	5.64	1.31	3.39	1.71	13	2.39e+03	1.20e+04	2.39e+03	2.39e+00
Benzoic acid	3.89	ERR	2.75	ERR	1	ERR	4.90e+01	4.90e+01	4.90e-02
2,4-Dichlorophenol	5.23	0.26	1.93	0.07	12	2.25e+02	2.80e+02	2.25e+02	2.25e-01
Naphthalene	7.20	2.15	4.56	4.62	14	2.05e+05	9.00e+04	9.00e+04	9.00e+01
2-Methylnaphthalene	6.47	2.12	4.56	4.49	14	8.93e+04	5.50e+04	5.50e+04	5.50e+01
2,4,5-Trichlorophenol	5.30	0.11	1.80	0.01	11	2.13e+02	2.70e+02	2.13e+02	2.13e-01
Dimethylphthalate	5.95	3.13	39.23	9.78	2	ERR	3.50e+03	3.50e+03	3.50e+00
Acenaphthylene	5.63	0.93	2.74	0.87	13	8.98e+02	5.50e+03	8.98e+02	8.98e-01
Acenaphthene	5.87	1.19	3.16	1.42	14	2.06e+03	1.10e+04	2.06e+03	2.06e+00
Diethylphthalate	3.84	0.02	2.75	0.00	2	4.85e+01	4.70e+01	4.70e+01	4.70e-02
Fluorene	5.89	1.24	3.16	1.54	14	2.32e+03	1.40e+04	2.32e+03	2.32e+00
Pentachlorophenol	5.08	ERR	2.75	ERR	1	ERR	1.60e+02	1.60e+02	1.60e-01
Phenanthrene	5.98	1.40	3.61	1.96	14	4.26e+03	2.00e+04	4.26e+03	4.26e+00
Anthracene	4.54	ERR	2.75	ERR	1	ERR	9.40e+01	9.40e+01	9.40e-02

Table U - 8

Determination of Exposure Point Concentration:
95% UCLM vs Maximum Detected Concentration

Media: Soils
Source Area: Onsite Containment Area

Chemical Of Potential Concern	95% UCLM Calculation: Ave. of LN Data	Std Dev. of LN Data	H value	Variance	n	UCLM (95%)	Max. Det. Conc. (ug/kg)	Exposure Point Conc. (ug/kg)	Exposure Point Conc. (mg/kg)
Di-n-butylphthalate	6.06	1.67	4.08	2.81	14	1.16e+04	3.60e+04	1.16e+04	1.16e+01
Fluoranthene	5.48	0.95	2.74	0.90	13	7.93e+02	3.80e+03	7.93e+02	7.93e-01
Pyrene	5.63	0.95	2.74	0.91	13	9.34e+02	5.90e+03	9.34e+02	9.34e-01
Butylbenzylphthalate	5.87	1.24	3.16	1.54	14	2.27e+03	1.50e+04	2.27e+03	2.27e+00
Benzo(a)anthracene	5.14	ERR	2.75	ERR	1	ERR	1.70e+02	1.70e+02	1.70e-01
Chrysene	4.43	ERR	2.75	ERR	1	ERR	8.40e+01	8.40e+01	8.40e-02
bis(2-Ethylhexyl)phthalate	5.83	2.58	5.56	6.68	14	5.16e+05	1.40e+05	1.40e+05	1.40e+02
Endosulfan 1	1.67	0.25	1.74	0.06	28	5.95e+00	1.20e+01	5.95e+00	5.95e-03
4,4-DDT	2.41	0.55	1.93	0.30	28	1.59e+01	9.10e+01	1.59e+01	1.59e-02
AROCLOR-1242	4.66	2.23	3.81	4.96	30	6.08e+03	4.00e+05	6.08e+03	6.08e+00
AROCLOR-1248	4.34	1.16	2.74	1.33	30	2.68e+02	4.50e+03	2.68e+02	2.68e-01
AROCLOR-1254	5.22	1.62	3.08	2.62	30	1.73e+03	1.00e+05	1.73e+03	1.73e+00

Notes:

Ave. of LN Data = The arithmatic mean of the natural logs of the detected concentration or the 1/2 SQL.
Std Dev. of LN Data = The standard deviation of the natural log of the detected concentration or the 1/2 SQL.
H Value = H statistic for computing a one-sided upper 95% confidence limit on a lognormal mean (Gilbert 1987, table A12)
Variance = Variance of the natural log of the detected concentration or the 1/2 SQL
n = Number of data points
UCLM (95%) = EXP(Ave. + 0.5 * Variance + ((Std Dev. * H value) / SQRT (n-1)))
Max. Det. Conc. = Maximum detected concentration of the chemical in the Source Area sample group.
Exposure Point Conc. = The 95% UCLM or the Max. Det. Conc. , whichever is lower.
ERR = Statistical operations cannot be performed.

[acs.2020]uo-d-2.w20

Table U - 9

Determination of Exposure Point Concentration:
95% UCLM vs Maximum Detected Concentration

Media: Soils
Source Area: Offsite Containment Area

Chemical of Potential Concern	95% UCLM Calculation: Ave. of LN Data	Std Dev. of LN Data	H value	Varience	n	UCLM (95%)	Max. Det. Conc. (mg/kg)	Exp. Pnt. Conc. (mg/kg)
Antimony	1.67	2.03	6.75	4.13	8	7.47e+03	1.52e+02	1.52e+02
Barium	3.95	1.48	3.31	2.18	19	4.90e+02	6.40e+03	4.90e+02
Cadmium	1.02	2.57	5.56	6.61	18	2.41e+03	1.70e+03	1.70e+03
Calcium	8.57	1.96	4.14	3.85	19	2.43e+05	5.05e+04	5.05e+04
Chromium,total	3.33	1.70	3.72	2.89	19	5.26e+02	3.75e+03	5.26e+02
Cobalt	2.20	0.70	2.19	0.49	19	1.65e+01	6.91e+01	1.65e+01
Copper	3.61	1.95	4.14	3.82	19	1.67e+03	5.79e+03	1.67e+03
Lead	4.22	2.18	4.14	4.76	19	6.18e+03	1.72e+04	6.18e+03
Manganese	4.52	0.98	2.56	0.95	19	2.66e+02	4.41e+02	2.66e+02
Mercury	-1.77	2.01	4.14	4.04	19	9.17e+00	3.60e+01	9.17e+00
Nickel	2.37	0.95	2.43	0.91	19	2.91e+01	7.26e+01	2.91e+01
Potassium	6.27	1.17	2.92	1.36	19	2.33e+03	8.10e+03	2.33e+03
Selenium	-0.57	1.68	3.72	2.81	19	1.00e+01	1.57e+02	1.00e+01
Silver	0.55	1.27	2.92	1.61	19	9.23e+00	3.12e+02	9.23e+00
Zinc	4.95	1.48	3.31	2.19	19	1.34e+03	4.70e+03	1.34e+03
Cyanide, total	0.86	0.91	2.43	0.82	19	5.99e+00	3.13e+01	5.99e+00
Percent solids	4.35	0.16	1.77	0.02	19	8.38e+01	9.10e+01	8.38e+01

Notes:

Ave. of LN Data = The arithmatic mean of the natural logs of the detected concentration or the 1/2 SQL.
Std Dev. of LN Data = The standard deviation of the natural log of the detected concentration or the 1/2 SQL.
H Value = H statistic for computing a one-sided upper 95% confidence limit on a lognormal mean (Gilbert 1987, table A12)
Variance = Variance of the natural log of the detected concentration or the 1/2 SQL
n = Number of data points
UCLM (95%) = EXP(Ave. + 0.5 * Variance + ((Std Dev. * H value) / SQRT (n-1)))
Max. Det. Conc. = Maximum detected concentration of the chemical in the Source Area sample group.
Exposure Point Conc. = The 95% UCLM or the Max. Det. Conc. , whichever is lower.

[acs.2020]um-e-2.w20

Table U - 10

Determination of Exposure Point Concentration:
95% UCLM vs Maximum Detected Concentration

Media: Soils
Source Area: Offsite Containment Area

Chemical Of Potential Concern	95% UCLM Calculation: Ave. of LN Data	Std Dev. of LN Data	H value	Variance	n	UCLM (95%)	Max. Det. Conc. (ug/kg)	Exposure Point Conc. (ug/kg)	Exposure Point Conc. (mg/kg)
Vinyl Chloride	4.52	2.58	5.01	6.68	23	4.10e+04	2.90e+03	2.90e+03	2.90e+00
Chloroethane	4.37	2.51	5.01	6.28	22	2.82e+04	2.00e+03	2.00e+03	2.00e+00
Methylene Chloride	7.25	3.11	5.39	9.66	37	2.88e+06	2.10e+05	2.10e+05	2.10e+02
Acetone	9.55	3.09	4.95	9.54	44	1.71e+07	3.40e+07	1.71e+07	1.71e+04
1,1-Dichloroethene	6.35	3.56	5.68	12.64	42	7.47e+06	3.90e+05	3.90e+05	3.90e+02
1,1-Dichloroethane	6.90	3.50	5.68	12.23	43	9.59e+06	4.90e+05	4.90e+05	4.90e+02
Total 1,2-Dichloroethene	6.44	2.96	5.39	8.78	38	6.98e+05	3.40e+04	3.40e+04	3.40e+01
Chloroform	7.23	3.95	6.42	15.59	44	1.60e+08	2.80e+06	2.80e+06	2.80e+03
1,2-Dichloroethane	6.99	3.25	4.95	10.54	43	2.51e+06	4.40e+05	4.40e+05	4.40e+02
2-Butanone	10.07	3.67	5.68	13.49	44	4.86e+08	9.90e+07	9.90e+07	9.90e+04
1,1,1-Trichloroethane	8.16	4.46	7.17	19.88	44	9.51e+09	1.50e+08	1.50e+08	1.50e+05
1,2-Dichloropropane	6.18	3.18	5.39	10.08	39	1.20e+06	6.80e+04	6.80e+04	6.80e+01
Trichloroethene	8.24	4.26	7.17	18.12	44	3.44e+09	1.90e+07	1.90e+07	1.90e+04
1,1,2-Trichloroethane	6.63	3.67	5.68	13.48	43	1.60e+07	4.00e+05	4.00e+05	4.00e+02
Benzene	7.92	3.42	5.68	11.67	44	1.82e+07	1.50e+06	1.50e+06	1.50e+03
4-Methyl-2-Pentanone	9.61	3.61	5.68	13.02	44	2.30e+08	6.10e+07	6.10e+07	6.10e+04
2-Hexanone	6.71	3.08	5.39	9.48	34	1.69e+06	4.70e+04	4.70e+04	4.70e+01
Tetrachloroethene	9.06	4.37	7.17	19.09	44	1.43e+10	4.60e+07	4.60e+07	4.60e+04
1,1,2,2-Tetrachloroethane	1.51	0.64	2.37	0.41	11	8.93e+00	1.70e+01	8.93e+00	8.93e-03
Toluene	10.39	4.19	6.42	17.54	44	1.27e+10	1.30e+08	1.30e+08	1.30e+05
Chlorobenzene	6.88	3.84	7.02	14.78	41	1.12e+08	1.00e+06	1.00e+06	1.00e+03
Ethylbenzene	9.34	4.24	6.42	18.02	44	5.95e+09	2.30e+07	2.30e+07	2.30e+04
Styrene	6.83	3.69	5.68	13.61	43	2.11e+07	3.10e+05	3.10e+05	3.10e+02
Total Xylenes	10.66	4.48	7.17	20.07	44	1.30e+11	1.00e+08	1.00e+08	1.00e+05
Phenol	9.22	2.20	3.81	4.84	32	5.12e+05	8.60e+05	5.12e+05	5.12e+02
bis(2-Chloroethyl)ether	7.98	2.51	4.59	6.30	33	5.23e+05	2.00e+05	2.00e+05	2.00e+02
1,4-Dichlorobenzene	6.27	1.59	3.31	2.53	25	5.52e+03	1.10e+04	5.52e+03	5.52e+00
Benzyl alcohol	7.25	2.07	3.81	4.29	31	5.08e+04	3.40e+04	3.40e+04	3.40e+01
1,2-Dichlorobenzene	7.77	2.41	4.59	5.81	33	3.06e+05	1.20e+05	1.20e+05	1.20e+02
2-Methylphenol	8.56	1.74	3.44	3.01	33	6.78e+04	9.00e+04	6.78e+04	6.78e+01
4-Methylphenol	9.28	1.88	3.81	3.52	33	2.21e+05	2.10e+05	2.10e+05	2.10e+02
Isophorone	9.62	3.27	6.20	10.71	33	1.15e+08	3.60e+06	3.60e+06	3.60e+03
2,4-Dimethylphenol	8.95	1.80	3.44	3.25	33	1.16e+05	2.20e+05	1.16e+05	1.16e+02
Benzoic acid	9.57	2.83	5.39	8.02	33	1.17e+07	3.20e+07	1.17e+07	1.17e+04
2,4-Dichlorophenol	5.10	0.44	2.03	0.19	13	2.33e+02	2.00e+02	2.00e+02	2.00e-01
1,2,4-Trichlorobenzene	6.99	2.00	3.81	4.02	29	3.44e+04	7.90e+04	3.44e+04	3.44e+01
Naphthalene	9.78	2.99	5.39	8.95	33	2.68e+07	2.40e+06	2.40e+06	2.40e+03
Hexachlorobutadiene	7.66	2.34	4.59	5.47	33	2.19e+05	1.50e+05	1.50e+05	1.50e+02
2-Methylnaphthalene	9.14	3.08	5.39	9.50	33	2.04e+07	9.90e+05	9.90e+05	9.90e+02
Dimethylphthalate	8.35	2.40	4.59	5.74	33	5.22e+05	7.10e+05	5.22e+05	5.22e+02

Table U - 10

Determination of Exposure Point Concentration:
95% UCLM vs Maximum Detected Concentration

Media: Soils
Source Area: Offsite Containment Area

Chemical Of Potential Concern	95% UCLM Calculation: Ave. of LN Data	Std Dev. of LN Data	H value	Variance	n	UCLM (95%)	Max. Det. Conc. (ug/kg)	Exposure Point Conc. (ug/kg)	Exposure Point Conc. (mg/kg)
Acenaphthylene	5.92	1.27	2.92	1.60	21	1.90e+03	1.10e+04	1.90e+03	1.90e+00
2,6-Dinitrotoluene	5.75	0.86	2.43	0.74	19	7.49e+02	3.50e+03	7.49e+02	7.49e-01
Acenaphthene	7.04	1.95	3.81	3.82	30	3.06e+04	1.80e+04	1.80e+04	1.80e+01
4-Nitrophenol	7.25	0.83	2.31	0.68	19	3.11e+03	1.00e+04	3.11e+03	3.11e+00
Dibenzofuran	6.24	1.47	3.31	2.16	24	4.16e+03	1.10e+04	4.16e+03	4.16e+00
Diethylphthalate	7.63	2.58	4.59	6.67	33	4.70e+05	2.80e+05	2.80e+05	2.80e+02
Fluorene	7.25	2.08	3.81	4.31	31	5.12e+04	3.10e+04	3.10e+04	3.10e+01
N-Nitrosodiphenylamine	7.50	2.14	3.81	4.57	33	7.53e+04	5.30e+04	5.30e+04	5.30e+01
Hexachlorobenzene	6.01	1.22	2.92	1.50	21	1.92e+03	1.10e+04	1.92e+03	1.92e+00
Pentachlorophenol	8.53	2.18	3.81	4.75	31	2.49e+05	1.80e+05	1.80e+05	1.80e+02
Phenanthrene	7.41	2.31	4.59	5.32	33	1.53e+05	4.30e+04	4.30e+04	4.30e+01
Anthracene	5.80	0.78	2.31	0.61	19	6.87e+02	1.30e+03	6.87e+02	6.87e-01
Di-n-butylphthalate	9.42	3.25	5.39	10.59	33	5.43e+07	3.40e+06	3.40e+06	3.40e+03
Fluoranthene	7.01	1.78	3.44	3.17	30	1.68e+04	1.90e+04	1.68e+04	1.68e+01
Pyrene	7.14	1.87	3.44	3.50	30	2.40e+04	2.20e+04	2.20e+04	2.20e+01
Butylbenzylphthalate	9.08	3.14	5.39	9.84	33	2.39e+07	1.60e+06	1.60e+06	1.60e+03
Benzo(a)anthracene	6.94	1.79	3.44	3.20	28	1.67e+04	1.60e+04	1.60e+04	1.60e+01
Chrysene	7.02	1.78	3.44	3.18	29	1.75e+04	2.00e+04	1.75e+04	1.75e+01
bis(2-Ethylhexyl)phthalate	10.62	3.39	6.20	11.51	33	5.33e+08	1.40e+07	1.40e+07	1.40e+04
Di-n-octylphthalate	7.55	2.32	4.59	5.38	33	1.84e+05	1.40e+05	1.40e+05	1.40e+02
Benzo(b)fluoranthene	6.84	1.80	3.72	3.24	26	1.79e+04	1.50e+04	1.50e+04	1.50e+01
Benzo(k)fluoranthene	6.84	1.80	3.72	3.24	26	1.79e+04	1.50e+04	1.50e+04	1.50e+01
Benzo(a)pyrene	6.15	1.23	2.92	1.52	21	2.24e+03	9.70e+03	2.24e+03	2.24e+00
Indeno(1,2,3-cd)pyrene	5.91	0.83	2.31	0.68	19	8.17e+02	1.90e+03	8.17e+02	8.17e-01
Dibenz(a,h)anthracene	5.05	0.45	2.65	0.20	5	3.11e+02	1.90e+02	1.90e+02	1.90e-01
Benzo(g,h,i)perylene	5.77	0.75	2.19	0.56	19	6.23e+02	1.50e+03	6.23e+02	6.23e-01
Alpha-BHC	3.25	1.52	3.08	2.32	35	1.83e+02	3.30e+02	1.83e+02	1.83e-01
Beta-BHC	3.66	1.80	3.44	3.22	40	5.21e+02	8.00e+02	5.21e+02	5.21e-01
Aldrin	3.84	1.94	3.53	3.78	42	8.98e+02	7.70e+03	8.98e+02	8.98e-01
Heptachlor Epoxide	1.66	0.28	1.93	0.08	13	6.35e+00	1.30e+01	6.35e+00	6.35e-03
4,4-DDE	4.03	1.59	3.08	2.52	36	4.50e+02	8.80e+02	4.50e+02	4.50e-01
4,4-DDD	4.44	1.87	3.44	3.51	41	1.35e+03	3.30e+03	1.35e+03	1.35e+00
4,4-DDT	4.30	1.75	3.44	3.06	40	8.91e+02	1.70e+03	8.91e+02	8.91e-01
AROCLOR-1242	6.21	2.11	3.53	4.45	42	1.47e+04	1.90e+05	1.47e+04	1.47e+01
AROCLOR-1248	6.20	2.11	3.53	4.44	42	1.45e+04	3.50e+04	1.45e+04	1.45e+01
AROCLOR-1254	7.69	2.48	4.23	6.16	42	2.46e+05	6.50e+05	2.46e+05	2.46e+02
AROCLOR-1260	7.49	2.44	4.23	5.95	42	1.76e+05	5.60e+05	1.76e+05	1.76e+02

Table U - 10

Determination of Exposure Point Concentration:
95% UCLM vs Maximum Detected Concentration

Media: Soils
Source Area: Offsite Containment Area

Chemical Of Potential Concern	95% UCLM Calculation						Max. Det. Conc. (ug/kg)	Exposure Point Conc.	
	Ave. of LN Data	Std Dev. of LN Data	H value	Variance	n	UCLM (95%)		(ug/kg)	(mg/kg)

Notes:

Ave. of LN Data = The arithmatic mean of the natural logs of the detected concentration or the 1/2 SQL.
Std Dev. of LN Data = The standard deviation of the natural log of the detected concentration or the 1/2 SQL.
H Value = H statistic for computing a one-sided upper 95% confidence limit on a lognormal mean (Gilbert 1987, table A12)
Variance = Variance of the natural log of the detected concentration or the 1/2 SQL
n = Number of data points
UCLM (95%) = EXP(Ave. + 0.5 * Variance + ((Std Dev. * H value) / SQRT (n-1)))
Max. Det. Conc. = Maximum detected concentration of the chemical in the Source Area sample group.
Exposure Point Conc. = The 95% UCLM or the Max. Det. Conc. , whichever is lower.
ERR = Statistical operations cannot be performed on a single data point.

[acs.2020]uo-e-2.w20

Table U - 11

Determination of Exposure Point Concentration:
95% UCLM vs Maximum Detected Concentration

Media: Soils
Source Area: Still Bottoms Treatment Lagoon Area

Chemical of Potential Concern	95% UCLM Calculation: Ave. of LN Data	Std Dev. of LN Data	H value	Variance	n	UCLM (95%)	Max. Det. Conc. (mg/kg)	Exp. Pnt. Conc. (mg/kg)
Antimony	0.84	1.48	5.18	2.19	8	1.26e+02	4.66e+01	4.66e+01
Barium	4.15	1.40	3.90	1.97	12	8.85e+02	1.56e+03	8.85e+02
Cadmium	0.86	2.06	4.96	4.25	12	4.32e+02	1.18e+02	1.18e+02
Calcium	8.45	1.66	4.42	2.75	12	1.69e+05	5.71e+04	5.71e+04
Chromium,total	3.78	1.62	3.90	2.63	12	1.10e+03	1.41e+03	1.10e+03
Cobalt	2.33	0.81	2.57	0.66	12	2.68e+01	6.30e+01	2.68e+01
Copper	3.53	1.21	3.39	1.46	12	2.44e+02	3.61e+02	2.44e+02
Lead	5.02	1.85	4.42	3.43	12	9.96e+03	6.30e+03	6.30e+03
Magnesium	7.55	1.36	3.39	1.85	12	1.93e+04	1.03e+04	1.03e+04
Mercury	-0.68	1.73	4.42	3.00	12	2.28e+01	1.10e+01	1.10e+01
Nickel	2.40	0.27	1.93	0.07	12	1.33e+01	1.96e+01	1.33e+01
Selenium	-0.42	0.57	2.27	0.33	12	1.15e+00	2.83e+00	1.15e+00
Zinc	4.74	1.57	3.90	2.48	12	2.50e+03	2.28e+03	2.28e+03
Cyanide, total	0.90	1.16	3.39	1.35	12	1.59e+01	7.07e+01	1.59e+01

Notes:

Ave. of LN Data = The arithmatic mean of the natural logs of the detected concentration or the 1/2 SQL.
Std Dev. of LN Data = The standard deviation of the natural log of the detected concentration or the 1/2 SQL.
H Value = H statistic for computing a one-sided upper 95% confidence limit on a lognormal mean (Gilbert 1987, table A12)
Variance = Variance of the natural log of the detected concentration or the 1/2 SQL
n = Number of data points
UCLM (95%) = EXP(Ave. + 0.5 * Variance + ((Std Dev. * H value) / SQRT (n-1)))
Max. Det. Conc. = Maximum detected concentration of the chemical in the Source Area sample group.
Exposure Point Conc. = The 95% UCLM or the Max. Det. Conc. , whichever is lower.

[acs.2020]um-f-2.w20

Table U - 12

Determination of Exposure Point Concentration:
95% UCLM vs Maximum Detected Concentration

Media: Soil
Source Area: Still Bottoms - Treatment Lagoon Area

Chemical Of Potential Concern	95% UCLM Calculation: Ave. of LN Data	Std Dev. of LN Data	H value	Variance	n	UCLM (95%)	Max. Det. Conc. (ug/kg)	Exposure Point Conc. (ug/kg)	Exposure Point Conc. (mg/kg)
Methylene Chloride	8.35	2.82	5.39	7.97	28	4.26e+06	3.80e+05	3.80e+05	3.80e+02
Acetone	7.08	2.09	4.96	4.37	13	2.11e+05	1.20e+04	1.20e+04	1.20e+01
1,1-Dichloroethane	6.59	2.45	5.01	5.99	22	2.10e+05	2.20e+04	2.20e+04	2.20e+01
Total 1,2-Dichloroethene	8.31	3.03	5.39	9.20	29	8.86e+06	3.20e+05	3.20e+05	3.20e+02
Chloroform	8.52	3.55	6.20	12.59	29	1.75e+08	2.10e+06	2.10e+06	2.10e+03
1,2-Dichloroethane	7.38	2.63	5.01	6.94	26	7.22e+05	4.00e+04	4.00e+04	4.00e+01
2-Butanone	9.43	2.76	5.39	7.64	29	9.50e+06	5.30e+05	5.30e+05	5.30e+02
1,1,1-Trichloroethane	8.78	3.64	6.20	13.27	29	3.54e+08	2.10e+07	2.10e+07	2.10e+04
Carbon Tetrachloride	7.81	3.35	6.20	11.21	29	3.39e+07	3.60e+06	3.60e+06	3.60e+03
1,2-Dichloropropane	6.47	2.45	5.01	6.01	21	2.03e+05	2.20e+04	2.20e+04	2.20e+01
Trichloroethene	8.80	3.41	6.20	11.63	29	1.22e+08	1.70e+06	1.70e+06	1.70e+03
1,1,2-Trichloroethane	6.14	2.29	5.01	5.26	19	9.67e+04	8.10e+03	8.10e+03	8.10e+00
Benzene	8.21	2.91	5.39	8.46	29	4.85e+06	1.70e+05	1.70e+05	1.70e+02
4-Methyl-2-Pentanone	9.74	2.78	5.39	7.70	29	1.35e+07	1.50e+06	1.50e+06	1.50e+03
Tetrachloroethene	9.61	3.75	6.20	14.03	29	1.34e+09	1.60e+06	1.60e+06	1.60e+03
Toluene	10.89	3.97	7.02	15.78	29	2.79e+10	2.30e+07	2.30e+07	2.30e+04
Chlorobenzene	0.69	ERR	2.75	ERR	1	ERR	2.00e+00	2.00e+00	2.00e-03
Ethylbenzene	10.18	4.04	7.02	16.29	29	1.93e+10	8.40e+06	8.40e+06	8.40e+03
Styrene	7.72	3.09	5.39	9.55	29	6.18e+06	1.60e+05	1.60e+05	1.60e+02
Total Xylenes	11.45	3.99	7.02	15.94	29	5.46e+10	9.40e+06	9.40e+06	9.40e+03
Phenol	7.90	2.09	3.81	4.37	29	1.09e+05	1.70e+05	1.09e+05	1.09e+02
bis(2-Chloroethyl)ether	8.00	2.09	3.81	4.37	29	1.19e+05	1.10e+05	1.10e+05	1.10e+02
2-Chlorophenol	4.87	ERR	2.75	ERR	1	ERR	1.30e+02	1.30e+02	1.30e-01
1,3-Dichlorobenzene	5.57	0.48	2.07	0.23	15	3.85e+02	8.80e+02	3.85e+02	3.85e-01
1,4-Dichlorobenzene	6.16	1.24	2.92	1.54	19	2.39e+03	5.20e+03	2.39e+03	2.39e+00
Benzyl alcohol	5.78	0.76	2.44	0.58	17	6.88e+02	1.60e+03	6.88e+02	6.88e-01
1,2-Dichlorobenzene	7.71	2.14	3.81	4.56	29	1.02e+05	7.00e+04	7.00e+04	7.00e+01
2-Methylphenol	7.07	1.87	3.44	3.48	27	2.35e+04	1.50e+04	1.50e+04	1.50e+01
4-Methylphenol	7.60	1.94	3.81	3.77	28	5.46e+04	4.30e+04	4.30e+04	4.30e+01
Isophorone	9.14	3.28	6.20	10.78	29	9.64e+07	2.60e+06	2.60e+06	2.60e+03
2,4-Dimethylphenol	5.96	1.06	2.74	1.13	17	1.42e+03	2.60e+03	1.42e+03	1.42e+00
Benzoic acid	7.60	1.62	3.61	2.64	17	3.25e+04	5.00e+04	3.25e+04	3.25e+01
2,4-Dichlorophenol	5.94	1.16	2.92	1.36	19	1.68e+03	4.10e+03	1.68e+03	1.68e+00
1,2,4-Trichlorobenzene	6.01	1.09	2.56	1.20	19	1.44e+03	4.30e+03	1.44e+03	1.44e+00
Naphthalene	9.47	2.59	4.59	6.72	29	3.52e+06	7.50e+05	7.50e+05	7.50e+02
Hexachlorobutadiene	7.68	2.01	3.81	4.04	29	6.97e+04	4.00e+04	4.00e+04	4.00e+01
4-Chloro-3-methylphenol	5.48	0.33	1.88	0.11	14	3.01e+02	4.20e+02	3.01e+02	3.01e-01
2-Methylnaphthalene	8.93	2.59	4.59	6.72	29	2.06e+06	3.20e+05	3.20e+05	3.20e+02
2,4,6-Trichlorophenol	5.53	0.43	1.97	0.18	14	3.47e+02	7.50e+02	3.47e+02	3.47e-01
2,4,5-Trichlorophenol	4.56	ERR	2.75	ERR	1	ERR	9.60e+01	9.60e+01	9.60e-02

Table U - 12

Determination of Exposure Point Concentration:
95% UCLM vs Maximum Detected Concentration

Media: Soil
Source Area: Still Bottoms - Treatment Lagoon Area

Chemical Of Potential Concern	95% UCLM Calculation: Ave. of LN Data	Std Dev. of LN Data	H value	Variance	n	UCLM (95%)	Max. Det. Conc. (ug/kg)	Exposure Point Conc. (ug/kg)	Exposure Point Conc. (mg/kg)
2-Chloronaphthalene	5.68	0.66	2.31	0.44	16	5.45e+02	1.80e+03	5.45e+02	5.45e-01
Dimethylphthalate	8.04	2.63	4.59	6.94	29	9.73e+05	3.20e+05	3.20e+05	3.20e+02
Acenaphthylene	6.07	1.38	3.31	1.90	19	3.30e+03	1.10e+04	3.30e+03	3.30e+00
Acenaphthene	6.04	1.30	2.92	1.69	20	2.33e+03	4.80e+03	2.33e+03	2.33e+00
4-Nitrophenol	7.10	0.33	1.88	0.11	15	1.52e+03	2.30e+03	1.52e+03	1.52e+00
Dibenzofuran	5.54	0.40	1.97	0.16	15	3.42e+02	6.60e+02	3.42e+02	3.42e-01
Diethylphthalate	7.53	2.38	4.59	5.68	29	2.52e+05	1.00e+05	1.00e+05	1.00e+02
Fluorene	6.24	1.53	3.31	2.33	21	5.07e+03	9.80e+03	5.07e+03	5.07e+00
N-Nitrosodiphenylamine	7.07	1.83	3.44	3.36	27	2.18e+04	1.30e+04	1.30e+04	1.30e+01
4-Bromophenyl-phenylether	5.87	0.88	2.59	0.77	17	9.23e+02	2.20e+03	9.23e+02	9.23e-01
Hexachlorobenzene	5.83	0.78	2.31	0.61	18	7.16e+02	2.80e+03	7.16e+02	7.16e-01
Pentachlorophenol	8.56	1.98	3.81	3.93	29	1.55e+05	6.40e+04	6.40e+04	6.40e+01
Phenanthrene	6.65	1.65	3.72	2.71	25	1.05e+04	1.00e+04	1.00e+04	1.00e+01
Anthracene	5.74	0.96	2.74	0.92	17	9.53e+02	3.30e+03	9.53e+02	9.53e-01
Di-n-butylphthalate	9.07	2.89	5.39	8.38	29	1.10e+07	6.90e+05	6.90e+05	6.90e+02
Fluoranthene	5.67	0.76	2.44	0.57	17	6.10e+02	1.70e+03	6.10e+02	6.10e-01
Pyrene	5.94	1.17	2.92	1.38	19	1.70e+03	4.70e+03	1.70e+03	1.70e+00
Butylbenzylphthalate	9.03	2.98	5.39	8.87	29	1.46e+07	9.60e+05	9.60e+05	9.60e+02
Benzo(a)anthracene	5.52	0.36	1.97	0.13	15	3.21e+02	4.60e+02	3.21e+02	3.21e-01
Chrysene	5.48	0.31	1.88	0.10	15	2.96e+02	4.60e+02	2.96e+02	2.96e-01
bis(2-Ethylhexyl)phthalat	10.60	2.89	5.39	8.35	29	4.95e+07	2.60e+06	2.60e+06	2.60e+03
Di-n-octylphthalate	6.88	1.86	3.44	3.47	27	1.95e+04	2.40e+04	1.95e+04	1.95e+01
Benzo(b)fluoranthene	5.54	0.34	1.88	0.12	16	3.20e+02	4.60e+02	3.20e+02	3.20e-01
Benzo(k)fluoranthene	5.54	0.34	1.88	0.12	16	3.20e+02	4.60e+02	3.20e+02	3.20e-01
Benzo(a)pyrene	5.31	0.09	1.80	0.01	11	2.15e+02	2.60e+02	2.15e+02	2.15e-01
Gamma-BHC (Lindane)	3.87	1.83	3.72	3.34	19	1.27e+03	1.10e+03	1.10e+03	1.10e+00
Endosulfan 1	3.88	1.84	3.72	3.37	19	1.30e+03	1.20e+03	1.20e+03	1.20e+00
4,4-DDT	5.24	2.48	5.01	6.16	21	6.59e+04	2.80e+04	2.80e+04	2.80e+01
Endrin Ketone	3.83	1.45	3.61	2.11	14	5.67e+02	2.60e+02	2.60e+02	2.60e-01
AROCLOR-1248	6.80	2.48	5.01	6.16	21	3.16e+05	7.60e+04	7.60e+04	7.60e+01
AROCLOR-1254	7.30	2.06	4.14	4.24	20	8.70e+04	4.70e+04	4.70e+04	4.70e+01
AROCLOR-1260	7.16	1.99	4.14	3.95	20	6.14e+04	3.50e+04	3.50e+04	3.50e+01

Notes:
Ave. of LN Data = The arithmatic mean of the natural logs of the detected concentration or the 1/2 SQL.
Std Dev. of LN Data = The standard deviation of the natural log of the detected concentration or the 1/2 SQL.
H Value = H statistic for computing a one-sided upper 95% confidence limit on a lognormal mean (Gilbert 1987, table A12)
Variance = Variance of the natural log of the detected concentration or the 1/2 SQL
n = Number of data points

Table U - 12

Determination of Exposure Point Concentration:
95% UCLM vs Maximum Detected Concentration

Media: Soil
Source Area: Still Bottoms - Treatment Lagoon Area

Chemical Of Potential Concern	95% UCLM Calculation: Ave. of LN Data	Std Dev. of LN Data	H value	Variance	n	UCLM (95%)	Max. Det. Conc. (ug/kg)	Exposure Point Conc. (ug/kg)	Exposure Point Conc. (mg/kg)

UCLM (95%) = EXP(Ave. + 0.5 * Variance + ((Std Dev. * H value) / SQRT (n-1)))
Max. Det. Conc. = Maximum detected concentration of the chemical in the Source Area sample group.
Exposure Point Conc. = The 95% UCLM or the Max. Det. Conc. , whichever is lower.
ERR = Statistical operations cannot be performed on a single data point.

[acs.2020]uo-f-2.w20

Table U - 13

Determination of Exposure Point Concentration:
95% UCLM vs Maximum Detected Concentration

Media: Surface Soils
Source Area: Kapica Pazmey

Chemical of Potential Concern	95% UCLM Calculation: Ave. of LN Data	Std Dev. of LN Data	H value	Variance	n	UCLM (95%)	Max. Det. Conc. (mg/kg)	Exp. Pnt. Conc. (mg/kg)
Aluminum	8.80	0.64	7.81	0.41	4	1.48e+05	1.32e+04	1.32e+04
Antimony	3.62	1.01	13.05	1.02	4	1.23e+05	8.48e+01	8.48e+01
Barium	7.15	1.73	22.87	2.98	4	4.51e+13	5.73e+03	5.73e+03
Cadmium	4.15	1.70	22.87	2.90	4	1.58e+12	1.74e+02	1.74e+02
Calcium	9.95	1.63	22.87	2.66	4	1.75e+14	1.57e+05	1.57e+05
Chromium,total	6.55	1.63	22.87	2.64	4	5.46e+12	3.08e+03	3.08e+03
Cobalt	3.62	1.39	19.60	1.94	4	6.97e+08	1.48e+02	1.48e+02
Copper	6.65	1.41	19.60	1.99	4	1.77e+10	4.47e+03	4.47e+03
Iron	9.69	1.00	13.05	0.99	4	4.85e+07	7.01e+04	7.01e+04
Lead	8.41	1.66	22.87	2.77	4	6.20e+13	1.62e+04	1.62e+04
Magnesium	8.48	1.75	22.87	3.06	4	2.38e+14	3.69e+04	3.69e+04
Manganese	6.13	1.06	13.05	1.12	4	2.37e+06	1.54e+03	1.54e+03
Mercury	1.32	1.83	22.87	3.34	4	6.07e+11	9.50e+00	9.50e+00
Nickel	3.72	1.21	16.33	1.46	4	7.58e+06	1.97e+02	1.97e+02
Selenium	1.79	1.06	13.05	1.12	4	3.09e+04	1.72e+01	1.72e+01
Silver	1.76	1.32	16.33	1.75	4	3.69e+06	2.48e+01	2.48e+01
Vanadium	2.97	0.73	9.12	0.53	4	1.19e+03	4.77e+01	4.77e+01
Zinc	8.29	1.87	22.87	3.51	4	1.28e+15	1.58e+04	1.58e+04
Cyanide, total	3.15	1.19	16.33	1.42	4	3.64e+06	6.62e+01	6.62e+01

Notes:

Ave. of LN Data = The arithmatic mean of the natural logs of the detected concentration or the 1/2 SQL.
Std Dev. of LN Data = The standard deviation of the natural log of the detected concentration or the 1/2 SQL.
H Value = H statistic for computing a one-sided upper 95% confidence limit on a lognormal mean (Gilbert 1987, table A12)
Variance = Variance of the natural log of the detected concentration or the 1/2 SQL
n = Number of data points
UCLM (95%) = EXP(Ave. + 0.5 * Variance + ((Std Dev. * H value) / SQRT (n-1)))
Max. Det. Conc. = Maximum detected concentration of the chemical in the Source Area sample group.
Exposure Point Conc. = The 95% UCLM or the Max. Det. Conc. , whichever is lower.

[acs.2020]um-g-2.w20

Table U - 14

Determination of Exposure Point Concentration:
95% UCLM vs Maximum Detected Concentration

Media: Surface Soil
Source Area: Kapica Pazmey

Chemical Of Potential Concern	95% UCLM Calculation: Ave. of LN Data	Std Dev. of LN Data	H value	Variance	n	UCLM (95%)	Max. Det. Conc. (ug/kg)	Exposure Point Conc. (ug/kg)	Exposure Point Conc. (mg/kg)
Methylene Chloride	5.30	ERR	2.75	ERR	1	ERR	2.00e+02	2.00e+02	2.00e-01
Acetone	5.73	1.04	13.05	1.07	3	7.43e+06	9.70e+02	9.70e+02	9.70e-01
1,1-Dichloroethane	4.72	0.28	4.11	0.08	3	2.63e+02	1.50e+02	1.50e+02	1.50e-01
Total 1,2-Dichloroethene	5.92	2.95	39.23	8.69	3	ERR	7.60e+03	7.60e+03	7.60e+00
Chloroform	2.30	ERR	2.75	ERR	1	ERR	1.00e+01	1.00e+01	1.00e-02
1,1,1-Trichloroethane	2.20	ERR	2.75	ERR	1	ERR	9.00e+00	9.00e+00	9.00e-03
1,2-Dichloropropane	2.94	ERR	2.75	ERR	1	ERR	1.90e+01	1.90e+01	1.90e-02
Trichloroethene	7.93	4.66	58.85	21.68	4	ERR	1.70e+05	1.70e+05	1.70e+02
Benzene	6.54	1.33	16.33	1.77	3	7.74e+09	3.20e+03	3.20e+03	3.20e+00
4-Methyl-2-Pentanone	6.96	3.91	52.31	15.32	4	ERR	2.70e+05	2.70e+05	2.70e+02
Tetrachloroethene	9.09	4.55	58.85	20.72	4	ERR	7.90e+05	7.90e+05	7.90e+02
Toluene	11.54	4.67	58.85	21.84	4	ERR	1.90e+07	1.90e+07	1.90e+04
Chlorobenzene	5.74	3.01	39.23	9.07	3	ERR	6.20e+03	6.20e+03	6.20e+00
Ethylbenzene	10.44	4.07	52.31	16.57	4	ERR	4.30e+06	4.30e+06	4.30e+03
Styrene	6.17	3.68	45.77	13.57	3	ERR	2.30e+04	2.30e+04	2.30e+01
Total Xylenes	12.39	3.57	45.77	12.73	4	ERR	2.30e+07	2.30e+07	2.30e+04
Phenol	7.70	2.23	26.14	4.97	4	1.10e+19	2.80e+04	2.80e+04	2.80e+01
1,2-Dichlorobenzene	5.89	0.55	6.50	0.30	3	5.20e+03	5.90e+02	5.90e+02	5.90e-01
2-Methylphenol	6.80	1.43	19.60	2.04	3	1.01e+12	4.70e+03	4.70e+03	4.70e+00
4-Methylphenol	6.62	1.59	19.60	2.54	3	1.05e+13	4.60e+03	4.60e+03	4.60e+00
Isophorone	9.46	2.08	26.14	4.33	4	4.92e+18	9.70e+04	9.70e+04	9.70e+01
2,4-Dimethylphenol	7.21	1.27	16.33	1.60	3	6.73e+09	4.90e+03	4.90e+03	4.90e+00
Naphthalene	9.36	2.11	26.14	4.45	4	7.30e+18	9.70e+04	9.70e+04	9.70e+01
2-Methylnaphthalene	8.85	2.05	26.14	4.19	4	1.51e+18	5.60e+04	5.60e+04	5.60e+01
2,4,5-Trichlorophenol	5.14	ERR	2.75	ERR	1	ERR	1.70e+02	1.70e+02	1.70e-01
Dimethylphthalate	6.40	0.73	9.12	0.53	3	8.75e+04	1.40e+03	1.40e+03	1.40e+00
Acenaphthene	5.89	ERR	2.75	ERR	1	ERR	3.60e+02	3.60e+02	3.60e-01
Dibenzofuran	5.97	0.13	2.75	0.02	2	5.60e+02	4.30e+02	4.30e+02	4.30e-01
Diethylphthalate	6.77	1.58	19.60	2.49	4	1.76e+11	5.00e+03	5.00e+03	5.00e+00
Fluorene	6.33	0.16	3.30	0.02	3	8.18e+02	6.20e+02	6.20e+02	6.20e-01
N-Nitrosodiphenylamine	7.30	1.21	16.33	1.46	3	3.45e+09	4.30e+03	4.30e+03	4.30e+00
Pentachlorophenol	6.64	0.95	11.74	0.91	2	8.65e+07	1.50e+03	1.50e+03	1.50e+00
Phenanthrene	7.28	1.09	13.05	1.19	4	9.70e+06	4.30e+03	4.30e+03	4.30e+00
Anthracene	6.23	0.37	5.22	0.14	2	3.79e+03	6.60e+02	6.60e+02	6.60e-01
Di-n-butylphthalate	10.11	0.95	11.74	0.90	4	2.37e+07	9.40e+04	9.40e+04	9.40e+01
Fluoranthene	7.46	0.76	10.43	0.58	3	6.26e+05	3.40e+03	3.40e+03	3.40e+00
Pyrene	7.50	0.30	4.11	0.09	3	4.50e+03	2.30e+03	2.30e+03	2.30e+00
Butylbenzylphthalate	8.65	2.12	26.14	4.51	4	4.50e+18	5.10e+04	5.10e+04	5.10e+01
Benzo(a)anthracene	7.38	0.55	6.50	0.31	3	2.37e+04	2.40e+03	2.40e+03	2.40e+00
Chrysene	7.17	0.00	2.75	0.00	2	1.30e+03	1.30e+03	1.30e+03	1.30e+00

Table U - 14

Determination of Exposure Point Concentration:
95% UCLM vs Maximum Detected Concentration

Media: Surface Soil
Source Area: Kapica Pazmey

Chemical Of Potential Concern	95% UCLM Calculation: Ave. of LN Data	Std Dev. of LN Data	H value	Variance	n	UCLM (95%)	Max. Det. Conc. (ug/kg)	Exposure Point Conc. (ug/kg)	Exposure Point Conc. (mg/kg)
bis(2-Ethylhexyl)phthalate	12.59	0.70	9.12	0.49	4	1.52e+07	5.40e+05	5.40e+05	5.40e+02
Di-n-octylphthalate	8.18	2.01	26.14	4.03	4	3.76e+17	3.80e+04	3.80e+04	3.80e+01
Benzo(b)fluoranthene	7.31	1.13	13.05	1.28	3	9.64e+07	3.90e+03	3.90e+03	3.90e+00
Benzo(k)fluoranthene	7.31	1.13	13.05	1.28	3	9.64e+07	3.90e+03	3.90e+03	3.90e+00
Benzo(a)pyrene	6.62	0.89	11.74	0.78	2	3.64e+07	1.40e+03	1.40e+03	1.40e+00
Indeno(1,2,3-cd)pyrene	6.35	0.51	6.50	0.26	2	1.76e+04	8.20e+02	8.20e+02	8.20e-01
Dibenz(a,h)anthracene	5.60	ERR	2.75	ERR	1	ERR	2.70e+02	2.70e+02	2.70e-01
Benzo(g,h,i)perylene	6.50	0.72	9.12	0.51	2	5.83e+05	1.10e+03	1.10e+03	1.10e+00
Aldrin	3.18	1.10	3.10	1.22	9	1.48e+02	8.80e+01	8.80e+01	8.80e-02
Endosulfan 1	2.64	0.93	4.48	0.86	6	1.39e+02	4.20e+01	4.20e+01	4.20e-02
4,4-DDD	3.56	1.01	3.70	1.03	8	2.44e+02	1.50e+02	1.50e+02	1.50e-01
AROCLOR-1242	7.01	2.63	5.56	6.89	16	1.51e+06	2.80e+05	2.80e+05	2.80e+02
AROCLOR-1248	6.52	1.99	4.56	3.97	15	5.62e+04	2.70e+04	2.70e+04	2.70e+01
AROCLOR-1254	7.24	1.95	4.56	3.82	15	1.02e+05	2.20e+04	2.20e+04	2.20e+01

Notes:

Ave. of LN Data = The arithmatic mean of the natural logs of the detected concentration or the 1/2 SQL.
Std Dev. of LN Data = The standard deviation of the natural log of the detected concentration or the 1/2 SQL.
H Value = H statistic for computing a one-sided upper 95% confidence limit on a lognormal mean (Gilbert 1987, table A12)
Variance = Variance of the natural log of the detected concentration or the 1/2 SQL
n = Number of data points
UCLM (95%) = EXP(Ave. + 0.5 * Variance + ((Std Dev. * H value) / SQRT (n-1)))
Max. Det. Conc. = Maximum detected concentration of the chemical in the Source Area sample group.
Exposure Point Conc. = The 95% UCLM or the Max. Det. Conc. , whichever is lower.
ERR = Statistical operations cannot be performed on a single data point.

[acs.2020]uo-g-2.w20

Table U - 15

Determination of Exposure Point Concentration:
95% UCLM vs Maximum Detected Concentration

Media: Sub-surface Soils
Source Area: Kapica Pazmey

Chemical of Potential Concern	95% UCLM Calculation: Ave. of LN Data	Std Dev. of LN Data	H value	Variance	n	UCLM (95%)	Max. Det. Conc. (mg/kg)	Exp. Pnt. Conc. (mg/kg)
Antimony	2.38	ERR	2.75	ERR	1	ERR	1.08e+01	1.08e+01
Barium	4.13	2.12	26.14	4.49	4	4.61e+16	1.49e+03	1.49e+03
Cadmium	-0.68	2.94	39.23	8.62	4	2.87e+30	4.04e+01	4.04e+01
Chromium,total	3.06	2.58	32.69	6.65	4	8.16e+23	1.01e+03	1.01e+03
Cobalt	1.89	0.40	5.22	0.16	4	2.38e+01	1.20e+01	1.20e+01
Copper	2.13	2.69	32.69	7.24	4	3.57e+24	4.78e+02	4.78e+02
Lead	3.63	3.18	39.23	10.10	4	1.06e+35	4.06e+03	4.06e+03
Magnesium	6.49	1.44	19.60	2.08	4	2.32e+10	5.17e+03	5.17e+03
Mercury	-2.24	2.11	26.14	4.46	4	6.81e+13	2.30e+00	2.30e+00
Selenium	-1.03	0.96	13.05	0.92	4	7.79e+02	1.50e+00	1.50e+00
Silver	1.09	2.05	26.14	4.20	4	6.69e+14	6.43e+01	6.43e+01
Zinc	4.95	2.34	32.69	5.48	4	3.34e+22	2.20e+03	2.20e+03
Cyanide, total	1.02	1.36	19.60	1.85	4	3.41e+07	2.13e+01	2.13e+01

Notes:

Ave. of LN Data = The arithmatic mean of the natural logs of the detected concentration or the 1/2 SQL.
Std Dev. of LN Data = The standard deviation of the natural log of the detected concentration or the 1/2 SQL.
H Value = H statistic for computing a one-sided upper 95% confidence limit on a lognormal mean (Gilbert 1987, table A12)
Variance = Variance of the natural log of the detected concentration or the 1/2 SQL
n = Number of data points
UCLM (95%) = EXP(Ave. + 0.5 * Variance + ((Std Dev. * H value) / SQRT (n-1)))
Max. Det. Conc. = Maximum detected concentration of the chemical in the Source Area sample group.
Exposure Point Conc. = The 95% UCLM or the Max. Det. Conc. , whichever is lower.
ERR = Statistical operations cannot be performed on a single data point

[acs.2020]um-h-2.w20

Table U - 16

Determination of Exposure Point Concentration:
95% UCLM vs Maximum Detected Concentration

Media: Sub surface soil
Source Area: Kapica Pazmey

Chemical Of Potential Concern	95% UCLM Calculation: Ave. of LN Data	Std Dev. of LN Data	H value	Variance	n	UCLM (95%)	Max. Det. Conc. (ug/kg)	Exposure Point Conc. (ug/kg)	Exposure Point Conc. (mg/kg)
Chloroethane	1.93	0.27	1.98	0.07	10	8.57e+00	1.20e+01	8.57e+00	8.57e-03
Acetone	4.44	2.40	6.07	5.77	13	1.02e+05	8.70e+03	8.70e+03	8.70e+00
Carbon Disulfide	1.04	0.03	2.04	0.00	6	2.91e+00	3.00e+00	2.91e+00	2.91e-03
1,1-Dichloroethane	2.44	2.24	4.96	5.01	12	4.00e+03	7.90e+02	7.90e+02	7.90e-01
Total 1,2-Dichloroethene	4.02	3.51	7.60	12.33	16	2.59e+07	2.60e+04	2.60e+04	2.60e+01
Chloroform	0.70	0.54	2.95	0.29	6	4.75e+00	3.00e+00	3.00e+00	3.00e-03
1,2-Dichloroethane	1.43	0.85	2.71	0.72	10	1.29e+01	4.40e+01	1.29e+01	1.29e-02
2-Butanone	4.95	3.47	7.60	12.02	16	5.13e+07	9.00e+04	9.00e+04	9.00e+01
1,1,1-Trichloroethane	2.26	2.03	4.96	4.12	12	1.56e+03	5.60e+02	5.60e+02	5.60e-01
1,2-Dichloropropane	1.40	0.78	2.71	0.61	10	1.12e+01	3.50e+01	1.12e+01	1.12e-02
Trichloroethene	4.14	4.00	8.63	16.03	16	1.41e+09	2.50e+05	2.50e+05	2.50e+02
Benzene	3.49	3.30	7.60	10.86	15	6.01e+06	2.30e+04	2.30e+04	2.30e+01
4-Methyl-2-Pentanone	3.62	2.65	6.07	7.01	13	1.29e+05	4.20e+03	4.20e+03	4.20e+00
2-Hexanone	2.23	1.33	3.64	1.78	10	1.15e+02	3.90e+02	1.15e+02	1.15e-01
Tetrachloroethene	4.29	4.26	9.67	18.18	16	2.72e+10	2.40e+05	2.40e+05	2.40e+02
Toluene	5.83	5.30	10.71	28.08	16	9.87e+14	1.40e+06	1.40e+06	1.40e+03
Chlorobenzene	4.05	3.27	7.60	10.70	16	7.42e+06	2.70e+04	2.70e+04	2.70e+01
Ethylbenzene	5.41	4.64	9.67	21.50	16	1.11e+12	5.70e+05	5.70e+05	5.70e+02
Styrene	4.04	3.73	7.60	13.92	16	9.07e+07	2.60e+05	2.60e+05	2.60e+02
Total Xylenes	7.41	4.50	9.67	20.22	16	3.05e+12	1.70e+06	1.70e+06	1.70e+03
Phenol	6.46	2.37	32.69	5.61	4	2.69e+23	9.60e+03	9.60e+03	9.60e+00
1,2-Dichlorobenzene	5.24	0.21	3.30	0.05	4	2.90e+02	2.60e+02	2.60e+02	2.60e-01
2-Methylphenol	5.68	1.79	22.87	3.20	4	2.63e+13	4.10e+03	4.10e+03	4.10e+00
4-Methylphenol	5.15	1.84	22.87	3.38	4	3.22e+13	2.40e+03	2.40e+03	2.40e+00
Isophorone	7.18	2.81	39.23	7.87	4	2.70e+32	6.50e+04	6.50e+04	6.50e+01
2,4-Dimethylphenol	5.07	1.87	22.87	3.51	4	5.12e+13	2.20e+03	2.20e+03	2.20e+00
Benzoic acid	5.39	1.10	13.05	1.21	3	1.00e+07	7.00e+02	7.00e+02	7.00e-01
Naphthalene	6.14	2.67	32.69	7.14	4	1.33e+26	2.30e+04	2.30e+04	2.30e+01
2-Methylnaphthalene	6.41	2.20	26.14	4.83	4	1.72e+18	1.60e+04	1.60e+04	1.60e+01
Dimethylphthalate	6.05	1.82	22.87	3.32	4	6.23e+13	6.50e+03	6.50e+03	6.50e+00
Acenaphthene	5.49	0.71	9.12	0.51	4	1.35e+04	7.10e+02	7.10e+02	7.10e-01
4-Nitrophenol	6.53	1.75	22.87	3.06	4	3.47e+13	4.60e+03	4.60e+03	4.60e+00
Dibenzofuran	5.25	0.91	11.74	0.82	4	1.34e+05	6.40e+02	6.40e+02	6.40e-01
2,4-Dinitrotoluene	5.54	0.80	10.43	0.64	4	4.28e+04	8.40e+02	8.40e+02	8.40e-01
Diethylphthalate	5.64	1.02	13.05	1.03	4	1.01e+06	1.30e+03	1.30e+03	1.30e+00
Fluorene	5.36	0.90	11.74	0.81	4	1.41e+05	7.60e+02	7.60e+02	7.60e-01
Pentachlorophenol	6.74	2.40	32.69	5.75	4	6.80e+23	1.60e+04	1.60e+04	1.60e+01
Phenanthrene	6.04	1.63	22.87	2.66	4	3.61e+12	4.80e+03	4.80e+03	4.80e+00
Anthracene	5.55	0.83	10.43	0.69	4	5.29e+04	8.90e+02	8.90e+02	8.90e-01
Di-n-butylphthalate	5.63	2.85	39.23	8.15	4	1.93e+32	1.90e+04	1.90e+04	1.90e+01

Table U - 16

Determination of Exposure Point Concentration:
95% UCLM vs Maximum Detected Concentration

Media: Sub surface soil
Source Area: Kapica Pazmey

Chemical Of Potential Concern	95% UCLM Calculation: Ave. of LN Data	Std Dev. of LN Data	H value	Variance	n	UCLM (95%)	Max. Det. Conc. (ug/kg)	Exposure Point Conc. (ug/kg)	Exposure Point Conc. (mg/kg)
Fluoranthene	5.66	2.13	26.14	4.56	4	2.77e+17	6.00e+03	6.00e+03	6.00e+00
Pyrene	5.72	1.80	22.87	3.23	4	3.08e+13	4.20e+03	4.20e+03	4.20e+00
Butylbenzylphthalate	6.33	2.38	32.69	5.68	4	3.32e+23	2.00e+04	2.00e+04	2.00e+01
Benzo(a)anthracene	5.76	1.26	16.33	1.58	4	9.84e+07	2.10e+03	2.10e+03	2.10e+00
Chrysene	5.68	1.09	13.05	1.19	4	1.93e+06	1.50e+03	1.50e+03	1.50e+00
bis(2-Ethylhexyl)phthalate	7.85	2.84	39.23	8.08	4	1.32e+33	1.10e+05	1.10e+05	1.10e+02
Di-n-octylphthalate	6.29	1.44	19.60	2.07	4	1.76e+10	3.30e+03	3.30e+03	3.30e+00
Benzo(b)fluoranthene	5.78	1.28	16.33	1.64	4	1.28e+08	2.20e+03	2.20e+03	2.20e+00
Benzo(k)fluoranthene	5.78	1.28	16.33	1.64	4	1.28e+08	2.20e+03	2.20e+03	2.20e+00
Benzo(a)pyrene	5.46	0.64	7.81	0.41	4	5.11e+03	6.10e+02	6.10e+02	6.10e-01
Benzo(g,h,i)perylene	5.24	0.21	3.30	0.05	4	2.90e+02	2.60e+02	2.60e+02	2.60e-01
AROCLOR-1242	5.92	2.34	5.56	5.48	16	1.66e+05	3.40e+04	3.40e+04	3.40e+01
AROCLOR-1248	5.54	1.80	4.08	3.23	16	8.51e+03	9.60e+03	8.51e+03	8.51e+00
AROCLOR-1254	6.29	2.06	4.56	4.22	16	5.03e+04	1.60e+04	1.60e+04	1.60e+01

Notes:

Ave. of LN Data = The arithmatic mean of the natural logs of the detected concentration or the 1/2 SQL.
Std Dev. of LN Data = The standard deviation of the natural log of the detected concentration or the 1/2 SQL.
H Value = H statistic for computing a one-sided upper 95% confidence limit on a lognormal mean (Gilbert 1987, table A12)
Variance = Variance of the natural log of the detected concentration or the 1/2 SQL
n = Number of data points
UCLM (95%) = EXP(Ave. + 0.5 * Variance + ((Std Dev. * H value) / SQRT (n-1)))
Max. Det. Conc. = Maximum detected concentration of the chemical in the Source Area sample group.
Exposure Point Conc. = The 95% UCLM or the Max. Det. Conc. , whichever is lower.
ERR = Statistical operations cannot be performed on a single data point.

[acs.2020]uo-h-2.w20

Table U - 17

Determination of Exposure Point Concentration:
95% UCLM vs Maximum Detected Concentration

Media: Sediments
Source Area: ACS

Chemical of Potential Concern	95% UCLM Calculation: Ave. of LN Data	Std Dev. of LN Data	H value	Variance	n	UCLM (95%)	Max. Det. Conc. (mg/kg)	Exp. Pnt. Conc. (mg/kg)
Barium	3.91	0.48	1.99	0.23	18	7.12e+01	1.07e+02	7.12e+01
Calcium	8.73	1.40	3.61	1.97	18	5.62e+04	7.30e+04	5.62e+04
Chromium, Total	2.79	0.94	2.59	0.88	18	4.54e+01	2.73e+02	4.54e+01
Copper	2.93	1.19	3.16	1.41	18	9.44e+01	3.59e+02	9.44e+01
Magnesium	7.57	1.42	3.61	2.03	18	1.86e+04	2.23e+04	1.86e+04
Mercury	-2.42	1.58	3.61	2.48	18	1.22e+00	8.80e+00	1.22e+00
Nickel	2.39	0.70	2.31	0.49	18	2.06e+01	4.05e+01	2.06e+01
Selenium	-0.94	0.51	2.07	0.26	18	5.73e-01	1.10e+00	5.73e-01
Vanadium	2.76	0.79	2.44	0.63	18	3.45e+01	4.79e+01	3.45e+01

Notes:

Ave. of LN Data = The arithmatic mean of the natural logs of the detected concentration or the 1/2 SQL.
Std Dev. of LN Data = The standard deviation of the natural log of the detected concentration or the 1/2 SQL.
H Value = H statistic for computing a one-sided upper 95% confidence limit on a lognormal mean (Gilbert 1987, table A12)
Variance = Variance of the natural log of the detected concentration or the 1/2 SQL
n = Number of data points
UCLM (95%) = EXP(Ave. + 0.5 * Variance + ((Std Dev. * H value) / SQRT (n-1)))
Max. Det. Conc. = Maximum detected concentration of the chemical in the Source Area sample group.
Exposure Point Conc. = The 95% UCLM or the Max. Det. Conc. , whichever is lower.

[acs.2020]um-i-2.w20

Table U - 18

Determination of Exposure Point Concentration:
95% UCLM vs Maximum Detected Concentration

Media: Sediment
Source Area: ACS

Chemical Of Potential Concern	95% UCLM Calculation: Ave. of LN Data	Std Dev. of LN Data	H value	Variance	n	UCLM (95%)	Max. Det. Conc. (ug/kg)	Exposure Point Conc. (ug/kg)	(mg/kg)
Chloroethane	2.25	0.31	1.88	0.10	17	1.16e+01	2.20e+01	1.16e+01	1.16e-02
Methylene Chloride	2.73	0.60	2.18	0.36	16	2.58e+01	4.40e+01	2.58e+01	2.58e-02
Total 1,2-Dichloroethene	1.53	0.32	1.83	0.10	18	5.60e+00	1.10e+01	5.60e+00	5.60e-03
Chloroform	1.40	0.51	2.07	0.26	18	5.93e+00	1.10e+01	5.93e+00	5.93e-03
2-Butanone	2.10	0.15	1.75	0.02	15	8.86e+00	1.10e+01	8.86e+00	8.86e-03
1,1,1-Trichloroethane	1.10	ERR	2.75	ERR	1	ERR	3.00e+00	3.00e+00	3.00e-03
Benzene	2.04	1.94	4.56	3.76	18	4.30e+02	1.40e+04	4.30e+02	4.30e-01
Toluene	2.13	1.26	3.16	1.59	18	4.89e+01	1.70e+02	4.89e+01	4.89e-02
Ethylbenzene	1.71	0.85	2.44	0.73	18	1.31e+01	1.30e+02	1.31e+01	1.31e-02
Total Xylenes	1.73	0.95	2.59	0.90	18	1.60e+01	2.00e+02	1.60e+01	1.60e-02
Phenol	4.65	0.84	10.43	0.70	2	9.43e+05	1.90e+02	1.90e+02	1.90e-01
bis(2-Chloroethyl)ether	5.71	0.29	1.88	0.08	17	3.61e+02	5.60e+02	3.61e+02	3.61e-01
bis(2-Chloroisopropyl)ether	5.87	0.59	2.18	0.35	18	5.77e+02	1.80e+03	5.77e+02	5.77e-01
4-Methylphenol	5.42	0.28	1.98	0.08	11	2.79e+02	2.70e+02	2.70e+02	2.70e-01
2,4-Dimethylphenol	5.71	0.30	1.88	0.09	17	3.62e+02	6.10e+02	3.62e+02	3.62e-01
Benzoic acid	6.51	0.70	2.41	0.48	12	1.42e+03	1.20e+03	1.20e+03	1.20e+00
Naphthalene	5.46	0.54	2.07	0.29	17	3.57e+02	4.20e+02	3.57e+02	3.57e-01
2-Methylnaphthalene	5.42	0.51	2.07	0.26	15	3.41e+02	4.60e+02	3.41e+02	3.41e-01
Dibenzofuran	5.42	0.02	2.04	0.00	5	2.32e+02	2.30e+02	2.30e+02	2.30e-01
Fluorene	5.64	0.46	2.07	0.21	18	3.95e+02	7.50e+02	3.95e+02	3.95e-01
Hexachlorobenzene	4.94	ERR	2.75	ERR	1	ERR	1.40e+02	1.40e+02	1.40e-01
Pentachlorophenol	4.64	1.12	13.05	1.26	2	4.51e+08	2.30e+02	2.30e+02	2.30e-01
Phenanthrene	5.48	0.56	2.18	0.31	18	3.77e+02	6.60e+02	3.77e+02	3.77e-01
Anthracene	4.51	0.13	2.75	0.02	2	1.32e+02	1.00e+02	1.00e+02	1.00e-01
Di-n-butylphthalate	4.63	0.45	5.22	0.20	4	4.44e+02	1.70e+02	1.70e+02	1.70e-01
Fluoranthene	5.63	0.70	2.31	0.49	18	5.24e+02	1.00e+03	5.24e+02	5.24e-01
Pyrene	5.59	0.69	2.31	0.47	18	5.00e+02	1.10e+03	5.00e+02	5.00e-01
Butylbenzylphthalate	5.11	0.04	2.75	0.00	2	1.86e+02	1.70e+02	1.70e+02	1.70e-01
Benzo(a)anthracene	5.55	0.63	2.18	0.39	14	4.57e+02	7.10e+02	4.57e+02	4.57e-01
Chrysene	5.55	0.61	2.18	0.37	18	4.29e+02	8.00e+02	4.29e+02	4.29e-01
bis(2-Ethylhexyl)phthalate	6.28	1.40	3.61	1.97	17	5.07e+03	1.30e+04	5.07e+03	5.07e+00
Benzo(b)fluoranthene	5.50	0.88	2.59	0.77	18	6.24e+02	1.50e+03	6.24e+02	6.24e-01
Benzo(k)fluoranthene	5.52	0.88	2.59	0.77	18	6.36e+02	1.50e+03	6.36e+02	6.36e-01
Benzo(a)pyrene	5.58	0.56	2.18	0.32	18	4.18e+02	6.90e+02	4.18e+02	4.18e-01
Indeno(1,2,3-cd)pyrene	5.62	0.26	1.88	0.07	17	3.24e+02	4.20e+02	3.24e+02	3.24e-01
Dibenz(a,h)anthracene	4.90	0.51	6.50	0.26	3	1.62e+03	2.00e+02	2.00e+02	2.00e-01
Benzo(g,h,i)perylene	5.70	0.30	1.88	0.09	18	3.59e+02	5.50e+02	3.59e+02	3.59e-01
Heptachlor Epoxide	2.44	0.83	2.44	0.69	18	2.66e+01	6.60e+01	2.66e+01	2.66e-02
AROCLOR-1248	4.78	1.15	3.16	1.32	18	5.53e+02	4.60e+03	5.53e+02	5.53e-01

Table U - 18

Determination of Exposure Point Concentration:
95% UCLM vs Maximum Detected Concentration

Media: Sediment
Source Area: ACS

Chemical Of Potential Concern	95% UCLM Calculation: Ave. of LN Data	Std Dev. of LN Data	H value	Variance	n	UCLM (95%)	Max. Det. Conc. (ug/kg)	Exposure Point Conc. (ug/kg)	Exposure Point Conc. (mg/kg)
AROCLOR-1254	5.88	1.41	3.61	2.00	18	3.34e+03	1.70e+04	3.34e+03	3.34e+00
AROCLOR-1260	5.09	0.36	2.03	0.13	13	2.13e+02	2.90e+02	2.13e+02	2.13e-01

Notes:

Ave. of LN Data = The arithmatic mean of the natural logs of the detected concentration or the 1/2 SQL.
Std Dev. of LN Data = The standard deviation of the natural log of the detected concentration or the 1/2 SQL.
H Value = H statistic for computing a one-sided upper 95% confidence limit on a lognormal mean (Gilbert 1987, table A12)
Variance = Variance of the natural log of the detected concentration or the 1/2 SQL
n = Number of data points
UCLM (95%) = EXP(Ave. + 0.5 * Variance + ((Std Dev. * H value) / SQRT (n-1)))
Max. Det. Conc. = Maximum detected concentration of the chemical in the Source Area sample group.
Exposure Point Conc. = The 95% UCLM or the Max. Det. Conc. , whichever is lower.
ERR = Statistical operations cannot be performed on a single data point.

[acs.2020]uo-i-2.w20

TABLE U-19

ACS ONSITE CONTAINMENT AREA

PARAMETER (UG/KG)	ARITHMETIC MEAN	n	STD	C-O-V
Chloroethane	3.20e+06	5	7.15e+06	223.34
Acetone	7.89e+02	40	1.62e+03	204.86
1,1-Dichloroethane	1.45e+01	23	5.14e+01	353.71
Total 1,2-Dichloroethene	4.39e+02	40	9.29e+02	211.56
Chloroform	2.98e+02	30	1.16e+03	389.95
1,2-Dichloroethane	1.77e+02	38	2.27e+02	128.48
2-Butanone	5.96e+01	22	6.85e+01	114.83
1,1,1-Trichloroethane	4.85e+05	42	3.09e+06	636.53
1,2-Dichloropropane	1.40e+02	30	3.03e+02	217.12
Trichloroethene	1.41e+03	41	6.37e+03	453.07
1,1,2-Trichloroethane	4.06e+01	24	1.52e+02	373.06
Benzene	1.71e+05	42	1.10e+06	639.83
4-Methyl-2-Pentanone	1.16e+02	26	2.25e+02	193.53
Tetrachloroethene	1.74e+05	42	9.21e+05	527.80
1,1,2,2-Tetrachloroethane	3.86e+02	40	8.28e+02	214.51
Toluene	4.79e+06	42	3.09e+07	644.38
Chlorobenzene	3.20e+01	25	8.03e+01	250.93
Ethylbenzene	1.71e+05	42	1.03e+06	604.78
Styrene	4.32e+02	40	1.11e+03	256.67
Total Xylenes	6.97e+05	42	3.87e+06	554.77
Phenol	2.64e+02	13	2.01e+02	76.20
1,3-Dichlorobenzene	2.00e+02	12	5.34e+01	26.71
1,4-Dichlorobenzene	3.58e+02	12	3.27e+02	91.14
1,2-Dichlorobenzene	2.23e+03	14	3.14e+03	140.86
2-Methylphenol	8.73e+02	13	2.50e+03	286.65
4-Methylphenol	1.53e+03	13	4.65e+03	304.48
2,4-Dimethylphenol	1.17e+03	13	3.26e+03	278.53
Benzoic acid	4.90e+01	1		
2,4-Dichlorophenol	1.92e+02	12	4.14e+01	21.50
Naphthalene	1.26e+04	14	2.75e+04	218.35
2-Methylnaphthalene	8.07e+03	14	1.84e+04	227.56
2,4,5-Trichlorophenol	2.01e+02	11	2.39e+01	11.87
Dimethylphthalate	1.77e+03	2	2.45e+03	138.07
Acenaphthylene	6.32e+02	13	1.46e+03	231.90
Acenaphthene	1.13e+03	14	2.87e+03	253.73
Diethylphthalate	4.65e+01	2	7.07e-01	1.52
Fluorene	1.34e+03	14	3.66e+03	273.57
Pentachlorophenol	1.60e+02	1		
Phenanthrene	1.87e+03	14	5.26e+03	280.52
Anthracene	9.40e+01	1		
Di-n-butylphthalate	3.28e+03	14	9.51e+03	290.04
Fluoranthene	4.85e+02	13	1.00e+03	206.31
Pyrene	6.62e+02	13	1.58e+03	237.95
Butylbenzylphthalate	1.39e+03	14	3.93e+03	282.39
Benzo(a)anthracene	1.70e+02	1		
Chrysene	8.40e+01	1		
bis(2-Ethylhexyl)phthalate	1.26e+04	14	3.73e+04	296.38

PARAMETER (MG/KG)	ARITHMETIC MEAN	n	STD	C-O-V
Barium	5.85e+01	14	1.31e+02	224.69
Calcium	8.80e+03	14	1.25e+04	141.77
Chromium,total	2.56e+01	14	7.08e+01	276.75
Cobalt	6.15e+00	14	4.86e+00	78.98
Magnesium	4.37e+03	14	5.60e+03	128.25
Mercury	9.06e-01	14	3.31e+00	365.27
Selenium	2.56e-01	14	5.89e-02	23.04
Cyanide, total	1.96e+00	14	1.94e+00	98.75

PARAMETER (UG/KG)	ARITHMETIC MEAN	n	STD	C-O-V
Endosulfan 1	5.50e+00	28	1.89e+00	34.38
4,4-DDT	1.42e+01	28	1.70e+01	119.17
AROCLOR-1242	1.51e+04	30	7.30e+04	481.97
AROCLOR-1248	2.77e+02	30	8.34e+02	301.53
AROCLOR-1254	3.86e+03	30	1.82e+04	471.51

JAH/jah/CAW
[ACS.2020]COVA.W20

TABLE U-19

ACS GROUNDWATERS - UPPER AQUIFER

PARAMETER (UG/L)	ARITHMETIC MEAN	n	STD	C-O-V
Chloromethane	1.26e+01	22	1.65e+01	130.70
Vinyl Chloride	5.93e+01	22	1.68e+02	282.80
Chloroethane	3.12e+02	23	6.17e+02	197.70
Methylene Chloride	4.65e+01	22	1.04e+02	224.19
Acetone	8.33e+03	22	2.70e+04	324.44
1,1-Dichloroethane	2.43e+02	23	6.47e+02	265.82
Total 1,2-Dichloroethene	3.95e+01	22	9.90e+01	250.45
2-Butanone	2.20e+04	17	6.26e+04	285.15
Trichloroethene	6.95e+00	21	1.03e+01	148.05
Benzene	4.74e+03	23	2.08e+04	438.39
4-Methyl-2-Pentanone	4.38e+03	23	1.43e+04	326.38
2-Hexanone	1.46e+02	22	4.48e+02	307.73
Tetrachloroethene	1.94e+01	22	4.81e+01	248.15
Toluene	1.30e+02	23	4.80e+02	368.41
Chlorobenzene	1.16e+01	21	2.33e+01	200.55
Ethylbenzene	1.35e+02	23	3.11e+02	230.05
Total Xylenes	1.95e+02	23	6.29e+02	323.10
Phenol	1.77e+01	23	4.90e+01	277.14
bis(2-Chloroethyl)ether	2.87e+01	23	6.20e+01	215.88
1,3-Dichlorobenzene	3.00e+00	1		
1,4-Dichlorobenzene	5.09e+00	23	1.24e+00	24.38
1,2-Dichlorobenzene	8.57e+00	23	8.25e+00	96.26
2-Methylphenol	6.81e+00	21	7.39e+00	108.57
bis(2-Chloroisopropyl)ether	3.50e+01	23	7.14e+01	203.86
4-Methylphenol	1.15e+02	21	4.78e+02	414.80
Isophorone	7.78e+00	23	7.74e+00	99.45
2,4-Dimethylphenol	1.02e+01	21	2.29e+01	224.52
Benzoic acid	1.02e+02	23	3.92e+02	384.87
Naphthalene	1.23e+01	23	1.96e+01	159.44
4-Chloro-3-methylphenol	3.50e+00	2	2.12e+00	60.61
2-Methylnaphthalene	6.57e+00	23	4.97e+00	75.72
Diethylphthalate	5.09e+00	23	9.49e-01	18.66
Pentachlorophenol	2.50e+00	2	7.07e-01	28.28
Di-n-butylphthalate	2.00e+00	1		
bis(2-Ethylhexyl)phthalate	7.83e+00	23	1.06e+01	134.99
AROCLOR-1248	3.52e-01	23	4.90e-01	139.14
AROCLOR-1260	1.65e+00	23	5.53e+00	334.45

PARAMETER (UG/L)	ARITHMETIC MEAN	n	STD	C-O-V
Arsenic	9.33e+00	25	1.10e+01	117.70
Barium	4.12e+02	25	4.81e+02	116.73
Beryllium	1.00e-01	25	0.00e+00	0.00
Cadmium	2.99e-01	25	6.18e-01	206.57
Chromium, Total	9.06e-01	25	9.10e-01	100.42
Lead	1.69e+00	25	6.95e-01	41.05
Manganese	1.90e+03	25	1.51e+03	79.44
Mercury	2.36e-01	25	3.14e-01	133.09
Nickel	2.36e+01	25	9.87e+00	41.91
Selenium	1.25e+00	25	1.05e+00	84.19
Sodium	1.24e+05	25	1.39e+05	112.27
Thallium	1.86e+00	25	6.61e-01	35.48
Vanadium	4.20e+00	25	6.03e+00	143.61
Zinc	9.67e+01	25	2.02e+02	208.78
Cyanide, Total	5.20e+00	25	1.00e+00	19.23
Aluminum	2.08e+02	25	2.25e+01	10.84
Calcium	1.65e+05	25	1.94e+05	117.52
Iron	2.21e+04	25	5.25e+04	237.48
Magnesium	3.14e+04	25	1.86e+04	59.11
Potassium	1.33e+04	25	2.39e+04	180.07

JAH/jah/CAW
[ACS.2020]COVB.W20

TABLE U-19

ACS GROUNDWATERS - LOWER AQUIFER

PARAMETER (UG/L)	ARITHMETIC MEAN	n	STD	C-O-V
Chloroethane	7.48e+01	9	1.51e+02	202.50
4-Methyl-2-Pentanone	3.00e+00	1		
bis(2-Chloroethyl)ether	6.44e+00	9	2.88e+00	44.64
Arsenic	3.09e+00	8	2.41e+00	78.07
Barium	1.78e+02	8	8.70e+01	49.00
Calcium	9.93e+04	8	4.20e+04	42.30
Copper	1.13e+01	8	3.54e+00	31.43
Iron	8.19e+02	8	1.20e+03	146.83
Magnesium	3.05e+04	8	1.56e+04	51.32
Manganese	2.78e+02	8	2.68e+02	96.39
Mercury	2.09e-01	8	1.15e-01	55.00
Potassium	1.72e+03	8	9.53e+02	55.35
Selenium	2.00e+00	8	0.00e+00	0.00
Sodium	3.38e+04	8	2.96e+04	87.61
Vanadium	1.35e+00	8	5.53e-01	40.96
Zinc	7.75e+00	8	6.02e+00	77.65

JAH/jah/CAW
[ACS.2020]COVC.W20

TABLE U-19

ACS KAPICA-PAZMEY SUB-SURFACE

PARAMETER (UG/KG)	ARITHMETIC MEAN	n	STD	C-O-V
Chloroethane	7.15e+00	10	2.19e+00	30.58
Acetone	1.09e+03	13	2.49e+03	228.30
Carbon Disulfide	2.83e+00	6	8.16e-02	2.88
1,1-Dichloroethane	1.26e+02	12	2.47e+02	196.27
Total 1,2-Dichloroethene	2.86e+03	16	6.97e+03	243.31
Chloroform	2.23e+00	6	9.58e-01	42.92
1,2-Dichloroethane	7.34e+00	10	1.29e+01	175.74
2-Butanone	8.20e+03	16	2.28e+04	277.57
1,1,1-Trichloroethane	8.52e+01	12	1.80e+02	211.14
1,2-Dichloropropane	6.44e+00	10	1.01e+01	156.19
Trichloroethene	1.86e+04	16	6.23e+04	333.99
Benzene	1.94e+03	15	5.89e+03	304.33
4-Methyl-2-Pentanone	5.67e+02	13	1.19e+03	210.49
2-Hexanone	4.47e+01	10	1.21e+02	271.45
Tetrachloroethene	2.17e+04	16	6.04e+04	278.02
Toluene	1.61e+05	16	3.82e+05	238.27
Chlorobenzene	2.79e+03	16	7.23e+03	258.61
Ethylbenzene	5.33e+04	16	1.44e+05	270.02
Styrene	1.74e+04	16	6.48e+04	372.07
Total Xylenes	2.25e+05	16	5.11e+05	226.79
Phenol	2.97e+03	4	4.52e+03	151.85
1,2-Dichlorobenzene	1.93e+02	4	4.50e+01	23.38
2-Methylphenol	1.12e+03	4	1.99e+03	177.41
4-Methylphenol	6.63e+02	4	1.16e+03	174.90
Isophorone	1.67e+04	4	3.22e+04	192.31
2,4-Dimethylphenol	6.13e+02	4	1.06e+03	172.78
Benzoic acid	3.23e+02	3	3.31e+02	102.53
Naphthalene	5.86e+03	4	1.14e+04	194.95
2-Methylnaphthalene	4.16e+03	4	7.90e+03	189.90
Dimethylphthalate	1.75e+03	4	3.17e+03	180.60
Acenaphthene	3.05e+02	4	2.70e+02	88.52
4-Nitrophenol	1.59e+03	4	2.04e+03	128.15
Dibenzofuran	2.63e+02	4	2.56e+02	97.35
2,4-Dinitrotoluene	3.38e+02	4	3.35e+02	99.26
Diethylphthalate	4.53e+02	4	5.65e+02	124.86
Fluorene	2.98e+02	4	3.10e+02	104.09
Pentachlorophenol	4.44e+03	4	7.72e+03	173.99
Phenanthrene	1.34e+03	4	2.31e+03	172.15
Anthracene	3.50e+02	4	3.60e+02	102.86
Di-n-butylphthalate	4.81e+03	4	9.46e+03	196.87
Fluoranthene	1.60e+03	4	2.94e+03	184.16
Pyrene	1.15e+03	4	2.03e+03	176.28
Butylbenzylphthalate	5.13e+03	4	9.92e+03	193.37
Benzo(a)anthracene	6.53e+02	4	9.65e+02	147.89
Chrysene	5.03e+02	4	6.65e+02	132.34
bis(2-Ethylhexyl)phthalate	2.85e+04	4	5.44e+04	190.87
Di-n-octylphthalate	1.13e+03	4	1.48e+03	131.07
Benzo(b)fluoranthene	6.78e+02	4	1.02e+03	149.82
Benzo(k)fluoranthene	6.78e+02	4	1.02e+03	149.82
Benzo(a)pyrene	2.80e+02	4	2.20e+02	78.57
Benzo(g,h,i)perylene	1.93e+02	4	4.50e+01	23.38

PARAMETER (MG/KG)	ARITHMETIC MEAN	n	STD	C-O-V
Antimony	1.08e+01	1		
Barium	3.89e+02	4	7.34e+02	188.95
Cadmium	1.02e+01	4	2.01e+01	197.58
Chromium,total	2.57e+02	4	5.02e+02	195.38
Cobalt	7.05e+00	4	3.30e+00	46.81
Copper	1.21e+02	4	2.38e+02	196.37
Lead	1.02e+03	4	2.03e+03	198.14
Magnesium	1.56e+03	4	2.41e+03	154.02
Mercury	6.08e-01	4	1.13e+00	185.76
Selenium	5.40e-01	4	6.40e-01	118.52
Silver	1.69e+01	4	3.16e+01	187.36
Zinc	6.50e+02	4	1.04e+03	160.42
Cyanide, total	6.38e+00	4	9.95e+00	156.08

PARAMETER (UG/KG)	ARITHMETIC MEAN	n	STD	C-O-V
AROCLOR-1242	4.02e+03	16	9.26e+03	230.10
AROCLOR-1248	1.19e+03	16	2.42e+03	203.44
AROCLOR-1254	3.03e+03	16	4.95e+03	163.26

JAH/jah/CAW
[ACS.2020]COVD.W20

TABLE U-19

ACS KAPICA-PAZMEY SURFACE SOILS

PARAMETER (UG/KG)	ARITHMETIC MEAN	n	STD	C-O-V
Methylene Chloride	2.00e+02	1		
Acetone	4.43e+02	3	4.59e+02	103.50
1,1-Dichloroethane	1.15e+02	3	3.23e+01	28.03
Total 1,2-Dichloroethene	2.65e+03	3	4.29e+03	162.15
Chloroform	1.00e+01	1		
1,1,1-Trichloroethane	9.00e+00	1		
1,2-Dichloropropane	1.90e+01	1		
Trichloroethene	6.76e+04	4	8.29e+04	122.70
Benzene	1.28e+03	3	1.66e+03	129.90
4-Methyl-2-Pentanone	6.77e+04	4	1.35e+05	199.10
Tetrachloroethene	2.60e+05	4	3.72e+05	143.17
Toluene	4.92e+06	4	9.39e+06	191.02
Chlorobenzene	2.18e+03	3	3.49e+03	160.04
Ethylbenzene	1.11e+06	4	2.13e+06	191.25
Styrene	7.78e+03	3	1.32e+04	169.49
Total Xylenes	5.90e+06	4	1.14e+07	193.05
Phenol	8.82e+03	4	1.31e+04	148.38
1,2-Dichlorobenzene	3.97e+02	3	1.95e+02	49.17
2-Methylphenol	1.83e+03	3	2.49e+03	135.82
4-Methylphenol	1.74e+03	3	2.48e+03	141.99
Isophorone	3.66e+04	4	4.37e+04	119.58
2,4-Dimethylphenol	2.20e+03	3	2.38e+03	108.57
Naphthalene	3.39e+04	4	4.36e+04	128.55
2-Methylnaphthalene	1.97e+04	4	2.51e+04	127.38
2,4,5-Trichlorophenol	1.70e+02	1		
Dimethylphthalate	7.30e+02	3	5.80e+02	79.49
Acenaphthene	3.60e+02	1		
Dibenzofuran	3.95e+02	2	4.95e+01	12.53
Diethylphthalate	1.89e+03	4	2.23e+03	118.47
Fluorene	5.67e+02	3	8.39e+01	14.80
N-Nitrosodiphenylamine	2.20e+03	3	1.97e+03	89.42
Pentachlorophenol	9.45e+02	2	7.85e+02	83.06
Phenanthrene	2.15e+03	4	1.86e+03	86.50
Anthracene	5.25e+02	2	1.91e+02	36.37
Di-n-butylphthalate	3.60e+04	4	3.90e+04	108.46
Fluoranthene	2.05e+03	3	1.32e+03	64.33
Pyrene	1.87e+03	3	5.13e+02	27.49
Butylbenzylphthalate	1.79e+04	4	2.32e+04	129.80
Benzo(a)anthracene	1.75e+03	3	8.05e+02	45.98
Chrysene	1.30e+03	2	0.00e+00	0.00
bis(2-Ethylhexyl)phthalate	3.43e+05	4	1.86e+05	54.22
Di-n-octylphthalate	1.20e+04	4	1.77e+04	148.15
Benzo(b)fluoranthene	2.11e+03	3	1.74e+03	82.35
Benzo(k)fluoranthene	2.11e+03	3	1.74e+03	82.35
Benzo(a)pyrene	9.00e+02	2	7.07e+02	78.57
Indeno(1,2,3-cd)pyrene	6.10e+02	2	2.97e+02	48.69
Dibenz(a,h)anthracene	2.70e+02	1		
Benzo(g,h,i)perylene	7.50e+02	2	4.95e+02	66.00

PARAMETER (MG/KG)	ARITHMETIC MEAN	n	STD	C-O-V
Aluminum	7.67e+03	4	4.56e+03	59.50
Antimony	4.96e+01	4	3.35e+01	67.52
Barium	2.52e+03	4	2.36e+03	93.59
Cadmium	1.14e+02	4	7.64e+01	67.04
Calcium	5.02e+04	4	7.17e+04	142.71
Chromium,total	1.33e+03	4	1.27e+03	96.02
Cobalt	6.32e+01	4	6.06e+01	95.92
Copper	1.55e+03	4	1.99e+03	128.26
Iron	2.51e+04	4	3.01e+04	120.06
Lead	8.28e+03	4	6.75e+03	81.57
Magnesium	1.24e+04	4	1.68e+04	135.44
Manganese	6.74e+02	4	6.29e+02	93.35
Mercury	7.04e+00	4	4.53e+00	64.42
Nickel	7.13e+01	4	8.56e+01	120.11
Selenium	8.35e+00	4	6.64e+00	79.55
Silver	9.88e+00	4	1.03e+01	104.57
Vanadium	2.39e+01	4	1.75e+01	73.04
Zinc	8.72e+03	4	7.95e+03	91.13
Cyanide, total	3.47e+01	4	2.77e+01	79.63

PARAMETER (UG/KG)	ARITHMETIC MEAN	n	STD	C-O-V
Aldrin	3.70e+01	9	3.14e+01	84.98
Endosulfan 1	1.90e+01	6	1.40e+01	73.89
4,4-DDD	5.26e+01	8	4.76e+01	90.56
AROCLOR-1242	2.31e+04	16	6.95e+04	300.87
AROCLOR-1248	3.38e+03	15	6.94e+03	205.46
AROCLOR-1254	5.27e+03	15	7.39e+03	140.11

JAH/jah/CAW
[ACS.2020]COVE.W20

TABLE U-19

ACS OFFSITE

PARAMETER (UG/KG)	ARITHMETIC MEAN	n	STD	C-O-V
Vinyl Chloride	6.02e+02	23	7.99e+02	132.62
Chloroethane	4.75e+02	22	5.52e+02	116.24
Methylene Chloride	2.22e+04	37	4.88e+04	220.11
Acetone	8.48e+05	44	5.12e+06	603.52
1,1-Dichloroethene	1.84e+04	42	6.15e+04	334.54
1,1-Dichloroethane	2.88e+04	43	8.38e+04	290.89
Total 1,2-Dichloroethene	5.18e+03	38	8.09e+03	156.33
Chloroform	1.62e+05	44	5.59e+05	344.07
1,2-Dichloroethane	2.55e+04	43	7.91e+04	309.69
2-Butanone	3.00e+06	44	1.52e+07	506.90
1,1,1-Trichloroethane	3.74e+06	44	2.26e+07	603.44
1,2-Dichloropropane	6.60e+03	39	1.35e+04	204.40
Trichloroethene	6.95e+05	44	3.05e+06	439.21
1,1,2-Trichloroethane	2.52e+04	43	7.44e+04	295.69
Benzene	8.13e+04	44	2.44e+05	300.31
4-Methyl-2-Pentanone	1.68e+06	44	9.20e+06	546.76
2-Hexanone	8.31e+03	34	1.33e+04	160.57
Tetrachloroethene	1.72e+06	44	7.41e+06	431.22
1,1,2,2-Tetrachloroethane	5.62e+00	11	4.58e+00	81.53
Toluene	3.96e+06	44	1.96e+07	494.10
Chlorobenzene	5.24e+04	41	1.74e+05	332.93
Ethylbenzene	8.79e+05	44	3.53e+06	401.75
Styrene	2.79e+04	43	7.06e+04	252.64
Total Xylenes	3.65e+06	44	1.52e+07	415.90

PARAMETER (MG/KG)	ARITHMETIC MEAN	n	STD	C-O-V
Antimony	2.92e+01	8	5.39e+01	184.58
Barium	4.04e+02	19	1.46e+03	360.48
Cadmium	1.02e+02	18	3.99e+02	390.39
Calcium	1.74e+04	19	1.96e+04	112.52
Chromium,total	2.40e+02	19	8.52e+02	354.78
Cobalt	1.25e+01	19	1.52e+01	121.40
Copper	3.93e+02	19	1.32e+03	334.67
Lead	1.07e+03	19	3.92e+03	367.02
Manganese	1.37e+02	19	1.17e+02	85.74
Mercury	2.24e+00	19	8.19e+00	365.97
Nickel	1.76e+01	19	2.09e+01	118.58
Potassium	1.08e+03	19	1.87e+03	172.49
Selenium	9.02e+00	19	3.59e+01	397.51
Silver	1.77e+01	19	7.13e+01	403.54
Zinc	4.58e+02	19	1.07e+03	232.52
Cyanide, total	4.24e+00	19	7.11e+00	167.60

PARAMETER (UG/KG)	ARITHMETIC MEAN	n	STD	C-O-V
Phenol	6.94e+04	32	1.82e+05	262.51
bis(2-Chloroethyl)ether	2.73e+04	33	5.29e+04	193.61
1,4-Dichlorobenzene	1.84e+03	25	3.05e+03	165.85
Benzyl alcohol	6.91e+03	31	9.93e+03	143.72
1,2-Dichlorobenzene	1.50e+04	33	2.46e+04	164.27
2-Methylphenol	1.49e+04	33	2.10e+04	140.51
4-Methylphenol	3.12e+04	33	4.61e+04	148.07
Isophorone	3.79e+05	33	8.89e+05	234.92
2,4-Dimethylphenol	2.41e+04	33	4.11e+04	171.05
Benzoic acid	1.05e+06	33	5.56e+06	527.29
2,4-Dichlorophenol	1.75e+02	13	5.09e+01	29.13
1,2,4-Trichlorobenzene	6.30e+03	29	1.48e+04	234.93
Naphthalene	2.58e+05	33	5.46e+05	211.81
Hexachlorobutadiene	1.49e+04	33	2.86e+04	191.38
2-Methylnaphthalene	1.31e+05	33	2.45e+05	186.66
Dimethylphthalate	5.11e+04	33	1.35e+05	263.65
Acenaphthylene	1.11e+03	21	2.45e+03	221.78
2,6-Dinitrotoluene	5.19e+02	19	7.80e+02	150.07
Acenaphthene	4.71e+03	30	6.03e+03	127.92
4-Nitrophenol	2.11e+03	19	2.40e+03	113.72
Dibenzofuran	1.65e+03	24	2.82e+03	171.30
Diethylphthalate	2.13e+04	33	5.06e+04	237.23
Fluorene	6.51e+03	31	8.78e+03	134.90
N-Nitrosodiphenylamine	9.33e+03	33	1.42e+04	151.88
Hexachlorobenzene	1.23e+03	21	2.74e+03	223.08
Pentachlorophenol	3.16e+04	31	4.82e+04	152.57
Phenanthrene	9.41e+03	33	1.37e+04	145.82
Anthracene	4.57e+02	19	4.05e+02	88.55
Di-n-butylphthalate	2.99e+05	33	8.14e+05	272.54
Fluoranthene	4.01e+03	30	5.50e+03	137.39
Pyrene	4.85e+03	30	6.24e+03	128.85
Butylbenzylphthalate	1.64e+05	33	3.50e+05	213.57
Benzo(a)anthracene	4.00e+03	28	5.54e+03	138.49
Chrysene	4.22e+03	29	5.92e+03	140.33
bis(2-Ethylhexyl)phthalate	1.29e+06	33	3.24e+06	249.92
Di-n-octylphthalate	1.34e+04	33	2.73e+04	204.18
Benzo(b)fluoranthene	3.76e+03	26	5.29e+03	140.83
Benzo(k)fluoranthene	3.76e+03	26	5.29e+03	140.83
Benzo(a)pyrene	1.26e+03	21	2.50e+03	198.76
Indeno(1,2,3-cd)pyrene	5.28e+02	19	4.97e+02	94.14
Dibenz(a,h)anthracene	1.66e+02	5	5.37e+01	32.33
Benzo(g,h,i)perylene	4.34e+02	19	3.93e+02	90.40
Alpha-BHC	6.60e+01	35	8.43e+01	127.75
Beta-BHC	1.42e+02	40	2.20e+02	154.19
Aldrin	3.44e+02	42	1.21e+03	350.02
Heptachlor Epoxide	5.48e+00	13	2.27e+00	41.40
4,4-DDE	1.58e+02	36	2.25e+02	141.97
4,4-DDD	3.77e+02	41	7.22e+02	191.38
4,4-DDT	2.64e+02	40	4.31e+02	163.11
AROCLOR-1242	6.54e+03	42	2.93e+04	447.00
AROCLOR-1248	3.39e+03	42	7.11e+03	209.45
AROCLOR-1254	2.66e+04	42	1.00e+05	376.54
AROCLOR-1260	2.76e+04	42	9.34e+04	337.99

JAH/jah/CAW
[ACS.2020]COVF.W20

TABLE U-19

ACS STILL BOTTOMS AND TREATMENT LAGOON

PARAMETER (UG/KG)	ARITHMETIC MEAN	n	STD	C-O-V
Methylene Chloride	4.99e+04	28	9.64e+04	193.40
Acetone	3.45e+03	13	3.85e+03	111.51
1,1-Dichloroethane	3.71e+03	22	6.17e+03	166.41
Total 1,2-Dichloroethene	3.94e+04	29	8.17e+04	207.11
Chloroform	1.95e+05	29	5.22e+05	267.60
1,2-Dichloroethane	1.02e+04	26	1.43e+04	140.69
2-Butanone	8.07e+04	29	1.31e+05	162.66
1,1,1-Trichloroethane	8.00e+05	29	3.89e+06	486.25
Carbon Tetrachloride	1.57e+05	29	6.70e+05	426.21
1,2-Dichloropropane	3.58e+03	21	6.22e+03	173.60
Trichloroethene	1.27e+05	29	3.23e+05	253.69
1,1,2-Trichloroethane	1.81e+03	19	2.53e+03	139.78
Benzene	3.23e+04	29	4.98e+04	154.50
4-Methyl-2-Pentanone	1.63e+05	29	3.44e+05	210.96
Tetrachloroethene	2.39e+05	29	3.66e+05	153.18
Toluene	1.59e+06	29	4.31e+06	271.78
Chlorobenzene	2.00e+00	1		
Ethylbenzene	7.25e+05	29	1.63e+06	224.73
Styrene	2.40e+04	29	4.32e+04	180.09
Total Xylenes	1.91e+06	29	2.75e+06	143.85
Gamma-BHC (Lindane)	1.69e+02	19	2.79e+02	164.96
Endosulfan 1	1.74e+02	19	2.98e+02	170.79
4,4-DDT	2.47e+03	21	6.46e+03	261.60
Endrin Ketone	9.73e+01	14	9.25e+01	95.04
AROCLOR-1248	1.10e+04	21	2.36e+04	213.62
AROCLOR-1254	7.40e+03	20	1.30e+04	175.79
AROCLOR-1260	6.42e+03	20	1.11e+04	173.32

PARAMETER (MG/KG)	ARITHMETIC MEAN	n	STD	C-O-V
Antimony	8.03e+00	8	1.60e+01	198.88
Barium	2.08e+02	12	4.40e+02	211.26
Cadmium	1.35e+01	12	3.31e+01	245.32
Calcium	1.11e+04	12	1.55e+04	138.83
Chromium,total	1.80e+02	12	3.98e+02	221.01
Cobalt	1.53e+01	12	1.81e+01	118.25
Copper	6.71e+01	12	9.82e+01	146.28
Lead	7.73e+02	12	1.78e+03	230.28
Magnesium	3.50e+03	12	3.34e+03	95.48
Mercury	1.69e+00	12	3.06e+00	181.53
Nickel	1.14e+01	12	3.64e+00	31.81
Selenium	8.03e-01	12	6.98e-01	87.03
Zinc	3.32e+02	12	6.28e+02	189.54
Cyanide, total	7.82e+00	12	1.99e+01	253.95

PARAMETER (UG/KG)	ARITHMETIC MEAN	n	STD	C-O-V
Phenol	1.67e+04	29	3.71e+04	222.67
bis(2-Chloroethyl)ether	1.40e+04	29	2.52e+04	179.12
2-Chlorophenol	1.30e+02	1		
1,3-Dichlorobenzene	2.99e+02	15	1.95e+02	65.07
1,4-Dichlorobenzene	1.02e+03	19	1.40e+03	136.46
Benzyl alcohol	4.56e+02	17	4.75e+02	104.14
1,2-Dichlorobenzene	1.05e+04	29	1.67e+04	159.65
2-Methylphenol	4.53e+03	27	5.71e+03	126.07
4-Methylphenol	7.04e+03	28	9.89e+03	140.44
Isophorone	2.28e+05	29	5.43e+05	237.90
2,4-Dimethylphenol	6.56e+02	17	7.13e+02	108.55
Benzoic acid	6.99e+03	17	1.27e+04	181.84
2,4-Dichlorophenol	7.88e+02	19	1.15e+03	145.69
1,2,4-Trichlorobenzene	7.88e+02	19	1.08e+03	137.30
Naphthalene	9.04e+04	29	1.53e+05	169.49
Hexachlorobutadiene	7.66e+03	29	9.64e+03	125.77
4-Chloro-3-methylphenol	2.54e+02	14	9.35e+01	36.78
2-Methylnaphthalene	5.37e+04	29	8.74e+04	162.72
2,4,6-Trichlorophenol	2.78e+02	14	1.58e+02	56.84
2,4,5-Trichlorophenol	9.60e+01	1		
2-Chloronaphthalene	3.92e+02	16	4.27e+02	108.95
Dimethylphthalate	3.83e+04	29	8.38e+04	219.15
Acenaphthylene	1.31e+03	19	2.60e+03	198.94
Acenaphthene	9.74e+02	20	1.36e+03	139.12
4-Nitrophenol	1.28e+03	15	4.77e+02	37.22
Dibenzofuran	2.78e+02	15	1.37e+02	49.23
Diethylphthalate	1.18e+04	29	2.10e+04	177.33
Fluorene	1.63e+03	21	2.57e+03	157.55
N-Nitrosodiphenylamine	4.45e+03	27	5.58e+03	125.50
4-Bromophenyl-phenylether	5.56e+02	17	6.45e+02	115.93
Hexachlorobenzene	5.07e+02	18	6.48e+02	127.86
Pentachlorophenol	2.09e+04	29	2.56e+04	122.34
Phenanthrene	2.30e+03	25	3.00e+03	130.06
Anthracene	5.58e+02	17	8.38e+02	150.28
Di-n-butylphthalate	8.46e+04	29	1.47e+05	173.20
Fluoranthene	3.96e+02	17	4.11e+02	103.81
Pyrene	8.43e+02	19	1.30e+03	153.70
Butylbenzylphthalate	9.96e+04	29	2.02e+05	202.69
Benzo(a)anthracene	2.67e+02	15	1.06e+02	39.58
Chrysene	2.53e+02	15	9.10e+01	35.92
bis(2-Ethylhexyl)phthalate	3.62e+05	29	6.25e+05	172.73
Di-n-octylphthalate	4.01e+03	27	6.20e+03	154.69
Benzo(b)fluoranthene	2.70e+02	16	9.96e+01	36.89
Benzo(k)fluoranthene	2.70e+02	16	9.96e+01	36.89
Benzo(a)pyrene	2.04e+02	11	2.06e+01	10.13

JAH/jah/CAW
[ACS.2020]COVG.W20

TABLE U-19

ACS SEDIMENTS

PARAMETER (UG/KG)	ARITHMETIC MEAN	n	STD	C-O-V
Chloroethane	1.00e+01	17	3.84e+00	3.83e+01
Methylene Chloride	1.82e+01	16	1.12e+01	6.14e+01
Total 1,2-Dichloroethene	4.87e+00	18	1.94e+00	3.98e+01
Chloroform	4.57e+00	18	2.43e+00	5.33e+01
2-Butanone	8.27e+00	15	1.27e+00	1.54e+01
1,1,1-Trichloroethane	3.00e+00	1		
Benzene	7.83e+02	18	3.30e+03	4.21e+02
Toluene	2.38e+01	18	4.53e+01	1.90e+02
Ethylbenzene	1.18e+01	18	2.96e+01	2.51e+02
Total Xylenes	1.57e+01	18	4.60e+01	2.93e+02
Phenol	1.24e+02	2	9.33e+01	7.53e+01
bis(2-Chloroethyl)ether	3.15e+02	17	9.98e+01	3.17e+01
bis(2-Chloroisopropyl)ether	4.46e+02	18	4.32e+02	9.69e+01
4-Methylphenol	2.32e+02	11	4.79e+01	2.07e+01
2,4-Dimethylphenol	3.15e+02	17	1.06e+02	3.35e+01
Benzoic acid	8.00e+02	12	4.04e+02	5.05e+01
Naphthalene	2.61e+02	17	1.06e+02	4.07e+01
2-Methylnaphthalene	2.50e+02	15	9.90e+01	3.97e+01
Dibenzofuran	2.26e+02	5	5.48e+00	2.42e+00
Fluorene	3.10e+02	18	1.41e+02	4.55e+01
Hexachlorobenzene	1.40e+02	1		
Pentachlorophenol	1.39e+02	2	1.29e+02	9.34e+01
Phenanthrene	2.75e+02	18	1.43e+02	5.18e+01
Anthracene	9.15e+01	2	1.20e+01	1.31e+01
Di-n-butylphthalate	1.11e+02	4	4.71e+01	4.26e+01
Fluoranthene	3.46e+02	18	2.44e+02	7.05e+01
Pyrene	3.33e+02	18	2.40e+02	7.21e+01
Butylbenzylphthalate	1.65e+02	2	7.07e+00	4.29e+00
Benzo(a)anthracene	3.03e+02	14	1.75e+02	5.77e+01
Chrysene	3.05e+02	18	1.88e+02	6.16e+01
bis(2-Ethylhexyl)phthalate	1.57e+03	17	3.16e+03	2.01e+02
Benzo(b)fluoranthene	3.52e+02	18	3.46e+02	9.81e+01
Benzo(k)fluoranthene	3.58e+02	18	3.49e+02	9.74e+01
Benzo(a)pyrene	3.02e+02	18	1.55e+02	5.13e+01
Indeno(1,2,3-cd)pyrene	2.86e+02	17	7.50e+01	2.62e+01
Dibenz(a,h)anthracene	1.45e+02	3	6.38e+01	4.40e+01
Benzo(g,h,i)perylene	3.12e+02	18	1.01e+02	3.24e+01
Heptachlor Epoxide	1.68e+01	18	1.75e+01	1.04e+02
AROCLOR-1248	3.78e+02	18	1.06e+03	2.81e+02
AROCLOR-1254	1.53e+03	18	4.05e+03	2.65e+02
AROCLOR-1260	1.72e+02	13	6.39e+01	3.71e+01

PARAMETER (MG/KG)	ARITHMETIC MEAN	n	STD	C-O-V
Barium	5.57e+01	18	2.53e+01	4.55e+01
Calcium	1.56e+04	18	2.25e+04	1.44e+02
Chromium, Total	3.07e+01	18	6.12e+01	1.99e+02
Copper	4.04e+01	18	8.06e+01	1.99e+02
Magnesium	5.26e+03	18	7.71e+03	1.46e+02
Mercury	6.13e-01	18	2.05e+00	3.35e+02
Nickel	1.39e+01	18	1.03e+01	7.43e+01
Selenium	4.50e-01	18	2.90e-01	6.45e+01
Vanadium	2.05e+01	18	1.38e+01	6.74e+01

JAH/jah/CAW
[ACS.2020]COVH.W20

TABLE U-19

ACS SURFACE WATERS

PARAMETER (UG/L)	ARITHMETIC MEAN	n	STD	C-O-V
Chloroethane	1.18e+01	5	1.09e+01	92.33
Acetone	8.00e+01	5	1.68e+02	209.63
1,1-Dichloroethane	1.50e+00	2	7.07e-01	47.14
Total 1,2-Dichloroethene	2.30e+00	5	7.58e-01	32.97
2-Butanone	3.76e+01	5	5.85e+01	155.62
Benzene	9.40e+01	5	2.05e+02	217.66
4-Methyl-2-Pentanone	1.38e+01	5	1.97e+01	142.59
Toluene	4.50e+00	5	2.76e+00	61.36
Ethylbenzene	3.20e+00	5	1.57e+00	48.91
Total Xylenes	9.00e+00	5	1.45e+01	161.49
Phenol	1.66e+01	5	1.77e+01	106.54
bis(2-Chloroethyl)ether	1.94e+01	5	3.22e+01	165.98
2-Methylphenol	5.00e+00	5	0.00e+00	0.00
bis(2-Chloroisopropyl)ether	9.80e+00	5	1.07e+01	109.52
4-Methylphenol	1.23e+02	5	2.61e+02	212.69
Isophorone	5.00e+00	5	0.00e+00	0.00
2,4-Dimethylphenol	6.40e+00	5	3.13e+00	48.91
Benzoic acid	3.70e+01	5	2.68e+01	72.52
4-Chloro-3-methylphenol	2.00e+00	1		
AROCLOR-1248	4.18e-01	5	2.60e-01	62.10
Aluminum	4.78e+02	5	3.87e+02	80.87
Arsenic	1.01e+01	5	1.95e+01	194.24
Barium	1.46e+02	5	1.03e+02	70.45
Beryllium	1.36e-01	5	8.05e-02	59.19
Cadmium	2.78e-01	5	2.73e-01	98.33
Calcium	1.14e+05	5	1.32e+05	116.39
Chromium, Total	1.01e+01	5	1.04e+01	102.73
Copper	1.24e+01	5	5.37e+00	43.28
Iron	4.97e+03	5	5.64e+03	113.46
Lead	1.10e+01	5	8.66e+00	78.61
Magnesium	2.29e+04	5	2.54e+04	110.89
Manganese	7.72e+02	5	7.61e+02	98.62
Nickel	3.90e+01	5	2.75e+01	70.45
Potassium	1.10e+04	5	1.23e+04	111.85
Selenium	1.22e+00	5	4.92e-01	40.32
Sodium	3.58e+04	5	4.05e+04	113.12
Zinc	5.62e+01	5	2.25e+01	40.01

JAH/jah/CAW
[ACS.2020]COVI.W20

Appendix V

Modeling Of Volatile Organic Emissions To Determine Exposure Point Concentrations

Appendix V

MODELING OF VOLATILE ORGANIC EMISSIONS TO DETERMINE EXPOSURE POINT CONCENTRATIONS

Volatilization of contaminants at uncontrolled hazardous waste sites may contribute to overall air loading at the Site. A predictive model is used to estimate the rate of these emissions over time. Farmer's equation as modified by Shen and Farino, described in the Superfund Exposure Assessment Manual (EPA, 1988), assumes that diffusion into the atmosphere occurs at a plane surface where concentrations remain constant, and ignores biodegradation, transport in water, and adsorption.

$$E_i = \frac{D_i C_{si} A (Pt^{4/3}) M_i}{d_{sc}}$$

where

E_i = emission rate of component i (g/sec)
D_i = diffusion coefficient of chemical i in air (cm^2/sec)
C_{si} = saturation vapor concentration of chemical i (g/cm^3)
A = exposed area (cm^3)
Pt = total soil porosity (unitless)
M_i = mole fraction of chemical i in the waste (gmole/gmole)
d_{sc} = effective depth of soil cover (cm)

Di, the diffusion coefficient, is provided in the above reference for most chemicals, or else is calculated using Fuller's method, also described in the reference.

Csi, the saturation vapor concentration, is calculated as follows:

$$C_{si} = \frac{VPi\ MWi}{RT}$$

where

VP = vapor pressure of chemical i (mm Hg)
MW = mole weight of chemical i (g/mole)
R = molar gas constant (63,361 mm Hg-cm^3/mole-K)
T = absolute temperature (K)

T, the temperature, is taken to be 19 centigrade (292 K), which is the mean temperature for the period of May 1 to October 31 as presented in the Soil Survey for Lake County Indiana (July, 1972).

A, the exposed area, is estimated based on review of the analytical data and Site maps. Area perimeters are delineated as follows:

On Site - Based on analytical results, the entire area covered by the geophysical survey is included.

Still Bottoms/Treatment Lagoon - A roughly rectangular area is included, beginning at the edge of the firepond to approximately 40 ft west of SB70, and from SB21 to AP-44.

Off Site - The exposed area follows the contour lines at the north end of the Off Site area, south along the western edge to AP-66, east to AP-9, and back north along AP-20 to AP-19.

Kapica-Pazmey - Starting at SB53, the area runs south to the boundary of the geophysical survey and follows it around the southern boundary of Kapica-Pazmey. It then heads northeast to SB44, where it turns west and runs back to SB53.

The area within these perimeters is then calculated in the prescribed units.

Pt, total porosity, is assumed to be 0.40, a reasonable value given the loamy fine sands present at the Site as described in the Lake County Soil Survey.

Mi, the mole fraction of the chemical in the buried waste, is estimated, since the molecular weight of the soil portion of the waste/soil mix is not known. Instead, the ratio of the mole fraction of each chemical to the sum of the mole fractions for all chemicals of potential concern is calculated as follows:

$$Mi = \frac{\text{Mf for chemical i}}{\text{sum of Mf for all chemicals of Potential Concern}}$$

where

$$Mf = \frac{Ci}{MWi}$$

where

Ci = concentration of chemical i (mg/kg)
MWi = molecular weight of chemical i (g/mole)

Dsc, the effective depth of soil cover is considered to be the depth to the water table. Since the controlling factor for the model is diffusion of chemical vapor through the soil cover, a vapor path through the soil is required. This vapor path does not exist below the water table, although sample points at lower depths indicate the contamination does extend lower.

Tables 1 through 5 of this appendix contain the values for each of the expressions within the equation, and the calculated Baseline Emission Estimates for each Site Area.

DISPERSION

Estimates of downwind component concentrations were calculated using the following equation from the Superfund Exposure Assessment Manual:

$$C(x) = \frac{Q}{pi\ Oy\ Oz\ u} * D$$

where

$C_{(x)}$	=	concentration of chemical i at distance x (g/m^3)
Q	=	emission rate of chemical i (same as Ei) (g/sec)
Oy	=	dispersion coefficient, lateral direction (meters)
Oz	=	dispersion coefficient, vertical direction (meters)
u	=	mean wind speed (m/sec)
pi	=	3.14
D	=	fraction of time wind blows towards receptor (unitless)

Dispersion coefficient values are derived from tables in the Superfund Exposure Assessment Manual. To calculate long-term atmospheric concentrations equated with annual average exposure conditions, a wind speed of 3 m/sec and stability class D were assumed for the Site to obtain conservative exposure point estimates. The wind is assumed to blow in the direction of the receptor for 30 % of the time.

The model allows prediction of concentrations at a distance no closer than 100 meters from the point of release. Downwind estimates to calculate exposures off-Site were calculated using a distance of 500 meters.

Since the wind blows in only one direction at a time, the combined concentration from the five areas at a given receptor point would be the sum of differing fractions of the concentration of each area. Due to the difficulty of determining this combined exposure, the maximum concentration from the five areas is carried forward to the quantitative risk assessment for both onsite (100 meters) and offsite (500 meters) scenerios. A summary of the concentrations onsite and offsite and the maximum value for each compound is presented in table 6 of this appendix.

The values used for exposed area and effective depth of soil cover are presented in the following table:

SITE AREA	Exposed Area	Depth of soil cover
On Site	1.1×10^8 cm^2	152 cm
Still Bottoms/ Treatment Lagoon	6.4×10^7 cm^2	183 cm
Off Site	1.6×10^8 cm^2	335 cm
Kapica Pazmey - surface soils	4.7×10^7 cm^2	53 cm
Kapica Pazmey - Subsurface soils	4.7×10^7 cm^2	427 cm

Table V-1

VOC EMISSION ESTIMATE CALCULATIONS

American Chemical Services Remedial Investigation
Griffith Indiana

Source Area: Onsite Containment Area

COMPOUND	Chemical Emission (Ei) Calculation Variables: MW (g/mole)	VP (mm Hg)	CSi (g/cm3)	ADV (cm3/mole)	Di @ 19 C (Cm2/sec)	Exp. Pnt. Conc. (mg/kg)	Mf mM/kg soil	Mi (mole/mole)	Ei (g/sec)	Estimated Downwind Concentration 100 m (g/m3)	500 m (g/m3)
Chloroethane	51	3.80e+03	1.06e-02	62.4	0.10767	1.60e+04	3.14e+02	2.01e-01	4.92e+01	4.17e-02	2.36e-03
Acetone	58	2.70e+02	8.60e-04	66.86	0.10245	3.51e+00	6.06e-02	3.89e-05	7.30e-04	6.19e-07	3.50e-08
1,1-Dichloroethane	99	1.82e+02	9.89e-04	79.92	0.08853	1.19e-02	1.20e-04	7.71e-08	1.44e-06	1.22e-09	6.89e-11
Total-1,2-Dichloroethene	97	2.08e+02	1.11e-03	75.96	0.09059	5.20e+00	5.36e-02	3.44e-05	7.37e-04	6.24e-07	3.53e-08
Chloroform	119	1.51e+02	9.86e-04	76.98	0.08818	1.48e+00	1.24e-02	7.98e-06	1.48e-04	1.25e-07	7.09e-09
1,2-Dichloroethane	99	6.40e+01	3.48e-04	79.92	0.08853	9.70e-01	9.80e-03	6.29e-06	4.13e-05	3.50e-08	1.98e-09
2-Butanone	72	7.75e+01	3.06e-04	87.32	0.08890	2.01e-01	2.79e-03	1.79e-06	1.04e-05	8.80e-09	4.97e-10
1,1,1-Trichloroethane	133	1.23e+02	8.98e-04	97.44	0.07917	1.31e+03	9.85e+00	6.33e-03	9.59e-02	8.13e-05	4.59e-06
1,2-Dichloropropane	113	4.20e+01	2.61e-04	100.38	0.07942	7.51e-01	6.65e-03	4.27e-06	1.88e-05	1.59e-08	9.02e-10
Trichloroethene	131	5.79e+01	4.16e-04	93.48	0.08067	1.22e+01	9.30e-02	5.97e-05	4.28e-04	3.62e-07	2.05e-08
1,1,2-Trichloroethane	133	3.00e+01	2.19e-04	97.44	0.07917	3.67e-02	2.76e-04	1.77e-07	6.56e-07	5.56e-10	3.14e-11
Benzene	78	9.52e+01	4.08e-04	110.88	0.07954	3.61e+02	4.63e+00	2.98e-03	2.06e-02	1.74e-05	9.85e-07
4-Methyl-2-Pentanone	100	6.00e+00	3.29e-05	128.24	0.07247	5.23e-01	5.23e-03	3.36e-06	1.71e-06	1.45e-09	8.19e-11
Tetrachloroethene	166	1.78e+01	1.62e-04	111	0.07360	5.90e+03	3.55e+01	2.28e-02	5.81e-02	4.92e-05	2.78e-06
1,1,2,2-Tetrachloroethane	168	5.00e+00	4.61e-05	114.96	0.07244	3.90e+00	2.32e-02	1.49e-05	1.06e-05	8.99e-09	5.08e-10
Toluene	92	2.81e+01	1.42e-04	131.34	0.07242	7.93e+04	8.62e+02	5.53e-01	1.21e+00	1.03e-03	5.81e-05
Chlorobenzene	113	1.17e+01	7.26e-05	128.4	0.07149	4.40e-02	3.89e-04	2.50e-07	2.76e-07	2.34e-10	1.32e-11
Ethylbenzene	106	7.00e+00	4.07e-05	151.8	0.06689	6.70e+03	6.32e+01	4.06e-02	2.36e-02	2.00e-05	1.13e-06
Styrene	104	5.00e+00	2.85e-05	147.84	0.06781	6.20e+00	5.96e-02	3.83e-05	1.58e-05	1.34e-08	7.57e-10
Total Xylenes	106	1.00e+01	5.82e-05	151.8	0.06689	2.50e+04	2.36e+02	1.51e-01	1.26e-01	1.06e-04	6.02e-06
Phenol	94	3.41e-01	1.76e-06	116.36	0.07610	4.32e-01	4.59e-03	2.95e-06	8.42e-08	7.13e-11	4.03e-12
1,3-Dichlorobenzene	147	2.28e+00	1.84e-05	145.92	0.06600	2.30e-01	1.57e-03	1.01e-06	2.60e-07	2.20e-10	1.25e-11
1,4-Dichlorobenzene	147	1.18e+00	9.52e-06	145.92	0.06600	5.63e-01	3.83e-03	2.46e-06	3.30e-07	2.79e-10	1.58e-11
1,2-Dichlorobenzene	147	1.00e+00	8.07e-06	145.92	0.06600	9.90e+00	6.73e-02	4.32e-05	4.91e-06	4.16e-09	2.35e-10
2-Methylphenol	108	2.40e-01	1.42e-06	136.82	0.06987	1.58e+00	1.47e-02	9.42e-06	2.00e-07	1.69e-10	9.57e-12
4-Methylphenol	108	1.10e-01	6.52e-07	136.82	0.06987	2.51e+00	2.32e-02	1.49e-05	1.45e-07	1.23e-10	6.93e-12
2,4-Dimethylphenol	122	5.90e-02	3.95e-07	157.28	0.06492	2.39e+00	1.96e-02	1.26e-05	6.87e-08	5.82e-11	3.29e-12
Benzoic acid	122	9.52e+01	6.37e-04	138.34	0.06869	4.90e-02	4.02e-04	2.58e-07	2.41e-06	2.04e-09	1.15e-10
2,4-Dichlorophenol	163	5.90e-02	5.28e-07	151.4	0.06442	2.25e-01	1.38e-03	8.87e-07	6.43e-09	5.45e-12	3.08e-13
Naphthalene	128	2.60e-04	1.83e-09	180.84	0.06072	9.00e+01	7.03e-01	4.51e-04	1.07e-08	9.05e-12	5.11e-13
2-Methylnaphthalene	142	5.90e-02	4.60e-07	201.3	0.05732	5.50e+01	3.87e-01	2.49e-04	1.40e-06	1.18e-09	6.70e-11
2,4,5-Trichlorophenol	197	1.00e+00	1.08e-05	168.92	0.06056	2.13e-01	1.08e-03	6.95e-07	9.71e-08	8.23e-11	4.65e-12
Dimethylphthalate	194	1.00e-02	1.06e-07	206.72	0.05533	3.50e+00	1.80e-02	1.16e-05	1.46e-08	1.23e-11	6.97e-13
Acenaphthylene	152	2.90e-02	2.42e-07	213.84	0.05545	8.98e-01	5.91e-03	3.79e-06	1.09e-08	9.19e-12	5.20e-13
Acenaphthene	154	1.55e-03	1.31e-08	217.8	0.05492	2.06e+00	1.34e-02	8.59e-06	1.32e-09	1.12e-12	6.31e-14
Diethylphthalate	222	3.50e-03	4.26e-08	247.64	0.05049	4.70e-02	2.12e-04	1.36e-07	6.24e-11	5.29e-14	2.99e-15
Fluorene	116	7.10e-04	4.52e-09	234.3	0.05446	2.32e+00	2.00e-02	1.28e-05	6.75e-10	5.71e-13	3.23e-14
Pentachlorophenol	266	1.10e-04	1.61e-09	203.96	0.05469	1.60e-01	6.02e-04	3.86e-07	7.23e-12	6.13e-15	3.46e-16
Phenanthrene	178	6.80e-04	6.64e-09	250.8	0.05091	4.26e+00	2.40e-02	1.54e-05	1.11e-09	9.40e-13	5.31e-14

Table V-1

VOC EMISSION ESTIMATE CALCULATIONS

American Chemical Services Remedial Investigation
Griffith Indiana

Source Area: Onsite Containment Area

COMPOUND	Chemical Emission (Ei) Calculation Variables									Estimated Downwind Concentration	
	MW (g/mole)	VP (mm Hg)	CSi (g/cm3)	ADV (cm3/mole)	Di @ 19 C (Cm2/sec)	Exp. Pnt. Conc. (mg/kg)	Mf mM/kg soil	Mi (mole/mole)	Ei (g/sec)	100 m (g/m3)	500 m (g/m3)
Anthracene	178	1.95e-04	1.91e-09	250.8	0.05091	9.40e-02	5.28e-04	3.39e-07	7.01e-12	5.94e-15	3.36e-16
Di-n-butylphthalate	278	1.00e-05	1.53e-10	329.48	0.04362	1.16e+01	4.18e-02	2.68e-05	3.81e-11	3.23e-14	1.82e-15
Fluoranthene	202	5.00e-06	5.54e-11	283.8	0.04764	7.93e-01	3.93e-03	2.52e-06	1.42e-12	1.20e-15	6.80e-17
Pyrene	202	2.50e-06	2.77e-11	283.8	0.04764	9.34e-01	4.63e-03	2.97e-06	8.36e-13	7.08e-16	4.01e-17
Butylbenzylphthalate	312	8.60e+06	1.47e+02	375.02	0.04077	2.27e+00	7.29e-03	4.68e-06	5.99e+00	5.07e-03	2.87e-04
Benzo(a)anthracene	228	2.20e-08	2.75e-13	320.76	0.04463	1.70e-01	7.46e-04	4.79e-07	1.25e-15	1.06e-18	6.01e-20
Chrysene	228	6.30e-09	7.88e-14	320.76	0.04463	8.40e-02	3.68e-04	2.37e-07	1.78e-16	1.50e-19	8.50e-21
bis(2-Ethylhexyl)phthalat	391	8.60e+06	1.85e+02	493.16	0.03535	1.40e+02	3.58e-01	2.30e-04	3.20e+02	2.71e-01	1.53e-02
Endosulfan 1	407	5.50e-06	1.23e-10	310.82	0.04417	5.95e-03	1.46e-05	9.39e-09	1.09e-14	9.21e-18	5.21e-19
4,4-DDT	355	5.50e-06	1.07e-10	346.32	0.04215	1.59e-02	4.48e-05	2.88e-08	2.77e-14	2.35e-17	1.33e-18
TOTAL PCBs	328	7.70e-05	1.39e-09	235.32	0.05074	8.08e+00	2.46e-02	1.58e-05	2.37e-10	2.01e-13	1.14e-14
Propyl Benzenes	120	3.20e+00	2.11e-05	172.26	0.06244	2.00e+01	1.67e-01	1.07e-04	3.00e-05	2.54e-08	1.44e-09
Ethyl Methyl Benzenes	120	3.20e+00	2.11e-05	172.26	0.06244	1.10e+02	9.17e-01	5.89e-04	1.65e-04	1.40e-07	7.91e-09
Diethyl Benzenes	106	7.00e+00	4.07e-05	151.8	0.06689	2.80e+01	2.64e-01	1.70e-04	9.85e-05	8.35e-08	4.72e-09
Methyl Propyl Benzenes	120	3.20e+00	2.11e-05	172.26	0.06244	1.40e+00	1.17e-02	7.49e-06	2.10e-06	1.78e-09	1.01e-10
Methyl Ethenyl Benzenes	120	3.20e+00	2.11e-05	172.26	0.06244	1.40e+00	1.17e-02	7.49e-06	2.10e-06	1.78e-09	1.01e-10
Trimethyl Benzenes	120	1.00e+02	6.59e-04	172.26	0.06244	3.90e+02	3.25e+00	2.09e-03	1.83e-02	1.55e-05	8.77e-07
Dimethyl ethyl benzenes	106	7.00e+00	4.07e-05	151.8	0.06689	2.00e+02	1.89e+00	1.21e-03	7.04e-04	5.96e-07	3.37e-08
Tetramethyl Benzenes	120	1.00e+02	6.59e-04	172.26	0.06244	1.10e-02	9.17e-05	5.89e-08	5.16e-07	4.37e-10	2.47e-11
Oxygenated Benzenes	106	1.00e+02	5.82e-04	132.86	0.07091	2.60e+02	2.45e+00	1.57e-03	1.39e-02	1.17e-05	6.64e-07
Cyclic alkanes	98	1.44e+02	7.75e-04	131.34	0.07189	5.30e+01	5.41e-01	3.47e-04	4.12e-03	3.49e-06	1.97e-07
Cyclic Alkenes	98	1.44e+02	7.75e-04	131.34	0.07189	3.70e+02	3.78e+00	2.42e-03	2.88e-02	2.44e-05	1.38e-06
Halogenated Alkanes	133	1.23e+02	8.98e-04	97.44	0.07917	2.20e+00	1.65e-02	1.06e-05	1.61e-04	1.36e-07	7.71e-09
n-chain Alkanes	86	1.20e+02	5.66e-04	110.88	0.07853	3.20e+02	3.72e+00	2.39e-03	2.27e-02	1.92e-05	1.09e-06
Branched Alkanes	86	1.20e+02	5.66e-04	110.88	0.07853	1.80e+02	2.09e+00	1.34e-03	1.28e-02	1.08e-05	6.11e-07
Branched Alkenes/Alkynes	86	1.20e+02	5.66e-04	110.88	0.07853	6.10e+02	7.09e+00	4.55e-03	4.32e-02	3.66e-05	2.07e-06
Methylated Naphthalenes	108	2.40e-01	1.83e-09	180.84	0.06072	8.40e+00	7.78e-02	4.99e-05	1.18e-09	1.00e-12	5.66e-14
Methylated Phenols	108	2.40e-01	1.42e-06	136.82	0.06987	1.10e+00	1.02e-02	6.54e-06	1.39e-07	1.17e-10	6.64e-12
Cyclic Ketones	138	3.80e-01	2.88e-06	177.74	0.06078	6.20e-01	4.49e-03	2.88e-06	1.08e-07	9.12e-11	5.16e-12
Simple Alcohols	74	4.40e+00	1.79e-05	91.28	0.08694	2.30e-03	3.11e-05	2.00e-08	6.61e-09	5.60e-12	3.17e-13
Non-Cyclic Acids	72	3.20e+00	1.26e-05	68.38	0.09820	2.20e+02	3.06e+00	1.96e-03	5.20e-04	4.40e-07	2.49e-08
Amines	113	1.00e-03	6.20e-09	131.95	0.07065	1.70e+02	1.50e+00	9.66e-04	9.03e-08	7.65e-11	4.32e-12
PCBs	328	7.70e-05	1.39e-09	235.32	0.05074	7.50e+00	2.29e-02	1.47e-05	2.20e-10	1.87e-13	1.05e-14
Furans	72	1.31e+02	5.18e-04	87.32	0.08890	1.40e+00	1.94e-02	1.25e-05	1.23e-04	1.04e-07	5.87e-09

Table V-1

VOC EMISSION ESTIMATE CALCULATIONS

American Chemical Services Remedial Investigation
Griffith Indiana

Source Area: Onsite Containment Area

This table summarizes the mathematical relationships used to model chemical emission rates from soils and the dispersion of chemical concentrations in air at a distance of 100 meters from the source. The relationships were obtained from the "Superfund Exposure Assessment Manual" (SEAM), 1988. The following defines the column headings: MW, molecular weight; VP, vapor pressure; Csi, saturation vapor concentration; ADV, atomic diffusion volume; Di, diffusion coefficient; Exp. Pnt. Conc., exposure point concentration; Mf, mmoles contaminant per kg soil; Mi, mole fraction (ie. fraction of total moles for each chemical); Ei, estimated emission rate. The following describes the equations and Site specific variables:

$$Csi = \frac{VP * MW}{R * T}$$

where:

R = 6.24e+04 (mm Hg-cm3/mole-K)
(T) temperature in degrees K = 293.15

$$Di = \frac{0.001 * T^{1.75} * ((1/MW) + (1/MWa))^{(1/2)}}{[(ADV^{(1/3)} + (ADVa^{(1/3)})]^2}$$

where:

(MWa) molecular wt. of air = 28.8 g/mole
(ADVa) atomic diffusion volume of air = 20.1 cm3/mole
(T) temperature in degrees K = 293.15
^ = exponent

$$Ei = \frac{Di * Csi * A * Pt^{(4/3)} * Mi}{Dsc}$$

where:

(A) surface area = 110,000,000 cm2
(Dcs) depth of soil cover = 152 cm
(Pt) soil porosity = 0.4
Pt^(4/3) = 2.95e-01
^ = exponent

$$C(x) = \frac{Ei}{(pi * Oy * Oz * u)} * 0.30$$

where:

C(x) = concentration at distance x

		at 100 m:	500 m:
pi	= 3.14		
Oy	= lateral dispersion coef., stability class D =	8	35 m
Oz	= vertical dispersion coef., stability class D =	4.7	19 m
u	= average wind speed (assume 3 m/s)		
0.3	= assume wind blows 30 % of the time towards receptor		

Default equation variables were obtained from SEAM. Refer to SEAM for further information.

JAH/jah/BJC
Version 1/25/91
[acs.2020]v-1.w20

Table V-2

VOC EMISSION ESTIMATE CALCULATIONS

American Chemical Services Remedial Investigation
Griffith Indiana

Source Area: Still Bottoms - Treatment Lagoon Area

COMPOUND	Chemical Emission (Ei) Calculation Variables									Estimated Downwind Concentration	
	MW (g/mole)	VP (mm Hg)	CSi (g/cm3)	ADV (cm3/mole)	Di @ 19 C (Cm2/sec)	Exp. Pnt. Conc. (mg/kg)	Mf mM/kg soil	Mi (mole/mole)	Ei (g/sec)	100 m (g/m3)	500 m (g/m3)
Methylene Chloride	85	3.62e+02	1.69e-03	59.46	0.10151	3.80e+02	4.47e+00	3.48e-03	6.15e-02	5.21e-05	2.94e-06
Acetone	58	2.70e+02	8.60e-04	66.86	0.10245	1.20e+01	2.07e-01	1.61e-04	1.46e-03	1.24e-06	7.00e-08
1,1-Dichloroethane	99	1.82e+02	9.89e-04	79.92	0.08853	2.20e+01	2.22e-01	1.73e-04	1.56e-03	1.32e-06	7.47e-08
Total-1,2-Dichloroethene	97	2.08e+02	1.11e-03	75.96	0.09059	3.20e+02	3.30e+00	2.57e-03	2.65e-02	2.25e-05	1.27e-06
Chloroform	119	1.51e+02	9.86e-04	76.98	0.08818	2.10e+03	1.76e+01	1.37e-02	1.23e-01	1.04e-04	5.89e-06
1,2-Dichloroethane	99	6.40e+01	3.48e-04	79.92	0.08853	4.00e+01	4.04e-01	3.14e-04	9.97e-04	8.45e-07	4.78e-08
2-Butanone	72	7.75e+01	3.06e-04	87.32	0.08890	5.30e+02	7.36e+00	5.73e-03	1.61e-02	1.36e-05	7.70e-07
1,1,1-Trichloroethane	133	1.23e+02	8.98e-04	97.44	0.07917	2.10e+04	1.58e+02	1.23e-01	9.00e-01	7.62e-04	4.31e-05
Carbon Tetrachloride	154	9.00e+01	7.61e-04	94.5	0.07922	3.60e+03	2.34e+01	1.82e-02	1.13e-01	9.57e-05	5.41e-06
1,2-Dichloropropane	113	4.20e+01	2.61e-04	100.38	0.07942	2.20e+01	1.95e-01	1.51e-04	3.23e-04	2.74e-07	1.55e-08
Trichloroethene	131	5.79e+01	4.16e-04	93.48	0.08067	1.70e+03	1.30e+01	1.01e-02	3.49e-02	2.96e-05	1.67e-06
1,1,2-Trichloroethane	133	3.00e+01	2.19e-04	97.44	0.07917	8.10e+00	6.09e-02	4.74e-05	8.47e-05	7.17e-08	4.06e-09
Benzene	78	9.52e+01	4.08e-04	110.88	0.07954	1.70e+02	2.18e+00	1.70e-03	5.67e-03	4.80e-06	2.71e-07
4-Methyl-2-Pentanone	100	6.00e+00	3.29e-05	128.24	0.07247	1.50e+03	1.50e+01	1.17e-02	2.87e-03	2.43e-06	1.37e-07
Tetrachloroethene	166	1.78e+01	1.62e-04	111	0.07360	1.60e+03	9.64e+00	7.50e-03	9.22e-03	7.81e-06	4.42e-07
Toluene	92	2.81e+01	1.42e-04	131.34	0.07242	2.30e+04	2.50e+02	1.94e-01	2.06e-01	1.74e-04	9.86e-06
Chlorobenzene	113	1.17e+01	7.26e-05	128.4	0.07149	2.00e-03	1.77e-05	1.38e-08	7.36e-09	6.24e-12	3.53e-13
Ethylbenzene	106	7.00e+00	4.07e-05	151.8	0.06689	8.40e+03	7.92e+01	6.16e-02	1.73e-02	1.47e-05	8.29e-07
Styrene	104	5.00e+00	2.85e-05	147.84	0.06781	1.60e+02	1.54e+00	1.20e-03	2.39e-04	2.02e-07	1.14e-08
Total Xylenes	106	1.00e+01	5.82e-05	151.8	0.06689	9.40e+03	8.87e+01	6.90e-02	2.77e-02	2.34e-05	1.33e-06
Phenol	94	3.41e-01	1.76e-06	116.36	0.07610	1.09e+02	1.16e+00	8.99e-04	1.24e-05	1.05e-08	5.94e-10
bis(2-Chloroethyl)ether	143	7.10e-01	5.57e-06	126.32	0.07045	1.10e+02	7.69e-01	5.98e-04	2.42e-05	2.05e-08	1.16e-09
2-Chlorophenol	129	5.90e-02	4.18e-07	133.88	0.06932	1.30e-01	1.01e-03	7.84e-07	2.34e-09	1.98e-12	1.12e-13
1,3-Dichlorobenzene	147	2.28e+00	1.84e-05	145.92	0.06600	3.85e-01	2.62e-03	2.04e-06	2.55e-07	2.16e-10	1.22e-11
1,4-Dichlorobenzene	147	1.18e+00	9.52e-06	145.92	0.06600	2.39e+00	1.63e-02	1.27e-05	8.21e-07	6.95e-10	3.93e-11
Benzyl alcohol	108	9.52e+01	5.64e-04	136.82	0.06987	6.88e-01	6.37e-03	4.96e-06	2.01e-05	1.71e-08	9.65e-10
1,2-Dichlorobenzene	147	1.00e+00	8.07e-06	145.92	0.06600	7.00e+01	4.76e-01	3.70e-04	2.03e-05	1.72e-08	9.74e-10
2-Methylphenol	108	2.40e-01	1.42e-06	136.82	0.06987	1.50e+01	1.39e-01	1.08e-04	1.11e-06	9.38e-10	5.30e-11
4-Methylphenol	108	1.10e-01	6.52e-07	136.82	0.06987	4.30e+01	3.98e-01	3.10e-04	1.45e-06	1.23e-09	6.97e-11
Isophorone	138	3.80e-01	2.88e-06	177.74	0.06078	2.60e+03	1.88e+01	1.47e-02	2.64e-04	2.24e-07	1.27e-08
2,4-Dimethylphenol	122	5.90e-02	3.95e-07	157.28	0.06492	1.42e+00	1.16e-02	9.05e-06	2.39e-08	2.03e-11	1.15e-12
Benzoic acid	122	9.52e+01	6.37e-04	138.34	0.06869	3.25e+01	2.67e-01	2.07e-04	9.36e-04	7.93e-07	4.48e-08
2,4-Dichlorophenol	163	5.90e-02	5.28e-07	151.4	0.06442	1.68e+00	1.03e-02	7.99e-06	2.80e-08	2.37e-11	1.34e-12
1,2,4-Trichlorobenzene	181	2.90e-01	2.88e-06	163.44	0.06180	1.44e+00	7.95e-03	6.18e-06	1.13e-07	9.61e-11	5.44e-12
Naphthalene	128	2.60e-04	1.83e-09	180.84	0.06072	7.50e+02	5.86e+00	4.56e-03	5.21e-08	4.41e-11	2.50e-12
Hexachlorobutadiene	261	2.00e+00	2.87e-05	183	0.05750	4.00e+01	1.53e-01	1.19e-04	2.02e-05	1.71e-08	9.70e-10
4-Chloro-3-methylphenol	143	5.90e-02	4.63e-07	137.84	0.06783	3.01e-01	2.11e-03	1.64e-06	5.31e-09	4.50e-12	2.54e-13
2-Methylnaphthalene	142	5.90e-02	4.60e-07	201.3	0.05732	3.20e+02	2.25e+00	1.75e-03	4.76e-06	4.03e-09	2.28e-10
2,4,6-Trichlorophenol	197	1.20e-02	1.30e-07	168.92	0.06056	3.47e-01	1.76e-03	1.37e-06	1.11e-09	9.39e-13	5.31e-14

Table V-2

VOC EMISSION ESTIMATE CALCULATIONS

American Chemical Services Remedial Investigation
Griffith Indiana

Source Area: Still Bottoms - Treatment Lagoon Area

COMPOUND	Chemical Emission (Ei) Calculation Variables									Estimated Downwind Concentration	
	MW (g/mole)	VP (mm Hg)	CSi (g/cm3)	ADV (cm3/mole)	Di @ 19 C (Cm2/sec)	Exp. Pnt. Conc. (mg/kg)	Mf mM/kg soil	Mi (mole/mole)	Ei (g/sec)	100 m (g/m3)	500 m (g/m3)
2,4,5-Trichlorophenol	197	1.00e+00	1.08e-05	168.92	0.06056	9.60e-02	4.87e-04	3.79e-07	2.56e-08	2.17e-11	1.23e-12
2-Chloronaphthalene	163	5.90e-02	5.28e-07	198.36	0.05707	5.45e-01	3.34e-03	2.60e-06	8.07e-09	6.83e-12	3.86e-13
Dimethylphthalate	194	1.00e-02	1.06e-07	206.72	0.05533	3.20e+02	1.65e+00	1.28e-03	7.79e-07	6.60e-10	3.73e-11
Acenaphthylene	152	2.90e-02	2.42e-07	213.84	0.05545	3.30e+00	2.17e-02	1.69e-05	2.33e-08	1.98e-11	1.12e-12
Acenaphthene	154	1.55e-03	1.31e-08	217.8	0.05492	2.33e+00	1.52e-02	1.18e-05	8.74e-10	7.40e-13	4.19e-14
4-Nitrophenol	139	5.90e-02	4.50e-07	131.03	0.06951	1.52e+00	1.09e-02	8.49e-06	2.74e-08	2.32e-11	1.31e-12
Dibenzofuran	170	2.00e-02	1.87e-07	223.28	0.05390	3.42e-01	2.01e-03	1.56e-06	1.62e-09	1.37e-12	7.76e-14
Diethylphthalate	222	3.50e-03	4.26e-08	247.64	0.05049	1.00e+02	4.50e-01	3.50e-04	7.78e-08	6.59e-11	3.72e-12
Fluorene	116	7.10e-04	4.52e-09	234.3	0.05446	5.07e+00	4.37e-02	3.40e-05	8.62e-10	7.31e-13	4.13e-14
N-Nitrosodiphenylamine	198	3.80e-05	4.13e-10	234.66	0.05213	1.30e+01	6.57e-02	5.11e-05	1.13e-10	9.60e-14	5.43e-15
4-Bromophenyl-phenylether	249	2.00e-02	2.73e-07	260.26	0.04903	9.23e-01	3.71e-03	2.88e-06	3.99e-09	3.38e-12	1.91e-13
Hexachlorobenzene	285	1.09e-05	1.71e-10	216	0.05310	7.16e-01	2.51e-03	1.95e-06	1.82e-12	1.55e-15	8.74e-17
Pentachlorophenol	266	1.10e-04	1.61e-09	203.96	0.05469	6.40e+01	2.41e-01	1.87e-04	1.69e-09	1.44e-12	8.11e-14
Phenanthrene	178	6.80e-04	6.64e-09	250.8	0.05091	1.00e+01	5.62e-02	4.37e-05	1.52e-09	1.29e-12	7.30e-14
Anthracene	178	1.95e-04	1.91e-09	250.8	0.05091	9.53e-01	5.35e-03	4.16e-06	4.16e-11	3.53e-14	1.99e-15
Di-n-butylphthalate	278	1.00e-05	1.53e-10	329.48	0.04362	6.90e+02	2.48e+00	1.93e-03	1.32e-09	1.12e-12	6.34e-14
Fluoranthene	202	5.00e-06	5.54e-11	283.8	0.04764	6.10e-01	3.02e-03	2.35e-06	6.39e-13	5.42e-16	3.06e-17
Pyrene	202	2.50e-06	2.77e-11	283.8	0.04764	1.70e+00	8.40e-03	6.54e-06	8.89e-13	7.53e-16	4.26e-17
Butylbenzylphthalate	312	8.60e+06	1.47e+02	375.02	0.04077	9.60e+02	3.08e+00	2.39e-03	1.48e+03	1.25e+00	7.09e-02
Benzo(a)anthracene	228	2.20e-08	2.75e-13	320.76	0.04463	3.21e-01	1.41e-03	1.10e-06	1.39e-15	1.18e-18	6.65e-20
Chrysene	228	6.30e-09	7.88e-14	320.76	0.04463	2.96e-01	1.30e-03	1.01e-06	3.67e-16	3.10e-19	1.76e-20
bis(2-Ethylhexyl)phthalat	391	8.60e+06	1.85e+02	493.16	0.03535	2.60e+03	6.65e+00	5.17e-03	3.48e+03	2.95e+00	1.67e-01
Di-n-octylphthalate	391	8.60e+06	1.85e+02	493.16	0.03535	1.95e+01	4.99e-02	3.88e-05	2.61e+01	2.21e-02	1.25e-03
Benzo(b)fluoranthene	252	5.00e-07	6.92e-12	353.76	0.04236	3.20e-01	1.27e-03	9.86e-07	2.98e-14	2.52e-17	1.43e-18
Benzo(k)fluoranthene	252	5.10e-07	7.05e-12	353.76	0.04236	3.20e-01	1.27e-03	9.86e-07	3.04e-14	2.57e-17	1.45e-18
Benzo(a)pyrene	252	5.60e-09	7.75e-14	353.76	0.04236	2.15e-01	8.52e-04	6.63e-07	2.24e-16	1.90e-19	1.07e-20
Gamma-BHC (Lindane)	291	1.60e+04	2.56e-01	110.88	0.07125	1.10e+00	3.78e-03	2.94e-06	5.52e-03	4.67e-06	2.64e-07
Endosulfan 1	407	5.50e-06	1.23e-10	310.82	0.04417	1.20e+00	2.95e-03	2.29e-06	1.28e-12	1.09e-15	6.15e-17
4,4-DDT	355	5.50e-06	1.07e-10	346.32	0.04215	2.80e+01	7.89e-02	6.14e-05	2.86e-11	2.42e-14	1.37e-15
Endrin Ketone	381	1.78e-07	3.72e-12	336.32	0.04264	2.60e-01	6.82e-04	5.31e-07	8.68e-15	7.36e-18	4.16e-19
TOTAL PCBs	328	7.70e-05	1.39e-09	235.32	0.05074	1.58e+02	4.82e-01	3.75e-04	2.72e-09	2.30e-12	1.30e-13
Propyl Benzenes	120	3.20e+00	2.11e-05	172.26	0.06244	3.80e+02	3.17e+00	2.46e-03	3.34e-04	2.83e-07	1.60e-08
Propenyl Benzenes	120	3.20e+00	2.11e-05	172.26	0.06244	6.70e+01	5.58e-01	4.34e-04	5.89e-05	4.99e-08	2.82e-09
Ethyl Methyl Benzenes	120	3.20e+00	2.11e-05	172.26	0.06244	1.90e+03	1.58e+01	1.23e-02	1.67e-03	1.42e-06	8.00e-08
Diethyl Benzenes	106	7.00e+00	4.07e-05	151.8	0.06689	5.10e+02	4.81e+00	3.74e-03	1.05e-03	8.90e-07	5.03e-08
Methyl Propyl Benzenes	120	3.20e+00	2.11e-05	172.26	0.06244	1.10e+03	9.17e+00	7.13e-03	9.67e-04	8.19e-07	4.63e-08
Methyl Phenyl Benzenes	128	2.60e-04	1.83e-09	180.84	0.06072	3.10e+01	2.42e-01	1.88e-04	2.15e-09	1.82e-12	1.03e-13
Trimethyl Benzenes	120	1.00e+02	6.59e-04	172.26	0.06244	1.80e+03	1.50e+01	1.17e-02	4.95e-02	4.19e-05	2.37e-06
Dimethyl ethyl benzenes	106	7.00e+00	4.07e-05	151.8	0.06689	1.90e+03	1.79e+01	1.39e-02	3.92e-03	3.32e-06	1.88e-07

Table V-2

VOC EMISSION ESTIMATE CALCULATIONS

American Chemical Services Remedial Investigation
Griffith Indiana

Source Area: Still Bottoms - Treatment Lagoon Area

	Chemical Emission (Ei) Calculation Variables									Estimated Downwind Concentration	
COMPOUND	MW (g/mole)	VP (mm Hg)	CSi (g/cm3)	ADV (cm3/mole)	Di @ 19 C (Cm2/sec)	Exp. Pnt. Conc. (mg/kg)	Mf mM/kg soil	Mi (mole/mole)	Ei (g/sec)	100 m (g/m3)	500 m (g/m3)
Tetramethyl Benzenes	120	1.00e+02	6.59e-04	172.26	0.06244	1.30e+03	1.08e+01	8.43e-03	3.57e-02	3.03e-05	1.71e-06
Oxygenated Benzenes	106	1.00e+02	5.82e-04	132.86	0.07091	1.00e+02	9.43e-01	7.34e-04	3.12e-03	2.64e-06	1.49e-07
Nitrogenated Benzenes	123	1.50e-01	1.01e-06	125.55	0.07159	2.50e+02	2.03e+00	1.58e-03	1.18e-05	1.00e-08	5.66e-10
Cyclic alkanes	98	1.44e+02	7.75e-04	131.34	0.07189	5.80e+03	5.92e+01	4.60e-02	2.64e-01	2.24e-04	1.27e-05
Cyclic Alkenes	98	1.44e+02	7.75e-04	131.34	0.07189	1.20e+03	1.22e+01	9.53e-03	5.47e-02	4.63e-05	2.62e-06
Halogenated Alkanes	133	1.23e+02	8.98e-04	97.44	0.07917	4.80e+03	3.61e+01	2.81e-02	2.06e-01	1.74e-04	9.85e-06
n-chain Alkanes	86	1.20e+02	5.66e-04	110.88	0.07853	2.30e+04	2.67e+02	2.08e-01	9.54e-01	8.08e-04	4.57e-05
Branched Alkanes	86	1.20e+02	5.66e-04	110.88	0.07853	5.90e+03	6.86e+01	5.34e-02	2.45e-01	2.07e-04	1.17e-05
Branched Alkenes/Alkynes	86	1.20e+02	5.66e-04	110.88	0.07853	2.60e+03	3.02e+01	2.35e-02	1.08e-01	9.13e-05	5.16e-06
Methylated Naphthalenes	108	2.40e-01	1.83e-09	180.84	0.06072	5.70e+01	5.28e-01	4.11e-04	4.69e-09	3.98e-12	2.25e-13
Phthalates	148	2.00e-04	1.62e-09	156.36	0.06399	5.80e+01	3.92e-01	3.05e-04	3.27e-09	2.77e-12	1.56e-13
Methylated Phenols	108	2.40e-01	1.42e-06	136.82	0.06987	7.20e-01	6.67e-03	5.19e-06	5.31e-08	4.50e-11	2.54e-12
Methylated Ketones	58	2.70e+02	8.60e-04	66.86	0.10245	1.60e+00	2.76e-02	2.15e-05	1.95e-04	1.65e-07	9.33e-09
Simple Ketones	72	7.75e+01	3.06e-04	87.32	0.08890	7.70e-01	1.07e-02	8.32e-06	2.33e-05	1.98e-08	1.12e-09
Cyclic Ketones	138	3.80e-01	2.88e-06	177.74	0.06078	1.60e+02	1.16e+00	9.02e-04	1.63e-05	1.38e-08	7.79e-10
Diols	62	5.00e-02	1.70e-07	55.84	0.10881	3.00e+00	4.84e-02	3.76e-05	7.18e-08	6.08e-11	3.44e-12
Simple Alcohols	74	4.40e+00	1.79e-05	91.28	0.08694	5.50e+01	7.43e-01	5.78e-04	9.26e-05	7.84e-08	4.43e-09
Cyclic Alcohols	108	1.00e+00	5.93e-06	136.82	0.06987	1.50e+01	1.39e-01	1.08e-04	4.61e-06	3.91e-09	2.21e-10
Oxygenated Alcohols	118	6.00e-01	3.89e-06	137.68	0.06906	2.80e+02	2.37e+00	1.85e-03	5.11e-05	4.32e-08	2.45e-09
Non-Cyclic Acids	72	3.20e+00	1.26e-05	68.38	0.09820	3.10e+02	4.31e+00	3.35e-03	4.29e-04	3.63e-07	2.05e-08
Amines	113	1.00e-03	6.20e-09	131.95	0.07065	1.40e+02	1.24e+00	9.64e-04	4.35e-08	3.69e-11	2.08e-12
Furans	72	1.31e+02	5.18e-04	87.32	0.08890	4.40e-01	6.11e-03	4.75e-06	2.26e-05	1.91e-08	1.08e-09

Table V-2

VOC EMISSION ESTIMATE CALCULATIONS

American Chemical Services Remedial Investigation
Griffith Indiana

Source Area: Still Bottoms - Treatment Lagoon Area

This table summarizes the mathematical relationships used to model chemical emission rates from soils and the dispersion of chemical concentrations in air at a distance of 100 meters from the source. The relationships were obtained from the "Superfund Exposure Assessment Manual" (SEAM), 1988. The following defines the column headings:
MW, molecular weight; VP, vapor pressure; Csi, saturation vapor concentration; ADV, atomic diffusion volume; Di, diffusion coefficient; Exp. Pnt. Conc., exposure point concentration; Mf, mmoles contaminant per kg soil; Mi, mole fraction (ie. fraction of total moles for each chemical); Ei, estimated emission rate. The following describes the equations and Site specific variables:

$$Csi = \frac{VP * MW}{R * T}$$

where:

R = 6.24e+04 (mm Hg-cm3/mole-K)
(T) temperature in degrees K = 293.15

$$Di = \frac{0.001 * T^{1.75} * ((1/MW) + (1/MWa))^{(1/2)}}{[(ADV^{(1/3)} + (ADVa^{(1/3)})]^2}$$

where:

(MWa) molecular wt. of air = 28.8 g/mole
(ADVa) atomic diffusion volume of air = 20.1 cm3/mole
(T) temperature in degrees K = 293.15
^ = exponent

$$Ei = \frac{Di * Csi * A * Pt^{(4/3)} * Mi}{Dsc}$$

where:

(A) surface area = 64,000,000 cm2
(Dcs) depth of soil cover = 183 cm
(Pt) soil porosity = 0.4
Pt^(4/3) = 2.95e-01
^ = exponent

$$C(x) = \frac{Ei}{(pi * Oy * Oz * u)} * 0.30$$

where:

C(x) = concentration at distance x

		at 100 m:	500 m:
pi	= 3.14		
Oy	= lateral dispersion coef., stability class D =	8	35 m
Oz	= vertical dispersion coef., stability class D =	4.7	19 m
u	= average wind speed (assume 3 m/s)		
0.3	= assume wind blows 30 % of the time towards receptor		

Default equation variables were obtained from SEAM. Refer to SEAM for further information.

JAH/jah/BJC
Version 1/24/91
[ACS.2020]v-2.w20

Table V-3

VOC EMISSION ESTIMATE CALCULATIONS

American Chemical Services Remedial Investigation
Griffith Indiana

Source Area: Offsite Containment Area

COMPOUND	MW (g/mole)	VP (mm Hg)	CSi (g/cm3)	ADV (cm3/mole)	Di @ 19 C (Cm2/sec)	Exp. Pnt. Conc. (mg/kg)	Mf mM/kg soil	Mi (mole/mole)	Ei (g/sec)	Estimated Downwind Concentration 100 m (g/m3)	500 m (g/m3)
	Chemical Emission (Ei) Calculation Variables										
Vinyl Chloride	63	2.66e+03	9.20e-03	58.44	0.10662	2.90e+00	4.60e-02	5.80e-06	8.00e-04	6.78e-07	3.83e-08
Chloroethane	51	3.80e+03	1.06e-02	62.4	0.10767	2.00e+00	3.92e-02	4.94e-06	7.96e-04	6.74e-07	3.81e-08
Methylene Chloride	85	3.62e+02	1.69e-03	59.46	0.10151	2.10e+02	2.47e+00	3.11e-04	7.51e-03	6.36e-06	3.60e-07
Acetone	58	2.70e+02	8.60e-04	66.86	0.10245	1.71e+04	2.95e+02	3.71e-02	4.60e-01	3.89e-04	2.20e-05
1,1-Dichloroethene	97	6.00e+02	3.19e-03	75.96	0.09059	3.90e+02	4.02e+00	5.06e-04	2.06e-02	1.75e-05	9.88e-07
1,1-Dichloroethane	99	1.82e+02	9.89e-04	79.92	0.08853	4.90e+02	4.95e+00	6.23e-04	7.68e-03	6.51e-06	3.68e-07
Total-1,2-Dichloroethene	97	2.08e+02	1.11e-03	75.96	0.09059	3.40e+01	3.51e-01	4.41e-05	6.23e-04	5.28e-07	2.99e-08
Chloroform	119	1.51e+02	9.86e-04	76.98	0.08818	2.80e+03	2.35e+01	2.96e-03	3.63e-02	3.07e-05	1.74e-06
1,2-Dichloroethane	99	6.40e+01	3.48e-04	79.92	0.08853	4.40e+02	4.44e+00	5.60e-04	2.43e-03	2.05e-06	1.16e-07
2-Butanone	72	7.75e+01	3.06e-04	87.32	0.08890	9.90e+04	1.38e+03	1.73e-01	6.64e-01	5.62e-04	3.18e-05
1,1,1-Trichloroethane	133	1.23e+02	8.98e-04	97.44	0.07917	1.50e+05	1.13e+03	1.42e-01	1.42e+00	1.20e-03	6.81e-05
1,2-Dichloropropane	113	4.20e+01	2.61e-04	100.38	0.07942	6.80e+01	6.02e-01	7.58e-05	2.21e-04	1.87e-07	1.06e-08
Trichloroethene	131	5.79e+01	4.16e-04	93.48	0.08067	1.90e+04	1.45e+02	1.83e-02	8.63e-02	7.31e-05	4.14e-06
1,1,2-Trichloroethane	133	3.00e+01	2.19e-04	97.44	0.07917	4.00e+02	3.01e+00	3.79e-04	9.24e-04	7.83e-07	4.43e-08
Benzene	78	9.52e+01	4.08e-04	110.88	0.07954	1.50e+03	1.92e+01	2.42e-03	1.11e-02	9.36e-06	5.29e-07
4-Methyl-2-Pentanone	100	6.00e+00	3.29e-05	128.24	0.07247	6.10e+04	6.10e+02	7.68e-02	2.58e-02	2.19e-05	1.24e-06
2-Hexanone	100	2.00e+00	1.10e-05	128.24	0.07247	4.70e+01	4.70e-01	5.92e-05	6.63e-06	5.61e-09	3.17e-10
Tetrachloroethene	166	1.78e+01	1.62e-04	111	0.07360	4.60e+04	2.77e+02	3.49e-02	5.86e-02	4.97e-05	2.81e-06
1,1,2,2-Tetrachloroethane	168	5.00e+00	4.61e-05	114.96	0.07244	8.93e-03	5.32e-05	6.70e-09	3.15e-09	2.67e-12	1.51e-13
Toluene	92	2.81e+01	1.42e-04	131.34	0.07242	1.30e+05	1.41e+03	1.78e-01	2.57e-01	2.18e-04	1.23e-05
Chlorobenzene	113	1.17e+01	7.26e-05	128.4	0.07149	1.00e+03	8.85e+00	1.11e-03	8.14e-04	6.89e-07	3.90e-08
Ethylbenzene	106	7.00e+00	4.07e-05	151.8	0.06689	2.30e+04	2.17e+02	2.73e-02	1.05e-02	8.88e-06	5.02e-07
Styrene	104	5.00e+00	2.85e-05	147.84	0.06781	3.10e+02	2.98e+00	3.75e-04	1.02e-04	8.66e-08	4.90e-09
Total Xylenes	106	1.00e+01	5.82e-05	151.8	0.06689	1.00e+05	9.43e+02	1.19e-01	6.51e-02	5.51e-05	3.12e-06
Phenol	94	3.41e-01	1.76e-06	116.36	0.07610	5.12e+02	5.45e+00	6.86e-04	1.29e-05	1.10e-08	6.19e-10
bis(2-Chloroethyl)ether	143	7.10e-01	5.57e-06	126.32	0.07045	2.00e+02	1.40e+00	1.76e-04	9.73e-06	8.24e-09	4.66e-10
1,4-Dichlorobenzene	147	1.18e+00	9.52e-06	145.92	0.06600	5.52e+00	3.75e-02	4.72e-06	4.18e-07	3.54e-10	2.00e-11
Benzyl alcohol	108	9.52e+01	5.64e-04	136.82	0.06987	3.40e+01	3.15e-01	3.96e-05	2.20e-04	1.86e-07	1.05e-08
1,2-Dichlorobenzene	147	1.00e+00	8.07e-06	145.92	0.06600	1.20e+02	8.16e-01	1.03e-04	7.71e-06	6.53e-09	3.69e-10
2-Methylphenol	108	2.40e-01	1.42e-06	136.82	0.06987	6.78e+01	6.28e-01	7.91e-05	1.11e-06	9.38e-10	5.30e-11
4-Methylphenol	108	1.10e-01	6.52e-07	136.82	0.06987	2.10e+02	1.94e+00	2.45e-04	1.57e-06	1.33e-09	7.52e-11
Isophorone	138	3.80e-01	2.88e-06	177.74	0.06078	3.60e+03	2.61e+01	3.29e-03	8.09e-05	6.85e-08	3.87e-09
2,4-Dimethylphenol	122	5.90e-02	3.95e-07	157.28	0.06492	1.16e+02	9.54e-01	1.20e-04	4.34e-07	3.67e-10	2.08e-11
Benzoic acid	122	9.52e+01	6.37e-04	138.34	0.06869	1.17e+04	9.59e+01	1.21e-02	7.45e-02	6.31e-05	3.57e-06
2,4-Dichlorophenol	163	5.90e-02	5.28e-07	151.4	0.06442	2.00e-01	1.23e-03	1.55e-07	7.40e-10	6.26e-13	3.54e-14
1,2,4-Trichlorobenzene	181	2.90e-01	2.88e-06	163.44	0.06180	3.44e+01	1.90e-01	2.39e-05	6.00e-07	5.08e-10	2.87e-11
Naphthalene	128	2.60e-04	1.83e-09	180.84	0.06072	2.40e+03	1.88e+01	2.36e-03	3.69e-08	3.12e-11	1.77e-12
Hexachlorobutadiene	261	2.00e+00	2.87e-05	183	0.05750	1.50e+02	5.75e-01	7.24e-05	1.68e-05	1.42e-08	8.04e-10
2-Methylnaphthalene	142	5.90e-02	4.60e-07	201.3	0.05732	9.90e+02	6.97e+00	8.78e-04	3.26e-06	2.76e-09	1.56e-10

Table V-3

VOC EMISSION ESTIMATE CALCULATIONS

American Chemical Services Remedial Investigation
Griffith Indiana

Source Area: Offsite Containment Area

COMPOUND	Chemical Emission (Ei) Calculation Variables									Estimated Downwind Concentration	
	MW (g/mole)	VP (mm Hg)	CSi (g/cm3)	ADV (cm3/mole)	Di @ 19 C (Cm2/sec)	Exp. Pnt. Conc. (mg/kg)	Mf mM/kg soil	Mi (mole/mole)	Ei (g/sec)	100 m (g/m3)	500 m (g/m3)
Dimethylphthalate	194	1.00e-02	1.06e-07	206.72	0.05533	5.22e+02	2.69e+00	3.39e-04	2.81e-07	2.38e-10	1.34e-11
Acenaphthylene	152	2.90e-02	2.42e-07	213.84	0.05545	1.90e+00	1.25e-02	1.58e-06	2.98e-09	2.52e-12	1.43e-13
2,6-Dinitrotoluene	182	1.80e-02	1.80e-07	160.68	0.06225	7.49e-01	4.12e-03	5.18e-07	8.17e-10	6.92e-13	3.91e-14
Acenaphthene	154	1.55e-03	1.31e-08	217.8	0.05492	1.80e+01	1.17e-01	1.47e-05	1.49e-09	1.26e-12	7.14e-14
4-Nitrophenol	139	5.90e-02	4.50e-07	131.03	0.06951	3.11e+00	2.24e-02	2.82e-06	1.24e-08	1.05e-11	5.95e-13
Dibenzofuran	170	2.00e-02	1.87e-07	223.28	0.05390	4.16e+00	2.45e-02	3.08e-06	4.36e-09	3.69e-12	2.09e-13
Diethylphthalate	222	3.50e-03	4.26e-08	247.64	0.05049	2.80e+02	1.26e+00	1.59e-04	4.81e-08	4.08e-11	2.31e-12
Fluorene	116	7.10e-04	4.52e-09	234.3	0.05446	3.10e+01	2.67e-01	3.37e-05	1.17e-09	9.88e-13	5.59e-14
N-Nitrosodiphenylamine	198	3.80e-05	4.13e-10	234.66	0.05213	5.30e+01	2.68e-01	3.37e-05	1.02e-10	8.65e-14	4.89e-15
Hexachlorobenzene	285	1.09e-05	1.71e-10	216	0.05310	1.92e+00	6.74e-03	8.49e-07	1.08e-12	9.17e-16	5.18e-17
Pentachlorophenol	266	1.10e-04	1.61e-09	203.96	0.05469	1.80e+02	6.77e-01	8.52e-05	1.05e-09	8.92e-13	5.05e-14
Phenanthrene	178	6.80e-04	6.64e-09	250.8	0.05091	4.30e+01	2.42e-01	3.04e-05	1.45e-09	1.23e-12	6.94e-14
Anthracene	178	1.95e-04	1.91e-09	250.8	0.05091	6.87e-01	3.86e-03	4.86e-07	6.64e-12	5.62e-15	3.18e-16
Di-n-butylphthalate	278	1.00e-05	1.53e-10	329.48	0.04362	3.40e+03	1.22e+01	1.54e-03	1.44e-09	1.22e-12	6.91e-14
Fluoranthene	202	5.00e-06	5.54e-11	283.8	0.04764	1.68e+01	8.33e-02	1.05e-05	3.90e-12	3.30e-15	1.87e-16
Pyrene	202	2.50e-06	2.77e-11	283.8	0.04764	2.20e+01	1.09e-01	1.37e-05	2.55e-12	2.16e-15	1.22e-16
Butylbenzylphthalate	312	8.60e+06	1.47e+02	375.02	0.04077	1.60e+03	5.13e+00	6.46e-04	5.46e+02	4.62e-01	2.61e-02
Benzo(a)anthracene	228	2.20e-08	2.75e-13	320.76	0.04463	1.60e+01	7.02e-02	8.84e-06	1.53e-14	1.29e-17	7.32e-19
Chrysene	228	6.30e-09	7.88e-14	320.76	0.04463	1.75e+01	7.69e-02	9.69e-06	4.80e-15	4.06e-18	2.30e-19
bis(2-Ethylhexyl)phthalat	391	8.60e+06	1.85e+02	493.16	0.03535	1.40e+04	3.58e+01	4.51e-03	4.14e+03	3.51e+00	1.98e-01
Di-n-octylphthalate	391	8.60e+06	1.85e+02	493.16	0.03535	1.40e+02	3.58e-01	4.51e-05	4.14e+01	3.51e-02	1.98e-03
Benzo(b)fluoranthene	252	5.00e-07	6.92e-12	353.76	0.04236	1.50e+01	5.95e-02	7.50e-06	3.09e-13	2.62e-16	1.48e-17
Benzo(k)fluoranthene	252	5.10e-07	7.05e-12	353.76	0.04236	1.50e+01	5.95e-02	7.50e-06	3.15e-13	2.67e-16	1.51e-17
Benzo(a)pyrene	252	5.60e-09	7.75e-14	353.76	0.04236	2.24e+00	8.89e-03	1.12e-06	5.17e-16	4.38e-19	2.48e-20
Indeno(1,2,3-cd)pyrene	276	1.00e-10	1.51e-15	386.76	0.04039	8.17e-01	2.96e-03	3.73e-07	3.21e-18	2.72e-21	1.54e-22
Dibenz(a,h)anthracene	278	1.00e-10	1.53e-15	390.72	0.04017	1.90e-01	6.83e-04	8.61e-08	7.43e-19	6.29e-22	3.56e-23
Benzo(g,h,i)perylene	276	1.03e-10	1.56e-15	386.76	0.04039	6.23e-01	2.26e-03	2.84e-07	2.52e-18	2.14e-21	1.21e-22
Alpha-BHC	291	2.50e-05	3.99e-10	110.88	0.07125	1.83e-01	6.27e-04	7.90e-08	3.16e-13	2.68e-16	1.52e-17
Beta-BHC	291	2.80e-07	4.47e-12	110.88	0.07125	5.21e-01	1.79e-03	2.26e-07	1.01e-14	8.57e-18	4.85e-19
Aldrin	365	6.00e-06	1.20e-10	330.84	0.04304	8.98e-01	2.46e-03	3.10e-07	2.26e-13	1.91e-16	1.08e-17
Heptachlor Epoxide	389	3.00e-04	6.41e-09	311.4	0.04420	6.35e-03	1.63e-05	2.06e-09	8.19e-14	6.94e-17	3.92e-18
4,4-DDE	318	6.50e-06	1.13e-10	324.84	0.04365	4.50e-01	1.41e-03	1.78e-07	1.24e-13	1.05e-16	5.95e-18
4,4-DDD	320	1.89e-06	3.32e-11	385.68	0.04018	1.35e+00	4.23e-03	5.33e-07	1.00e-13	8.48e-17	4.79e-18
4,4-DDT	355	5.50e-06	1.07e-10	346.32	0.04215	8.91e-01	2.51e-03	3.16e-07	2.01e-13	1.70e-16	9.63e-18
TOTAL PCBs	328	7.70e-05	1.39e-09	235.32	0.05074	4.51e+02	1.37e+00	1.73e-04	1.71e-09	1.45e-12	8.21e-14
Propyl Benzenes	120	3.20e+00	2.11e-05	172.26	0.06244	5.20e+02	4.33e+00	5.46e-04	1.01e-04	8.56e-08	4.84e-09
Propenyl Benzenes	120	3.20e+00	2.11e-05	172.26	0.06244	1.20e+02	1.00e+00	1.26e-04	2.33e-05	1.98e-08	1.12e-09
Ethyl Methyl Benzenes	120	3.20e+00	2.11e-05	172.26	0.06244	5.90e+03	4.92e+01	6.19e-03	1.15e-03	9.72e-07	5.49e-08
Diethyl Benzenes	106	7.00e+00	4.07e-05	151.8	0.06689	2.20e+03	2.08e+01	2.61e-03	1.00e-03	8.49e-07	4.80e-08

Table V-3

VOC EMISSION ESTIMATE CALCULATIONS

American Chemical Services Remedial Investigation
Griffith Indiana

Source Area: Offsite Containment Area

COMPOUND	Chemical Emission (Ei) Calculation Variables									Estimated Downwind Concentration	
	MW (g/mole)	VP (mm Hg)	CSi (g/cm3)	ADV (cm3/mole)	Di @ 19 C (Cm2/sec)	Exp. Pnt. Conc. (mg/kg)	Mf mM/kg soil	Mi (mole/mole)	Ei (g/sec)	100 m (g/m3)	500 m (g/m3)
Methyl Propyl Benzenes	120	3.20e+00	2.11e-05	172.26	0.06244	9.40e+02	7.83e+00	9.86e-04	1.83e-04	1.55e-07	8.75e-09
Trimethyl Benzenes	120	1.00e+02	6.59e-04	172.26	0.06244	9.80e+03	8.17e+01	1.03e-02	5.95e-02	5.04e-05	2.85e-06
Dimethyl ethyl benzenes	106	7.00e+00	4.07e-05	151.8	0.06689	1.70e+03	1.60e+01	2.02e-03	7.74e-04	6.56e-07	3.71e-08
Tetramethyl Benzenes	120	1.00e+02	6.59e-04	172.26	0.06244	2.90e+02	2.42e+00	3.04e-04	1.76e-03	1.49e-06	8.44e-08
Oxygenated Benzenes	106	1.00e+02	5.82e-04	132.86	0.07091	3.50e+03	3.30e+01	4.16e-03	2.41e-02	2.05e-05	1.16e-06
Nitrogenated Benzenes	123	1.50e-01	1.01e-06	125.55	0.07159	9.90e+02	8.05e+00	1.01e-03	1.03e-05	8.76e-09	4.95e-10
Cyclic alkanes	98	1.44e+02	7.75e-04	131.34	0.07189	9.90e+01	1.01e+00	1.27e-04	9.97e-04	8.45e-07	4.78e-08
Cyclic Alkenes	98	1.44e+02	7.75e-04	131.34	0.07189	4.70e+02	4.80e+00	6.04e-04	4.73e-03	4.01e-06	2.27e-07
n-chain Alkanes	86	1.20e+02	5.66e-04	110.88	0.07853	1.30e+03	1.51e+01	1.90e-03	1.19e-02	1.01e-05	5.71e-07
Branched Alkanes	86	1.20e+02	5.66e-04	110.88	0.07853	2.30e+03	2.67e+01	3.37e-03	2.11e-02	1.79e-05	1.01e-06
Branched Alkenes/Alkynes	86	1.20e+02	5.66e-04	110.88	0.07853	1.40e+02	1.63e+00	2.05e-04	1.28e-03	1.09e-06	6.15e-08
Ethers	74	4.42e+02	1.80e-03	91.28	0.08694	9.20e+01	1.24e+00	1.57e-04	3.44e-03	2.91e-06	1.65e-07
Methylated Naphthalenes	108	2.40e-01	1.83e-09	180.84	0.06072	7.30e+02	6.76e+00	8.51e-04	1.33e-08	1.13e-11	6.36e-13
Phthalates	148	2.00e-04	1.62e-09	156.36	0.06399	1.20e+03	8.11e+00	1.02e-03	1.49e-08	1.27e-11	7.16e-13
Methylated Phenols	108	2.40e-01	1.42e-06	136.82	0.06987	5.40e+01	5.00e-01	6.30e-05	8.81e-07	7.46e-10	4.22e-11
Methylated Ketones	58	2.70e+02	8.60e-04	66.86	0.10245	1.00e+02	1.72e+00	2.17e-04	2.69e-03	2.28e-06	1.29e-07
Simple Ketones	72	7.75e+01	3.06e-04	87.32	0.08890	9.10e-01	1.26e-02	1.59e-06	6.10e-06	5.17e-09	2.92e-10
Cyclic Ketones	138	3.80e-01	2.88e-06	177.74	0.06078	8.00e+01	5.80e-01	7.30e-05	1.80e-06	1.52e-09	8.61e-11
Diols	62	5.00e-02	1.70e-07	55.84	0.10881	2.60e+03	4.19e+01	5.28e-03	1.38e-05	1.17e-08	6.59e-10
Simple Alcohols	74	4.40e+00	1.79e-05	91.28	0.08694	4.80e+02	6.49e+00	8.17e-04	1.79e-04	1.51e-07	8.56e-09
Cyclic Alcohols	108	1.00e+00	5.93e-06	136.82	0.06987	1.30e+01	1.20e-01	1.52e-05	8.84e-07	7.49e-10	4.23e-11
Oxygenated Alcohols	118	6.00e-01	3.89e-06	137.68	0.06906	2.40e+03	2.03e+01	2.56e-03	9.68e-05	8.20e-08	4.63e-09
Cyclic Acids	122	9.50e+01	6.36e-04	138.34	0.06869	7.80e+01	6.39e-01	8.05e-05	4.95e-04	4.19e-07	2.37e-08
Non-Cyclic Acids	72	3.20e+00	1.26e-05	68.38	0.09820	6.30e+04	8.75e+02	1.10e-01	1.93e-02	1.63e-05	9.23e-07
Amines	113	1.00e-03	6.20e-09	131.95	0.07065	5.30e+02	4.69e+00	5.91e-04	3.64e-08	3.09e-11	1.74e-12
Furans	72	1.31e+02	5.18e-04	87.32	0.08890	3.10e-01	4.31e-03	5.42e-07	3.51e-06	2.98e-09	1.68e-10

Table V-3

VOC EMISSION ESTIMATE CALCULATIONS

American Chemical Services Remedial Investigation
Griffith Indiana

Source Area: Offsite Containment Area

This table summarizes the mathematical relationships used to model chemical emission rates from soils and the dispersion of chemical concentrations in air at a distance of 100 meters from the source. The relationships were obtained from the "Superfund Exposure Assessment Manual" (SEAM), 1988. The following defines the column headings: MW, molecular weight; VP, vapor pressure; Csi, saturation vapor concentration; ADV, atomic diffusion volume; Di, diffusion coefficient; Exp. Pnt. Conc., exposure point concentration; Mf, mmoles contaminant per kg soil; Mi, mole fraction (ie. fraction of total moles for each chemical); Ei, estimated emission rate. The following describes the equations and Site specific variables:

$$Csi = \frac{VP * MW}{R * T}$$

where:

R = 6.24e+04 (mm Hg-cm3/mole-K)
(T) temperature in degrees K = 293.15

$$Di = \frac{0.001 * T^{1.75} * ((1/MW) + (1/MWa))^{(1/2)}}{[(ADV^{(1/3)} + (ADVa^{(1/3)})]^2}$$

where:

(MWa) molecular wt. of air = 28.8 g/mole
(ADVa) atomic diffusion volume of air = 20.1 cm3/mole
(T) temperature in degrees K = 293.15
^ = exponent

$$Ei = \frac{Di * Csi * A * Pt^{(4/3)} * Mi}{Dsc}$$

where:

(A) surface area = 1.60e+08 cm2
(Dcs) depth of soil cover = 335 cm
(Pt) soil porosity = 0.4
Pt^(4/3) = 2.95e-01
^ = exponent

$$C(x) = \frac{Ei}{(pi * Oy * Oz * u)} * 0.30$$

where:

C(x) = concentration at distance x

		at 100 m:	500 m:
pi	= 3.14		
Oy	= lateral dispersion coef., stability class D =	8	35 m
Oz	= vertical dispersion coef., stability class D =	4.7	19 m
u	= average wind speed (assume 3 m/s)		
0.3	= assume wind blows 30 % of the time towards receptor		

Default equation variables were obtained from SEAM. Refer to SEAM for further information.

JAH/jah/BJC
Version 1/25/91
[acs.2020]v-3.w20

Table V-4

VOC EMISSION ESTIMATE CALCULATIONS

American Chemical Services Remedial Investigation
Griffith Indiana

Source Area: Kapica-Pazmey Surface Soil

COMPOUND	Chemical Emission (Ei) Calculation Variables									Estimated Downwind Concentration	
	MW (g/mole)	VP (mm Hg)	CSi (g/cm3)	ADV (cm3/mole)	Di @ 19 C (Cm2/sec)	Exp. Pnt. Conc. (mg/kg)	Mf mM/kg soil	Mi (mole/mole)	Ei (g/sec)	100 m (g/m3)	500 m (g/m3)
Methylene Chloride	85	3.62e+02	1.69e-03	59.46	0.10151	2.00e-01	2.35e-03	4.74e-06	2.12e-04	1.80e-07	1.02e-08
Acetone	58	2.70e+02	8.60e-04	66.86	0.10245	9.70e-01	1.67e-02	3.37e-05	7.75e-04	6.57e-07	3.71e-08
1,1-Dichloroethane	99	1.82e+02	9.89e-04	79.92	0.08853	1.50e-01	1.52e-03	3.05e-06	6.98e-05	5.92e-08	3.34e-09
Total-1,2-Dichloroethene	97	2.08e+02	1.11e-03	75.96	0.09059	7.60e+00	7.84e-02	1.58e-04	4.14e-03	3.51e-06	1.98e-07
Chloroform	119	1.51e+02	9.86e-04	76.98	0.08818	1.00e-02	8.40e-05	1.69e-07	3.85e-06	3.26e-09	1.84e-10
1,1,1-Trichloroethane	133	1.23e+02	8.98e-04	97.44	0.07917	9.00e-03	6.77e-05	1.36e-07	2.53e-06	2.15e-09	1.21e-10
1,2-Dichloropropane	113	4.20e+01	2.61e-04	100.38	0.07942	1.90e-02	1.68e-04	3.39e-07	1.83e-06	1.55e-09	8.77e-11
Trichloroethene	131	5.79e+01	4.16e-04	93.48	0.08067	1.70e+02	1.30e+00	2.61e-03	2.29e-02	1.94e-05	1.10e-06
Benzene	78	9.52e+01	4.08e-04	110.88	0.07954	3.20e+00	4.10e-02	8.26e-05	7.00e-04	5.93e-07	3.35e-08
4-Methyl-2-Pentanone	100	6.00e+00	3.29e-05	128.24	0.07247	2.70e+02	2.70e+00	5.44e-03	3.39e-03	2.87e-06	1.62e-07
Tetrachloroethene	166	1.78e+01	1.62e-04	111	0.07360	7.90e+02	4.76e+00	9.59e-03	2.99e-02	2.53e-05	1.43e-06
Toluene	92	2.81e+01	1.42e-04	131.34	0.07242	1.90e+04	2.07e+02	4.16e-01	1.12e+00	9.46e-04	5.35e-05
Chlorobenzene	113	1.17e+01	7.26e-05	128.4	0.07149	6.20e+00	5.49e-02	1.11e-04	1.50e-04	1.27e-07	7.18e-09
Ethylbenzene	106	7.00e+00	4.07e-05	151.8	0.06689	4.30e+03	4.06e+01	8.17e-02	5.82e-02	4.93e-05	2.79e-06
Styrene	104	5.00e+00	2.85e-05	147.84	0.06781	2.30e+01	2.21e-01	4.46e-04	2.25e-04	1.91e-07	1.08e-08
Total Xylenes	106	1.00e+01	5.82e-05	151.8	0.06689	2.30e+04	2.17e+02	4.37e-01	4.45e-01	3.77e-04	2.13e-05
Phenol	94	3.41e-01	1.76e-06	116.36	0.07610	2.80e+01	2.98e-01	6.00e-04	2.10e-05	1.78e-08	1.01e-09
1,2-Dichlorobenzene	147	1.00e+00	8.07e-06	145.92	0.06600	5.90e-01	4.01e-03	8.09e-06	1.13e-06	9.53e-10	5.39e-11
2-Methylphenol	108	2.40e-01	1.42e-06	136.82	0.06987	4.70e+00	4.35e-02	8.77e-05	2.28e-06	1.93e-09	1.09e-10
4-Methylphenol	108	1.10e-01	6.52e-07	136.82	0.06987	4.60e+00	4.26e-02	8.58e-05	1.02e-06	8.65e-10	4.89e-11
Isophorone	138	3.80e-01	2.88e-06	177.74	0.06078	9.70e+01	7.03e-01	1.42e-03	6.47e-05	5.48e-08	3.10e-09
2,4-Dimethylphenol	122	5.90e-02	3.95e-07	157.28	0.06492	4.90e+00	4.02e-02	8.09e-05	5.42e-07	4.59e-10	2.60e-11
Naphthalene	128	2.60e-04	1.83e-09	180.84	0.06072	9.70e+01	7.58e-01	1.53e-03	4.43e-08	3.75e-11	2.12e-12
2-Methylnaphthalene	142	5.90e-02	4.60e-07	201.3	0.05732	5.60e+01	3.94e-01	7.94e-04	5.47e-06	4.64e-09	2.62e-10
2,4,5-Trichlorophenol	197	1.00e+00	1.08e-05	168.92	0.06056	1.70e-01	8.63e-04	1.74e-06	2.98e-07	2.52e-10	1.42e-11
Dimethylphthalate	194	1.00e-02	1.06e-07	206.72	0.05533	1.40e+00	7.22e-03	1.45e-05	2.24e-08	1.90e-11	1.07e-12
Acenaphthene	154	1.55e-03	1.31e-08	217.8	0.05492	3.60e-01	2.34e-03	4.71e-06	8.86e-10	7.50e-13	4.24e-14
Dibenzofuran	170	2.00e-02	1.87e-07	223.28	0.05390	4.30e-01	2.53e-03	5.10e-06	1.34e-08	1.13e-11	6.41e-13
Diethylphthalate	222	3.50e-03	4.26e-08	247.64	0.05049	5.00e+00	2.25e-02	4.54e-05	2.55e-08	2.16e-11	1.22e-12
Fluorene	116	7.10e-04	4.52e-09	234.3	0.05446	6.20e-01	5.34e-03	1.08e-05	6.93e-10	5.87e-13	3.32e-14
N-Nitrosodiphenylamine	198	3.80e-05	4.13e-10	234.66	0.05213	4.30e+00	2.17e-02	4.37e-05	2.46e-10	2.09e-13	1.18e-14
Pentachlorophenol	266	1.10e-04	1.61e-09	203.96	0.05469	1.50e+00	5.64e-03	1.14e-05	2.61e-10	2.21e-13	1.25e-14
Phenanthrene	178	6.80e-04	6.64e-09	250.8	0.05091	4.30e+00	2.42e-02	4.87e-05	4.30e-09	3.64e-12	2.06e-13
Anthracene	178	1.95e-04	1.91e-09	250.8	0.05091	6.60e-01	3.71e-03	7.47e-06	1.89e-10	1.60e-13	9.07e-15
Di-n-butylphthalate	278	1.00e-05	1.53e-10	329.48	0.04362	9.40e+01	3.38e-01	6.81e-04	1.18e-09	1.00e-12	5.67e-14
Fluoranthene	202	5.00e-06	5.54e-11	283.8	0.04764	3.40e+00	1.68e-02	3.39e-05	2.34e-11	1.98e-14	1.12e-15
Pyrene	202	2.50e-06	2.77e-11	283.8	0.04764	2.30e+00	1.14e-02	2.29e-05	7.92e-12	6.71e-15	3.79e-16
Butylbenzylphthalate	312	8.60e+06	1.47e+02	375.02	0.04077	5.10e+01	1.63e-01	3.29e-04	5.17e+02	4.38e-01	2.47e-02
Benzo(a)anthracene	228	2.20e-08	2.75e-13	320.76	0.04463	2.40e+00	1.05e-02	2.12e-05	6.81e-14	5.77e-17	3.26e-18

Table V-4

VOC EMISSION ESTIMATE CALCULATIONS

American Chemical Services Remedial Investigation
Griffith Indiana

Source Area: Kapica-Pazmey Surface Soil

COMPOUND	Chemical Emission (Ei) Calculation Variables: MW (g/mole)	VP (mm Hg)	CSi (g/cm3)	ADV (cm3/mole)	Di @ 19 C (Cm2/sec)	Exp. Pnt. Conc. (mg/kg)	Mf mM/kg soil	Mi (mole/mole)	Ei (g/sec)	Estimated Downwind Concentration 100 m (g/m3)	500 m (g/m3)
Chrysene	228	6.30e-09	7.88e-14	320.76	0.04463	1.30e+00	5.70e-03	1.15e-05	1.06e-14	8.95e-18	5.06e-19
bis(2-Ethylhexyl)phthalat	391	8.60e+06	1.85e+02	493.16	0.03535	5.40e+02	1.38e+00	2.78e-03	4.74e+03	4.02e+00	2.27e-01
Di-n-octylphthalate	391	8.60e+06	1.85e+02	493.16	0.03535	3.80e+01	9.72e-02	1.96e-04	3.34e+02	2.83e-01	1.60e-02
Benzo(b)fluoranthene	252	5.00e-07	6.92e-12	353.76	0.04236	3.90e+00	1.55e-02	3.12e-05	2.39e-12	2.02e-15	1.14e-16
Benzo(k)fluoranthene	252	5.10e-07	7.05e-12	353.76	0.04236	3.90e+00	1.55e-02	3.12e-05	2.43e-12	2.06e-15	1.17e-16
Benzo(a)pyrene	252	5.60e-09	7.75e-14	353.76	0.04236	1.40e+00	5.56e-03	1.12e-05	9.60e-15	8.13e-18	4.60e-19
Indeno(1,2,3-cd)pyrene	276	1.00e-10	1.51e-15	386.76	0.04039	8.20e-01	2.97e-03	5.99e-06	9.57e-17	8.11e-20	4.58e-21
Dibenz(a,h)anthracene	278	1.00e-10	1.53e-15	390.72	0.04017	2.70e-01	9.71e-04	1.96e-06	3.13e-17	2.66e-20	1.50e-21
Benzo(g,h,i)perylene	276	1.03e-10	1.56e-15	386.76	0.04039	1.10e+00	3.99e-03	8.03e-06	1.32e-16	1.12e-19	6.33e-21
Aldrin	365	6.00e-06	1.20e-10	330.84	0.04304	8.80e-02	2.41e-04	4.86e-07	6.57e-13	5.56e-16	3.15e-17
Endosulfan 1	407	5.50e-06	1.23e-10	310.82	0.04417	4.20e-02	1.03e-04	2.08e-07	2.95e-13	2.50e-16	1.41e-17
4,4-DDD	320	1.89e-06	3.32e-11	385.68	0.04018	1.50e-01	4.69e-04	9.44e-07	3.29e-13	2.79e-16	1.58e-17
TOTAL PCBs	328	7.70e-05	1.39e-09	235.32	0.05074	3.29e+02	1.00e+00	2.02e-03	3.71e-08	3.15e-11	1.78e-12
Propyl Benzenes	120	3.20e+00	2.11e-05	172.26	0.06244	1.20e-01	1.00e-03	2.01e-06	6.93e-07	5.87e-10	3.32e-11
Propenyl Benzenes	120	3.20e+00	2.11e-05	172.26	0.06244	3.20e+01	2.67e-01	5.37e-04	1.85e-04	1.56e-07	8.85e-09
Ethyl Methyl Benzenes	120	3.20e+00	2.11e-05	172.26	0.06244	3.70e+02	3.08e+00	6.21e-03	2.14e-03	1.81e-06	1.02e-07
Trimethyl Benzenes	120	1.00e+02	6.59e-04	172.26	0.06244	2.20e+02	1.83e+00	3.69e-03	3.97e-02	3.36e-05	1.90e-06
Dimethyl ethyl benzenes	106	7.00e+00	4.07e-05	151.8	0.06689	6.00e+01	5.66e-01	1.14e-03	8.12e-04	6.88e-07	3.89e-08
Tetramethyl Benzenes	120	1.00e+02	6.59e-04	172.26	0.06244	6.80e+01	5.67e-01	1.14e-03	1.23e-02	1.04e-05	5.88e-07
Cyclic alkanes	98	1.44e+02	7.75e-04	131.34	0.07189	5.20e+01	5.31e-01	1.07e-03	1.56e-02	1.32e-05	7.45e-07
n-chain Alkanes	86	1.20e+02	5.66e-04	110.88	0.07853	2.90e+02	3.37e+00	6.79e-03	7.90e-02	6.69e-05	3.78e-06
Branched Alkanes	86	1.20e+02	5.66e-04	110.88	0.07853	3.20e+02	3.72e+00	7.50e-03	8.71e-02	7.38e-05	4.17e-06
Methylated Ketones	58	2.70e+02	8.60e-04	66.86	0.10245	1.80e-01	3.10e-03	6.25e-06	1.44e-04	1.22e-07	6.89e-09
Cyclic Acids	122	9.50e+01	6.36e-04	138.34	0.06869	1.90e+01	1.56e-01	3.14e-04	3.58e-03	3.03e-06	1.72e-07
Non-Cyclic Acids	72	3.20e+00	1.26e-05	68.38	0.09820	2.60e+02	3.61e+00	7.27e-03	2.36e-03	2.00e-06	1.13e-07

Table V-4

VOC EMISSION ESTIMATE CALCULATIONS

American Chemical Services Remedial Investigation
Griffith Indiana

Source Area: Kapica-Pazmey Surface Soil

This table summarizes the mathematical relationships used to model chemical emission rates from soils and the dispersion of chemical concentrations in air at a distance of 100 meters from the source. The relationships were obtained from the "Superfund Exposure Assessment Manual" (SEAM), 1988. The following defines the column headings:
MW, molecular weight; VP, vapor pressure; Csi, saturation vapor concentration; ADV, atomic diffusion volume; Di, diffusion coefficient; Exp. Pnt. Conc., exposure point concentration; Mf, mmoles contaminant per kg soil; Mi, mole fraction (ie. fraction of total moles for each chemical); Ei, estimated emission rate. The following describes the equations and Site specific variables:

$$Csi = \frac{VP * MW}{R * T}$$

where:

R = 6.24e+04 (mm Hg-cm3/mole-K)
(T) temperature in degrees K = 293.15

$$Di = \frac{0.001 * T^{1.75} * ((1/MW) + (1/MWa))^{(1/2)}}{[(ADV^{(1/3)} + (ADVa^{(1/3)})]^2}$$

where:

(MWa) molecular wt. of air = 28.8 g/mole
(ADVa) atomic diffusion volume of air = 20.1 cm3/mole
(T) temperature in degrees K = 293.15
^ = exponent

$$Ei = \frac{Di * Csi * A * Pt^{(4/3)} * Mi}{Dsc}$$

where:

(A) surface area = 4.70e+07 cm2
(Dcs) depth of soil cover = 53 cm
(Pt) soil porosity = 0.4
Pt^(4/3) = 2.95e-01
^ = exponent

$$C(x) = \frac{Ei}{(pi * Oy * Oz * u)} * 0.30$$

where:

C(x) = concentration at distance x

		at 100 m:	500 m:
pi	= 3.14		
Oy	= lateral dispersion coef., stability class D =	8	35 m
Oz	= vertical dispersion coef., stability class D =	4.7	19 m
u	= average wind speed (assume 3 m/s)		
0.3	= assume wind blows 30 % of the time towards receptor		

Default equation variables were obtained from SEAM. Refer to SEAM for further information.

JAH/jah/BJC
Version 1/25/91
[acs.2020]v-4.w20

Table V-5

VOC EMISSION ESTIMATE CALCULATIONS

American Chemical Services Remedial Investigation
Griffith Indiana

Source Area: Kapica-Pazmey Subsurface Soil

COMPOUND	Chemical Emission (Ei) Calculation Variables									Estimated Downwind Concentration	
	MW (g/mole)	VP (mm Hg)	CSi (g/cm3)	ADV (cm3/mo	Di @ 19 C (Cm2/sec)	Exp. Pnt. Conc. (mg/kg)	Mf mM/kg soil	Mi (mole/mole)	Ei (g/sec)	100 m (g/m3)	500 m (g/m3)
Chloroethane	51	3.80e+03	1.06e-02	62.4	0.10767	8.57e-03	1.68e-04	2.49e-06	9.26e-05	7.84e-08	4.44e-09
Acetone	58	2.70e+02	8.60e-04	66.86	0.10245	8.70e+00	1.50e-01	2.23e-03	6.36e-03	5.39e-06	3.05e-07
Carbon disulfide	76	3.60e+02	1.50e-03	50.5	0.10977	2.91e-03	3.83e-05	5.68e-07	3.04e-06	2.57e-09	1.45e-10
1,1-Dichloroethane	99	1.82e+02	9.89e-04	79.92	0.08853	7.90e-01	7.98e-03	1.18e-04	3.36e-04	2.85e-07	1.61e-08
Total-1,2-Dichloroethene	97	2.08e+02	1.11e-03	75.96	0.09059	2.60e+01	2.68e-01	3.98e-03	1.29e-02	1.10e-05	6.20e-07
Chloroform	119	1.51e+02	9.86e-04	76.98	0.08818	3.00e-03	2.52e-05	3.74e-07	1.06e-06	8.94e-10	5.05e-11
1,2-Dichloroethane	99	6.40e+01	3.48e-04	79.92	0.08853	1.29e-02	1.30e-04	1.93e-06	1.93e-06	1.63e-09	9.23e-11
2-Butanone	72	7.75e+01	3.06e-04	87.32	0.08890	9.00e+01	1.25e+00	1.86e-02	1.64e-02	1.39e-05	7.85e-07
1,1,1-Trichloroethane	133	1.23e+02	8.98e-04	97.44	0.07917	5.60e-01	4.21e-03	6.25e-05	1.44e-04	1.22e-07	6.90e-09
1,2-Dichloropropane	113	4.20e+01	2.61e-04	100.38	0.07942	1.12e-02	9.87e-05	1.46e-06	9.83e-07	8.33e-10	4.71e-11
Trichloroethene	131	5.79e+01	4.16e-04	93.48	0.08067	2.50e+02	1.91e+00	2.83e-02	3.09e-02	2.61e-05	1.48e-06
Benzene	78	9.52e+01	4.08e-04	110.88	0.07954	2.30e+01	2.95e-01	4.38e-03	4.60e-03	3.90e-06	2.20e-07
4-Methyl-2-Pentanone	100	6.00e+00	3.29e-05	128.24	0.07247	4.20e+00	4.20e-02	6.23e-04	4.83e-05	4.09e-08	2.31e-09
2-Hexanone	100	2.00e+00	1.10e-05	128.24	0.07247	1.15e-01	1.15e-03	1.70e-05	4.39e-07	3.72e-10	2.10e-11
Tetrachloroethene	166	1.78e+01	1.62e-04	111	0.07360	2.40e+02	1.45e+00	2.15e-02	8.31e-03	7.04e-06	3.98e-07
Toluene	92	2.81e+01	1.42e-04	131.34	0.07242	1.40e+03	1.52e+01	2.26e-01	7.53e-02	6.38e-05	3.61e-06
Chlorobenzene	113	1.17e+01	7.26e-05	128.4	0.07149	2.70e+01	2.39e-01	3.55e-03	5.97e-04	5.05e-07	2.86e-08
Ethylbenzene	106	7.00e+00	4.07e-05	151.8	0.06689	5.70e+02	5.38e+00	7.98e-02	7.05e-03	5.97e-06	3.38e-07
Styrene	104	5.00e+00	2.85e-05	147.84	0.06781	2.60e+02	2.50e+00	3.71e-02	2.33e-03	1.97e-06	1.12e-07
Total Xylenes	106	1.00e+01	5.82e-05	151.8	0.06689	1.70e+03	1.60e+01	2.38e-01	3.00e-02	2.54e-05	1.44e-06
Phenol	94	3.41e-01	1.76e-06	116.36	0.07610	9.60e+00	1.02e-01	1.52e-03	6.58e-06	5.58e-09	3.15e-10
1,2-Dichlorobenzene	147	1.00e+00	8.07e-06	145.92	0.06600	2.60e-01	1.77e-03	2.62e-05	4.53e-07	3.84e-10	2.17e-11
2-Methylphenol	108	2.40e-01	1.42e-06	136.82	0.06987	4.10e+00	3.80e-02	5.63e-04	1.82e-06	1.54e-09	8.70e-11
4-Methylphenol	108	1.10e-01	6.52e-07	136.82	0.06987	2.40e+00	2.22e-02	3.30e-04	4.87e-07	4.13e-10	2.33e-11
Isophorone	138	3.80e-01	2.88e-06	177.74	0.06078	6.50e+01	4.71e-01	6.99e-03	3.97e-05	3.36e-08	1.90e-09
2,4-Dimethylphenol	122	5.90e-02	3.95e-07	157.28	0.06492	2.20e+00	1.80e-02	2.68e-04	2.23e-07	1.89e-10	1.07e-11
Benzoic acid	122	9.52e+01	6.37e-04	138.34	0.06869	7.00e-01	5.74e-03	8.51e-05	1.21e-04	1.02e-07	5.79e-09
Naphthalene	128	2.60e-04	1.83e-09	180.84	0.06072	2.30e+01	1.80e-01	2.67e-03	9.59e-09	8.13e-12	4.59e-13
2-Methylnaphthalene	142	5.90e-02	4.60e-07	201.3	0.05732	1.60e+01	1.13e-01	1.67e-03	1.43e-06	1.21e-09	6.85e-11
Dimethylphthalate	194	1.00e-02	1.06e-07	206.72	0.05533	6.50e+00	3.35e-02	4.97e-04	9.50e-08	8.05e-11	4.55e-12
Acenaphthene	154	1.55e-03	1.31e-08	217.8	0.05492	7.10e-01	4.61e-03	6.84e-05	1.60e-09	1.35e-12	7.65e-14
4-Nitrophenol	139	5.90e-02	4.50e-07	131.03	0.06951	4.60e+00	3.31e-02	4.91e-04	4.98e-07	4.22e-10	2.39e-11
Dibenzofuran	170	2.00e-02	1.87e-07	223.28	0.05390	6.40e-01	3.76e-03	5.59e-05	1.82e-08	1.54e-11	8.73e-13
2,4-Dinitrotoluene	182	5.10e-03	5.09e-08	160.68	0.06225	8.40e-01	4.62e-03	6.85e-05	7.05e-09	5.97e-12	3.37e-13
Diethylphthalate	222	3.50e-03	4.26e-08	247.64	0.05049	1.30e+00	5.86e-03	8.69e-05	6.07e-09	5.14e-12	2.91e-13
Fluorene	116	7.10e-04	4.52e-09	234.3	0.05446	7.60e-01	6.55e-03	9.72e-05	7.77e-10	6.58e-13	3.72e-14
Pentachlorophenol	266	1.10e-04	1.61e-09	203.96	0.05469	1.60e+01	6.02e-02	8.93e-04	2.54e-09	2.15e-12	1.22e-13
Phenanthrene	178	6.80e-04	6.64e-09	250.8	0.05091	4.80e+00	2.70e-02	4.00e-04	4.39e-09	3.72e-12	2.10e-13
Anthracene	178	1.95e-04	1.91e-09	250.8	0.05091	8.90e-01	5.00e-03	7.42e-05	2.33e-10	1.98e-13	1.12e-14

Table V-5

VOC EMISSION ESTIMATE CALCULATIONS

American Chemical Services Remedial Investigation
Griffith Indiana

Source Area: Kapica-Pazmey Subsurface Soil

	Chemical Emission (Ei) Calculation Variables									Estimated Downwind Concentration	
						Exp. Pnt.				100 m	500 m
COMPOUND	MW (g/mole)	VP (mm Hg)	CSi (g/cm3)	ADV (cm3/mo	Di @ 19 C (Cm2/sec)	Conc. (mg/kg)	Mf mM/kg soil	Mi (mole/mole)	Ei (g/sec)	(g/m3)	(g/m3)
Di-n-butylphthalate	278	1.00e-05	1.53e-10	329.48	0.04362	1.90e+01	6.83e-02	1.01e-03	2.19e-10	1.85e-13	1.05e-14
Fluoranthene	202	5.00e-06	5.54e-11	283.8	0.04764	6.00e+00	2.97e-02	4.41e-04	3.78e-11	3.20e-14	1.81e-15
Pyrene	202	2.50e-06	2.77e-11	283.8	0.04764	4.20e+00	2.08e-02	3.09e-04	1.32e-11	1.12e-14	6.33e-16
Butylbenzylphthalate	312	8.60e+06	1.47e+02	375.02	0.04077	2.00e+01	6.41e-02	9.51e-04	1.85e+02	1.57e-01	8.87e-03
Benzo(a)anthracene	228	2.20e-08	2.75e-13	320.76	0.04463	2.10e+00	9.21e-03	1.37e-04	5.45e-14	4.62e-17	2.61e-18
Chrysene	228	6.30e-09	7.88e-14	320.76	0.04463	1.50e+00	6.58e-03	9.76e-05	1.11e-14	9.44e-18	5.34e-19
bis(2-Ethylhexyl)phthalat	391	8.60e+06	1.85e+02	493.16	0.03535	1.10e+02	2.81e-01	4.18e-03	8.84e+02	7.48e-01	4.23e-02
Di-n-octylphthalate	391	8.60e+06	1.85e+02	493.16	0.03535	3.30e+00	8.44e-03	1.25e-04	2.65e+01	2.25e-02	1.27e-03
Benzo(b)fluoranthene	252	5.00e-07	6.92e-12	353.76	0.04236	2.20e+00	8.73e-03	1.30e-04	1.23e-12	1.04e-15	5.90e-17
Benzo(k)fluoranthene	252	5.10e-07	7.05e-12	353.76	0.04236	2.20e+00	8.73e-03	1.30e-04	1.26e-12	1.06e-15	6.01e-17
Benzo(a)pyrene	252	5.60e-09	7.75e-14	353.76	0.04236	6.10e-01	2.42e-03	3.59e-05	3.82e-15	3.24e-18	1.83e-19
Benzo(g,h,i)perylene	276	1.03e-10	1.56e-15	386.76	0.04039	2.60e-01	9.42e-04	1.40e-05	2.86e-17	2.42e-20	1.37e-21
TOTAL PCBs	328	7.70e-05	1.39e-09	235.32	0.05074	5.85e+01	1.78e-01	2.65e-03	6.04e-09	5.12e-12	2.89e-13
Propyl Benzenes	120	3.20e+00	2.11e-05	172.26	0.06244	1.30e+02	1.08e+00	1.61e-02	6.86e-04	5.81e-07	3.29e-08
Ethyl Methyl Benzenes	120	3.20e+00	2.11e-05	172.26	0.06244	8.80e+02	7.33e+00	1.09e-01	4.65e-03	3.94e-06	2.23e-07
Methyl Propyl Benzenes	120	3.20e+00	2.11e-05	172.26	0.06244	9.80e+01	8.17e-01	1.21e-02	5.17e-04	4.38e-07	2.48e-08
Methyl Ethenyl Benzenes	120	3.20e+00	2.11e-05	172.26	0.06244	4.40e+01	3.67e-01	5.44e-03	2.32e-04	1.97e-07	1.11e-08
Trimethyl Benzenes	120	1.00e+02	6.59e-04	172.26	0.06244	5.20e+02	4.33e+00	6.43e-02	8.58e-02	7.27e-05	4.11e-06
Dimethyl ethyl benzenes	106	7.00e+00	4.07e-05	151.8	0.06689	7.90e+01	7.45e-01	1.11e-02	9.77e-04	8.28e-07	4.68e-08
Cyclic alkanes	98	1.44e+02	7.75e-04	131.34	0.07189	4.10e-02	4.18e-04	6.21e-06	1.12e-05	9.50e-09	5.37e-10
Halogenated Alkanes	133	1.23e+02	8.98e-04	97.44	0.07917	2.10e-01	1.58e-03	2.34e-05	5.40e-05	4.58e-08	2.59e-09
n-chain Alkanes	86	1.20e+02	5.66e-04	110.88	0.07853	2.60e+02	3.02e+00	4.49e-02	6.47e-02	5.48e-05	3.10e-06
Branched Alkanes	86	1.20e+02	5.66e-04	110.88	0.07853	1.10e+02	1.28e+00	1.90e-02	2.74e-02	2.32e-05	1.31e-06
Branched Alkenes/Alkynes	86	1.20e+02	5.66e-04	110.88	0.07853	2.10e-01	2.44e-03	3.62e-05	5.23e-05	4.43e-08	2.50e-09
Methylated Ketones	58	2.70e+02	8.60e-04	66.86	0.10245	9.60e-03	1.66e-04	2.46e-06	7.02e-06	5.94e-09	3.36e-10
Simple Ketones	72	7.75e+01	3.06e-04	87.32	0.08890	8.10e-01	1.13e-02	1.67e-04	1.47e-04	1.25e-07	7.06e-09
Simple Alcohols	74	4.40e+00	1.79e-05	91.28	0.08694	2.40e-02	3.24e-04	4.81e-06	2.43e-07	2.05e-10	1.16e-11
Cyclic Alcohols	108	1.00e+00	5.93e-06	136.82	0.06987	1.50e+00	1.39e-02	2.06e-04	2.77e-06	2.35e-09	1.33e-10
Non-Cyclic Acids	72	3.20e+00	1.26e-05	68.38	0.09820	1.30e+02	1.81e+00	2.68e-02	1.08e-03	9.14e-07	5.17e-08

Table V-5

VOC EMISSION ESTIMATE CALCULATIONS

American Chemical Services Remedial Investigation
Griffith Indiana

Source Area: Kapica-Pazmey Subsurface Soil

This table summarizes the mathematical relationships used to model chemical emission rates from soils and the dispersion of chemical concentrations in air at a distance of 100 meters from the source. The relationships were obtained from the "Superfund Exposure Assessment Manual" (SEAM), 1988. The following defines the column headings: MW, molecular weight; VP, vapor pressure; Csi, saturation vapor concentration; ADV, atomic diffusion volume; Di, diffusion coefficient; Exp. Pnt. Conc., exposure point concentration; Mf, mmoles contaminant per kg soil; Mi, mole fraction (ie. fraction of total moles for each chemical); Ei, estimated emission rate. The following describes the equations and Site specific variables:

$$Csi = \frac{VP * MW}{R * T}$$

where:

R = 6.24e+04 (mm Hg-cm3/mole-K)
(T) temperature in degrees K = 293.15

$$Di = \frac{0.001 * T^{1.75} * ((1/MW) + (1/MWa))^{(1/2)}}{[(ADV^{(1/3)} + (ADVa^{(1/3)})]^2}$$

where:

(MWa) molecular wt. of air = 28.8 g/mole
(ADVa) atomic diffusion volume of air = 20.1 cm3/mole
(T) temperature in degrees K = 293.15
^ = exponent

$$Ei = \frac{Di * Csi * A * Pt^{(4/3)} * Mi}{Dsc}$$

where:

(A) surface area = 47,000,000 cm2
(Dcs) depth of soil cover 427 cm
(Pt) soil porosity = 0.4
Pt^(4/3) = 2.95e-01
^ = exponent

$$C(x) = \frac{Ei}{(pi * Oy * Oz * u)} * 0.30$$

where:

C(x) = concentration at distance x

		at 100 m:	500 m:
pi	= 3.14		
Oy	= lateral dispersion coef., stability class D =	8	35 m
Oz	= vertical dispersion coef., stability class D =	4.7	19 m
u	= average wind speed (assume 3 m/s)		
0.3	= assume wind blows 30 % of the time towards receptor		

Default equation variables were obtained from SEAM. Refer to SEAM for further information.

JAH/jah/BJC
Version 1/25/91
[acs.2020]v-5.w20

Table V-6

SUMMARY OF CHEMICAL EXPOSURE POINT CONCENTRATIONS

American Chemical Services NPL Site
Remedial Investigation
Griffith, Indiana

Chemical of Potential Concern	100 Meters: Onsite Containment Area (g/m3)	Still Bottoms Treatment Lagoon (g/m3)	Offsite Containment Area (g/m3)	Kapica Pazmey Surface (g/m3)	Kapica Pazmey Sub-Surface (g/m3)	Maximum Estimated Conc. (g/m3)	Maximum Estimated Conc. (mg/m3)
VOLATILES							
Vinyl chloride			6.78e-07			6.78e-07	6.78e-04
Chloroethane	4.17e-02		6.74e-07		7.84e-08	4.17e-02	4.17e+01
Methylene chloride		5.21e-05	6.36e-06	1.80e-07		5.21e-05	5.21e-02
Acetone	6.19e-07	1.24e-06	3.89e-04	6.57e-07	5.39e-06	3.89e-04	3.89e-01
Carbon disulfide					2.57e-09	2.57e-09	2.57e-06
1,1-Dichloroethene			1.75e-05			1.75e-05	1.75e-02
1,1-Dichloroethane	1.22e-09	1.32e-06	6.51e-06	5.92e-08	2.85e-07	6.51e-06	6.51e-03
1,2-Dichloroethene (cis)	6.24e-07	2.25e-05	5.28e-07	3.51e-06	1.10e-05	2.25e-05	2.25e-02
Chloroform	1.25e-07	1.04e-04	3.07e-05	3.26e-09	8.94e-10	1.04e-04	1.04e-01
1,2-Dichloroethane	3.50e-08	8.45e-07	2.05e-06		1.63e-09	2.05e-06	2.05e-03
2-Butanone	8.80e-09	1.36e-05	5.62e-04		1.39e-05	5.62e-04	5.62e-01
1,1,1-Trichloroethane	8.13e-05	7.62e-04	1.20e-03	2.15e-09	1.22e-07	1.20e-03	1.20e+00
Carbon tetrachloride		9.57e-05				9.57e-05	9.57e-02
1,2-Dichloropropane	1.59e-08	2.74e-07	1.87e-07	1.55e-09	8.33e-10	2.74e-07	2.74e-04
Trichloroethene	3.62e-07	2.96e-05	7.31e-05	1.94e-05	2.61e-05	7.31e-05	7.31e-02
1,1,2-Trichloroethane	5.56e-10	7.17e-08	7.83e-07			7.83e-07	7.83e-04
Benzene	1.74e-05	4.80e-06	9.36e-06	5.93e-07	3.90e-06	1.74e-05	1.74e-02
4-Methyl-2-pentanone	1.45e-09	2.43e-06	2.19e-05	2.87e-06	4.09e-08	2.19e-05	2.19e-02
2-Hexanone			5.61e-09		3.72e-10	5.61e-09	5.61e-06
Tetrachloroethene	4.92e-05	7.81e-06	4.97e-05	2.53e-05	7.04e-06	4.97e-05	4.97e-02
1,1,2,2-Tetrachloroethane	8.99e-09		2.67e-12			8.99e-09	8.99e-06
Toluene	1.03e-03	1.74e-04	2.18e-04	9.46e-04	6.38e-05	1.03e-03	1.03e+00
Chlorobenzene	2.34e-10	6.24e-12	6.89e-07	1.27e-07	5.05e-07	6.89e-07	6.89e-04
Ethylbenzene	2.00e-05	1.47e-05	8.88e-06	4.93e-05	5.97e-06	4.93e-05	4.93e-02
Styrene	1.34e-08	2.02e-07	8.66e-08	1.91e-07	1.97e-06	1.97e-06	1.97e-03
Xylenes (mixed)	1.06e-04	2.34e-05	5.51e-05	3.77e-04	2.54e-05	3.77e-04	3.77e-01
SEMIVOLATILES							
Phenol	7.13e-11	1.05e-08	1.10e-08	1.78e-08	5.58e-09	1.78e-08	1.78e-05
bis(2-Chloroethyl) ether		2.05e-08	8.24e-09			2.05e-08	2.05e-05
2-Chlorophenol		1.98e-12				1.98e-12	1.98e-09
1,3-Dichlorobenzene	2.20e-10	2.16e-10				2.20e-10	2.20e-07
1,4-Dichlorobenzene	2.79e-10	6.95e-10	3.54e-10			6.95e-10	6.95e-07
Benzyl Alcohol		1.71e-08	1.86e-07			1.86e-07	1.86e-04
1,2-Dichlorobenzene	4.16e-09	1.72e-08	6.53e-09	9.53e-10	3.84e-10	1.72e-08	1.72e-05
2-Methylphenol	1.69e-10	9.38e-10	9.38e-10	1.93e-09	1.54e-09	1.93e-09	1.93e-06
4-Methylphenol	1.23e-10	1.23e-09	1.33e-09	8.65e-10	4.13e-10	1.33e-09	1.33e-06
Isophorone		2.24e-07	6.85e-08	5.48e-08	3.36e-08	2.24e-07	2.24e-04
2,4-Dimethylphenol	5.82e-11	2.03e-11	3.67e-10	4.59e-10	1.89e-10	4.59e-10	4.59e-07
Benzoic Acid	2.04e-09	7.93e-07	6.31e-05		1.02e-07	6.31e-05	6.31e-02
2,4-Dichlorophenol	5.45e-12	2.37e-11	6.26e-13			2.37e-11	2.37e-08
1,2,4-Trichlorobenzene		9.61e-11	5.08e-10			5.08e-10	5.08e-07
Naphthalene	9.05e-12	4.41e-11	3.12e-11	3.75e-11	8.13e-12	4.41e-11	4.41e-08
Hexachlorobutadiene		1.71e-08	1.42e-08			1.71e-08	1.71e-05
4-Chloro-3-methylphenol		4.50e-12				4.50e-12	4.50e-09
2-Methylnaphthalene	1.18e-09	4.03e-09	2.76e-09	4.64e-09	1.21e-09	4.64e-09	4.64e-06
2,4,6-Trichlorophenol		9.39e-13				9.39e-13	9.39e-10
2,4,5-Trichlorophenol	8.23e-11	2.17e-11		2.52e-10		2.52e-10	2.52e-07
2-Chloronaphthalene		6.83e-12				6.83e-12	6.83e-09
Dimethylphthalate	1.23e-11	6.60e-10	2.38e-10	1.90e-11	8.05e-11	6.60e-10	6.60e-07
Acenaphthylene	9.19e-12	1.98e-11	2.52e-12			1.98e-11	1.98e-08
2,6-Dinitrotoluene			6.92e-13			6.92e-13	6.92e-10
Acenaphthene	1.12e-12	7.40e-13	1.26e-12	7.50e-13	1.35e-12	1.35e-12	1.35e-09
4-Nitrophenol		2.32e-11	1.05e-11		4.22e-10	4.22e-10	4.22e-07
Dibenzofuran		1.37e-12	3.69e-12	1.13e-11	1.54e-11	1.54e-11	1.54e-08
2,4-Dinitrotoluene					5.97e-12	5.97e-12	5.97e-09

Table V-6

SUMMARY OF CHEMICAL EXPOSURE POINT CONCENTRATIONS

American Chemical Services NPL Site
Remedial Investigation
Griffith, Indiana

Chemical of Potential Concern	100 Meters: Onsite Containment Area (g/m3)	Still Bottoms Treatment Lagoon (g/m3)	Offsite Containment Area (g/m3)	Kapica Pazmey Surface (g/m3)	Kapica Pazmey Sub-Surface (g/m3)	Maximum Estimated Conc. (g/m3)	Maximum Estimated Conc. (mg/m3)
Diethylphthalate	5.29e-14	6.59e-11	4.08e-11	2.16e-11	5.14e-12	6.59e-11	6.59e-08
Fluorene	5.71e-13	7.31e-13	9.88e-13	5.87e-13	6.58e-13	9.88e-13	9.88e-10
N-nitrosodiphenylamine		9.60e-14	8.65e-14	2.09e-13		2.09e-13	2.09e-10
4-Bromophenyl-phenylether		3.38e-12				3.38e-12	3.38e-09
Hexachlorobenzene		1.55e-15	9.17e-16			1.55e-15	1.55e-12
Pentachlorophenol	6.13e-15	1.44e-12	8.92e-13	2.21e-13	2.15e-12	2.15e-12	2.15e-09
Phenanthrene	9.40e-13	1.29e-12	1.23e-12	3.64e-12	3.72e-12	3.72e-12	3.72e-09
Anthracene	5.94e-15	3.53e-14	5.62e-15	1.60e-13	1.98e-13	1.98e-13	1.98e-10
Di-n-butylphthalate	3.23e-14	1.12e-12	1.22e-12	1.00e-12	1.85e-13	1.22e-12	1.22e-09
Fluoranthene	1.20e-15	5.42e-16	3.30e-15	1.98e-14	3.20e-14	3.20e-14	3.20e-11
Pyrene	7.08e-16	7.53e-16	2.16e-15	6.71e-15	1.12e-14	1.12e-14	1.12e-11
Butylbenzylphthalate	5.07e-03	1.25e+00	4.62e-01	4.38e-01	1.57e-01	1.25e+00	1.25e+03
Benzo(a)anthracene	1.06e-18	1.18e-18	1.29e-17	5.77e-17	4.62e-17	5.77e-17	5.77e-14
Chrysene	1.50e-19	3.10e-19	4.06e-18	8.95e-18	9.44e-18	9.44e-18	9.44e-15
bis(2-ethylhexyl)phthalate	2.71e-01	2.95e+00	3.51e+00	4.02e+00	7.48e-01	4.02e+00	4.02e+03
Di-n-octyl Phthalate		2.21e-02	3.51e-02	2.83e-01	2.25e-02	2.83e-01	2.83e+02
Benzo(b)fluoranthene		2.52e-17	2.62e-16	2.02e-15	1.04e-15	2.02e-15	2.02e-12
Benzo(k)fluoranthene		2.57e-17	2.67e-16	2.06e-15	1.06e-15	2.06e-15	2.06e-12
Benzo(a)pyrene		1.90e-19	4.38e-19	8.13e-18	3.24e-18	8.13e-18	8.13e-15
Ideno(1,2,3-cd)pyrene			2.72e-21	8.11e-20		8.11e-20	8.11e-17
Dibenz(a,h)anthracene			6.29e-22	2.66e-20		2.66e-20	2.66e-17
Benzo(g,h,i)perylene			2.14e-21	1.12e-19	2.42e-20	1.12e-19	1.12e-16
PESTICIDE/PCB							
alpha-BHC			2.68e-16			2.68e-16	2.68e-13
beta-BHC			8.57e-18			8.57e-18	8.57e-15
gamma-BHC (Lindane)		4.67e-06				4.67e-06	4.67e-03
Aldrin			1.91e-16	5.56e-16		5.56e-16	5.56e-13
Heptachlor epoxide			6.94e-17			6.94e-17	6.94e-14
Endosulfan I	9.21e-18	1.09e-15		2.50e-16		1.09e-15	1.09e-12
4,4'-DDE			1.05e-16			1.05e-16	1.05e-13
4,4'-DDD			8.48e-17	2.79e-16		2.79e-16	2.79e-13
4,4'-DDT	2.35e-17	2.42e-14	1.70e-16			2.42e-14	2.42e-11
Endrin ketone		7.36e-18				7.36e-18	7.36e-15
Total - PCBs	2.01e-13	2.30e-12	1.45e-12	3.15e-11	5.12e-12	3.15e-11	3.15e-08
TIC GROUPS							
Propyl Benzenes	2.54e-08	2.83e-07	8.56e-08	5.87e-10	5.81e-07	5.81e-07	5.81e-04
Propenyl Benzenes		4.99e-08	1.98e-08	1.56e-07		1.56e-07	1.56e-04
Ethyl Methyl Benzenes	1.40e-07	1.42e-06	9.72e-07	1.81e-06	3.94e-06	3.94e-06	3.94e-03
Diethyl Benzenes	8.35e-08	8.90e-07	8.49e-07			8.90e-07	8.90e-04
Methyl Propyl Benzenes	1.78e-09	8.19e-07	1.55e-07		4.38e-07	8.19e-07	8.19e-04
Methyl Ethenyl Benzenes	1.78e-09				1.97e-07	1.97e-07	1.97e-04
Methyl Phenyl Benzenes		1.82e-12				1.82e-12	1.82e-09
Trimethyl Benzenes	1.55e-05	4.19e-05	5.04e-05	3.36e-05	7.27e-05	7.27e-05	7.27e-02
Dimethyl ethyl benzenes	5.96e-07	3.32e-06	6.56e-07	6.88e-07	8.28e-07	3.32e-06	3.32e-03
Tetramethyl Benzenes	4.37e-10	3.03e-05	1.49e-06	1.04e-05		3.03e-05	3.03e-02
Oxygenated Benzenes	1.17e-05	2.64e-06	2.05e-05			2.05e-05	2.05e-02
Nitrogenated Benzenes		1.00e-08	8.76e-09			1.00e-08	1.00e-05
Cyclic alkanes	3.49e-06	2.24e-04	8.45e-07	1.32e-05	9.50e-09	2.24e-04	2.24e-01
Cyclic Alkenes	2.44e-05	4.63e-05	4.01e-06			4.63e-05	4.63e-02
Halogenated Alkanes	1.36e-07	1.74e-04			4.58e-08	1.74e-04	1.74e-01
n-chain Alkanes	1.92e-05	8.08e-04	1.01e-05	6.69e-05	5.48e-05	8.08e-04	8.08e-01
Branched Alkanes	1.08e-05	2.07e-04	1.79e-05	7.38e-05	2.32e-05	2.07e-04	2.07e-01
Branched Alkenes/Alkynes	3.66e-05	9.13e-05	1.09e-06		4.43e-08	9.13e-05	9.13e-02
Ethers			2.91e-06			2.91e-06	2.91e-03
Methylated Naphthalenes	1.00e-12	3.98e-12	1.13e-11			1.13e-11	1.13e-08

Table V-6

SUMMARY OF CHEMICAL EXPOSURE POINT CONCENTRATIONS

American Chemical Services NPL Site
Remedial Investigation
Griffith, Indiana

Chemical of Potential Concern	100 Meters: Onsite Containment Area (g/m3)	Still Bottoms Treatment Lagoon (g/m3)	Offsite Containment Area (g/m3)	Kapica Pazmey Surface (g/m3)	Kapica Pazmey Sub-Surface (g/m3)	Maximum Estimated Conc. (g/m3)	Maximum Estimated Conc. (mg/m3)
Phthalates		2.77e-12	1.27e-11			1.27e-11	1.27e-08
Methylated Phenols	1.17e-10	4.50e-11	7.46e-10			7.46e-10	7.46e-07
Methylated Ketones		1.65e-07	2.28e-06	1.22e-07	5.94e-09	2.28e-06	2.28e-03
Simple Ketones		1.98e-08	5.17e-09		1.25e-07	1.25e-07	1.25e-04
Cyclic Ketones	9.12e-11	1.38e-08	1.52e-09			1.38e-08	1.38e-05
Diols		6.08e-11	1.17e-08			1.17e-08	1.17e-05
Simple Alcohols	5.60e-12	7.84e-08	1.51e-07		2.05e-10	1.51e-07	1.51e-04
Cyclic Alcohols		3.91e-09	7.49e-10		2.35e-09	3.91e-09	3.91e-06
Oxygenated Alcohols		4.32e-08	8.20e-08			8.20e-08	8.20e-05
Cyclic Acids			4.19e-07	3.03e-06		3.03e-06	3.03e-03
Non-Cyclic Acids	4.40e-07	3.63e-07	1.63e-05	2.00e-06	9.14e-07	1.63e-05	1.63e-02
Amines	7.65e-11	3.69e-11	3.09e-11			7.65e-11	7.65e-08
PCBs	1.87e-13					1.87e-13	1.87e-10
Furans	1.04e-07	1.91e-08	2.98e-09			1.04e-07	1.04e-04

This table contains values calculated in tables V-1 through V-5. Since a receptor at a given point would be exposed to varying amounts from each area, a single value is selected to represent exposure. The maximum emission estimate from the five source areas is selected and coverted from g/m3 to mg/m3.

1/25/91
JAH/jah/BJC
[acs.2020]V-6.w20

Table V-6

SUMMARY OF CHEMICAL EXPOSURE POINT CONCENTRATIONS

American Chemical Services NPL Site
Remedial Investigation
Griffith, Indiana

Chemical of Potential Concern	500 Meters: Onsite Containment Area (g/m3)	Still Bottoms Treatment Lagoon (g/m3)	Offsite Containment Area (g/m3)	Kapica Pazmey Surface (g/m3)	Kapica Pazmey Sub-Surface (g/m3)	Maximum Estimated Conc. (g/m3)	Maximum Estimated Conc. (mg/m3)
VOLATILES							
Vinyl chloride			3.83e-08			3.83e-08	3.83e-05
Chloroethane	2.36e-03		3.81e-08		4.44e-09	2.36e-03	2.36e+00
Methylene chloride		2.94e-06	3.60e-07	1.02e-08		2.94e-06	2.94e-03
Acetone	3.50e-08	7.00e-08	2.20e-05	3.71e-08	3.05e-07	2.20e-05	2.20e-02
Carbon disulfide					1.45e-10	1.45e-10	1.45e-07
1,1-Dichloroethene			9.88e-07			9.88e-07	9.88e-04
1,1-Dichloroethane	6.89e-11	7.47e-08	3.68e-07	3.34e-09	1.61e-08	3.68e-07	3.68e-04
1,2-Dichloroethene (cis)	3.53e-08	1.27e-06	2.99e-08	1.98e-07	6.20e-07	1.27e-06	1.27e-03
Chloroform	7.09e-09	5.89e-06	1.74e-06	1.84e-10	5.05e-11	5.89e-06	5.89e-03
1,2-Dichloroethane	1.98e-09	4.78e-08	1.16e-07		9.23e-11	1.16e-07	1.16e-04
2-Butanone	4.97e-10	7.70e-07	3.18e-05		7.85e-07	3.18e-05	3.18e-02
1,1,1-Trichloroethane	4.59e-06	4.31e-05	6.81e-05	1.21e-10	6.90e-09	6.81e-05	6.81e-02
Carbon tetrachloride		5.41e-06				5.41e-06	5.41e-03
1,2-Dichloropropane	9.02e-10	1.55e-08	1.06e-08	8.77e-11	4.71e-11	1.55e-08	1.55e-05
Trichloroethene	2.05e-08	1.67e-06	4.14e-06	1.10e-06	1.48e-06	4.14e-06	4.14e-03
1,1,2-Trichloroethane	3.14e-11	4.06e-09	4.43e-08			4.43e-08	4.43e-05
Benzene	9.85e-07	2.71e-07	5.29e-07	3.35e-08	2.20e-07	9.85e-07	9.85e-04
4-Methyl-2-pentanone	8.19e-11	1.37e-07	1.24e-06	1.62e-07	2.31e-09	1.24e-06	1.24e-03
2-Hexanone			3.17e-10		2.10e-11	3.17e-10	3.17e-07
Tetrachloroethene	2.78e-06	4.42e-07	2.81e-06	1.43e-06	3.98e-07	2.81e-06	2.81e-03
1,1,2,2-Tetrachloroethane	5.08e-10		1.51e-13			5.08e-10	5.08e-07
Toluene	5.81e-05	9.86e-06	1.23e-05	5.35e-05	3.61e-06	5.81e-05	5.81e-02
Chlorobenzene	1.32e-11	3.53e-13	3.90e-08	7.18e-09	2.86e-08	3.90e-08	3.90e-05
Ethylbenzene	1.13e-06	8.29e-07	5.02e-07	2.79e-06	3.38e-07	2.79e-06	2.79e-03
Styrene	7.57e-10	1.14e-08	4.90e-09	1.08e-08	1.12e-07	1.12e-07	1.12e-04
Xylenes (mixed)	6.02e-06	1.33e-06	3.12e-06	2.13e-05	1.44e-06	2.13e-05	2.13e-02
SEMIVOLATILES							
Phenol	4.03e-12	5.94e-10	6.19e-10	1.01e-09	3.15e-10	1.01e-09	1.01e-06
bis(2-Chloroethyl) ether		1.16e-09	4.66e-10			1.16e-09	1.16e-06
2-Chlorophenol		1.12e-13				1.12e-13	1.12e-10
1,3-Dichlorobenzene	1.25e-11	1.22e-11				1.25e-11	1.25e-08
1,4-Dichlorobenzene	1.58e-11	3.93e-11	2.00e-11			3.93e-11	3.93e-08
Benzyl Alcohol		9.65e-10	1.05e-08			1.05e-08	1.05e-05
1,2-Dichlorobenzene	2.35e-10	9.74e-10	3.69e-10	5.39e-11	2.17e-11	9.74e-10	9.74e-07
2-Methylphenol	9.57e-12	5.30e-11	5.30e-11	1.09e-10	8.70e-11	1.09e-10	1.09e-07
4-Methylphenol	6.93e-12	6.97e-11	7.52e-11	4.89e-11	2.33e-11	7.52e-11	7.52e-08
Isophorone		1.27e-08	3.87e-09	3.10e-09	1.90e-09	1.27e-08	1.27e-05
2,4-Dimethylphenol	3.29e-12	1.15e-12	2.08e-11	2.60e-11	1.07e-11	2.60e-11	2.60e-08
Benzoic Acid	1.15e-10	4.48e-08	3.57e-06		5.79e-09	3.57e-06	3.57e-03
2,4-Dichlorophenol	3.08e-13	1.34e-12	3.54e-14			1.34e-12	1.34e-09
1,2,4-Trichlorobenzene		5.44e-12	2.87e-11			2.87e-11	2.87e-08
Naphthalene	5.11e-13	2.50e-12	1.77e-12	2.12e-12	4.59e-13	2.50e-12	2.50e-09
Hexachlorobutadiene		9.70e-10	8.04e-10			9.70e-10	9.70e-07
4-Chloro-3-methylphenol		2.54e-13				2.54e-13	2.54e-10
2-Methylnaphthalene	6.70e-11	2.28e-10	1.56e-10	2.62e-10	6.85e-11	2.62e-10	2.62e-07
2,4,6-Trichlorophenol		5.31e-14				5.31e-14	5.31e-11
2,4,5-Trichlorophenol	4.65e-12	1.23e-12		1.42e-11		1.42e-11	1.42e-08
2-Chloronaphthalene		3.86e-13				3.86e-13	3.86e-10
Dimethylphthalate	6.97e-13	3.73e-11	1.34e-11	1.07e-12	4.55e-12	3.73e-11	3.73e-08
Acenaphthylene	5.20e-13	1.12e-12	1.43e-13			1.12e-12	1.12e-09
2,6-Dinitrotoluene			3.91e-14			3.91e-14	3.91e-11
Acenaphthene	6.31e-14	4.19e-14	7.14e-14	4.24e-14	7.65e-14	7.65e-14	7.65e-11
4-Nitrophenol		1.31e-12	5.95e-13		2.39e-11	2.39e-11	2.39e-08
Dibenzofuran		7.76e-14	2.09e-13	6.41e-13	8.73e-13	8.73e-13	8.73e-10
2,4-Dinitrotoluene					3.37e-13	3.37e-13	3.37e-10

Table V-6

SUMMARY OF CHEMICAL EXPOSURE POINT CONCENTRATIONS

American Chemical Services NPL Site
Remedial Investigation
Griffith, Indiana

Chemical of Potential Concern	500 Meters: Onsite Containment Area (g/m3)	Still Bottoms Treatment Lagoon (g/m3)	Offsite Containment Area (g/m3)	Kapica Pazmey Surface (g/m3)	Kapica Pazmey Sub-Surface (g/m3)	Maximum Estimated Conc. (g/m3)	Maximum Estimated Conc. (mg/m3)
Diethylphthalate	2.99e-15	3.72e-12	2.31e-12	1.22e-12	2.91e-13	3.72e-12	3.72e-09
Fluorene	3.23e-14	4.13e-14	5.59e-14	3.32e-14	3.72e-14	5.59e-14	5.59e-11
N-nitrosodiphenylamine		5.43e-15	4.89e-15	1.18e-14		1.18e-14	1.18e-11
4-Bromophenyl-phenylether		1.91e-13				1.91e-13	1.91e-10
Hexachlorobenzene		8.74e-17	5.18e-17			8.74e-17	8.74e-14
Pentachlorophenol	3.46e-16	8.11e-14	5.05e-14	1.25e-14	1.22e-13	1.22e-13	1.22e-10
Phenanthrene	5.31e-14	7.30e-14	6.94e-14	2.06e-13	2.10e-13	2.10e-13	2.10e-10
Anthracene	3.36e-16	1.99e-15	3.18e-16	9.07e-15	1.12e-14	1.12e-14	1.12e-11
Di-n-butylphthalate	1.82e-15	6.34e-14	6.91e-14	5.67e-14	1.05e-14	6.91e-14	6.91e-11
Fluoranthene	6.80e-17	3.06e-17	1.87e-16	1.12e-15	1.81e-15	1.81e-15	1.81e-12
Pyrene	4.01e-17	4.26e-17	1.22e-16	3.79e-16	6.33e-16	6.33e-16	6.33e-13
Butylbenzylphthalate	2.87e-04	7.09e-02	2.61e-02	2.47e-02	8.87e-03	7.09e-02	7.09e+01
Benzo(a)anthracene	6.01e-20	6.65e-20	7.32e-19	3.26e-18	2.61e-18	3.26e-18	3.26e-15
Chrysene	8.50e-21	1.76e-20	2.30e-19	5.06e-19	5.34e-19	5.34e-19	5.34e-16
bis(2-ethylhexyl)phthalat	1.53e-02	1.67e-01	1.98e-01	2.27e-01	4.23e-02	2.27e-01	2.27e+02
Di-n-octyl Phthalate		1.25e-03	1.98e-03	1.60e-02	1.27e-03	1.60e-02	1.60e+01
Benzo(b)fluoranthene		1.43e-18	1.48e-17	1.14e-16	5.90e-17	1.14e-16	1.14e-13
Benzo(k)fluoranthene		1.45e-18	1.51e-17	1.17e-16	6.01e-17	1.17e-16	1.17e-13
Benzo(a)pyrene		1.07e-20	2.48e-20	4.60e-19	1.83e-19	4.60e-19	4.60e-16
Ideno(1,2,3-cd)pyrene			1.54e-22	4.58e-21		4.58e-21	4.58e-18
Dibenz(a,h)anthracene			3.56e-23	1.50e-21		1.50e-21	1.50e-18
Benzo(g,h,i)perylene			1.21e-22	6.33e-21	1.37e-21	6.33e-21	6.33e-18
PESTICIDE/PCB							
alpha-BHC			1.52e-17			1.52e-17	1.52e-14
beta-BHC			4.85e-19			4.85e-19	4.85e-16
gamma-BHC (Lindane)		2.64e-07				2.64e-07	2.64e-04
Aldrin			1.08e-17	3.15e-17		3.15e-17	3.15e-14
Heptachlor epoxide			3.92e-18			3.92e-18	3.92e-15
Endosulfan I	5.21e-19	6.15e-17		1.41e-17		6.15e-17	6.15e-14
4,4'-DDE			5.95e-18			5.95e-18	5.95e-15
4,4'-DDD			4.79e-18	1.58e-17		1.58e-17	1.58e-14
4,4'-DDT	1.33e-18	1.37e-15	9.63e-18			1.37e-15	1.37e-12
Endrin ketone		4.16e-19				4.16e-19	4.16e-16
Total - PCBs	1.14e-14	1.30e-13	8.21e-14	1.78e-12	2.89e-13	1.78e-12	1.78e-09
TIC GROUPS							
Propyl Benzenes	1.44e-09	1.60e-08	4.84e-09	3.32e-11	3.29e-08	3.29e-08	3.29e-05
Propenyl Benzenes		2.82e-09	1.12e-09	8.85e-09		8.85e-09	8.85e-06
Ethyl Methyl Benzenes	7.91e-09	8.00e-08	5.49e-08	1.02e-07	2.23e-07	2.23e-07	2.23e-04
Diethyl Benzenes	4.72e-09	5.03e-08	4.80e-08			5.03e-08	5.03e-05
Methyl Propyl Benzenes	1.01e-10	4.63e-08	8.75e-09		2.48e-08	4.63e-08	4.63e-05
Methyl Ethenyl Benzenes	1.01e-10				1.11e-08	1.11e-08	1.11e-05
Methyl Phenyl Benzenes		1.03e-13				1.03e-13	1.03e-10
Trimethyl Benzenes	8.77e-07	2.37e-06	2.85e-06	1.90e-06	4.11e-06	4.11e-06	4.11e-03
Dimethyl ethyl benzenes	3.37e-08	1.88e-07	3.71e-08	3.89e-08	4.68e-08	1.88e-07	1.88e-04
Tetramethyl Benzenes	2.47e-11	1.71e-06	8.44e-08	5.88e-07		1.71e-06	1.71e-03
Oxygenated Benzenes	6.64e-07	1.49e-07	1.16e-06			1.16e-06	1.16e-03
Nitrogenated Benzenes		5.66e-10	4.95e-10			5.66e-10	5.66e-07
Cyclic alkanes	1.97e-07	1.27e-05	4.78e-08	7.45e-07	5.37e-10	1.27e-05	1.27e-02
Cyclic Alkenes	1.38e-06	2.62e-06	2.27e-07			2.62e-06	2.62e-03
Halogenated Alkanes	7.71e-09	9.85e-06			2.59e-09	9.85e-06	9.85e-03
n-chain Alkanes	1.09e-06	4.57e-05	5.71e-07	3.78e-06	3.10e-06	4.57e-05	4.57e-02
Branched Alkanes	6.11e-07	1.17e-05	1.01e-06	4.17e-06	1.31e-06	1.17e-05	1.17e-02
Branched Alkenes/Alkynes	2.07e-06	5.16e-06	6.15e-08		2.50e-09	5.16e-06	5.16e-03
Ethers			1.65e-07			1.65e-07	1.65e-04
Methylated Naphthalenes	5.66e-14	2.25e-13	6.36e-13			6.36e-13	6.36e-10

Table V-6

SUMMARY OF CHEMICAL EXPOSURE POINT CONCENTRATIONS

American Chemical Services NPL Site
Remedial Investigation
Griffith, Indiana

Chemical of Potential Concern	500 Meters: Onsite Containment Area (g/m3)	Still Bottoms Treatment Lagoon (g/m3)	Offsite Containment Area (g/m3)	Kapica Pazmey Surface (g/m3)	Kapica Pazmey Sub-Surface (g/m3)	Maximum Estimated Conc. (g/m3)	Maximum Estimated Conc. (mg/m3)
Phthalates		1.56e-13	7.16e-13			7.16e-13	7.16e-10
Methylated Phenols	6.64e-12	2.54e-12	4.22e-11			4.22e-11	4.22e-08
Methylated Ketones		9.33e-09	1.29e-07	6.89e-09	3.36e-10	1.29e-07	1.29e-04
Simple Ketones		1.12e-09	2.92e-10		7.06e-09	7.06e-09	7.06e-06
Cyclic Ketones	5.16e-12	7.79e-10	8.61e-11			7.79e-10	7.79e-07
Diols		3.44e-12	6.59e-10			6.59e-10	6.59e-07
Simple Alcohols	3.17e-13	4.43e-09	8.56e-09		1.16e-11	8.56e-09	8.56e-06
Cyclic Alcohols		2.21e-10	4.23e-11		1.33e-10	2.21e-10	2.21e-07
Oxygenated Alcohols		2.45e-09	4.63e-09			4.63e-09	4.63e-06
Cyclic Acids			2.37e-08	1.72e-07		1.72e-07	1.72e-04
Non-Cyclic Acids	2.49e-08	2.05e-08	9.23e-07	1.13e-07	5.17e-08	9.23e-07	9.23e-04
Amines	4.32e-12	2.08e-12	1.74e-12			4.32e-12	4.32e-09
PCBs	1.05e-14					1.05e-14	1.05e-11
Furans	5.87e-09	1.08e-09	1.68e-10			5.87e-09	5.87e-06

This table contains values calculated in tables V-1 through V-5. Since a receptor at a given point would be exposed to varying amounts from each area, a single value is selected to represent exposure. The maximum emission estimate from the five source areas is selected and coverted from g/m3 to mg/m3.

1/25/91
JAH/jah/BJC
[acs.2020]V-6.w20

Appendix W

Modeling of Fugitive Dust Emissions To Determine Exposure Point Concentrations

Appendix W

MODELING OF FUGITIVE DUST EMISSIONS TO DETERMINE EXPOSURE POINT CONCENTRATIONS

Fugitive dust emissions are generated from any area with an erodable surface exposed to wind or mechanical disturbances. Mechanical disturbances due to vehicles traveling on unpaved surfaces would not be expected at this Site. Areas effected by wind erosion are identified according to the erodibility of the surface. Most areas at ACS are either fully vegetated or covered with clean gravel, rendering the surface nonerodibile. The exception to this is the Kapica-Pazmey area, which overall is unvegetated.

The approach for fugitive dust modeling presented by Cowherd, et al. (1985) incorporates release rate estimation and contaminant migration analysis (dispersion). The method is designed for emergency applications, although the Superfund Exposure Assessment Manual (1988) indicates the degree of accuracy attained using this method is consistent with simplified quantitative estimation methods. To understand the methodologies used to obtain the exposure concentrations for fugitive dust, the guidance provided by Cowherd, et al. (1985) should be referenced. The calculations presented in Table 1 of this appendix are a result of procedures presented in this guidance document.

EMISSION RATES

The emission rate of fugitive dust is calculated using the following sequence of equations:

The respirable emission factor E_{10} is determined for an unlimited reservoir of erodible particles, since the soils present are fine sands, and relates the average annual rate of respirable particles to field and climatic factors in the following equation:

$$E_{10} = 0.036\,(1-V)\left(\frac{[u]}{u_t}\right) f(x)$$

where

E_{10} = PM_{10} emission factor (PM_{10} - airborne particulate matter with aerodynamic diameter of 10 um or less); i.e., annual average PM_{10} emission rate per unit area of contaminated surface (g/m^2 - hr)
V = fraction of surface covered with vegetation (dimensionless)
$[u]$ = mean annual wind speed (m/sec)
$f(x)$ = function plotted in Figure 4-3 (Cowherd, 1985)
u_t = threshold wind speed at 7 m (m/sec)

Below is a summary of values used for the above parameters to obtain an annual average emission rate:

1. Aggregate size distribution - Soil classification and grain size analysis at the Site indicate the fine sands occur in the greatest amounts. The average particle size mode is 0.1 mm.

2. Threshold friction velocity estimated from figure 3-4 (Cowherd, 1985) is taken to be 25 cm/sec.

3. Using the measure of roughness height (z_0) of 5.0 cm (between grasslands and suburban dwellings, as an estimate of the low buildings present as the vegetation outside the immediate area), taken from Figure 3-6 (Cowherd, 1985), the equivalent 7 meter threshold wind speed (u_t) is found using Figure 4-1 (Cowherd, 1985) to be:

   u_t = 12.5 (25 cm/sec) = 312.5 cm/sec = 3.12 m/sec

4. x = 0.886 (3.12 m/s) / (4.6m/s) = 1.87
   The value f(x) is derived from Figure 4-3 (Cowherd, 1985).
   f(0.60) = 1.87

5. $[u]$ = 4.6 m/s
   $[u^+]$ = 21 m/s (taken from Chicago, Il data, Table 4-1 (Cowherd, 1985)

6. V = 0 (assumes bare soil)

For the ACS Site, the E_{10} value is 2.16e-01 g/m^2 - hr. This is the unit emission rate per time of respirable particles.

$$PM_{10} = A\,E_{10}$$

where

PM_{10} = Annual average emission rate (g/hr)
A = Source extent (4700 m^2)
E_{10} = emission factor calculated in previous equation (g/m^2 - hr)

The PM_{10} value for the Kapica-Pazmey area at ACS is 1014 g/hr, and represents the emission rate for the the entire area.

$$R_{10} = (PM_{10})\ (alpha)$$

where

R_{10}	=	Emission rate of the contaminant as P_{10} particles (g/hr)
A	=	Source extent (4700 m^2)
E_{10}	=	Respirable emissions factor (1.73e-1 g/m^2-hr)
alpha	=	Mass fraction of specific contaminant in PM_{10} emissions (1.e., contamination level in the bulk surface material - maximum concentration)

The R_{10} value is the emission rate from the given area for each particular chemical in g/hr.

DISPERSION MODELING

The emission rates for each compound were used to model atmospheric dispersion concentrations at a specific distance and direction from the contaminant source. The modeling procedure uses previously obtained computer model dispersion output. Specific details may be found in Cowherd, et al. (1985).

Two distances from the source were used in modeling particulate contamination. On-site particulate concentrations were estimated using a distance of 200 meters from the source. Off-site concentrations were obtained for 500 meters from the source. The model does not allow distances to a receptor of less than 200 meters. Wind speed and direction have been factored into the model based on historical meteorological data as described by Cowherd, et al. (1985), thus, concentrations as a function of direction are reflective of the meteorological characteristics of the region.

Below is a summary of calculations and values used to model contaminant dispersion:

1. Climatic region for the Site from Figure 4-5 (Cowherd, 1985) is region 4 and has a P_R value of 0.288 (Figure 4-7). P_R represents the fraction of time that wind erosion occurs.

2. Source size required for the model is 100 m x 100 m. (Cowherd, 1985) page 43.

3. R_{10} results are converted from to ug/s.
   (g/hr) (1e + 6 ug/g) / (3600 sec/hr) = ug/sec

4. Wind erosion scaling factor Q_i
   Q_i (ug/sec) = (R_{10} / P_R)

5. Unscaled Concentration (f_i) for Climatic region 4 are taken from Appendix D (Cowherd, 1985) for 200 and 500 meter ranges and 8 directions (N, NE, E, SE, S, SW, W, NW). North provides the most conservative values, and is used to represent fugitive dust emission estimates at the Site.

6. Chronic exposure values, x, are calculated for each distance and direction

   $Q_i f_i = x$ (pg/m^3)

Respirable concentrations of fugitive dust emanating from the Kapica Pazmey area of the ACS Site are presented in table W-1 of this Appendix.

JAH/jah/vlr/MSR
[ccf-600-97g]
60251.17-MD

Table W - 1

SUMMARY OF FUGITIVE DUST EMISSION AND DISPERSION VALUES

American Chemical Services NPL Site
Remedial Investigation
Griffith, Indiana

Compound	--- Emission Rate Calculation -- Exposure Point Conc. (ug/kg)	alpha (unitless)	R10 (g/hr)	---------- Dispersion Modeling ---------- SCALING FACTORS Q1 = R10/PR (ug/s)	Onsite 200 Meters (mg/m3)	Offsite 500 Meters (mg/m3)
VOLATILES						
Methylene chloride	2.00e+02	2.00e-07	2.03e-04	1.96e-01	6.70e-10	1.84e-10
Acetone	9.70e+02	9.70e-07	9.84e-04	9.49e-01	3.25e-09	8.92e-10
1,1-Dichloroethane	1.50e+02	1.50e-07	1.52e-04	1.47e-01	5.02e-10	1.38e-10
1,2-Dichloroethene (cis)	7.60e+03	7.60e-06	7.71e-03	7.43e+00	2.55e-08	6.99e-09
Chloroform	1.00e+01	1.00e-08	1.01e-05	9.78e-03	3.35e-11	9.19e-12
1,1,1-Trichloroethane	9.00e+00	9.00e-09	9.13e-06	8.80e-03	3.01e-11	8.27e-12
1,2-Dichloropropane	1.90e+01	1.90e-08	1.93e-05	1.86e-02	6.36e-11	1.75e-11
Trichloroethene	1.70e+05	1.70e-04	1.72e-01	1.66e+02	5.69e-07	1.56e-07
Benzene	3.20e+03	3.20e-06	3.24e-03	3.13e+00	1.07e-08	2.94e-09
4-Methyl-2-pentanone	2.70e+05	2.70e-04	2.74e-01	2.64e+02	9.04e-07	2.48e-07
Tetrachloroethene	7.90e+05	7.90e-04	8.01e-01	7.73e+02	2.65e-06	7.26e-07
Toluene	1.90e+07	1.90e-02	1.93e+01	1.86e+04	6.36e-05	1.75e-05
Chlorobenzene	6.20e+03	6.20e-06	6.29e-03	6.06e+00	2.08e-08	5.70e-09
Ethylbenzene	4.30e+06	4.30e-03	4.36e+00	4.21e+03	1.44e-05	3.95e-06
Styrene	2.30e+04	2.30e-05	2.33e-02	2.25e+01	7.70e-08	2.11e-08
Xylenes (mixed)	2.30e+07	2.30e-02	2.33e+01	2.25e+04	7.70e-05	2.11e-05
SEMIVOLATILES						
Phenol	2.80e+04	2.80e-05	2.84e-02	2.74e+01	9.38e-08	2.57e-08
1,2-Dichlorobenzene	5.90e+02	5.90e-07	5.98e-04	5.77e-01	1.98e-09	5.42e-10
2-Methylphenol	4.70e+03	4.70e-06	4.77e-03	4.60e+00	1.57e-08	4.32e-09
4-Methylphenol	4.60e+03	4.60e-06	4.66e-03	4.50e+00	1.54e-08	4.23e-09
Isophorone	9.70e+04	9.70e-05	9.84e-02	9.49e+01	3.25e-07	8.92e-08
2,4-Dimethylphenol	4.90e+03	4.90e-06	4.97e-03	4.79e+00	1.64e-08	4.50e-09
Naphthalene	9.70e+04	9.70e-05	9.84e-02	9.49e+01	3.25e-07	8.92e-08
2-Methylnaphthalene	5.60e+04	5.60e-05	5.68e-02	5.48e+01	1.88e-07	5.15e-08
2,4,5-Trichlorophenol	1.70e+02	1.70e-07	1.72e-04	1.66e-01	5.69e-10	1.56e-10
Dimethylphthalate	1.40e+03	1.40e-06	1.42e-03	1.37e+00	4.69e-09	1.29e-09
Acenaphthene	3.60e+02	3.60e-07	3.65e-04	3.52e-01	1.21e-09	3.31e-10
Dibenzofuran	4.30e+02	4.30e-07	4.36e-04	4.21e-01	1.44e-09	3.95e-10
Diethylphthalate	5.00e+03	5.00e-06	5.07e-03	4.89e+00	1.67e-08	4.60e-09
Fluorene	6.20e+02	6.20e-07	6.29e-04	6.06e-01	2.08e-09	5.70e-10
N-nitrosodiphenylamine	4.30e+03	4.30e-06	4.36e-03	4.21e+00	1.44e-08	3.95e-09
Pentachlorophenol	1.50e+03	1.50e-06	1.52e-03	1.47e+00	5.02e-09	1.38e-09
Phenanthrene	4.30e+03	4.30e-06	4.36e-03	4.21e+00	1.44e-08	3.95e-09
Anthracene	6.60e+02	6.60e-07	6.69e-04	6.46e-01	2.21e-09	6.07e-10
Di-n-butylphthalate	9.40e+04	9.40e-05	9.53e-02	9.19e+01	3.15e-07	8.64e-08
Fluoranthene	3.40e+03	3.40e-06	3.45e-03	3.33e+00	1.14e-08	3.13e-09
Pyrene	2.30e+03	2.30e-06	2.33e-03	2.25e+00	7.70e-09	2.11e-09
Butylbenzylphthalate	5.10e+04	5.10e-05	5.17e-02	4.99e+01	1.71e-07	4.69e-08
Benzo(a)anthracene	2.40e+03	2.40e-06	2.43e-03	2.35e+00	8.04e-09	2.21e-09

Table W - 1

SUMMARY OF FUGITIVE DUST EMISSION AND DISPERSION VALUES

American Chemical Services NPL Site
Remedial Investigation
Griffith, Indiana

Compound	--- Emission Rate Calculation -- Exposure Point Conc. (ug/kg)	alpha (unitless)	R10 (g/hr)	---------- Dispersion Modeling ---------- SCALING FACTORS Q1 = R10/PR (ug/s)	Onsite 200 Meters (mg/m3)	Offsite 500 Meters (mg/m3)
Chrysene	1.30e+03	1.30e-06	1.32e-03	1.27e+00	4.35e-09	1.20e-09
bis(2-ethylhexyl)phthalate	5.40e+05	5.40e-04	5.48e-01	5.28e+02	1.81e-06	4.96e-07
Di-n-octyl Phthalate	3.80e+04	3.80e-05	3.85e-02	3.72e+01	1.27e-07	3.49e-08
Benzo(b)fluoranthene	3.90e+03	3.90e-06	3.95e-03	3.81e+00	1.31e-08	3.59e-09
Benzo(k)fluoranthene	3.90e+03	3.90e-06	3.95e-03	3.81e+00	1.31e-08	3.59e-09
Benzo(a)pyrene	1.40e+03	1.40e-06	1.42e-03	1.37e+00	4.69e-09	1.29e-09
Ideno(1,2,3-cd)pyrene	8.20e+02	8.20e-07	8.32e-04	8.02e-01	2.75e-09	7.54e-10
Dibenz(a,h)anthracene	2.70e+02	2.70e-07	2.74e-04	2.64e-01	9.04e-10	2.48e-10
Benzo(g,h,i)perylene	1.10e+03	1.10e-06	1.12e-03	1.08e+00	3.68e-09	1.01e-09
PESTICIDE/PCB						
Aldrin	8.80e+01	8.80e-08	8.92e-05	8.61e-02	2.95e-10	8.09e-11
Endosulfan I	4.20e+01	4.20e-08	4.26e-05	4.11e-02	1.41e-10	3.86e-11
4,4'-DDD	1.50e+02	1.50e-07	1.52e-04	1.47e-01	5.02e-10	1.38e-10
Total - PCBs	3.29e+05	3.29e-04	3.34e-01	3.22e+02	1.10e-06	3.02e-07
METALS						
Aluminum	1.32e+04	1.32e-05	1.34e-02	1.29e+01	4.42e-08	1.21e-08
Antimony	8.48e+01	8.48e-08	8.60e-05	8.29e-02	2.84e-10	7.80e-11
Barium	5.73e+03	5.73e-06	5.81e-03	5.60e+00	1.92e-08	5.27e-09
Cadmium (food/soil)	1.74e+02	1.74e-07	1.76e-04	1.70e-01	5.83e-10	1.60e-10
Calcium	1.57e+05	1.57e-04	1.59e-01	1.54e+02	5.26e-07	1.44e-07
Chromium IV	3.08e+03	3.08e-06	3.12e-03	3.01e+00	1.03e-08	2.83e-09
Cobalt	1.48e+02	1.48e-07	1.50e-04	1.45e-01	4.96e-10	1.36e-10
Copper	4.47e+03	4.47e-06	4.53e-03	4.37e+00	1.50e-08	4.11e-09
Iron	7.01e+04	7.01e-05	7.11e-02	6.86e+01	2.35e-07	6.44e-08
Lead	1.62e+04	1.62e-05	1.64e-02	1.58e+01	5.43e-08	1.49e-08
Magnesium	3.69e+04	3.69e-05	3.74e-02	3.61e+01	1.24e-07	3.39e-08
Manganese	1.54e+03	1.54e-06	1.56e-03	1.51e+00	5.16e-09	1.42e-09
Mercury	9.50e+00	9.50e-09	9.63e-06	9.29e-03	3.18e-11	8.73e-12
Nickel	1.97e+02	1.97e-07	2.00e-04	1.93e-01	6.60e-10	1.81e-10
Selenium	1.72e+01	1.72e-08	1.74e-05	1.68e-02	5.76e-11	1.58e-11
Silver	2.48e+01	2.48e-08	2.51e-05	2.43e-02	8.31e-11	2.28e-11
Vanadium	4.77e+01	4.77e-08	4.84e-05	4.67e-02	1.60e-10	4.39e-11
Zinc	1.58e+04	1.58e-05	1.60e-02	1.55e+01	5.29e-08	1.45e-08
Cyanide	6.62e+01	6.62e-08	6.71e-05	6.47e-02	2.22e-10	6.09e-11
Propyl Benzenes	1.20e+02	1.20e-07	1.22e-04	1.17e-01	4.02e-10	1.10e-10
Propenyl Benzenes	3.20e+04	3.20e-05	3.24e-02	3.13e+01	1.07e-07	2.94e-08
Ethyl Methyl Benzenes	3.70e+05	3.70e-04	3.75e-01	3.62e+02	1.24e-06	3.40e-07
Trimethyl Benzenes	2.20e+05	2.20e-04	2.23e-01	2.15e+02	7.37e-07	2.02e-07
Dimethyl ethyl benzenes	6.00e+04	6.00e-05	6.08e-02	5.87e+01	2.01e-07	5.52e-08
Tetramethyl Benzenes	6.80e+04	6.80e-05	6.90e-02	6.65e+01	2.28e-07	6.25e-08

Table W - 1

SUMMARY OF FUGITIVE DUST EMISSION AND DISPERSION VALUES

American Chemical Services NPL Site
Remedial Investigation
Griffith, Indiana

Compound	--- Emission Rate Calculation -- Exposure Point Conc. (ug/kg)	alpha (unitless)	R10 (g/hr)	---------- Dispersion Modeling ---------- SCALING FACTORS Q1 = R10/PR (ug/s)	Onsite 200 Meters (mg/m3)	Offsite 500 Meters (mg/m3)
Cyclic alkanes	5.20e+04	5.20e-05	5.27e-02	5.09e+01	1.74e-07	4.78e-08
n-chain Alkanes	2.90e+05	2.90e-04	2.94e-01	2.84e+02	9.71e-07	2.67e-07
Branched Alkanes	3.20e+05	3.20e-04	3.24e-01	3.13e+02	1.07e-06	2.94e-07
Methylated Ketones	1.80e+02	1.80e-07	1.83e-04	1.76e-01	6.03e-10	1.65e-10
Cyclic Acids	1.90e+04	1.90e-05	1.93e-02	1.86e+01	6.36e-08	1.75e-08
Non-Cyclic Acids	2.60e+05	2.60e-04	2.64e-01	2.54e+02	8.71e-07	2.39e-07

R10 = PM10 * alpha

where
PM10 = E10 * A

A = 4.70e+03 m2
E10 = 2.16e-01 g/m2-hr
alpha org = [Max(ug/kg)/1e+09]
alpha inorg = [Max(mg/kg)/1e+06]

E10 = 0.036 (1-V) ([U]/Ut)^3 F(x)

where
V = 0
[U] = 4.6 (m/sec)
Ut = 3.12
F(x) = 1.87

Scaling Factor Q1 = (R10 / PR) * ((1e+06 ug/g) / (hr/3600

Chronic Exposure Value X (pg/m3) = Q1 * F1
mg/m3 = (pg/m3)*1.0e-9

PR value from Figure 4-7, Cowherd et al. 1985
Climatic Region = 4 PR = 0.288

F1 values from page D-17, Cowherd et al. 1985
F1 for North at 200 Meters = 3.425
F1 for North at 500 Meters = 0.941

This table provides values calculated using the procedures outlined in "Rapid Assessment of Exposure to Particulate Emissions from Surface Contamination Sites", Cowherd et. al., February 1985 (EPA/600/8-85/002)

JAH/jah/
9/19/91
[acs.2020]dust-table.w20

Appendix X

Chronic Daily Chemical Intakes, Noncancer Hazard and Cancer Risks

Appendix X

Table of Contents

Land Use Scenario	Exposed Population	Exposure Medium	Health Risk	Table Number
Current	Adult off-site resident	Groundwater, lower aquifer	Noncancer hazard	X-1
			Cancer risk	X-2
		Ambient air, VOC	Noncancer hazard	X-3
			Cancer risk	X-4
		Ambient air, dust	Noncancer hazard	X-5
			Cancer risk	X-6
Current	Child off-site resident	Groundwater, upper aquifer	Noncancer hazard	X-7
			Cancer risk	X-8
Current	Child trespasser	Surface soil, Kapica-Pazmey	Noncancer hazard	X-9
			Cancer risk	X-10
		Surface water	Noncancer hazard	X-11
			Cancer risk	X-12
		Sediment	Noncancer hazard	X-13
			Cancer risk	X-14
		Ambient air, VOC	Noncancer hazard	X-15
			Cancer risk	X-16
		Ambient air, dust	Noncancer hazard	X-17
			Cancer risk	X-18
Current	ACS worker	Ambient air, VOC	Noncancer hazard	X-19
			Cancer risk	X-20
		Ambient air, dust	Noncancer hazard	X-21
			Cancer risk	X-22

Appendix X

Table of Contents
(Continued)

Land Use Scenario	Exposed Population	Exposure Medium	Health Risk	Table Number
Future	Adult on-site resident	Groundwater, lower aquifer	Noncancer hazard	X-23
			Cancer risk	X-24
		Groundwater, upper aquifer	Noncancer hazard	X-25
			Cancer risk	X-26
		Ambient air, VOC	Noncancer hazard	X-27
			Cancer risk	X-28
		Soil, on-site containment area	Noncancer hazard	X-29
			Cancer risk	X-30
		Soil, still bottoms and treatment lagoons	Noncancer hazard	X-31
			Cancer risk	X-32
		Soil, off-site containment area	Noncancer hazard	X-33
			Cancer risk	X-34
		Surface soil, Kapica-Pazmey	Noncancer hazard	X-35
			Cancer risk	X-36
		Subsurface soil, Kapica-Pazmey	Noncancer hazard	X-37
			Cancer risk	X-38
Future	Child on-site resident	Surface water	Noncancer hazard	X-39
			Cancer risk	X-40
		Sediment	Noncancer hazard	X-41
			Cancer risk	X-42

BC/vlr
[ccf-600-97d]
60251.17-MD

Table X - 1

SUMMARY OF NONCANCER HAZARDS

American Chemical Services Remedial Investigation
Griffith Indiana

Medium: Groundwater
Source Area: Lower Aquifer

Population: Offsite Resident
Land Use: Current Site Conditions

CHEMICAL OF POTENTIAL CONCERN	CHRONIC DAILY INTAKE (mg/kg-d)			HAZARD QUOTIENT				
	Dermal Absorp.	Ingestion	Inhalation	Dermal Absorp.	Ingestion	Inhalation	Total	% of Total
VOLATILES								
Chloroethane	2.0e-05	1.3e-02	5.4e-03	ND	ND	5.4e-03	5.4e-03	0.5
4-Methyl-2-pentanone	1.7e-05	8.6e-05	3.7e-05	6.7e-04	1.7e-03	1.9e-03	4.2e-03	0.4
SEMIVOLATILES								
bis(2-Chloroethyl) ether	1.2e-06	2.4e-04	5.8e-05	ND	ND	ND	0.0e+00	0.0
METALS								
Arsenic	5.7e-07	1.9e-04	0.0e+00	6.0e-04	1.9e-01	ND	2.0e-01	16.5
Barium	2.4e-05	8.3e-03	0.0e+00	6.9e-03	1.2e-01	ND	1.2e-01	10.5
Calcium	1.2e-02	4.3e+00	0.0e+00	ND	ND	ND	0.0e+00	0.0
Copper	1.1e-06	3.9e-04	0.0e+00	ND	ND	ND	0.0e+00	0.0
Iron	2.6e-04	9.0e-02	0.0e+00	ND	ND	ND	0.0e+00	0.0
Magnesium	4.3e-03	1.5e+00	0.0e+00	ND	ND	ND	0.0e+00	0.0
Manganese	6.1e-05	2.1e-02	0.0e+00	1.5e-02	2.1e-01	ND	2.2e-01	18.8
Mercury	2.8e-08	9.5e-06	0.0e+00	6.1e-04	3.2e-02	ND	3.2e-02	2.7
Potassium	2.4e-04	8.1e-02	0.0e+00	ND	ND	ND	0.0e+00	0.0
Selenium	1.7e-07	5.7e-05	0.0e+00	ND	ND	ND	0.0e+00	0.0
Sodium	8.0e-03	2.7e+00	0.0e+00	ND	ND	ND	0.0e+00	0.0
Vanadium	1.5e-07	5.3e-05	0.0e+00	4.4e-04	7.5e-03	ND	8.0e-03	0.7
Zinc	1.1e-06	3.6e-04	0.0e+00	1.8e-05	1.8e-03	ND	1.8e-03	0.2
TIC Groupings								
Ethers	3.4e-06	1.0e-03	4.4e-04	1.4e-05	2.1e-03	ND	2.1e-03	0.2
Diols	3.7e-05	7.7e-03	1.9e-03	3.7e-05	3.9e-03	ND	3.9e-03	0.3
Cyclic Alcohols	3.5e-04	7.1e-02	1.7e-02	2.3e-03	2.4e-01	ND	2.4e-01	20.2
Oxygenated Alcohols	1.4e-04	2.9e-02	6.9e-03	ND	ND	3.4e-01	3.4e-01	28.9
Cyclic Acids	5.5e-05	1.1e-02	2.7e-03	1.8e-05	2.9e-03	ND	2.9e-03	0.2
				Total	Total	Total	Total	Total
				2.7e-02	8.1e-01	3.5e-01	1.2e+00	100.0
				Total Risk All Routes		2.4e+00		

Table X - 1

SUMMARY OF NONCANCER HAZARDS

American Chemical Services Remedial Investigation
Griffith Indiana

Medium:	Groundwater	Population:	Offsite Resident
Source Area:	Lower Aquifer	Land Use:	Current Site Conditions

This table presents chronic daily intakes and hazard quotients for chemicals of potential concern. Hazard quotients are calculated by dividing the chronic daily intake by the reference dose. Chemical-specific hazard quotients are summed for each exposure route to arrive at a total hazard value. In some cases, hazard quotients were not determined (ND) because reference doses are not available.

JAH/jah/caw/KJD
VERSION 6/26/91
[ACS.2020.BRA]B-Hr.W20

Table X - 2

SUMMARY OF CANCER RISKS

American Chemical Services Remedial Investigation
Griffith Indiana

Medium: Groundwater
Source Area: Lower Aquifer

Population: Offsite Resident
Land Use: Current Site Conditions

CHEMICAL OF POTENTIAL CONCERN	CHRONIC DAILY INTAKE (mg/kg-d)			CANCER RISKS				
	Dermal Absorp.	Ingestion	Inhalation	Dermal Absorp.	Ingestion	Inhalation	Total	% of Total
VOLATILES								
Chloroethane	8.4e-06	5.4e-03	2.3e-03	ND	ND	ND	0.0e+00	0.0
4-Methyl-2-pentanone	7.2e-06	3.7e-05	1.6e-05	ND	ND	ND	0.0e+00	0.0
SEMIVOLATILES								
bis(2-Chloroethyl) ether	5.0e-07	1.0e-04	2.5e-05	1.1e-06	1.1e-04	2.7e-05	1.4e-04	48.5
METALS								
Arsenic	2.4e-07	8.3e-05	0.0e+00	4.6e-07	1.5e-04	ND	1.5e-04	51.5
Barium	1.0e-05	3.5e-03	0.0e+00	ND	ND	ND	0.0e+00	0.0
Calcium	5.3e-03	1.8e+00	0.0e+00	ND	ND	ND	0.0e+00	0.0
Copper	4.8e-07	1.7e-04	0.0e+00	ND	ND	ND	0.0e+00	0.0
Iron	1.1e-04	3.9e-02	0.0e+00	ND	ND	ND	0.0e+00	0.0
Magnesium	1.8e-03	6.3e-01	0.0e+00	ND	ND	ND	0.0e+00	0.0
Manganese	2.6e-05	8.9e-03	0.0e+00	ND	ND	ND	0.0e+00	0.0
Mercury	1.2e-08	4.1e-06	0.0e+00	ND	ND	ND	0.0e+00	0.0
Potassium	1.0e-04	3.5e-02	0.0e+00	ND	ND	ND	0.0e+00	0.0
Selenium	7.1e-08	2.4e-05	0.0e+00	ND	ND	ND	0.0e+00	0.0
Sodium	3.4e-03	1.2e+00	0.0e+00	ND	ND	ND	0.0e+00	0.0
Vanadium	6.6e-08	2.3e-05	0.0e+00	ND	ND	ND	0.0e+00	0.0
Zinc	4.5e-07	1.6e-04	0.0e+00	ND	ND	ND	0.0e+00	0.0
TIC Groupings								
Ethers	1.5e-06	4.4e-04	1.9e-04	ND	ND	ND	0.0e+00	0.0
Diols	1.6e-05	3.3e-03	7.9e-04	ND	ND	ND	0.0e+00	0.0
Cyclic Alcohols	1.5e-04	3.1e-02	7.3e-03	ND	ND	ND	0.0e+00	0.0
Oxygenated Alcohols	5.9e-05	1.2e-02	2.9e-03	ND	ND	ND	0.0e+00	0.0
Cyclic Acids	2.4e-05	4.9e-03	1.2e-03	ND	ND	ND	0.0e+00	0.0
				Total	Total	Total	Total	Total
				1.6e-06	2.6e-04	2.7e-05	2.9e-04	100.0
				Total Risk All Routes		5.9e-04		

Table X - 2

SUMMARY OF CANCER RISKS

American Chemical Services Remedial Investigation
Griffith Indiana

Medium:	Groundwater	Population:	Offsite Resident
Source Area:	Lower Aquifer	Land Use:	Current Site Conditions

This table presents chronic daily intakes and cancer risks for chemicals of potential concern. Cancer risks are calculated by multiplying the chronic daily intake by the slope factor. Chemical-specific cancer risks are summed for each exposure route to arrive at a total risk value. In some cases, cancer risks were not determined (ND) because slope factors are not available.

JAH/jah/caw/KJD
6/26/91
[ACS.2020.BRA]B-Cr.W20

Table X - 3

SUMMARY OF NONCANCER HAZARDS

American Chemical Services Remedial Investigation
Griffith Indiana

Medium: Ambient Air
Source Area: Volatile Emissions
Population: Offsite Resident
Land Use: Current Site Conditions

CHEMICAL OF POTENTIAL CONCERN	CHRONIC DAILY INTAKE (mg/kg-d)	HAZARD QUOTIENT	
	Inhalation	Inhalation	% of Total
VOLATILES			
Vinyl chloride	5.5e-06	ND	0.0
Chloroethane	3.4e-01	3.4e-01	36.1
Methylene chloride	4.2e-04	1.4e-04	0.0
Acetone	3.1e-03	ND	0.0
Carbon disulfide	2.1e-08	2.1e-06	0.0
1,1-Dichloroethene	1.4e-04	ND	0.0
1,1-Dichloroethane	5.2e-05	5.2e-04	0.1
1,2-Dichloroethene (cis)	1.8e-04	ND	0.0
Chloroform	8.4e-04	ND	0.0
1,2-Dichloroethane	1.7e-05	ND	0.0
2-Butanone	4.5e-03	5.0e-02	5.4
1,1,1-Trichloroethane	9.7e-03	3.2e-02	3.5
Carbon tetrachloride	7.7e-04	ND	0.0
1,2-Dichloropropane	2.2e-06	ND	0.0
Trichloroethene	5.9e-04	ND	0.0
1,1,2-Trichloroethane	6.3e-06	ND	0.0
Benzene	1.4e-04	ND	0.0
4-Methyl-2-pentanone	1.8e-04	8.8e-03	0.9
2-Hexanone	4.5e-08	ND	0.0
Tetrachloroethene	4.0e-04	ND	0.0
1,1,2,2-Tetrachloroethane	7.2e-08	ND	0.0
Toluene	8.3e-03	4.1e-03	0.4
Chlorobenzene	5.6e-06	1.1e-03	0.1
Ethylbenzene	4.0e-04	4.0e-04	0.0
Styrene	1.6e-05	ND	0.0
Xylenes (mixed)	3.0e-03	1.0e-02	1.1
SEMIVOLATILES			
Phenol	1.4e-07	ND	0.0
bis(2-Chloroethyl) ether	1.7e-07	ND	0.0
2-Chlorophenol	1.6e-11	ND	0.0
1,3-Dichlorobenzene	1.8e-09	ND	0.0
1,4-Dichlorobenzene	5.6e-09	8.0e-09	0.0
Benzyl Alcohol	1.5e-06	ND	0.0
1,2-Dichlorobenzene	1.4e-07	3.5e-06	0.0
2-Methylphenol	1.6e-08	ND	0.0

Table X - 3

SUMMARY OF NONCANCER HAZARDS

American Chemical Services Remedial Investigation
Griffith Indiana

Medium: Ambient Air
Source Area: Volatile Emissions
Population: Offsite Resident
Land Use: Current Site Conditions

CHEMICAL OF POTENTIAL CONCERN	CHRONIC DAILY INTAKE (mg/kg-d)	HAZARD QUOTIENT	
	Inhalation	Inhalation	% of Total
4-Methylphenol	1.1e-08	ND	0.0
Isophorone	1.8e-06	ND	0.0
2,4-Dimethylphenol	3.7e-09	ND	0.0
Benzoic Acid	5.1e-04	ND	0.0
2,4-Dichlorophenol	1.9e-10	ND	0.0
1,2,4-Trichlorophenol	4.1e-09	1.4e-06	0.0
Naphthalene	3.6e-10	ND	0.0
Hexachlorobutadiene	1.4e-07	ND	0.0
4-Chloro-3-methylphenol	3.6e-11	ND	0.0
2-Methylnaphthalene	3.7e-08	ND	0.0
2,4,6-Trichlorophenol	7.6e-12	ND	0.0
2,4,5-Trichlorophenol	2.0e-09	ND	0.0
2-Chloronaphthalene	5.5e-11	ND	0.0
Dimethylphthalate	5.3e-09	ND	0.0
Acenaphthylene	1.6e-10	ND	0.0
2,6-Dinitrotoluene	5.6e-12	ND	0.0
Acenaphthene	1.1e-11	ND	0.0
4-Nitrophenol	3.4e-09	ND	0.0
Dibenzofuran	1.2e-10	ND	0.0
2,4-Dinitrotoluene	4.8e-11	ND	0.0
Diethylphthalate	5.3e-10	ND	0.0
Fluorene	8.0e-12	ND	0.0
N-nitrosodiphenylamine	1.7e-12	ND	0.0
4-Bromophenyl-phenylether	2.7e-11	ND	0.0
Hexachlorobenzene	1.2e-14	ND	0.0
Pentachlorophenol	1.7e-11	ND	0.0
Phenanthrene	3.0e-11	ND	0.0
Anthracene	1.6e-12	ND	0.0
Di-n-butylphthalate	9.8e-12	ND	0.0
Fluoranthene	2.6e-13	ND	0.0
Pyrene	9.0e-14	ND	0.0
Butylbenzylphthalate	1.0e+01	ND	0.0
Benzo(a)anthracene	4.6e-16	ND	0.0
Chrysene	7.6e-17	ND	0.0
bis(2-ethylhexyl)phthalate	3.2e+01	ND	0.0
Di-n-octyl Phthalate	2.3e+00	ND	0.0
Benzo(b)fluoranthene	1.6e-14	ND	0.0
Benzo(k)fluoranthene	1.7e-14	ND	0.0
Benzo(a)pyrene	6.5e-17	ND	0.0

Table X - 3

SUMMARY OF NONCANCER HAZARDS

American Chemical Services Remedial Investigation
Griffith Indiana

Medium: Ambient Air
Source Area: Volatile Emissions
Population: Offsite Resident
Land Use: Current Site Conditions

CHEMICAL OF POTENTIAL CONCERN	CHRONIC DAILY INTAKE (mg/kg-d)	HAZARD QUOTIENT	
	Inhalation	Inhalation	% of Total
Ideno(1,2,3-cd)pyrene	6.5e-19	ND	0.0
Dibenz(a,h)anthracene	2.1e-19	ND	0.0
Benzo(g,h,i)perylene	9.0e-19	ND	0.0
Total Carcinogenic PAHs	3.4e-14	ND	0.0
PESTICIDE/PCB			
alpha-BHC	2.2e-15	ND	0.0
beta-BHC	6.9e-17	ND	0.0
gamma-BHC (Lindane)	3.8e-05	ND	0.0
Aldrin	4.5e-15	ND	0.0
Heptachlor epoxide	5.6e-16	ND	0.0
Endosulfan I	8.8e-15	ND	0.0
4,4'-DDE	8.5e-16	ND	0.0
4,4'-DDD	2.2e-15	ND	0.0
4,4'-DDT	1.9e-13	ND	0.0
Endrin ketone	5.9e-17	ND	0.0
PCB	2.5e-10	ND	0.0
TIC Groupings			
Propyl Benzenes	4.7e-06	5.2e-04	0.1
Propenyl Benzenes	1.3e-06	1.3e-04	0.0
Ethyl Methyl Benzenes	3.2e-05	1.6e-05	0.0
Diethyl Benzenes	7.2e-06	7.2e-06	0.0
Methyl Propyl Benzenes	6.6e-06	7.3e-04	0.1
Methyl Ethenyl Benzenes	1.6e-06	1.6e-04	0.0
Methyl Phenyl Benzenes	1.5e-11	ND	0.0
Trimethyl Benzenes	5.9e-04	1.0e-03	0.1
Dimethyl ethyl benzenes	2.7e-05	2.7e-05	0.0
Tetramethyl Benzenes	2.4e-04	4.3e-04	0.0
Oxygenated Benzenes	1.6e-04	ND	0.0
Nitrogenated Benzenes	8.1e-08	4.0e-05	0.0
Cyclic alkanes	1.8e-03	ND	0.0
Cyclic Alkenes	3.7e-04	ND	0.0
Halogenated Alkanes	1.4e-03	4.7e-03	0.5
n-chain Alkanes	6.5e-03	3.3e-02	3.5
Branched Alkanes	1.7e-03	8.3e-03	0.9
Branched Alkenes/Alkynes	7.4e-04	ND	0.0

Table X - 3

SUMMARY OF NONCANCER HAZARDS

American Chemical Services Remedial Investigation
Griffith Indiana

Medium: Ambient Air
Source Area: Volatile Emissions

Population: Offsite Resident
Land Use: Current Site Conditions

CHEMICAL OF POTENTIAL CONCERN	CHRONIC DAILY INTAKE (mg/kg-d)	HAZARD QUOTIENT	
	Inhalation	Inhalation	% of Total
Ethers	2.3e-05	ND	0.0
Methylated Naphthalenes	9.1e-11	ND	0.0
Phthalates	1.0e-10	ND	0.0
Methylated Phenols	6.0e-09	ND	0.0
Methylated Ketones	1.8e-05	ND	0.0
Simple Ketones	1.0e-06	1.1e-05	0.0
Cyclic Ketones	1.1e-07	ND	0.0
Diols	9.4e-08	ND	0.0
Simple Alcohols	1.2e-06	ND	0.0
Cyclic Alcohols	3.1e-08	ND	0.0
Oxygenated Alcohols	6.6e-07	3.3e-05	0.0
Cyclic Acids	2.4e-05	ND	0.0
Non-Cyclic Acids	1.3e-04	4.4e-01	47.1
Amines	6.2e-10	ND	0.0
PCBs	1.5e-12	ND	0.0
Furans	8.4e-07	ND	0.0
		9.3e-01	100%

This table presents chronic daily intakes and hazard quotients for chemicals of potential concern. Hazard quotients are calculated by dividing the chronic daily intake by the reference dose. Chemical-specific hazar quotients are summed for each exposure route to arrive at a total hazard value. In some cases, hazard quotie were not determined (ND) because reference doses are not available.

JAH/jah/BJC
VERSION 6/15/91
[ACS.2020.BRA]C-H.W20

Table X - 4

SUMMARY OF CANCER RISKS

American Chemical Services Remedial Investigation
Griffith Indiana

Medium: Ambient Air
Source Area: Volatile Emissions
Population: Offsite Resident
Land Use: Current Site Conditions

CHEMICAL OF POTENTIAL CONCERN	CHRONIC DAILY INTAKE (mg/kg-d)	CANCER RISKS	
	Inhalation	Inhalation	% of Total
VOLATILES			
Vinyl chloride	2.3e-06	6.9e-07	0.4
Chloroethane	1.4e-01	ND	0.0
Methylene chloride	1.8e-04	2.5e-06	1.6
Acetone	1.3e-03	ND	0.0
Carbon disulfide	8.9e-09	ND	0.0
1,1-Dichloroethene	6.0e-05	7.2e-05	46.6
1,1-Dichloroethane	2.2e-05	ND	0.0
1,2-Dichloroethene (cis)	7.8e-05	ND	0.0
Chloroform	3.6e-04	2.9e-05	18.8
1,2-Dichloroethane	7.1e-06	6.5e-07	0.4
2-Butanone	1.9e-03	ND	0.0
1,1,1-Trichloroethane	4.2e-03	ND	0.0
Carbon tetrachloride	3.3e-04	4.3e-05	27.7
1,2-Dichloropropane	9.4e-07	ND	0.0
Trichloroethene	2.5e-04	4.3e-06	2.8
1,1,2-Trichloroethane	2.7e-06	1.5e-07	0.1
Benzene	6.0e-05	1.7e-06	1.1
4-Methyl-2-pentanone	7.5e-05	ND	0.0
2-Hexanone	1.9e-08	ND	0.0
Tetrachloroethene	1.7e-04	5.7e-07	0.4
1,1,2,2-Tetrachloroethane	3.1e-08	6.2e-09	0.0
Toluene	3.5e-03	ND	0.0
Chlorobenzene	2.4e-06	ND	0.0
Ethylbenzene	1.7e-04	ND	0.0
Styrene	6.8e-06	1.4e-08	0.0
Xylenes (mixed)	1.3e-03	ND	0.0
SEMIVOLATILES			
Phenol	6.1e-08	ND	0.0
bis(2-Chloroethyl) ether	7.1e-08	7.8e-08	0.1
2-Chlorophenol	6.8e-12	ND	0.0
1,3-Dichlorobenzene	7.6e-10	ND	0.0
1,4-Dichlorobenzene	2.4e-09	ND	0.0
Benzyl Alcohol	6.4e-07	ND	0.0
1,2-Dichlorobenzene	5.9e-08	ND	0.0
2-Methylphenol	6.7e-09	ND	0.0

Table X - 4

SUMMARY OF CANCER RISKS

American Chemical Services Remedial Investigation
Griffith Indiana

Medium: Ambient Air
Source Area: Volatile Emissions

Population: Offsite Resident
Land Use: Current Site Conditions

CHEMICAL OF POTENTIAL CONCERN	CHRONIC DAILY INTAKE (mg/kg-d)	CANCER RISKS	
	Inhalation	Inhalation	% of Total
4-Methylphenol	4.6e-09	ND	0.0
Isophorone	7.7e-07	ND	0.0
2,4-Dimethylphenol	1.6e-09	ND	0.0
Benzoic Acid	2.2e-04	ND	0.0
2,4-Dichlorophenol	8.2e-11	ND	0.0
1,2,4-Trichlorophenol	1.8e-09	ND	0.0
Naphthalene	1.5e-10	ND	0.0
Hexachlorobutadiene	5.9e-08	4.6e-09	0.0
4-Chloro-3-methylphenol	1.6e-11	ND	0.0
2-Methylnaphthalene	1.6e-08	ND	0.0
2,4,6-Trichlorophenol	3.2e-12	3.6e-14	0.0
2,4,5-Trichlorophenol	8.7e-10	ND	0.0
2-Chloronaphthalene	2.4e-11	ND	0.0
Dimethylphthalate	2.3e-09	ND	0.0
Acenaphthylene	6.8e-11	ND	0.0
2,6-Dinitrotoluene	2.4e-12	ND	0.0
Acenaphthene	4.7e-12	ND	0.0
4-Nitrophenol	1.5e-09	ND	0.0
Dibenzofuran	5.3e-11	ND	0.0
2,4-Dinitrotoluene	2.1e-11	ND	0.0
Diethylphthalate	2.3e-10	ND	0.0
Fluorene	3.4e-12	ND	0.0
N-nitrosodiphenylamine	7.2e-13	ND	0.0
4-Bromophenyl-phenylether	1.2e-11	ND	0.0
Hexachlorobenzene	5.3e-15	ND	0.0
Pentachlorophenol	7.4e-12	ND	0.0
Phenanthrene	1.3e-11	ND	0.0
Anthracene	6.8e-13	ND	0.0
Di-n-butylphthalate	4.2e-12	ND	0.0
Fluoranthene	1.1e-13	ND	0.0
Pyrene	3.9e-14	ND	0.0
Butylbenzylphthalate	4.3e+00	ND	0.0
Benzo(a)anthracene	2.0e-16	ND	0.0
Chrysene	3.3e-17	ND	0.0
bis(2-ethylhexyl)phthalate	1.4e+01	ND	0.0
Di-n-octyl Phthalate	9.8e-01	ND	0.0
Benzo(b)fluoranthene	7.0e-15	ND	0.0
Benzo(k)fluoranthene	7.1e-15	ND	0.0
Benzo(a)pyrene	2.8e-17	ND	0.0

Table X - 4

SUMMARY OF CANCER RISKS

American Chemical Services Remedial Investigation
Griffith Indiana

Medium: Ambient Air
Source Area: Volatile Emissions
Population: Offsite Resident
Land Use: Current Site Conditions

CHEMICAL OF POTENTIAL CONCERN	CHRONIC DAILY INTAKE (mg/kg-d)	CANCER RISKS	
	Inhalation	Inhalation	% of Total
Ideno(1,2,3-cd)pyrene	2.8e-19	ND	0.0
Dibenz(a,h)anthracene	9.2e-20	ND	0.0
Benzo(g,h,i)perylene	3.9e-19	ND	0.0
Total Carcinogenic PAHs	1.4e-14	8.8e-14	0.0
PESTICIDE/PCB			
alpha-BHC	9.3e-16	ND	0.0
beta-BHC	3.0e-17	ND	0.0
gamma-BHC (Lindane)	1.6e-05	ND	0.0
Aldrin	1.9e-15	ND	0.0
Heptachlor epoxide	2.4e-16	ND	0.0
Endosulfan I	3.8e-15	ND	0.0
4,4'-DDE	3.6e-16	ND	0.0
4,4'-DDD	9.6e-16	ND	0.0
4,4'-DDT	8.4e-14	2.8e-14	0.0
Endrin ketone	2.5e-17	ND	0.0
PCB	1.1e-10	ND	0.0
TIC Groupings			
Propyl Benzenes	2.0e-06	ND	0.0
Propenyl Benzenes	5.4e-07	ND	0.0
Ethyl Methyl Benzenes	1.4e-05	ND	0.0
Diethyl Benzenes	3.1e-06	ND	0.0
Methyl Propyl Benzenes	2.8e-06	ND	0.0
Methyl Ethenyl Benzenes	6.8e-07	ND	0.0
Methyl Phenyl Benzenes	6.3e-12	ND	0.0
Trimethyl Benzenes	2.5e-04	ND	0.0
Dimethyl ethyl benzenes	1.1e-05	ND	0.0
Tetramethyl Benzenes	1.0e-04	ND	0.0
Oxygenated Benzenes	7.1e-05	ND	0.0
Nitrogenated Benzenes	3.5e-08	ND	0.0
Cyclic alkanes	7.7e-04	ND	0.0
Cyclic Alkenes	1.6e-04	ND	0.0
Halogenated Alkanes	6.0e-04	ND	0.0
n-chain Alkanes	2.8e-03	ND	0.0
Branched Alkanes	7.2e-04	ND	0.0
Branched Alkenes/Alkynes	3.2e-04	ND	0.0

Table X - 4

SUMMARY OF CANCER RISKS

American Chemical Services Remedial Investigation
Griffith Indiana

Medium: Ambient Air
Source Area: Volatile Emissions
Population: Offsite Resident
Land Use: Current Site Conditions

CHEMICAL OF POTENTIAL CONCERN	CHRONIC DAILY INTAKE (mg/kg-d)	CANCER RISKS	
	Inhalation	Inhalation	% of Total
Ethers	1.0e-05	ND	0.0
Methylated Naphthalenes	3.9e-11	ND	0.0
Phthalates	4.4e-11	ND	0.0
Methylated Phenols	2.6e-09	ND	0.0
Methylated Ketones	7.9e-06	ND	0.0
Simple Ketones	4.3e-07	ND	0.0
Cyclic Ketones	4.8e-08	ND	0.0
Diols	4.0e-08	ND	0.0
Simple Alcohols	5.2e-07	ND	0.0
Cyclic Alcohols	1.3e-08	ND	0.0
Oxygenated Alcohols	2.8e-07	ND	0.0
Cyclic Acids	1.0e-05	ND	0.0
Non-Cyclic Acids	5.6e-05	ND	0.0
Amines	2.6e-10	ND	0.0
PCBs	6.4e-13	ND	0.0
Furans	3.6e-07	ND	0.0
		Total 1.6e-04	Total 100%

This table presents chronic daily intakes and cancer risks for chemicals of potential concern. Cancer risks are calculated by multiplying the chronic daily intake by the slope factor. Chemical-specific cancer risks are summed for each exposure route to arrive at a total risk value. In some cases, cancer risks were not determined (ND) because slope factors are not available.

JAH/jah/BJC
6/15/91
[ACS.2020.BRA]C-C.W20

Table X - 5

SUMMARY OF NONCANCER HAZARDS

American Chemical Services Remedial Investigation
Griffith Indiana

Medium: Ambient Air
Source Area: Fugitive Dust

Population: Offsite Resident
Land Use: Current Site Conditions

CHEMICAL OF POTENTIAL CONCERN	CHRONIC DAILY INTAKE (mg/kg-d)	HAZARD QUOTIENT	
	Inhalation	Inhalation	% of Total
VOLATILES			
Methylene chloride	2.6e-11	8.7e-12	0.0
Acetone	1.3e-10	ND	0.0
1,1-Dichloroethane	2.0e-11	2.0e-10	0.0
1,2-Dichloroethene (cis)	1.0e-09	ND	0.0
Chloroform	1.3e-12	ND	0.0
1,1,1-Trichloroethane	1.2e-12	3.9e-12	0.0
1,2-Dichloropropane	2.5e-12	ND	0.0
Trichloroethene	2.2e-08	ND	0.0
Benzene	4.2e-10	ND	0.0
4-Methyl-2-pentanone	3.5e-08	1.8e-06	0.5
Tetrachloroethene	1.0e-07	ND	0.0
Toluene	2.5e-06	1.2e-06	0.4
Chlorobenzene	8.1e-10	1.6e-07	0.0
Ethylbenzene	5.6e-07	5.6e-07	0.2
Styrene	3.0e-09	ND	0.0
Xylenes (mixed)	3.0e-06	1.0e-05	3.0
SEMIVOLATILES			
Phenol	3.7e-09	ND	0.0
1,2-Dichlorobenzene	7.7e-11	1.9e-09	0.0
2-Methylphenol	6.2e-10	ND	0.0
4-Methylphenol	6.0e-10	ND	0.0
Isophorone	1.3e-08	ND	0.0
2,4-Dimethylphenol	6.4e-10	ND	0.0
Naphthalene	1.3e-08	ND	0.0
2-Methylnaphthalene	7.3e-09	ND	0.0
2,4,5-Trichlorophenol	2.2e-11	ND	0.0
Dimethylphthalate	1.8e-10	ND	0.0
Acenaphthene	4.7e-11	ND	0.0
Dibenzofuran	5.6e-11	ND	0.0
Diethylphthalate	6.5e-10	ND	0.0
Fluorene	8.1e-11	ND	0.0
N-nitrosodiphenylamine	5.6e-10	ND	0.0
Pentachlorophenol	2.0e-10	ND	0.0
Phenanthrene	5.6e-10	ND	0.0

Table X - 5

SUMMARY OF NONCANCER HAZARDS

American Chemical Services Remedial Investigation
Griffith Indiana

Medium: Ambient Air
Source Area: Fugitive Dust

Population: Offsite Resident
Land Use: Current Site Conditions

CHEMICAL OF POTENTIAL CONCERN	CHRONIC DAILY INTAKE (mg/kg-d)	HAZARD QUOTIENT	
	Inhalation	Inhalation	% of Total
Anthracene	8.6e-11	ND	0.0
Di-n-butylphthalate	1.2e-08	ND	0.0
Fluoranthene	4.5e-10	ND	0.0
Pyrene	3.0e-10	ND	0.0
Butylbenzylphthalate	6.7e-09	ND	0.0
Benzo(a)anthracene	3.1e-10	ND	0.0
Chrysene	1.7e-10	ND	0.0
bis(2-ethylhexyl)phthalate	7.1e-08	ND	0.0
Di-n-octyl Phthalate	5.0e-09	ND	0.0
Benzo(b)fluoranthene	5.1e-10	ND	0.0
Benzo(k)fluoranthene	5.1e-10	ND	0.0
Benzo(a)pyrene	1.8e-10	ND	0.0
Ideno(1,2,3-cd)pyrene	1.1e-10	ND	0.0
Dibenz(a,h)anthracene	3.5e-11	ND	0.0
Benzo(g,h,i)perylene	1.4e-10	ND	0.0
Total Carcinogenic PAHs	1.8e-09	ND	0.0
PESTICIDE/PCB			
Aldrin	1.2e-11	ND	0.0
Endosulfan I	5.5e-12	ND	0.0
4,4'-DDD	2.0e-11	ND	0.0
PCB	4.3e-08	ND	0.0
METALS			
Aluminum	1.7e-09	ND	0.0
Antimony	1.1e-11	ND	0.0
Barium	7.5e-10	7.5e-06	2.2
Cadmium (food/soil)	2.3e-11	ND	0.0
Calcium	2.1e-08	ND	0.0
Chromium VI	4.0e-10	2.0e-04	59.7
Cobalt	1.9e-11	ND	0.0
Copper	5.9e-10	ND	0.0
Iron	9.2e-09	ND	0.0
Lead	2.1e-09	ND	0.0
Magnesium	4.8e-09	ND	0.0
Manganese	2.0e-10	5.0e-07	0.1
Mercury	1.2e-12	4.1e-09	0.0

Table X - 5

SUMMARY OF NONCANCER HAZARDS

American Chemical Services Remedial Investigation
Griffith Indiana

Medium: Ambient Air
Source Area: Fugitive Dust

Population: Offsite Resident
Land Use: Current Site Conditions

CHEMICAL OF POTENTIAL CONCERN	CHRONIC DAILY INTAKE (mg/kg-d)	HAZARD QUOTIENT	
	Inhalation	Inhalation	% of Total
Nickel	2.6e-11	ND	0.0
Selenium	2.3e-12	ND	0.0
Silver	3.2e-12	ND	0.0
Vanadium	6.2e-12	ND	0.0
Zinc	2.1e-09	ND	0.0
Cyanide	8.7e-12	ND	0.0
TIC Groupings			
Propyl Benzenes	1.6e-11	1.7e-09	0.0
Propenyl Benzenes	4.2e-09	4.2e-07	0.1
Ethyl Methyl Benzenes	4.8e-08	2.4e-08	0.0
Trimethyl Benzenes	2.9e-08	5.1e-08	0.0
Dimethyl ethyl benzenes	7.9e-09	7.9e-09	0.0
Tetramethyl Benzenes	8.9e-09	1.6e-08	0.0
Cyclic alkanes	6.8e-09	ND	0.0
n-chain Alkanes	3.8e-08	1.9e-07	0.1
Branched Alkanes	4.2e-08	2.1e-07	0.1
Methylated Ketones	2.4e-11	ND	0.0
Cyclic Acids	2.5e-09	ND	0.0
Non-Cyclic Acids	3.4e-08	1.1e-04	33.6
		Total	Total
		3.4e-04	100%

This table presents chronic daily intakes and hazard quotients for chemicals of potential concern. Hazard quotients are calculated by dividing the chronic daily intake by the reference dose. Chemical-specific hazard quotients are summed for each exposure route to arrive at a total hazard value. In some cases, hazard quotients were not determined (ND) because reference doses are not available.

JAH/jah/BJC
VERSION 6/15/91
[ACS.2020.BRA]D-H.W20

Table X - 6

SUMMARY OF CANCER RISKS

American Chemical Services Remedial Investigation
Griffith Indiana

Medium: Ambient Air
Source Area: Fugitive Dust

Population: Offsite Resident
Land Use: Current Site Conditions

CHEMICAL OF POTENTIAL CONCERN	CHRONIC DAILY INTAKE (mg/kg-d)	CANCER RISKS	
	Inhalation	Inhalation	% of Total
VOLATILES			
Methylene chloride	1.1e-11	1.6e-13	0.0
Acetone	5.4e-11	ND	0.0
1,1-Dichloroethane	8.4e-12	ND	0.0
1,2-Dichloroethene (cis)	4.3e-10	ND	0.0
Chloroform	5.6e-13	4.5e-14	0.0
1,1,1-Trichloroethane	5.1e-13	ND	0.0
1,2-Dichloropropane	1.1e-12	ND	0.0
Trichloroethene	9.5e-09	1.6e-10	3.1
Benzene	1.8e-10	5.2e-12	0.1
4-Methyl-2-pentanone	1.5e-08	ND	0.0
Tetrachloroethene	4.4e-08	1.5e-10	2.8
Toluene	1.1e-06	ND	0.0
Chlorobenzene	3.5e-10	ND	0.0
Ethylbenzene	2.4e-07	ND	0.0
Styrene	1.3e-09	2.6e-12	0.0
Xylenes (mixed)	1.3e-06	ND	0.0
SEMIVOLATILES			
Phenol	1.6e-09	ND	0.0
1,2-Dichlorobenzene	3.3e-11	ND	0.0
2-Methylphenol	2.6e-10	ND	0.0
4-Methylphenol	2.6e-10	ND	0.0
Isophorone	5.4e-09	ND	0.0
2,4-Dimethylphenol	2.8e-10	ND	0.0
Naphthalene	5.4e-09	ND	0.0
2-Methylnaphthalene	3.1e-09	ND	0.0
2,4,5-Trichlorophenol	9.5e-12	ND	0.0
Dimethylphthalate	7.9e-11	ND	0.0
Acenaphthene	2.0e-11	ND	0.0
Dibenzofuran	2.4e-11	ND	0.0
Diethylphthalate	2.8e-10	ND	0.0
Fluorene	3.5e-11	ND	0.0
N-nitrosodiphenylamine	2.4e-10	ND	0.0
Pentachlorophenol	8.4e-11	ND	0.0
Phenanthrene	2.4e-10	ND	0.0
Anthracene	3.7e-11	ND	0.0

Table X - 6

SUMMARY OF CANCER RISKS

American Chemical Services Remedial Investigation
Griffith Indiana

Medium: Ambient Air
Source Area: Fugitive Dust

Population: Offsite Resident
Land Use: Current Site Conditions

CHEMICAL OF POTENTIAL CONCERN	CHRONIC DAILY INTAKE (mg/kg-d)	CANCER RISKS	
	Inhalation	Inhalation	% of Total
Di-n-butylphthalate	5.3e-09	ND	0.0
Fluoranthene	1.9e-10	ND	0.0
Pyrene	1.3e-10	ND	0.0
Butylbenzylphthalate	2.9e-09	ND	0.0
Benzo(a)anthracene	1.3e-10	ND	0.0
Chrysene	7.3e-11	ND	0.0
bis(2-ethylhexyl)phthalate	3.0e-08	ND	0.0
Di-n-octyl Phthalate	2.1e-09	ND	0.0
Benzo(b)fluoranthene	2.2e-10	ND	0.0
Benzo(k)fluoranthene	2.2e-10	ND	0.0
Benzo(a)pyrene	7.9e-11	ND	0.0
Ideno(1,2,3-cd)pyrene	4.6e-11	ND	0.0
Dibenz(a,h)anthracene	1.5e-11	ND	0.0
Benzo(g,h,i)perylene	6.2e-11	ND	0.0
Total Carcinogenic PAHs	7.9e-10	4.8e-09	92.1
PESTICIDE/PCB			
Aldrin	4.9e-12	8.4e-11	1.6
Endosulfan I	2.4e-12	ND	0.0
4,4'-DDD	8.4e-12	ND	0.0
PCB	1.8e-08	ND	0.0
METALS			
Aluminum	7.4e-10	ND	0.0
Antimony	4.8e-12	ND	0.0
Barium	3.2e-10	ND	0.0
Cadmium (food/soil)	9.8e-12	ND	0.0
Calcium	8.8e-09	ND	0.0
Chromium VI	1.7e-10	ND	0.0
Cobalt	8.3e-12	ND	0.0
Copper	2.5e-10	ND	0.0
Iron	3.9e-09	ND	0.0
Lead	9.1e-10	ND	0.0
Magnesium	2.1e-09	ND	0.0
Manganese	8.6e-11	ND	0.0
Mercury	5.3e-13	ND	0.0
Nickel	1.1e-11	9.3e-12	0.2

Table X - 6

SUMMARY OF CANCER RISKS

American Chemical Services Remedial Investigation
Griffith Indiana

Medium: Ambient Air
Source Area: Fugitive Dust

Population: Offsite Resident
Land Use: Current Site Conditions

CHEMICAL OF POTENTIAL CONCERN	CHRONIC DAILY INTAKE (mg/kg-d)	CANCER RISKS	
	Inhalation	Inhalation	% of Total
Selenium	9.7e-13	ND	0.0
Silver	1.4e-12	ND	0.0
Vanadium	2.7e-12	ND	0.0
Zinc	8.9e-10	ND	0.0
Cyanide	3.7e-12	ND	0.0
TIC Groupings			
Propyl Benzenes	6.7e-12	ND	0.0
Propenyl Benzenes	1.8e-09	ND	0.0
Ethyl Methyl Benzenes	2.1e-08	ND	0.0
Trimethyl Benzenes	1.2e-08	ND	0.0
Dimethyl ethyl benzenes	3.4e-09	ND	0.0
Tetramethyl Benzenes	3.8e-09	ND	0.0
Cyclic alkanes	2.9e-09	ND	0.0
n-chain Alkanes	1.6e-08	ND	0.0
Branched Alkanes	1.8e-08	ND	0.0
Methylated Ketones	1.0e-11	ND	0.0
Cyclic Acids	1.1e-09	ND	0.0
Non-Cyclic Acids	1.5e-08	ND	0.0
		Total 5.2e-09	Total 100%

This table presents chronic daily intakes and cancer risks for chemicals of potential concern. Cancer risks are calculated by multiplying the chronic daily intake by the slope factor. Chemical-specific cancer risks are summed for each exposure route to arrive at a total risk value. In some cases, cancer risks were not determined (ND) because slope factors are not available.

JAH/jah/BJC
6/15/91
[ACS.2020.BRA]D-C.W20

Table X - 7

SUMMARY OF NONCANCER HAZARDS

American Chemical Services Remedial Investigation
Griffith Indiana

Medium: Groundwater
Source Area: Upper Aquifer

Population: Offsite Child Resident
Land Use: Current Site Conditions

CHEMICAL OF POTENTIAL CONCERN	CHRONIC DAILY INTAKE (mg/kg-d)		HAZARD QUOTIENT			
	Dermal Absorp.	Ingestion	Dermal Absorp.	Ingestion	Total	% of Total
VOLATILES						
Chloromethane	2.2e-03	9.3e-06	ND	ND	0.0e+00	0.0
Vinyl chloride	1.0e-02	4.5e-05	ND	ND	0.0e+00	0.0
Chloroethane	2.3e-03	1.2e-03	ND	ND	0.0e+00	0.0
Methylene chloride	3.1e-02	1.3e-04	6.4e-01	2.2e-03	6.4e-01	0.4
Acetone	4.1e+00	1.7e-02	4.3e+01	1.7e-01	4.3e+01	27.7
1,1-Dichloroethane	8.5e-02	3.6e-04	8.5e-01	3.6e-03	8.5e-01	0.6
1,2-Dichloroethene (cis)	1.1e-02	4.9e-05	1.2e+00	4.9e-03	1.2e+00	0.8
2-Butanone	1.6e-01	1.4e-01	6.3e+00	2.7e+00	9.0e+00	5.8
Trichloroethene	1.2e-03	5.2e-06	ND	ND	0.0e+00	0.0
Benzene	1.6e+00	6.2e-02	ND	ND	0.0e+00	0.0
4-Methyl-2-pentanone	2.1e+00	8.9e-03	8.4e+01	1.8e-01	8.4e+01	54.3
2-Hexanone	2.4e-02	1.0e-04	ND	ND	0.0e+00	0.0
Tetrachloroethene	3.4e-03	1.5e-05	3.4e-01	1.5e-03	3.5e-01	0.2
Toluene	3.0e-02	1.3e-04	1.5e-01	6.5e-04	1.5e-01	0.1
Chlorobenzene	2.1e-03	8.8e-06	3.5e-01	4.4e-04	3.5e-01	0.2
Ethylbenzene	1.4e-01	4.3e-04	2.8e+00	4.3e-03	2.8e+00	1.8
Xylenes (mixed)	1.3e-01	5.6e-04	1.3e-01	2.8e-04	1.3e-01	0.1
SEMIVOLATILES						
Phenol	2.1e-05	1.1e-05	3.9e-05	1.9e-05	5.8e-05	0.0
bis(2-Chloroethyl) ether	2.7e-05	2.4e-05	ND	ND	0.0e+00	0.0
1,3-Dichlorobenzene	2.1e-06	1.9e-06	ND	ND	0.0e+00	0.0
1,4-Dichlorobenzene	3.9e-06	3.4e-06	ND	ND	0.0e+00	0.0
1,2-Dichlorobenzene	7.4e-06	6.4e-06	1.6e-04	7.1e-05	2.3e-04	0.0
2-Methylphenol	1.8e-05	4.9e-06	4.3e-04	9.5e-05	5.3e-04	0.0
bis(2-Chloroisopropyl)ether	3.9e-05	3.4e-05	2.0e-03	8.4e-04	2.8e-03	0.0
4-Methylphenol	1.7e-04	4.3e-05	4.3e-03	8.5e-04	5.2e-03	0.0
Isophorone	6.5e-06	5.6e-06	6.5e-05	2.8e-05	9.4e-05	0.0
2,4-Dimethylphenol	1.6e-04	6.2e-06	1.6e-02	3.1e-04	1.6e-02	0.0
Benzoic Acid	6.4e-05	5.6e-05	2.1e-05	1.4e-05	3.5e-05	0.0
Naphthalene	1.1e-05	9.3e-06	3.2e-03	2.3e-03	5.5e-03	0.0
4-Chloro-3-methylphenol	3.9e-05	3.1e-06	ND	ND	0.0e+00	0.0
2-Methylnaphthalene	5.3e-06	4.6e-06	ND	ND	0.0e+00	0.0
Diethylphthalate	8.8e-09	3.3e-06	2.2e-08	4.2e-06	4.2e-06	0.0
Pentachlorophenol	2.1e-06	1.9e-06	8.0e-05	6.2e-05	1.4e-04	0.0
Di-n-butylphthalate	6.6e-10	1.2e-06	7.3e-09	1.2e-05	1.2e-05	0.0
bis(2-ethylhexyl)phthalate	7.7e-09	5.8e-06	1.5e-06	2.9e-04	2.9e-04	0.0
PESTICIDE/PCB						

Table X - 7

SUMMARY OF NONCANCER HAZARDS

American Chemical Services Remedial Investigation
Griffith Indiana

Medium: Groundwater
Source Area: Upper Aquifer

Population: Offsite Child Resident
Land Use: Current Site Conditions

CHEMICAL OF POTENTIAL CONCERN	CHRONIC DAILY INTAKE (mg/kg-d)		HAZARD QUOTIENT			
	Dermal Absorp.	Ingestion	Dermal Absorp.	Ingestion	Total	% of Total
PCB	1.3e-04	1.1e-06	ND	ND	0.0e+00	0.0
METALS						
Aluminum	4.6e-05	1.3e-04	ND	ND	0.0e+00	0.0
Arsenic	4.9e-06	1.4e-05	5.1e-03	1.4e-02	1.9e-02	0.0
Barium	1.4e-04	3.9e-04	3.9e-02	5.6e-03	4.5e-02	0.0
Beryllium	2.4e-08	6.9e-08	4.8e-05	1.4e-05	6.2e-05	0.0
Cadmium (water)	7.1e-08	2.0e-07	2.0e-03	4.1e-04	2.4e-03	0.0
Calcium	5.1e-02	1.5e-01	ND	ND	0.0e+00	0.0
Chromium VI	4.2e-07	8.6e-07	1.7e-04	1.7e-04	3.4e-04	0.0
Iron	4.7e-02	1.3e-01	ND	ND	0.0e+00	0.0
Lead	3.9e-07	1.1e-06	5.6e-03	8.1e-03	1.4e-02	0.0
Magnesium	8.8e-03	2.5e-02	ND	ND	0.0e+00	0.0
Manganese	9.1e-04	2.6e-03	2.3e-01	2.6e-02	2.5e-01	0.2
Mercury	6.0e-08	1.7e-07	1.3e-03	5.8e-04	1.9e-03	0.0
Nickel	5.6e-06	1.6e-05	2.8e-03	8.0e-04	3.6e-03	0.0
Potassium	4.2e-03	1.2e-02	ND	ND	0.0e+00	0.0
Selenium	3.1e-07	8.8e-07	ND	ND	0.0e+00	0.0
Sodium	8.3e-02	2.4e-01	ND	ND	0.0e+00	0.0
Thallium	4.5e-07	1.3e-06	1.3e-01	1.8e-02	1.5e-01	0.1
Vanadium	1.3e-06	3.9e-06	3.8e-03	5.5e-04	4.4e-03	0.0
Zinc	3.5e-05	1.0e-04	5.9e-04	5.1e-04	1.1e-03	0.0
Cyanide	1.2e-06	3.4e-06	8.3e-05	1.7e-04	2.5e-04	0.0
TIC Groupings						
Propyl Benzenes	8.7e-03	3.7e-05	4.3e-01	9.3e-04	4.3e-01	0.3
Propenyl Benzenes	8.7e-04	3.7e-06	2.9e-01	6.2e-04	2.9e-01	0.2
Ethyl Methyl Benzenes	1.9e-02	8.0e-05	9.4e-02	4.0e-04	9.4e-02	0.1
Diethyl Benzenes	1.5e-02	4.8e-05	3.1e-01	4.8e-04	3.1e-01	0.2
Methyl Propyl Benzenes	2.0e-03	8.6e-06	1.0e-01	2.2e-04	1.0e-01	0.1
Methyl Ethenyl Benzenes	1.3e-05	1.1e-05	4.3e-03	1.9e-03	6.1e-03	0.0
Methyl Phenyl Benzenes	1.7e-05	1.5e-05	5.1e-03	3.7e-03	8.8e-03	0.0
Trimethyl Benzenes	9.3e-02	4.0e-04	2.3e-01	9.9e-04	2.3e-01	0.2
Dimethyl ethyl benzenes	7.8e-02	2.5e-04	1.6e+00	2.5e-03	1.6e+00	1.0
Tetramethyl Benzenes	1.9e-02	8.0e-05	4.7e-02	2.0e-04	4.7e-02	0.0
Oxygenated Benzenes	1.3e-02	5.6e-05	2.6e-01	5.6e-04	2.6e-01	0.2
Halogenated Benzenes	8.6e-05	7.4e-05	8.6e-03	3.7e-03	1.2e-02	0.0
Cyclic alkanes	1.1e-02	4.7e-05	ND	ND	0.0e+00	0.0
Cyclic Alkenes	9.1e-03	3.9e-05	ND	ND	0.0e+00	0.0
Halogenated Alkanes	1.1e-02	4.8e-05	1.3e-01	5.4e-04	1.3e-01	0.1
Branched Alkanes	1.0e-01	4.4e-04	3.5e+00	7.4e-03	3.5e+00	2.3

Table X - 7

SUMMARY OF NONCANCER HAZARDS

American Chemical Services Remedial Investigation
Griffith Indiana

Medium: Groundwater
Source Area: Upper Aquifer

Population: Offsite Child Resident
Land Use: Current Site Conditions

CHEMICAL OF POTENTIAL CONCERN	CHRONIC DAILY INTAKE (mg/kg-d)		HAZARD QUOTIENT			
	Dermal Absorp.	Ingestion	Dermal Absorp.	Ingestion	Total	% of Total
Ethers	3.7e-03	9.3e-04	1.5e-02	1.9e-03	1.6e-02	0.0
Methylated Naphthalenes	5.3e-05	4.6e-05	1.6e-02	1.1e-02	2.7e-02	0.0
Methylated Phenols	5.0e-04	1.2e-04	1.2e-02	2.4e-03	1.5e-02	0.0
Methylated Ketones	1.0e-03	4.3e-06	1.1e-02	4.3e-05	1.1e-02	0.0
Simple Ketones	1.2e-02	5.3e-05	5.0e-01	1.1e-03	5.0e-01	0.3
Cyclic Ketones	1.3e-02	5.7e-05	1.3e-01	2.8e-04	1.3e-01	0.1
Diols	1.3e-03	1.1e-03	1.3e-03	5.6e-04	1.8e-03	0.0
Simple Alcohols	5.8e-03	2.5e-05	1.2e-01	2.5e-04	1.2e-01	0.1
Cyclic Alcohols	1.4e-03	1.2e-03	9.5e-03	4.1e-03	1.4e-02	0.0
Oxygenated Alcohols	1.6e-03	1.4e-03	ND	ND	0.0e+00	0.0
Cyclic Acids	3.0e-04	2.6e-04	1.0e-04	6.5e-05	1.7e-04	0.0
Non-Cyclic Acids	1.6e-01	6.8e-04	4.0e+00	8.5e-03	4.0e+00	2.6
Amines	4.6e-03	2.0e-05	1.9e-02	4.0e-05	1.9e-02	0.0
Furans	0.0e+00	9.3e-05	ND	ND	0.0e+00	0.0
			Total	Total	Total	Total
			1.5e+02	3.2e+00	1.5e+02	100.0

This table presents chronic daily intakes and hazard quotients for chemicals of potential concern. Hazard quotients are calculated by dividing the chronic daily intake by the reference dose. Chemical-specific hazard quotients are summed for each exposure route to arrive at a total hazard value. In some cases, hazard quotients were not determined (ND) because reference doses are not available.

JAH/jah/
VERSION 6/20/91
[ACS.2020.BRA]A-Hr.W20

Table X - 8

SUMMARY OF CANCER RISKS

American Chemical Services Remedial Investigation
Griffith Indiana

Medium: Groundwater
Source Area: Upper Aquifer
Population: Offsite Child Resident
Land Use: Current Site Conditions

CHEMICAL OF POTENTIAL CONCERN	CHRONIC DAILY INTAKE (mg/kg-d)		CANCER RISKS			
	Dermal Absorp.	Ingestion	Dermal Absorp.	Ingestion	Total	% of Total
VOLATILES						
Chloromethane	3.1e-04	1.3e-06	8.1e-06	1.7e-08	8.1e-06	0.0
Vinyl chloride	1.5e-03	6.4e-06	2.8e-03	1.2e-05	2.9e-03	16.9
Chloroethane	3.3e-04	1.8e-04	ND	ND	0.0e+00	0.0
Methylene chloride	4.4e-03	1.9e-05	4.1e-05	1.4e-07	4.1e-05	0.2
Acetone	5.8e-01	2.5e-03	ND	ND	0.0e+00	0.0
1,1-Dichloroethane	1.2e-02	5.2e-05	ND	ND	0.0e+00	0.0
1,2-Dichloroethene (cis)	1.6e-03	7.0e-06	ND	ND	0.0e+00	0.0
2-Butanone	2.3e-02	1.9e-02	ND	ND	0.0e+00	0.0
Trichloroethene	1.7e-04	7.4e-07	1.9e-06	8.1e-09	1.9e-06	0.0
Benzene	2.3e-01	8.8e-03	1.3e-02	2.6e-04	1.3e-02	79.6
4-Methyl-2-pentanone	3.0e-01	1.3e-03	ND	ND	0.0e+00	0.0
2-Hexanone	3.5e-03	1.5e-05	ND	ND	0.0e+00	0.0
Tetrachloroethene	4.9e-04	2.1e-06	2.5e-05	1.1e-07	2.5e-05	0.1
Toluene	4.4e-03	1.9e-05	ND	ND	0.0e+00	0.0
Chlorobenzene	3.0e-04	1.3e-06	ND	ND	0.0e+00	0.0
Ethylbenzene	2.0e-02	6.2e-05	ND	ND	0.0e+00	0.0
Xylenes (mixed)	1.9e-02	7.9e-05	ND	ND	0.0e+00	0.0
SEMIVOLATILES						
Phenol	3.0e-06	1.6e-06	ND	ND	0.0e+00	0.0
bis(2-Chloroethyl) ether	3.9e-06	3.4e-06	8.6e-06	3.7e-06	1.2e-05	0.1
1,3-Dichlorobenzene	3.1e-07	2.6e-07	ND	ND	0.0e+00	0.0
1,4-Dichlorobenzene	5.6e-07	4.8e-07	1.3e-08	1.2e-08	2.5e-08	0.0
1,2-Dichlorobenzene	1.1e-06	9.1e-07	ND	ND	0.0e+00	0.0
2-Methylphenol	2.5e-06	6.9e-07	ND	ND	0.0e+00	0.0
bis(2-Chloroisopropyl)ether	5.6e-06	4.8e-06	ND	ND	0.0e+00	0.0
4-Methylphenol	2.5e-05	6.1e-06	ND	ND	0.0e+00	0.0
Isophorone	9.3e-07	8.1e-07	7.7e-09	3.3e-09	1.1e-08	0.0
2,4-Dimethylphenol	2.3e-05	8.9e-07	ND	ND	0.0e+00	0.0
Benzoic Acid	9.2e-06	7.9e-06	ND	ND	0.0e+00	0.0
Naphthalene	1.5e-06	1.3e-06	ND	ND	0.0e+00	0.0
4-Chloro-3-methylphenol	5.6e-06	4.4e-07	ND	ND	0.0e+00	0.0
2-Methylnaphthalene	7.6e-07	6.5e-07	ND	ND	0.0e+00	0.0
Diethylphthalate	1.3e-09	4.8e-07	ND	ND	0.0e+00	0.0
Pentachlorophenol	3.1e-07	2.6e-07	4.1e-08	3.2e-08	7.3e-08	0.0
Di-n-butylphthalate	9.4e-11	1.8e-07	ND	ND	0.0e+00	0.0

Table X - 8

SUMMARY OF CANCER RISKS

American Chemical Services Remedial Investigation
Griffith Indiana

Medium: Groundwater
Source Area: Upper Aquifer
Population: Offsite Child Resident
Land Use: Current Site Conditions

CHEMICAL OF POTENTIAL CONCERN	CHRONIC DAILY INTAKE (mg/kg-d)		CANCER RISKS			
	Dermal Absorp.	Ingestion	Dermal Absorp.	Ingestion	Total	% of Total
bis(2-ethylhexyl)phthalate	1.1e-09	8.3e-07	6.1e-11	1.2e-08	1.2e-08	0.0
PESTICIDE/PCB						
PCB	1.9e-05	1.5e-07	4.8e-04	1.2e-06	4.8e-04	2.9
METALS						
Aluminum	6.6e-06	1.9e-05	ND	ND	0.0e+00	0.0
Arsenic	7.0e-07	2.0e-06	1.3e-06	3.6e-06	4.9e-06	0.0
Barium	2.0e-05	5.6e-05	ND	ND	0.0e+00	0.0
Beryllium	3.4e-09	9.9e-09	1.5e-07	4.3e-08	1.9e-07	0.0
Cadmium (water)	1.0e-08	2.9e-08	ND	ND	0.0e+00	0.0
Calcium	7.3e-03	2.1e-02	ND	ND	0.0e+00	0.0
Chromium VI	6.0e-08	1.2e-07	ND	ND	0.0e+00	0.0
Iron	6.7e-03	1.9e-02	ND	ND	0.0e+00	0.0
Lead	5.6e-08	1.6e-07	ND	ND	0.0e+00	0.0
Magnesium	1.3e-03	3.6e-03	ND	ND	0.0e+00	0.0
Manganese	1.3e-04	3.7e-04	ND	ND	0.0e+00	0.0
Mercury	8.6e-09	2.5e-08	ND	ND	0.0e+00	0.0
Nickel	7.9e-07	2.3e-06	ND	ND	0.0e+00	0.0
Potassium	6.0e-04	1.7e-03	ND	ND	0.0e+00	0.0
Selenium	4.4e-08	1.3e-07	ND	ND	0.0e+00	0.0
Sodium	1.2e-02	3.4e-02	ND	ND	0.0e+00	0.0
Thallium	6.4e-08	1.8e-07	ND	ND	0.0e+00	0.0
Vanadium	1.9e-07	5.5e-07	ND	ND	0.0e+00	0.0
Zinc	5.0e-06	1.4e-05	ND	ND	0.0e+00	0.0
Cyanide	1.7e-07	4.8e-07	ND	ND	0.0e+00	0.0
TIC Groupings						
Propyl Benzenes	1.2e-03	5.3e-06	ND	ND	0.0e+00	0.0
Propenyl Benzenes	1.2e-04	5.3e-07	ND	ND	0.0e+00	0.0
Ethyl Methyl Benzenes	2.7e-03	1.1e-05	ND	ND	0.0e+00	0.0
Diethyl Benzenes	2.2e-03	6.9e-06	ND	ND	0.0e+00	0.0
Methyl Propyl Benzenes	2.9e-04	1.2e-06	ND	ND	0.0e+00	0.0
Methyl Ethenyl Benzenes	1.8e-06	1.6e-06	ND	ND	0.0e+00	0.0
Methyl Phenyl Benzenes	2.5e-06	2.1e-06	ND	ND	0.0e+00	0.0
Trimethyl Benzenes	1.3e-02	5.6e-05	ND	ND	0.0e+00	0.0

Table X - 8

SUMMARY OF CANCER RISKS

American Chemical Services Remedial Investigation
Griffith Indiana

Medium: Groundwater
Source Area: Upper Aquifer

Population: Offsite Child Resident
Land Use: Current Site Conditions

CHEMICAL OF POTENTIAL CONCERN	CHRONIC DAILY INTAKE (mg/kg-d)		CANCER RISKS			
	Dermal Absorp.	Ingestion	Dermal Absorp.	Ingestion	Total	% of Total
Dimethyl ethyl benzenes	1.1e-02	3.5e-05	ND	ND	0.0e+00	0.0
Tetramethyl Benzenes	2.7e-03	1.1e-05	ND	ND	0.0e+00	0.0
Oxygenated Benzenes	1.9e-03	7.9e-06	ND	ND	0.0e+00	0.0
Halogenated Benzenes	1.2e-05	1.1e-05	ND	ND	0.0e+00	0.0
Cyclic alkanes	1.6e-03	6.7e-06	ND	ND	0.0e+00	0.0
Cyclic Alkenes	1.3e-03	5.6e-06	ND	ND	0.0e+00	0.0
Halogenated Alkanes	1.6e-03	6.9e-06	ND	ND	0.0e+00	0.0
Branched Alkanes	1.5e-02	6.3e-05	ND	ND	0.0e+00	0.0
Ethers	5.2e-04	1.3e-04	ND	ND	0.0e+00	0.0
Methylated Naphthalenes	7.6e-06	6.5e-06	ND	ND	0.0e+00	0.0
Methylated Phenols	7.2e-05	1.8e-05	ND	ND	0.0e+00	0.0
Methylated Ketones	1.4e-04	6.2e-07	ND	ND	0.0e+00	0.0
Simple Ketones	1.8e-03	7.6e-06	ND	ND	0.0e+00	0.0
Cyclic Ketones	1.9e-03	8.1e-06	1.6e-05	3.3e-08	1.6e-05	0.1
Diols	1.8e-04	1.6e-04	ND	ND	0.0e+00	0.0
Simple Alcohols	8.3e-04	3.5e-06	ND	ND	0.0e+00	0.0
Cyclic Alcohols	2.0e-04	1.8e-04	ND	ND	0.0e+00	0.0
Oxygenated Alcohols	2.3e-04	1.9e-04	ND	ND	0.0e+00	0.0
Cyclic Acids	4.3e-05	3.7e-05	ND	ND	0.0e+00	0.0
Non-Cyclic Acids	2.3e-02	9.7e-05	ND	ND	0.0e+00	0.0
Amines	6.6e-04	2.8e-06	ND	ND	0.0e+00	0.0
Furans	0.0e+00	1.3e-05	ND	ND	0.0e+00	0.0
			Total 1.7e-02	Total 2.8e-04	Total 1.7e-02	Total 100.0

This table presents chronic daily intakes and cancer risks for chemicals of potential concern. Cancer risks are calculated by multiplying the chronic daily intake by the slope factor. Chemical-specific cancer risks are summed for each exposure route to arrive at a total risk value. In some cases, cancer risks were not determined (ND) because slope factors are not available.

JAH/jah/
6/20/91
[ACS.2020.BRA]A-Cr.W20

Table X - 9

SUMMARY OF NONCANCER HAZARDS

American Chemical Services Remedial Investigation
Griffith Indiana

Medium: Surface Soil
Source Area: Kapica - Pazmey

Population: Trespasser Child
Land Use: Current Site Conditions

CHEMICAL OF POTENTIAL CONCERN	CHRONIC DAILY INTAKE (mg/kg-d)		HAZARD QUOTIENT			
	Dermal Absorp.	Ingestion	Dermal Absorp.	Ingestion	Total	% of Total
VOLATILES						
Methylene chloride	2.9e-06	9.5e-08	6.1e-05	1.6e-06	6.3e-05	0.0
Acetone	1.4e-05	4.6e-07	1.5e-04	4.6e-06	1.5e-04	0.0
1,1-Dichloroethane	2.2e-06	7.1e-08	2.2e-05	7.1e-07	2.3e-05	0.0
1,2-Dichloroethene (cis)	1.1e-04	3.6e-06	1.2e-02	3.6e-04	1.2e-02	0.0
Chloroform	1.5e-07	4.7e-09	1.5e-05	4.7e-07	1.5e-05	0.0
1,1,1-Trichloroethane	1.3e-07	4.3e-09	1.5e-06	4.7e-08	1.5e-06	0.0
1,2-Dichloropropane	2.8e-07	9.0e-09	ND	ND	0.0e+00	0.0
Trichloroethene	2.5e-03	8.1e-05	ND	ND	0.0e+00	0.0
Benzene	4.7e-05	1.5e-06	ND	ND	0.0e+00	0.0
4-Methyl-2-pentanone	4.0e-03	1.3e-04	1.6e-01	2.6e-03	1.6e-01	0.1
Tetrachloroethene	1.2e-02	3.8e-04	1.2e+00	3.8e-02	1.2e+00	0.7
Toluene	2.8e-01	9.0e-03	1.4e+00	4.5e-02	1.4e+00	0.8
Chlorobenzene	9.1e-05	2.9e-06	1.5e-02	1.5e-04	1.5e-02	0.0
Ethylbenzene	6.3e-02	2.0e-03	1.3e+00	2.0e-02	1.3e+00	0.7
Styrene	3.4e-04	1.1e-05	1.9e-03	5.5e-05	1.9e-03	0.0
Xylenes (mixed)	3.4e-01	1.1e-02	3.4e-01	5.5e-03	3.4e-01	0.2
SEMIVOLATILES						
Phenol	4.1e-04	1.3e-05	7.6e-04	2.2e-05	7.8e-04	0.0
1,2-Dichlorobenzene	8.6e-06	2.8e-07	1.9e-04	3.1e-06	2.0e-04	0.0
2-Methylphenol	6.9e-05	2.2e-06	1.7e-03	4.4e-05	1.7e-03	0.0
4-Methylphenol	6.7e-05	2.2e-06	1.7e-03	4.4e-05	1.7e-03	0.0
Isophorone	1.4e-03	4.6e-05	1.4e-02	2.3e-04	1.4e-02	0.0
2,4-Dimethylphenol	7.2e-05	2.3e-06	7.2e-03	1.2e-04	7.3e-03	0.0
Naphthalene	1.4e-03	4.6e-05	4.2e-01	1.2e-02	4.3e-01	0.2
2-Methylnaphthalene	8.2e-04	2.7e-05	ND	ND	0.0e+00	0.0
2,4,5-Trichlorophenol	2.5e-06	8.1e-08	5.0e-05	8.1e-07	5.1e-05	0.0
Dimethylphthalate	2.0e-05	6.6e-07	4.1e-05	6.6e-07	4.2e-05	0.0
Acenaphthene	5.3e-06	1.7e-07	1.8e-04	2.8e-06	1.8e-04	0.0
Dibenzofuran	6.3e-06	2.0e-07	ND	ND	0.0e+00	0.0
Diethylphthalate	7.3e-05	2.4e-06	1.8e-04	3.0e-06	1.9e-04	0.0
Fluorene	9.1e-06	2.9e-07	4.5e-04	7.4e-06	4.6e-04	0.0
N-nitrosodiphenylamine	6.3e-05	2.0e-06	ND	ND	0.0e+00	0.0
Pentachlorophenol	2.2e-05	7.1e-07	8.1e-04	2.4e-05	8.4e-04	0.0
Phenanthrene	6.3e-05	2.0e-06	ND	ND	0.0e+00	0.0
Anthracene	9.7e-06	3.1e-07	6.4e-05	1.0e-06	6.5e-05	0.0

Table X - 9

SUMMARY OF NONCANCER HAZARDS

American Chemical Services Remedial Investigation
Griffith Indiana

Medium: Surface Soil
Source Area: Kapica - Pazmey

Population: Trespasser Child
Land Use: Current Site Conditions

CHEMICAL OF POTENTIAL CONCERN	CHRONIC DAILY INTAKE (mg/kg-d)		HAZARD QUOTIENT			
	Dermal Absorp.	Ingestion	Dermal Absorp.	Ingestion	Total	% of Total
Di-n-butylphthalate	1.4e-03	4.5e-05	1.5e-02	4.5e-04	1.6e-02	0.0
Fluoranthene	5.0e-05	1.6e-06	2.5e-03	4.0e-05	2.5e-03	0.0
Pyrene	3.4e-05	1.1e-06	2.2e-03	3.6e-05	2.3e-03	0.0
Butylbenzylphthalate	7.5e-04	2.4e-05	4.1e-03	1.2e-04	4.3e-03	0.0
Benzo(a)anthracene	3.5e-05	1.1e-06	ND	ND	0.0e+00	0.0
Chrysene	1.9e-05	6.2e-07	ND	ND	0.0e+00	0.0
bis(2-ethylhexyl)phthalate	7.9e-03	2.6e-04	1.6e+00	1.3e-02	1.6e+00	0.9
Di-n-octyl Phthalate	5.6e-04	1.8e-05	5.6e-02	9.0e-04	5.7e-02	0.0
Benzo(b)fluoranthene	5.7e-05	1.9e-06	ND	ND	0.0e+00	0.0
Benzo(k)fluoranthene	5.7e-05	1.9e-06	ND	ND	0.0e+00	0.0
Benzo(a)pyrene	2.0e-05	6.6e-07	ND	ND	0.0e+00	0.0
Ideno(1,2,3-cd)pyrene	1.2e-05	3.9e-07	ND	ND	0.0e+00	0.0
Dibenz(a,h)anthracene	4.0e-06	1.3e-07	ND	ND	0.0e+00	0.0
Benzo(g,h,i)perylene	1.6e-05	5.2e-07	ND	ND	0.0e+00	0.0
Total Carcinogenic PAHs	2.0e-04	6.6e-06	ND	ND	0.0e+00	0.0
PESTICIDE/PCB						
Aldrin	1.3e-06	4.2e-08	8.6e-02	1.4e-03	8.7e-02	0.0
Endosulfan I	6.1e-07	2.0e-08	2.5e-02	4.0e-04	2.5e-02	0.0
4,4'-DDD	2.2e-06	7.1e-08	ND	ND	0.0e+00	0.0
PCB	1.3e-03	1.6e-04	ND	ND	0.0e+00	0.0
METALS						
Aluminum	6.4e-03	6.3e-03	ND	ND	0.0e+00	0.0
Antimony	4.1e-05	4.0e-05	2.1e+00	1.0e-01	2.2e+00	1.2
Barium	2.8e-03	2.7e-03	8.0e-01	3.9e-02	8.4e-01	0.5
Cadmium (food/soil)	8.5e-05	8.3e-05	1.2e+00	8.3e-02	1.3e+00	0.7
Calcium	7.7e-02	7.5e-02	ND	ND	0.0e+00	0.0
Chromium VI	1.5e-03	1.5e-03	6.0e-01	2.9e-01	8.9e-01	0.5
Cobalt	7.2e-05	7.0e-05	ND	ND	0.0e+00	0.0
Copper	2.2e-03	2.1e-03	ND	ND	0.0e+00	0.0
Iron	3.4e-02	3.3e-02	ND	ND	0.0e+00	0.0
Lead	7.9e-03	7.7e-03	1.1e+02	5.5e+01	1.7e+02	92.7
Magnesium	1.8e-02	1.8e-02	ND	ND	0.0e+00	0.0
Manganese	7.5e-04	7.3e-04	1.9e-01	7.3e-03	2.0e-01	0.1
Mercury	4.6e-06	4.5e-06	1.0e-01	1.5e-02	1.2e-01	0.1
Nickel	9.6e-05	9.4e-05	4.8e-02	4.7e-03	5.3e-02	0.0

Table X - 9

SUMMARY OF NONCANCER HAZARDS

American Chemical Services Remedial Investigation
Griffith Indiana

Medium: Surface Soil
Source Area: Kapica - Pazmey

Population: Trespasser Child
Land Use: Current Site Conditions

CHEMICAL OF POTENTIAL CONCERN	CHRONIC DAILY INTAKE (mg/kg-d)		HAZARD QUOTIENT			
	Dermal Absorp.	Ingestion	Dermal Absorp.	Ingestion	Total	% of Total
Selenium	8.4e-06	8.2e-06	ND	ND	0.0e+00	0.0
Silver	1.2e-05	1.2e-05	4.0e-02	3.9e-03	4.4e-02	0.0
Vanadium	2.3e-05	2.3e-05	6.7e-02	3.2e-03	7.0e-02	0.0
Zinc	7.7e-03	7.5e-03	1.3e-01	3.8e-02	1.7e-01	0.1
Cyanide	3.2e-05	3.1e-05	2.3e-03	1.6e-03	3.9e-03	0.0
TIC Groupings						
Propyl Benzenes	1.8e-06	5.7e-08	8.8e-05	1.4e-06	8.9e-05	0.0
Propenyl Benzenes	4.7e-04	1.5e-05	1.6e-01	2.5e-03	1.6e-01	0.1
Ethyl Methyl Benzenes	5.4e-03	1.8e-04	2.7e-02	8.8e-04	2.8e-02	0.0
Trimethyl Benzenes	3.2e-03	1.0e-04	8.1e-03	2.6e-04	8.3e-03	0.0
Dimethyl ethyl benzenes	8.8e-04	2.8e-05	1.8e-02	2.8e-04	1.8e-02	0.0
Tetramethyl Benzenes	1.0e-03	3.2e-05	2.5e-03	8.1e-05	2.6e-03	0.0
Cyclic alkanes	0.0e+00	2.5e-05	ND	ND	0.0e+00	0.0
n-chain Alkanes	4.2e-03	1.4e-04	1.4e-01	2.3e-03	1.4e-01	0.1
Branched Alkanes	4.7e-03	1.5e-04	1.6e-01	2.5e-03	1.6e-01	0.1
Methylated Ketones	2.6e-06	8.5e-08	2.8e-05	8.5e-07	2.9e-05	0.0
Cyclic Acids	2.8e-04	9.0e-06	9.3e-05	2.3e-06	9.5e-05	0.0
Non-Cyclic Acids	3.8e-03	1.2e-04	9.5e-02	1.5e-03	9.7e-02	0.1
			Total	Total	Total	Total
			1.3e+02	5.6e+01	1.8e+02	100.0

This table presents chronic daily intakes and hazard quotients for chemicals of potential concern. Hazard quotients are calculated by dividing the chronic daily intake by the reference dose. Chemical-specific hazard quotients are summed for each exposure route to arrive at a total hazard value. In some cases, hazard quotients were not determined (ND) because reference doses are not available.

JAH/jah/
VERSION 6/20/91
[ACS.2020.BRAIE-H.W20

Table X - 10

SUMMARY OF CANCER RISKS

American Chemical Services Remedial Investigation
Griffith Indiana

Medium: Surface Soil
Source Area: Kapica-Pazmey

Population: Trespasser Child
Land Use: Current Site Conditions

CHEMICAL OF POTENTIAL CONCERN	CHRONIC DAILY INTAKE (mg/kg-d)		CANCER RISKS			
	Dermal Absorp.	Ingestion	Dermal Absorp.	Ingestion	Total	% of Total
VOLATILES						
Methylene chloride	4.2e-07	1.4e-08	3.9e-09	1.0e-10	4.0e-09	0.0
Acetone	2.0e-06	6.6e-08	ND	ND	0.0e+00	0.0
1,1-Dichloroethane	3.1e-07	1.0e-08	ND	ND	0.0e+00	0.0
1,2-Dichloroethene (cis)	1.6e-05	5.2e-07	ND	ND	0.0e+00	0.0
Chloroform	2.1e-08	6.8e-10	1.3e-10	4.1e-12	1.3e-10	0.0
1,1,1-Trichloroethane	1.9e-08	6.1e-10	ND	ND	0.0e+00	0.0
1,2-Dichloropropane	4.0e-08	1.3e-09	5.4e-09	8.8e-11	5.5e-09	0.0
Trichloroethene	3.6e-04	1.2e-05	3.9e-06	1.3e-07	4.0e-06	0.1
Benzene	6.7e-06	2.2e-07	3.9e-07	6.3e-09	3.9e-07	0.0
4-Methyl-2-pentanone	5.6e-04	1.8e-05	ND	ND	0.0e+00	0.0
Tetrachloroethene	1.7e-03	5.4e-05	8.4e-05	2.7e-06	8.7e-05	1.5
Toluene	4.0e-02	1.3e-03	ND	ND	0.0e+00	0.0
Chlorobenzene	1.3e-05	4.2e-07	ND	ND	0.0e+00	0.0
Ethylbenzene	9.0e-03	2.9e-04	ND	ND	0.0e+00	0.0
Styrene	4.8e-05	1.6e-06	1.6e-06	4.7e-08	1.7e-06	0.0
Xylenes (mixed)	4.8e-02	1.6e-03	ND	ND	0.0e+00	0.0
SEMIVOLATILES						
Phenol	5.9e-05	1.9e-06	ND	ND	0.0e+00	0.0
1,2-Dichlorobenzene	1.2e-06	4.0e-08	ND	ND	0.0e+00	0.0
2-Methylphenol	9.8e-06	3.2e-07	ND	ND	0.0e+00	0.0
4-Methylphenol	9.6e-06	3.1e-07	ND	ND	0.0e+00	0.0
Isophorone	2.0e-04	6.6e-06	1.7e-06	2.7e-08	1.7e-06	0.0
2,4-Dimethylphenol	1.0e-05	3.3e-07	ND	ND	0.0e+00	0.0
Naphthalene	2.0e-04	6.6e-06	ND	ND	0.0e+00	0.0
2-Methylnaphthalene	1.2e-04	3.8e-06	ND	ND	0.0e+00	0.0
2,4,5-Trichlorophenol	3.6e-07	1.2e-08	ND	ND	0.0e+00	0.0
Dimethylphthalate	2.9e-06	9.5e-08	ND	ND	0.0e+00	0.0
Acenaphthene	7.5e-07	2.4e-08	ND	ND	0.0e+00	0.0
Dibenzofuran	9.0e-07	2.9e-08	ND	ND	0.0e+00	0.0
Diethylphthalate	1.0e-05	3.4e-07	ND	ND	0.0e+00	0.0
Fluorene	1.3e-06	4.2e-08	ND	ND	0.0e+00	0.0
N-nitrosodiphenylamine	9.0e-06	2.9e-07	4.5e-08	1.4e-09	4.6e-08	0.0
Pentachlorophenol	3.1e-06	1.0e-07	4.2e-07	1.2e-08	4.3e-07	0.0
Phenanthrene	9.0e-06	2.9e-07	ND	ND	0.0e+00	0.0
Anthracene	1.4e-06	4.5e-08	ND	ND	0.0e+00	0.0

Table X - 10

SUMMARY OF CANCER RISKS

American Chemical Services Remedial Investigation
Griffith Indiana

Medium: Surface Soil
Source Area: Kapica-Pazmey

Population: Trespasser Child
Land Use: Current Site Conditions

CHEMICAL OF POTENTIAL CONCERN	CHRONIC DAILY INTAKE (mg/kg-d)		CANCER RISKS			
	Dermal Absorp.	Ingestion	Dermal Absorp.	Ingestion	Total	% of Total
Di-n-butylphthalate	2.0e-04	6.4e-06	ND	ND	0.0e+00	0.0
Fluoranthene	7.1e-06	2.3e-07	ND	ND	0.0e+00	0.0
Pyrene	4.8e-06	1.6e-07	ND	ND	0.0e+00	0.0
Butylbenzylphthalate	1.1e-04	3.5e-06	ND	ND	0.0e+00	0.0
Benzo(a)anthracene	5.0e-06	1.6e-07	ND	ND	0.0e+00	0.0
Chrysene	2.7e-06	8.8e-08	ND	ND	0.0e+00	0.0
bis(2-ethylhexyl)phthalate	1.1e-03	3.7e-05	6.3e-05	5.1e-07	6.4e-05	1.1
Di-n-octyl Phthalate	7.9e-05	2.6e-06	ND	ND	0.0e+00	0.0
Benzo(b)fluoranthene	8.2e-06	2.6e-07	ND	ND	0.0e+00	0.0
Benzo(k)fluoranthene	8.2e-06	2.6e-07	ND	ND	0.0e+00	0.0
Benzo(a)pyrene	2.9e-06	9.5e-08	ND	ND	0.0e+00	0.0
Ideno(1,2,3-cd)pyrene	1.7e-06	5.6e-08	ND	ND	0.0e+00	0.0
Dibenz(a,h)anthracene	5.6e-07	1.8e-08	ND	ND	0.0e+00	0.0
Benzo(g,h,i)perylene	2.3e-06	7.5e-08	ND	ND	0.0e+00	0.0
Total Carcinogenic PAHs	2.9e-05	9.5e-07	6.7e-04	1.1e-05	6.8e-04	11.9
PESTICIDE/PCB						
Aldrin	1.8e-07	6.0e-09	6.3e-06	1.0e-07	6.4e-06	0.1
Endosulfan I	8.8e-08	2.8e-09	ND	ND	0.0e+00	0.0
4,4'-DDD	3.1e-07	1.0e-08	1.5e-07	2.4e-09	1.5e-07	0.0
PCB	1.8e-04	2.2e-05	4.7e-03	1.7e-04	4.9e-03	85.2
METALS						
Aluminum	9.2e-04	9.0e-04	ND	ND	0.0e+00	0.0
Antimony	5.9e-06	5.8e-06	ND	ND	0.0e+00	0.0
Barium	4.0e-04	3.9e-04	ND	ND	0.0e+00	0.0
Cadmium (food/soil)	1.2e-05	1.2e-05	ND	ND	0.0e+00	0.0
Calcium	1.1e-02	1.1e-02	ND	ND	0.0e+00	0.0
Chromium VI	2.1e-04	2.1e-04	ND	ND	0.0e+00	0.0
Cobalt	1.0e-05	1.0e-05	ND	ND	0.0e+00	0.0
Copper	3.1e-04	3.0e-04	ND	ND	0.0e+00	0.0
Iron	4.9e-03	4.8e-03	ND	ND	0.0e+00	0.0
Lead	1.1e-03	1.1e-03	ND	ND	0.0e+00	0.0
Magnesium	2.6e-03	2.5e-03	ND	ND	0.0e+00	0.0
Manganese	1.1e-04	1.0e-04	ND	ND	0.0e+00	0.0
Mercury	6.6e-07	6.4e-07	ND	ND	0.0e+00	0.0
Nickel	1.4e-05	1.3e-05	ND	ND	0.0e+00	0.0

Table X - 10

SUMMARY OF CANCER RISKS

American Chemical Services Remedial Investigation
Griffith Indiana

Medium: Surface Soil
Source Area: Kapica-Pazmey

Population: Trespasser Child
Land Use: Current Site Conditions

CHEMICAL OF POTENTIAL CONCERN	CHRONIC DAILY INTAKE (mg/kg-d)		CANCER RISKS			
	Dermal Absorp.	Ingestion	Dermal Absorp.	Ingestion	Total	% of Total
Selenium	1.2e-06	1.2e-06	ND	ND	0.0e+00	0.0
Silver	1.7e-06	1.7e-06	ND	ND	0.0e+00	0.0
Vanadium	3.3e-06	3.2e-06	ND	ND	0.0e+00	0.0
Zinc	1.1e-03	1.1e-03	ND	ND	0.0e+00	0.0
Cyanide	4.6e-06	4.5e-06	ND	ND	0.0e+00	0.0
TIC Groupings						
Propyl Benzenes	2.5e-07	8.1e-09	ND	ND	0.0e+00	0.0
Propenyl Benzenes	6.7e-05	2.2e-06	ND	ND	0.0e+00	0.0
Ethyl Methyl Benzenes	7.7e-04	2.5e-05	ND	ND	0.0e+00	0.0
Trimethyl Benzenes	4.6e-04	1.5e-05	ND	ND	0.0e+00	0.0
Dimethyl ethyl benzenes	1.3e-04	4.1e-06	ND	ND	0.0e+00	0.0
Tetramethyl Benzenes	1.4e-04	4.6e-06	ND	ND	0.0e+00	0.0
Cyclic alkanes	0.0e+00	3.5e-06	ND	ND	0.0e+00	0.0
n-chain Alkanes	6.1e-04	2.0e-05	ND	ND	0.0e+00	0.0
Branched Alkanes	6.7e-04	2.2e-05	ND	ND	0.0e+00	0.0
Methylated Ketones	3.8e-07	1.2e-08	ND	ND	0.0e+00	0.0
Cyclic Acids	4.0e-05	1.3e-06	ND	ND	0.0e+00	0.0
Non-Cyclic Acids	5.4e-04	1.8e-05	ND	ND	0.0e+00	0.0
			Total 5.5e-03	Total 1.9e-04	Total 5.7e-03	Total 100.0

This table presents chronic daily intakes and cancer risks for chemicals of potential concern. Cancer risks are calculated by multiplying the chronic daily intake by the slope factor. Chemical-specific cancer risks are summed for each exposure route to arrive at a total risk value. In some cases, cancer risks were not determined (ND) because slope factors are not available.

JAH/jah/
6/20/91
[ACS.2020.BRA]E-C.W20

Table X - 11

SUMMARY OF NONCANCER HAZARDS

American Chemical Services Remedial Investigation
Griffith Indiana

Medium: Surface Water
Source Area: ACS

Population: Trespasser Child
Land Use: Current Site Conditions

CHEMICAL OF POTENTIAL CONCERN	CHRONIC DAILY INTAKE (mg/kg-d)		HAZARD QUOTIENT			
	Dermal Absorp.	Ingestion	Dermal Absorp.	Ingestion	Total	% of Total
VOLATILES						
Chloroethane	1.7e-05	2.1e-06	ND	ND	0.0e+00	0.0
Acetone	2.7e-02	2.7e-05	2.9e-01	2.7e-04	2.9e-01	21.7
1,1-Dichloroethane	1.4e-04	1.4e-07	1.4e-03	1.4e-06	1.4e-03	0.1
1,2-Dichloroethene (cis)	2.1e-04	2.1e-07	2.3e-02	2.1e-05	2.3e-02	1.7
2-Butanone	5.0e-05	1.0e-05	2.0e-03	2.0e-04	2.2e-03	0.2
Benzene	3.6e-03	3.3e-05	ND	ND	0.0e+00	0.0
4-Methyl-2-pentanone	3.5e-03	3.5e-06	1.4e-01	7.0e-05	1.4e-01	10.7
Toluene	5.7e-04	5.7e-07	2.9e-03	2.8e-06	2.9e-03	0.2
Ethylbenzene	5.2e-04	3.8e-07	1.0e-02	3.8e-06	1.0e-02	0.8
Xylenes (mixed)	2.5e-03	2.5e-06	2.5e-03	1.2e-06	2.5e-03	0.2
SEMIVOLATILES						
Phenol	2.6e-05	3.2e-06	4.8e-05	5.3e-06	5.4e-05	0.0
bis(2-Chloroethyl) ether	2.7e-05	5.5e-06	ND	ND	0.0e+00	0.0
2-Methylphenol	5.6e-06	3.6e-07	1.4e-04	7.0e-06	1.4e-04	0.0
bis(2-Chloroisopropyl)ether	1.0e-05	2.1e-06	5.1e-04	5.2e-05	5.6e-04	0.0
4-Methylphenol	7.3e-04	4.2e-05	1.8e-02	8.4e-04	1.9e-02	1.5
Isophorone	1.8e-06	3.6e-07	1.8e-05	1.8e-06	1.9e-05	0.0
2,4-Dimethylphenol	8.4e-05	7.7e-07	8.4e-03	3.8e-05	8.5e-03	0.6
Benzoic Acid	2.9e-05	5.9e-06	9.8e-06	1.5e-06	1.1e-05	0.0
4-Chloro-3-methylphenol	7.8e-06	1.4e-07	ND	ND	0.0e+00	0.0
PESTICIDE/PCB						
PCB	3.2e-05	6.0e-08	ND	ND	0.0e+00	0.0
METALS						
Aluminum	1.0e-04	6.8e-05	ND	ND	0.0e+00	0.0
Arsenic	4.8e-06	3.2e-06	5.0e-03	3.2e-03	8.2e-03	0.6
Barium	3.4e-05	2.3e-05	9.8e-03	3.3e-04	1.0e-02	0.8
Beryllium	2.9e-08	1.9e-08	5.7e-05	3.8e-06	6.1e-05	0.0
Cadmium (water)	7.6e-08	5.1e-08	2.2e-03	1.0e-04	2.3e-03	0.2
Calcium	3.5e-02	2.4e-02	ND	ND	0.0e+00	0.0
Chromium VI	4.2e-06	2.0e-06	1.7e-03	4.0e-04	2.1e-03	0.2
Copper	2.0e-06	1.4e-06	ND	ND	0.0e+00	0.0

Table X - 11

SUMMARY OF NONCANCER HAZARDS

American Chemical Services Remedial Investigation
Griffith Indiana

Medium: Surface Water
Source Area: ACS

Population: Trespasser Child
Land Use: Current Site Conditions

CHEMICAL OF POTENTIAL CONCERN	CHRONIC DAILY INTAKE (mg/kg-d)		HAZARD QUOTIENT			
	Dermal Absorp.	Ingestion	Dermal Absorp.	Ingestion	Total	% of Total
Iron	1.5e-03	1.0e-03	ND	ND	0.0e+00	0.0
Lead	2.5e-06	1.7e-06	3.6e-02	1.2e-02	4.8e-02	3.7
Magnesium	6.6e-03	4.4e-03	ND	ND	0.0e+00	0.0
Manganese	2.0e-04	1.3e-04	4.9e-02	1.3e-03	5.0e-02	3.8
Nickel	8.5e-06	5.7e-06	4.2e-03	2.8e-04	4.5e-03	0.3
Potassium	3.2e-03	2.1e-03	ND	ND	0.0e+00	0.0
Selenium	1.9e-07	1.3e-07	ND	ND	0.0e+00	0.0
Sodium	8.7e-03	5.9e-03	ND	ND	0.0e+00	0.0
Zinc	9.3e-06	6.3e-06	1.6e-04	3.1e-05	1.9e-04	0.0
TIC Groupings						
n-chain Alkanes	9.3e-03	9.3e-06	3.1e-01	1.5e-04	3.1e-01	23.5
Ethers	1.7e-05	1.0e-06	6.7e-05	2.0e-06	6.9e-05	0.0
Methylated Phenols	1.1e-04	6.4e-06	2.7e-03	1.3e-04	2.9e-03	0.2
Methylated Ketones	4.3e-04	4.3e-07	4.5e-03	4.3e-06	4.5e-03	0.3
Diols	5.0e-06	1.0e-06	5.0e-06	5.0e-07	5.5e-06	0.0
Cyclic Alcohols	1.5e-04	3.0e-05	9.9e-04	1.0e-04	1.1e-03	0.1
Oxygenated Alcohols	1.3e-05	2.6e-06	ND	ND	0.0e+00	0.0
Cyclic Acids	6.7e-05	1.4e-05	2.2e-05	3.4e-06	2.6e-05	0.0
Non-Cyclic Acids	1.4e-02	1.4e-05	3.6e-01	1.8e-04	3.6e-01	27.2
Amines	4.3e-03	4.3e-06	1.7e-02	8.5e-06	1.7e-02	1.3
Furans	0.0e+00	5.3e-06	ND	ND	0.0e+00	0.0
			Total	Total	Total	Total
			1.3e+00	2.0e-02	1.3e+00	100.0

This table presents chronic daily intakes and hazard quotients for chemicals of potential concern. Hazard quotients are calculated by dividing the chronic daily intake by the reference dose. Chemical-specific hazard quotients are summed for each exposure route to arrive at a total hazard value. In some cases, hazard quotients were not determined (ND) because reference doses are not available.

JAH/jah/
VERSION 6/19/91
[ACS.2020.BRA]H-H.W20

Table X - 12

SUMMARY OF CANCER RISKS

American Chemical Services Remedial Investigation
Griffith Indiana

Medium: Surface Water
Source Area: ACS

Population: Trespasser Child
Land Use: Current Site Conditions

CHEMICAL OF POTENTIAL CONCERN	CHRONIC DAILY INTAKE (mg/kg-d)		CANCER RISKS			
	Dermal Absorp.	Ingestion	Dermal Absorp.	Ingestion	Total	% of Total
VOLATILES						
Chloroethane	2.4e-06	3.1e-07	ND	ND	0.0e+00	0.0
Acetone	3.9e-03	3.9e-06	ND	ND	0.0e+00	0.0
1,1-Dichloroethane	2.0e-05	2.0e-08	ND	ND	0.0e+00	0.0
1,2-Dichloroethene (cis)	3.1e-05	3.1e-08	ND	ND	0.0e+00	0.0
2-Butanone	7.1e-06	1.4e-06	ND	ND	0.0e+00	0.0
Benzene	5.2e-04	4.7e-06	3.0e-05	1.4e-07	3.0e-05	19.1
4-Methyl-2-pentanone	5.0e-04	5.0e-07	ND	ND	0.0e+00	0.0
Toluene	8.2e-05	8.1e-08	ND	ND	0.0e+00	0.0
Ethylbenzene	7.5e-05	5.5e-08	ND	ND	0.0e+00	0.0
Xylenes (mixed)	3.6e-04	3.6e-07	ND	ND	0.0e+00	0.0
SEMIVOLATILES						
Phenol	3.7e-06	4.6e-07	ND	ND	0.0e+00	0.0
bis(2-Chloroethyl) ether	3.9e-06	7.8e-07	8.6e-06	8.6e-07	9.4e-06	6.0
2-Methylphenol	7.9e-07	5.1e-08	ND	ND	0.0e+00	0.0
bis(2-Chloroisopropyl)ether	1.5e-06	3.0e-07	ND	ND	0.0e+00	0.0
4-Methylphenol	1.0e-04	6.0e-06	ND	ND	0.0e+00	0.0
Isophorone	2.5e-07	5.1e-08	2.1e-09	2.1e-10	2.3e-09	0.0
2,4-Dimethylphenol	1.2e-05	1.1e-07	ND	ND	0.0e+00	0.0
Benzoic Acid	4.2e-06	8.5e-07	ND	ND	0.0e+00	0.0
4-Chloro-3-methylphenol	1.1e-06	2.0e-08	ND	ND	0.0e+00	0.0
PESTICIDE/PCB						
PCB	4.5e-06	8.5e-09	1.2e-04	6.6e-08	1.2e-04	73.4
METALS						
Aluminum	1.5e-05	9.8e-06	ND	ND	0.0e+00	0.0
Arsenic	6.8e-07	4.6e-07	1.3e-06	8.2e-07	2.1e-06	1.3
Barium	4.9e-06	3.3e-06	ND	ND	0.0e+00	0.0
Beryllium	4.1e-09	2.7e-09	1.8e-07	1.2e-08	1.9e-07	0.1
Cadmium (water)	1.1e-08	7.3e-09	ND	ND	0.0e+00	0.0
Calcium	5.1e-03	3.4e-03	ND	ND	0.0e+00	0.0
Chromium VI	5.9e-07	2.8e-07	ND	ND	0.0e+00	0.0
Copper	2.9e-07	1.9e-07	ND	ND	0.0e+00	0.0

Table X - 12

SUMMARY OF CANCER RISKS

American Chemical Services Remedial Investigation
Griffith Indiana

Medium: Surface Water
Source Area: ACS

Population: Trespasser Child
Land Use: Current Site Conditions

CHEMICAL OF POTENTIAL CONCERN	CHRONIC DAILY INTAKE (mg/kg-d)		CANCER RISKS			
	Dermal Absorp.	Ingestion	Dermal Absorp.	Ingestion	Total	% of Total
Iron	2.2e-04	1.5e-04	ND	ND	0.0e+00	0.0
Lead	3.6e-07	2.4e-07	ND	ND	0.0e+00	0.0
Magnesium	9.4e-04	6.3e-04	ND	ND	0.0e+00	0.0
Manganese	2.8e-05	1.9e-05	ND	ND	0.0e+00	0.0
Nickel	1.2e-06	8.1e-07	ND	ND	0.0e+00	0.0
Potassium	4.6e-04	3.1e-04	ND	ND	0.0e+00	0.0
Selenium	2.8e-08	1.9e-08	ND	ND	0.0e+00	0.0
Sodium	1.2e-03	8.4e-04	ND	ND	0.0e+00	0.0
Zinc	1.3e-06	9.0e-07	ND	ND	0.0e+00	0.0
TIC Groupings						
n-chain Alkanes	1.3e-03	1.3e-06	ND	ND	0.0e+00	0.0
Ethers	2.4e-06	1.4e-07	ND	ND	0.0e+00	0.0
Methylated Phenols	1.6e-05	9.2e-07	ND	ND	0.0e+00	0.0
Methylated Ketones	6.1e-05	6.1e-08	ND	ND	0.0e+00	0.0
Diols	7.1e-07	1.4e-07	ND	ND	0.0e+00	0.0
Cyclic Alcohols	2.1e-05	4.3e-06	ND	ND	0.0e+00	0.0
Oxygenated Alcohols	1.8e-06	3.7e-07	ND	ND	0.0e+00	0.0
Cyclic Acids	9.6e-06	1.9e-06	ND	ND	0.0e+00	0.0
Non-Cyclic Acids	2.0e-03	2.0e-06	ND	ND	0.0e+00	0.0
Amines	6.1e-04	6.1e-07	ND	ND	0.0e+00	0.0
Furans	0.0e+00	7.6e-07	ND	ND	0.0e+00	0.0
			Total 1.6e-04	Total 1.9e-06	Total 1.6e-04	Total 100.0

This table presents chronic daily intakes and cancer risks for chemicals of potential concern. Cancer risks are calculated by multiplying the chronic daily intake by the slope factor. Chemical-specific cancer risks are summed for each exposure route to arrive at a total risk value. In some cases, cancer risks were not determined (ND) because slope factors are not available.

JAH/jah/
6/19/91
[ACS.2020.BRA]H-C.W20

Table X - 13

SUMMARY OF NONCANCER HAZARDS

American Chemical Services Remedial Investigation
Griffith Indiana

Medium: Sediment
Source Area: ACS

Population: Trespasser Child
Land Use: Current Site Conditions

CHEMICAL OF POTENTIAL CONCERN	CHRONIC DAILY INTAKE (mg/kg-d)		HAZARD QUOTIENT			
	Dermal Absorp.	Ingestion	Dermal Absorp.	Ingestion	Total	% of Total
VOLATILES						
Chloroethane	1.7e-07	2.8e-09	ND	ND	0.0e+00	0.0
Methylene chloride	3.8e-07	6.1e-09	5.1e-10	6.6e-12	5.1e-10	0.0
1,2-Dichloroethene (cis)	8.2e-08	1.3e-09	ND	ND	0.0e+00	0.0
Chloroform	8.7e-08	1.4e-09	7.6e-11	1.2e-12	7.7e-11	0.0
2-Butanone	1.3e-07	2.1e-09	ND	ND	0.0e+00	0.0
1,1,1-Trichloroethane	4.4e-08	7.1e-10	ND	ND	0.0e+00	0.0
Benzene	6.3e-06	1.0e-07	5.2e-08	4.2e-10	5.3e-08	0.0
Toluene	7.2e-07	1.2e-08	ND	ND	0.0e+00	0.0
Ethylbenzene	1.9e-07	3.1e-09	ND	ND	0.0e+00	0.0
Xylenes (mixed)	2.3e-07	3.8e-09	ND	ND	0.0e+00	0.0
SEMIVOLATILES						
Phenol	2.8e-06	4.5e-08	ND	ND	0.0e+00	0.0
bis(2-Chloroethyl) ether	5.3e-06	8.6e-08	1.7e-06	1.3e-08	1.7e-06	0.8
bis(2-Chloroisopropyl)ether	8.4e-06	1.4e-07	ND	ND	0.0e+00	0.0
4-Methylphenol	4.0e-06	6.4e-08	ND	ND	0.0e+00	0.0
2,4-Dimethylphenol	5.3e-06	8.6e-08	ND	ND	0.0e+00	0.0
Benzoic Acid	1.8e-05	2.8e-07	ND	ND	0.0e+00	0.0
Naphthalene	5.2e-06	8.5e-08	ND	ND	0.0e+00	0.0
2-Methylnaphthalene	5.0e-06	8.1e-08	ND	ND	0.0e+00	0.0
Dibenzofuran	3.4e-06	5.5e-08	ND	ND	0.0e+00	0.0
Fluorene	5.8e-06	9.4e-08	ND	ND	0.0e+00	0.0
Hexachlorobenzene	2.0e-06	3.3e-08	9.4e-07	7.6e-09	9.4e-07	0.4
Pentachlorophenol	3.4e-06	5.5e-08	6.4e-08	9.4e-10	6.5e-08	0.0
Phenanthrene	5.5e-06	9.0e-08	ND	ND	0.0e+00	0.0
Anthracene	1.5e-06	2.4e-08	ND	ND	0.0e+00	0.0
Di-n-butylphthalate	2.5e-06	4.0e-08	ND	ND	0.0e+00	0.0
Fluoranthene	7.7e-06	1.2e-07	ND	ND	0.0e+00	0.0
Pyrene	7.3e-06	1.2e-07	ND	ND	0.0e+00	0.0
Butylbenzylphthalate	2.5e-06	4.0e-08	ND	ND	0.0e+00	0.0
Benzo(a)anthracene	6.7e-06	1.1e-07	ND	ND	0.0e+00	0.0
Chrysene	6.3e-06	1.0e-07	ND	ND	0.0e+00	0.0
bis(2-ethylhexyl)phthalate	7.4e-05	1.2e-06	5.9e-07	2.4e-09	6.0e-07	0.3
Benzo(b)fluoranthene	9.1e-06	1.5e-07	ND	ND	0.0e+00	0.0
Benzo(k)fluoranthene	9.3e-06	1.5e-07	ND	ND	0.0e+00	0.0
Benzo(a)pyrene	6.1e-06	9.9e-08	ND	ND	0.0e+00	0.0

Table X - 13

SUMMARY OF NONCANCER HAZARDS

American Chemical Services Remedial Investigation
Griffith Indiana

Medium: Sediment
Source Area: ACS

Population: Trespasser Child
Land Use: Current Site Conditions

CHEMICAL OF POTENTIAL CONCERN	CHRONIC DAILY INTAKE (mg/kg-d)		HAZARD QUOTIENT			
	Dermal Absorp.	Ingestion	Dermal Absorp.	Ingestion	Total	% of Total
Ideno(1,2,3-cd)pyrene	4.7e-06	7.7e-08	ND	ND	0.0e+00	0.0
Dibenz(a,h)anthracene	2.9e-06	4.7e-08	ND	ND	0.0e+00	0.0
Benzo(g,h,i)perylene	5.3e-06	8.5e-08	ND	ND	0.0e+00	0.0
Total Carcinogenic PAHs	4.5e-05	7.3e-07	1.5e-04	1.2e-06	1.5e-04	69.6
PESTICIDE/PCB						
Heptachlor epoxide	3.9e-07	6.3e-09	1.0e-06	8.2e-09	1.0e-06	0.5
PCB	1.6e-05	9.8e-07	5.9e-05	1.1e-06	6.0e-05	27.8
METALS						
Barium	3.5e-08	1.7e-08	ND	ND	0.0e+00	0.0
Calcium	2.7e-05	1.3e-05	ND	ND	0.0e+00	0.0
Chromium VI	2.2e-08	1.1e-08	ND	ND	0.0e+00	0.0
Copper	4.6e-08	2.2e-08	ND	ND	0.0e+00	0.0
Magnesium	9.1e-06	4.4e-06	ND	ND	0.0e+00	0.0
Mercury	6.0e-10	2.9e-10	ND	ND	0.0e+00	0.0
Nickel	1.0e-08	4.9e-09	ND	ND	0.0e+00	0.0
Selenium	2.8e-10	1.4e-10	ND	ND	0.0e+00	0.0
Vanadium	1.7e-08	8.2e-09	ND	ND	0.0e+00	0.0
TIC Groupings						
Halogenated Alkanes	8.5e-05	1.4e-06	ND	ND	0.0e+00	0.0
Branched Alkanes	1.5e-05	2.4e-07	ND	ND	0.0e+00	0.0
Phthalates	3.2e-05	5.2e-07	ND	ND	0.0e+00	0.0
Methylated Phenols	3.2e-05	5.2e-07	ND	ND	0.0e+00	0.0
Methylated Ketones	3.7e-07	5.9e-09	ND	ND	0.0e+00	0.0
Cyclic Alcohols	1.3e-05	2.1e-07	ND	ND	0.0e+00	0.0
Non-Cyclic Acids	2.0e-05	3.3e-07	ND	ND	0.0e+00	0.0
PCBs	0.0e+00	1.1e-06	ND	1.2e-06	1.2e-06	0.6
Furans	0.0e+00	3.8e-08	ND	ND	0.0e+00	0.0
			Total 2.1e-04	Total 3.5e-06	Total 2.2e-04	Total 100.0

Table X - 13

SUMMARY OF NONCANCER HAZARDS

American Chemical Services Remedial Investigation
Griffith Indiana

Medium: Sediment
Source Area: ACS

Population: Trespasser Child
Land Use: Current Site Conditions

CHEMICAL OF POTENTIAL CONCERN	CHRONIC DAILY INTAKE (mg/kg-d)		HAZARD QUOTIENT			
	Dermal Absorp.	Ingestion	Dermal Absorp.	Ingestion	Total	% of Total

This table presents chronic daily intakes and hazard quotients for chemicals of potential concern. Hazard quotients are calculated by dividing the chronic daily intake by the reference dose. Chemical-specific hazard quotients are summed for each exposure route to arrive at a total hazard value. In some cases, hazard quotients were not determined (ND) because reference doses are not available.

JAH/jah/
VERSION 6/19/91
[ACS.2020.BRA]I-H.W20

Table X - 14

SUMMARY OF CANCER RISKS

American Chemical Services Remedial Investigation
Griffith Indiana

Medium: Sediment
Source Area: ACS

Population: Trespasser Child
Land Use: Current Site Conditions

CHEMICAL OF POTENTIAL CONCERN	CHRONIC DAILY INTAKE (mg/kg-d)		CANCER RISKS			
	Dermal Absorp.	Ingestion	Dermal Absorp.	Ingestion	Total	% of Total
VOLATILES						
Chloroethane	2.4e-08	3.9e-10	ND	ND	0.0e+00	0.0
Methylene chloride	5.4e-08	8.8e-10	5.1e-10	6.6e-12	5.1e-10	0.0
1,2-Dichloroethene (cis)	1.2e-08	1.9e-10	ND	ND	0.0e+00	0.0
Chloroform	1.2e-08	2.0e-10	7.6e-11	1.2e-12	7.7e-11	0.0
2-Butanone	1.9e-08	3.0e-10	ND	ND	0.0e+00	0.0
1,1,1-Trichloroethane	6.3e-09	1.0e-10	ND	ND	0.0e+00	0.0
Benzene	9.0e-07	1.5e-08	5.2e-08	4.2e-10	5.3e-08	0.0
Toluene	1.0e-07	1.7e-09	ND	ND	0.0e+00	0.0
Ethylbenzene	2.7e-08	4.4e-10	ND	ND	0.0e+00	0.0
Xylenes (mixed)	3.3e-08	5.4e-10	ND	ND	0.0e+00	0.0
SEMIVOLATILES						
Phenol	4.0e-07	6.4e-09	ND	ND	0.0e+00	0.0
bis(2-Chloroethyl) ether	7.5e-07	1.2e-08	1.7e-06	1.3e-08	1.7e-06	0.8
bis(2-Chloroisopropyl)ether	1.2e-06	2.0e-08	ND	ND	0.0e+00	0.0
4-Methylphenol	5.6e-07	9.2e-09	ND	ND	0.0e+00	0.0
2,4-Dimethylphenol	7.6e-07	1.2e-08	ND	ND	0.0e+00	0.0
Benzoic Acid	2.5e-06	4.1e-08	ND	ND	0.0e+00	0.0
Naphthalene	7.5e-07	1.2e-08	ND	ND	0.0e+00	0.0
2-Methylnaphthalene	7.1e-07	1.2e-08	ND	ND	0.0e+00	0.0
Dibenzofuran	4.8e-07	7.8e-09	ND	ND	0.0e+00	0.0
Fluorene	8.3e-07	1.3e-08	ND	ND	0.0e+00	0.0
Hexachlorobenzene	2.9e-07	4.7e-09	9.4e-07	7.6e-09	9.4e-07	0.4
Pentachlorophenol	4.8e-07	7.8e-09	6.4e-08	9.4e-10	6.5e-08	0.0
Phenanthrene	7.9e-07	1.3e-08	ND	ND	0.0e+00	0.0
Anthracene	2.1e-07	3.4e-09	ND	ND	0.0e+00	0.0
Di-n-butylphthalate	3.6e-07	5.8e-09	ND	ND	0.0e+00	0.0
Fluoranthene	1.1e-06	1.8e-08	ND	ND	0.0e+00	0.0
Pyrene	1.0e-06	1.7e-08	ND	ND	0.0e+00	0.0
Butylbenzylphthalate	3.6e-07	5.8e-09	ND	ND	0.0e+00	0.0
Benzo(a)anthracene	9.6e-07	1.5e-08	ND	ND	0.0e+00	0.0
Chrysene	9.0e-07	1.5e-08	ND	ND	0.0e+00	0.0
bis(2-ethylhexyl)phthalate	1.1e-05	1.7e-07	5.9e-07	2.4e-09	6.0e-07	0.3
Benzo(b)fluoranthene	1.3e-06	2.1e-08	ND	ND	0.0e+00	0.0
Benzo(k)fluoranthene	1.3e-06	2.2e-08	ND	ND	0.0e+00	0.0
Benzo(a)pyrene	8.7e-07	1.4e-08	ND	ND	0.0e+00	0.0

Table X - 14

SUMMARY OF CANCER RISKS

American Chemical Services Remedial Investigation
Griffith Indiana

Medium: Sediment
Source Area: ACS

Population: Trespasser Child
Land Use: Current Site Conditions

CHEMICAL OF POTENTIAL CONCERN	CHRONIC DAILY INTAKE (mg/kg-d)		CANCER RISKS			
	Dermal Absorp.	Ingestion	Dermal Absorp.	Ingestion	Total	% of Total
Ideno(1,2,3-cd)pyrene	6.8e-07	1.1e-08	ND	ND	0.0e+00	0.0
Dibenz(a,h)anthracene	4.2e-07	6.8e-09	ND	ND	0.0e+00	0.0
Benzo(g,h,i)perylene	7.5e-07	1.2e-08	ND	ND	0.0e+00	0.0
Total Carcinogenic PAHs	6.5e-06	1.0e-07	1.5e-04	1.2e-06	1.5e-04	69.6
PESTICIDE/PCB						
Heptachlor epoxide	5.6e-08	9.0e-10	1.0e-06	8.2e-09	1.0e-06	0.5
PCB	2.3e-06	1.4e-07	5.9e-05	1.1e-06	6.0e-05	27.8
METALS						
Barium	5.0e-09	2.4e-09	ND	ND	0.0e+00	0.0
Calcium	3.9e-06	1.9e-06	ND	ND	0.0e+00	0.0
Chromium VI	3.2e-09	1.5e-09	ND	ND	0.0e+00	0.0
Copper	6.6e-09	3.2e-09	ND	ND	0.0e+00	0.0
Magnesium	1.3e-06	6.3e-07	ND	ND	0.0e+00	0.0
Mercury	8.5e-11	4.2e-11	ND	ND	0.0e+00	0.0
Nickel	1.4e-09	7.0e-10	ND	ND	0.0e+00	0.0
Selenium	4.0e-11	1.9e-11	ND	ND	0.0e+00	0.0
Vanadium	2.4e-09	1.2e-09	ND	ND	0.0e+00	0.0
TIC Groupings						
Halogenated Alkanes	1.2e-05	2.0e-07	ND	ND	0.0e+00	0.0
Branched Alkanes	2.1e-06	3.4e-08	ND	ND	0.0e+00	0.0
Phthalates	4.6e-06	7.5e-08	ND	ND	0.0e+00	0.0
Methylated Phenols	4.6e-06	7.5e-08	ND	ND	0.0e+00	0.0
Methylated Ketones	5.2e-08	8.5e-10	ND	ND	0.0e+00	0.0
Cyclic Alcohols	1.8e-06	3.0e-08	ND	ND	0.0e+00	0.0
Non-Cyclic Acids	2.9e-06	4.7e-08	ND	ND	0.0e+00	0.0
PCBs	0.0e+00	1.6e-07	ND	1.2e-06	1.2e-06	0.6
Furans	0.0e+00	5.4e-09	ND	ND	0.0e+00	0.0
			Total 2.1e-04	Total 3.5e-06	Total 2.2e-04	Total 100.0

This table presents chronic daily intakes and cancer risks for chemicals of potential concern. Cancer

Table X - 14

SUMMARY OF CANCER RISKS

American Chemical Services Remedial Investigation
Griffith Indiana

Medium: Sediment
Source Area: ACS

Population: Trespasser Child
Land Use: Current Site Conditions

CHEMICAL OF POTENTIAL CONCERN	CHRONIC DAILY INTAKE (mg/kg-d)		CANCER RISKS			
	Dermal Absorp.	Ingestion	Dermal Absorp.	Ingestion	Total	% of Total

risks are calculated by multiplying the chronic daily intake by the slope factor. Chemical-specific cancer risks are summed for each exposure route to arrive at a total risk value. In some cases, cancer risks were not determined (ND) because slope factors are not available.

JAH/jah/
6/19/91
[ACS.2020.BRA]I-C.W20

Table X - 15

SUMMARY OF NONCANCER HAZARDS

American Chemical Services Remedial Investigation
Griffith Indiana

Medium: Ambient Air
Source Area: Volatile Emissions
Population: Child Trespasser
Land Use: Current Site Conditions

CHEMICAL OF POTENTIAL CONCERN	CHRONIC DAILY INTAKE	HAZARD QUOTIENT	
	Inhalation	Inhalation	% of Total
VOLATILES			
Vinyl chloride	3.1e-05	ND	0.0
Chloroethane	1.9e+00	1.9e+00	36.1
Methylene chloride	2.4e-03	7.9e-04	0.0
Acetone	1.8e-02	ND	0.0
Carbon disulfide	1.2e-07	1.2e-05	0.0
1,1-Dichloroethene	8.0e-04	ND	0.0
1,1-Dichloroethane	3.0e-04	3.0e-03	0.1
1,2-Dichloroethene (cis)	1.0e-03	ND	0.0
Chloroform	4.8e-03	ND	0.0
1,2-Dichloroethane	9.4e-05	ND	0.0
2-Butanone	2.6e-02	2.8e-01	5.4
1,1,1-Trichloroethane	5.5e-02	1.8e-01	3.5
Carbon tetrachloride	4.4e-03	ND	0.0
1,2-Dichloropropane	1.2e-05	ND	0.0
Trichloroethene	3.3e-03	ND	0.0
1,1,2-Trichloroethane	3.6e-05	ND	0.0
Benzene	7.9e-04	ND	0.0
4-Methyl-2-pentanone	1.0e-03	5.0e-02	0.9
2-Hexanone	2.6e-07	ND	0.0
Tetrachloroethene	2.3e-03	ND	0.0
1,1,2,2-Tetrachloroethane	4.1e-07	ND	0.0
Toluene	4.7e-02	2.3e-02	0.4
Chlorobenzene	3.1e-05	6.3e-03	0.1
Ethylbenzene	2.2e-03	2.2e-03	0.0
Styrene	9.0e-05	ND	0.0
Xylenes (mixed)	1.7e-02	5.7e-02	1.1
SEMIVOLATILES			
Phenol	8.1e-07	ND	0.0
bis(2-Chloroethyl) ether	9.4e-07	ND	0.0
2-Chlorophenol	9.0e-11	ND	0.0
1,3-Dichlorobenzene	1.0e-08	ND	0.0
1,4-Dichlorobenzene	3.2e-08	4.5e-08	0.0
Benzyl Alcohol	8.5e-06	ND	0.0
1,2-Dichlorobenzene	7.9e-07	2.0e-05	0.0
2-Methylphenol	8.8e-08	ND	0.0

Table X - 15

SUMMARY OF NONCANCER HAZARDS

American Chemical Services Remedial Investigation
Griffith Indiana

Medium: Ambient Air
Source Area: Volatile Emissions
Population: Child Trespasser
Land Use: Current Site Conditions

CHEMICAL OF POTENTIAL CONCERN	CHRONIC DAILY INTAKE	HAZARD QUOTIENT	
	Inhalation	Inhalation	% of Total
4-Methylphenol	6.1e-08	ND	0.0
Isophorone	1.0e-05	ND	0.0
2,4-Dimethylphenol	2.1e-08	ND	0.0
Benzoic Acid	2.9e-03	ND	0.0
2,4-Dichlorophenol	1.1e-09	ND	0.0
1,2,4-Trichlorophenol	2.3e-08	7.7e-06	0.0
Naphthalene	2.0e-09	ND	0.0
Hexachlorobutadiene	7.8e-07	ND	0.0
4-Chloro-3-methylphenol	2.1e-10	ND	0.0
2-Methylnaphthalene	2.1e-07	ND	0.0
2,4,6-Trichlorophenol	4.3e-11	ND	0.0
2,4,5-Trichlorophenol	1.1e-08	ND	0.0
2-Chloronaphthalene	3.1e-10	ND	0.0
Dimethylphthalate	3.0e-08	ND	0.0
Acenaphthylene	9.0e-10	ND	0.0
2,6-Dinitrotoluene	3.2e-11	ND	0.0
Acenaphthene	6.2e-11	ND	0.0
4-Nitrophenol	1.9e-08	ND	0.0
Dibenzofuran	7.0e-10	ND	0.0
2,4-Dinitrotoluene	2.7e-10	ND	0.0
Diethylphthalate	3.0e-09	ND	0.0
Fluorene	4.5e-11	ND	0.0
N-nitrosodiphenylamine	9.5e-12	ND	0.0
4-Bromophenyl-phenylether	1.5e-10	ND	0.0
Hexachlorobenzene	7.0e-14	ND	0.0
Pentachlorophenol	9.8e-11	ND	0.0
Phenanthrene	1.7e-10	ND	0.0
Anthracene	9.0e-12	ND	0.0
Di-n-butylphthalate	5.6e-11	ND	0.0
Fluoranthene	1.5e-12	ND	0.0
Pyrene	5.1e-13	ND	0.0
Butylbenzylphthalate	5.7e+01	ND	0.0
Benzo(a)anthracene	2.6e-15	ND	0.0
Chrysene	4.3e-16	ND	0.0
bis(2-ethylhexyl)phthalate	1.8e+02	ND	0.0
Di-n-octyl Phthalate	1.3e+01	ND	0.0
Benzo(b)fluoranthene	9.2e-14	ND	0.0
Benzo(k)fluoranthene	9.4e-14	ND	0.0
Benzo(a)pyrene	3.7e-16	ND	0.0

Table X - 15

SUMMARY OF NONCANCER HAZARDS

American Chemical Services Remedial Investigation
Griffith Indiana

Medium: Ambient Air
Source Area: Volatile Emissions
Population: Child Trespasser
Land Use: Current Site Conditions

CHEMICAL OF POTENTIAL CONCERN	CHRONIC DAILY INTAKE	HAZARD QUOTIENT	
	Inhalation	Inhalation	% of Total
Ideno(1,2,3-cd)pyrene	3.7e-18	ND	0.0
Dibenz(a,h)anthracene	1.2e-18	ND	0.0
Benzo(g,h,i)perylene	5.1e-18	ND	0.0
Total Carcinogenic PAHs	1.9e-13	ND	0.0
PESTICIDE/PCB			
alpha-BHC	1.2e-14	ND	0.0
beta-BHC	3.9e-16	ND	0.0
gamma-BHC (Lindane)	2.1e-04	ND	0.0
Aldrin	2.5e-14	ND	0.0
Heptachlor epoxide	3.2e-15	ND	0.0
Endosulfan I	5.0e-14	ND	0.0
4,4'-DDE	4.8e-15	ND	0.0
4,4'-DDD	1.3e-14	ND	0.0
4,4'-DDT	1.1e-12	ND	0.0
Endrin ketone	3.4e-16	ND	0.0
PCB	1.4e-09	ND	0.0
TIC Groupings			
Propyl Benzenes	2.7e-05	2.9e-03	0.1
Propenyl Benzenes	7.1e-06	7.1e-04	0.0
Ethyl Methyl Benzenes	1.8e-04	9.0e-05	0.0
Diethyl Benzenes	4.1e-05	4.1e-05	0.0
Methyl Propyl Benzenes	3.7e-05	4.2e-03	0.1
Methyl Ethenyl Benzenes	9.0e-06	9.0e-04	0.0
Methyl Phenyl Benzenes	8.3e-11	ND	0.0
Trimethyl Benzenes	3.3e-03	5.8e-03	0.1
Dimethyl ethyl benzenes	1.5e-04	1.5e-04	0.0
Tetramethyl Benzenes	1.4e-03	2.4e-03	0.0
Oxygenated Benzenes	9.3e-04	ND	0.0
Nitrogenated Benzenes	4.6e-07	2.3e-04	0.0
Cyclic alkanes	1.0e-02	ND	0.0
Cyclic Alkenes	2.1e-03	ND	0.0
Halogenated Alkanes	7.9e-03	2.6e-02	0.5
n-chain Alkanes	3.7e-02	1.8e-01	3.5
Branched Alkanes	9.4e-03	4.7e-02	0.9
Branched Alkenes/Alkynes	4.2e-03	ND	0.0

Table X - 15

SUMMARY OF NONCANCER HAZARDS

American Chemical Services Remedial Investigation
Griffith Indiana

Medium: Ambient Air
Source Area: Volatile Emissions

Population: Child Trespasser
Land Use: Current Site Conditions

CHEMICAL OF POTENTIAL CONCERN	CHRONIC DAILY INTAKE	HAZARD QUOTIENT	
	Inhalation	Inhalation	% of Total
Ethers	1.3e-04	ND	0.0
Methylated Naphthalenes	5.1e-10	ND	0.0
Phthalates	5.8e-10	ND	0.0
Methylated Phenols	3.4e-08	ND	0.0
Methylated Ketones	1.0e-04	ND	0.0
Simple Ketones	5.7e-06	6.3e-05	0.0
Cyclic Ketones	6.3e-07	ND	0.0
Diols	5.3e-07	ND	0.0
Simple Alcohols	6.9e-06	ND	0.0
Cyclic Alcohols	1.8e-07	ND	0.0
Oxygenated Alcohols	3.7e-06	1.9e-04	0.0
Cyclic Acids	1.4e-04	ND	0.0
Non-Cyclic Acids	7.4e-04	2.5e+00	47.1
Amines	3.5e-09	ND	0.0
PCBs	8.5e-12	ND	0.0
Furans	4.7e-06	ND	0.0
		5.3e+00	100%

This table presents chronic daily intakes and hazard quotients for chemicals of potential concern. Hazard quotients are calculated by dividing the chronic daily intake by the reference dose. Chemical-specific hazar quotients are summed for each exposure route to arrive at a total hazard value. In some cases, hazard quotie were not determined (ND) because reference doses are not available.

JAH/jah/BJC
VERSION 6/15/91
[acs.2020.bra]F-H.w20

Table X - 16

SUMMARY OF CANCER RISKS

American Chemical Services Remedial Investigation
Griffith Indiana

Medium: Ambient Air
Source Area: Volatile Emissions
Population: Child Trespasser
Land Use: Current Site Conditions

CHEMICAL OF POTENTIAL CONCERN	CHRONIC DAILY INTAKE (mg/kg-d)	CANCER RISKS	
	Inhalation	Inhalation	% of Total
VOLATILES			
Vinyl chloride	4.4e-06	1.3e-06	0.4
Chloroethane	2.7e-01	ND	0.0
Methylene chloride	3.4e-04	4.7e-06	1.6
Acetone	2.5e-03	ND	0.0
Carbon disulfide	1.7e-08	ND	0.0
1,1-Dichloroethene	1.1e-04	1.4e-04	46.6
1,1-Dichloroethane	4.2e-05	ND	0.0
1,2-Dichloroethene (cis)	1.5e-04	ND	0.0
Chloroform	6.8e-04	5.5e-05	18.8
1,2-Dichloroethane	1.3e-05	1.2e-06	0.4
2-Butanone	3.7e-03	ND	0.0
1,1,1-Trichloroethane	7.8e-03	ND	0.0
Carbon tetrachloride	6.2e-04	8.1e-05	27.7
1,2-Dichloropropane	1.8e-06	ND	0.0
Trichloroethene	4.8e-04	8.1e-06	2.8
1,1,2-Trichloroethane	5.1e-06	2.9e-07	0.1
Benzene	1.1e-04	3.3e-06	1.1
4-Methyl-2-pentanone	1.4e-04	ND	0.0
2-Hexanone	3.7e-08	ND	0.0
Tetrachloroethene	3.2e-04	1.1e-06	0.4
1,1,2,2-Tetrachloroethane	5.9e-08	1.2e-08	0.0
Toluene	6.7e-03	ND	0.0
Chlorobenzene	4.5e-06	ND	0.0
Ethylbenzene	3.2e-04	ND	0.0
Styrene	1.3e-05	2.6e-08	0.0
Xylenes (mixed)	2.5e-03	ND	0.0
SEMIVOLATILES			
Phenol	1.2e-07	ND	0.0
bis(2-Chloroethyl) ether	1.3e-07	1.5e-07	0.1
2-Chlorophenol	1.3e-11	ND	0.0
1,3-Dichlorobenzene	1.4e-09	ND	0.0
1,4-Dichlorobenzene	4.5e-09	ND	0.0
Benzyl Alcohol	1.2e-06	ND	0.0
1,2-Dichlorobenzene	1.1e-07	ND	0.0
2-Methylphenol	1.3e-08	ND	0.0

Table X - 16

SUMMARY OF CANCER RISKS

American Chemical Services Remedial Investigation
Griffith Indiana

Medium: Ambient Air
Source Area: Volatile Emissions

Population: Child Trespasser
Land Use: Current Site Conditions

CHEMICAL OF POTENTIAL CONCERN	CHRONIC DAILY INTAKE (mg/kg-d)	CANCER RISKS	
	Inhalation	Inhalation	% of Total
4-Methylphenol	8.7e-09	ND	0.0
Isophorone	1.5e-06	ND	0.0
2,4-Dimethylphenol	3.0e-09	ND	0.0
Benzoic Acid	4.1e-04	ND	0.0
2,4-Dichlorophenol	1.5e-10	ND	0.0
1,2,4-Trichlorophenol	3.3e-09	ND	0.0
Naphthalene	2.9e-10	ND	0.0
Hexachlorobutadiene	1.1e-07	8.7e-09	0.0
4-Chloro-3-methylphenol	2.9e-11	ND	0.0
2-Methylnaphthalene	3.0e-08	ND	0.0
2,4,6-Trichlorophenol	6.1e-12	6.7e-14	0.0
2,4,5-Trichlorophenol	1.6e-09	ND	0.0
2-Chloronaphthalene	4.5e-11	ND	0.0
Dimethylphthalate	4.3e-09	ND	0.0
Acenaphthylene	1.3e-10	ND	0.0
2,6-Dinitrotoluene	4.5e-12	ND	0.0
Acenaphthene	8.8e-12	ND	0.0
4-Nitrophenol	2.7e-09	ND	0.0
Dibenzofuran	1.0e-10	ND	0.0
2,4-Dinitrotoluene	3.9e-11	ND	0.0
Diethylphthalate	4.3e-10	ND	0.0
Fluorene	6.4e-12	ND	0.0
N-nitrosodiphenylamine	1.4e-12	ND	0.0
4-Bromophenyl-phenylether	2.2e-11	ND	0.0
Hexachlorobenzene	1.0e-14	1.6e-14	0.0
Pentachlorophenol	1.4e-11	ND	0.0
Phenanthrene	2.4e-11	ND	0.0
Anthracene	1.3e-12	ND	0.0
Di-n-butylphthalate	8.0e-12	ND	0.0
Fluoranthene	2.1e-13	ND	0.0
Pyrene	7.3e-14	ND	0.0
Butylbenzylphthalate	8.2e+00	ND	0.0
Benzo(a)anthracene	3.8e-16	ND	0.0
Chrysene	6.1e-17	ND	0.0
bis(2-ethylhexyl)phthalate	2.6e+01	ND	0.0
Di-n-octyl Phthalate	1.8e+00	ND	0.0
Benzo(b)fluoranthene	1.3e-14	ND	0.0
Benzo(k)fluoranthene	1.3e-14	ND	0.0
Benzo(a)pyrene	5.3e-17	ND	0.0

Table X - 16

SUMMARY OF CANCER RISKS

American Chemical Services Remedial Investigation
Griffith Indiana

Medium: Ambient Air
Source Area: Volatile Emissions
Population: Child Trespasser
Land Use: Current Site Conditions

CHEMICAL OF POTENTIAL CONCERN	CHRONIC DAILY INTAKE (mg/kg-d)	CANCER RISKS	
	Inhalation	Inhalation	% of Total
Ideno(1,2,3-cd)pyrene	5.3e-19	ND	0.0
Dibenz(a,h)anthracene	1.7e-19	ND	0.0
Benzo(g,h,i)perylene	7.3e-19	ND	0.0
Total Carcinogenic PAHs	2.7e-14	1.7e-13	0.0
PESTICIDE/PCB			
alpha-BHC	1.7e-15	ND	0.0
beta-BHC	5.6e-17	ND	0.0
gamma-BHC (Lindane)	3.0e-05	ND	0.0
Aldrin	3.6e-15	ND	0.0
Heptachlor epoxide	4.5e-16	ND	0.0
Endosulfan I	7.1e-15	ND	0.0
4,4'-DDE	6.9e-16	ND	0.0
4,4'-DDD	1.8e-15	ND	0.0
4,4'-DDT	1.6e-13	5.4e-14	0.0
Endrin ketone	4.8e-17	ND	0.0
PCB	2.0e-10	ND	0.0
TIC Groupings			
Propyl Benzenes	3.8e-06	ND	0.0
Propenyl Benzenes	1.0e-06	ND	0.0
Ethyl Methyl Benzenes	2.6e-05	ND	0.0
Diethyl Benzenes	5.8e-06	ND	0.0
Methyl Propyl Benzenes	5.3e-06	ND	0.0
Methyl Ethenyl Benzenes	1.3e-06	ND	0.0
Methyl Phenyl Benzenes	1.2e-11	ND	0.0
Trimethyl Benzenes	4.7e-04	ND	0.0
Dimethyl ethyl benzenes	2.2e-05	ND	0.0
Tetramethyl Benzenes	2.0e-04	ND	0.0
Oxygenated Benzenes	1.3e-04	ND	0.0
Nitrogenated Benzenes	6.5e-08	ND	0.0
Cyclic alkanes	1.5e-03	ND	0.0
Cyclic Alkenes	3.0e-04	ND	0.0
Halogenated Alkanes	1.1e-03	ND	0.0
n-chain Alkanes	5.3e-03	ND	0.0
Branched Alkanes	1.3e-03	ND	0.0
Branched Alkenes/Alkynes	5.9e-04	ND	0.0

Table X - 16

SUMMARY OF CANCER RISKS

American Chemical Services Remedial Investigation
Griffith Indiana

Medium: Ambient Air
Source Area: Volatile Emissions
Population: Child Trespasser
Land Use: Current Site Conditions

CHEMICAL OF POTENTIAL CONCERN	CHRONIC DAILY INTAKE (mg/kg-d)	CANCER RISKS	
	Inhalation	Inhalation	% of Total
Ethers	1.9e-05	ND	0.0
Methylated Naphthalenes	7.3e-11	ND	0.0
Phthalates	8.2e-11	ND	0.0
Methylated Phenols	4.9e-09	ND	0.0
Methylated Ketones	1.5e-05	ND	0.0
Simple Ketones	8.1e-07	ND	0.0
Cyclic Ketones	9.0e-08	ND	0.0
Diols	7.6e-08	ND	0.0
Simple Alcohols	9.9e-07	ND	0.0
Cyclic Alcohols	2.5e-08	ND	0.0
Oxygenated Alcohols	5.3e-07	ND	0.0
Cyclic Acids	2.0e-05	ND	0.0
Non-Cyclic Acids	1.1e-04	ND	0.0
Amines	5.0e-10	ND	0.0
PCBs	1.2e-12	ND	0.0
Furans	6.8e-07	ND	0.0
		2.9e-04	100%

This table presents chronic daily intakes and cancer risks for chemicals of potential concern. Cancer risks are calculated by multiplying the chronic daily intake by the slope factor. Chemical-specific cancer risks are summed for each exposure route to arrive at a total risk value. In some cases, cancer risks were not determined (ND) because slope factors are not available.

JAH/jah/BJC
6/15/91
[ACS.2020.BRA]F-C.W20

Table X - 17

SUMMARY OF NONCANCER HAZARDS

American Chemical Services Remedial Investigation
Griffith Indiana

Medium: Ambient Air
Source Area: Fugitive Dust

Population: Child Trespasser
Land Use: Current Site Conditions

CHEMICAL OF POTENTIAL CONCERN	CHRONIC DAILY INTAKE (mg/kg-d)	HAZARD QUOTIENT	
	Inhalation	Inhalation	% of Total
VOLATILES			
Methylene chloride	3.1e-11	1.0e-11	0.0
Acetone	1.5e-10	ND	0.0
1,1-Dichloroethane	2.3e-11	2.3e-10	0.0
1,2-Dichloroethene (cis)	1.2e-09	ND	0.0
Chloroform	1.5e-12	ND	0.0
1,1,1-Trichloroethane	1.4e-12	4.6e-12	0.0
1,2-Dichloropropane	2.9e-12	ND	0.0
Trichloroethene	2.6e-08	ND	0.0
Benzene	4.9e-10	ND	0.0
4-Methyl-2-pentanone	4.1e-08	2.1e-06	3.4
Tetrachloroethene	1.2e-07	ND	0.0
Toluene	2.9e-06	1.5e-06	8.5
Chlorobenzene	9.5e-10	1.9e-07	0.3
Ethylbenzene	6.6e-07	6.6e-07	0.0
Styrene	3.5e-09	ND	0.0
Xylenes (mixed)	3.5e-06	1.2e-05	68.0
SEMIVOLATILES			
Phenol	4.3e-09	ND	0.0
1,2-Dichlorobenzene	9.0e-11	2.3e-09	0.0
2-Methylphenol	7.2e-10	ND	0.0
4-Methylphenol	7.0e-10	ND	0.0
Isophorone	1.5e-08	ND	0.0
2,4-Dimethylphenol	7.5e-10	ND	0.0
Naphthalene	1.5e-08	ND	0.0
2-Methylnaphthalene	8.6e-09	ND	0.0
2,4,5-Trichlorophenol	2.6e-11	ND	0.0
Dimethylphthalate	2.1e-10	ND	0.0
Acenaphthene	5.5e-11	ND	0.0
Dibenzofuran	6.6e-11	ND	0.0
Diethylphthalate	7.6e-10	ND	0.0
Fluorene	9.5e-11	ND	0.0
N-nitrosodiphenylamine	6.6e-10	ND	0.0
Pentachlorophenol	2.3e-10	ND	0.0
Phenanthrene	6.6e-10	ND	0.0
Anthracene	1.0e-10	ND	0.0

Table X - 17

SUMMARY OF NONCANCER HAZARDS

American Chemical Services Remedial Investigation
Griffith Indiana

Medium: Ambient Air
Source Area: Fugitive Dust

Population: Child Trespasser
Land Use: Current Site Conditions

CHEMICAL OF POTENTIAL CONCERN	CHRONIC DAILY INTAKE (mg/kg-d)	HAZARD QUOTIENT	
	Inhalation	Inhalation	% of Total
Di-n-butylphthalate	1.4e-08	ND	0.0
Fluoranthene	5.2e-10	ND	0.0
Pyrene	3.5e-10	ND	0.0
Butylbenzylphthalate	7.8e-09	ND	0.0
Benzo(a)anthracene	3.7e-10	ND	0.0
Chrysene	2.0e-10	ND	0.0
bis(2-ethylhexyl)phthalate	8.2e-08	ND	0.0
Di-n-octyl Phthalate	5.8e-09	ND	0.0
Benzo(b)fluoranthene	6.0e-10	ND	0.0
Benzo(k)fluoranthene	6.0e-10	ND	0.0
Benzo(a)pyrene	2.1e-10	ND	0.0
Ideno(1,2,3-cd)pyrene	1.3e-10	ND	0.0
Dibenz(a,h)anthracene	4.1e-11	ND	0.0
Benzo(g,h,i)perylene	1.7e-10	ND	0.0
Total Carcinogenic PAHs	2.1e-09	ND	0.0
PESTICIDE/PCB			
Aldrin	1.3e-11	ND	0.0
Endosulfan I	6.4e-12	ND	0.0
4,4'-DDD	2.3e-11	ND	0.0
PCB	5.0e-08	ND	0.0
METALS			
Aluminum	2.0e-09	ND	0.0
Antimony	1.3e-11	ND	0.0
Barium	8.8e-10	8.8e-06	14.6
Cadmium (food/soil)	2.7e-11	ND	0.0
Calcium	2.4e-08	ND	0.0
Chromium VI	4.7e-10	2.4e-04	0.0
Cobalt	2.3e-11	ND	0.0
Copper	6.8e-10	ND	0.0
Iron	1.1e-08	ND	0.0
Lead	2.5e-09	ND	0.0
Magnesium	5.6e-09	ND	0.0
Manganese	2.4e-10	5.9e-07	1.3
Mercury	1.5e-12	4.8e-09	0.0
Nickel	3.0e-11	ND	0.0

Table X - 17

SUMMARY OF NONCANCER HAZARDS

American Chemical Services Remedial Investigation
Griffith Indiana

Medium: Ambient Air
Source Area: Fugitive Dust

Population: Child Trespasser
Land Use: Current Site Conditions

CHEMICAL OF POTENTIAL CONCERN	CHRONIC DAILY INTAKE (mg/kg-d)	HAZARD QUOTIENT	
	Inhalation	Inhalation	% of Total
Selenium	2.6e-12	ND	0.0
Silver	3.8e-12	ND	0.0
Vanadium	7.3e-12	ND	0.0
Zinc	2.4e-09	ND	0.0
Cyanide	1.0e-11	ND	0.0
TIC Groupings			
Propyl Benzenes	1.8e-11	2.0e-09	0.0
Propenyl Benzenes	4.9e-09	4.9e-07	0.8
Ethyl Methyl Benzenes	5.7e-08	2.8e-08	0.2
Trimethyl Benzenes	3.4e-08	5.9e-08	0.1
Dimethyl ethyl benzenes	9.2e-09	9.2e-09	0.0
Tetramethyl Benzenes	1.0e-08	1.8e-08	0.0
Cyclic alkanes	7.9e-09	ND	0.0
n-chain Alkanes	4.4e-08	2.2e-07	1.3
Branched Alkanes	4.9e-08	2.4e-07	1.4
Methylated Ketones	2.7e-11	ND	0.0
Cyclic Acids	2.9e-09	ND	0.0
Non-Cyclic Acids	4.0e-08	1.3e-04	0.0
		Total	Total
		3.9e-04	100%

This table presents chronic daily intakes and hazard quotients for chemicals of potential concern. Hazard quotients are calculated by dividing the chronic daily intake by the reference dose. Chemical-specific hazar quotients are summed for each exposure route to arrive at a total hazard value. In some cases, hazard quotie were not determined (ND) because reference doses are not available.

JAH/jah/BJC
VERSION 6/15/91
[ACS.2020.BRA]G-H.W20

Table X - 18

SUMMARY OF CANCER RISKS

American Chemical Services Remedial Investigation
Griffith Indiana

Medium: Ambient Air
Source Area: Fugitive Dust

Population: Child Trespasser
Land Use: Current Site Conditions

CHEMICAL OF POTENTIAL CONCERN	CHRONIC DAILY INTAKE (mg/kg-d)	CANCER RISKS	
	Inhalation	Inhalation	% of Total
VOLATILES			
Methylene chloride	4.4e-12	6.1e-14	0.0
Acetone	2.1e-11	ND	0.0
1,1-Dichloroethane	3.3e-12	ND	0.0
1,2-Dichloroethene (cis)	1.7e-10	ND	0.0
Chloroform	2.2e-13	1.8e-14	0.0
1,1,1-Trichloroethane	2.0e-13	ND	0.0
1,2-Dichloropropane	4.1e-13	ND	0.0
Trichloroethene	3.7e-09	6.3e-11	3.1
Benzene	7.0e-11	2.0e-12	0.1
4-Methyl-2-pentanone	5.9e-09	ND	0.0
Tetrachloroethene	1.7e-08	5.7e-11	2.8
Toluene	4.1e-07	ND	0.0
Chlorobenzene	1.4e-10	ND	0.0
Ethylbenzene	9.4e-08	ND	0.0
Styrene	5.0e-10	1.0e-12	0.0
Xylenes (mixed)	5.0e-07	ND	0.0
SEMIVOLATILES			
Phenol	6.1e-10	ND	0.0
1,2-Dichlorobenzene	1.3e-11	ND	0.0
2-Methylphenol	1.0e-10	ND	0.0
4-Methylphenol	1.0e-10	ND	0.0
Isophorone	2.1e-09	ND	0.0
2,4-Dimethylphenol	1.1e-10	ND	0.0
Naphthalene	2.1e-09	ND	0.0
2-Methylnaphthalene	1.2e-09	ND	0.0
2,4,5-Trichlorophenol	3.7e-12	ND	0.0
Dimethylphthalate	3.1e-11	ND	0.0
Acenaphthene	7.9e-12	ND	0.0
Dibenzofuran	9.4e-12	ND	0.0
Diethylphthalate	1.1e-10	ND	0.0
Fluorene	1.4e-11	ND	0.0
N-nitrosodiphenylamine	9.4e-11	ND	0.0
Pentachlorophenol	3.3e-11	ND	0.0
Phenanthrene	9.4e-11	ND	0.0
Anthracene	1.4e-11	ND	0.0

Table X - 18

SUMMARY OF CANCER RISKS

American Chemical Services Remedial Investigation
Griffith Indiana

Medium: Ambient Air
Source Area: Fugitive Dust

Population: Child Trespasser
Land Use: Current Site Conditions

CHEMICAL OF POTENTIAL CONCERN	CHRONIC DAILY INTAKE (mg/kg-d)	CANCER RISKS	
	Inhalation	Inhalation	% of Total
Di-n-butylphthalate	2.1e-09	ND	0.0
Fluoranthene	7.4e-11	ND	0.0
Pyrene	5.0e-11	ND	0.0
Butylbenzylphthalate	1.1e-09	ND	0.0
Benzo(a)anthracene	5.2e-11	ND	0.0
Chrysene	2.8e-11	ND	0.0
bis(2-ethylhexyl)phthalate	1.2e-08	ND	0.0
Di-n-octyl Phthalate	8.3e-10	ND	0.0
Benzo(b)fluoranthene	8.5e-11	ND	0.0
Benzo(k)fluoranthene	8.5e-11	ND	0.0
Benzo(a)pyrene	3.1e-11	ND	0.0
Ideno(1,2,3-cd)pyrene	1.8e-11	ND	0.0
Dibenz(a,h)anthracene	5.9e-12	ND	0.0
Benzo(g,h,i)perylene	2.4e-11	ND	0.0
Total Carcinogenic PAHs	3.1e-10	1.9e-09	92.1
PESTICIDE/PCB			
Aldrin	1.9e-12	3.3e-11	1.6
Endosulfan I	9.2e-13	ND	0.0
4,4'-DDD	3.3e-12	ND	0.0
PCB	7.2e-09	ND	0.0
METALS			
Aluminum	2.9e-10	ND	0.0
Antimony	1.9e-12	ND	0.0
Barium	1.3e-10	ND	0.0
Cadmium (food/soil)	3.8e-12	ND	0.0
Calcium	3.4e-09	ND	0.0
Chromium VI	6.7e-11	ND	0.0
Cobalt	3.2e-12	ND	0.0
Copper	9.8e-11	ND	0.0
Iron	1.5e-09	ND	0.0
Lead	3.5e-10	ND	0.0
Magnesium	8.1e-10	ND	0.0
Manganese	3.4e-11	ND	0.0
Mercury	2.1e-13	ND	0.0
Nickel	4.3e-12	3.6e-12	0.2

Table X - 18

SUMMARY OF CANCER RISKS

American Chemical Services Remedial Investigation
Griffith Indiana

Medium: Ambient Air
Source Area: Fugitive Dust

Population: Child Trespasser
Land Use: Current Site Conditions

CHEMICAL OF POTENTIAL CONCERN	CHRONIC DAILY INTAKE (mg/kg-d)	CANCER RISKS	
	Inhalation	Inhalation	% of Total
Selenium	3.8e-13	ND	0.0
Silver	5.4e-13	ND	0.0
Vanadium	1.0e-12	ND	0.0
Zinc	3.4e-10	ND	0.0
Cyanide	1.4e-12	ND	0.0
TIC Groupings			
Propyl Benzenes	2.6e-12	ND	0.0
Propenyl Benzenes	7.0e-10	ND	0.0
Ethyl Methyl Benzenes	8.1e-09	ND	0.0
Trimethyl Benzenes	4.8e-09	ND	0.0
Dimethyl ethyl benzenes	1.3e-09	ND	0.0
Tetramethyl Benzenes	1.5e-09	ND	0.0
Cyclic alkanes	1.1e-09	ND	0.0
n-chain Alkanes	6.3e-09	ND	0.0
Branched Alkanes	7.0e-09	ND	0.0
Methylated Ketones	3.9e-12	ND	0.0
Cyclic Acids	4.1e-10	ND	0.0
Non-Cyclic Acids	5.7e-09	ND	0.0
		2.0e-09	100%

This table presents chronic daily intakes and cancer risks for chemicals of potential concern. Cancer risks are calculated by multiplying the chronic daily intake by the slope factor. Chemical-specific cancer risks are summed for each exposure route to arrive at a total risk value. In some cases, cancer risks were not determined (ND) because slope factors are not available.

JAH/jah/BJC
6/15/91
[ACS.2020.BRA]G-C.W20

Table X - 19

SUMMARY OF NONCANCER HAZARDS

American Chemical Services Remedial Investigation
Griffith Indiana

Medium: Ambient Air
Source Area: Volatile Emissions
Population: ACS Worker
Land Use: Current Site Conditions

CHEMICAL OF POTENTIAL CONCERN	CHRONIC DAILY INTAKE (mg/kg-d)	HAZARD QUOTIENT	
	Inhalation	Inhalation	% of Total
VOLATILES			
Vinyl chloride	5.8e-05	ND	0.0
Chloroethane	3.6e+00	3.6e+00	36.1
Methylene chloride	4.4e-03	1.5e-03	0.0
Acetone	3.3e-02	ND	0.0
Carbon disulfide	2.2e-07	2.2e-05	0.0
1,1-Dichloroethene	1.5e-03	ND	0.0
1,1-Dichloroethane	5.6e-04	5.6e-03	0.1
1,2-Dichloroethene (cis)	1.9e-03	ND	0.0
Chloroform	8.9e-03	ND	0.0
1,2-Dichloroethane	1.8e-04	ND	0.0
2-Butanone	4.8e-02	5.3e-01	5.4
1,1,1-Trichloroethane	1.0e-01	3.4e-01	3.5
Carbon tetrachloride	8.2e-03	ND	0.0
1,2-Dichloropropane	2.3e-05	ND	0.0
Trichloroethene	6.3e-03	ND	0.0
1,1,2-Trichloroethane	6.7e-05	ND	0.0
Benzene	1.5e-03	ND	0.0
4-Methyl-2-pentanone	1.9e-03	9.3e-02	0.9
2-Hexanone	4.8e-07	ND	0.0
Tetrachloroethene	4.2e-03	ND	0.0
1,1,2,2-Tetrachloroethane	7.7e-07	ND	0.0
Toluene	8.8e-02	4.4e-02	0.4
Chlorobenzene	5.9e-05	1.2e-02	0.1
Ethylbenzene	4.2e-03	4.2e-03	0.0
Styrene	1.7e-04	ND	0.0
Xylenes (mixed)	3.2e-02	1.1e-01	1.1
SEMIVOLATILES			
Phenol	1.5e-06	ND	0.0
bis(2-Chloroethyl) ether	1.8e-06	ND	0.0
2-Chlorophenol	1.7e-10	ND	0.0
1,3-Dichlorobenzene	1.9e-08	ND	0.0
1,4-Dichlorobenzene	5.9e-08	8.5e-08	0.0
Benzyl Alcohol	1.6e-05	ND	0.0
1,2-Dichlorobenzene	1.5e-06	3.7e-05	0.0
2-Methylphenol	1.6e-07	ND	0.0
4-Methylphenol	1.1e-07	ND	0.0
Isophorone	1.9e-05	ND	0.0
2,4-Dimethylphenol	3.9e-08	ND	0.0
Benzoic Acid	5.4e-03	ND	0.0

Table X - 19

SUMMARY OF NONCANCER HAZARDS

American Chemical Services Remedial Investigation
Griffith Indiana

Medium: Ambient Air
Source Area: Volatile Emissions

Population: ACS Worker
Land Use: Current Site Conditions

CHEMICAL OF POTENTIAL CONCERN	CHRONIC DAILY INTAKE (mg/kg-d)	HAZARD QUOTIENT	
	Inhalation	Inhalation	% of Total
2,4-Dichlorophenol	2.0e-09	ND	0.0
1,2,4-Trichlorophenol	4.3e-08	1.4e-05	0.0
Naphthalene	3.8e-09	ND	0.0
Hexachlorobutadiene	1.5e-06	ND	0.0
4-Chloro-3-methylphenol	3.8e-10	ND	0.0
2-Methylnaphthalene	4.0e-07	ND	0.0
2,4,6-Trichlorophenol	8.0e-11	ND	0.0
2,4,5-Trichlorophenol	2.2e-08	ND	0.0
2-Chloronaphthalene	5.8e-10	ND	0.0
Dimethylphthalate	5.6e-08	ND	0.0
Acenaphthylene	1.7e-09	ND	0.0
2,6-Dinitrotoluene	5.9e-11	ND	0.0
Acenaphthene	1.2e-10	ND	0.0
4-Nitrophenol	3.6e-08	ND	0.0
Dibenzofuran	1.3e-09	ND	0.0
2,4-Dinitrotoluene	5.1e-10	ND	0.0
Diethylphthalate	5.6e-09	ND	0.0
Fluorene	8.4e-11	ND	0.0
N-nitrosodiphenylamine	1.8e-11	ND	0.0
4-Bromophenyl-phenylether	2.9e-10	ND	0.0
Hexachlorobenzene	1.3e-13	ND	0.0
Pentachlorophenol	1.8e-10	ND	0.0
Phenanthrene	3.2e-10	ND	0.0
Anthracene	1.7e-11	ND	0.0
Di-n-butylphthalate	1.0e-10	ND	0.0
Fluoranthene	2.7e-12	ND	0.0
Pyrene	9.6e-13	ND	0.0
Butylbenzylphthalate	1.1e+02	ND	0.0
Benzo(a)anthracene	4.9e-15	ND	0.0
Chrysene	8.1e-16	ND	0.0
bis(2-ethylhexyl)phthalate	3.4e+02	ND	0.0
Di-n-octyl Phthalate	2.4e+01	ND	0.0
Benzo(b)fluoranthene	1.7e-13	ND	0.0
Benzo(k)fluoranthene	1.8e-13	ND	0.0
Benzo(a)pyrene	6.9e-16	ND	0.0
Ideno(1,2,3-cd)pyrene	6.9e-18	ND	0.0
Dibenz(a,h)anthracene	2.3e-18	ND	0.0
Benzo(g,h,i)perylene	9.6e-18	ND	0.0
Total Carcinogenic PAHs	3.6e-13	ND	0.0
PESTICIDE/PCB			
alpha-BHC	2.3e-14	ND	0.0

Table X - 19

SUMMARY OF NONCANCER HAZARDS

American Chemical Services Remedial Investigation
Griffith Indiana

Medium: Ambient Air
Source Area: Volatile Emissions

Population: ACS Worker
Land Use: Current Site Conditions

CHEMICAL OF POTENTIAL CONCERN	CHRONIC DAILY INTAKE (mg/kg-d)	HAZARD QUOTIENT	
	Inhalation	Inhalation	% of Total
beta-BHC	7.3e-16	ND	0.0
gamma-BHC (Lindane)	4.0e-04	ND	0.0
Aldrin	4.8e-14	ND	0.0
Heptachlor epoxide	5.9e-15	ND	0.0
Endosulfan I	9.3e-14	ND	0.0
4,4'-DDE	9.0e-15	ND	0.0
4,4'-DDD	2.4e-14	ND	0.0
4,4'-DDT	2.1e-12	ND	0.0
Endrin ketone	6.3e-16	ND	0.0
PCB	2.7e-09	ND	0.0
TIC Groupings			
Propyl Benzenes	5.0e-05	5.5e-03	0.1
Propenyl Benzenes	1.3e-05	1.3e-03	0.0
Ethyl Methyl Benzenes	3.4e-04	1.7e-04	0.0
Diethyl Benzenes	7.6e-05	7.6e-05	0.0
Methyl Propyl Benzenes	7.0e-05	7.8e-03	0.1
Methyl Ethenyl Benzenes	1.7e-05	1.7e-03	0.0
Methyl Phenyl Benzenes	1.6e-10	ND	0.0
Trimethyl Benzenes	6.2e-03	1.1e-02	0.1
Dimethyl ethyl benzenes	2.8e-04	2.8e-04	0.0
Tetramethyl Benzenes	2.6e-03	4.5e-03	0.0
Oxygenated Benzenes	1.7e-03	ND	0.0
Nitrogenated Benzenes	8.6e-07	4.3e-04	0.0
Cyclic alkanes	1.9e-02	ND	0.0
Cyclic Alkenes	4.0e-03	ND	0.0
Halogenated Alkanes	1.5e-02	5.0e-02	0.5
n-chain Alkanes	6.9e-02	3.5e-01	3.5
Branched Alkanes	1.8e-02	8.9e-02	0.9
Branched Alkenes/Alkynes	7.8e-03	ND	0.0
Ethers	2.5e-04	ND	0.0
Methylated Naphthalenes	9.6e-10	ND	0.0
Phthalates	1.1e-09	ND	0.0
Methylated Phenols	6.4e-08	ND	0.0
Methylated Ketones	1.9e-04	ND	0.0
Simple Ketones	1.1e-05	1.2e-04	0.0
Cyclic Ketones	1.2e-06	ND	0.0
Diols	1.0e-06	ND	0.0
Simple Alcohols	1.3e-05	ND	0.0
Cyclic Alcohols	3.3e-07	ND	0.0
Oxygenated Alcohols	7.0e-06	3.5e-04	0.0
Cyclic Acids	2.6e-04	ND	0.0

Table X - 19

SUMMARY OF NONCANCER HAZARDS

American Chemical Services Remedial Investigation
. Griffith Indiana

Medium: Ambient Air
Source Area: Volatile Emissions

Population: ACS Worker
Land Use: Current Site Conditions

CHEMICAL OF POTENTIAL CONCERN	CHRONIC DAILY INTAKE (mg/kg-d)	HAZARD QUOTIENT	
	Inhalation	Inhalation	% of Total
Non-Cyclic Acids	1.4e-03	4.6e+00	47.1
Amines	6.5e-09	ND	0.0
PCBs	1.6e-11	ND	0.0
Furans	8.9e-06	ND	0.0
		Total 9.9e+00	Total 100%

This table presents chronic daily intakes and hazard quotients for chemicals of potential concern. Hazard quotients are calculated by dividing the chronic daily intake by the reference dose. Chemical-specific hazard quotients are summed for each exposure route to arrive at a total hazard value. In some cases, hazard quotients were not determined (ND) because reference doses are not available.

JAH/jah/BJC
VERSION 6/15/91
[acs.2020.bra]J-H.w20

Table X - 20

SUMMARY OF CANCER RISKS

American Chemical Services Remedial Investigation
Griffith Indiana

Medium: Ambient Air
Source Area: Volatile Emissions
Population: ACS Worker
Land Use: Current Site Conditions

CHEMICAL OF POTENTIAL CONCERN	CHRONIC DAILY INTAKE (mg/kg-d)	CANCER RISKS	
	Inhalation	Inhalation	% of Total
VOLATILES			
Vinyl chloride	2.5e-05	7.3e-06	0.4
Chloroethane	1.5e+00	ND	0.0
Methylene chloride	1.9e-03	2.7e-05	1.6
Acetone	1.4e-02	ND	0.0
Carbon disulfide	9.4e-08	ND	0.0
1,1-Dichloroethene	6.4e-04	7.7e-04	46.6
1,1-Dichloroethane	2.4e-04	ND	0.0
1,2-Dichloroethene (cis)	8.2e-04	ND	0.0
Chloroform	3.8e-03	3.1e-04	18.8
1,2-Dichloroethane	7.5e-05	6.8e-06	0.4
2-Butanone	2.1e-02	ND	0.0
1,1,1-Trichloroethane	4.4e-02	ND	0.0
Carbon tetrachloride	3.5e-03	4.6e-04	27.7
1,2-Dichloropropane	1.0e-05	ND	0.0
Trichloroethene	2.7e-03	4.6e-05	2.8
1,1,2-Trichloroethane	2.9e-05	1.6e-06	0.1
Benzene	6.4e-04	1.9e-05	1.1
4-Methyl-2-pentanone	8.0e-04	ND	0.0
2-Hexanone	2.1e-07	ND	0.0
Tetrachloroethene	1.8e-03	6.0e-06	0.4
1,1,2,2-Tetrachloroethane	3.3e-07	6.6e-08	0.0
Toluene	3.8e-02	ND	0.0
Chlorobenzene	2.5e-05	ND	0.0
Ethylbenzene	1.8e-03	ND	0.0
Styrene	7.2e-05	1.4e-07	0.0
Xylenes (mixed)	1.4e-02	ND	0.0
SEMIVOLATILES			
Phenol	6.5e-07	ND	0.0
bis(2-Chloroethyl) ether	7.5e-07	8.3e-07	0.1
2-Chlorophenol	7.3e-11	ND	0.0
1,3-Dichlorobenzene	8.1e-09	ND	0.0
1,4-Dichlorobenzene	2.5e-08	ND	0.0
Benzyl Alcohol	6.8e-06	ND	0.0
1,2-Dichlorobenzene	6.3e-07	ND	0.0
2-Methylphenol	7.1e-08	ND	0.0
4-Methylphenol	4.9e-08	ND	0.0
Isophorone	8.2e-06	ND	0.0
2,4-Dimethylphenol	1.7e-08	ND	0.0
Benzoic Acid	2.3e-03	ND	0.0

Table X - 20

SUMMARY OF CANCER RISKS

American Chemical Services Remedial Investigation
Griffith Indiana

Medium: Ambient Air
Source Area: Volatile Emissions
Population: ACS Worker
Land Use: Current Site Conditions

CHEMICAL OF POTENTIAL CONCERN	CHRONIC DAILY INTAKE (mg/kg-d)	CANCER RISKS	
	Inhalation	Inhalation	% of Total
2,4-Dichlorophenol	8.7e-10	ND	0.0
1,2,4-Trichlorophenol	1.9e-08	ND	0.0
Naphthalene	1.6e-09	ND	0.0
Hexachlorobutadiene	6.3e-07	4.9e-08	0.0
4-Chloro-3-methylphenol	1.6e-10	ND	0.0
2-Methylnaphthalene	1.7e-07	ND	0.0
2,4,6-Trichlorophenol	3.4e-11	3.8e-13	0.0
2,4,5-Trichlorophenol	9.2e-09	ND	0.0
2-Chloronaphthalene	2.5e-10	ND	0.0
Dimethylphthalate	2.4e-08	ND	0.0
Acenaphthylene	7.2e-10	ND	0.0
2,6-Dinitrotoluene	2.5e-11	ND	0.0
Acenaphthene	5.0e-11	ND	0.0
4-Nitrophenol	1.5e-08	ND	0.0
Dibenzofuran	5.7e-10	ND	0.0
2,4-Dinitrotoluene	2.2e-10	ND	0.0
Diethylphthalate	2.4e-09	ND	0.0
Fluorene	3.6e-11	ND	0.0
N-nitrosodiphenylamine	7.6e-12	ND	0.0
4-Bromophenyl-phenylether	1.2e-10	ND	0.0
Hexachlorobenzene	5.7e-14	9.1e-14	0.0
Pentachlorophenol	7.9e-11	ND	0.0
Phenanthrene	1.4e-10	ND	0.0
Anthracene	7.2e-12	ND	0.0
Di-n-butylphthalate	4.5e-11	ND	0.0
Fluoranthene	1.2e-12	ND	0.0
Pyrene	4.1e-13	ND	0.0
Butylbenzylphthalate	4.6e+01	ND	0.0
Benzo(a)anthracene	2.1e-15	ND	0.0
Chrysene	3.5e-16	ND	0.0
bis(2-ethylhexyl)phthalate	1.5e+02	ND	0.0
Di-n-octyl Phthalate	1.0e+01	ND	0.0
Benzo(b)fluoranthene	7.4e-14	ND	0.0
Benzo(k)fluoranthene	7.6e-14	ND	0.0
Benzo(a)pyrene	3.0e-16	ND	0.0
Ideno(1,2,3-cd)pyrene	3.0e-18	ND	0.0
Dibenz(a,h)anthracene	9.7e-19	ND	0.0
Benzo(g,h,i)perylene	4.1e-18	ND	0.0
Total Carcinogenic PAHs	1.5e-13	9.3e-13	0.0
PESTICIDE/PCB			
alpha-BHC	9.8e-15	ND	0.0

Table X - 20

SUMMARY OF CANCER RISKS

American Chemical Services Remedial Investigation
Griffith Indiana

Medium: Ambient Air
Source Area: Volatile Emissions
Population: ACS Worker
Land Use: Current Site Conditions

CHEMICAL OF POTENTIAL CONCERN	CHRONIC DAILY INTAKE (mg/kg-d)	CANCER RISKS	
	Inhalation	Inhalation	% of Total
beta-BHC	3.1e-16	ND	0.0
gamma-BHC (Lindane)	1.7e-04	ND	0.0
Aldrin	2.0e-14	3.5e-13	0.0
Heptachlor epoxide	2.5e-15	ND	0.0
Endosulfan I	4.0e-14	ND	0.0
4,4'-DDE	3.9e-15	ND	0.0
4,4'-DDD	1.0e-14	ND	0.0
4,4'-DDT	8.9e-13	3.0e-13	0.0
Endrin ketone	2.7e-16	ND	0.0
PCB	1.2e-09	ND	0.0
TIC Groupings			
Propyl Benzenes	2.1e-05	ND	0.0
Propenyl Benzenes	5.7e-06	ND	0.0
Ethyl Methyl Benzenes	1.4e-04	ND	0.0
Diethyl Benzenes	3.3e-05	ND	0.0
Methyl Propyl Benzenes	3.0e-05	ND	0.0
Methyl Ethenyl Benzenes	7.2e-06	ND	0.0
Methyl Phenyl Benzenes	6.7e-11	ND	0.0
Trimethyl Benzenes	2.7e-03	ND	0.0
Dimethyl ethyl benzenes	1.2e-04	ND	0.0
Tetramethyl Benzenes	1.1e-03	ND	0.0
Oxygenated Benzenes	7.5e-04	ND	0.0
Nitrogenated Benzenes	3.7e-07	ND	0.0
Cyclic alkanes	8.2e-03	ND	0.0
Cyclic Alkenes	1.7e-03	ND	0.0
Halogenated Alkanes	6.4e-03	ND	0.0
n-chain Alkanes	3.0e-02	ND	0.0
Branched Alkanes	7.6e-03	ND	0.0
Branched Alkenes/Alkynes	3.3e-03	ND	0.0
Ethers	1.1e-04	ND	0.0
Methylated Naphthalenes	4.1e-10	ND	0.0
Phthalates	4.6e-10	ND	0.0
Methylated Phenols	2.7e-08	ND	0.0
Methylated Ketones	8.4e-05	ND	0.0
Simple Ketones	4.6e-06	ND	0.0
Cyclic Ketones	5.0e-07	ND	0.0
Diols	4.3e-07	ND	0.0
Simple Alcohols	5.5e-06	ND	0.0
Cyclic Alcohols	1.4e-07	ND	0.0
Oxygenated Alcohols	3.0e-06	ND	0.0
Cyclic Acids	1.1e-04	ND	0.0

Table X - 20

SUMMARY OF CANCER RISKS

American Chemical Services Remedial Investigation
Griffith Indiana

Medium: Ambient Air
Source Area: Volatile Emissions
Population: ACS Worker
Land Use: Current Site Conditions

CHEMICAL OF POTENTIAL CONCERN	CHRONIC DAILY INTAKE (mg/kg-d)	CANCER RISKS	
	Inhalation	Inhalation	% of Total
Non-Cyclic Acids	6.0e-04	ND	0.0
Amines	2.8e-09	ND	0.0
PCBs	6.8e-12	ND	0.0
Furans	3.8e-06	ND	0.0
		Total 1.6e-03	Total 100%

This table presents chronic daily intakes and cancer risks for chemicals of potential concern. Cancer risks are calculated by multiplying the chronic daily intake by the slope factor. Chemical-specific cancer risks are summed for each exposure route to arrive at a total risk value. In some cases, cancer risks were not determined (ND) because slope factors are not available.

JAH/jah/BJC
6/15/91
[ACS.2020.BRA]J-C.W20

Table X - 21

SUMMARY OF NONCANCER HAZARDS

American Chemical Services Remedial Investigation
Griffith Indiana

Medium: Ambient Air
Source Area: Fugitive Dust
Population: ACS Workers
Land Use: Current Site Conditions

CHEMICAL OF POTENTIAL CONCERN	CHRONIC DAILY INTAKE (mg/kg-d)	HAZARD QUOTIENT	
	Inhalation	Inhalation	% of Total
VOLATILES			
Methylene chloride	5.7e-11	1.9e-11	0.0
Acetone	2.8e-10	ND	0.0
1,1-Dichloroethane	4.3e-11	4.3e-10	0.0
1,2-Dichloroethene (cis)	2.2e-09	ND	0.0
Chloroform	2.9e-12	ND	0.0
1,1,1-Trichloroethane	2.6e-12	8.6e-12	0.0
1,2-Dichloropropane	5.4e-12	ND	0.0
Trichloroethene	4.9e-08	ND	0.0
Benzene	9.2e-10	ND	0.0
4-Methyl-2-pentanone	7.7e-08	3.9e-06	0.5
Tetrachloroethene	2.3e-07	ND	0.0
Toluene	5.4e-06	2.7e-06	0.4
Chlorobenzene	1.8e-09	3.6e-07	0.0
Ethylbenzene	1.2e-06	1.2e-06	0.2
Styrene	6.6e-09	ND	0.0
Xylenes (mixed)	6.6e-06	2.2e-05	3.0
SEMIVOLATILES			
Phenol	8.0e-09	ND	0.0
1,2-Dichlorobenzene	1.7e-10	4.2e-09	0.0
2-Methylphenol	1.3e-09	ND	0.0
4-Methylphenol	1.3e-09	ND	0.0
Isophorone	2.8e-08	ND	0.0
2,4-Dimethylphenol	1.4e-09	ND	0.0
Naphthalene	2.8e-08	ND	0.0
2-Methylnaphthalene	1.6e-08	ND	0.0
2,4,5-Trichlorophenol	4.9e-11	ND	0.0
Dimethylphthalate	4.0e-10	ND	0.0
Acenaphthene	1.0e-10	ND	0.0
Dibenzofuran	1.2e-10	ND	0.0
Diethylphthalate	1.4e-09	ND	0.0
Fluorene	1.8e-10	ND	0.0
N-nitrosodiphenylamine	1.2e-09	ND	0.0
Pentachlorophenol	4.3e-10	ND	0.0
Phenanthrene	1.2e-09	ND	0.0
Anthracene	1.9e-10	ND	0.0

Table X - 21

SUMMARY OF NONCANCER HAZARDS

American Chemical Services Remedial Investigation
Griffith Indiana

Medium: Ambient Air
Source Area: Fugitive Dust

Population: ACS Workers
Land Use: Current Site Conditions

CHEMICAL OF POTENTIAL CONCERN	CHRONIC DAILY INTAKE (mg/kg-d)	HAZARD QUOTIENT	
	Inhalation	Inhalation	% of Total
Di-n-butylphthalate	2.7e-08	ND	0.0
Fluoranthene	9.7e-10	ND	0.0
Pyrene	6.6e-10	ND	0.0
Butylbenzylphthalate	1.5e-08	ND	0.0
Benzo(a)anthracene	6.9e-10	ND	0.0
Chrysene	3.7e-10	ND	0.0
bis(2-ethylhexyl)phthalate	1.5e-07	ND	0.0
Di-n-octyl Phthalate	1.1e-08	ND	0.0
Benzo(b)fluoranthene	1.1e-09	ND	0.0
Benzo(k)fluoranthene	1.1e-09	ND	0.0
Benzo(a)pyrene	4.0e-10	ND	0.0
Ideno(1,2,3-cd)pyrene	2.3e-10	ND	0.0
Dibenz(a,h)anthracene	7.7e-11	ND	0.0
Benzo(g,h,i)perylene	3.1e-10	ND	0.0
Total Carcinogenic PAHs	4.0e-09	ND	0.0
PESTICIDE/PCB			
Aldrin	2.5e-11	ND	0.0
Endosulfan I	1.2e-11	ND	0.0
4,4'-DDD	4.3e-11	ND	0.0
PCB	9.4e-08	ND	0.0
METALS			
Aluminum	3.8e-09	ND	0.0
Antimony	2.4e-11	ND	0.0
Barium	1.6e-09	1.6e-05	2.2
Cadmium (food/soil)	5.0e-11	ND	0.0
Calcium	4.5e-08	ND	0.0
Chromium VI	8.8e-10	4.4e-04	59.7
Cobalt	4.2e-11	ND	0.0
Copper	1.3e-09	ND	0.0
Iron	2.0e-08	ND	0.0
Lead	4.6e-09	ND	0.0
Magnesium	1.1e-08	ND	0.0
Manganese	4.4e-10	1.1e-06	0.1
Mercury	2.7e-12	9.1e-09	0.0
Nickel	5.6e-11	ND	0.0

Table X - 21

SUMMARY OF NONCANCER HAZARDS

American Chemical Services Remedial Investigation
Griffith Indiana

Medium: Ambient Air
Source Area: Fugitive Dust

Population: ACS Workers
Land Use: Current Site Conditions

CHEMICAL OF POTENTIAL CONCERN	CHRONIC DAILY INTAKE (mg/kg-d)	HAZARD QUOTIENT	
	Inhalation	Inhalation	% of Total
Selenium	4.9e-12	ND	0.0
Silver	7.1e-12	ND	0.0
Vanadium	1.4e-11	ND	0.0
Zinc	4.5e-09	ND	0.0
Cyanide	1.9e-11	ND	0.0
TIC Groupings			
Propyl Benzenes	3.4e-11	3.8e-09	0.0
Propenyl Benzenes	9.2e-09	9.2e-07	0.1
Ethyl Methyl Benzenes	1.1e-07	5.3e-08	0.0
Trimethyl Benzenes	6.3e-08	1.1e-07	0.0
Dimethyl ethyl benzenes	1.7e-08	1.7e-08	0.0
Tetramethyl Benzenes	1.9e-08	3.4e-08	0.0
Cyclic alkanes	1.5e-08	ND	0.0
n-chain Alkanes	8.3e-08	4.2e-07	0.1
Branched Alkanes	9.2e-08	4.6e-07	0.1
Methylated Ketones	5.2e-11	ND	0.0
Cyclic Acids	5.4e-09	ND	0.0
Non-Cyclic Acids	7.4e-08	2.5e-04	33.6
		Total	Total
		7.4e-04	100%

This table presents chronic daily intakes and hazard quotients for chemicals of potential concern. Hazard quotients are calculated by dividing the chronic daily intake by the reference dose. Chemical-specific hazar quotients are summed for each exposure route to arrive at a total hazard value. In some cases, hazard quotie were not determined (ND) because reference doses are not available.

JAH/jah/BJC
VERSION 6/15/91
[ACS.2020.BRA]K-H.W20

Table X - 22

SUMMARY OF CANCER RISKS

American Chemical Services Remedial Investigation
Griffith Indiana

Medium: Ambient Air
Source Area: Fugitive Dust

Population: ACS Worker
Land Use: Current Site Conditions

CHEMICAL OF POTENTIAL CONCERN	CHRONIC DAILY INTAKE (mg/kg-d)	CANCER RISKS	
	Inhalation	Inhalation	% of Total
VOLATILES			
Methylene chloride	2.5e-11	3.4e-13	0.0
Acetone	1.2e-10	ND	0.0
1,1-Dichloroethane	1.8e-11	ND	0.0
1,2-Dichloroethene (cis)	9.3e-10	ND	0.0
Chloroform	1.2e-12	9.9e-14	0.0
1,1,1-Trichloroethane	1.1e-12	ND	0.0
1,2-Dichloropropane	2.3e-12	ND	0.0
Trichloroethene	2.1e-08	3.5e-10	3.1
Benzene	3.9e-10	1.1e-11	0.1
4-Methyl-2-pentanone	3.3e-08	ND	0.0
Tetrachloroethene	9.7e-08	3.2e-10	2.8
Toluene	2.3e-06	ND	0.0
Chlorobenzene	7.6e-10	ND	0.0
Ethylbenzene	5.3e-07	ND	0.0
Styrene	2.8e-09	5.6e-12	0.0
Xylenes (mixed)	2.8e-06	ND	0.0
SEMIVOLATILES			
Phenol	3.4e-09	ND	0.0
1,2-Dichlorobenzene	7.2e-11	ND	0.0
2-Methylphenol	5.8e-10	ND	0.0
4-Methylphenol	5.6e-10	ND	0.0
Isophorone	1.2e-08	ND	0.0
2,4-Dimethylphenol	6.0e-10	ND	0.0
Naphthalene	1.2e-08	ND	0.0
2-Methylnaphthalene	6.9e-09	ND	0.0
2,4,5-Trichlorophenol	2.1e-11	ND	0.0
Dimethylphthalate	1.7e-10	ND	0.0
Acenaphthene	4.4e-11	ND	0.0
Dibenzofuran	5.3e-11	ND	0.0
Diethylphthalate	6.1e-10	ND	0.0
Fluorene	7.6e-11	ND	0.0
N-nitrosodiphenylamine	5.3e-10	ND	0.0
Pentachlorophenol	1.8e-10	ND	0.0
Phenanthrene	5.3e-10	ND	0.0
Anthracene	8.1e-11	ND	0.0

Table X - 22

SUMMARY OF CANCER RISKS

American Chemical Services Remedial Investigation
Griffith Indiana

Medium: Ambient Air
Source Area: Fugitive Dust

Population: ACS Worker
Land Use: Current Site Conditions

CHEMICAL OF POTENTIAL CONCERN	CHRONIC DAILY INTAKE (mg/kg-d)	CANCER RISKS	
	Inhalation	Inhalation	% of Total
Di-n-butylphthalate	1.2e-08	ND	0.0
Fluoranthene	4.2e-10	ND	0.0
Pyrene	2.8e-10	ND	0.0
Butylbenzylphthalate	6.3e-09	ND	0.0
Benzo(a)anthracene	2.9e-10	ND	0.0
Chrysene	1.6e-10	ND	0.0
bis(2-ethylhexyl)phthalate	6.6e-08	ND	0.0
Di-n-octyl Phthalate	4.7e-09	ND	0.0
Benzo(b)fluoranthene	4.8e-10	ND	0.0
Benzo(k)fluoranthene	4.8e-10	ND	0.0
Benzo(a)pyrene	1.7e-10	ND	0.0
Ideno(1,2,3-cd)pyrene	1.0e-10	ND	0.0
Dibenz(a,h)anthracene	3.3e-11	ND	0.0
Benzo(g,h,i)perylene	1.3e-10	ND	0.0
Total Carcinogenic PAHs	1.7e-09	1.0e-08	92.1
PESTICIDE/PCB			
Aldrin	1.1e-11	1.8e-10	1.6
Endosulfan I	5.2e-12	ND	0.0
4,4'-DDD	1.8e-11	ND	0.0
PCB	4.0e-08	ND	0.0
METALS			
Aluminum	1.6e-09	ND	0.0
Antimony	1.0e-11	ND	0.0
Barium	7.0e-10	ND	0.0
Cadmium (food/soil)	2.1e-11	ND	0.0
Calcium	1.9e-08	ND	0.0
Chromium VI	3.8e-10	ND	0.0
Cobalt	1.8e-11	ND	0.0
Copper	5.5e-10	ND	0.0
Iron	8.6e-09	ND	0.0
Lead	2.0e-09	ND	0.0
Magnesium	4.5e-09	ND	0.0
Manganese	1.9e-10	ND	0.0
Mercury	1.2e-12	ND	0.0
Nickel	2.4e-11	2.0e-11	0.2

Table X - 22

SUMMARY OF CANCER RISKS

American Chemical Services Remedial Investigation
Griffith Indiana

Medium: Ambient Air
Source Area: Fugitive Dust

Population: ACS Worker
Land Use: Current Site Conditions

CHEMICAL OF POTENTIAL CONCERN	CHRONIC DAILY INTAKE (mg/kg-d)	CANCER RISKS	
	Inhalation	Inhalation	% of Total
Selenium	2.1e-12	ND	0.0
Silver	3.0e-12	ND	0.0
Vanadium	5.9e-12	ND	0.0
Zinc	1.9e-09	ND	0.0
Cyanide	8.1e-12	ND	0.0
TIC Groupings			
Propyl Benzenes	1.5e-11	ND	0.0
Propenyl Benzenes	3.9e-09	ND	0.0
Ethyl Methyl Benzenes	4.5e-08	ND	0.0
Trimethyl Benzenes	2.7e-08	ND	0.0
Dimethyl ethyl benzenes	7.4e-09	ND	0.0
Tetramethyl Benzenes	8.3e-09	ND	0.0
Cyclic alkanes	6.4e-09	ND	0.0
n-chain Alkanes	3.6e-08	ND	0.0
Branched Alkanes	3.9e-08	ND	0.0
Methylated Ketones	2.2e-11	ND	0.0
Cyclic Acids	2.3e-09	ND	0.0
Non-Cyclic Acids	3.2e-08	ND	0.0
		Total 1.1e-08	Total 100%

This table presents chronic daily intakes and cancer risks for chemicals of potential concern. Cancer risks are calculated by multiplying the chronic daily intake by the slope factor. Chemical-specific cancer risks are summed for each exposure route to arrive at a total risk value. In some cases, cancer risks were not determined (ND) because slope factors are not available.

JAH/jah/BJC
6/15/91
[ACS.2020.BRA]K-C.W20

Table X - 23

SUMMARY OF NONCANCER HAZARDS

American Chemical Services Remedial Investigation
Griffith Indiana

Medium: Groundwater
Source Area: Lower Aquifer

Population: Onsite Resident
Land Use: Future Site Conditions

CHEMICAL OF POTENTIAL CONCERN	CHRONIC DAILY INTAKE (mg/kg-d)			HAZARD QUOTIENT				
	Dermal Absorp.	Ingestion	Inhalation	Dermal Absorp.	Ingestion	Inhalation	Total	% of Total
VOLATILES								
Chloroethane	2.0e-05	1.3e-02	5.4e-03	ND	ND	5.4e-03	5.4e-03	0.4
4-Methyl-2-pentanone	1.7e-05	8.6e-05	3.7e-05	6.7e-04	1.7e-03	1.9e-03	4.2e-03	0.3
SEMIVOLATILES								
bis(2-Chloroethyl) ether	1.7e-06	3.4e-04	8.2e-05	ND	ND	ND	0.0e+00	0.0
METALS								
Arsenic	7.2e-07	2.5e-04	0.0e+00	7.5e-04	2.5e-01	ND	2.5e-01	18.9
Barium	2.6e-05	8.9e-03	0.0e+00	7.4e-03	1.3e-01	ND	1.3e-01	10.2
Calcium	1.3e-02	4.3e+00	0.0e+00	ND	ND	ND	0.0e+00	0.0
Copper	1.7e-06	5.7e-04	0.0e+00	ND	ND	ND	0.0e+00	0.0
Iron	2.6e-04	9.0e-02	0.0e+00	ND	ND	ND	0.0e+00	0.0
Magnesium	4.4e-03	1.5e+00	0.0e+00	ND	ND	ND	0.0e+00	0.0
Manganese	7.2e-05	2.5e-02	0.0e+00	1.8e-02	2.5e-01	ND	2.7e-01	20.3
Mercury	3.9e-08	1.3e-05	0.0e+00	8.7e-04	4.5e-02	ND	4.6e-02	3.5
Potassium	2.8e-04	9.8e-02	0.0e+00	ND	ND	ND	0.0e+00	0.0
Selenium	1.7e-07	5.7e-05	0.0e+00	ND	ND	ND	0.0e+00	0.0
Sodium	8.0e-03	2.7e+00	0.0e+00	ND	ND	ND	0.0e+00	0.0
Vanadium	2.0e-07	6.9e-05	0.0e+00	5.7e-04	9.8e-03	ND	1.0e-02	0.8
Zinc	1.8e-06	6.3e-04	0.0e+00	3.0e-05	3.1e-03	ND	3.2e-03	0.2
TIC Groupings								
Ethers	3.4e-06	1.0e-03	4.4e-04	1.4e-05	2.1e-03	ND	2.1e-03	0.2
Diols	3.7e-05	7.7e-03	1.9e-03	3.7e-05	3.9e-03	ND	3.9e-03	0.3
Cyclic Alcohols	3.5e-04	7.1e-02	1.7e-02	2.3e-03	2.4e-01	ND	2.4e-01	18.4
Oxygenated Alcohols	1.4e-04	2.9e-02	6.9e-03	ND	ND	3.4e-01	3.4e-01	26.2
Cyclic Acids	5.5e-05	1.1e-02	2.7e-03	1.8e-05	2.9e-03	ND	2.9e-03	0.2
				3.1e-02	9.3e-01	3.5e-01	3.5e-01	100.0
				Total Risk All Routes		1.3e+00		

Table X - 23

SUMMARY OF NONCANCER HAZARDS

American Chemical Services Remedial Investigation
Griffith Indiana

Medium:	Groundwater	Population:	Onsite Resident
Source Area:	Lower Aquifer	Land Use:	Future Site Conditions

This table presents chronic daily intakes and hazard quotients for chemicals of potential concern. Hazard quotients are calculated by dividing the chronic daily intake by the reference dose. Chemical-specific hazard quotients are summed for each exposure route to arrive at a total hazard value. In some cases, hazard quotients were not determined (ND) because reference doses are not available.

JAH/jah/caw
VERSION 6/25/91
[ACS.2020.BRA]B-H.W20

Table X - 24

SUMMARY OF CANCER RISKS

American Chemical Services Remedial Investigation
Griffith Indiana

Medium: Groundwater
Source Area: Lower Aquifer

Population: Onsite Resident
Land Use: Future Site Conditions

CHEMICAL OF POTENTIAL CONCERN	CHRONIC DAILY INTAKE (mg/kg-d)			CANCER RISKS				
	Dermal Absorp.	Ingestion	Inhalation	Dermal Absorp.	Ingestion	Inhalation	Total	% of Total
VOLATILES								
Chloroethane	8.4e-06	5.4e-03	2.3e-03	ND	ND	ND	0.0e+00	0.0
4-Methyl-2-pentanone	7.2e-06	3.7e-05	1.6e-05	ND	ND	ND	0.0e+00	0.0
SEMIVOLATILES								
bis(2-Chloroethyl) ether	7.1e-07	1.5e-04	3.5e-05	1.6e-06	1.6e-04	3.9e-05	2.0e-04	51.5
METALS								
Arsenic	3.1e-07	1.1e-04	0.0e+00	5.8e-07	1.9e-04	ND	1.9e-04	48.5
Barium	1.1e-05	3.8e-03	0.0e+00	ND	ND	ND	0.0e+00	0.0
Calcium	5.4e-03	1.8e+00	0.0e+00	ND	ND	ND	0.0e+00	0.0
Copper	7.1e-07	2.4e-04	0.0e+00	ND	ND	ND	0.0e+00	0.0
Iron	1.1e-04	3.9e-02	0.0e+00	ND	ND	ND	0.0e+00	0.0
Magnesium	1.9e-03	6.5e-01	0.0e+00	ND	ND	ND	0.0e+00	0.0
Manganese	3.1e-05	1.1e-02	0.0e+00	ND	ND	ND	0.0e+00	0.0
Mercury	1.7e-08	5.8e-06	0.0e+00	ND	ND	ND	0.0e+00	0.0
Potassium	1.2e-04	4.2e-02	0.0e+00	ND	ND	ND	0.0e+00	0.0
Selenium	7.1e-08	2.4e-05	0.0e+00	ND	ND	ND	0.0e+00	0.0
Sodium	3.4e-03	1.2e+00	0.0e+00	ND	ND	ND	0.0e+00	0.0
Vanadium	8.6e-08	2.9e-05	0.0e+00	ND	ND	ND	0.0e+00	0.0
Zinc	7.8e-07	2.7e-04	0.0e+00	ND	ND	ND	0.0e+00	0.0
TIC Groupings								
Ethers	1.5e-06	4.4e-04	1.9e-04	ND	ND	ND	0.0e+00	0.0
Diols	1.6e-05	3.3e-03	7.9e-04	ND	ND	ND	0.0e+00	0.0
Cyclic Alcohols	1.5e-04	3.1e-02	7.3e-03	ND	ND	ND	0.0e+00	0.0
Oxygenated Alcohols	5.9e-05	1.2e-02	2.9e-03	ND	ND	ND	0.0e+00	0.0
Cyclic Acids	2.4e-05	4.9e-03	1.2e-03	ND	ND	ND	0.0e+00	0.0
				2.1e-06	3.5e-04	3.9e-05	1.3e-05	100.0
				Total Risk All Routes		3.9e-04		

Table X - 24

SUMMARY OF CANCER RISKS

American Chemical Services Remedial Investigation
Griffith Indiana

Medium:	Groundwater	Population:	Onsite Resident
Source Area:	Lower Aquifer	Land Use:	Future Site Conditions

This table presents chronic daily intakes and cancer risks for chemicals of potential concern. Cancer risks are calculated by multiplying the chronic daily intake by the slope factor. Chemical-specific cancer risks are summed for each exposure route to arrive at a total risk value. In some cases, cancer risks were not determined (ND) because slope factors are not available.

JAH/jah/caw
6/25/91
[ACS.2020.BRA]B-C.W20

Table X - 25

SUMMARY OF NONCANCER HAZARDS

American Chemical Services Remedial Investigation
Griffith Indiana

Medium: Groundwater
Source Area: Upper Aquifer

Population: Onsite Resident
Land Use: Future Site Conditions

CHEMICAL OF POTENTIAL CONCERN	CHRONIC DAILY INTAKE (mg/kg-d)			HAZARD QUOTIENT				
	Dermal Absorp.	Ingestion	Inhalation	Dermal Absorp.	Ingestion	Inhalation	Total	% of Total
VOLATILES								
Chloromethane	3.8e-04	1.9e-03	8.4e-04	ND	ND	ND	0.0e+00	0.0
Vinyl chloride	4.0e-03	2.1e-02	8.9e-03	ND	ND	ND	0.0e+00	0.0
Chloroethane	8.9e-05	5.7e-02	2.5e-02	ND	ND	2.5e-02	2.5e-02	0.0
Methylene chloride	2.1e-03	1.1e-02	4.7e-03	4.4e-02	1.8e-01	1.6e-03	2.3e-01	0.1
Acetone	5.5e-01	2.8e+00	1.2e+00	5.8e+00	2.8e+01	ND	3.4e+01	10.3
1,1-Dichloroethane	1.3e-02	6.9e-02	3.0e-02	1.3e-01	6.9e-01	3.0e-01	1.1e+00	0.3
1,2-Dichloroethene (cis)	2.2e-03	1.1e-02	4.9e-03	2.4e-01	1.1e+00	ND	1.4e+00	0.4
2-Butanone	6.1e-03	6.3e+00	2.7e+00	2.4e-01	1.3e+02	3.0e+01	1.6e+02	47.3
Trichloroethene	2.5e-04	1.3e-03	5.6e-04	ND	ND	ND	0.0e+00	0.0
Benzene	6.2e-02	2.9e+00	1.2e+00	ND	ND	ND	0.0e+00	0.0
4-Methyl-2-pentanone	3.0e-01	1.5e+00	6.7e-01	1.2e+01	3.1e+01	3.3e+01	7.6e+01	23.1
2-Hexanone	1.0e-02	5.1e-02	2.2e-02	ND	ND	ND	0.0e+00	0.0
Tetrachloroethene	1.1e-03	5.7e-03	2.5e-03	1.1e-01	5.7e-01	ND	6.8e-01	0.2
Toluene	1.3e-02	6.6e-02	2.8e-02	6.4e-02	3.3e-01	1.4e-02	4.1e-01	0.1
Chlorobenzene	5.4e-04	2.7e-03	1.2e-03	9.0e-02	1.4e-01	2.4e-01	4.6e-01	0.1
Ethylbenzene	8.4e-03	3.1e-02	1.4e-02	1.7e-01	3.1e-01	1.4e-02	4.9e-01	0.2
Xylenes (mixed)	1.7e-02	8.6e-02	3.7e-02	1.7e-02	4.3e-02	1.2e-01	1.8e-01	0.1
	0	0	0					
SEMIVOLATILES	0	0	0					
	0	0	0					
Phenol	5.5e-05	6.9e-03	1.6e-03	1.0e-04	1.1e-02	ND	1.2e-02	0.0
bis(2-Chloroethyl) ether	3.5e-05	7.1e-03	1.7e-03	ND	ND	ND	0.0e+00	0.0
1,3-Dichlorobenzene	4.2e-07	8.6e-05	2.1e-05	ND	ND	ND	0.0e+00	0.0
1,4-Dichlorobenzene	1.4e-06	2.9e-04	6.9e-05	ND	ND	9.8e-05	9.8e-05	0.0
1,2-Dichlorobenzene	4.6e-06	9.4e-04	2.3e-04	1.0e-04	1.0e-02	5.7e-03	1.6e-02	0.0
2-Methylphenol	1.7e-05	1.1e-03	2.6e-04	4.1e-04	2.1e-02	ND	2.2e-02	0.0
bis(2-Chloroisopropyl)ether	4.2e-05	8.6e-03	2.1e-03	2.1e-03	2.1e-01	ND	2.2e-01	0.1
4-Methylphenol	1.1e-03	6.3e-02	1.5e-02	2.7e-02	1.3e+00	ND	1.3e+00	0.4
Isophorone	4.9e-06	1.0e-03	2.4e-04	4.9e-05	5.0e-03	ND	5.0e-03	0.0
2,4-Dimethylphenol	3.4e-04	3.1e-03	7.5e-04	3.4e-02	1.6e-01	ND	1.9e-01	0.1
Benzoic Acid	2.6e-04	5.4e-02	1.3e-02	8.8e-05	1.4e-02	ND	1.4e-02	0.0
Naphthalene	9.8e-06	2.0e-03	4.9e-04	2.9e-03	5.1e-01	ND	5.1e-01	0.2
4-Chloro-3-methylphenol	7.6e-06	1.4e-04	3.4e-05	ND	ND	ND	0.0e+00	0.0
2-Methylnaphthalene	3.7e-06	7.7e-04	1.9e-04	ND	ND	ND	0.0e+00	0.0
Diethylphthalate	2.8e-09	2.6e-04	6.2e-05	7.1e-09	3.2e-04	ND	3.2e-04	0.0
Pentachlorophenol	4.2e-07	8.6e-05	2.1e-05	1.5e-05	2.9e-03	ND	2.9e-03	0.0
Di-n-butylphthalate	1.3e-10	5.7e-05	1.4e-05	1.4e-09	5.7e-04	ND	5.7e-04	0.0

Table X - 25

SUMMARY OF NONCANCER HAZARDS

American Chemical Services Remedial Investigation
Griffith Indiana

Medium: Groundwater
Source Area: Upper Aquifer

Population: Onsite Resident
Land Use: Future Site Conditions

CHEMICAL OF POTENTIAL CONCERN	CHRONIC DAILY INTAKE (mg/kg-d)			HAZARD QUOTIENT				
	Dermal Absorp.	Ingestion	Inhalation	Dermal Absorp.	Ingestion	Inhalation	Total	% of Total
bis(2-ethylhexyl)phthalate	7.9e-09	1.4e-03	3.4e-04	1.6e-06	7.1e-02	ND	7.1e-02	0.0
	0	0	0					
PESTICIDE/PCB	0	0	0					
	0	0	0					
PCB	4.3e-04	8.5e-04	2.0e-04	ND	ND	ND	0.0e+00	0.0
	0	0	0					
METALS	0	0	0					
	0	0	0					
Aluminum	2.3e-05	8.0e-03	0.0e+00	ND	ND	ND	0.0e+00	0.0
Arsenic	3.6e-06	1.2e-03	0.0e+00	3.8e-03	1.2e+00	ND	1.2e+00	0.4
Barium	1.5e-04	5.3e-02	0.0e+00	4.4e-02	7.5e-01	ND	7.9e-01	0.2
Beryllium	2.1e-08	7.1e-06	0.0e+00	4.2e-05	1.4e-03	ND	1.5e-03	0.0
Cadmium (water)	2.6e-07	8.9e-05	0.0e+00	7.4e-03	1.8e-01	ND	1.8e-01	0.1
Calcium	8.6e-02	3.0e+01	0.0e+00	ND	ND	ND	0.0e+00	0.0
Chromium VI	4.5e-07	1.1e-04	0.0e+00	1.8e-04	2.2e-02	ND	2.2e-02	0.0
Iron	1.8e-02	6.2e+00	0.0e+00	ND	ND	ND	0.0e+00	0.0
Lead	3.8e-07	1.3e-04	0.0e+00	5.5e-03	9.4e-01	ND	9.4e-01	0.3
Magnesium	6.6e-03	2.3e+00	0.0e+00	ND	ND	ND	0.0e+00	0.0
Manganese	3.5e-04	1.2e-01	0.0e+00	8.8e-02	1.2e+00	ND	1.3e+00	0.4
Mercury	1.4e-07	4.9e-05	0.0e+00	3.1e-03	1.6e-01	ND	1.7e-01	0.1
Nickel	4.4e-06	1.5e-03	0.0e+00	2.2e-03	7.6e-02	ND	7.8e-02	0.0
Potassium	8.0e-03	2.7e+00	0.0e+00	ND	ND	ND	0.0e+00	0.0
Selenium	5.2e-07	1.8e-04	0.0e+00	ND	ND	ND	0.0e+00	0.0
Sodium	3.7e-02	1.3e+01	0.0e+00	ND	ND	ND	0.0e+00	0.0
Thallium	3.3e-07	1.1e-04	0.0e+00	9.5e-02	1.6e+00	ND	1.7e+00	0.5
Vanadium	2.2e-06	7.4e-04	0.0e+00	6.2e-03	1.1e-01	ND	1.1e-01	0.0
Zinc	7.4e-05	2.5e-02	0.0e+00	1.2e-03	1.3e-01	ND	1.3e-01	0.0
Cyanide	8.3e-07	2.9e-04	0.0e+00	5.9e-05	1.4e-02	ND	1.4e-02	0.0
	0	0	0					
TIC Groupings	0	0	0					
	0	0	0					
Propyl Benzenes	3.4e-04	1.7e-03	7.4e-04	1.7e-02	4.3e-02	8.2e-02	1.4e-01	0.0
Propenyl Benzenes	3.4e-05	1.7e-04	7.4e-05	1.1e-02	2.9e-02	7.4e-03	4.7e-02	0.0
Ethyl Methyl Benzenes	7.3e-04	3.7e-03	1.6e-03	3.6e-03	1.9e-02	8.0e-04	2.3e-02	0.0
Diethyl Benzenes	5.9e-04	2.2e-03	9.6e-04	1.2e-02	2.2e-02	9.6e-04	3.5e-02	0.0
Methyl Propyl Benzenes	7.8e-05	4.0e-04	1.7e-04	3.9e-03	1.0e-02	1.9e-02	3.3e-02	0.0
Methyl Ethenyl Benzenes	2.5e-06	5.1e-04	1.2e-04	8.3e-04	8.6e-02	1.2e-02	9.9e-02	0.0
Methyl Phenyl Benzenes	3.3e-06	6.9e-04	1.6e-04	9.9e-04	1.7e-01	ND	1.7e-01	0.1
Trimethyl Benzenes	3.6e-03	1.8e-02	7.9e-03	9.0e-03	4.6e-02	1.4e-02	6.9e-02	0.0

Table X - 25

SUMMARY OF NONCANCER HAZARDS

American Chemical Services Remedial Investigation
Griffith Indiana

Medium: Groundwater
Source Area: Upper Aquifer

Population: Onsite Resident
Land Use: Future Site Conditions

CHEMICAL OF POTENTIAL CONCERN	CHRONIC DAILY INTAKE (mg/kg-d)			HAZARD QUOTIENT				
	Dermal Absorp.	Ingestion	Inhalation	Dermal Absorp.	Ingestion	Inhalation	Total	% of Total
Dimethyl ethyl benzenes	3.0e-03	1.1e-02	4.9e-03	6.1e-02	1.1e-01	4.9e-03	1.8e-01	0.1
Tetramethyl Benzenes	7.3e-04	3.7e-03	1.6e-03	1.8e-03	9.3e-03	2.8e-03	1.4e-02	0.0
Oxygenated Benzenes	5.0e-04	2.6e-03	1.1e-03	1.0e-02	2.6e-02	ND	3.6e-02	0.0
Halogenated Benzenes	1.7e-05	3.4e-03	8.2e-04	1.7e-03	1.7e-01	ND	1.7e-01	0.1
Cyclic alkanes	4.3e-04	2.2e-03	9.4e-04	ND	ND	ND	0.0e+00	0.0
Cyclic Alkenes	3.5e-04	1.8e-03	7.8e-04	ND	ND	ND	0.0e+00	0.0
Halogenated Alkanes	4.4e-04	2.2e-03	9.6e-04	4.9e-03	2.5e-02	3.2e-03	3.3e-02	0.0
Branched Alkanes	4.0e-03	2.1e-02	8.9e-03	1.3e-01	3.4e-01	4.4e-02	5.2e-01	0.2
Ethers	1.4e-04	4.3e-02	1.9e-02	5.7e-04	8.6e-02	ND	8.6e-02	0.0
Methylated Naphthalenes	1.0e-05	2.1e-03	5.1e-04	3.1e-03	5.3e-01	ND	5.3e-01	0.2
Methylated Phenols	9.7e-05	5.7e-03	1.4e-03	2.4e-03	1.1e-01	ND	1.1e-01	0.0
Methylated Ketones	3.9e-05	2.0e-04	8.6e-05	4.1e-04	2.0e-03	ND	2.4e-03	0.0
Simple Ketones	4.8e-04	2.5e-03	1.1e-03	1.9e-02	4.9e-02	1.2e-02	8.0e-02	0.0
Cyclic Ketones	5.2e-04	2.6e-03	1.1e-03	5.2e-03	1.3e-02	ND	1.8e-02	0.0
Diols	2.5e-04	5.1e-02	1.2e-02	2.5e-04	2.6e-02	ND	2.6e-02	0.0
Simple Alcohols	2.2e-04	1.1e-03	4.9e-04	4.5e-03	1.1e-02	ND	1.6e-02	0.0
Cyclic Alcohols	2.8e-04	5.7e-02	1.4e-02	1.8e-03	1.9e-01	ND	1.9e-01	0.1
Oxygenated Alcohols	3.0e-04	6.3e-02	1.5e-02	ND	ND	7.5e-01	7.5e-01	0.2
Cyclic Acids	5.8e-05	1.2e-02	2.9e-03	1.9e-05	3.0e-03	ND	3.0e-03	0.0
Non-Cyclic Acids	6.2e-03	3.1e-02	1.4e-02	1.5e-01	3.9e-01	4.5e+01	4.6e+01	13.9
Amines	9.0e-04	9.1e-04	2.2e-04	3.6e-03	1.8e-03	ND	5.4e-03	0.0
Furans	0.0e+00	4.3e-03	1.9e-03	ND	ND	ND	0.0e+00	0.0
				Total 2.0e+01	Total 2.0e+02	Total 1.1e+02	Total 3.3e+02	Total 100.0

This table presents chronic daily intakes and hazard quotients for chemicals of potential concern. Hazard quotients are calculated by dividing the chronic daily intake by the reference dose. Chemical-specific hazard quotients are summed for each exposure route to arrive at a total hazard value. In some cases, hazard quotients were not determined (ND) because reference doses are not available.

JAH/jah/
VERSION 6/19/91
[ACS.2020.BRAIM-H.W20

Table X - 26

SUMMARY OF CANCER RISKS

American Chemical Services Remedial Investigation
Griffith Indiana

Medium: Groundwater
Source Area: Upper Aquifer

Population: Onsite Resident
Land Use: Future Site Conditions

CHEMICAL OF POTENTIAL CONCERN	CHRONIC DAILY INTAKE (mg/kg-d)			CANCER RISKS				
	Dermal Absorp.	Ingestion	Inhalation	Dermal Absorp.	Ingestion	Inhalation	Total	% of Total
VOLATILES								
Chloromethane	1.6e-04	8.3e-04	3.6e-04	4.2e-06	1.1e-05	2.3e-06	1.7e-05	0.0
Vinyl chloride	1.7e-03	8.8e-03	3.8e-03	3.3e-03	1.7e-02	1.1e-03	2.1e-02	24.4
Chloroethane	3.8e-05	2.4e-02	1.1e-02	ND	ND	ND	0.0e+00	0.0
Methylene chloride	9.1e-04	4.7e-03	2.0e-03	8.5e-06	3.5e-05	2.8e-05	7.2e-05	0.1
Acetone	2.4e-01	1.2e+00	5.2e-01	ND	ND	ND	0.0e+00	0.0
1,1-Dichloroethane	5.8e-03	2.9e-02	1.3e-02	ND	ND	ND	0.0e+00	0.0
1,2-Dichloroethene (cis)	9.6e-04	4.9e-03	2.1e-03	ND	ND	ND	0.0e+00	0.0
2-Butanone	2.6e-03	2.7e+00	1.2e+00	ND	ND	ND	0.0e+00	0.0
Trichloroethene	1.1e-04	5.5e-04	2.4e-04	1.2e-06	6.1e-06	4.0e-06	1.1e-05	0.0
Benzene	2.6e-02	1.2e+00	5.3e-01	1.5e-03	3.6e-02	1.5e-02	5.2e-02	60.5
4-Methyl-2-pentanone	1.3e-01	6.6e-01	2.9e-01	ND	ND	ND	0.0e+00	0.0
2-Hexanone	4.3e-03	2.2e-02	9.5e-03	ND	ND	ND	0.0e+00	0.0
Tetrachloroethene	4.8e-04	2.4e-03	1.1e-03	2.4e-05	1.2e-04	3.5e-06	1.5e-04	0.2
Toluene	5.5e-03	2.8e-02	1.2e-02	ND	ND	ND	0.0e+00	0.0
Chlorobenzene	2.3e-04	1.2e-03	5.1e-04	ND	ND	ND	0.0e+00	0.0
Ethylbenzene	3.6e-03	1.3e-02	5.8e-03	ND	ND	ND	0.0e+00	0.0
Xylenes (mixed)	7.2e-03	3.7e-02	1.6e-02	ND	ND	ND	0.0e+00	0.0
	0	0	0.0e+00					
SEMIVOLATILES	0	0	0.0e+00					
	0	0	0.0e+00					
Phenol	2.3e-05	2.9e-03	7.1e-04	ND	ND	ND	0.0e+00	0.0
bis(2-Chloroethyl) ether	1.5e-05	3.1e-03	7.3e-04	3.3e-05	3.4e-03	8.1e-04	4.2e-03	4.9
1,3-Dichlorobenzene	1.8e-07	3.7e-05	8.8e-06	ND	ND	ND	0.0e+00	0.0
1,4-Dichlorobenzene	5.9e-07	1.2e-04	2.9e-05	1.4e-08	2.9e-06	ND	3.0e-06	0.0
1,2-Dichlorobenzene	2.0e-06	4.0e-04	9.7e-05	ND	ND	ND	0.0e+00	0.0
2-Methylphenol	7.1e-06	4.7e-04	1.1e-04	ND	ND	ND	0.0e+00	0.0
bis(2-Chloroisopropyl)ether	1.8e-05	3.7e-03	8.8e-04	ND	ND	ND	0.0e+00	0.0
4-Methylphenol	4.6e-04	2.7e-02	6.5e-03	ND	ND	ND	0.0e+00	0.0
Isophorone	2.1e-06	4.3e-04	1.0e-04	1.7e-08	1.8e-06	ND	1.8e-06	0.0
2,4-Dimethylphenol	1.4e-04	1.3e-03	3.2e-04	ND	ND	ND	0.0e+00	0.0
Benzoic Acid	1.1e-04	2.3e-02	5.6e-03	ND	ND	ND	0.0e+00	0.0
Naphthalene	4.2e-06	8.7e-04	2.1e-04	ND	ND	ND	0.0e+00	0.0
4-Chloro-3-methylphenol	3.3e-06	6.1e-05	1.5e-05	ND	ND	ND	0.0e+00	0.0
2-Methylnaphthalene	1.6e-06	3.3e-04	7.9e-05	ND	ND	ND	0.0e+00	0.0
Diethylphthalate	1.2e-09	1.1e-04	2.6e-05	ND	ND	ND	0.0e+00	0.0
Pentachlorophenol	1.8e-07	3.7e-05	8.8e-06	2.4e-08	4.4e-06	ND	4.4e-06	0.0
Di-n-butylphthalate	5.5e-11	2.4e-05	5.9e-06	ND	ND	ND	0.0e+00	0.0

Table X - 26

SUMMARY OF CANCER RISKS

American Chemical Services Remedial Investigation
Griffith Indiana

Medium: Groundwater
Source Area: Upper Aquifer

Population: Onsite Resident
Land Use: Future Site Conditions

CHEMICAL OF POTENTIAL CONCERN	CHRONIC DAILY INTAKE (mg/kg-d)			CANCER RISKS				
	Dermal Absorp.	Ingestion	Inhalation	Dermal Absorp.	Ingestion	Inhalation	Total	% of Total
bis(2-ethylhexyl)phthalate	3.4e-09	6.1e-04	1.5e-04	1.9e-10	8.6e-06	ND	8.6e-06	0.0
	0	0	0.0e+00					
PESTICIDE/PCB	0	0	0.0e+00					
	0	0	0.0e+00					
PCB	1.9e-04	3.6e-04	8.7e-05	4.8e-03	2.8e-03	ND	7.6e-03	8.7
	0	0	0.0e+00					
METALS	0	0	0.0e+00					
	0	0	0.0e+00					
Aluminum	1.0e-05	3.4e-03	0.0e+00	ND	ND	ND	0.0e+00	0.0
Arsenic	1.5e-06	5.3e-04	0.0e+00	2.9e-06	9.5e-04	ND	9.6e-04	1.1
Barium	6.6e-05	2.3e-02	0.0e+00	ND	ND	ND	0.0e+00	0.0
Beryllium	8.9e-09	3.1e-06	0.0e+00	3.8e-07	1.3e-05	ND	1.4e-05	0.0
Cadmium (water)	1.1e-07	3.8e-05	0.0e+00	ND	ND	ND	0.0e+00	0.0
Calcium	3.7e-02	1.3e+01	0.0e+00	ND	ND	ND	0.0e+00	0.0
Chromium VI	1.9e-07	4.8e-05	0.0e+00	ND	ND	ND	0.0e+00	0.0
Iron	7.8e-03	2.7e+00	0.0e+00	ND	ND	ND	0.0e+00	0.0
Lead	1.6e-07	5.6e-05	0.0e+00	ND	ND	ND	0.0e+00	0.0
Magnesium	2.8e-03	9.6e-01	0.0e+00	ND	ND	ND	0.0e+00	0.0
Manganese	1.5e-04	5.2e-02	0.0e+00	ND	ND	ND	0.0e+00	0.0
Mercury	6.1e-08	2.1e-05	0.0e+00	ND	ND	ND	0.0e+00	0.0
Nickel	1.9e-06	6.5e-04	0.0e+00	ND	ND	ND	0.0e+00	0.0
Potassium	3.4e-03	1.2e+00	0.0e+00	ND	ND	ND	0.0e+00	0.0
Selenium	2.2e-07	7.6e-05	0.0e+00	ND	ND	ND	0.0e+00	0.0
Sodium	1.6e-02	5.4e+00	0.0e+00	ND	ND	ND	0.0e+00	0.0
Thallium	1.4e-07	4.9e-05	0.0e+00	ND	ND	ND	0.0e+00	0.0
Vanadium	9.2e-07	3.2e-04	0.0e+00	ND	ND	ND	0.0e+00	0.0
Zinc	3.2e-05	1.1e-02	0.0e+00	ND	ND	ND	0.0e+00	0.0
Cyanide	3.6e-07	1.2e-04	0.0e+00	ND	ND	ND	0.0e+00	0.0
	0	0	0.0e+00					
TIC Groupings	0	0	0.0e+00					
	0	0	0.0e+00					
Propyl Benzenes	1.4e-04	7.3e-04	3.2e-04	ND	ND	ND	0.0e+00	0.0
Propenyl Benzenes	1.4e-05	7.3e-05	3.2e-05	ND	ND	ND	0.0e+00	0.0
Ethyl Methyl Benzenes	3.1e-04	1.6e-03	6.9e-04	ND	ND	ND	0.0e+00	0.0
Diethyl Benzenes	2.5e-04	9.6e-04	4.1e-04	ND	ND	ND	0.0e+00	0.0
Methyl Propyl Benzenes	3.4e-05	1.7e-04	7.4e-05	ND	ND	ND	0.0e+00	0.0
Methyl Ethenyl Benzenes	1.1e-06	2.2e-04	5.3e-05	ND	ND	ND	0.0e+00	0.0
Methyl Phenyl Benzenes	1.4e-06	2.9e-04	7.1e-05	ND	ND	ND	0.0e+00	0.0
Trimethyl Benzenes	1.5e-03	7.8e-03	3.4e-03	ND	ND	ND	0.0e+00	0.0

Table X - 26

SUMMARY OF CANCER RISKS

American Chemical Services Remedial Investigation
Griffith Indiana

Medium: Groundwater
Source Area: Upper Aquifer

Population: Onsite Resident
Land Use: Future Site Conditions

CHEMICAL OF POTENTIAL CONCERN	CHRONIC DAILY INTAKE (mg/kg-d)			CANCER RISKS				
	Dermal Absorp.	Ingestion	Inhalation	Dermal Absorp.	Ingestion	Inhalation	Total	% of Total
Dimethyl ethyl benzenes	1.3e-03	4.9e-03	2.1e-03	ND	ND	ND	0.0e+00	0.0
Tetramethyl Benzenes	3.1e-04	1.6e-03	6.9e-04	ND	ND	ND	0.0e+00	0.0
Oxygenated Benzenes	2.2e-04	1.1e-03	4.8e-04	ND	ND	ND	0.0e+00	0.0
Halogenated Benzenes	7.1e-06	1.5e-03	3.5e-04	ND	ND	ND	0.0e+00	0.0
Cyclic alkanes	1.8e-04	9.3e-04	4.0e-04	ND	ND	ND	0.0e+00	0.0
Cyclic Alkenes	1.5e-04	7.7e-04	3.3e-04	ND	ND	ND	0.0e+00	0.0
Halogenated Alkanes	1.9e-04	9.6e-04	4.1e-04	ND	ND	ND	0.0e+00	0.0
Branched Alkanes	1.7e-03	8.8e-03	3.8e-03	ND	ND	ND	0.0e+00	0.0
Ethers	6.1e-05	1.8e-02	7.9e-03	ND	ND	ND	0.0e+00	0.0
Methylated Naphthalenes	4.4e-06	9.1e-04	2.2e-04	ND	ND	ND	0.0e+00	0.0
Methylated Phenols	4.2e-05	2.4e-03	5.9e-04	ND	ND	ND	0.0e+00	0.0
Methylated Ketones	1.7e-05	8.6e-05	3.7e-05	ND	ND	ND	0.0e+00	0.0
Simple Ketones	2.1e-04	1.1e-03	4.5e-04	ND	ND	ND	0.0e+00	0.0
Cyclic Ketones	2.2e-04	1.1e-03	4.9e-04	1.8e-06	4.6e-06	ND	6.4e-06	0.0
Diols	1.1e-04	2.2e-02	5.3e-03	ND	ND	ND	0.0e+00	0.0
Simple Alcohols	9.6e-05	4.9e-04	2.1e-04	ND	ND	ND	0.0e+00	0.0
Cyclic Alcohols	1.2e-04	2.4e-02	5.9e-03	ND	ND	ND	0.0e+00	0.0
Oxygenated Alcohols	1.3e-04	2.7e-02	6.5e-03	ND	ND	ND	0.0e+00	0.0
Cyclic Acids	2.5e-05	5.1e-03	1.2e-03	ND	ND	ND	0.0e+00	0.0
Non-Cyclic Acids	2.6e-03	1.3e-02	5.8e-03	ND	ND	ND	0.0e+00	0.0
Amines	3.8e-04	3.9e-04	9.4e-05	ND	ND	ND	0.0e+00	0.0
Furans	0.0e+00	1.8e-03	7.9e-04	ND	ND	ND	0.0e+00	0.0
				Total 9.7e-03	Total 6.0e-02	Total 1.7e-02	Total 8.7e-02	Total 100.0

This table presents chronic daily intakes and cancer risks for chemicals of potential concern. Cancer risks are calculated by multiplying the chronic daily intake by the slope factor. Chemical-specific cancer risks are summed for each exposure route to arrive at a total risk value. In some cases, cancer risks were not determined (ND) because slope factors are not available.

JAH/jah/
6/19/91
[ACS.2020.BRA]M-C.W20

Table X - 27

SUMMARY OF NONCANCER HAZARDS

American Chemical Services Remedial Investigation
Griffith Indiana

Medium: Ambient Air
Source Area: Volatile Emissions

Population: Onsite Resident
Land Use: Future Site Conditions

CHEMICAL OF POTENTIAL CONCERN	CHRONIC DAILY INTAKE (mg/kg-d)	HAZARD QUOTIENT	
	Inhalation	Inhalation	% of Total
VOLATILES			
Vinyl chloride	9.7e-05	ND	0.0
Chloroethane	5.9e+00	5.9e+00	36.1
Methylene chloride	7.4e-03	2.5e-03	0.0
Acetone	5.5e-02	ND	0.0
Carbon disulfide	3.7e-07	3.7e-05	0.0
1,1-Dichloroethene	2.5e-03	ND	0.0
1,1-Dichloroethane	9.3e-04	9.3e-03	0.1
1,2-Dichloroethene (cis)	3.2e-03	ND	0.0
Chloroform	1.5e-02	ND	0.0
1,2-Dichloroethane	2.9e-04	ND	0.0
2-Butanone	8.0e-02	8.9e-01	5.4
1,1,1-Trichloroethane	1.7e-01	5.7e-01	3.5
Carbon tetrachloride	1.4e-02	ND	0.0
1,2-Dichloropropane	3.9e-05	ND	0.0
Trichloroethene	1.0e-02	ND	0.0
1,1,2-Trichloroethane	1.1e-04	ND	0.0
Benzene	2.5e-03	ND	0.0
4-Methyl-2-pentanone	3.1e-03	1.6e-01	0.9
2-Hexanone	8.0e-07	ND	0.0
Tetrachloroethene	7.1e-03	ND	0.0
1,1,2,2-Tetrachloroethane	1.3e-06	ND	0.0
Toluene	1.5e-01	7.3e-02	0.4
Chlorobenzene	9.8e-05	2.0e-02	0.1
Ethylbenzene	7.0e-03	7.0e-03	0.0
Styrene	2.8e-04	ND	0.0
Xylenes (mixed)	5.4e-02	1.8e-01	1.1
SEMIVOLATILES			
Phenol	2.5e-06	ND	0.0
bis(2-Chloroethyl) ether	2.9e-06	ND	0.0
2-Chlorophenol	2.8e-10	ND	0.0
1,3-Dichlorobenzene	3.1e-08	ND	0.0
1,4-Dichlorobenzene	9.9e-08	1.4e-07	0.0
Benzyl Alcohol	2.7e-05	ND	0.0
1,2-Dichlorobenzene	2.5e-06	6.1e-05	0.0
2-Methylphenol	2.7e-07	ND	0.0
4-Methylphenol	1.9e-07	ND	0.0
Isophorone	3.2e-05	ND	0.0
2,4-Dimethylphenol	6.5e-08	ND	0.0
Benzoic Acid	9.0e-03	ND	0.0

Table X - 27

SUMMARY OF NONCANCER HAZARDS

American Chemical Services Remedial Investigation
Griffith Indiana

Medium: Ambient Air
Source Area: Volatile Emissions
Population: Onsite Resident
Land Use: Future Site Conditions

CHEMICAL OF POTENTIAL CONCERN	CHRONIC DAILY INTAKE (mg/kg-d)	HAZARD QUOTIENT	
	Inhalation	Inhalation	% of Total
2,4-Dichlorophenol	3.4e-09	ND	0.0
1,2,4-Trichlorophenol	7.2e-08	2.4e-05	0.0
Naphthalene	6.3e-09	ND	0.0
Hexachlorobutadiene	2.4e-06	ND	0.0
4-Chloro-3-methylphenol	6.4e-10	ND	0.0
2-Methylnaphthalene	6.6e-07	ND	0.0
2,4,6-Trichlorophenol	1.3e-10	ND	0.0
2,4,5-Trichlorophenol	3.6e-08	ND	0.0
2-Chloronaphthalene	9.7e-10	ND	0.0
Dimethylphthalate	9.4e-08	ND	0.0
Acenaphthylene	2.8e-09	ND	0.0
2,6-Dinitrotoluene	9.9e-11	ND	0.0
Acenaphthene	1.9e-10	ND	0.0
4-Nitrophenol	6.0e-08	ND	0.0
Dibenzofuran	2.2e-09	ND	0.0
2,4-Dinitrotoluene	8.5e-10	ND	0.0
Diethylphthalate	9.4e-09	ND	0.0
Fluorene	1.4e-10	ND	0.0
N-nitrosodiphenylamine	3.0e-11	ND	0.0
4-Bromophenyl-phenylether	4.8e-10	ND	0.0
Hexachlorobenzene	2.2e-13	ND	0.0
Pentachlorophenol	3.1e-10	ND	0.0
Phenanthrene	5.3e-10	ND	0.0
Anthracene	2.8e-11	ND	0.0
Di-n-butylphthalate	1.7e-10	ND	0.0
Fluoranthene	4.6e-12	ND	0.0
Pyrene	1.6e-12	ND	0.0
Butylbenzylphthalate	1.8e+02	ND	0.0
Benzo(a)anthracene	8.2e-15	ND	0.0
Chrysene	1.3e-15	ND	0.0
bis(2-ethylhexyl)phthalate	5.7e+02	ND	0.0
Di-n-octyl Phthalate	4.0e+01	ND	0.0
Benzo(b)fluoranthene	2.9e-13	ND	0.0
Benzo(k)fluoranthene	2.9e-13	ND	0.0
Benzo(a)pyrene	1.2e-15	ND	0.0
Ideno(1,2,3-cd)pyrene	1.2e-17	ND	0.0
Dibenz(a,h)anthracene	3.8e-18	ND	0.0
Benzo(g,h,i)perylene	1.6e-17	ND	0.0
Total Carcinogenic PAHs	5.9e-13	ND	0.0
PESTICIDE/PCB			
alpha-BHC	3.8e-14	ND	0.0

Table X - 27

SUMMARY OF NONCANCER HAZARDS

American Chemical Services Remedial Investigation
Griffith Indiana

Medium: Ambient Air
Source Area: Volatile Emissions
Population: Onsite Resident
Land Use: Future Site Conditions

CHEMICAL OF POTENTIAL CONCERN	CHRONIC DAILY INTAKE (mg/kg-d)	HAZARD QUOTIENT	
	Inhalation	Inhalation	% of Total
beta-BHC	1.2e-15	ND	0.0
gamma-BHC (Lindane)	6.7e-04	ND	0.0
Aldrin	7.9e-14	ND	0.0
Heptachlor epoxide	9.9e-15	ND	0.0
Endosulfan I	1.5e-13	ND	0.0
4,4'-DDE	1.5e-14	ND	0.0
4,4'-DDD	4.0e-14	ND	0.0
4,4'-DDT	3.4e-12	ND	0.0
Endrin ketone	1.0e-15	ND	0.0
PCB	4.5e-09	ND	0.0
TIC Groupings			
Propyl Benzenes	8.3e-05	9.2e-03	0.1
Propenyl Benzenes	2.2e-05	2.2e-03	0.0
Ethyl Methyl Benzenes	5.6e-04	2.8e-04	0.0
Diethyl Benzenes	1.3e-04	1.3e-04	0.0
Methyl Propyl Benzenes	1.2e-04	1.3e-02	0.1
Methyl Ethenyl Benzenes	2.8e-05	2.8e-03	0.0
Methyl Phenyl Benzenes	2.6e-10	ND	0.0
Trimethyl Benzenes	1.0e-02	1.8e-02	0.1
Dimethyl ethyl benzenes	4.7e-04	4.7e-04	0.0
Tetramethyl Benzenes	4.3e-03	7.6e-03	0.0
Oxygenated Benzenes	2.9e-03	ND	0.0
Nitrogenated Benzenes	1.4e-06	7.1e-04	0.0
Cyclic alkanes	3.2e-02	ND	0.0
Cyclic Alkenes	6.6e-03	ND	0.0
Halogenated Alkanes	2.5e-02	8.3e-02	0.5
n-chain Alkanes	1.2e-01	5.8e-01	3.5
Branched Alkanes	3.0e-02	1.5e-01	0.9
Branched Alkenes/Alkynes	1.3e-02	ND	0.0
Ethers	4.2e-04	ND	0.0
Methylated Naphthalenes	1.6e-09	ND	0.0
Phthalates	1.8e-09	ND	0.0
Methylated Phenols	1.1e-07	ND	0.0
Methylated Ketones	3.2e-04	ND	0.0
Simple Ketones	1.8e-05	2.0e-04	0.0
Cyclic Ketones	2.0e-06	ND	0.0
Diols	1.7e-06	ND	0.0
Simple Alcohols	2.2e-05	ND	0.0
Cyclic Alcohols	5.6e-07	ND	0.0
Oxygenated Alcohols	1.2e-05	5.8e-04	0.0
Cyclic Acids	4.3e-04	ND	0.0

Table X - 27

SUMMARY OF NONCANCER HAZARDS

American Chemical Services Remedial Investigation
Griffith Indiana

Medium: Ambient Air
Source Area: Volatile Emissions

Population: Onsite Resident
Land Use: Future Site Conditions

CHEMICAL OF POTENTIAL CONCERN	CHRONIC DAILY INTAKE (mg/kg-d)	HAZARD QUOTIENT	
	Inhalation	Inhalation	% of Total
Non-Cyclic Acids	2.3e-03	7.7e+00	47.1
Amines	1.1e-08	ND	0.0
PCBs	2.7e-11	ND	0.0
Furans	1.5e-05	ND	0.0
		Total 1.6e+01	Total 100%

This table presents chronic daily intakes and hazard quotients for chemicals of potential concern. Hazard quotients are calculated by dividing the chronic daily intake by the reference dose. Chemical-specific hazard quotients are summed for each exposure route to arrive at a total hazard value. In some cases, hazard quotients were not determined (ND) because reference doses are not available.

JAH/jah/BJC
VERSION 6/15/91
[ACS.2020.BRA]S-H.W20

Table X - 28

SUMMARY OF CANCER RISKS

American Chemical Services Remedial Investigation
Griffith Indiana

Medium: Ambient Air
Source Area: Volatile Emissions
Population: Onsite Resident
Land Use: Future Site Conditions

CHEMICAL OF POTENTIAL CONCERN	CHRONIC DAILY INTAKE (mg/kg-d)	CANCER RISKS	
	Inhalation	Inhalation	% of Total
VOLATILES			
Vinyl chloride	4.1e-05	1.2e-05	0.4
Chloroethane	2.5e+00	ND	0.0
Methylene chloride	3.2e-03	4.4e-05	1.6
Acetone	2.4e-02	ND	0.0
Carbon disulfide	1.6e-07	ND	0.0
1,1-Dichloroethene	1.1e-03	1.3e-03	46.6
1,1-Dichloroethane	4.0e-04	ND	0.0
1,2-Dichloroethene (cis)	1.4e-03	ND	0.0
Chloroform	6.4e-03	5.2e-04	18.8
1,2-Dichloroethane	1.3e-04	1.1e-05	0.4
2-Butanone	3.4e-02	ND	0.0
1,1,1-Trichloroethane	7.4e-02	ND	0.0
Carbon tetrachloride	5.8e-03	7.6e-04	27.7
1,2-Dichloropropane	1.7e-05	ND	0.0
Trichloroethene	4.5e-03	7.6e-05	2.8
1,1,2-Trichloroethane	4.8e-05	2.7e-06	0.1
Benzene	1.1e-03	3.1e-05	1.1
4-Methyl-2-pentanone	1.3e-03	ND	0.0
2-Hexanone	3.4e-07	ND	0.0
Tetrachloroethene	3.0e-03	1.0e-05	0.4
1,1,2,2-Tetrachloroethane	5.5e-07	1.1e-07	0.0
Toluene	6.3e-02	ND	0.0
Chlorobenzene	4.2e-05	ND	0.0
Ethylbenzene	3.0e-03	ND	0.0
Styrene	1.2e-04	2.4e-07	0.0
Xylenes (mixed)	2.3e-02	ND	0.0
SEMIVOLATILES			
Phenol	1.1e-06	ND	0.0
bis(2-Chloroethyl) ether	1.3e-06	1.4e-06	0.1
2-Chlorophenol	1.2e-10	ND	0.0
1,3-Dichlorobenzene	1.3e-08	ND	0.0
1,4-Dichlorobenzene	4.2e-08	ND	0.0
Benzyl Alcohol	1.1e-05	ND	0.0
1,2-Dichlorobenzene	1.1e-06	ND	0.0
2-Methylphenol	1.2e-07	ND	0.0
4-Methylphenol	8.1e-08	ND	0.0
Isophorone	1.4e-05	ND	0.0
2,4-Dimethylphenol	2.8e-08	ND	0.0
Benzoic Acid	3.9e-03	ND	0.0

Table X - 28

SUMMARY OF CANCER RISKS

American Chemical Services Remedial Investigation
Griffith Indiana

Medium: Ambient Air
Source Area: Volatile Emissions
Population: Onsite Resident
Land Use: Future Site Conditions

CHEMICAL OF POTENTIAL CONCERN	CHRONIC DAILY INTAKE (mg/kg-d)	CANCER RISKS	
	Inhalation	Inhalation	% of Total
2,4-Dichlorophenol	1.4e-09	ND	0.0
1,2,4-Trichlorophenol	3.1e-08	ND	0.0
Naphthalene	2.7e-09	ND	0.0
Hexachlorobutadiene	1.0e-06	8.2e-08	0.0
4-Chloro-3-methylphenol	2.7e-10	ND	0.0
2-Methylnaphthalene	2.8e-07	ND	0.0
2,4,6-Trichlorophenol	5.7e-11	6.3e-13	0.0
2,4,5-Trichlorophenol	1.5e-08	ND	0.0
2-Chloronaphthalene	4.2e-10	ND	0.0
Dimethylphthalate	4.0e-08	ND	0.0
Acenaphthylene	1.2e-09	ND	0.0
2,6-Dinitrotoluene	4.2e-11	ND	0.0
Acenaphthene	8.3e-11	ND	0.0
4-Nitrophenol	2.6e-08	ND	0.0
Dibenzofuran	9.4e-10	ND	0.0
2,4-Dinitrotoluene	3.6e-10	ND	0.0
Diethylphthalate	4.0e-09	ND	0.0
Fluorene	6.0e-11	ND	0.0
N-nitrosodiphenylamine	1.3e-11	ND	0.0
4-Bromophenyl-phenylether	2.1e-10	ND	0.0
Hexachlorobenzene	9.4e-14	1.5e-13	0.0
Pentachlorophenol	1.3e-10	ND	0.0
Phenanthrene	2.3e-10	ND	0.0
Anthracene	1.2e-11	ND	0.0
Di-n-butylphthalate	7.5e-11	ND	0.0
Fluoranthene	2.0e-12	ND	0.0
Pyrene	6.8e-13	ND	0.0
Butylbenzylphthalate	7.7e+01	ND	0.0
Benzo(a)anthracene	3.5e-15	ND	0.0
Chrysene	5.8e-16	ND	0.0
bis(2-ethylhexyl)phthalate	2.5e+02	ND	0.0
Di-n-octyl Phthalate	1.7e+01	ND	0.0
Benzo(b)fluoranthene	1.2e-13	ND	0.0
Benzo(k)fluoranthene	1.3e-13	ND	0.0
Benzo(a)pyrene	5.0e-16	ND	0.0
Ideno(1,2,3-cd)pyrene	4.9e-18	ND	0.0
Dibenz(a,h)anthracene	1.6e-18	ND	0.0
Benzo(g,h,i)perylene	6.8e-18	ND	0.0
Total Carcinogenic PAHs	2.5e-13	1.5e-12	0.0
PESTICIDE/PCB			
alpha-BHC	1.6e-14	1.0e-13	0.0

Table X - 28

SUMMARY OF CANCER RISKS

American Chemical Services Remedial Investigation
Griffith Indiana

Medium: Ambient Air
Source Area: Volatile Emissions
Population: Onsite Resident
Land Use: Future Site Conditions

CHEMICAL OF POTENTIAL CONCERN	CHRONIC DAILY INTAKE (mg/kg-d)	CANCER RISKS	
	Inhalation	Inhalation	% of Total
beta-BHC	5.2e-16	ND	0.0
gamma-BHC (Lindane)	2.9e-04	ND	0.0
Aldrin	3.4e-14	5.8e-13	0.0
Heptachlor epoxide	4.2e-15	ND	0.0
Endosulfan I	6.6e-14	ND	0.0
4,4'-DDE	6.4e-15	ND	0.0
4,4'-DDD	1.7e-14	ND	0.0
4,4'-DDT	1.5e-12	5.0e-13	0.0
Endrin ketone	4.5e-16	ND	0.0
PCB	1.9e-09	ND	0.0
TIC Groupings			
Propyl Benzenes	3.5e-05	ND	0.0
Propenyl Benzenes	9.6e-06	ND	0.0
Ethyl Methyl Benzenes	2.4e-04	ND	0.0
Diethyl Benzenes	5.4e-05	ND	0.0
Methyl Propyl Benzenes	5.0e-05	ND	0.0
Methyl Ethenyl Benzenes	1.2e-05	ND	0.0
Methyl Phenyl Benzenes	1.1e-10	ND	0.0
Trimethyl Benzenes	4.4e-03	ND	0.0
Dimethyl ethyl benzenes	2.0e-04	ND	0.0
Tetramethyl Benzenes	1.8e-03	ND	0.0
Oxygenated Benzenes	1.2e-03	ND	0.0
Nitrogenated Benzenes	6.1e-07	ND	0.0
Cyclic alkanes	1.4e-02	ND	0.0
Cyclic Alkenes	2.8e-03	ND	0.0
Halogenated Alkanes	1.1e-02	ND	0.0
n-chain Alkanes	4.9e-02	ND	0.0
Branched Alkanes	1.3e-02	ND	0.0
Branched Alkenes/Alkynes	5.6e-03	ND	0.0
Ethers	1.8e-04	ND	0.0
Methylated Naphthalenes	6.9e-10	ND	0.0
Phthalates	7.7e-10	ND	0.0
Methylated Phenols	4.6e-08	ND	0.0
Methylated Ketones	1.4e-04	ND	0.0
Simple Ketones	7.6e-06	ND	0.0
Cyclic Ketones	8.4e-07	ND	0.0
Diols	7.1e-07	ND	0.0
Simple Alcohols	9.2e-06	ND	0.0
Cyclic Alcohols	2.4e-07	ND	0.0
Oxygenated Alcohols	5.0e-06	ND	0.0
Cyclic Acids	1.9e-04	ND	0.0

Table X - 28

SUMMARY OF CANCER RISKS

American Chemical Services Remedial Investigation
Griffith Indiana

Medium: Ambient Air
Source Area: Volatile Emissions

Population: Onsite Resident
Land Use: Future Site Conditions

CHEMICAL OF POTENTIAL CONCERN	CHRONIC DAILY INTAKE (mg/kg-d)	CANCER RISKS	
	Inhalation	Inhalation	% of Total
Non-Cyclic Acids	1.0e-03	ND	0.0
Amines	4.7e-09	ND	0.0
PCBs	1.1e-11	ND	0.0
Furans	6.3e-06	ND	0.0
		Total 2.7e-03	Total 100%

This table presents chronic daily intakes and cancer risks for chemicals of potential concern. Cancer risks are calculated by multiplying the chronic daily intake by the slope factor. Chemical-specific cancer risks are summed for each exposure route to arrive at a total risk value. In some cases, cancer risks were not determined (ND) because slope factors are not available.

JAH/jah/BJC
6/15/91
[ACS.2020.BRA]S-C.W20

Table X - 29

SUMMARY OF NONCANCER HAZARDS

American Chemical Services Remedial Investigation
Griffith Indiana

Medium: Soils
Source Area: Onsite Containment Area

Population: Onsite Resident
Land Use: Future Site Conditions

CHEMICAL OF POTENTIAL CONCERN	CHRONIC DAILY INTAKE (mg/kg-d)		HAZARD QUOTIENT			
	Dermal Absorp.	Ingestion	Dermal Absorp.	Ingestion	Total	% of Total
VOLATILES						
Chloroethane	6.2e-01	1.1e-02	ND	ND	0.0e+00	0.0
Acetone	1.4e-04	2.5e-06	1.4e-03	2.5e-05	1.5e-03	0.0
1,1-Dichloroethane	4.6e-07	8.5e-09	4.6e-06	8.5e-08	4.7e-06	0.0
1,2-Dichloroethene (cis)	2.0e-04	3.7e-06	2.1e-02	3.7e-04	2.2e-02	0.0
Chloroform	5.7e-05	1.1e-06	5.7e-03	1.1e-04	5.9e-03	0.0
1,2-Dichloroethane	3.8e-05	6.9e-07	ND	ND	0.0e+00	0.0
2-Butanone	7.8e-06	1.4e-07	3.1e-04	2.9e-06	3.1e-04	0.0
1,1,1-Trichloroethane	5.1e-02	9.3e-04	5.7e-01	1.0e-02	5.8e-01	1.2
1,2-Dichloropropane	2.9e-05	5.3e-07	ND	ND	0.0e+00	0.0
Trichloroethene	4.7e-04	8.7e-06	ND	ND	0.0e+00	0.0
1,1,2-Trichloroethane	1.4e-06	2.6e-08	7.1e-04	6.5e-06	7.2e-04	0.0
Benzene	1.4e-02	2.6e-04	ND	ND	0.0e+00	0.0
4-Methyl-2-pentanone	2.0e-05	3.7e-07	8.1e-04	7.5e-06	8.2e-04	0.0
Tetrachloroethene	2.3e-01	4.2e-03	2.3e+01	4.2e-01	2.3e+01	47.0
1,1,2,2-Tetrachloroethane	1.5e-04	2.8e-06	ND	ND	0.0e+00	0.0
Toluene	3.1e+00	5.6e-02	1.5e+01	2.8e-01	1.6e+01	31.6
Chlorobenzene	1.7e-06	3.1e-08	2.8e-04	1.6e-06	2.9e-04	0.0
Ethylbenzene	2.6e-01	4.8e-03	5.2e+00	4.8e-02	5.3e+00	10.6
Styrene	2.4e-04	4.4e-06	1.3e-03	2.2e-05	1.4e-03	0.0
Xylenes (mixed)	9.7e-01	1.8e-02	9.7e-01	8.9e-03	9.8e-01	2.0
SEMIVOLATILES						
Phenol	1.7e-05	3.1e-07	3.1e-05	5.1e-07	3.2e-05	0.0
1,3-Dichlorobenzene	8.9e-06	1.6e-07	ND	ND	0.0e+00	0.0
1,4-Dichlorobenzene	2.2e-05	4.0e-07	ND	ND	0.0e+00	0.0
1,2-Dichlorobenzene	3.8e-04	7.1e-06	8.6e-03	7.8e-05	8.6e-03	0.0
2-Methylphenol	6.2e-05	1.1e-06	1.5e-03	2.2e-05	1.5e-03	0.0
4-Methylphenol	9.7e-05	1.8e-06	2.4e-03	3.6e-05	2.5e-03	0.0
2,4-Dimethylphenol	9.3e-05	1.7e-06	9.3e-03	8.5e-05	9.4e-03	0.0
Benzoic Acid	1.9e-06	3.5e-08	6.3e-07	8.7e-09	6.4e-07	0.0
2,4-Dichlorophenol	8.8e-06	1.6e-07	5.8e-03	5.3e-05	5.9e-03	0.0
Naphthalene	3.5e-03	6.4e-05	1.0e+00	1.6e-02	1.1e+00	2.1
2-Methylnaphthalene	2.1e-03	3.9e-05	ND	ND	0.0e+00	0.0
2,4,5-Trichlorophenol	8.3e-06	1.5e-07	1.7e-04	1.5e-06	1.7e-04	0.0
Dimethylphthalate	1.4e-04	2.5e-06	2.7e-04	2.5e-06	2.7e-04	0.0
Acenaphthylene	3.5e-05	6.4e-07	ND	ND	0.0e+00	0.0

Table X - 29

SUMMARY OF NONCANCER HAZARDS

American Chemical Services Remedial Investigation
Griffith Indiana

Medium: Soils
Source Area: Onsite Containment Area
Population: Onsite Resident
Land Use: Future Site Conditions

CHEMICAL OF POTENTIAL CONCERN	CHRONIC DAILY INTAKE (mg/kg-d)		HAZARD QUOTIENT			
	Dermal Absorp.	Ingestion	Dermal Absorp.	Ingestion	Total	% of Total
Acenaphthene	8.0e-05	1.5e-06	2.7e-03	2.4e-05	2.7e-03	0.0
Diethylphthalate	1.8e-06	3.3e-08	4.6e-06	4.2e-08	4.6e-06	0.0
Fluorene	9.0e-05	1.7e-06	4.5e-03	4.1e-05	4.6e-03	0.0
Pentachlorophenol	6.2e-06	1.1e-07	2.3e-04	3.8e-06	2.3e-04	0.0
Phenanthrene	1.7e-04	3.0e-06	ND	ND	0.0e+00	0.0
Anthracene	3.7e-06	6.7e-08	2.4e-05	2.2e-07	2.5e-05	0.0
Di-n-butylphthalate	4.5e-04	8.3e-06	5.0e-03	8.3e-05	5.1e-03	0.0
Fluoranthene	3.1e-05	5.6e-07	1.5e-03	1.4e-05	1.6e-03	0.0
Pyrene	3.6e-05	6.7e-07	2.4e-03	2.2e-05	2.4e-03	0.0
Butylbenzylphthalate	8.8e-05	1.6e-06	4.9e-04	8.1e-06	5.0e-04	0.0
Benzo(a)anthracene	6.6e-06	1.2e-07	ND	ND	0.0e+00	0.0
Chrysene	3.3e-06	6.0e-08	ND	ND	0.0e+00	0.0
bis(2-ethylhexyl)phthalate	5.4e-03	1.0e-04	1.1e+00	5.0e-03	1.1e+00	2.2
Total Carcinogenic PAHs	9.9e-06	1.8e-07	ND	ND	0.0e+00	0.0
PESTICIDE/PCB						
Endosulfan I	2.3e-07	4.2e-09	9.3e-03	8.5e-05	9.3e-03	0.0
4,4'-DDT	6.2e-07	1.1e-08	2.5e-03	2.3e-05	2.5e-03	0.0
PCB	9.1e-05	6.3e-06	ND	ND	0.0e+00	0.0
METALS						
Barium	9.3e-05	5.1e-05	2.7e-02	7.3e-04	2.7e-02	0.1
Calcium	5.0e-02	2.7e-02	ND	ND	0.0e+00	0.0
Chromium VI	6.6e-05	3.6e-05	2.6e-02	7.2e-03	3.4e-02	0.1
Cobalt	1.0e-05	5.8e-06	ND	ND	0.0e+00	0.0
Magnesium	1.7e-02	9.5e-03	ND	ND	0.0e+00	0.0
Mercury	1.3e-06	7.2e-07	2.9e-02	2.4e-03	3.1e-02	0.1
Selenium	3.6e-07	2.0e-07	ND	ND	0.0e+00	0.0
Cyanide	3.2e-06	1.7e-06	2.3e-04	8.7e-05	3.1e-04	0.0
TIC Groupings						
Propyl Benzenes	7.8e-04	1.4e-05	3.9e-02	3.6e-04	3.9e-02	0.1
Ethyl Methyl Benzenes	4.3e-03	7.8e-05	2.1e-02	3.9e-04	2.2e-02	0.0
Diethyl Benzenes	1.1e-03	2.0e-05	2.2e-02	2.0e-04	2.2e-02	0.0
Methyl Propyl Benzenes	5.4e-05	1.0e-06	2.7e-03	2.5e-05	2.7e-03	0.0
Methyl Ethenyl Benzenes	5.4e-05	1.0e-06	1.8e-02	1.7e-04	1.8e-02	0.0

Table X - 29

SUMMARY OF NONCANCER HAZARDS

American Chemical Services Remedial Investigation
Griffith Indiana

Medium: Soils
Source Area: Onsite Containment Area
Population: Onsite Resident
Land Use: Future Site Conditions

CHEMICAL OF POTENTIAL CONCERN	CHRONIC DAILY INTAKE (mg/kg-d)		HAZARD QUOTIENT			
	Dermal Absorp.	Ingestion	Dermal Absorp.	Ingestion	Total	% of Total
Trimethyl Benzenes	1.5e-02	2.8e-04	3.8e-02	6.9e-04	3.9e-02	0.1
Dimethyl ethyl benzenes	7.8e-03	1.4e-04	1.6e-01	1.4e-03	1.6e-01	0.3
Tetramethyl Benzenes	4.3e-07	7.8e-09	1.1e-06	2.0e-08	1.1e-06	0.0
Oxygenated Benzenes	1.0e-02	1.9e-04	2.0e-01	1.9e-03	2.0e-01	0.4
Cyclic alkanes	0.0e+00	3.8e-05	ND	ND	0.0e+00	0.0
Cyclic Alkenes	0.0e+00	2.6e-04	ND	ND	0.0e+00	0.0
Halogenated Alkanes	8.6e-05	1.6e-06	9.5e-04	1.7e-05	9.7e-04	0.0
n-chain Alkanes	1.2e-02	2.3e-04	4.1e-01	3.8e-03	4.2e-01	0.8
Branched Alkanes	7.0e-03	1.3e-04	2.3e-01	2.1e-03	2.4e-01	0.5
Branched Alkenes/Alkynes	0.0e+00	4.3e-04	ND	ND	0.0e+00	0.0
Methylated Naphthalenes	3.3e-04	6.0e-06	9.7e-02	1.5e-03	9.9e-02	0.2
Methylated Phenols	4.3e-05	7.8e-07	1.0e-03	1.5e-05	1.1e-03	0.0
Cyclic Ketones	2.4e-05	4.4e-07	2.4e-04	2.2e-06	2.4e-04	0.0
Simple Alcohols	8.9e-08	1.6e-09	1.8e-06	1.6e-08	1.8e-06	0.0
Non-Cyclic Acids	8.6e-03	1.6e-04	2.1e-01	2.0e-03	2.2e-01	0.4
Amines	6.6e-03	1.2e-04	2.6e-02	2.4e-04	2.7e-02	0.1
PCBs	0.0e+00	5.3e-06	ND	ND	0.0e+00	0.0
Furans	0.0e+00	1.0e-06	ND	ND	0.0e+00	0.0
			Total	Total	Total	Total
			4.9e+01	8.2e-01	5.0e+01	100.0

This table presents chronic daily intakes and hazard quotients for chemicals of potential concern. Hazard quotients are calculated by dividing the chronic daily intake by the reference dose. Chemical-specific hazard quotients are summed for each exposure route to arrive at a total hazard value. In some cases, hazard quotients were not determined (ND) because reference doses are not available.

JAH/jah/
VERSION 6/19/91
[ACS.2020.BRA]N-H.W20

Table X - 30

SUMMARY OF CANCER RISKS

American Chemical Services Remedial Investigation
Griffith Indiana

Medium: Soils
Source Area: Onsite Containment Area

Population: Onsite Resident
Land Use: Future Site Conditions

CHEMICAL OF POTENTIAL CONCERN	CHRONIC DAILY INTAKE (mg/kg-d)		CANCER RISKS			
	Dermal Absorp.	Ingestion	Dermal Absorp.	Ingestion	Total	% of Total
VOLATILES						
Chloroethane	2.7e-01	4.9e-03	ND	ND	0.0e+00	0.0
Acetone	5.9e-05	1.1e-06	ND	ND	0.0e+00	0.0
1,1-Dichloroethane	2.0e-07	3.6e-09	ND	ND	0.0e+00	0.0
1,2-Dichloroethene (cis)	8.7e-05	1.6e-06	ND	ND	0.0e+00	0.0
Chloroform	2.5e-05	4.5e-07	1.5e-07	2.8e-09	1.5e-07	0.0
1,2-Dichloroethane	1.6e-05	3.0e-07	1.5e-06	2.7e-08	1.5e-06	0.0
2-Butanone	3.3e-06	6.1e-08	ND	ND	0.0e+00	0.0
1,1,1-Trichloroethane	2.2e-02	4.0e-04	ND	ND	0.0e+00	0.0
1,2-Dichloropropane	1.3e-05	2.3e-07	1.7e-06	1.6e-08	1.7e-06	0.0
Trichloroethene	2.0e-04	3.7e-06	2.2e-06	4.1e-08	2.3e-06	0.0
1,1,2-Trichloroethane	6.1e-07	1.1e-08	7.0e-08	6.4e-10	7.0e-08	0.0
Benzene	6.0e-03	1.1e-04	3.5e-04	3.2e-06	3.5e-04	5.2
4-Methyl-2-pentanone	8.7e-06	1.6e-07	ND	ND	0.0e+00	0.0
Tetrachloroethene	9.8e-02	1.8e-03	5.0e-03	9.2e-05	5.1e-03	75.6
1,1,2,2-Tetrachloroethane	6.5e-05	1.2e-06	1.4e-05	2.4e-07	1.4e-05	0.2
Toluene	1.3e+00	2.4e-02	ND	ND	0.0e+00	0.0
Chlorobenzene	7.3e-07	1.3e-08	ND	ND	0.0e+00	0.0
Ethylbenzene	1.1e-01	2.0e-03	ND	ND	0.0e+00	0.0
Styrene	1.0e-04	1.9e-06	3.4e-06	5.7e-08	3.5e-06	0.1
Xylenes (mixed)	4.2e-01	7.6e-03	ND	ND	0.0e+00	0.0
SEMIVOLATILES						
Phenol	7.2e-06	1.3e-07	ND	ND	0.0e+00	0.0
1,3-Dichlorobenzene	3.8e-06	7.0e-08	ND	ND	0.0e+00	0.0
1,4-Dichlorobenzene	9.4e-06	1.7e-07	2.3e-07	4.1e-09	2.3e-07	0.0
1,2-Dichlorobenzene	1.6e-04	3.0e-06	ND	ND	0.0e+00	0.0
2-Methylphenol	2.6e-05	4.8e-07	ND	ND	0.0e+00	0.0
4-Methylphenol	4.2e-05	7.7e-07	ND	ND	0.0e+00	0.0
2,4-Dimethylphenol	4.0e-05	7.3e-07	ND	ND	0.0e+00	0.0
Benzoic Acid	8.2e-07	1.5e-08	ND	ND	0.0e+00	0.0
2,4-Dichlorophenol	3.8e-06	6.9e-08	ND	ND	0.0e+00	0.0
Naphthalene	1.5e-03	2.7e-05	ND	ND	0.0e+00	0.0
2-Methylnaphthalene	9.2e-04	1.7e-05	ND	ND	0.0e+00	0.0
2,4,5-Trichlorophenol	3.6e-06	6.5e-08	ND	ND	0.0e+00	0.0
Dimethylphthalate	5.8e-05	1.1e-06	ND	ND	0.0e+00	0.0
Acenaphthylene	1.5e-05	2.7e-07	ND	ND	0.0e+00	0.0

Table X - 30

SUMMARY OF CANCER RISKS

American Chemical Services Remedial Investigation
Griffith Indiana

Medium: Soils
Source Area: Onsite Containment Area
Population: Onsite Resident
Land Use: Future Site Conditions

CHEMICAL OF POTENTIAL CONCERN	CHRONIC DAILY INTAKE (mg/kg-d)		CANCER RISKS			
	Dermal Absorp.	Ingestion	Dermal Absorp.	Ingestion	Total	% of Total
Acenaphthene	3.4e-05	6.3e-07	ND	ND	0.0e+00	0.0
Diethylphthalate	7.8e-07	1.4e-08	ND	ND	0.0e+00	0.0
Fluorene	3.9e-05	7.1e-07	ND	ND	0.0e+00	0.0
Pentachlorophenol	2.7e-06	4.9e-08	3.6e-07	5.9e-09	3.6e-07	0.0
Phenanthrene	7.1e-05	1.3e-06	ND	ND	0.0e+00	0.0
Anthracene	1.6e-06	2.9e-08	ND	ND	0.0e+00	0.0
Di-n-butylphthalate	1.9e-04	3.5e-06	ND	ND	0.0e+00	0.0
Fluoranthene	1.3e-05	2.4e-07	ND	ND	0.0e+00	0.0
Pyrene	1.6e-05	2.9e-07	ND	ND	0.0e+00	0.0
Butylbenzylphthalate	3.8e-05	6.9e-07	ND	ND	0.0e+00	0.0
Benzo(a)anthracene	2.8e-06	5.2e-08	ND	ND	0.0e+00	0.0
Chrysene	1.4e-06	2.6e-08	ND	ND	0.0e+00	0.0
bis(2-ethylhexyl)phthalate	2.3e-03	4.3e-05	1.3e-04	6.0e-07	1.3e-04	1.9
Total Carcinogenic PAHs	4.2e-06	7.8e-08	9.7e-05	8.9e-07	9.8e-05	1.5
PESTICIDE/PCB						
Endosulfan I	9.9e-08	1.8e-09	ND	ND	0.0e+00	0.0
4,4'-DDT	2.7e-07	4.9e-09	1.8e-07	1.7e-09	1.8e-07	0.0
PCB	3.9e-05	2.7e-06	1.0e-03	2.1e-05	1.0e-03	15.2
METALS						
Barium	4.0e-05	2.2e-05	ND	ND	0.0e+00	0.0
Calcium	2.1e-02	1.2e-02	ND	ND	0.0e+00	0.0
Chromium VI	2.8e-05	1.6e-05	ND	ND	0.0e+00	0.0
Cobalt	4.5e-06	2.5e-06	ND	ND	0.0e+00	0.0
Magnesium	7.4e-03	4.1e-03	ND	ND	0.0e+00	0.0
Mercury	5.6e-07	3.1e-07	ND	ND	0.0e+00	0.0
Selenium	1.6e-07	8.5e-08	ND	ND	0.0e+00	0.0
Cyanide	1.4e-06	7.4e-07	ND	ND	0.0e+00	0.0
TIC Groupings						
Propyl Benzenes	3.3e-04	6.1e-06	ND	ND	0.0e+00	0.0
Ethyl Methyl Benzenes	1.8e-03	3.4e-05	ND	ND	0.0e+00	0.0
Diethyl Benzenes	4.7e-04	8.5e-06	ND	ND	0.0e+00	0.0
Methyl Propyl Benzenes	2.3e-05	4.3e-07	ND	ND	0.0e+00	0.0
Methyl Ethenyl Benzenes	2.3e-05	4.3e-07	ND	ND	0.0e+00	0.0

Table X - 30

SUMMARY OF CANCER RISKS

American Chemical Services Remedial Investigation
Griffith Indiana

Medium: Soils
Source Area: Onsite Containment Area
Population: Onsite Resident
Land Use: Future Site Conditions

CHEMICAL OF POTENTIAL CONCERN	CHRONIC DAILY INTAKE (mg/kg-d)		CANCER RISKS			
	Dermal Absorp.	Ingestion	Dermal Absorp.	Ingestion	Total	% of Total
Trimethyl Benzenes	6.5e-03	1.2e-04	ND	ND	0.0e+00	0.0
Dimethyl ethyl benzenes	3.3e-03	6.1e-05	ND	ND	0.0e+00	0.0
Tetramethyl Benzenes	1.8e-07	3.4e-09	ND	ND	0.0e+00	0.0
Oxygenated Benzenes	4.3e-03	7.9e-05	ND	ND	0.0e+00	0.0
Cyclic alkanes	0.0e+00	1.6e-05	ND	ND	0.0e+00	0.0
Cyclic Alkenes	0.0e+00	1.1e-04	ND	ND	0.0e+00	0.0
Halogenated Alkanes	3.7e-05	6.7e-07	ND	ND	0.0e+00	0.0
n-chain Alkanes	5.3e-03	9.8e-05	ND	ND	0.0e+00	0.0
Branched Alkanes	3.0e-03	5.5e-05	ND	ND	0.0e+00	0.0
Branched Alkenes/Alkynes	0.0e+00	1.9e-04	ND	ND	0.0e+00	0.0
Methylated Naphthalenes	1.4e-04	2.6e-06	ND	ND	0.0e+00	0.0
Methylated Phenols	1.8e-05	3.4e-07	ND	ND	0.0e+00	0.0
Cyclic Ketones	1.0e-05	1.9e-07	8.5e-08	7.8e-10	8.5e-08	0.0
Simple Alcohols	3.8e-08	7.0e-10	ND	ND	0.0e+00	0.0
Non-Cyclic Acids	3.7e-03	6.7e-05	ND	ND	0.0e+00	0.0
Amines	2.8e-03	5.2e-05	ND	ND	0.0e+00	0.0
PCBs	0.0e+00	2.3e-06	ND	1.8e-05	1.8e-05	0.3
Furans	0.0e+00	4.3e-07	ND	ND	0.0e+00	0.0
			Total	Total	Total	Total
			6.6e-03	1.4e-04	6.8e-03	100.0

This table presents chronic daily intakes and cancer risks for chemicals of potential concern. Cancer risks are calculated by multiplying the chronic daily intake by the slope factor. Chemical-specific cancer risks are summed for each exposure route to arrive at a total risk value. In some cases, cancer risks were not determined (ND) because slope factors are not available.

JAH/jah/
6/19/91
[ACS.2020.BRA]N-C.W20

Table X - 31

SUMMARY OF NONCANCER HAZARDS

American Chemical Services Remedial Ivestigation
Griffith Indiana

Medium: Soil
Source Area: Still bottoms - Treatment Lagoon

Population: Onsite Resident
Land Use: Future Site Conditions

CHEMICAL OF POTENTIAL CONCERN	CHRONIC DAILY INTAKE (mg/kg-d)		HAZARD QUOTIENT			
	Dermal Absorp.	Ingestion	Dermal Absorp.	Ingestion	Total	% of Total
VOLATILES						
Methylene chloride	1.5e-02	2.7e-04	3.1e-01	4.5e-03	3.1e-01	0.1
Acetone	4.7e-04	8.5e-06	4.9e-03	8.5e-05	5.0e-03	0.0
1,1-Dichloroethane	8.6e-04	1.6e-05	8.6e-03	1.6e-04	8.7e-03	0.0
1,2-Dichloroethene (cis)	1.2e-02	2.3e-04	1.3e+00	2.3e-02	1.3e+00	0.2
Chloroform	8.2e-02	1.5e-03	8.2e+00	1.5e-01	8.3e+00	1.5
1,2-Dichloroethane	1.6e-03	2.8e-05	ND	ND	0.0e+00	0.0
2-Butanone	2.1e-02	3.8e-04	8.2e-01	7.6e-03	8.3e-01	0.1
1,1,1-Trichloroethane	8.2e-01	1.5e-02	9.1e+00	1.7e-01	9.2e+00	1.6
Carbon tetrachloride	1.4e-01	2.6e-03	2.4e+02	3.7e+00	2.4e+02	42.6
1,2-Dichloropropane	8.6e-04	1.6e-05	ND	ND	0.0e+00	0.0
Trichloroethene	6.6e-02	1.2e-03	ND	ND	0.0e+00	0.0
1,1,2-Trichloroethane	3.1e-04	5.8e-06	1.6e-01	1.4e-03	1.6e-01	0.0
Benzene	6.6e-03	1.2e-04	ND	ND	0.0e+00	0.0
4-Methyl-2-pentanone	5.8e-02	1.1e-03	2.3e+00	2.1e-02	2.4e+00	0.4
Tetrachloroethene	6.2e-02	1.1e-03	6.2e+00	1.1e-01	6.3e+00	1.1
Toluene	8.9e-01	1.6e-02	4.5e+00	8.2e-02	4.6e+00	0.8
Chlorobenzene	7.8e-08	1.4e-09	1.3e-05	7.1e-08	1.3e-05	0.0
Ethylbenzene	3.3e-01	6.0e-03	6.5e+00	6.0e-02	6.6e+00	1.2
Styrene	6.2e-03	1.1e-04	3.5e-02	5.7e-04	3.5e-02	0.0
Xylenes (mixed)	3.7e-01	6.7e-03	3.7e-01	3.3e-03	3.7e-01	0.1
SEMIVOLATILES						
Phenol	4.2e-03	7.7e-05	7.8e-03	1.3e-04	7.9e-03	0.0
bis(2-Chloroethyl) ether	4.3e-03	7.8e-05	ND	ND	0.0e+00	0.0
2-Chlorophenol	5.1e-06	9.3e-08	2.0e-03	1.9e-05	2.0e-03	0.0
1,3-Dichlorobenzene	1.5e-05	2.7e-07	ND	ND	0.0e+00	0.0
1,4-Dichlorobenzene	9.3e-05	1.7e-06	ND	ND	0.0e+00	0.0
Benzyl Alcohol	2.7e-05	4.9e-07	1.8e-04	1.6e-06	1.8e-04	0.0
1,2-Dichlorobenzene	2.7e-03	5.0e-05	6.0e-02	5.5e-04	6.1e-02	0.0
2-Methylphenol	5.8e-04	1.1e-05	1.4e-02	2.1e-04	1.4e-02	0.0
4-Methylphenol	1.7e-03	3.1e-05	4.2e-02	6.1e-04	4.2e-02	0.0
Isophorone	1.0e-01	1.9e-03	1.0e+00	9.3e-03	1.0e+00	0.2
2,4-Dimethylphenol	5.5e-05	1.0e-06	5.5e-03	5.1e-05	5.6e-03	0.0
Benzoic Acid	1.3e-03	2.3e-05	4.2e-04	5.8e-06	4.3e-04	0.0
2,4-Dichlorophenol	6.5e-05	1.2e-06	4.3e-02	4.0e-04	4.4e-02	0.0
1,2,4-Trichlorophenol	5.6e-05	1.0e-06	8.5e-02	7.8e-04	8.6e-02	0.0

Table X - 31

SUMMARY OF NONCANCER HAZARDS

American Chemical Services Remedial Ivestigation
Griffith Indiana

Medium: Soil
Source Area: Still bottoms - Treatment Lagoon

Population: Onsite Resident
Land Use: Future Site Conditions

CHEMICAL OF POTENTIAL CONCERN	CHRONIC DAILY INTAKE (mg/kg-d)		HAZARD QUOTIENT			
	Dermal Absorp.	Ingestion	Dermal Absorp.	Ingestion	Total	% of Total
Naphthalene	2.9e-02	5.3e-04	8.7e+00	1.3e-01	8.8e+00	1.6
Hexachlorobutadiene	1.6e-03	2.8e-05	1.6e+00	1.4e-02	1.6e+00	0.3
4-Chloro-3-methylphenol	1.2e-05	2.1e-07	ND	ND	0.0e+00	0.0
2-Methylnaphthalene	1.2e-02	2.3e-04	ND	ND	0.0e+00	0.0
2,4,6-Trichlorophenol	1.3e-05	2.5e-07	ND	ND	0.0e+00	0.0
2,4,5-Trichlorophenol	3.7e-06	6.8e-08	7.5e-05	6.8e-07	7.5e-05	0.0
2-Chloronaphthalene	2.1e-05	3.9e-07	5.3e-04	4.8e-06	5.3e-04	0.0
Dimethylphthalate	1.2e-02	2.3e-04	2.5e-02	2.3e-04	2.5e-02	0.0
Acenaphthylene	1.3e-04	2.3e-06	ND	ND	0.0e+00	0.0
Acenaphthene	9.1e-05	1.7e-06	3.0e-03	2.8e-05	3.1e-03	0.0
4-Nitrophenol	5.9e-05	1.1e-06	ND	ND	0.0e+00	0.0
Dibenzofuran	1.3e-05	2.4e-07	ND	ND	0.0e+00	0.0
Diethylphthalate	3.9e-03	7.1e-05	9.7e-03	8.9e-05	9.8e-03	0.0
Fluorene	2.0e-04	3.6e-06	9.8e-03	9.0e-05	9.9e-03	0.0
N-nitrosodiphenylamine	5.1e-04	9.3e-06	ND	ND	0.0e+00	0.0
4-Bromophenyl-phenylether	3.6e-05	6.6e-07	ND	ND	0.0e+00	0.0
Hexachlorobenzene	2.8e-05	5.1e-07	7.0e-02	6.4e-04	7.0e-02	0.0
Pentachlorophenol	2.5e-03	4.6e-05	9.2e-02	1.5e-03	9.4e-02	0.0
Phenanthrene	3.9e-04	7.1e-06	ND	ND	0.0e+00	0.0
Anthracene	3.7e-05	6.8e-07	2.5e-04	2.3e-06	2.5e-04	0.0
Di-n-butylphthalate	2.7e-02	4.9e-04	3.0e-01	4.9e-03	3.0e-01	0.1
Fluoranthene	2.4e-05	4.3e-07	1.2e-03	1.1e-05	1.2e-03	0.0
Pyrene	6.6e-05	1.2e-06	4.4e-03	4.0e-05	4.4e-03	0.0
Butylbenzylphthalate	3.7e-02	6.8e-04	2.1e-01	3.4e-03	2.1e-01	0.0
Benzo(a)anthracene	1.2e-05	2.3e-07	ND	ND	0.0e+00	0.0
Chrysene	1.2e-05	2.1e-07	ND	ND	0.0e+00	0.0
bis(2-ethylhexyl)phthalate	1.0e-01	1.9e-03	2.0e+01	9.3e-02	2.0e+01	3.6
Di-n-octyl Phthalate	7.6e-04	1.4e-05	7.6e-02	6.9e-04	7.6e-02	0.0
Benzo(b)fluoranthene	1.2e-05	2.3e-07	ND	ND	0.0e+00	0.0
Benzo(k)fluoranthene	1.2e-05	2.3e-07	ND	ND	0.0e+00	0.0
Benzo(a)pyrene	8.3e-06	1.5e-07	ND	ND	0.0e+00	0.0
Total Carcinogenic PAHs	5.7e-05	1.0e-06	ND	ND	0.0e+00	0.0
PESTICIDE/PCB						
gamma-BHC (Lindane)	4.3e-05	7.8e-07	1.4e-01	2.6e-03	1.5e-01	0.0
Endosulfan I	4.7e-05	8.5e-07	1.9e+00	1.7e-02	1.9e+00	0.3
4,4'-DDT	1.1e-03	2.0e-05	4.4e+00	4.0e-02	4.4e+00	0.8
Endrin ketone	1.0e-05	1.9e-07	ND	ND	0.0e+00	0.0

Table X - 31

SUMMARY OF NONCANCER HAZARDS

American Chemical Services Remedial Investigation
Griffith Indiana

Medium: Soil
Source Area: Still bottoms - Treatment Lagoon

Population: Onsite Resident
Land Use: Future Site Conditions

CHEMICAL OF POTENTIAL CONCERN	CHRONIC DAILY INTAKE (mg/kg-d)		HAZARD QUOTIENT			
	Dermal Absorp.	Ingestion	Dermal Absorp.	Ingestion	Total	% of Total
PCB	1.6e-03	1.1e-04	ND	ND	0.0e+00	0.0
METALS						
Antimony	6.0e-05	3.3e-05	3.0e+00	8.3e-02	3.1e+00	0.6
Barium	1.1e-03	6.3e-04	3.3e-01	9.0e-03	3.4e-01	0.1
Cadmium (food/soil)	1.5e-04	8.4e-05	2.2e+00	8.4e-02	2.3e+00	0.4
Calcium	7.4e-02	4.1e-02	ND	ND	0.0e+00	0.0
Chromium VI	1.4e-03	7.8e-04	5.7e-01	1.6e-01	7.2e-01	0.1
Cobalt	3.5e-05	1.9e-05	ND	ND	0.0e+00	0.0
Copper	3.2e-04	1.7e-04	ND	ND	0.0e+00	0.0
Lead	8.2e-03	4.5e-03	1.2e+02	3.2e+01	1.5e+02	26.5
Magnesium	1.3e-02	7.3e-03	ND	ND	0.0e+00	0.0
Mercury	1.4e-05	7.8e-06	3.2e-01	2.6e-02	3.4e-01	0.1
Nickel	1.7e-05	9.5e-06	8.6e-03	4.7e-04	9.1e-03	0.0
Selenium	1.5e-06	8.2e-07	ND	ND	0.0e+00	0.0
Zinc	3.0e-03	1.6e-03	4.9e-02	8.1e-03	5.7e-02	0.0
Cyanide	2.1e-05	1.1e-05	1.5e-03	5.7e-04	2.0e-03	0.0
TIC Groupings						
Propyl Benzenes	1.5e-02	2.7e-04	7.4e-01	6.8e-03	7.5e-01	0.1
Propenyl Benzenes	2.6e-03	4.8e-05	8.7e-01	8.0e-03	8.8e-01	0.2
Ethyl Methyl Benzenes	7.4e-02	1.4e-03	3.7e-01	6.8e-03	3.8e-01	0.1
Diethyl Benzenes	2.0e-02	3.6e-04	4.0e-01	3.6e-03	4.0e-01	0.1
Methyl Propyl Benzenes	4.3e-02	7.8e-04	2.1e+00	2.0e-02	2.2e+00	0.4
Methyl Phenyl Benzenes	1.2e-03	2.2e-05	3.6e-01	5.5e-03	3.6e-01	0.1
Trimethyl Benzenes	7.0e-02	1.3e-03	1.7e-01	3.2e-03	1.8e-01	0.0
Dimethyl ethyl benzenes	7.4e-02	1.4e-03	1.5e+00	1.4e-02	1.5e+00	0.3
Tetramethyl Benzenes	5.1e-02	9.3e-04	1.3e-01	2.3e-03	1.3e-01	0.0
Oxygenated Benzenes	3.9e-03	7.1e-05	7.8e-02	7.1e-04	7.8e-02	0.0
Nitrogenated Benzenes	9.7e-03	1.8e-04	3.9e+01	3.6e-01	3.9e+01	7.0
Cyclic alkanes	0.0e+00	4.1e-03	ND	ND	0.0e+00	0.0
Cyclic Alkenes	0.0e+00	8.5e-04	ND	ND	0.0e+00	0.0
Halogenated Alkanes	1.9e-01	3.4e-03	2.1e+00	3.8e-02	2.1e+00	0.4
n-chain Alkanes	8.9e-01	1.6e-02	3.0e+01	2.7e-01	3.0e+01	5.4
Branched Alkanes	2.3e-01	4.2e-03	7.6e+00	7.0e-02	7.7e+00	1.4
Branched Alkenes/Alkynes	0.0e+00	1.9e-03	ND	ND	0.0e+00	0.0
Methylated Naphthalenes	2.2e-03	4.1e-05	6.6e-01	1.0e-02	6.7e-01	0.1

Table X - 31

SUMMARY OF NONCANCER HAZARDS

American Chemical Services Remedial Ivestigation
Griffith Indiana

Medium: Soil
Source Area: Still bottoms - Treatment Lagoon

Population: Onsite Resident
Land Use: Future Site Conditions

CHEMICAL OF POTENTIAL CONCERN	CHRONIC DAILY INTAKE (mg/kg-d)		HAZARD QUOTIENT			
	Dermal Absorp.	Ingestion	Dermal Absorp.	Ingestion	Total	% of Total
Phthalates	2.3e-03	4.1e-05	2.3e-03	2.1e-05	2.3e-03	0.0
Methylated Phenols	2.8e-05	5.1e-07	6.9e-04	1.0e-05	7.0e-04	0.0
Methylated Ketones	6.2e-05	1.1e-06	6.5e-04	1.1e-05	6.7e-04	0.0
Simple Ketones	3.0e-05	5.5e-07	1.2e-03	1.1e-05	1.2e-03	0.0
Cyclic Ketones	6.2e-03	1.1e-04	6.2e-02	5.7e-04	6.3e-02	0.0
Diols	1.2e-04	2.1e-06	1.2e-04	1.1e-06	1.2e-04	0.0
Simple Alcohols	2.1e-03	3.9e-05	4.3e-02	3.9e-04	4.3e-02	0.0
Cyclic Alcohols	5.8e-04	1.1e-05	3.9e-03	3.6e-05	3.9e-03	0.0
Oxygenated Alcohols	1.1e-02	2.0e-04	ND	ND	0.0e+00	0.0
Non-Cyclic Acids	1.2e-02	2.2e-04	3.0e-01	2.8e-03	3.0e-01	0.1
Amines	5.4e-03	1.0e-04	2.2e-02	2.0e-04	2.2e-02	0.0
Furans	0.0e+00	3.1e-07	ND	ND	0.0e+00	0.0
			Total 5.2e+02	Total 3.8e+01	Total 5.6e+02	Total 100.0

This table presents chronic daily intakes and hazard quotients for chemicals of potential concern. Hazard quotients are calculated by dividing the chronic daily intake by the reference dose. Chemical-specific hazard quotients are summed for each exposure route to arrive at a total hazard value. In some cases, hazard quotients were not determined (ND) because reference doses are not available.

JAH/jah/
VERSION 6/19/91
[ACS.2020.BRA]O-H.W20

Table X - 32

SUMMARY OF CANCER RISKS

American Chemical Services Remedial Ivestigation
Griffith Indiana

Medium: Soils
Source Area: Still Bottoms-Treatment Lagoons

Population: Onsite Resident
Land Use: Future Site Conditions

CHEMICAL OF POTENTIAL CONCERN	CHRONIC DAILY INTAKE (mg/kg-d)		CANCER RISKS			
	Dermal Absorp.	Ingestion	Dermal Absorp.	Ingestion	Total	% of Total
VOLATILES						
Methylene chloride	6.3e-03	1.2e-04	5.9e-05	8.7e-07	6.0e-05	0.2
Acetone	2.0e-04	3.7e-06	ND	ND	0.0e+00	0.0
1,1-Dichloroethane	3.7e-04	6.7e-06	ND	ND	0.0e+00	0.0
1,2-Dichloroethene (cis)	5.3e-03	9.8e-05	ND	ND	0.0e+00	0.0
Chloroform	3.5e-02	6.4e-04	2.1e-04	3.9e-06	2.2e-04	0.6
1,2-Dichloroethane	6.7e-04	1.2e-05	6.1e-05	1.1e-06	6.2e-05	0.2
2-Butanone	8.8e-03	1.6e-04	ND	ND	0.0e+00	0.0
1,1,1-Trichloroethane	3.5e-01	6.4e-03	ND	ND	0.0e+00	0.0
Carbon tetrachloride	6.0e-02	1.1e-03	9.2e-03	1.4e-04	9.3e-03	24.4
1,2-Dichloropropane	3.7e-04	6.7e-06	5.0e-05	4.6e-07	5.0e-05	0.1
Trichloroethene	2.8e-02	5.2e-04	3.1e-04	5.7e-06	3.2e-04	0.8
1,1,2-Trichloroethane	1.3e-04	2.5e-06	1.5e-05	1.4e-07	1.6e-05	0.0
Benzene	2.8e-03	5.2e-05	1.6e-04	1.5e-06	1.7e-04	0.4
4-Methyl-2-pentanone	2.5e-02	4.6e-04	ND	ND	0.0e+00	0.0
Tetrachloroethene	2.7e-02	4.9e-04	1.4e-03	2.5e-05	1.4e-03	3.6
Toluene	3.8e-01	7.0e-03	ND	ND	0.0e+00	0.0
Chlorobenzene	3.3e-08	6.1e-10	ND	ND	0.0e+00	0.0
Ethylbenzene	1.4e-01	2.6e-03	ND	ND	0.0e+00	0.0
Styrene	2.7e-03	4.9e-05	8.9e-05	1.5e-06	9.0e-05	0.2
Xylenes (mixed)	1.6e-01	2.9e-03	ND	ND	0.0e+00	0.0
SEMIVOLATILES						
Phenol	1.8e-03	3.3e-05	ND	ND	0.0e+00	0.0
bis(2-Chloroethyl) ether	1.8e-03	3.4e-05	4.0e-03	3.7e-05	4.1e-03	10.7
2-Chlorophenol	2.2e-06	4.0e-08	ND	ND	0.0e+00	0.0
1,3-Dichlorobenzene	6.4e-06	1.2e-07	ND	ND	0.0e+00	0.0
1,4-Dichlorobenzene	4.0e-05	7.3e-07	9.6e-07	1.8e-08	9.8e-07	0.0
Benzyl Alcohol	1.1e-05	2.1e-07	ND	ND	0.0e+00	0.0
1,2-Dichlorobenzene	1.2e-03	2.1e-05	ND	ND	0.0e+00	0.0
2-Methylphenol	2.5e-04	4.6e-06	ND	ND	0.0e+00	0.0
4-Methylphenol	7.2e-04	1.3e-05	ND	ND	0.0e+00	0.0
Isophorone	4.3e-02	7.9e-04	3.6e-04	3.3e-06	3.6e-04	0.9
2,4-Dimethylphenol	2.4e-05	4.3e-07	ND	ND	0.0e+00	0.0
Benzoic Acid	5.4e-04	9.9e-06	ND	ND	0.0e+00	0.0
2,4-Dichlorophenol	2.8e-05	5.1e-07	ND	ND	0.0e+00	0.0
1,2,4-Trichlorophenol	2.4e-05	4.4e-07	ND	ND	0.0e+00	0.0

Table X - 32

SUMMARY OF CANCER RISKS

American Chemical Services Remedial Ivestigation
Griffith Indiana

Medium: Soils
Source Area: Still Bottoms-Treatment Lagoons

Population: Onsite Resident
Land Use: Future Site Conditions

CHEMICAL OF POTENTIAL CONCERN	CHRONIC DAILY INTAKE (mg/kg-d)		CANCER RISKS			
	Dermal Absorp.	Ingestion	Dermal Absorp.	Ingestion	Total	% of Total
Naphthalene	1.2e-02	2.3e-04	ND	ND	0.0e+00	0.0
Hexachlorobutadiene	6.7e-04	1.2e-05	1.0e-04	9.5e-07	1.0e-04	0.3
4-Chloro-3-methylphenol	5.0e-06	9.2e-08	ND	ND	0.0e+00	0.0
2-Methylnaphthalene	5.3e-03	9.8e-05	ND	ND	0.0e+00	0.0
2,4,6-Trichlorophenol	5.8e-06	1.1e-07	1.3e-07	1.2e-09	1.3e-07	0.0
2,4,5-Trichlorophenol	1.6e-06	2.9e-08	ND	ND	0.0e+00	0.0
2-Chloronaphthalene	9.1e-06	1.7e-07	ND	ND	0.0e+00	0.0
Dimethylphthalate	5.3e-03	9.8e-05	ND	ND	0.0e+00	0.0
Acenaphthylene	5.5e-05	1.0e-06	ND	ND	0.0e+00	0.0
Acenaphthene	3.9e-05	7.1e-07	ND	ND	0.0e+00	0.0
4-Nitrophenol	2.5e-05	4.6e-07	ND	ND	0.0e+00	0.0
Dibenzofuran	5.7e-06	1.0e-07	ND	ND	0.0e+00	0.0
Diethylphthalate	1.7e-03	3.1e-05	ND	ND	0.0e+00	0.0
Fluorene	8.4e-05	1.5e-06	ND	ND	0.0e+00	0.0
N-nitrosodiphenylamine	2.2e-04	4.0e-06	1.1e-06	1.9e-08	1.1e-06	0.0
4-Bromophenyl-phenylether	1.5e-05	2.8e-07	ND	ND	0.0e+00	0.0
Hexachlorobenzene	1.2e-05	2.2e-07	3.8e-05	3.5e-07	3.9e-05	0.1
Pentachlorophenol	1.1e-03	2.0e-05	1.4e-04	2.3e-06	1.4e-04	0.4
Phenanthrene	1.7e-04	3.1e-06	ND	ND	0.0e+00	0.0
Anthracene	1.6e-05	2.9e-07	ND	ND	0.0e+00	0.0
Di-n-butylphthalate	1.1e-02	2.1e-04	ND	ND	0.0e+00	0.0
Fluoranthene	1.0e-05	1.9e-07	ND	ND	0.0e+00	0.0
Pyrene	2.8e-05	5.2e-07	ND	ND	0.0e+00	0.0
Butylbenzylphthalate	1.6e-02	2.9e-04	ND	ND	0.0e+00	0.0
Benzo(a)anthracene	5.4e-06	9.8e-08	ND	ND	0.0e+00	0.0
Chrysene	4.9e-06	9.0e-08	ND	ND	0.0e+00	0.0
bis(2-ethylhexyl)phthalate	4.3e-02	7.9e-04	2.4e-03	1.1e-05	2.4e-03	6.4
Di-n-octyl Phthalate	3.2e-04	6.0e-06	ND	ND	0.0e+00	0.0
Benzo(b)fluoranthene	5.3e-06	9.8e-08	ND	ND	0.0e+00	0.0
Benzo(k)fluoranthene	5.3e-06	9.8e-08	ND	ND	0.0e+00	0.0
Benzo(a)pyrene	3.6e-06	6.6e-08	ND	ND	0.0e+00	0.0
Total Carcinogenic PAHs	2.5e-05	4.5e-07	5.6e-04	5.2e-06	5.7e-04	1.5
PESTICIDE/PCB						
gamma-BHC (Lindane)	1.8e-05	3.4e-07	2.4e-05	4.4e-07	2.4e-05	0.1
Endosulfan I	2.0e-05	3.7e-07	ND	ND	0.0e+00	0.0
4,4'-DDT	4.7e-04	8.5e-06	3.2e-04	2.9e-06	3.2e-04	0.8
Endrin ketone	4.3e-06	7.9e-08	ND	ND	0.0e+00	0.0

Table X - 32

SUMMARY OF CANCER RISKS

American Chemical Services Remedial Ivestigation
Griffith Indiana

Medium: Soils
Source Area: Still Bottoms-Treatment Lagoons

Population: Onsite Resident
Land Use: Future Site Conditions

CHEMICAL OF POTENTIAL CONCERN	CHRONIC DAILY INTAKE (mg/kg-d)		CANCER RISKS			
	Dermal Absorp.	Ingestion	Dermal Absorp.	Ingestion	Total	% of Total
PCB	7.0e-04	4.8e-05	1.8e-02	3.7e-04	1.8e-02	48.2
METALS						
Antimony	2.6e-05	1.4e-05	ND	ND	0.0e+00	0.0
Barium	4.9e-04	2.7e-04	ND	ND	0.0e+00	0.0
Cadmium (food/soil)	6.6e-05	3.6e-05	ND	ND	0.0e+00	0.0
Calcium	3.2e-02	1.7e-02	ND	ND	0.0e+00	0.0
Chromium VI	6.1e-04	3.3e-04	ND	ND	0.0e+00	0.0
Cobalt	1.5e-05	8.2e-06	ND	ND	0.0e+00	0.0
Copper	1.4e-04	7.5e-05	ND	ND	0.0e+00	0.0
Lead	3.5e-03	1.9e-03	ND	ND	0.0e+00	0.0
Magnesium	5.7e-03	3.1e-03	ND	ND	0.0e+00	0.0
Mercury	6.1e-06	3.4e-06	ND	ND	0.0e+00	0.0
Nickel	7.4e-06	4.1e-06	ND	ND	0.0e+00	0.0
Selenium	6.4e-07	3.5e-07	ND	ND	0.0e+00	0.0
Zinc	1.3e-03	7.0e-04	ND	ND	0.0e+00	0.0
Cyanide	8.8e-06	4.8e-06	ND	ND	0.0e+00	0.0
TIC Groupings						
Propyl Benzenes	6.3e-03	1.2e-04	ND	ND	0.0e+00	0.0
Propenyl Benzenes	1.1e-03	2.0e-05	ND	ND	0.0e+00	0.0
Ethyl Methyl Benzenes	3.2e-02	5.8e-04	ND	ND	0.0e+00	0.0
Diethyl Benzenes	8.5e-03	1.6e-04	ND	ND	0.0e+00	0.0
Methyl Propyl Benzenes	1.8e-02	3.4e-04	ND	ND	0.0e+00	0.0
Methyl Phenyl Benzenes	5.2e-04	9.5e-06	ND	ND	0.0e+00	0.0
Trimethyl Benzenes	3.0e-02	5.5e-04	ND	ND	0.0e+00	0.0
Dimethyl ethyl benzenes	3.2e-02	5.8e-04	ND	ND	0.0e+00	0.0
Tetramethyl Benzenes	2.2e-02	4.0e-04	ND	ND	0.0e+00	0.0
Oxygenated Benzenes	1.7e-03	3.1e-05	ND	ND	0.0e+00	0.0
Nitrogenated Benzenes	4.2e-03	7.6e-05	ND	ND	0.0e+00	0.0
Cyclic alkanes	0.0e+00	1.8e-03	ND	ND	0.0e+00	0.0
Cyclic Alkenes	0.0e+00	3.7e-04	ND	ND	0.0e+00	0.0
Halogenated Alkanes	8.0e-02	1.5e-03	ND	ND	0.0e+00	0.0
n-chain Alkanes	3.8e-01	7.0e-03	ND	ND	0.0e+00	0.0
Branched Alkanes	9.8e-02	1.8e-03	ND	ND	0.0e+00	0.0
Branched Alkenes/Alkynes	0.0e+00	7.9e-04	ND	ND	0.0e+00	0.0
Methylated Naphthalenes	9.5e-04	1.7e-05	ND	ND	0.0e+00	0.0

Table X - 32

SUMMARY OF CANCER RISKS

American Chemical Services Remedial Ivestigation
Griffith Indiana

Medium: Soils
Source Area: Still Bottoms-Treatment Lagoons

Population: Onsite Resident
Land Use: Future Site Conditions

CHEMICAL OF POTENTIAL CONCERN	CHRONIC DAILY INTAKE (mg/kg-d)		CANCER RISKS			
	Dermal Absorp.	Ingestion	Dermal Absorp.	Ingestion	Total	% of Total
Phthalates	9.7e-04	1.8e-05	ND	ND	0.0e+00	0.0
Methylated Phenols	1.2e-05	2.2e-07	ND	ND	0.0e+00	0.0
Methylated Ketones	2.7e-05	4.9e-07	ND	ND	0.0e+00	0.0
Simple Ketones	1.3e-05	2.4e-07	ND	ND	0.0e+00	0.0
Cyclic Ketones	2.7e-03	4.9e-05	2.2e-05	2.0e-07	2.2e-05	0.1
Diols	5.0e-05	9.2e-07	ND	ND	0.0e+00	0.0
Simple Alcohols	9.2e-04	1.7e-05	ND	ND	0.0e+00	0.0
Cyclic Alcohols	2.5e-04	4.6e-06	ND	ND	0.0e+00	0.0
Oxygenated Alcohols	4.7e-03	8.5e-05	ND	ND	0.0e+00	0.0
Non-Cyclic Acids	5.2e-03	9.5e-05	ND	ND	0.0e+00	0.0
Amines	2.3e-03	4.3e-05	ND	ND	0.0e+00	0.0
Furans	0.0e+00	1.3e-07	ND	ND	0.0e+00	0.0
			Total 3.8e-02	Total 6.2e-04	Total 3.8e-02	Total 100.0

This table presents chronic daily intakes and cancer risks for chemicals of potential concern. Cancer risks are calculated by multiplying the chronic daily intake by the slope factor. Chemical-specific cancer risks are summed for each exposure route to arrive at a total risk value. In some cases, cancer risks were not determined (ND) because slope factors are not available.

JAH/jah/
6/19/91
[ACS.2020.BRA]O-C.W20

Table X - 33

SUMMARY OF NONCANCER HAZARDS

American Chemical Services Remedial Investigation
Griffith Indiana

Medium: Soils
Source Area: Offsite Containment Area
Population: Onsite Resident
Land Use: Future Site Conditions

CHEMICAL OF POTENTIAL CONCERN	CHRONIC DAILY INTAKE (mg/kg-d)		HAZARD QUOTIENT			
	Dermal Absorp.	Ingestion	Dermal Absorp.	Ingestion	Total	% of Total
VOLATILES						
Vinyl chloride	1.1e-04	2.1e-06	ND	ND	0.0e+00	0.0
Chloroethane	7.8e-05	1.4e-06	ND	ND	0.0e+00	0.0
Methylene chloride	8.2e-03	1.5e-04	1.7e-01	2.5e-03	1.7e-01	0.0
Acetone	6.6e-01	1.2e-02	7.0e+00	1.2e-01	7.1e+00	0.7
1,1-Dichloroethene	1.5e-02	2.8e-04	1.7e+00	3.1e-02	1.7e+00	0.2
1,1-Dichloroethane	1.9e-02	3.5e-04	1.9e-01	3.5e-03	1.9e-01	0.0
1,2-Dichloroethene (cis)	1.3e-03	2.4e-05	1.4e-01	2.4e-03	1.4e-01	0.0
Chloroform	1.1e-01	2.0e-03	1.1e+01	2.0e-01	1.1e+01	1.1
1,2-Dichloroethane	1.7e-02	3.1e-04	ND	ND	0.0e+00	0.0
2-Butanone	3.8e+00	7.1e-02	1.5e+02	1.4e+00	1.6e+02	15.2
1,1,1-Trichloroethane	5.8e+00	1.1e-01	6.5e+01	1.2e+00	6.6e+01	6.5
1,2-Dichloropropane	2.6e-03	4.8e-05	ND	ND	0.0e+00	0.0
Trichloroethene	7.4e-01	1.4e-02	ND	ND	0.0e+00	0.0
1,1,2-Trichloroethane	1.6e-02	2.8e-04	7.8e+00	7.1e-02	7.8e+00	0.8
Benzene	5.8e-02	1.1e-03	ND	ND	0.0e+00	0.0
4-Methyl-2-pentanone	2.4e+00	4.3e-02	9.5e+01	8.7e-01	9.6e+01	9.4
2-Hexanone	1.8e-03	3.3e-05	ND	ND	0.0e+00	0.0
Tetrachloroethene	1.8e+00	3.3e-02	1.8e+02	3.3e+00	1.8e+02	17.8
1,1,2,2-Tetrachloroethane	3.5e-07	6.4e-09	ND	ND	0.0e+00	0.0
Toluene	5.1e+00	9.3e-02	2.5e+01	4.6e-01	2.6e+01	2.5
Chlorobenzene	3.9e-02	7.1e-04	6.5e+00	3.6e-02	6.5e+00	0.6
Ethylbenzene	8.9e-01	1.6e-02	1.8e+01	1.6e-01	1.8e+01	1.8
Styrene	1.2e-02	2.2e-04	6.7e-02	1.1e-03	6.8e-02	0.0
Xylenes (mixed)	3.9e+00	7.1e-02	3.9e+00	3.6e-02	3.9e+00	0.4
SEMIVOLATILES						
Phenol	2.0e-02	3.6e-04	3.7e-02	6.1e-04	3.7e-02	0.0
bis(2-Chloroethyl) ether	7.8e-03	1.4e-04	ND	ND	0.0e+00	0.0
1,4-Dichlorobenzene	2.1e-04	3.9e-06	ND	ND	0.0e+00	0.0
Benzyl Alcohol	1.3e-03	2.4e-05	8.8e-03	8.1e-05	8.9e-03	0.0
1,2-Dichlorobenzene	4.7e-03	8.5e-05	1.0e-01	9.5e-04	1.0e-01	0.0
2-Methylphenol	2.6e-03	4.8e-05	6.5e-02	9.5e-04	6.6e-02	0.0
4-Methylphenol	8.2e-03	1.5e-04	2.0e-01	3.0e-03	2.1e-01	0.0
Isophorone	1.4e-01	2.6e-03	1.4e+00	1.3e-02	1.4e+00	0.1
2,4-Dimethylphenol	4.5e-03	8.3e-05	4.5e-01	4.1e-03	4.6e-01	0.0
Benzoic Acid	4.5e-01	8.3e-03	1.5e-01	2.1e-03	1.5e-01	0.0

Table X - 33

SUMMARY OF NONCANCER HAZARDS

American Chemical Services Remedial Investigation
Griffith Indiana

Medium: Soils
Source Area: Offsite Containment Area
Population: Onsite Resident
Land Use: Future Site Conditions

CHEMICAL OF POTENTIAL CONCERN	CHRONIC DAILY INTAKE (mg/kg-d)		HAZARD QUOTIENT			
	Dermal Absorp.	Ingestion	Dermal Absorp.	Ingestion	Total	% of Total
2,4-Dichlorophenol	7.8e-06	1.4e-07	5.2e-03	4.7e-05	5.2e-03	0.0
1,2,4-Trichlorophenol	1.3e-03	2.4e-05	2.0e+00	1.9e-02	2.1e+00	0.2
Naphthalene	9.3e-02	1.7e-03	2.8e+01	4.3e-01	2.8e+01	2.8
Hexachlorobutadiene	5.8e-03	1.1e-04	5.8e+00	5.3e-02	5.9e+00	0.6
2-Methylnaphthalene	3.8e-02	7.1e-04	ND	ND	0.0e+00	0.0
Dimethylphthalate	2.0e-02	3.7e-04	4.1e-02	3.7e-04	4.1e-02	0.0
Acenaphthylene	7.4e-05	1.4e-06	ND	ND	0.0e+00	0.0
2,6-Dinitrotoluene	2.9e-05	5.3e-07	ND	ND	0.0e+00	0.0
Acenaphthene	7.0e-04	1.3e-05	2.3e-02	2.1e-04	2.4e-02	0.0
4-Nitrophenol	1.2e-04	2.2e-06	ND	ND	0.0e+00	0.0
Dibenzofuran	1.6e-04	3.0e-06	ND	ND	0.0e+00	0.0
Diethylphthalate	1.1e-02	2.0e-04	2.7e-02	2.5e-04	2.7e-02	0.0
Fluorene	1.2e-03	2.2e-05	6.0e-02	5.5e-04	6.1e-02	0.0
N-nitrosodiphenylamine	2.1e-03	3.8e-05	ND	ND	0.0e+00	0.0
Hexachlorobenzene	7.5e-05	1.4e-06	1.9e-01	1.7e-03	1.9e-01	0.0
Pentachlorophenol	7.0e-03	1.3e-04	2.6e-01	4.3e-03	2.6e-01	0.0
Phenanthrene	1.7e-03	3.1e-05	ND	ND	0.0e+00	0.0
Anthracene	2.7e-05	4.9e-07	1.8e-04	1.6e-06	1.8e-04	0.0
Di-n-butylphthalate	1.3e-01	2.4e-03	1.5e+00	2.4e-02	1.5e+00	0.1
Fluoranthene	6.5e-04	1.2e-05	3.3e-02	3.0e-04	3.3e-02	0.0
Pyrene	8.6e-04	1.6e-05	5.7e-02	5.2e-04	5.8e-02	0.0
Butylbenzylphthalate	6.2e-02	1.1e-03	3.5e-01	5.7e-03	3.5e-01	0.0
Benzo(a)anthracene	6.2e-04	1.1e-05	ND	ND	0.0e+00	0.0
Chrysene	6.8e-04	1.2e-05	ND	ND	0.0e+00	0.0
bis(2-ethylhexyl)phthalate	5.4e-01	1.0e-02	1.1e+02	5.0e-01	1.1e+02	10.7
Di-n-octyl Phthalate	5.4e-03	1.0e-04	5.4e-01	5.0e-03	5.5e-01	0.1
Benzo(b)fluoranthene	5.8e-04	1.1e-05	ND	ND	0.0e+00	0.0
Benzo(k)fluoranthene	5.8e-04	1.1e-05	ND	ND	0.0e+00	0.0
Benzo(a)pyrene	8.7e-05	1.6e-06	ND	ND	0.0e+00	0.0
Ideno(1,2,3-cd)pyrene	3.2e-05	5.8e-07	ND	ND	0.0e+00	0.0
Dibenz(a,h)anthracene	7.4e-06	1.4e-07	ND	ND	0.0e+00	0.0
Benzo(g,h,i)perylene	2.4e-05	4.4e-07	ND	ND	0.0e+00	0.0
Total Carcinogenic PAHs	2.6e-03	4.8e-05	ND	ND	0.0e+00	0.0
PESTICIDE/PCB						
alpha-BHC	7.1e-06	1.3e-07	ND	ND	0.0e+00	0.0
beta-BHC	2.0e-05	3.7e-07	ND	ND	0.0e+00	0.0
Aldrin	3.5e-05	6.4e-07	2.3e+00	2.1e-02	2.3e+00	0.2

Table X - 33

SUMMARY OF NONCANCER HAZARDS

American Chemical Services Remedial Investigation
Griffith Indiana

Medium: Soils
Source Area: Offsite Containment Area
Population: Onsite Resident
Land Use: Future Site Conditions

CHEMICAL OF POTENTIAL CONCERN	CHRONIC DAILY INTAKE (mg/kg-d)		HAZARD QUOTIENT			
	Dermal Absorp.	Ingestion	Dermal Absorp.	Ingestion	Total	% of Total
Heptachlor epoxide	2.5e-07	4.5e-09	3.8e-02	3.5e-04	3.8e-02	0.0
4,4'-DDE	1.7e-05	3.2e-07	ND	ND	0.0e+00	0.0
4,4'-DDD	5.3e-05	9.7e-07	ND	ND	0.0e+00	0.0
4,4'-DDT	3.5e-05	6.3e-07	1.4e-01	1.3e-03	1.4e-01	0.0
PCB	4.7e-03	3.2e-04	ND	ND	0.0e+00	0.0
METALS						
Antimony	2.0e-04	1.1e-04	9.8e+00	2.7e-01	1.0e+01	1.0
Barium	6.3e-04	3.5e-04	1.8e-01	5.0e-03	1.9e-01	0.0
Cadmium (food/soil)	2.2e-03	1.2e-03	3.1e+01	1.2e+00	3.3e+01	3.2
Calcium	6.5e-02	3.6e-02	ND	ND	0.0e+00	0.0
Chromium VI	6.8e-04	3.7e-04	2.7e-01	7.5e-02	3.5e-01	0.0
Cobalt	2.1e-05	1.2e-05	ND	ND	0.0e+00	0.0
Copper	2.2e-03	1.2e-03	ND	ND	0.0e+00	0.0
Iron	8.0e-03	4.4e-03	ND	ND	0.0e+00	0.0
Manganese	3.5e-04	1.9e-04	8.6e-02	1.9e-03	8.8e-02	0.0
Mercury	1.2e-05	6.5e-06	2.6e-01	2.2e-02	2.9e-01	0.0
Nickel	3.8e-05	2.1e-05	1.9e-02	1.0e-03	2.0e-02	0.0
Potassium	3.0e-03	1.7e-03	ND	ND	0.0e+00	0.0
Selenium	1.3e-05	7.1e-06	ND	ND	0.0e+00	0.0
Silver	1.2e-05	6.6e-06	4.0e-02	2.2e-03	4.2e-02	0.0
Zinc	1.7e-03	9.5e-04	2.9e-02	4.8e-03	3.4e-02	0.0
Cyanide	7.8e-06	4.3e-06	5.5e-04	2.1e-04	7.7e-04	0.0
TIC Groupings						
Propyl Benzenes	2.0e-02	3.7e-04	1.0e+00	9.3e-03	1.0e+00	0.1
Propenyl Benzenes	4.7e-03	8.5e-05	1.6e+00	1.4e-02	1.6e+00	0.2
Ethyl Methyl Benzenes	2.3e-01	4.2e-03	1.1e+00	2.1e-02	1.2e+00	0.1
Diethyl Benzenes	8.6e-02	1.6e-03	1.7e+00	1.6e-02	1.7e+00	0.2
Methyl Propyl Benzenes	3.7e-02	6.7e-04	1.8e+00	1.7e-02	1.8e+00	0.2
Trimethyl Benzenes	3.8e-01	7.0e-03	9.5e-01	1.7e-02	9.7e-01	0.1
Dimethyl ethyl benzenes	6.6e-02	1.2e-03	1.3e+00	1.2e-02	1.3e+00	0.1
Tetramethyl Benzenes	1.1e-02	2.1e-04	2.8e-02	5.2e-04	2.9e-02	0.0
Oxygenated Benzenes	1.4e-01	2.5e-03	2.7e+00	2.5e-02	2.7e+00	0.3
Nitrogenated Benzenes	3.8e-02	7.1e-04	1.5e+02	1.4e+00	1.6e+02	15.2
Cyclic alkanes	0.0e+00	7.1e-05	ND	ND	0.0e+00	0.0
Cyclic Alkenes	0.0e+00	3.3e-04	ND	ND	0.0e+00	0.0

Table X - 33

SUMMARY OF NONCANCER HAZARDS

American Chemical Services Remedial Investigation
Griffith Indiana

Medium: Soils
Source Area: Offsite Containment Area
Population: Onsite Resident
Land Use: Future Site Conditions

CHEMICAL OF POTENTIAL CONCERN	CHRONIC DAILY INTAKE (mg/kg-d)		HAZARD QUOTIENT			
	Dermal Absorp.	Ingestion	Dermal Absorp.	Ingestion	Total	% of Total
n-chain Alkanes	5.1e-02	9.3e-04	1.7e+00	1.5e-02	1.7e+00	0.2
Branched Alkanes	8.9e-02	1.6e-03	3.0e+00	2.7e-02	3.0e+00	0.3
Branched Alkenes/Alkynes	0.0e+00	1.0e-04	ND	ND	0.0e+00	0.0
Ethers	3.6e-03	6.6e-05	1.4e-02	1.3e-04	1.4e-02	0.0
Methylated Naphthalenes	2.8e-02	5.2e-04	8.4e+00	1.3e-01	8.6e+00	0.8
Phthalates	4.7e-02	8.5e-04	4.7e-02	4.3e-04	4.7e-02	0.0
Methylated Phenols	2.1e-03	3.8e-05	5.1e-02	7.5e-04	5.2e-02	0.0
Methylated Ketones	3.9e-03	7.1e-05	4.1e-02	7.1e-04	4.2e-02	0.0
Simple Ketones	3.5e-05	6.5e-07	1.4e-03	1.3e-05	1.4e-03	0.0
Cyclic Ketones	3.1e-03	5.7e-05	3.1e-02	2.8e-04	3.1e-02	0.0
Diols	1.0e-01	1.9e-03	1.0e-01	9.3e-04	1.0e-01	0.0
Simple Alcohols	1.9e-02	3.4e-04	3.7e-01	3.4e-03	3.8e-01	0.0
Cyclic Alcohols	5.1e-04	9.3e-06	3.4e-03	3.1e-05	3.4e-03	0.0
Oxygenated Alcohols	9.3e-02	1.7e-03	ND	ND	0.0e+00	0.0
Cyclic Acids	3.0e-03	5.6e-05	1.0e-03	1.4e-05	1.0e-03	0.0
Non-Cyclic Acids	2.4e+00	4.5e-02	6.1e+01	5.6e-01	6.2e+01	6.0
Amines	2.1e-02	3.8e-04	8.2e-02	7.6e-04	8.3e-02	0.0
Furans	0.0e+00	2.2e-07	ND	ND	0.0e+00	0.0
			Total	Total	Total	Total
			1.0e+03	1.3e+01	1.0e+03	100.0

This table presents chronic daily intakes and hazard quotients for chemicals of potential concern. Hazard quotients are calculated by dividing the chronic daily intake by the reference dose. Chemical-specific hazard quotients are summed for each exposure route to arrive at a total hazard value. In some cases, hazard quotients were not determined (ND) because reference doses are not available.

JAH/jah/
VERSION 6/19/91
[ACS.2020.BRA]P-H.W20

Table X - 34

SUMMARY OF CANCER RISKS

American Chemical Services Remedial Investigation
Griffith Indiana

Medium: Soils
Source Area: Offsite Containment Area
Population: Onsite Resident
Land Use: Future Site Conditions

CHEMICAL OF POTENTIAL CONCERN	CHRONIC DAILY INTAKE (mg/kg-d)		CANCER RISKS			
	Dermal Absorp.	Ingestion	Dermal Absorp.	Ingestion	Total	% of Total
VOLATILES						
Vinyl chloride	4.8e-05	8.9e-07	9.2e-05	1.7e-06	9.3e-05	0.1
Chloroethane	3.3e-05	6.1e-07	ND	ND	0.0e+00	0.0
Methylene chloride	3.5e-03	6.4e-05	3.3e-05	4.8e-07	3.3e-05	0.0
Acetone	2.8e-01	5.2e-03	ND	ND	0.0e+00	0.0
1,1-Dichloroethene	6.5e-03	1.2e-04	3.9e-03	7.1e-05	4.0e-03	2.6
1,1-Dichloroethane	8.2e-03	1.5e-04	ND	ND	0.0e+00	0.0
1,2-Dichloroethene (cis)	5.7e-04	1.0e-05	ND	ND	0.0e+00	0.0
Chloroform	4.7e-02	8.5e-04	2.8e-04	5.2e-06	2.9e-04	0.2
1,2-Dichloroethane	7.3e-03	1.3e-04	6.7e-04	1.2e-05	6.8e-04	0.4
2-Butanone	1.6e+00	3.0e-02	ND	ND	0.0e+00	0.0
1,1,1-Trichloroethane	2.5e+00	4.6e-02	ND	ND	0.0e+00	0.0
1,2-Dichloropropane	1.1e-03	2.1e-05	1.5e-04	1.4e-06	1.6e-04	0.1
Trichloroethene	3.2e-01	5.8e-03	3.5e-03	6.4e-05	3.5e-03	2.3
1,1,2-Trichloroethane	6.7e-03	1.2e-04	7.6e-04	7.0e-06	7.7e-04	0.5
Benzene	2.5e-02	4.6e-04	1.4e-03	1.3e-05	1.5e-03	1.0
4-Methyl-2-pentanone	1.0e+00	1.9e-02	ND	ND	0.0e+00	0.0
2-Hexanone	7.8e-04	1.4e-05	ND	ND	0.0e+00	0.0
Tetrachloroethene	7.7e-01	1.4e-02	3.9e-02	7.2e-04	4.0e-02	26.2
1,1,2,2-Tetrachloroethane	1.5e-07	2.7e-09	3.1e-08	5.5e-10	3.2e-08	0.0
Toluene	2.2e+00	4.0e-02	ND	ND	0.0e+00	0.0
Chlorobenzene	1.7e-02	3.1e-04	ND	ND	0.0e+00	0.0
Ethylbenzene	3.8e-01	7.0e-03	ND	ND	0.0e+00	0.0
Styrene	5.2e-03	9.5e-05	1.7e-04	2.8e-06	1.7e-04	0.1
Xylenes (mixed)	1.7e+00	3.1e-02	ND	ND	0.0e+00	0.0
SEMIVOLATILES						
Phenol	8.5e-03	1.6e-04	ND	ND	0.0e+00	0.0
bis(2-Chloroethyl) ether	3.3e-03	6.1e-05	7.3e-03	6.7e-05	7.4e-03	4.9
1,4-Dichlorobenzene	9.2e-05	1.7e-06	2.2e-06	4.0e-08	2.2e-06	0.0
Benzyl Alcohol	5.7e-04	1.0e-05	ND	ND	0.0e+00	0.0
1,2-Dichlorobenzene	2.0e-03	3.7e-05	ND	ND	0.0e+00	0.0
2-Methylphenol	1.1e-03	2.1e-05	ND	ND	0.0e+00	0.0
4-Methylphenol	3.5e-03	6.4e-05	ND	ND	0.0e+00	0.0
Isophorone	6.0e-02	1.1e-03	4.9e-04	4.5e-06	5.0e-04	0.3
2,4-Dimethylphenol	1.9e-03	3.6e-05	ND	ND	0.0e+00	0.0
Benzoic Acid	1.9e-01	3.6e-03	ND	ND	0.0e+00	0.0

Table X - 34

SUMMARY OF CANCER RISKS

American Chemical Services Remedial Investigation
Griffith Indiana

Medium: Soils
Source Area: Offsite Containment Area
Population: Onsite Resident
Land Use: Future Site Conditions

CHEMICAL OF POTENTIAL CONCERN	CHRONIC DAILY INTAKE (mg/kg-d)		CANCER RISKS			
	Dermal Absorp.	Ingestion	Dermal Absorp.	Ingestion	Total	% of Total
2,4-Dichlorophenol	3.3e-06	6.1e-08	ND	ND	0.0e+00	0.0
1,2,4-Trichlorophenol	5.7e-04	1.0e-05	ND	ND	0.0e+00	0.0
Naphthalene	4.0e-02	7.3e-04	ND	ND	0.0e+00	0.0
Hexachlorobutadiene	2.5e-03	4.6e-05	3.9e-04	3.6e-06	3.9e-04	0.3
2-Methylnaphthalene	1.6e-02	3.0e-04	ND	ND	0.0e+00	0.0
Dimethylphthalate	8.7e-03	1.6e-04	ND	ND	0.0e+00	0.0
Acenaphthylene	3.2e-05	5.8e-07	ND	ND	0.0e+00	0.0
2,6-Dinitrotoluene	1.2e-05	2.3e-07	1.7e-05	1.6e-07	1.7e-05	0.0
Acenaphthene	3.0e-04	5.5e-06	ND	ND	0.0e+00	0.0
4-Nitrophenol	5.2e-05	9.5e-07	ND	ND	0.0e+00	0.0
Dibenzofuran	6.9e-05	1.3e-06	ND	ND	0.0e+00	0.0
Diethylphthalate	4.7e-03	8.5e-05	ND	ND	0.0e+00	0.0
Fluorene	5.2e-04	9.5e-06	ND	ND	0.0e+00	0.0
N-nitrosodiphenylamine	8.8e-04	1.6e-05	4.4e-06	7.9e-08	4.5e-06	0.0
Hexachlorobenzene	3.2e-05	5.9e-07	1.0e-04	9.4e-07	1.0e-04	0.1
Pentachlorophenol	3.0e-03	5.5e-05	4.0e-04	6.6e-06	4.1e-04	0.3
Phenanthrene	7.2e-04	1.3e-05	ND	ND	0.0e+00	0.0
Anthracene	1.1e-05	2.1e-07	ND	ND	0.0e+00	0.0
Di-n-butylphthalate	5.7e-02	1.0e-03	ND	ND	0.0e+00	0.0
Fluoranthene	2.8e-04	5.1e-06	ND	ND	0.0e+00	0.0
Pyrene	3.7e-04	6.7e-06	ND	ND	0.0e+00	0.0
Butylbenzylphthalate	2.7e-02	4.9e-04	ND	ND	0.0e+00	0.0
Benzo(a)anthracene	2.7e-04	4.9e-06	ND	ND	0.0e+00	0.0
Chrysene	2.9e-04	5.4e-06	ND	ND	0.0e+00	0.0
bis(2-ethylhexyl)phthalate	2.3e-01	4.3e-03	1.3e-02	6.0e-05	1.3e-02	8.6
Di-n-octyl Phthalate	2.3e-03	4.3e-05	ND	ND	0.0e+00	0.0
Benzo(b)fluoranthene	2.5e-04	4.6e-06	ND	ND	0.0e+00	0.0
Benzo(k)fluoranthene	2.5e-04	4.6e-06	ND	ND	0.0e+00	0.0
Benzo(a)pyrene	3.7e-05	6.8e-07	ND	ND	0.0e+00	0.0
Ideno(1,2,3-cd)pyrene	1.4e-05	2.5e-07	ND	ND	0.0e+00	0.0
Dibenz(a,h)anthracene	3.2e-06	5.8e-08	ND	ND	0.0e+00	0.0
Benzo(g,h,i)perylene	1.0e-05	1.9e-07	ND	ND	0.0e+00	0.0
Total Carcinogenic PAHs	1.1e-03	2.0e-05	2.6e-02	2.3e-04	2.6e-02	17.0
PESTICIDE/PCB						
alpha-BHC	3.0e-06	5.6e-08	3.8e-05	3.5e-07	3.9e-05	0.0
beta-BHC	8.7e-06	1.6e-07	3.1e-05	2.9e-07	3.2e-05	0.0
Aldrin	1.5e-05	2.7e-07	5.1e-04	4.7e-06	5.1e-04	0.3

Table X - 34

SUMMARY OF CANCER RISKS

American Chemical Services Remedial Investigation
Griffith Indiana

Medium: Soils
Source Area: Offsite Containment Area
Population: Onsite Resident
Land Use: Future Site Conditions

CHEMICAL OF POTENTIAL CONCERN	CHRONIC DAILY INTAKE (mg/kg-d)		CANCER RISKS			
	Dermal Absorp.	Ingestion	Dermal Absorp.	Ingestion	Total	% of Total
Heptachlor epoxide	1.1e-07	1.9e-09	1.9e-06	1.8e-08	1.9e-06	0.0
4,4'-DDE	7.5e-06	1.4e-07	2.8e-06	4.7e-08	2.9e-06	0.0
4,4'-DDD	2.3e-05	4.1e-07	1.1e-05	9.9e-08	1.1e-05	0.0
4,4'-DDT	1.5e-05	2.7e-07	1.0e-05	9.3e-08	1.0e-05	0.0
PCB	2.0e-03	1.4e-04	5.1e-02	1.1e-03	5.2e-02	34.6
METALS						
Antimony	8.4e-05	4.6e-05	ND	ND	0.0e+00	0.0
Barium	2.7e-04	1.5e-04	ND	ND	0.0e+00	0.0
Cadmium (food/soil)	9.4e-04	5.2e-04	ND	ND	0.0e+00	0.0
Calcium	2.8e-02	1.5e-02	ND	ND	0.0e+00	0.0
Chromium VI	2.9e-04	1.6e-04	ND	ND	0.0e+00	0.0
Cobalt	9.2e-06	5.0e-06	ND	ND	0.0e+00	0.0
Copper	9.3e-04	5.1e-04	ND	ND	0.0e+00	0.0
Iron	3.4e-03	1.9e-03	ND	ND	0.0e+00	0.0
Manganese	1.5e-04	8.1e-05	ND	ND	0.0e+00	0.0
Mercury	5.1e-06	2.8e-06	ND	ND	0.0e+00	0.0
Nickel	1.6e-05	8.9e-06	ND	ND	0.0e+00	0.0
Potassium	1.3e-03	7.1e-04	ND	ND	0.0e+00	0.0
Selenium	5.6e-06	3.1e-06	ND	ND	0.0e+00	0.0
Silver	5.1e-06	2.8e-06	ND	ND	0.0e+00	0.0
Zinc	7.4e-04	4.1e-04	ND	ND	0.0e+00	0.0
Cyanide	3.3e-06	1.8e-06	ND	ND	0.0e+00	0.0
TIC Groupings						
Propyl Benzenes	8.7e-03	1.6e-04	ND	ND	0.0e+00	0.0
Propenyl Benzenes	2.0e-03	3.7e-05	ND	ND	0.0e+00	0.0
Ethyl Methyl Benzenes	9.8e-02	1.8e-03	ND	ND	0.0e+00	0.0
Diethyl Benzenes	3.7e-02	6.7e-04	ND	ND	0.0e+00	0.0
Methyl Propyl Benzenes	1.6e-02	2.9e-04	ND	ND	0.0e+00	0.0
Trimethyl Benzenes	1.6e-01	3.0e-03	ND	ND	0.0e+00	0.0
Dimethyl ethyl benzenes	2.8e-02	5.2e-04	ND	ND	0.0e+00	0.0
Tetramethyl Benzenes	4.8e-03	8.9e-05	ND	ND	0.0e+00	0.0
Oxygenated Benzenes	5.8e-02	1.1e-03	ND	ND	0.0e+00	0.0
Nitrogenated Benzenes	1.6e-02	3.0e-04	ND	ND	0.0e+00	0.0
Cyclic alkanes	0.0e+00	3.0e-05	ND	ND	0.0e+00	0.0
Cyclic Alkenes	0.0e+00	1.4e-04	ND	ND	0.0e+00	0.0

Table X - 34

SUMMARY OF CANCER RISKS

American Chemical Services Remedial Investigation
Griffith Indiana

Medium: Soils
Source Area: Offsite Containment Area
Population: Onsite Resident
Land Use: Future Site Conditions

CHEMICAL OF POTENTIAL CONCERN	CHRONIC DAILY INTAKE (mg/kg-d)		CANCER RISKS			
	Dermal Absorp.	Ingestion	Dermal Absorp.	Ingestion	Total	% of Total
n-chain Alkanes	2.2e-02	4.0e-04	ND	ND	0.0e+00	0.0
Branched Alkanes	3.8e-02	7.0e-04	ND	ND	0.0e+00	0.0
Branched Alkenes/Alkynes	0.0e+00	4.3e-05	ND	ND	0.0e+00	0.0
Ethers	1.5e-03	2.8e-05	ND	ND	0.0e+00	0.0
Methylated Naphthalenes	1.2e-02	2.2e-04	ND	ND	0.0e+00	0.0
Phthalates	2.0e-02	3.7e-04	ND	ND	0.0e+00	0.0
Methylated Phenols	9.0e-04	1.6e-05	ND	ND	0.0e+00	0.0
Methylated Ketones	1.7e-03	3.1e-05	ND	ND	0.0e+00	0.0
Simple Ketones	1.5e-05	2.8e-07	ND	ND	0.0e+00	0.0
Cyclic Ketones	1.3e-03	2.4e-05	1.1e-05	1.0e-07	1.1e-05	0.0
Diols	4.3e-02	7.9e-04	ND	ND	0.0e+00	0.0
Simple Alcohols	8.0e-03	1.5e-04	ND	ND	0.0e+00	0.0
Cyclic Alcohols	2.2e-04	4.0e-06	ND	ND	0.0e+00	0.0
Oxygenated Alcohols	4.0e-02	7.3e-04	ND	ND	0.0e+00	0.0
Cyclic Acids	1.3e-03	2.4e-05	ND	ND	0.0e+00	0.0
Non-Cyclic Acids	1.0e+00	1.9e-02	ND	ND	0.0e+00	0.0
Amines	8.8e-03	1.6e-04	ND	ND	0.0e+00	0.0
Furans	0.0e+00	9.5e-08	ND	ND	0.0e+00	0.0
			Total 1.5e-01	Total 2.3e-03	Total 1.5e-01	Total 100.0

This table presents chronic daily intakes and cancer risks for chemicals of potential concern. Cancer risks are calculated by multiplying the chronic daily intake by the slope factor. Chemical-specific cancer risks are summed for each exposure route to arrive at a total risk value. In some cases, cancer risks were not determined (ND) because slope factors are not available.

JAH/jah/
6/19/91
[ACS.2020.BRA]P-C.W20

Table X - 35

SUMMARY OF NONCANCER HAZARDS

American Chemical Services Remedial Investigation
Griffith Indiana

Medium: Surface Soils
Source Area: Kapica-Pazmey

Population: Onsite Resident
Land Use: Future Site Conditions

CHEMICAL OF POTENTIAL CONCERN	CHRONIC DAILY INTAKE (mg/kg-d)		HAZARD QUOTIENT			
	Dermal Absorp.	Ingestion	Dermal Absorp.	Ingestion	Total	% of Total
VOLATILES						
Methylene chloride	7.8e-06	1.4e-07	1.6e-04	2.4e-06	1.6e-04	0.0
Acetone	3.8e-05	6.9e-07	4.0e-04	6.9e-06	4.0e-04	0.0
1,1-Dichloroethane	5.8e-06	1.1e-07	5.8e-05	1.1e-06	5.9e-05	0.0
1,2-Dichloroethene (cis)	3.0e-04	5.4e-06	3.1e-02	5.4e-04	3.2e-02	0.0
Chloroform	3.9e-07	7.1e-09	3.9e-05	7.1e-07	4.0e-05	0.0
1,1,1-Trichloroethane	3.5e-07	6.4e-09	3.9e-06	7.1e-08	4.0e-06	0.0
1,2-Dichloropropane	7.4e-07	1.4e-08	ND	ND	0.0e+00	0.0
Trichloroethene	6.6e-03	1.2e-04	ND	ND	0.0e+00	0.0
Benzene	1.2e-04	2.3e-06	ND	ND	0.0e+00	0.0
4-Methyl-2-pentanone	1.0e-02	1.9e-04	4.2e-01	3.8e-03	4.2e-01	0.1
Tetrachloroethene	3.1e-02	5.6e-04	3.1e+00	5.6e-02	3.1e+00	0.8
Toluene	7.4e-01	1.4e-02	3.7e+00	6.8e-02	3.8e+00	0.9
Chlorobenzene	2.4e-04	4.4e-06	4.0e-02	2.2e-04	4.0e-02	0.0
Ethylbenzene	1.7e-01	3.1e-03	3.3e+00	3.1e-02	3.4e+00	0.8
Styrene	8.9e-04	1.6e-05	5.0e-03	8.2e-05	5.0e-03	0.0
Xylenes (mixed)	8.9e-01	1.6e-02	8.9e-01	8.2e-03	9.0e-01	0.2
SEMIVOLATILES						
Phenol	1.1e-03	2.0e-05	2.0e-03	3.3e-05	2.0e-03	0.0
1,2-Dichlorobenzene	2.3e-05	4.2e-07	5.1e-04	4.7e-06	5.1e-04	0.0
2-Methylphenol	1.8e-04	3.3e-06	4.5e-03	6.6e-05	4.5e-03	0.0
4-Methylphenol	1.8e-04	3.3e-06	4.5e-03	6.6e-05	4.5e-03	0.0
Isophorone	3.8e-03	6.9e-05	3.8e-02	3.5e-04	3.8e-02	0.0
2,4-Dimethylphenol	1.9e-04	3.5e-06	1.9e-02	1.7e-04	1.9e-02	0.0
Naphthalene	3.8e-03	6.9e-05	1.1e+00	1.7e-02	1.1e+00	0.3
2-Methylnaphthalene	2.2e-03	4.0e-05	ND	ND	0.0e+00	0.0
2,4,5-Trichlorophenol	6.6e-06	1.2e-07	1.3e-04	1.2e-06	1.3e-04	0.0
Dimethylphthalate	5.4e-05	1.0e-06	1.1e-04	1.0e-06	1.1e-04	0.0
Acenaphthene	1.4e-05	2.6e-07	4.7e-04	4.3e-06	4.7e-04	0.0
Dibenzofuran	1.7e-05	3.1e-07	ND	ND	0.0e+00	0.0
Diethylphthalate	1.9e-04	3.6e-06	4.9e-04	4.5e-06	4.9e-04	0.0
Fluorene	2.4e-05	4.4e-07	1.2e-03	1.1e-05	1.2e-03	0.0
N-nitrosodiphenylamine	1.7e-04	3.1e-06	ND	ND	0.0e+00	0.0
Pentachlorophenol	5.8e-05	1.1e-06	2.2e-03	3.6e-05	2.2e-03	0.0
Phenanthrene	1.7e-04	3.1e-06	ND	ND	0.0e+00	0.0
Anthracene	2.6e-05	4.7e-07	1.7e-04	1.6e-06	1.7e-04	0.0

Table X - 35

SUMMARY OF NONCANCER HAZARDS

American Chemical Services Remedial Investigation
Griffith Indiana

Medium: Surface Soils
Source Area: Kapica-Pazmey

Population: Onsite Resident
Land Use: Future Site Conditions

CHEMICAL OF POTENTIAL CONCERN	CHRONIC DAILY INTAKE (mg/kg-d)		HAZARD QUOTIENT			
	Dermal Absorp.	Ingestion	Dermal Absorp.	Ingestion	Total	% of Total
Di-n-butylphthalate	3.7e-03	6.7e-05	4.1e-02	6.7e-04	4.1e-02	0.0
Fluoranthene	1.3e-04	2.4e-06	6.6e-03	6.1e-05	6.7e-03	0.0
Pyrene	8.9e-05	1.6e-06	6.0e-03	5.5e-05	6.0e-03	0.0
Butylbenzylphthalate	2.0e-03	3.6e-05	1.1e-02	1.8e-04	1.1e-02	0.0
Benzo(a)anthracene	9.3e-05	1.7e-06	ND	ND	0.0e+00	0.0
Chrysene	5.1e-05	9.3e-07	ND	ND	0.0e+00	0.0
bis(2-ethylhexyl)phthalate	2.1e-02	3.8e-04	4.2e+00	1.9e-02	4.2e+00	1.0
Di-n-octyl Phthalate	1.5e-03	2.7e-05	1.5e-01	1.4e-03	1.5e-01	0.0
Benzo(b)fluoranthene	1.5e-04	2.8e-06	ND	ND	0.0e+00	0.0
Benzo(k)fluoranthene	1.5e-04	2.8e-06	ND	ND	0.0e+00	0.0
Benzo(a)pyrene	5.4e-05	1.0e-06	ND	ND	0.0e+00	0.0
Ideno(1,2,3-cd)pyrene	3.2e-05	5.8e-07	ND	ND	0.0e+00	0.0
Dibenz(a,h)anthracene	1.0e-05	1.9e-07	ND	ND	0.0e+00	0.0
Benzo(g,h,i)perylene	4.3e-05	7.8e-07	ND	ND	0.0e+00	0.0
Total Carcinogenic PAHs	5.4e-04	1.0e-05	ND	ND	0.0e+00	0.0
PESTICIDE/PCB						
Aldrin	3.4e-06	6.3e-08	2.3e-01	2.1e-03	2.3e-01	0.1
Endosulfan I	1.6e-06	3.0e-08	6.5e-02	6.0e-04	6.6e-02	0.0
4,4'-DDD	5.8e-06	1.1e-07	ND	ND	0.0e+00	0.0
PCB	3.4e-03	2.3e-04	ND	ND	0.0e+00	0.0
METALS						
Aluminum	1.7e-02	9.4e-03	ND	ND	0.0e+00	0.0
Antimony	1.1e-04	6.0e-05	5.5e+00	1.5e-01	5.6e+00	1.4
Barium	7.4e-03	4.1e-03	2.1e+00	5.8e-02	2.2e+00	0.5
Cadmium (food/soil)	2.3e-04	1.2e-04	3.2e+00	1.2e-01	3.3e+00	0.8
Calcium	2.0e-01	1.1e-01	ND	ND	0.0e+00	0.0
Chromium VI	4.0e-03	2.2e-03	1.6e+00	4.4e-01	2.0e+00	0.5
Cobalt	1.9e-04	1.1e-04	ND	ND	0.0e+00	0.0
Copper	5.8e-03	3.2e-03	ND	ND	0.0e+00	0.0
Iron	9.1e-02	5.0e-02	ND	ND	0.0e+00	0.0
Lead	2.1e-02	1.2e-02	3.0e+02	8.2e+01	3.8e+02	91.8
Magnesium	4.8e-02	2.6e-02	ND	ND	0.0e+00	0.0
Manganese	2.0e-03	1.1e-03	5.0e-01	1.1e-02	5.1e-01	0.1
Mercury	1.2e-05	6.8e-06	2.7e-01	2.3e-02	3.0e-01	0.1
Nickel	2.6e-04	1.4e-04	1.3e-01	7.0e-03	1.3e-01	0.0

Table X - 35

SUMMARY OF NONCANCER HAZARDS

American Chemical Services Remedial Investigation
Griffith Indiana

Medium: Surface Soils
Source Area: Kapica-Pazmey

Population: Onsite Resident
Land Use: Future Site Conditions

CHEMICAL OF POTENTIAL CONCERN	CHRONIC DAILY INTAKE (mg/kg-d)		HAZARD QUOTIENT			
	Dermal Absorp.	Ingestion	Dermal Absorp.	Ingestion	Total	% of Total
Selenium	2.2e-05	1.2e-05	ND	ND	0.0e+00	0.0
Silver	3.2e-05	1.8e-05	1.1e-01	5.9e-03	1.1e-01	0.0
Vanadium	6.2e-05	3.4e-05	1.8e-01	4.9e-03	1.8e-01	0.0
Zinc	2.0e-02	1.1e-02	3.4e-01	5.6e-02	4.0e-01	0.1
Cyanide	8.6e-05	4.7e-05	6.1e-03	2.4e-03	8.5e-03	0.0
TIC Groupings						
Propyl Benzenes	4.7e-06	8.5e-08	2.3e-04	2.1e-06	2.4e-04	0.0
Propenyl Benzenes	1.2e-03	2.3e-05	4.1e-01	3.8e-03	4.2e-01	0.1
Ethyl Methyl Benzenes	1.4e-02	2.6e-04	7.2e-02	1.3e-03	7.3e-02	0.0
Trimethyl Benzenes	8.6e-03	1.6e-04	2.1e-02	3.9e-04	2.2e-02	0.0
Dimethyl ethyl benzenes	2.3e-03	4.3e-05	4.7e-02	4.3e-04	4.7e-02	0.0
Tetramethyl Benzenes	2.6e-03	4.8e-05	6.6e-03	1.2e-04	6.7e-03	0.0
Cyclic alkanes	0.0e+00	3.7e-05	ND	ND	0.0e+00	0.0
n-chain Alkanes	1.1e-02	2.1e-04	3.8e-01	3.4e-03	3.8e-01	0.1
Branched Alkanes	1.2e-02	2.3e-04	4.1e-01	3.8e-03	4.2e-01	0.1
Methylated Ketones	7.0e-06	1.3e-07	7.4e-05	1.3e-06	7.5e-05	0.0
Cyclic Acids	7.4e-04	1.4e-05	2.5e-04	3.4e-06	2.5e-04	0.0
Non-Cyclic Acids	1.0e-02	1.9e-04	2.5e-01	2.3e-03	2.5e-01	0.1
			Total	Total	Total	Total
			3.3e+02	8.4e+01	4.2e+02	100.0

This table presents chronic daily intakes and hazard quotients for chemicals of potential concern. Hazard quotients are calculated by dividing the chronic daily intake by the reference dose. Chemical-specific hazard quotients are summed for each exposure route to arrive at a total hazard value. In some cases, hazard quotients were not determined (ND) because reference doses are not available.

JAH/jah/
VERSION 6/19/91
[ACS.2020.BRA]Q-H.W20

Table X - 36

SUMMARY OF CANCER RISKS

American Chemical Services Remedial Investigation
Griffith Indiana

Medium: Surface Soils
Source Area: Kapica-Pazmey

Population: Onsite Resident
Land Use: Future Site Conditions

CHEMICAL OF POTENTIAL CONCERN	CHRONIC DAILY INTAKE (mg/kg-d)		CANCER RISKS			
	Dermal Absorp.	Ingestion	Dermal Absorp.	Ingestion	Total	% of Total
VOLATILES						
Methylene chloride	3.3e-06	6.1e-08	3.1e-08	4.6e-10	3.2e-08	0.0
Acetone	1.6e-05	3.0e-07	ND	ND	0.0e+00	0.0
1,1-Dichloroethane	2.5e-06	4.6e-08	ND	ND	0.0e+00	0.0
1,2-Dichloroethene (cis)	1.3e-04	2.3e-06	ND	ND	0.0e+00	0.0
Chloroform	1.7e-07	3.1e-09	1.0e-09	1.9e-11	1.0e-09	0.0
1,1,1-Trichloroethane	1.5e-07	2.7e-09	ND	ND	0.0e+00	0.0
1,2-Dichloropropane	3.2e-07	5.8e-09	4.3e-08	3.9e-10	4.3e-08	0.0
Trichloroethene	2.8e-03	5.2e-05	3.1e-05	5.7e-07	3.2e-05	0.1
Benzene	5.3e-05	9.8e-07	3.1e-06	2.8e-08	3.1e-06	0.0
4-Methyl-2-pentanone	4.5e-03	8.2e-05	ND	ND	0.0e+00	0.0
Tetrachloroethene	1.3e-02	2.4e-04	6.7e-04	1.2e-05	6.8e-04	1.5
Toluene	3.2e-01	5.8e-03	ND	ND	0.0e+00	0.0
Chlorobenzene	1.0e-04	1.9e-06	ND	ND	0.0e+00	0.0
Ethylbenzene	7.2e-02	1.3e-03	ND	ND	0.0e+00	0.0
Styrene	3.8e-04	7.0e-06	1.3e-05	2.1e-07	1.3e-05	0.0
Xylenes (mixed)	3.8e-01	7.0e-03	ND	ND	0.0e+00	0.0
SEMIVOLATILES						
Phenol	4.7e-04	8.5e-06	ND	ND	0.0e+00	0.0
1,2-Dichlorobenzene	9.8e-06	1.8e-07	ND	ND	0.0e+00	0.0
2-Methylphenol	7.8e-05	1.4e-06	ND	ND	0.0e+00	0.0
4-Methylphenol	7.7e-05	1.4e-06	ND	ND	0.0e+00	0.0
Isophorone	1.6e-03	3.0e-05	1.3e-05	1.2e-07	1.3e-05	0.0
2,4-Dimethylphenol	8.2e-05	1.5e-06	ND	ND	0.0e+00	0.0
Naphthalene	1.6e-03	3.0e-05	ND	ND	0.0e+00	0.0
2-Methylnaphthalene	9.3e-04	1.7e-05	ND	ND	0.0e+00	0.0
2,4,5-Trichlorophenol	2.8e-06	5.2e-08	ND	ND	0.0e+00	0.0
Dimethylphthalate	2.3e-05	4.3e-07	ND	ND	0.0e+00	0.0
Acenaphthene	6.0e-06	1.1e-07	ND	ND	0.0e+00	0.0
Dibenzofuran	7.2e-06	1.3e-07	ND	ND	0.0e+00	0.0
Diethylphthalate	8.3e-05	1.5e-06	ND	ND	0.0e+00	0.0
Fluorene	1.0e-05	1.9e-07	ND	ND	0.0e+00	0.0
N-nitrosodiphenylamine	7.2e-05	1.3e-06	3.6e-07	6.4e-09	3.6e-07	0.0
Pentachlorophenol	2.5e-05	4.6e-07	3.3e-06	5.5e-08	3.4e-06	0.0
Phenanthrene	7.2e-05	1.3e-06	ND	ND	0.0e+00	0.0
Anthracene	1.1e-05	2.0e-07	ND	ND	0.0e+00	0.0

Table X - 36

SUMMARY OF CANCER RISKS

American Chemical Services Remedial Investigation
Griffith Indiana

Medium: Surface Soils
Source Area: Kapica-Pazmey

Population: Onsite Resident
Land Use: Future Site Conditions

CHEMICAL OF POTENTIAL CONCERN	CHRONIC DAILY INTAKE (mg/kg-d)		CANCER RISKS			
	Dermal Absorp.	Ingestion	Dermal Absorp.	Ingestion	Total	% of Total
Di-n-butylphthalate	1.6e-03	2.9e-05	ND	ND	0.0e+00	0.0
Fluoranthene	5.7e-05	1.0e-06	ND	ND	0.0e+00	0.0
Pyrene	3.8e-05	7.0e-07	ND	ND	0.0e+00	0.0
Butylbenzylphthalate	8.5e-04	1.6e-05	ND	ND	0.0e+00	0.0
Benzo(a)anthracene	4.0e-05	7.3e-07	ND	ND	0.0e+00	0.0
Chrysene	2.2e-05	4.0e-07	ND	ND	0.0e+00	0.0
bis(2-ethylhexyl)phthalate	9.0e-03	1.6e-04	5.0e-04	2.3e-06	5.1e-04	1.1
Di-n-octyl Phthalate	6.3e-04	1.2e-05	ND	ND	0.0e+00	0.0
Benzo(b)fluoranthene	6.5e-05	1.2e-06	ND	ND	0.0e+00	0.0
Benzo(k)fluoranthene	6.5e-05	1.2e-06	ND	ND	0.0e+00	0.0
Benzo(a)pyrene	2.3e-05	4.3e-07	ND	ND	0.0e+00	0.0
Ideno(1,2,3-cd)pyrene	1.4e-05	2.5e-07	ND	ND	0.0e+00	0.0
Dibenz(a,h)anthracene	4.5e-06	8.2e-08	ND	ND	0.0e+00	0.0
Benzo(g,h,i)perylene	1.8e-05	3.4e-07	ND	ND	0.0e+00	0.0
Total Carcinogenic PAHs	2.3e-04	4.3e-06	5.4e-03	4.9e-05	5.4e-03	12.0
PESTICIDE/PCB						
Aldrin	1.5e-06	2.7e-08	5.0e-05	4.6e-07	5.0e-05	0.1
Endosulfan I	7.0e-07	1.3e-08	ND	ND	0.0e+00	0.0
4,4'-DDD	2.5e-06	4.6e-08	1.2e-06	1.1e-08	1.2e-06	0.0
PCB	1.5e-03	1.0e-04	3.8e-02	7.7e-04	3.8e-02	85.1
METALS						
Aluminum	7.3e-03	4.0e-03	ND	ND	0.0e+00	0.0
Antimony	4.7e-05	2.6e-05	ND	ND	0.0e+00	0.0
Barium	3.2e-03	1.7e-03	ND	ND	0.0e+00	0.0
Cadmium (food/soil)	9.7e-05	5.3e-05	ND	ND	0.0e+00	0.0
Calcium	8.7e-02	4.8e-02	ND	ND	0.0e+00	0.0
Chromium VI	1.7e-03	9.4e-04	ND	ND	0.0e+00	0.0
Cobalt	8.2e-05	4.5e-05	ND	ND	0.0e+00	0.0
Copper	2.5e-03	1.4e-03	ND	ND	0.0e+00	0.0
Iron	3.9e-02	2.1e-02	ND	ND	0.0e+00	0.0
Lead	9.0e-03	4.9e-03	ND	ND	0.0e+00	0.0
Magnesium	2.0e-02	1.1e-02	ND	ND	0.0e+00	0.0
Manganese	8.6e-04	4.7e-04	ND	ND	0.0e+00	0.0
Mercury	5.3e-06	2.9e-06	ND	ND	0.0e+00	0.0
Nickel	1.1e-04	6.0e-05	ND	ND	0.0e+00	0.0

Table X - 36

SUMMARY OF CANCER RISKS

American Chemical Services Remedial Investigation
Griffith Indiana

Medium: Surface Soils
Source Area: Kapica-Pazmey

Population: Onsite Resident
Land Use: Future Site Conditions

CHEMICAL OF POTENTIAL CONCERN	CHRONIC DAILY INTAKE (mg/kg-d)		CANCER RISKS			
	Dermal Absorp.	Ingestion	Dermal Absorp.	Ingestion	Total	% of Total
Selenium	9.6e-06	5.3e-06	ND	ND	0.0e+00	0.0
Silver	1.4e-05	7.6e-06	ND	ND	0.0e+00	0.0
Vanadium	2.6e-05	1.5e-05	ND	ND	0.0e+00	0.0
Zinc	8.8e-03	4.8e-03	ND	ND	0.0e+00	0.0
Cyanide	3.7e-05	2.0e-05	ND	ND	0.0e+00	0.0
TIC Groupings						
Propyl Benzenes	2.0e-06	3.7e-08	ND	ND	0.0e+00	0.0
Propenyl Benzenes	5.3e-04	9.8e-06	ND	ND	0.0e+00	0.0
Ethyl Methyl Benzenes	6.2e-03	1.1e-04	ND	ND	0.0e+00	0.0
Trimethyl Benzenes	3.7e-03	6.7e-05	ND	ND	0.0e+00	0.0
Dimethyl ethyl benzenes	1.0e-03	1.8e-05	ND	ND	0.0e+00	0.0
Tetramethyl Benzenes	1.1e-03	2.1e-05	ND	ND	0.0e+00	0.0
Cyclic alkanes	0.0e+00	1.6e-05	ND	ND	0.0e+00	0.0
n-chain Alkanes	4.8e-03	8.9e-05	ND	ND	0.0e+00	0.0
Branched Alkanes	5.3e-03	9.8e-05	ND	ND	0.0e+00	0.0
Methylated Ketones	3.0e-06	5.5e-08	ND	ND	0.0e+00	0.0
Cyclic Acids	3.2e-04	5.8e-06	ND	ND	0.0e+00	0.0
Non-Cyclic Acids	4.3e-03	7.9e-05	ND	ND	0.0e+00	0.0
			Total 4.4e-02	Total 8.4e-04	Total 4.5e-02	Total 100.0

This table presents chronic daily intakes and cancer risks for chemicals of potential concern. Cancer risks are calculated by multiplying the chronic daily intake by the slope factor. Chemical-specific cancer risks are summed for each exposure route to arrive at a total risk value. In some cases, cancer risks were not determined (ND) because slope factors are not available.

JAH/jah/
6/19/91
[ACS.2020.BRA]Q-C.W20

Table X - 37

SUMMARY OF NONCANCER HAZARDS

American Chemical Services Remedial Investigation
Griffith Indiana

Medium: Soil - All Depths
Source Area: Kapica-Pazmey
Population: Onsite Resident
Land Use: Future Site Conditions

CHEMICAL OF POTENTIAL CONCERN	CHRONIC DAILY INTAKE (mg/kg-d)		HAZARD QUOTIENT			
	Dermal Absorp.	Ingestion	Dermal Absorp.	Ingestion	Total	% of Total
VOLATILES						
Chloroethane	2.7e-07	5.0e-09	ND	ND	0.0e+00	0.0
Methylene chloride	2.8e-06	5.1e-08	5.8e-05	8.5e-07	5.9e-05	0.0
Acetone	3.4e-04	6.2e-06	3.6e-03	6.2e-05	3.6e-03	0.0
Carbon disulfide	1.2e-07	2.1e-09	2.3e-06	2.1e-08	2.4e-06	0.0
1,1-Dichloroethene	3.1e-05	5.6e-07	3.4e-03	6.3e-05	3.5e-03	0.0
1,2-Dichloroethene (cis)	1.0e-03	1.9e-05	1.1e-01	1.9e-03	1.1e-01	0.0
Chloroform	3.9e-07	7.1e-09	3.9e-05	7.1e-07	4.0e-05	0.0
1,2-Dichloroethane	6.6e-07	1.2e-08	ND	ND	0.0e+00	0.0
2-Butanone	3.5e-03	6.4e-05	1.4e-01	1.3e-03	1.4e-01	0.0
1,1,1-Trichloroethane	2.2e-05	4.0e-07	2.4e-04	4.4e-06	2.5e-04	0.0
1,2-Dichloropropane	9.4e-07	1.7e-08	ND	ND	0.0e+00	0.0
Trichloroethene	9.7e-03	1.8e-04	ND	ND	0.0e+00	0.0
Benzene	8.9e-04	1.6e-05	ND	ND	0.0e+00	0.0
4-Methyl-2-pentanone	1.0e-02	1.9e-04	4.2e-01	3.8e-03	4.2e-01	0.1
2-Hexanone	1.5e-05	2.8e-07	ND	ND	0.0e+00	0.0
Tetrachloroethene	3.1e-02	5.6e-04	3.1e+00	5.6e-02	3.1e+00	0.7
Toluene	7.4e-01	1.4e-02	3.7e+00	6.8e-02	3.8e+00	0.9
Chlorobenzene	1.0e-03	1.9e-05	1.7e-01	9.6e-04	1.8e-01	0.0
Ethylbenzene	1.7e-01	3.1e-03	3.3e+00	3.1e-02	3.4e+00	0.8
Styrene	1.0e-02	1.9e-04	5.6e-02	9.3e-04	5.7e-02	0.0
Xylenes (mixed)	8.9e-01	1.6e-02	8.9e-01	8.2e-03	9.0e-01	0.2
SEMIVOLATILES						
Phenol	5.6e-04	1.0e-05	1.0e-03	1.7e-05	1.0e-03	0.0
1,2-Dichlorobenzene	2.3e-05	4.2e-07	5.1e-04	4.7e-06	5.1e-04	0.0
2-Methylphenol	1.8e-04	3.3e-06	4.5e-03	6.6e-05	4.5e-03	0.0
4-Methylphenol	1.8e-04	3.3e-06	4.5e-03	6.6e-05	4.5e-03	0.0
Isophorone	3.8e-03	6.9e-05	3.8e-02	3.5e-04	3.8e-02	0.0
2,4-Dimethylphenol	1.9e-04	3.5e-06	1.9e-02	1.7e-04	1.9e-02	0.0
Benzoic Acid	2.7e-05	5.0e-07	9.1e-06	1.2e-07	9.2e-06	0.0
Naphthalene	3.8e-03	6.9e-05	1.1e+00	1.7e-02	1.1e+00	0.3
2-Methylnaphthalene	2.2e-03	4.0e-05	ND	ND	0.0e+00	0.0
2,4,5-Trichlorophenol	6.6e-06	1.2e-07	1.3e-04	1.2e-06	1.3e-04	0.0
Dimethylphthalate	2.3e-04	4.2e-06	4.5e-04	4.2e-06	4.6e-04	0.0
Acenaphthene	2.8e-05	5.1e-07	9.2e-04	8.4e-06	9.3e-04	0.0
4-Nitrophenol	2.6e-03	4.7e-05	ND	ND	0.0e+00	0.0

Table X - 37

SUMMARY OF NONCANCER HAZARDS

American Chemical Services Remedial Investigation
Griffith Indiana

Medium: Soil - All Depths
Source Area: Kapica-Pazmey

Population: Onsite Resident
Land Use: Future Site Conditions

CHEMICAL OF POTENTIAL CONCERN	CHRONIC DAILY INTAKE (mg/kg-d)		HAZARD QUOTIENT			
	Dermal Absorp.	Ingestion	Dermal Absorp.	Ingestion	Total	% of Total
Dibenzofuran	2.5e-05	4.6e-07	ND	ND	0.0e+00	0.0
2,4-Dinitrotoluene	3.3e-05	6.0e-07	ND	ND	0.0e+00	0.0
Diethylphthalate	1.9e-04	3.6e-06	4.9e-04	4.5e-06	4.9e-04	0.0
Fluorene	3.0e-05	5.4e-07	1.5e-03	1.4e-05	1.5e-03	0.0
N-nitrosodiphenylamine	1.7e-04	3.1e-06	ND	ND	0.0e+00	0.0
Pentachlorophenol	6.2e-04	1.1e-05	2.3e-02	3.8e-04	2.3e-02	0.0
Phenanthrene	1.9e-04	3.4e-06	ND	ND	0.0e+00	0.0
Anthracene	2.7e-05	4.9e-07	1.8e-04	1.6e-06	1.8e-04	0.0
Di-n-butylphthalate	3.7e-03	6.7e-05	4.1e-02	6.7e-04	4.1e-02	0.0
Fluoranthene	2.3e-04	4.3e-06	1.2e-02	1.1e-04	1.2e-02	0.0
Pyrene	1.6e-04	3.0e-06	1.1e-02	1.0e-04	1.1e-02	0.0
Butylbenzylphthalate	2.0e-03	3.6e-05	1.1e-02	1.8e-04	1.1e-02	0.0
Benzo(a)anthracene	9.3e-05	1.7e-06	ND	ND	0.0e+00	0.0
Chrysene	5.8e-05	1.1e-06	ND	ND	0.0e+00	0.0
bis(2-ethylhexyl)phthalate	2.1e-02	3.8e-04	4.2e+00	1.9e-02	4.2e+00	1.0
Di-n-octyl Phthalate	1.5e-03	2.7e-05	1.5e-01	1.4e-03	1.5e-01	0.0
Benzo(b)fluoranthene	1.5e-04	2.8e-06	ND	ND	0.0e+00	0.0
Benzo(k)fluoranthene	1.5e-04	2.8e-06	ND	ND	0.0e+00	0.0
Benzo(a)pyrene	5.4e-05	1.0e-06	ND	ND	0.0e+00	0.0
Ideno(1,2,3-cd)pyrene	3.2e-05	5.8e-07	ND	ND	0.0e+00	0.0
Dibenz(a,h)anthracene	1.0e-05	1.9e-07	ND	ND	0.0e+00	0.0
Benzo(g,h,i)perylene	4.3e-05	7.8e-07	ND	ND	0.0e+00	0.0
Total Carcinogenic PAHs	5.5e-04	1.0e-05	ND	ND	0.0e+00	0.0
PESTICIDE/PCB						
Aldrin	8.9e-07	1.6e-08	5.9e-02	5.4e-04	6.0e-02	0.0
Endosulfan I	7.9e-07	1.5e-08	3.2e-02	2.9e-04	3.2e-02	0.0
4,4'-DDD	4.2e-06	7.7e-08	ND	ND	0.0e+00	0.0
PCB	9.7e-04	6.7e-05	ND	ND	0.0e+00	0.0
METALS						
Aluminum	1.3e-02	7.4e-03	ND	ND	0.0e+00	0.0
Antimony	1.1e-04	6.0e-05	5.5e+00	1.5e-01	5.6e+00	1.4
Barium	7.4e-03	4.1e-03	2.1e+00	5.8e-02	2.2e+00	0.5
Cadmium (food/soil)	2.3e-04	1.2e-04	3.2e+00	1.2e-01	3.3e+00	0.8
Calcium	2.0e-01	1.1e-01	ND	ND	0.0e+00	0.0
Chromium VI	4.0e-03	2.2e-03	1.6e+00	4.4e-01	2.0e+00	0.5

Table X - 37

SUMMARY OF NONCANCER HAZARDS

American Chemical Services Remedial Investigation
Griffith Indiana

Medium: Soil - All Depths
Source Area: Kapica-Pazmey
Population: Onsite Resident
Land Use: Future Site Conditions

CHEMICAL OF POTENTIAL CONCERN	CHRONIC DAILY INTAKE (mg/kg-d)		HAZARD QUOTIENT			
	Dermal Absorp.	Ingestion	Dermal Absorp.	Ingestion	Total	% of Total
Cobalt	1.9e-04	1.1e-04	ND	ND	0.0e+00	0.0
Copper	5.8e-03	3.2e-03	ND	ND	0.0e+00	0.0
Iron	8.7e-02	4.8e-02	ND	ND	0.0e+00	0.0
Lead	2.1e-02	1.2e-02	3.0e+02	8.2e+01	3.8e+02	91.5
Magnesium	4.8e-02	2.6e-02	ND	ND	0.0e+00	0.0
Manganese	2.0e-03	1.1e-03	5.0e-01	1.1e-02	5.1e-01	0.1
Mercury	1.2e-05	6.8e-06	2.7e-01	2.3e-02	3.0e-01	0.1
Nickel	2.6e-04	1.4e-04	1.3e-01	7.0e-03	1.3e-01	0.0
Selenium	2.2e-05	1.2e-05	ND	ND	0.0e+00	0.0
Silver	8.3e-05	4.6e-05	2.8e-01	1.5e-02	2.9e-01	0.1
Vanadium	5.2e-05	2.9e-05	1.5e-01	4.1e-03	1.5e-01	0.0
Zinc	2.0e-02	1.1e-02	3.4e-01	5.6e-02	4.0e-01	0.1
Cyanide	8.6e-05	4.7e-05	6.1e-03	2.4e-03	8.5e-03	0.0
TIC Groupings						
Propyl Benzenes	5.1e-03	9.3e-05	2.5e-01	2.3e-03	2.5e-01	0.1
Propenyl Benzenes	1.2e-03	2.3e-05	4.1e-01	3.8e-03	4.2e-01	0.1
Ethyl Methyl Benzenes	3.4e-02	6.3e-04	1.7e-01	3.1e-03	1.7e-01	0.0
Methyl Propyl Benzenes	3.8e-03	7.0e-05	1.9e-01	1.7e-03	1.9e-01	0.0
Methyl Ethenyl Benzenes	1.7e-03	3.1e-05	5.7e-01	5.2e-03	5.8e-01	0.1
Trimethyl Benzenes	2.0e-02	3.7e-04	5.1e-02	9.3e-04	5.1e-02	0.0
Dimethyl ethyl benzenes	3.1e-03	5.6e-05	6.1e-02	5.6e-04	6.2e-02	0.0
Tetramethyl Benzenes	2.6e-03	4.8e-05	6.6e-03	1.2e-04	6.7e-03	0.0
Cyclic alkanes	0.0e+00	3.7e-05	ND	ND	0.0e+00	0.0
Halogenated Alkanes	8.2e-06	1.5e-07	9.1e-05	1.7e-06	9.2e-05	0.0
n-chain Alkanes	1.1e-02	2.1e-04	3.8e-01	3.4e-03	3.8e-01	0.1
Branched Alkanes	1.2e-02	2.3e-04	4.1e-01	3.8e-03	4.2e-01	0.1
Branched Alkenes/Alkynes	0.0e+00	1.5e-07	ND	ND	0.0e+00	0.0
Methylated Ketones	7.0e-06	1.3e-07	7.4e-05	1.3e-06	7.5e-05	0.0
Simple Ketones	3.1e-05	5.8e-07	1.3e-03	1.2e-05	1.3e-03	0.0
Simple Alcohols	9.3e-07	1.7e-08	1.9e-05	1.7e-07	1.9e-05	0.0
Cyclic Alcohols	5.8e-05	1.1e-06	3.9e-04	3.6e-06	3.9e-04	0.0
Cyclic Acids	7.4e-04	1.4e-05	2.5e-04	3.4e-06	2.5e-04	0.0
Non-Cyclic Acids	1.0e-02	1.9e-04	2.5e-01	2.3e-03	2.5e-01	0.1
			Total	Total	Total	Total
			3.3e+02	8.4e+01	4.2e+02	100.0

Table X - 37

SUMMARY OF NONCANCER HAZARDS

American Chemical Services Remedial Investigation
Griffith Indiana

Medium: Soil - All Depths
Source Area: Kapica-Pazmey

Population: Onsite Resident
Land Use: Future Site Conditions

CHEMICAL OF POTENTIAL CONCERN	CHRONIC DAILY INTAKE (mg/kg-d)		HAZARD QUOTIENT			
	Dermal Absorp.	Ingestion	Dermal Absorp.	Ingestion	Total	% of Total

This table presents chronic daily intakes and hazard quotients for chemicals of potential concern. Hazard quotients are calculated by dividing the chronic daily intake by the reference dose. Chemical-specific hazard quotients are summed for each exposure route to arrive at a total hazard value. In some cases, hazard quotients were not determined (ND) because reference doses are not available.

JAH/jah/
VERSION 6/19/91
[ACS.2020.BRA]R-H.W20

Table X - 38

SUMMARY OF CANCER RISKS

American Chemical Services Remedial Investigation
Griffith Indiana

Medium: Soils - All Depths
Source Area: Kapica-Pazmey
Population: Onsite Resident
Land Use: Future Site Conditions

CHEMICAL OF POTENTIAL CONCERN	CHRONIC DAILY INTAKE (mg/kg-d)		CANCER RISKS			
	Dermal Absorp.	Ingestion	Dermal Absorp.	Ingestion	Total	% of Total
VOLATILES						
Chloroethane	1.2e-07	2.2e-09	ND	ND	0.0e+00	0.0
Methylene chloride	1.2e-06	2.2e-08	1.1e-08	1.6e-10	1.1e-08	0.0
Acetone	1.4e-04	2.7e-06	ND	ND	0.0e+00	0.0
Carbon disulfide	5.0e-08	9.2e-10	ND	ND	0.0e+00	0.0
1,1-Dichloroethene	1.3e-05	2.4e-07	7.9e-06	1.4e-07	8.0e-06	0.0
1,2-Dichloroethene (cis)	4.3e-04	7.9e-06	ND	ND	0.0e+00	0.0
Chloroform	1.7e-07	3.1e-09	1.0e-09	1.9e-11	1.0e-09	0.0
1,2-Dichloroethane	2.8e-07	5.2e-09	2.6e-08	4.7e-10	2.6e-08	0.0
2-Butanone	1.5e-03	2.7e-05	ND	ND	0.0e+00	0.0
1,1,1-Trichloroethane	9.3e-06	1.7e-07	ND	ND	0.0e+00	0.0
1,2-Dichloropropane	4.0e-07	7.4e-09	5.5e-08	5.0e-10	5.5e-08	0.0
Trichloroethene	4.2e-03	7.6e-05	4.6e-05	8.4e-07	4.7e-05	0.3
Benzene	3.8e-04	7.0e-06	2.2e-05	2.0e-07	2.2e-05	0.1
4-Methyl-2-pentanone	4.5e-03	8.2e-05	ND	ND	0.0e+00	0.0
2-Hexanone	6.5e-06	1.2e-07	ND	ND	0.0e+00	0.0
Tetrachloroethene	1.3e-02	2.4e-04	6.7e-04	1.2e-05	6.8e-04	3.8
Toluene	3.2e-01	5.8e-03	ND	ND	0.0e+00	0.0
Chlorobenzene	4.5e-04	8.2e-06	ND	ND	0.0e+00	0.0
Ethylbenzene	7.2e-02	1.3e-03	ND	ND	0.0e+00	0.0
Styrene	4.3e-03	7.9e-05	1.4e-04	2.4e-06	1.5e-04	0.8
Xylenes (mixed)	3.8e-01	7.0e-03	ND	ND	0.0e+00	0.0
SEMIVOLATILES						
Phenol	2.4e-04	4.4e-06	ND	ND	0.0e+00	0.0
1,2-Dichlorobenzene	9.8e-06	1.8e-07	ND	ND	0.0e+00	0.0
2-Methylphenol	7.8e-05	1.4e-06	ND	ND	0.0e+00	0.0
4-Methylphenol	7.7e-05	1.4e-06	ND	ND	0.0e+00	0.0
Isophorone	1.6e-03	3.0e-05	1.3e-05	1.2e-07	1.3e-05	0.1
2,4-Dimethylphenol	8.2e-05	1.5e-06	ND	ND	0.0e+00	0.0
Benzoic Acid	1.2e-05	2.1e-07	ND	ND	0.0e+00	0.0
Naphthalene	1.6e-03	3.0e-05	ND	ND	0.0e+00	0.0
2-Methylnaphthalene	9.3e-04	1.7e-05	ND	ND	0.0e+00	0.0
2,4,5-Trichlorophenol	2.8e-06	5.2e-08	ND	ND	0.0e+00	0.0
Dimethylphthalate	9.7e-05	1.8e-06	ND	ND	0.0e+00	0.0
Acenaphthene	1.2e-05	2.2e-07	ND	ND	0.0e+00	0.0
4-Nitrophenol	1.1e-03	2.0e-05	ND	ND	0.0e+00	0.0

Table X - 38

SUMMARY OF CANCER RISKS

American Chemical Services Remedial Investigation
Griffith Indiana

Medium: Soils - All Depths
Source Area: Kapica-Pazmey
Population: Onsite Resident
Land Use: Future Site Conditions

CHEMICAL OF POTENTIAL CONCERN	CHRONIC DAILY INTAKE (mg/kg-d)		CANCER RISKS			
	Dermal Absorp.	Ingestion	Dermal Absorp.	Ingestion	Total	% of Total
Dibenzofuran	1.1e-05	2.0e-07	ND	ND	0.0e+00	0.0
2,4-Dinitrotoluene	1.4e-05	2.6e-07	1.9e-05	1.7e-07	1.9e-05	0.1
Diethylphthalate	8.3e-05	1.5e-06	ND	ND	0.0e+00	0.0
Fluorene	1.3e-05	2.3e-07	ND	ND	0.0e+00	0.0
N-nitrosodiphenylamine	7.2e-05	1.3e-06	3.6e-07	6.4e-09	3.6e-07	0.0
Pentachlorophenol	2.7e-04	4.9e-06	3.6e-05	5.9e-07	3.6e-05	0.2
Phenanthrene	8.0e-05	1.5e-06	ND	ND	0.0e+00	0.0
Anthracene	1.2e-05	2.1e-07	ND	ND	0.0e+00	0.0
Di-n-butylphthalate	1.6e-03	2.9e-05	ND	ND	0.0e+00	0.0
Fluoranthene	1.0e-04	1.8e-06	ND	ND	0.0e+00	0.0
Pyrene	7.0e-05	1.3e-06	ND	ND	0.0e+00	0.0
Butylbenzylphthalate	8.5e-04	1.6e-05	ND	ND	0.0e+00	0.0
Benzo(a)anthracene	4.0e-05	7.3e-07	ND	ND	0.0e+00	0.0
Chrysene	2.5e-05	4.6e-07	ND	ND	0.0e+00	0.0
bis(2-ethylhexyl)phthalate	9.0e-03	1.6e-04	5.0e-04	2.3e-06	5.1e-04	2.8
Di-n-octyl Phthalate	6.3e-04	1.2e-05	ND	ND	0.0e+00	0.0
Benzo(b)fluoranthene	6.5e-05	1.2e-06	ND	ND	0.0e+00	0.0
Benzo(k)fluoranthene	6.5e-05	1.2e-06	ND	ND	0.0e+00	0.0
Benzo(a)pyrene	2.3e-05	4.3e-07	ND	ND	0.0e+00	0.0
Ideno(1,2,3-cd)pyrene	1.4e-05	2.5e-07	ND	ND	0.0e+00	0.0
Dibenz(a,h)anthracene	4.5e-06	8.2e-08	ND	ND	0.0e+00	0.0
Benzo(g,h,i)perylene	1.8e-05	3.4e-07	ND	ND	0.0e+00	0.0
Total Carcinogenic PAHs	2.4e-04	4.3e-06	5.4e-03	5.0e-05	5.5e-03	30.7
PESTICIDE/PCB						
Aldrin	3.8e-07	7.0e-09	1.3e-05	1.2e-07	1.3e-05	0.1
Endosulfan I	3.4e-07	6.2e-09	ND	ND	0.0e+00	0.0
4,4'-DDD	1.8e-06	3.3e-08	8.7e-07	7.9e-09	8.7e-07	0.0
PCB	4.2e-04	2.9e-05	1.1e-02	2.2e-04	1.1e-02	60.9
METALS						
Aluminum	5.7e-03	3.2e-03	ND	ND	0.0e+00	0.0
Antimony	4.7e-05	2.6e-05	ND	ND	0.0e+00	0.0
Barium	3.2e-03	1.7e-03	ND	ND	0.0e+00	0.0
Cadmium (food/soil)	9.7e-05	5.3e-05	ND	ND	0.0e+00	0.0
Calcium	8.7e-02	4.8e-02	ND	ND	0.0e+00	0.0
Chromium VI	1.7e-03	9.4e-04	ND	ND	0.0e+00	0.0

Table X - 38

SUMMARY OF CANCER RISKS

American Chemical Services Remedial Investigation
Griffith Indiana

Medium: Soils - All Depths
Source Area: Kapica-Pazmey

Population: Onsite Resident
Land Use: Future Site Conditions

CHEMICAL OF POTENTIAL CONCERN	CHRONIC DAILY INTAKE (mg/kg-d)		CANCER RISKS			
	Dermal Absorp.	Ingestion	Dermal Absorp.	Ingestion	Total	% of Total
Cobalt	8.2e-05	4.5e-05	ND	ND	0.0e+00	0.0
Copper	2.5e-03	1.4e-03	ND	ND	0.0e+00	0.0
Iron	3.7e-02	2.0e-02	ND	ND	0.0e+00	0.0
Lead	9.0e-03	4.9e-03	ND	ND	0.0e+00	0.0
Magnesium	2.0e-02	1.1e-02	ND	ND	0.0e+00	0.0
Manganese	8.6e-04	4.7e-04	ND	ND	0.0e+00	0.0
Mercury	5.3e-06	2.9e-06	ND	ND	0.0e+00	0.0
Nickel	1.1e-04	6.0e-05	ND	ND	0.0e+00	0.0
Selenium	9.6e-06	5.3e-06	ND	ND	0.0e+00	0.0
Silver	3.6e-05	2.0e-05	ND	ND	0.0e+00	0.0
Vanadium	2.2e-05	1.2e-05	ND	ND	0.0e+00	0.0
Zinc	8.8e-03	4.8e-03	ND	ND	0.0e+00	0.0
Cyanide	3.7e-05	2.0e-05	ND	ND	0.0e+00	0.0
TIC Groupings						
Propyl Benzenes	2.2e-03	4.0e-05	ND	ND	0.0e+00	0.0
Propenyl Benzenes	5.3e-04	9.8e-06	ND	ND	0.0e+00	0.0
Ethyl Methyl Benzenes	1.5e-02	2.7e-04	ND	ND	0.0e+00	0.0
Methyl Propyl Benzenes	1.6e-03	3.0e-05	ND	ND	0.0e+00	0.0
Methyl Ethenyl Benzenes	7.3e-04	1.3e-05	ND	ND	0.0e+00	0.0
Trimethyl Benzenes	8.7e-03	1.6e-04	ND	ND	0.0e+00	0.0
Dimethyl ethyl benzenes	1.3e-03	2.4e-05	ND	ND	0.0e+00	0.0
Tetramethyl Benzenes	1.1e-03	2.1e-05	ND	ND	0.0e+00	0.0
Cyclic alkanes	0.0e+00	1.6e-05	ND	ND	0.0e+00	0.0
Halogenated Alkanes	3.5e-06	6.4e-08	ND	ND	0.0e+00	0.0
n-chain Alkanes	4.8e-03	8.9e-05	ND	ND	0.0e+00	0.0
Branched Alkanes	5.3e-03	9.8e-05	ND	ND	0.0e+00	0.0
Branched Alkenes/Alkynes	0.0e+00	6.4e-08	ND	ND	0.0e+00	0.0
Methylated Ketones	3.0e-06	5.5e-08	ND	ND	0.0e+00	0.0
Simple Ketones	1.3e-05	2.5e-07	ND	ND	0.0e+00	0.0
Simple Alcohols	4.0e-07	7.3e-09	ND	ND	0.0e+00	0.0
Cyclic Alcohols	2.5e-05	4.6e-07	ND	ND	0.0e+00	0.0
Cyclic Acids	3.2e-04	5.8e-06	ND	ND	0.0e+00	0.0
Non-Cyclic Acids	4.3e-03	7.9e-05	ND	ND	0.0e+00	0.0
			Total 1.8e-02	Total 2.9e-04	Total 1.8e-02	Total 100.0

Table X - 38

SUMMARY OF CANCER RISKS

American Chemical Services Remedial Investigation
Griffith Indiana

Medium: Soils - All Depths
Source Area: Kapica-Pazmey

Population: Onsite Resident
Land Use: Future Site Conditions

CHEMICAL OF POTENTIAL CONCERN	CHRONIC DAILY INTAKE (mg/kg-d)		CANCER RISKS			
	Dermal Absorp.	Ingestion	Dermal Absorp.	Ingestion	Total	% of Total

This table presents chronic daily intakes and cancer risks for chemicals of potential concern. Cancer risks are calculated by multiplying the chronic daily intake by the slope factor. Chemical-specific cancer risks are summed for each exposure route to arrive at a total risk value. In some cases, cancer risks were not determined (ND) because slope factors are not available.

JAH/jah/
6/19/91
[ACS.2020.BRA]R-C.W20

Table X - 39

SUMMARY OF NONCANCER HAZARDS

American Chemical Services Remedial Investigation
Griffith Indiana

Medium: Surface Water
Source Area: ACS

Population: Onsite Resident Child
Land Use: Future Site Conditions

CHEMICAL OF POTENTIAL CONCERN	CHRONIC DAILY INTAKE (mg/kg-d)		HAZARD QUOTIENT			
	Dermal Absorp.	Ingestion	Dermal Absorp.	Ingestion	Total	% of Total
VOLATILES						
Chloroethane	2.1e-03	2.1e-06	ND	ND	0.0e+00	0.0
Acetone	2.7e-02	2.7e-05	2.9e-01	2.7e-04	2.9e-01	28.2
1,1-Dichloroethane	1.4e-04	1.4e-07	1.4e-03	1.4e-06	1.4e-03	0.1
1,2-Dichloroethene (cis)	2.1e-04	2.1e-07	2.3e-02	2.1e-05	2.3e-02	2.2
2-Butanone	5.0e-05	1.0e-05	2.0e-03	2.0e-04	2.2e-03	0.2
Benzene	3.6e-03	3.3e-05	ND	ND	0.0e+00	0.0
4-Methyl-2-pentanone	3.5e-03	3.5e-06	1.4e-01	7.0e-05	1.4e-01	13.8
Toluene	5.7e-04	5.7e-07	1.9e-03	2.8e-06	1.9e-03	0.2
Ethylbenzene	5.2e-04	3.8e-07	1.0e-02	3.8e-06	1.0e-02	1.0
Xylenes (mixed)	2.5e-03	2.5e-06	2.5e-03	1.2e-06	2.5e-03	0.2
SEMIVOLATILES						
Phenol	2.6e-05	3.2e-06	4.8e-05	5.3e-06	5.4e-05	0.0
bis(2-Chloroethyl) ether	2.7e-05	5.5e-06	ND	ND	0.0e+00	0.0
2-Methylphenol	5.6e-06	3.6e-07	1.4e-04	7.0e-06	1.4e-04	0.0
bis(2-Chloroisopropyl)ether	1.0e-05	2.1e-06	5.1e-04	5.2e-05	5.6e-04	0.1
4-Methylphenol	7.3e-04	4.2e-05	1.8e-02	8.4e-04	1.9e-02	1.8
Isophorone	1.8e-06	3.6e-07	1.8e-05	1.8e-06	1.9e-05	0.0
2,4-Dimethylphenol	8.4e-05	7.7e-07	8.4e-03	3.8e-05	8.5e-03	0.8
Benzoic Acid	2.9e-05	5.9e-06	9.8e-06	1.5e-06	1.1e-05	0.0
4-Chloro-3-methylphenol	7.8e-06	1.4e-07	ND	ND	0.0e+00	0.0
PESTICIDE/PCB						
PCB	3.2e-05	6.0e-08	ND	ND	0.0e+00	0.0
METALS						
Aluminum	1.0e-04	6.8e-05	ND	ND	0.0e+00	0.0
Arsenic	4.8e-06	3.2e-06	5.0e-03	3.2e-03	8.2e-03	0.8
Barium	3.4e-05	2.3e-05	1.4e-02	3.3e-04	1.4e-02	1.4
Beryllium	2.9e-08	1.9e-08	5.7e-05	3.8e-06	6.1e-05	0.0
Cadmium (water)	7.6e-08	5.1e-08	2.2e-03	1.0e-04	2.3e-03	0.2
Calcium	3.5e-02	2.4e-02	ND	ND	0.0e+00	0.0
Chromium VI	4.2e-06	2.0e-06	1.7e-03	4.0e-04	2.1e-03	0.2
Copper	2.0e-06	1.4e-06	ND	ND	0.0e+00	0.0

Table X - 39

SUMMARY OF NONCANCER HAZARDS

American Chemical Services Remedial Investigation
Griffith Indiana

Medium: Surface Water
Source Area: ACS

Population: Onsite Resident Child
Land Use: Future Site Conditions

CHEMICAL OF POTENTIAL CONCERN	CHRONIC DAILY INTAKE (mg/kg-d)		HAZARD QUOTIENT			
	Dermal Absorp.	Ingestion	Dermal Absorp.	Ingestion	Total	% of Total
Iron	1.5e-03	1.0e-03	ND	ND	0.0e+00	0.0
Lead	2.5e-06	1.7e-06	3.6e-02	1.2e-02	4.8e-02	4.7
Magnesium	6.6e-03	4.4e-03	ND	ND	0.0e+00	0.0
Manganese	2.0e-04	1.3e-04	2.5e-02	1.3e-03	2.6e-02	2.5
Nickel	8.5e-06	5.7e-06	4.2e-03	2.8e-04	4.5e-03	0.4
Potassium	3.2e-03	2.1e-03	ND	ND	0.0e+00	0.0
Selenium	1.9e-07	1.3e-07	ND	ND	0.0e+00	0.0
Sodium	8.7e-03	5.9e-03	ND	ND	0.0e+00	0.0
Zinc	9.3e-06	6.3e-06	1.6e-04	3.1e-05	1.9e-04	0.0
TIC Groupings						
n-chain Alkanes	9.3e-03	9.3e-06	3.1e-02	1.5e-04	3.1e-02	3.1
Ethers	1.7e-05	1.0e-06	6.7e-05	2.0e-06	6.9e-05	0.0
Methylated Phenols	1.1e-04	6.4e-06	2.8e-03	1.3e-04	2.9e-03	0.3
Methylated Ketones	4.3e-04	4.3e-07	4.5e-03	4.3e-06	4.5e-03	0.4
Diols	5.0e-06	1.0e-06	5.0e-06	5.0e-07	5.5e-06	0.0
Cyclic Alcohols	1.5e-04	3.0e-05	9.9e-04	1.0e-04	1.1e-03	0.1
Oxygenated Alcohols	1.3e-05	2.6e-06	ND	ND	0.0e+00	0.0
Cyclic Acids	6.7e-05	1.4e-05	2.2e-05	3.4e-06	2.6e-05	0.0
Non-Cyclic Acids	1.4e-02	1.4e-05	3.6e-01	1.8e-04	3.6e-01	35.2
Amines	4.3e-03	4.3e-06	1.7e-02	8.5e-06	1.7e-02	1.7
Furans	0.0e+00	5.3e-06	ND	ND	0.0e+00	0.0
			total	total	total	total
			1.0e+00	2.0e-02	1.0e+00	100.0

This table presents chronic daily intakes and hazard quotients for chemicals of potential concern. Hazard quotients are calculated by dividing the chronic daily intake by the reference dose. Chemical-specific hazard quotients are summed for each exposure route to arrive at a total hazard value. In some cases, hazard quotients were not determined (ND) because reference doses are not available.

JAH/jah/BJC
VERSION 6/15/91
[ACS.2020.BRA]H-H.W20

Table X - 40

SUMMARY OF CANCER RISKS

American Chemical Services Remedial Investigation
Griffith Indiana

Medium: Surface Water
Source Area: ACS

Population: Onsite Child Resident
Land Use: Future Site Conditions

CHEMICAL OF POTENTIAL CONCERN	CHRONIC DAILY INTAKE (mg/kg-d)		CANCER RISKS			
	Dermal Absorp.	Ingestion	Dermal Absorp.	Ingestion	Total	% of Total
VOLATILES						
Chloroethane	3.1e-04	3.1e-07	ND	ND	0.0e+00	0.0
Acetone	3.9e-03	3.9e-06	ND	ND	0.0e+00	0.0
1,1-Dichloroethane	2.0e-05	2.0e-08	ND	ND	0.0e+00	0.0
1,2-Dichloroethene (cis)	3.1e-05	3.1e-08	ND	ND	0.0e+00	0.0
2-Butanone	7.1e-06	1.4e-06	ND	ND	0.0e+00	0.0
Benzene	5.2e-04	4.7e-06	3.0e-05	1.4e-07	3.0e-05	19.1
4-Methyl-2-pentanone	5.0e-04	5.0e-07	ND	ND	0.0e+00	0.0
Toluene	8.2e-05	8.1e-08	ND	ND	0.0e+00	0.0
Ethylbenzene	7.5e-05	5.5e-08	ND	ND	0.0e+00	0.0
Xylenes (mixed)	3.6e-04	3.6e-07	ND	ND	0.0e+00	0.0
SEMIVOLATILES						
Phenol	3.7e-06	4.6e-07	ND	ND	0.0e+00	0.0
bis(2-Chloroethyl) ether	3.9e-06	7.8e-07	8.6e-06	8.6e-07	9.4e-06	6.0
2-Methylphenol	7.9e-07	5.1e-08	ND	ND	0.0e+00	0.0
bis(2-Chloroisopropyl)ether	1.5e-06	3.0e-07	ND	ND	0.0e+00	0.0
4-Methylphenol	1.0e-04	6.0e-06	ND	ND	0.0e+00	0.0
Isophorone	2.5e-07	5.1e-08	2.0e-09	2.1e-10	2.2e-09	0.0
2,4-Dimethylphenol	1.2e-05	1.1e-07	ND	ND	0.0e+00	0.0
Benzoic Acid	4.2e-06	8.5e-07	ND	ND	0.0e+00	0.0
4-Chloro-3-methylphenol	1.1e-06	2.0e-08	ND	ND	0.0e+00	0.0
PESTICIDE/PCB						
PCB	4.5e-06	8.5e-09	1.2e-04	6.6e-08	1.2e-04	73.4
METALS						
Aluminum	1.5e-05	9.8e-06	ND	ND	0.0e+00	0.0
Arsenic	6.8e-07	4.6e-07	1.3e-06	8.2e-07	2.1e-06	1.3
Barium	4.9e-06	3.3e-06	ND	ND	0.0e+00	0.0
Beryllium	4.1e-09	2.7e-09	1.8e-07	1.2e-08	1.9e-07	0.1
Cadmium (water)	1.1e-08	7.3e-09	ND	ND	0.0e+00	0.0
Calcium	5.1e-03	3.4e-03	ND	ND	0.0e+00	0.0
Chromium VI	5.9e-07	2.8e-07	ND	ND	0.0e+00	0.0
Copper	2.9e-07	1.9e-07	ND	ND	0.0e+00	0.0

Table X - 40

SUMMARY OF CANCER RISKS

American Chemical Services Remedial Investigation
Griffith Indiana

Medium: Surface Water
Source Area: ACS

Population: Onsite Child Resident
Land Use: Future Site Conditions

CHEMICAL OF POTENTIAL CONCERN	CHRONIC DAILY INTAKE (mg/kg-d)		CANCER RISKS			
	Dermal Absorp.	Ingestion	Dermal Absorp.	Ingestion	Total	% of Total
Iron	2.2e-04	1.5e-04	ND	ND	0.0e+00	0.0
Lead	3.6e-07	2.4e-07	ND	ND	0.0e+00	0.0
Magnesium	9.4e-04	6.3e-04	ND	ND	0.0e+00	0.0
Manganese	2.8e-05	1.9e-05	ND	ND	0.0e+00	0.0
Nickel	1.2e-06	8.1e-07	ND	ND	0.0e+00	0.0
Potassium	4.6e-04	3.1e-04	ND	ND	0.0e+00	0.0
Selenium	2.8e-08	1.9e-08	ND	ND	0.0e+00	0.0
Sodium	1.2e-03	8.4e-04	ND	ND	0.0e+00	0.0
Zinc	1.3e-06	9.0e-07	ND	ND	0.0e+00	0.0
TIC Groupings						
n-chain Alkanes	1.3e-03	1.3e-06	ND	ND	0.0e+00	0.0
Ethers	2.4e-06	1.4e-07	ND	ND	0.0e+00	0.0
Methylated Phenols	1.6e-05	9.2e-07	ND	ND	0.0e+00	0.0
Methylated Ketones	6.1e-05	6.1e-08	ND	ND	0.0e+00	0.0
Diols	7.1e-07	1.4e-07	ND	ND	0.0e+00	0.0
Cyclic Alcohols	2.1e-05	4.3e-06	ND	ND	0.0e+00	0.0
Oxygenated Alcohols	1.8e-06	3.7e-07	ND	ND	0.0e+00	0.0
Cyclic Acids	9.6e-06	1.9e-06	ND	ND	0.0e+00	0.0
Non-Cyclic Acids	2.0e-03	2.0e-06	ND	ND	0.0e+00	0.0
Amines	6.1e-04	6.1e-07	ND	ND	0.0e+00	0.0
Furans	0.0e+00	7.6e-07	ND	ND	0.0e+00	0.0
			Total 1.6e-04	Total 1.9e-06	Total 1.6e-04	Total 100.0

This table presents chronic daily intakes and cancer risks for chemicals of potential concern. Cancer risks are calculated by multiplying the chronic daily intake by the slope factor. Chemical-specific cancer risks are summed for each exposure route to arrive at a total risk value. In some cases, cancer risks were not determined (ND) because slope factors are not available.

JAH/jah/BJC
6/15/91
[ACS.2020.BRA]H-C.W20

Table X - 41

SUMMARY OF NONCANCER HAZARDS

American Chemical Services Remedial Investigation
Griffith Indiana

Medium: Sediment
Source Area: ACS

Population: Child Resident
Land Use: Future Site Conditions

CHEMICAL OF POTENTIAL CONCERN	CHRONIC DAILY INTAKE (mg/kg-d)		HAZARD QUOTIENT			
	Dermal Absorp.	Ingestion	Dermal Absorp.	Ingestion	Total	% of Total
VOLATILES						
Chloroethane	1.7e-07	2.8e-09	ND	ND	0.0e+00	0.0
Methylene chloride	3.8e-07	6.1e-09	5.1e-10	6.6e-12	5.1e-10	0.0
1,2-Dichloroethene (cis)	8.2e-08	1.3e-09	ND	ND	0.0e+00	0.0
Chloroform	8.7e-08	1.4e-09	7.6e-11	1.2e-12	7.7e-11	0.0
2-Butanone	1.3e-07	2.1e-09	ND	ND	0.0e+00	0.0
1,1,1-Trichloroethane	4.4e-08	7.1e-10	ND	ND	0.0e+00	0.0
Benzene	6.3e-06	1.0e-07	5.2e-08	4.2e-10	5.3e-08	0.0
Toluene	7.2e-07	1.2e-08	ND	ND	0.0e+00	0.0
Ethylbenzene	1.9e-07	3.1e-09	ND	ND	0.0e+00	0.0
Xylenes (mixed)	2.3e-07	3.8e-09	ND	ND	0.0e+00	0.0
SEMIVOLATILES						
Phenol	2.8e-06	4.5e-08	ND	ND	0.0e+00	0.0
bis(2-Chloroethyl) ether	5.3e-06	8.6e-08	1.7e-06	1.3e-08	1.7e-06	0.8
bis(2-Chloroisopropyl)ether	8.4e-06	1.4e-07	ND	ND	0.0e+00	0.0
4-Methylphenol	4.0e-06	6.4e-08	ND	ND	0.0e+00	0.0
2,4-Dimethylphenol	5.3e-06	8.6e-08	ND	ND	0.0e+00	0.0
Benzoic Acid	1.8e-05	2.8e-07	ND	ND	0.0e+00	0.0
Naphthalene	5.2e-06	8.5e-08	ND	ND	0.0e+00	0.0
2-Methylnaphthalene	5.0e-06	8.1e-08	ND	ND	0.0e+00	0.0
Dibenzofuran	3.4e-06	5.5e-08	ND	ND	0.0e+00	0.0
Fluorene	5.8e-06	9.4e-08	ND	ND	0.0e+00	0.0
Hexachlorobenzene	2.0e-06	3.3e-08	9.4e-07	7.6e-09	9.4e-07	0.4
Pentachlorophenol	3.4e-06	5.5e-08	6.4e-08	9.4e-10	6.5e-08	0.0
Phenanthrene	5.5e-06	9.0e-08	ND	ND	0.0e+00	0.0
Anthracene	1.5e-06	2.4e-08	ND	ND	0.0e+00	0.0
Di-n-butylphthalate	2.5e-06	4.0e-08	ND	ND	0.0e+00	0.0
Fluoranthene	7.7e-06	1.2e-07	ND	ND	0.0e+00	0.0
Pyrene	7.3e-06	1.2e-07	ND	ND	0.0e+00	0.0
Butylbenzylphthalate	2.5e-06	4.0e-08	ND	ND	0.0e+00	0.0
Benzo(a)anthracene	6.7e-06	1.1e-07	ND	ND	0.0e+00	0.0
Chrysene	6.3e-06	1.0e-07	ND	ND	0.0e+00	0.0
bis(2-ethylhexyl)phthalate	7.4e-05	1.2e-06	5.9e-07	2.4e-09	6.0e-07	0.3
Benzo(b)fluoranthene	9.1e-06	1.5e-07	ND	ND	0.0e+00	0.0
Benzo(k)fluoranthene	9.3e-06	1.5e-07	ND	ND	0.0e+00	0.0
Benzo(a)pyrene	6.1e-06	9.9e-08	ND	ND	0.0e+00	0.0

Table X - 41

SUMMARY OF NONCANCER HAZARDS

American Chemical Services Remedial Investigation
Griffith Indiana

Medium: Sediment
Source Area: ACS

Population: Child Resident
Land Use: Future Site Conditions

CHEMICAL OF POTENTIAL CONCERN	CHRONIC DAILY INTAKE (mg/kg-d)		HAZARD QUOTIENT			
	Dermal Absorp.	Ingestion	Dermal Absorp.	Ingestion	Total	% of Total
Ideno(1,2,3-cd)pyrene	4.7e-06	7.7e-08	ND	ND	0.0e+00	0.0
Dibenz(a,h)anthracene	2.9e-06	4.7e-08	ND	ND	0.0e+00	0.0
Benzo(g,h,i)perylene	5.3e-06	8.5e-08	ND	ND	0.0e+00	0.0
Total Carcinogenic PAHs	4.5e-05	7.3e-07	1.5e-04	1.2e-06	1.5e-04	69.6
PESTICIDE/PCB						
Heptachlor epoxide	3.9e-07	6.3e-09	1.0e-06	8.2e-09	1.0e-06	0.5
PCB	1.6e-05	9.8e-07	5.9e-05	1.1e-06	6.0e-05	27.8
METALS						
Barium	3.5e-08	1.7e-08	ND	ND	0.0e+00	0.0
Calcium	2.7e-05	1.3e-05	ND	ND	0.0e+00	0.0
Chromium VI	2.2e-08	1.1e-08	ND	ND	0.0e+00	0.0
Copper	4.6e-08	2.2e-08	ND	ND	0.0e+00	0.0
Magnesium	9.1e-06	4.4e-06	ND	ND	0.0e+00	0.0
Mercury	6.0e-10	2.9e-10	ND	ND	0.0e+00	0.0
Nickel	1.0e-08	4.9e-09	ND	ND	0.0e+00	0.0
Selenium	2.8e-10	1.4e-10	ND	ND	0.0e+00	0.0
Vanadium	1.7e-08	8.2e-09	ND	ND	0.0e+00	0.0
TIC Groupings						
Halogenated Alkanes	8.5e-05	1.4e-06	ND	ND	0.0e+00	0.0
Branched Alkanes	1.5e-05	2.4e-07	ND	ND	0.0e+00	0.0
Phthalates	3.2e-05	5.2e-07	ND	ND	0.0e+00	0.0
Methylated Phenols	3.2e-05	5.2e-07	ND	ND	0.0e+00	0.0
Methylated Ketones	3.7e-07	5.9e-09	ND	ND	0.0e+00	0.0
Cyclic Alcohols	1.3e-05	2.1e-07	ND	ND	0.0e+00	0.0
Non-Cyclic Acids	2.0e-05	3.3e-07	ND	ND	0.0e+00	0.0
PCBs	0.0e+00	1.1e-06	ND	1.2e-06	1.2e-06	0.6
Furans	0.0e+00	3.8e-08	ND	ND	0.0e+00	0.0
			Total 2.1e-04	Total 3.5e-06	Total 2.2e-04	Total 100.0

Table X - 41

SUMMARY OF NONCANCER HAZARDS

American Chemical Services Remedial Investigation
Griffith Indiana

Medium: Sediment
Source Area: ACS

Population: Child Resident
Land Use: Future Site Conditions

CHEMICAL OF POTENTIAL CONCERN	CHRONIC DAILY INTAKE (mg/kg-d)		HAZARD QUOTIENT			
	Dermal Absorp.	Ingestion	Dermal Absorp.	Ingestion	Total	% of Total

This table presents chronic daily intakes and hazard quotients for chemicals of potential concern. Hazard quotients are calculated by dividing the chronic daily intake by the reference dose. Chemical-specific hazard quotients are summed for each exposure route to arrive at a total hazard value. In some cases, hazard quotients were not determined (ND) because reference doses are not available.

JAH/jah/
VERSION 6/19/91
[ACS.2020.BRA]I-H.W20

Table X - 42

SUMMARY OF CANCER RISKS

American Chemical Services Remedial Investigation
Griffith Indiana

Medium: Sediment
Source Area: ACS

Population: Child Resident
Land Use: Future Site Conditions

CHEMICAL OF POTENTIAL CONCERN	CHRONIC DAILY INTAKE (mg/kg-d)		CANCER RISKS			
	Dermal Absorp.	Ingestion	Dermal Absorp.	Ingestion	Total	% of Total
VOLATILES						
Chloroethane	2.4e-08	3.9e-10	ND	ND	0.0e+00	0.0
Methylene chloride	5.4e-08	8.8e-10	5.1e-10	6.6e-12	5.1e-10	0.0
1,2-Dichloroethene (cis)	1.2e-08	1.9e-10	ND	ND	0.0e+00	0.0
Chloroform	1.2e-08	2.0e-10	7.6e-11	1.2e-12	7.7e-11	0.0
2-Butanone	1.9e-08	3.0e-10	ND	ND	0.0e+00	0.0
1,1,1-Trichloroethane	6.3e-09	1.0e-10	ND	ND	0.0e+00	0.0
Benzene	9.0e-07	1.5e-08	5.2e-08	4.2e-10	5.3e-08	0.0
Toluene	1.0e-07	1.7e-09	ND	ND	0.0e+00	0.0
Ethylbenzene	2.7e-08	4.4e-10	ND	ND	0.0e+00	0.0
Xylenes (mixed)	3.3e-08	5.4e-10	ND	ND	0.0e+00	0.0
SEMIVOLATILES						
Phenol	4.0e-07	6.4e-09	ND	ND	0.0e+00	0.0
bis(2-Chloroethyl) ether	7.5e-07	1.2e-08	1.7e-06	1.3e-08	1.7e-06	0.8
bis(2-Chloroisopropyl)ether	1.2e-06	2.0e-08	ND	ND	0.0e+00	0.0
4-Methylphenol	5.6e-07	9.2e-09	ND	ND	0.0e+00	0.0
2,4-Dimethylphenol	7.6e-07	1.2e-08	ND	ND	0.0e+00	0.0
Benzoic Acid	2.5e-06	4.1e-08	ND	ND	0.0e+00	0.0
Naphthalene	7.5e-07	1.2e-08	ND	ND	0.0e+00	0.0
2-Methylnaphthalene	7.1e-07	1.2e-08	ND	ND	0.0e+00	0.0
Dibenzofuran	4.8e-07	7.8e-09	ND	ND	0.0e+00	0.0
Fluorene	8.3e-07	1.3e-08	ND	ND	0.0e+00	0.0
Hexachlorobenzene	2.9e-07	4.7e-09	9.4e-07	7.6e-09	9.4e-07	0.4
Pentachlorophenol	4.8e-07	7.8e-09	6.4e-08	9.4e-10	6.5e-08	0.0
Phenanthrene	7.9e-07	1.3e-08	ND	ND	0.0e+00	0.0
Anthracene	2.1e-07	3.4e-09	ND	ND	0.0e+00	0.0
Di-n-butylphthalate	3.6e-07	5.8e-09	ND	ND	0.0e+00	0.0
Fluoranthene	1.1e-06	1.8e-08	ND	ND	0.0e+00	0.0
Pyrene	1.0e-06	1.7e-08	ND	ND	0.0e+00	0.0
Butylbenzylphthalate	3.6e-07	5.8e-09	ND	ND	0.0e+00	0.0
Benzo(a)anthracene	9.6e-07	1.5e-08	ND	ND	0.0e+00	0.0
Chrysene	9.0e-07	1.5e-08	ND	ND	0.0e+00	0.0
bis(2-ethylhexyl)phthalate	1.1e-05	1.7e-07	5.9e-07	2.4e-09	6.0e-07	0.3
Benzo(b)fluoranthene	1.3e-06	2.1e-08	ND	ND	0.0e+00	0.0
Benzo(k)fluoranthene	1.3e-06	2.2e-08	ND	ND	0.0e+00	0.0
Benzo(a)pyrene	8.7e-07	1.4e-08	ND	ND	0.0e+00	0.0

Table X - 42

SUMMARY OF CANCER RISKS

American Chemical Services Remedial Investigation
Griffith Indiana

Medium: Sediment
Source Area: ACS

Population: Child Resident
Land Use: Future Site Conditions

CHEMICAL OF POTENTIAL CONCERN	CHRONIC DAILY INTAKE (mg/kg-d)		CANCER RISKS			
	Dermal Absorp.	Ingestion	Dermal Absorp.	Ingestion	Total	% of Total
Ideno(1,2,3-cd)pyrene	6.8e-07	1.1e-08	ND	ND	0.0e+00	0.0
Dibenz(a,h)anthracene	4.2e-07	6.8e-09	ND	ND	0.0e+00	0.0
Benzo(g,h,i)perylene	7.5e-07	1.2e-08	ND	ND	0.0e+00	0.0
Total Carcinogenic PAHs	6.5e-06	1.0e-07	1.5e-04	1.2e-06	1.5e-04	69.6
PESTICIDE/PCB						
Heptachlor epoxide	5.6e-08	9.0e-10	1.0e-06	8.2e-09	1.0e-06	0.5
PCB	2.3e-06	1.4e-07	5.9e-05	1.1e-06	6.0e-05	27.8
METALS						
Barium	5.0e-09	2.4e-09	ND	ND	0.0e+00	0.0
Calcium	3.9e-06	1.9e-06	ND	ND	0.0e+00	0.0
Chromium VI	3.2e-09	1.5e-09	ND	ND	0.0e+00	0.0
Copper	6.6e-09	3.2e-09	ND	ND	0.0e+00	0.0
Magnesium	1.3e-06	6.3e-07	ND	ND	0.0e+00	0.0
Mercury	8.5e-11	4.2e-11	ND	ND	0.0e+00	0.0
Nickel	1.4e-09	7.0e-10	ND	ND	0.0e+00	0.0
Selenium	4.0e-11	1.9e-11	ND	ND	0.0e+00	0.0
Vanadium	2.4e-09	1.2e-09	ND	ND	0.0e+00	0.0
TIC Groupings						
Halogenated Alkanes	1.2e-05	2.0e-07	ND	ND	0.0e+00	0.0
Branched Alkanes	2.1e-06	3.4e-08	ND	ND	0.0e+00	0.0
Phthalates	4.6e-06	7.5e-08	ND	ND	0.0e+00	0.0
Methylated Phenols	4.6e-06	7.5e-08	ND	ND	0.0e+00	0.0
Methylated Ketones	5.2e-08	8.5e-10	ND	ND	0.0e+00	0.0
Cyclic Alcohols	1.8e-06	3.0e-08	ND	ND	0.0e+00	0.0
Non-Cyclic Acids	2.9e-06	4.7e-08	ND	ND	0.0e+00	0.0
PCBs	0.0e+00	1.6e-07	ND	1.2e-06	1.2e-06	0.6
Furans	0.0e+00	5.4e-09	ND	ND	0.0e+00	0.0
			Total 2.1e-04	Total 3.5e-06	Total 2.2e-04	Total 100.0

This table presents chronic daily intakes and cancer risks for chemicals of potential concern. Cancer

Table X - 42

SUMMARY OF CANCER RISKS

American Chemical Services Remedial Investigation
Griffith Indiana

Medium: Sediment
Source Area: ACS

Population: Child Resident
Land Use: Future Site Conditions

CHEMICAL OF POTENTIAL CONCERN	CHRONIC DAILY INTAKE (mg/kg-d)		CANCER RISKS			
	Dermal Absorp.	Ingestion	Dermal Absorp.	Ingestion	Total	% of Total

risks are calculated by multiplying the chronic daily intake by the slope factor. Chemical-specific cancer risks are summed for each exposure route to arrive at a total risk value. In some cases, cancer risks were not determined (ND) because slope factors are not available.

JAH/jah/
6/19/91
[ACS.2020.BRA]I-C.W20

Appendix Y

Groundwater Model

U.S.G.S Modflow model (Modflow) was used to simulate the groundwater flow system in the upper aquifer at the American Chemical Service NPL Site. Modflow is a three-dimensional finite-difference groundwater flow model developed by the U.S. Geological Survey. The model simulates groundwater flow within aquifers using a block-centered finite-difference approach. Multiple layers can be simulated as confined, unconfined, or a combination of both. The model can simulate external stresses including: flow to wells, areal recharge, evapotranspiration, flow to drains, flow through riverbeds, and general-head boundary conditions.

The version used for this report was compiled by S.S. Papadopulos & Associates for use with the MT3D method of characteristics solute transport simulation. Abstracts from the Modflow and MT3D model documentation are attached. The following items are also attached following this summary of the modeling procedure:

- Table summarizing input variables for the modeling.
- Figure showing Finite Difference Grid and Node Assignments
- Contour plots of the simulated water table under current conditions, and future conditions, assuming landfill closure, and closure of the ACS Firepond.
- Block diagrams of the current and future water table simulations
- Solute transport simulation results for 10 years, 20 years and 30 years to predict effects of Griffith municipal landfill in upper aquifer.
- Modflow input files for Current Conditions Simulation
- Modflow input files for Future Conditions Simulation
- MT3D input files for simulating 30 years of solute transport from the Griffith Municipal Landfill.

MODEL PARAMETERS

Modeling in this implementation was limited to the upper aquifer which is effectively isolated from lower aquifer by the clay confining layer found beneath the upper aquifer across the whole site. A single consistent set of time and space units are required for the model. The units selected for this implementation were "feet" for length units and "days" for the time unit. The following parameters resulted. Grid spacing, aquifer

thickness, and watertable elevation were reported in feet. Hydraulic conductivity units were in feet per day; transmissivity units were in feet-squared per day. Volumes of discharge and recharge were reported in cubic feet per day. The Strongly Implicit Procedure (SIP) module used to solve model.

A 30 column, 24 row finite difference grid, with 100-foot grid spacing was used for the simulation. Input variables are used in the model to define the: 1) aquifer geometry, 2) boundary conditions, 3) hydraulic characteristics of the aquifer, and 4) recharge/discharge interactions with the atmosphere and surface water bodies. The use of each of these groups of input parameters is discussed below. The attached figure, "Finite Difference Grid, Model Node Assignments," displays the orientation of the model over the modeled area, and indicates the boundary conditions used.

Aquifer Geometry

Aquifer thickness is variable because the a water table aquifer is being modeled. The base of the aquifer is assumed to be 620 feet msl. The water table elevation is variable across the Site, at 630 to 634 feet msl in the ACS facility, to less than 625 feet in vicinity of the municipal landfill where de-watering occurs continuously.

Boundary Conditions

The General Head Boundary (GHB) module was used to simulate the boundary conditions surrounding the site. GHB entries were made for each of the exterior nodes of the model. The "head" specified for each was the average groundwater elevation observed along that boundary during the RI. The conductivity value was selected to represent the transmissivity of the aquifer.

Hydraulic Properties

Aquifer characteristics are required for each layer of the model. These include: specific yield (storativity), hydraulic conductivity, and transmissivity, vertical hydraulic conductivity between model layers.

Specific Yield for the upper aquifer was assigned to be SF1 = 0.25. Since the aquifer being simulated is unconfined, it was not necessary to assign a storativity value.

Hydraulic Conductivity. Based on baildown tests conducted at the Phase I and II monitoring wells, it was determined that the hydraulic conductivity ranges from 2.4 to 24 feet/day ($8.5x10^{-4}$ to $8.5x10^{-3}$ cm/sec) from west to east across the site. The model calculated the transmissivity for each node, by multiplying the value by the saturated thickness, calculated as the difference between the water table elevation and elevation of the bottom of the layer. The bottom elevation (BOT-1) was assigned as 620 feet in the BCF input file.

Recharge/Discharge

Recharge is both lateral and vertical. Lateral recharge occurs to the upper aquifer from north and east of the Site. For the simulation, lateral recharge is controlled by the General Head Boundary assignments in column 30 and row 24.

Areal recharge was applied on the basis of 6 inches per year infiltration (0.00137 feet/day), in the RCH module. Areal recharge was not applied to discharge areas, including areas of wetland observed at the site. The primary recharge occurred across the ACS facility, where there is little relief and no vegetation to promote runoff and evapotranspiration. Storm sewers drain approximately one-third of the ACS compound directly into the fire pond. The area drained is approximately 50 times greater than the fire pond surface area, so the recharge to the pond was calculated to be 50 times the annual infiltration rate.

Primary discharge from the upper aquifer occurs toward the landfill de-watering area in the southwest, and toward the drainage ditch which runs to the northwest and west of the site. These were simulated by establishing "river nodes" with assigned head values in the RIV module. Locations are shown on the attached Figure.

MODEL IMPLEMENTATION

Existing Conditions Simulation

The model was implemented with the hydraulic data developed in the Remedial Investigation of the site. Initially the model was implemented to replicate the existing conditions at the site, with surface water discharge to the ACS Firepond and groundwater discharge to the excavation area in the Griffith Municipal Landfill. The

input files are included in this appendix. The DOS extension for the files is "*.AC1". Upon obtaining a reasonable replication of the observed water table configuration, the model was used to predict the future water table configuration, assuming that the Griffith Landfill is closed, so upper aquifer de-watering is discontinued, and the ACS fire pond is no longer used to receive surface water run-off.

The aquifer permeability values used were derived by conducting baildown tests at most of the site monitoring wells. The results suggested that the hydraulic conductivity is an order of magnitude higher on the east side of the site than along the western boundary of the ACS facility. Grain-size analysis of aquifer samples indicated that the aquifer matrix was coarser grained at the wells along the eastern boundary. Groundwater flow modeling was used to history match water table configurations. It was found that the observed head distribution in the upper aquifer was most reasonably achieved in the simulation where hydraulic conductivity values were 10x lower on the western side of the site.

The model was calibrated to known water table elevations, measured at approximately 50 points across the site, including surface water locations, measured at four different times throughout approximately one year. Sensitivity analysis was conducted with 1) aerial recharge by infiltrating precipitation and 2) hydraulic conductivity.

Average annual precipitation in northwestern Indiana is 44 inches. Simulations were run with assumed infiltration of 4 to 20 inches (10 to 50 percent). Infiltration amounts from 4 to 12 inches gave results which were consistent with field observations. Even 20 inches provided reasonable results. In otherwords, the model was relatively insensitive to variations in total infiltration amounts.

The use of lower hydraulic conductivity values caused significant deviations from the observed water table heads. However, doubling and quadrupling the hydraulic conductivity had relatively little effect on the water table distribution. Six inches of annual infiltration, representing approximately 15 percent of the annual precipitation was selected as representative of the site conditions.

The major control on groundwater flow regime (and associated head values) appears to be the steep gradient and interaction between recharge at ACS and de-watering in the landfill area.

Future Conditions Simulation

Three changes were made to the current condition (*.AC1) input files to create the future condition (*.AC3):

- the "drains" which represent the de-watering at the landfill were removed;
- the high level of recharge to the fire pond was eliminated; and
- Infiltration was reduced by a factor of 10 in the Off-Site Containment area, because it is assumed that the area will be remediated and capped.

The groundwater flow simulation was run for 30 years, for use in the solute transport simulation.

SOLUTE TRANSPORT SIMULATION

Benzene was selected as the source of contamination to model. The concentration of benzene observed in the landfill ranged from 2 to 6 ug/L. A value was 5 ug/L was assigned for the entire landfill area.

The future condition water table results (*.AC3 input files) were used for the advection for the transport simulation.

Longitudinal dispersion coefficient was assigned a value of D_l = 2 feet. Transverse and vertical dispersion coefficients of $D_t = D_v = 0.4$ were used. Retardation coefficients were calculated for the upper and lower aquifer in the RI Report, Section 6 (Table 6-2 and 6-4). The value derived was $R_f = 2.47$, based on aquifer porosity of 0.25, bulk density of 1.8, and a distribution coefficient of 0.204.

SIMULATION RESULTS

The groundwater modeling shows that closure of the landfill and ACS fire pond will result in significantly reduced hydraulic gradients, but in no major change in

groundwater flow paths. The groundwater will still flow generally from the northeast, beneath the site and discharge at the ditch cut through the wetlands west of the Site.

In the current condition groundwater flow regime, all the groundwater flowing beneath the landfill, discharges to the de-watering excavations. In the future scenario, when the de-watering is discontinued, the drainage ditch will resume its function and groundwater will continue to discharge to the east.

The solute transport model shows that the the benzene level (and other landfill constituents) will migrate slowly towards the west. The upper aquifer surrounding the landfill will not be affected by leaking leachate.

GROUNDWATER MODEL DOCUMENTATION ABSTRACTS

Techniques of Water-Resources Investigations of the United States Geological Survey

Chapter A1

A MODULAR THREE-DIMENSIONAL FINITE-DIFFERENCE GROUND-WATER FLOW MODEL

By Michael G. McDonald and
Arlen W. Harbaugh

This chapter supersedes U.S. Geological Survey Open-File Report 83–875

Book 6

MODELING TECHNIQUES

A MODULAR THREE-DIMENSIONAL FINITE-DIFFERENCE GROUND-WATER FLOW MODEL

By Michael G. McDonald and Arlen W. Harbaugh

ABSTRACT

This report presents a finite-difference model and its associated modular computer program. The model simulates flow in three dimensions. The report includes detailed explanations of physical and mathematical concepts on which the model is based and an explanation of how those concepts are incorporated in the modular structure of the computer program. The modular structure consists of a Main Program and a series of highly independent subroutines called "modules." The modules are grouped into "packages." Each package deals with a specific feature of the hydrologic system which is to be simulated, such as flow from rivers or flow into drains, or with a specific method of solving linear equations which describe the flow system, such as the Strongly Implicit Procedure or Slice-Successive Overrelaxation.

The division of the program into modules permits the user to examine specific hydrologic features of the model independently. This also facilitates development of additional capabilities because new packages can be added to the program without modifying the existing packages. The input and output systems of the computer program are also designed to permit maximum flexibility.

Ground-water flow within the aquifer is simulated using a block-centered finite-difference approach. Layers can be simulated as confined, unconfined, or a combination of confined and unconfined. Flow associated with external stresses, such as wells, areal recharge, evapotranspiration, drains, and streams, can also be simulated. The finite-difference equations can be solved using either the Strongly Implicit Procedure or Slice-Successive Overrelaxation.

The program is written in FORTRAN 77 and will run without modification on most computers that have a FORTRAN 77 compiler. For each program module, this report includes a narrative description, a flow chart, a list of variables, and a module listing.

M T 3 D

a modular three-dimensional transport model

User's Manual

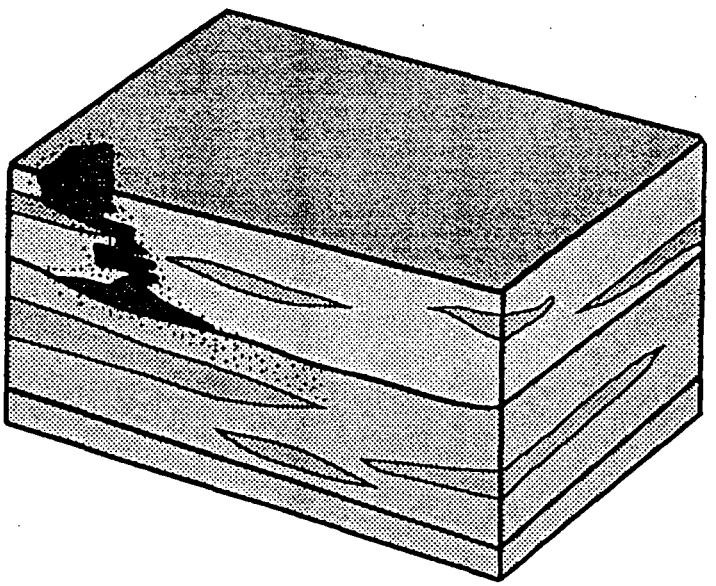

first edition 10/17/90
first revision 02/15/91

S.S. Papadopulos & Associates, Inc.

PREFACE

This document describes the theory and application of MT3D: a modular three-dimensional transport model for simulation of advection, dispersion and chemical reactions in groundwater systems. It includes four computer disks containing the MT3D source code, example data sets, post-processing programs, and a flow model to be used in conjunction with MT3D. A supplemental document which contains a complete listing of the MT3D source code is available if there is a need to verify the source code included in the computer disk.

The documentation for the MT3D program has been funded in part by the United States Environmental Protection Agency. However, the funding does not constitute endorsement or recommendation by the United States Environmental Protection Agency for the use of MT3D or any commercial products mentioned in the document.

To report any error in the MT3D program or to inquire about future upgrades, please call or write to

Chunmiao Zheng
S.S. Papadopulos & Associates Inc.
12250 Rockville Pike, Suite 290
Rockville, Maryland 20852
(Tel) 301-468-5760
(Fax) 301-881-0832

Abstract

mt3d: a modular three-dimensional transport model

This documentation describes the theory and application of a modular three-dimensional transport model for simulation of advection, dispersion and chemical reactions of dissolved constituents in groundwater systems. The model program, referred to as MT3D, uses a modular structure similar to that implemented in MODFLOW, the U. S. Geological Survey modular three-dimensional finite-difference groundwater flow model (McDonald and Harbaugh, 1988). This modular structure makes it possible to simulate advection, dispersion, sink/source mixing, and chemical reactions independently without reserving computer memory space for unused options. New transport processes and options can be added to the model readily without having to modify the existing code.

The MT3D transport model uses a mixed Eulerian-Lagrangian approach to the solution of the three-dimensional advective-dispersive-reactive equation, in three basic options: the method of characteristics (referred to as MOC), the modified method of characteristics (referred to as MMOC), and a hybrid of these two methods (referred to as HMOC). This approach combines the strength of the method of characteristics for eliminating numerical dispersion and the computational efficiency of the modified method of characteristics. The availability of both MOC and MMOC options, and their selective use based on an automatic adaptive procedure under the HMOC option, make MT3D uniquely suitable for a wide range of field problems.

The MT3D transport model is intended to be used in conjunction with any block-centered finite-difference flow model such as MODFLOW and is based on the assumption that changes in the concentration field will not affect the flow field measurably. This allows the user to construct and calibrate a flow model independently. MT3D retrieves the hydraulic heads and the various flow and sink/source terms saved by the flow model, automatically incorporating the specified hydrologic boundary conditions. Currently, MT3D accommodates the following spatial discretization capabilities and transport boundary conditions: (1) confined, unconfined or variably confined/unconfined aquifer layers; (2) inclined model layers and variable cell thickness within the same layer; (3) specified concentration or mass flux boundaries; and (4) the solute transport effects of external sources and sinks such as wells, drains, rivers, areal recharge and evapotranspiration.

TABLE AND FIGURES

Table 1.
Summary of Input Variables
Upper Aquifer Groundwater Model
ACS NPL Site

The following are the input parameters for the Modflow Implementation of the upper aquifer at the ACS NPL Site. The general conductions used for all simulations are listed first. These are followed by a listing of the model parameters changed to simulate future conditions, and then input variables for the solute transport simulation.

Single layer, 30 column, 24 row finite difference grid. Uniform grid spacing = 100 foot.

Time Units = days, Length Units = feet

Boundary Conditions

- General Head Boundary conditions provide regional water table elevations of 635 feet msl in northeast, to 633 feet msl along south and west boundary, 635 to 634 feet msl along eastern boundary, and 635 to 633 feet msl along northern boundary.

- Groundwater elevation is essentially controlled by discharge to the creek on the northwest (column 28) and west sides (row 2).

Aquifer Properties

Specific yield/storage coefficient set as 0.25
Hydraulic conductivity range
2.4 to 24 ft/day (8.5×10^{-4} to 8.5×10^{-3} cm/sec)

Aquifer thickness calculated within model

- Top elevation from head-value for node
- Bottom elevation set at 620 ft msl

Discharge Areas

- De-watering at Landfill Excavation
- The DRN module was used to simulate de-watering to 625 feet msl in the landfill de-watering area.
- Three river stretches set by RIV module
- Creek along row 3 between column 2 and 9, set to 630 ft msl
- Creek along row 2 between column 26 and 28, set to 630 ft msl
- Ditch along north boundary simulated setting column 28, rows 3 - 15 at levels from 630 to 631
- Ditch just west of Off-Site Containment Area set at 632 ft msl,based on staff gage SG-1 history.

Table 1. (continued)
Summary of Input Variables
Upper Aquifer Groundwater Model
ACS NPL Site

Recharge Areas

- GBH boundaries provide lateral recharge from northeast area.
- RCH module used to apply areal precipitation recharge
- Average annual precipitation for area = 44 inches/year
- Model calibrated assuming 15% infiltration (6 in/yr) ACS facility has no vegetation.
- Storm sewers from southeast drain into fire pond
- Drained area is about 50x the fire pond area.
  - Coefficient of 50 used for fire pond
  - Coefficient of 2 used for much of unvegetated area
  - Factor of 2 used in Off site area at internal drainage area north of Off-Site containment area.

Time step was 5 years to represent essentially steady-state conditions.

Strongly Implicit Procedure (SIP) module used to solve model.

FUTURE CONDITION SIMULATION

Three changes were made to the current condition (*.AC1) input files to create the future condition (*.AC3):

- the "drains" which represent the de-watering at the landfill were removed;
- the high level of recharge to the fire pond was eliminated; and
- Infiltration was reduced by a factor of 10 in the Off-Site Containment area, because it is assumed that the area will be remediated and capped.

The groundwater flow simulation was run for 30 years, for use in the solute transport simulation.

SOLUTE TRANSPORT SIMULATION

Source: 5 ug/L benzene for entire landfill area.

Advection was driven by future condition water table configuration, for 30 year simulation.

Dispersion: $D_l = 2.0$ feet
$D_t = 0.4$ feet
$D_v = 0.4$ feet

Retardation. Benzene retardation factor = 2.47

Finite Difference Grid, Model Node Assignments

Columns ---->

Rows

	1	2	3	4	5	6	7	8	9	10	11	12	13	14	15	16	17	18	19	20	21	22	23	24	25	26	27	28	29	30
1	0	0	0	0	0	0	0	0	0	0	0	0	0	0	0	0	0	0	0	0	0	0	0	0	0	0	0	0	0	0
2	1	1	1	1	1	1	1	1	1	1	1	1	1	1	1	1	1	1	1	1	1	1	1	1	1	1	1	1		0
3	0															2	2											1		0
4	0								4	4	4	2	4	4	2	2	2											1		0
5	0								4	4	4	2	4	4	2	2	2											1		0
6	0							4	4	4	4	4	4	4	4													1		0
7	0						4	4	4	4	4	4	4	4	4													1		0
8	0					4	4	4	4	4	4	4	4	4	4	1												1		0
9	0					4	4	4	4	4	4	4	4	4	4	1												1		0
10	0				4	4	4	4	4	4	4	4	4	4	4	1												1		0
11	0			4	4	4	4	4	4	4	4	4	4	4	4	1												1		0
12	0		4	4	4	4	4	4	4	4	4	4	4	1	1				5	5	5	5	5					1		0
13	0		4	4	4	4	4	4	4	4	1	1	1	4	4				5	5	5	5	5	5				1		0
14	0		4	4	4	4	4	4											5	3	3	5	5	5	5			1		0
15	0		4	4	4	4	4	4										5	5	5	5	5	5	5	5			1	1	1
16	0		4	4	4	4	4	4										5	5	5	5	5	5	5	5					0
17	0		4	4	4	4	4	4										5	5	5	5	5	5	5	5					0
18	0																	5	5	5	5	5	5	5	5					0
19	0																	5	5	5	5	5	5	5	5					0
20	0																													0
21	0																													0
22	0																													0
23	0																													0
24	0	0	0	0	0	0	0	0	0	0	0	0	0	0	0	0	0	0	0	0	0	0	0	0	0	0	0	0	0	0

Legend:

- 0 General Head Boundary Nodes
- 1 Creek Nodes
- 2 Landfill De-Watering Areas
- 3 ACS Fire Pond Nodes
- 4 Griffith Landfill Nodes
- 5 American Chemical Service Facility

Modeled Water Table -- Current Conditions

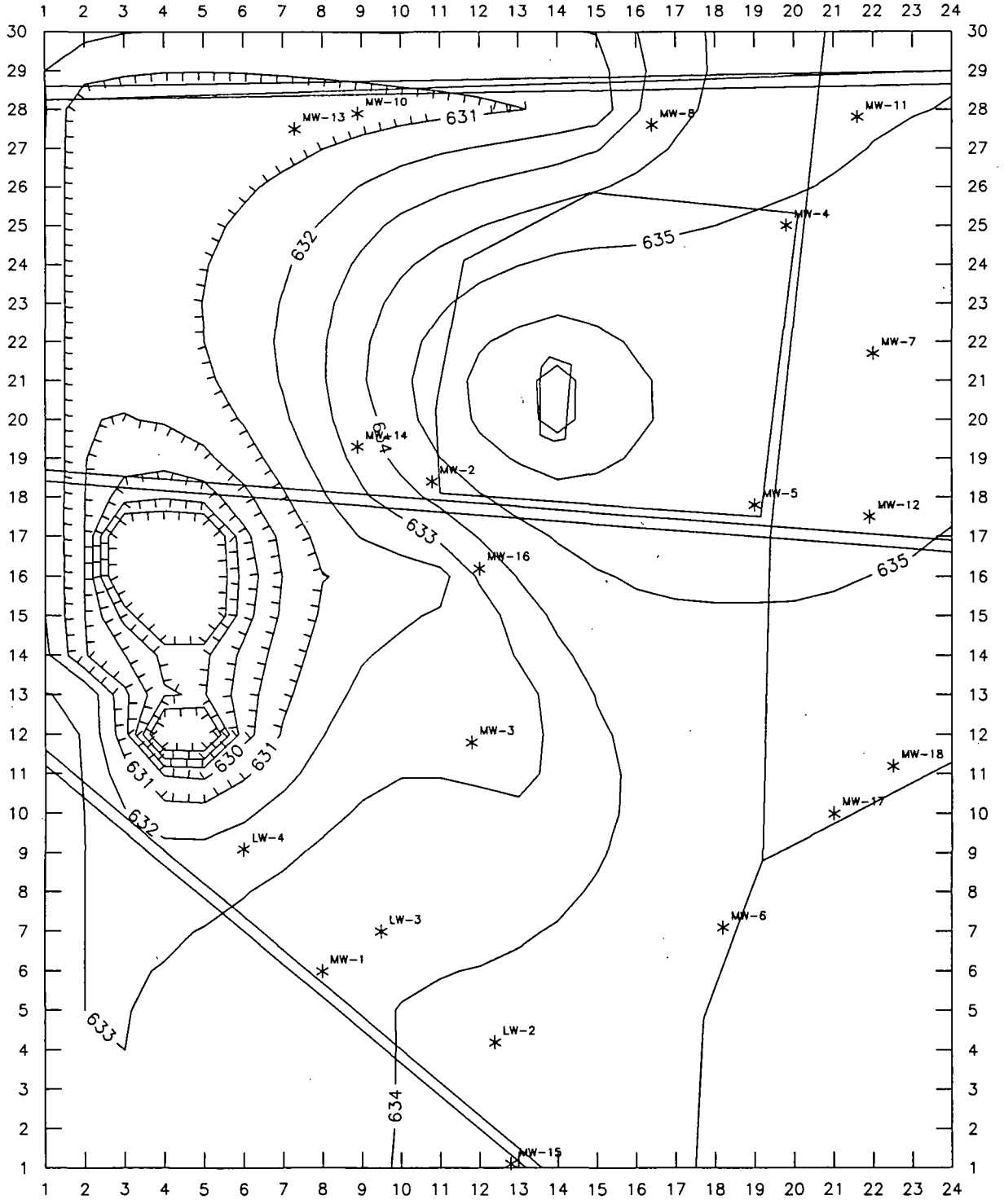

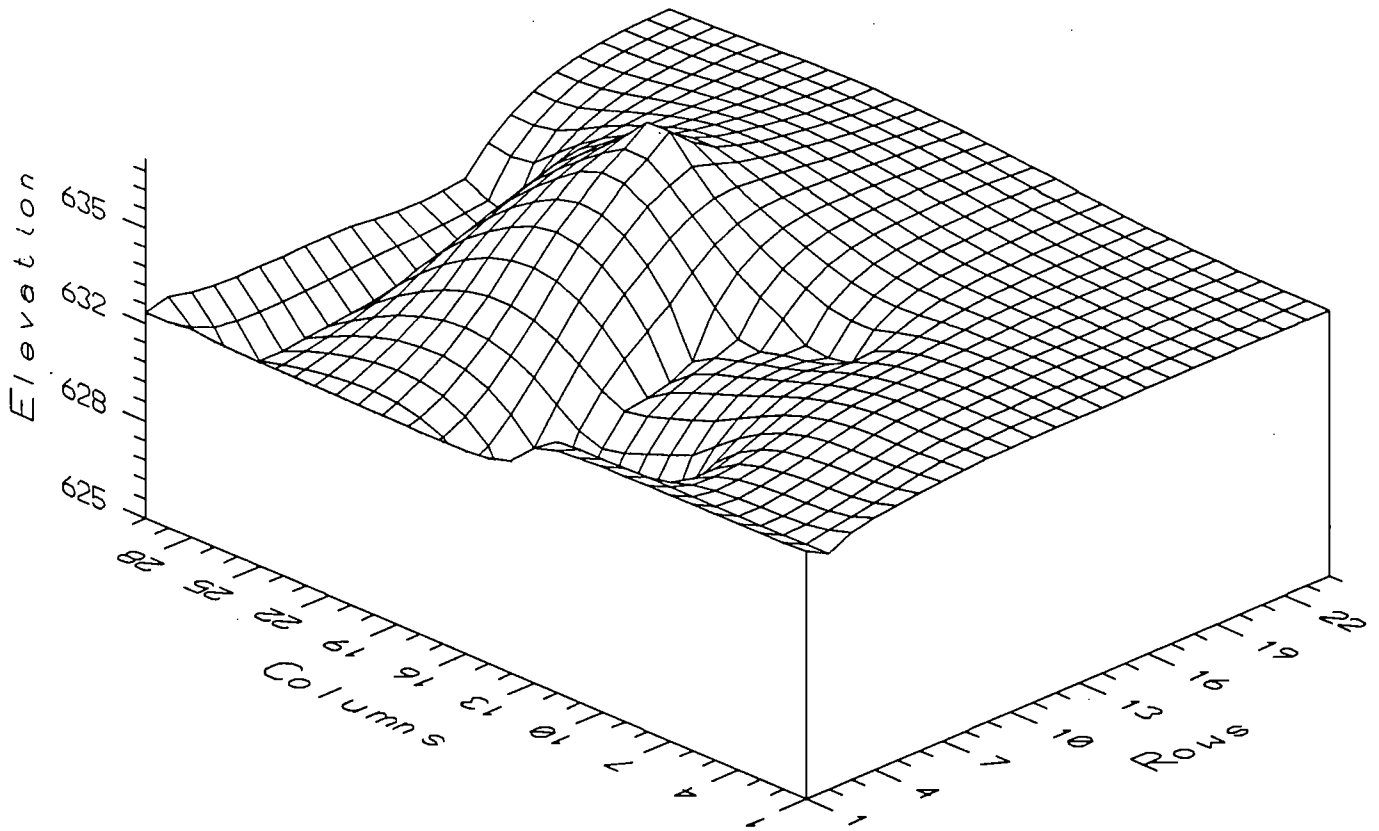

Modeled Existing Water Table

Future Conditions -- Landfill Closed, No Fire Pond

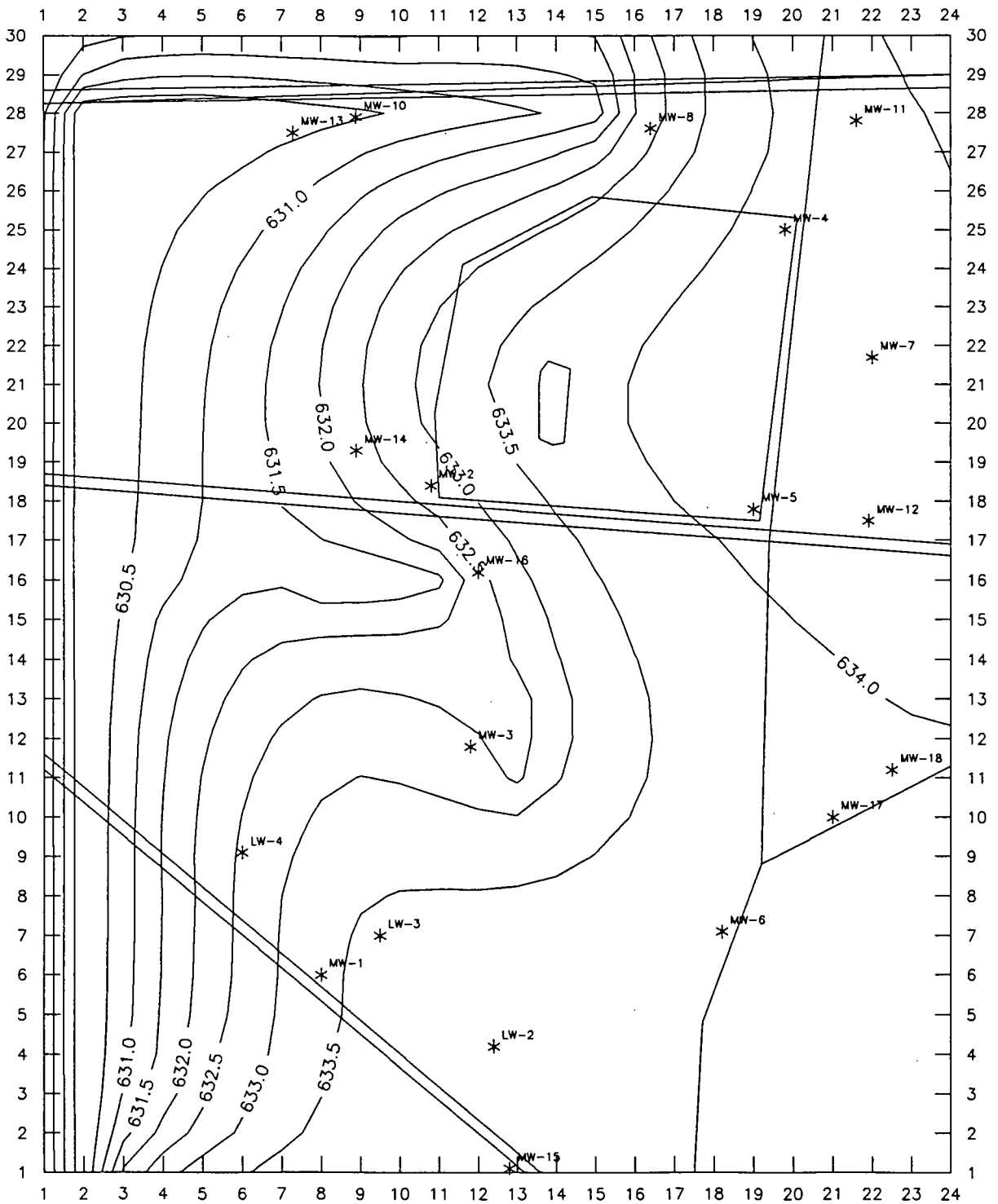

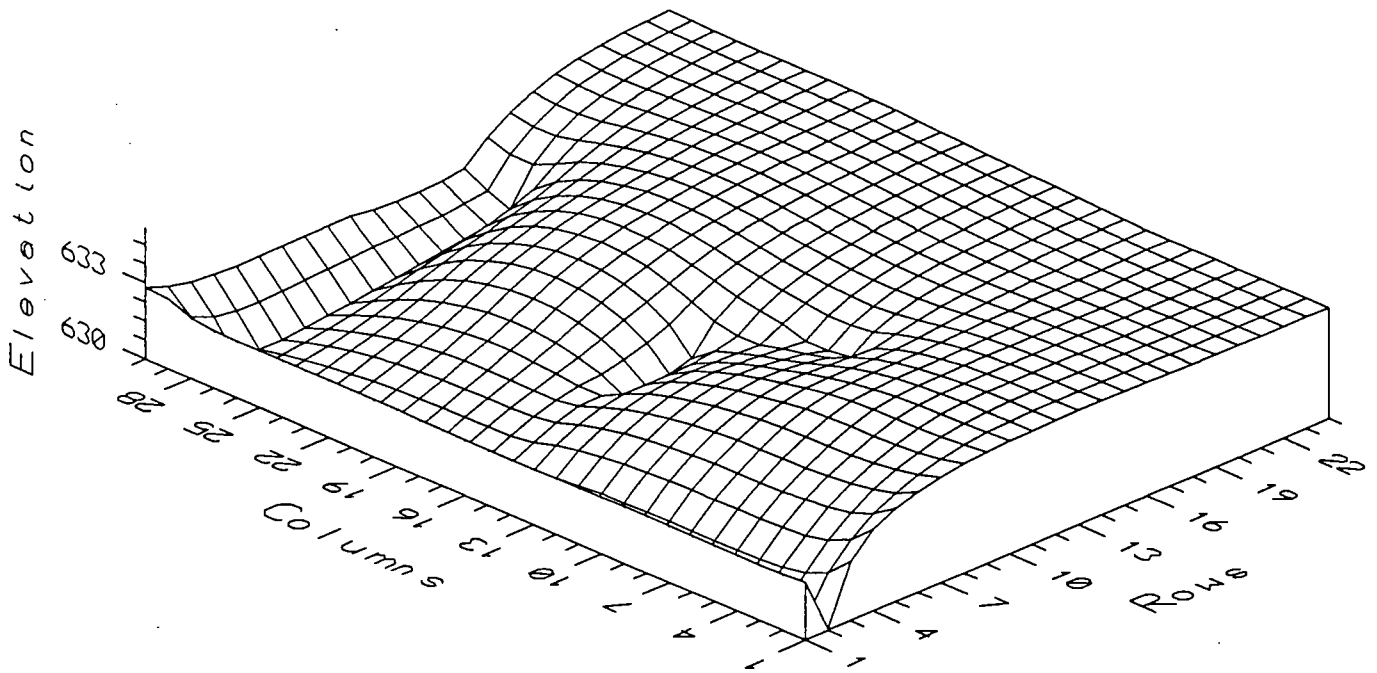

Modeled Future Water Table - Landfill Closed

Modeled Benzene Concentration after 10 years

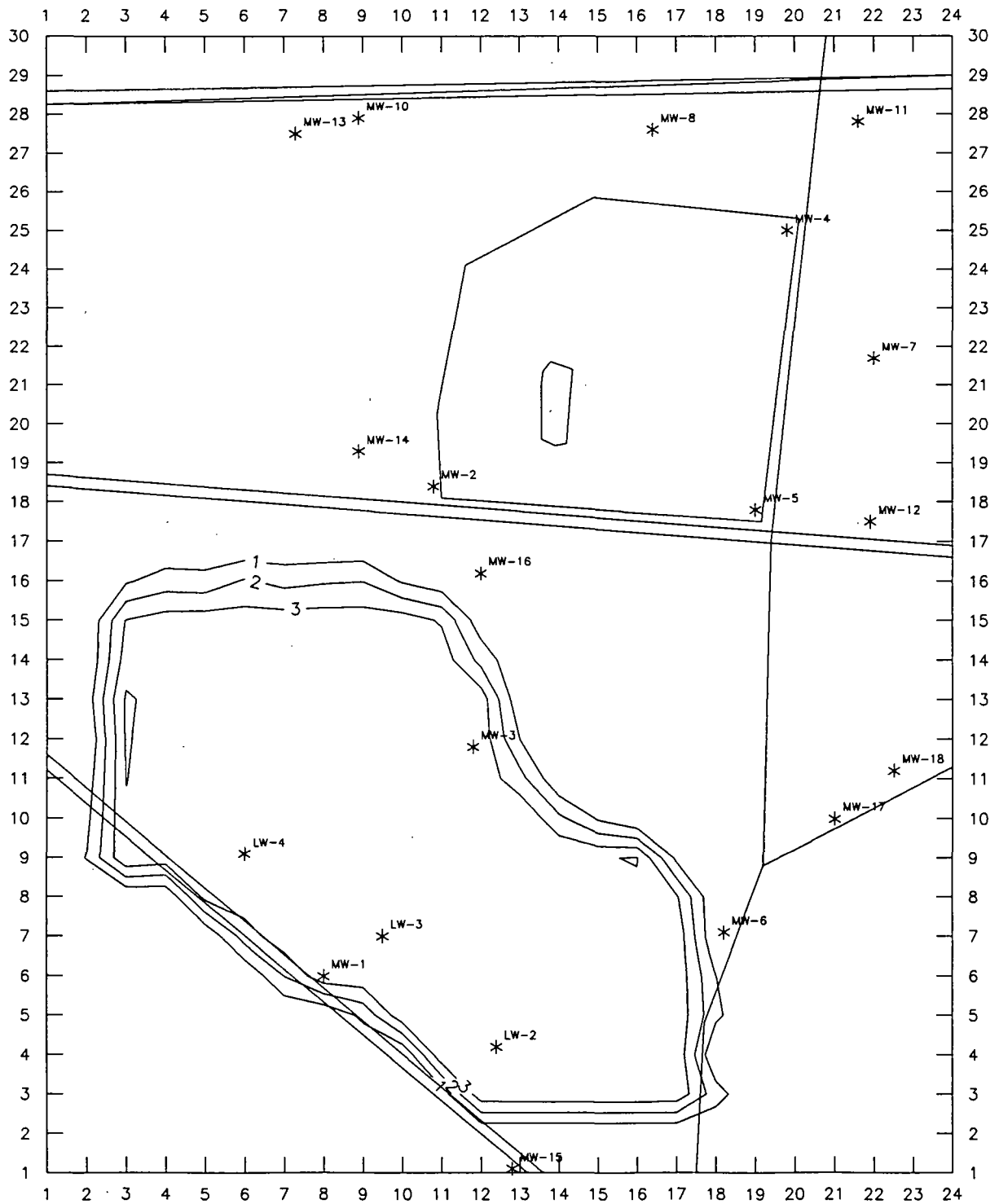

Modeled Benzene Concentration after 20 years

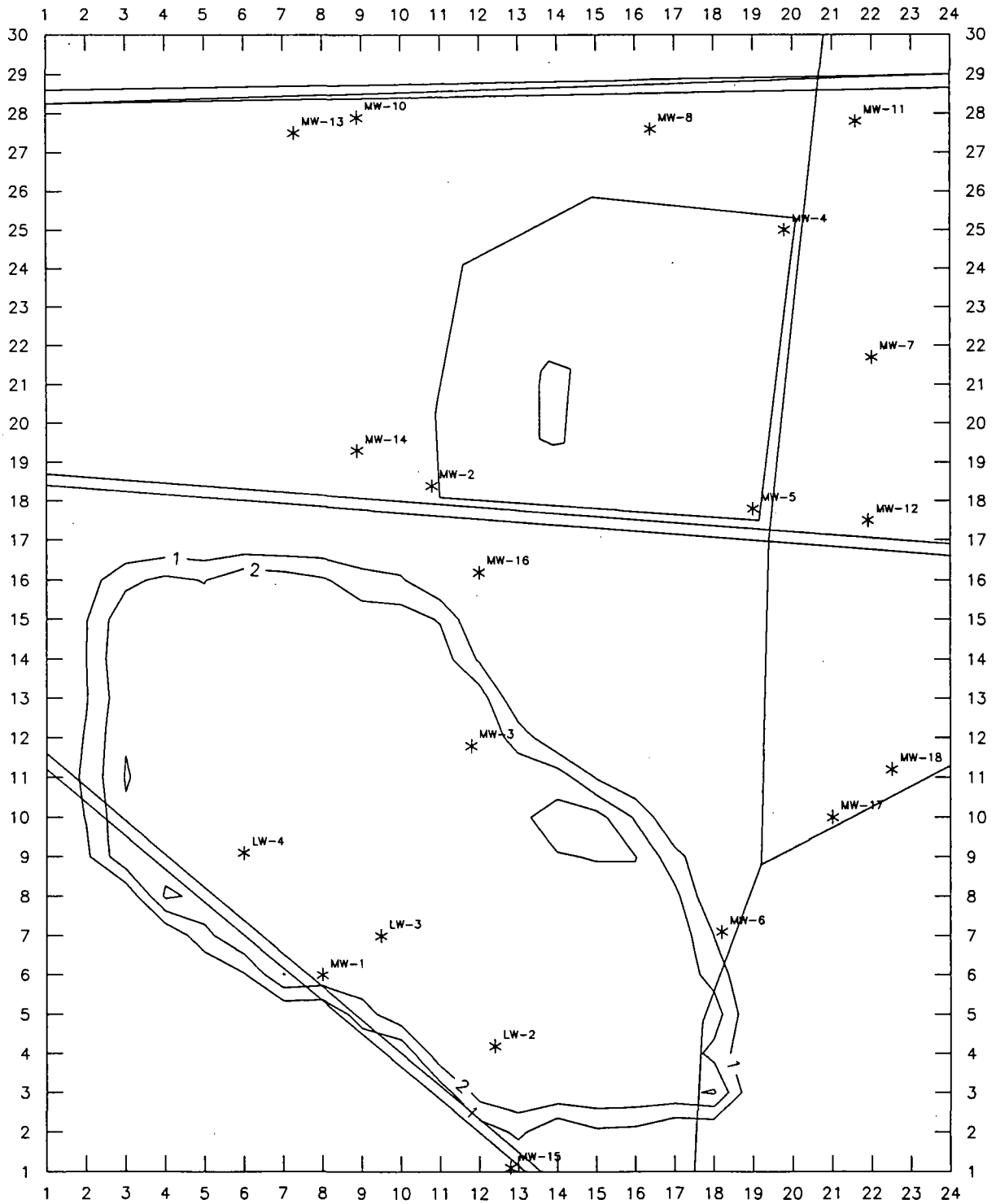

Modeled Benzene Concentration after 30 years

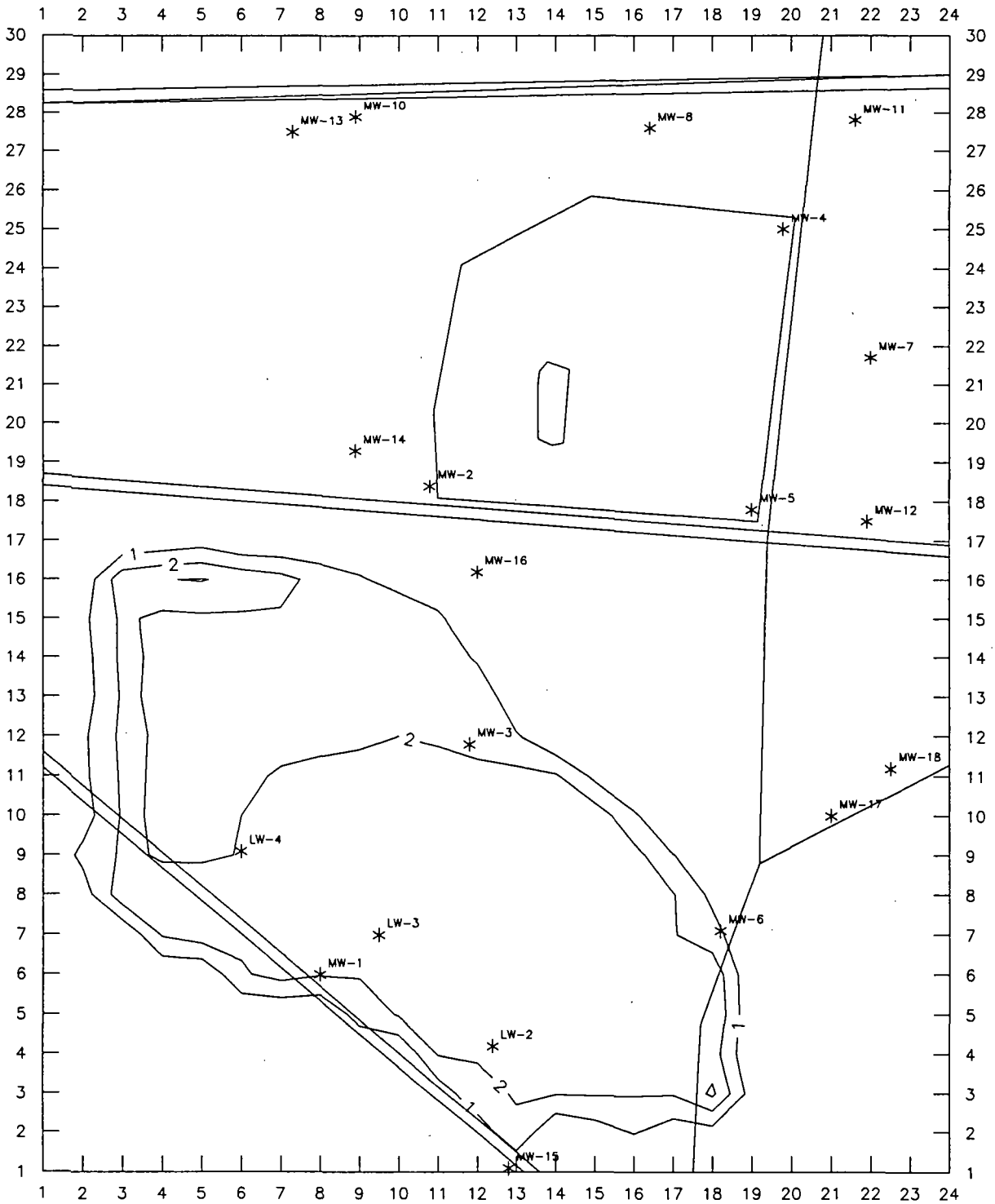

INPUT FILES
EXISTING CONDITION GROUNDWATER FLOW SYSTEM

```
BAS.AC1 -- K x 1 (2.4), 6 in/yr precip, creek 630 ft, Leach ditch 632 ft
landfill drains at 627 ft -- 5 year simulation
        1       24       30        1        4
 11  0 13 14  0  0 17 18 19  0  0 22  0  0  0  0  0  0  0 24  0  0
        0        0                                          IAPART,ISTRT
        1        1  (30I2)                   3             IBOUND-1
 1 1 1 1 1 1 1 1 1 1 1 1 1 1 1 1 1 1 1 1 1 1 1 1 1 1 1 1 1 1
 1 1 1 1 1 1 1 1 1 1 1 1 1 1 1 1 1 1 1 1 1 1 1 1 1 1 1 2 1 1
 1 1 1 1 1 1 1 1 1 1 1 1 1 1 2 2 1 1 1 1 1 1 1 1 1 1 1 2 1 1
 1 1 1 1 1 1 1 1 1 1 1 2 1 1 2 2 2 1 1 1 1 1 1 1 1 1 1 2 1 1
 1 1 1 1 1 1 1 1 1 1 1 2 1 1 2 2 2 1 1 1 1 1 1 1 1 1 1 2 1 1
 1 1 1 1 1 1 1 1 1 1 1 1 1 1 1 1 1 1 1 1 1 1 1 1 1 1 1 2 1 1
 1 1 1 1 1 1 1 1 1 1 1 1 1 1 1 1 1 1 1 1 1 1 1 1 1 1 1 2 1 1
 1 1 1 1 1 1 1 1 1 1 1 1 1 1 1 1 1 1 1 1 1 1 1 1 1 1 1 2 1 1
 1 1 1 1 1 1 1 1 1 1 1 1 1 1 1 1 1 1 1 1 1 1 1 1 1 1 1 2 1 1
 1 1 1 1 1 1 1 1 1 1 1 1 1 1 1 1 1 1 1 1 1 1 1 1 1 1 1 2 1 1
 1 1 1 1 1 1 1 1 1 1 1 1 1 1 1 1 1 1 1 1 1 1 1 1 1 1 1 2 1 1
 1 1 1 1 1 1 1 1 1 1 1 1 1 1 1 1 1 1 1 1 1 1 1 1 1 1 1 2 1 1
 1 1 1 1 1 1 1 1 1 1 1 1 1 1 1 1 1 1 1 1 1 1 1 1 1 1 1 2 1 1
 1 1 1 1 1 1 1 1 1 1 1 1 1 1 1 1 1 1 1 1 1 1 1 1 1 1 1 2 1 1
 1 1 1 1 1 1 1 1 1 1 1 1 1 1 1 1 1 1 2 2 1 1 1 1 1 1 2 1 1
 1 1 1 1 1 1 1 1 1 1 1 1 1 1 1 1 1 1 1 1 1 1 1 1 1 1 2 1 1
 1 1 1 1 1 1 1 1 1 1 1 1 1 1 1 1 1 1 1 1 1 1 1 1 1 1 1 1 1
 1 1 1 1 1 1 1 1 1 1 1 1 1 1 1 1 1 1 1 1 1 1 1 1 1 1 1 1 1
 1 1 1 1 1 1 1 1 1 1 1 1 1 1 1 1 1 1 1 1 1 1 1 1 1 1 1 1 1
 1 1 1 1 1 1 1 1 1 1 1 1 1 1 1 1 1 1 1 1 1 1 1 1 1 1 1 1 1
 1 1 1 1 1 1 1 1 1 1 1 1 1 1 1 1 1 1 1 1 1 1 1 1 1 1 1 1 1
 1 1 1 1 1 1 1 1 1 1 1 1 1 1 1 1 1 1 1 1 1 1 1 1 1 1 1 1 1
 1 1 1 1 1 1 1 1 1 1 1 1 1 1 1 1 1 1 1 1 1 1 1 1 1 1 1 1 1
 1 1 1 1 1 1 1 1 1 1 1 1 1 1 1 1 1 1 1 1 1 1 1 1 1 1 1 1 1
    630.0
        1        1  (15F5.1)                  4             IHEAD-1
6340 6310 6310 6310 6310 6310 6310 6310 6310 6300 6300 6300 6300 6300 6300
6300 6300 6300 6310 6310 6310 6310 6310 6310 6310 6310 6310 6310 6310 6300
6340 6301 6301 6301 6301 6301 6301 6300 6299 6298 6295 6294 6296 6298 6300
6301 6302 6302 6301 6300 6300 6300 6300 6300 6300 6300 6300 6300 6301 6301
6340 6301 6300 6300 6300 6300 6300 6300 6300 6295 6289 6284 6289 6295 6299
6270 6270 6304 6304 6304 6304 6304 6304 6303 6303 6302 6301 6300 6301 6301
6340 6303 6303 6303 6303 6303 6302 6301 6298 6292 6281 6217 6282 6293 6270
6270 6270 6307 6307 6307 6307 6307 6307 6306 6305 6304 6302 6300 6301 6302
6340 6304 6305 6305 6305 6305 6304 6303 6300 6294 6283 6218 6284 6295 6270
6270 6270 6309 6310 6310 6310 6310 6309 6308 6307 6305 6303 6300 6302 6302
6340 6305 6307 6307 6308 6307 6307 6305 6303 6299 6294 6289 6295 6301 6306
6309 6311 6312 6313 6313 6313 6312 6311 6310 6308 6306 6304 6301 6302 6303
6340 6307 6308 6309 6310 6310 6309 6309 6307 6305 6303 6302 6304 6307 6310
6313 6314 6315 6316 6316 6316 6315 6314 6312 6310 6307 6304 6301 6302 6303
6340 6308 6310 6311 6312 6312 6312 6312 6311 6310 6310 6310 6311 6313 6315
6316 6318 6319 6319 6319 6318 6317 6316 6314 6312 6309 6305 6301 6303 6304
6340 6309 6311 6313 6314 6314 6315 6315 6315 6315 6315 6315 6316 6317 6319
6320 6321 6322 6322 6322 6321 6320 6318 6316 6313 6310 6306 6301 6303 6304
6340 6311 6313 6314 6316 6317 6317 6318 6318 6319 6319 6320 6320 6321 6323
6324 6324 6325 6325 6325 6324 6323 6321 6318 6315 6311 6306 6301 6303 6305
6340 6312 6314 6316 6317 6319 6320 6321 6321 6322 6322 6323 6324 6325 6326
6327 6327 6328 6328 6328 6327 6325 6323 6320 6317 6312 6307 6301 6304 6306
6340 6313 6315 6317 6319 6320 6322 6323 6324 6325 6325 6326 6327 6328 6329
6330 6330 6331 6331 6331 6330 6328 6326 6323 6319 6314 6308 6301 6305 6307
6340 6313 6316 6318 6320 6322 6324 6325 6326 6327 6328 6329 6330 6331 6332
6332 6333 6334 6334 6334 6333 6331 6329 6326 6321 6316 6310 6301 6306 6308
```

```
6340 6314 6317 6320 6322 6324 6325 6327 6328 6329 6330 6331 6332 6333 6334
6335 6335 6336 6336 6337 6336 6334 6331 6328 6324 6319 6312 6302 6307 6310
6340 6315 6318 6321 6323 6325 6327 6328 6329 6331 6332 6333 6334 6335 6336
6337 6337 6338 6338 6338 6338 6336 6334 6331 6328 6323 6316 6304 6312 6314
6340 6316 6319 6322 6324 6326 6328 6329 6331 6332 6333 6334 6335 6336 6337
6338 6339 6340 6340 6340 6339 6338 6337 6334 6331 6328 6323 6319 6320 6322
6340 6317 6320 6323 6325 6327 6329 6330 6332 6333 6334 6336 6337 6338 6339
6340 6341 6341 6342 6342 6341 6340 6339 6337 6335 6332 6330 6328 6327 6328
6340 6318 6321 6323 6326 6328 6329 6331 6333 6334 6335 6337 6338 6339 6340
6341 6342 6343 6343 6343 6343 6342 6341 6340 6338 6336 6335 6333 6333 6333
6340 6319 6322 6324 6326 6328 6330 6332 6333 6335 6336 6337 6339 6340 6341
6342 6343 6344 6344 6344 6344 6344 6343 6342 6341 6340 6339 6338 6337 6337
6340 6320 6322 6324 6327 6328 6330 6332 6333 6335 6336 6338 6339 6340 6341
6342 6343 6344 6345 6345 6345 6345 6345 6344 6343 6343 6342 6341 6340 6340
6340 6320 6322 6325 6327 6328 6330 6332 6333 6335 6336 6338 6339 6340 6342
6343 6344 6345 6346 6346 6347 6347 6346 6346 6346 6345 6344 6344 6343 6343
6340 6321 6323 6325 6326 6328 6330 6331 6333 6335 6336 6338 6339 6340 6342
6343 6344 6345 6346 6347 6348 6348 6348 6348 6347 6347 6347 6346 6346 6345
6340 6321 6323 6324 6326 6328 6329 6331 6332 6334 6336 6337 6339 6340 6342
6343 6344 6345 6347 6348 6349 6349 6349 6349 6349 6349 6348 6348 6348 6348
6340 6321 6322 6324 6325 6327 6328 6330 6331 6333 6335 6336 6338 6340 6341
6342 6344 6345 6347 6348 6350 6350 6350 6350 6350 6350 6350 6350 6350 6350
  1826.25        1        1.                                    T-1
     30.         1        1.                                    T-2
     30.         1        1.                                    T-3
     30.         1        1.                                    T-4
     30.         1        1.                                    T-4
```

```
        0        0                SS if ISS=1,    IBCFBD      BCF.AC1
1 0
        0       1.                                TRPY        L-1
        0     100.                                DELR
        0     100.                                DELC
       11     0.25  (30F2.0)                 11     SF1-1
1 1 1 1 1 1 1 1 1 1 1 1 1 1 1 1 1 1 1 1 1 1 1 1 1 1 1 1
1 1 1 1 1 1 1 1 1 1 1 1 1 1 1 1 1 1 1 1 1 1 1 1 1 1 1 1
1 1 1 1 1 1 1 1 1 1 1 1 1 1 2 2 1 1 1 1 1 1 1 1 1 1 1 1
1 1 1 1 1 1 1 1 1 1 1 1 1 2 2 2 1 1 1 1 1 1 1 1 1 1 1 1
1 1 1 1 1 1 1 1 1 1 1 1 1 2 2 2 1 1 1 1 1 1 1 1 1 1 1 1
1 1 1 1 1 1 1 1 1 1 1 1 1 1 1 1 1 1 1 1 1 1 1 1 1 1 1 1
1 1 1 1 1 1 1 1 1 1 1 1 1 1 1 1 1 1 1 1 1 1 1 1 1 1 1 1
1 1 1 1 1 1 1 1 1 1 1 1 1 1 1 1 1 1 1 1 1 1 1 1 1 1 1 1
1 1 1 1 1 1 1 1 1 1 1 1 1 1 1 1 1 1 1 1 1 1 1 1 1 1 1 1
1 1 1 1 1 1 1 1 1 1 1 1 1 1 1 1 1 1 1 1 1 1 1 1 1 1 1 1
1 1 1 1 1 1 1 1 1 1 1 1 1 1 1 1 1 1 1 1 1 1 1 1 1 1 1 1
1 1 1 1 1 1 1 1 1 1 1 1 1 1 1 1 1 1 1 1 1 1 1 1 1 1 1 1
1 1 1 1 1 1 1 1 1 1 1 1 1 1 1 1 1 1 1 1 1 1 1 1 1 1 1 1
1 1 1 1 1 1 1 1 1 1 1 1 1 1 1 1 1 1 2 2 1 1 1 1 1 1 1 1
1 1 1 1 1 1 1 1 1 1 1 1 1 1 1 1 1 1 1 1 1 1 1 1 1 1 1 1
1 1 1 1 1 1 1 1 1 1 1 1 1 1 1 1 1 1 1 1 1 1 1 1 1 1 1 1
1 1 1 1 1 1 1 1 1 1 1 1 1 1 1 1 1 1 1 1 1 1 1 1 1 1 1 1
1 1 1 1 1 1 1 1 1 1 1 1 1 1 1 1 1 1 1 1 1 1 1 1 1 1 1 1
1 1 1 1 1 1 1 1 1 1 1 1 1 1 1 1 1 1 1 1 1 1 1 1 1 1 1 1
1 1 1 1 1 1 1 1 1 1 1 1 1 1 1 1 1 1 1 1 1 1 1 1 1 1 1 1
1 1 1 1 1 1 1 1 1 1 1 1 1 1 1 1 1 1 1 1 1 1 1 1 1 1 1 1
1 1 1 1 1 1 1 1 1 1 1 1 1 1 1 1 1 1 1 1 1 1 1 1 1 1 1 1
1 1 1 1 1 1 1 1 1 1 1 1 1 1 1 1 1 1 1 1 1 1 1 1 1 1 1 1
1 1 1 1 1 1 1 1 1 1 1 1 1 1 1 1 1 1 1 1 1 1 1 1 1 1 1 1
1 1 1 1 1 1 1 1 1 1 1 1 1 1 1 1 1 1 1 1 1 1 1 1 1 1 1 1
1 1 1 1 1 1 1 1 1 1 1 1 1 1 1 1 1 1 1 1 1 1 1 1 1 1 1 1
       11      2.4  (25F3.0)                  8     HY-1
 1  1  1  1  1  1  1  1  1  1  1  1  1  1  1  1  1  1  1  1  1  1  1  1  1  1
 1  1  1  1  1
 1  1  1  1  1  1  1  1  1  1  1  1  1  1  1  1  1  1  1  1  1  1  1  1  1  1
 1  1  1  1  1
 1  1  1  1  1  1  1  1  1  1  1  1  1  1  1  1  1  1  1  1  1  1  1  1  1  1
 1  1  1  1  1
 1  1  1  1  1  1  1  1  1  1  1  1  1  1  1  1  1  1  1  1  1  1  1  1  1  1
 1  1  1  1  1
 1  1  1  1  1  1  1  1  1  1  1  1  1  1  1  1  1  1  1  1  1  1  1  1  1  1
 1  1  1  1  1
 1  1  1  1  1  1  1  1  1  1  1  1  1  1  1  1  1  1  1  1  1  1  1  1  1  1
 1  1  1  1  1
 1  1  1  1  1  1  1  1  1  1  1  1  1  1  1  1  1  1  1  1  1  1  1  1  1  1
 1  1  1  1  1
 1  1  1  1  1  1  1  1  1  1  1  1  1  1  1  1  1  1  1  1  1  1  1  1  1  1
 1  1  1  1  1
 1  1  1  1  1  1  1  1  1  1  1  1  1  1  1  1  1  1  1  1  1  1  1  1  1  1
 1  1  1  1  1
 2  2  2  2  2  2  2  2  2  2  2  2  2  2  2  2  2  2  2  2  2  2  2  2  2  2
 2  2  2  2  2
 3  3  3  3  3  3  3  3  3  3  3  3  3  3  3  3  3  3  3  3  3  3  3  3  3  3
 3  3  3  3  3
 4  4  4  4  4  4  4  4  4  4  4  4  4  4  4  4  4  4  4  4  4  4  4  4  4  4
 4  4  4  4  4
 5  5  5  5  5  5  5  5  5  5  5  5  5  5  5  5  5  5  5  5  5  5  5  5  5  5
 5  5  5  5  4
 6  6  6  6  6  6  6  6  6  6  6  6  6  6  6  6  6  6  6  6 10 10  6  6  6  6
```

```
 6  6  6  5  4
 7  7  7  7  7  7  7  7  7  7  7  7  7  7  7  7  7  7  7  7  7  7  7  7  7  7
 7  7  6  5  4
 8  8  8  8  8  8  8  8  8  8  8  8  8  8  8  8  8  8  8  8  8  8  8  8  8  8
 8  7  6  5  4
 9  9  9  9  9  9  9  9  9  9  9  9  9  9  9  9  9  9  9  9  9  9  9  9  9  9
 8  7  6  5  4
10 10 10 10 10 10 10 10 10 10 10 10 10 10 10 10 10 10 10 10 10 10 10 10 10  9
 8  7  6  5  4
10 10 10 10 10 10 10 10 10 10 10 10 10 10 10 10 10 10 10 10 10 10 10 10 10  9
 8  7  6  5  4
10 10 10 10 10 10 10 10 10 10 10 10 10 10 10 10 10 10 10 10 10 10 10 10 10  9
 8  7  6  5  4
10 10 10 10 10 10 10 10 10 10 10 10 10 10 10 10 10 10 10 10 10 10 10 10 10  9
 8  7  6  5  4
10 10 10 10 10 10 10 10 10 10 10 10 10 10 10 10 10 10 10 10 10 10 10 10 10  9
 8  7  6  5  4
10 10 10 10 10 10 10 10 10 10 10 10 10 10 10 10 10 10 10 10 10 10 10 10 10  9
 8  7  6  5  4
10 10 10 10 10 10 10 10 10 10 10 10 10 10 10 10 10 10 10 10 10 10 10 10 10  9
 8  7  6  5  4
       0      620.                                BOT-1
```

10	0					DRN.AC1
10	row	col	Elev	Cond	Drains	T-1
1	3	16	625.0	5000.		
1	3	17	625.0	5000.		
1	4	12	625.0	5000.		
1	4	15	625.0	5000.		
1	4	16	625.0	5000.		
1	4	17	625.0	5000.		
1	5	12	625.0	5000.		
1	5	15	625.0	5000.		
1	5	16	625.0	5000.		
1	5	17	625.0	5000.		
-1					T-2	
-1					T-3	
-1					T-4	
-1					T-5	
-1					T-6	
-1					T-7	
-1					T-8	
-1					T-9	
-1					T-10	
-1					T-11	

52	0					RIV.AC1
52	Row	Col	Stage	Cond	RBOT	T-1
1	2	1	633.0	1500.	627.0	
1	2	2	633.0	1500.	627.0	
1	2	3	633.0	1500.	627.0	
1	2	4	633.0	1500.	627.0	
1	2	5	633.0	1500.	627.0	
1	2	6	633.0	1500.	627.0	
1	2	7	633.0	1500.	627.0	
1	2	8	633.0	1500.	627.0	
1	2	9	633.0	1500.	627.0	
1	2	10	633.0	1500.	627.0	
1	2	11	633.0	1500.	627.0	
1	2	12	633.0	1500.	627.0	
1	2	13	633.0	1500.	627.0	
1	2	14	630.0	1500.	627.0	
1	2	15	630.0	1500.	627.0	
1	2	16	630.0	1500.	627.0	
1	2	17	630.0	1500.	627.0	
1	2	18	630.0	1500.	627.0	
1	2	19	630.0	1500.	627.0	
1	2	20	630.0	1500.	627.0	
1	2	21	630.0	1500.	627.0	
1	2	22	630.0	1500.	627.0	
1	2	23	630.0	1500.	627.0	
1	2	24	630.0	1500.	627.0	
1	2	25	630.0	1500.	627.0	
1	2	26	630.0	1500.	627.0	
1	2	27	630.0	1500.	627.0	
1	2	28	630.0	1500.	627.0	
1	3	28	630.0	1500.	627.0	
1	4	28	630.0	1500.	627.0	
1	5	28	630.0	1500.	627.0	
1	6	28	630.1	1500.	627.0	
1	7	28	630.2	1500.	627.0	
1	8	28	630.3	1500.	627.0	
1	9	28	630.4	1500.	627.0	
1	10	28	630.5	1500.	627.0	
1	11	28	630.6	1500.	627.0	
1	12	28	630.7	1500.	627.0	
1	13	28	630.8	1500.	627.0	
1	14	28	630.9	1500.	627.0	
1	15	28	631.0	1500.	627.0	
1	15	29	631.5	1500.	627.5	
1	15	30	632.0	1500.	628.0	
1	8	16	631.0	500.	628.0	
1	9	16	631.0	500.	628.0	
1	10	16	631.0	500.	628.0	
1	11	16	631.0	500.	628.0	
1	12	15	632.0	500.	628.0	
1	12	14	632.0	500.	628.0	
1	13	13	632.0	500.	628.0	
1	13	12	632.0	500.	628.0	
1	13	11	632.0	500.	628.0	
-1						T-2
-1						T-3
-1						T-4
-1						T-5

GBH.AC1

102	0			
102	Row	Col	Head	Cond
1	24	1	634.0	25.
1	24	2	634.0	25.
1	24	3	634.0	25.
1	24	4	634.0	25.
1	24	5	634.0	25.
1	24	6	634.0	25.
1	24	7	634.0	25.
1	24	8	634.0	25.
1	24	9	634.0	25.
1	24	10	634.0	25.
1	24	11	634.0	25.
1	24	12	634.0	25.
1	24	13	634.8	25.
1	24	14	634.0	25.
1	24	15	634.1	25.
1	24	16	634.2	25.
1	24	17	634.4	25.
1	24	18	634.5	25.
1	24	19	634.7	25.
1	24	20	634.8	25.
1	24	21	635.0	25.
1	24	22	635.0	25.
1	24	23	635.0	25.
1	24	24	635.0	25.
1	24	25	635.0	25.
1	24	26	635.0	25.
1	24	27	635.0	25.
1	24	28	635.0	25.
1	24	29	635.0	25.
1	24	30	635.0	25.
1	1	1	634.0	25.
1	3	1	634.0	25.
1	4	1	634.0	25.
1	5	1	634.0	25.
1	6	1	634.0	25.
1	7	1	634.0	25.
1	8	1	634.0	25.
1	9	1	634.0	25.
1	10	1	634.0	25.
1	11	1	634.0	25.
1	12	1	634.0	25.
1	13	1	634.0	25.
1	14	1	634.0	25.
1	15	1	634.0	25.
1	16	1	634.0	25.
1	17	1	634.0	25.
1	18	1	634.0	25.
1	19	1	634.0	25.
1	20	1	634.0	25.
1	21	1	634.0	25.
1	22	1	634.0	25.
1	23	1	634.0	25.
1	1	2	634.0	25.
1	1	3	634.0	25.
1	1	4	634.0	25.
1	1	5	634.0	25.

1	1	6	634.0	25.	
1	1	7	634.0	25.	
1	1	8	634.0	25.	
1	1	9	634.0	25.	
1	1	10	634.0	25.	
1	1	11	634.0	25.	
1	1	12	634.0	25.	
1	1	13	634.0	25.	
1	1	14	634.0	25.	
1	1	15	634.0	25.	
1	1	16	634.0	25.	
1	1	17	634.0	25.	
1	1	18	634.0	25.	
1	1	19	634.0	25.	
1	1	20	634.0	25.	
1	1	21	634.0	25.	
1	1	22	634.0	25.	
1	1	23	634.0	25.	
1	1	24	634.0	25.	
1	1	25	634.0	25.	
1	1	26	634.0	25.	
1	1	27	634.0	25.	
1	1	28	634.0	25.	
1	1	29	634.0	25.	
1	1	30	633.0	25.	
1	2	30	633.0	25.	
1	3	30	633.0	25.	
1	4	30	633.0	25.	
1	5	30	633.0	25.	
1	6	30	633.0	25.	
1	7	30	633.0	25.	
1	8	30	633.0	25.	
1	9	30	633.0	25.	
1	10	30	634.0	25.	
1	11	30	634.0	25.	
1	12	30	634.0	25.	
1	13	30	634.0	25.	
1	14	30	634.0	25.	
1	16	30	635.0	25.	
1	17	30	635.0	25.	
1	18	30	635.0	25.	
1	19	30	635.0	25.	
1	20	30	635.0	25.	
1	21	30	635.0	25.	
1	22	30	635.0	25.	
1	23	30	635.0	25.	
-1					T-2
-1					T-3
-1					T-4
-1					T-5
-1					T-6
-1					T-7
-1					T-8

```
        1        0                    NRCHOP,  IRCHCB          RCH.AC1
        1                             INRECH                       T-1
       18  .0013693 (30F2.0)                   11            6.0"/YEAR
0 0 0 0 0 0 0 0 0 0 0 0 0 0 0 0 0 0 0 0 0 0 0 0 0 0 0 0 0 0
0 0 0 0 0 0 0 0 0 0 0 0 0 0 0 0 0 0 0 0 0 0 0 0 0 0 0 0 0 0
0 0 0 0 0 0 0 0 0 0 0 0 0 0 0 0 0 0 0 0 0 0 0 0 0 0 0 0 0 0
0 0 0 0.3.3.3.5.5.5.5.5.5.5.5 0 0 0 0 0 0 0 0 0 0 0 0 0 0 0
0 0 0.3.3.3.3.5.5.5.5.5.5.5.5 0 0 0 0 0 0 0 0 0 0 0 0 0 0 0
0 0.3.3.3.3.5.5.5.5.5.5.5.5.5 0 0 0 0 0 0 0 0 0 0 0 0 0 0 0
0.3.3.3.3.5.5.5.5.5.5.5.5.5.5 0 0 0 0 0 0 0 0 0 0 0 0 0 0 0
0.3.3.3.5.5.5.5.5.5.5.5.5.5.5 0 0 0 0 0 0 0 0 0 0 0 0 0 0 0
0.3.3.3.5.5.5.5.5.5.5.5.5.5.5 0 0 0 0 0 0 0 0 0 0 0 0 0 0 0
0.3.3.3.5.5.5.5.5.5.5.5.5.5.5 0 0 0 0 0 0 0 0 0 0 0 0 0 0 0
0.3.3.5.5.5.5.5.5.5.5.5.5.5.5 0 0.3.3.3.3.3.3.3.3.3.3.3 0 0
0.3.3.5.5.5.5.5.5.5.5.5.5.5.5 0 0.3 5 5 5 5 1 1 1.3.3.3 0 0
0.3.3.5.5.5.5.5.5.5.5.5.5.5.3.3.3 2 2 2 2 2 1 1 1.3.3 0 0
0.3.3.5.3.5.5.5.5.5.5.5 1 1 1 1.5 1 25050 2 2 2 5 1.3.3 0 0
0.3.3.3.3.5.5.5.5.5.5.5 1 2 2 2 1 1 2 2 2 2 2 2 5 1.3.3.3 0
0.3.3.3.3.5.5.5.5.5.5.5 1 2 2 2 1 1 1 1 1 1 1 1 1 1.3.3.3 0
0.0.3.3.3.3.3.3.3.3.3.5 1 1 1 1 1 1 1 1 1 1 1 1 1 1.3.3.3 0
0 0 0 0 0 0 0 0 0 0 0 0.5.5.5.5 1 1 1 1 2 1 1 1 1.3.3.3 0
0 0 0 0 0 0 0 0 0 0 0 0.5.5.5.5 1 1 1 1 1 1 1 1 1.3.3.3 0
0 0 0 0 0 0 0 0 0 0 0.5.5.5.5.5.3.3.3.3.3.3.3.3.3.3.3.3 0
0 0 0 0 0 0 0 0 0 0 0.5.5.5.5.5.3.3.3.3.3.3.3.3.3.3.3.3 0
0 0 0 0 0 0 0 0 0 0 0.5.5.5.5.5.5.3.3.3.3.3.3.3.3.3.3.3 0
0 0 0 0 0 0 0 0 0 0.5.5.5.5.5.5.3.3.3.3.3.3.3.3.3.3.3 0 0
0 0 0 0 0 0 0 0 0 0 0 0 0 0 0 0 0 0 0 0 0 0 0 0 0 0 0 0 0
       -1                            INRECH                       T-2
       -1                            INRECH                       T-3
       -1                            INRECH                       T-4
       -1                            INRECH                       T-5
       -1                            INRECH                       T-6
       -1                            INRECH                       T-7
       -1                            INRECH                       T-8
       -1                            INRECH                       T-9
```

```
  50      10                                  SIP.AC1
 1.0   0.005      1
```

4	4	0	0	IHEDFM,IDDNFM,IHEDUN,IDDNUN	AC1
0	1	0	1	INCODE,IHDDFL,IBUDFL,ICBCFL	T1
1	0	1	0	hdpr,ddpr,hdsv,ddsv	L-1
-1	1	0	1	INCODE,IHDDFL,IBUDFL,ICBCFL	T2
-1	1	0	1	INCODE,IHDDFL,IBUDFL,ICBCFL	T3
-1	1	0	1	INCODE,IHDDFL,IBUDFL,ICBCFL	T4
-1	1	0	1	INCODE,IHDDFL,IBUDFL,ICBCFL	T5
-1	1	0	1	INCODE,IHDDFL,IBUDFL,ICBCFL	T6
-1	1	0	1	INCODE,IHDDFL,IBUDFL,ICBCFL	T7
-1	1	0	1	INCODE,IHDDFL,IBUDFL,ICBCFL	T8
-1	1	0	1	INCODE,IHDDFL,IBUDFL,ICBCFL	T9
-1	1	0	1	INCODE,IHDDFL,IBUDFL,ICBCFL	T10
-1	1	0	1	INCODE,IHDDFL,IBUDFL,ICBCFL	T11
-1	1	0	1	INCODE,IHDDFL,IBUDFL,ICBCFL	T12

INPUT FILES
FUTURE CONDITION GROUNDWATER FLOW SYSTEM

```
BAS.AC3 -- K x 1 (2.4), 6 in/yr precip, creek 630 ft, Leach ditch 632 ft
30 year simulation,  No leachate collection system, no firepond source
        1       24       30        1        4
 11  0  0 14  0  0 17 18 19  0  0 22  0  0  0  0  0  0  0  0  0 24  0  0
        0        0                                          IAPART,ISTRT
        1        1  (30I2)                   3             IBOUND-1
 1 1 1 1 1 1 1 1 1 1 1 1 1 1 1 1 1 1 1 1 1 1 1 1 1 1 1 1 1 1
 1 1 1 1 1 1 1 1 1 1 1 1 1 1 1 1 1 1 1 1 1 1 1 1 1 1 1 1 2 1 1
 1 1 1 1 1 1 1 1 1 1 1 1 1 1 2 2 1 1 1 1 1 1 1 1 1 1 1 1 2 1 1
 1 1 1 1 1 1 1 1 1 1 1 2 1 1 2 2 2 1 1 1 1 1 1 1 1 1 1 1 2 1 1
 1 1 1 1 1 1 1 1 1 1 1 2 1 1 2 2 2 1 1 1 1 1 1 1 1 1 1 1 2 1 1
 1 1 1 1 1 1 1 1 1 1 1 1 1 1 1 1 1 1 1 1 1 1 1 1 1 1 1 1 2 1 1
 1 1 1 1 1 1 1 1 1 1 1 1 1 1 1 1 1 1 1 1 1 1 1 1 1 1 1 1 2 1 1
 1 1 1 1 1 1 1 1 1 1 1 1 1 1 1 1 1 1 1 1 1 1 1 1 1 1 1 1 2 1 1
 1 1 1 1 1 1 1 1 1 1 1 1 1 1 1 1 1 1 1 1 1 1 1 1 1 1 1 1 2 1 1
 1 1 1 1 1 1 1 1 1 1 1 1 1 1 1 1 1 1 1 1 1 1 1 1 1 1 1 1 2 1 1
 1 1 1 1 1 1 1 1 1 1 1 1 1 1 1 1 1 1 1 1 1 1 1 1 1 1 1 1 2 1 1
 1 1 1 1 1 1 1 1 1 1 1 1 1 1 1 1 1 1 1 1 1 1 1 1 1 1 1 1 2 1 1
 1 1 1 1 1 1 1 1 1 1 1 1 1 1 1 1 1 1 1 1 1 1 1 1 1 1 1 1 2 1 1
 1 1 1 1 1 1 1 1 1 1 1 1 1 1 1 1 1 1 1 1 1 1 1 1 1 1 1 1 2 1 1
 1 1 1 1 1 1 1 1 1 1 1 1 1 1 1 1 1 1 2 2 1 1 1 1 1 1 2 1 1
 1 1 1 1 1 1 1 1 1 1 1 1 1 1 1 1 1 1 1 1 1 1 1 1 1 1 2 1 1
 1 1 1 1 1 1 1 1 1 1 1 1 1 1 1 1 1 1 1 1 1 1 1 1 1 1 1 1 1 1
 1 1 1 1 1 1 1 1 1 1 1 1 1 1 1 1 1 1 1 1 1 1 1 1 1 1 1 1 1 1
 1 1 1 1 1 1 1 1 1 1 1 1 1 1 1 1 1 1 1 1 1 1 1 1 1 1 1 1 1 1
 1 1 1 1 1 1 1 1 1 1 1 1 1 1 1 1 1 1 1 1 1 1 1 1 1 1 1 1 1 1
 1 1 1 1 1 1 1 1 1 1 1 1 1 1 1 1 1 1 1 1 1 1 1 1 1 1 1 1 1 1
 1 1 1 1 1 1 1 1 1 1 1 1 1 1 1 1 1 1 1 1 1 1 1 1 1 1 1 1 1 1
 1 1 1 1 1 1 1 1 1 1 1 1 1 1 1 1 1 1 1 1 1 1 1 1 1 1 1 1 1 1
 1 1 1 1 1 1 1 1 1 1 1 1 1 1 1 1 1 1 1 1 1 1 1 1 1 1 1 1 1 1
    630.5
        1        1  (15F5.1)                  4             IHEAD-1
 6340 6310 6310 6310 6310 6310 6310 6310 6310 6300 6300 6300 6300 6300 6300
 6300 6300 6300 6310 6310 6310 6310 6310 6310 6310 6310 6310 6310 6310 6300
 6340 6301 6301 6301 6301 6301 6301 6300 6299 6298 6300 6300 6300 6300 6300
 6301 6302 6302 6301 6300 6300 6300 6300 6300 6300 6300 6300 6300 6301 6301
 6340 6301 6300 6300 6300 6300 6300 6300 6300 6295 6300 6304 6300 6300 6300
 6300 6300 6304 6304 6304 6304 6304 6304 6303 6303 6302 6301 6300 6301 6300
 6340 6303 6303 6303 6303 6303 6302 6301 6298 6300 6300 6300 6300 6300 6300
 6300 6300 6307 6307 6307 6307 6307 6307 6306 6305 6304 6302 6300 6301 6300
 6340 6304 6305 6305 6305 6305 6304 6303 6300 6300 6300 6300 6300 6300 6300
 6300 6300 6309 6310 6310 6310 6310 6309 6308 6307 6305 6303 6300 6302 6300
 6340 6305 6307 6307 6308 6307 6307 6305 6303 6300 6300 6300 6300 6301 6300
 6309 6311 6312 6313 6313 6313 6312 6311 6310 6308 6306 6304 6301 6302 6303
 6340 6307 6308 6309 6310 6310 6309 6309 6307 6305 6303 6302 6304 6307 6310
 6313 6314 6315 6316 6316 6316 6315 6314 6312 6310 6307 6304 6301 6302 6303
 6340 6308 6310 6311 6312 6312 6312 6312 6311 6310 6310 6310 6311 6313 6315
 6316 6318 6319 6319 6319 6318 6317 6316 6314 6312 6309 6305 6301 6303 6304
 6340 6309 6311 6313 6314 6314 6315 6315 6315 6315 6315 6315 6316 6317 6319
 6320 6321 6322 6322 6322 6321 6320 6318 6316 6313 6310 6306 6301 6303 6304
 6340 6311 6313 6314 6316 6317 6317 6318 6318 6319 6319 6320 6320 6321 6323
 6324 6324 6325 6325 6325 6324 6323 6321 6318 6315 6311 6306 6301 6303 6305
 6340 6312 6314 6316 6317 6319 6320 6321 6321 6322 6322 6323 6324 6325 6326
 6327 6327 6328 6328 6328 6327 6325 6323 6320 6317 6312 6307 6301 6304 6306
 6340 6313 6315 6317 6319 6320 6322 6323 6324 6325 6325 6326 6327 6328 6329
 6330 6330 6331 6331 6331 6330 6328 6326 6323 6319 6314 6308 6301 6305 6307
 6340 6313 6316 6318 6320 6322 6324 6325 6326 6327 6328 6329 6330 6331 6332
 6332 6333 6334 6334 6334 6333 6331 6329 6326 6321 6316 6310 6301 6306 6308
```

```
6340 6314 6317 6320 6322 6324 6325 6327 6328 6329 6330 6331 6332 6333 6334
6335 6335 6336 6336 6337 6336 6334 6331 6328 6324 6319 6312 6302 6307 6310
6340 6315 6318 6321 6323 6325 6327 6328 6329 6331 6332 6333 6334 6335 6336
6337 6337 6338 6338 6338 6338 6336 6334 6331 6328 6323 6316 6304 6312 6314
6340 6316 6319 6322 6324 6326 6328 6329 6331 6332 6333 6334 6335 6336 6337
6338 6339 6340 6340 6340 6339 6338 6337 6334 6331 6328 6323 6319 6320 6322
6340 6317 6320 6323 6325 6327 6329 6330 6332 6333 6334 6336 6337 6338 6339
6340 6341 6341 6342 6342 6341 6340 6339 6337 6335 6332 6330 6328 6327 6328
6315 6318 6321 6323 6326 6328 6329 6331 6333 6334 6335 6337 6338 6339 6340
6340 6342 6343 6343 6343 6343 6342 6341 6340 6338 6336 6335 6333 6333 6333
6316 6319 6322 6324 6326 6328 6330 6332 6333 6335 6336 6337 6339 6340 6341
6342 6343 6344 6344 6344 6344 6344 6343 6342 6341 6340 6339 6338 6337 6337
6317 6320 6322 6324 6327 6328 6330 6332 6333 6335 6336 6338 6339 6340 6341
6342 6343 6344 6345 6345 6345 6345 6345 6344 6343 6343 6342 6341 6340 6340
6317 6320 6322 6325 6327 6328 6330 6332 6333 6335 6336 6338 6339 6340 6342
6343 6344 6345 6346 6346 6347 6347 6346 6346 6346 6345 6344 6344 6343 6343
6318 6321 6323 6325 6326 6328 6330 6331 6333 6335 6336 6338 6339 6340 6342
6343 6344 6345 6346 6347 6348 6348 6348 6348 6347 6347 6347 6346 6346 6345
6319 6321 6323 6324 6326 6328 6329 6331 6332 6334 6336 6337 6339 6340 6342
6343 6344 6345 6347 6348 6349 6349 6349 6349 6349 6349 6348 6348 6348 6348
6320 6321 6322 6324 6325 6327 6328 6330 6331 6333 6335 6336 6338 6340 6341
6342 6344 6345 6347 6348 6350 6350 6350 6350 6350 6350 6350 6350 6350 6350
  10957.5        30        1.                                    T-1
  1826.25         1        1.                                    T-2
```

```
        0        0                SS if ISS=1,    IBCFBD      BCF.AC3
1 0                                   -
        0       1.                                TRPY        L-1
        0      100.                               DELR
        0      100.                               DELC
       11      0.25  (30F2.0)                11     SF1-1
1 1 1 1 1 1 1 1 1 1 1 1 1 1 1 1 1 1 1 1 1 1 1 1 1 1 1 1 1 1
1 1 1 1 1 1 1 1 1 1 1 1 1 1 1 1 1 1 1 1 1 1 1 1 1 1 1 1 1 1
1 1 1 1 1 1 1 1 1 1 1 1 1 1 1 1 1 1 1 1 1 1 1 1 1 1 1 1 1 1
1 1 1 1 1 1 1 1 1 1 1 1 1 1 1 1 1 1 1 1 1 1 1 1 1 1 1 1 1 1
1 1 1 1 1 1 1 1 1 1 1 1 1 1 1 1 1 1 1 1 1 1 1 1 1 1 1 1 1 1
1 1 1 1 1 1 1 1 1 1 1 1 1 1 1 1 1 1 1 1 1 1 1 1 1 1 1 1 1 1
1 1 1 1 1 1 1 1 1 1 1 1 1 1 1 1 1 1 1 1 1 1 1 1 1 1 1 1 1 1
1 1 1 1 1 1 1 1 1 1 1 1 1 1 1 1 1 1 1 1 1 1 1 1 1 1 1 1 1 1
1 1 1 1 1 1 1 1 1 1 1 1 1 1 1 1 1 1 1 1 1 1 1 1 1 1 1 1 1 1
1 1 1 1 1 1 1 1 1 1 1 1 1 1 1 1 1 1 1 1 1 1 1 1 1 1 1 1 1 1
1 1 1 1 1 1 1 1 1 1 1 1 1 1 1 1 1 1 1 1 1 1 1 1 1 1 1 1 1 1
1 1 1 1 1 1 1 1 1 1 1 1 1 1 1 1 1 1 1 1 1 1 1 1 1 1 1 1 1 1
1 1 1 1 1 1 1 1 1 1 1 1 1 1 1 1 1 1 1 1 1 1 1 1 1 1 1 1 1 1
1 1 1 1 1 1 1 1 1 1 1 1 1 1 1 1 1 1 1 1 1 1 1 1 1 1 1 1 1 1
1 1 1 1 1 1 1 1 1 1 1 1 1 1 1 1 1 1 1 1 1 1 1 1 1 1 1 1 1 1
1 1 1 1 1 1 1 1 1 1 1 1 1 1 1 1 1 1 1 1 1 1 1 1 1 1 1 1 1 1
1 1 1 1 1 1 1 1 1 1 1 1 1 1 1 1 1 1 1 1 1 1 1 1 1 1 1 1 1 1
1 1 1 1 1 1 1 1 1 1 1 1 1 1 1 1 1 1 1 1 1 1 1 1 1 1 1 1 1 1
1 1 1 1 1 1 1 1 1 1 1 1 1 1 1 1 1 1 1 1 1 1 1 1 1 1 1 1 1 1
1 1 1 1 1 1 1 1 1 1 1 1 1 1 1 1 1 1 1 1 1 1 1 1 1 1 1 1 1 1
1 1 1 1 1 1 1 1 1 1 1 1 1 1 1 1 1 1 1 1 1 1 1 1 1 1 1 1 1 1
1 1 1 1 1 1 1 1 1 1 1 1 1 1 1 1 1 1 1 1 1 1 1 1 1 1 1 1 1 1
1 1 1 1 1 1 1 1 1 1 1 1 1 1 1 1 1 1 1 1 1 1 1 1 1 1 1 1 1 1
1 1 1 1 1 1 1 1 1 1 1 1 1 1 1 1 1 1 1 1 1 1 1 1 1 1 1 1 1 1
1 1 1 1 1 1 1 1 1 1 1 1 1 1 1 1 1 1 1 1 1 1 1 1 1 1 1 1 1 1
1 1 1 1 1 1 1 1 1 1 1 1 1 1 1 1 1 1 1 1 1 1 1 1 1 1 1 1 1 1
1 1 1 1 1 1 1 1 1 1 1 1 1 1 1 1 1 1 1 1 1 1 1 1 1 1 1 1 1 1
1 1 1 1 1 1 1 1 1 1 1 1 1 1 1 1 1 1 1 1 1 1 1 1 1 1 1 1 1 1
1 1 1 1 1 1 1 1 1 1 1 1 1 1 1 1 1 1 1 1 1 1 1 1 1 1 1 1 1 1
1 1 1 1 1 1 1 1 1 1 1 1 1 1 1 1 1 1 1 1 1 1 1 1 1 1 1 1 1 1
1 1 1 1 1 1 1 1 1 1 1 1 1 1 1 1 1 1 1 1 1 1 1 1 1 1 1 1 1 1
1 1 1 1 1 1 1 1 1 1 1 1 1 1 1 1 1 1 1 1 1 1 1 1 1 1 1 1 1 1
1 1 1 1 1 1 1 1 1 1 1 1 1 1 1 1 1 1 1 1 1 1 1 1 1 1 1 1 1 1
1 1 1 1 1 1 1 1 1 1 1 1 1 1 1 1 1 1 1 1 1 1 1 1 1 1 1 1 1 1
1 1 1 1 1 1 1 1 1 1 1 1 1 1 1 1 1 1 1 1 1 1 1 1 1 1 1 1 1 1
1 1 1 1 1 1 1 1 1 1 1 1 1 1 1 1 1 1 1 1 1 1 1 1 1 1 1 1 1 1
1 1 1 1 1 1 1 1 1 1 1 1 1 1 1 1 1 1 1 1 1 1 1 1 1 1 1 1 1 1
1 1 1 1 1 1 1 1 1 1 1 1 1 1 1 1 1 1 1 1 1 1 1 1 1 1 1 1 1 1
1 1 1 1 1 1 1 1 1 1 1 1 1 1 1 1 1 1 1 1 1 1 1 1 1 1 1 1 1 1
1 1 1 1 1 1 1 1 1 1 1 1 1 1 1 1 1 1 1 1 1 1 1 1 1 1 1 1 1 1
1 1 1 1 1 1 1 1 1 1 1 1 1 1 1 1 1 1 1 1 1 1 1 1 1 1 1 1 1 1
1 1 1 1 1 1 1 1 1 1 1 1 1 1 1 1 1 1 1 1 1 1 1 1 1 1 1 1 1 1
1 1 1 1 1 1 1 1 1 1 1 1 1 1 1 1 1 1 1 1 1 1 1 1 1 1 1 1 1 1
1 1 1 1 1 1 1 1 1 1 1 1 1 1 1 1 1 1 1 1 1 1 1 1 1 1 1 1 1 1
1 1 1 1 1 1 1 1 1 1 1 1 1 1 1 1 1 1 1 1 1 1 1 1 1 1 1 1 1 1
1 1 1 1 1 1 1 1 1 1 1 1 1 1 1 1 1 1 1 1 1 1 1 1 1 1 1 1 1 1
1 1 1 1 1 1 1 1 1 1 1 1 1 1 1 1 1 1 1 1 1 1 1 1 1 1 1 1 1 1
1 1 1 1 1 1 1 1 1 1 1 1 1 1 1 1 1 1 1 1 1 1 1 1 1 1 1 1 1 1
1 1 1 1 1 1 1 1 1 1 1 1 1 1 1 1 1 1 1 1 1 1 1 1 1 1 1 1 1 1
1 1 1 1 1 1 1 1 1 1 1 1 1 1 1 1 1 1 1 1 1 1 1 1 1 1 1 1 1 1
1 1 1 1 1 1 1 1 1 1 1 1 1 1 1 1 1 1 1 1 1 1 1 1 1 1 1 1 1 1
       11      2.4  (25F3.0)                 8     HY-1
 1  1  1  1  1  1  1  1  1  1  1  1  1  1  1  1  1  1  1  1  1  1  1  1  1  1
 1  1  1  1  1
 1  1  1  1  1  1  1  1  1  1  1  1  1  1  1  1  1  1  1  1  1  1  1  1  1  1
 1  1  1  1  1
 1  1  1  1  1  1  1  1  1  1  1  1  1  1  1  1  1  1  1  1  1  1  1  1  1  1
 1  1  1  1  1
 1  1  1  1  1  1  1  1  1  1  1  1  1  1  1  1  1  1  1  1  1  1  1  1  1  1
 1  1  1  1  1
 1  1  1  1  1  1  1  1  1  1  1  1  1  1  1  1  1  1  1  1  1  1  1  1  1  1
 1  1  1  1  1
 1  1  1  1  1  1  1  1  1  1  1  1  1  1  1  1  1  1  1  1  1  1  1  1  1  1
 1  1  1  1  1
 1  1  1  1  1  1  1  1  1  1  1  1  1  1  1  1  1  1  1  1  1  1  1  1  1  1
 1  1  1  1  1
 1  1  1  1  1  1  1  1  1  1  1  1  1  1  1  1  1  1  1  1  1  1  1  1  1  1
 1  1  1  1  1
 1  1  1  1  1  1  1  1  1  1  1  1  1  1  1  1  1  1  1  1  1  1  1  1  1  1
 1  1  1  1  1
 2  2  2  2  2  2  2  2  2  2  2  2  2  2  2  2  2  2  2  2  2  2  2  2  2  2
 2  2  2  2  2
 3  3  3  3  3  3  3  3  3  3  3  3  3  3  3  3  3  3  3  3  3  3  3  3  3  3
 3  3  3  3  3
 4  4  4  4  4  4  4  4  4  4  4  4  4  4  4  4  4  4  4  4  4  4  4  4  4  4
 4  4  4  4  4
 5  5  5  5  5  5  5  5  5  5  5  5  5  5  5  5  5  5  5  5  5  5  5  5  5  5
 5  5  5  5  4
 6  6  6  6  6  6  6  6  6  6  6  6  6  6  6  6  6  6  6  6  6  6  6  6  6  6
```

```
 6  6  6  5  4
 7  7  7  7  7  7  7  7  7  7  7  7  7  7  7  7  7  7  7  7  7  7  7  7  7
 7  7  6  5  4
 8  8  8  8  8  8  8  8  8  8  8  8  8  8  8  8  8  8  8  8  8  8  8  8  8
 8  7  6  5  4
 9  9  9  9  9  9  9  9  9  9  9  9  9  9  9  9  9  9  9  9  9  9  9  9  9
 8  7  6  5  4
10 10 10 10 10 10 10 10 10 10 10 10 10 10 10 10 10 10 10 10 10 10 10 10  9
 8  7  6  5  4
10 10 10 10 10 10 10 10 10 10 10 10 10 10 10 10 10 10 10 10 10 10 10 10  9
 8  7  6  5  4
10 10 10 10 10 10 10 10 10 10 10 10 10 10 10 10 10 10 10 10 10 10 10 10  9
 8  7  6  5  4
10 10 10 10 10 10 10 10 10 10 10 10 10 10 10 10 10 10 10 10 10 10 10 10  9
 8  7  6  5  4
10 10 10 10 10 10 10 10 10 10 10 10 10 10 10 10 10 10 10 10 10 10 10 10  9
 8  7  6  5  4
10 10 10 10 10 10 10 10 10 10 10 10 10 10 10 10 10 10 10 10 10 10 10 10  9
 8  7  6  5  4
10 10 10 10 10 10 10 10 10 10 10 10 10 10 10 10 10 10 10 10 10 10 10 10  9
 8  7  6  5  4
10 10 10 10 10 10 10 10 10 10 10 10 10 10 10 10 10 10 10 10 10 10 10 10  9
 8  7  6  5  4
       0     620.                              BOT-1
```

52	0					RIV.AC3
52	Row	Col	Stage	Cond	RBOT	T-1
1	2	1	630.0	1500.	627.0	
1	2	2	630.0	1500.	627.0	
1	2	3	630.0	1500.	627.0	
1	2	4	630.0	1500.	627.0	
1	2	5	630.0	1500.	627.0	
1	2	6	630.0	1500.	627.0	
1	2	7	630.0	1500.	627.0	
1	2	8	630.0	1500.	627.0	
1	2	9	630.0	1500.	627.0	
1	2	10	630.0	1500.	627.0	
1	2	11	630.0	1500.	627.0	
1	2	12	630.0	1500.	627.0	
1	2	13	630.0	1500.	627.0	
1	2	14	630.0	1500.	627.0	
1	2	15	630.0	1500.	627.0	
1	2	16	630.0	1500.	627.0	
1	2	17	630.0	1500.	627.0	
1	2	18	630.0	1500.	627.0	
1	2	19	630.0	1500.	627.0	
1	2	20	630.0	1500.	627.0	
1	2	21	630.0	1500.	627.0	
1	2	22	630.0	1500.	627.0	
1	2	23	630.0	1500.	627.0	
1	2	24	630.0	1500.	627.0	
1	2	25	630.0	1500.	627.0	
1	2	26	630.0	1500.	627.0	
1	2	27	630.0	1500.	627.0	
1	2	28	630.0	1500.	627.0	
1	3	28	630.0	1500.	627.0	
1	4	28	630.0	1500.	627.0	
1	5	28	630.0	1500.	627.0	
1	6	28	630.1	1500.	627.0	
1	7	28	630.2	1500.	627.0	
1	8	28	630.3	1500.	627.0	
1	9	28	630.4	1500.	627.0	
1	10	28	630.5	1500.	627.0	
1	11	28	630.6	1500.	627.0	
1	12	28	630.7	1500.	627.0	
1	13	28	630.8	1500.	627.0	
1	14	28	630.9	1500.	627.0	
1	15	28	631.0	1500.	627.0	
1	15	29	631.5	1500.	627.5	
1	15	30	632.0	1500.	628.0	
1	8	16	631.0	500.	628.0	
1	9	16	631.0	500.	628.0	
1	10	16	631.0	500.	628.0	
1	11	16	631.0	500.	628.0	
1	12	15	632.0	500.	628.0	
1	12	14	632.0	500.	628.0	
1	13	13	632.0	500.	628.0	
1	13	12	632.0	500.	628.0	
1	13	11	632.0	500.	628.0	
-1						T-2
-1						T-3
-1						T-4
-1						T-5

102	0			GBH.AC1
102	Row	Col	Head	Cond
1	24	1	634.0	25.
1	24	2	634.0	25.
1	24	3	634.0	25.
1	24	4	634.0	25.
1	24	5	634.0	25.
1	24	6	634.0	25.
1	24	7	634.0	25.
1	24	8	634.0	25.
1	24	9	634.0	25.
1	24	10	634.0	25.
1	24	11	634.0	25.
1	24	12	634.0	25.
1	24	13	634.8	25.
1	24	14	634.0	25.
1	24	15	634.1	25.
1	24	16	634.2	25.
1	24	17	634.4	25.
1	24	18	634.5	25.
1	24	19	634.7	25.
1	24	20	634.8	25.
1	24	21	635.0	25.
1	24	22	635.0	25.
1	24	23	635.0	25.
1	24	24	635.0	25.
1	24	25	635.0	25.
1	24	26	635.0	25.
1	24	27	635.0	25.
1	24	28	635.0	25.
1	24	29	635.0	25.
1	24	30	635.0	25.
1	1	1	634.0	25.
1	3	1	634.0	25.
1	4	1	634.0	25.
1	5	1	634.0	25.
1	6	1	634.0	25.
1	7	1	634.0	25.
1	8	1	634.0	25.
1	9	1	634.0	25.
1	10	1	634.0	25.
1	11	1	634.0	25.
1	12	1	634.0	25.
1	13	1	634.0	25.
1	14	1	634.0	25.
1	15	1	634.0	25.
1	16	1	634.0	25.
1	17	1	634.0	25.
1	18	1	634.0	25.
1	19	1	634.0	25.
1	20	1	634.0	25.
1	21	1	634.0	25.
1	22	1	634.0	25.
1	23	1	634.0	25.
1	1	2	634.0	25.
1	1	3	634.0	25.
1	1	4	634.0	25.
1	1	5	634.0	25.

1	1	6	634.0	25.	
1	1	7	634.0	25.	
1	1	8	634.0	25.	
1	1	9	634.0	25.	
1	1	10	634.0	25.	
1	1	11	634.0	25.	
1	1	12	634.0	25.	
1	1	13	634.0	25.	
1	1	14	634.0	25.	
1	1	15	634.0	25.	
1	1	16	634.0	25.	
1	1	17	634.0	25.	
1	1	18	634.0	25.	
1	1	19	634.0	25.	
1	1	20	634.0	25.	
1	1	21	634.0	25.	
1	1	22	634.0	25.	
1	1	23	634.0	25.	
1	1	24	634.0	25.	
1	1	25	634.0	25.	
1	1	26	634.0	25.	
1	1	27	634.0	25.	
1	1	28	634.0	25.	
1	1	29	634.0	25.	
1	1	30	633.0	25.	
1	2	30	633.0	25.	
1	3	30	633.0	25.	
1	4	30	633.0	25.	
1	5	30	633.0	25.	
1	6	30	633.0	25.	
1	7	30	633.0	25.	
1	8	30	633.0	25.	
1	9	30	633.0	25.	
1	10	30	634.0	25.	
1	11	30	634.0	25.	
1	12	30	634.0	25.	
1	13	30	634.0	25.	
1	14	30	634.0	25.	
1	16	30	635.0	25.	
1	17	30	635.0	25.	
1	18	30	635.0	25.	
1	19	30	635.0	25.	
1	20	30	635.0	25.	
1	21	30	635.0	25.	
1	22	30	635.0	25.	
1	23	30	635.0	25.	
-1					T-2
-1					T-3
-1					T-4
-1					T-5
-1					T-6
-1					T-7
-1					T-8

```
       1        0                    NRCHOP,  IRCHCB          RCH.AC3
       1                             INRECH                      T-1
      18  .0013689 (30F2.0)                  11            6.0"/YEAR
0 0 0 0 0 0 0 0 0 0 0 0 0 0 0 0 0 0 0 0 0 0 0 0 0 0 0 0 0 0
0 0 0 0 0 0 0 0 0 0 0 0 0 0 0 0 0 0 0 0 0 0 0 0 0 0 0 0 0 0
0 0 0 0 0 0 0 0 0 0 0 0 0 0 0 0 0 0 0 0 0 0 0 0 0 0 0 0 0 0
0 0 0 0.3.3.3.3.5.5.5.5.5.5.5 0 0 0 0 0 0 0 0 0 0 0 0 0 0 0
0 0 0.3.3.3.3.3.5.5.5.5.5.5.5 0 0 0 0 0 0 0 0 0 0 0 0 0 0 0
0 0.3.3.3.3.3.5.5.5.5.5.5.5.5 0 0 0 0 0 0 0 0 0 0 0 0 0 0 0
0.3.3.3.3.3.5.5.5.5.5.5.5.5.5 0 0 0 0 0 0 0 0 0 0 0 0 0 0 0
0.3.3.3.3.5.5.5.5.5.5.5.5.5.5 0 0 0 0 0 0 0 0 0 0 0 0 0 0 0
0.3.3.3.3.5.5.5.5.5.5.5.5.5.5 0 0 0 0 0 0 0 0 0 0 0 0 0 0 0
0.3.3.3.5.5.5.5.5.5.5.5.5.5.5 0 0 0 0 0 0 0 0 0 0 0 0 0 0 0
0.3.3.5.5.5.5.5.5.5.5.5.5.5.5 0 0 0.3.3.3.3.3.3.3.3.3.3 0 0
0.3.5.5.5.5.5.5.5.5.5.5.5.5.5 0 0 0 1 1 1 1 1 1 1.3.3.3 0 0
0.3.5.5.5.5.5.5.5.5.5.5.5.5.5 0 0 0 1 1 1 1 1 1 1 1.3.3 0 0
0.3.5.5.5.5.5.5.1.1.1.1.1.1.1.1 1 1 1 1 1 1 1 1 1.3.3 0 0
0.3.5.5.5.5.5.5.1.1.1.1.1.1.1.1 1 1 1 1 1 1 1 1 1.3.3.3 0
0.3.5.5.5.5.5.5.1.1.1.1.1.1.1.1 1 1 1 1 1 1 1 1 1.3.3.3 0
0 0.5.5.5.5.5.5.1.1.1.1.1.1.1.1 1 1 1 1 1 1 1 1 1.3.3.3 0
0 0 0 0 0 0 0 0 0 0 0 0.3.3.3.3 1 1 1 1 1 1 1 1 1.3.3.3 0
0 0 0 0 0 0 0 0 0 0 0 0.3.3.3.3 1 1 1 1 1 1 1 1 1.3.3.3 0
0 0 0 0 0 0 0 0 0 0 0.3.3.3.3.3.3.3.3.3.3.3.3.3.3.3.3.3 0
0 0 0 0 0 0 0 0 0 0 0.3.3.3.3.3.3.3.3.3.3.3.3.3.3.3.3.3 0
0 0 0 0 0 0 0 0 0 0.3.3.3.3.3.3.3.3.3.3.3.3.3.3.3.3.3.3 0
0 0 0 0 0 0 0 0 0 0.3.3.3.3.3.3.3.3.3.3.3.3.3.3.3.3.3.3 0
0 0 0 0 0 0 0 0 0 0 0 0 0 0 0 0 0 0 0 0 0 0 0 0 0 0 0 0 0
       -1                            INRECH                      T-2
       -1                            INRECH                      T-3
       -1                            INRECH                      T-4
       -1                            INRECH                      T-5
       -1                            INRECH                      T-6
       -1                            INRECH                      T-7
       -1                            INRECH                      T-8
       -1                            INRECH                      T-9
```

```
100      10                                        SIP.AC3
1.0    0.005       1
```

4	4	0	0	IHEDFM,IDDNFM,IHEDUN,IDDNUN	AC3
0	0	0	1	INCODE,IHDDFL,IBUDFL,ICBCFL	T1
1	0	1	0	hdpr,ddpr,hdsv,ddsv	L-1
-1	0	0	1	INCODE,IHDDFL,IBUDFL,ICBCFL	T2
-1	0	0	1	INCODE,IHDDFL,IBUDFL,ICBCFL	T3
-1	0	0	1	INCODE,IHDDFL,IBUDFL,ICBCFL	T4
-1	1	0	1	INCODE,IHDDFL,IBUDFL,ICBCFL	T5
-1	0	0	1	INCODE,IHDDFL,IBUDFL,ICBCFL	T6
-1	0	0	1	INCODE,IHDDFL,IBUDFL,ICBCFL	T7
-1	0	0	1	INCODE,IHDDFL,IBUDFL,ICBCFL	T8
-1	0	0	1	INCODE,IHDDFL,IBUDFL,ICBCFL	T9
-1	1	0	1	INCODE,IHDDFL,IBUDFL,ICBCFL	T10
-1	0	0	1	INCODE,IHDDFL,IBUDFL,ICBCFL	T11
-1	0	0	1	INCODE,IHDDFL,IBUDFL,ICBCFL	T12
-1	0	0	1	INCODE,IHDDFL,IBUDFL,ICBCFL	T13
-1	0	0	1	INCODE,IHDDFL,IBUDFL,ICBCFL	T14
-1	1	0	1	INCODE,IHDDFL,IBUDFL,ICBCFL	T15
-1	0	0	1	INCODE,IHDDFL,IBUDFL,ICBCFL	T16
-1	0	0	1	INCODE,IHDDFL,IBUDFL,ICBCFL	T17
-1	0	0	1	INCODE,IHDDFL,IBUDFL,ICBCFL	T18
-1	0	0	1	INCODE,IHDDFL,IBUDFL,ICBCFL	T19
-1	1	0	1	INCODE,IHDDFL,IBUDFL,ICBCFL	T20
-1	0	0	1	INCODE,IHDDFL,IBUDFL,ICBCFL	T21
-1	0	0	1	INCODE,IHDDFL,IBUDFL,ICBCFL	T22
-1	0	0	1	INCODE,IHDDFL,IBUDFL,ICBCFL	T23
-1	0	0	1	INCODE,IHDDFL,IBUDFL,ICBCFL	T24
-1	1	0	1	INCODE,IHDDFL,IBUDFL,ICBCFL	T25
-1	0	0	1	INCODE,IHDDFL,IBUDFL,ICBCFL	T26
-1	0	0	1	INCODE,IHDDFL,IBUDFL,ICBCFL	T27
-1	0	0	1	INCODE,IHDDFL,IBUDFL,ICBCFL	T28
-1	0	0	1	INCODE,IHDDFL,IBUDFL,ICBCFL	T29
-1	1	0	1	INCODE,IHDDFL,IBUDFL,ICBCFL	T30
-1	0	0	1	INCODE,IHDDFL,IBUDFL,ICBCFL	T31
-1	0	0	1	INCODE,IHDDFL,IBUDFL,ICBCFL	T32
-1	0	0	1	INCODE,IHDDFL,IBUDFL,ICBCFL	T33
-1	0	0	1	INCODE,IHDDFL,IBUDFL,ICBCFL	T34
-1	1	0	1	INCODE,IHDDFL,IBUDFL,ICBCFL	T35
-1	0	0	1	INCODE,IHDDFL,IBUDFL,ICBCFL	T36
-1	0	0	1	INCODE,IHDDFL,IBUDFL,ICBCFL	T37
-1	0	0	1	INCODE,IHDDFL,IBUDFL,ICBCFL	T38
-1	0	0	1	INCODE,IHDDFL,IBUDFL,ICBCFL	T39
-1	1	0	1	INCODE,IHDDFL,IBUDFL,ICBCFL	T30
-1	0	0	1	INCODE,IHDDFL,IBUDFL,ICBCFL	T41
-1	0	0	1	INCODE,IHDDFL,IBUDFL,ICBCFL	T42
-1	0	0	1	INCODE,IHDDFL,IBUDFL,ICBCFL	T43
-1	0	0	1	INCODE,IHDDFL,IBUDFL,ICBCFL	T44
-1	1	0	1	INCODE,IHDDFL,IBUDFL,ICBCFL	T45
-1	0	0	1	INCODE,IHDDFL,IBUDFL,ICBCFL	T46
-1	0	0	1	INCODE,IHDDFL,IBUDFL,ICBCFL	T47
-1	0	0	1	INCODE,IHDDFL,IBUDFL,ICBCFL	T48
-1	0	0	1	INCODE,IHDDFL,IBUDFL,ICBCFL	T49
-1	1	0	1	INCODE,IHDDFL,IBUDFL,ICBCFL	T50
-1	0	0	1	INCODE,IHDDFL,IBUDFL,ICBCFL	T51
-1	0	0	1	INCODE,IHDDFL,IBUDFL,ICBCFL	T52
-1	0	0	1	INCODE,IHDDFL,IBUDFL,ICBCFL	T53
-1	0	0	1	INCODE,IHDDFL,IBUDFL,ICBCFL	T54
-1	1	0	1	INCODE,IHDDFL,IBUDFL,ICBCFL	T55
-1	0	0	1	INCODE,IHDDFL,IBUDFL,ICBCFL	T56

INPUT FILES

SOLUTE TRANSPORT SIMULATION FOR LANDFILL AREA

```
ACS Groundwater Transport Model, Simulating Griffith Municipal Landfill
30 year simulation --   5 ug/l Benzene at source
        1       24       30        1                 |NLAY,NROW,NCOL,NPER
DAY FT  UNDF                                         |LUNIT,TUNIT,MUNIT
T T T T                                              |ADV,DSP,SSM,RCT
 1                                                   |LAYCON
        0     100.                                   |DELR
        0     100.                                   |DELC
        0     634.                                   |HTOP
        0      14.                                   |DZ-LAYER1
        0     0.25                                   |POROSITY-LAYER1
        0        1                                        |ICBUND-LAYER1
      100        5.  (30F2.0)                 7           |SCONC-LAYER1
 0 0 0 0 0 0 0 0 0 0 0 0 0 0 0 0 0 0 0 0 0 0 0 0 0 0 0 0
 0 0 0 0 0 0 0 0 0 0 0 0 0 0 0 0 0 0 0 0 0 0 0 0 0 0 0 0
 0 0 0 0 0 0 0 0 0 0 0 0 0 0 0 0 0 0 0 0 0 0 0 0 0 0 0 0
 0 0 0 0 0 0 0 0 1 1 1 1 1 1 1 0 0 0 0 0 0 0 0 0 0 0 0 0
 0 0 0 0 0 0 0 0 1 1 1 1 1 1 1 0 0 0 0 0 0 0 0 0 0 0 0 0
 0 0 0 0 0 0 0 1 1 1 1 1 1 1 1 0 0 0 0 0 0 0 0 0 0 0 0 0
 0 0 0 0 0 0 1 1 1 1 1 1 1 1 1 0 0 0 0 0 0 0 0 0 0 0 0 0
 0 0 0 0 0 1 1 1 1 1 1 1 1 1 1 0 0 0 0 0 0 0 0 0 0 0 0 0
 0 0 0 0 0 1 1 1 1 1 1 1 1 1 1 0 0 0 0 0 0 0 0 0 0 0 0 0
 0 0 0 0 1 1 1 1 1 1 1 1 1 1 1 0 0 0 0 0 0 0 0 0 0 0 0 0
 0 0 0 1 1 1 1 1 1 1 1 1 1 1 1 0 0 0 0 0 0 0 0 0 0 0 0 0
 0 0 1 1 1 1 1 1 1 1 1 1 1 1 1 0 0 0 0 0 0 0 0 0 0 0 0 0
 0 0 1 1 1 1 1 1 1 1 1 1 1 1 1 0 0 0 0 0 0 0 0 0 0 0 0 0
 0 0 1 1 1 1 1 1 0 0 0 0 0 0 0 0 0 0 0 0 0 0 0 0 0 0 0 0
 0 0 1 1 1 1 1 1 0 0 0 0 0 0 0 0 0 0 0 0 0 0 0 0 0 0 0 0
 0 0 1 1 1 1 1 1 0 0 0 0 0 0 0 0 0 0 0 0 0 0 0 0 0 0 0 0
 0 0 1 1 1 1 1 1 0 0 0 0 0 0 0 0 0 0 0 0 0 0 0 0 0 0 0 0
 0 0 0 0 0 0 0 0 0 0 0 0 0 0 0 0 0 0 0 0 0 0 0 0 0 0 0 0
 0 0 0 0 0 0 0 0 0 0 0 0 0 0 0 0 0 0 0 0 0 0 0 0 0 0 0 0
 0 0 0 0 0 0 0 0 0 0 0 0 0 0 0 0 0 0 0 0 0 0 0 0 0 0 0 0
 0 0 0 0 0 0 0 0 0 0 0 0 0 0 0 0 0 0 0 0 0 0 0 0 0 0 0 0
 0 0 0 0 0 0 0 0 0 0 0 0 0 0 0 0 0 0 0 0 0 0 0 0 0 0 0 0
 0 0 0 0 0 0 0 0 0 0 0 0 0 0 0 0 0 0 0 0 0 0 0 0 0 0 0 0
     0.00                                                        |CINACT
        1        0        1        0        T                   |IFMTCN,IFMTNP IFMTRF,IFMTDP,SAVUCN
        4                                                        |NPRS
   365.25   3652.50   7305.00   10957.5
        4                                                        |NOBS
        1        3        4                                      |Layer, Row, Col
        1        6        4
        1        9        4
        1        8       10
        T                                                        |CHKMAS
  10957.5       30       1.                                      |PERLEN,NSTP,TSMULT
       0.     10000                                              |DT0,MXSTRN
```

```
     3     0.5    75000                                        !MIXELM,PERCEL,MXPART
     3     .50                                                 !ITRACK,WD
  1.e-5      0        0       10        2       30        1    !DCEPS,NPLANE,NPL,NPH,NPMIN,NPMAX,SRMULT
     1      0        8                                         !INTERP,NLSINK,NPSINK
   .01                                                         !DCHMOC
```

```
0      2.      ¦AL-LAYER1, ENTERED AS A UNIFORM VALUE
0      .20     ¦TRPT, ENTERED AS A UNIROM VALUE
0      .20     ¦TRPV
0      0.      ¦DMCOEF
```

```
F F T F T T                    ¦FWEL,FDRN,FRCH,FEVT,FRIV,FGHB
    1000                                                  ¦MXSS
      -1                                                  ¦INCRCH
       0                                                  ¦NSS
```

```
1        0                    |ISOTHM,IREACT
0      1.8                    |RHOB, ENTERED AS A UNIFORM VALUE
0     .204                    |SP1
0       1.                    |SP2
```

Appendix Z

Screening Method for Estimating Inhalation Exposure to Volatile Chemicals from Domestic Water

DRAFT FEB 15 1991

SCREENING METHOD FOR ESTIMATING INHALATION EXPOSURE TO VOLATILE CHEMICALS FROM DOMESTIC WATER

1. Introduction

The following discussion has been developed to provide a screening method for estimating the indoor air concentrations of volatile chemicals from indoor water uses and the resulting human inhalation exposures, with an emphasis on showers. A computerized model titled MAVRIQ (Model for Analysis of Volatiles and Residential Indoor-Air Quality), which is under development, may also be used to refine the exposure estimates since it more accurately accounts for human behavioral and water use patterns.

This procedure evolved from research done by Julian Andelman at the Universtity of Pittsburg under funding from the Expsoure Assessment Group at US EPA in Washington, DC. The references given provide a more detailed description of these procedures and related work.

2. When is Inhalation Exposure of Concern?

In order to determine the significance of the inhalation pathway the ratio of the vapor inhalation exposure to the water ingestion exposure can be calculated. Using Henry's Law Constant to obtain the equilibrium concentration in air, and setting a ratio of < 0.1 as criteria, the equation can be derived as follow:

$$\frac{\text{max inhalation exposure}}{\text{water ingestion exposure}} < 0.1 \qquad (1)$$

$$\frac{H\ C_w \times (20{,}000\ \text{L/day})}{C_w \times (2\ \text{L/day})} < 0.1 \qquad (2)$$

$$H < 10^{-5} \qquad (3)$$

Where C_w = contaminant concentration in water (mg/L)
H = Henry's Law Constant (unitless)

The unitless Henry's Law Constant can be calculated by using the following equation.

$$H = H'/RT$$

where H' = Henry's Law Constant in atm-m^3/mol
R = gas constant in atm-m^3/mol °K
T = temperature in °K.

Assuming a typical water temperature in a shower scenario of 40°C, RT is 2.6×10^{-2} atm-m^3/mol.

Equation (3) suggests that for compounds with Henry's Law Constants of $< 10^{-5}$, the inhalation exposure would not exceed ingestion and is probably much less, therefore the inhalation pathway may not be of concern when compared to ingestion. Caution should be used when applying this criterion. If the ingestion exposure is significant, the inhalation exposure, although orders of magnitude less, may also be significant when considered separately.

3. Showering Exposure

The derivations and assumptions of the equations used to estimate exposure through the showering scenario are included in Appendix 1.

The exposure equation below accounts for the exposure during the showering time and the exposure during the period subsequent to the shower where there is a decay of the chemical concentration.

$$E_i = [C_{aAVG1}Bt_1]_{shower} + [C_{aAVG2}Bt_2]_{after\ shower} \qquad (4)$$

Where: E_i = exposure [mg]
C_{aAVG1} = average air concentration during shower [mg/L]
C_{aAVG2} = average air concentration after shower [mg/L]
B = breathing rate [L/hr]
t_1 = shower period [hr]
t_2 = after shower period [hr]

C_{aAVG1} and C_{aAVG2} are estimated using equations (5) and (6) and (7) below.

$$C_{aAVG1} = C_{aMAX}/2 \qquad (5)$$

$$C_{aAVG2} = C_{aMAX} \qquad (6)$$

$$C_{aMAX} = \frac{C_w \times f \times F_w \times t_1}{V_a} \qquad (7)$$

Where: C_{aMAX} = maximum air concentration in bathroom [mg/L]
C_w = water concentration [mg/L]
f = fraction volatilization [unitless]
F_w = water flow rate [L/hr]
V_a = bathroom size [L]

Default values for the variables in these equations are tabulated in table 1.

Using equations (4) through (7) and the average or most probable values from Table 1, one

can estimate the exposure during showering.

Example:
Assumptions

$f = .75$
$F_w = 600$ L/hr
$t_1 = 0.08$ hr
$t_2 = 0.2$ hr
$V_a = 10{,}000$ L

$$C_{aMAX} = \frac{C_w (0.75)(600 L/hr)(0.08\ hr)}{(10{,}000\ L)}$$

$$= 3.6 \times 10^{-3}\ C_w$$

$$C_{aAVG} = 1.8 \times 10^{-3}\ C_w$$

$$E_1 = 1.8 \times 10^{-3}\ C_w(833 L/hr)(0.08 hr) + 3.6 \times 10^{-3}\ C_w(833 L/hr)(0.2 hr)$$

$$= 0.72(L)\ C_w$$

TABLE 1

Variable	Value or Range	Reference
Fraction Volatilization (f)	0.5 - 0.9 (typical=0.75)	1
Water Flow Rate (F_w) [L/hr]	600 - 1,800 (mean=600)	2
Shower Period (t_1) [hr]	0.08 - 0.3 (mean=0.08)	2
After Shower Period (t_2)	0.2 (typical)	1
Bathroom size (V_a) [L]	8,300 - 9,800	3
Breathing Rate (B) [L/hr]	833 ($20m^3$/day)	4

1. Andelman, J., Total Exposure to Volatile Organic Compounds in Potable Water, Chapter 20, Significance and Treatment of Volatile Organic Compounds in Water Supplies

2. U.S. Department of Housing and Urban Development, Residential Water Conservation Projects, March 1984, Contract H-5230

3. Giardino NJ, Gumerman E, Andelman JB, Wilkes CR, Small MJ, Borrazo JE, Davidson CI (1990), Real-Time Air Measurements of Trichloroethylene in Domestic Bathrooms using Contaminated Water

4. U.S. EPA Factors Handbook

4. Whole House Exposure

Similarly, a one-compartment indoor-air model may be used to describe the range of average indoor-air concentrations that are likely to be encountered from a volatile organic chemical. The equation does not address the time and space variations that will be encountered throughout the day in the home. The exposure estimates obtained using the air concentrations from equation (8) do not include those that would occur at the point of water use, such as during showering.

The air concentration can be estimated by using the equation below.

$$C_a = \frac{WHF\ C_w\ f}{HV\ ER\ MC} \qquad (8)$$

where; C_a = concentration in air (mg/m^3)
C_w = concentration in water (mg/L)
WFH = water flow rate in whole house (L/day)
HV = house volume (m^3)
ER = exchange rate (air changes/day)
MC = mixing coefficient (unitless)
f = fraction of contaminant that volatilizes (unitless)

Table 2 shows a list of the ranges of values that these variables can take. An example of the use of equation (8) is presented below.

Assumptions

WFH = 723 (L/day)
HV = 177.7 (m^3)
ER = 13.7 - 58.8 (air changes/day)
MC = 0.15 - 1.0 (unitless)
f = 0.5 - 1.0 (unitless)

$$C_a = (0.03 - 2.0\ [L/m^3])\ C_w\ [mg/L] \qquad (9)$$

TABLE 2

Variable	Value or Range	Reference
Water Flow Rate (WFH) [L/day]	723 (typical)	1
House Volume (HV) [m^3]	177.7 (typical?)	2
Exchange Rate (ER) [air changes/day]	13.7 - 58.8	3
Exchange Rate (ER) [air changes/day]	21.6 - 84.0	4
Mixing Coefficient (MC) (unitless)	0.15 - 1.0	5
Fraction Volatilization (f) [unitless]	0.5 - 1.0	6

1. U.S. Department of Housing and Urban Development (1984) Residential Water Conservation Projects

2. Axley J (1988) Progress Toward a General Analytical Method for Predicting Indoor Air Pollution in Buildings: Indoor Air Quality Modeling Phase III Report. NBSIR 88-3814

3. Grimsrud D.T., Sherman M.H., and Sonderegger R.C. (1982) Calculating infiltration: Implications for a Construction Quality Standard. Proceedings - ASHRAE/DEO Conference on Thermal Performance of the Exterior Envelopes of Buildings, Las Vegas, NV, Lawrence Berkeley Laboratory Report, LBL-9416. (refers to new houses)

4. ASHRAE (1985) Natural Ventilation and Infiltration. ASHRAE Fundamentals Handbook, Chapter 22, ASHRAE Inc., Atlanta, GA. (refers to older houses)

5. U.S. EPA (1987); Exposure to Volatilized Drinking Water Contaminants Via Inhalation - Importance Relative to Ingestion; Office of Drinking Water, Criteria and Standards Division, Health Effects Branch.

6. Cantor, K.P., Christman R.F., Ram, N.M., Significance and Treatment of Volatile Organic

Compounds in Water Supplies; Chapter 20 - Total Exposure to Volatile Organic Compounds in Potable Water; Julian B. Andelman

Note: The ranges represent the average value and the maximum value. For the range presented in reference #4, the first value represents the median. Values presented for mixing coefficients are based on judgment.

Appendix A: Derivation of Equations

Nature of Volatilization Process

To assess the potential for VOC's to volatilize from water used indoors, it is useful to consider the equilibrium and rate processes involved. The relevant relationship describing the volatilization of a chemical and its subsequent equilibrium between the air and water phases is Henry's law

$$H = C_a/C_w \qquad (1)$$

where H is the dimensionless Henry's law constant, and C_a and C_w (mass/volume) are the concentrations of the volatilized chemical in the air and water phases, respectively, at equilibrium.

Table 5 is a list of H constants at 25 °C for several organic chemicals of environmental concern, along with their vapor pressures and solubilities, the values being approximate, either calculated or taken directly from the compilation by Mackay and Shiu [19]. The H constants shown there encompass a

range greater than five orders of magnitude. Their vapor pressures and water solubilities are also quite different. Since the H values are predicted fairly well by the ratio of the vapor pressure of the pure material to its aqueous solubility, compounds such as carbon tetrachloride and tetrachloroethylene, with quite different solubilities and vapor pressures, can nevertheless have similar H values. Also it is essential to recognize that even a low vapor-pressure chemical, by virtue of its low solubility in water, has the potential to volatilize to the same extent as a high vapor-pressure chemical.

The maximum extent to which a chemical may be expected to volatilize in the home from indoor water uses can be estimated by considering the average quantities of water used within a home, F_w (L/h), along with typical air flow or infiltration rates F_a (L/h). For a family of four a typical ratio of F_a/F_w may be taken as 10^4 [4]. The ratio of masses of volatilized chemicals, r, in the two phases is given by

$$r = (C_a/C_w)(V_a/V_w) \qquad (2)$$

where V_a and V_w are the quantities of air and water, respectively, used in a given period of time in the home. In the steady-state one can assume that V_a/V_w equals F_a/F_w, and r_{MAX} is the maximum expected value for r when C_a/C_w equals H, such that

$$r_{MAX} = H(F_a/F_w) = 10^4 H \qquad (3)$$

This indicates that in the steady-state, as water is used within the typical home and air infiltrates through it, for a chemical with an H value as low as 10^{-4}, r_{MAX} is unity, or about 50% volatilization will occur. Since all the chemicals in Table 5 have H values greater than 10^{-4}, in each case, assuming Henry's law equilibrium is attained, one would expect substantial volatilization to occur in the home from normal uses of contaminated water as it is exposed to the indoor air.

The H constant will increase with temperature. Munz and Roberts [20] showed that for several volatile organic chemicals the temperature effect is given by

$$\log H = A' - B'/T \qquad (4)$$

where A′ and B′ are constants for each chemical, and T is absolute temperature. For chloroform the measured A′ and B′ values were found to be 4.990 and 1729, respectively; and for carbon tetrachloride, 5.853 and 1718, respectively, the measurements being taken over the range of 10 to 30 °C. For example, using this equation for chloroform, the H values are 0.076 and 0.19 at 10 °C and 30 °C, respectively, The comparable values for carbon tetrachloride are 0.606 and 1.52. Thus the maximum extent of volatilization that can occur will increase markedly with temperature.

As discussed by Mackay and Yeun [21], the rate of volatilization of a chemical from water is dependent on its molecular-diffusivity properties. Often a two-resistance model

is used to describe the process in which the volatilizing chemical has to first diffuse across a liquid film at the air water interface, followed by diffusion across the air film. Mackay and Yeun measured volatilization rates in a wind wave tank for 11 organic compounds with varying Henry's law constants. They confirmed the validity of the two-resistance model, and showed the effects of solute diffusivity and temperature. The chemicals studied included several halogenated VOC's, including chlorobenzene, carbon tetrachloride, 1,2-dibromoethane, and 1,2-dichloropropane, as well as benzene and toluene, and several ketones and alcohols. They showed that no interactions occur when solutes volatilize simultaneously, and concluded that the mass-transfer rate was predominantly liquid-phase resistant for many of these chemicals.

The two-resistance model expressing the mass flux, F_m (mol/m^2s), can be written as

$$F_m = K(C_w - C_a/H) \tag{5}$$

where K is the overall, two-resistance mass-transfer coefficient (m/s), C_a is the solute concentration in air (mol/m^3) and C_w that in water. The overall mass transfer is a product of the flux and the surface area exposed, so that, for example, small droplets in a shower with a greater surface area would be expected to have a greater rate of volatilization per unit time than would the same mass of larger droplets with a lower surface area/mass ratio.

Mackay and Yeun concluded that the mass-transfer coefficient in either the liquid or gas phase was most likely dependent on the Schmidt number, Sc, which is the dimensionless ratio of viscosity/(density x diffusivity), in the respective phase. The two-resistance model describes the K in terms of liquid and gas phase transfer coefficients, K_L and K_G, respectively, such that

$$1/K = 1/K_L + 1/HK_G \qquad (6)$$

They showed that for their data K_L was proportional to 3.41×10^{-3} $Sc_L^{-0.5}$, while K_G was proportional to 4.62×10^{-2} $Sc_G^{-0.67}$. The Sc_G and Sc_L values for the 12 compounds did not differ greatly, ranging from 0.72-1.07 for Sc_G, and 939-1177 for Sc_L at 20 °C. However, the H values varied considerably by almost four orders of magnitude. For the smallest H-value compound, 1-butanol, the K_G term dominated to establish the overall K, while for the high H-value compounds like benzene and carbon tetrachloride, liquid-film transfer was the dominant rate-controlling step, the $1/HK_G$ term being negligible in Equation 8. The overall mass-transfer coefficients measured were thus quite different at these two extremes. For example, the ratio of mass-transfer coefficients for benzene to that of 1-butanol varied from 14 to 20. In contrast, for those compounds where K_L dominated, the K values did not vary much, as expected, since their Sc_L values were quite similar, and H no longer played a significant role in determining K. Thus, in one series of determinations of mass-transfer coefficients, Mackay and Yeun measured K values of 51.1, 51.1,

and 45.3 (10^6 m/s), respectively, for benzene, carbon tetrachloride, and 1,2-dibromoethane, their Sc_L values being 1021, 1062, and 1075, respectively.

This analysis indicates that one should be able to compare and predict the K values among compounds based on fundamental molecular properties and H values, to the extent that this two-resistance model applies to the volatilization from indoor water uses. They observed that the use of the K_L dependency on $Sc_L^{-0.5}$ predicts a 2.8% temperature increase in K per degree.

Equation 5 for the mass-transfer or flux at the water air-interface predicts that when the air concentration, C_a, is negligible, meaning a small buildup of chemical in the receiving air, then the rate of mass transfer is directly proportional to the concentration of volatilizing chemical in the water. This is of importance in that one could then extrapolate the percent volatilization at a high concentration in the feed water to predict the same fractional volatilization at a low-feed concentration. At the same time, even if the buildup in the air did occur, however, and its removal were first order in concentration, one could still extrapolate to the lower feed concentration.

There is independent evidence in laboratory studies that the mass-transfer coefficient may be reasonably constant over several orders of magnitude of concentration [22]. For 1,2-dichloroethane in the range of 1 g/L to 10 ug/L the coefficient

of variation of mass-transfer coefficient was found to be ± 6.31%; for 1,1,1-trichloroethane it was ± 5.42% over a range of concentration of 0.05 g/L to 30 ug/L.

In summary, the H constant will limit the maximum volatilization that can occur in indoor water uses. However, except for a few still-water systems in the home, such as water in a toilet bowl, many water uses are flowing or are of short-term duration in which the rate of volatilization will be limiting and equilibrium not reached. In those instances the mass-transfer coefficients become the principal controlling factor for the relative releases of different volatile and semi-volatile chemicals. Even here, however, the H constant is of importance in that it will influence the magnitude of the mass-transfer coefficient, as well as the extent to which the flux for volatilization at the water-air interface will be reduced as the air concentration builds up.

Finally, the water-air interfacial areas and temperatures of the water uses are critical determining factors in the rate of mass transfer; and certainly the H constants will increase with temperature as well. Thus, one can expect that since the various indoor water uses involve different quantities and flows of water, residence times in the water appliances and uses, degrees of mixing and turbulence, and temperatures, the extents of volatilization among the water uses, even for a given chemical, should vary.

Values for transfer efficiencies among water uses in a typical home have been determined for radon by Prichard and Gessell [10]. As shown in Table 6, the transfer efficiencies (percent volatilization) were found to vary from 30 to 90% among the water uses, the volume use-weighted mean being about 50%.

Laboratory Shower Experiments

We have performed studies on volatilization of chemicals from laboratory and full-size shower and bath systems in which chemicals have been added to the water [3-8]. In our typical laboratory shower experiments with chloroform shown in Figure 1 [23], the concentration of the chemical in the air pumped from the chamber is measured continuously as the shower water flows, and continues to be measured after the chemical injection is terminated, but with the shower still flowing. The peak concentrations shown in Figure 1 occur shortly after terminating the injection of chemical. In these studies we have also monitored the drainwater leaving the shower chamber for mass-balance purposes.

For this system the equation describing the rate of change of air concentration, C_a (mg/L), can be expressed as [6]

$$V_a(dC_a/dt) = k(C_w - C_a/H) - F_aC_a \qquad (7)$$

where V_a (L) is the volume of the shower chamber, C_w (mg/L) the concentration of the chemical in the feed water, F_a (L/min) the air flow rate through the chamber, and k (L/min) the

volatilization mass-transfer coefficient. When the feed concentration is terminated, the volatilization source term becomes zero and Equation 7 reduces to

$$V_a(dC_a/dt) = -F_aC_a \tag{8}$$

the integrated form being

$$\ln C_a = \ln C_{a\,INITIAL} - (F_a/V_a)t \tag{9}$$

As expressed by Equation 7, we find that the volatilization source term $k(C_w - C_a/H)$ does indeed reduce significantly with time as C_a increases. For example, in the experiment with a chloroform feed of 1.84 mg/L shown in Figure 1, at 10, 30, and 50 min, the instantaneous fractional rate of volatilization, f, was 0.82, 0.70, and 0.62, respectively. This is consistent with our experimental observation that the C_a/C_w ratio for air and water leaving the chamber was found to be less than the H value for chloroform, but that the latter value of about 0.15 was gradually approached during the shower experiment [23], thus gradually inhibiting the volatilization rate.

We have also found in our experiments with both chloroform and trichloroethylene (TCE), that during the decay period (following the termination of the chemical in the shower feed) significant quantities of the volatilized chemical in the shower chamber air redissolves in the flowing water, as measured in the drainwater. Thus, Equations 8 and 9 are not quite accurate, since there is this additional decay route.

As shown in Figure 1 for chloroform, as expected the air concentration due to volatilization increases with temperature and concentration of the feed water in the shower experiments. Also as expected, we have found that increased air flow reduces the concentration of volatilized chemical in the chamber air and at the same time increases the rate of volatilization, since the rate of approach to Henry's law equilibrium is reduced. Rates of volatilization for chloroform and TCE ranged from about 50 to 90%, depending on temperature and other shower conditions, with chloroform volatilization typically lower than that for TCE.

Modeling Shower and Whole House Exposures

One can estimate the shower and whole house exposures by the use of simple, one-compartment modeling. For example, integrating Equation 7 and assuming that C_a/H is negligible compared to C_w, one obtains an expression for the change in C_a with time in a chamber

$$\ln (1 - C_a F_a / k C_w) = - (F_a / V_a) t \qquad (10)$$

The assumption that C_a/H is negligible implies that the rate of volatilization in the shower is constant. In that case it can be shown that k equals fF_w, where f is the fraction of chemical that volatilizes from the feedwater whose flow rate is F_w (V/t). Although, as noted above there is a gradual decrease in f values with time during the shower experiments, this will not substantially affect the estimated average values of C_a that will

be used to calculate exposures. Using Equation 10 one can calculate the maximum air concentration that will be achieved in a one-compartment shower or bath. For small values of $(F_a/V_a)t$ (the magnitude of which will be considered below), Equation 10 reduces to a simple linear form

$$C_a = ktC_w/V_a \tag{11}$$

Thus, after a given shower period, t, this is also the maximum concentration, C_{aMAX},

$$C_{aMAX} = ktC_w/V_a \tag{12}$$

Also, the average concentration, C_{aAVG}, would be $C_{aMAX}/2$ since C_a increases linearly with time

$$C_{aAVG} = ktC_w/2V_a \tag{13}$$

For the purpose of estimating possible shower exposures, it will be assumed that the concentrations during the shower period itself, as well as subsequently while a person remains in the bathroom, will be the same in the shower and bathroom. In fact, our measurements in a full-size shower show that there is indeed a difference between the two, and that the system should be more appropriately treated as a two-compartment system [24]. For precise modeling of the exposures, this difference should be considered, but as an approximation it will be neglected here.

Subsequent to the showering period there will be a decay of the air concentrations in the bathroom due to normal exchange of air. During this period the person in the bathroom will continue to be exposed to the volatilized chemicals in the air. The decay

of C_a is represented by

$$\ln (C_a/C_{aMAX}) = - (F_a/V_a)t \quad (14)$$

For small values of $(F_a/V_a)t$ this equation linearizes to

$$C_a = C_{aMAX} [1 - (F_a/V_a)t] \quad (15)$$

The average concentration during this period, C_{aAVG}, is

$$C_{aAVG} = (C_a + C_{aMAX})/2 \quad (16)$$

Combining Equations 15 and 16, one obtains

$$C_{aAVG} = C_{aMAX} [1 - F_a t/(2V_a)] \quad (17)$$

In many cases, the $F_a t/(2V_a)$ term in Equation 17 is likely to be substantially smaller than unity, so that as an approximation during the decay period one can assume that $C_{aAVG} = C_{aMAX}$, at least for the purposes of estimating the magnitude of inhalation exposures.

One can use these equations to estimate the C_{aAVG} values for various shower-water flow and bathroom characteristics. In an Australian survey of water uses, distributions of average shower-water flow rates and duration were reported for about 2,500 households [25]. The geometric mean for the shower flow rates, F_w, was about 8 L/min (about 500 L/h), and about 6 min for the shower duration, which will be specified as t_d, and typically taken as 0.1 h. These values will be utilized here to estimate C_a values using the above equations. In a study of modern houses in one heating season the geometric mean for air exchange rates was reported to be 0.53 h^{-1} [13]. This value will be used for the bathroom, along with a value for its size, V_a, of 10,000 L.

Thus, the F_a for the bathroom will be $0.53V_a$, or about 5,000 L/h. Thus, for a shower period of 0.1 h, or a decay period of 0.2 h, with $(F_a/V_a)t$ values of 0.053 and 0.115, respectively, the approximation of linearizing Equations 10 and 14 involves errors of less than one percent.

The above equations and data can be utilized to estimate the average air concentrations to which people are exposed in bathrooms during and after showering. As discussed earlier, the fractional volatilization rate in our shower experiments has been found to range from 0.5 to 0.9, depending on the specific chemical, water temperature, and other factors. For the purposes of estimating a typical value, we will use an f value of 0.75.

Using Equation 12 and the fact that k equals fF_w yields

$$C_{aMAX} = C_w f F_w t_d / V_a \tag{18}$$

One can use typical values for the variables indicated above to obtain

$$C_{aMAX} = C_w(0.75)(500)(0.1)/10^4 = 3.75\text{x}10^{-3}\ C_w \tag{19}$$

The value for C_{aAVG} would be one-half this, or $1.9\text{x}10^{-3}\ C_w$. It is interesting to note that Prichard and Gesell [10] predicted that for a five-minute shower using 75 L of water and with 65% volatilization in a 30,000 L room, the average radon air concentration would be $1.6\text{x}10^{-3}\ C_w$. Similarly, McCone [9] modeled several low molecular-weight organics volatilizing with multiple family use of a bathroom in the early morning hours and calculated typical bathroom air concentrations of $5\text{x}10^{-3}\ C_w$.

Such predicted air concentrations will be highly dependent on a variety of factors, including the nature of the volatilizing chemical, geometry and air exchange between the shower and surrounding room, water temperature, and water flow rate. Nevertheless, these can be assessed to determine the likely range of bathroom air concentrations that can be expected in homes.

It is also of interest to estimate the inhalation exposures in the shower and bathroom, and compare them to the likely ingestion exposures. Inhalation exposure, E_i (mg), can be defined as the product of C_a, the breathing rate, B (L/h), typically 1,000 L/h for an adult, and the exposure time, t.

$$E_i = C_a B t \qquad (20)$$

As an example, one can use this equation to estimate the exposures during a 0.1 h showering time, using the value of C_{aAVG} above of 1.9×10^{-3} C_w. Also as noted above, during a 0.2 h period subsequent to the shower, the decay will not be significant, so that the C_{aAVG} during this period can be taken to be C_{MAX}, namely 3.75×10^{-3} C_w. Thus, one can calculate the E_i for the combined 0.1 h shower and 0.2 h subsequent period in the bathroom as the sum of two terms using Equation 20, to give

$$E_i = [C_{aAVG} B t]_{shower} + [C_{aAVG} B t]_{decay} \qquad (21)$$

Inserting the appropriate values, one obtains

$$E_i = 1.875 \times 10^{-3}\ C_w (1000)(0.1) + 3.75 \times 10^{-3}\ C_w (1000)(0.2) \qquad (22)$$

Thus, E_i has the value $0.94 C_w$, where the units of C_w are mass/L.

This is the inhalation exposure in the bathroom during the shower and subsequent to it while the bather remains in the bathroom, and is approximately equivalent to the exposure that would occur from ingesting one liter of the water. However, several occupants of a home may take a shower during a period when the volatile chemical air concentration in a bathroom has not decayed and builds up to levels higher than one would predict for a single bather. In that instance, the exposures could be substantially higher than would be predicted by the above relationship.

Similarly, we have used a simple predictive equation, based on a one-compartment indoor-air model, to describe the range of average indoor-air concentrations that are likely to be encountered from a chemical volatilizing at an average rate of 50% from all water uses, as discussed above to be a typical value for radon. The relationship we have obtained for the expected range of indoor-air concentrations is [7]

$$C_a = (0.1 \text{ to } 5)\times10^{-4}\ C_w \qquad (23)$$

where C_a is the average indoor-air concentration (mg/L), generated by the corresponding average water concentration, C_w (mg/L). Thus, for example, a water concentration of 1 mg/L would be expected to generate between 1×10^{-5} to 5×10^{-4} mg/L average air concentration in the home. This, of course, does not address the time and space variations that will be encountered throughout the day in the home. It is interesting to note that

Nazaroff et al. [13] have similarly made estimates of the likely indoor-air concentrations of radon for U.S. homes by the water volatilization route. The geometric mean in their factor applicable to Equation 23 is 0.65×10^{-4}, within our range of predicted values. Also, their range of one standard deviation around the mean corresponds to the following equation

$$C_a = (0.23 \text{ to } 1.87) \times 10^{-4}\ C_w \qquad (24)$$

also within our predicted range. McKone [9] has similarly estimated household air concentration for several volatilizing chemicals, predicting an average C_a ranging from 2×10^{-5} to 1.2×10^{-4} mg/L in air for a C_w of 1 mg/L in water, also within the range of that predicted by Equation 23.

One can use these air concentration predictions to estimate the likely inhalation exposures, E_i, for an adult during a 24-hour residence period in a house. Combining Equations 20 and 23 one obtains

$$E_i = (0.1 \text{ to } 5)(10^{-4})(1000)(24)\ C_w = (0.2 \text{ to } 10)\ C_w \qquad (25)$$

Since the C_w units here are mass/L, a 1 mg/L water concentration corresponds to a range of inhalation exposures of 0.2 to 10 mg per day, in comparison to 2 mg per day for the ingestion of 2 liters of that water. It should be noted that these inhalation exposure estimates do not include those that would occur at the point of water use, such as during showering. As discussed above, the latter exposures can be comparable to those from direct ingestion.

There is a remarkable consistency in the above range of likely predicted average indoor-air concentrations from the totality of indoor water sources. Nevertheless, there are a number of factors to be considered in refining these estimates and developing a useful and simple predictive relationship that can be applied by those responsible for exposure assessments in specific situations. They can be categorized as follows:

a) chemical characteristics that affect the rate and extent of volatilization, including soap and detergent use

b) water use factors that affect the "source strength" and its time and location variability

c) chemical characteristics that influence the behavior and interactions of the volatilized chemicals with "sinks", typically high surface area materials in the home; also the specific nature, amounts, and locations of these sinks

d) house structure and indoor-air flow regimes that transport the volatilized chemicals throughout the home

e) personal behavior and home occupancy factors that determine an individual's exposure.

The simple indoor-air models mentioned above generally are not sufficiently specific to address all the above factors, although they can and have been evaluated for some indoor-air pollution sources other than those from water [26].

The potential interactions between surfaces in homes and organic vapors released from water into indoor air have not been

studied and need to be evaluated. For some chemicals it may be appropriate to incorporate these interactions into the volatilization, indoor-air exposure model. One study of the interaction of volatile organic chemicals with materials used in the home examined three surfaces [27]: plywood, nylon carpeting, and wool carpeting. The study focused on twenty volatile organic chemicals, including alkanes, aromatics, alcohols, esters, ketones, aldehydes, terpenes, and chlorinated hydrocarbons. They showed clear interactions between the gaseous organic chemicals and the surfaces. For example, in one experiment wool carpeting became essentially saturated with lindane within about one day.

In order to determine the role of such "sink" interactions there are three broad questions that need to be addressed:

1) Which classes of organic/surface systems demonstrate significant sorption effects?

2) What are the appropriate equilibrium and kinetic models for the sorption process for the organic/surface systems of interest?

3) How can this equilibrium and kinetic information be incorporated into a water-volatilization, indoor-air quality model?

Summary and Conclusions

VOC's have the potential for causing substantial human exposures from indoor uses of contaminated water by non-ingestion

routes, namely inhalation following volatilization from water, as well as by skin contact. The latter exposures have been estimated to be comparable to those from direct ingestion of water, although published research in this area is scanty.

Measurements in homes have shown that VOC's can be detected in indoor air following the use of contaminated water. Scaled-down and full-size laboratory bath and shower studies for such VOC's as chloroform and trichloroethylene have shown that a variety of factors can affect the extent of volatilization, found to be typically in the range of 50 to 90%. These include the nature of the volatilizing chemical, water temperature, air and water flow rates, and nature of the water use (e.g., bath versus shower).

The Henry's law equilibrium constants, H, predict that even chemicals with low vapor pressures may be expected to volatilize substantially, provided their water solubilities are also low. Thus, so-called semi-volatile organic chemicals have the potential to volatilize and cause inhalation exposures. Also, chemicals with varying H values may nevertheless volatilize at comparable rates.

Modeling and estimates of inhalation exposures to VOC's indicate that for the bather these exposures during and directly after a shower can be comparable to that from direct ingestion of the contaminated water. Also, when all water uses are considered, the inhalation exposures to all inhabitants of a home

may be substantially larger than that from direct ingestion, even without considering the inhalation exposures at the point of water use. However, additional research is required to more specifically and precisely quantify these exposures to encompass the full range of home characteristics, as well as personal water uses and occupancy factors.

Because the non-ingestion exposures to VOC's in indoor water uses are likely to be comparable to or greater than those from direct ingestion, it would be prudent to consider this in establishing regulatory limits in drinking water, as well as the need to restrict all indoor water uses when it is judged that there is a significant health risk from the direct ingestion of a contaminated water.

Acknowledgments

The author would like to acknowledge the fruitful discussions and collaborations with several students and colleagues which have provided useful perspective and data for much of this research. These include Nicholas Giardino, Thomas Jackman, Steve Myers, Lynn Wilder, Amy Couch, and William Thurston at the University of Pittsburgh; also, John Borrazzo and Cliff Davidson at Carnegie-Mellon University.

This research has been funded in part under cooperative agreement CR812761-02 between the U.S. Environmental Protection Agency and the Center for Environmental Epidemiology of the

University of Pittsburgh. This manuscript has not been subjected to EPA peer and administrative review policy, does not necessarily reflect its views, and no offical endorsement should be inferred.

References

1. Wallace LA, ED Pellizzari, TD Hartwell, R Whitmore, C Sparacino, and H Zelon (1986) "Total Exposure Assessment Methodology (Team) Study: Personal Exposures, Indoor-Outdoor Relationships, and Breath Levels of Volatile Organic Compounds in New Jersey," Environment International 12:369-387.

2. Wallace, LA (1987) The Total Exposure Assessment Methodology (TEAM) Study: Summary and Analysis: Volume I (Washington, DC: Office of Research and Development, U.S. Environmental Protection Agency).

3. Andelman, JB (1985) "Human Exposures to Volatile Halogenated Organic Chemicals in Indoor and Outdoor Air," Environmental Health Perspectives 62:313-318.

4. Andelman, JB (1985) "Inhalation Exposure in the Home to Volatile Organic Contaminants of Drinking Water," The Science of the Total Environment 47:443-460.

5. Andelman, JB, SM Meyers, and LC Wilder (1986) "Volatilization of Organic Chemicals from Indoor Uses of Water", in Chemicals in the Environment, JN Lester, R Perry, and RM Sterritt, Eds. (London: Selper Ltd.), 323-330.

6. Andelman, JB, A Couch, and WW Thurston (1986) "Inhalation Exposures in Indoor Air to Trichloroethylene from Shower Water," in Environmental Epidemiology, FC Kopfler, and GC Craun, Eds. (Chelsea, MI: Lewis Publishers, Inc.), 201-213.

7. Andelman, JB, LC Wilder, and SM Myers (1987) "Indoor Air Pollution from Volatile Chemicals in Water," in Proceedings of The 4th International Conference on Indoor Air Quality and Climate, INDOOR AIR '87, Volume 1 (Berlin: Institute for Water, Soil and Air Hygiene), 37-41.

8. Giardino, NJ, JB Andelman, JE Borrazzo, and CI Davidson (1988) "Sulfur Hexafluoride as a Surrogate for Volatilization of Organics from Indoor Water Uses," JAPCA 38(3):278-280.

9. McKone, TE (1987) "Human Exposure to Volatile Organic Compounds in Household Tap Water: The Indoor Inhalation Pathway," Environ. Sci. Technol. 21:1194-1201.

10. Prichard, HM, and TF Gesell (1981) "An Estimate of Population Exposures Due to Radon in Public Water Supplies in the Area of Houston, Texas," Health Physics 41:599-606.

11. Hess, CT, CV Weiffenbach, and SA Norton (1983) "Environmental Radon and Cancer Correlations in Maine," Health Physics 45:339-348.

12. Cross, FT, NH Harley, and W Hoffman (1985) "Health Effects and Risks from ^{222}Rn in Drinking Water," Health Physics 48(5):649-670.

13. Nazaroff, WW, SM Doyle, AV Nero, and RG Sextro (1987) "Potable Water as a Source of Airborne ^{222}Rn in U.S. Dwellings: A Review and Assessment," Health Physics 52(3):281-295.

14. Klaassen, CD (1980) "Absorption, Distribution and Excretion of Toxicants," in Toxicology, J Doull, CD Klaassen, and MO Amdur, Eds. (New York: Macmillan), 28-51.

15. Drinking Water and Health (1977) (Washington, DC: National Academy Press).

16. Brown, HS, DR Bishop, and CA Rowan (1984) "The Role of Skin Absorption as a Route of Exposure for Volatile Organic Compounds (VOCs) in Drinking Water," Am. J. Public Health 74:479-484.

17. Harris, RH, JV Rodricks, CS Clark, and SS Papadopulos (1987) "Adverse Health Effects at a Tennessee Hazardous Waste Disposal Site," in Health Effects From Hazarous Waste Sites, JB Andelman, and DW Underhill, Eds. (Chelsea, MI: Lewis Publishers, Inc.), 221-240.

18. Wester, RC, M Mobayen, and HI Maibach (1987) "In Vivo and In Vitro Absorption and Binding to Powdered Stratum Corneum as Methods to Evaluate Skin Absorption of Environmental Chemical Contaminants From Ground and Surface Water," J. Tox. Env. Health 21:367-374.

19. Mackay, D, and WY Shiu (1981) "A Critical Review of Henry's Law Constants for Chemicals of Environmental Interest," J. Phys. Chem. Ref. Data 10(4):1175-1199.

20. Munz, C, and PV Roberts (1987) "Air-Water Phase Equilibria of Volatile Organic Solutes," J. AWWA 79:62-69.

21. Mackay, D, and ATK Yeun (1983) "Mass Transfer Coefficient Correlations for Volatilization of Organic Solutes from Water," Environ. Sci. Technol. 17(4):211-217.

22. Rathbun, RE, and DY Tai (1984) "Volatilization of Chlorinated Hydrocarbons from Water," in Gas Transfer at Water Surfaces, W Brutsaert, and GH Jirka, Eds. (Dordrecht, Holland: D. Reidel Publishing Company), 27-34.

23. Jackman, T (1988) "Volatilization of Chloroform and Trichloroethylene in a Model Shower System," MSc Thesis, University of Pittsburgh, Pittsburgh, PA.

24. Giardino, N (1987) "An Indoor Air Pollution Study Using Sulfur Hexafluoride Volatilized from a Model Shower System," MSc Thesis, University of Pittsburgh, Pittsburgh, PA.

25. James, IR, and MW Knuiman (1987) "An Application of Bayes Methodology to the Analysis of Diary Records From a Water Use Study," J. Amer. Stat. Assoc. 82:705-711.

26. Wadden, RA, and PA Scheff (1983) Indoor Air Pollution (New York: John Wiley and Sons).

27. Seifert, B, and HJ Schmahl (1987) "Quantification of Sorption Effects for Selected Organic Substances Present in Indoor Air," in Proceedings of The 4th International Conference on Indoor Air Quality and Climate, INDOOR AIR '87, Volume 1 (Berlin: Institute for Water, Soil and Air Hygiene), 252-256.

Appendix B: Assumptions and Uncertainties

- Equation (4) does not account for the concentration of the chemical in the air remaining from previous showers taken by other members of the family.

- The use of Equation (4) also assumes that $(F_a/V)t$, where F_a is the air flow rate, is small compared to unity, which implies that the relationship between concentration in air and time is linear.

- Equation (4) also assumes that C_a/H during the course of the shower is small compared to C_w; which implies that the volatilization rate in the shower is constant.

- The use of Equation (6) assumes that $tF_a/2V_a$ is small compared to unity so that the concentration during the decay period after the shower, $C_{a\Delta VE2}$, can be approximated by C_{MAX}.

- The exchange between the air in the shower chamber and that in the bathroom is so rapid that the combined volume of these two compartments can be treated as a single chamber with a single concentration of volatilized chemical.

- Equation (4) does not account for the exchange rate that occurs when an exhaust fan is turned on. Modeling results using the Model for Analysis of Volatiles and Residential Indoor-air Quality (MAVRIQ) indicate that exposure is reduced by 20 % if exhaust fan is used.

- The range of volatilization fraction in Table 1 is based on experiments conducted with trichloroethylene, chloroform and dibromochloropropane. The relationship between these volatilization rates, Henry's Law Constant and molecular weight is not known yet. Summarized below are the experimental results for these three chemicals under approximately the same conditions.

Chemical	T (°C)	H (unitless)	% Volatilized
Trichloroethylene	46	1.14	81.8
Chloroform	42	0.35	56
Dibromochlorpropane	42	0.03	22.8

- Equation (8) treats the whole house as one compartment model.

WARZYN ENGINEERING INC.
MADISON, WISCONSIN

BY JAH DATE 6-14-91 SUBJECT ACS - Groundwater SHEET NO. ____ OF ____
CHKD. BY MUK DATE 6-14-91 Shower Inhalation Calc. JOB NO. 60251.23

Per Shower Event (1/day)

$$E_i\,(mg) = \left[\left(\frac{\frac{C_w(\frac{mg}{L}) * f\,(0.9) * F_w(\frac{600\,L}{hr}) * t_1\,(0.08\,hr)}{Z}}{V_a\,(10{,}000\,L)}\right) * \left(B\left(\frac{833\,L}{hr}\right) * t_1\,(0.08\,hr)\right)\right] +$$

$$\left[\left(\frac{C_w(\frac{mg}{L}) * f(0.9) * F_w(\frac{600\,L}{hr}) * t_1\,(0.08\,hr)}{V_a\,(10{,}000\,L)}\right) * \left(B\left(\frac{833\,L}{hr}\right) * t_2\,(0.2\,hr)\right)\right]$$

$$E_i\,(mg) = \left[\left(\frac{\frac{C_w(mg/L) * 43.2}{Z}}{10{,}000}\right)(66.64\,L)\right] + \left[\left(\frac{C_w(\frac{mg}{L}) * 43.2}{10{,}000}\right)(166.6\,L)\right]$$

$$= \left(C_w\left(\frac{mg}{L}\right) * 0.144\right) + \left(C_w\left(\frac{mg}{L}\right) * 0.719712\right) = E_i\,\frac{(mg)}{day}$$

$$\boxed{f * C_w * 0.959616}$$

C_w = conc (mg/L)
f = Fraction Volatized (90%)
F_w = Water Flow Rate (600 L/hr)
ET < t_1 = Shower Period (0.08 hr)
t_2 = bathroom Period (0.2 hr)
V_a = bathroom Volume (10,000 L)
IR = B = breathing Rate (L/hr)

$$\boxed{\text{Intake} = \frac{CA(\frac{mg}{m^3}) * IR(\frac{m^3}{hr}) * ET(\frac{hr}{day}) * EF(\frac{day}{year}) * ED\,(years)}{BW\,(kg) * AT\,(days)}}$$

eq 6-16 RA

EF = 365 day/year
ED = 10 yrs
BW = 30 kg
AT = 3650 (NC)
25,550 (C)

$$\left[\left(\frac{\left(\frac{\left(C_w\left(\frac{mg}{L}\right) * f(x) * F_w\left(\frac{600L}{hr}\right) * t_1(0.08hr)\right)}{2}\right)}{V_a\ (10{,}000\ L)}\right) * \left(B\left(\frac{833L}{hr}\right) * t_1(0.08hr)\right)\right] + \left[\left(\frac{\left(C_w\left(\frac{mg}{L}\right) * f(x) * F_w\left(\frac{600L}{hr}\right) * t_1(0.08hr)\right)}{V_a\ (10{,}000\ L)}\right) * \left(B\left(\frac{833L}{hr}\right) * t_2(0.2hr)\right)\right]$$

$$= \left(C_w\left(\frac{mg}{L}\right) * f(x) * 0.159936\right) + \left(C_w\left(\frac{mg}{L}\right) * f(x) * 0.79968\right)$$

$$= \left(C_w\left(\frac{mg}{L}\right) * f(x) * 0.959616\right) = E_L\left(\frac{mg}{day}\right)$$