US EPA RECORDS CENTER REGION 5
465760

SITE SAFETY PLAN
APPENDICES J - O

PRE-DESIGN SITE INVESTIGATION
AMERICAN CHEMICAL SERVICE, INC.

GRIFFITH, INDIANA

JANUARY 1996

PREPARED FOR:
ACS RD/RA EXECUTIVE COMMITTEE
GRIFFITH, INDIANA

• • •

PREPARED BY:
MONTGOMERY WATSON
ADDISON, ILLINOIS

MONTGOMERY WATSON

SITE SAFETY PLAN
APPENDICES J - O

PRE-DESIGN SITE INVESTIGATION
AMERICAN CHEMICAL SERVICE, INC.

GRIFFITH, INDIANA

JANUARY 1996

PREPARED FOR:
ACS RD/RA EXECUTIVE COMMITTEE
GRIFFITH, INDIANA

• • •

PREPARED BY:
MONTGOMERY WATSON
ADDISON, ILLINOIS

J

AMERICAN CHEMICAL SERVICE
SITE SAFETY PLAN

american Chemical Service, Inc.
TECHNICAL PRODUCTS

P.O. Box 190 · Griffith, Indiana 46319
(219) 924-4359

Date: May 10, 1995

To: All Contractors and Unescorted Inspectors
From: ACS Management

Topic: Safety and Health Plan, Non-ACS Personnel

American Chemical Service Inc. (ACS) is providing the attached document titled "Safety and Health Plan, Non-ACS Personnel" for your review. ACS requires that "unescorted" Non-ACS Personnel who are working, inspecting, observing or auditing within the ACS facility read and understand the attached plan prior to entering the facility. Unescorted means Non-ACS Personnel who are not escorted by an ACS management employee.

Please address any questions regarding the information contained in this plan to ACS management.

a:\MEMO.510

American Chemical Service, Inc.
P.O. Box 190 • Griffith, Indiana 46319
(219) 924-4370 • Chicago Phone (312) 768-3400

Safety and Health Plan

Non-ACS Personnel

April 1995

Table of Contents

Section No.	Title	Revision	Date
---	Table of Contents	000	4/20/95
---	List of Forms	000	4/20/95
SH 1.0	Introduction	000	4/20/95
SH 2.0	Background of ACS Facilities	000	4/20/95
SH 3.0	Site Entry and Accountability Program	000	4/20/95
SH 4.0	Description and Tour of Work Areas	000	4/20/95
SH 5.0	Plant Safety and Health Rules	000	4/20/95
SH 6.0	ACS Hazard Communication Program	000	4/20/95
SH 7.0	Emergency Notification System	000	4/20/95
SH 8.0	Point of Contact for Questions and Answers	000	4/20/95

Approval

List of Forms

Form No.	Title	Section	Rev No.	Date
SH 3.1	Visitor Sign-in Log	3.0	000	4/20/95
SH 3.2	Contractor & Unescorted Inspector Accountability Log	3.0	000	4/20/95

Approval

1.0 Introduction

This section to American Chemical Service's (ACS's) Site Safety and Health Plan titled "Non-ACS Personnel" has been prepared for the safety and health of visitors, Inspectors, and contractors entering the ACS facility. Pertinent information concerning plant safety and health rules, entry procedures, and the hazards present at the ACS facility is provided. Because ACS is a chemical manufacturer it must adhere to stringent safety and health regulations and requires all Non-ACS Personnel visiting the site to comply with plant Safety and Health rules established by ACS.

ACS recognizes four different categories of Non-ACS Personnel who may regularly visit/work at the site which include:

1.) **Visitors:** Site visitors who have a limited need to enter the plant manufacturing area on an infrequent basis.

2.) **Inspectors:** Personnel who have the need to enter specific areas for short or extended periods of time for the purpose of inspecting, observing or auditing.

3.) **Contractors:** Personnel who are contracted by ACS or others to conduct work within the ACS facility.

4.) **Transporters:** Personnel driving transportation vehicles for the sole purpose of delivering or shipping material to/from the site.

Specific safety and health rules and requirements have been established by ACS for each of the categories listed above based on the plant areas to be visited/worked in and the potential hazards present.

All Non-ACS Personnel, excluding transporters, are required to sign in at the ACS Facility office and obtain a badge as outlined in Section 3.0 of this document to provide accountability of personnel in the event of an emergency incident. All personnel entering the facility are required to comply with the general plant safety and health rules presented in Section 4.0.

Non-ACS Personnel allowed to work at the site unescorted (not in the presence of an ACS Management employee) must first receive a sufficient description and tour of the area to be worked in as discussed in Section 4.0. Unescorted Non-ACS Personnel are prohibited from entering areas they are not familiar with due to the potential hazards present at the site.

An explanation of ACS's Hazard Communication Program is provided in Section 6.0 for review by Non-ACS Personnel who will be working within the plant site. Section 7.0 describes ACS's Emergency Notification System that must be read and reviewed by all Non-ACS Personnel who work within the plant unescorted. All questions concerning this program can be addressed to ACS management personnel as discussed in Section 8.0

Approval

2.0 Background of ACS Facilities

American Chemical Service, Inc. is a chemical manufacturer which normally operates twenty-four hours a day five days a week. The main products manufactured at this facility are plasticizers, oil additives, and gasoline additives. These products are manufactured through various manufacturing processes including chemical reactions, blending, and mixing operations.

ACS currently employs a sufficient number of personnel to effectively operate and manage this facility. ACS's employees are provided safety and training education on a monthly basis which covers the various topics which are required by the Indiana Occupational Safety and Health Administration (IOSHA) as well as additional topics which may be required by ACS's internal manufacturing department.

The property that ACS is situated upon is classified as a Superfund Site. This site is currently being studied and remediated under the direction of the U.S. Environmental Protection Agency, the Indiana Department of Environmental Management, and a steering committee comprised of the potentially responsible parties.

At this time no additional personal protective equipment is required to enter this site other than the personal protective equipment that is required in Section 5.0 of this program. Non-ACS Personnel will be notified in the event that any special precautions or additional personal protective equipment would be required to be worn in the plant manufacturing areas.

Approval

3.0 Site Entry and Accountability

In order to provide for an accountability system of Non-ACS Personnel on-site in the event of an emergency situation, a Site Entry and Accountability system has been created and implemented at ACS. All Non-ACS Personnel as defined in Section 1.0 , excluding transporters, are required to sign in at the ACS Facility Office and obtain a badge. The badge shall be worn in a visible manner. If there is a need to be within the plant outside the normal day time working hours, 8:00 am to 4:30 pm, special arrangements must be made with ACS management. The following is a brief description of entry requirements for visitors, Inspectors, contractors, and transporters as defined in Section 1.0

3.1 Visitors

Each visitor shall sign-in at the ACS facility office using form SH 3.1 and obtain a badge if planning to enter any plant area(s). All visitors will be escorted within the facility. An ACS Management employee will be accountable for each visitor directly under his/her responsibility. In the event of an emergency situation the visitor will be directed in the proper actions to take.

3.2 Inspectors

Depending on the specific task (inspecting, observing or auditing) and the duration required in plant areas, Inspectors will be either escorted or unescorted. Entry procedures for each type of Inspector are stated below.

3.2.1 Escorted Inspectors

Each escorted Inspector shall sign-in at the ACS facility office using form SH 3.1 and obtain a badge if planning to enter any plant area(s). An ACS Management employee will be accountable for each escorted Inspector directly under his/her responsibility. In the event of an emergency situation the escorted Inspector will be directed in the proper actions to take. An escorted inspector must restrict his/her presence to designated plant areas. In particular, escorted inspectors visiting for purposes of the EPA Remedial Design/Remedial Action (RD/RA) may not enter plant manufacturing areas except as necessary to access RD/RA areas.

3.2.2 Unescorted Inspectors

All unescorted Inspectors shall be familiar with and comply with all general and contractor rules as stated in this document. Each unescorted Inspector shall sign in each day using Form SH 3.2 and secure an unescorted Inspector badge. This unescorted Inspector badge must be displayed at all times while within the facility

boundaries. An unescorted inspector must restrict his/her presence to designated plant areas. In particular, unescorted inspectors visiting the ACS facility for the purposes of the RD/RA may not enter plant manufacturing areas except as necessary to access RD/RA locations. Whenever an unescorted Inspector will be leaving the facility he/she must sign out and return the ID badge to the sign-out location.

3.3 Contractors

Each contractor and employee of a contractor shall sign in each day using Form SH 3.2 and secure a contractor badge. This contractor badge must be visibly displayed at all times while within the facility boundaries. Whenever a contractor employee will be leaving the facility he/she must sign out and return the ID badge to the sign-out location.

All contractors must ensure compliance by their employees with this program. Failure to comply with this program could result in personal injury and/or illness in the event of an emergency incident.

For large scale and/or long term on-site operations conducted by a contractor, ACS may require that the contractor maintain an independent site entry and accountability system for the contractor's employees and subcontractors. The contractor's system shall meet the requirements of ACS's program and be approved by ACS management.

All RD/RA contractors and their employees must limit their presence to RD/RA areas except as necessary to access RD/RA work areas. No entry is allowed in plant manufacturing areas. Entry and exit routes shall be restricted as indicated on an ACS site map which may be changed from time to time.

3.4 Transporters

Each transporter entering the facility must report to either ACS or a contractor. The transporter will be directly under the control of either ACS or a contractor. Each transporter shall comply with current Department of Transportation Regulations.

3.4.1 ACS Contracted Transporters

All ACS contracted transporters must report to the ACS Production Office to receive directions on what procedures are to be followed and what area to report to for product loading and/or off-loading. The ACS Management employee responsible for

the receipt of the transporter will inform the transporter of any and all potential hazards in the specific areas they will be in as well as the specific PPE that is required in the plant and in the loading/unloading area.

3.4.2 Non-ACS Contracted Transporters

All Non-ACS contracted transporters must report to the contractors facility located on site. The contractor shall be accountable for all transporters brought on site under the contractors orders, direction, subcontracting, etc.

The contractor who contracted the transporter shall be responsible for informing the transporter of any and all potential hazards present in the area(s) the transporter will be in as well as informing the transporter of the safety and health rules for the Non-ACS Personnel on site as stated in this document.

Approval

AMERICAN CHEMICAL SERVICE
SITE SAFETY & HEALTH PLAN
NON-ACS PERSONNEL

Form : SH 3.1
Section : SH 3.0
Rev. No. : 000
Date : 4/20/95
Page No. : 1 of 1

VISITOR SIGN-IN LOG

DATE	NAME	REPRESENTING	TIME IN	TIME OUT	BADGE #

Approval

AMERICAN CHEMICAL SERVICE
SITE SAFETY & HEALTH PLAN
NON-ACS PERSONNEL

Form : SH 3.2
Section : SH 3.0
Rev. No. : 000
Date : 4/20/95
Page No. : 1 of 1

CONTRACTOR & UNESCORTED INSPECTOR ACCOUNTABILITY LOG

I have read, understand and agree to comply with the Contractor Responsibilities as listed in the ACS Site Safety and Health Plan

DATE	NAME	REPRESENTING	TIME IN	TIME OUT	BADGE #

Approval

4.0 Description and Tour of Work Areas.

This section applies specifically to Unescorted Inspectors and Contractors.
The on-site coordinator/supervisor for the contractor and/or Inspector will receive a sufficient description of the operations, personnel, and the potential physical and chemical health hazards of the department(s) they will be performing the work in. This representative of the contractor and/or Inspector will also be given a tour of the department(s) that they will be working in. The contractor and/or Inspector must not enter that area until this briefing and tour has occurred. This information will be provided by the ACS Management.

The on-site coordinator/supervisor for the contractor must then review the information concerning the department(s) they will be working in with their employees and/or subcontractors.

For the safety and health of all parties involved, the contractor, Inspector, and/or their employees shall not enter any area of the ACS facility that they are not familiar with or have not been authorized to be in from ACS management.

Approval

5.0 Plant Safety and Health Rules

The following rules are the basic safety and health rules required of all Non-ACS Personnel while inside this facility. For specific situations additional requirements as specified by IOSHA may be required.

5.1 General Plant Rules

Smoking

Due to ACS storing a large quantity of combustible liquids on-site, ***NO*** individual is allowed to smoke at any location within the fenced area at any time.

Hot Work Permit

Any time that a contractor will perform "Hot Work" within this facility the contractor's supervisor must first notify ACS management so that the appropriate air monitoring, area inspection, etc., can be performed prior to the initiation of the hot work. An ACS Hot Work Permit will also be issued by ACS management. The contractor supervisor will receive a description of the hot work permitting process and rules and will be expected to comply with all ACS rules concerning hot work during the use of this permit.

Personal Protective Equipment

The minimum acceptable personal protective equipment that must be worn on site by all individuals entering the manufacturing portion of this facility consists of a hard hat, industrial safety glasses or chemical splash goggles, and steel toe - steel shank safety shoes. All PPE must be in compliance with current IOSHA, ANSI, and any other applicable standards.

Material Safety Data Sheets

All Non-ACS Personnel who bring hazardous substances on site shall immediately provide a clearly legible copy of the most recent MSDS for each substance brought on the ACS site to the ACS management. ACS management shall also be informed of the location(s) where this substance(s) will be located and the method of storage and distribution of said substance.

Material Safety Data Sheets, (MSDS), for all hazardous substances stored on site by ACS will be available for review by all Non-ACS Personnel performing operations on site upon their request.

Food and Beverage Consumption

Any food or beverage which is consumed on site shall be stored and consumed in an approved - non contaminated - area such as the front office, supervisors office, employee break room or other facility as provided by the contractor.

5.2.1 Visitors

All visitors of the ACS facility must comply with all of the general safety and health rules listed herein this document. Dependent upon the manufacturing areas to be visited, additional safety and health measurements may be required prior to the visitor entering a specific area. If this situation arises, the ACS Management employee escorting the visitor will address these issues as they arise.

5.2.2 Inspectors

5.2.2.1 Escorted Inspectors

All escorted Inspectors must comply with all of the general safety and health rules listed in this document. Dependent upon the manufacturing areas to be inspected, additional safety and health measurements may be required prior to the inspector entering a specific area. If this situation arises, the ACS Management employee escorting the inspector will address these issues as they arise.

5.2.2.2 Unescorted Inspectors

From time to time it may become necessary for an Inspector to be on site for an extended period of time for the purpose of observing an on-going operation, performance of an audit, etc. ACS Management shall make the determination when the Inspector will be allowed to be present in a specific area(s) of the facility, unescorted. All unescorted inspectors shall comply with the general safety and health rules as stated in this document in addition to all of the safety and health rules for contractors as stated in this document.

5.2.3 Contractors

All contractors entering the ACS facility shall comply with all general safety and health rules and contractor rules as stated in this document.

Contractor Facilities

ACS is designed and constructed to be self-supportive for its manufacturing facilities and employees only. ACS is not prepared to provide any office space, restroom or comfort facilities, food preparation, food consumption or any other type of facilities for contractors. Therefore, all contractors must provide their own facilities while on the ACS site. Any facilities brought onto the ACS site for use by contractors shall first be approved by ACS Management. The location and type of these facilities shall also be approved by ACS Management.

Permit Required Confined Space Program

All contractors performing on-site confined space entry procedures must comply with all applicable IOSHA regulations. All contractors must furnish their own equipment for performing these operations. ACS Management shall be notified prior to the start of such procedures in order that the confined space operations can be reviewed for possible hazards unknown to the contractor.

Unsafe Operations

If at any time a contractor will perform a task which poses or has the potential to pose a safety or health risk to ACS, its Management, employees, equipment, or processes or to other Non-ACS Personnel on site, that contractor shall immediately inform the ACS Management of such operation(s) prior to the commencement of such operation(s).

If a contractor is performing a task in a safe and healthful manner and an unsafe or unhealthful situation arises or is discovered, the contractor shall immediately stop the operation(s) and simultaneously notify the ACS Management of the situation.

Proof of Insurance, Permits, and Records

Each contractor must have submitted, to ACS Management, proof of current liability insurance, workmans comp insurance, and any other applicable insurance, permits, records etc., prior to commencing any operations on site. Proof of applicable levels of training and education for the tasks being performed on site shall be made available, upon request, to ACS Management by all Inspectors, and Contractors.

Acknowledgement of Review and Understanding of this Document

Each unescorted inspector and contractor must read and review this program, on an annual basis prior to conducting any work at the ACS facility.

Outside Contractor Illness and Injury Log

Due to the nature of the operations at ACS and the current requirements of the Indiana Occupational Safety and Health Administration Standard 29 CFR 1910.119 paragraph (h)(2)(vi) ACS must maintain a contractor's employee injury and illness log related to the contractor's work in process areas. Contractors are required to report any illness or injury occurring on-site to ACS management.

5.2.4 Transporters

Each transporter must have submitted, to ACS Management, proof of current liability and workmans compensation insurance. All Transporters who transport materials into or out of the ACS facility must comply with all of the general safety and health rules of this program as stated in this document. All transporters must also comply with current Federal Department of Transportation Regulations.

Approval

6.0 ACS Hazard Communication Program

ACS, in compliance with the Indiana Occupational Safety and Health Standard 29 CFR 1910.1200 Hazard Communication and the Uniform Fire Code of Indiana, utilizes the following systems to identify hazards within portable containers, storage tanks and buildings on site.

Hazardous Materials Information System (HMIS)

The HMIS system is a color coded, numerical coded, and symbol coded system that is utilized on all portable containers of materials on site. The coding is as follows:

Blue area provides health information
1 - normal hazard
2 - slightly hazardous
3 - extremely hazardous
4 - deadly

Red area provides flammability information
0 - substance will not burn
1 - flashpoint above 200 degrees F.
2 - flashpoint between 100 - 200 degrees F.
3 - flashpoint below 100 degrees F.
4 - flashpoint below 73 degrees F.

Yellow area provides reactivity information
0 - stable
1 - unstable if heated
2 - violent chemical change
3 - shock and heat may detonate
4 - may detonate

White area at the top contains the name of the substance the way it appears on the MSDS. The white area at the bottom of the label contains the target organs is codes as follows:

A. Skin	B. Eyes	C. Liver	D. Kidneys
E. Teeth	F. Central Nervous System		G. Respiratory System
H. Cardiovascular System		I. Lungs	
J. Blood or Hematopoietic System		K. Immune System (Allergic Reaction)	
L. Reproductive toxin			

PPE section contains an alphabetically coded system to identify the personal protective equipment required to be worn when working with this substance under

normal operations. The key to this code is included below.

PPE Key Code

A - Hard Hat and Safety Glasses.

B - Hard Hat, Safety glasses and compatible gloves.

C - Hard Hat, Safety glasses, compatible gloves, and splash apron.

D - Hard Hat, Safety glasses, compatible gloves, face shield and splash apron.

E - Hard hat, safety glasses, compatible gloves and a dust/mist respiratory mask.

F - Hard hat, safety glasses, compatible gloves, dust/mist respiratory mask, and a splash apron.

G - Hard hat, safety glasses, compatible gloves, and a vapor respirator.

H - Hard hat, safety glasses, compatible gloves, vapor respirator and a splash apron.

I - Hard hat, safety glasses, compatible gloves, and a dust/vapor respirator.

J - Hard hat, safety glasses, compatible gloves, dust/vapor respirator, and a splash apron.

K - Hard hat, safety glasses, compatible gloves, Full body chemical resistant coverall, supplied air respiratory protection and chemical resistant boots.

X - See your supervisor

*NOTE: Minimum acceptable personal protective equipment for on-site workers includes safety glasses with side shields, steel-toe safety shoes and a hard hat.

Material Safety Data Sheets

All Non-ACS Personnel who bring hazardous substances on site shall immediately provide a clearly legible copy of the most recent MSDS for each substance brought on the ACS site to the ACS management. ACS management shall also be informed of the location (s) where this substance(s) will be located and the method of storage and distribution of said substance.

Material Safety Data Sheets, (MSDS), for all hazardous substances stored on site by ACS will be available for review by all outside contractors performing operations on site upon their request.

Approval

7.0 Emergency Notification System

DIAL 71

The ACS plant facility has an on site alarm system which consists of four strategically placed sirens throughout the plant. This siren system can be activated by lifting the receiver on any in-plant phone and dialing the numbers "71" waiting for the ringing in the receiver and then hanging up the receiver. The four sirens will then be activated throughout the plant until they are shut off by the emergency coordinator or his alternate. At the phone location, in close proximity to the phone, is a toggle switch on an explosion proof box. By placing this switch in the up position a revolving yellow light will be activated on that building to allow the employees and emergency response team to know what area the emergency has occurred in.

Contractors & Unescorted Inspectors Responsibilities

Each contractor and unescorted Inspector has the responsibility to become thoroughly familiar with the area that they are working in. This includes the locations of the in-plant phone, emergency escape routes, location of the nearest eye wash, fire extinguishers, and emergency exits.

In the event that a contractor or unescorted Inspector causes an emergency situation, the following procedures must be followed:

1. Immediately stop all operations.

2. Evacuate all unnecessary employees from the affected area to an upwind and uphill location. This includes leaving all equipment and vehicles in the area of the incident and relocating all employees from the affected area.

3. Immediately activate the emergency notification system by dialing "71" on the nearest in-plant phone.

4. If the incident can be mitigated safely by the contractor then such action should be taken. If the incident is of a very minor nature then the contractor may simply notify the ACS Management verbally. Each incident will be different and will be of varying nature. When in doubt if the emergency notification system should be activated the contractor shall activate the system immediately.

5. The supervisor for the crew that created the incident will provide as much information as is possible to the Emergency Coordinator or his alternate concerning the events occurring which lead up to the incident, personnel head count, etc.

6. The contractor(s) and their employees will cooperate fully in any and all investigations concerning any and all incidents occurring at this facility.

Activation of Emergency Notification System

In the event that the emergency notification system is activated while the contractor and/or unescorted Inspector is inside the facility the following actions must be taken:

1. Immediately stop all operations.

2. Evacuate all unnecessary employees from the affected area to an upwind and uphill location. This may be to a location outside of the plant. The wind direction can be determined from a wind sock located on the east side of the site.

3. If off site relocation is required, the predetermined meeting places are as follows:
   a. If the personnel are required to leave the facility going south - the meeting place is the intersection of Colfax and Reeder Roads.
   b. If the personnel are required to leave the facility going north - the meeting place is at the Grand Trunk Rail Road Tracks.

4. The supervisor responsible for each of the contractor and/or inspection companies and/or agencies on site is responsible for taking a head count of their employees and reporting this information to the proper ACS representative.

5. The Non-ACS Personnel will remain off site until authorized to return by the ACS Facility coordinator or his alternate.

Approval

8.0 Point of Contact for Questions and Answers

All questions concerning this program or this facility must be directed to the ACS Management Staff. This process is implemented to alleviate duplication of effort as well as to minimize confusion.

ACS Management

All ACS supervisory personnel are designated with a blue hard hat. These individuals are authorized to interact with Non-ACS Personnel on a very limited scale, i.e. questions concerning the specific department the Non-ACS Personnel are working in. These individuals are the main members of the on-site emergency response team and will take an aggressive and offensive role during all emergency incidents occurring at this facility.

ACS Production Employees

All ACS production employees are designated with a white hard hat. These individuals are not authorized to provide information or answer questions of Non-ACS Personnel. These individuals are a part of the on site emergency response team and will fulfill a proactive support role to the supervisory personnel during all emergencies occurring on site.

Approval

K

AIR MONITORING EQUIPMENT MANUALS

INSTRUCTION MANUAL

OVM / DATALOGGER

MODEL 580B

Thermo Environmental Instruments, Inc. MODEL 580B

CLASSIFIED BY
UNDERWRITERS LABORATORIES, INC.®
AS TO ELECTRICAL SHOCK AND EXPLOSION HAZARD ONLY FOR USE IN
CLASS 1, DIVISION 2, GROUPS A, B, C & D
HAZARDOUS LOCATIONS

70X0

THERMO ENVIRONMENTAL INSTRUMENTS INC.

8 WEST FORGE PARKWAY . FRANKLIN, MA 02038

TEL: (508) 520-0430 . TELEX: 200205 THEMO UR

FAX: (508) 520-1460

P/N 16860

REVISED 9/91

INSTRUMENT WARRANTY

WARRANTY. Subject to the exceptions stated below, Thermo Environmental Instruments Inc. agrees to correct, either by repair or at our opinion, by replacement, any defects in materials or workmanship which develop within one year from the date of surface shipment, parts and labor supplied free of charge and surface transportation costs to be borne by the offeror both ways, provided that the investigation and inspection defects developed under normal and proper use.

The exceptions mentioned above are: (1) All items claimed must be returned to Thermo Environmental Instruments Inc., transportation charges collect, and will be shipped prepaid and charged to the customer unless the item is found to be defective and covered by the warranty in which case Thermo Environmental Instruments Inc. will pay all transportation charges; (2) Thermo Environmental Instruments Inc. agrees to extend to the customer whatever warranty is given to Thermo Environmental Instruments Inc. and incorporated into products sold to the customer; (3) Thermo Environmental Instruments Inc. shall be released from all obligations under this warranty in the event repairs or modifications are made by persons other than its own authorized service personnel, or service personnel from an authorized representative, unless such repair is minor, merely the installation of a new plug-in component; (4) If any model or sample was shown to the Purchaser, such model or sample was shown merely to illustrate the article and not to represent that any article delivered hereunder would conform to the model or sample; and (5) Spare parts are warranted for ninety (90) days.

THE FOREGOING WARRANTY IS EXCLUSIVE AND IN LIEU OF ALL OTHER WARRANTIES, WHETHER WRITTEN, ORAL, IMPLIED OR STATUTORY. SELLER DOES NOT WARRANT MERCHANTABILITY OR FITNESS FOR ANY PARTICULAR PURPOSE, OR MAKE ANY OTHER WARRANTY OR AGREEMENT EXPRESSED OR IMPLIED WITH RESPECT TO ANY ARTICLES COVERED HEREUNDER. THERE ARE NO WARRANTIES WHICH EXTEND BEYOND THOSE EXPRESSLY STATED IN THIS CONTRACT.

SECTION I

INTRODUCTION

1 INTRODUCTION

The 580B is a portable Organic Vapor Meter (OVM), which detects and quantitates most organic vapors with a highly sensitive photoionization detector (PID). The 580B has an operating range of 0-2000 parts per million (ppm) with a minimum detectable of 0.1 ppm. No support gases are required.

The 580B is controlled by a microprocessor which provides many features that were not previously available. Maximum signal hold, detector linearization, overrange lockout, IBM PC (or compatible) interface, extensive data logging capabilities and much more. With the many features provided by the 580B leak detection, head space measurements, and field survey are all easily accomplished. Completely portable, the 580B operates from internal batteries for eight hours in the field.

1.1 ABOUT THIS MANUAL

This manual is broken down into eight chapters. The first chapter (this one) provides a general overview of the 580B. Chapter two discusses, in great detail, the extensive facilities of the 580B. The focus of this chapter is on how to use the seven switches to access the various facilities. Chapter three explains, in detail, how to perform routine maintenance on the 580B. Chapter four is a technical discussion of calibration and methods for generating standards. Chapter five is a technical discussion of a few applications which illustrate some of the uses of the 580B. Chapter six is a technical discussion of methods for collecting a sample using the 580B. Chapter seven is a discussion of the communication facilities provided by the 580B. Chapter eight contains two flow charts which illustrate the 580B software flow. This chapter is a helpful tool for the new user. Appendix A is a detailed explanation of the 580B communication protocol. This chapter is provided in order to allow a programmer to develop specialized communication software for the 580B. There are several other addendums which contain miscellaneous information about the 580B.

1.2 INSTRUMENT OVERVIEW

This section describes various points of interest on the 580B. Each number refers to a number in Figure 1.1.

1. **POWER PLUG** - The power plug is used to run the instrument from its internal batteries. There is a chain attached to the power plug so that it will not be lost.

2. **RS-232 CONNECTOR** - This connector is used for communi-

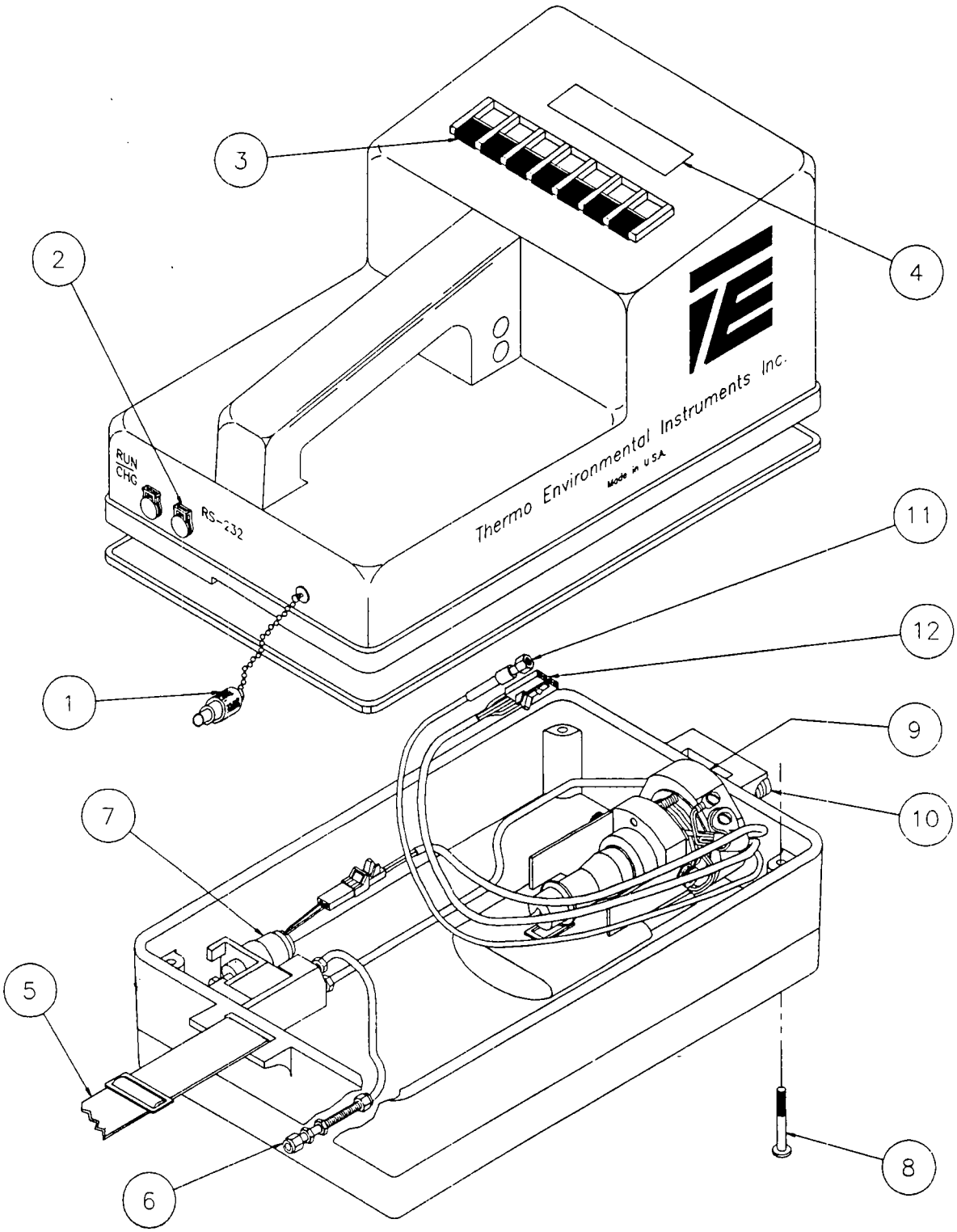

Figure 1.1
Instrument Assembly

cation with a serial printer or computer. A communication cable provided with the instrument fits into the receptacle.

3. **KEY PAD** - There are seven switches which operate the 580B. The switch marked ON/OFF is used to turn the pump and lamp on and off. The switch marked **LIGHT** will turn on backlighting for the two line display. The other five switches perform various functions. For a detailed description of the function of each switch see chapter two or the flow charts in chapter eight.

4. **DISPLAY** - The 580B has a two line by sixteen character display.

5. **SHOULDER STRAP** - There is an adjustable shoulder strap for carrying the 580B.

6. **SAMPLE EXIT PORT** - The 580B sample is drawn into the detector by a positive displacement pump and then sent back out through the exit port.

NOTE : The photoionization detector is a non destructive detector so the sample may be collected at the exit for further analysis (see Chapter Six).

7. **PUMP** - The 580B pump draws the sample into the detector.

8. **MOUNTING SCREWS** - There are four captive screws which hold the 580B top and bottom together. The screws are specially designed so that they do not fall out when they are loosened out of the case top.

9. **DETECTOR** - The photoionization detector is shown with the lamp and high voltage power supply.

10. **SAMPLE INLET** - Sample is drawn into the detector through the sample inlet at the front of the 580B.

11. **SIGNAL CABLE** - The PID signal is brought up to the microprocessor, for analysis, via the coaxial signal cable.

12. **BASE HARNESS** - The base harness plugs into a connector on the case top.

1.3 580B FEATURES

This section provides a brief overview of the various features of the 580B. After reading this section the user should have a good idea of what the instrument can do. Chapters two and three will explain, in detail, how each feature is selected.

TURNING ON PUMP AND LAMP - The pump and lamp are turned on by pressing the ON/OFF switch (the instrument power must already be on).

CALIBRATION - Calibration of the 580B is extremely impor-

tant. Chapter two explains how to calibrate the 580B in great detail. Chapter four discusses at length some of the basic theory and methods behind calibration. It is strongly suggested that this chapter be read in order to gain a deeper understanding of usage of the 580B. Chapter three also discusses calibration.

CONCENTRATIONS - Once the lamp and pump have been turned on the 580B begins to display the concentration of the incoming sample on the bottom line of the display. Normally the top line of the display will be a bar graph (logarithmic on a scale of zero to 2000). The operator may however select the MAX HOLD mode of operation. When in MAX HOLD, the top line of the display will show the highest concentration recorded.

LOGGING - The 580B provides extensive facilities for logging information. The operator may save a particular reading along with a six digit location code and a date and time stamp. If the 580B is in the MAX HOLD mode when logging is initiated then the max hold value will be logged.

AUTO LOGGING - Logging may be performed automatically by using the 580B's auto logging feature. Auto logging is not allowed while in the MAX HOLD mode. When auto logging is selected a LOGGING INTERVAL is selected (anywhere from one second to 99 minutes and 59 seconds). At the end of each logging interval the present concentration will be logged (the location code is automatically incremented each time).

AVERAGE - The 580B normally updates the concentration once per second. The operator has the option of setting the averaging time anywhere from one second up to four minutes.

NOTE : The bottom line of the display will be blank until the first averaging interval is completed. The top line will however be updated each second.

RESPONSE FACTOR - A response factor may be used in order to relate a particular gas to the calibration gas. When computing the displayed concentration the microprocessor multiplies the measured concentration by the response factor and displays the result. If the response factor is one, then the concentration is not changed. Chapters four and five explain some uses of the response factor.

LAMP SELECTION - The 580B allows for calibration data to be saved for one 10.0 eV lamp and one 11.8 eV lamp. This allows lamps to be switched in the field without requiring recalibration. A lamp serial number may also be entered.

ALARM - An alarm level may be selected. The 580B will sound an audible alarm (the top line will also indicate an alarm) whenever the concentration goes above the selected alarm level.

ACCESS - The 580B provides four access levels so that various features may be "locked out." User identification number

and instrument number are also provided.

CLOCK - The 580B has an internal clock which will run even when the instrument power is cut off.

COMMUNICATION - The 580B has a serial communication port for outputing data to a serial printer. Many of the 580B features may be accessed from a remote computer through the serial communication port (there is communication software available which will run on an IBM PC or clone).

DISPLAY LOGGED DATA - The logged data may be displayed on the 580B's two line display.

SECTION II

PRINCIPAL OF OPERATION

2.1 PHOTOIONIZATION DETECTOR OPERATION & THEORY

2.1.1 GENERAL

The sample is drawn into the ion chamber by a pump down stream of the detector. Here the sample is bombarded by ultra-violet light (UV) exciting the molecule. If the energy, (hU) of the UV light is greater than the ionization potential (IP) of the sample molecule (R) an electron will be removed, ionizing the molecule. A positively charged molecule and a free electron are produced, as :

$$R + hu \rightarrow R^+ + e^-$$

Several typical reactions follow:

C_6H_6 (benzene) + hu -> $C_6H_6^+ + e^-$ IP = 9.2 eV

$H_2C{=}CHCl$ (VCM) + hu -> $H_2C{=}CHCl^+ + e^-$ IP = 9.9 eV

C_3H_8 (propane) + hu -> $C_3H_8^+ + e^-$ IP = 10.9 eV

For this reason the ionization potential of the subject molecule plays an important role in selecting the lamp energy. Ionization potentials are expressed in electron volts (eV). A list of ionization potentials can be found in Appendix E of this manual or a more complete list in the CRC "Handbook of Chemistry and Physics".

2.1.2 LAMP ENERGIES

There are three lamps available from TEI, 10.0 eV, 10.6 eV, and 11.8 eV. The different energies are obtained by filling the lamp envelopes with different gases and selecting a window which will pass the wavelength produced when the gas is excited. The combination of gas and windows which produce these energies are listed below:

ENERGY	GAS	WINDOW	WAVELENGTH (nm)
10.0 eV	Krypton	MgF	123.6
10.6 eV	Krypton	MgF	117.4
11.8 eV	Argon	LiF	105.1

Though ionization potential will help the user select a lamp, it will not give any information as to the performance of

the detector in measuring a specific compound. The response of the system varies considerably from compound to compound even though they may have the same ionization potential. Some generalizations may help the user obtain a feeling for the difference in response between compounds.

2.1.3 COMPARATIVE RESPONSE

The following is an idealized response chart. No attempt is made to quantitate the relationship, it's a guideline.

Decreasing PID Response:	Aromatic Compounds
	Unsaturated Compounds
	Saturated Compounds
	Ketones
	Alcohols
	Compounds with Sub Groups

It becomes obvious that sensitivity is influenced by the electronegativity of the molecule though this is not a predictable measure of performance. The only true test of performance is to measure the specific compound of interest and compare it to a good performing standard such as isobutylene.

2.1.4 RESPONSE FACTORS

This relative comparison with isobutylene mentioned above is a very effective way of measuring a variety of compounds without the need to recalibrate for each compound.

The development of a RESPONSE FACTOR allows the operator to correct the instrument's response given a one to one correspondence for all compounds measured, using isobutylene as the reference standard.

Note: Because there is variation in lamp production and hence performance, it is suggested that all calibration and subsequent development of response factors be done on the same lamp/instrument combination.

The preparation of standards and the development of response factors is discussed in subsequent sections of this manual. Once the response factor is generated, it is entered into the 580. The instrument automatically reports the concentration of the compound measured in relative units. It is important to recognize that all compounds measured at that time will be reported relative to the response factor entered in the instrument. For example, if we have calibrated the instrument on isobutylene and have entered a response factor for benzene, we will read concentrations with a one to one correspondence to benzene. If during these measurements toluene or any other compound is encountered, the instrument will report the concentration as if it was measuring benzene. For this reason care should be taken when using this facility.

The above discussion should give the reader a good overview of PID performance. To further understand the intricacies of the

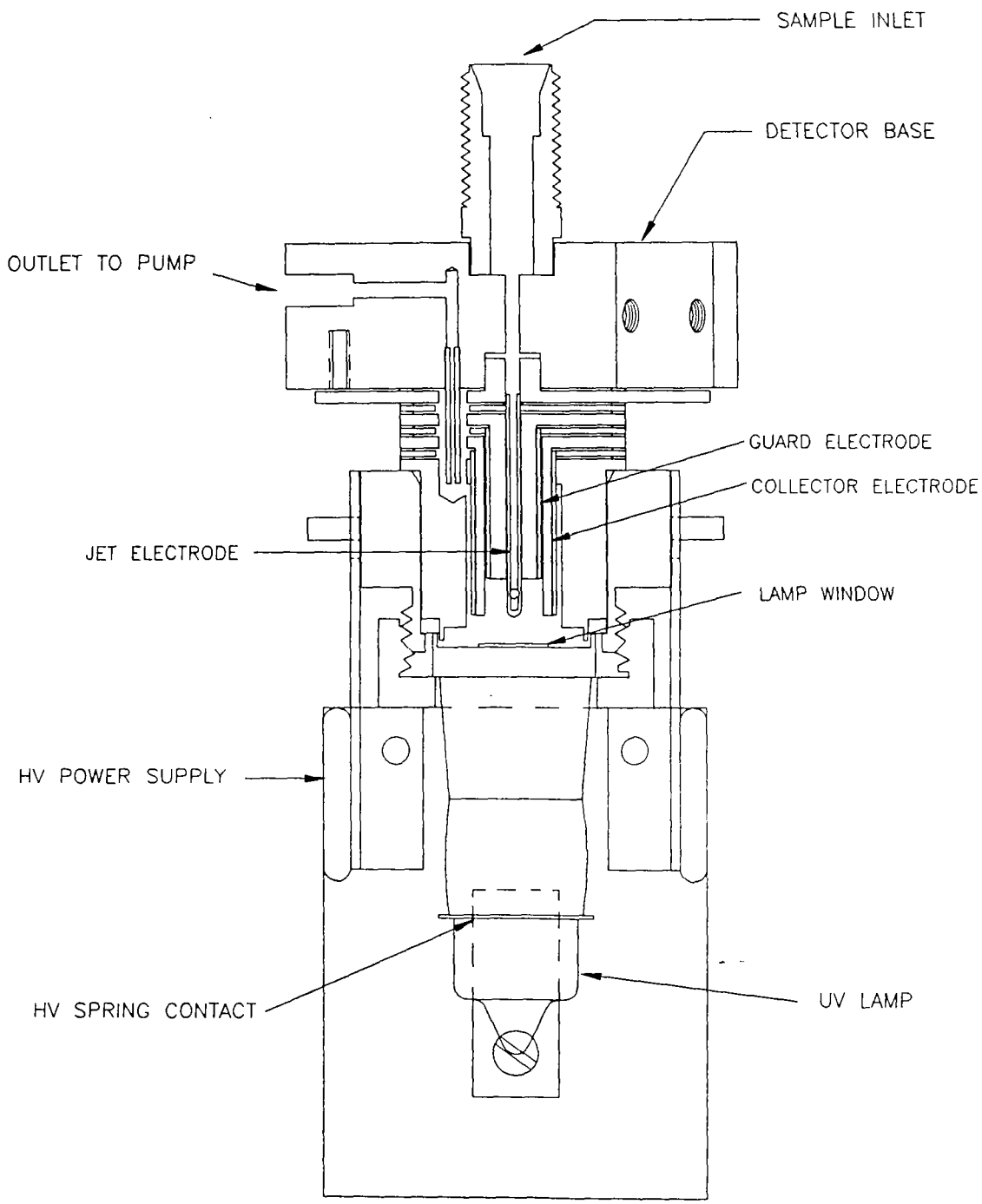

Figure 2.1
Photo Ionization Detector

instrument it is suggested that the user prepare a number of standards of different compounds and measure them relative to isobutylene. Included in this comparison should be several mixtures of compounds such as gasoline, paint thinner, or cleaning solvent, etc. Through this type of study the inequity of the PID response will be better understood making the Model 580 a more effective tool. The use of the instrument is discussed in greater detail in subsequent sections.

2.1.5 PHOTOIONIZATION DETECTOR

The detector is constructed of Teflon and stainless steel to eliminate chemical interaction with the surfaces that are encountered by the sample. To further reduce possible interaction with the surfaces, the flow rate thru the detector is high, 400 - 500 cc/min developing a very dynamic transport of the sample.

Referring to Figure 2.1, the sample is drawn into the ionization chamber through the jet electrode where the UV radiation from the lamp ionizes the sample. A bias voltage of several hundred volts is applied to the jet to aid in the collection of ions. As a result of the ionization process and the impingement of the UV energy from the lamp on the sample, positively charged ions and free electrons are produced. The jet is negative relative to the collector where the electrons are collected.

Between the jet and the collector, separated on both sides by Teflon, is the guard electrode. Its function is to eliminate surface currents which could flow between the two active electrodes. When the Teflon surfaces become dirty during use, there can be the development of a conduction path on the Teflon, which increases in high humidity situations. The guard electrode eliminates this path. The collector electrode is connected to the electrometer which measures the ion current produced during the ionization process. The sample is moved through the detector by an external pump which is on the exit of the detector.

2.2 PROGRAM OPERATION

2.2.1 INTRODUCTION

The 580B has seven switches located just below the display. They are labeled:

ON/OFF MODE/STORE RESET LIGHT +/INC -/CRSR SPKR

The ON/OFF switch toggles the lamp and pump power between on and off. The MODE/STORE, RESET, +/INC, -/CRSR and SPKR switches all have various meanings (including none at all) depending upon the mode. The SPKR switch normally is used to toggle the instrument speaker between on and off. Pressing the MODE/STORE switch will cause the 580B to return to the Run mode, except when the 580B is already in this mode. In which case it will cause the 580B to enter the Log mode.

The LIGHT switch is used to illuminate the display.

The 580B has several modes. Some of the modes may have sub modes. The modes and sub modes are tabulated below.

Run mode
    Concentration meter normal
    Max hold
Log mode
Parameter mode
    Calibration mode
Access mode
Clock mode
Communication mode

The following sections will describe each mode and how to get to them and through them. It is strongly suggested that this section be carefully read and that the 580B be used along with the manual in order to re-enforce the manual.

2.2.2 POWER FOR LAMP AND PUMP

When the 580B is first turned on (see section 1.3) the display will indicate that the lamp is not lit. Pressing the ON/OFF switch will tell the microprocessor to turn on the lamp and the pump. The microprocessor will send power to the lamp and pump and then "look" to see if the lamp is actually lit. If it did not light then the microprocessor will try again.

If after fourteen seconds the lamp still will not light, then the microprocessor will indicate a lamp out condition.

In the event that the microprocessor is unable to light the lamp, check the seating of the lamp (see section 3.1). If the problem persists, call service.

Once the lamp is lit, the display will show the PPM (parts per million) on the bottom line. The top line will either be a bar graph or the maximum reading (see section 2.2.3).

To turn the lamp and pump off simply press the ON/OFF switch.

2.2.3 RUN MODES

The 580B has two run modes, Max Hold and Concentration meter. The run mode is selected in the Parameters section (see Section 2.4). In the concentration meter mode the top line of the display will be a bar graph. The bar graph is a logarithmic bar graph over the range of 0 to 2000 PPM. The bar graph is intended as a rough visual indication of the current PPM. The bottom line will indicate the exact PPM.

In the Max Hold mode the top line of the display will indicate the maximum reading. The bottom line of the display will indicate the current PPM. Whenever a new maximum is seen, the top line will be updated. The Max Hold reading may be reset by pressing the RESET switch while in the run mode.

2.2.4 LOG MODE

The ability to "log" data is one of the 580B's greatest

features. Readings may be stored for later analysis. Each reading will have a date and time as well as a location code associated with it. Up to over 700 readings may be stored. Logged data may even be sent to a printer or computer via an RS-232 serial communication port (see section 2.7).

The Log mode is entered from the Run mode by pressing the MODE/STORE switch. When this switch is pressed from the Run mode the display will show:

LOG THIS VALUE?

on the top line and either PPM or MAX PPM on the bottom line depending upon which run mode the 580B is currently in. By pressing the +/INC switch the display will then show:

LOC. CODE 000001

on the top line (the actual location code may not be 000001). The location code may now be entered. By pressing the +/INC switch the number above the cursor may be incremented. By pressing the -/CRSR switch the cursor may be moved to the next digit. The 580B automatically increments the location code each time a data point is logged.

Once the desired location code has been entered, pressing the MODE/STORE switch will "log" the data point. This means that the reading displayed on the bottom line, along with the location code, the current date and the current time will be stored into the 580B's memory. The 580B will then return to the Run mode.

If for any reason logging is not desired, pressing the RESET switch rather than the MODE/STORE switch will cause the value not to be stored. The 580B will then go back to displaying:

LOG THIS VALUE?

Pressing the mode switch will now return the 580B to the Run mode.

It is possible, when attempting to log a data point, that rather than the display showing "LOC. CODE 000001" it will show "BAR CODE: ." Don't be alarmed. This has happened becouse the location mode selection is not properly set. Section 2.4.3 describes how to set this parameter. Pressing the mode/store switch will cancel the logging operation and return to the run mode. The location mode selection should be changed as described in section 2.4.3.

2.2.4A AUTO LOGGING MODE

The 580B may be instructed to automatically log data according to a predefined time interval. AUTO LOGGING is selected from within the Parameters section (see section 2.4). At the end of the logging interval (settable from 1 second up to 99 minutes and 59 seconds) the current average ppm value will be logged and the logging interval will be restarted.

NOTE: Auto logging is not allowed with the Max Hold mode.

2.2.5 SPEAKER

While the 580B is in the Run mode the speaker may be turned on. The speaker will generate a "clicking" which will increase in speed as the concentration increases. The purpose of the speaker is to give the operator an audible indication of the PPM. The speaker may be turned on or off by pressing the SPKR switch. The speaker rate may also be changed by changing the switches located inside of the instrument. Only one of the four speaker rate switches should be on (in the down position) at any time.

2.2.6 LOW BATTERY

The 580B will display a warning when the battery is low. The warning will be a flashing B in the left hand corner of the bottom line of the display when the 580B is in the Run mode. The 580B should be recharged when the low battery warning is activated.

2.2.7 OVERRANGE

The 580B will display an overrange warning if the concentration goes above 2000 PPM. The top line of the display will show:

OVERRANGE

Once an overrange condition occurs the instrument will "lock out". This means that the overrange warning will continue to be displayed until the instrument is brought to a "clean" area. A clean area is defined to be an area where the concentration of organic vapors is below 20 PPM. The 580B will continue to indicate PPM on the bottom line during an overrange condition.

2.2.8 ALARM

The 580B has an alarm which will sound if the PPM rises above the alarm setting. The alarm setting is entered in the Parameters mode (see section 2.4.3). If the speaker is not activated then the alarm will of course not be heard. Once the PPM drops below the alarm setting the alarm will turn off. The top line of the display will also indicate when there is an alarm condition.

2.3 MAIN MENU

By pressing the MODE/STORE switch from the Run mode and then pressing the -/CRSR switch when asked if logging is desired,

the 580B will display the main menu:

R/COMM -/PARAM
+/ACCESS S/CLOCK

The other four operating modes (Communication, Parameters, Access and Clock) may be entered from the Main menu. The operating mode may always be returned to by pressing the MODE/STORE switch.

2.4 PARAMETERS MODE

All of the 580B operating parameters are entered in the Parameters mode. The 580B is also calibrated from within the Parameters mode.

The Parameters mode may be entered by pressing the -/CRSR switch from the main menu.

There are nine different sections in the Parameters mode.

1. Run mode selection
2. Auto logging selection
3. Location mode selection
4. Average time selection
5. Alarm setting
6. Lamp selection
7. Response factor setting
8. Calibration
9. Free space indication

Pressing the +/INC switch will advance the 580B to the next section. Pressing the -/CRSR will advance the 580B to the previous section. Each section and any of its sub-sections will be described in the following pages. It is important to note that when the 580B is in a sub-section of any of the above sections that the +/INC and -/CRSR switches will have a different meaning. This may seem confusing at first but will become clear after stepping through each section.

2.4.1 RUN MODE SELECTION

There are two Run modes. Concentration meter normal and Max Hold (see Section 2.2.3). The top line of the display will show:

CONC. METER

the bottom line will show:

"RESET" TO CHG

the bottom line will alternate every two seconds with:

MAX HOLD

if the 580B is in the Max Hold mode. Pressing the RESET switch will cause the 580B to show:

MAX HOLD
+ = USE/ - = NO

if the +/INC switch is pressed then the Max Hold mode will be selected. If the -/CRSR switch is pressed then the Concentration meter normal mode will be selected. In either case the 580B will then return to the previous screen.

2.4.2 AUTO LOGGING SELECTION

The 580B can be configured to automatically log data points. The top line of the display will show:

AUTO LOGGING

The bottom line will alternate between "RESET TO CHG." and "ON" or "OFF". Pressing the RESET switch will cause the 580B to show:

AUTO LOGGING
+/ON -/OFF

Pressing the -/CRSR switch will turn auto logging off and return operation to the previous screen. Pressing the +/INC switch will enable auto logging and allow setting of the logging interval. The display will show:

INTERVAL 00:01
"RESET"WHEN DONE

The +/INC switch will increment the number above the cursor and the -/CRSR switch will move the cursor. The logging interval format is MM:SS (where M is minute and S is second). Pressing the RESET switch will return operation to the first auto logging screen.

2.4.3 LOCATION MODE SELECTION

The 580B may be configured to accept a six digit location code which is entered via the keypad. There is an alternate method for entering location codes however UL approval has not yet been obtained for this option. For updated information contact Thermo Environmental Instruments inc.

The display shows the currently selected location mode. For example the display will show:

Loc. code mode
"reset" to chg.

When the 580B is configured to enable operator editing of the location code, pressing the RESET switch causes the 580 to show:

Bar code mode
"reset" to chg.

The 580B is now configured for the alternate location mode (which is not presently available for use in hazardous locations). Pressing the reset switch will cause the 580B to be configured for location code mode.

2.4.4 AVERAGE TIME SELECTION

The 580B can be configured to display the average PPM from once a second up to once every four minutes. The display will show:

AVERAGE = 0:01
"RESET" TO CHG

Pressing the RESET switch will cause the 580B to show:

AVERAGE = 0:01
"RESET"WHEN DONE

The +/INC switch will increment the number above the cursor and the -/CRSR switch will move the cursor. The average time format is M:SS (where M is minutes and S is seconds).

NOTE: The maximum averaging interval is four minutes.

2.4.5 ALARM SETTING

The 580B will display the current alarm setting on the top line of the display. The setting may be changed by simultaneously pressing the RESET switch with either the +/INC switch to increment the digit above the cursor or the -/CRSR switch to move the cursor.

2.4.6 LAMP SELECTION

The 580B will display:

LAMP

on the top line. The bottom line will alternate every two seconds between:

"RESET" TO CHG

and the currently selected lamp setting and its associated serial number.
i.e.

11.8eV 000000

By pressing the RESET switch, the 580B will display:

+/10eV -/11eV

on the bottom line. Pressing the +/INC switch will select the 10.0 eV lamp. Pressing the -/CRSR switch will select the 11.8eV lamp. In either case the 580B will then allow editing of the lamp serial number. The display will show:

SERIAL # 000000
"RESET"WHEN DONE

The +/INC switch will increment the number above the cursor and the -/CRSR switch will move the cursor. Pressing the RESET switch will return operation to the original lamp screen.
When using a 10.0 eV lamp or a 10.6 eV setting should be selected. When using an 11.8 eV lamp the 11 eV setting should be selected.

2.4.7 RESPONSE FACTOR SETTING

The current Response Factor setting will be displayed on the top line of the display. The Response Factor may be changed by simultaneously pressing the RESET switch with either the +/INC switch to increment the digit above the cursor or the -/CRSR switch to move the cursor.

The response factor is used to equate the response of one organic vapor with that of the calibration gas. The current reading is always multiplied by the response factor in order to obtain the displayed concentration. A response factor of one will not change the displayed concentration.

2.4.8 CALIBRATION

The 580B will display:

"RESET" TO
CALIBRATE

The calibration mode may be entered by pressing the RESET switch.
The 580B will display:

RESTORE BACKUP
+ = YES

The previous calibration information may be restored by pressing the +/INC switch. The 580B will then return to the previous screen. If the backup is not desired, by pressing the -/INC switch the calibration routine will continue. The display will show:

ZERO GAS
RESET WHEN READY

Once zero gas has been introduced the RESET switch should be pressed. The 580B will then zero the instrument. The 580B will display:

MODEL 580B
ZEROING

Once the 580B has been zeroed the 580B will display:

SPAN PPM = 0000

The Span gas concentration may now be entered by simultaneously pressing the RESET switch and either the +/INC switch to increment the digit above the cursor or the -/CRSR switch to move the cursor. Once the span gas concentration has been entered the +/INC switch should be pressed.
The 580B will then display:

SPAN GAS
RESET WHEN READY

Once the span gas has been introduced the RESET switch should be pressed. The 580B will then calibrate the instrument. The 580B will display:

MODEL 580B
CALIBRATING

Once the 580B has been calibrated the 580B will go back to the beginning and display:

"RESET" TO
CALIBRATE

If during the zeroing or calibrating of the 580B a steady reading was not seen then the 580B will display:

CAL ERROR
RESET WHEN READY

Pressing the RESET switch will return the 580B to zeroing or calibrating (depending of course on which it came from).

See Section 4.1 for tips on calibrating the 580B.

2.4.9 FREE SPACE INDICATION

This section will give a rough indication of how much room is left for logging data points. The screen will display a bar graph on the top line and the amount of free space on the bottom line. The number indicates the total number of bytes which are available. Each data point takes fifteen bytes. Other bytes may also be needed in order to store other important information. This is why only a rough indication of room may be given.

2.5 ACCESS MODE

The Access mode is entered by pressing the +/INC switch from the main menu. The 580B has four access levels, zero through three. Level zero will only allow the operator to log data points and of course to change access levels (only if the access code is known). Level one will also allow the user to change the user identification number. Level two will allow the user complete access to the Parameters mode, and allow viewing of the date and time. Access level three allows complete access.

The access mode has three sections:

1. Access level
2. User identification number
3. Instrument number

Pressing the +/INC switch will advance the 580B to the next section. Pressing the -/CRSR switch will advance the 580B to the previous section.

TABLE OF ACCESS LEVELS

ACCESS LEVEL	OPERATIONS ALLOWED
0	Change access level Log data
1	All above operations View time and date View communication format Display logged data Change user I.D.
2	All above operations Change operating Parameters Reset logged data
3	All operations available

2.5.1 ACCESS LEVEL

The screen will display:

```
ACCESS LEVEL   3
"RESET" TO CHG
```

By pressing the RESET switch the 580B will display:

```
    KEY    00003
"RESET" WHEN DONE
```

Please note that in both screens the 3 indicates the current access level and may not necessarily be a three.

In order to change the access level the +/INC switch may be pressed to increment the digit above the cursor and the -/CRSR switch may be pressed to move the cursor. The desired access level should be entered in the right most digit. Note that only access levels between zero and three are legal. The remaining four digits are the access code. The access code will be 0000 when the instrument is shipped. The access code should then be entered. Once this is done press the RESET switch. The 580B will then return to the previous screen.

If the access code entered was not the proper access code, or if the access level was not a legal access level then the access level will not be changed.

The last and most important point regarding the access level is how to change the access code. The access code is the four rightmost digits of the instrument number. The instrument number is only viewable (and therefore only changeable) while in access level three.

2.5.2 USER IDENTIFICATION NUMBER

The screen will display:

```
I.D.# 014563977
"RESET" TO CHG
```

By pressing the RESET switch the 580B will display:

```
I.D.# 014563977
"RESET" WHEN DONE
```

The user identification number may be changed by pressing the +/INC switch to increment the digit above the cursor and the -/CRSR switch to move the cursor. The user identification number is a nine digit number (just right for fitting a social security number). Once the user identification number has been entered press the RESET switch and the 580B will return to the previous screen.

2.5.3 INSTRUMENT NUMBER

The screen will display:

```
INSTR #  000000
"RESET" TO CHG
```

By pressing the RESET switch the 580B will display:

```
INSTR #  000000
"RESET" WHEN DONE
```

The instrument number may be changed by pressing the +/INC switch to increment the digit above the cursor and the -/CRSR switch to move the cursor. Once the instrument number has been entered the RESET switch should be pressed. The 580B will then display the previous screen.

When the instrument number is changed it is very important that the last four digits be remembered. These digits are the access code and therefore will need to be known in order to change the access level.

2.6 CLOCK MODE

The Clock mode is entered from the Main menu by pressing the SPKR switch. The screen will display the date and time on the top line. The bottom line will display:

"RESET" TO CHG

By pressing the RESET switch the 580B will display:

"RESET" WHEN DONE

The date and time may be changed by pressing the +/INC switch to increment the number (or in the case of the month the months abbreviation) above the cursor. The -/CRSR switch will move the cursor. Once the proper month has been entered the RESET switch should be pressed. The 580B will return to the previous screen.

The date and time will be maintained even when the instrument is turned off! It is however advisable that the date and time periodically be checked to ensure that it is correct.

2.7 COMMUNICATION MODE

The Communication mode is entered from the main menu by pressing the RESET switch. The Communications mode has four sections.

1. Communicate with printer or computer
2. Display logged data
3. Reset logged data
4. Set communication parameters

Pressing the -/CRSR switch will advance the 580B to the next section.

NOTE: A detailed discussion of communication protocol is given in Appendix A. Further discussion of communication may be found in Section Seven.

2.7.1 COMMUNICATE WITH PRINTER OR COMPUTER

The 580B is capable of communicating with a computer or outputting logged data to a printer. The 580B will display:

COMMUNICATE?

"+" = YES

if the computer format is selected or it will display:

OUTPUT TO PRINTER
"+" = YES

if the printer format is selected. In either case pressing the +/INC switch will cause the 580B to try to establish communication. Pressing the -/CRSR switch instead will cause the 580B to advance to the next section.

2.7.2 DISPLAY LOGGED DATA

If at least one data point has been logged the 580B will display:

DISP. LOG DATA?
"+" = YES

By pressing the +/INC switch the 580B will display the first data point. The date and time which the data point was logged will be displayed on the top line. The bottom line will alternate between the location code and the PPM. Pressing the +/INC switch will advance to the next logged data point. This will continue until there are no more data points at which time the 580B will display:

NO DATA STORED

The MODE/STORE switch may be pressed to return to the Run mode.

2.7.3 RESET LOGGED DATA

The logged data can be erased so that more data points may be logged. The screen will display:

RESET LOG DATA?
"+" = YES

Pressing the +/INC switch will erase all of the logged data points. The 580B will then advance to the next section.

2.7.4 COMMUNICATIONS PARAMETERS

The 580B can be configured to communicate with a printer or a computer. The baud rate may also be set for 9600, 4800, 2400, 1200, 900, 600, 300, or 150 baud. The 580B will display the current communication format (computer or printer) on the top line and the current baud rate on the bottom line. Pressing the RESET switch will cause the 580B to display:

COMPUTER FORMAT
+ = USE - = NO

Pressing the +/INC switch will select the computer format and the 580B will advance to the baud rate screen (see below). Pressing the -/CRSR switch will cause the 580B to display:

PRINTER FORMAT
+ = USE - = NO

Pressing the +/INC switch will select the printer format and the 580B will advance to the baud rate screen (see below). Pressing the -/CRSR switch will cause the 580B to display the previous screen.

The baud rate screen will display the currently selected baud rate on the top line. The bottom line will display:

+ = USE - = NO

Pressing the +/INC switch will cause the displayed baud rate to be selected and the 580B to show the selected format on the top line and the baud rate on the bottom line. Pressing the -/CRSR switch instead will cause the next lowest baud rate to be displayed.

2.8 BATTERY / CHARGER

The model 580B uses a 1.2 amp hour lead acid (gel cell) battery. There is protection circuitry potted directly on top of the battery. The battery is rechargeable with the charger provided with the instrument. The charger is regulated so that there is no danger of "over charging" the battery. It is suggested that the 580B be charged over the weekend (as well as each evening) during periods of heavy usage in order to ensure maximum battery charge.

SECTION III

ROUTINE MAINTENANCE

The routine maintenance of the 580B involves the calibration of the instrument, the cleaning of the lamp window, and the maintaining of charge on the battery. The following pages give instructions for routine maintenance. Figure 3.1 illustrates the detector assembly.

3.1 LAMP INSERTION AND REMOVAL

3.1.1 REMOVAL

NOTE: The 580B must be off while removing the lamp.

In order to remove the lamp the four screws which hold the case top and bottom together must first be loosened. The case bottom should be placed flat on the table and the top placed on its side next to the bottom.

The high voltage power supply is removed next by loosening the thumb screws on each side and then pulling the power supply towards the rear of the instrument (see figure 3.1). The lamp may now be removed by loosening the lamp nut.

3.1.2 INSERTION

Insertion of the lamp is accomplished by performing the above tasks in the reverse order. The lamp should be placed flat against the o-ring and the lamp nut fastened down in order to create a proper seal. The high voltage power supply should then be inserted and the thumb screws fastened down. There are three pins protruding from the high voltage power supply which should fit snugly into connectors located beneath the detector. The lamp spring (mounted in the center of the high voltage power supply) should make contact with the lamp ring.

3.1.3 LAMP CLEANING

On occasion the lamp should be removed for cleaning. Cleaning of the lamp is accomplished by cleaning the lens surface of the UV lamp. This is accomplished by using the aluminum oxide scouring powder provided with the 580B.

The procedure for cleaning the lamp is as follows. First place a small amount of aluminum oxide scouring powder on the lens of the UV lamp. Next gently scour this lens with a soft tissue or cloth. Scour the lens in a rotary type motion. After scouring the lens surface, gently blow the remaining powder from the lens. Thoroughly wipe the lamp lens with a clean tissue to remove the last traces of cleaning powder. The lamp is now able to be inserted into the detector.

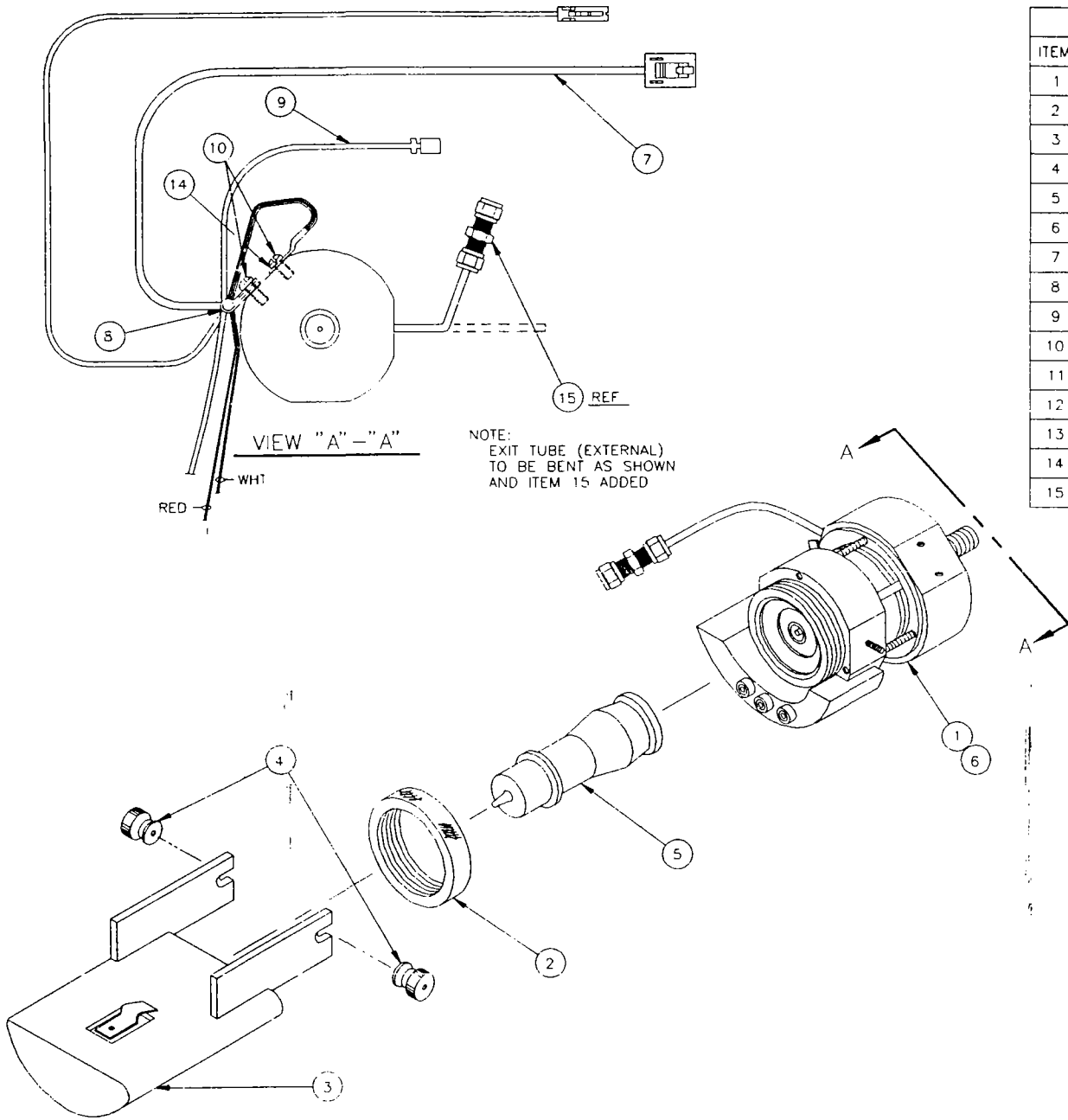

MATERIAL LIST			
ITEM	PART NO.	DESCRIPTION	QTY
1	580B-6003	DETECTOR SUB ASSY.	1
2	580S-2010	NUT – LAMP (13507)	1
3	580S-6019	PWR. SUPPLY ASSY. (13560)	1
4	12082	NUT – KNURLED	2
5	11929	U.V. LAMP 10.0	1
6	580S-6035	DETECTOR WIRING ASSY. (13575)	1
7	580B-6001	BASE HARNESS ASSY.	1
8	4166	STRAIN RELIEF	1
9	580S-6028	SIGNAL CABLE (13568)	1
10	5814	#4-40 X 1/4" BINDER HD. SCREW	2
11			
12			
13	5510	TEFLON TUBING 1/8" 6.5" LG	1
14	5588	#4 INT. TOOTH STAR WASHER	1
15	4417	UNION-2U-316	1

580B-600

Figure 3.1
Detector Assembly

3.2 CALIBRATION

NOTE: Chapter four should be read before calibrating the 580B in order to gain a better understanding of the concepts behind calibration of the 580B.

The following is a brief discussion of calibration as it relates to different lamps. One of the parameters in the Parameters mode (see Section 2.4) allows selection of lamp setting. The two types of lamps are the 10.0 eV and the 11.8 eV lamp. Whenever a new lamp is used the 580B must be calibrated. This is true even if the new lamp is the same type, e.g., the new and old lamp are both 10.0 eV. This is due to the fact that each lamp will have a slightly different sensitivity.

It is important to note that the 11.8 eV lamp will in general be less sensitive than the 10.0 eV lamp. This is true despite the higher energy level of the 11.8 eV lamp. The 11.8 eV lamp will however "see" certain gases which the 10.0 eV lamp will not. See Table E.1 for a list of common organic vapors and their associated ionization potentials. Any questions regarding the use of the 580B should be directed to Thermo Environmental's Application Laboratory.

The 580B is quite simple to calibrate. A source of "zero air" and "span gas" are all that is needed to calibrate the 580B. The zero air is introduced to the 580B in order to determine the "background" signal. The concentration of the span gas is then selected. The span gas is finally introduced to the 580B. The instrument makes all of the necessary calculations (including linearization) to arrive at a "calibration constant." When in the Run mode the signal is multiplied by the calibration constant in order to arrive at the current PPM.

$$\text{CALIBRATION CONSTANT} = \frac{\text{SPAN PPM}}{\text{SPAN SIGNAL - ZERO SIGNAL}}$$

$$\text{PPM} = (\text{SPAN SIGNAL} - \text{ZERO SIGNAL})\ \text{CALIBRATION CONSTANT}$$

NOTE: The PPM is then multiplied by the RESPONSE FACTOR before being displayed. Chapter four explains the use of response factors when calibrating.

Section 2.4.8 gives a detailed explanation of which buttons to press in order to calibrate the 580B. The flow chart at the back of this manual may also be helpful.

3.3 CHARGE

When there is a flashing "B" in the lower left corner of the display (while in the run mode) the battery is low. The battery is recharged by plugging the charger into the RUN/CHARGE plug at the rear of the 580B. The instrument runs while it is charging.

SECTION IV

CALIBRATION

4.1 GENERAL

The Model 580B Organic Vapor Meter is indeed a quantitative instrument and can certainly be used as such. It makes use of the Photoionization Detection System using a lamp with an ionization energy of 10.0 eV which is standard in the Model 580B. Almost all organic materials will be ionized at this energy level. There are some organic materials, such as a few of the freons, methane, ethane and propane that are not ionized and thus will not be detected. The ionization potentials for the various organic materials will simply tell whether the material will be detected by the Photoionization Detector. It does not give any clue as to the sensitivity of the detector for that particular material. Certainly, different organic vapors will have different sensitivities. It is important to understand that the Model 580B does indeed sense most organic vapors and that its response to these different organic vapors will be different.

In this section of the manual, the aspects of calibrating the Model 580B for various vapors will be discussed. In the following section discussing applications, various ways of using the features of the Model 580B will be explained along with the various methods for calibration of the 580B. There will also be applications of the Model 580B in specific instances where the organic vapors or the mixtures of organic vapors are completely unknown. The 580B can be an extremely useful tool, even in areas such as those.

4.2 FACTORY CALIBRATION TEST OF THE MODEL 580B

The Model 580B has been tested for calibration and linearity tested at the factory. The particular gas chosen for this calibration is isobutylene. The Model 580B has good response for isobutylene. Isobutylene standards prepared in air are relatively stable with time, undergoing no serious adsorption or reaction problems. The test information is included in the instrument packet. In addition to the above test a benzene standard is also run. It is important to note that the instrument was not calibrated. It was tested for calibration. Therefore, it should be calibrated by the operator before use.

4.3 METHODS OF GENERATING CONCENTRATIONS OF VARIOUS MATERIALS IN AIR

This section is not intended to be all inclusive as far as the preparation of gas and vapor standards in air are concerned. Only those methods that have been found most practical for the calibration of the 580B are discussed here. There are basically two types of standards, cylinder and bag.

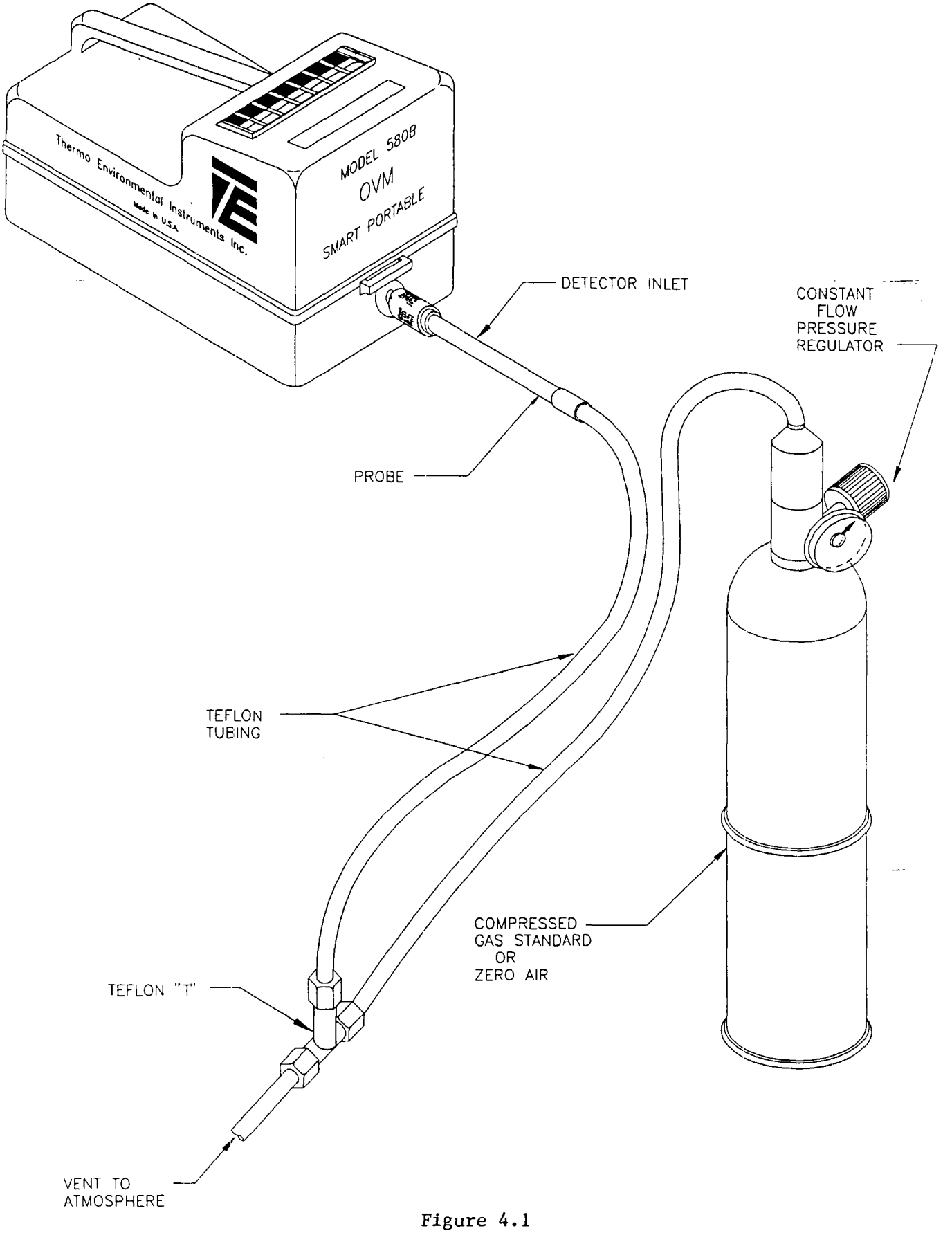

Figure 4.1
Cylinder Calibration

4.3.1 CYLINDER STANDARDS

Certainly commercially available standard cylinders of gaseous materials in air offer the most convenient method of calibration. However, these are static standards. Standards prepared in this fashion in air for vapors of various organic liquids often show concentration reduction with time due to adsorption problems. In general, gases when mixed with air will maintain their concentrations with time since adsorption is generally not a problem.

However, some gases are sufficiently reactive that chemical reaction of the gas will cause a reduction of it in air. These precautions must be observed when using commercially prepared standards for calibration of the Model 580B. It is for this reason that isobutylene in air was chosen as a reference standard for factory calibration. TEI offers a cylinder standard which includes both zero and isobutylene standards. A constant flow pressure regulator sets the flow needed for calibration of the 580B. Figure 4.1 illustrates the physical calibration procedure. The inlet to the 580B is connected to the "T" as shown. It is important that this connection is tangent to the gas flow. The "T" is connected to the regulator on the standard cylinder. It is important that a length of tubing is attached to the "T" location. This prevents diffusion of ambient air into sample line. The regulator and tubing assembly will have to be moved between both the zero air and standard cylinder.

4.3.2 BAG STANDARDS (ISOBUTYLENE)

Bag standards can be prepared in a laboratory and in general are reasonable ways of calibrating the Model 580B. However, it is important that these standards be used shortly after their preparation to reduce the significance of any adsorption problems. Static standards prepared for calibration of the Model 580B are best prepared in collapsible plastic bags. This is opposed to a fixed volume container. The sampling rate of the 580B, which is 500 ml/min, requires an appreciable amount of sample. Even one minute's sampling out of a fixed container will remove 500 ml/min from it. This should not significantly reduce the pressure inside the container. Thus, the collapsible bag provides the best means as opposed to a fixed volume. A 5 gallon polyethylene bag is a convenient size to use for the preparation of static standard.

A tube is inserted into the opened end of the bag and the bag opening then sealed around the tube. The tube should have a cutoff valve or some means of closing the volume of the bag. The volume of air introduced into the bag must be measured. This is most conveniently measured by a wet test meter. However, a source of air flowing through a flow meter can be used if the flow can be held constant, then time is a measure of the volume of the air placed into the bag. All air is expelled from the bag by completely collapsing it prior to connection to the source of air.

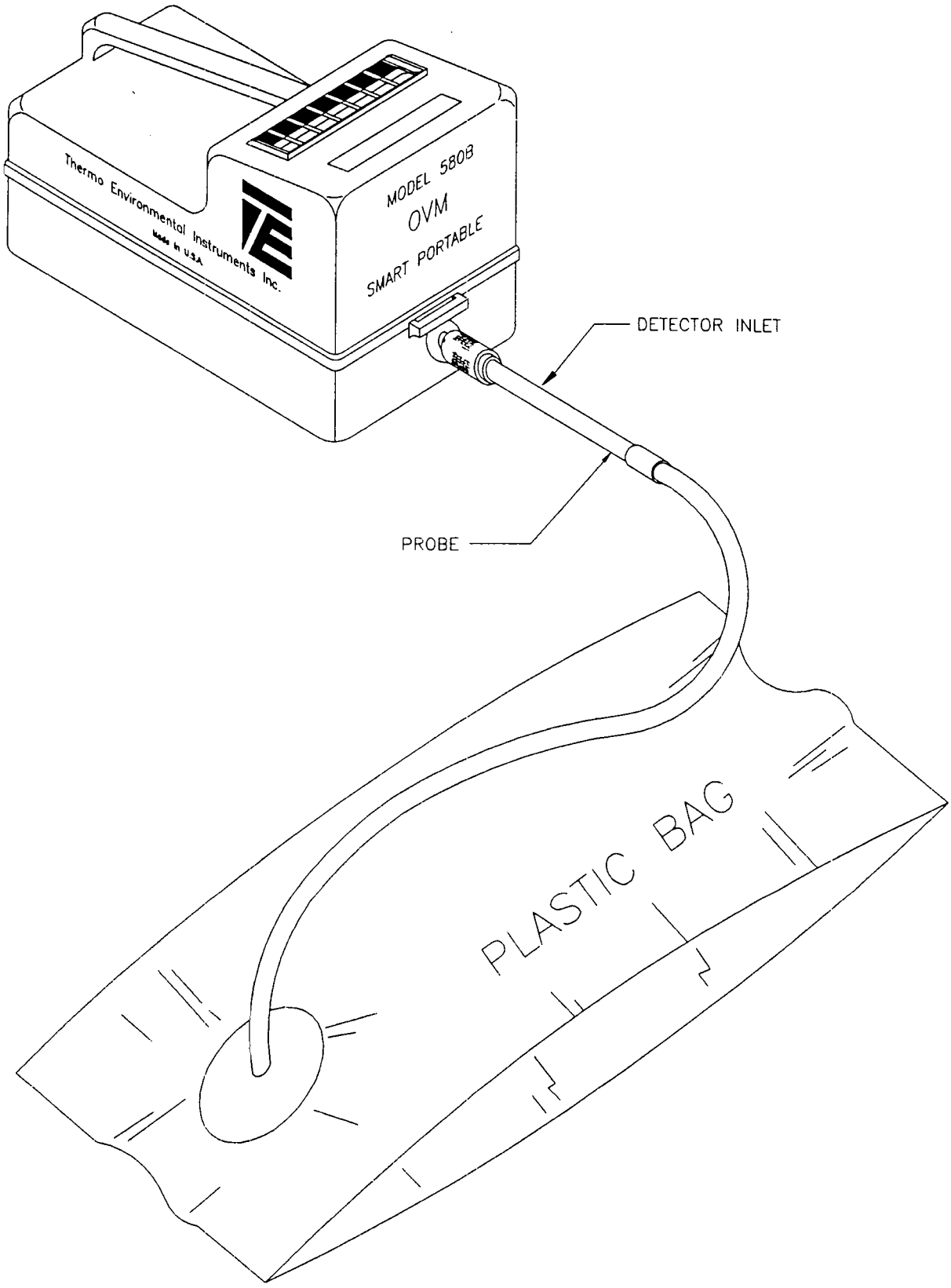

Figure 4.2
Bag Calibration

It can then be connected to a wet test meter or flow meter via a short length of rubber tubing hooked to the plastic tube of the bag. The air flow is started into the bag at a rate of approximately 5L/min. A total of 10 liters is a convenient volume for a 5 gallon bag. This would mean approximately 2 minutes for filling the bag. Figure 4.2 illustrates the physical configuration needed to develop bag standards.

For gaseous samples, the trace organic will be added via a glass hypodermic syringe. The 1 cc Tuberculin syringe is a convenient size. For an isobutylene standard, the 1 cc syringe is flushed with pure isobutylene and then filled to the 1cc mark. While the air is flowing into the plastic bag, the short piece of rubber tubing is pierced by the needle from the 1 cc syringe and the plunger slowly depressed such that the 1 cc of isobutylene is added to the air flowing into the plastic bag. When 10 liters of air have been added to the plastic bag, the flow is immediately stopped and the valve on the tube or the closing clamp is applied to contain the air and isobutylene within the plastic bag. It is best at this stage of the procedure not to rely solely on the diffusion of isobutylene to form a uniform mixture inside the plastic bag. Slight kneading of the plastic bag will hasten the mixing of the isobutylene in air. The plastic tube from the bag is then connected to the probe on the Model 580B via a short length of rubber tubing and the valve on the plastic tube immediately opened. The Model 580B withdraws a sample from the bag at the sampling rate of 500 ml/min. Thus, 10 liters of sample in the bag will provide approximately 20 minutes. Certainly the calibration of the 580B can be accomplished in a shorter period of time. The concentration of isobutylene in ppm by volume will be equal to the sample size, which was 1 cc, divided by the volume of the bag in liters, which would be 10 liters, times 1000. In this particular instance, the concentration would be:

$$\text{Conc (ppm by Vol)} = \frac{\text{1cc Isobutylene x 1000}}{\text{10 L Air}} = 100 \text{ ppm}$$

4.3.3 BAG STANDARDS (ORGANICS)

On occasion there is the need to prepare standards other than the normal calibration standard. As mentioned previously, isobutylene was chosen as a standard because of its stability. If other standards are to be used, it is best to develop a relation of the other standard to a standard of known stability like isobutylene. If this procedure is followed, a response factor can be developed by comparing the other organic standard to isobutylene this technique will be discussed in a later section. The following is a suggested technique for preparing other standards.

For organic materials, which are normally liquids at room temperature, the procedure is essentially the same except that an extremely small liquid sample is injected into the flowing air stream rather than the gas sample. This technique works well

only for relatively volatile organic materials. The flowing air stream must vaporize all of the material or the calculation will be off. If the material is not rapidly volatile in that flowing air stream, the liquid should be injected through the surface of the plastic bag. Immediately after withdrawing the needle, the hole in the plastic bag should be covered with a piece of plastic tape.

Again, significant kneading of the bag will hasten the evaporation of the sample and mixing of the vapor into the air to provide homogeneous samples. The introduction of this sample into the 580B is the same as before. The calculation of the concentration of the vapor in air is a two-step procedure whereby the small volume of liquid injected into the air stream and into the plastic bag is converted to a volume of vapor. This volume of vapor is then used in the same manner as the volume of gas in the case of isobutylene. The following equations apply:

$$\text{Volume Vapor (uL)} = \frac{\text{Liquid Volume (ul)} \times \text{Liquid Density} \times 24.45}{\text{Molecular Weight}}$$

The above equation gives the vapor volume at atmospheric pressure (760 torr) and 25° C (77F).

Then:

$$\text{Concentration (ppm by Volume)} = \frac{\text{Vapor Volume (ul)} \times 1000}{\text{Air Volume (liters)}}$$

The following is a sample calculation for benzene:

Liquid Volume = 2 ul

Benzene Density = 0.879 g/cc

Molecular Weight Benzene = 78.1

Air Volume = 10 Liters

$$\text{Vapor Volume} = \frac{2 \times 0.879 \times 24.45 = 0.55 \text{ ul}}{78.1} \quad \text{Benzene Vapor}$$

$$\text{Conc} = \frac{0.55 \times 1000}{10} = 55 \text{ ppm (vol)}$$

The syringe used for the measurement of liquids in this particular instance is a small volume-type such as those manufactured by the Hamilton Company. A convenient size syringe is the 10 microliter volume.

4.4 580B CALIBRATION

The following procedure is applicable for both Cylinder and Bag Standards. The sequence requires both Zero gas and Span gas to be used. Span gas can be either contained as a cylinder or bag, in either case the exact concentration used must be known. This concentration will be entered to the 580 when the program provides its entry. With respect to Zero gas, there are several choices. Obviously a certified zero air standard in a cylinder presents no problem. Another choice would be to build a zero air standard in a bag. This can be simply accomplished with the set-up in Figures 4.1 and 4.2 using a charcoal scrubber to remove all the hydrocarbons present in the air. Charcoal does not absorb Methane; this does not cause a problem because the PID does not respond to it. Another approach which could be used in an emergency is to use room air unscrubbed. This is acceptable if you know that there are no hydrocarbons present or they are exceptionally low in concentration. However, it is not recommended as a standard practice. The physical set up for cylinder calibration is illustrated in Figure 4.1; bag calibration in Figure 4.2.

4.4.1 CALIBRATION ROUTINE

(A) Set-up calibration assembly with zero air cylinder or bag as described in Figures 4.1 and 4.2.
(B) Model 580B set-up and zero calibration.

1. Power-up instrument using power plug.
2. Depress ON/OFF Key to ignite lamp and initiate sample pump.
3. Depress MODE/STORE Key.
4. Depress-/CRSR Key in response to LOG THIS VALUE? Prompt.
5. Depress-/CRSR Key to select Parameters Mode from the Main Menu.
6. Depress +/INC Key to advance thru the Run Mode selection parameter prompt.
7. Depress +/INC Key to advance thru the Auto Logging Mode selection parameter prompt.
8. Depress +/INC Key to advance thru the Average Time selection parameter prompt.
9. Depress +/INC Key to advance thru the Alarm Setting parameter prompt.
10. Depress +/INC Key to advance thru Lamp Selection parameter prompt.
11. Depress +/INC Key to advance thru Response Factor Setting parameter prompt.
12. Depress RESET Key to initiate calibration sequence.
13. Depress-/CRSR Key to decline restoration of the backup calibration.
14. Connect outlet of calibration tubing assembly to the Model 580B Detector Inlet as illustrated in Figure 4.2.
15. Introduce Zero Air to Model 580B by opening flow regulator.

16. Depress RESET Key to "Zero" Model 580B.
17. Close Flow Regulator.

(C) Span Calibration - assuming that the Span gas has a concentration of 250 ppm isobutylene the following procedure is followed:

18. Simultaneously Depress RESET and -/CRSR Keys to activate the movable cursor.
19. Repeat Step 18 until the cursor is at the ones place.
20. Simultaneously Depress RESET and +/INC Keys to increment the ones place value.
21. Repeat Step 20 until the ones place value reads 0.
22. Repeat Step 18 to move cursor to the tens place.
23. Repeat Step 20 until the tens place value reads 5.
24. Repeat Step 18 to move the cursor to the hundreds place.
25. Repeat Step 20 until the hundreds place value reads 2.
26. Repeat Step 18 to move the cursor to the thousands place.
27. Repeat Step 20 until the thousands place value reads 0.
28. The LCD should now read:

```
SPAN PPM = 0250
"+" TO CONTINUE
```

29. Depress +/INC to accept the span conc. value.
30. Connect isobutylene cylinder (250 ppm) to calibration tubing assembly.
31. Connect outlet of calibration tubing assembly to the Model 580B Detector Inlet.
32. Introduce isobutylene standard to Model 580B by opening flow regulator.
33. Reset key to "CALIBRATE" Model 580B.
34. Close Flow Regulator.
35. Depress +/INC. Key in response to "RESET" TO CALIBRATE message.
36. Depress MODE/STORE to return to the Run Mode.

The instrument has been calibrated and is ready to make measurements.

4.5 DETERMINATION OF RESPONSE FACTORS

As mentioned above, the Model 580 can be calibrated with isobutylene but be set to read correctly, the concentration of another substance. This is done by using the Response Factor that is set in the parameter routine. The default for the response factor is 1.0. The Response Factor is the number that is multiplied by the measured concentration to obtain the correct concentration of the measured component. If the chemical to be measured is less sensitive on a PID than the standard, (usually isobutylene) then the Response Factor is greater than 1.0. If it is more sensitive than the standard then the Response Factor is less than 1.0.

The reason for a Response Factor is practicality. If it is

know that the sample to be measured contains only benzene and therefore the user would like to read benzene concentration directly, there are two approaches. The user could make a bag standard daily of benzene vapor in air and calibrate the 580 directly. Or the Response Factor could be used. In the latter case a bag with benzene is made only once for comparison to a cylinder of a stable standard (such as isobutylene). Then daily, the Model 580 is calibrated with the cylinder standard, a simple operation compared to the work of preparing a bag standard.

As an example, if the bag containing 55 ppm benzene in air as prepared above were measured in a 580 calibrated against isobutylene, the concentration might have been read as 91 ppm. thus the 580 is more sensitive for benzene than for isobutylene.

The Response Factor can now be calculated as:

$$\text{Response Factor (RF)} = \frac{\text{Factor STD Concentration}}{\text{580 Reading of Factor STD}}$$

$$RF = 55/91 = 0.604$$

When 0.60 is entered into the 580 as the Response Factor, the 580 will read 55 ppm for the bag.

Now the 580 need only be calibrated using an isobutylene standard and a Response Factor of 0.60 to correctly respond to benzene.

580B USER MANUAL
TABLE OF CONTENTS

SECTION			PAGE
1	**Introduction**		
	1.1	About this manual	1-1
	1.2	Instrument Overview	1-1
	1.3	580B Features	1-3
2	**Principle of Operation**		
	2.1	Photoionization Detector Operation Strategy	2-1
	2.2	Program Operation	2-4
	2.3	Main Menu	2-7
	2.4	Parameters Mode	2-8
	2.5	Access Mode	2-13
	2.6	Clock Mode	2-15
	2.7	Communication Mode	2-15
	2.8	Battery/Charger	2-17
3	**Service/Hardware**		
	3.1	Lamp Insertion and Removal	3-1
	3.2	Calibration	3-3
	3.3	Charge	3-3
4	**Calibration**		
	4.1	General	4-1
	4.2	Factory Calibration Test of Model 580B	4-1
	4.3	Methods of Generating Concentrations of Various Materials in Air	4-1
	4.4	580B Calibration	4-7
	4.5	Determination of Response Factors	4-8
5	**Applications**		
	5.1	General	5-1
	5.2	Vinyl Chloride Monomer	5-1
	5.3	Monitoring Isolated Plant Areas for Toluene and Methyl Isobutyl Ketone	5-2
	5.4	Petroleum Ether Vapor in Workspace Air	5-4
	5.5	Leak Sourcing	5-5
	5.6	Afterburner Efficiency	5-5
	5.7	Sample Collection of Unknown Environments	5-6
6	**Collection Techniques**		
	6.1	General	6-1
	6.2	Bag sample collection	6-2
	6.3	Collection using charcoal tubes view - sample collection techniques	6-3

TABLE OF CONTENTS (CONTINUED)

7	**Communication**		
	7.1	Printer	7-1
	7.2	Computer	7-1
	7.3	Communication Software	7-1
8	**Flow Chart**		
	8.1	Quick Start-up	8-1
	8.2	Detailed Flow Chart	8-1
A	**Communication**		
	A.1	Introduction	A-1
	A.2	Printer Mode Interface	A-1
	A.3	Computer Mode Interface	A-2
B	**Schematics**		
C	**580B Block Diagram**		
D	**Material List and Silkscreen**		
E	**580B Detailed Drawing**		
F	**Common Organic Solvents and Gases Data Sheet**		
G	**Variable Dilution Probe Assembly drawing**		
	G.1	General	G-1
	G.2	Technical Consideration	G-1
	G.3	Calibration of the Dilution Probe	G-1
H	**Probe Extension**		
I	**Water Trap**		

SECTION V

APPLICATIONS

5.1 GENERAL

This section discusses six applications which were done on the old model 580. These applications are discussed as they relate to the model 580B. The following applications of the Model 580B are given to show some different uses and means of calibration of the Model 580B in various practical applications. It is certainly not intended to be an exhaustive list of the uses of the Model 580B. In each situation, the stress is placed on the means of calibration and the interpretation of the readout of the Model 580B. Since the Photoionization Detector responds to virtually all organic materials and since its response varies for the different organic materials, questions can certainly arise as to just how the numbers presented on the digital display relate to anything meaningful. These applications will hopefully illustrate several ways in which these numbers can be quantitative and also illustrate uses of the 580B where accurate quantitation may be impossible.

5.2 VINYL CHLORIDE MONOMER IN REACTION VESSELS.

This particular application involved measuring the vinyl chloride content in vinyl chloride polymerization vessels following the polymerization reaction and the removal of the polymer slurry. Any residual vinyl chloride left in the reaction vessel has to be flushed and scrubbed prior to the opening of the vessel. The vinyl chloride content must be below a certain prescribed level prior to this opening. The reaction vessel is flushed with nitrogen to remove the vinyl chloride from the vessel and purge it through the filter media which remove the vinyl chloride from the nitrogen stream for recovery. During this particular operation, it is known that vinyl chloride monomer comprises significantly more than 90% of the entire organic material. In this instance, if the Model 580B is calibrated for vinyl chloride measurement, indeed the readout will be virtually the true vinyl chloride concentration inside the reactor vessel. The nitrogen exit stream prior to the vinyl chloride recovery was the point used for the analysis.

Since the plant was a considerable distance from the laboratory and since the study would require a significant period of time encompassing several weeks, it was decided to calibrate the Model 580B with the isobutylene reference standard and determine a response factor setting for a vinyl chloride standard in the laboratory.

With the response factor set at 1.0, the instrument was calibrated with isobutylene. The Model 580B was then presented with a known concentration of vinyl chloride monomer in nitrogen. The response factor for the vinyl chloride was then set in order for the Model 580B to read the correct concentration of vinyl chloride in the nitrogen. Static

standards of vinyl chloride are very definitely not stable with time due to the reaction of the vinyl chloride with itself. Thus, standards need to be prepared fresh each time vinyl chloride is to be used to calibrate an instrument. Since bag preparation, which was the technique used for this laboratory calibration of the 580B, would have been inprac tical at the plant; the use of a stable reference standard of isobutylene was chosen. Thus, at the plant site, the Model 580B could be calibrated using the isobutylene standard from a cylinder. This of course, greatly simplified the plant use of the Model 580B. This relationship to a reference standard reduces the time and equipment required at the plant such that the survey of all of the reactor vessels was completed in a short period of time with the items established for the nitrogen flush of the reactor vessels prior to opening the reactor vessels.

It is important to note that when the response factor setting was determined in the laboratory, nitrogen was used as the matrix for the bag preparation of the vinyl chloride standard. If air were used a different setting (higher) would be obtained. Since the sample was in a nitrogen matrix so should be the standard. Note also it is not necessary to have the isobutylene standard in nitrogen. In addition to correcting for differences in response between isobutylene and vinyl chloride, the response factor setting can also adjust for the different readings in nitrogen and air.

5.3 MONITORING ISOLATED PLANT AREAS FOR TOLUENE AND METHYL ISOBUTYL KETONE.

Two areas of an extensive plant operation were required to be monitored for the levels of methyl isobutyl ketone and toluene. Both of these areas were relatively isolated. In one area, methyl isobutyl ketone was the only solvent to which the atmosphere was exposed other than the potential leaks that might occur in process equipment in that same area. There were no other known solvents in use in that area and the ventilating system in effect isolated this area from other areas in the plant. In the second area, toluene had just very recently been substituted as a solvent in place of benzene due to the lower TLV for benzene. Average workplace levels were therefore needed for the toluene concentration in this work area. Again, toluene was the only solvent in this area and there was no other process equipment in the immediate area for even possible leak problems.

Notice that in both of these areas in the plant, it is certainly known from the processes occurring in that area and its relative isolation from the other areas in the plant, exactly which organic vapors will be by far the predominant vapors in the workplace air. In many instances, by simply knowing the processes involved and the chemicals in use in those processes, the qualitative aspects of the environment can indeed be established without the use of instrumentation. This is one of the most overlooked aspects in establishing what organic vapors are present in the environment. It simply involves determining what are the possible organic vapors that can be present. In general, this narrows it to several and in many cases, a single organic

vapor.

In these cases, the Model 580B can be calibrated specifically for these materials and will provide quantitative data on the levels of these materials in the workplace environment. In this particular instance, even though the laboratory to be used for the calibration of the Model 580B was at the plant site, it was desired to use a single 580B to monitor both work areas sequentially and several times throughout the course of a single day. This was to be done over a period of time to establish the variations of both methyl isobutyl ketone and the toluene in these work areas. In this particular instance, changing the response factor setting can avoid considerable calibration changes, as one moves from determining concentrations of methyl isobutyl ketone to the area where one is measuring the concentrations of the toluene vapor.

For calibration, the Model 580B response factor was set at 1.0 and the instrument spanned properly using a known reference standard of isobutylene. The Model 580B was then presented with a flowing air stream containing toluene vapor as generated in the Thermo Electron Model 360 using a toluene diffusion tube. The response factor was then adjusted so that the readout of the Model 580B corresponded to the toluene concentration in this standard.

The Model 580B was then presented with a flowing air stream containing methyl isobutyl ketone. This also was generated via a diffusion tube in the Model 360 Standards Generator. Once again, the response factor was adjusted so that the digital display gave the correct reading for the concentration for the methyl isobutyl ketone presented to the instrument.

With the instrument then calibrated with the reference isobutylene standard and knowing the proper settings of the response factors for methyl isobutyl ketone and toluene, the Model 580B was then ready for its plant survey. The area containing the toluene was monitored for a period of time with the toluene levels as noted by the 580B being recorded.

The response factor was set for this toluene reading. The instrument was then moved directly to the methyl isobutyl ketone area and the response factor adjusted to read methyl isobutyl ketone. The 580B was then able to read directly the methyl isobutyl ketone concentration in the second area. There was the possibility of leaks in process equipment in this particular area. The area in general was surveyed. If significant changes in the reading of the 580B were observed, the 580B was used as a leak sourcing instrument as described in a later section. In this fashion, it could be determined if some of the varying concentrations in this area were indeed coming from a leak in the process equipment. During the survey of this particular area, no leaks from process equipment were observed, therefore, the readings obtained on the 580B could indeed be considered the methyl isobutyl ketone concentration in this particular area.

Throughout the survey of these two workplaces, the 580B could move back and forth rapidly due to its portability and could be, in effect, recalibrated for each of the two different vapors by the mere setting of the response factor.

5.4 PETROLEUM ETHER VAPORS IN WORKSPACE AIR.

A given workplace was using petroleum ether as a paint solvent and for cleaning purposes. It was desired to quantitate the amount of petroleum ether in the air being recirculated in this particular area. Petroleum ether is a distillation fraction from crude oil. Its boiling point is slightly lower than the boiling point of gasoline. This means that petroleum ether is not a single chemical entity, but a multitude of hydrocarbons in a certain boiling range fraction. Reasonable quantitative data can be obtained here without knowing the exact chemical composition of each hydrocarbon that composes petroleum ether . For this purpose, the Model 580B can be used to measure these vapors. The 580B is initially calibrated with the response factor set at 1.0 using a reference standard of isobutylene.

The 580B is calibrated on isobutylene. Then a bag sample is prepared, as detailed above, for the quantitation of the instrument to measure the petroleum ether. In this particular instance, the petroleum ether is injected into the bag in the same fashion that liquid samples are injected. The calculation, however, has to change slightly because the ppm on a volume basis cannot be calculated without knowing the exact chemical composition of the petroleum ether. However, in a situation such as this, one can still quantitate it on a weight basis of the solvent in air. The equations below show this calculation.

Weight Vapor (mg)=Liquid Volume (uL) x Density g/ml

$$\text{Conc (mg/m3)} = \frac{\text{Weight Vapor (mg x 1000)}}{\text{Air Volume (liters)}}$$

For Petroleum Ether In This Example:

Liquid Volume = 3 uL

Petroleum Ether Density = 0.66 g/ml

Air Volume = 10 liters

Vapor Weight = 3 uL x 0.66 g/mL = 1.98 mg

$$\text{Conc} = \frac{1.98 \times 1000}{10} = 198 \text{ mg/m3}$$

This sample in the bag is then presented to the Model 580B and the response factor adjusted so that the digital readout on the front panel provides the proper reading in mg/m3. The setting of the response factor that is needed for this reading is noted. The Model 580B can now be used to monitor reasonably quantitatively the petroleum ether in the workplace environment. Any further calibration of the instrument can be done using the reference standard of isobutylene. This is a reasonably accurate

way of giving quantitative information on the amount of solvent in air even though the results are not reported in ppm on a volume basis.

This technique can be used in general when the solvents are a mixture of materials which in general will probably be petroleum distillation fractions. It would certainly also be used in the case of gasoline vapors in air. Notice from the equations used versus the equations for determining the ppm concentration in bag samples for pure liquids, the only real thing missing is the molecular weight of the material. It may be possible to assume an average molecular weight of the solvent mixture and actually report a ppm by volume basis.

5.5 LEAK SOURCING

In this particular instance, the Model 580B is to be used for determining the presence or absence of leaks in a chemical process plant. The Model 580B is uniquely adapted to this particular operation due to its light weight. In this particular instance, it is not necessary to accurately attempt to quantitate the readings from the Model 580B. It will be used simply to determine presence of leaks and to locate these leaks.

The Model 580B is simply calibrated against a reference standard of isobutylene as normal. No further calibration is used. It is not necessary to know the particular chemicals flowing in the different pipes or what they are in the various reaction chambers. It is only necessary to know that these materials will have some response on the Photoionization Detector. That is, that their ionization potentials are below the energy of the lamp. The standard probe of the Model 580B, with the 580B fully operational, is then simply moved along the various pipes and reactor vessels in the chemical process.

All seals are traced clear around the seal with the end of the probe. As one approaches a leak, the concentration of the organic materials in the air being sampled by the Model 580B will increase significantly. The point of maximum reading will indicate the point of the leaks. As one moves further away from the leak, the concentration of the organics in air will certainly decrease. In this very rapid fashion, the presence of leaks can be detected and their source fairly accurately pinpointed so that the leak can be repaired.

In many instances, it is not necessarily the workplace hazards of these leaks that is important, but the economics of the chemical process itself. In this instance, as in many instances, the exact composition of the organic materials being measured is really unimportant to the successful use of the 580B in a specific application. Also the exact numbers that are displayed on the digital readout of the 580B are unimportant. It is only relative magnitudes that are important in this instance.

5.6 AFTERBURNER EFFICIENCY

In a particular coating process, the material, after it has been coated, is passed into a dryer where the solvents of the coating are removed. These solvents are then vented into a

stack. To reduce the hydrocarbon emission from this plant, an afterburner had been installed to combust the organic solvents from the coating prior to release to the atmosphere. It is important to determine the efficiency of this afterburner and to follow the efficiency of the afterburner to avoid dumping excess solvent into the atmosphere and, thus, become subject to pollution fines.

The Model 580B is ideally suited to this type of operation. Again, it will be unnecessary to know the exact chemical composition of the coating solvent. The Model 580B is simply standardized against the reference standard isobutylene in the usual fashion.

The Model 580B is then connected to sample the stack gas in the dryer prior to the afterburner, noting the steady state number displayed on the digital panel meter. The 580B is then connected to the exhaust gases from the stack following the afterburner.

Again, the steady state number, as displayed on the Model 580B, is noted.

The reading prior to the burner minus the reading after the burner divided by the reading prior to the burner times 100 gives efficiency of the afterburner in the stack. This number is quite accurate, even though the Model 580B was not calibrated specifically for the solvents or solvent mixture used in this particular coating operation. The individual readings before and after the afterburner may not have the exact quantitative relationship to the actual amount of material, but their ratio will be accurate since basically the same chemical or mixture of chemicals is being measured before and after the afterburner.

5.7 SAMPLE COLLECTION OF UNKNOWN ENVIRONMENTS

The Model 580B can also be used in areas where organics are known to be present, but perhaps the exact composition of the environment is not known. This may be due to several solvents being in the same general workplace or various separate processes occurring in that same workplace, all of which could and possibly are admitting organic vapors. In plant areas such as these, the Model 580B can still be extremely useful.

The 580B is calibrated against a reference standard of isobutylene, as mentioned above. The 580B is then used as a survey tool throughout the entire plant area. The readings are logged, especially changes in these readings. The exact numbers displayed will not, in general, be a quantitative measure of the ppm of the organic vapor since it is impossible to know what organic chemical or mixture of chemicals should be used for the calibration. When high readings are obtained on the Model 580B, an evacuated sample bag can be connected to the rear of the 580B at the sample exhaust port. This bag could be virtually identical to the type of bag used for standards preparation. The Model 580B is sampling the atmosphere at the rate of 500 ml/min. The detection system of Photoionization is a nondestructive system such that the sample that is exiting the Model 580B is indeed the same material that is giving the readings on the 580B. When the 580B is seeing high readings, this is the time the bag is con-

nected to the rear for sample collection. The bag, if the same type is used for sample preparation, can hold approximately 10 liters of air sample; which would permit a sampling time of 20 minutes.

This bag sample can then be closed on removal from the 580B and transported to a laboratory for subsequent analysis to identify the individual chemical compounds present in the sample causing the high readings and to ascertain if the workplace environment is harmful at those high readings.

The use of the Model 580B coupled with the bag collection ensures that the sample that is returned to the laboratory for analysis is a sample containing the desired organic vapors. This is assured because the bag collection is used only when the Model 580B is detecting high levels of organic vapor in the environment. This is an instance of the use of the Model 580B when the type of organic vapors are not known and it is desired to know them. The 580B has a very useful function even in these areas. It should be noted that a charcoal tube could be connected to the rear of the 580B as well as an evacuated plastic bag. The charcoal tube will pass the bulk of the sample, which is air, and adsorb the organic vapors. This charcoal tube can be returned to the lab for subsequent analysis for both a qualitative identification of the materials present as well as a quantitative measure of their levels.

SECTION VI

COLLECTION TECHNIQUES

6.1 GENERAL

As mentioned in the Application Section, it is possible to use the 580B in completely unknown areas as far as the organic vapors present are concerned and still obtain meaningful data. One of the techniques described here is the use of the 580B as a means of collecting the representative samples for further identification in the laboratory regarding the specific organics that may be present in addition to their concentrations.

Two techniques were mentioned in the section under the heading "Sample Collection of Unknown Environments". One of these techniques involves the use of a bag for collection and the other involves the use of charcoal tubes as a means of trapping organic vapors. In this section, each of these techniques will be explored in further depth as to the proper way of using the 580B to collect the samples for subsequent analysis. These collection techniques are quite useful when one is using the Model 580B simply as a survey instrument. When readings on the 580B become quite high in certain areas, it is impossible to determine the exact source of the high readings to perhaps pinpoint the specific organic chemical giving rise to the reading. One may very well want to identify what the chemical or chemical mixture is that is providing the high reading. This will have to be done with instrumentation significantly more sophisticated than the Model 580B; namely, an instrument that can provide specificity as well as qualitative identification. A Gas Chromatograph is such an instrument.

If it is desired to collect some of the air to send to a laboratory for further analysis, one needs to be sure that the proper samples are taken at the proper time. This means simply that one needs to be assured that the sample sent to the laboratory is indeed a sample that has a high concentration of organic vapor present in the sample. The 580B is used to indicate the presence of the high level organic vapors. The sample then is gathered at the exit port of the 580B when the 580B is reading high values. This assures that the sample sent to the laboratory does indeed have the high level vapors present in it. This generally simplifies the sampling technique of the environment and reduces the number of samples and, therefore, the expense needed to accurately identify the organics present and to quantitate them in a laboratory.

Two design features of the Model 580B make this type of operation possible. The first is that the detection system used in the Model 580B is the Photoionization Detector which is basically a nondestructive detector. Thus, the instrument is able to sense the organic vapor using the detector and virtually the same concentration of the same materials exits the detector as entered it. This does make it possible for the collection of the exact sample contributing to the high readings.

The second feature of the 580B that allows this sample collection is that a positive displacement pumping system is used to draw the sample into the Model 580B. It is a very simple procedure then connect to the exit of this positive displacement pump and trap the sample exiting the 580B after it has passed through the detector.

6.2 BAG SAMPLE COLLECTION.

One of the most convenient ways to sample the environmental air is to simply trap the entire air sample in a collection bag. As discussed before, the bags used for the calibration of the Model 580B, as discussed under the Calibration Section, can certainly be used for collection of the air samples. There are several precautions that must be mentioned immediately relative to the use of bag sample collection. When a bag has been filled with air that has organic vapor in the air sample, the organic vapor molecules will absorb onto the inside surface of the bag. This adsorption will begin immediately on introduction of the air into the bag. It will continue to progress with time until the vapor molecules that adsorb onto the wall of the bag are in equilibrium with the vapor molecules in the air. This equilibrium depends very strongly on the bag material and the chemical entity of the vapor itself. The ambient temperature also has some effect.

As mentioned under the Calibration Procedure, when one is preparing a known vapor concentration in a bag, the bag should be analyzed very rapidly after its preparation to ensure proper calibration of the instrument. The technique here is to use the standard prepared in this fashion as soon as possible such that the adsorption that has occurred is an absolute minimum amount. This adsorption becomes a bit more serious problem in using bags for sample collection. The first problem is simply when one is reusing the bag, one has to be sure that the sample contained in the bag previously has been completely desorbed from the wall. This, in general, can be checked by using clean air to fill a bag allowing the bag to set for a short period of time, about 1 hour, and then analyzing the air in the bag. If on using the 580 to analyze this air, it shows measurable organics, then the air in the bag should be dumped and new air introduced and allowed to set for the same period of time. There will be a reduction of organic vapor on the second go-around.

If it is still too high, this procedure is repeated until the bag shows virtually no organic vapor. The bag can be evacuated and reused.

The other problem associated with adsorption and sample collection is that the sample that is collected in the bag must be analyzed as soon as possible after collection if one is going to determine quantitatively the amount of organic vapor in that bag sample. The longer the sample stays in contact with the bag, the greater the adsorption will be of the organic vapors on the surface of the bag and, therefore, the lower the concentration of the organic vapors in the air sample.

If one is interested here in only doing a qualitative analysis of the organic vapors, that is identify what vapors are

present in the air sample, the bag certainly is a convenient way of taking the sample. If one in addition to getting the qualitative analysis desires to quantitate one or more of the specific organic vapors in the sample, the bag sample should be analyzed within an hour of taking this sample. If the bag sample cannot be analyzed this soon, it is recommended that one use the charcoal tube technique explained in the next section.

There are two considerations to be given relative to the size of the bag and, therefore, the size of the sample taken. The first consideration is the amount of sample needed by the laboratory for its analysis. If the analysis is to be done by gas chromatography directly on the air sample, in general only 1 to 5 mL of sample would be required for the analysis. Therefore, this does not become a major consideration here. If, however, other analytical techniques were to be used that would require significantly higher volumes of sample, this should be taken into account.

The other consideration is the sampling time. The Model 580B samples at the rate at which the bag attached to the exit port of the 580B will be filled. If the bag can conveniently hold 10 liters of air, this means that the sampling time can be up to 20 minutes. In general, collection techniques using the Model 580B are not intended to supply a four or eight hour integrated sample. They are used simply to help identify the materials contributing to a high concentration and possibly the analysis of individual toxic organic vapors in that particular air sample. Thus, a 20 minute limitation on sampling time should not be too severe.

Certainly larger bags could be used on the exit of the 580B, allowing up to several hours of sampling time should this be desired. The difficulty then becomes that the bags are quite large and physically become difficult to manipulate. It was recommended back in the Calibration Section that perhaps a 10 liter bag would certainly be the convenient bag for the calibration of the 580B. It would appear to be also a convenient bag for collection of the samples. For this purpose, a bag that has no adsorbed vapors on the interior surface is evacuated and closed to the atmosphere. Several of these bags could be carried in a very small container. When the Model 580B is reading high values, and it is impossible to determine the source of the high values, then a bag can be connected to the exit port of the 580B and immediately opened to accept the sample exiting the 580B. The bag is kept connected to this exit as long as the 580B is giving high readings or until the bag has reached its volume capacity. At this point, the bag is removed from the exit port of the 580B, immediately closed, and returned to the laboratory for analysis.

6.3 COLLECTION USING CHARCOAL TUBES

A technique very common in industrial hygiene-type analysis is to use a small charcoal tube as a collection device. An air sample is pulled through the charcoal tube at a known flow rate for a known period of time. This flow rate and time determine the total volume of air or total sample size. The organic vapors

in the air are adsorbed on the charcoal in the tube. These vapors are then desorbed from the charcoal by adding a known volume of desorbing solvent, usually carbon disulfide. The organics end up in the carbon disulfide. The carbon disulfide is then injected into a gas chromatograph using Flame Ionization Detection. The individual organic vapors can then be identified and quantitated.

The usual charcoal tubes that are used for this type of work contain two sections. One section has approximately 100 milligrams of charcoal and a backup section has 50 milligrams. The backup section is analyzed separately from the main section to determine if there is organic vapor breakthrough in the main section. These particular size tubes have a recommended maximum flow in the neighborhood of 250 to 300 mL/min. The exit of the Model 580 is at 500 mL/min. The most advantageous way of using a smaller charcoal tube would be to split the exit stream and pass it through two parallel charcoal tubes. This would give approximately 250 mL through each tube. For analysis purposes, the charcoal of each tube is removed and combined using double the amount of solvent that would be required for a single tube.

The amount of total air that can be passed through charcoal tubes certainly depends on the concentration of organic vapor in the air. It also depends to some extent on the particular organic vapor. In general, a total sample through the smaller charcoal tube of 10 liters is a reasonably safe number to use. Since the flow is split exiting the 580B using the smaller charcoal tubes, only 250 ml/min is going through the tube. It would take 40 minutes to accumulate 10 liters passing through each of the tubes. There are charcoal tubes available in the marketplace containing 300 milligrams of charcoal in the front section and 150 milligrams of charcoal in the rear section. These tubes have correspondingly larger diameter and can accommodate higher volumetric throughputs. One of these tubes could be hooked to the exit of the 580B without doing the split. Conceivably since it contains 3 times the amount of charcoal, a safe operating total volumetric throughput would be approximately 30 liters. This would be a full hour's operating time on the Model 580B. Again, it must be stressed that the 580B when used in the particular form, is not being used as a personnel sampler to end up with the time weighted average concentration over an eight hour period. The intent here is to identify the high level organics observed on the 580B and to quantitate them following identification to determine the safe working area.

SECTION VII

COMMUNICATION

The 580B provides a serial (as opposed to parallel) communication port. There is also a communication cable provided for easy link up to a serial printer or RS-232 port of a computer. Logged data may be "dumped" (sent through the communication port) to a serial printer. Many of the 580B parameters may be set by a remote computer by using the serial port and the 580B communication software (the software is an option, part number 580A-9014).

Note: The serial port is not to be used in a hazardous location.

7.1 PRINTER

The 580B can be instructed to send all of its logged data through the serial port to a printer (or a dumb terminal). The 580B printer mode should be selected (see Section 2.7.4).The serial communication cable should then be plugged into the RS-232 port at the rear of the instrument and the other end of the cable plugged into the serial port of a printer. The 580B should finally be instructed to output to the printer (see section 2.7.1).

7.2 COMPUTER

The 580B provides capabilities for remote operation. Appendix A includes a detailed technical explanation of the 580B printer and computer interface protocol. The information in this appendix is sufficient for custom software to be developed for interfacing to the 580B. Thermo Environmental however has developed communication software which implements all of the available communication capabilities in a simple "menu driven" format. Remote communication may also be accomplished by using generic communication software package such as CrossTalk. Appendix A will be helpful if this route is taken.

NOTE: Generally, the RS-232 port on an IBM PC (or compatible) is a male connector. Since the communication cable provided with the 580B is also male, a "gender changer" (a DB-25 connector which converts from male to female) is needed.

7.3 COMMUNICATION SOFTWARE (OPTIONAL)

There is communication software available which will run on an IBM PC or compatible. The software provides the capability of obtaining or changing the 580B parameters (alarm setting, response factor, or operating mode to name a few). Logged data may be stored to disk or printed to a parallel printer. Concentrations may be read and displayed on the computer screen. There are a few operations which may not be accomplished remotely (for obvious reasons). The lamp may not be changed remotely. The lamp and pump may not be turned on from the computer either.

NOTE: The communication software will not work unless the 580B is attached via the communication cable.

7.3.1 HOW TO GUIDE FOR COMMUNICATION SOFTWARE

#1. The 580B must be turned on and connected to the computer's RS-232 port. The 580B must be in the computer mode (this is the default setting).

#2. The floppy disk should be inserted into the computer. Type 580B (this software was originally developed for the 580B) and then hit return. The introduction screen will appear.

#3. The software defaults to 2400 baud (as does the 580B). If some other baud rate is desired it must match the setting on the 580B.

#4. After selection of the baud rate press return. The main menu will appear.

NOTE: If the computer's screen goes blank and the main menu does not appear, then there is a problem with the communication link. Check to be sure that the communication cable is plugged into the RS-232 port and that the 580B is on.

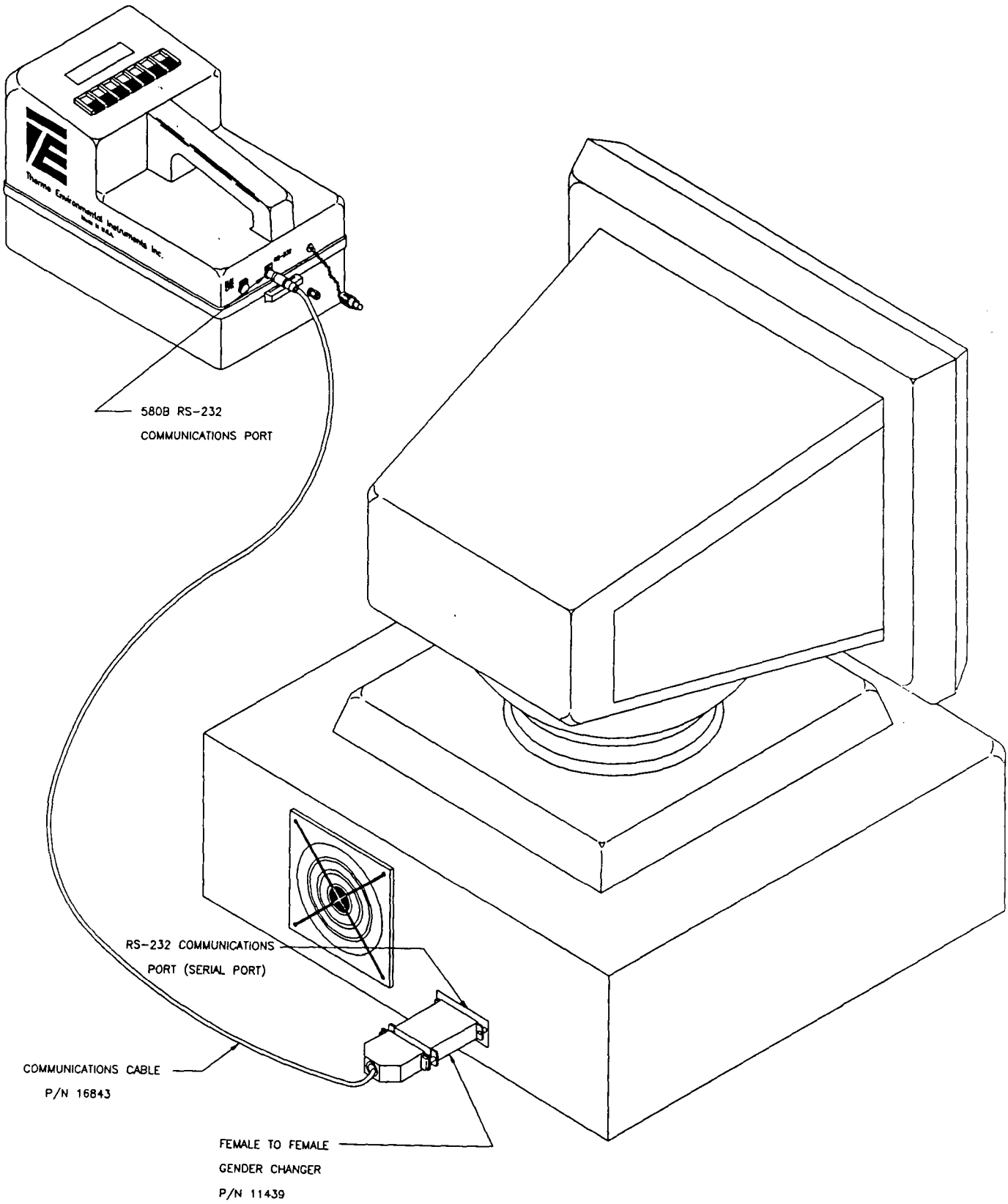

Figure 7.1
Serial Printer Communication

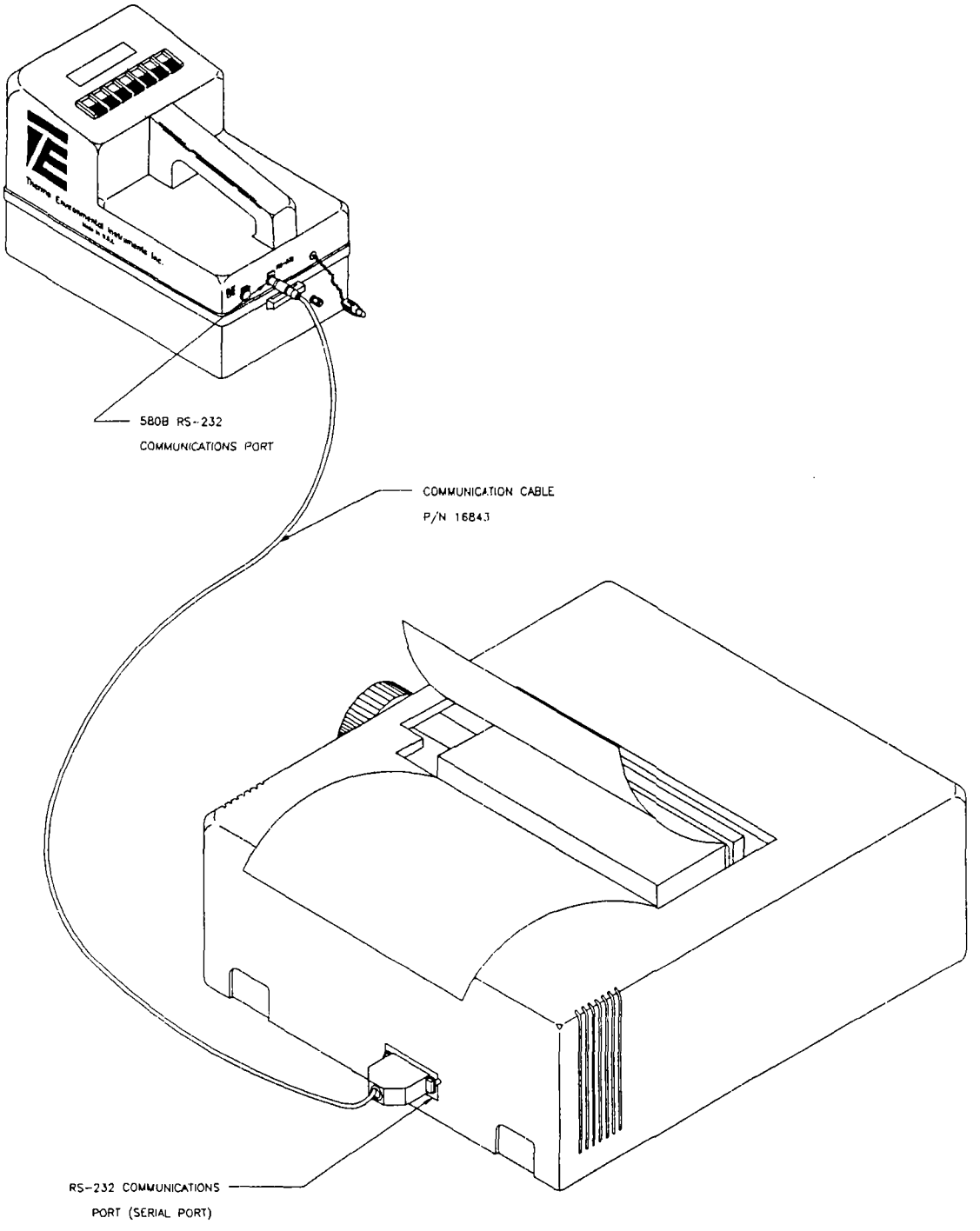

Figure 7.2
Computer Communication

SECTION VIII

FLOW CHART

There are two flow charts which illustrate the structure of the 580B software. The first is a "Quick Start-up" flow chart. Much of the detail is not included in this flow chart in order to diagram the basic structure of the software. The second flow chart includes extensive detail of each screen and the function of the seven buttons. These flow charts provide an easy method for determining how to get at each of the many facilities provided by the 580B.

8.1 QUICK START-UP

The Quick Start-up flow chart shows each of the top level screens. The screens are ordered acccrding to the hierarchy of the 580B software. The particular button (which advanced the 580B to the next screen) is shown in parenthesis above each screen. This flow chart does not illustrate any of the associated screens or operations (see the detailed flow chart for more in depth information).

The Quick Start-up flow chart should be fully understood before moving on to the more detailed flow chart. The best way to learn each of the flow charts is to have the 580B with you and to follow along verifying each step.

8.2 DETAILED FLOW CHART

The detailed flow chart illustrates many of the lower level screens as well as the function of buttons. Screens are shown in rectangles with the text written inside. The buttons are shown in ellipses (actually a rather flattened ellipse) with the button identifier written inside. There are a few conventions which need to be explained. The button identifiers have been abbreviated. For example the +/INC button is simply denoted as +. When two buttons need to be pressed simultaneously each identifier is shown with a slash between them. For example RESET/+ indicates that the RESET and +/INC buttons should be pressed together. Arrows indicate the direction of flow from one screen to the next.

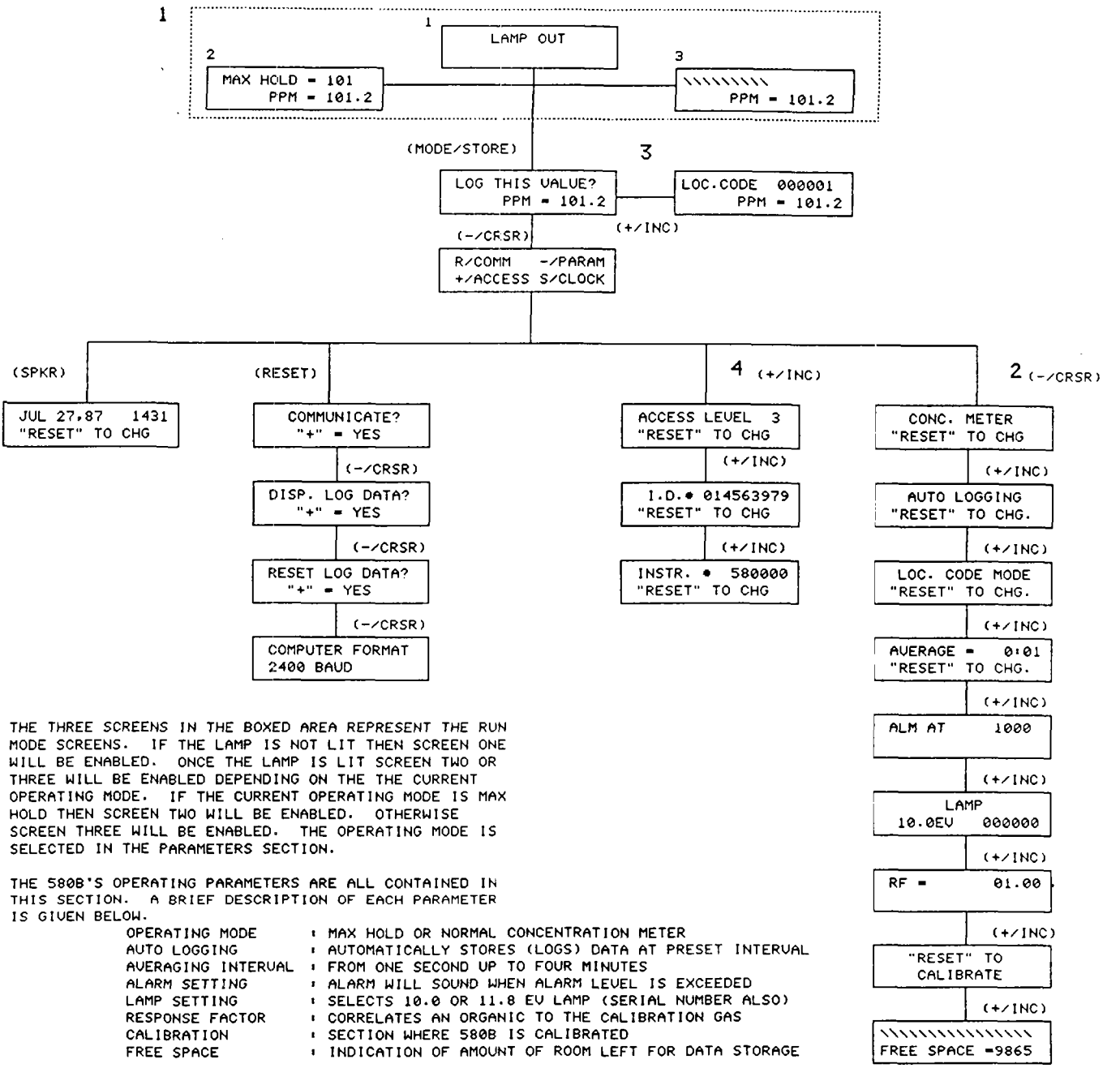

1 THE THREE SCREENS IN THE BOXED AREA REPRESENT THE RUN MODE SCREENS. IF THE LAMP IS NOT LIT THEN SCREEN ONE WILL BE ENABLED. ONCE THE LAMP IS LIT SCREEN TWO OR THREE WILL BE ENABLED DEPENDING ON THE THE CURRENT OPERATING MODE. IF THE CURRENT OPERATING MODE IS MAX HOLD THEN SCREEN TWO WILL BE ENABLED. OTHERWISE SCREEN THREE WILL BE ENABLED. THE OPERATING MODE IS SELECTED IN THE PARAMETERS SECTION.

2 THE 580B'S OPERATING PARAMETERS ARE ALL CONTAINED IN THIS SECTION. A BRIEF DESCRIPTION OF EACH PARAMETER IS GIVEN BELOW.

OPERATING MODE	: MAX HOLD OR NORMAL CONCENTRATION METER
AUTO LOGGING	: AUTOMATICALLY STORES (LOGS) DATA AT PRESET INTERVAL
AVERAGING INTERVAL	: FROM ONE SECOND UP TO FOUR MINUTES
ALARM SETTING	: ALARM WILL SOUND WHEN ALARM LEVEL IS EXCEEDED
LAMP SETTING	: SELECTS 10.0 OR 11.8 EV LAMP (SERIAL NUMBER ALSO)
RESPONSE FACTOR	: CORRELATES AN ORGANIC TO THE CALIBRATION GAS
CALIBRATION	: SECTION WHERE 580B IS CALIBRATED
FREE SPACE	: INDICATION OF AMOUNT OF ROOM LEFT FOR DATA STORAGE

3 THESE ARE THE SCREENS USED FOR LOGGING (STORING) DATA POINTS. AFTER ENTERING THE DESIRED LOCATION CODE, SIMPLY PRESSING THE MODE/STORE SWITCH WILL LOG THE VALUE (AS WELL AS A DATE AND TIME STAMP) AND RETURN OPERATION TO THE RUN MODE.

4 THE ACCESS (SECURITY) LEVEL IS SET IN THIS SECTION. ACCESS LEVEL THREE GIVES THE OPERATOR ACCESS TO ALL OF THE 580B'S FACILITIES. LOWER ACCESS LEVEL ZERO ARE PROGRESSIVELY MORE RESTRICTIVE. ACCESS LEVEL ZERO ONLY ALLOW READING AND LOGGING OF DATA.

Figure 8.1
Quick Flow Chart

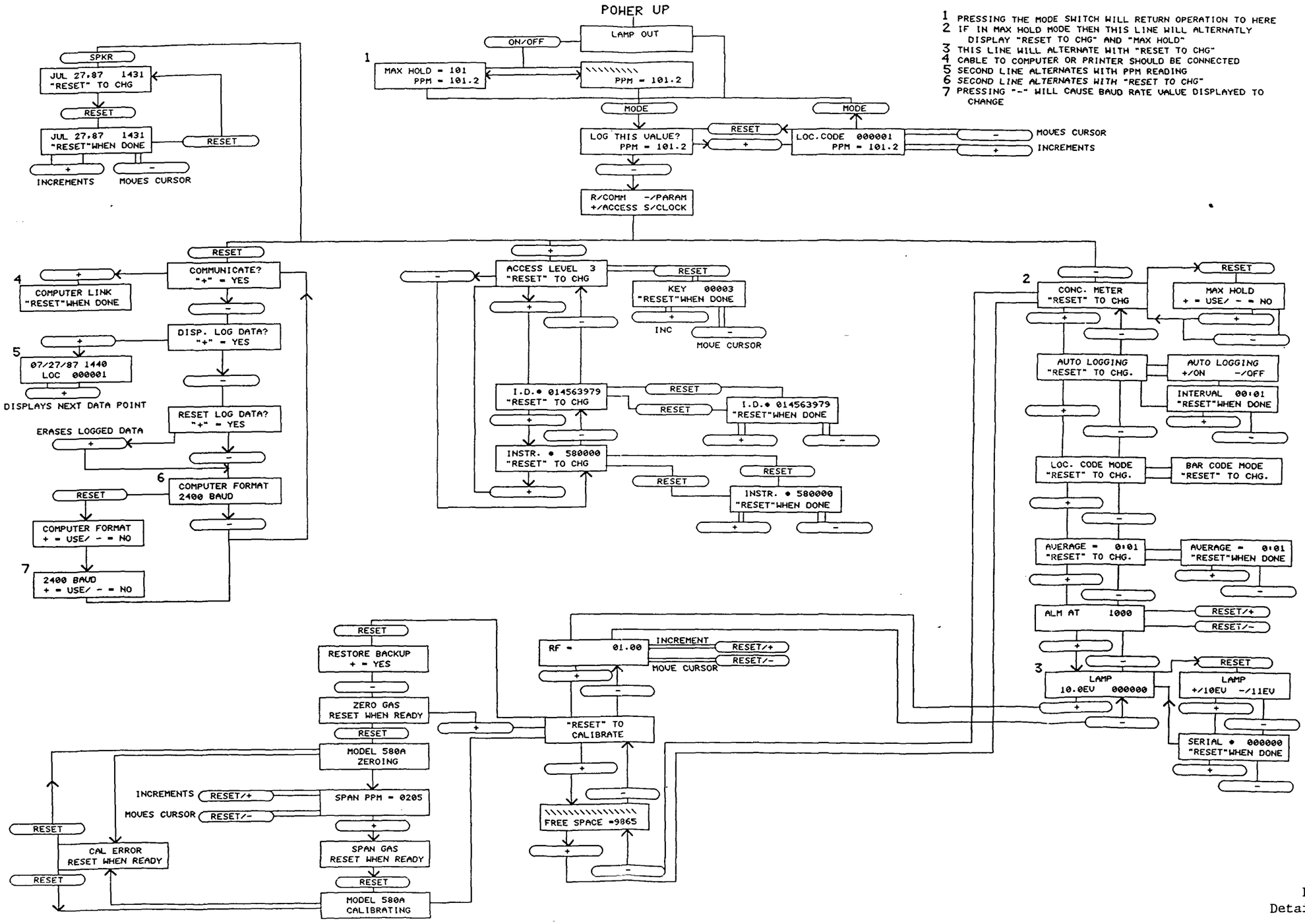

Figure 8.2
Detailed Flow Chart

APPENDIX A

COMMUNICATION

A.1 INTRODUCTION

The 580B is capable of communicating over an RS-232 link with any peripheral device which adheres to the communication protocol outlined in this document. The 580B will communicate with a peripheral device in one of two modes. While in the PRINTER mode the 580B responds to commands from its keypad and can be commanded to send characters out its RS-232 port to a peripheral device. In the COMPUTER mode the 580B responds to commands from a peripheral computer and can be commanded to send and receive data and to perform other tasks. Regardless of the mode used, the 580B sends and expects to receive data in the following format:

No Parity
1 Start Bit
8 Data Bits
1 Stop Bit
Baud Rate = 150, 300, 600, 1200, 2400, 4800 or 9600

The Baud Rate may be selected from the 580B keypad (see Section 2.7)

A.2 PRINTER MODE INTERFACE

In the PRINTER mode the 580B can be instructed to send its log data out the RS-232 port to a peripheral device such as a printer.

The 580B can be manually instructed from its keypad to output its log data. In this case the 580B sends all the log data points it has acquired thus far. The log data is saved in 580B memory and will NOT be automatically erased upon output. While in the PRINTER mode, the 580B log data file must be erased (reset) from the keypad. An example of a log data output is shown on page A-17. Notice that the 580B also sends header information which includes the following parameters: instrument number, user ID, and mode of operation. The date at the top of the header corresponds to the time when the first log data point was taken with the parameters set as shown in the header. If any of the parameters are changed and then new log data points are acquired, the 580B will send an updated header before it sends the new data points. It is also important to note that every log data point is time stamped to show when it was stored.

HARDWARE INTERFACE, PRINTER MODE

```
580B                PERIPHERAL

TxD  (B)_____________)RxD
CTS  (E)(_____________DTR (or "printer ready")
GND  (A)_____________GND
```

The connections shown above are required before the 580B can successfully send its log data to the peripheral. An example of a cable used for PRINTER MODE communication is shown below:

SAMPLE CABLE, 580B TO HP THINKJET PRINTER

```
580B                PRINTER

TxD (B)_____________)RxD (3)
CTS (E)(_____________DTR (20)
GND (A)_____________GND (1)
GND (F)_____________GND (7)
```

Thinkjet connector = TRW/CINCH DB-25P plug connector

Please remember that the 580B must be placed into the PRINTER mode prior to output of log data to a printer. This is done from the 580B keypad.

HARDWARE HANDSHAKING, PRINTER MODE

The 580B will send log data out the port to a peripheral device as long as its CTS line is asserted (+V). If the peripheral has temporarily fallen behind, and consequently clears its DTR line (-V), the 580B will stop transmitting data. It will resume transmitting as soon as the peripheral reasserts (+V) its DTR line.

A.3 COMPUTER MODE INTERFACE

In the COMPUTER mode the 580B will respond to commands sent by a peripheral computer. The 580B will respond to 3 types of commands; DO, GET, and SET commands.

An example of a DO command is "DO RESET LOG (ret)" in which the 580B is instructed to reset its log which, in effect, clears all previously stored log data points.

A GET command such as "GET ALARM (ret)" allows the peripheral to change a specified parameter in the 580B to a value provided by the peripheral.

A combination of DO, SET, and GET commands allow the operator at the peripheral to perform a variety of functions needed to prepare a 580B for acquiring data.

The 580B can also be operated under "computer control". For example, the 580B can be commanded to acquire readings at specified intervals and then store the readings in a log data file.

The 580B can subsequently be commanded to send its log data to a printer, a file or the screen of the peripheral computer. This can all be accomplished through commands issued by the peripheral computer. So, effectively the 580B is under "computer control".

HARDWARE INTERFACE, COMPUTER MODE

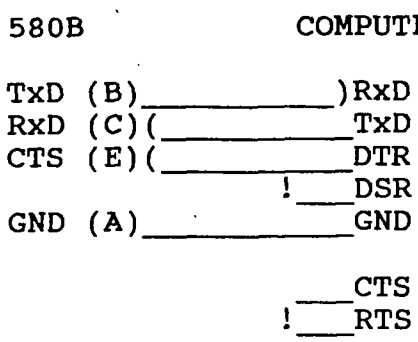

The connections shown above are required before the peripheral computer can successfully communicate with the 580B. In addition, the 580B must be placed into COMPUTER mode. This is done from the 580B keypad.

An example of a cable used for COMPUTER MODE communication is shown below:

SAMPLE CABLE, 580B TO IBM PC

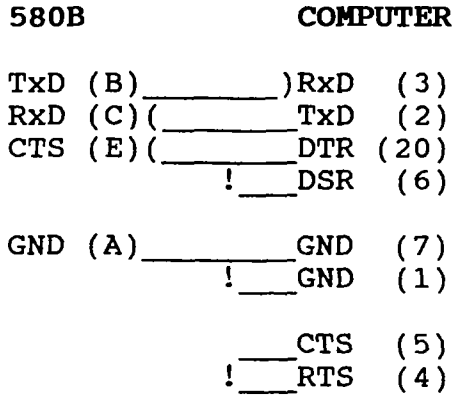

If the peripheral's DTR line is asserted (+V), the 580B will look for and then respond to peripheral commands. As long as DTR remains high, the 580B will NOT perform functions such as counting, updating the display, storing log data, etc. If DTR is asserted, the 580B will display the following message:

"COMPUTER LINK"
"WAITING FOR COMM"

The 580B must be allowed 100ms between the time the peripheral asserts DTR and the time it sends the 580B its first message. If the 580B is busy communicating the display will read:

When DTR is low (-V), the 580B will return to its normal mode of operation where it counts, updates the display, etc. and will NOT respond to peripheral commands.

XON/XOFF HANDSHAKING, COMPUTER MODE

If the 580B is transmitting log data and detects that an XOFF has been received, it will stop transmitting. The 580B will not resume transmission until the peripheral device sends XON. The 580B will respond to XON and XOFF characters only if it is NOT communicating with the computer (i.e., if 580B CTS is NOT asserted).

It is important to note that if the 580B receives an XOFF it will stop transmitting and will simply wait for the peripheral to send XON, it will not acquire data, update the display or perform other functions. The 580B is essentially "locked up" until it receives XON. For this reason, it would be good programming practice to send out an XON to the 580B prior to 580B/peripheral communication and afterwards also. Consequently, if an XOFF character is sent to the 580B inadvertently, the 580B will not be locked up indefinitely.

PERIPHERAL/580B COMMAND MESSAGES

A command message is a string of upper-case ASCII characters terminated by an ASCII carriage return. The carriage return may immediately follow the command or a space may separate the command and the carriage return as shown in the example below. The command messages which the 580B will accept from the peripheral are listed in TABLE A.1. The 580B will accept the messages as shown in TABLE 1 or the command portion of the message can be abbreviated as follows:

"S R F 01.00 (ret)" instead of
"SET RESPONSE FACTOR 01.00 (ret)"

Please note that the abbreviation must contain the first letter of each and every word of the command. There are some additional guidelines for abbreviating the SET OPERATING MODE commands.

If the abbreviated version of a command is sent, an ASCII blank must separate each letter of the command and must separate the command from the data. Note that the command message will contain data only if a SET command is being sent.

If the spelled-out version of a command is sent, an ASCII blank must separate each word of the command and must separate the command from the data.

Every SET command message contains a data value. The data sent as part of a SET command must conform to the formats described in TABLE A.1. It is important to note that the 580B does NOT perform error-checking on data sent as part of a SET command.

It is up to the user to insure that the data value is "reasonable" and formatted as shown in TABLE A.1.

The following are examples of valid command messages:

"SET ACCESS LEVEL 3 (ret)"
or "S A L 3 (ret)"

"SET REAL TIME 02/15/86 1723 (ret)"
or "S R T 02/15/86 1723 (ret)"

580B/PERIPHERAL RESPONSE MESSAGES

A response message is a string of upper-case ASCII characters terminated by an ASCII carriage return. The response messages which the 580B will send to the peripheral are listed in TABLE A.1. The messages which the 580B sends in response to a GET command contain data formatted as shown. The notes which follow TABLE A.1 describe the GET command response messages in more detail.

SOFTWARE HANDSHAKING, COMPUTER MODE

Every command message must be preceded by the "WAKE UP/PROCEED" sequence. This sequence begins when the peripheral sends a WAKE UP ("?") character to the 580B. The 580B must respond with a PROCEED ("!") character before the computer can send a command message. In the discussion to follow, the WAKE UP/PROCEED sequence will be referred to as (WAKE UP/PROCEED).

The peripheral sends command messages to the 580B an entire line at a time. When the 580B receives the command line it will echo the line back to the peripheral. The peripheral will examine the echo to determine if the 580B received the command correctly. If the echo was correct, the peripheral will signal the 580B with the PROCEED character. The 580B will then perform the task specified by the command message. In the discussion ahead, the command message and echo sequence will be referred to as (COMMAND/ECHO/PROCEED).

The software handshaking sequences for each of the 3 types of commands are given below:

DO COMMANDS

The handshake sequence for a DO command is as follows:

1. (WAKE UP/PROCEED)
2. (COMMANDS/ECHO/PROCEED)
3. 580B performs task
4. 580B sends PROCEED or ERR

If the 580B was able to successfully complete the task it will send a PROCEED character in step 4, otherwise it will send the error message ("ERR").

GET COMMANDS

The handshake sequence below applies to all of the GET commands with the exception of GET LOG DATA and GET CONTINUED LOG:

1. (WAKE UP/PROCEED)
2. (COMMAND/ECHO/PROCEED)
3. 580B sends data message
4. Peripheral echoes data message
5. 580B sends PROCEED or ERR

The message sent by the 580B in response to a GET command are shown in TABLE 1. When the peripheral receives the message containing the data it echoes the entire message back to the 580B. If the echo is correct the 580B will send the PROCEED character so that the peripheral knows it received the data correctly. If the echo is not correct, the 580B will send "ERR".

The GET LOG DATA and GET CONTINUED LOG commands differ from the other GET commands in that the 580B sends an indefinite number of data values. The handshake sequence for these commands is as follows:

1. (WAKE UP/PROCEED)
2. (COMMAND/ECHO/PROCEED)
3. 580B sends a log data point message
4. If message = "EOT" (end of transmission) then DONE, otherwise go on to step 5.
5. Peripheral echoes entire message
6. 580B sends PROCEED or ERR
7. Peripheral sends PROCEED
8. Go to step 3

In step 4, the 580B sends "EOT" if it has sent all the log data points available. If some time later the peripheral sends "GET CONTINUED LOG (ret)" the 580B will send any additional data points it may have acquired since the GET LOG DATA command. In step 6, the 580B will send PROCEED if the peripheral echoed the message correctly in step 5. The 580B will also increment its data buffer pointer. If however, the peripheral did NOT correctly echo the message in step 5, the 580B will send "ERR" in step 6 and will NOT increment its data buffer pointer. This means that the next time through step 3, the 580B will send the same data point again. In either case, the peripheral must send a PROCEED in step 7.

SET COMMANDS

The handshaking sequence for a SET command is as follows:

1. (WAKE UP/PROCEED)
2. (COMMAND/ECHO/PROCEED)
3. 580B sets parameter to value
4. 580B sends PROCEED or ERR

In step 3 the 580B sets the parameter specified by the command to the value provided by the peripheral in the command message. The data value sent in the SET command message must be formatted as shown in TABLE 1. If the 580B is able to successfully set the parameter it will send the PROCEED character, otherwise it will send "ERR".

NOTE: The flowcharts shown in Figures A.1 - A.4 are included to further explain the software handshaking sequences required for successful communication between the peripheral and the 580B.

TABLE A.1
MESSAGE FORMATS

PERIPHERAL COMMAND	580B RESPONSE
DO COMMANDS	
DO END COMMUNICATIONS (ret)	! (ret)
DO RESET LOG (ret)	! (ret)
GET COMMANDS	
GET ACCESS LEVEL (ret)	ACCESS LEVEL I (ret)
GET ALARM SETTING (ret)	ALARM SETTING IIII (ret)
GET CONTINUED LOG (ret)	(see notes which follow)
GET INSTRUMENT NUMBER (ret)	INSTRUMENT # IIIIII (ret)
GET LOCATION CODE (ret)	LOCATION CODE IIIIII (ret)
GET LOG DATA (ret)	(see notes which follow)
GET OPERATING MODE (ret)	OPERATING MODE: ASCII (50) (ret)
GET MAX READING (ret)	LAST MAX VALUE IIII ASCII (8) (ret)
GET RATEMETER READING (ret)	LAST CONC VALUE IIII ASCII (8) (ret)
GET REAL TIME (ret)	REAL TIME CLOCK II/II/II IIII (ret)
GET USER ID (ret)	USER I.D. # IIIIIIIII (ret)
GET RESPONSE FACTOR (ret)	RESPONSE FACTOR II.II (ret)
GET SPAN CONCENTRATION (ret)	SPAN CONCENTRATION IIII (ret)
GET VERSION NUMBER (ret)	580B VERSION 1.0 (ret)
GET LOGGING INTERVAL (ret)	I:II (ret)
SET COMMANDS	
SET ACCESS LEVEL I (ret)	! (ret)
SET ALARM SETTING IIII (ret)	! (ret)
SET INSTRUMENT NUMBER IIIIII (ret)	! (ret)
SET LOCATION CODE IIIIII (ret)	! (ret)
SET OPERATING MODE ASCII (50) (ret)	! (ret)
SET REAL TIME II/II/II/ IIII (ret)	! (ret)
SET USER ID IIIIIIIII (ret)	! (ret)
SET RESPONSE FACTOR II.II (ret)	! (ret)
SET SPAN CONCENTRATION IIII (ret)	! (ret)
SET LOGGING INTERVAL I:II (ret)	! (ret)

NOTES ON TABLE A.1

The peripheral will receive data back from the 580B in response to a GET command only. The 580B response to a DO or SET command is the PROCEED ("!") character. This is because the 580B does not actually return data but signals the peripheral with the PROCEED character if it was able to perform the task requested. If for some reason the 580B is unable to perform the task it will send an error message "ERR" rather than PROCEED.

The data values sent by the peripheral as part of a SET command message and the data received by the peripheral in response to a GET command must be formatted as shown in TABLE A.1.

The data format codes used in TABLE 1 are described below:

I	a single digit
III...II	an integer "string", the number of I's shown indicates the length of the string. Note: the "string" MUST be the length specified, use leading zeros if necessary.
ASCII (n)	an ASCII string with a maximum of n characters

Several of the command messages listed in TABLE 1 require additional explanation. These comments are listed according to the command name:

DO RESET LOG

This command instructs the 580B to clear its log data file. All log data values acquired previously will be erased.

GET CONTINUED LOG

This command instructs the 580B to send any log data points acquired since the last GET LOG DATA command. The format of the 580B response will be the same as the response to the GET LOG DATA command.

GET LOG DATA

This command instructs the 580B to send all of its log data points. The log data file is saved in 580B memory and is NOT automatically erased upon output. The log data file may be erased (reset) with the DO RESET LOG command.

GET OPERATING MODE

The 580B responds to a GET OPERATING MODE command by sending a string "MODE: ", followed by an ASCII string which describes the current 580B mode of operation. The 580B responses to the

GET OPERATING MODE command are listed below:

OPERATING MODE: CONCENTRATION METER NORMAL
OPERATING MODE: CONCENTRATION METER MAX HOLD

GET MAX READING

The 580B responds to a GET MAX READING command by sending the max value as shown in TABLE A.1. After the 580B sends the max reading it resets the max value to 0.

GET REAL TIME

The 580B will return its real time as an ASCII string in the following format: "05/29/86 1422"

SET ACCESS LEVEL

The access level must be an integer in the range 0 to 3

SET INSTRUMENT NUMBER

The instrument number is a string of 6 integers. If the instrument number = 2 then the number must be represented as 000002 (i.e. leading zeros must fill in excess spaces). An example of a valid SET INSTRUMENT NUMBER command is "SET INSTRUMENT NUMBER 000002 (ret)".

SET LOCATION CODE

The location code is a string of 6 integers. If the location code = 234 then the correct SET LOCATION CODE command is "SET LOCATION CODE 000234 (ret)". (Leading zeros must fill excess spaces.)

SET OPERATING MODE

As shown in TABLE A.1, the command SET OPERATING MODE must be followed by an ASCII string which describes the mode. The list of valid SET OPERATING MODE commands along with valid abbreviations are listed below:

SET OPERATING MODE CONCENTRATION (ret)
S O M C (ret)

SET OPERATING MODE MAX HOLD (ret)
S O M M H (ret)

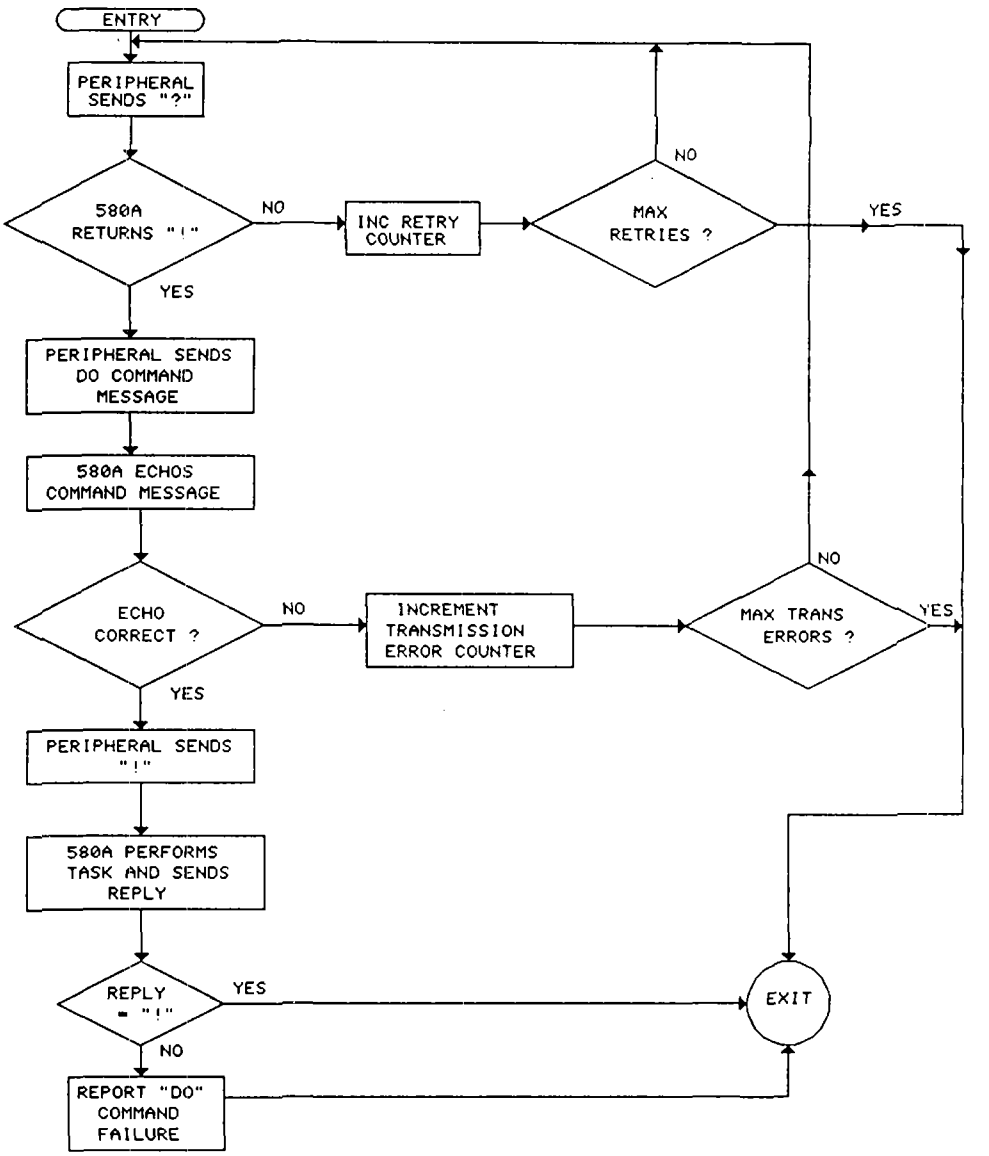

Figure A.1
Software Handshake
Do Commands

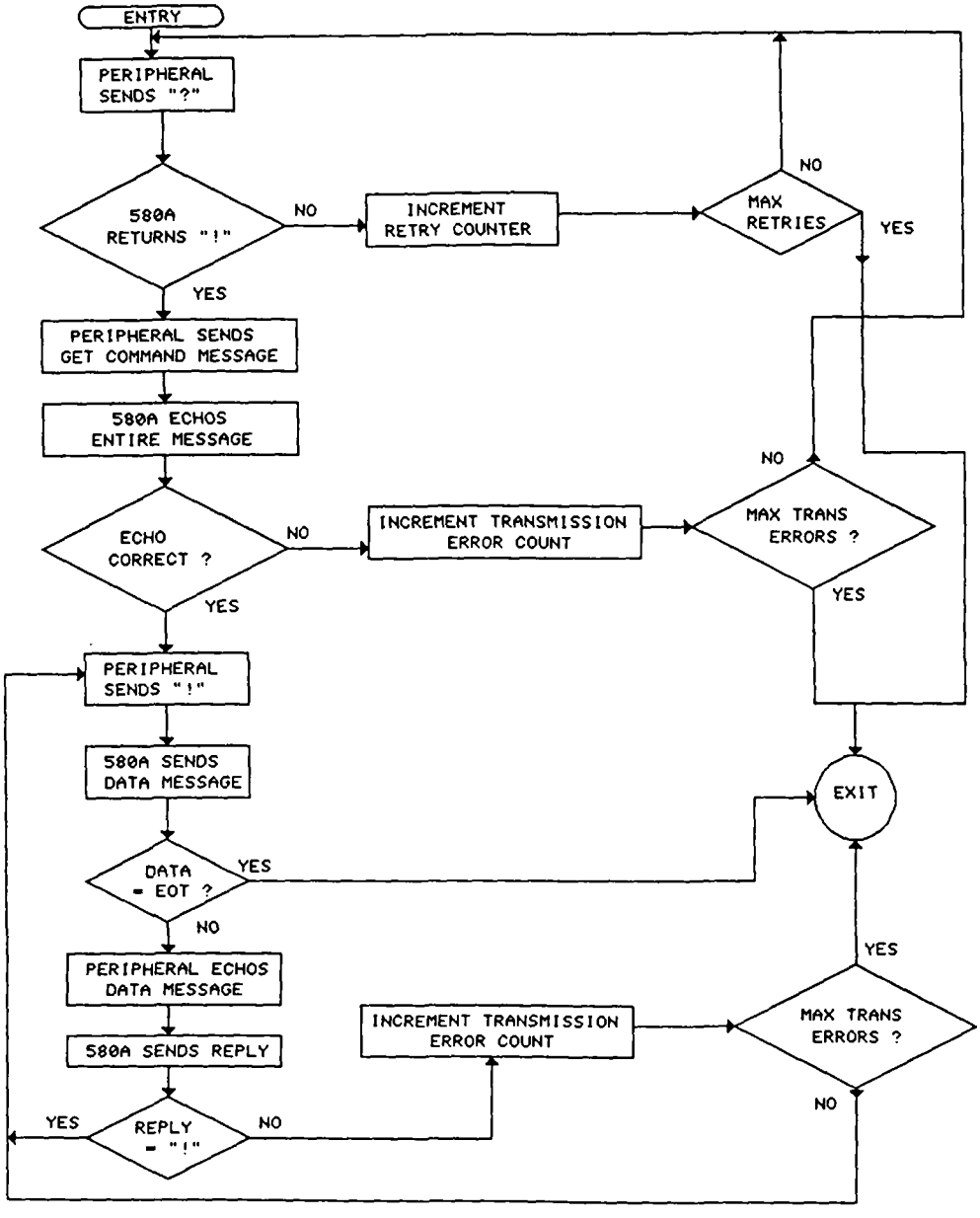

Figure A.2
Software Handshake
Get Log Data, Get Continue Log Command

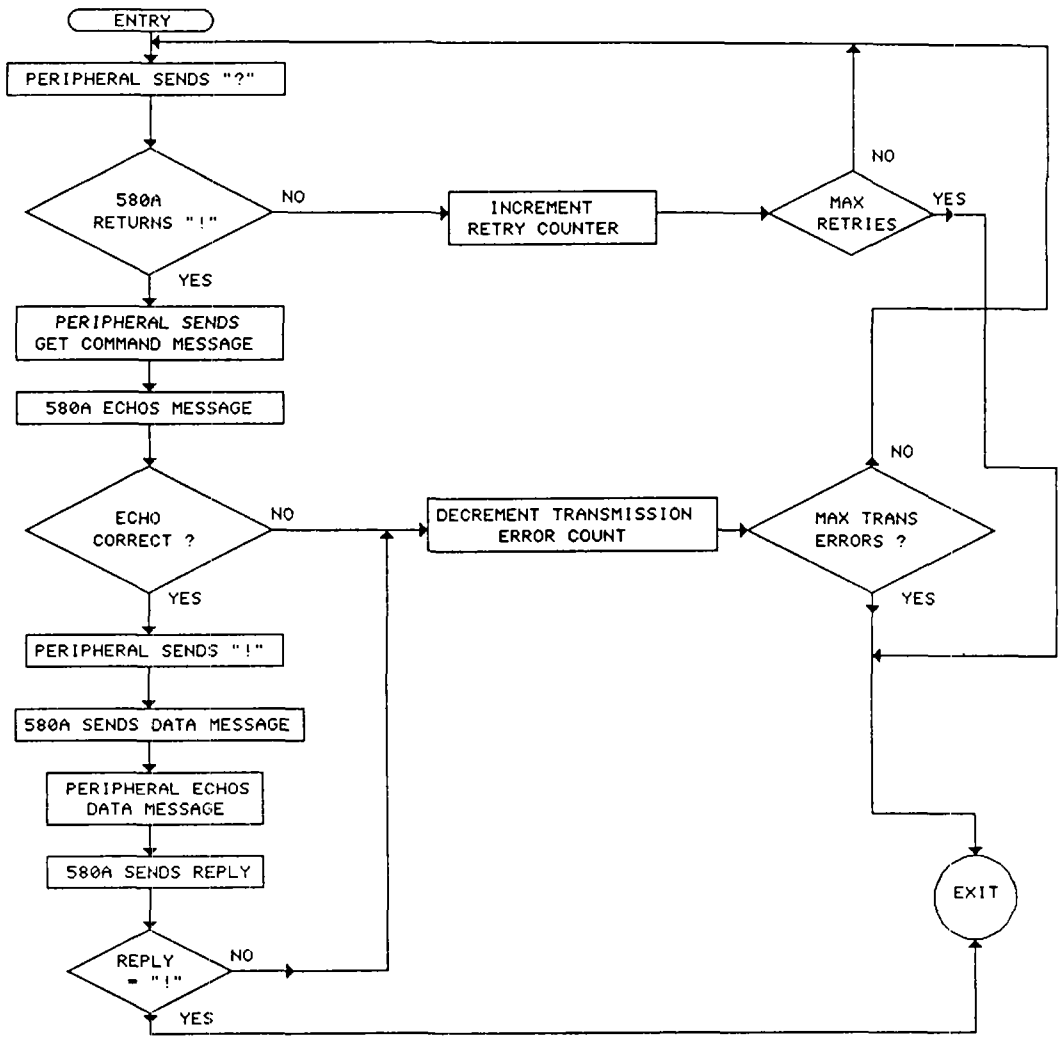

Figure A.3
Software Handshake
Get Command
(Except Get Log Data, Get Continue Log)

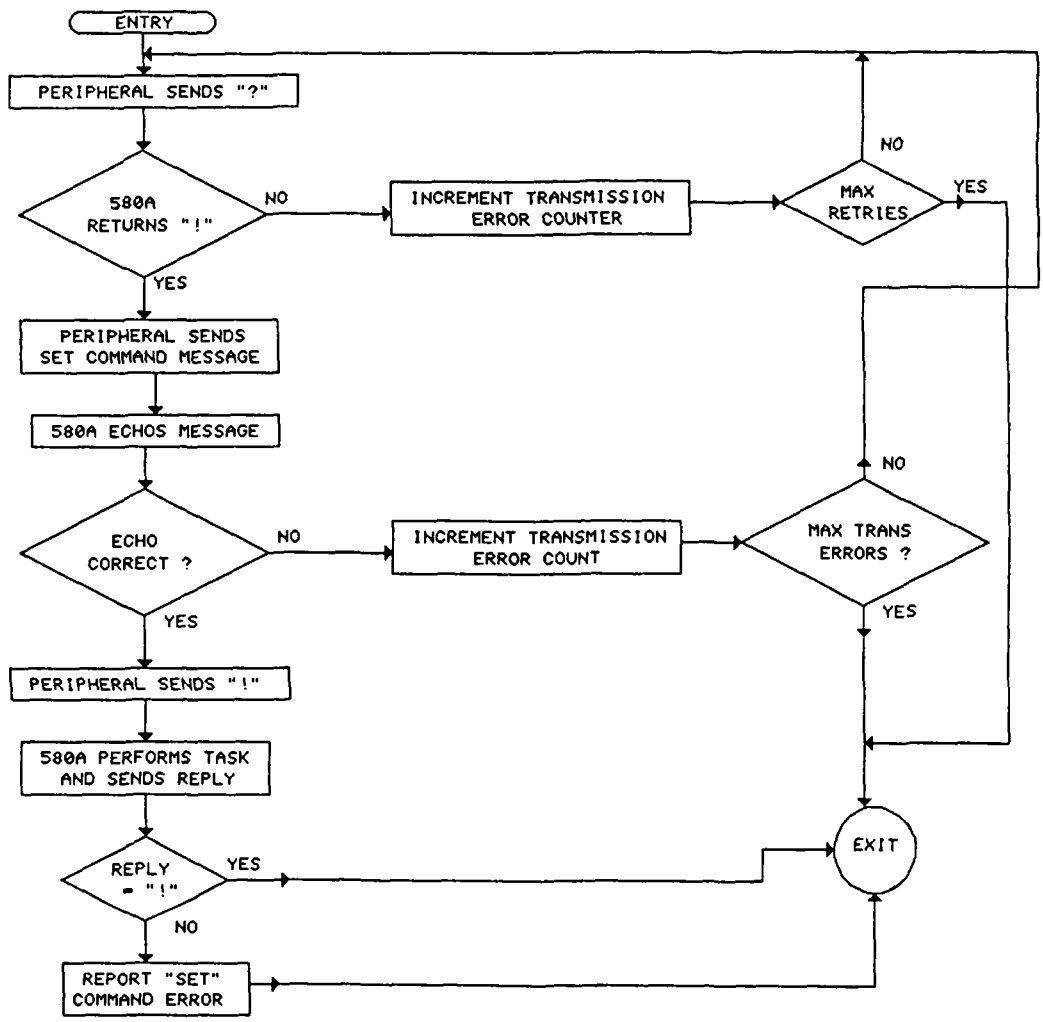

Figure A.4
Software Handshake
Set Commands

SET REAL TIME

The format for setting the real time is as follows:

```
II/II/II IIII
 .  .  .  .
 .  .  .  . .........minutes (max=59)
 .  .  .  ...........hours (max=23)
 .  .  ..............year
 .  ................day
 ...................month
```

For example: SET REAL TIME 02/15/86 1723 (ret)
This instructs the 580B to set its real time clock to February 15, 1986 5:23 p.m.

SET USER ID

The user ID is a string of 9 integers. To set user ID = 66, use the following command "SET USER ID 000000066 (ret)" (leading zeros must fill in excess spaces).

```
 580B   VER. 1.1
 07/11/88 1508
 INSTRUMENT #     580000
 USER I.D. #      014569373
 OPERATING MODE: CONC. METER, MAX HOLD

                   LOC.          PPM     STATUS
07/11/88 1508    000000        0012
07/11/88 1508    000001        0047
07/11/88 1508    000002        0000
07/11/88 1508    000003        0050
07/11/88 1508    000004        0021
07/11/88 1508    000005        0010
07/11/88 1509    000006        0061
07/11/88 1509    000007        0046
07/11/88 1509    000008        0004
07/11/88 1509    000009        0104    ALARM
07/11/88 1509    000010        0076

 07/11/88 1509
 INSTRUMENT #     580000
 USER I.D. #      014569373
 OPERATING MODE: CONC. METER

                   LOC.          PPM     STATUS
07/11/88 1509    000011        0000
07/11/88 1509    000012        0064
07/11/88 1509    000013        0052
07/11/88 1509    000014        0001
07/11/88 1509    000015        0007
07/11/88 1509    000016        0101    ALARM
```

Figure A.5
Data Log Output

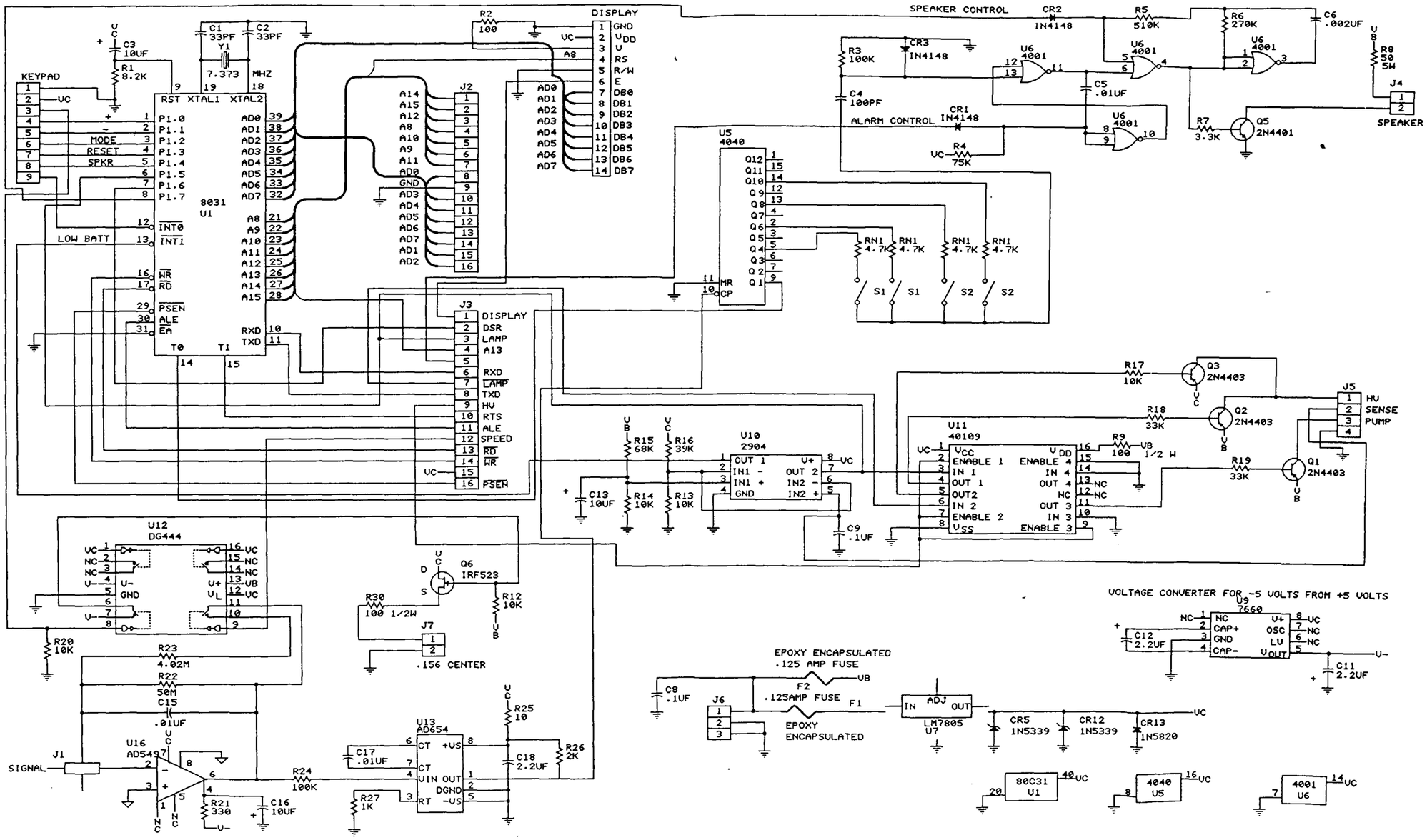

Figure B-1
Processor Board Schematic

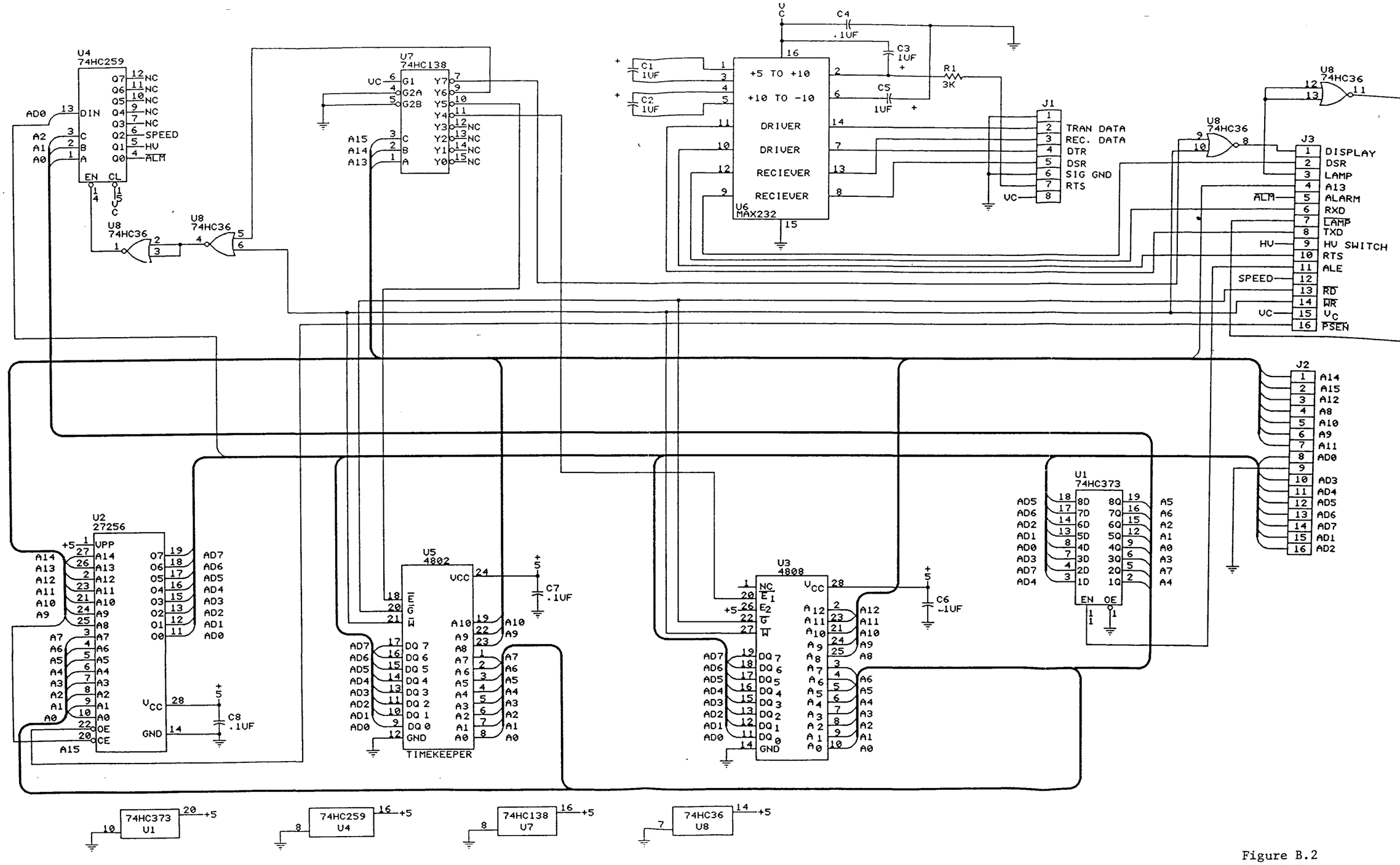

Figure B.2
Memory Board Schematic

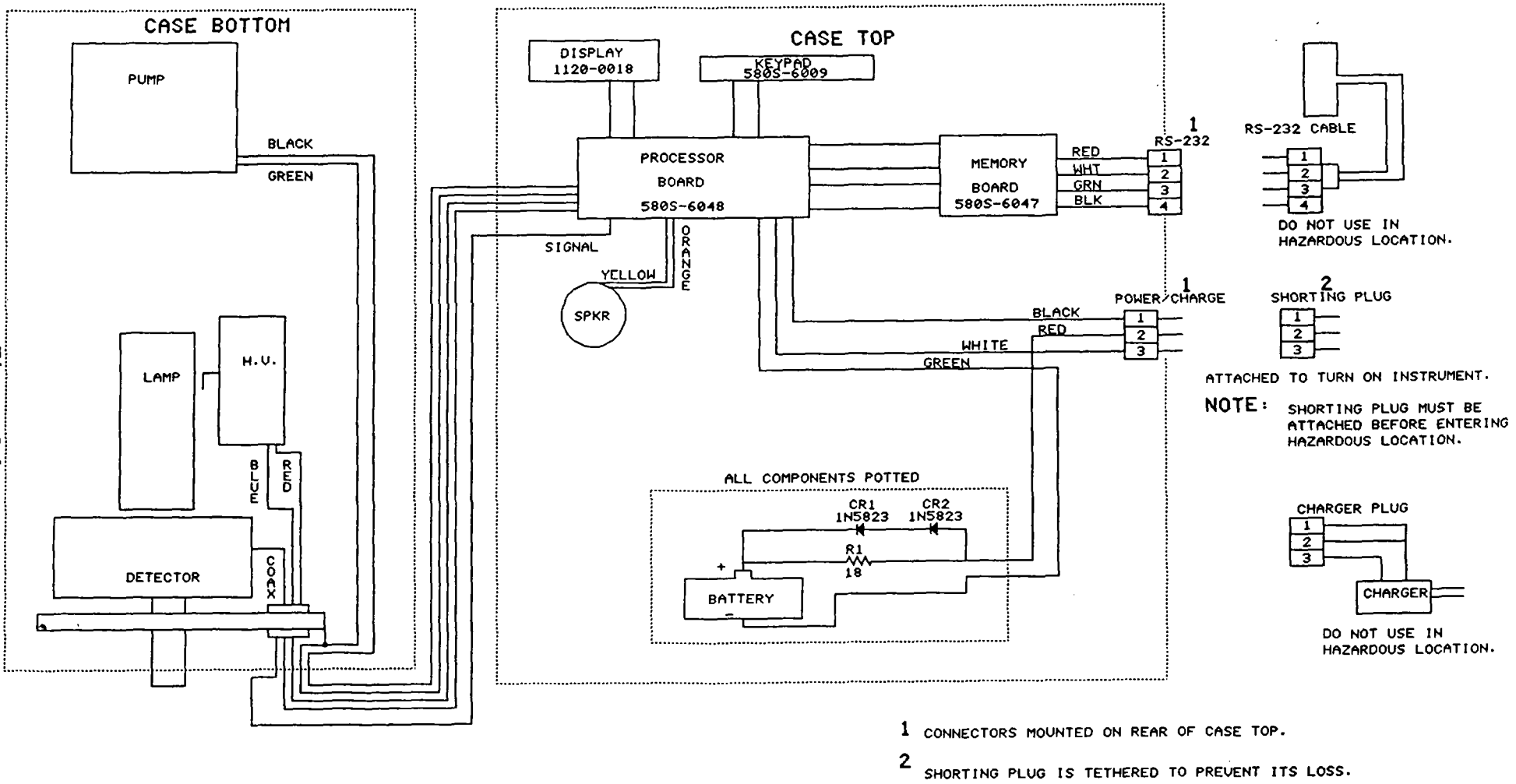

Figure C.1
Block Diagram
C-1

1 CONNECTORS MOUNTED ON REAR OF CASE TOP.

2 SHORTING PLUG IS TETHERED TO PREVENT ITS LOSS.

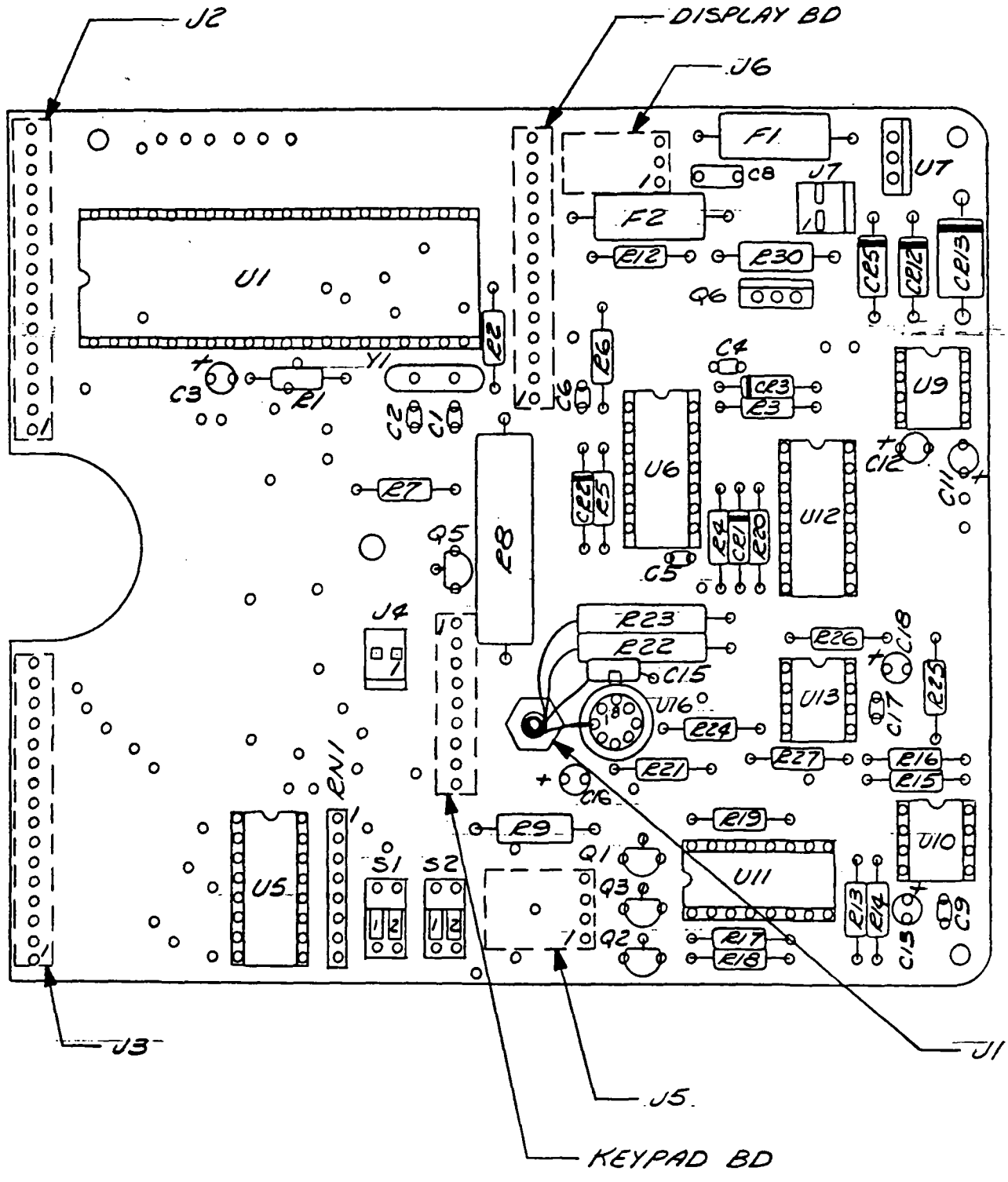

Figure D.1
Processor Board Loading Drawing

BILL OF MATERIALS THERMO ENVIRONMENTAL INSTRUMENTS
580S-6048

QUAN.	PART NUMBER	DESG.	DESCRIPTION
1	11695	U1	80C31 8 BIT MICROCONTROLLER
1	11696	U5	4040 BINARY COUNTER
1	11697	U6	4001 NOR GATE
1	11126	U7	LM7805 5 VOLT REGULATOR
1	11694	U9	7660 VOLTAGE CONVERTER
1	11716	U10	LM2904 DUAL OP AMP
1	11717	U11	CD40109B QUAD LEVEL SHIFTER
1	11723	U12	DG-444 ANALOG SWITCH
1	9296	U13	AD654 V/F
1	11097	U16	AD515 ELECTROMETER
2	10391	C1,2	CAPACITOR, 33PF
3	10376	C3,13, 16	CAPACITOR, 10UF
1	5609	C4	MONOLITHIC CAPACITOR, 100PF
2	5605	C5,15	MONOLITHIC CAPACITOR, .01UF
1	10399	C6	MONOLITHIC CAPACITOR, .002UF
2	10372	C8,9	MONOLITHIC CAPACITOR, .1UF
3	10390	C11,12, 18	CAPACITOR, 2.2UF
1	9333	C17	MONOLITHIC CAPACITOR, .01UF
1	10790	R1	RESISTOR, 8.2K
1	10847	R2	RESISTOR, 100, 1/4W
2	10862	R3,24	RESISTOR, 100K
1	10928	R4	RESISTOR, 75K
1	10929	R5	RESISTOR, 510K

BILL OF MATERIALS THERMO ENVIRONMENTAL INSTRUMENTS
580S-6048

QUAN.	PART NUMBER	DESG.	DESCRIPTION
1	10930	R6	RESISTOR, 270K
1	5986	R7	RESISTOR, 3.3K
1	10939	R8	RESISTOR, 50, 5W
2	10704	R9,30	RESISTOR, 100, 1/2W
5	10864	R12-14 17,20	RESISTOR, 10K
1	10938	R15	RESISTOR, 68K
1	6025	R16	RESISTOR, 39K
2	2219	R18,19	RESISTOR, 33K
1	10786	R21	RESISTOR, 330
	6150	R22	RESISTOR, 50M
1	6116	R23	RESISTOR, 4.02M
1	10846	R25	RESISTOR, 10
1	10936	R26	RESISTOR, 2K
1	10863	R27	RESISTOR, 1K
1	11641	RN1	NETWORK, 4.7K X 6
3	11807	CR1,2, 3	IN4148
2	11829	CR5,12	IN5339
1	11850	CR13	IN5820
1	10557	Y1	7.373 MHZ
1	10446	J1	RADIAL SMC
1	11398	J4	2 PIN AMP, .100 CENTER
1	11418	J5	4 PIN MTE
1	11419	J6	3 PIN MTE

BILL OF MATERIALS THERMO ENVIRONMENTAL INSTRUMENTS
580S-6048

QUAN.	PART NUMBER	DESG.	DESCRIPTION
1	11405	J7	2 PIN AMP .156 CENTER
2	580S-6040	F1,2	.125 AMP FUSE ASSEMBLY
2	12138	S1,2	SPST SWITCH, DUAL
3	11762	Q1-3	2N4403
1	11759	Q5	2N4401
1	11773	Q6	IRF523
1	580S-2057		PCB BLANK

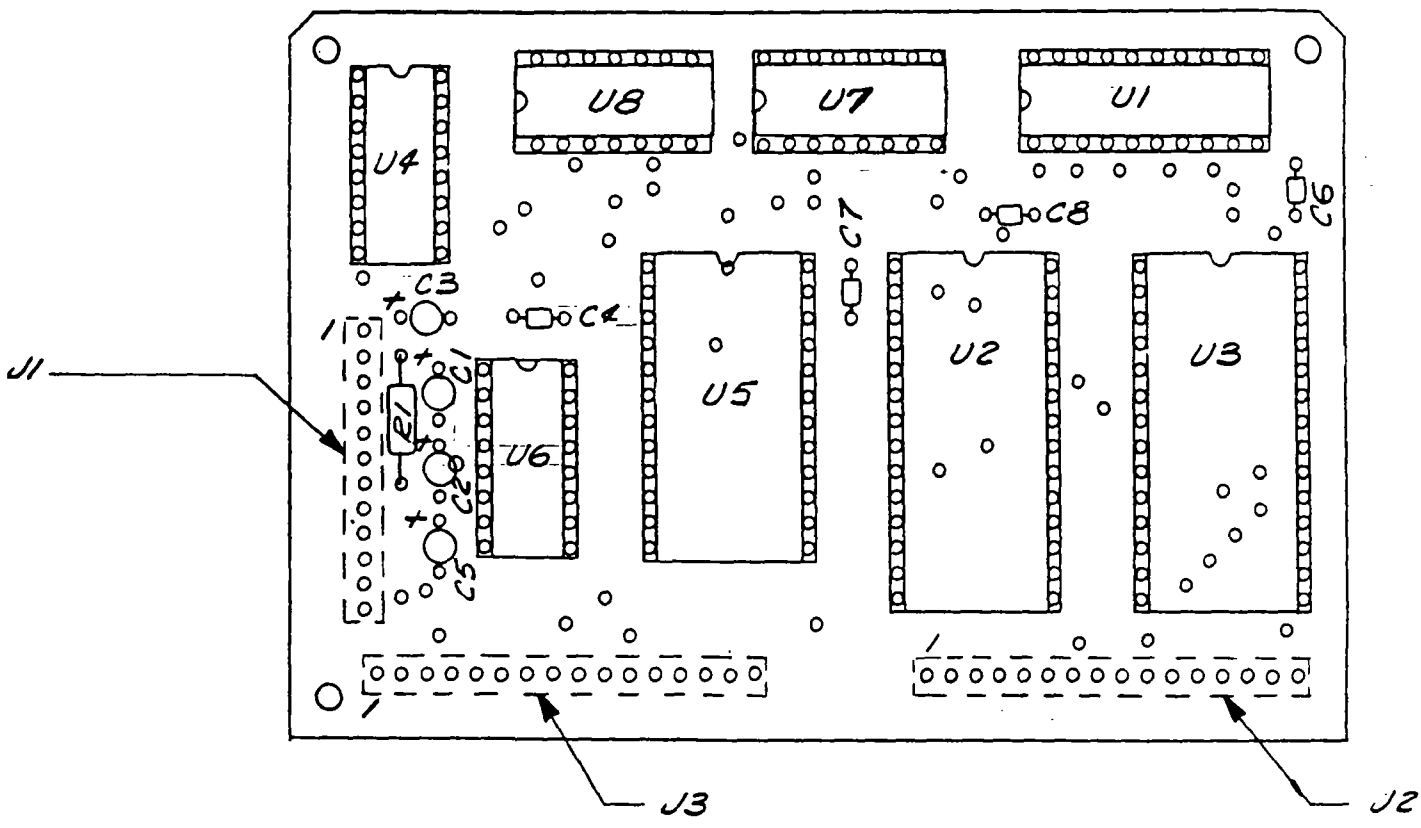

Figure D.2
Memory Board Loading Drawing

BILL OF MATERIALS THERMO ENVIRONMENTAL INSTRUMENTS
580S-6047

QUAN.	PART NUMBER	DESG.	DESCRIPTION
1	11689	U1	74HC373
1	11728	U2	27C256 8K EPROM
1	11687	U3	48Z08 8K X 8 BATTERY BACKED RAM
1	11688	U4	74HC259 OUTPUT PORT
1	11691	U5	48TO2 2K X 8 TIMEKEEPER RAM
1	11685	U6	MAX232 RS-232 CHIP
1	11151	U7	74HC138
1	11699	U8	74HC36
4	10378	C1-3, 5	1UF CAPACITOR
4	10372	C4,6, 7,8	MONOLITHIC CAPACITOR, .1UF
1	10789	R1	RESISTOR, 3K
1	11374	X7	28 PIN SOCKET
1	580S-2056 (16839)		PCB BLANK

ITEM	PART NO.	DESCRIPTION	QTY
		BILL OF MAT'L	
17		M3 X .5 METRIC INSERT	1
16	5822	6-32 X 5/8 LG BIND HD. SC	2
15	12088	8-32 X 1" LG FLATHD SC	3
14	5856	6-32 X 1½" LG PAN HD SC	2
13	7534	NYLON WASHER	1
12	5815	4-40 X 5/16" LG. BND HD. SC.	1
11	5868	6-32 X .44 LG FLT HD MCH SC.	2
10	5808-6027	P.C. BD SET UL	1
9	0570-0001	KEYPAD	1
8	5808-6007	SHORTING PLUG (11432)	1
7	5808-2003	DUST COVER	1
6	5808-6029	RS-232 HARNESS ASSY.	1
5	5805-6014	POWER HARNESS (12555)	1
4	5805-0008	BATTERY HOLDER	1
3	5805-6039	BATTERY ASSY.	1
2	5804-6015	SPEAKER ASSY (13675)	1
1	5808-1002	CASE TOP	1

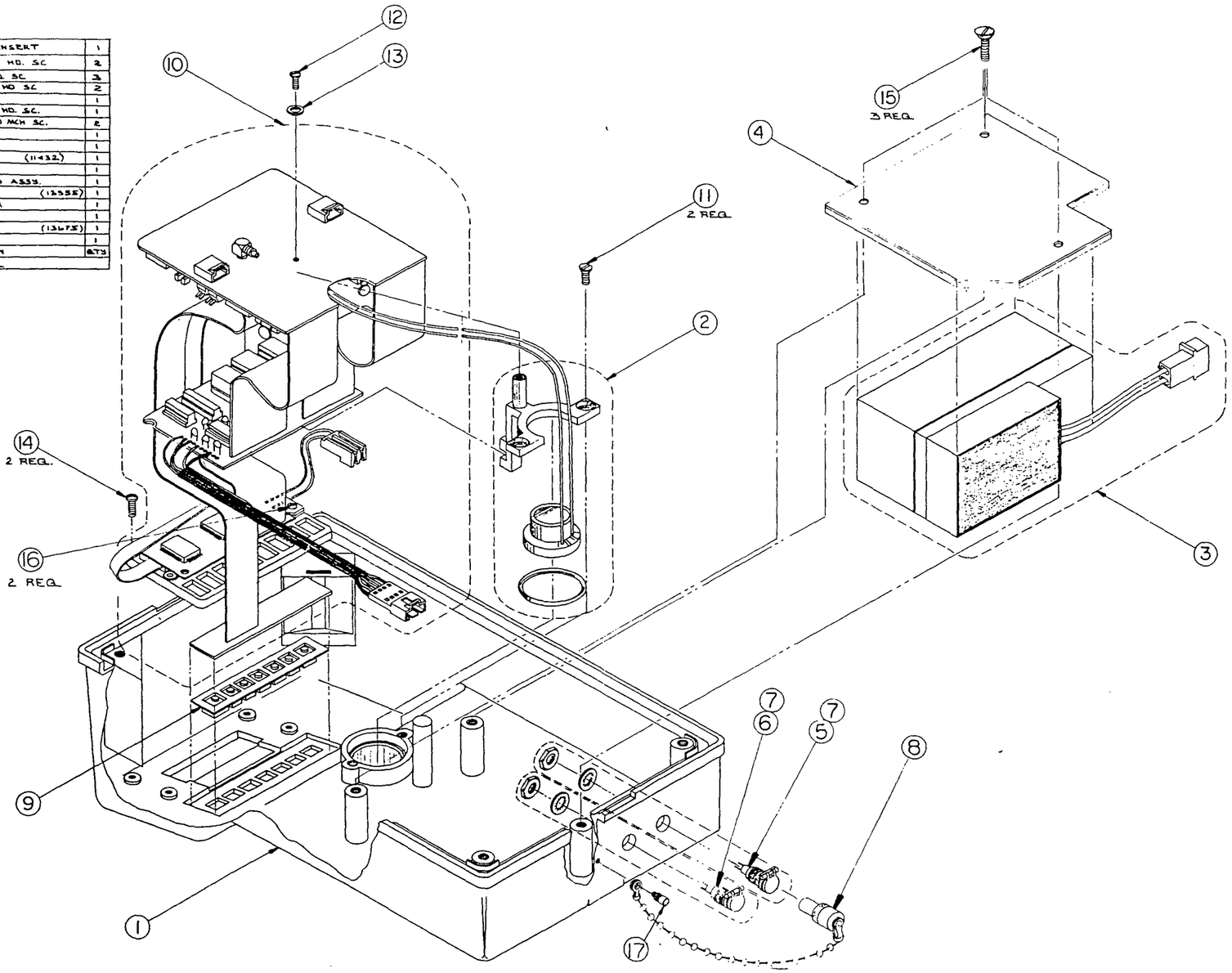

Figure E.1
Case Top Assembly

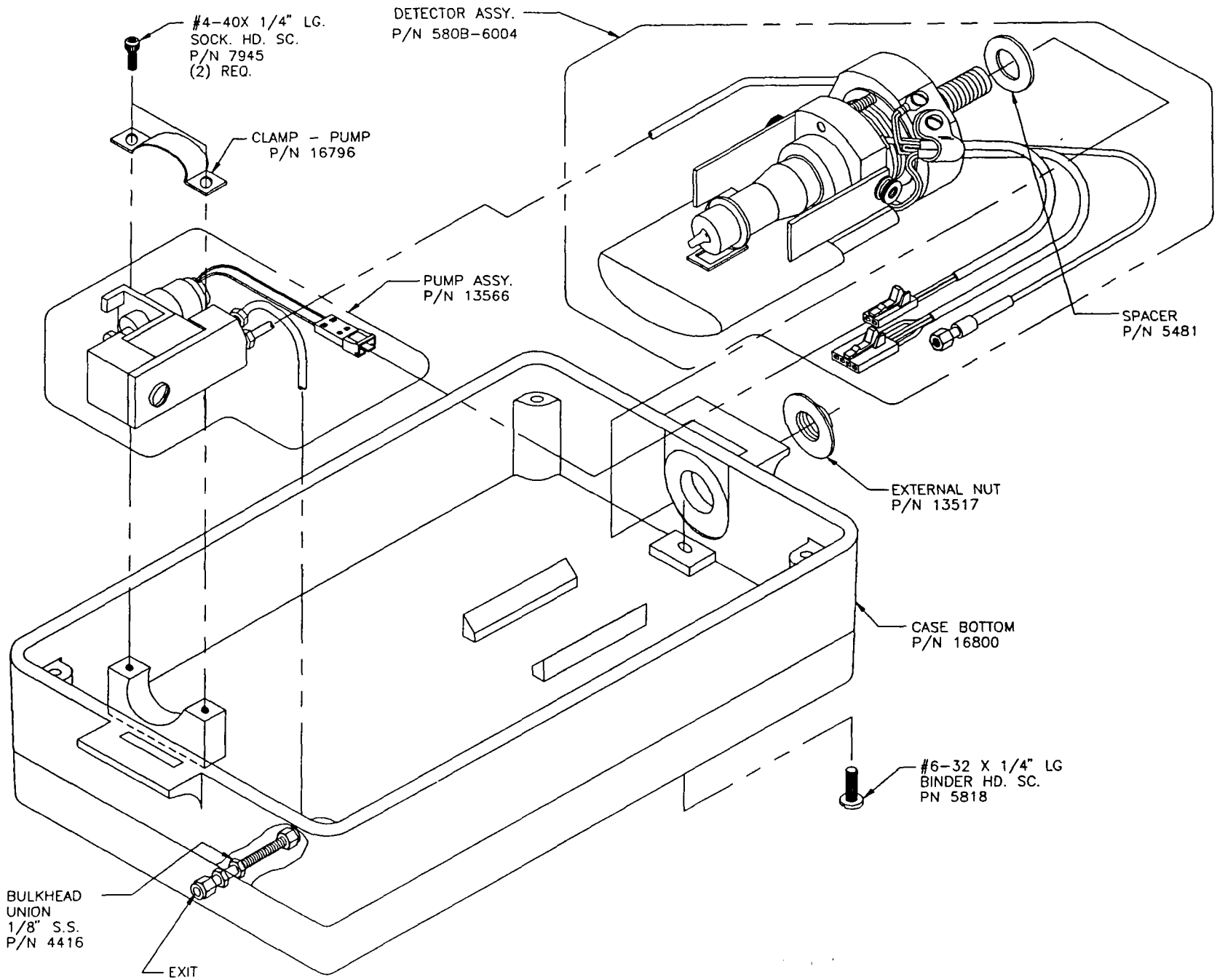

Figure E.2
Case Bottom Assembly

APPENDIX F
COMMON ORGANIC SOLVENTS AND GASES DATA SHEET

CHEMICAL MATERIALS	F.W. (G/MOLE)	DENSITY (G/ML)	BP (°C)*	I.P. (EV)**	TWA (PPM)***
Acetaldehyde	44.05	0.788	21	10.21	200
Acetamide	59.07	1.159	221	9.77	
Acetic Acid	60.05	1.049	116-117	10.37	10
Acetic Anhydride	102.1	1.10	138-117	9.88	5
Acetone	58.1	0.79	56	9.69	1000
Acetonitrile	41.1	0.79	82	12.22	40 cell
Acetophenone	120.15	1.033	202	9.27	
Acetyl Bromide	122.96	1.52	75-75	10.55	
Acetyl Chloride	78.50	1.104	52	11.02	
Acetylene	26.02	0.90		11.41	
Acrolein	56.06	0.8389	53	10.10	0.1
Acrylonitrile	53.06	0.8004	77	10.91	10
Allyl Alcohol	58.1	0.85	96-98	9.67	2
Allyl Chloride	76.5	0.94	44-46	9.9	1
Aniline	93.1	1.02	184	7.70	5
Anisole	108.13	0.9956	154	8.22	
Ammonia	17.03	gas		10.15	
Arsine	77.9	gas			0.05
Benzaldelyde	106.12	1.053	178-185	9.53	
Benzene	78.1	0.88	80	9.25	1
Benzonitrile	103.12	1.010	188	9.71	
Benzotriflouride	146.11	1.1886	102	9.68	
Benzyl Chloride	126.6	1.10	177-181	9.14	1
Biphenyl	154.21	0.992	255		
Bromine	159.81	3.1023	58.8	10.55	0.1
Bromobenzene	157.02	1.495	156	8.98	
1-Bromobutene	137.03	1.276	100-04	10.13	
2-Bromobutene	137.03	1.255	91	9.98	
1-Bromo-2-Chlorethene	143.42	1.723	106-07	10.63	
Bromochloromethane	129.39	1.991	68	10.77	
1-Bromo-2-Flourobenzene	175.01	1.593	150	8.99	
Bromoform	252.8	2.9	150-01	10.47	0.5
1-Bromo-2-methyl propane	137.03	1.260	90-92	10.09	
2-Bromo-2-methyl propane	137.03	1.189	72-74	9.89	
1-Bromopentane	151.05	1.218	130	10.10	
2-Bromopropane	123.00	1.354	71	10.18	
2-Bromopropene	123.00	1.310	59	10.08	
1-Bromopropene	120.98	1.413	58-63	9.30	
3-Bromopropene	120.98	1.398	70-71	9.70	
2-Bromothiophene	163.04	1.684	149-151	8.63	
M-Bromotoluene	171.04	1.4099	183.7	8.81	
O-Bromotoluene	171.04	1.431	58.60	8.79	
P-Bromotoluene	171.04	1.431	184	8.67	
1,3-Butadiene	54.1	gas	9.07		1000
Butane	58.12	gas	10.63		
	90.19	.842	9.14		

* BP - Boiling Point Degrees Centigrade
** IP - Ionization Potential
*** TWA - Time Weighted Average = Parts Per Million

CHEMICAL MATERIALS	F.W. (G/MOLE)	DENSITY (G/ML)	BP (^{o}C)*	I.P. (EV)**	TWA (PPM)***
2-Butanone	72.1	0.81	80	9.53	200
1-Butene	56.10	0.6255		9.58	
N-Butyl Acetate	116.2	0.88	124-26	10.01	150
S-Butyl Acetate	116.2	0.88	111-12	9.91	150
N-Butyl Alcohol	74.1	0.81	117.7	10.04	100
N-Butyl Amine	73.1	0.73	73	78	5
S-Butyl Amine	73.1	0.73	63	8.70	5
T-Butyl Amine	73.1	0.73	46	8.64	5
N-Butyl Benzene	134.21	0.8604	183	8.69	
S-Butyl Benzene	134.21	0.8604	173-04	8.68	
T-Butyl Benzene	134.21	0.8669	169	8.68	
N-Butyraldehyde	72.10	0.8016	75	9.86	
N-Butyric Acid	88.10	0.959	162	10.16	
N-Butyronitrile	69.10	0.7954	115-17	11.67	
Camphor	152.2	0.99	204	8.76	2 mg/m
Carbon Dioxide	44.01	gas		13.79	5000
Carbon Monoxide	28.01	gas		14.01	50
Carbon Tetrachloride	153.8	1.59	77	11.47	10
Chlorine	70.90	gas		11.48	1 cell
Chlorobenzene	112.6	1.10	132	9.07	75
Chloroform	119.4	1.48	60.5-61.5	11.37	50 cell
1-Chloro-2-Methylpropane	92.57	.883	68-69	10.66	
2-Chloro-2-Methylpropane	101.64	.851	51-52	10.61	
1-Chloropropane	78.54	.892	46-47	10.82	
2-Chloropropane	78.54	.859	34-36	10.78	
3-Chloropropane	76.53	.939	44-46	10.04	
2-Chlorothiophene	118.59	1.286	127-29	8.68	
M-Chlorotoluene	126.58	1.076	160-162	8.83	
O-Chlorotoluene	126.58	1.0826	157-159	8.83	
P-Chlorotoluene	126.58	1.0697	162	8.70	
M-Cresol	108.1	1.034	203	8.52	5 cell
O-Cresol	108.1	1.048	191	8.50	5 cell
P-Cresol	108.1	1.034	202	8.38	5 cell
Crotonaldehyde	70.09	0.853	104	9.73	2
Cumene	120.2	0.86	152-154	8.75	50
Cyanogen	52.04	0.9537		13.80	
Cyclohexane	84.2	0.81	80.7-81	9.98	300
Cyclohexane	100.2	0.96	160-161	10.0	50
Cyclohexanone	98.1	0.95	155	9.14	50
Cyclohexene	82.1	0.81	83	8.95	300
Cyclo-Octatetraene	104.15	0.925	142-43	7.99	
Cyclopentane	70.13	0.7460	50	10.53	
Cyclopentanone	84.11	1.4366	130-131	9.26	
Cyclopentene	68.12	0.744	44	9.01	
Cyclopropane	42.08	gas		9.91	
Diborane	27.68	gas		11.00	
Diazomethane	42.0	gas		9.0	0.2

* BP - Boiling Point Degrees Centigrade
** IP - Ionization Potential
*** TWA - Time Weighted Average = Parts Per Million

CHEMICAL MATERIALS	F.W. (G/MOLE)	DENSITY (G/ML)	BP (^{o}C)*	I.P. (EV)**	TWA (PPM)**
Dibromodiflouromethane	209.83	2.297	22-23	11.07	
1,2-Dibromoethane	187.87	2.180	131-32	9.45	
1,3-Dibromopropane	201.90	1.937	167	10.07	
Dibutylphthlate	278.3	1.04	340		5 mg/m
M-Dichlorobenzene	147.01	1.288	172-73	9.12	50
O-Dichlorobenzene	147.01	1.306	179-180	9.07	50
P-Dichlorobenzene	147.01	1.241	173	8.94	75
1,1-Dichlorethane	99.0	1.18	57	11.06	100
1,2-Dichlorethane	98.96	1.256	83	11.12	
1,2-Dichlorethylene	97.0	1.28	46-60	9.66	200
Dichloromethane	84.93	1.325	39.8-40	11.35	
1,2-Dichloropropane	112.99	1.156	95-96	10.87	
1,3-Dichloropropane	112.99	1.190	120-22	10.85	
2,3-Dichloropropane	110.97	1.204	94	9.82	
N,N-Diethyl Acetamide	115.18	0.925	182-86	8.60	
Diethylamine	73.1	0.71	55	8.01	25
Diethyl Ether	74.12	0.7134	34.6	9.53	
N.N-Diethyl Formamide	101.15	0.908	176-77	8.89	
Diethyl Ketone	86.13	0.816	102	9.32	
Diethyl Sulfide	90.19	.837		8.43	
Diethyl Sulfite	138.19	1.883	158-60	9.68	
Dihydropyran	84.12	0.922	86	8.34	
Diisopropylamine	101.2	0.72	84	7.73	5
1,1-Dimethoxyethane	90.12	0.863	64	9.65	
N,N-Dimethyl Acetamide	87.12	0.937	164.5-66	8.81	10
Dimethyl Amine	45.1	0.68		8.24	10
N,N-Dimethyl Aniline	122.2	0.96	193-94	7.13	
2,2-Dimethyl Butane	86.18	0.649	50	10.06	
2,3-Dimethyl Butane	86.18	0.662	50	10.02	
3,3-Dimethyl Butanone	100.16	0.801	106	9.17	
N,N-Dimethyl Formamide	73.09	0.9445	153	9.12	10
Dimethlyl Sulfide	63.13	0.846	38	8.69	
P-Dioxane	88.1	1.03	100-102	9.13	100
Dipropyl Amine	101.19	0.738	105-110	7.84	
Durene	134.12	0.84	80-82	8.03	
Epichlorohydrin	92.5	1.18	115-117		5
Ethane	30.07	gas		11.65	
Ethanethiol	62.13	0.8315	35	9.29	
Ethyl Acetate	88.1	0.90	76.5-77.5	10.11	400
Ethyl Alcohol	46.1	0.80	78	10.48	1000
Ethyl Amine	45.1	0.69	19.20	8.86	10
Ethyl Benzene	106.2	0.87	136	8.76	100
Ethyl Bromide	109.0	1.45	37-40	10.29	200
Ethyl Butyl Ketone	114.2	0.82	146-49	9.02	50
Ethyl Chloride	64.52	0.9214		10.98	1000
Ethyl Disulfide	122.25	0.993	153	8.27	
Ethylene Dibromide	187.9	2.17	131-132	10.52	20
Ethylene Dichloride	99.0	1.26	83	11.32	50

* BP - Boiling Point Degrees Centigrade
** IP - Ionization Potential
*** TWA - Time Weighted Average = Parts Per Million

CHEMICAL MATERIALS	F.W. (G/MOLE)	DENSITY (G/ML)	BP (^{O}C)*	I.P. (EV)**	TWA (PPM)**
Ethyl Ether	74.1	0.73	34.6	9.59	400
Ethyl Formate	74.1	0.92	52-54	10.61	100
Ethyl Iodide	155.98	1.950	67-73	9.33	
Ethyl Isothiocyanate	87.15	1.003	60	9.14	
Ethyl Methyl Sulfide	76.16	0.842	66-67	8.55	
Ethyl Nitrate	75.07	0.90	112	11.22	
Ethyl Propionate	102.13	0.891	99	10.00	
Ethyl Thiocyanate	87.14	1.007		9.89	
Ethynylbenzene	102.13	0.9300	142-44	8.82	
Fluorine	37.99	gas		15.70	0.1
Flourobenzene	96.10	1.024	85	9.20	
O-Fluorophenol	112.10	1.256	172-74	8.95	
M-Fluorotoluene	110.13	0.997	178	8.92	
O-Fluorotoluene	110.13	1.004	172-172	8.92	
P-Fluorotoluene	110.13	1.001	185	8.79	
Formaldehyde	30.03	1.083		10.87	3
Formahide	45.04	1.1334	210	10.25	
Formic Acid	46.02	1.220	110-101	11.05	
2-Furaldehyde	96.09	1.160	182	9.21	250
Furan	68.07	0.9371		8.89	
Heptane	100.2	0.68	98	10.08	500
2-Heptanone	114.18	0.8068	149-50	9.33	
Hexane	86.2	0.66	68-69	10.18	500
1-Hexane	84.16	0.673	64	9.46	
Hexone	100.2	0.80		9.53	100
Hydrogen	2.017	gas		15.43	
Hydrogen Bromide	80.92	gas		11.62	3
Hydrogen Chloride	36.47	gas		12.74	5 cell
Hydrogen Cyanide	27.03	0.687		13.91	10
Hydrogen Flouride	20.01	gas		15.77	3
Hydrogen Iodide	127.93	gas		10.38	
Hydrogen Selenide	80.98	gas		9.88	0.05
Hydrogen Sulfide	34.08	gas		10.46	20 cell
Hydrogen Telluride	129.63	gas		9.14	
Iodine	253.81	4.93		9.28	0.1 cell
Iodobenzene	204.02	1.8384	188	8.73	
1-Iodobutene	184.02	1.617	130-31	9.21	
2-Iodobutene	184.02	1.4991	119-120	9.09	
1-Iodo-2-Methylpropane	184.02	1.599	120-21	9.18	
1-Iodopentane	198.05	1.517	154-55	9.19	
1-Iodopropane	169.99	1.743	101-02	9.26	
2-Iodopropane	169.99	1.703	88-90	9.17	
O-Iodotoluene	218.04	1.713	211	8.62	
M-Iodotoluene	218.04	1.698		8.61	
P-Odotoluene	218.04		211-5	8.50	
Isoamyl Acetate	130.2	0.88	142	9.94	
Isoamyl Alcohol	88.2	0.81	130-1	10.42	100

* BP - Boiling Point Degrees Centigrade
** IP - Ionization Potential
*** TWA - Time Weighted Average = Parts Per Million

CHEMICAL MATERIALS	F.W. (G/MOLE)	DENSITY (G/ML)	BP (^{O}C)*	I.P. (EV)**	TWA (PPM)**
Isobutyl Amine	73.14	0.724	64-71	8.70	
Isobutyl Formate	102.13	0.885	98.4	10.46	
Isobutylene	56.11	0.5942	-6.9	9.23	
Isobutyraldehyde	72.11	0.794	63	9.74	
Isobutyric Acid	88.11	0.950	153-54	10.02	
Isoctane	114.2	0.70	98-99	17.9	400
Isopentane	114.23	0.692	30	10.32	
Isoprene	68.12	0.681	34	8.85	
Isopropyl Acetate	102.1	0.87	85	9.99	250
Isopropyl Alcohol	60.1	0.79		10.16	400
Isopropyl Amine	59.1	0.69	33-34	8.72	5
Isopropyl Benzene	120.2	0.86	152-54	8.75	50
Isopropyl Ether	102.2	1.37	68-69	9.20	500
Isovaleraldehyde	86.13	0.785	90	9.71	
2,3-Lutidine	107.15	0.945	162-63	8.85	
2,4-Lutidine	107.15	0.927	159	8.85	
2,6-Lutidine	107.15	0.9252	143-45	8.85	
Malaic Anhydride	98.1	0.93	200	11.1	
Mesitylene	120.19	0.8637	162-64	8.40	
Mesityl Oxide	98.14	0.8592	129	9.08	
Methane	16.04	gas		12.98	
Methanethiol	48.11	0.96		9.44	
N-Methyl Acetamide	73.10	0.957	204-05	8.90	
Methyl Acetate	74.08	0.9279	57.5	10.27	
Methyl Acrylate	86.1	0.96	80	9.9	10
Methyl Amine	31.06	gas	48	8.97	
Methyl Bromide	95.0	gas		10.53	
2-Methyl-1-Butane	70.16	0.650	31	9.12	
3-Methyl-1-Butane	70.14	0.627	20	9.51	
3-Methyl-2-Butane	70.14	0.643		8.67	
Methyl Butyl Ketone	100.6	0.83	127	9.34	100
Methyl Butyrate	102.13	0.898	102-103	10.07	
Methyl Chloride	50.5			11.28	100
Methyl Cyclohexane	98.19	0.770	101	9.85	
Methyl Disulfide	94.20	1.046	109	8.46	
Methyl Ethyl Ketone	72.10	0.805	80	9.53	
Methyl Formate	60.1	1.34	34	10.815	100
2-Methyl Furan	82.10	0.827	63-66	8.39	
Methyl Iodide	142.0	2.28	41-43	9.54	5
Methyl Isobutyl Ketone	100.2	0.80	117-18	9.30	100
Methyl Isobutyrate	102.13	0.891	90	9.98	
Methyl Isopropyl Ketone	86.12	0.805	94-95	9.32	
Methyl Isothiocyanate	73.12		37-39	9.25	
Methyl Methacrylate	100.1	0.94	100	9.9	100
1-Methyl Napthalene	142.20	1.001	240-243	7.96	
2-Methyl Napthalene	142.20	1,000	241-242	7.96	
2-Methyl Pentane	86.18	0.653	62	10.12	
3-Methyl Pentane	86.18	0.664	64	10.08	
Methyl Propionate	88.11	0.915	79	10.15	

* BP - Boiling Point Degrees Centigrade
** IP - Ionization Potential
*** TWA - Time Weighted Average = Parts Per Million

CHEMICAL MATERIALS	F.W. (G/MOLE)	DENSITY (G/ML)	BP (^{o}C)*	I.P. (EV)**	TWA (PPM)**
Methyl Propyl Ketone	86.13	0.809	100.01	9.38	
2-Methyl Styrene	165.4	1.068	131	10.07	
Monomethyl Aniline	107.16	0.989			
Monomethyl Hydrazine	46.1	0.87			
Morpholine	87.1	1.01	129	8.88	20
Nephthalene	93.7	1.16	217.7	8.12	10
Nitric Oxide	162.2	1.01		9.25	
P-Nitroaniline	138.1				1.0
Nitrobenzene	123.1	1.21	210-211	9.92	1.0
4-Nitrobiphenyl	199.2				
P-Nitrochlorobenzene	157.6	1.52		9.96	1.0 mg/m
Nitrogen Dioxide	46.01	1.448		9.78	
Nitroethane	75.1	1.38	112	10.81	100
Nitromethane	61.0	1.13	100.8-101	11.08	100
1-Nitropropane	89.1	0.99	131-32	10.88	25
2-Nitropropane	89.1	0.98	120	10.71	25
N-Nitrosodimethylamine	74.1	1.00	153	9.07	
Nitrotoluene	137.1	1.16	225-238	11.63	5
Oxygen	31.9988	gas		12.08	
Ozone	48.00	gas		12.08	
Pentaborane	63.17	0.61		10.40	
Pentane	72.15	0.62638	35	10.35	
2,4-Pentanedione	70.13	0.6429	140.4	8.87	
1-Pentene	70.13	0.6503	29.9-30.1	9.50	
Phenetol	122.16	0.967	169-70	8.13	
Phenol	94.1	1.07	182	8.50	5
Phenyl Hydrazine	108.1	1.1	238-41	7.86	5
Phenyl Isocyanate	119.12	1.0887	162-63	8.77	
Phenyl Isothiocyanate	135.18	1.1288	221	8.52	
Phosgene	98.9	gas		11.77	0.4 mg/m
Phosphine	34.0	gas			0.3
Phosphorous Pentachloride	208.2	1.6		10.7	1 mg/m
Phosphorous Trichloride	137.3	1.57	76	10.5	
2-Picoline	93.12	0.950	128-29	9.02	
3-Picoline	93.12	0.9613	144	9.02	
4-Picoline	93.12	0.9571	145	9.04	
Propane	44.09	gas		11.07	
1-Propanethiol	76.16	0.841	67-68	9.20	
Propiolactone	72.06	1.146	162	9.70	
Propionic Acid	74.08	0.99336	141	10.24	
Propionaldehyde	58.08	0.8071	46-50	9.98	
Propionitrile	55.08	0.7818	97	11.84	
N-Propyl Acetate	102.1	0.84	120	10.04	200
Propyl Alcohol	60.10	0.804	97	10.20	
Propyl Amine	59.11	0.719	48	8.78	
Propyl Benzene	120.20	0.862	159	8.72	
Propylene	42.08	gas		8.73	
Propylene Oxide	58.08	0.859	34	10.22	

* BP - Boiling Point Degrees Centigrade
** IP - Ionization Potential
*** TWA - Time Weighted Average = Parts Per Million

CHEMICAL MATERIALS	F.W. (G/MOLE)	DENSITY (G/ML)	BP (^{o}C)*	I.P. (EV)**	TWA (PPM)***
Methyl Propyl Ketone	86.13	0.809	100.01	9.38	
2-Methyl Styrene	165.4	1.068	131	10.07	
Monomethyl Aniline	107.16	0.989			
Monomethyl Hydrazine	46.1	0.87			
Morpholine	87.1	1.01	129	8.88	20
Napthalene	93.7	1.16	217.7	8.12	10
Propyl Ether	102.17	0.7360	88.90	9.27	
Propyl Formate	88.10	0.901		10.54	
Pyrene	202.3	gas		7.41	
Pyridine	79.1	0.98	115	9.32	5
Pyrrole	67.09	0.9691	131	8.20	
Styrene	104.14	9.9059	145-146	8.47	
Styrene Oxide	120.2	1.054	194	9.04	
Tetrachloroethylene	165.9	1.63	121	9.32	100
Tetrahydrofuran	72.10	0.8892	67	9.54	
Tetrahydropyran	86.13	0.8814	88	9.26	
Thiophene	84.1	1.53	84	8.86	
Toluene	93.13	0.866	111	8.82	
O-Toluidine	107.2	1.01	199-200	7.44	5
Trichloroethene	131.40	1.4649	87	9.45	
Triethylamine	101.19	1.069	88.18	7.50	
Trimethyl Amine	59.11	0.636	3-4	7.82	
2,2,4-Trimethyl Pentane	114.23	0.692	98-99	9.86	
Tripropyl Amine	143.27	0.753	155-58	7.23	
Valeraldehyder	86.13	0.8095	103	9.82	
Valeric Acid	102.13	0.939	185	10.12	
Vinyl Acetate	118	0.94	72-73	9.19	10
Vinyl Bromide	106.96	1.517	16	9.80	
Vinyl Chloride	62.5	gas		10.00	1
Water	18.016	1.00	100	12.59	
M-Xylene	106.16	0.8684	138-39	8.56	100
O-Xylene	106.16	0.8801	143-45	8.56	100
P-Xylene	106.16	0.8614	138	8.45	100

* BP - Boiling Point Degrees Centigrade
** IP - Ionization Potential
*** TWA - Time Weighted Average = Parts Per Million

APPENDIX G

DILUTION PROBE OPERATION

(Not investigated as part of UL classified product)

G.1 GENERAL

The dilution probe is constructed of stainless steel and Teflon, with a charcoal filter mounted on the dilution inlet. The purpose of the charcoal filter is to provide hydrocarbon free air to the probe assembly so that the dilution of the incoming sample is not affected by the dilution air. The charcoal filter should be changed every 3 months to ensure proper operation, eliminating the problem of hydrocarbon breakthrough. It is easy to evaluate the performance of the charcoal, by challenging the Model 580A with hydrocarbon free air, then introducing a standard through the charcoal filter, with the inlet of the probe plugged. If there is breakthrough, a reading other than zero will be observed on the readout.

Another important part of the dilution probe is the 10 micron filter that is placed in the inlet of the probe assembly. The flow through this may reduce with time, as dirt collects on the inlet filter. This filter should be changed on a regular basis, depending upon the operator's experience and the environment in which he is working.

It is important to realize that the charcoal filter is not a totally efficient device. This does not cause a problem with the 580A, however, because the photoionization detector does not respond to ethane or methane.

G.2 TECHNICAL CONSIDERATION

Need For Dilution - The Model 580B dilution system was developed to increase the dynamic range of the Model 580A. As the instrument is manufactured, it has a workable range of 0 to 2,000 ppm. Above this upper limit, the detector is found to be non-linear. It does not absorb ethane or methane. The 580B will "lock out" for concentrations above 2,000 ppm. To meet the requirements of fugitive emission measurements as defined in EPA Method 21, there is the need to make measurements above the 2,000 ppm level. To accomplish this using a detector system that is limited by linearity, a dilution probe was developed. this probe provides a nominal 10 to 1 dilution ratio, increasing the dynamic range of the Model 580B from 2,000 to 20,000 ppm.

G.3 CALIBRATION OF THE DILUTION PROBE

The dilution probe is not factory calibrated. It has been tested and evaluated proper performance. It is the responsibility of the operator to properly calibrate the dilution probe.

The following is a simple procedure for this activity:

1. The performance of the 580B should have previously seen verified and calibrated.

2. Place the 580B in close proximity to a standard with the appropriate range. For example, if the instrument is to be used in a 5,000 ppm sampling range, then a standard of that concentration should be selected.

3. Connect the dilution probe making sure that the charcoal filter and the 10 micron filter are in place to the front of the 580B.

4. Challenge the instrument with the new standard gas and adjust the micro metering valve until a tenth of the reading is seen on the instrument readout.

5. As in the example of the 5,000 ppm standard, 500 ppm should be seen on the readout.

6. This is all that is required to calibrate the 580A or 580B.

   Note: It is important that both zero and span of of the 580A have been properly verified prior to initiating this procedure. It is very simple after using the dilution probe, to remove it and recheck the performance of the instrument on your low concentrator standard.

7. It should be noted that due to the environment that you are operating in, there may be a change in the back pressure of the charcoal filter and the 10 micron filter. Any changes in these over a period of time will cause a change in the split ratio of the dilution probe. Therefore, it is important to calibrate the dilution probe as regularly as you calibrate the 580A or 580B.

REPLACEMENT PARTS

1.	Inlet Probe Assembly	580A-6016
2.	Charcoal Filter	3150-0018
3.	Inlet Filter 10 Micron	3150-0017

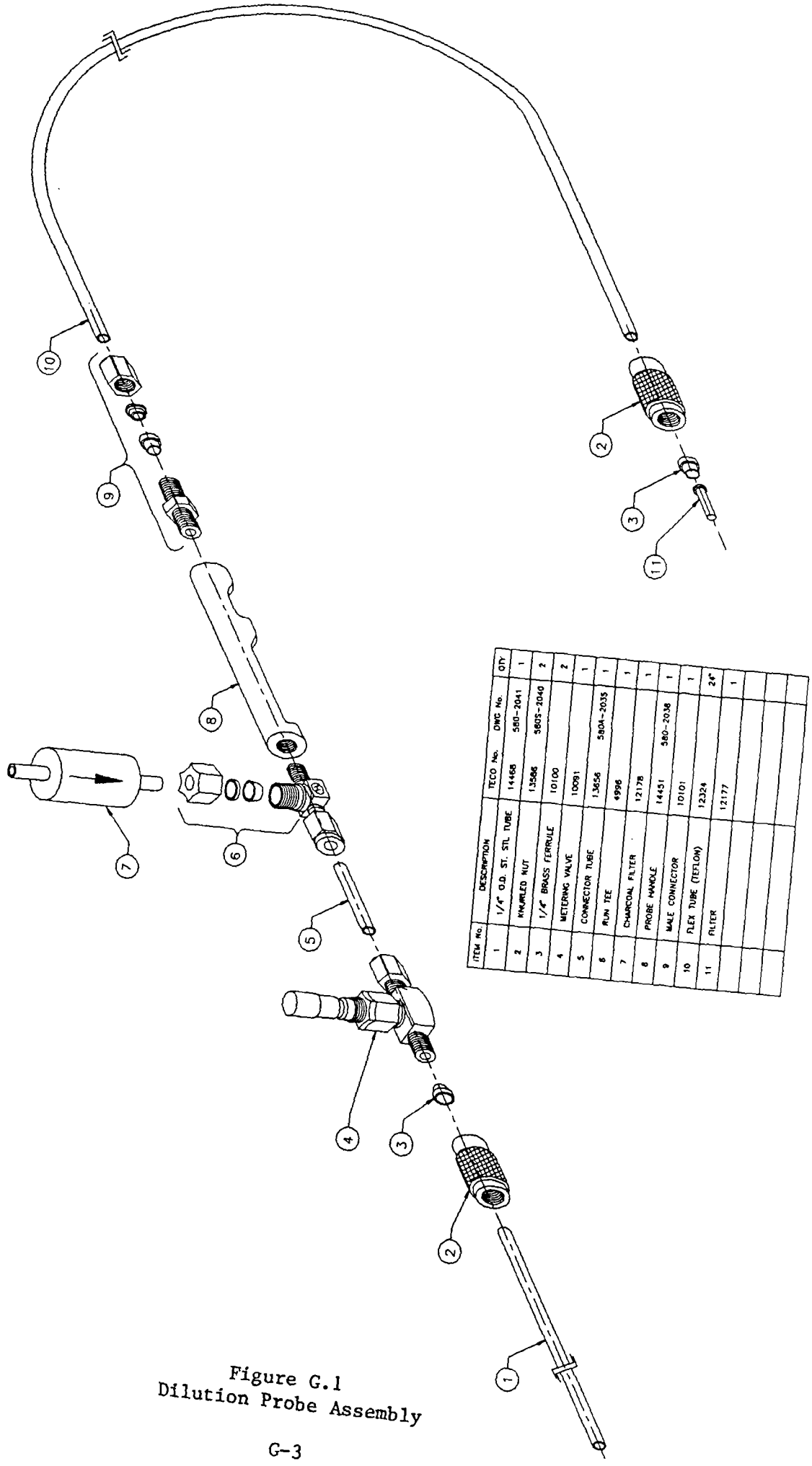

ITEM No.	DESCRIPTION	TECO No.	DWG No.	QTY
1	1/4" O.D. ST. STL TUBE	14468	580-2041	1
2	KNURLED NUT	13586	5805-2040	2
3	1/4" BRASS FERRULE	10100		2
4	METERING VALVE	10091		1
5	CONNECTOR TUBE	13656	5804-2035	1
6	RUN TEE	4996		1
7	CHARCOAL FILTER	12178		1
8	PROBE HANDLE	14451	580-2038	1
9	MALE CONNECTOR	10101		1
10	FLEX TUBE (TEFLON)	12324		24"
11	FILTER	12177		1

Figure G.1
Dilution Probe Assembly

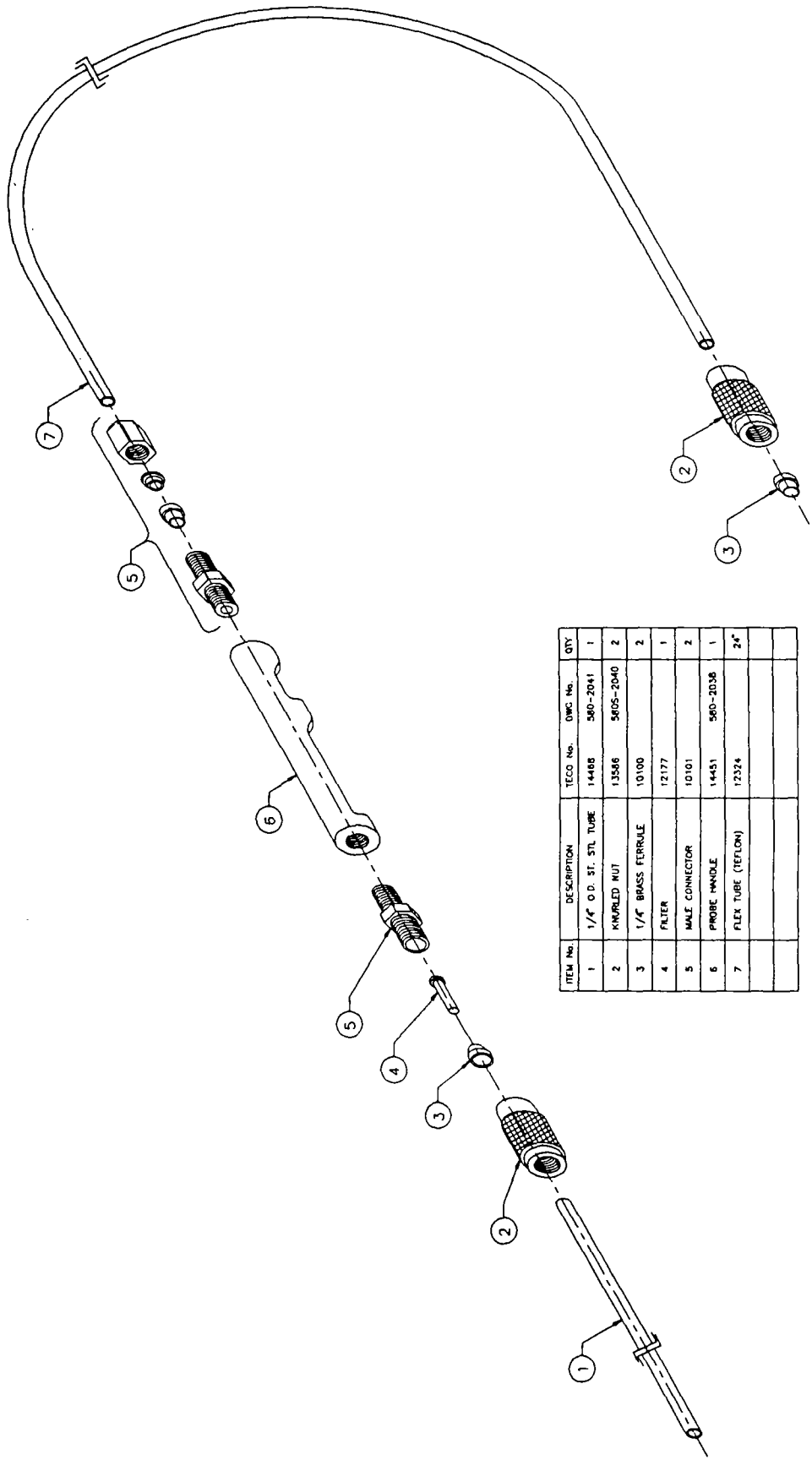

ITEM No.	DESCRIPTION	TECO No.	DMC No.	QTY
1	1/4" O.D. ST. STL TUBE	14468	580-2041	1
2	KNURLED NUT	13586	5605-2040	2
3	1/4" BRASS FERRULE	10100		2
4	FILTER	12177		1
5	MALE CONNECTOR	10101		2
6	PROBE HANDLE	14451	580-2038	1
7	FLEX TUBE (TEFLON)	12324		24"

Figure H.1
Probe Extension Assembly

APPENDIX I

INSTRUCTION SHEET
OPTION 11 WATER TRAP ASSEMBLY

(Not investigated as part of the UL classified product)

INSTALLATION

The water trap assembly (16846) is to be installed on the end of the 580 sample probe. The tygon tubing included is to be placed on the syringe side of the filter then connected to the probe. Refer to the drawing below.

USE

The water trap will effectively stop water from entering the instrument. Water traps can be re-used after drying at room temperature, but the user must be cautious of possible contamination. Contaminated traps should be discarded.

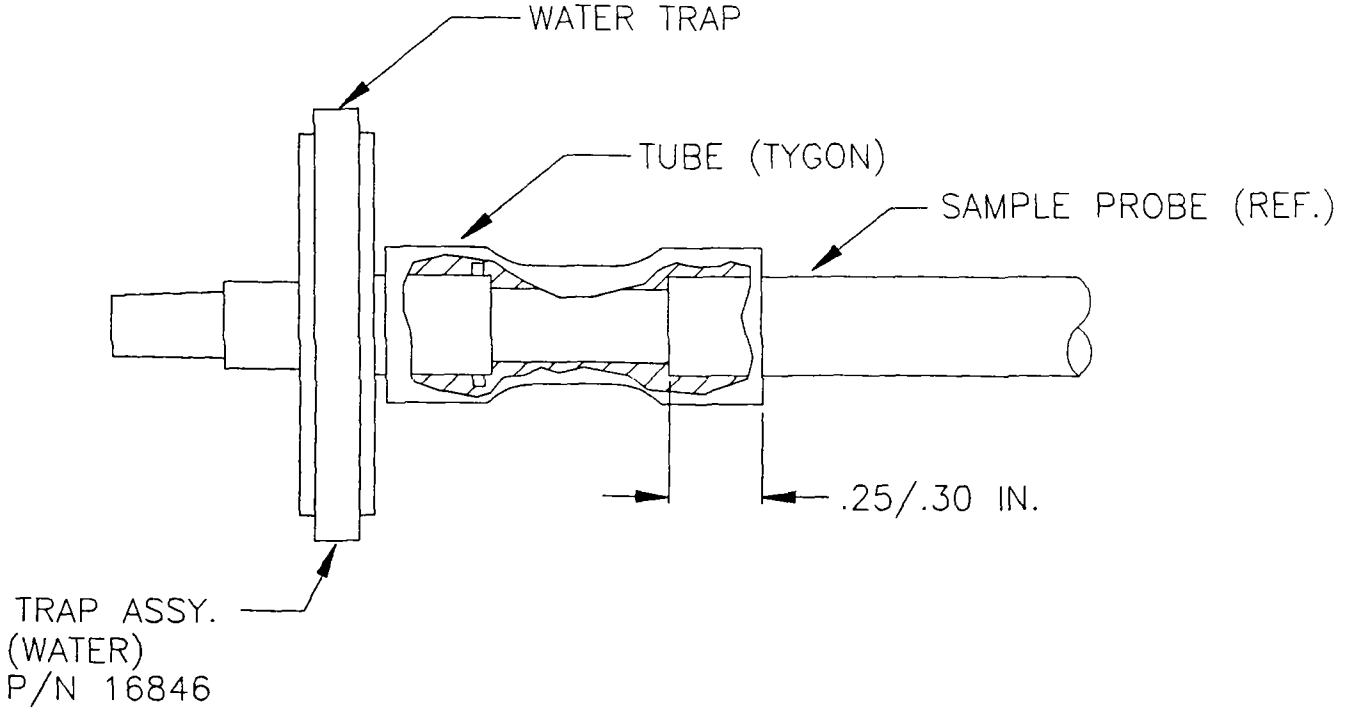

Figure I.1
Water Trap Assembly

INSTRUCTION MANUAL 970297

hnu

MODEL HW-101
Portable Hazardous Waste Analyzer

Preliminary Version
© Copyright 1988
All Rights Reserved
Published in the U.S.A.

PRELIMINARY

TABLE OF CONTENTS

CHAPTER/SECTION			PAGE
1		GENERAL INFORMATION	
	1-1	Safety Precautions	1
	1-2	Introduction	1
	1-3	Equipment Description	1
2		OPERATION	8
	2-1	Introduction	8
	2-2	Controls and Indicators	8
	2-3	Operation Procedures	8
	2-4	Special Precautions	12
3		FUNCTIONAL DESCRIPTION	16
	3-1	Principle of Operation	16
	3-2	Equipment Description	20
4		SCHEDULED MAINTENANCE	23
	4-1	Introduction	23
	4-2	Battery Charge	23
	4-3	UV Lamp and Ion Chamber	23
	4-4	Calibration	24
5		TROUBLESHOOTING	29
6		CORRECTIVE MAINTENANCE	47
	6-1	Introduction	47
	6-2	Equipment Disassembly/Reassembly	47
		ILLUSTRATED PARTS BREAKDOWN	
		Group Assembly Parts List	54
		Numerical Index	58
		Reference Designation Index	59
		Spare Parts Kits	60

LIST OF ILLUSTRATIONS

FIGURE	TITLE
1-1	Photoionization Analyzer, Operating condition
1-2	Probe storage, Instrument Cover
1-3	Photoionization Analyzer, stored condition
2-1	Controls and Indicators
3-1	Detection Process
3-2	Block Diagram, component location
3-3	Block diagram, electrical connections
4-1	Calibration Test Set-up
5-1	Fault Logic Diagram
5-2	Power Supply PCB, Test Points
6-1	Probe Assembly
6-2	Light Source Subassembly
6-3	Readout Assembly
7-1	Part Location, Probe
7-2	Part Location, Readout
7-3	Part Location, Outer assembly

LIST OF TABLES

TABLE NO.	TITLE
1-1	Reference Data
1-2	Equipment Supplied
1-3	Equipment Required, not supplied
2-1	Controls
2-2	Indicators/Connectors
3-1	Typical gases that will be ionized
3-2	Typical gases that will not be ionized
4-1	Scheduled Maintenance Action Index
5-1	Troubleshooting Data
5-2	Troubleshooting Index
5-3	Pad Data, Power Supply PCB
5-4	Pin Data, Amplifier PCB P2/J2
5-5	Pin Data, Probe Cable, P3/J3

SAFETY SUMMARY

The following are general safety precautions that are not related to any specific procedures and therefore do not appear elsewhere in this publication. These are recommended precautions that personnel must understand and apply during many phases of operation and maintenance.

KEEP AWAY FROM LIVE CIRCUITS

Operating personnel must at all times observe all safety regulations. Do not replace components or make any adustments inside the equipment with the high voltage supply turned on. Under certain conditions, dangerous potentials may exist when the power control is in the OFF position, due to charges retained by capacitors. To avoid casualties, always remove power and discharge and ground a circuit before touching it.

DO NOT SERVICE OR ADJUST ALONE

Under no circumstances should any person reach into the equipment for the purpose of servicing or adjusting except in the presence of someone who is capable of rendering aid.

RESUSCITATION

Personnel working with or near high voltage should be familiar with modern methods of resuscitation. Such information may be obtained from the Bureau of Medicine and Surgery.

The following warnings appear in the text in this volume, and are repeated here for emphasis.

WARNINGS: Do not observe the light source closer than 6 inches. When necessary, observe only briefly. Continued exposure to ultraviolet energy generated by the light source can be harmful to eyesight.

A high reading on the meter should be cause for protective action since the instrument measures gases in the vicinity of the operator.

Turn the function switch on the control panel to the OFF position before disassembly. Otherwise, high voltages of -1200 VDC, will be present.

Use great care when operating the analyzer with the readout assembly outside the case due to the presence of -1200 V DC.

When conducting tests on analyzer in open condition, exercise great care due to presence of high voltage.

CHAPTER 1

GENERAL INFORMATION AND SAFETY PRECAUTIONS

1-1 SAFETY PRECAUTIONS

Safety precautions to be exercised in the use and repair of this equipment are described in the Safety Summary in the front section of this manual.

1-2 INTRODUCTION

This manual describes the operation, maintenance and parts list for the Photoionization Analyzer, Model HW 101, HNU Systems Inc., 160 Charlemont St., Newton, MA 02161, tel: 617-964-6690.

1-3 EQUIPMENT DESCRIPTION

The Photoionization Analyzer is a portable instrument used to detect and measure the concentration of a variety of hydrocarbon gases in various atmospheres. The analyzer consists of a probe and a readout assembly (see Figure 1-1). The probe contains the sensing and amplifying circuitry; the readout assembly contains the meter indicator, controls, and power supply.

Reference data on the analyzer is given in Table 1-1. Physical characteristics of the equipment are given in Table 1-2.

Characteristics of equipment required for maintenance and calibration are given in Table 1-3.

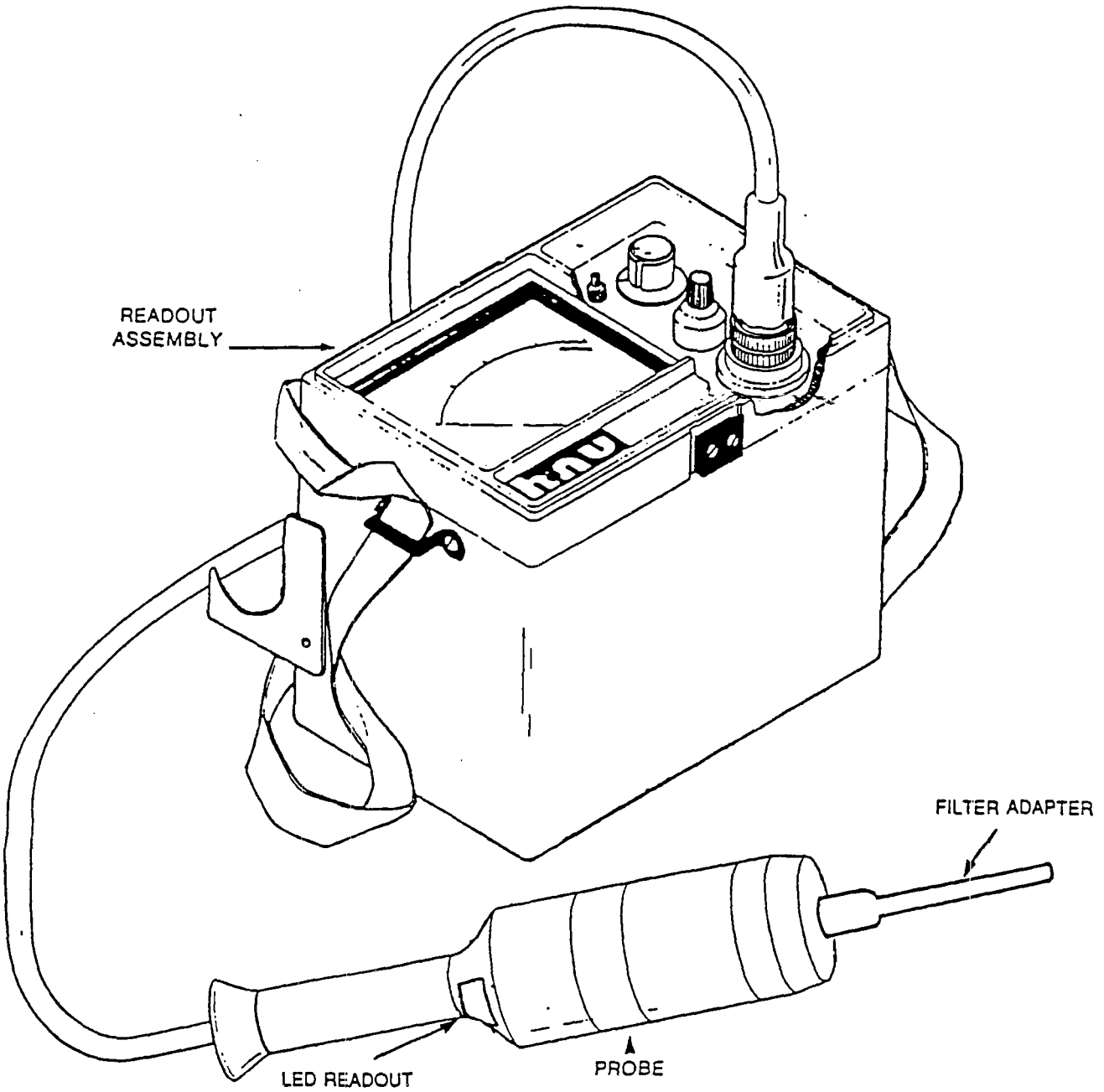

FIGURE 1-1
PHOTOIONIZATION ANALYZER
OPERATING CONDITION

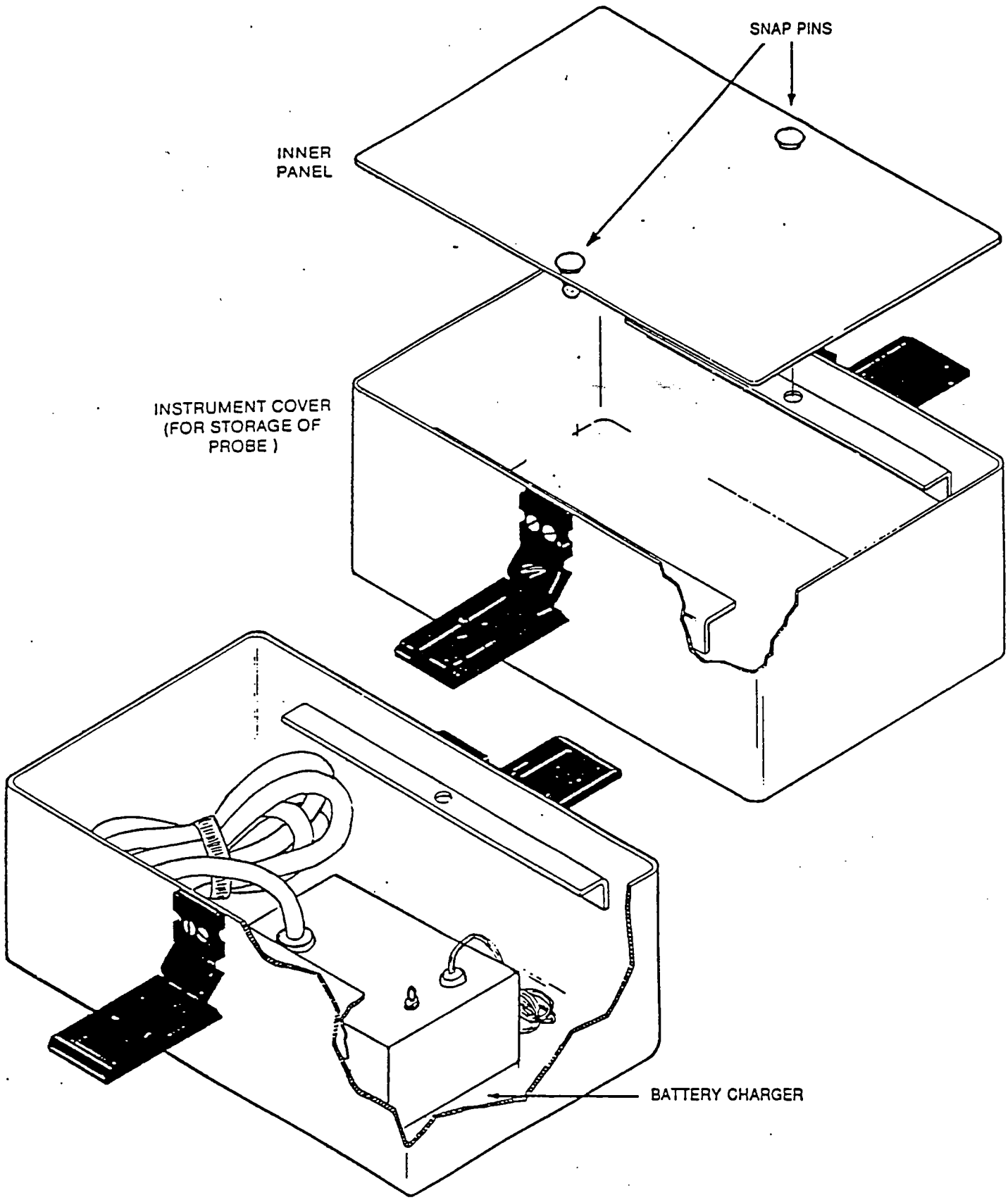

FIGURE 1-2
BATTERY CHARGER
STORAGE

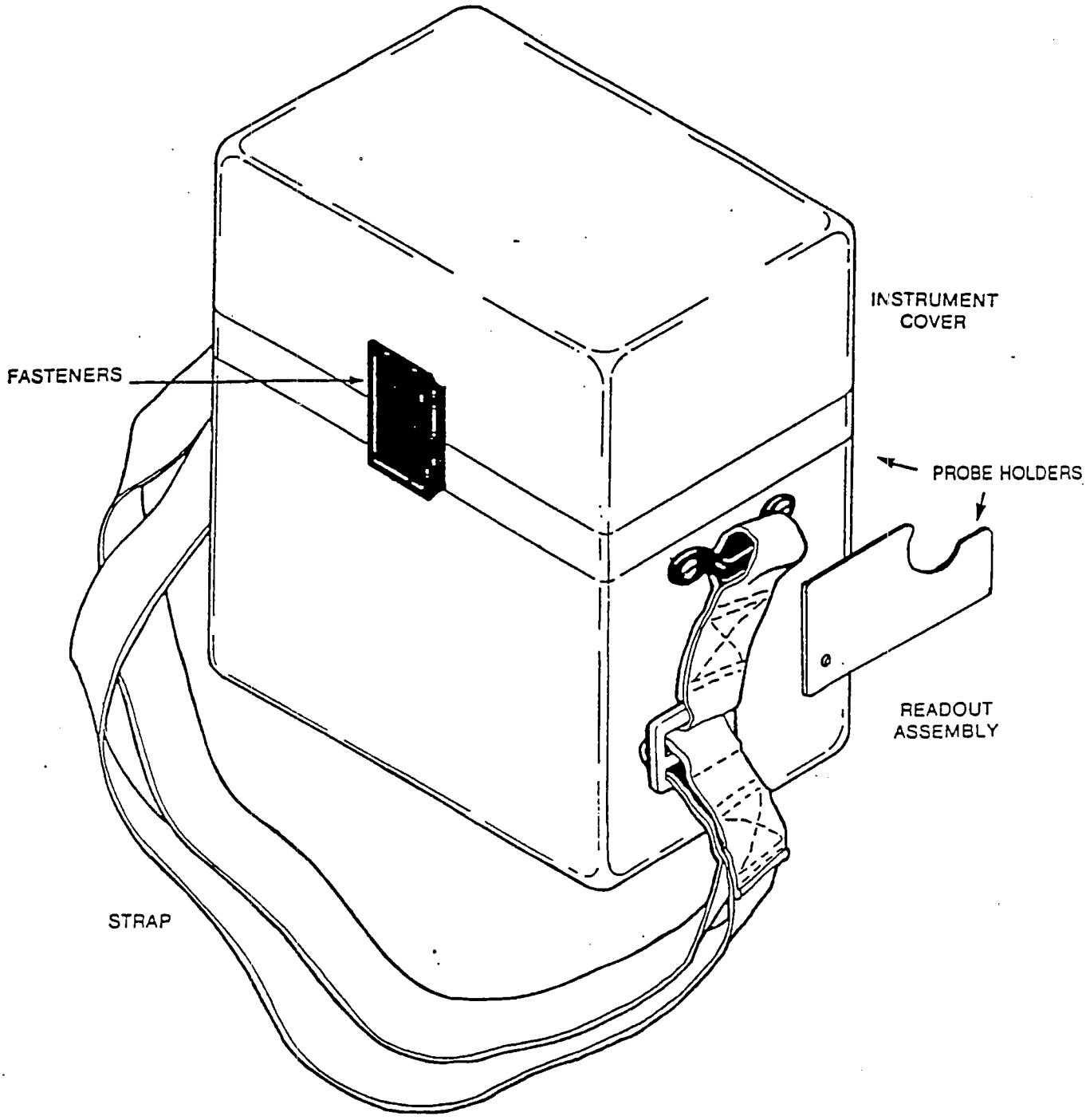

FIGURE 1-3
PHOTOIONIZATION ANALYZER
STORED CONDITION

TABLE 1-1

REFERENCE DATA

a) DESCRIPTION

Trace Gas Analazer	HNU Systems, Inc. Photoionization Analyzer Model HW 101

b) FUNCTIONAL CHARACTERISTICS (see NOTE)

Detection Range *	0.1 to 2000 ppm (parts per million by volume)
Minimum Detection Level *	0.1 ppm
Maximum Sensitivity *	0 to 20 ppm FSD (Full Scale Deflection)
Repeatability *	plus or minus 1% of FSD
Linear Range *	0.1 to 400 ppm
Useful Range *	0.1 to 2000 ppm
Response Time	Less than 5 seconds to 90% of FSD
Ambient Humidity	up to 90% RH
Operating Temperature Ambient	0 to 40 degrees C.
Operating Time on Battery	Approximately 10 hours
Battery Recharge Time after normal use	Approximately 6 hours
Battery Charger Power	120V AC, single phase, 50-60 cycle, 1.5 Amps

NOTE: Items marked with asterisk valid when span control set at 9.8 and measuring benzene. Values will vary for other compounds and conditions.

TABLE 1-2

EQUIPMENT SUPPLIED

Quan.	Name	Overall Dims CM (inches)	Weight Kg.(lbs)	Volume cm3(cu ft.)
1	Photoionization Analyzer (stored condition)	21W x 13D x 24H (8 1/4 x 5 3/16 x 9 1/2)	4.7 (10.28)	6552 (0.23)
	Probe Assembly	6.0 Diam x 34.3L (2 3/8 x 13 1/2)	1.2 (2.7)	636 (0.023)
	Readout Assembly	21W x 13D x 16.5H (8 1/4 x 5 3/16 x 6 1/2)	3.4 (7.5)	4504 (0.16)
1	Battery Charger with cord	7.3W x 8.0D x 10.2L (2 7/8 x 3 1/8 x 4)	0.4 (0.9)	596 (0.021)

TABLE 1-3

EQUIPMENT REQUIRED, NOT SUPPLIED

Test Equipment Category (name)	Representative Test Eq. Model No.	Equipment Test Parameters	Application
Container/ Calib. Gas	HNU Systems Inc. cylinder, No. 101-350	Lightweight disposable steel cylinder containing 30 liters (3.6 cubic feet) at 300 lb/in2 and 70 oF. Contents to be 100 ppm of isobutylene in zero air +/- 10% -- rated concentration listed on cylinder.	Calibration
Regulator	HNU Systems Inc. regulator, NO. 101-351	Single stage regulator, flow preset at factory, 200-300 cc per minute, gage indicates pressure of tank contents	Calibration
Voltmeter	Multimeter, digital type	0 - 1500 V DC	Maintenance
Tubing	Latex	0.187 ID and 0.250 OD	Calibration
Compound, lamp cleaning	HNU part No. PA 101534-A1		Maintenance

CHAPTER 2

OPERATION

2-1 INTRODUCTION

The Photoionization analyzer is a portable instrument used to detect the concentration of a variety of trace gases in an atmosphere. The principal elements consist of a probe and a readout assembly. Associated elements consist of a battery charger and carrying straps.

2-2 CONTROLS AND INDICATORS

The controls and indicators are located on the panel of the readout assembly (see Figure 2-1) and are listed and described in Tables 2-1 and 2-2.

2-3 OPERATING PROCEDURES

The following are the procedures to be used in operating the analyzer:

a. Unclamp the cover from the main readout assembly.

b. Connect the probe cable to the 12 pin keyed connector on the readout assembly panel.

c. Screw the filter nozzle securely into the probe end cap. NOTE: This must be in place for proper operation.

d. Set the span control as specified by the initial factory calibration or by subsequent calibrations (see Section 4-4).

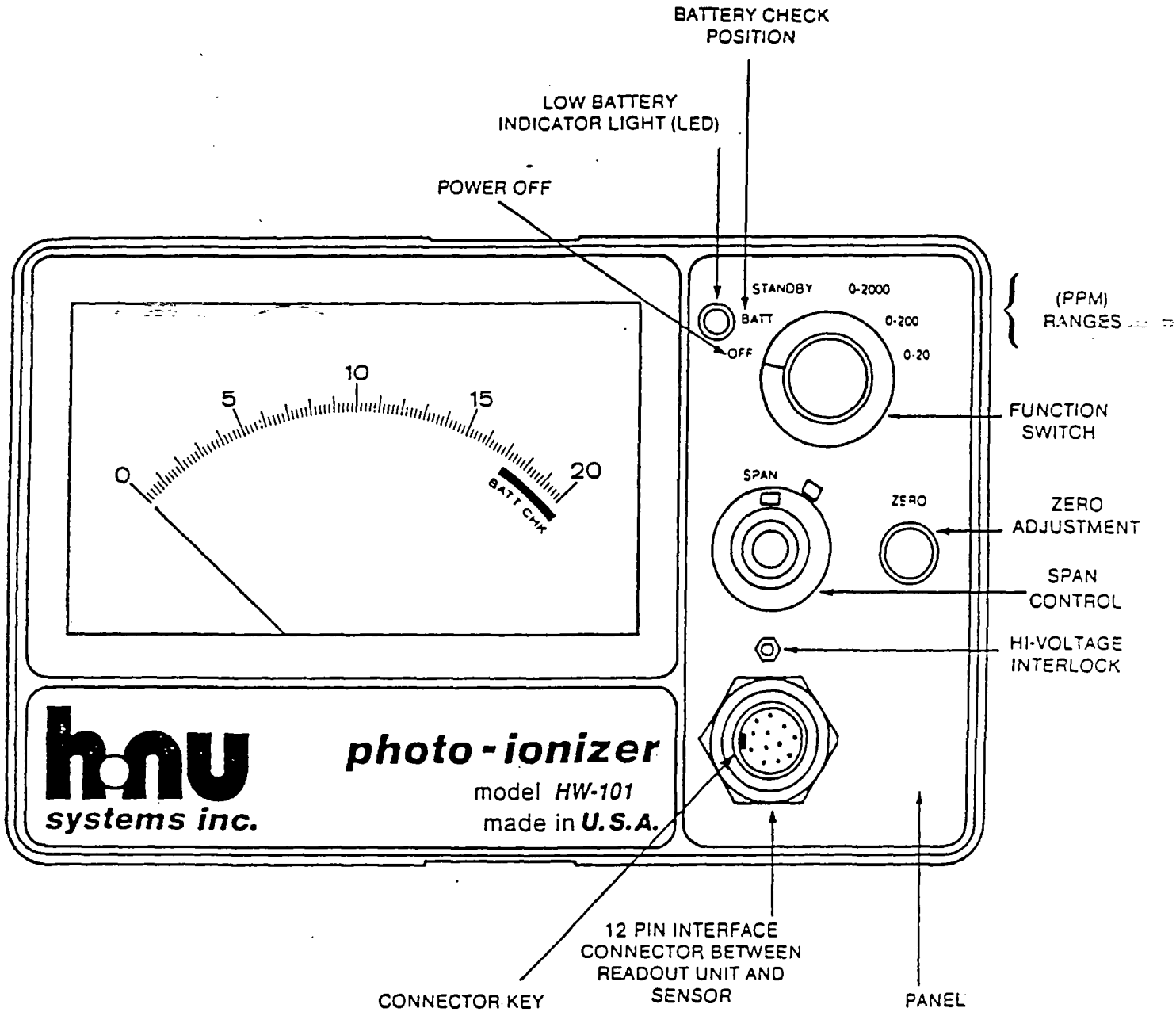

FIGURE 2-1
CONTROLS AND INDICATORS

e. Turn the function switch to the BATT (battery check) position. The needle on the meter will go to the green zone if the battery is fully charged. If the needle is below the green zone or if the Low Battery Indicator comes on, the battery must be recharged before the analyzer is to be used.

f. Turn the function switch to the STANDBY position. Turn the zero adjustment until the meter needle is at zero.

g. Calibrate the instrument as necessary (see para. 4.4).

h. Turn the function switch to the appropriate operating position. Start with the 0-2000 position and then switch to the more sensitive ranges as required to give the best resolution and upscale display.

The analyzer is now operational.

i. Hold the probe so that the nozzle is at the point where the measurement is to be made.

The instrument measures the concentration by drawing the gas in at the end of the nozzle, passing it through an ionization chamber, and discharging the gas at the end of the probe opposite from the tip.

CAUTION

The probe will draw samples from low pressure areas, i.e., from ductwork, or from any distance, and will draw in water.

DO NOT IMMERSE NOZZLE IN LIQUIDS!!
DO NOT IMMERSE NOZZLE IN DIRT, AS FRITTED FILTER WILL CLOG!

WARNING

A high reading should be cause for protective action since the instrument measures gases in the vicinity of the operator.

Take the reading or readings as desired being aware that air currents or drafts in the vicinity of the probe tip may cause fluctuations, and a stable reading may not be possible under these conditions. Change the function switch scale ranges as required.

Samples may be drawn from some distance as the pump is somewhat powerful.

WARNING

Do not dead head the pump as the vacuum in the ion chamber will change affecting an accurate reading.

j. When not conducting measurements and when analyzer is to be kept in readiness state, turn function switch to OFF position.

k. Check battery condition as required by turning the function switch to BATT position. Normal operating time between recharging is 8 to 10 hours. If the Low Battery Indicator comes on, turn analyzer off and recharge.

CAUTION

Use only in an emergency with a low battery when on battery charge. See para. 4.2.

l. After completion of each operating period turn function switch to OFF position, and recharge battery.

m. When not operating, leave analyzer in assembled condition, and connected to battery charger.

n. When transporting, disassemble probe readout assembly. Protect nozzle from dust and dirt.

2-4 SPECIAL PRECAUTIONS

2-4.1 ELECTROMAGNETIC RADIATION

The analyzer is well protected against interference from electromagnetic radiation so no errors normally occur from such sources, such as large electric motors, transformers, switching stations, electromagnets, etc. In an extreme case very close to a highly radiating source, the possibility of such an effect can be determined and corrected by the following procedure. Zero the analyzer in an electrically quiet area with the function switch in the STANDBY position. Then move the analyzer to the questionable area with the switch still in the STANDBY position. If AC pick up is occurring, the meter will indicate the magnitude of the error. The measurement in the operating position can then be compensated by subtracting this value.

TABLE 2-1

CONTROLS

Name	Position	Function
Function Switch		Controls the operation of the analyzer
	OFF	All operations OFF
	BATT (Battery check)	Check the condition of the battery. If the needle on the meter is in the green arc, the battery is charged. If the needle is not in the green arc the battery should be recharged. Can be done in any position, best in OFF, see directions on charger.
	STANDBY	All electronics ON, ultraviolet (UV) light source OFF. This position conserves power and extends battery life. This position is used to set the analyzer zero position. (i.e. no UV light, no signal.)
	0-2000	Sets range of meter at 0-2000 ppm.
	0-200	Sets range of meter at 0-200 ppm.
	0-20	Sets range of meter at 0-20 ppm.
Probe LED Bar Graph Display		Provides relative indication of meter reading (concentration).Each LED of the Bar-graph Display represents 10% of the full scale setting of the range switch.
ZERO		With the function switch in STANDBY position, this control is used to adjust the analyzer to read zero.

Name	Position	Function
SPAN		This control is used to set the sensitivity of the amplifier to make the meter give direct readings of the trace gas concentrations in ppm. This control is a vernier control. The whole number of the setting appears in the window of the control, decimal parts appear on the dial. A lock on the control secures it in a specific setting.
HI-VOLTAGE INTERLOCK	---	This is a normally open push button switch.
	Open	Switch is open when cable not connected, causing high voltage for the UV lamp to be disconnected from the 12 pin connector for the probe as a safety precaution.
	Closed	Switch is closed when the probe cable is connected to the readout panel. This connects high voltage to the socket. This switch is automatically closed when the cable is attached by the pressure of the cable connector on the switch push button. This switch may also be closed manually during maintenance checks of the readout assembly without the probe cable attached.

NOTE: See Figure 2-1 for locations

TABLE 2-2

INDICATORS/CONNECTORS

Name	Function
Low Battery indicator (LED)	Illuminates after approximately 10 hours. Do not attempt to take readings when this light is on.
Probe Connector	12 pin connector for cable between the readout assembly and the probe.
Meter/ Probe L.E.D.	Indicates concentration of measured gas.

NOTE: See Figure 2-1 for location.

CHAPTER 3

FUNCTIONAL DESCRIPTION

3-1 PRINCIPLE OF OPERATION

The analyzer measures the concentration of trace gases present in the atmosphere by using the principle of photoioization. Photoionization occurs when an atom or molecule absorbs light of sufficient energy to cause an electron to leave and create a positive ion. This will occur when the ionization potential of the molecule is less than the energy of the photon. The ionization potential of a molecule is that energy in electron volts (eV) required to free an electron. In the HW 101, the source of photons is an ultraviolet lamp with an energy of 10.2 eV.

The detection process in this analyzer is shown in Fig. 3-1. Sample gases enter through the nozzle into the ion chamber. The ultraviolet lamp generates photons with an energy of 10.2 eV and these enter the ion chamber. Ionization occurs for those molecules having ionization potentials less than 10.2 eV.

A positive biased electrode causes these positive ions to travel to a collector in the chamber. Here ions create a current proportional to concentration at the collector which is then amplified and the signal displayed on the meter.

The amount of ionization occuring, and thus the input signal to the amplifier, is proportional to the amount of trace gas present in the ion chamber and to the ionization sensitivity of that gas.

Gases that will be ionized are those with ionization potentials of 10.2 eV or less. Typical gases that will be ionized and their potentials are listed in Table 3-1. These gases will thus be detected and measured with this analyzer.

The ion chamber is kept at reduced pressure to minimize effects of humidity and other gases.

Gases having ionization potentials higher than approximately 10.2 eV will not be ionized by this analyzer. Examples of th#se and their potentials are listed in Table 3-2. As can be seen from the table the ionization potential of the major components of air, i.e., oxygen, nitrogen, carbon dioxide, and of methane and freons, range from about 12.0 eV to about 15.6 eV and will thus not be ionized by photons from the 10.2 eV lamp.

When the analyzer is used to measure a mixture of gases, such as hydrocarbons in air, a calibration gas is selected to approximate the average response of the components to be measured. In this case, isobutylene is the compound whose response best approximates these hydrocarbons.

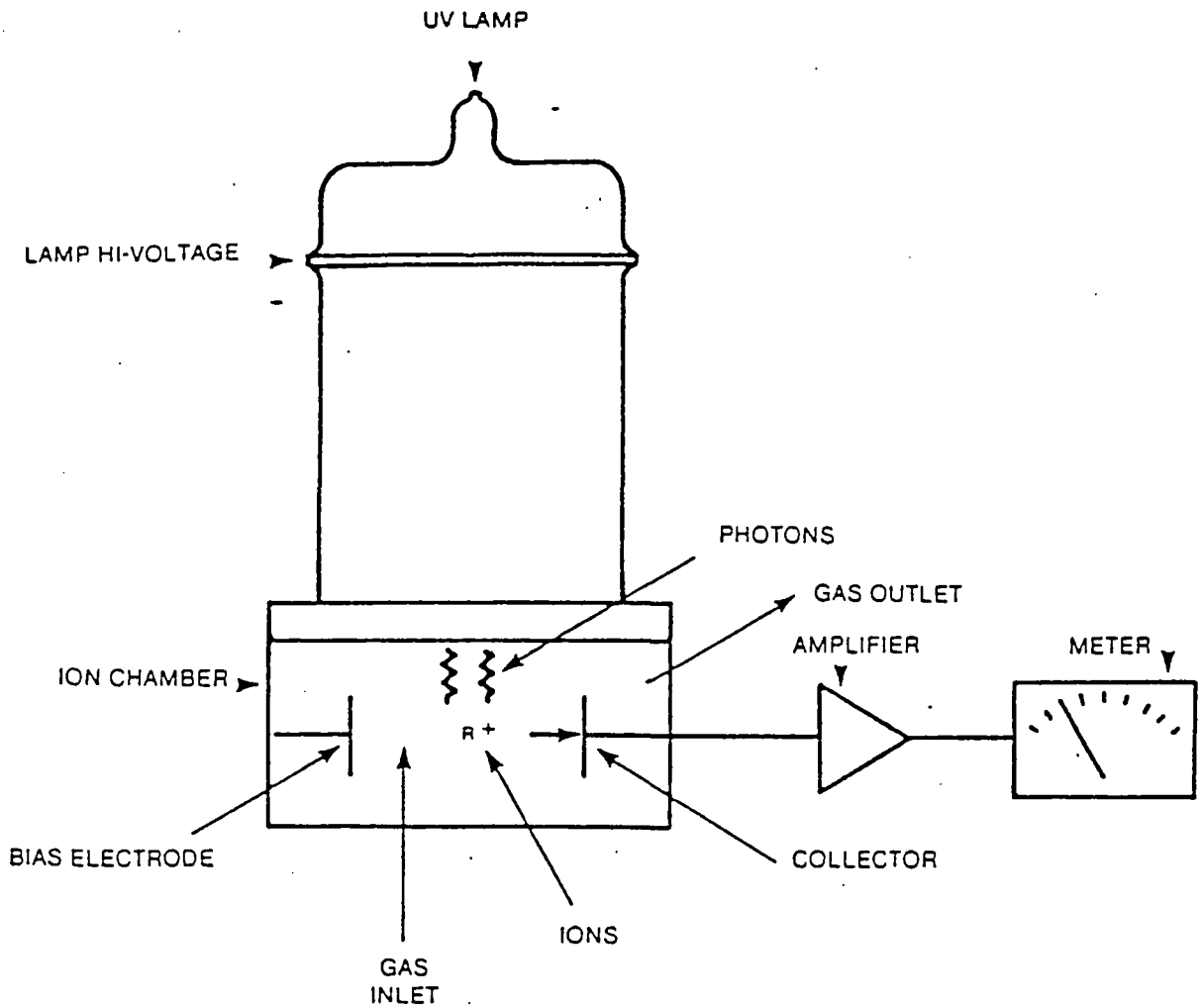

FIGURE 3-1
DETECTION PROCESS

TABLE 3-1

TYPICAL GASES THAT WILL BE IONIZED BY THE ANALYZER

Gas	Ionization Potential (eV)
Xylene	8.56
Toluene	8.82
Cyclohexanone	9.14
Benzene	9.25
Isobutylene	9.44
Trichloroethylene	9.45
Methyl ethyl ketone	9.53
Tetrahydrofuran	9.54
Acetone	9.69
Vinyl chloride	10.00
Ammonia	10.15
Isopropanol	10.17
Hexane	10.18
Ethanol	10.48

TABLE 3-2

TYPICAL GASES THAT WILL NOT BE IONIZED BY THE ANALYZER

Gas	Ionization Potential (eV)
Methanol	10.85
Nitromethane	11.08
Methyl chloride	11.28
Chlorine (C12)	11.48
Methyl chloroform	11.5
Freon 11	11.77
Freon 113	11.78
Genetron (101)	11.98
Freon 114	approx. 12
Oxygen (02)	12.1
Acetonitrile	12.22
Freon 12	12.31
Freon 13	12.91
Methane (CH4)	12.98
Carbon dioxide (C02)	13.79
Carbon monoxide (CO)	14.01
Hydrogen	15.426
Nitrogen (N2)	15.6

3-2 EQUIPMENT DESCRIPTION

The components of the analyzer are located in the probe and the readout assembly (see Fig. 3-2 and 3-3). The ion chamber, UV light source, amplifier board, pump and filter nozzle are located in the probe assembly. The battery, the power supply board, and the meter are located in the readout assembly. The probe and the readout assembly are connected by an 800 cm (32") cable.

The pump draws gas in through the filter and orifice located in the filter nozzle, through the ion chamber, and then discharges it through the hollow exhaust screw in the handle. The flow rate is approximately 175 to 275 cubic centimeters per minute. A general variation in the flow rate will not affect the measurement. A major obstruction to the flow, however, will prevent proper readings and lengthen response time, by changing the vacuum in ion chamber.

The output signal from the ion chamber goes to the amplifier and through the cable to the meter on the readout assembly.

Voltage for the light source, ion chamber, amplifier and pump is provided from a DC converter on the power supply board. The battery provides the source of power for the converter. The positive side of the battery is grounded.

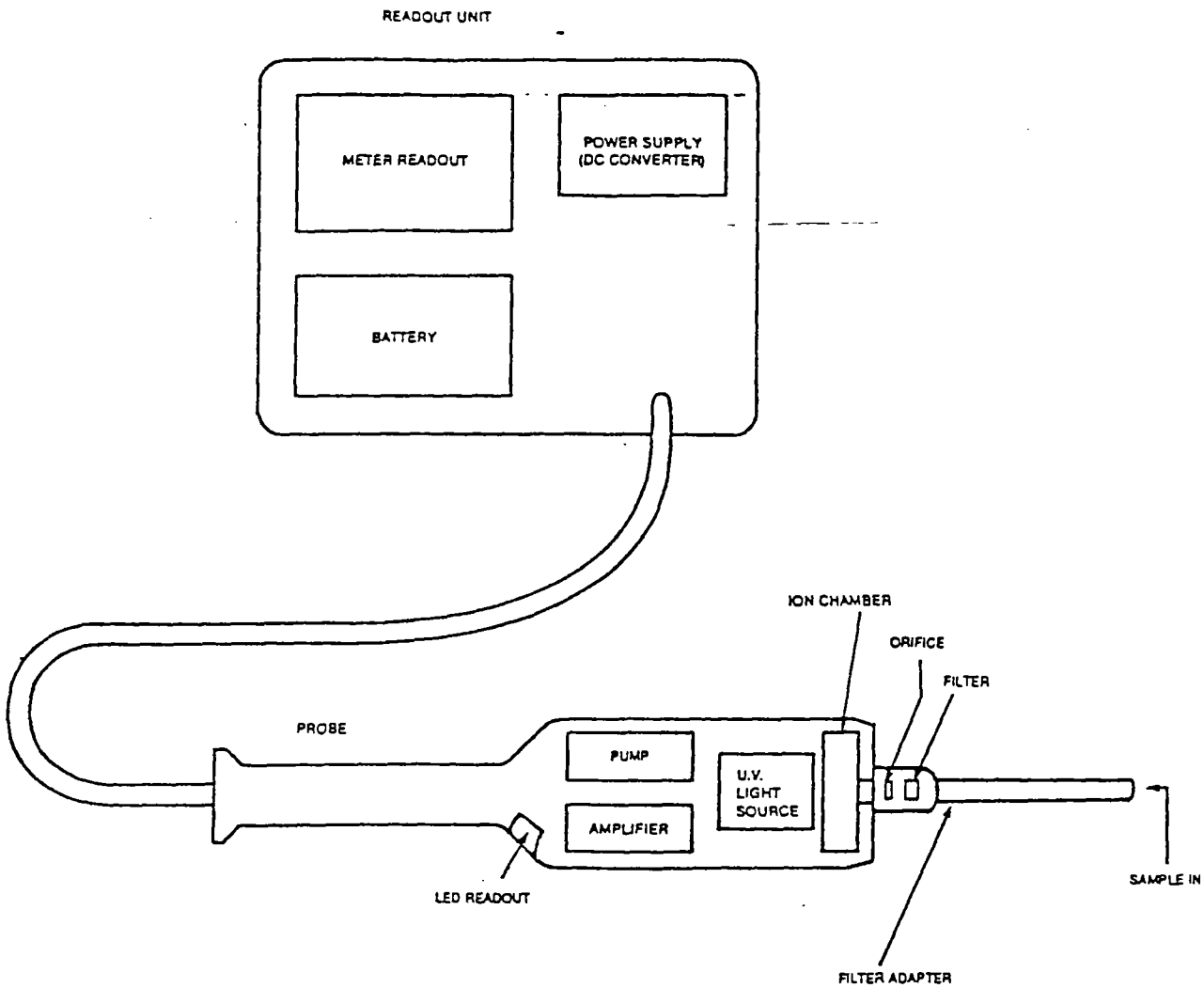

FIGURE 3-2
BLOCK DIAGRAM
COMPONENT LOCATION

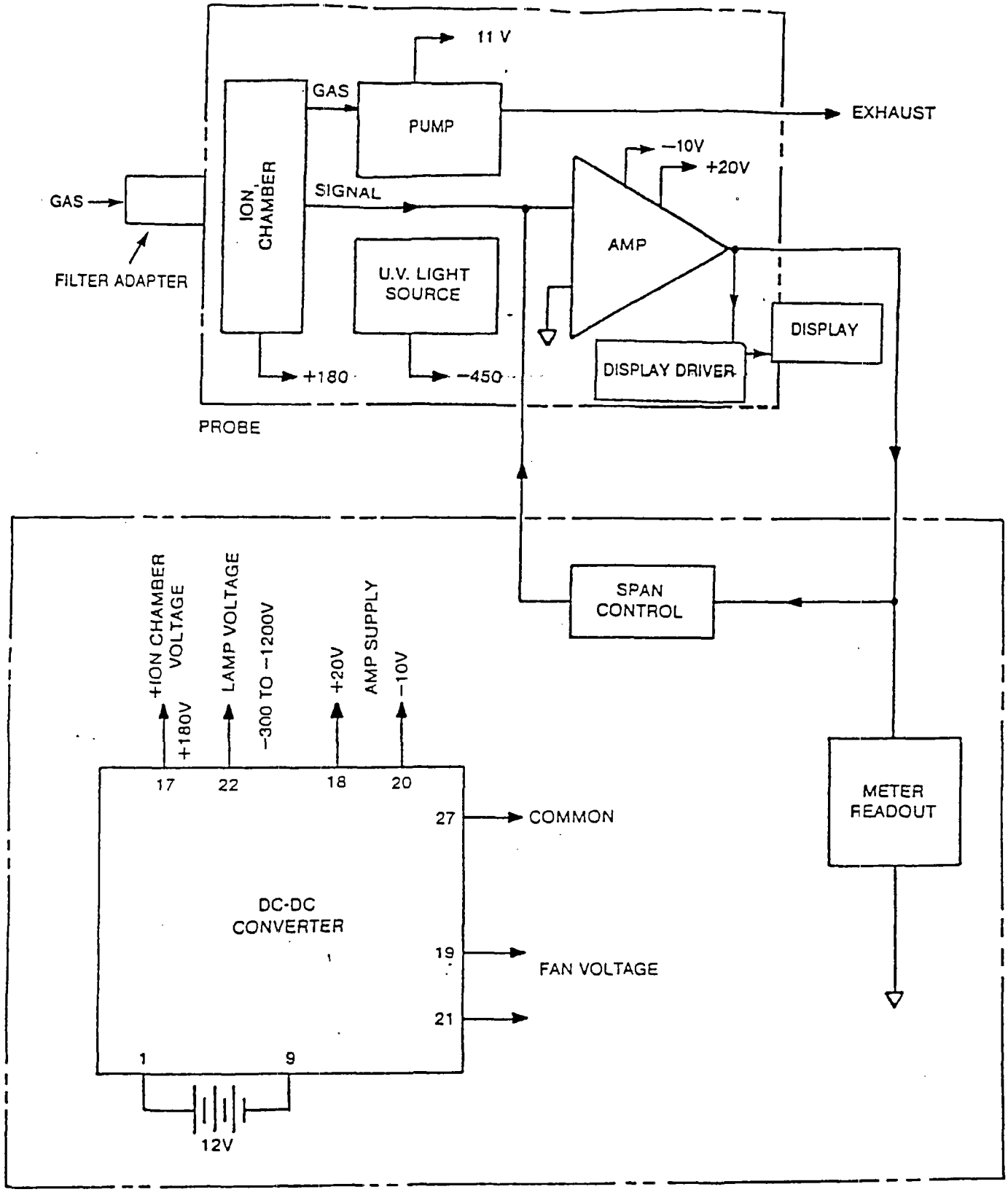

NOTE: ALL VOLTAGES SHOWN ARE NOMINAL VALUES.

FIGURE 3-3
BLOCK DIAGRAM
ELECTRICAL CONNECTIONS

CHAPTER 4

SCHEDULED MAINTENANCE

4-1 INTRODUCTION

Scheduled maintenance actions for the analyzer are those listed in Table 4-1.

4-2 BATTERY CHARGE

Check the battery charge as described in paragraph 2-3g. If the battery is low as indicated by the meter reading or the warning indicator LED, it is necessary to recharge the battery.

To charge the battery, first insert the mini phone plug of the charger into the jack, J6, on the side of the bezel adjacent to the meter. Then insert the charger plug into a 120 VAC single phase, 50-60 cycle outlet. To ensure that the charger is functioning, turn the function switch, S1, to the battery check (BATT position. The meter should deflect full scale if the charger is working, leave the function switch in the OFF position.

The analyzer can be operated, however, while charging by turning the function switch to the desired position. Such usage will extend the time required to completely recharge the battery. A normal full recharge of the battery from low voltage level as indicated by the warning light takes about 6 hours.

4-3 UV LAMP AND ION CHAMBER

During periods of operation of the analyzer, moisture or other foreign matter could be drawn into the probe forming deposits on the surface of the UV lamp or in the ion chamber. These deposits would interfere with the ionization process and cause erroneous readings. Cleaning can be accomplished as follows:

Disassemble the probe as described in Paragraph 6-2.1

WARNING

Turn the function switch on the control panel to the OFF position before disassembly. Otherwise, high voltage of 1200 VDC will be present.

First, clean the lamp with a mild detergent and wipe dry. Then, the ion chamber can be inspected for dust or particulate deposits. If such matter is present, the assembly can be gently swirled in ethanol or isopropanol and dried gently at 50 - 60 degrees C for approximately a half hour. No liquid must be present at reassembly as this would affect the performance.

Reassemble the probe as described in paragraph 6-2.1 and check calibration of the analyzer (see Section 4-4).

If the calibration is still not satisfactory, disassemble the probe again and clean the lamp with the special HNU cleaning compound (see Table 1-3). As this is a rigorous cleaning procedure it should be done only after the more gentle cleaning is tried as described above. Do not clean the ion chamber with this special cleaning compound. Do not clean 11.7 ev lamps with this compound, a special cleaning compound is available for 11.7 lamps.

Reassemble the probe, check to see if the lamp is on before reattaching the filter nozzle (see WARNING, Section 2-3j), and calibrate the analyzer (see Section 4-4).

4-4 CALIBRATION

The analyzer is calibrated by use of a cylinder and a regulator (see Table 1-3). The cylinder contains a calibration gas consisting of a mixture of isobutylene in zero air. Isobutylene is non-toxic and safe to use in confined areas. There are no listed exposure levels at any concentration.

The regulator sets and controls the flow rate of gas to the analyzer at a value preset at the factory.

The analyzer is connected to the output of the regulator with a short piece (butt connected) of flexible tubing (see Figure 4-1). It is important to use clean tubing since contaminated .tubing will adversely affect the calibration readings.

Set the function switch on the analyzer at the desired ppm range position. The gas from the regulator will flow thru the probe. The isobutylene level in the calibration gas is specifically selected for the analyzer. The desired ppm level to be indicated on the meter is given on the cylinder label.

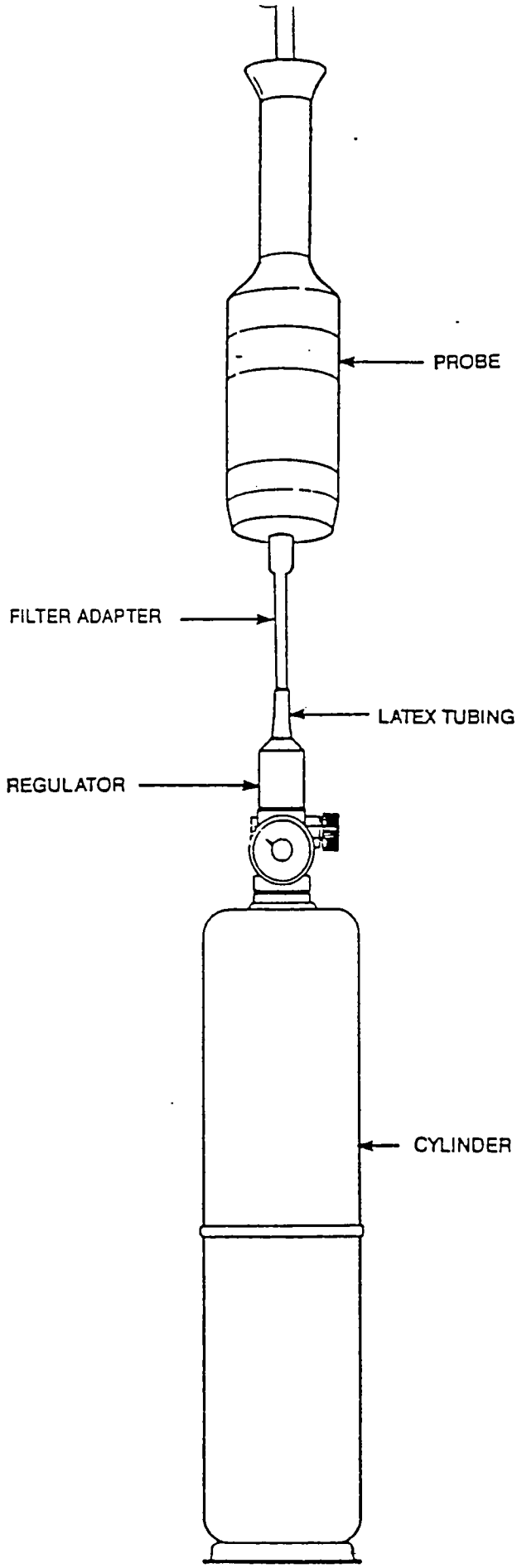

FIGURE 4-1
CALIBRATION TEST SET UP

Adjust the span control so the meter reads the specified value. Turn the function switch back to the STANDBY position. Check and reset the zero setting if necessary. If this setting is changed, recheck the calibration setting.

NOTE: To conserve calibration gas, this cylinder should be opened until a steady reading is secured and any adjustment is made (1 min.). This is the most effecient use of the calibration gas cylinder. Do not use the cylinder below about 30 PSIG as the reading can deviate up to 10% from the rated value. Safely discard the disposable cylinder when empty. If questions arise about disposal, this cylinder contained 99.99% pure air with 100ppm Isobutylene (non-toxic, non-flammable impurity).

If the span setting resulting from calibration is 0.0 or if the calibration cannot be achieved then the lamp must be cleaned (see Section 4-3 and 6-2.1).

If the analyzer still cannot be calibrated (the lamp may be ON but the output too low) or if the lamp has failed it must be replaced.

To replace the lamp, disassemble the probe, remove the old lamp, install a new one and reassemble. Set the SPAN pot to 8.0. Remove the readout assembly case (see Section 6-2.2). Locate the gain control potentiometer, R48, on the power supply board as shown on Figure 5-2. Recalibrate the analyzer adjusting this potentiometer, R48, with a small screwdriver to obtain the specified ppm reading.

If the analyzer still cannot be calibrated, it is possible that it may be leaking. The HW 101 normally operates at approximately 775 mbars +/- 30 mbars, and if not reassembled properly can leak.

NOTES:

1) The screws holding the end cap are special screws with rubber gaskets in the head.

2) The ion chamber has a special gasket on the screen retainer.

3) The filter nozzle must have its gasket in place where it connects with the probe. (The filter nozzle should not be disassembled either for filter replacement or general cleaning)

WARNING

Use great care when operating the analyzer with readout assembly outside the case due to the presence of -1200 V DC.

When calibration is accomplished, turn the analyzer OFF and replace the readout assembly in its case.

Adjustment of R48 potentiometer is used only when a new lamp is installed. At all other times adjustment is accomplished using the SPAN control potentiometer.

TABLE 4-1

SCHEDULED MAINTENANCE ACTION INDEX

Periodicity	Maintenance Action	Reference para.
As required	Battery recharge	4-2
Monthly (or as required)	UV Lamp and Ion Chamber	4-3
Daily	Calibration	4-4

CHAPTER 5

TROUBLESHOOTING

5.1 INTRODUCTION

The initial step of any troubleshooting is a thorough visual inspection to look for possible loose or open connections, shorts, dust or other obvious conditions.

Detailed troubleshooting for fault location and correction is accomplished by steps outlined in the following.

Fault Logic Diagram	Figure 5-1
Test Points, Power Supply PCB	Figure 5-2
Troubleshooting Data	Table 5-1
Troubleshooting Index	Table 5-2
Fuse Index	Table 5-3
Indicator Lamp Index	Table 5-4
Relay Index	Table 5-5
Pad Data, Power Supply PCB	Table 5-6
Pin Data, Amplifier PCB, P2/J2	Table 5-7
Pin Data, Probe Cable, P3/J3	Table 5-8

Disassembly and reassembly as may be required for checking the equipment or placing parts are described in Chapter 6.

WARNING

Turn the function switch on the control panel to the OFF position before disassembly. Otherwise high voltage of -1200 VDC will be present.

WARNING

Do not observe the light source closer than 6 inches. When necessary, observe only briefly. Continued exposure to ultraviolet energy generated by the light source can be harmful to eyesight

WARNING

When conducting tests on analyzer in open condition, exercise great care due to presence of high voltage.

TABLE 5-1

TROUBLESHOOTING DATA

Symptom	Probable Cause	Corrective Action
1. Meter indicates low battery	a. Battery charge low	1) Recharge battery, check meter with function switch in BATT position to ensure the charger is operating properly (See Table 2-1)
	b. Battery dead	1) Disconnect battery and check with voltohmeter. Should read -11 to -15 V DC. Replace if dead. (See Section 6-2.2)
	c. Blown fuse (F1,2A,Fig.3-3)	1) Check fuse. If blown, check low battery for evidence of shorts in wiring, then replace fuse.
	d. Bad connections	1) Check wiring connections. Repair poor or bad connections.
	e. Broken meter movement	1) Tip instrument rapidly from side to side. Meter needle should move freely, and return to zero. If faulty, replace with new meter.
2. Low battery	a. Power supply defective.	1) Check power supply voltages (see Figure 5-2 and Table 5-6). If in error replace control assembly.

3. UV Lamp not ON	a. High Voltage interlock (Microswitch S2) at probe cable connector on readout assy not operating	1) Check by applying pressure to switch plunger with cable in place. Adjust hex screw on side of cable connector, if required to increase throw of switch plunger.
	b. High voltage supply out or faulty.	1) Check high voltage output on power supply board (pad 22). If voltage not correct (See Table 5-3) replace control assembly.
	c. Lamp not making proper connection with high voltage	1) Remove lamp, clean and tighten contacts, re-install lamp.
	d. Lamp faulty	1) Replace lamp.
	e. Short in high voltage lines.	1) Check wiring from power supply board to probe cable connector (J3 pin D) to UV lamp contacts (D1). Remove any shorts.
4. Pump not running	a. Pump stuck	1) Disassemble probe and clean passages with care.
	b. Pump connections faulty	1) Check for wiring connections at pump motor and at probe cable connector. Repair as required.
	c. Low or dead battery	1) Check battery output (power supply board, pad 8) Recharge or replace battery as required.
	d. Pump voltage not correct	1) Check pump voltage (power supply board pads 19 and 21, probe cable pins A and C). If not correct, replace control assembly.

Symptom	Probable Cause	Corrective Action
		2) If pump voltages correct, replace pump.
5. Meter does not respond.	a. Dirty or open probe connection.	1) Clean and tighten or resolder connections in probe.
	b. Broken meter movement.	1) See 1-e-1 above.
	c. Dirty or open connections to meter	1) Clean and tighten connections at meter.
	d. Low or dead battery	1) See 4-c-1 above.
	e. Blown fuse	1) See 1-a-1 above.
6. Meter does not return to zero in STANDBY	a. Broken meter movement	1) See 1-e-1 above.
	b. Dirty or open connections to meter	1) See 5-c-1 above.
	c. Dirty or open connections in probe.	1) See 5-a-1 above.
	d. Zero adjust faulty	1) Rotate zero adjust pot (see Fig. 2-1) (R50, Fig. 3-4). Check pot output at meter probe connector (J3 pins B and L). If voltage does not vary, replace zero adjust pot.
	e. Amplifier faulty	1) Rotate zero adjust pot.Check amplifier output at power supply PCB (Pad 11), amplifier board connector (P2/J2 pin E), or probe connector (P3/J3 pin E), or observe meter. If voltage level on meter does not respond, replace amplifier board.

Symptom	Probable Cause	Corrective Action
	f. Ion chamber shorted	1) Clean ion chamber. (See para. 4-3) Recheck analyzer operation in returning to zero at STANDBY. 2) Replace ion chamber.
7. Meter readings high or low.	a. Incorrect calibration	1) Recalibrate (see para 4-4).
	b. Lamp dirty.	1) Clean lamp (see para 4-3).
	c. Contamination in ion chamber.	1) Clean ion chamber (see para. 4-3).
	d. 0 ring leaking or missing	1) Check 0 rings and adjacent surfaces (see para. 6-2.1).
	e. Power supply board faulty.	1) Check power supply board outputs. (pads 17, 20, and 22 Table 5-3). If voltages not correct, replace control assembly.
	f. Dirty or loose connections.	1) Clean or tighten connections at amplifier board, probe cable, and meter.
	g. Probe may be leaking	1) Place finger over filter nozzle inlet and check flow at the exhaust. There should be no flow. 2) Remove filter nozzle and place finger over inlet and recheck flow at exhaust. There should be no flow. 3) If still leaking, remove end cap and ion chamber and block inlet to pump at small "O" ring on retainer. There should be no flow. If still leaking at this point, call HNU Service Department.

Symptom	Probable Cause	Corrective Action
8. Meter erratic, unstable or non-repeatable	a. Loose cable connection	1) Check cable connection at control panel. Observe meter. Tighten cable as required.
	b. Dirty or loose meter connections	1) Check meter connections. Clean and tighten as required.
	c. Contamination in ion chamber.	1) Clean ion chamber. (see para. 4-3).
	d. Power supply board	1) See 7-D-1 above.
	e. Unstable or noisy	1) Observe lamp (Important see Warning, Section 2-3j). If operation not steady, replace lamp.
	f. Function switch in high gain, most sensitive position (i.e., 0-20ppm)	1) Unstable meter operation is common with function switch in most sensitive position. Turn switch to less sensitive position if desirable.
	g. Pump not operating properly.	1) See 7G
	h. Gas flow slow or	1) See 4-a-1 above.
	i. Meter contacts dirty or loose.	1) Clean and tighten contacts
	j. Electromagnetic interference	1) See 2-4.2
	h. Hi Voltage Interblock	1) See 3-A-1
9.Drifting meter readings	a. Ion Chamber contaminated.	1) Clean ion chamber. (See para. 4-3)
10.LED Readout on probe	a. Out completely Meter OK	
	b. Some segments out	

TABLE 5-2

TROUBLESHOOTING INDEX

Functional Area	Troubleshooting alignment / adjustment (Table 5-2 Para.)	Diagram (Fig. No.)	Functional Description (Para.)
Battery	1,4,5	3-4	3-2
Controls/Circuitry	5,6,7,8,9	3-4	3-2
Meter	1,5,6,7,8	3-4	3-2
Power Supply	2,3,4,7,8	3-4	3-2
Pump	4,8	3-4	3-2
Lamp	3,7,8	3-4	3-2
Ion Chamber	6,7,8	3-4	3-1,3-2
Filter Nozzle			
Readout			

TABLE 5-3

PAD DATA, POWER SUPPLY PCB

Pad No.	Signal Name	Voltage (Vdc)
1	Battery Positive(+)	0
2	Ground	0
3	Battery Charger (+)	0
4	Low Battery Indicator	
5	Low Battery Indicator	
6	Hi-Volt Relay Disconnect -Pump Ground	-12(See Note)
7	Battery Charger (-)	-11 to - 15
8	Battery negative (-)	-11 to - 15
9	Battery negative (-)	-11 to - 15
10	Hi-Volt relay disconnect	0 or -12
11	Amplifier Signal	0 to -5
12	Signal divider for span control	0 to -5
13	" " " " "	"
14	" " " " "	"
15	" " " " "	"
16	" " " " "	"
17	Ion chamber accelerating voltage	+180
18	Zero adjust voltage power	+18 to +21
19	Not Used	
20	Amplifier Power	-9.5 to10.5
21	Pump Power	-10.nominal (see NOTE)
22	UV Lamp	up to -1200 (see para32)
23	Output Signal to Meter	0 to -5
24	Battery Check Voltage	-11 to -15
25	Not Used	
26	Signal Feedback	0 to -5
27	Ground	0
28	Ground	0
29	Not Used	
30	Ground	0
31	Ground	0

NOTE: Differential voltage for pump between pads 21(+) and 6(-) will be between 9.0 and 11.0 volts DC.

TABLE 5-4

PIN DATA, AMPLIFIER PCB, P2/J2

Pin #	Signal Name	Voltage (V DC)
A	Ground	0
B	Span Control Setting	varying
C	Zero Adjust	varying
D	Amplifier Power	-9.5 to -10.5
E	Amplifier Signal	0 to -15.0
F	Zero Adjust Voltage	+18 to +21
3	Zero Adjust	varying

TABLE 5-5

PIN DATA, PROBE CABLE, P3/J3

Pin #	Signal Name	Voltage (V DC)
A	Pump Ground	-12 nominal
B	Zero Adjust	varying
C	Pump Power	-1.0 nominal
D	UV Lamp	up to -1200 (see para. 3-2)
E	Amplifier Signal	0 to -5.0
F	Ground	0
H	Span Control Setting	varying
J	Ground	0
K	Zero adjust Voltage	+18 to +21
L	Zero Adjust	varying
M	Ion Chamber accelerating voltage	+180
N	Amplifier Power	-9.5 to -10.5

NOTE: Differential potential for pump between pins C(+) and A(-) will be between 9.0 and 11.0 Volts DC.

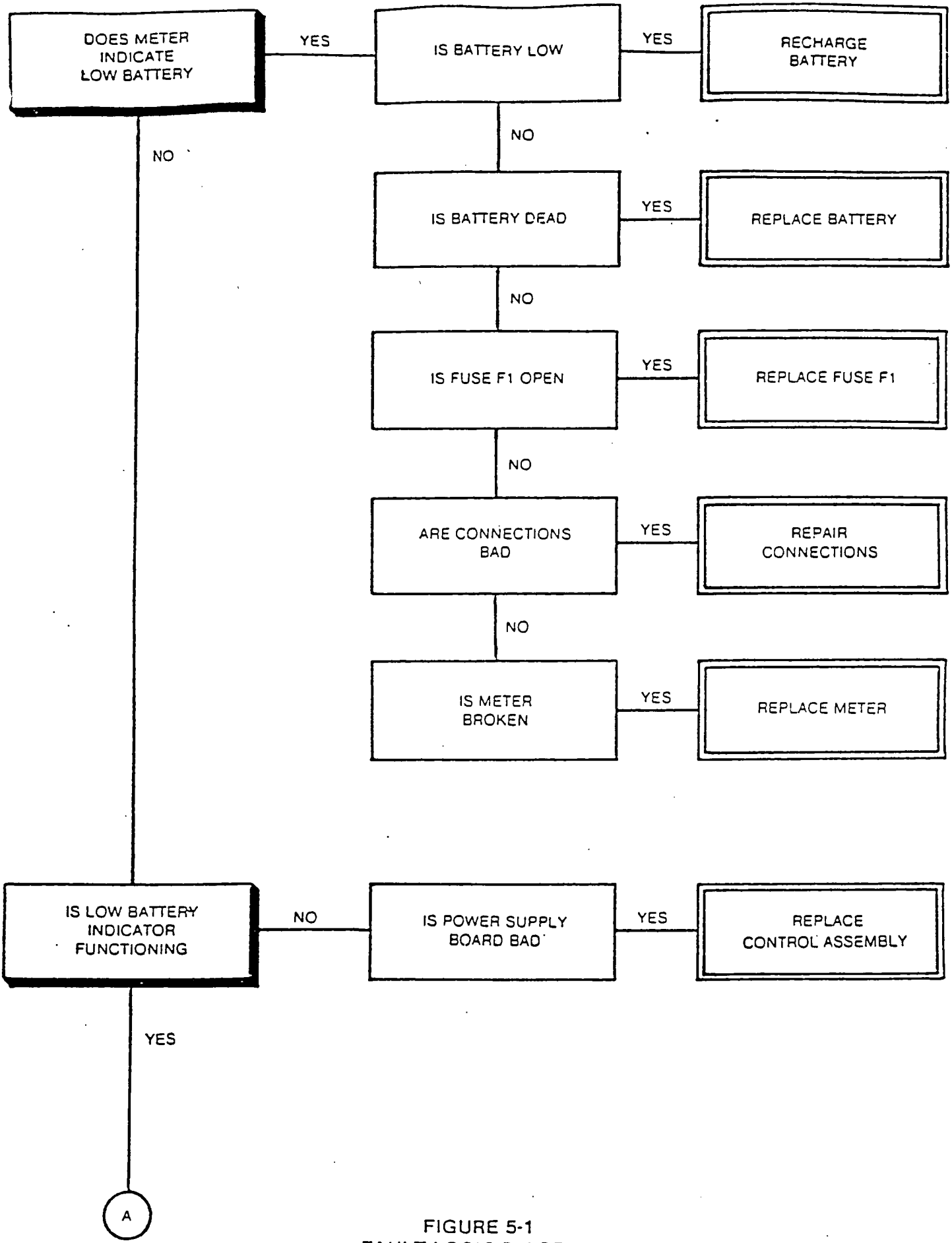

FIGURE 5-1
FAULT LOGIC DIAGRAM

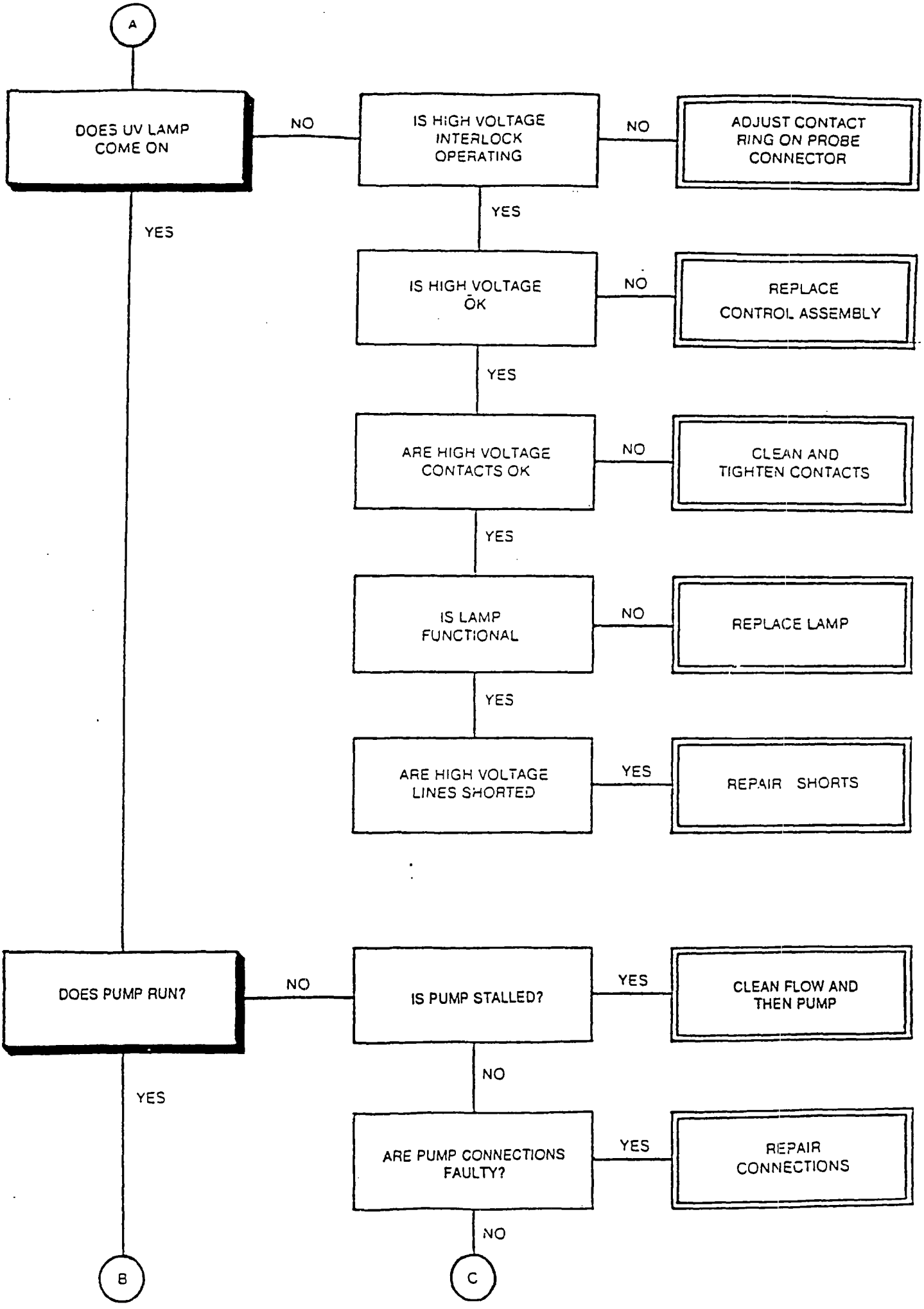
A
DOES UV LAMP COME ON
NO
IS HIGH VOLTAGE INTERLOCK OPERATING
NO
ADJUST CONTACT RING ON PROBE CONNECTOR
YES
YES
IS HIGH VOLTAGE OK
NO
REPLACE CONTROL ASSEMBLY
YES
ARE HIGH VOLTAGE CONTACTS OK
NO
CLEAN AND TIGHTEN CONTACTS
YES
IS LAMP FUNCTIONAL
NO
REPLACE LAMP
YES
ARE HIGH VOLTAGE LINES SHORTED
YES
REPAIR SHORTS
DOES PUMP RUN?
NO
IS PUMP STALLED?
YES
CLEAN FLOW AND THEN PUMP
NO
YES
ARE PUMP CONNECTIONS FAULTY?
YES
REPAIR CONNECTIONS
NO
B
C

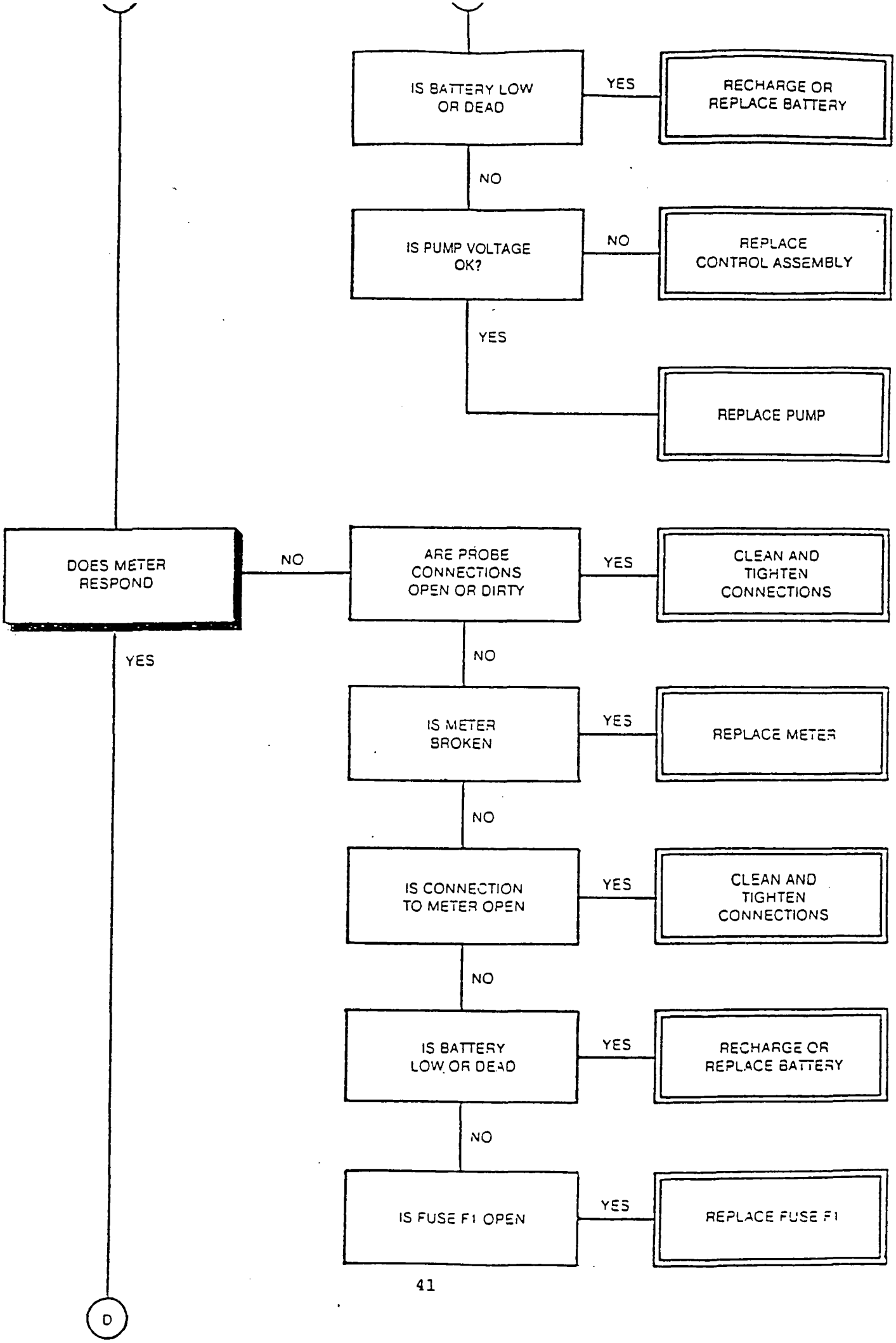
IS BATTERY LOW OR DEAD
YES
RECHARGE OR REPLACE BATTERY
NO
IS PUMP VOLTAGE OK?
NO
REPLACE CONTROL ASSEMBLY
YES
REPLACE PUMP
DOES METER RESPOND
NO
ARE PROBE CONNECTIONS OPEN OR DIRTY
YES
CLEAN AND TIGHTEN CONNECTIONS
YES
NO
IS METER BROKEN
YES
REPLACE METER
NO
IS CONNECTION TO METER OPEN
YES
CLEAN AND TIGHTEN CONNECTIONS
NO
IS BATTERY LOW OR DEAD
YES
RECHARGE OR REPLACE BATTERY
NO
IS FUSE F1 OPEN
YES
REPLACE FUSE F1
D

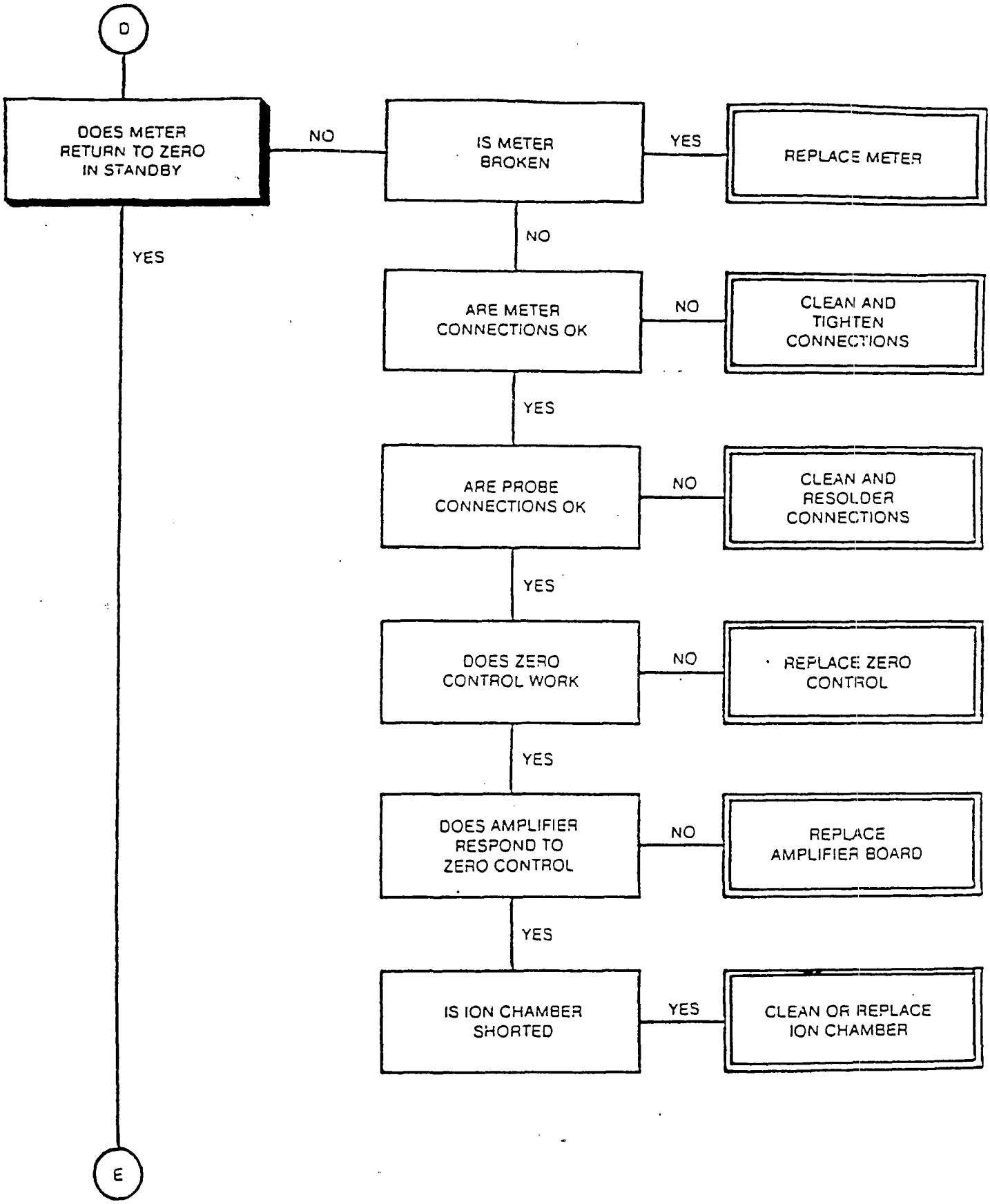
D
DOES METER RETURN TO ZERO IN STANDBY
NO
IS METER BROKEN
YES
REPLACE METER
NO
YES
ARE METER CONNECTIONS OK
NO
CLEAN AND TIGHTEN CONNECTIONS
YES
ARE PROBE CONNECTIONS OK
NO
CLEAN AND RESOLDER CONNECTIONS
YES
DOES ZERO CONTROL WORK
NO
REPLACE ZERO CONTROL
YES
DOES AMPLIFIER RESPOND TO ZERO CONTROL
NO
REPLACE AMPLIFIER BOARD
YES
IS ION CHAMBER SHORTED
YES
CLEAN OR REPLACE ION CHAMBER
E

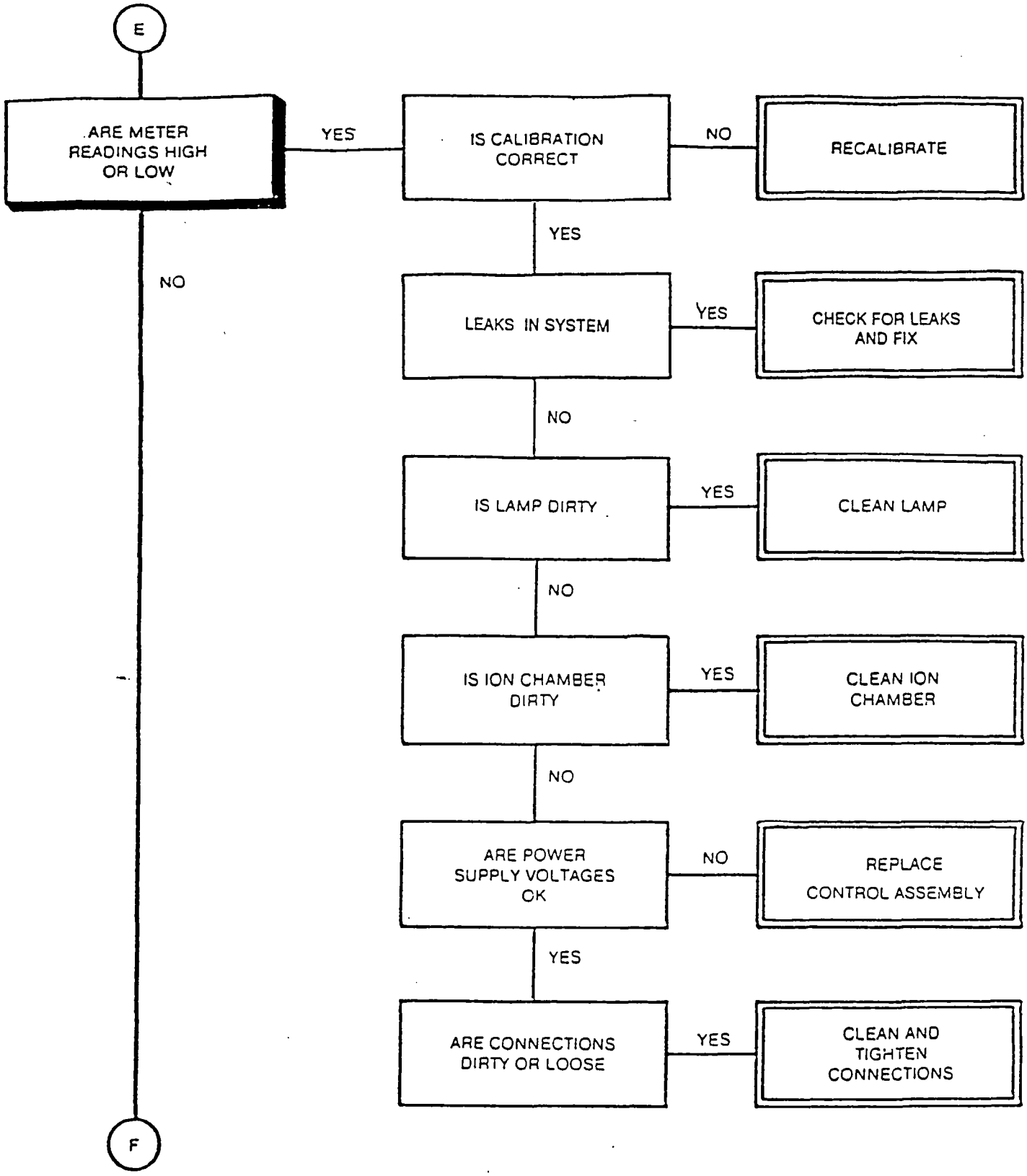
E
ARE METER READINGS HIGH OR LOW
YES
IS CALIBRATION CORRECT
NO
RECALIBRATE
YES
NO
LEAKS IN SYSTEM
YES
CHECK FOR LEAKS AND FIX
NO
IS LAMP DIRTY
YES
CLEAN LAMP
NO
IS ION CHAMBER DIRTY
YES
CLEAN ION CHAMBER
NO
ARE POWER SUPPLY VOLTAGES OK
NO
REPLACE CONTROL ASSEMBLY
YES
ARE CONNECTIONS DIRTY OR LOOSE
YES
CLEAN AND TIGHTEN CONNECTIONS
F

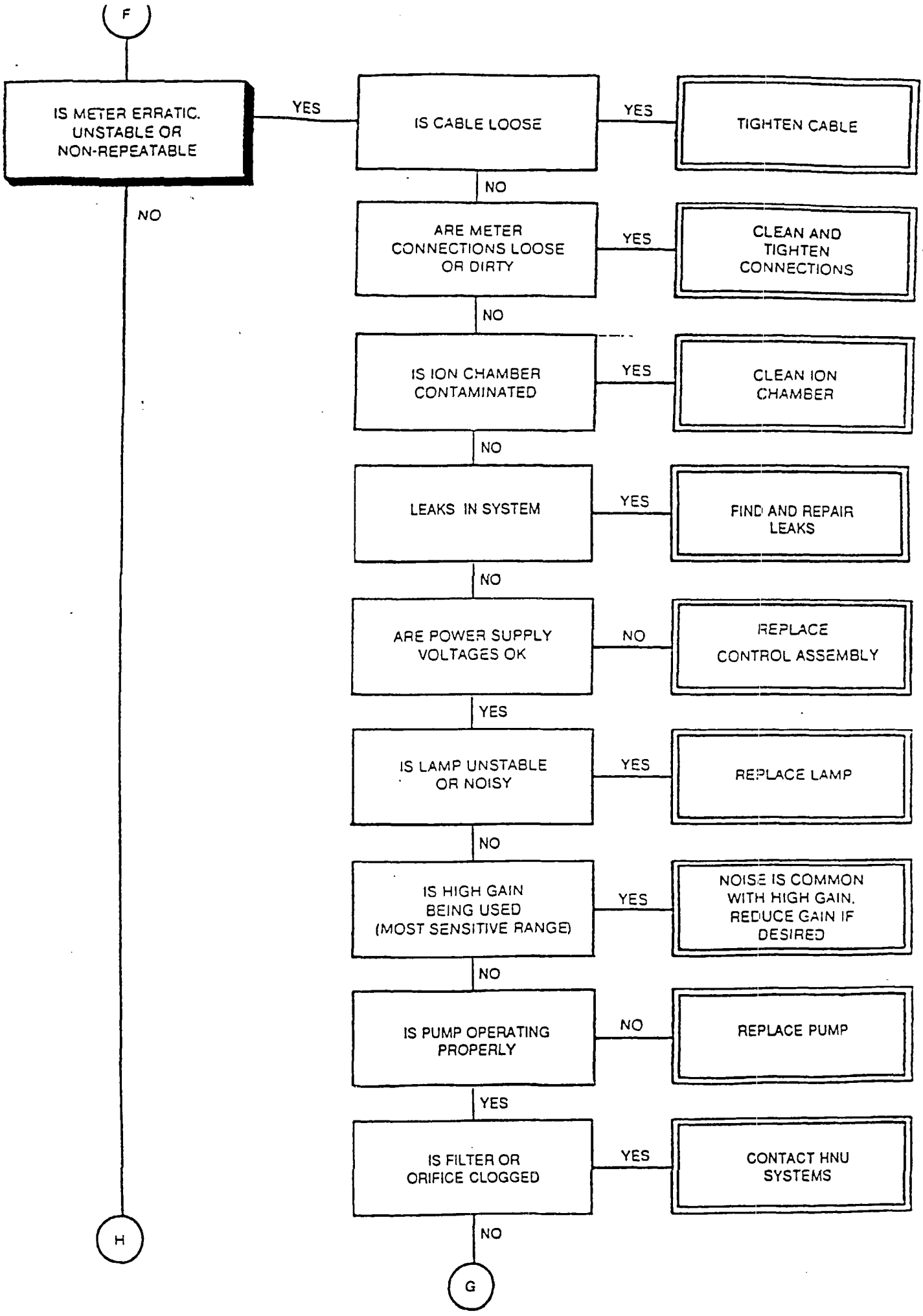
F
IS METER ERRATIC. UNSTABLE OR NON-REPEATABLE
YES
IS CABLE LOOSE
YES
TIGHTEN CABLE
NO
NO
ARE METER CONNECTIONS LOOSE OR DIRTY
YES
CLEAN AND TIGHTEN CONNECTIONS
NO
IS ION CHAMBER CONTAMINATED
YES
CLEAN ION CHAMBER
NO
LEAKS IN SYSTEM
YES
FIND AND REPAIR LEAKS
NO
ARE POWER SUPPLY VOLTAGES OK
NO
REPLACE CONTROL ASSEMBLY
YES
IS LAMP UNSTABLE OR NOISY
YES
REPLACE LAMP
NO
IS HIGH GAIN BEING USED (MOST SENSITIVE RANGE)
YES
NOISE IS COMMON WITH HIGH GAIN. REDUCE GAIN IF DESIRED
NO
IS PUMP OPERATING PROPERLY
NO
REPLACE PUMP
YES
IS FILTER OR ORIFICE CLOGGED
YES
CONTACT HNU SYSTEMS
NO
NO
H
G

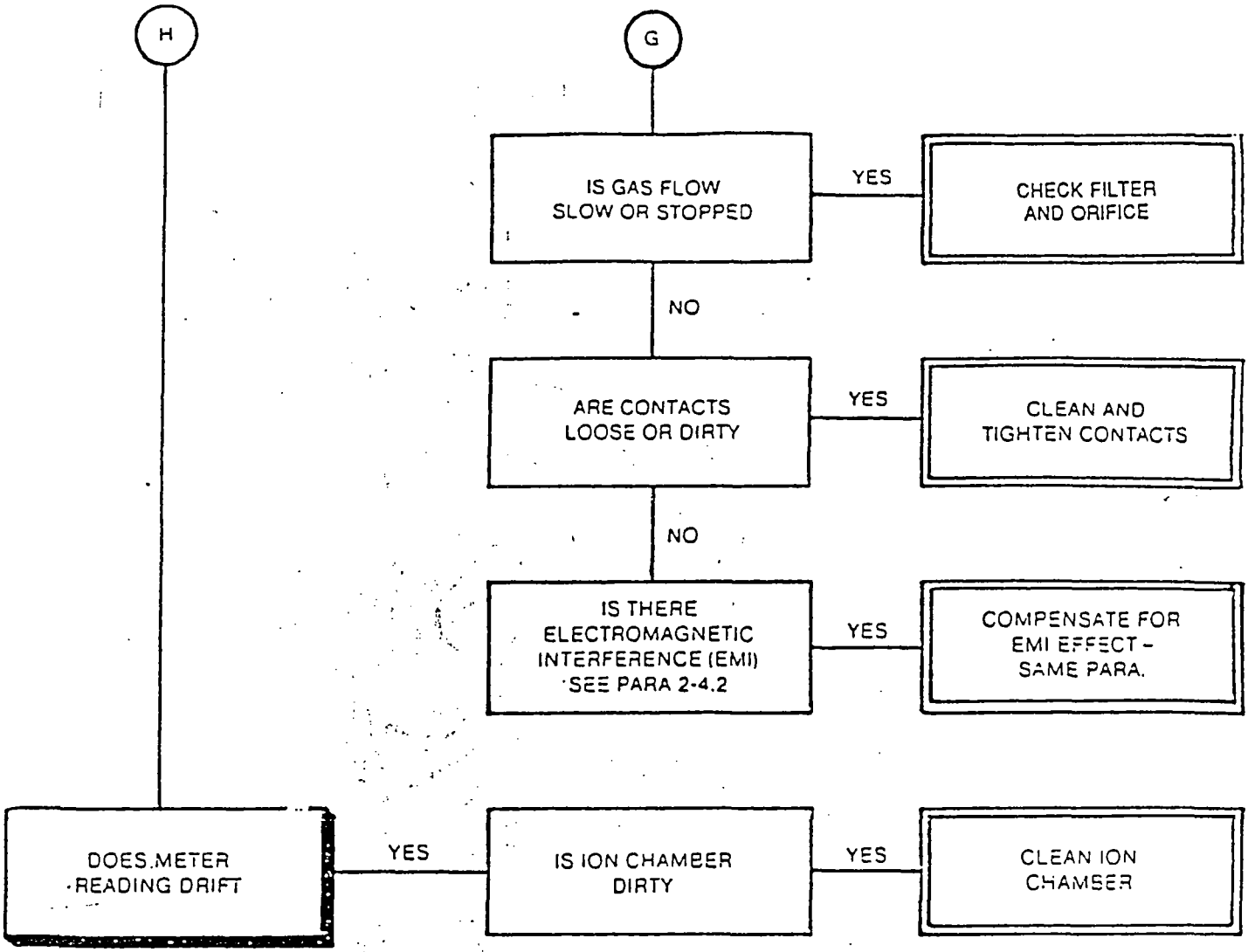

Note: For further details, see Table 5-1.

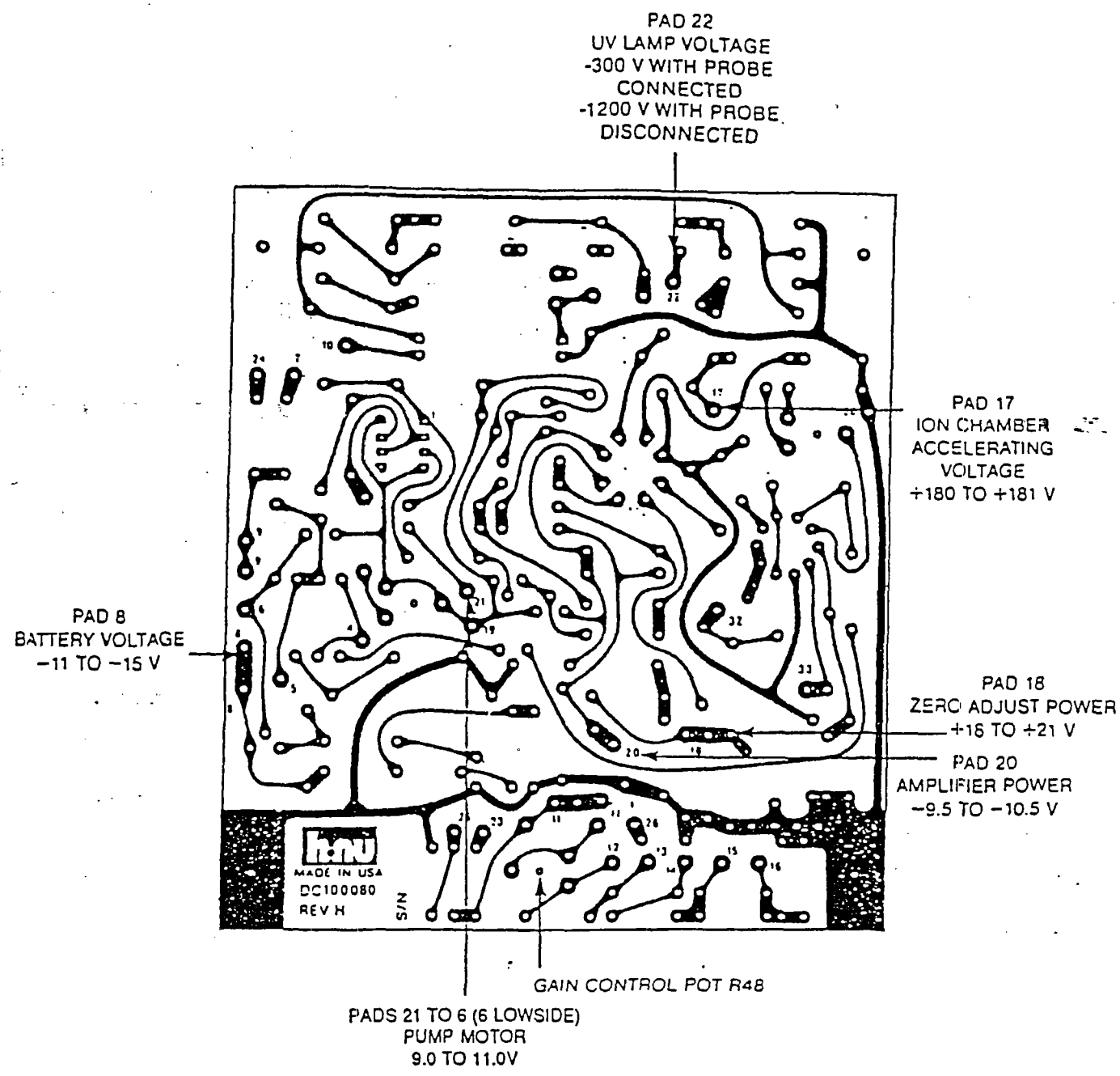

FIGURE 5-2
TEST POINTS
POWER SUPPLY PCB

CHAPTER 6

CORRECTIVE MAINTENANCE

6-1 INTRODUCTION

The scope and function of corrective maintenance of the analyzer consists of the disassembly, replacement of component parts and subassemblies and the reassembly. All adjustments and calibrations are described in chapters 2 through 5.

6-2 EQUIPMENT DISASSMBLY/REASSEMBLY

Disassembly and reassembly of the analyzer for maintenance and part replacement can be accomplished as follows.

6-2.1 PROBE ASSEMBLY

WARNING

Turn the function switch on the control panel to the OFF position before disassembly. Otherwise high voltage of -1200 VDC, will be present.

Disconnect the probe cable connector at the readout assembly.

Hold the lamp housing with the black end cap upright. Loosen the screws on the top of the end cap, separate the end cap and ion chamber from the lamp and lamp housing.

CAUTION

Care must be taken so that the ion chamber does not fall out of the end cap or the light source does not fall out of the lamp housing.

Be sure to retain all "O" rings and gaskets to ensure leak tight reassembly.

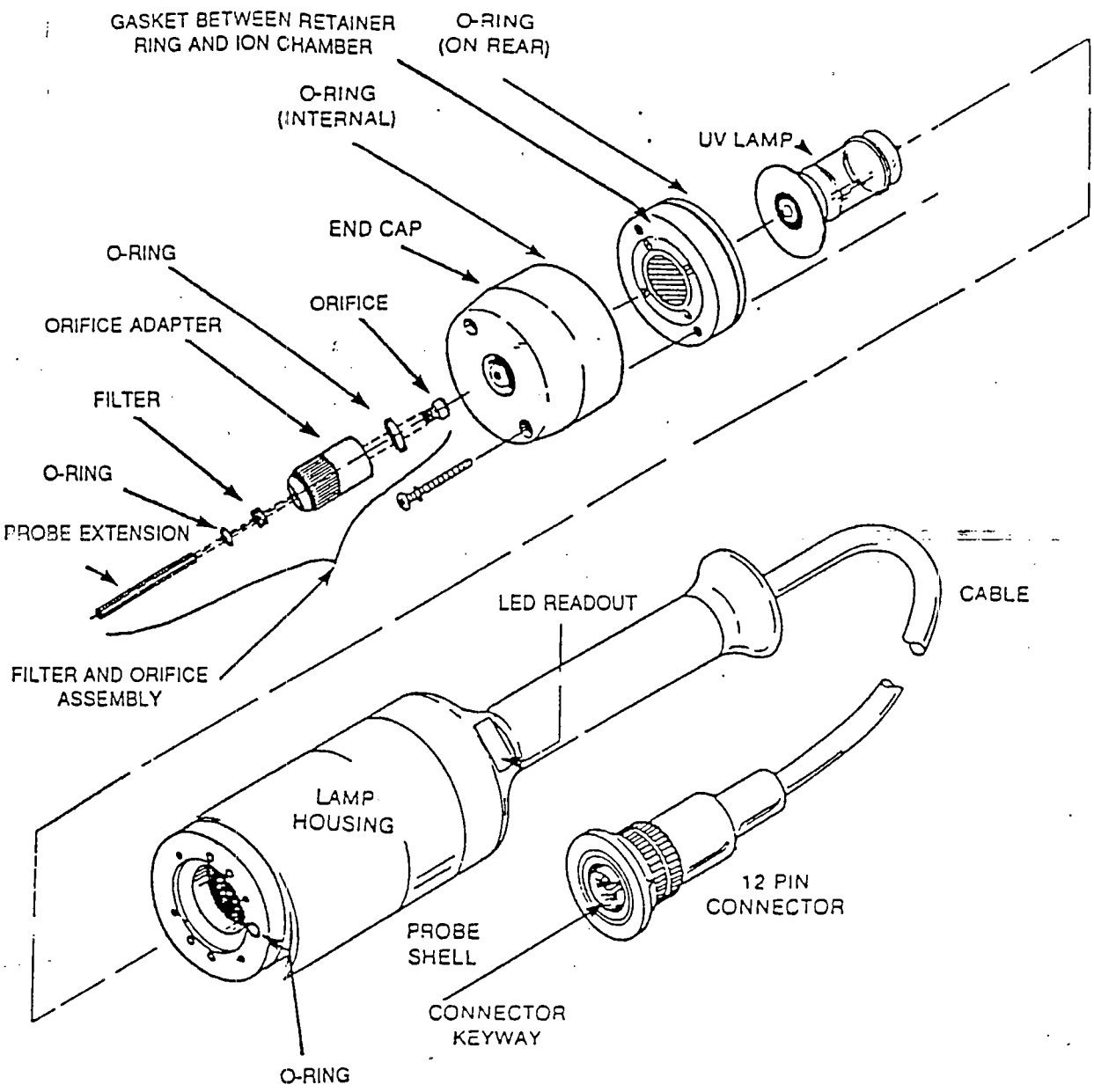

FIGURE 6-1
PROBE ASSEMBLY

Turn the end cap over in the hand. Tap lightly on the top. The ion chamber should fall out of the end cap.

Place one hand over the top of the lamp housing and tilt slightly. The lamp will slide out of the housing.

Clean or replace the lamp as required (see Section 4-3 for lamp cleaning).

Remove any dust or particles that may be deposited in the sample passages by gently blowing, or by lightly brushing with a camels hair brush. Extreme care is required to prevent damage to the pump.

Inspect the surfaces adjacent to the O-rings for evidence of leakage. Replace any O-rings where such evidence appears. A special tool is required to remove the lamp housing from the probe. Contact HNU Systems.

The amplifier board can be removed from the lamp source housing subassembly, (see Fig. 6-2) by unsnapping the coaxial connector, J1, and then removing the retaining screw. The amplifier board will then slide out of the housing assembly.

Reassemble the probe by first sliding the lamp back into the lamp housing. Place the ion chamber on top of the lamp housing, making sure that the contacts are properly aligned, and "O" rings are seated correctly. The ion chamber fits only one way.

Place the end cap on top of the ion chamber and replace the two screws. Tighten the screws enough to seal the O-ring. Check to be sure the assembly is leak tight by blocking the sample inlet and checking for no-flow at the exhaust.

CAUTION

Check ion chamber alignment. It only fits one way.

Align the 12 pin probe connector to the readout assembly and reconnect with a twisting motion until a click occurs. Check to ensure the high voltage microswitch is properly depressed.

Perform zero adjustment (Section 2-3, steps f thru h) and calibrate (Section 4-4) after probe repair, lamp replacement, or probe replacement.

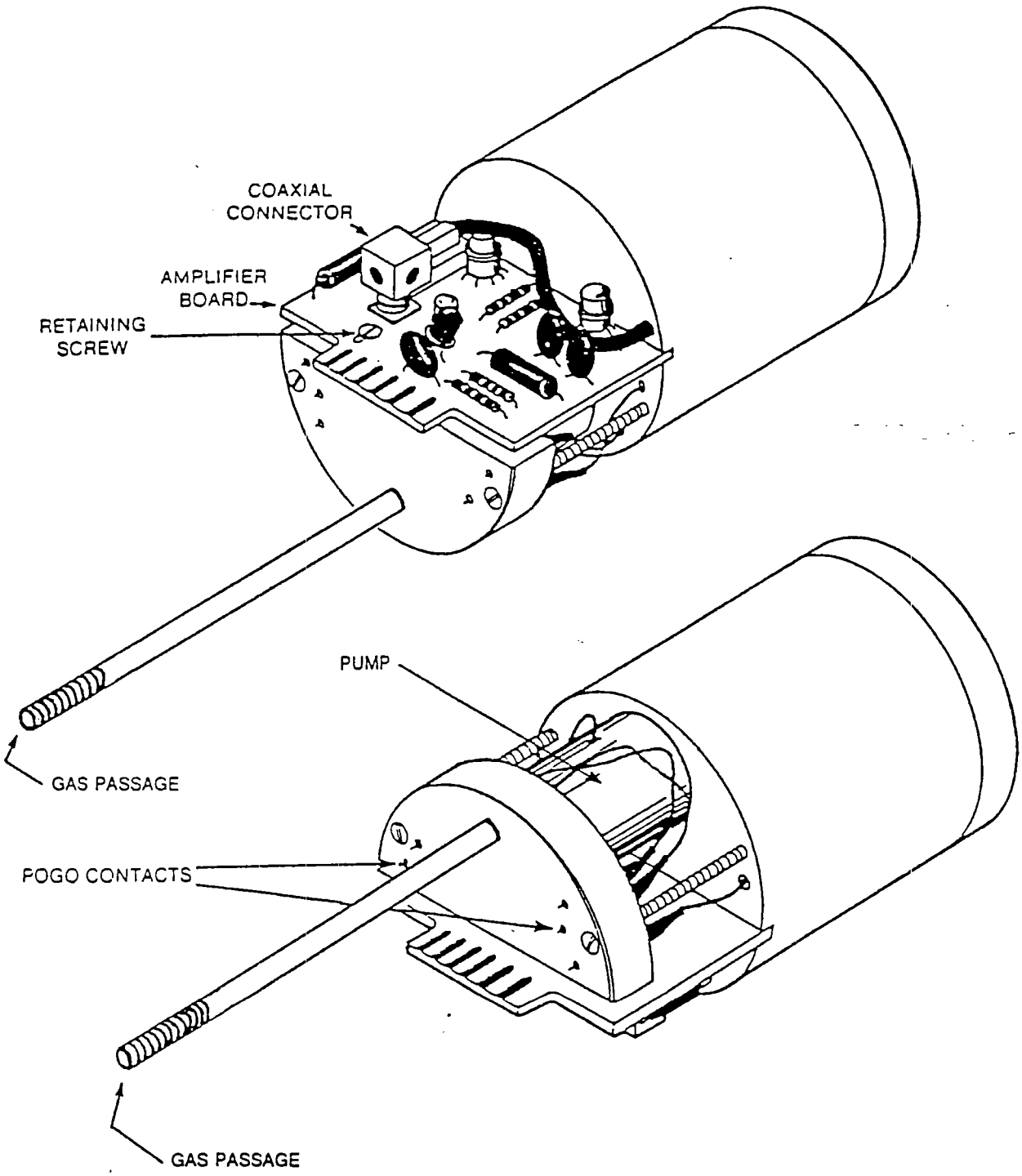

FIGURE 6-2
LIGHT SOURCE
SUBASSEMBLY

6-2.2 READOUT ASSEMBLY

WARNING

Turn the function switch on the control panel to the OFF position before disassembly. Otherwise, high voltage of -1200 VDC will be present.

Disconnect the probe cable connection. Loosen the screw on the bottom of the case and, holding the instrument by the bezel, remove the case. (See Fig. 6-3). Remove and replace the subassemlies as follows:

a. Control assembly - The control assembly is bonded to the bezel and is not removable.

b. Meter - The meter may be removed and replaced by the following steps. (Maintain sealing gasket in original location)

1) Disconnect the leads from the meter.

2) Remove 2 screws from clamps holding meter in place.

3) Loosen 2 nuts on clamps.

4) Move clamps inward to clear opening.

5) Move bezel with meter forward out of assembly.

6) Transfer the clamps to the new meter.

7) Reverse steps 1) thru 6) to install new meter.

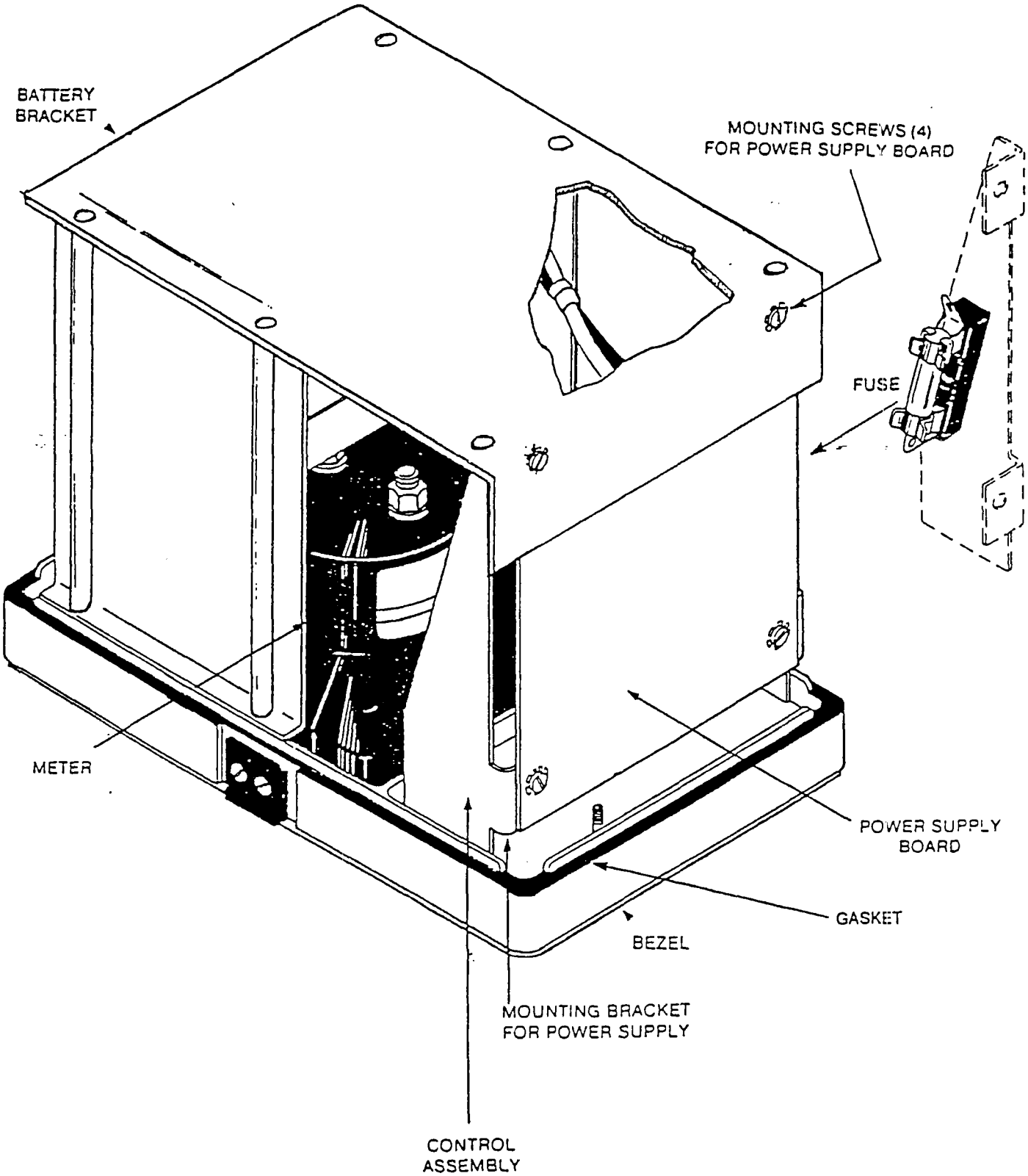

FIGURE 6-3
READOUT ASSEMBLY

c. Battery - The battery may be removed and replaced by the following steps:

1) Disconnect the molex connector to the battery.

2) Remove 4 screws on battery bracket holding battery in place.

3) Remove battery from the bracket on the end away from the control assembly.

4) Install new battery by reversing steps 1) thu 3) above.

5) On the power suply board, turn R53 (see Figure 5-2) a 20 turn 10k potentiometer, fully counter clockwise.

6) Charge the battery until fully charged (approx. 2 hrs).

7) Operate the analyzer on one of the three ppm range settings for 4 1/2 hours.

8) Adjust R53 (see Figure 5-2) in a clockwise direction until the low battery LED indicator just comes on.

9) Recharge the battery. The analyzer will now operate for 10 hours before the low battery indicator comes on.

GROUP ASSEMBLY PARTS LIST

Figure & Index No.	Part Number	Description 1 2 3 4 5 6 7	Units per Assy
1	AC103981	Probe assembly: provides gas detection	1
2	AD103960	Shell and cable assy: consists of shell, base, handle, knob cable and connector	1
3	DA100049-1	Exhaust screw	1
4	AC103980	Lamp Housing: provides housing p ifie PCB	1
		light source (lamp)	1
6	AB100008-A1	Pump Assy	1
7	AB102256-A1	Amplifier PCB	1
8	AD103983	Ion chamber assy	1
9	DB100053-1	End cap	1
10		Screw: end cap assy, 6-32 x 1 1/4 pin head, with internal tooth standard washer #6, both stainless steel	2
11	DB104124	Probe extension: 8" length	1
12	568-020	O-Ring: Ion chamber seal, 1" O.D., 70 Duro ARP, (90512)	1
13	568-012	O-Ring: Extension seal, 7/16" ID 70 Duro ARP, (90512)	1
14	568-005	O-Ring: seal, 7/32" OD, 70 Duro, ARP, (90512)	1
15	568-002	O-Ring: seal, 13/16" OD, 70 Duro, ARP, (90512)	1

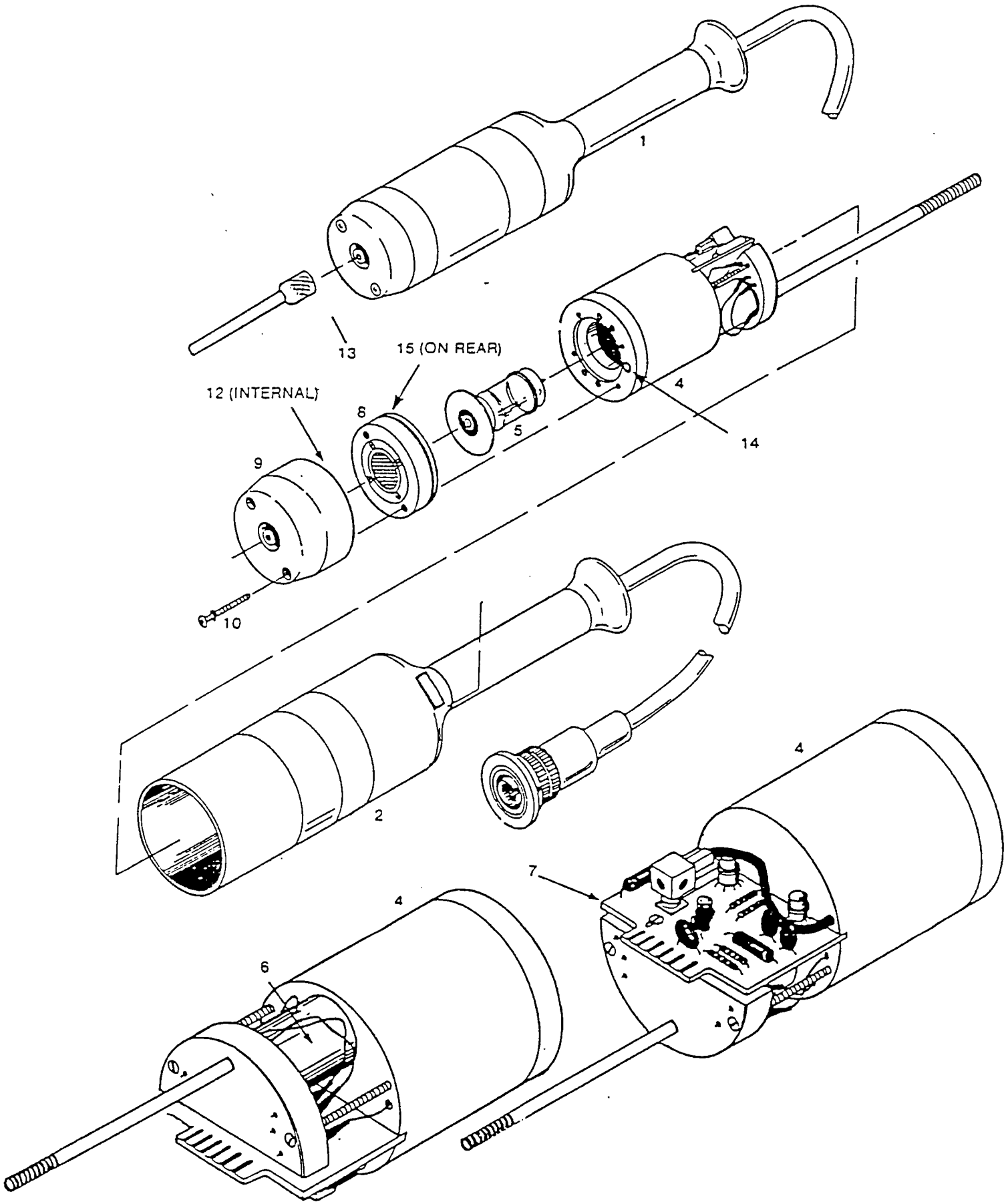

FIGURE 7-1

PARTS LOCATION, PROBE

GROUP ASSEMBLY PARTS LIST

Figure & Index	Part Number	Description 1 2 3 4 5 6 7	Units Per Assy
7-2	AC103959	Readout assy: provides control and indications	1
	AC103961	Meter & Bezel Assy	
1	DC#00012-1	Meter: 4 1/2" (11.3 cm.), Taut band movement, graduated 0-5-10-15-20 division	1
2	AB100086-A1	Switch: Function switch, rotary 6 position, (Ref Des: S1)	1
3	DA101816-1	Potentiometer: span control, 10 turn 100K, Spectrol #534 (02111) (Ref Des: R51)	1
4	DA100029-1	Potentiometer: zero adjust turn, 10K, CTS #VA45R103A (23223) (Ref Des: R50)	1
5	AC103963	Control assy: consists of bracket power supply PCB, cable fuse and power jack	1
6		Fuse: 2A, Bussman #AGC-2 (71400) or Fusetron #MDL-2 (07689) (Ref Des: F1)	1
7	AA100011-A1	Battery: 12 V dc, 2.5 ampere-hours (Ref Des B1)	1
7-3 1	DB100017-1	Strap, neck: supports readout assy from neck of operator when in use	1
2	DB100018-1	Strap, waist: secures readout assy to waist of operator when in use	1
3	AC102269-A1	Charger, battery: 15.0 V dc, 120 Vac, 1ph input,	1
4	DD102240	Case, cover	1
5	DB100050-1	Case, readout assy	1
	AC103953	Display Driver Board Assy	
	AB103965	Low Bat Board Assy	

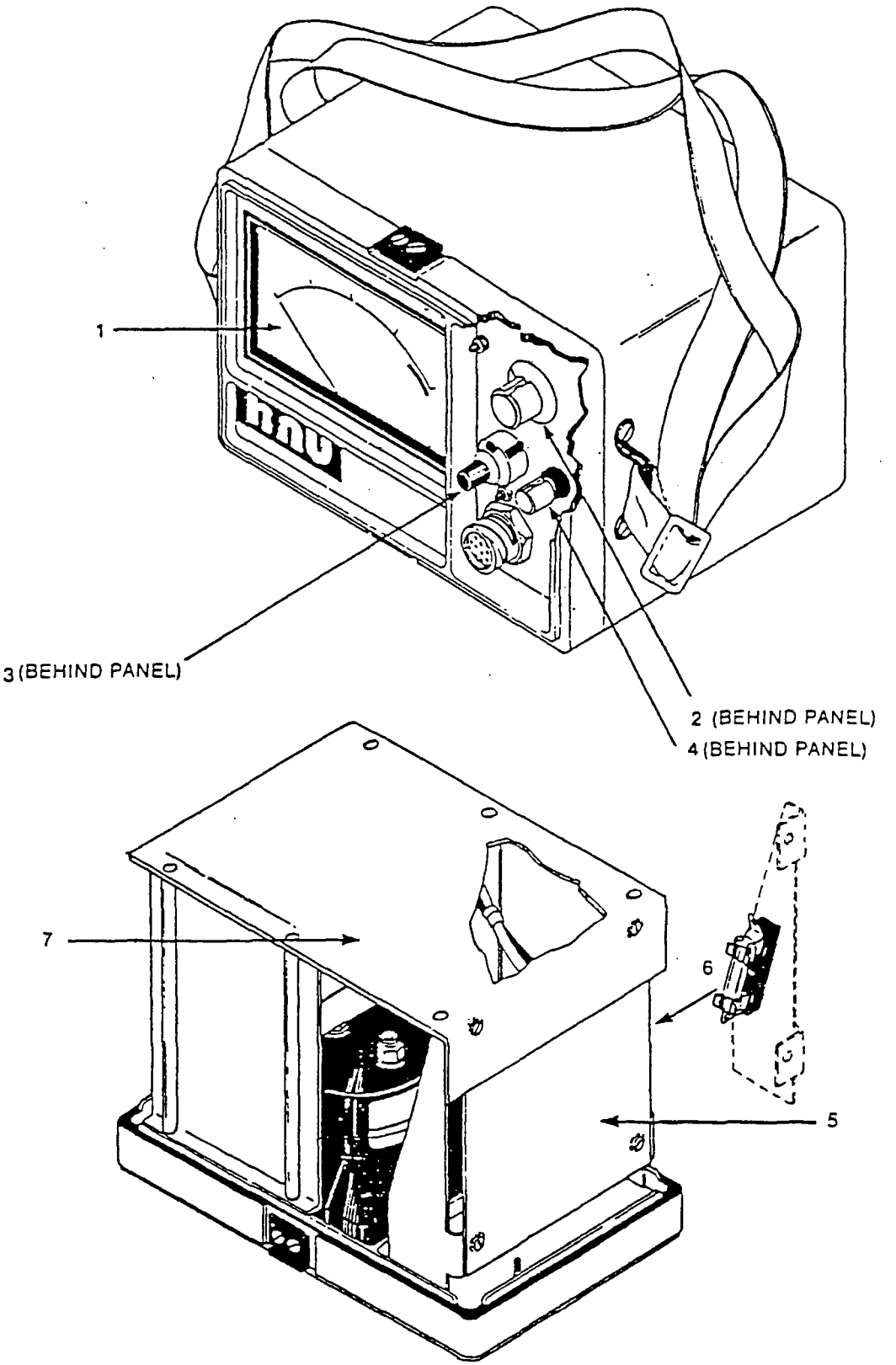

FIGURE 7-2
PARTS LOCATION, READOUT ASSEMBLY

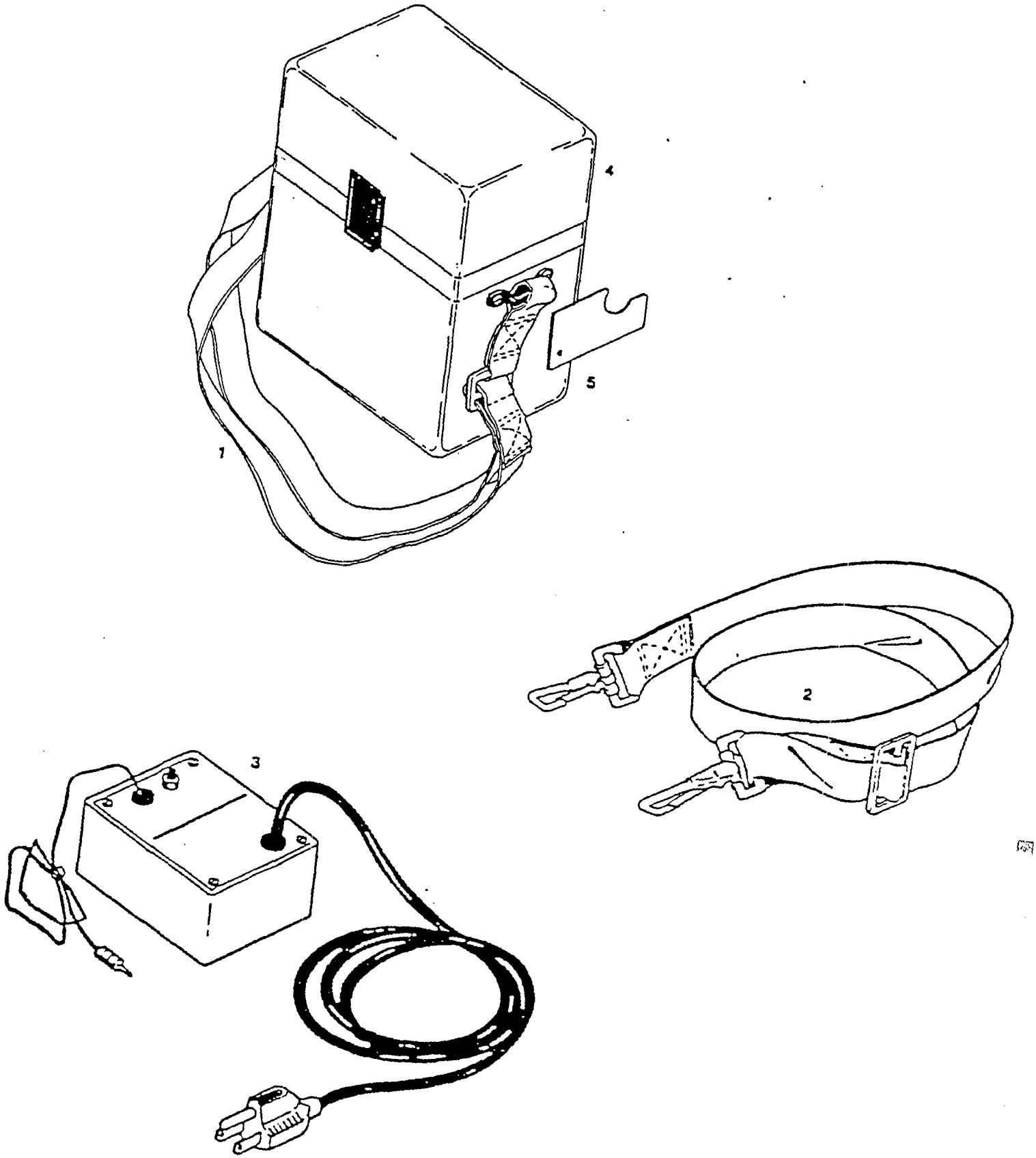

FIGURE 7-3
PARTS LOCATION, OUTER ASSEMBLY

NUMERICAL INDEX

Part Number	Figure and Index Number	Source	Codes	
			Maintenance	Recoverability
AD102242	1-1	PD	3L	L
AA100011-A1	7-2-7	PA	3L	L
AA100111-A1	7-1-11	PA	3Z	Z
AB100008-A1	7-1-6			
AB100086-A1	7-2-2			
AB102256-A1	7-1-7	PA	3L	L
AC100004-A1	7-1-2	PA	3G	G
AC100107-A1	7-1-4	PA	3Z	Z
AC102257-A1	7-1-1	PA	3L	L
AC102260-A1	7-2-5	PA	3L	L
AC102269-A1	7-3-3	PA	3Z	Z
AGC-2	7-2-6	PA	3Z	Z
OA100029-1	7-2-4			
DA100049-1	7-1-3	PA	3Z	Z
DA101816-1	7-2-3			
DB100017-1	7-3-1			
DB100018-1	7-3-2			
DB100050-1	7-3-5			
DB100053-1	7-1-9	PA	3Z	Z
DB100012-1	7-2-1	PA	3Z	Z
DD102240	7-3-4	PA	3Z	Z
MDL-2 or AGC-2	7-2-7	PA	3Z	Z
PA100009-A1	7-1-5	PA	3Z	Z
PA100010-A1	7-1-12 thru 7-1-15			
VA45R103A	7-2-4			
534	7-2-3			
568-025	7-1-15	PA	3Z	Z
568-005	7-1-14	PA	3Z	Z
568-012	7-1-13	PA	3Z	Z
568-020	7-1-12	PA	3Z	Z
AC100005-A1	7-1-8	PA	3L	L
DC102573	4-3-1	PA	3Z	Z
DC102579	4-3-2	PA	3Z	Z

REFERENCE DESIGNATION INDEX

Reference Designation	Part Number
B1	AA100011-A1
F1	AGC-2 or MDL-2
R50	DA100029-1, VA45R103A
R51	DA101816-1, 534
S1	AB100086-A1

AVAILABLE SPARE PARTS KITS

PA100010-A1	O-Ring Kit: Contains two each of 568-020, 568-012, 568-005 and 568-002
PA-102743-A1	Five Piece Spare Parts Kit: Contains one each of PA100009-A1 UV light source, AA100011-A1 Battery, AB102256-A1 Amplifier PCB, AC102260-A1 Control Assembly and PA100010-A1 O-Ring Kit.
PA-102744-A1	Three Piece Spare Parts Kit: Contains one each of PA100009-A1 UC light source, AA100011-A1 Battery and PA100010-A1 O-Ring Kit.

Bedienungsanleitung
Operating Instructions

COMPUR 4100 SD

Monitox HCN

Compur-Electronic GmbH

Compur - Texas
(713) 939-7007
call for supplies

A Scientific, Inc.
Barclay Blvd.
olnshire, Illinois 60069
ne: 800-323-2000 (in IL 312/634-2800)
x: 72-6399 MDA-USA • Fax: 312-634-1371

Gasspurenwarnsystem
COMPUR 4100 SD HCN

Das Gasspurenwarnsystem COMPUR 4100 SD HCN besteht aus
Gasdetektor (Warngerät mit Anzeige)
Gasgenerator (Prüfgerät)
Konsole (empfohlenes Zubehör)
Protokollheft (empfohlenes Zubehör)

Das System ist speziell für die MAK-Wert-Überwachung ausgelegt.

ACHTUNG!
Trotz der stark vereinfachten Bedienung durch den Endbenutzer ist das Monitox 4100 SD für HCN trotzdem ein komplexes Meßgerät, das eine sichere Funktion nur bei sorgfältiger Beachtung dieser Bedienungsanleitung und regelmäßiger Kontrolle durch die für den Einsatz des Gerätes Verantwortlichen gewährleistet. Dies gilt besonders für den regelmäßigen Zellenersatz sowie den täglichen Funktionstest. Das Einstellen der Warnschwellen liegt ebenso ganz in der Verantwortung des Betriebes; COMPUR empfiehlt die strenge Einhaltung der MAK-Werte. Eine Reparatur ist wegen des Ex-Schutzes nur durch den Hersteller zulässig.

Das Gerät wird von COMPUR mit folgenden Einstellwerten ausgeliefert:
Alarmschwellen:
1. bei MAK = 10 ppm HCN
2. bei 2 MAK = 20 ppm HCN

Die Detektorzelle wird bei HCN Konzentrationen über 1000 ppm irreversibel geschädigt. Dadurch geht die Anzeige nicht mehr auf „Null" zurück. In diesen Fällen muß die Zelle ausgetauscht werden.

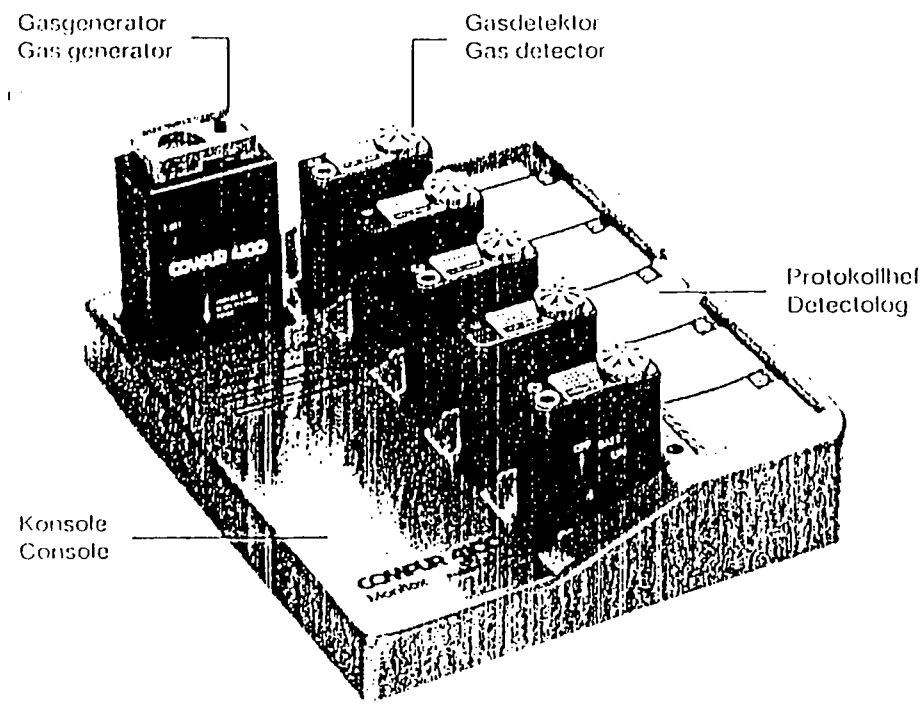

Abb. 1
Picture 1

Abb
Pict

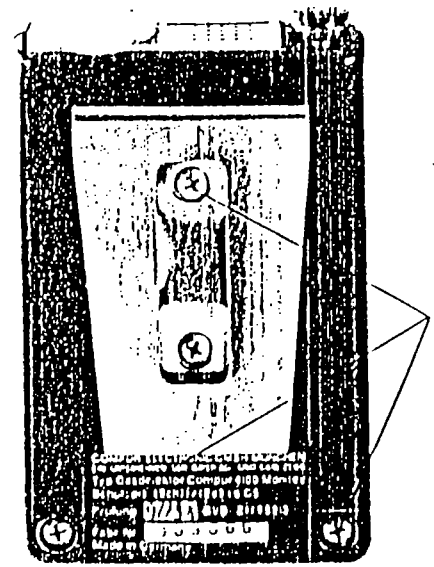

Abb. 3
Picture 3

7 Gehäuseschrauben
8 Dosimeterstecker
9 Ohrhörerstecker

7 housing s
8 dosimete
9 earphone

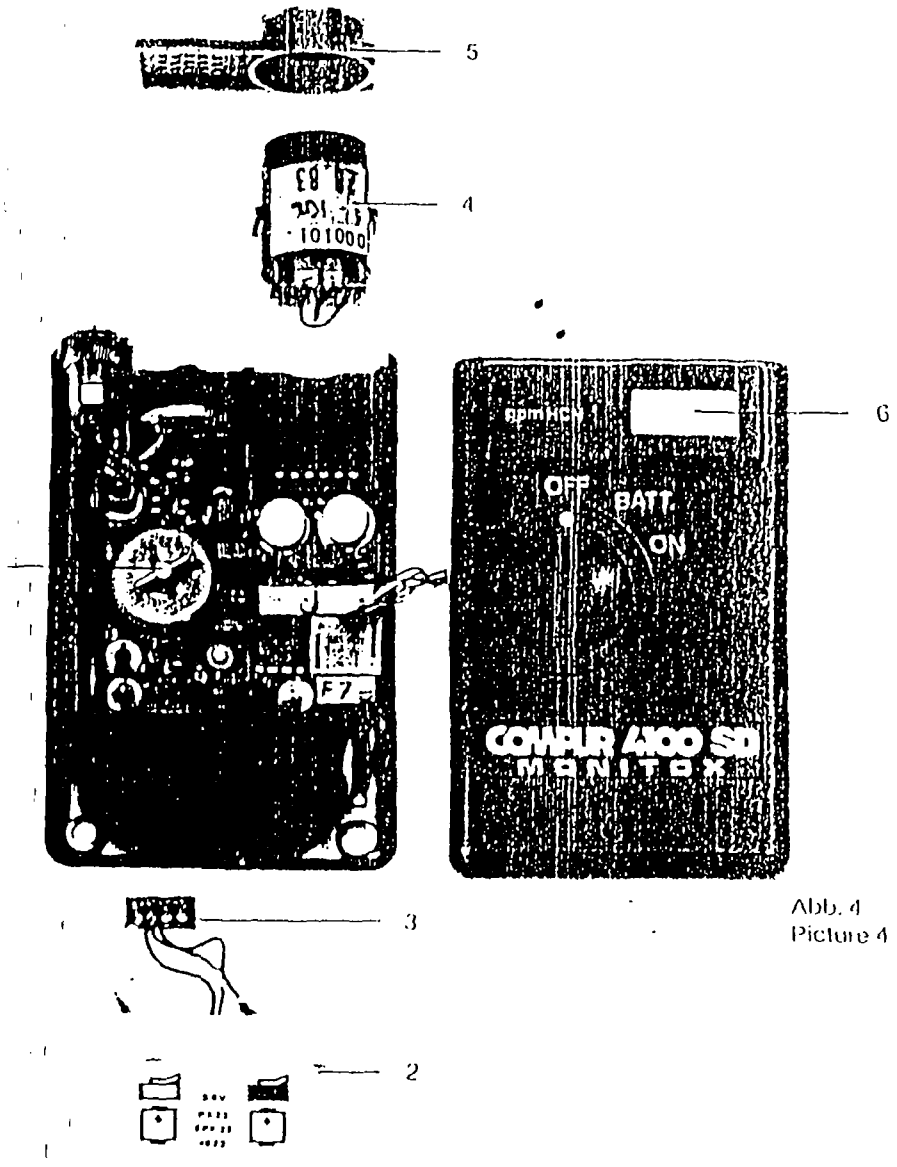

Abb. 4
Picture 4

1 Ein-/Aus-Schalter
2 Batteriebehälter
3 Stecker des Batteriebehälters
4 Detektorzelle
5 Filterkappe
6 Display

1 On /Off-switch
2 battery pack
3 battery pack connector
4 detector cell
5 filter cap
6 display

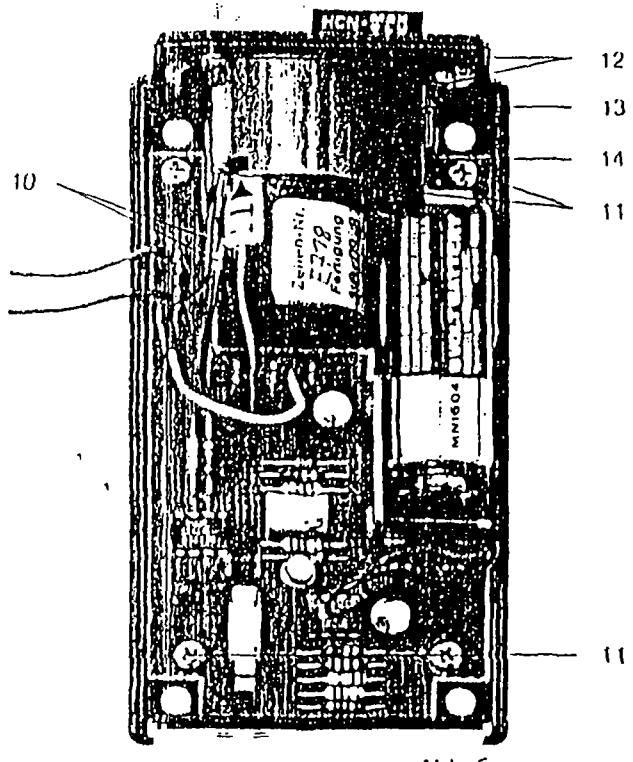

Abb. 5
Picture 5

10 Lüfteranschlüsse
11 Leiterplattenschrauben
12 Befestigungsschrauben
13 Schaltstift
14 Schalter

10 fan leads
11 pcb-screws
12 fan screws
13 switch pin
14 switch

weise zur Fehlersuche

	Hinweis
metest Detektor nicht	Batterien wechseln (5.1.)
tionstest mit rator geht nicht	a) Evtl. mit 2. Detektor nachprüfen, ob Generator o. k., sonst b) b) Filterkappe wechseln (5.2.), wenn nicht verschmutzt, c) c) neue Sensorzelle einbauen (5.3.).
rator liefert genug Gas	Zelle befeuchten, d. h. mit Feuchthaltekappe mehrere Tage stehen lassen, sonst Generatorzelle wechseln (5.4.).
Generator tet rote LED Test auf	Generatorbatterie ersetzen (5.5.).

6.

Zubehör und Verbrauchsmaterial

Bestellnummern für Verkaufseinheiten

1. Gasdetektor HCN Digitalanzeige, 2 Alarmschwellen mit Dosimeter-Anschluß	U 5306 203
2. Zelle HCN mit Filterkappe	U 5800 103
3. Filterkappe HCN (10 Stück)	U 5810 341
4. Batterie PX 23 (1 Stück)	U 4990 001
5. Gasgenerator HCN	U 5390 300
6. Generatorzelle HCN	U 5820 300
7. Kalibriergasadapter	U 5900 106
8. Meßleitung: Eichen	U 5900 112
9. Digitalvoltmeter	U 5900 018
10. Stromgenerator	U 5900 023
11. Kalibrierkabelsatz für Stromgenerator	U 5900 125
12. Protokollheft	U 5900 004
13. Ohrhörer	U 5900 002

Table of Contents

		Page
	Important Information	20
1.	Technical Description of the COMPUR 4100 SD Monitox Detector for HCN	21
1.1.	Applications	21
1.2.	Mode of Operation	21
1.3.	Technical Data	22
1.4.	Cross-sensitivities	23
2.	Technical Description of the COMPUR 4100 Monitox Gas Generator for HCN	23
2.1.	Applications	23
2.2.	Mode of Operation	24
2.3.	Technical Data	24
3.	Use of the detector and generator	25
3.1.	Detector Actuation and Functional test	25
3.2.	Use of the Gas Detector	26
3.3.	Connecting the Earphone	26
3.4.	Connecting the Dosimeter	26
3.5.	Digital Display	27
3.6.	Detector Deactivation and Storage	27
4.	Calibration Instruction for the Detector	28
4.1.	Accessories required	28
4.1.1.	Calibration with gas	28
4.1.2.	Calibration – Electronical Method	28
4.2.	Zero calibration and gain adjustment with calibration gas	28
4.2.1.	Preparation	28
4.2.2.	Zero-Adjustment	28
4.2.3.	Gain Adjustment with gas	29
4.2.4.	Gain Adjustment with the current calibrator	29
4.3.	Setting the Alarm Thresholds	29
4.4.	Concluding the adjustment operations	29
5.	Maintenance and Servicing Instructions	30
5.1.	Battery Replacement	30
5.2.	Filter Cap Replacement	30
5.3.	Sensor Cell Replacement	30
5.4.	Generator Cell Replacement	30
5.5.	Generator Battery Replacement	30
5.6.	Troubleshooting	30
6.	Accessories and Consumables	30
	Attachment	30

Detection and Warning System
IPUR 4100 SD Monitox HCN

:OMPUR 4100 SD Monitox Gas
:tion and Warning System comprises
detector (alarm unit with digital display)
generator (test unit)
sole (recommended accessory)
tectolog (recommended accessory)

system is especially designed to
tor the TLV of HCN.

!TION!
ugh the 4100 SD Monitox for HCN has
highly simplified for ease of operation
user, it is nevertheless a complex
suring instrument which will operate
ly only if these operating instructions
arefully observed and if the instrument
ecked regularly by the safety officer.

This applies in particular to the regular replacement of the cells and daily functional tests. The responsibility for any changes made in the alarm threshold settings must be borne entirely by the operator; COMPUR recommends the strict observance of the TLV. Since the unit is designed to be intrinsically safe, all repairs must be made by the manufacturer or other approved personnel.

COMPUR offers the instrument with the following factory settings:
first alarm threshold = at TLV = 10 ppm
second alarm threshold = at 2 TLV = 20 ppm

The detector cell will be destroyed if the detector is permanently exposed to a HCN-concentration exceeding 1000 ppm. In this case the cell has to be replaced.

1.

Technical Description of the COMPUR 4100 SD Monitox Detector for HCN

1.1.

Applications

The COMPUR 4100 SD Monitox is a personal monitor for HCN.

It is designed to be worn attached to the clothing near the breathing zone of the person to be protected. The detector produces an audible first alarm when the HCN-concentration exceeds the TLV (factory setting: 10 ppm) and a second alarm, when it exceeds 2 x TLV.

Independent of the alarm setting, the digital display shows the actual HCN-concentration in ppm (parts per million) in the nominal range of 0 – 100 ppm HCN.

In conjunction with the COMPUR 4102 Dosimeter, the unit can be employed to register HCN-concentrations at confined spaces ranging from 0 to 10 x TLV.

The COMPUR 4100 SD Monitox cannot be used to measure process gas streams or in presence of continuous high HCN-concentrations.

1.2.

Mode of Operation

Ambient air diffuses through the filter inse (a dust filter) (5) to the measuring cell. The measuring cell, a dual-electrode electrochemical cell with an organic electrolyte gel, generates an output curre proportional to the partial pressure of HCi in the air.

A series of electronic amplifiers supply a voltage signal which is fed to the comparator for the alarm threshold. If the first alarm threshold is exceeded, an intermittent tone is produced; if the seco alarm threshold has been exceeded a du tone signal is produced by the tone generator and loudspeaker (or earphone very loud areas). The standardised analo signal corresponding to the actual HCN-concentrations (the TLV corresponds to 80 mV) can be fed to the Dosimeter.

The same signal is fed to the AD-convert driving the digital display. The display is adjusted to give a reading of 10 ppm at 80 mV input.

The 4100 SD Monitox consists of two separate power circuits (via two miniatu batteries); the circuit for the analogue pa is separated from that for the alarm-generation.

When the „on-off" switch is moved to th „Batt." position, the batteries will be test before the instrument is turned on. In thi switch position, the batteries are electronically tested under the high load the final tone stages. If one of the batte fails to reach the predetermined lower theoretical limit, no alarm will be heard.

nical Data for the COMPUR 4100 SD Monitox for HCN

mity certificate		BVS 82.013
class		EEx ib II C T 6
sions		104.4 x 62 x 24 mm
l (with batteries)		approx. 150 g
supply		2 x PX 23 (5,6 V)
y service life		approx. 1000 h.
y range		0 – 100 ppm
volume		min. 80 dBA / 30 cm
levels		2 alarms, adjustable
onse time		T_{20} < 10 s T_{90} < 3 min.
to alarm	20 ppm	< 15 s
	50 ppm	< 3 s
ection possibilities		earphone, dosimeter
erature range		0 – 50 °C
ve humidity		10% – 95%
point drift		< 1 ppm / 6 months
tivity drift		< 15% / 6 months
ce life of the cell		min. 6 months (dependant on dose)

1.4.

Cross-sensitivities

Test components	Test concentration	Indication in ppm HCN
SO_2	5000 ppm / 40% rH	10
NO_2	10 ppm	– 6
NH_3	1000 ppm	10
CO	1000 ppm	—
CO_2	1000 ppm	—
H_2	1000 ppm	—
CH_2:CHCN	10 ppm	—
CH_3CN	200 ppm	—
$(CH_3)N$	500 ppm	17
CH_3OH	200 ppm	—
$COCl_2$	5 ppm	10
Cl_2	10 ppm	5
HCl	10 ppm	7
H_2S	2 ppm	10
Hydrocarbons, saturated	2% vol.	—
Hydrocarbons, unsaturated	1% vol.	—
Aromatic compounds (also alcylated)	200 ppm	—

2.

Technical Description of the COMPUR 4100 SD Monitox Gas Generator for HCN

2.1.

Applications

The HCN gas generator serves to enhanc the reliability of the Monitox gas detectio and warning system. The Monitox detect must undergo a functional test by placing on the generator before each use. The generation of a gas concentration exceeding the TLV ensures that the detec will respond reliably during use (picture 2

The gas generator, however, is not design to generate a calibration gas of known concentration. Daily testing of the Monit detector does not mean that the user is n recommended to change cell sequentiall

The COMPUR 4100 Gas Generator must not be exposed to or used in explosive atmospheres.

N.B.: The generator cell may dry out at very low relative humidity in the air this case, it is necessary to put the moisture cap delivered with the generator on top of the generator always when it is not in use.

This ensures a correct gas concentration for the detector tes

le of Operation

witch on the generator is activated by g the detector in the matching recess generator head.

all fan feeds a flow of air past the rator cell directly to the detector cell. e same time, gas is generated olytically in the generator cell in such nount that the gas concentration is enough to cause the detector to nd within 10 seconds (alarm threshold pm). The period of gas generation is ated by the green LED.

The red LED indicates when the battery must be replaced.

After a 10 seconds interval, gas production is terminated and the fan conveys pure air until the detector is removed.

This functional test of the detector checks any of the following defects:

- clogging of the dust filter
- a malfunctioning cell
- a malfunctioning electronics system
- a malfunctioning generator.

hnical Data of the COMPUR 4100 SD Monitox 3 Generator for HCN

ensions	133 x 65 x 40 mm
ht (incl. batteries)	approx. 250 g
perature range	0 °C – 50 °C
er supply	9 volt alkali battery, leakproof, e.g. Mallory 1604
rator cell service life	approx. 3000 tests or for 1 year
ery service life	approx. 3000 tests

3.

Use of the detector and generator

3.1.

Detector actuation and functional test

Battery Test

Turn the switch on the COMPUR 4100 SD Monitox to "Batt.". If the battery has sufficient power to operate the detector for eight hours, an audible (intermittent) tone will be heard. The LCD-display is switched off at the "Batt." test position. If no tone is emitted, this indicates that at least one of the batteries is exhausted. For safety reasons both batteries should be replaced (refer to section 5.1.).

When the audible tone has been heard (to preserve batteries, the test should be as short as possible), the switch is moved to "ON". The tone will cease. The LCD-display is operating now, it must show "0" ppm after some seconds.

Functional Test (picture 2)

Place the detector on top of the generator as illustrated.

As soon as the detector sounds its alarm, it must be removed from the generator. The detector is ready for operation once the alarm has ceased.

If the detector alarm does not sound within ten seconds the detector has to be checked and serviced. If necessary, the filter cap has to be replaced (see point 5.2.).

It is advisable to record the test and assignment of the gas detector in the detectolog.

The battery test and functional test must be performed prior to each use to thus ensure maximum safety.

During the gas test the LCD-display must show the response of the cell to HCN-concentration as well. As the alarm threshold is factoryset at 10 ppm the alarm should sound at 10 ppm. As the display reads a new value every second, the time for alarm and display of 10 ppm may be different.

of the Gas Detector

s detector must be worn in the ing zone of the person to be protected e filter cap (5) should not be covered way.

ber lip on the carrying clip makes it le to securely attach the Monitox to of clothing (e.g. the breast pocket).

s not deemed adequately secure, the supplied with the Monitox can be d in the holes of the carrying clip. ables the Monitox to be worn around ck.

possible, the filter cap should be ted from water, dust-laden air or dirt. he battery and functional tests (refer t 3.1.) should be performed before tector is put into operation.

l gas concentration in the vicinity of isor exceeds the set alarm value, the will sound after a delay dependent on concentration (The higher the ntration, the more quickly the UR 4100 SD Monitox will respond).

m sounds at a level of at least 80 dB tance of about 30 centimeters hes).

3.3.
Connecting the Earphone

When the detector is being utilised in an area with high background noise, the optional earphone should be used to be sure that the alarm will not go unnoticed. The earphone is connected to the earphone socket (9) on the detector. This socket disconnects the internal loudspeaker. If the earphone is being used, it is important that the tests also be conducted with the earphone plugged into the detector (refer to point 3.1.f. When the earphone is not being used, the socket should be closed with the plastic plug.

3.4.
Connecting the Dosimeter

The COMPUR 4102 Mini-Dosimeter can be connected to the 4100 SD (refer to operating instructions for the 4102).

The generator test can also be carried out with the Dosimeter connected to the COMPUR 4100 SD if the detector is turned 180° about its longitudinal axis relative to the position shown in point 3.1. and then placed on the generator in that way, that the cell fits into the recess on the generator. The functional test is then started by pushing the generator button with one's finger.

The plug should be replaced in the Dosimeter socket whenever the Dosimeter is not being used.

3.5.
Digital Display

Additional to the warning-function of the COMPUR 4100 SD Monitox its digital display (6) gives a direct reading of the actual HCN concentration.

Thus it is possible to determine HCN-concentrations below and above the TLV-level, giving the skilled worker and industrial hygienist the means to detect unusual conditions of HCN-concentrations with high accuracy and resolution.

The COMPUR 4100 SD Monitox is, however, even with its digital display, primary a measuring and warning device for personal protection.

It has not been designed for measurement in process-control; moreover exposures to high HCN-concentrations for any length of time must be avoided, as the accuracy of the reading will suffer.

3.6.
Detector Deactivation and Storage

a) brief period of inactivity (up to a month)
   the detector is deactivated (switch to "OFF")

b) Prolonged inactivity and storage
   It is advisable to open the Monitox and remove both the cell and batteries, to provide them from leaking and corrodin the interior of the Monitox (refer to the sections on cell and battery replacemen 5.3.).
   Before reutilizing the Monitox a new c has to be installed.

ibration Instruction for the ector COMPUR 4100 SD nitox

hance the intrinsic accuracy of the or for HCN it is necessary to calibrate tector either with a HCN nitrogen s with definite concentration of HCN ke an electronic adjustment by means COMPUR current generator 00 023.

essories required

ration with gas

libration cap to place onto Monitox

w meter

illivoltmeter 0 – 2000 mV;
put resistance ≥ 1 M Ω

bing, set of test cables, screw-driver

libration gas, known concentration, bout 10 ppm HCN in pure N_2

ark: The generation and above all the stability time of HCN calibration gas is not without problems. So if only a small number of detectors are to be calibrated, the electronic method should be prefered.

2.
bration – Electronical Method
ure 6 and 7)

alibration unit (current generator)

illivoltmeter 0 – 2000 mV,
put resistance ≥ 1 M Ω

et of test cables, screw-driver

4.2.
Zero calibration and gain adjustment with calibration gas

4.2.1.
Preparation

The Monitox is opened and positioned with the electronic components upward on a non-slip surface. The cover with the digital display is carefully put aside with the display upward.

Then the unit is switched on via "Batt." position to "ON". The LCD-display should read 00 ppm after several seconds.

The excellent zero-point stability of the cells will normally make unnecessary to adjust the zero-point. Deviations from zero are caused mostly by fault sensor cells.

For zero-checking remove sensor cell.

4.2.2.
Zero-Adjustment

Connect Millivoltmeter to tie down point (MP 2) and GND (MP 1) (picture 6). If the reading is not zero in clean air, and also is not zero without sensor cell, potentiometer (R 9) (offset voltage) has to be varied until the reading is zero.

Note: If reading is zero without cell and not zero with the cell, it may need up to one hour to stabilize the cell. If a cell has been removed for a fonger period without short-circuiting the two connectors, the time to stabilize may be up to one day. A new cell therefore has short-circuit on the small pcb, that must be broken away before inserting the cell.

4.2.3.
Gain Adjustment with gas

The special calibration adapter is tightly put onto the dust filter on top of the detector cell.

Adjust a calibration-gas flow through the calibration cap; flow rate should be approx. 100 ccm per minute and the inlet must be the smaller pipe; to avoid pressure variations the outlet should be free of obstacles. After 5 minutes the display of the Monitox has reached its final value.

Connect millivoltmeter to tie down point (MP 2) and GND (MP 1). Depending on the concentration of the calibration gas the following voltage should be displayed: (adjust by means of pot R 7)

$$U = \frac{[c] \text{ in ppm}}{10 \text{ ppm}} \times 80 \text{ mV}$$

The display of the Monitox must show the gas concentration. In the opposite, adjust pot (R 15) until correct reading is shown.

4.2.4.
Gain-Adjustment with the current calibrator

Each detector cell produced by COMPUR is supplied with an indication of the output current at 10 ppm HCN. (Never throw away packings of replacement cells before having noted this indication!!!)

Remove detector cell. Insert calibration cable with the plug board into plug connector for detector cell. The gold contacts must touch the spring contacts. Connect other side of the cable to the current generator.

Make sure of correct polarity of plugs. Switch on generator, turn button till generator display shows output current of detector cell.

Remark: Display always shows actual value of current. If it is zero, check the contacts!

Connect voltmeter to tie down point (MP and GND. Adjust sensibility by means of pot (R 7) until 80 mV is displayed. Monito must now display 10 ppm. In opposite, adjust pot (R 15).

4.3.
Setting the Alarm thresholds

The alarms of the standard version are to set on 10 ppm (first alarm 1 TLV) and 20 pp (second alarm 2 x TLV).

To set the alarm levels, push the 2 mini-switches (S 1) to the right. The display of t Monitox shows now the level of the 1st alarm threshold. This can be adjusted by means of the potentiometer (R 30).

To adjust the 2nd alarm level, push the upper switch to the left. The display sho now the 2nd alarm threshold. This can b adjusted by means of the potentiometer (R 29).

After having adjusted the alarm levels, pu both mini switches to the left. The Monit display shows now the actual concentra of HCN.

4.4.
Concluding the adjustment operations

After the settings have been made, turn switch on the pcb to "OFF"-position. M sure that the switch-handle on the cove also in the "OFF"-position. Then carefu replace the cover and fold the connecti cable between pcb and display so that i neither squeezed in nor cracked. Tighte the screws. The Monitox is now ready f operation.

aintenance and Servicing structions

1.
ıttery Replacement

Turn switch (7) to "OFF".

Remove three screws (12).

Turn detector over and remove front cover.

Attention: Do not attempt to remove the cable between front panel and pbc!

Lift out battery housing, disconnect plug.

Unscrew and remove battery lids.

Replace batteries with + pole towards lid.

Replace lids.

Plug-in battery plug. Ensure cable and cable socket in right position.

Replace battery housing and front cover, carefully adjust the cable of the front panel, so that it is not damaged by fixing the front panel; then tighten the screws.

Repeat battery test.

2.
ter Cap Replacement

Remove screws (7) (picture 4) and open detector.

Carefully remove sensor cell together with filter cap (5). Pull cap off cell (4).

Attach new filter cap (with identical gas label HCN) and return sensor cell to original position.
Filter cap order number appears on plate attached to inside of front panel and is listed in section 6.

Replace front cover and tighten screws

Repeat performance test.

5.3.
Sensor Cell Replacement

1. Open detector (see 5.1.).
2. Remove cell together with filter cap.
3. Remove new cell and filter cap from storage container, pull transparent cap off the cell and replace this by the new filter cap. Correct position of filter cap is shown in illustration.
   Remove short-circuit protection attached to pcb by breaking it away.
4. Proceed current calibration (4.2.4.).
5. Replace sensor cell with filter cap in proper position.
6. Close Monitox.

5.4.
Generator Cell Replacement
(picture 5)

1. Open housing
   (as when replacing battery)
2. Unsolder fan leads (10).
3. Loosen four screws (11) and three screws (12).
4. Remove outlet, gas cell and fan through the front.
5. Carefully insert replacement unit U 5820 300 consisting of outlet, cell and fan and tighten screws (12).
6. Tighten screws (11). Align circuit board so that pin (13) reliably actuates switch (14) when gas detector attached.
7. Resolder fan leads (10).
8. Reassemble generator and tighten screws.
9. Testing: Use properly functioning gas detector for same gas. Switch to "ON", attach. Alarm must sound after about eight seconds.

5.5.
Generator Battery Replacement

Loosen four screws on rear housing panel. Carefully remove front cover. For correct positioning of battery, refer to illustration 5.

5.6.
Troubleshooting

Malfunction	Remedy
Battery test: no response	Replace batteries (5.1.)
Generator test: no response	a) Repeat test using 2nd detector, if no response, b) b) Replace filter cap (5.2.), if not dirty, c) c) Insert new sensor cell (5.3.)
Generator does not supply enough gas	Use moisturizing cap for several days, otherwise replace generator cell (5.4.).
Red LED lights up during test	Replace generator batteries (5.5.).

6.
Accessories and consumabl

Part Numbers

1. Gas detector digital display, 2 alarm thresholds with Dosimeter output	U 5306
2. HCN cell with filter cap	U 5800
3. HCN filter cap (10 pcs.)	U 5810
4. Battery PX 23 (1 pc.)	U 4990
5. HCN gas generator	U 5390
6. HCN generator cell	U 5820
7. Calibration gas adapter	U 5900
8. Measuring cable: calibration	U 5900
9. Digital Voltmeter	U 5900
10. Current calibrator	U 5900
11. Calibration cable used in connection with current calibrator	U 5900
12. Detectolog	U 5900
13. Earphone	U 5900

RADIATION ALERT™
MONITOR 4

Operation Manual

©1982
Solar Electronics International
156 Drakes Lane
Summertown, TN 38483

INDUSTRIAL
SCIENTIFIC

Model HMX271

Hydrogen Sulfide, Combustible Gas
and Oxygen Monitor

Instruction Manual

1001 Oakdale Road
Oakdale, PA 15071

Call Toll Free: 1-800-DETECTS (338-3287)
U.S.A. and Canada
or (412) 788-4353

1703-6229

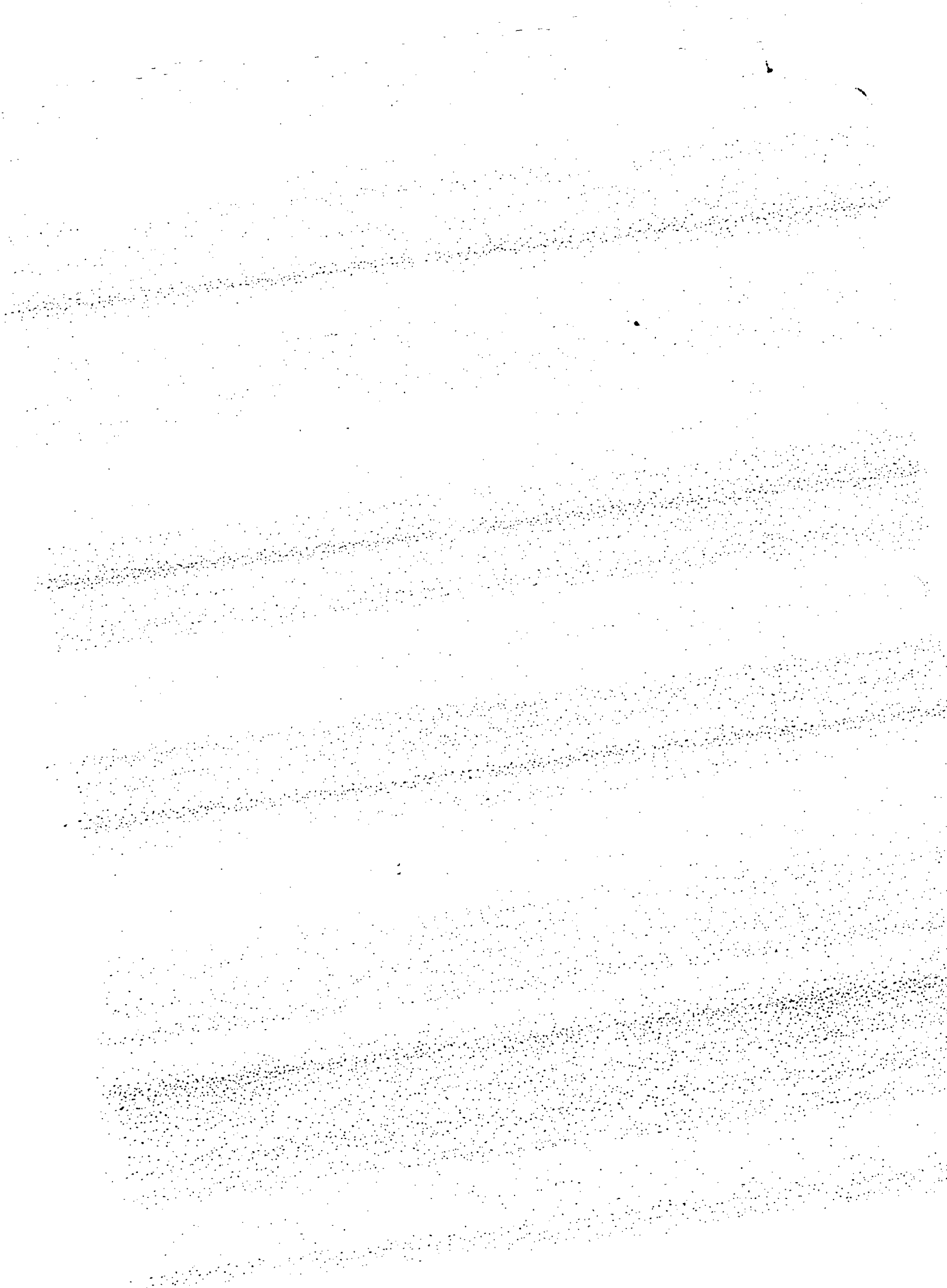

NOTE: ONLY THE COMBUSTIBLE GAS DETECTION PORTION OF THIS INSTRUMENT HAS BEEN ASSESSED FOR PERFORMANCE ACCORDING TO CSA STANDARD C22.2 NO. 152.

TABLE OF CONTENTS

1.0 GENERAL INFORMATION 2
1.1 Air and Gases 2
1.2 Warnings and Cautionary Statements 3

2.0 INTRODUCTION 5

3.0 UNPACKING 8

4.0 BATTERY PACK 9
4.1 Charging the Batteries 9

5.0 PREPARING FOR OPERATION 10
5.1 Switching ON the Instrument 10
5.2 Switching OFF the Instrument 12

6.0 CALIBRATION 12
6.1 General Information 12
6.2 Checking Alarm Settings 13
6.3 Adjusting the Alarm Settings 15

7.0 ZERO ADJUSTMENTS 17

8.0 SPAN ADJUSTMENTS 18

9.0 MAINTENANCE 19
9.1 Screen Replacement 19
9.2 Battery Pack Replacement 20
9.3 Oxygen Sensor Replacement 20
9.4 Hydrogen Sulfide Sensor Replacement 21
9.5 Combustible Gas Sensor Replacement 22

10.0 REPLACEMENT PARTS LIST 25

11.0 SPECIFICATIONS 30
11.1 Physical and Components 30
11.2 Performance 31
11.3 Environmental Factors 31

LIST OF ILLUSTRATIONS

Figure 1.	HMX271 Controls	6
Figure 2.	Display and Alarms	7
Figure 3.	Instrument On/Off	11
Figure 4.	Calibration Adjustments	14
Figure 5.	Calibration Cup	18
Figure 6.	Battery Pack and Sensor Replacement	22, 23
Figure 7.	Exploded View	24
Figure 8.	Side View	27
Figure 9.	Wiring Diagram	28, 29

LIST OF TABLES

Table I.	Packing List	8
Table II.	Calibration Equipment	12
Table III.	Replacement Parts	25

1.0 GENERAL INFORMATION

1.1 Air and Gases

Air is a mixture of gases. Clean, dry air consists of 78.08 volume percent nitrogen, 20.95 volume percent oxygen, and 0.87 volume percent other gases including argon and carbon dioxide. Life, combustion and various chemical reactions are supported by oxygen. Human beings can tolerate moderate variations in the amount of oxygen in the air. Breathing becomes labored when the air contains only 16% oxygen. However, U.S. Department of Labor—OSHA (General Industry Safety and Health Standards 29 CFR 1910.94 (d) (9) (vi) requires the use of air-supplied respirators to provide adequate oxygen when the concentration of oxygen is less than 19.5%. Oxygen deficiency can be the result of the displacement of oxygen by other gases, aerobic bacterial activity, combustion, and the oxidation of metal.

A mixture of air and a combustible gas or vapor (hereinafter the term "gas" shall be understood to mean

combustible gases and/or vapors) will support the propagation of a flame away from a source of ignition only when the concentration of the gas, as a percent of the total volume of the mixture, is within the flammable range of that specific gas or combination of gases. An air/gas mixture in which the concentration of gas is below the flammable range will be too lean to propagate combustion. The flammable range has a lower limit and an upper limit; i.e., the lower flammable limit (LFL) and "lower explosive limit" (LEL) are equivalent, as are "upper flammable limit" and "upper explosive limit".

1.2 Warnings and Cautionary Statements

Certain conditions or failure to observe certain necessary procedures will impair the performance of the instrument. These are outlined below to be read and understood by any person using the instrument.

1.2.1 Oxygen deficient atmospheres will cause erroneous low determinations of the combustible gas content of the air.

1.2.2 Oxygen enriched atmospheres will cause erroneous high determinations of the combustible gas content of the air.

1.2.3 Verify the calibration of the combustible detecting mode of the instrument after use where the combustible gas content as a percent of the LEL was 100% or greater. Long continuous use (hours for one test) at high LEL concentrations (50% to 100%) may cause damage to the LEL detector, resulting in reduction of sensitivity and erratic behavior, including inability to calibrate. If this occurs, the LEL detector should be replaced.

1.2.4 *Silicone compound vapors and sulfur compound* vapors will cause desensitization of the LEL detector and thus cause erroneous low determinations. Verify the calibration of an instrument that has been used where these vapors were present before that instrument is relied upon for accurate measurements. Replace the LEL detector if the instrument cannot be calibrated.

1.2.5 Changes in the total pressure of the atmosphere due to changes in altitude will bear on the instrument's determination of the air's oxygen content. Calibrate the oxygen monitor mode of the HMX271 at the altitude at which it will be used.

1.2.6 Any rapid up-scale reading followed by a declining or erratic reading, or reading greater than 100% LEL, may indicate a gas concentration beyond the accurate response range of the LEL detector. Either take immediate corrective action to eliminate this potential hazard; or, withdraw from it.

1.2.7 Readings that are either negative or greater than 100% LEL may indicate an explosive concentration of combustible gas.

1.2.8 Obstruction of the screened sensor ports will cause erroneous low readings. These screens must be kept clean.

1.2.9 Sudden changes in temperature or pressure may cause temporary fluctuations in the oxygen reading.

1.2.10 Alarm device is nonlatching and will automatically reset.

2.0 INTRODUCTION

The HMX271 3-Gas Monitor continuously and simultaneously monitors ambient levels of oxygen, hydrogen sulfide, and combustible gases. All three gases are monitored simultaneously; only one is displayed on the instrument's liquid crystal display (LCD). When one of three membrane switches located immediately below the LCD panel is touched, the respective gas readout will appear on the display. A small triangular pointer also appears on the display, just above the switch that was pressed, to indicate which gas is being displayed. The last gas selected will remain on display until a different switch is pressed. The readout for the three gases may be selected in any sequence that the user desires. When the instrument is first turned on it will automatically display the oxygen readout. (See figure 1).

Although only one gas can be displayed at a time, all of the alarm circuits are active and continuously monitoring for unsafe conditions. If any of the gases reaches a preset safety limit, the audible and visual alarms are activated immediately. The audible alarm is a high pitched tone that alternates between two frequencies at the rate of approximately two times per second. A rectangular LCD enunciator appears near the top of the display panel to indicate which gas or gases caused alarm activation. The LCD will continue to display the readout of the gas range last selected by touching one of the membrane switches. (See figure 2).

Combustible gases are displayed in percent of lower explosive limit (LEL) in 1% LEL increments, Hydrogen Sulfide (H_2S) in parts per million (ppm) in 1 ppm increments, and oxygen (OX) in percent by volume in 0.1% increments.

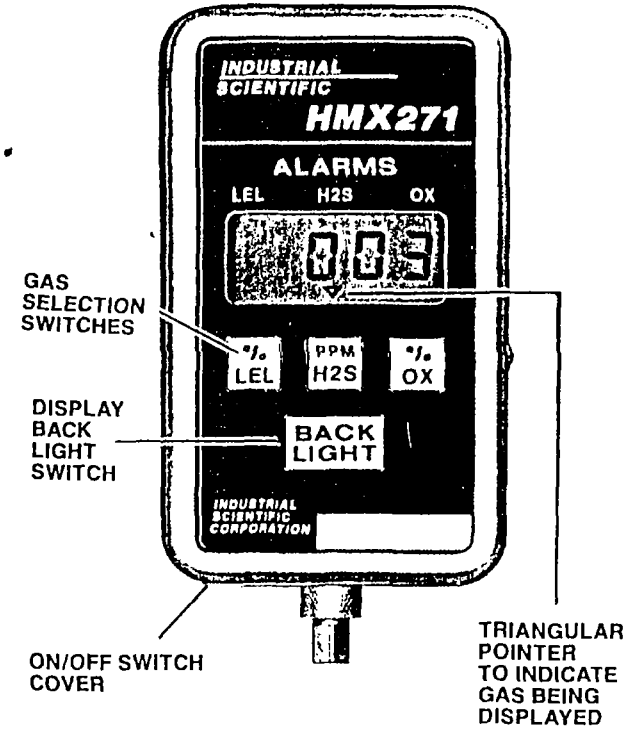

Figure 1.
HMX271 Controls

NORMAL OPERATION

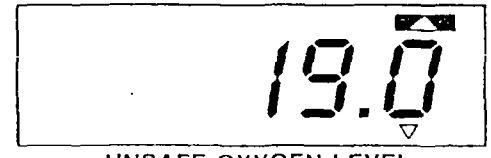

UNSAFE OXYGEN LEVEL

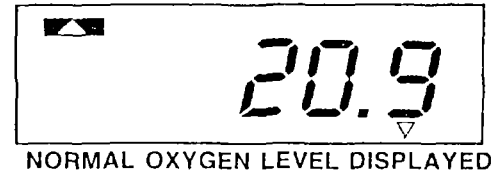

NORMAL OXYGEN LEVEL DISPLAYED
COMBUSTIBLE GASES IN ALARM MODE

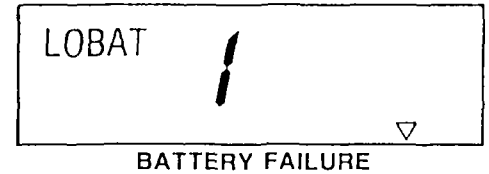

BATTERY FAILURE

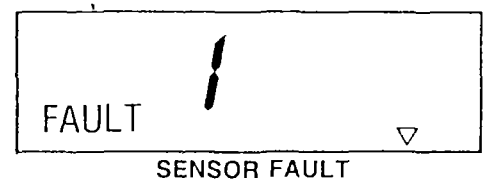

SENSOR FAULT

Figure 2.
Display and Alarms

Although primarily intended as a diffusion instrument, the monitor can be equipped for remote monitoring with an optional sampling pump (ISC Model SP200 or SP201).

3.0 UNPACKING

The shipping case should contain the following items. Account for each item.

TABLE I. PACKING LIST

QTY.	PART NO.	DESCRIPTION
1	1810-1139	HMX271 Hydrogen Sulfide, Combustible Gases and Oxygen Monitor
1	1703-6229	Model HMX271 Instruction Manual
1	1810-1204	Single Carrying Case
1	1700-6933	Calibration Cup
1	1700-7592	Tygon Tubing
1	1703-8803	Micro Screwdriver w/Hex Head

After unpacking, visually inspect each item for signs of physical damage. If damage is evident, contact either the local distributor of ISC detection instruments, or call Industrial Scientific at:

1-800-DETECTS (338-3287)
U.S.A. and Canada
or
(412) 788-4353

4.0 BATTERY PACK

Before Proceeding to use the Instrument, Charge the Batteries and Calibrate the Measuring Modes

NOTE: Instrument must be turned off before charging.

4.1 Charging the Batteries

The HMX271 requires a constant 75 milliamperes charging current. A completely discharged battery's full potential will be restored by 14 hours of charging. A Single Unit Charger, Part Number 1810-0123, and a Five Unit Charger, Part Number 1810-0115, are available from the local distributor of Industrial Scientific Corporation products. There is no danger of overcharging the batteries when using either of the above ISC 200 Series Constant Current Battery Chargers.

Apparent reductions in battery capacity may result from repetitive use patterns. A fully charged battery that does not deliver energy for at least 10 hours continuous monitoring may have developed a "memory" condition. To eradicate this, entirely discharge (until low battery warning) and then fully recharge the battery. The memory effect can be avoided by using the HMX271 so that the battery is discharged to varying depths.

The HMX271 is powered by a 750 milliamp/hour (mah) rechargeable nickel cadmium battery pack. When charged for 14 hours on any of the ISC charging units, the battery will power the monitor for a minimum of 10 hours. Typical run time will be approximately 12 hours. When the battery nears the end of its useful charge life (approximately ½ hour of operating time remaining), the monitor will start to emit short audible tone bursts to warn of a low battery condition. The tone bursts are two to three minutes apart and about one to five sec-

onds in duration increase in length as the end of battery life approaches. When the battery is no longer capable of supplying sufficient power to the monitor, the monitor will go into the battery failure mode. The battery failure mode is indicated by all of the display digits being blanked except for the numeral (1) in the far left position; the word LOBAT appears in the upper left corner of the display; and the audible alarm sounds a continuous high pitched tone. (See figure 2). The above condition will continue for approximately 10 minutes or until the monitor is switched off. A 14 hour recharging then is needed to restore the battery to a *full charge condition.*

Note: After the monitor goes into the battery failure mode, it should be switched off within a few minutes. If the unit is not switched off within 10 minutes, inaccurate fluctuating readings will appear on the display and serious battery damage may result.

The HMX271 is also equipped with circuitry that detects LEL sensor faults. If a fault condition should occur, the monitor will go into a failure mode similar to the low battery failure mode and the word FAULT will appear in the lower left corner of the display. When the oxygen sensor is missing, audible and visual alarms are activated. (See figure 2.)

5.0 PREPARING FOR OPERATION

5.1 Switching ON the instrument (see Figure 3)

To switch on the instrument:

1. Back off the knurled nut that holds the calibration cover in place.
2. Rotate the cover so that the metal button is inserted in the oval-shaped hole.
3. Tighten the nut until the calibration cover is flush with the case. Do not overtighten.

OFF

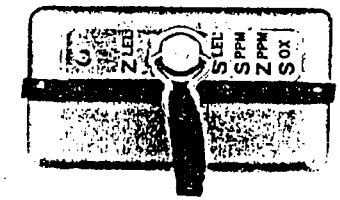

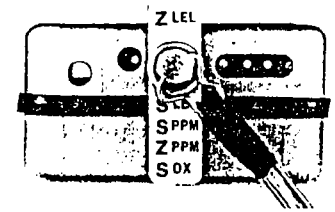

ON

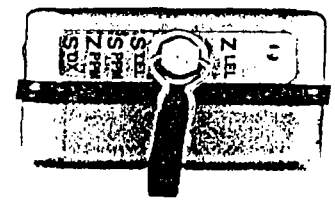

Figure 3.
Instrument ON/OFF

4. The monitor is ready for use as soon as the display stabilizes (approximately 60 seconds).

5.2 Switching OFF the Instrument (see Figure 3)

To switch off the instrument:

1. Back off the knurled nut that holds the calibration cover in place.

2. Rotate the cover so that the metal button is inserted in the unmarked round hole.

3. Tighten the nut until the calibration cover is flush with the case. Do not overtighten.

6.0 CALIBRATION

6.1 General Information

Maximum safety will be insured by performing a calibration check on the HMX271 prior to each use. A calibration kit and replacement cylinders of calibration gas are available from ISC (see Table II).

For best calibration accuracy, the monitor should be allowed to stabilize at room temperature for at least one (1) hour before calibration.

TABLE II. CALIBRATION EQUIPMENT

Part No.	Description
1810-1279	Calibration kit, consisting of: Carrying Case Cylinder of Hydrogen Sulfide Cylinder of Pentane and Oxygen Regulator Calibration Cup
1810-0859	Replacement cylinder of Hydrogen Sulfide
1810-1238	Replacement cylinder of Pentane and Oxygen

6.2 Checking Alarm Settings

Before calibrating the instrument, it is good practice to check all of the alarm settings to verify that they are set correctly. The calibration cover must first be released and turned ninety degrees to expose the five calibration adjustments along the bottom end of the instrument. The function of the five control adjustments are: (1) LEL zero offset **Z LEL**, (2) LEL span sensitivity **S LEL**, (3) H_2S span sensitivity **S PPM**, (4) H_2S zero offset **Z PPM** and (5) OX calibration **S OX**. (See figure 4).

6.2.1 To Check LEL

To check the LEL alarm setting, switch the display to the LEL mode. Slowly turn the **Z LEL** (LEL zero offset) adjustment in the clockwise direction until the alarm is activated. When the alarm point is reached, slowly turn the adjustment back and forth through the point at which the alarm is activated. Observe the display. The display will show the percent of LEL at which the alarm is set to activate. Turn the adjustment back to the zero display reading. The factory setting for the LEL alarm is 10 %.

6.2.2 To Check H_2S

Checking the H_2S alarm setting is similar to the procedure used for the LEL. Switch the display to the H_2S mode and slowly turn the **Z PPM** (H_2S zero offset) adjustment in the clockwise direction until the alarm is activated. Slowly turn the adjustment back and forth through the point of activation and observe the display for the ppm level at which the H_2S alarm activates. Turn the adjustment back to the zero display reading. The factory setting for the hydrogen sulfide alarm is 10 ppm.

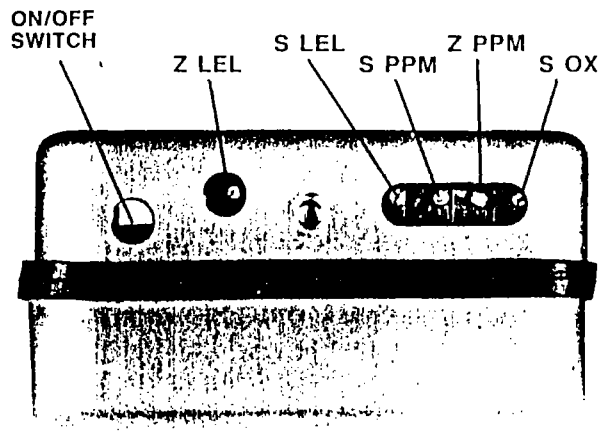

Figure 4.
Calibration Adjustments

6.2.3 To Check OX

Unlike the LEL and H_2S, the OX section does not require a Z adjustment. After switching to the OX mode, observe and note the display reading, which should be 20.9% in normal room air. Slowly turn the **S OX** (OX calibration) adjustment counterclockwise until the low oxygen alarm setting is reached. Slowly turn the adjustment back and forth through the alarm point to verify the setting. After the low alarm setting is located, slowly turn the adjustment in the clockwise direction until the high oxygen alarm setting is found. Slowly turn the adjustment back and forth through the alarm point to verify the setting. Return the display to the original setting. The oxygen alarms are factory set at 19.5% for the low alarm and 23.0% for the high alarm.

6.3 Adjusting the Alarm Settings

In order to access the four alarm adjustments on the HMX271, the instrument must be opened by separating the two halves of the case.

To open the case:

1. Use the micro screwdriver w/hex head to remove the screws on either side of the monitor.

2. Back off the knurled nut of the strap assembly as far as possible. Use a 5/16" wrench to remove the center post of the strap assembly.

3. Lift the case top off the monitor. Set the case top (containing the electronics) aside, being careful not to damage the wires between the case top and bottom.

4. The alarm adjustments are located along the top end of the main printed circuit board and are identified with a label. (See figure 6).

6.3.1 Adjusting the LEL Alarm

Switch the display to the LEL mode and turn the **Z LEL** (LEL zero offset) adjustment, so that the display shows the desired level of LEL to which the alarm is to be adjusted. If the alarm is activated, the new LEL alarm is higher than the one currently set. Turn the LEL alarm adjustment, in the clockwise direction until the alarm is deactivated. Then, slowly turn the LEL alarm adjustment in the counterclockwise direction until the point is reached that again activates the alarm. The **Z LEL** adjustment should then be turned slowly back and forth through the alarm trip point to verify that it is correct. Return the display to zero.

6.3.2 Adjusting the H_2S Alarm

The H_2S alarm is set in the same manner as the LEL alarm with the exception of the display mode being switched to H_2S and the use of the **Z PPM** (H_2S zero offset) and the PPM alarm adjustments. In some instances, where the alarm is to be set very high, it may be necessary to turn the **S PPM** (H_2S span sensitivity) adjustment clockwise in order to set the desired level on the display. If the **S PPM** adjustment is moved, the instrument **must** be recalibrated.

6.3.3 Adjusting the OX Alarm

After the display has been set to the OX mode, use the **S OX** (OX calibration) control to set the desired level of the low oxygen alarm on the display. If the alarm is activated, the present setting is higher than the desired new setting. Turn the low alarm adjustment, in the counterclockwise direction until the alarm is deactivated. Now, turn the low alarm adjustment slowly clockwise until the alarm is once again activated. Slowly turn the **S OX** calibration control back and forth through the

alarm point to verify the setting. Adjust the **S OX** calibration control so that the display reads the desired level for the high oxygen alarm. If the alarm is activated, the current setting is lower than the desired new setting. Turn the high alarm adjustment, in the clockwise direction until the alarm is deactivated. Now, turn the high alarm adjustment slowly in the counterclockwise direction until the alarm is once again activated. Turn the **S OX** calibration control back and forth through the alarm point to verify the setting. Return the display to its original setting.

Note: It is possible to overlap the high and lower oxygen alarm settings. If this happens, the alarm will be activated for all oxygen levels. To exit this condition, turn the high oxygen alarm to its highest clockwise position and the low oxygen alarm to its lowest counterclockwise position and repeat procedure 6.3.3.

Reassemble the monitor and perform calibration of all three gases.

7.0 ZERO ADJUSTMENTS

Only the H_2S and LEL sections of the HMX271 require zero calibration. (See figure 5). In clean air, switch the display to the H_2S mode and adjust the **Z PPM** (H_2S zero offset) by turning it counterclockwise until the minus sign (–) appears on the display. Very slowly turn the **Z PPM** control clockwise until the minus sign just goes off, leaving (000) in the display.

In clean air, switch the display to the LEL mode and adjust the **Z LEL** (LEL zero offset) control by turning it counterclockwise until the minus sign (–) appears on the display. Very slowly turn the **Z LEL** control clockwise until the minus sign just goes off, leaving (000) in the display.

8.0 SPAN ADJUSTMENTS

After the LEL and H_2S zeros have been properly set, the span sensitivity may be calibrated. Switch the display to the LEL mode, and apply the span gas of 25%

Figure 5.
Calibration Cup

LEL Pentane (see note 1) to the monitor using the calibration cup. Allow the gas to flow for two (2) minutes. With the gas still flowing, adjust the **S LEL** (LEL span sensitivity) control, on the bottom of the instrument, so that the display reads the percent of LEL, to the nearest percent, that is printed on the calibration gas cylinder. Remove the calibration gas.

Repeat the above procedure for H_2S using a known concentration of hydrogen sulfide span calibration gas with the **S PPM** (H_2S span sensitivity) control to complete the span calibration.

In clean air, known to have 20.9% oxygen, the **S OX** (OX calibration) control should be adjusted so that the display reads 20.9% oxygen. Final calibration of the oxygen readout should only be done in free air if the user is sure that the air contains the normal 20.9% oxygen. The readout should then be adjusted so that the display reads 20.9%. If there is any doubt of the oxygen content of the air, calibration gas of a known percentage of oxygen in nitrogen should be used.

Note 1

Industrial Scientific Corporation recommends that the calibration gas used for general combustible gas measurement is 25% LEL pentane. If you are measuring a known combustible gas, span calibration should be made using a known % LEL concentration of that gas.

9.0 MAINTENANCE

9.1 Screen Replacement

Specially treated stainless steel screens protect the sensors from direct impact and dust particles.

To remove the screens:

1. Remove the four (4) screws that hold the bezel and screens in place.

2. Forced air cleaning may not remove very fine dust particles clogging the screens. NEVER use any type of solvent to clean the screen, since they may degrade sensor performance. Screens that cannot be cleaned should be replaced. See replacement parts list.
3. Reassemble the screen and bezel to the monitor.

9.2 Battery Pack Replacement

Since it is normal for gas detection sensors and batteries to deteriorate with age, the HMX271 has been designed so that it is possible to replace all of the sensors and the battery using only simple hand tools. No soldering is required. In all cases, it is necessary to separate the two case halves. Always handle the opened instrument carefully to prevent damage to the wiring harness. The top half of the case should be flipped over and allowed to lay face down next to the bottom half of the case.

To replace the battery, first locate the battery wires that lead to a small two (2) terminal connector located at the far left end of the regulator printed circuit (PC) board. (See figure 6). Carefully pull the connector from the PC board and lift the battery from the case. It may be necessary to gently pry the battery free with a small screwdriver or similar object. Install the new battery in reverse order and carefully lay the battery leads down against the regulator PC board before reassembling the case halves.

9.3 Oxygen Sensor Replacement

Replacement of any of the sensors requires that the bezel and screens be removed first. This should be done prior to separating the case halves.

Note: Before replacing any of the sensors, pull the battery connector off to remove power.

To replace the oxygen sensor, first locate the small black connector in the sensor leads and carefully pull the two halves apart. Locate and remove the two long #2 screws that go through the front of the case bottom and into the oxygen sensor retaining bracket. Lift the oxygen sensor and bracket out of the instrument. When the sensor is removed, the plastic mounting ring may adhere to the sensor surface. The ring should be reinstalled in its original position. Next, install the new sensor in reverse order and reassemble the instrument.

Note: It is normal for the instrument to go into the high oxygen alarm immediately after a new oxygen sensor is installed. After the new sensor is connected to the instrument, it takes approximately ten minutes for the sensor to stabilize.

9.4 Hydrogen Sulfide Sensor Replacement

In order to replace the hydrogen sulfide sensor, the oxygen sensor must be removed first. After the oxygen sensor has been removed, locate the three long #2 screws that extend through the instrument case bottom and into the threaded inserts on the sensor PC board. Lift the PC board, with the sensor attached, from the instrument case bottom. The sensor is connected to the PC board by small pins that are inserted into sockets on the board. Remove the sensor by pulling it free of the sockets. The new sensor will have a small wire that shorts two of the terminals. Remove this wire and insert the new sensor into the sensor PC board. Reassemble the instrument in reverse order.

9.5 Combustible Gas Sensor Replacement

To replace the LEL sensor, it is first necessary to remove the oxygen sensor. After the oxygen sensor is removed, locate the three circuit connector that connects the LEL sensor to the regulator PC board and disconnect it. (See figure 6). Locate and remove the two screws that mount the LEL sensor to the case bottom. Carefully remove the sensor from the case bottom. Install the new sensor in the reverse order. Make certain that the sealing gaskets are properly installed, when mounting the new sensor. Reassemble the instrument in reverse order.

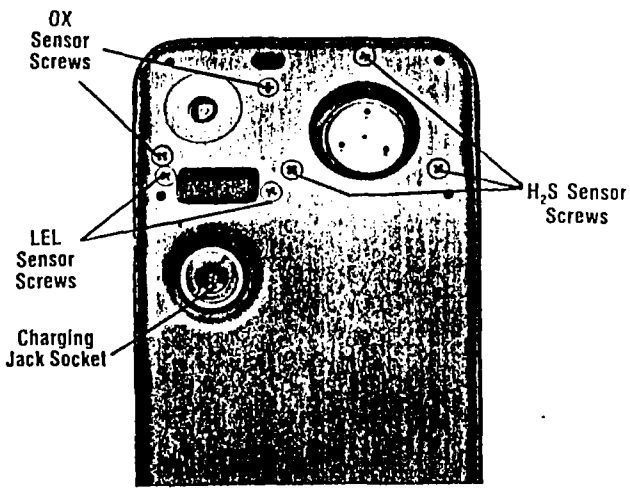

Back view with Bezel and Screens removed

Figure 6.
(Continued on fold-out page)

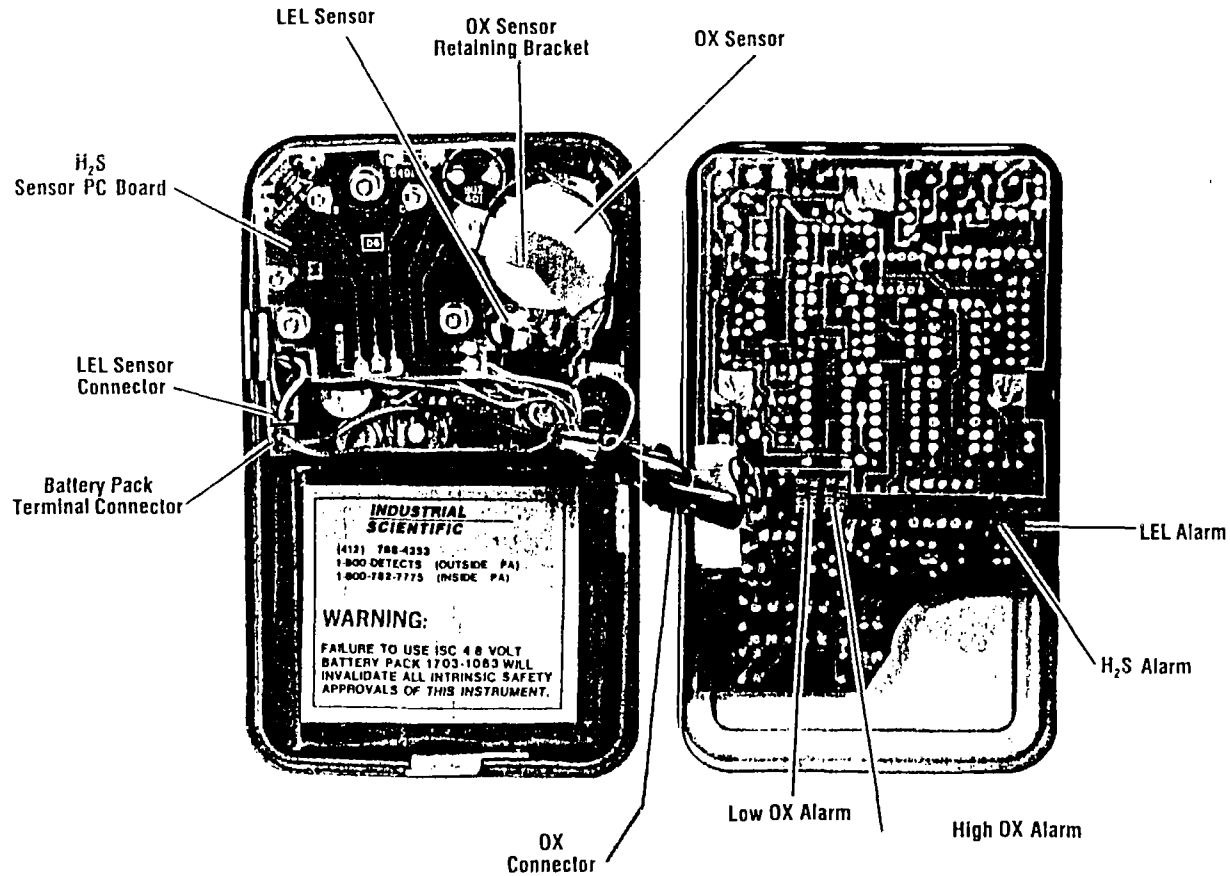

Figure 6.
Battery Pack and Sensor Replacement

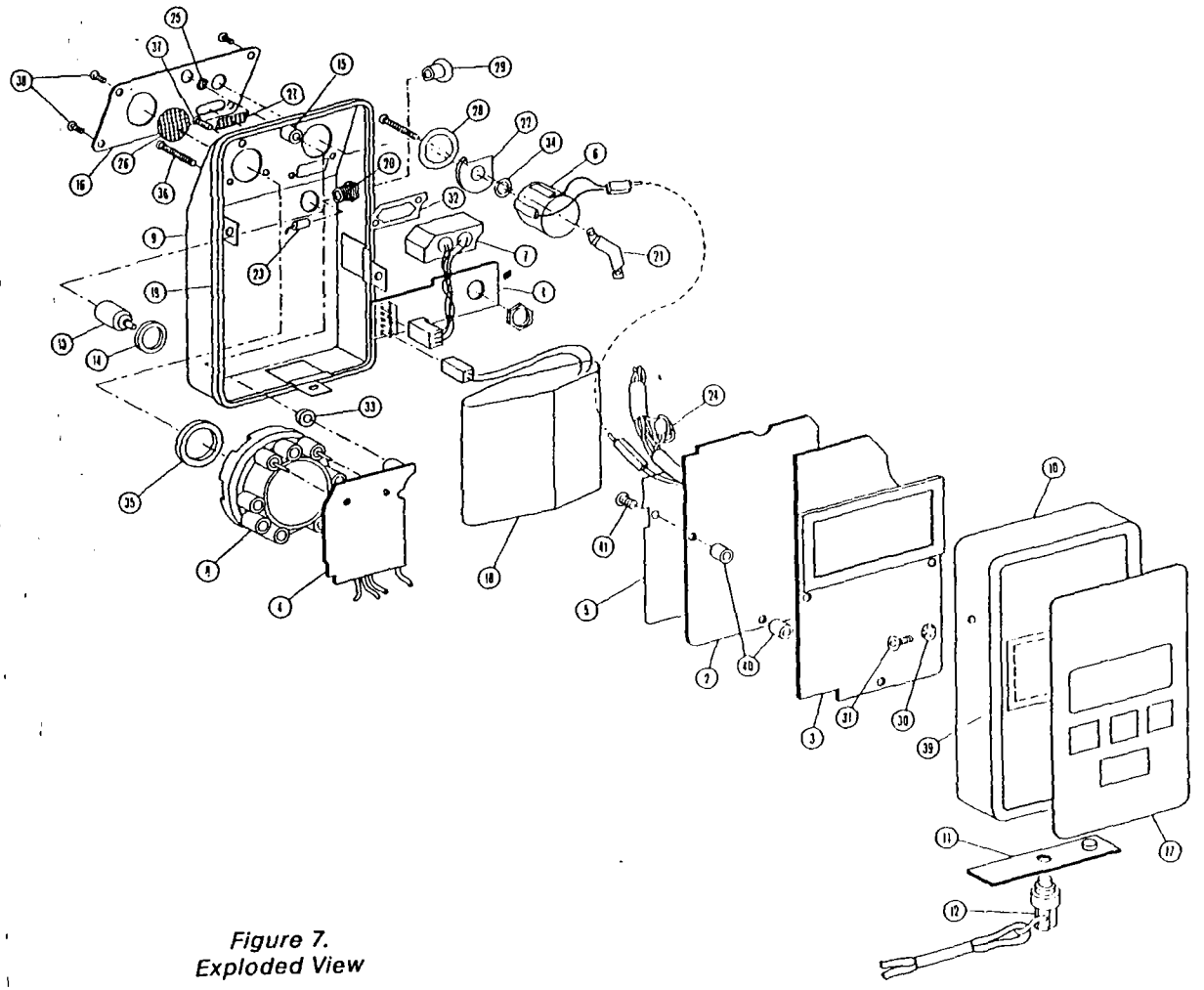

Figure 7.
Exploded View

10. REPLACEMENT PARTS LIST

Item numbers refer to Figure 7, Exploded View.

TABLE III. REPLACEMENT PARTS

Item	Part No.	Description
1	1703-1204	Regulator PC Board Assembly
2	1702-9117	Main PC Board Assembly
3	1702-9018	Display PC Board Assembly
4	1702-8762	Sensor PC Board Assembly
5	1703-1444	Insulator Assembly
6	1703-5114	Oxygen Sensor
7	1703-1287	Combustible Detector
8	1702-2062	Hydrogen Sulfide Sensor
9	1702-8614	Case Bottom Assembly
10	1703-0081	Case Top Assembly
11	1703-1600	Calibration Cover Assembly
12	1700-4078	Instrument Strap
13	1700-1660	Charging Jack Socket
14	1702-8630	Charging Jack Bushing
15	1703-0644	Buzzer Adapter
16	1702-8648	Bezel, 3-Gas
17	1702-9091	Faceplate HMX271
18	1703-1063	Battery Pack Assembly
19	1703-1782	Gasket
20	1702-8374	Receptacle
21	1703-1238	Oxygen Sensor Clamp
22	1703-2467	Oxygen Sensor Cap
23	1703-1527	Ferrite Bead
24	1703-1535	Ferrite Bead
25	1703-0669	Buzzer Screen
26	1703-1154	Hydrogen Sulfide Sensor Screen
27	1703-1345	LEL Detector Screen
28	1703-2475	Tape, Transfer
29	1702-9273	Hole Plug
30	1701-9787	Washer, LKG, #6
31	1701-3558	Screw, 6-32 x 3/16

32	1703-1329	Gasket (part of item 7)
33	1703-0651	Seal (part of item 4)
34	1703-0610	Oxygen Sensor Seal
35	1703-1303	Hydrogen Sulfide Sensor Gasket
36	1702-8457	Screw, 2-56 x 1.00
37	1703-0693	Screw, 2-56 x .25
38	1701-7914	Screw, 2-56 x .12
39	1703-1618	RF Screen
40	1703-1089	Spacer
41	1703-1774	Screw, 4-40 x .25

For your convenience and protection, record the serial number of your HMX271 Monitor in the space provided.

Serial No. _____

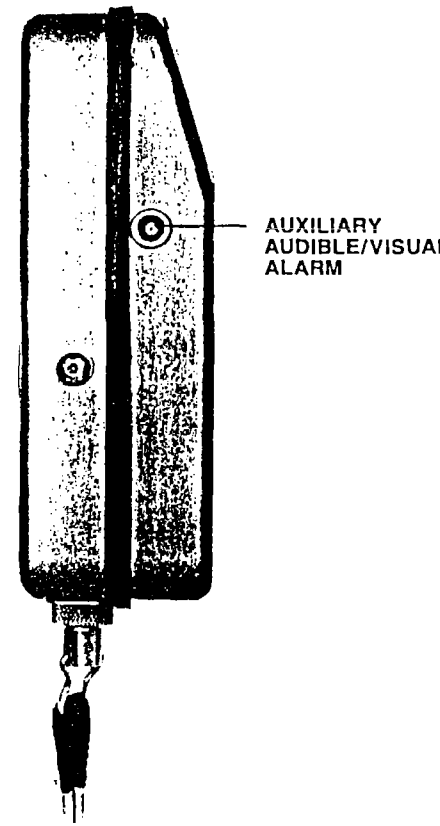

For those instances where a high noise environment is encountered, a jack is provided on the side of the HMX271 case for use with the remote audible/visual alarm.

Figure 8.
Side View

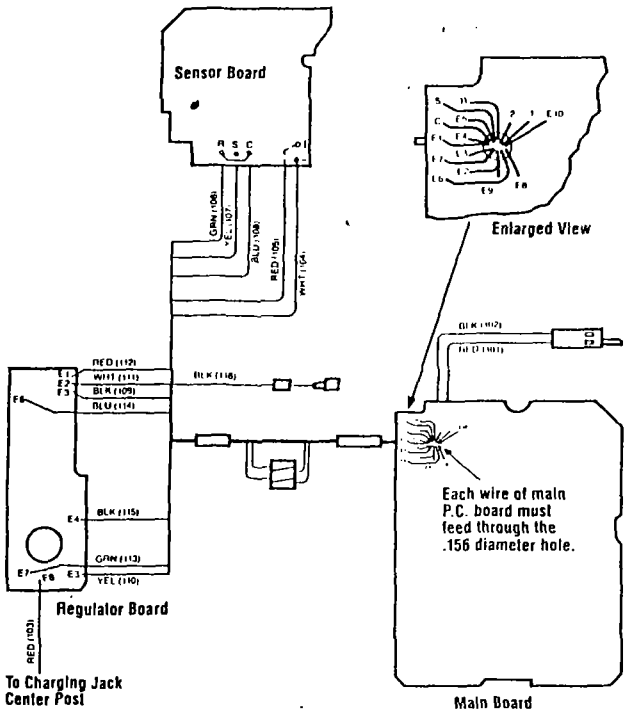

Figure 9.
Wiring Diagram

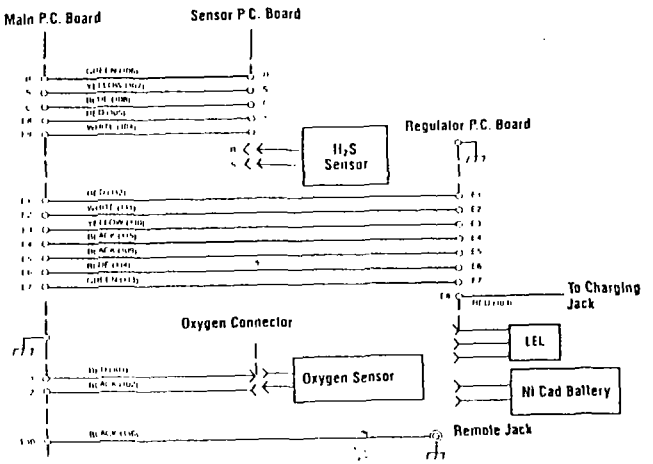

Figure 9.
Wiring Diagram

11.0 SPECIFICATIONS

11.1 Physical and Components

Case:	Stainless steel, dust tight, splash resistant
Dimensions:	4.75 x 2.75 x 1.5 inches (121 x 70 x 38 mm)
Weight:	22 ounces
Sensors:	Hydrogen Sulfide — Electrochemical Combustible Gases — Catalytic, Diffusion Type Oxygen — Electrochemical
Power Source:	750 mA hour rechargeable, nickel cadmium battery pack
Battery Life:	Minimum 10 hours per battery charge
Readout:	Digital liquid crystal display
Alarms:	Pulsing visual and audible alarms. Continuous visual and audible low battery alarms accompanied by display blanking. Expiring batteries indicated by a unique audible warning signal. Audible and visual alarms are activated when the oxygen sensor is missing. When the combustible gas sensor is open or missing, the fault condition will occur, and the audible alarm will sound a continuous tone.

11.2 Performance

Measuring Range:	Hydrogen Sulfide — 0 to 1999 parts per million (ppm) Combustible Gases — 0 to 99% LEL Oxygen — 0 to 30% of volume

11.3 Environmental Factors

Temperature Range: -15°C to +45°C

Humidity Range: 0-95% RH (Noncondensing)

INDUSTRIAL SCIENTIFIC CORPORATION

1001 Oakdale Road
Oakdale, PA 15071

Call Toll Free: 1-800-DETECTS (338-3287)
U.S.A. and Canada
or
(412) 788-4353

1704-2300

INDUSTRIAL SCIENTIFIC

Model SP202

Sampling Pump

Instruction Manual

TABLE OF CONTENTS

1.0 INTRODUCTION 2

2.0 UNPACKING 2

3.0 OPERATION 3
- 3.1 Faceplate 3
- 3.2 Testing the Pump 6
- 3.3 Using the Pump 8
- 3.4 Operating Precautions 8
- 3.5 Using the Water Stop 9

4.0 MAINTENANCE 10
- 4.1 Regular Maintenance 10
- 4.2 Battery Charging (Nicad Users Only) 10
- 4.3 Battery "Memory" (Nicad Users Only) 10
- 4.4 Battery Life (Nicad) 11
- 4.5 Battery Life (Alkaline) 11
- 4.6 Testing the SP202 Filter 12
- 4.7 Alternate Filter Test Method 13

5.0 REPLACEMENT PARTS LIST (NICAD) 14

5.0 REPLACEMENT PARTS LIST (ALKALINE) . . 17

6.0 SPECIFICATIONS 18

7.0 SP202 ACCESSORIES 19

LIST OF ILLUSTRATIONS

Figure 1. SP202 Controls (Nicad) 4
Figure 2. SP202 Controls (Alkaline) 5
Figure 3. SP202 With Extendable Probe 7
Figure 4. Alkaline Battery Replacement 13
Figure 5. Exploded View (Nicad) 15
Figure 6. Exploded View (Alkaline) 16

LIST OF TABLES

Table I. Packing List 3
Table II. Replacement Parts (Nicad) 14
Table III. Replacement Parts (Alkaline) 17

1.0 INTRODUCTION

The SP202 Sampling Pump (in conjunction with one of Industrial Scientific's 200 Series Gas Monitoring Instruments) can be used for remote sampling when it is unsafe for the instrument user to enter the area where an atmospheric determination is to be made. The SP202 is also useful for testing otherwise inaccessible areas.

The SP202 Nicad Pump is powered by a nickel cadmium battery pack that provides a minimum of 14 hours (@ 25°C with 10 ft. tygon tubing) of continuous operation. Battery chargers are available to recharge the SP202's batteries.

The SP202 Alkaline Pump is powered by (4) disposable, AAA size alkaline batteries. The batteries provide 10 hours (@ 25°C with 10 ft. tygon tubing) of continuous operation. The pump is factory shipped with batteries installed.

An external, user replaceable dust filter (P/N 1702-4597) is designed to protect internal pump parts.

2.0 UNPACKING

The shipping carton should contain the following items. Account for each item before discarding the carton.

TABLE I. PACKING LIST

Qty	Part No.	Description
1	1810-1782	SP202 Sampling Pump (Nicad)
	or	
1	1810-1790	SP202 Sampling Pump (Alkaline)
1	1700-7774	1/16" Allen Wrench
10'	1700-7592	Sampling Hose
1	1702-7152	Water Stop

After unpacking, visually inspect each item for signs of physical damage. If damage is evident, contact either the local distributor of detection instruments, or call Industrial Scientific Corporation at:

Call Toll Free: 1-800-DETECTS (338-3287)
U.S.A. and Canada
or
(412) 788-4353

3.0 OPERATION

3.1 Faceplate

The SP202 faceplate is protected by a transparent film that may be peeled off if desired.

WARNING

Before using the SP202, test the unit to ensure that it is operating properly. A failure of internal components could cause inaccurate instrument readings due to failure to draw a proper sample. Return the SP202 to either Industrial Scientific or an authorized distributor for repair if a problem should occur. Refer to Section 3.2.

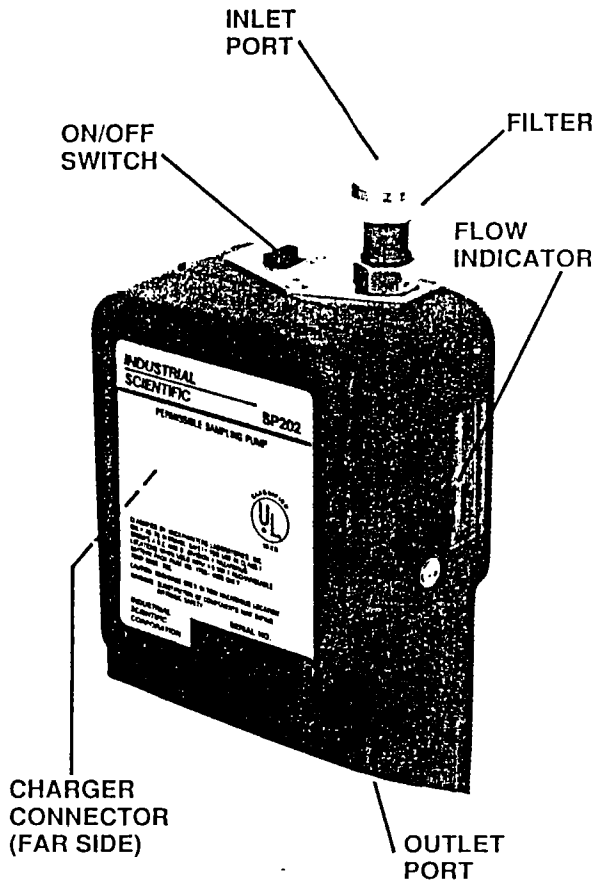

Figure 1.
SP202 Controls (Nicad)

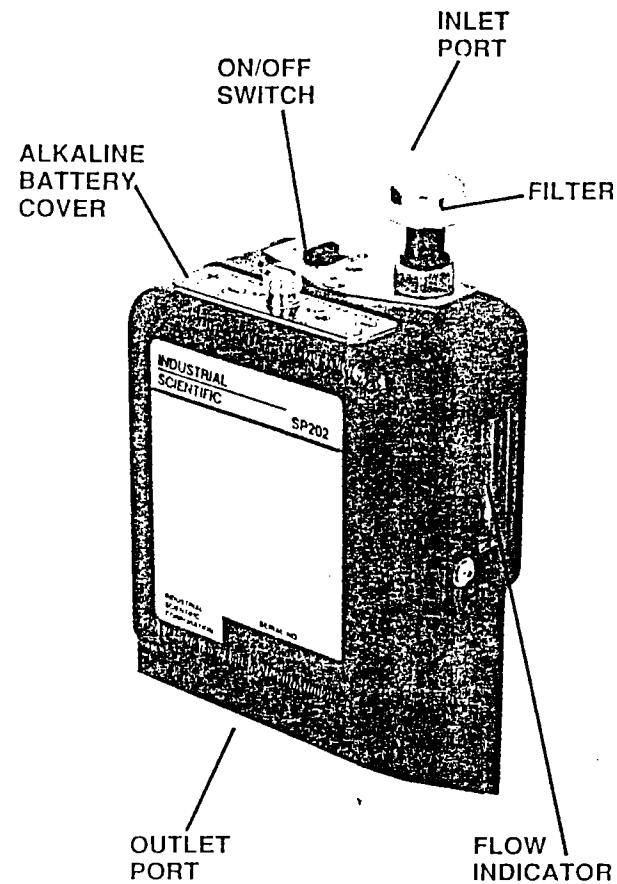

Figure 2.
SP202 Controls (Alkaline)

3.2 Testing the Pump

To test the pump for proper operation:

1. The SP202 must be held in a vertical position with the green area of the flow indicator directly above the red area. Attach desired length of tubing. Turn the pump on. The pump is working properly if the flow indicator float is in the green region. Under normal operation, the ball may be moving in the green region. If the ball is in the red region, the batteries may need charged/changed or the filter (1702-4597) may be obstructed. If the pump still does not function properly the pump must be serviced before use.

2. Block the inlet of the SP202 by placing a finger on the filter of the Sampling Pump (see Figures 1 & 2). Check the float in the flow indicator and verify that it is either fluctuating between the red and green area, or that it is completely in the red area of the indicator. Remove the obstruction from the filter of the SP202 Sampling Pump and note that the float in the flow indicator returns to the green area of the indicator.

3. Block the outlet of the SP202 by placing a finger on the outlet fitting on the Sampling Pump. Check the float in the flow indicator and verify that it is in the red area of the indicator. Remove the obstruction from the outlet of the SP202 Sampling Pump and note that the float in the flow indicator returns to the green area of the indicator.

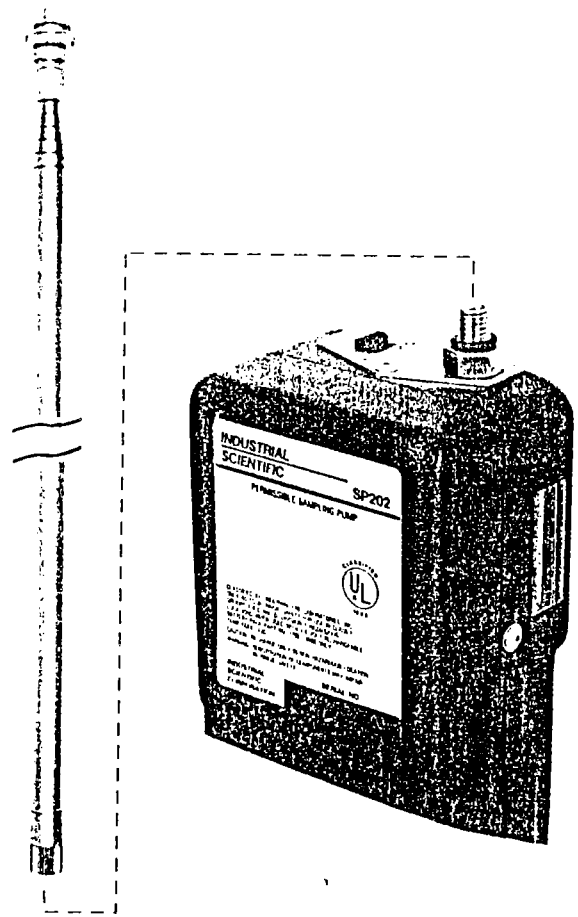

Figure 3.
SP202 with Extendable Probe

3.3 Using the Pump

NOTE: The flow indicator should be checked periodically.

To use the pump:

1. Fit the SP202 over the sensor end of the 200 Series Instrument. Push the instrument into the pump cavity as far as possible. This is a tight fit; therefore, you may need to "rock" the instrument into position. There will be gaps between the SP202 and the instrument; these serve to prevent sensor pressurization.

2. Attach the extendable probe or sampling hose on the fitting. Turn on the SP202. Allow 2 seconds per foot of hose length for the sampling line to be purged before reading the concentration.

3. If the pump motor is heard to stall or slow noticeably during use, there may be a blockage in the sample draw hose, or the external filter(s) may be clogged and need to be replaced. Check the SP202 flow indicator if a problem exists, withdraw the hose, clear the blockage and/or replace the filters, and test the unit as described in Section 3.2 before resuming operation. See Section 4.6 for the proper way to test the external filter.

3.4 Operating Precautions

1. The external dust filter will not stop mists, vapors or steam.

2. The SP202 will lift a vertical column of water in excess of 10 ft. before the pump motor will stall.

The pump will draw liquid over a much longer distance if the hose is not vertical. If liquid is drawn into the pump, internal SP202 components may be damaged (take precautions to prevent this). See Section 3.5.

3. Do not operate the SP202 without the external dust filter (P/N 1702-4597). Pump damage may result, and the warranty will be voided.

4. The screw-in external dust filter on the SP202 is designed to stop very small particles from damaging internal pump parts. In very dusty atmospheres, this filter may clog in a very short time. To prevent this, use an additional in-line prefilter, such as P/N 1701-3145 to prevent most of the dust from reaching the screw-in filter.

5. Use teflon tubing conversion kit P/N 1704-3746 when sampling for toxic gases in the parts-per-million range. Use of other tubing such as tygon can cause erroneously low readings due to the absorption of the gas by the tubing.

6. Do not use a sampling hose longer than 100 feet.

3.5 Using the Water Stop

1. A water stop is included with each pump. If the pump will be operated in areas where liquid can be drawn into the sampling hose, the water stop should be inserted into the end of the sampling hose (tapered end into hose) prior to sampling. This will prevent liquid from being drawn into the pump.

2. If the water stop is dropped into liquid, it will block the sample from entering into the hose and will

restrict sample flow. If this occurs, withdraw the hose, tap or shake the water stop to remove the liquid, and test the unit (with sample hose connected) as described in Section 3.2 before resuming operation.

3. If the pump will not operate after attempting to remove the liquid from the water stop, remove the water stop from the hose. If the flow increases, the water stop is clogged and should be replaced.

4. The water stop may also be used as an auxiliary filter in very dusty atmospheres.

4.0 MAINTENANCE

4.1 Regular Maintenance

The SP202 requires no regular maintenance except for recharging the batteries or replacing the batteries and periodic replacement of the filter.

4.2 Battery Charging (Nicad Users Only)

A completely discharged battery will be restored to full capacity by 14 hours of charging with Industrial Scientific's single-unit, five-unit, and twelve-unit chargers.

4.3 Battery "Memory" (Nicad Users Only)

An apparent reduction in battery capacity may result from repetitive use patterns. A fully charged battery should provide a minimum of 14 hours of continuous operation. A fully charged battery that does not provide 14 hours of continuous operation may have

developed a "memory" condition. To eliminate this memory:

1. Discharge the battery until the motor speed drops noticeably and the flow indicator drops into the red region. Do not discharge beyond this point.

2. Turn the pump off and recharge for a minimum of 14 hours.

3. If, after repeating this procedure one more time, the pump will not run for 14 hours, replace the battery pack.

4.4 Battery Life (Nicad)

Battery life can be maintained by the following procedure.

1. Discharge the battery to different degrees before each charging.

2. Charge the battery only when the motor begins to slow down and the flow indicator drops into the red region.

3. Never allow the battery to become fully discharged.

4.5 Battery Life (Alkaline)

A set of new batteries will provide a minimum of 10 hours of continuous operation. Actual operation time will vary between battery manufacturers, ambient temperature, and tubing length.

NOTE: Use only Industrial Scientific Corporation Part No. 1703-4265 or one of the approved

battery types listed on the pump. Always replace all four alkaline batteries at the same time.

The battery cover is held in place with a quick-opening fastener. Remove the battery cover by turning the fastener in a counterclockwise direction. First, remove the batteries from positions 2 and 3. Then, move the batteries from positions 1 and 4 to positions 2 and 3 for removal.

To insert new batteries, the pump should be positioned face down. Insert the battery for position 1 into the pump at position 2. Then, move it to position 1. Insert the position 2 battery. Insert the battery for position 4 into the pump at position 3. Then, move it to position 4. Insert the position 3 battery. Check the exposed battery terminals against the battery cover markings for proper alignment before installing the battery cover. Press the battery cover into position and secure by turning the fastener in a clockwise direction. (see Figure 4).

4.6 Testing the SP202 Filter

To test the filter for proper operation:

1. Switch on the pump.
2. Listen to the pump speed.
3. Verify that the flow indicator float is in the green area.
4. Unscrew the filter (Item 11 in Fig. 5, Item 24 in Fig. 6).
5. If the pump speed increases, replace the filter.

4.7 Alternate Filter Test Method

Using the flow indicator, measure and compare the flow with first the old filter and then the new one.

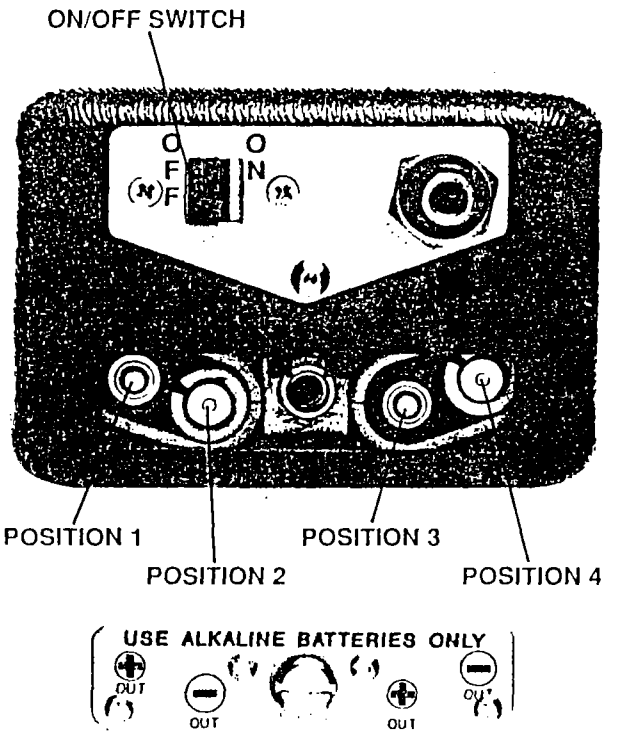

Figure 4.
Alkaline Battery Replacement

5.0 REPLACEMENT PARTS (NICAD)

The following item numbers refer to the exploded view, Figure 5.

TABLE II. REPLACEMENT PARTS

Item	Part No.	Description
	1810-1782	**SP202 SAMPLING PUMP**
1	1704-0841	Pump Assembly
2	1704-1070	Case Front
3	1704-1096	Case Back
4	1704-0585	Pump Bracket
5	1704-0544	Flow Indicator
6	1704-0601	Adapter Fitting
7	1704-1112	Faceplate
8	1704-3951	Fitting 1/8"
9	1704-0809	Switch
10	1702-4688	Battery Pack
11	1702-4597	Filter
12	1700-1660	Charging Socket
13	1701-1990	Solder Lug
14	1700-7592	Tubing
15	1703-6179	Nut #10-32
16	1704-0924	Nut M8 x 1.25
17	1701-3541	Screw 4-40 x 1/4"
18	1703-0693	Screw 2-56 x .25
19	1704-1682	Plate On/Off
20	1701-9795	Lockwasher
21	1704-1690	Switch Gasket
22	1702-2211	O-Ring
23	1700-5323	Wire #24 Red

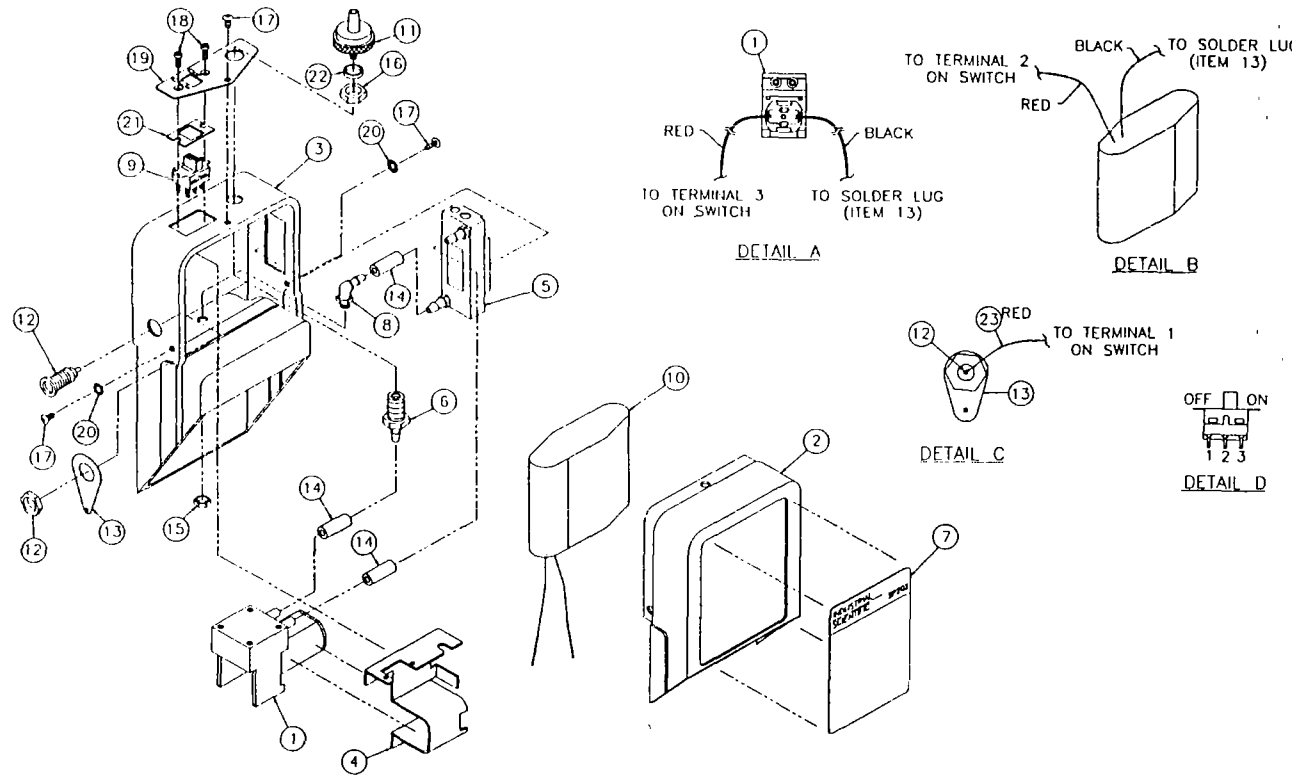

Figure 5.
Exploded View (Nicad)

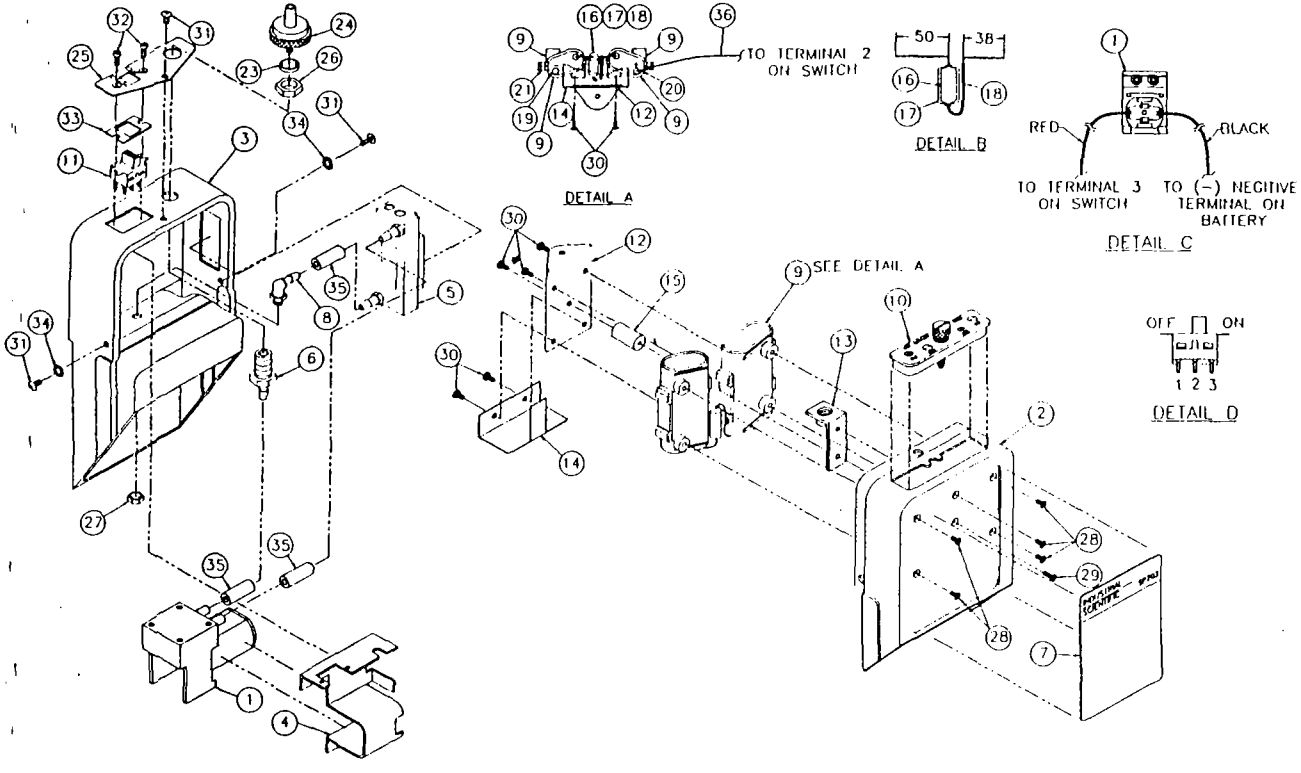

Figure 6.
Exploded View (Alkaline)

5.0 REPLACEMENT PARTS (ALKALINE)

The following item numbers refer to the exploded view, Figure 6.

TABLE III. REPLACEMENT PARTS

Item	Part No.	Description
	1810-1790	**SP202 SAMPLING PUMP**
1	1704-0841	Pump Assembly
2	1704-1062	Case Front
3	1704-1088	Case Back
4	1704-0585	Pump Bracket
5	1704-0544	Flow Indicator
6	1704-0601	Adapter Fitting
7	1704-1120	Faceplate
8	1704-3951	Fitting 1/8"
9	1703-3879	Battery Case
10	1704-0890	Battery Cover
11	1704-0809	Switch
12	1704-0577	Battery Bracket
13	1704-0916	Bracket/Fastener
14	1703-7482	Battery Insulator
15	1703-6401	Spacer
16	1703-7037	Resistor
17	1700-8715	Shrink Tubing 3/16"
18	1700-8376	Shrink Tubing 1/16"
19	1703-4182	Battery Contact (Left)
20	1703-4190	Battery Contact (Right)
21	1703-4125	Snaplock Pin
22	1703-4265	AAA Battery
23	1702-2211	O-Ring
24	1702-4597	Filter
25	1704-1682	Plate On/Off
26	1704-0924	Nut M8 x 1.25

Item	Part No.	Description
27	1703-6179	Nut #10-32
28	1703-2434	Screw 2-56 x .18
29	1703-0693	Screw 2-56 x .25
30	1703-4034	Screw 2-56 x .18 PH
31	1701-3541	Screw 4-40 x .25
32	1703-0695	Screw 2-56 x .25 PH
33	1704-1690	Switch Gasket
34	1701-9795	Lockwasher
35	1700-7592	Tygon Tubing 1/8"
36	1700-5323	Wire #24 Red

6.0 SPECIFICATIONS

Dimensions:	52mm x 79mm x 137mm (2.04" x 3.1" x 5.4")
Weight: (Alkaline)	310 Grams (11 oz.)
(Nicad)	369 Grams (13 oz.)
Pumping Capability:	Minimum of one half liter per minute (1pm), through 100' of .125" ID hose.
Battery Life: (Nicad)	Minimum of 14 hours continuous operation with battery pack P/N 1702-4688 at 25°C with 10 ft. tygon tubing.
(Alkaline)	10 hours @ 25°C with 10 ft. tygon tubing. 2 hours @ 0° with 10 ft. tygon tubing.

7.0 SP202 ACCESSORIES

Part Number	Description
1702-4597	Screw-on filter, 1 each
1702-4191	Screw-on filter, Package of 5
1701-3145	In-line filter
1810-1386	Extendable Probe
1810-1428	4 ft. Polycarbonate Probes
1810-0123	Single-Unit Charger
1810-0115	5-Unit Charger
1810-1006	12-Unit Charger
1700-7592	Sampling Hose
1702-7152	Water Stop
1704-3746	Teflon Tubing Coversion Kit

L

Organic and Inorganic Chemical Concentrations

TABLE 7-2
ORGANIC AND INORGANIC CHEMICAL CONCENTRATIONS
AMERICAN CHEMICAL SERVICES RI/FS
GRIFFITH, INDIANA

TRIX: Ground Water
RCE AREA: Upper Aquifer

CHEMICAL	UNITS	CHEMICAL CONCENTRATION MINIMUM	MAXIMUM	ARITHMETIC MEAN	NUMBER SAMPLES ANALYZED TOTAL	DETECTED
Volatiles					24	
Chloromethane	ug/l	68.000	68.000	68.00		1
Vinyl Chloride	ug/l	22.000	720.000	374.00		3
Chloroethane	ug/l	3.000	2000.000	442.71		17
Methylene Chloride	ug/l	1.000	7.000	4.00		2
Acetone	ug/l	84000.000	99000.000	91500.00		2
1,1-Dichloroethane	ug/l	6.000	2400.000	981.25		4
Total 1,2-Dichloroethene	ug/l	1.000	400.000	180.67		6
2-Butanone	ug/l	150000.000	220000.000	185000.00		2
Trichloroethene	ug/l	34.000	45.000	39.50		2
Benzene	ug/l	1.000	100000.000	7265.20		15
4-Methyl-2-Pentanone	ug/l	45000.000	54000.000	49500.00		2
2-Hexanone	ug/l	1200.000	1800.000	1500.00		2
Tetrachloroethene	ug/l	160.000	200.000	180.00		2
Toluene	ug/l	21.000	2300.000	725.25		4
Chlorobenzene	ug/l	2.000	96.000	33.60		5
Ethylbenzene	ug/l	52.000	1100.000	476.00		7
Total Xylenes	ug/l	47.000	3000.000	659.57		7
Semi-Volatiles					24	
Phenol	ug/l	3.000	240.000	34.20		10
bis(2-Chloroethyl)ether	ug/l	4.000	250.000	65.67		9
1,3-Dichlorobenzene	ug/l	3.000	3.000	3.00		1
1,4-Dichlorobenzene	ug/l	3.000	10.000	5.50		4
1,2-Dichlorobenzene	ug/l	4.000	33.000	18.50		6
2-Methylphenol	ug/l	2.000	38.000	14.50		4
bis(2-Chloroisopropyl)ether	ug/l	59.000	300.000	143.20		5
4-Methylphenol	ug/l	5.000	2200.000	468.00		5
Isophorone	ug/l	19.000	35.000	26.33		3
2,4-Dimethylphenol	ug/l	6.000	110.000	41.33		3
Benzoic acid	ug/l	2.000	1900.000	323.00		6
Naphthalene	ug/l	2.000	71.000	32.50		6
4-Chloro-3-methylphenol	ug/l	2.000	2.000	2.00		1
2-Methylnaphthalene	ug/l	9.000	27.000	17.00		3
Diethylphthalate	ug/l	3.000	9.000	6.00		2
Pentachlorophenol	ug/l	2.000	3.000	2.50		2
Di-n-butylphthalate	ug/l	2.000	2.000	2.00		1
bis(2-Ethylhexyl)phthalate	ug/l	2.000	50.000	16.33		6
Pesticides/PCBs					24	
AROCLOR-1248	ug/l	2.600	2.600	2.60		1
AROCLOR-1260	ug/l	27.000	27.000	27.00		1

TABLE 7-2
ORGANIC AND INORGANIC CHEMICAL CONCENTRATIONS
AMERICAN CHEMICAL SERVICES RI/FS
GRIFFITH, INDIANA

MATRIX: Ground Water
CE AREA: Upper Aquifer

CHEMICAL	UNITS	CHEMICAL CONCENTRATION MINIMUM	MAXIMUM	ARITHMETIC MEAN	NUMBER SAMPLES ANALYZED TOTAL	DETECTED
Metals					24	
Aluminum	ug/l	250.000	280.000	265.00		2
Arsenic	ug/l	2.100	43.200	13.59		17
Barium	ug/l	230.000	1840.000	608.75		16
Beryllium	ug/l	0.250	0.250	0.25		1
Cadmium	ug/l	0.240	3.100	0.98		4
Calcium	ug/l	32100.000	1040000.000	176233.33		24
Chromium, Total	ug/l	1.100	3.900	2.43		4
Iron	ug/l	170.000	218000.000	25052.77		22
Lead	ug/l	3.200	4.600	3.90		2
Magnesium	ug/l	7270.000	78800.000	33820.56		18
Manganese	ug/l	281.000	4250.000	2099.00		23
Mercury	ug/l	1.700	1.700	1.70		1
Nickel	ug/l	48.000	53.000	49.67		3
Potassium	ug/l	1480.000	95800.000	13938.75		24
Selenium	ug/l	2.100	6.200	3.47		3
Sodium	ug/l	12700.000	444000.000	145423.81		21
Thallium	ug/l	3.100	4.000	3.55		2
Vanadium	ug/l	2.200	25.900	8.25		8
Zinc	ug/l	10.000	886.000	113.15		20
Cyanide, Total	ug/l	10.000	10.000	10.00		1
Tent. Ident. Compound-SVOC					24	
Unknown	ug/l	6.000	2600.000	249.79		86
Unknown Hydrocarbon	ug/l	36.000	1100.000	418.67		3
Ethylmethylbenzene isomer	ug/l	24.000	130.000	64.00		4
Trimethylbenzene isomer	ug/l	50.000	300.000	172.50		4
Ethyldimethylbenzene isomer	ug/l	32.000	160.000	96.00		2
Undecane, 4,7-dimethyl-	ug/l	120.000	120.000	120.00		1
Benzene, 1,1'-oxybis-	ug/l	24.000	24.000	24.00		1
Benzene, propyl-	ug/l	22.000	22.000	22.00		1
Benzene, 1-ethyl-2-methyl-	ug/l	42.000	88.000	65.00		2
Benzene, 2-ethyl-1,4-dimethyl-	ug/l	6.000	400.000	151.00		4
Unknown Substituted Benzene	ug/l	22.000	110.000	51.00		8
Unknown carboxylic acid	ug/l	22.000	22.000	22.00		1
Tetramethylbenzene isomer	ug/l	120.000	130.000	125.00		2
Benzene, 1,3,5-trimethyl-	ug/l	82.000	280.000	181.00		2
Cyclohexanol, 3,3,5-trimethyl-	ug/l	26.000	2000.000	728.57		7
Hexanoic acid, 2-ethyl-	ug/l	360.000	360.000	360.00		1
Benzene, 1-ethenyl-3-ethyl-	ug/l	18.000	18.000	18.00		1
Hexanoic acid (DOT)	ug/l	740.000	740.000	740.00		1
Dimethylphenol	ug/l	54.000	200.000	127.00		2
Cyclopentanol, 2-methyl-Cl...	ug/l	52.000	52.000	52.00		1
Benzene, 1-ethyl-4-methoxy-	ug/l	90.000	90.000	90.00		1
Furan, 2,2'-methylenebis-	ug/l	150.000	150.000	150.00		1
Benzenamine, n,n-diethyl-	ug/l	32.000	32.000	32.00		1

TABLE 7-2
ORGANIC AND INORGANIC CHEMICAL CONCENTRATIONS
AMERICAN CHEMICAL SERVICES RI/FS
GRIFFITH, INDIANA

MATRIX: Ground Water
RCE AREA: Upper Aquifer

CHEMICAL	UNITS	CHEMICAL CONCENTRATION MINIMUM	MAXIMUM	ARITHMETIC MEAN	NUMBER SAMPLES ANALYZED TOTAL	DETECTED
Furan, 2,2'-[oxybis(methylene)]bis,-	ug/l	32.000	54.000	42.67		3
Hexanoic acid, anhydride	ug/l	60.000	60.000	60.00		1
1,4-Methanonaphthalene, 1,4-...	ug/l	160.000	160.000	160.00		1
2-Propanol, 1-[2-(2-methoxy-1-methylethoxy)-1-2-propanol	ug/l	110.000	110.000	110.00		1
Hexanoic acid, 2-methyl-	ug/l	720.000	720.000	720.00		1
2,4-Pentanediol, 2-methyl-	ug/l	72.000	1800.000	936.00		2
2-Propanol, 2-(2-methoxy-1-m...	ug/l	90.000	90.000	90.00		1
Benzeneacetic acid, .alpha.-ethyl-	ug/l	58.000	58.000	58.00		1
Pentanoic acid, 4-methyl-	ug/l	1100.000	1100.000	1100.00		1
Disulfide, diethyl-	ug/l	140.000	720.000	430.00		2
3-Octanone	ug/l	86.000	86.000	86.00		1
Benzene, 1-chloro-3-methyl-	ug/l	120.000	120.000	120.00		1
Cyclohexanemethanol, .alpha.-.alpha.-4-trimethyl-	ug/l	220.000	220.000	220.00		1
Unknown substituted phenol	ug/l	28.000	28.000	28.00		1
Phenol, 3-ethyl-5-methyl-	ug/l	50.000	50.000	50.00		1
Benzoic acid, 3-methyl-	ug/l	38.000	38.000	38.00		1
thane, 1,2-bis(2-chloroethoxy)-	ug/l	50.000	78.000	64.00		2
Benzene, ethyl-	ug/l	16.000	16.000	16.00		1
Benzene, 1,3-dimethyl-	ug/l	440.000	440.000	440.00		1
Benzene, 1,2-dimethyl-4-(phenylmethyl)-	ug/l	24.000	24.000	24.00		1
Benzene, (1,1-dimethylpropyl...	ug/l	32.000	32.000	32.00		1
Naphthalene, 1,2,3,4-tetrah...	ug/l	52.000	52.000	52.00		1
1(2H)-Naphthalenone, 3,4-dih...	ug/l	12.000	12.000	12.00		1
2-Cyclohepten-1-one	ug/l	92.000	92.000	92.00		1
Benzene, 1-methyl-4-(methyls...	ug/l	14.000	14.000	14.00		1
Glycine, n-(2-methyl-1-oxo-2...	ug/l	12.000	12.000	12.00		1
Phenol, 3,5-dimethyl-	ug/l	12.000	12.000	12.00		1
1,3-Pentanediol, 2,2,4-trimethyl-	ug/l	40.000	40.000	40.00		1
2,4,6(1H,3H,5H)-Pyrimidinetrione-5-(1-methyl)-	ug/l	10.000	130.000	70.00		2
2-Methylcyclopentanol isomer	ug/l	2000.000	2000.000	2000.00		1
Trimethylphenol isomer	ug/l	62.000	62.000	62.00		1
Methylbenzoic acid isomer	ug/l	44.000	420.000	232.00		2
2-Propanol, 1-(2-methoxy-1-methylethoxy)-2-propanol	ug/l	140.000	2200.000	1170.00		2
Propanoic acid, 2-(3-chlorophenoxy)-propanoic acid	ug/l	98.000	98.000	98.00		1
Unknown substituted sulfonyl	ug/l	44.000	44.000	44.00		1
Trimethyl benzoic acid	ug/l	12.000	12.000	12.00		1
Caprolactam	ug/l	10.000	10.000	10.00		1
Octane, 2,3-dimethyl-	ug/l	320.000	720.000	520.00		2
ecane, 2,6,7-trimethyl-	ug/l	320.000	380.000	350.00		2
onane, 3,7-dimethyl-	ug/l	180.000	180.000	180.00		1

TABLE 7-2
ORGANIC AND INORGANIC CHEMICAL CONCENTRATIONS
AMERICAN CHEMICAL SERVICES RI/FS
GRIFFITH, INDIANA

MATRIX: Ground Water
SOURCE AREA: Upper Aquifer

CHEMICAL	UNITS	CHEMICAL CONCENTRATION MINIMUM	MAXIMUM	ARITHMETIC MEAN	NUMBER SAMPLES ANALYZED TOTAL	DETECTED
Dimethyl undecane	ug/l	170.000	170.000	170.00		1
Methylethylphenol	ug/l	54.000	88.000	71.00		2
Unknown diol	ug/l	82.000	82.000	82.00		1
Chloromethylbenzene	ug/l	68.000	68.000	68.00		1
Disilane, hexaethyl-	ug/l	46.000	46.000	46.00		1
Unknown alcohol	ug/l	24.000	24.000	24.00		1
Methylpropenylbenzene	ug/l	6.000	6.000	6.00		1
Tetrahydronaphthalene	ug/l	66.000	66.000	66.00		1
2-Cyclohexen-1-one, 3,5,5-trimethyl-	ug/l	32.000	32.000	32.00		1
Benzoic acid, 2,4-dimethyl-	ug/l	24.000	24.000	24.00		1
Benzoic acid, 2,4,6-trimethyl-	ug/l	36.000	36.000	36.00		1
Benzoic acid, 4-(1,1-dimethylethyl)-	ug/l	34.000	34.000	34.00		1
Phenobarbital (VAN)	ug/l	8.000	22.000	15.00		2
Ethyltrimethylbenzene + unknown	ug/l	54.000	54.000	54.00		1
Methylnaphthalene	ug/l	74.000	74.000	74.00		1
Dimethylnaphthalene	ug/l	38.000	38.000	38.00		1
Tent. Ident. Compound-VOC					24	
Unknown	ug/l	29.000	140.000	73.50		8
Benzene, 1-ethyl-2-methyl-	ug/l	70.000	70.000	70.00		1
Benzene, propyl-	ug/l	60.000	60.000	60.00		1
Benzene, (1-methylethyl)-	ug/l	60.000	60.000	60.00		1
yclohexane, methyl-	ug/l	40.000	40.000	40.00		1
thylmethylbenzene isomer	ug/l	35.000	100.000	59.60		5
Trimethylbenzene isomer	ug/l	130.000	640.000	437.50		4
Benzene, 1,3,5-trimethyl-	ug/l	170.000	170.000	170.00		1
Unknown alcohol	ug/l	700.000	1100.000	900.00		2
Ethane, 1,1'oxybis-	ug/l	4.000	1500.000	264.29		7
2-Propanol, 2-methyl-	ug/l	8.000	8.000	8.00		1
Unknown oxygenated alkane	ug/l	450.000	450.000	450.00		1
Dimethylcyclohexane	ug/l	76.000	76.000	76.00		1
Ethenylcyclohexene	ug/l	63.000	63.000	63.00		1
Diethylbenzene	ug/l	78.000	78.000	78.00		1
Butanol	ug/l	40.000	40.000	40.00		1
Propane, 1,1'-oxybis-	ug/l	6.000	6.000	6.00		1
Methylpentanol	ug/l	15.000	15.000	15.00		1
Methylhexanone	ug/l	7.000	7.000	7.00		1
Cyclohexane, 1,3-dimethyl-, trans-	ug/l	45.000	45.000	45.00		1
Disopropyl ether (DOT)	ug/l	8.100	8.100	8.10	-	1

This table includes all compounds identified above detection limits in the Upper Aquifer Source Area (see table 7-1 for samples included in this area), and is provided as the starting point in the development of a Set of Chemical Data for use in the Risk Assessment, as discussed in Section 7.1.2.1. Refer to appropriate appendices to determine the total parameters analyzed and their associated detection limits. Refer to appendix U for values used in risk calulations. The data values presented contain a maximum of three significant digits for the results of metals analyses and two significant digits for organic chemical analyses: additional digits are due to limitations in the computer program used to prepare these tables, and do not infer an increase in accuracy. The number of tentatively identified compounds designated as unknowns may exceed the total number of samples analyzed because more than one unknown compound may be present in a given sample.

[ACS]UGW.MAX

TABLE 7-3
ORGANIC AND INORGANIC CHEMICAL CONCENTRATIONS
AMERICAN CHEMICAL SERVICES RI/FS
GRIFFITH, INDIANA

\TRIX: Ground Water
JURCE AREA: Lower Aquifer

CHEMICAL	UNITS	CHEMICAL CONCENTRATION MINIMUM	MAXIMUM	ARITHMETIC MEAN	NUMBER SAMPLES ANALYZED TOTAL	DETECTED
Volatiles					9	
Chloroethane	ug/l	3.000	440.000	214.33		3
4-Methyl-2-Pentanone	ug/l	3.000	3.000	3.00		1
Semi-Volatiles					9	
bis(2-Chloroethyl)ether	ug/l	11.000	12.000	11.50		2
Metals					9	
Arsenic	ug/l	2.100	8.600	4.06		5
Barium	ug/l	220.000	310.000	255.00		4
Calcium	ug/l	59000.000	151000.000	113266.67		6
Iron	ug/l	152.000	3160.000	1043.33		6
Magnesium	ug/l	19300.000	53100.000	35766.67		6
Manganese	ug/l	123.000	866.000	337.33		6
Mercury	ug/l	0.470	0.470	0.47		1
Potassium	ug/l	960.000	3420.000	1923.33		6
Sodium	ug/l	10000.000	96200.000	40700.00		6
Vanadium	ug/l	2.000	2.000	2.00		1
Zinc	ug/l	10.000	22.000	16.00		2
Tent. Ident. Compound-SVOC					9	
Unknown	ug/l	10.000	3300.000	340.59		17
Cyclohexanol, 3,3,5-trimethyl-	ug/l	2500.000	2500.000	2500.00		1
2-Propanol, 1-[2-(2-methoxy-1-methylethoxy)-1-2 -propanol	ug/l	1000.000	1000.000	1000.00		1
2,4-Pentanediol, 2-methyl-	ug/l	270.000	270.000	270.00		1
2-Propanol, 1-(2-methoxy-1-methylethoxy)-2-prop anol	ug/l	530.000	530.000	530.00		1
Dimethylbenzoic acid	ug/l	400.000	400.000	400.00		1
Dimethylethylbenzoic acid	ug/l	400.000	400.000	400.00		1
Propanoic acid, 2-(3-chlorophenoxy)-propanoic acid	ug/l	170.000	170.000	170.00		1
Tent. Ident. Compound-VOC					9	
Unknown	ug/l	1200.000	1200.000	1200.00		1
Methane, dimethoxy-	ug/l	6.000	6.000	6.00		1

TABLE 7-3
ORGANIC AND INORGANIC CHEMICAL CONCENTRATIONS
AMERICAN CHEMICAL SERVICES RI/FS
GRIFFITH, INDIANA

''TRIX: Ground Water
RCE AREA: Lower Aquifer

CHEMICAL	UNITS	CHEMICAL CONCENTRATION MINIMUM	MAXIMUM	ARITHMETIC MEAN	NUMBER SAMPLES ANALYZED TOTAL	DETECTED
Ethane, 1,1'oxybis-	ug/l	36.000	36.000	36.00		1
Propane, 2,2'-oxybis-	ug/l	10.000	10.000	10.00		1
Substituted methylborane	ug/l	11.000	11.000	11.00		1

This table includes all compounds identified above detection limits in the lower Aquifer Source Area (see table 7-1 for samples included in this area), and is provided as the starting point in the development of a Set of Chemical Data for use in the Risk Assessment, as discussed in Section 7.1.2.1. Refer to appropriate appendices to determine the total parameters analyzed and their associated detection limits. Refer to appendix U for values used in risk calulations. The data values presented contain a maximum of three significant digits for the results of metals analyses and two significant digits for organic chemical analyses: additional digits are due to limitations in the computer program used to prepare these tables, and do not infer an increase in accuracy. The number of tentatively identified compounds designated as unknowns may exceed the total number of samples analyzed because more than one unknown compound may be present in a given sample.

TABLE 7-4
ORGANIC AND INORGANIC CHEMICAL CONCENTRATIONS
AMERICAN CHEMICAL SERVICES RI/FS
GRIFFITH, INDIANA

MATRIX: Soil
RCE AREA: On-site Containment Area

CHEMICAL	UNITS	CHEMICAL CONCENTRATION MINIMUM	MAXIMUM	ARITHMETIC MEAN	NUMBER SAMPLES ANALYZED TOTAL	DETECTED
Volatiles					42	
Chloroethane	ug/kg	1.000	2.000	1.50		2
Acetone	ug/kg	88.000	7400.000	2896.00		3
1,1-Dichloroethane	ug/kg	1.000	250.000	34.00		8
Total 1,2-Dichloroethene	ug/kg	2.000	5200.000	606.63		24
Chloroform	ug/kg	1.000	6400.000	970.29		7
1,2-Dichloroethane	ug/kg	1.000	970.000	485.50		2
2-Butanone	ug/kg	4.000	210.000	101.92		12
1,1,1-Trichloroethane	ug/kg	1.000	20000000.000	884990.00		23
1,2-Dichloropropane	ug/kg	1.000	230.000	41.50		6
Trichloroethene	ug/kg	4.000	40000.000	5305.20		10
1,1,2-Trichloroethane	ug/kg	1.000	140.000	34.80		5
Benzene	ug/kg	1.000	7100000.000	205348.34		35
4-Methyl-2-Pentanone	ug/kg	2.000	650.000	119.38		13
Tetrachloroethene	ug/kg	9.000	5900000.000	430941.59		17
1,1,2,2-Tetrachloroethane	ug/kg	2.000	3900.000	779.00		7
Toluene	ug/kg	4.000	200000000.000	5292643.45		38
Chlorobenzene	ug/kg	2.000	300.000	104.14		7
Ethylbenzene	ug/kg	2.000	6700000.000	193832.14		37
Styrene	ug/kg	1.000	6200.000	3100.50		2
Total Xylenes	ug/kg	6.000	25000000.000	790871.54		37
Semi-Volatiles					14	
Phenol	ug/kg	53.000	780.000	345.33		6
1,3-Dichlorobenzene	ug/kg	110.000	350.000	230.00		2
1,4-Dichlorobenzene	ug/kg	570.000	1200.000	850.00		3
1,2-Dichlorobenzene	ug/kg	110.000	9900.000	3557.50		8
2-Methylphenol	ug/kg	42.000	9200.000	1663.50		6
4-Methylphenol	ug/kg	82.000	17000.000	3082.00		6
Isophorone	ug/kg	3900.000	88000.000	45950.00		2
2,4-Dimethylphenol	ug/kg	76.000	12000.000	2311.50		6
Benzoic acid	ug/kg	49.000	49.000	49.00		1
2,4-Dichlorophenol	ug/kg	89.000	280.000	184.50		2
Naphthalene	ug/kg	370.000	90000.000	19517.78		9
Hexachlorobutadiene	ug/kg	3700.000	3700.000	3700.00		1
2-Methylnaphthalene	ug/kg	150.000	55000.000	18580.00		6
2,4,5-Trichlorophenol	ug/kg	270.000	270.000	270.00		1
Dimethylphthalate	ug/kg	42.000	3500.000	1771.00		2
Acenaphthylene	ug/kg	340.000	5500.000	2086.67		3
Acenaphthene	ug/kg	980.000	11000.000	4493.33		3
Dibenzofuran	ug/kg	570.000	4200.000	2385.00		2
Diethylphthalate	ug/kg	46.000	47.000	46.50		2
Fluorene	ug/kg	1200.000	14000.000	5466.67		3
Pentachlorophenol	ug/kg	160.000	160.000	160.00		1
Phenanthrene	ug/kg	1500.000	20000.000	7966.67		3
Anthracene	ug/kg	94.000	94.000	94.00		1
Di-n-butylphthalate	ug/kg	160.000	36000.000	10990.00		4

TABLE 7-4
ORGANIC AND INORGANIC CHEMICAL CONCENTRATIONS
AMERICAN CHEMICAL SERVICES RI/FS
GRIFFITH, INDIANA

TRIX: Soil
URCE AREA: On-site Containment Area

CHEMICAL	UNITS	CHEMICAL CONCENTRATION MINIMUM	MAXIMUM	ARITHMETIC MEAN	NUMBER SAMPLES ANALYZED TOTAL	DETECTED
Fluoranthene	ug/kg	54.000	3800.000	1136.00		4
Pyrene	ug/kg	250.000	5900.000	2216.67		3
Butylbenzylphthalate	ug/kg	740.000	15000.000	5713.33		3
Benzo(a)anthracene	ug/kg	170.000	170.000	170.00		1
Chrysene	ug/kg	84.000	84.000	84.00		1
bis(2-Ethylhexyl)phthalate	ug/kg	39.000	140000.000	13545.77		13
Pesticides/PCBs					31	
Endosulfan 1	ug/kg	11.000	12.000	11.50		2
4,4-DDT	ug/kg	50.000	91.000	70.50		2
AROCLOR-1242	ug/kg	130.000	400000.000	91826.00		5
AROCLOR-1248	ug/kg	600.000	990.000	795.00		2
AROCLOR-1254	ug/kg	230.000	100000.000	16871.43		7
Metals					14	
luminum	mg/kg	1450.000	5670.000	3187.86		14
ntimony	mg/kg	5.300	5.300	5.30		1
Arsenic	mg/kg	1.000	21.300	3.70		13
Barium	mg/kg	515.000	515.000	515.00		1
Beryllium	mg/kg	0.080	0.440	0.16		14
Cadmium	mg/kg	0.050	6.000	0.72		10
Calcium	mg/kg	183.000	38300.000	8795.71		14
Chromium, Total	mg/kg	4.600	271.000	32.15		11
Cobalt	mg/kg	22.400	22.400	22.40		1
Copper	mg/kg	6.200	115.000	22.29		8
Iron	mg/kg	1730.000	10300.000	5262.14		14
Lead	mg/kg	2.900	1440.000	112.11		14
Magnesium	mg/kg	473.000	17400.000	4368.79		14
Manganese	mg/kg	17.500	614.000	145.49		14
Mercury	mg/kg	12.400	12.400	12.40		1
Nickel	mg/kg	10.000	12.800	11.80		3
Potassium	mg/kg	264.000	764.000	483.21		14
Selenium	mg/kg	0.450	0.450	0.45		1
Vanadium	mg/kg	3.100	20.600	11.01		14
Zinc	mg/kg	9.000	747.000	71.91		14
Cyanide, Total	mg/kg	8.700	8.700	8.70		1
Percent Solids	%	65.800	89.900	84.04		14
Tent. Ident. Compound-SVOC					14	
Unknown	ug/kg	120.000	1900000.000	96398.48		33
Unknown Hydrocarbon	ug/kg	330.000	79000.000	28138.33		12
thylmethylbenzene isomer	ug/kg	670.000	45000.000	16323.33		3
Trimethylbenzene isomer	ug/kg	320.000	240000.000	50856.25		8
Ethyldimethylbenzene isomer	ug/kg	1300.000	36000.000	18650.00		2

TABLE 7-4
ORGANIC AND INORGANIC CHEMICAL CONCENTRATIONS
AMERICAN CHEMICAL SERVICES RI/FS
GRIFFITH, INDIANA

MATRIX: Soil
RCE AREA: On-site Containment Area

CHEMICAL	UNITS	CHEMICAL CONCENTRATION MINIMUM	MAXIMUM	ARITHMETIC MEAN	NUMBER SAMPLES ANALYZED TOTAL	DETECTED
Undecane, 4,7-dimethyl-	ug/kg	8000.000	740000.000	379333.33		3
Benzene, 1,1'-oxybis-	ug/kg	580.000	260000.000	69263.33		6
Benzene, propyl-	ug/kg	330.000	950.000	640.00		2
Benzene, 1-ethyl-2-methyl-	ug/kg	250.000	210000.000	32077.14		7
Benzene, 1,4-diethyl-	ug/kg	28000.000	28000.000	28000.00		1
Benzene, 2-ethyl-1,4-dimethyl-	ug/kg	82.000	200000.000	24136.57		14
Unknown Substituted Benzene	ug/kg	120.000	1300000.000	251016.25		8
Benzene, 1-ethyl-3-methyl-	ug/kg	520.000	38000.000	10705.00		4
Benzene, 1,2,4-trimethyl-	ug/kg	710.000	390000.000	68680.00		6
Benzene, (1,1-dimethylethyl)-	ug/kg	370.000	370.000	370.00		1
Hexadecanoic acid	ug/kg	220000.000	220000.000	220000.00		1
Benzene, 1,3,5-trimethyl-	ug/kg	240.000	2300.000	926.67		6
Nonane, 2,6-dimethyl-	ug/kg	14000.000	470000.000	242000.00		2
Dimethylphenol	ug/kg	1100.000	1100.000	1100.00		1
Unknown fatty acid	ug/kg	9600.000	9600.000	9600.00		1
Sulfur, mol. (S8)	ug/kg	240.000	16000.000	4217.50		8
Ethyl-phenol isomer	ug/kg	1400.000	1400.000	1400.00		1
Propyl-phenol isomer	ug/kg	3400.000	3400.000	3400.00		1
Phenol, 3,5-diethyl-	ug/kg	1100.000	1100.000	1100.00		1
Methyl-methyl-ethylphenol isomer	ug/kg	870.000	870.000	870.00		1
Benzene, 1-ethyl-4-methoxy-	ug/kg	2100.000	2100.000	2100.00		1
Cyclopentene, 1-ethenyl-3-me...	ug/kg	21000.000	190000.000	100333.33		3
Dimethylbenzene isomer	ug/kg	8300.000	12000.000	10433.33		3
Unknown chlorinated biphenyl	ug/kg	240.000	4000.000	1748.75		8
Trichlorobiphenyl isomer	ug/kg	320.000	7500.000	2655.00		4
Nonane, 4,5-dimethyl-	ug/kg	240.000	870.000	555.00		2
Aroclor 1016	ug/kg	550.000	550.000	550.00		1
1,1'-Biphenyl, tetrachloro-	ug/kg	200.000	200.000	200.00		1
Benzo[B]naphtho[2,3-D]furan	ug/kg	200.000	200.000	200.00		1
Furan, 2,2'-methylenebis-	ug/kg	1400.000	1400.000	1400.00		1
Benzenamine, n,n-diethyl-	ug/kg	540.000	170000.000	35836.00		5
Ethanone, 1-(2-chlorophenyl)-	ug/kg	410.000	410.000	410.00		1
Furan, 2,2'-[oxybis(methylene)]bis,-	ug/kg	1100.000	1100.000	1100.00		1
2(1H)-Quinolinone	ug/kg	620.000	620.000	620.00		1
Benzenesulfonamide, n-butyl-	ug/kg	900.000	900.000	900.00		1
Phenol, 2-[1-(4-hydroxypheny...	ug/kg	370.000	2200.000	1285.00		2
Benzene, 1,1'-methylenebis-	ug/kg	950.000	950.000	950.00		1
Hexanoic acid, anhydride	ug/kg	2100.000	2100.000	2100.00		1
4-Carene, (1S,3S,6R)-(-)-	ug/kg	7700.000	7700.000	7700.00		1
Undecane	ug/kg	17000.000	17000.000	17000.00		1
Decane, 3,6-dimethyl-	ug/kg	8800.000	8800.000	8800.00		1
1,4-Methanonaphthalene, 1,4-...	ug/kg	10000.000	10000.000	10000.00		1
Naphthalene, 1,2-dimethyl-	ug/kg	8400.000	8400.000	8400.00		1
Benzene, (1-methylethyl)-	ug/kg	370.000	370.000	370.00		1
Benzene, 1-ethenyl-2-methyl-	ug/kg	1400.000	1400.000	1400.00		1
Benzaldehyde, 4-propyl-	ug/kg	1100.000	1100.000	1100.00		1
Naphthalene, 1-methyl-	ug/kg	240.000	240.000	240.00		1
Benzene, 1-ethyl-2,3-dimethyl-	ug/kg	160000.000	160000.000	160000.00		1

TABLE 7-4
ORGANIC AND INORGANIC CHEMICAL CONCENTRATIONS
AMERICAN CHEMICAL SERVICES RI/FS
GRIFFITH, INDIANA

TRIX: Soil
SOURCE AREA: On-site Containment Area

CHEMICAL	UNITS	CHEMICAL CONCENTRATION MINIMUM	MAXIMUM	ARITHMETIC MEAN	NUMBER SAMPLES ANALYZED TOTAL	DETECTED
9-Eicosyne	ug/kg	610000.000	610000.000	610000.00		1
3-Carene	ug/kg	160000.000	660000.000	410000.00		2
Tent. Ident. Compound-VOC					42	
Unknown	ug/kg	4.800	42000.000	10218.40		11
Nonane	ug/kg	5.800	70000.000	19371.87		10
Octane, 2,3-dimethyl-	ug/kg	24000.000	52000.000	38000.00		2
Propylbenzene + Unknown	ug/kg	57.000	180.000	118.50		2
Benzene, 1-ethyl-2-methyl-	ug/kg	4.800	110000.000	48204.96		5
Benzene, 1,2,4-trimethyl-	ug/kg	93000.000	93000.000	93000.00		1
Unknown Hydrocarbon	ug/kg	10.000	1400.000	484.63		8
Methylethylbenzene + Unknown	ug/kg	95.000	8300.000	4197.50		2
Benzene, propyl-	ug/kg	15.000	20000.000	8794.80		5
Benzene, (1-methylethyl)-	ug/kg	11.000	49000.000	24505.50		2
Benzene, 1,2,3-trimethyl-	ug/kg	13.000	26000.000	17503.25		4
Cyclohexane, methyl-	ug/kg	34.000	53000.000	19358.50		4
Trimethylbenzene isomer	ug/kg	1100.000	1200.000	1150.00		2
‹cane	ug/kg	3300.000	320000.000	87257.14		7
›ubstituted Benzene	ug/kg	11.000	240000.000	24502.60		20
Trimethylbenzene + Unknown	ug/kg	12.000	12.000	12.00		1
Nonane, 3-methyl-	ug/kg	35000.000	35000.000	35000.00		1
Cyclohexane, propyl-	ug/kg	8.600	94.000	51.30		2
Cyclohexane, ethyl-	ug/kg	42.000	42.000	42.00		1
Nonane, 4-methyl-	ug/kg	180000.000	180000.000	180000.00		1
Benzene, 1,3,5-trimethyl-	ug/kg	3.600	3.600	3.60		1
2-Pentanol, 4-methyl-	ug/kg	2.300	2.300	2.30		1
Octane	ug/kg	41.000	28000.000	14020.50		2
Heptane, 2,5-dimethyl-	ug/kg	24000.000	24000.000	24000.00		1
Heptane, 2,4-dimethyl-	ug/kg	24000.000	24000.000	24000.00		1
Octane, 3-methyl-	ug/kg	27000.000	27000.000	27000.00		1
Benzene, 1-ethyl-4-methyl-	ug/kg	6.000	6.000	6.00		1
Dichlorobenzene	ug/kg	890.000	3400.000	2145.00		2
Bicyclo[3.1.0]hex-2-ene, 2-me...	ug/kg	55000.000	370000.000	212500.00		2
Hexane, 2,4-dimethyl-	ug/kg	25000.000	25000.000	25000.00		1
Unknown cyclic hydrocarbon	ug/kg	27.000	27.000	27.00		1
Ethylmethylbenzene	ug/kg	8.600	3400.000	447.90		14
Trimethylbenzene	ug/kg	4.900	83000.000	9696.70		17
Unknown ketone	ug/kg	12.000	94.000	53.00		2
Decane + unknown	ug/kg	34.000	38000.000	12695.33		3
Ethylmethylheptane	ug/kg	1600.000	1600.000	1600.00		1
Ethylmethyloctane	ug/kg	1900.000	1900.000	1900.00		1
Methyl(methylethyl) benzene	ug/kg	1400.000	1400.000	1400.00		1
Dimethylundecane	ug/kg	1800.000	1800.000	1800.00		1
Cyclohexane	ug/kg	290.000	290.000	290.00		1
Tetramethylbenzene	ug/kg	11.000	11.000	11.00		1
›known bicyclic hydrocarbon	ug/kg	24.000	24.000	24.00		1

TABLE 7-4
ORGANIC AND INORGANIC CHEMICAL CONCENTRATIONS
AMERICAN CHEMICAL SERVICES RI/FS
GRIFFITH, INDIANA

'IX: Soil
.CE AREA: On-site Containment Area

CHEMICAL	UNITS	CHEMICAL CONCENTRATION MINIMUM	MAXIMUM	ARITHMETIC MEAN	NUMBER SAMPLES ANALYZED TOTAL	DETECTED
Hydrocarbon + unknown	ug/kg	89.000	160.000	124.50		2
Unknown substituted cyclonex	ug/kg	62.000	62.000	62.00		1
Dichloropentane	ug/kg	1100.000	1100.000	1100.00		1
Dichloromethylbutane	ug/kg	2200.000	2200.000	2200.00		1
Dimethyloctane	ug/kg	18000.000	18000.000	18000.00		1
Dimethyldecane	ug/kg	8900.000	8900.000	8900.00		1

This table includes all compounds identified above detection limits in the On-Site Containment Area (see table 7-1 for samples included in this area), and is provided as the starting point in the development of a Set of Chemical Data for use in the Risk Assessment, as discussed in Section 7.1.2.1. Refer to appropriate appendices to determine the total parameters analyzed and their associated detection limits. Refer to appendix U for values used in risk calulations. The data values presented contain a maximum of three significant digits for the results of metals analyses and two significant digits for organic chemical analyses: additional digits are due to limitations in the computer program used to prepare these tables, and do not infer an increase in accuracy. The number of tentatively identified compounds designated as unknowns may exceed the total number of samples analyzed because more than one unknown compound may be present in a given sample.

TABLE 7-5
ORGANIC AND INORGANIC CHEMICAL CONCENTRATIONS
AMERICAN CHEMICAL SERVICES RI/FS
GRIFFITH, INDIANA

MATRIX: Soil
SOURCE AREA: Still Bottoms/Treatment Lagoon

CHEMICAL	UNITS	CHEMICAL CONCENTRATION MINIMUM	MAXIMUM	ARITHMETIC MEAN	NUMBER SAMPLES ANALYZED TOTAL	DETECTED
Volatiles					28	
Methylene Chloride	ug/kg	12000.000	260000.000	136000.00		2
Acetone	ug/kg	8100.000	12000.000	10050.00		2
1,1-Dichloroethane	ug/kg	12.000	22000.000	5095.33		6
Total 1,2-Dichloroethene	ug/kg	2.000	120000.000	21870.67		12
Chloroform	ug/kg	2.000	2100000.000	286342.21		19
1,2-Dichloroethane	ug/kg	120.000	40000.000	15780.00		4
2-Butanone	ug/kg	15.000	350000.000	59485.77		13
1,1,1-Trichloroethane	ug/kg	6.000	21000000.000	1093134.14		21
Carbon Tetrachloride	ug/kg	530000.000	3600000.000	2065000.00		2
1,2-Dichloropropane	ug/kg	17.000	22000.000	7363.40		5
Trichloroethene	ug/kg	6.000	1700000.000	183544.80		20
1,1,2-Trichloroethane	ug/kg	2.000	8100.000	2710.33		3
Benzene	ug/kg	9.000	170000.000	38794.00		17
4-Methyl-2-Pentanone	ug/kg	65.000	1500000.000	234670.28		18
Tetrachloroethene	ug/kg	23.000	1600000.000	266225.88		26
Toluene	ug/kg	14.000	23000000.000	1704183.48		27
Chlorobenzene	ug/kg	2.000	2.000	2.00		1
Ethylbenzene	ug/kg	2.000	8400000.000	751032.21		28
Styrene	ug/kg	18000.000	90000.000	54000.00		2
Total Xylenes	ug/kg	41.000	9400000.000	1978405.75		28
Semi-Volatiles					28	
Phenol	ug/kg	110.000	170000.000	20293.18		22
bis(2-Chloroethyl)ether	ug/kg	99.000	110000.000	13728.18		17
2-Chlorophenol	ug/kg	130.000	130.000	130.00		1
1,3-Dichlorobenzene	ug/kg	180.000	880.000	543.33		3
1,4-Dichlorobenzene	ug/kg	98.000	5200.000	2032.57		7
Benzyl alcohol	ug/kg	180.000	1600.000	1060.00		3
1,2-Dichlorobenzene	ug/kg	45.000	53000.000	9170.83		18
2-Methylphenol	ug/kg	120.000	15000.000	1875.56		9
4-Methylphenol	ug/kg	46.000	43000.000	4099.71		17
Isophorone	ug/kg	41.000	2600000.000	313641.24		21
2,4-Dimethylphenol	ug/kg	80.000	2600.000	580.00		10
Benzoic acid	ug/kg	130.000	50000.000	10785.00		8
2,4-Dichlorophenol	ug/kg	41.000	4100.000	1480.33		3
1,2,4-Trichlorobenzene	ug/kg	110.000	4300.000	1882.00		5
Naphthalene	ug/kg	260.000	750000.000	97080.74		27
Hexachlorobutadiene	ug/kg	55.000	40000.000	7678.93		14
4-Chloro-3-methylphenol	ug/kg	420.000	420.000	420.00		1
2-Methylnaphthalene	ug/kg	91.000	320000.000	57668.56		27
2,4,6-Trichlorophenol	ug/kg	750.000	750.000	750.00		1
2,4,5-Trichlorophenol	ug/kg	96.000	96.000	96.00		1
2-Chloronaphthalene	ug/kg	1800.000	1800.000	1800.00		1
Dimethylphthalate	ug/kg	65.000	320000.000	62443.24		17
Acenaphthylene	ug/kg	40.000	3900.000	1970.00		2

TABLE 7-5
ORGANIC AND INORGANIC CHEMICAL CONCENTRATIONS
AMERICAN CHEMICAL SERVICES RI/FS
GRIFFITH, INDIANA

TRIX: Soil
URCE AREA: Still Bottoms/Treatment Lagoon

CHEMICAL	UNITS	CHEMICAL CONCENTRATION MINIMUM	CHEMICAL CONCENTRATION MAXIMUM	CHEMICAL CONCENTRATION ARITHMETIC MEAN	NUMBER SAMPLES ANALYZED TOTAL	NUMBER SAMPLES ANALYZED DETECTED
Acenaphthene	ug/kg	60.000	4800.000	1736.10		10
4-Nitrophenol	ug/kg	1600.000	2300.000	1950.00		2
Dibenzofuran	ug/kg	450.000	660.000	555.00		2
Diethylphthalate	ug/kg	44.000	100000.000	13281.29		24
Fluorene	ug/kg	67.000	9800.000	2692.25		12
N-Nitrosodiphenylamine	ug/kg	13000.000	13000.000	13000.00		1
4-Bromophenyl-phenylether	ug/kg	2200.000	2200.000	2200.00		1
Hexachlorobenzene	ug/kg	250.000	2800.000	982.50		4
Pentachlorophenol	ug/kg	160.000	64000.000	14024.00		15
Phenanthrene	ug/kg	79.000	10000.000	3382.13		16
Anthracene	ug/kg	74.000	3300.000	1491.33		3
Di-n-butylphthalate	ug/kg	51.000	690000.000	87654.68		28
Fluoranthene	ug/kg	66.000	1700.000	769.20		5
Pyrene	ug/kg	79.000	4700.000	1565.80		5
Butylbenzylphthalate	ug/kg	47.000	960000.000	106966.33		27
Benzo(a)anthracene	ug/kg	460.000	460.000	460.00		2
Chrysene	ug/kg	260.000	460.000	360.00		2
bis(2-Ethylhexyl)phthalate	ug/kg	140.000	2600000.000	374932.14		28
Di-n-octylphthalate	ug/kg	77.000	24000.000	5474.53		15
Benzo(b)fluoranthene	ug/kg	390.000	460.000	425.00		2
Benzo(k)fluoranthene	ug/kg	390.000	460.000	425.00		2
Benzo(a)pyrene	ug/kg	260.000	260.000	260.00		1
Pesticides/PCBs					23	
Gamma-BHC (Lindane)	ug/kg	1100.000	1100.000	1100.00		1
Endosulfan 1	ug/kg	1200.000	1200.000	1200.00		1
4,4-DDT	ug/kg	4700.000	12000.000	8350.00		2
Endrin Ketone	ug/kg	260.000	260.000	260.00		1
AROCLOR-1248	ug/kg	52000.000	76000.000	64000.00		2
AROCLOR-1254	ug/kg	28000.000	47000.000	37500.00		2
AROCLOR-1260	ug/kg	330.000	35000.000	15726.00		5
Metals					11	
Aluminum	mg/kg	490.000	7890.000	3559.09		11
Antimony	mg/kg	10.900	46.600	28.75		2
Arsenic	mg/kg	0.950	5.700	2.35		10
Barium	mg/kg	81.600	1560.000	466.08		5
Beryllium	mg/kg	0.100	0.890	0.25		10
Cadmium	mg/kg	0.120	118.000	14.73		11
Calcium	mg/kg	181.000	57100.000	11242.55		11
Chromium, Total	mg/kg	8.700	1410.000	195.72		11
Cobalt	mg/kg	41.700	41.700	41.70		1
Copper	mg/kg	6.500	361.000	72.65		11
Iron	mg/kg	482.000	6610.000	3928.36		11
Lead	mg/kg	21.900	6300.000	842.54		11

TABLE 7-5
ORGANIC AND INORGANIC CHEMICAL CONCENTRATIONS
AMERICAN CHEMICAL SERVICES RI/FS
GRIFFITH, INDIANA

MATRIX: Soil
SOURCE AREA: Still Bottoms/Treatment Lagoon

CHEMICAL	UNITS	CHEMICAL CONCENTRATION MINIMUM	MAXIMUM	ARITHMETIC MEAN	NUMBER SAMPLES ANALYZED TOTAL	DETECTED
Magnesium	mg/kg	101.000	10300.000	3419.82		11
Manganese	mg/kg	4.300	1030.000	203.30		11
Mercury	mg/kg	0.060	11.000	2.02		10
Nickel	mg/kg	12.200	19.600	16.73		3
Potassium	mg/kg	181.000	767.000	354.55		11
Selenium	mg/kg	0.460	2.830	1.42		4
Sodium	mg/kg	498.000	1260.000	757.67		3
Vanadium	mg/kg	1.200	12.100	7.43		11
Zinc	mg/kg	5.300	2280.000	359.86		11
Cyanide, Total	mg/kg	5.000	70.700	26.90		3
Percent Solids	%	63.200	90.600	80.81		11
Tent. Ident. Compound-SVOC					28	
Unknown	ug/kg	230.000	5500000.000	237468.23		198
Unknown Hydrocarbon	ug/kg	290.000	1300000.000	150781.48		61
Ethylmethylbenzene isomer	ug/kg	17000.000	1600000.000	602428.57		7
Methylbenzene + Unknown	ug/kg	11000.000	11000.000	11000.00		1
rimethylbenzene + Unknown	ug/kg	29000.000	1800000.000	914500.00		2
rimethylbenzene isomer	ug/kg	11000.000	1100000.000	553210.53		19
Methylpropylbenzene isomer	ug/kg	19000.000	560000.000	262833.33		6
Ethyldimethylbenzene isomer	ug/kg	9100.000	1100000.000	458131.25		16
Undecane, 4,7-dimethyl-	ug/kg	520.000	520000.000	103613.33		9
Ethyldimethylbenzene + Unknown	ug/kg	6000.000	11000.000	8500.00		2
Ethanol, 2-(2-butoxyethoxy)-...	ug/kg	17000.000	17000.000	17000.00		1
Benzene, 1,1'-oxybis-	ug/kg	280.000	100000.000	25736.00		5
Benzene, propyl-	ug/kg	490.000	280000.000	94622.50		4
Benzene, 1-ethyl-2-methyl-	ug/kg	35000.000	520000.000	258750.00		4
Benzene, 1-methyl-2-propyl-	ug/kg	440000.000	440000.000	440000.00		1
Benzene, 1,4-diethyl-	ug/kg	190000.000	510000.000	350000.00		2
Benzene, 2-ethyl-1,4-dimethyl-	ug/kg	22000.000	1900000.000	410923.08		13
Unknown + Nitrobenzene	ug/kg	900000.000	900000.000	900000.00		1
Unknown + TCL	ug/kg	1100000.000	1100000.000	1100000.00		1
Unknown Substituted Benzene	ug/kg	47000.000	1100000.000	402666.67		6
Benzene, 1-ethyl-3-methyl-	ug/kg	44000.000	1900000.000	426625.00		8
Benzene, 1,2,4-trimethyl-	ug/kg	49000.000	49000.000	49000.00		1
Benzene, (1,1-dimethylethyl)-	ug/kg	46000.000	47000.000	46500.00		2
Benzene, 2-ethyl-1,3-dimethyl-	ug/kg	42000.000	42000.000	42000.00		1
Benzene, methyl(1-methylethyl-)	ug/kg	28000.000	28000.000	28000.00		1
Unknown Alkene	ug/kg	3300000.000	3300000.000	3300000.00		1
3-Octadecene, (E)-	ug/kg	2600000.000	2600000.000	2600000.00		1
Hexadecanoic acid	ug/kg	310000.000	310000.000	310000.00		1
5-Eicosene, (E)-	ug/kg	1400000.000	1400000.000	1400000.00		1
Unknown carboxylic acid	ug/kg	43000.000	480000.000	331000.00		3
Methylpropylbenzene + Unknown	ug/kg	140000.000	1100000.000	620000.00		2
Tetramethylbenzene isomer	ug/kg	290000.000	960000.000	625000.00		2
etramethylbenzene + TCL	ug/kg	390000.000	1100000.000	745000.00		2
Decane	ug/kg	450.000	410000.000	216362.50		4

TABLE 7-5
ORGANIC AND INORGANIC CHEMICAL CONCENTRATIONS
AMERICAN CHEMICAL SERVICES RI/FS
GRIFFITH, INDIANA

MATRIX: Soil
JRCE AREA: Still Bottoms/Treatment Lagoon

CHEMICAL	UNITS	CHEMICAL CONCENTRATION MINIMUM	MAXIMUM	ARITHMETIC MEAN	NUMBER SAMPLES ANALYZED TOTAL	DETECTED
Benzene, 1,3,5-trimethyl-	ug/kg	150000.000	150000.000	150000.00		1
Nonane, 2,5-dimethyl-	ug/kg	300000.000	300000.000	300000.00		1
Benzene, 1,2,3,5-tetramethyl-	ug/kg	1400.000	280000.000	140700.00		2
Tetradecane	ug/kg	670.000	140000.000	32115.71		7
Hexadecane	ug/kg	19000.000	85000.000	52000.00		2
Heptadecane, 2,6-dimethyl-	ug/kg	480.000	130000.000	68160.00		3
Dodecanoic acid	ug/kg	30000.000	30000.000	30000.00		1
Tetradecanoic acid	ug/kg	23000.000	23000.000	23000.00		1
Pentacosane	ug/kg	140000.000	140000.000	140000.00		1
Cyclohexanol, 3,3,5-trimethyl-	ug/kg	4800.000	11000.000	8500.00		3
Hexanoic acid, 2-ethyl-	ug/kg	400.000	890.000	645.00		2
Azulene, 1,2,3,3A-tetrahydro-	ug/kg	150000.000	1200000.000	675000.00		2
Diethylbenzeamine + Unknown	ug/kg	12000.000	12000.000	12000.00		1
Hexanoic acid (DOT)	ug/kg	810.000	930.000	870.00		2
Dimethylphenol	ug/kg	570.000	720.000	645.00		2
Benzene, 1,4-dimethyl-2-nitro-	ug/kg	1700.000	1700.000	1700.00		1
Sulfur, mol. (S8)	ug/kg	1600.000	7700.000	4533.33		3
Phthalic anhydride	ug/kg	4400.000	58000.000	31200.00		2
Benzenamine, n,n-diethyl-	ug/kg	890.000	140000.000	20486.25		8
Furan, 2,2'-[oxybis(methylene)]bis,-	ug/kg	440.000	440.000	440.00		1
1H-Idene, 1-ethylidene-	ug/kg	42000.000	42000.000	42000.00		1
Benzene, (1-methylethyl)-	ug/kg	180000.000	180000.000	180000.00		1
Benzene, 1,3-diethyl-4-methy...	ug/kg	870.000	870.000	870.00		1
Hydroxylamine, o-decyl-	ug/kg	590.000	140000.000	47230.00		3
Iron, tricarbonyl[n-(phenyl-...	ug/kg	140000.000	140000.000	140000.00		1
Undecane, 2-methyl-	ug/kg	100000.000	100000.000	100000.00		1
Ethanol, 2-butoxy-*	ug/kg	280000.000	280000.000	280000.00		1
Phosphoric acid, triethyles...	ug/kg	37000.000	150000.000	93500.00		2
Octanoic acid	ug/kg	370.000	4800.000	2585.00		2
2,4-Pentanediol, 2-methyl-	ug/kg	3000.000	3000.000	3000.00		1
Unknown PNA	ug/kg	13000.000	13000.000	13000.00		1
3-Octanone	ug/kg	320.000	770.000	545.00		2
Cyclohexanemethanol, .alpha.-.alpha.-4-trimethyl-	ug/kg	640.000	880.000	760.00		2
Benzene, 1,2-dimethyl-4-(phenylmethyl)-	ug/kg	31000.000	31000.000	31000.00		1
Decane, 2-Cyclohexyl-, 2-cycl...	ug/kg	140000.000	140000.000	140000.00		1
Decane, 2,6,7-trimethyl-	ug/kg	62000.000	62000.000	62000.00		1
Dimethyl undecane	ug/kg	520.000	31000.000	10986.00		5
Cyclohexanone, 3,3,5-trimethyl-	ug/kg	13000.000	65000.000	39000.00		2
Dimethyl heptadecane	ug/kg	310.000	860.000	505.00		4
Dimethyl cyclooctane	ug/kg	110000.000	110000.000	110000.00		1
VOA TCL	ug/kg	13000.000	79000.000	41666.67		3
Ethylmethylbenzene	ug/kg	120.000	360000.000	55188.95		19
Trimethylbenzene	ug/kg	320.000	100000.000	17576.36		22
Trimethylcyclohexanone	ug/kg	23000.000	23000.000	23000.00		1
Trimethylcyclohexanol	ug/kg	15000.000	15000.000	15000.00		1
Methyl(methylethyl)benzene	ug/kg	4100.000	4100.000	4100.00		1

TABLE 7-5
ORGANIC AND INORGANIC CHEMICAL CONCENTRATIONS
AMERICAN CHEMICAL SERVICES RI/FS
GRIFFITH, INDIANA

TRIX: Soil
RCE AREA: Still Bottoms/Treatment Lagoon

CHEMICAL	UNITS	CHEMICAL CONCENTRATION MINIMUM	MAXIMUM	ARITHMETIC MEAN	NUMBER SAMPLES ANALYZED TOTAL	DETECTED
Ethyldimethylbenzene	ug/kg	380.000	370000.000	76224.00		10
Tetramethylbenzene	ug/kg	17000.000	47000.000	32000.00		2
Dihydromethylindene	ug/kg	8700.000	8700.000	8700.00		1
Unknown octadecenoic acid	ug/kg	13000.000	13000.000	13000.00		1
Diethylbenzene	ug/kg	91000.000	91000.000	91000.00		1
Ethyltrimethylbenzene + unknown	ug/kg	17000.000	17000.000	17000.00		1
Dimethyldodecane	ug/kg	12000.000	12000.000	12000.00		1
Methylnaphthalene	ug/kg	2000.000	13000.000	7500.00		2
Dimethylnaphthalene + unknown	ug/kg	19000.000	19000.000	19000.00		1
Tetramethylpentadecane	ug/kg	13000.000	13000.000	13000.00		1
Dimethylnaphthalene	ug/kg	1700.000	57000.000	29350.00		2
Benzene, (1,3,3-trimethylnonyl)-	ug/kg	67000.000	67000.000	67000.00		1
Benzene, 1-ethyl-2,4,5-trimethyl-	ug/kg	46000.000	46000.000	46000.00		1
Unknown benzene	ug/kg	6400.000	37000.000	22800.00		3
Unknown aromatic	ug/kg	73000.000	73000.000	73000.00		1
Methylethylbenzene	ug/kg	450.000	1400.000	925.00		2
Isoquinoline	ug/kg	620.000	780.000	700.00		2
Unknown alkyl cyclohexane	ug/kg	150000.000	150000.000	150000.00		1
Tridecane, 4,8-dimethyl-	ug/kg	35000.000	35000.000	35000.00		1
3-Pentanone, 2,2,4,4-tetram..	ug/kg	610.000	610.000	610.00		1
Cyclooctane, 2,4-dimethyl-	ug/kg	2500.000	2500.000	2500.00		1
1-Octanol, 2-butyl-	ug/kg	55000.000	55000.000	55000.00		1
Unknown oxygenated alkane	ug/kg	43000.000	43000.000	43000.00		1
Acetamide, n-ethyl-n-phenyl-	ug/kg	340.000	340.000	340.00		1
Benzenamine, n-ethyl-	ug/kg	280.000	280.000	280.00		1
Tetramethylpentanone + unknown	ug/kg	1600.000	1600.000	1600.00		1
Tetramethylbenzene + unknown	ug/kg	530.000	530.000	530.00		1
Tent. Ident. Compound-VOC					28	
Unknown	ug/kg	2600.000	1900000.000	306390.91		11
Aceticacid, butylester	ug/kg	600.000	600.000	600.00		1
Nonane	ug/kg	7900.000	200000.000	92714.29		7
Benzene, 1-ethyl-3-methyl-	ug/kg	140000.000	140000.000	140000.00		1
Octane, 2,3-dimethyl-	ug/kg	220000.000	220000.000	220000.00		1
Propylbenzene + Unknown	ug/kg	52000.000	59000.000	55500.00		2
Benzene, 1-ethyl-2-methyl-	ug/kg	130000.000	1700000.000	632500.00		4
Benzene, 1,2,4-trimethyl-	ug/kg	150000.000	1200000.000	546666.67		3
Unknown Hydrocarbon	ug/kg	390.000	1100000.000	227439.00		10
Methylethylbenzene + Unknown	ug/kg	27000.000	120000.000	73500.00		4
Heptane, 2,3,6-trimethyl-	ug/kg	230000.000	230000.000	230000.00		1
Benzene, propyl-	ug/kg	65.000	380000.000	88083.13		8
Nonane, 2,6-dimethyl-	ug/kg	250000.000	250000.000	250000.00		1
Benzene, (1-methylethyl)-	ug/kg	24000.000	480000.000	244666.67		3
Benzene, 1,2,3-trimethyl-	ug/kg	470000.000	470000.000	470000.00		1
Decane, 4-methyl-	ug/kg	120000.000	120000.000	120000.00		1
Cyclohexane, methyl-	ug/kg	58000000.000	58000000.000	58000000.000		1
Decane	ug/kg	710000.000	3200000.000	1573333.33		3

TABLE 7-5
ORGANIC AND INORGANIC CHEMICAL CONCENTRATIONS
AMERICAN CHEMICAL SERVICES RI/FS
GRIFFITH, INDIANA

MATRIX: Soil
JRCE AREA: Still Bottoms/Treatment Lagoon

CHEMICAL	UNITS	CHEMICAL CONCENTRATION MINIMUM	MAXIMUM	ARITHMETIC MEAN	NUMBER SAMPLES ANALYZED TOTAL	DETECTED
Hexane, 3-methyl-	ug/kg	4100000.000	4100000.000	4100000.00		1
Substituted Benzene	ug/kg	790.000	420000.000	91846.25		8
Cyclohexane, ethyl-	ug/kg	100000.000	100000.000	100000.00		1
Benzene, 1,3,5-trimethyl-	ug/kg	14000.000	14000.000	14000.00		1
Octane	ug/kg	130000.000	4100000.000	2115000.00		2
Furan, tetrahydro-	ug/kg	54.000	54.000	54.00		1
Heptane, 3-methyl-	ug/kg	5900000.000	5900000.000	5900000.00		1
Benzene, (nitromethyl)-	ug/kg	250000.000	250000.000	250000.00		1
Hexane, 2-methyl-	ug/kg	3700000.000	3700000.000	3700000.00		1
Heptane	ug/kg	23000000.000	23000000.000	23000000.000		1
Cyclopentane, 1,2,4-trimethyl-	ug/kg	3300000.000	3300000.000	3300000.00		1
Cyclopentane, 1,2,3-trimethyl-	ug/kg	3200000.000	3200000.000	3200000.00		1
Hexane, 2,5-dimethyl-	ug/kg	4600000.000	4600000.000	4600000.00		1
Ethane, 1,1-dichloro-1-nitro-	ug/kg	17000.000	17000.000	17000.00		1
Methane, dichlorofluoro-	ug/kg	4800000.000	4800000.000	4800000.00		1
Nonane, 2-methyl-	ug/kg	130000.000	130000.000	130000.00		1
Methane, trichlorofluoro-	ug/kg	4200000.000	4200000.000	4200000.00		1
2-Hexanone, 5-methyl-	ug/kg	240.000	240.000	240.00		1
Ethylmethylbenzene	ug/kg	75.000	880000.000	238065.36		14
Trimethylbenzene	ug/kg	60.000	1700000.000	390309.33		15
Unknown ketone	ug/kg	7.400	7.400	7.40		1
Decane + unknown	ug/kg	1200.000	1100000.000	350700.00		6
Tetramethylbenzene	ug/kg	220000.000	1300000.000	760000.00		2
Ketone	ug/kg	57.000	230.000	143.50		2
Hydrocarbon + unknown	ug/kg	130000.000	130000.000	130000.00		1
Unknown substituted benzene	ug/kg	690000.000	690000.000	690000.00		2
Tetramethylpentanone	ug/kg	56.000	56.000	56.00		1
Unknown hydrocarbon C10H22	ug/kg	270000.000	270000.000	270000.00		1
Ethylmethylheptane + unknown	ug/kg	330000.000	330000.000	330000.00		1
Methylnonane	ug/kg	7900.000	7900.000	7900.00		1
Undecane + unknown	ug/kg	510000.000	510000.000	510000.00		1
Ethyldimethylbenzene	ug/kg	120000.000	760000.000	440000.00		2
Trimethyloctane	ug/kg	4300.000	4300.000	4300.00		1
Ethane, 1,1,2-trichloro-1,2,2-trichloro-trifluoroethane	ug/kg	670000.000	670000.000	670000.00		1
Methylphenylethanone	ug/kg	160000.000	160000.000	160000.00		1

This table includes all compounds identified above detection limits in the Stillbottoms/Treatment Lagoon Area (see table 7-1 for samples included in this area), and is provided as the starting point in the development of a Set of Chemical Data for use in the Risk Assessment, as discussed in Section 7.1.2.1. Refer to appropriate appendices to determine the total parameters analyzed and their associated detection limits. Refer to appendix U for values used in risk calulations. The data values presented contain a maximum of three significant digits for the results of metals analyses and two significant digits for organic chemical analyses: additional digits are due to limitations in the computer program used to prepare these tables, and do not infer an increase in accuracy. The number of tentatively identified compounds designated as unknowns may exceed the total number of samples analyzed because more than one unknown compound may be present in a given sample.

[ACS]BSB.MAX

TABLE 7-6
ORGANIC AND INORGANIC CHEMICAL CONCENTRATIONS
AMERICAN CHEMICAL SERVICES RI/FS
GRIFFITH, INDIANA

TRIX: Soil
RCE AREA: Off-site Containment Area

CHEMICAL	UNITS	CHEMICAL CONCENTRATION MINIMUM	MAXIMUM	ARITHMETIC MEAN	NUMBER SAMPLES ANALYZED TOTAL	DETECTED
Volatiles					44	
Vinyl Chloride	ug/kg	2900.000	2900.000	2900.00		1
Chloroethane	ug/kg	8.000	2000.000	949.33		3
Methylene Chloride	ug/kg	120.000	210000.000	31462.22		9
Acetone	ug/kg	18.000	34000000.000	1549406.00		23
1,1-Dichloroethene	ug/kg	3.000	390000.000	117348.25		4
1,1-Dichloroethane	ug/kg	2.000	490000.000	56253.28		18
Total 1,2-Dichloroethene	ug/kg	2.000	34000.000	5551.64		14
Chloroform	ug/kg	2.000	2800000.000	222572.21		19
1,2-Dichloroethane	ug/kg	19.000	440000.000	34581.56		16
2-Butanone	ug/kg	9.000	99000000.000	3760304.09		35
1,1,1-Trichloroethane	ug/kg	6.000	150000000.000	5679486.07		29
1,2-Dichloropropane	ug/kg	1.000	23000.000	3037.36		11
Trichloroethene	ug/kg	3.000	19000000.000	926650.18		33
1,1,2-Trichloroethane	ug/kg	630.000	400000.000	94626.00		5
Benzene	ug/kg	5.000	1500000.000	97320.92		36
4-Methyl-2-Pentanone	ug/kg	1400.000	61000000.000	2535958.62		29
2-Hexanone	ug/kg	11.000	47000.000	12348.71		7
Tetrachloroethene	ug/kg	4.000	46000000.000	2161008.94		35
1,1,2,2-Tetrachloroethane	ug/kg	17.000	17.000	17.00		1
Toluene	ug/kg	5.000	130000000.000	3957498.77		44
Chlorobenzene	ug/kg	3.000	1000000.000	176792.17		6
Ethylbenzene	ug/kg	2.000	23000000.000	942758.29		41
Styrene	ug/kg	30.000	310000.000	86604.29		7
Total Xylenes	ug/kg	2.000	100000000.000	3734752.63		43
Semi-Volatiles					35	
Phenol	ug/kg	85.000	860000.000	84403.00		25
bis(2-Chloroethyl)ether	ug/kg	150.000	200000.000	48040.67		15
1,4-Dichlorobenzene	ug/kg	46.000	11000.000	3146.27		11
Benzyl alcohol	ug/kg	89.000	34000.000	4163.90		10
1,2-Dichlorobenzene	ug/kg	80.000	120000.000	18266.47		19
2-Methylphenol	ug/kg	420.000	90000.000	15494.58		24
4-Methylphenol	ug/kg	150.000	210000.000	33741.07		28
Isophorone	ug/kg	98.000	3600000.000	443152.07		28
2,4-Dimethylphenol	ug/kg	250.000	220000.000	26390.40		25
Benzoic acid	ug/kg	230.000	32000000.000	2293735.33		15
2,4-Dichlorophenol	ug/kg	57.000	200.000	107.33		3
1,2,4-Trichlorobenzene	ug/kg	54.000	79000.000	13469.33		9
Naphthalene	ug/kg	230.000	2400000.000	282228.00		30
Hexachlorobutadiene	ug/kg	190.000	150000.000	33025.00		8
2-Methylnaphthalene	ug/kg	43.000	990000.000	147837.00		29
Dimethylphthalate	ug/kg	120.000	710000.000	68395.65		23
Acenaphthylene	ug/kg	57.000	11000.000	3694.25		4
2,6-Dinitrotoluene	ug/kg	3500.000	3500.000	3500.00		1

TABLE 7-6
ORGANIC AND INORGANIC CHEMICAL CONCENTRATIONS
AMERICAN CHEMICAL SERVICES RI/FS
GRIFFITH, INDIANA

MATRIX: Soil
SOURCE AREA: Off-site Containment Area

CHEMICAL	UNITS	CHEMICAL CONCENTRATION MINIMUM	MAXIMUM	ARITHMETIC MEAN	NUMBER SAMPLES ANALYZED TOTAL	DETECTED
Acenaphthene	ug/kg	68.000	18000.000	5258.36		14
4-Nitrophenol	ug/kg	10000.000	10000.000	10000.00		1
Dibenzofuran	ug/kg	59.000	11000.000	3241.73		11
Diethylphthalate	ug/kg	60.000	280000.000	24047.17		24
Fluorene	ug/kg	58.000	28000.000	7737.80		15
N-Nitrosodiphenylamine	ug/kg	180.000	53000.000	11060.00		8
Hexachlorobenzene	ug/kg	930.000	11000.000	5965.00		2
Pentachlorophenol	ug/kg	180.000	180000.000	44296.00		10
Phenanthrene	ug/kg	39.000	43000.000	8514.70		20
Anthracene	ug/kg	230.000	1300.000	910.00		3
Di-n-butylphthalate	ug/kg	54.000	3400000.000	327294.50		30
Fluoranthene	ug/kg	220.000	19000.000	4418.33		12
Pyrene	ug/kg	330.000	22000.000	6426.00		10
Butylbenzylphthalate	ug/kg	72.000	1600000.000	185039.24		29
Benzo(a)anthracene	ug/kg	360.000	14000.000	3738.33		6
Chrysene	ug/kg	400.000	20000.000	5316.67		6
bis(2-Ethylhexyl)phthalate	ug/kg	180.000	14000000.000	1525888.93		28
Di-n-octylphthalate	ug/kg	72.000	140000.000	15918.20		15
Benzo(b)fluoranthene	ug/kg	220.000	15000.000	4816.00		5
Benzo(k)fluoranthene	ug/kg	220.000	15000.000	4816.00		5
Benzo(a)pyrene	ug/kg	380.000	9700.000	3245.00		4
Indeno(1,2,3-cd)pyrene	ug/kg	420.000	1400.000	790.00		3
Dibenz(a,h)anthracene	ug/kg	70.000	190.000	130.00		2
Benzo(g,h,i)perylene	ug/kg	230.000	1500.000	766.67		3
Pesticides/PCBs					44	
Alpha-BHC	ug/kg	330.000	330.000	330.00		1
Beta-BHC	ug/kg	800.000	800.000	800.00		1
Aldrin	ug/kg	13.000	7700.000	3856.50		2
Heptachlor Epoxide	ug/kg	13.000	13.000	13.00		1
4,4-DDE	ug/kg	880.000	880.000	880.00		1
4,4-DDD	ug/kg	3300.000	3300.000	3300.00		1
4,4-DDT	ug/kg	1700.000	1700.000	1700.00		1
AROCLOR-1242	ug/kg	96.000	190000.000	66265.33		3
AROCLOR-1248	ug/kg	16000.000	35000.000	23666.67		3
AROCLOR-1254	ug/kg	210.000	650000.000	62715.33		15
AROCLOR-1260	ug/kg	200.000	560000.000	81630.83		12
Metals					19	
Aluminum	mg/kg	137.000	18000.000	4453.00		19
Antimony	mg/kg	3.700	152.000	46.24		5
Arsenic	mg/kg	1.100	9.100	3.33		17
Barium	mg/kg	67.400	6400.000	1461.68		5
Beryllium	mg/kg	0.060	0.800	0.21		16
Cadmium	mg/kg	0.060	1700.000	102.19		18
Calcium	mg/kg	413.000	50500.000	19413.94		17

TABLE 7-6
ORGANIC AND INORGANIC CHEMICAL CONCENTRATIONS
AMERICAN CHEMICAL SERVICES RI/FS
GRIFFITH, INDIANA

TRIX: Soil
URCE AREA: Off-site Containment Area

CHEMICAL	UNITS	CHEMICAL CONCENTRATION MINIMUM	MAXIMUM	ARITHMETIC MEAN	NUMBER SAMPLES ANALYZED TOTAL	DETECTED
Chromium, Total	mg/kg	6.600	3750.000	253.42		18
Cobalt	mg/kg	14.600	69.100	29.62		5
Copper	mg/kg	5.600	5790.000	415.01		18
Iron	mg/kg	2670.000	27400.000	8202.11		19
Lead	mg/kg	2.300	17200.000	1066.82		19
Magnesium	mg/kg	394.000	18800.000	8300.31		13
Manganese	mg/kg	13.400	441.000	136.50		19
Mercury	mg/kg	0.120	36.000	5.15		8
Nickel	mg/kg	10.900	72.600	34.33		8
Potassium	mg/kg	34.900	8100.000	1081.63		19
Selenium	mg/kg	1.200	157.000	33.56		5
Silver	mg/kg	312.000	312.000	312.00		1
Sodium	mg/kg	232.000	2410.000	704.80		5
Thallium	mg/kg	0.720	1.500	1.07		3
Vanadium	mg/kg	4.500	24.300	11.42		17
Zinc	mg/kg	7.800	4700.000	458.22		19
Cyanide, Total	mg/kg	7.100	31.300	14.28		4
Percent Solids	%	46.400	91.000	78.35		19
nt. Ident. Compound-SVOC					35	
Unknown	ug/kg	120.000	100000000.000	1118379.22		281
Unknown Hydrocarbon	ug/kg	270.000	1100000.000	88402.88		66
Ethylmethylbenzene isomer	ug/kg	70000.000	84000.000	77000.00		2
Trimethylbenzene + Unknown	ug/kg	220000.000	220000.000	220000.00		1
Trimethylbenzene isomer	ug/kg	86000.000	1900000.000	775750.00		8
Ethyldimethylbenzene isomer	ug/kg	65000.000	1300000.000	749166.67		6
Undecane, 4,7-dimethyl-	ug/kg	1200.000	1100000.000	279890.91		11
Ethyldimethylbenzene + Unknown	ug/kg	830000.000	830000.000	830000.00		1
Ethanol, 2-(2-butoxyethoxy)-...	ug/kg	3800.000	3800.000	3800.00		1
Methanol, dibutoxy-	ug/kg	2400000.000	2400000.000	2400000.00		1
Benzene, 1,1'-oxybis-	ug/kg	2800.000	3500000.000	454366.67		12
Benzene, propyl-	ug/kg	380000.000	520000.000	450000.00		2
Benzene, 1-ethyl-2-methyl-	ug/kg	2800.000	1600000.000	627600.00		3
Benzene, 1,4-diethyl-	ug/kg	750000.000	750000.000	750000.00		1
Benzene, 2-ethyl-1,4-dimethyl-	ug/kg	1700.000	650000.000	233375.00		4
Unknown Substituted Benzene	ug/kg	580.000	780000.000	390290.00		2
Benzene, 1-ethyl-3-methyl-	ug/kg	5700.000	1900000.000	781900.00		3
Benzene, 1,2,4-trimethyl-	ug/kg	1100.000	620000.000	310550.00		2
Benzene, 2-ethyl-1,3-dimethyl-	ug/kg	1700.000	1700.000	1700.00		1
Benzene, methyl(1-methylethyl-)	ug/kg	330000.000	330000.000	330000.00		1
Hexadecanoic acid	ug/kg	2800000.000	2800000.000	2800000.00		1
Unknown carboxylic acid	ug/kg	500.000	1600.000	1050.00		2
Tetramethylbenzene isomer	ug/kg	280000.000	280000.000	280000.00		1
Decane	ug/kg	89000.000	440000.000	224750.00		4
Benzene, 1,3,5-trimethyl-	ug/kg	2900.000	1300000.000	375280.00		5
Nonane, 2,5-dimethyl-	ug/kg	91000.000	1600000.000	672750.00		4

TABLE 7-6
ORGANIC AND INORGANIC CHEMICAL CONCENTRATIONS
AMERICAN CHEMICAL SERVICES RI/FS
GRIFFITH, INDIANA

'TRIX: Soil
URCE AREA: Off-site Containment Area

CHEMICAL	UNITS	CHEMICAL CONCENTRATION MINIMUM	MAXIMUM	ARITHMETIC MEAN	NUMBER SAMPLES ANALYZED TOTAL	DETECTED
Tetradecane	ug/kg	20000.000	78000.000	45333.33		3
Hexadecane	ug/kg	82000.000	82000.000	82000.00		1
Heptadecane, 2,6-dimethyl-	ug/kg	280.000	42000.000	10750.00		4
Heptadecane	ug/kg	16000.000	16000.000	16000.00		1
Docosane	ug/kg	3900.000	3900.000	3900.00		1
Cyclohexanol, 3,3,5-trimethyl-	ug/kg	9500.000	13000.000	10875.00		4
Nonane, 2,6-dimethyl-	ug/kg	82000.000	2300000.000	808000.00		4
Benzene, 1-methyl-3-propyl-	ug/kg	360000.000	700000.000	530000.00		2
Azulene, 1,2,3,3A-tetrahydro-	ug/kg	470000.000	470000.000	470000.00		1
Diethylbenzeamine + Unknown	ug/kg	990000.000	990000.000	990000.00		1
Hexanoic acid (DOT)	ug/kg	1100.000	3700.000	2200.00		3
Dimethylphenol + Unknown	ug/kg	1100.000	1100.000	1100.00		1
Dimethylphenol	ug/kg	280.000	54000.000	9075.71		14
Benzene, 1,4-dimethyl-2-nitro-	ug/kg	5300.000	5300.000	5300.00		1
Unknown chlorinated compound	ug/kg	13000.000	98000.000	55500.00		2
Unknown fatty acid	ug/kg	2600000.000	2600000.000	2600000.00		1
2-Butenedioic acid (E)-dim...	ug/kg	15000000.000	15000000.000	15000000.000		1
Butanedioicacid, dimethyle...	ug/kg	4700000.000	4700000.000	4700000.00		1
Butanedioicacid, monomethyl..	ug/kg	63000000.000	63000000.000	63000000.000		1
1,3-Propanediol, 2,2-dimethyl-	ug/kg	2600000.000	2600000.000	2600000.00		1
Hexanedioic acid, ethylmethlester-	ug/kg	1600000.000	1600000.000	1600000.00		1
Hexanedioic acid, dibutylester	ug/kg	7100000.000	7100000.000	7100000.00		1
Hexanedioic acid, bis(2-methylpropyl) ester-	ug/kg	9600000.000	9600000.000	9600000.00		1
Benzene, 2,4-dimethyl-1-(1-methylethyl)-	ug/kg	2300.000	940000.000	471150.00		2
Cyclopentanol, 2-methyl-Cl...	ug/kg	2600.000	2600.000	2600.00		1
Cyclopropanamine, 2-phenyl-,...	ug/kg	9600.000	9600.000	9600.00		1
Phenol, 2,3-dimethyl-	ug/kg	3000.000	11000.000	6475.00		4
Benzene, 1-methyl-4-(1-methylethyl)-	ug/kg	6100.000	6100.000	6100.00		1
Benzene, 1-methyl-3-(1-methylethyl)-	ug/kg	1100.000	1100.000	1100.00		1
Benzene, 1-ethyl-4-methoxy-	ug/kg	1800.000	1800.000	1800.00		1
Cyclopentene, 1-ethenyl-3-me...	ug/kg	180000.000	220000.000	200000.00		2
Dimethylbenzene isomer	ug/kg	120000.000	120000.000	120000.00		1
Butylcitrate + Unknown	ug/kg	430000.000	430000.000	430000.00		1
Benzenamine, n,n-diethyl-	ug/kg	300.000	530000.000	274575.00		4
1,4-Methanonaphthalene, 1,4-...	ug/kg	55000.000	55000.000	55000.00		1
Benzaldehyde, 4-propyl-	ug/kg	78000.000	510000.000	276000.00		3
Naphthalene, 1-methyl-	ug/kg	78000.000	730000.000	397000.00		4
Dispiro[2.0.2.2]octane	ug/kg	40000.000	40000.000	40000.00		1
Benzene, 1,3-diethyl-4-methy...	ug/kg	69000.000	69000.000	69000.00		1
Benzene, 1,2,3-trimethyl-	ug/kg	7600.000	7600.000	7600.00		1
Ethanol, 2-[2-(2-ethoxyethox...	ug/kg	1700.000	1700.000	1700.00		1
Ethanol, 1-(2-butoxyethoxy)-	ug/kg	18000.000	18000.000	18000.00		1
Phenol, 2-ethyl-4-methyl	ug/kg	460.000	2500.000	1586.67		3
Iron, tricarbonyl[n-(phenyl-...	ug/kg	47000.000	47000.000	47000.00		1
Ethanol, 2-butoxy-*	ug/kg	430.000	2900.000	1665.00		2

TABLE 7-6
ORGANIC AND INORGANIC CHEMICAL CONCENTRATIONS
AMERICAN CHEMICAL SERVICES RI/FS
GRIFFITH, INDIANA

TRIX: Soil
JRCE AREA: Off-site Containment Area

CHEMICAL	UNITS	CHEMICAL CONCENTRATION MINIMUM	MAXIMUM	ARITHMETIC MEAN	NUMBER SAMPLES ANALYZED TOTAL	DETECTED
Phosphoric acid, triethyles...	ug/kg	230000.000	230000.000	230000.00		1
Octanoic acid	ug/kg	2000.000	2000.000	2000.00		1
2,4-Pentanediol, 2-methyl-	ug/kg	1100.000	7500.000	3660.00		5
3-Octanone	ug/kg	910.000	910.000	910.00		1
Cyclohexanemethanol, .alpha.-.alpha.-4-trimethyl-	ug/kg	320.000	320.000	320.00		1
Unknown substituted phenol	ug/kg	780.000	780.000	780.00		1
1,2-Benzenedicarboxylic acid butyl-2-methyl	ug/kg	78000.000	78000.000	78000.00		1
Unknown phthalate	ug/kg	1800.000	1200000.000	222300.00		6
Dimethyl undecane	ug/kg	72000.000	91000.000	81500.00		2
Methylethylphenol	ug/kg	330.000	2500.000	1392.50		4
Unknown alcohol	ug/kg	580.000	16000.000	8290.00		2
Cyclohexanone, 3,3,5-trimethyl-	ug/kg	2100.000	17000.000	9550.00		2
Phenol, 3-propyl-	ug/kg	660.000	660.000	660.00		1
Ethylmethylbenzene	ug/kg	630.000	2100000.000	588203.75		8
Trimethylbenzene	ug/kg	550.000	1400000.000	353965.91		22
Trimethylcyclohexanol	ug/kg	5400.000	5400.000	5400.00		1
Ethyldimethylbenzene	ug/kg	35000.000	1700000.000	731500.00		10
Tetramethylbenzene	ug/kg	250.000	290000.000	110750.00		3
Diethylbenzene	ug/kg	1500.000	2200000.000	1100750.00		2
Unknown alkylated benzene	ug/kg	88000.000	280000.000	159666.67		6
Dimethylnonane	ug/kg	140000.000	140000.000	140000.00		1
Methylpropylbenzene	ug/kg	98000.000	140000.000	119000.00		2
Urea, n-methyl-n'-(4-methylphenyl)-	ug/kg	1800.000	1800.000	1800.00		1
Methylethylbenzene + unknown	ug/kg	830.000	830.000	830.00		1
Benzopyrene	ug/kg	270.000	270.000	270.00		1
Methylnaphthalene	ug/kg	230000.000	230000.000	230000.00		1
Unknown benzene	ug/kg	130000.000	480000.000	285000.00		4
Unknown aromatic	ug/kg	37000.000	1400000.000	406500.00		4
7-Hexadecane, (z)-	ug/kg	73000.000	73000.000	73000.00		1
3-Hexadecane, (z)-	ug/kg	1300.000	1300.000	1300.00		1
2-Methylcyclopentanol	ug/kg	510.000	1200.000	855.00		2
9-Octadecene, (E)-	ug/kg	970.000	1200.000	1085.00		2
Unknown substituted hydrocarbon	ug/kg	1100.000	510000.000	195525.00		4
Silanediamine, 1,1-dimethyl-	ug/kg	340000.000	340000.000	340000.00		1
1-Hexen-3-one, 5-methyl-1-phenyl-	ug/kg	80000.000	80000.000	80000.00		1
Azobenzene (ACN)	ug/kg	120000.000	120000.000	120000.00		1
Benzeneacetonitrile, .alpha...	ug/kg	120000.000	120000.000	120000.00		1
Phenol, 2-ethyl-5-methyl-	ug/kg	3400.000	3400.000	3400.00		1
Benzenamine, n-methyl-	ug/kg	930.000	930.000	930.00		1
Methylethylbenzene	ug/kg	1700.000	2300.000	2000.00		2
Diethylbenzene + unknown	ug/kg	400000.000	400000.000	400000.00		1
Diethylundecane	ug/kg	440000.000	440000.000	440000.00		1
Acetic acid, 2-ethylhexyl ester	ug/kg	350000.000	350000.000	350000.00		1
Methylmethylethylbenzene + unknown	ug/kg	290000.000	290000.000	290000.00		1
Unknown ethoxyl alcohol	ug/kg	6500.000	6500.000	6500.00		1
Ethanone, 1-phenyl-	ug/kg	2100.000	2100.000	2100.00		1
1-Decanol, 2-ethyl-	ug/kg	3100.000	3100.000	3100.00		1

TABLE 7-6
ORGANIC AND INORGANIC CHEMICAL CONCENTRATIONS
AMERICAN CHEMICAL SERVICES RI/FS
GRIFFITH, INDIANA

IX: Soil
CE AREA: Off-site Containment Area

CHEMICAL	UNITS	CHEMICAL CONCENTRATION MINIMUM	MAXIMUM	ARITHMETIC MEAN	NUMBER SAMPLES ANALYZED TOTAL	DETECTED
Isoquinoline	ug/kg	4900.000	4900.000	4900.00		1
Unknown Ketone	ug/kg	2100.000	2100.000	2100.00		1
Unknown butoxyethoxy ethanol	ug/kg	2100.000	2100.000	2100.00		1
Unknown substituted alkane	ug/kg	9600.000	9600.000	9600.00		1
Cyclohexane, 1,2,4,5-tetraethyl-	ug/kg	2500.000	2500.000	2500.00		1
ent. Ident. Compound-VOC					44	
Unknown	ug/kg	130.000	1500000.000	192115.48		31
Aceticacid, butylester	ug/kg	22.000	140000.000	30555.60		5
Nonane	ug/kg	32.000	160000.000	53340.80		15
Benzene, 1-ethyl-3-methyl-	ug/kg	300000.000	300000.000	300000.00		1
Octane, 2,3-dimethyl-	ug/kg	1700.000	97000.000	52233.33		3
Propylbenzene + Unknown	ug/kg	3100.000	200000.000	64820.00		5
Benzene, 1-ethyl-2-methyl-	ug/kg	65000.000	910000.000	329000.00		5
Benzene, 1,2,4-trimethyl-	ug/kg	150000.000	150000.000	150000.00		1
Unknown Hydrocarbon	ug/kg	11000.000	280000.000	124000.00		10
Methylethylbenzene + Unknown	ug/kg	24.000	640000.000	136990.57		7
nzene, propyl-	ug/kg	17000.000	160000.000	69857.14		7
nonane, 2,6-dimethyl-	ug/kg	2000.000	130000.000	41250.00		4
Benzene, (1-methylethyl)-	ug/kg	190000.000	190000.000	190000.00		1
Benzene, 1,2,3-trimethyl-	ug/kg	380000.000	380000.000	380000.00		1
Ethylmethylbenzene isomer	ug/kg	1100.000	370000.000	125775.00		4
Trimethylbenzene isomer	ug/kg	860.000	690000.000	252382.50		8
Decane	ug/kg	2700.000	580000.000	280242.86		7
Cyclopentane, 1-ethyl-3-methyl-, cis-	ug/kg	7500.000	7500.000	7500.00		1
Substituted Benzene	ug/kg	2000.000	15000.000	7240.00		5
3-Pentanone, 2,2,4,4-tetramethyl-	ug/kg	13.000	13.000	13.00		1
Trimethylbenzene + Unknown	ug/kg	2700.000	100000.000	44566.67		3
Nonane, 4-methyl-	ug/kg	5200.000	5200.000	5200.00		1
2-Pentanol, 4-methyl-	ug/kg	390.000	390.000	390.00		1
Undecane	ug/kg	1300000.000	1300000.000	1300000.00		1
Aceticacid, methylester	ug/kg	270000.000	270000.000	270000.00		1
Octane	ug/kg	170.000	27000.000	13585.00		2
Hexane, 4-ethyl-2-methyl-	ug/kg	60000.000	60000.000	60000.00		1
Heptane, 2,3,5-trimethyl-	ug/kg	54000.000	54000.000	54000.00		1
Methane, oxybis-	ug/kg	27000.000	27000.000	27000.00		1
Methane, dimethoxy-	ug/kg	92000.000	92000.000	92000.00		1
3-Buten-2-one, 3-methyl-	ug/kg	100000.000	100000.000	100000.00		1
1-Butanol	ug/kg	2500.000	480000.000	241250.00		2
Pentane	ug/kg	4600.000	120000.000	62300.00		2
2,3-Heptadien-5-yne, 2,4-dimethyl-	ug/kg	140000.000	140000.000	140000.00		1
Benzene, (2-methylpropyl)-	ug/kg	98000.000	98000.000	98000.00		1
Unknown alcohol	ug/kg	380.000	1700.000	1040.00		2
uran, tetrahydro-	ug/kg	91.000	310.000	188.75		4
-Heptanone, 5-methyl-	ug/kg	15.000	15.000	15.00		1
1-Propenylbenzene + Unknown	ug/kg	120000.000	120000.000	120000.00		1

TABLE 7-6
ORGANIC AND INORGANIC CHEMICAL CONCENTRATIONS
AMERICAN CHEMICAL SERVICES RI/FS
GRIFFITH, INDIANA

MATRIX: Soil
IRCE AREA: Off-site Containment Area

CHEMICAL	UNITS	CHEMICAL CONCENTRATION MINIMUM	MAXIMUM	ARITHMETIC MEAN	NUMBER SAMPLES ANALYZED TOTAL	DETECTED
Heptane, 3-methyl-	ug/kg	5300.000	5300.000	5300.00		1
Hexane, 2,2,3,3-tetramethyl-	ug/kg	6000.000	6000.000	6000.00		1
Cyclohexane, butyl-	ug/kg	52000.000	52000.000	52000.00		1
Heptane	ug/kg	180.000	180.000	180.00		1
2-Hexanone, 5-methyl-	ug/kg	20.000	20.000	20.00		1
Ethane, 1,1'oxybis-	ug/kg	22.000	57.000	39.50		2
Propanoicacid, 2-methyl-,butylester-	ug/kg	27000.000	27000.000	27000.00		1
Unknown oxygenated alkane	ug/kg	71.000	71.000	71.00		1
Ethenylcyclohexene	ug/kg	3700.000	3700.000	3700.00		1
Ethylmethylbenzene	ug/kg	9.400	5900000.000	257982.09		39
Trimethylbenzene	ug/kg	4.700	9800000.000	402142.25		41
Unknown ketone	ug/kg	20.000	440.000	136.75		4
Decane + unknown	ug/kg	16.000	1500000.000	263772.57		14
Ethylmethylheptane	ug/kg	58000.000	91000.000	74500.00		2
Methyl(methylethyl) benzene	ug/kg	210000.000	210000.000	210000.00		1
Tetramethylbenzene	ug/kg	11000.000	91000.000	51000.00		2
Unknown substituted benzene	ug/kg	4400.000	96000.000	50200.00		2
Methylheptanone	ug/kg	6.000	6.000	6.00		1
Dimethylnonane + unknown	ug/kg	110000.000	110000.000	110000.00		1
Unknown Hydrocarbon C10H16	ug/kg	130.000	130.000	130.00		1
Bicyclo[3.1.0]hex-2-ene, 2-methyl-	ug/kg	29000.000	29000.000	29000.00		1
Methylnonane	ug/kg	6800.000	20000.000	13400.00		2
Dimethylnonane	ug/kg	87000.000	87000.000	87000.00		1
Decane + Substituted benzene	ug/kg	8800000.000	8800000.000	8800000.00		1
Undecane + Substituted benzene	ug/kg	9800000.000	9800000.000	9800000.00		1
Acetic acid, 1-methylethylester	ug/kg	31.000	640000.000	160801.75		4
Undecane + unknown	ug/kg	210000.000	210000.000	210000.00		1
Acetic acid ester	ug/kg	100000.000	100000.000	100000.00		1
2-Propanol	ug/kg	1900.000	3100.000	2500.00		2
Butanol	ug/kg	51.000	610.000	323.67		3
Unknown oxygenated hydrocarbon	ug/kg	450.000	450.000	450.00		1
Hexanol	ug/kg	14.000	14.000	14.00		1
Methylhexanol	ug/kg	19.000	30.000	24.50		2
Ethyldimethylbenzene	ug/kg	8200.000	8200.000	8200.00		1
Hexane	ug/kg	150.000	150.000	150.00		1
Pentanol	ug/kg	110.000	110.000	110.00		1
Propenylbenzene + unknown	ug/kg	7300.000	7300.000	7300.00		1
Trimethyltricycloheptane	ug/kg	99000.000	99000.000	99000.00		1
Acetic acid, propylester	ug/kg	39.000	39.000	39.00		1
Octane, 2,6-dimethyl-	ug/kg	5300.000	5300.000	5300.00		1
Benzene, 1,1'-oxybis-	ug/kg	7300.000	7300.000	7300.00		1

This table includes all compounds identified above detection limits in the Off-Site Containment Area (see table 7-1 for samples included in this area), and is provided as the starting point in the development of a Set of Chemical Data for use in the Risk Assessment, as discussed in Section 7.1.2.1. Refer to appropriate appendices to determine the total parameters analyzed and their associated detection limits. Refer to appendix U for values used in risk calulations. The data values presented contain a maximum of three significant digits for the results of metals analyses and two significant digits for organic chemical analyses: additional digits are due to limitations in the computer program used to prepare these tables, and do not infer an increase in accuracy. The number of tentatively identified compounds designated as unknowns may exceed the total number of samples analyzed because more than one unknown compound may be present in a given sample.

[ACS]FSB.MAX

TABLE 7-7
ORGANIC AND INORGANIC CHEMICAL CONCENTRATIONS
AMERICAN CHEMICAL SERVICES RI/FS
GRIFFITH, INDIANA

'TRIX: Soil
URCE AREA: Kapica/Pazmey Surface Soils

CHEMICAL	UNITS	CHEMICAL CONCENTRATION MINIMUM	MAXIMUM	ARITHMETIC MEAN	NUMBER SAMPLES ANALYZED TOTAL	DETECTED
Volatiles					4	
Methylene Chloride	ug/kg	200.000	200.000	200.00		1
Acetone	ug/kg	130.000	970.000	550.00		2
1,1-Dichloroethane	ug/kg	86.000	150.000	118.00		2
Total 1,2-Dichloroethene	ug/kg	21.000	7600.000	3810.50		2
Chloroform	ug/kg	10.000	10.000	10.00		1
1,1,1-Trichloroethane	ug/kg	9.000	9.000	9.00		1
1,2-Dichloropropane	ug/kg	19.000	19.000	19.00		1
Trichloroethene	ug/kg	11.000	170000.000	90003.67		3
Benzene	ug/kg	320.000	3200.000	1760.00		2
4-Methyl-2-Pentanone	ug/kg	270000.000	270000.000	270000.00		1
Tetrachloroethene	ug/kg	130.000	790000.000	260092.50		4
Toluene	ug/kg	29000.000	19000000.000	6556333.33		3
Chlorobenzene	ug/kg	6200.000	6200.000	6200.00		1
Ethylbenzene	ug/kg	7000.000	4300000.000	1482333.33		3
Styrene	ug/kg	23000.000	23000.000	23000.00		1
Total Xylenes	ug/kg	5900.000	23000000.000	5904975.00		4
emi-Volatiles					4	
Phenol	ug/kg	190.000	28000.000	8822.50		4
1,2-Dichlorobenzene	ug/kg	200.000	590.000	395.00		2
2-Methylphenol	ug/kg	4700.000	4700.000	4700.00		1
4-Methylphenol	ug/kg	230.000	4600.000	2415.00		2
Isophorone	ug/kg	840.000	97000.000	36560.00		4
2,4-Dimethylphenol	ug/kg	1300.000	4900.000	3100.00		2
Naphthalene	ug/kg	680.000	97000.000	33895.00		4
2-Methylnaphthalene	ug/kg	460.000	56000.000	19740.00		4
2,4,5-Trichlorophenol	ug/kg	170.000	170.000	170.00		1
Dimethylphthalate	ug/kg	1400.000	1400.000	1400.00		1
Acenaphthene	ug/kg	360.000	360.000	360.00		1
Dibenzofuran	ug/kg	360.000	430.000	395.00		2
Diethylphthalate	ug/kg	150.000	5000.000	2575.00		2
Fluorene	ug/kg	470.000	620.000	566.67		3
N-Nitrosodiphenylamine	ug/kg	1900.000	4300.000	3100.00		2
Pentachlorophenol	ug/kg	1500.000	1500.000	1500.00		1
Phenanthrene	ug/kg	450.000	4300.000	2150.00		4
Anthracene	ug/kg	660.000	660.000	660.00		1
Di-n-butylphthalate	ug/kg	11000.000	94000.000	36000.00		4
Fluoranthene	ug/kg	760.000	3400.000	2080.00		2
Pyrene	ug/kg	1300.000	2300.000	1800.00		2
Butylbenzylphthalate	ug/kg	3200.000	51000.000	23733.33		3
Benzo(a)anthracene	ug/kg	850.000	2400.000	1625.00		2
Chrysene	ug/kg	1300.000	1300.000	1300.00		2
bis(2-Ethylhexyl)phthalate	ug/kg	110000.000	540000.000	342500.00		4
Di-n-octylphthalate	ug/kg	1300.000	38000.000	15800.00		3
Benzo(b)fluoranthene	ug/kg	430.000	3900.000	2165.00		2

TABLE 7-7
ORGANIC AND INORGANIC CHEMICAL CONCENTRATIONS
AMERICAN CHEMICAL SERVICES RI/FS
GRIFFITH, INDIANA

TRIX: Soil
URCE AREA: Kapica/Pazmey Surface Soils

CHEMICAL	UNITS	CHEMICAL CONCENTRATION MINIMUM	MAXIMUM	ARITHMETIC MEAN	NUMBER SAMPLES ANALYZED TOTAL	DETECTED
Benzo(k)fluoranthene	ug/kg	430.000	3900.000	2165.00		2
Benzo(a)pyrene	ug/kg	1400.000	1400.000	1400.00		1
Indeno(1,2,3-cd)pyrene	ug/kg	820.000	820.000	820.00		1
Dibenz(a,h)anthracene	ug/kg	270.000	270.000	270.00		1
Benzo(g,h,i)perylene	ug/kg	1100.000	1100.000	1100.00		1
Pesticides/PCBs					16	
Aldrin	ug/kg	88.000	88.000	88.00		1
Endosulfan 1	ug/kg	42.000	42.000	42.00		1
4,4-DDD	ug/kg	25.000	150.000	77.67		3
AROCLOR-1242	ug/kg	15000.000	280000.000	89750.00		4
AROCLOR-1248	ug/kg	5100.000	27000.000	13333.33		3
AROCLOR-1254	ug/kg	2000.000	22000.000	12360.00		5
Metals					4	
Aluminum	mg/kg	3220.000	13200.000	7667.50		4
Antimony	mg/kg	9.000	84.800	49.63		4
Arsenic	mg/kg	2.100	30.600	10.28		4
Barium	mg/kg	107.000	5730.000	2519.25		4
Beryllium	mg/kg	0.160	1.500	0.53		4
Cadmium	mg/kg	5.000	174.000	114.00		4
Calcium	mg/kg	2910.000	157000.000	50227.50		4
Chromium, Total	mg/kg	70.000	3080.000	1327.25		4
Cobalt	mg/kg	42.300	148.000	82.40		3
Copper	mg/kg	176.000	4470.000	1553.75		4
Iron	mg/kg	8220.000	70100.000	25060.00		4
Lead	mg/kg	401.000	16200.000	8277.75		4
Magnesium	mg/kg	2260.000	36900.000	16326.67		3
Manganese	mg/kg	135.000	1540.000	674.00		4
Mercury	mg/kg	0.240	9.500	7.04		4
Nickel	mg/kg	12.000	197.000	71.28		4
Potassium	mg/kg	333.000	1420.000	713.25		4
Selenium	mg/kg	1.400	17.200	8.35		4
Silver	mg/kg	24.800	24.800	24.80		1
Sodium	mg/kg	215.000	3920.000	1446.75		4
Vanadium	mg/kg	9.900	47.700	23.90		4
Zinc	mg/kg	292.000	15800.000	8720.50		4
Cyanide, Total	mg/kg	4.600	66.200	34.73		4
Percent Solids	%	57.200	93.000	78.25		4
Tent. Ident. Compound-SVOC					4	
Unknown	ug/kg	16000.000	960000.000	97038.46		26
Unknown Hydrocarbon	ug/kg	30000.000	36000.000	33000.00		2

TABLE 7-7
ORGANIC AND INORGANIC CHEMICAL CONCENTRATIONS
AMERICAN CHEMICAL SERVICES RI/FS
GRIFFITH, INDIANA

TRIX: Soil
RCE AREA: Kapica/Pazmey Surface Soils

CHEMICAL	UNITS	CHEMICAL CONCENTRATION MINIMUM	MAXIMUM	ARITHMETIC MEAN	NUMBER SAMPLES ANALYZED TOTAL	DETECTED
Ethylmethylbenzene isomer	ug/kg	52000.000	52000.000	52000.00		1
Trimethylbenzene isomer	ug/kg	70000.000	220000.000	145000.00		2
Undecane, 4,7-dimethyl-	ug/kg	14000.000	93000.000	41333.33		6
Benzene, 1-ethyl-2-methyl-	ug/kg	39000.000	76000.000	57500.00		2
Benzene, 2-ethyl-1,4-dimethyl-	ug/kg	21000.000	60000.000	40500.00		2
Unknown Substituted Benzene	ug/kg	28000.000	84000.000	56000.00		2
Benzene, 1-ethyl-3-methyl-	ug/kg	150000.000	150000.000	150000.00		1
Benzene, 1,2,4-trimethyl-	ug/kg	16000.000	68000.000	42000.00		2
Hexadecanoic acid	ug/kg	23000.000	260000.000	141500.00		2
Decane	ug/kg	96000.000	96000.000	96000.00		1
Benzene, 1,3,5-trimethyl-	ug/kg	70000.000	92000.000	81000.00		2
Octane, 2,3,6-trimethyl-	ug/kg	320000.000	320000.000	320000.00		1
Decane, 3-methyl-	ug/kg	56000.000	56000.000	56000.00		1
Nonane, 2,5-dimethyl-	ug/kg	220000.000	220000.000	220000.00		1
Decane, 2,5,6-trimethyl-	ug/kg	48000.000	48000.000	48000.00		1
Benzene, 1,2,3,5-tetramethyl-	ug/kg	21000.000	68000.000	49333.33		3
Tetradecane	ug/kg	21000.000	21000.000	21000.00		1
Hexadecane	ug/kg	35000.000	130000.000	78000.00		3
Heptadecane, 2,6-dimethyl-	ug/kg	14000.000	150000.000	54777.78		9
odecanoic acid	ug/kg	190000.000	190000.000	190000.00		2
Phenol, 4-(2,2,3,3-tetramethylbutyl)-	ug/kg	19000.000	240000.000	129500.00		2
Heptadecane	ug/kg	54000.000	260000.000	157000.00		2
Dodecane, 2,6,10-trimethyl-	ug/kg	110000.000	110000.000	110000.00		1
Cycloheptane, 1,3,5-tris(met...	ug/kg	52000.000	52000.000	52000.00		1
Methyl(methylethen) benzene + Unknown	ug/kg	32000.000	32000.000	32000.00		1
1,2-Benzenedicarboxylic acid butyl-2-methyl	ug/kg	19000.000	19000.000	19000.00		1
Tent. Ident. Compound-VOC					4	
Unknown	ug/kg	5900.000	440000.000	70637.50		8
Nonane	ug/kg	39000.000	39000.000	39000.00		1
Benzene, 1-ethyl-3-methyl-	ug/kg	880000.000	880000.000	880000.00		1
Benzene, 1,2,4-trimethyl-	ug/kg	790.000	790.000	790.00		1
Benzene, propyl-	ug/kg	120.000	120.000	120.00		1
Nonane, 2,6-dimethyl-	ug/kg	4800.000	4800.000	4800.00		1
Benzene, (1-methylethyl)-	ug/kg	510.000	370000.000	133170.00		3

TABLE 7-7
ORGANIC AND INORGANIC CHEMICAL CONCENTRATIONS
AMERICAN CHEMICAL SERVICES RI/FS
GRIFFITH, INDIANA

TRIX: Soil
JRCE AREA: Kapica/Pazmey Surface Soils

CHEMICAL	UNITS	CHEMICAL CONCENTRATION MINIMUM	MAXIMUM	ARITHMETIC MEAN	NUMBER SAMPLES ANALYZED TOTAL	DETECTED
Benzene, 1,2,3-trimethyl-	ug/kg	85.000	85.000	85.00		1
Cyclohexane, methyl-	ug/kg	18000.000	18000.000	18000.00		1
Ethylmethylbenzene isomer	ug/kg	57000.000	180000.000	118500.00		2
Trimethylbenzene isomer	ug/kg	93000.000	210000.000	151500.00		2
Decane	ug/kg	24000.000	290000.000	126666.67		3
Hexane, 3-methyl-	ug/kg	55.000	55.000	55.00		1
Cyclopentane, 1-ethyl-3-methyl-, cis-	ug/kg	150.000	150.000	150.00		1
Cyclohexane, 2-propenyl-	ug/kg	73.000	73.000	73.00		1
Substituted Benzene	ug/kg	98.000	1300.000	699.00		2
3-Pentanone, 2,2,4,4-tetramethyl-	ug/kg	180.000	180.000	180.00		1
Cyclohexane, 1-ethyl-4-methyl-, trans-	ug/kg	5100.000	5100.000	5100.00		1
Trimethylbenzene + Unknown	ug/kg	16000.000	16000.000	16000.00		1

This table includes all compounds identified above detection limits in the Kapica-Pazmey Area soil samples collected at a depth of less than 3 feet(see table 7-1 for samples included in this area), and is provided as the starting point in the development of a Set of Chemical Data for use in the Risk Assessment, as discussed in Section 7.1.2.1. Refer to appropriate appendices to determine the total parameters analyzed and their associated detection limits. Refer to appendix U for values used in risk calulations. The data values presented contain a maximum of three significant digits for the results of metals analyses and two significant digits for organic chemical analyses: additional digits are due to limitations in the computer program used to prepare these tables, and do not infer an increase in accuracy. The number of tentatively identified compounds designated as unknowns may exceed the total number of samples analyzed because more than one unknown compound may be present in a given sample.

TABLE 7-8
ORGANIC AND INORGANIC CHEMICAL CONCENTRATIONS
AMERICAN CHEMICAL SERVICES RI/FS
GRIFFITH, INDIANA

'TRIX: Soil
JRCE AREA: Kapica/Pazmey Subsurface Soils

CHEMICAL	UNITS	CHEMICAL CONCENTRATION MINIMUM	MAXIMUM	ARITHMETIC MEAN	NUMBER SAMPLES ANALYZED TOTAL	DETECTED
Volatiles					17	
Chloroethane	ug/kg	12.000	12.000	12.00		1
Methylene Chloride	ug/kg	190.000	190.000	190.00		1
Acetone	ug/kg	79.000	8700.000	4126.33		3
Carbon Disulfide	ug/kg	3.000	3.000	3.00		1
1,1-Dichloroethane	ug/kg	5.000	790.000	378.33		3
Total 1,2-Dichloroethene	ug/kg	360.000	26000.000	9553.33		3
Chloroform	ug/kg	1.000	3.000	1.67		3
1,2-Dichloroethane	ug/kg	44.000	44.000	44.00		1
2-Butanone	ug/kg	5.000	90000.000	30012.00		3
1,1,1-Trichloroethane	ug/kg	83.000	560.000	321.50		2
1,2-Dichloropropane	ug/kg	35.000	35.000	35.00		1
Trichloroethene	ug/kg	20.000	250000.000	59444.00		5
Benzene	ug/kg	2.000	23000.000	4970.80		5
4-Methyl-2-Pentanone	ug/kg	2.000	4200.000	1423.67		3
2-Hexanone	ug/kg	4.000	390.000	197.00		2
Tetrachloroethene	ug/kg	2.000	240000.000	43466.63		8
Toluene	ug/kg	1.000	1400000.000	197543.00		13
Chlorobenzene	ug/kg	18.000	27000.000	6787.75		4
Ethylbenzene	ug/kg	2.000	570000.000	60899.93		14
Styrene	ug/kg	58.000	260000.000	87119.33		3
Total Xylenes	ug/kg	11.000	1700000.000	240252.67		15
Semi-Volatiles					4	
Phenol	ug/kg	58.000	9600.000	2974.50		4
1,2-Dichlorobenzene	ug/kg	260.000	260.000	260.00		1
2-Methylphenol	ug/kg	80.000	4100.000	1436.67		3
4-Methylphenol	ug/kg	41.000	2400.000	662.75		4
Isophorone	ug/kg	1600.000	65000.000	33300.00		2
2,4-Dimethylphenol	ug/kg	39.000	2200.000	761.00		3
Benzoic acid	ug/kg	79.000	700.000	323.00		3
Naphthalene	ug/kg	54.000	23000.000	7758.00		3
2-Methylnaphthalene	ug/kg	290.000	16000.000	8145.00		2
Dimethylphthalate	ug/kg	6500.000	6500.000	6500.00		1
Acenaphthene	ug/kg	710.000	710.000	710.00		1
4-Nitrophenol	ug/kg	66.000	66.000	66.00		1
Dibenzofuran	ug/kg	71.000	640.000	355.50		2
2,4-Dinitrotoluene	ug/kg	840.000	840.000	840.00		1
Diethylphthalate	ug/kg	1300.000	1300.000	1300.00		1
Fluorene	ug/kg	92.000	760.000	426.00		2
Pentachlorophenol	ug/kg	45.000	16000.000	8022.50		2
Phenanthrene	ug/kg	220.000	4800.000	2510.00		2
Anthracene	ug/kg	890.000	890.000	890.00		1
Di-n-butylphthalate	ug/kg	39.000	19000.000	4806.50		4
Fluoranthene	ug/kg	40.000	6000.000	3020.00		2
Pyrene	ug/kg	71.000	4200.000	2135.50		2

TABLE 7-8
ORGANIC AND INORGANIC CHEMICAL CONCENTRATIONS
AMERICAN CHEMICAL SERVICES RI/FS
GRIFFITH, INDIANA

MATRIX: Soil
SOURCE AREA: Kapica/Pazmey Subsurface Soils

CHEMICAL	UNITS	CHEMICAL CONCENTRATION MINIMUM	MAXIMUM	ARITHMETIC MEAN	NUMBER SAMPLES ANALYZED TOTAL	DETECTED
Butylbenzylphthalate	ug/kg	20000.000	20000.000	20000.00		1
Benzo(a)anthracene	ug/kg	2100.000	2100.000	2100.00		1
Chrysene	ug/kg	1500.000	1500.000	1500.00		1
bis(2-Ethylhexyl)phthalate	ug/kg	110.000	110000.000	28477.50		4
Di-n-octylphthalate	ug/kg	890.000	3300.000	2095.00		2
Benzo(b)fluoranthene	ug/kg	2200.000	2200.000	2200.00		1
Benzo(k)fluoranthene	ug/kg	2200.000	2200.000	2200.00		1
Benzo(a)pyrene	ug/kg	610.000	610.000	610.00		1
Benzo(g,h,i)perylene	ug/kg	260.000	260.000	260.00		1
Pesticides/PCBs					16	
AROCLOR-1242	ug/kg	3200.000	34000.000	18733.33		3
AROCLOR-1248	ug/kg	9600.000	9600.000	9600.00		1
AROCLOR-1254	ug/kg	1000.000	16000.000	9275.00		4
Metals					4	
Aluminum	mg/kg	2380.000	4580.000	3372.50		4
Antimony	mg/kg	10.800	10.800	10.80		1
Arsenic	mg/kg	1.500	2.300	1.98		4
Barium	mg/kg	1490.000	1490.000	1490.00		1
Beryllium	mg/kg	0.110	0.180	0.15		4
Cadmium	mg/kg	0.090	40.400	10.19		4
Calcium	mg/kg	404.000	6650.000	3527.00		2
Chromium, Total	mg/kg	4.800	1010.000	256.95		4
Cobalt	mg/kg	12.000	12.000	12.00		1
Copper	mg/kg	478.000	478.000	478.00		1
Iron	mg/kg	1990.000	8940.000	4325.00		4
Lead	mg/kg	5.000	4060.000	1022.13		4
Magnesium	mg/kg	582.000	5170.000	2876.00		2
Manganese	mg/kg	25.500	105.000	57.63		4
Mercury	mg/kg	0.070	2.300	1.19		2
Nickel	mg/kg	12.700	12.700	12.70		1
Potassium	mg/kg	209.000	425.000	311.00		4
Selenium	mg/kg	1.500	1.500	1.50		1
Silver	mg/kg	64.300	64.300	64.30		1
Sodium	mg/kg	214.000	214.000	214.00		1
Vanadium	mg/kg	3.900	11.300	7.45		4
Zinc	mg/kg	9.400	2200.000	650.20		4
Cyanide, Total	mg/kg	21.300	21.300	21.30		1
Percent Solids	%	85.200	93.400	91.00		4
Tent. Ident. Compound-SVOC					4	
Unknown	ug/kg	180.000	210000.000	18778.80		25
Unknown Hydrocarbon	ug/kg	6800.000	69000.000	37900.00		2

TABLE 7-8
ORGANIC AND INORGANIC CHEMICAL CONCENTRATIONS
AMERICAN CHEMICAL SERVICES RI/FS
GRIFFITH, INDIANA

MATRIX: Soil
SOURCE AREA: Kapica/Pazmey Subsurface Soils

CHEMICAL	UNITS	CHEMICAL CONCENTRATION MINIMUM	MAXIMUM	ARITHMETIC MEAN	NUMBER SAMPLES ANALYZED TOTAL	DETECTED
Undecane, 4,7-dimethyl-	ug/kg	1800.000	58000.000	29900.00		2
Benzene, 2-ethyl-1,4-dimethyl-	ug/kg	54000.000	58000.000	56000.00		3
Unknown Substituted Benzene	ug/kg	77000.000	77000.000	77000.00		1
Benzene, 1-ethyl-3-methyl-	ug/kg	52000.000	160000.000	106000.00		2
Benzene, 1,2,4-trimethyl-	ug/kg	52000.000	230000.000	141000.00		2
Benzene, (1,1-dimethylethyl)-	ug/kg	79000.000	79000.000	79000.00		1
Hexadecanoic acid	ug/kg	10000.000	110000.000	60000.00		2
Decane, 2,5,6-trimethyl-	ug/kg	110000.000	110000.000	110000.00		1
Tetradecane	ug/kg	3400.000	3400.000	3400.00		1
Heptadecane, 2,6-dimethyl-	ug/kg	3600.000	14000.000	8366.67		3
Dodecanoic acid	ug/kg	3000.000	3000.000	3000.00		1
Phenol, 4-(2,2,3,3-tetramethylbutyl)-	ug/kg	3300.000	3300.000	3300.00		1
Tridecane, 5-propyl-	ug/kg	3900.000	3900.000	3900.00		1
Hexadecane, 2-methyl-	ug/kg	1600.000	1600.000	1600.00		1
Heptadecane	ug/kg	7900.000	14000.000	10950.00		2
Tetradecanoic acid	ug/kg	3900.000	130000.000	66950.00		2
Docosane	ug/kg	2000.000	2000.000	2000.00		1
Hexatriacontane	ug/kg	3500.000	3500.000	3500.00		1
1-Decene, 2,4-dimethyl-	ug/kg	210.000	210.000	210.00		1
Cyclohexanol, 3,3,5-trimethyl-	ug/kg	210.000	1500.000	855.00		2
Hexanoic acid, 2-ethyl-	ug/kg	470.000	470.000	470.00		1
Eicosane, 10-methyl-	ug/kg	290.000	290.000	290.00		1
Dodecane, 1-iodo-	ug/kg	210.000	210.000	210.00		1
Nonane, 2,6-dimethyl-	ug/kg	42000.000	42000.000	42000.00		1
Benzene, 1-methyl-3-propyl-	ug/kg	98000.000	98000.000	98000.00		1
Benzene, 1-ethenyl-3-ethyl-	ug/kg	44000.000	44000.000	44000.00		1
Tent. Ident. Compound-VOC					17	
Unknown	ug/kg	16.000	87000.000	8301.85		13
Nonane	ug/kg	17.000	42000.000	11907.80		5
Propylbenzene + Unknown	ug/kg	21.000	21.000	21.00		1
Benzene, 1-ethyl-2-methyl-	ug/kg	13.000	44000.000	14707.67		3
Benzene, 1,2,4-trimethyl-	ug/kg	28.000	59.000	43.50		2
Unknown Hydrocarbon	ug/kg	20.000	2700.000	890.25		4
Benzene, propyl-	ug/kg	6.500	130000.000	27422.23		6
Benzene, (1-methylethyl)-	ug/kg	9.700	7500.000	3754.85		2
Benzene, 1,2,3-trimethyl-	ug/kg	14.000	14.000	14.00		1
Cyclohexane, methyl-	ug/kg	16.000	16.000	16.00		1
Decane	ug/kg	88.000	260000.000	115017.60		5
Cyclohexane, 1-ethyl-4-methyl-, trans-	ug/kg	9.700	9.700	9.70		1
Nonane, 3-methyl-	ug/kg	29.000	29.000	29.00		1
Cyclohexane, propyl-	ug/kg	9.000	41.000	28.33		3
Heptane, 4-(1-methylethyl)-	ug/kg	19000.000	19000.000	19000.00		1
Benzene, 1,3,5-trimethyl-	ug/kg	24000.000	24000.000	24000.00		1
2-Pentanol, 4-methyl-	ug/kg	12.000	24.000	18.00		2

TABLE 7-8
ORGANIC AND INORGANIC CHEMICAL CONCENTRATIONS
AMERICAN CHEMICAL SERVICES RI/FS
GRIFFITH, INDIANA

TRIX: Soil
SOURCE AREA: Kapica/Pazmey Subsurface Soils

CHEMICAL	UNITS	CHEMICAL CONCENTRATION MINIMUM	MAXIMUM	ARITHMETIC MEAN	NUMBER SAMPLES ANALYZED TOTAL	DETECTED
Octane, 2,3,6-trimethyl-	ug/kg	23.000	23.000	23.00		1
Octane, 6-ethyl-2-methyl-	ug/kg	37.000	37.000	37.00		1
Octane	ug/kg	3800.000	3800.000	3800.00		1
2-Hexanone, 5-methyl-	ug/kg	9.600	9.600	9.60		1
Unknown cyclic hydrocarbon	ug/kg	9.000	9.000	9.00		1
Ethylmethylbenzene	ug/kg	24.000	490000.000	73752.46		13
Trimethylbenzene	ug/kg	14.000	520000.000	76208.38		16
2-Pentanone	ug/kg	54.000	54.000	54.00		1
2-Heptanone	ug/kg	810.000	810.000	810.00		1
Hydrocarbon + unknown	ug/kg	24.000	63000.000	24274.67		3

This table includes all compounds identified above detection limits in the Kapica-Pazmey Area (see table 7-1 for samples included in this area), and is provided as the starting point in the development of a Set of Chemical Data for use in the Risk Assessment, as discussed in Section 7.1.2.1. Refer to appropriate appendices to determine the total parameters analyzed and their associated detection limits. Refer to appendix U for values used in risk calulations. The data values presented contain a maximum of three significant digits for the results of metals analyses and two significant digits for organic chemical analyses: additional digits are due to limitations in the computer program used to prepare these tables, and do not infer an increase in accuracy. The number of tentatively identified compounds designated as unknowns may exceed the total number of samples analyzed because more than one unknown compound may be present in a given sample.

TABLE 7-9
ORGANIC AND INORGANIC CHEMICAL CONCENTRATIONS
AMERICAN CHEMICAL SERVICES RI/FS
GRIFFITH, INDIANA

TRIX: Surface Water
RCE AREA: Drainage Area

CHEMICAL	UNITS	CHEMICAL CONCENTRATION MINIMUM	MAXIMUM	ARITHMETIC MEAN	NUMBER SAMPLES ANALYZED TOTAL	DETECTED
Volatiles					5	
Chloroethane	ug/l	14.000	30.000	22.00		2
Acetone	ug/l	5.000	380.000	192.50		2
1,1-Dichloroethane	ug/l	1.000	2.000	1.50		2
Total 1,2-Dichloroethene	ug/l	1.000	3.000	2.00		2
2-Butanone	ug/l	33.000	140.000	86.50		2
Benzene	ug/l	460.000	460.000	460.00		1
4-Methyl-2-Pentanone	ug/l	49.000	49.000	49.00		1
Toluene	ug/l	7.000	8.000	7.50		2
Ethylbenzene	ug/l	6.000	6.000	6.00		1
Total Xylenes	ug/l	35.000	35.000	35.00		1
Semi-Volatiles					5	
Phenol	ug/l	23.000	45.000	34.00		2
bis(2-Chloroethyl)ether	ug/l	5.000	77.000	41.00		2
2-Methylphenol	ug/l	5.000	5.000	5.00		1
bis(2-Chloroisopropyl)ether	ug/l	29.000	29.000	29.00		1
4-Methylphenol	ug/l	9.000	590.000	299.50		2
Isophorone	ug/l	5.000	5.000	5.00		1
2,4-Dimethylphenol	ug/l	12.000	12.000	12.00		1
Benzoic acid	ug/l	85.000	85.000	85.00		1
4-Chloro-3-methylphenol	ug/l	2.000	2.000	2.00		1
Pesticides/PCBs					5	
AROCLOR-1248	ug/l	0.500	0.840	0.67		2
Metals					5	
Aluminum	ug/l	470.000	960.000	730.00		3
Arsenic	ug/l	2.300	45.000	23.65		2
Barium	ug/l	330.000	330.000	330.00		1
Beryllium	ug/l	0.280	0.280	0.28		1
Cadmium	ug/l	0.370	0.720	0.55		2
Calcium	ug/l	12500.000	334000.000	113600.00		5
Chromium, Total	ug/l	5.000	28.000	12.28		4
Copper	ug/l	22.000	22.000	22.00		1
Iron	ug/l	265.000	14300.000	4967.20		5
Lead	ug/l	4.200	23.800	11.02		5
Magnesium	ug/l	1080.000	61700.000	25460.00		4
Manganese	ug/l	24.000	1850.000	771.60		5
Nickel	ug/l	55.000	80.000	67.50		2
Potassium	ug/l	650.000	30000.000	13322.50		4
Selenium	ug/l	2.100	2.100	2.10		1

TABLE 7-9
ORGANIC AND INORGANIC CHEMICAL CONCENTRATIONS
AMERICAN CHEMICAL SERVICES RI/FS
GRIFFITH, INDIANA

'RIX: Surface Water
.URCE AREA: Drainage Area

CHEMICAL	UNITS	CHEMICAL CONCENTRATION MINIMUM	MAXIMUM	ARITHMETIC MEAN	NUMBER SAMPLES ANALYZED TOTAL	DETECTED
Sodium	ug/l	4200.000	82300.000	54500.00		3
Zinc	ug/l	53.000	88.000	64.00		4
Tent. Ident. Compound-SVOC					5	
Unknown	ug/l	10.000	620.000	127.20		25
Unknown Hydrocarbon	ug/l	16.000	16.000	16.00		1
Pentacosane	ug/l	72.000	72.000	72.00		1
Cyclohexanol, 3,3,5-trimethyl-	ug/l	420.000	420.000	420.00		1
Hexanoic acid (DOT)	ug/l	200.000	200.000	200.00		1
Phenol, 2,3-dimethyl-	ug/l	90.000	90.000	90.00		1
2-Propanol, 1-[2-(2-methoxy-1-methylethoxy)-1-2 -propanol	ug/l	36.000	36.000	36.00		1
Benzeneacetic acid	ug/l	190.000	190.000	190.00		1
Diphosphoric acid tetraethy..	ug/l	26.000	26.000	26.00		1
2,4-Pentanediol, 2-methyl-	ug/l	14.000	14.000	14.00		1
2-Propanol, 2-(2-methoxy-1-m...	ug/l	14.000	14.000	14.00		1
Benzeneacetic acid, .alpha.-ethyl-	ug/l	34.000	34.000	34.00		1
Unknown PNA	ug/l	8.000	8.000	8.00		1
Eicosane	ug/l	130.000	130.000	130.00		1
Pentanoic acid, 4-methyl-	ug/l	160.000	160.000	160.00		1
Benzeneacetonitrile	ug/l	60.000	60.000	60.00		1
2-Hexadecane, 3,7,11,15-tetr...	ug/l	42.000	42.000	42.00		1
Tent. Ident. Compound-VOC					5	
Furan, tetrahydro-	ug/l	75.000	75.000	75.00		1
3-Heptanone, 5-methyl-	ug/l	6.000	6.000	6.00		1
Ethane, 1,1'oxybis-	ug/l	14.000	14.000	14.00		1

This table includes all compounds identified above detection limits in the Surface Water Samples (see table 7-1 for samples included in this area), and is provided as the starting point in the development of a Set of Chemical Data for use in the Risk Assessment, as discussed in Section 7.1.2.1. Refer to appropriate appendices to determine the total parameters analyzed and their associated detection limits. Refer to appendix U for values used in risk calulations. The data values presented contain a maximum of three significant digits for the results of metals analyses and two ignificant digits for organic chemical analyses: additional digits are due to limitations in the computer program used o prepare these tables, and do not infer an increase in accuracy. The number of tentatively identified compounds designated as unknowns may exceed the total number of samples analyzed because more than one unknown compound may be present in a given sample.

TABLE 7-10
ORGANIC AND INORGANIC CHEMICAL CONCENTRATIONS
AMERICAN CHEMICAL SERVICES RI/FS
GRIFFITH, INDIANA

'RIX: Sediment
.URCE AREA: Drainage Area

CHEMICAL	UNITS	CHEMICAL CONCENTRATION MINIMUM	MAXIMUM	ARITHMETIC MEAN	NUMBER SAMPLES ANALYZED TOTAL	DETECTED
Volatiles					18	
Chloroethane	ug/kg	40.000	40.000	40.00		1
Methylene Chloride	ug/kg	44.000	44.000	44.00		1
Total 1,2-Dichloroethene	ug/kg	6.000	6.000	6.00		1
Chloroform	ug/kg	2.000	8.000	3.17		6
2-Butanone	ug/kg	11.000	11.000	11.00		1
1,1,1-Trichloroethane	ug/kg	3.000	3.000	3.00		1
Benzene	ug/kg	23.000	14000.000	7011.50		2
Toluene	ug/kg	3.000	170.000	72.60		5
Ethylbenzene	ug/kg	130.000	130.000	130.00		1
Total Xylenes	ug/kg	200.000	200.000	200.00		1
Semi-Volatiles					18	
Phenol	ug/kg	58.000	190.000	124.00		2
bis(2-Chloroethyl)ether	ug/kg	430.000	560.000	495.00		2
bis(2-Chloroisopropyl)ether	ug/kg	1400.000	1800.000	1600.00		2
4-Methylphenol	ug/kg	100.000	270.000	185.00		2
2,4-Dimethylphenol	ug/kg	610.000	610.000	610.00		1
Benzoic acid	ug/kg	190.000	1200.000	557.14		7
Naphthalene	ug/kg	59.000	420.000	172.00		4
2-Methylnaphthalene	ug/kg	55.000	380.000	178.75		4
Dibenzofuran	ug/kg	230.000	230.000	230.00		1
Fluorene	ug/kg	75.000	75.000	75.00		1
Hexachlorobenzene	ug/kg	140.000	140.000	140.00		1
Pentachlorophenol	ug/kg	47.000	230.000	138.50		2
Phenanthrene	ug/kg	68.000	660.000	264.43		7
Anthracene	ug/kg	83.000	100.000	91.50		2
Di-n-butylphthalate	ug/kg	58.000	170.000	110.50		4
Fluoranthene	ug/kg	62.000	1000.000	423.25		8
Pyrene	ug/kg	71.000	1100.000	394.38		8
Butylbenzylphthalate	ug/kg	160.000	170.000	165.00		2
Benzo(a)anthracene	ug/kg	78.000	710.000	325.14		7
Chrysene	ug/kg	77.000	800.000	330.63		8
bis(2-Ethylhexyl)phthalate	ug/kg	51.000	13000.000	2257.36		11
Benzo(b)fluoranthene	ug/kg	56.000	1500.000	398.36		11
Benzo(k)fluoranthene	ug/kg	56.000	1500.000	408.36		11
Benzo(a)pyrene	ug/kg	63.000	690.000	327.14		7
Indeno(1,2,3-cd)pyrene	ug/kg	160.000	420.000	297.50		4
Dibenz(a,h)anthracene	ug/kg	75.000	200.000	145.00		3
Benzo(g,h,i)perylene	ug/kg	180.000	550.000	372.50		4
Pesticides/PCBs					18	
Heptachlor Epoxide	ug/kg	66.000	66.000	66.00		1
AROCLOR-1248	ug/kg	4600.000	4600.000	4600.00		1

TABLE 7-10
ORGANIC AND INORGANIC CHEMICAL CONCENTRATIONS
AMERICAN CHEMICAL SERVICES RI/FS
GRIFFITH, INDIANA

'TRIX: Sediment
)RCE AREA: Drainage Area

CHEMICAL	UNITS	CHEMICAL CONCENTRATION MINIMUM	MAXIMUM	ARITHMETIC MEAN	NUMBER SAMPLES ANALYZED TOTAL	DETECTED
AROCLOR-1254	ug/kg	460.000	17000.000	5862.50		4
AROCLOR-1260	ug/kg	290.000	290.000	290.00		1
Metals					18	
Aluminum	mg/kg	1850.000	15700.000	6660.56		18
Antimony	mg/kg	2.800	5.100	3.95		2
Arsenic	mg/kg	1.100	22.500	6.98		18
Barium	mg/kg	63.000	107.000	78.51		8
Beryllium	mg/kg	0.080	1.000	0.46		18
Cadmium	mg/kg	0.080	4.700	1.01		16
Calcium	mg/kg	759.000	73000.000	15609.94		18
Chromium, Total	mg/kg	4.300	273.000	30.70		18
Copper	mg/kg	6.300	359.000	47.92		15
Iron	mg/kg	2550.000	34500.000	12395.56		18
Lead	mg/kg	3.600	702.000	100.01		18
Magnesium	mg/kg	443.000	22300.000	5807.31		16
Manganese	mg/kg	23.100	419.000	171.95		18
Mercury	mg/kg	0.130	8.800	2.06		5
Nickel	mg/kg	14.400	40.500	25.15		6
Potassium	mg/kg	202.000	2870.000	720.33		18
Selenium	mg/kg	0.870	1.100	1.02		3
Thallium	mg/kg	1.400	1.400	1.40		1
Vanadium	mg/kg	4.500	47.900	20.50		18
Zinc	mg/kg	6.400	271.000	106.32		18
Percent Solids	%	27.000	81.300	60.31		17
Tent. Ident. Compound-SVOC					18	
Unknown	ug/kg	140.000	17000.000	1679.27		220
Unknown Hydrocarbon	ug/kg	320.000	54000.000	3708.29		41
Hexadecanoic acid	ug/kg	1300.000	1400.000	1350.00		2
Hexatriacontane	ug/kg	1700.000	1700.000	1700.00		1
Cyclohexanol, 3,3,5-trimethyl-	ug/kg	870.000	870.000	870.00		1
Dimethylphenol	ug/kg	2200.000	2200.000	2200.00		1
1,3,5-Triazine-2,4,6(1H,3H,5)-trione, 1,3,5-tri-	ug/kg	690.000	690.000	690.00		1
Sulfur, mol. (S8)	ug/kg	180.000	5400.000	2790.00		2
Bromohexane isomer	ug/kg	790.000	5800.000	2796.67		3
PCB	ug/kg	360.000	4700.000	2253.75		8
Benzopyrene isomer	ug/kg	320.000	320.000	320.00		1
Phthalic anhydride	ug/kg	1300.000	1700.000	1500.00		2
Propanoic acid, 2-methyl-1,...	ug/kg	740.000	740.000	740.00		1
Hexane, 2,3,4-trimethyl-	ug/kg	420.000	420.000	420.00		1
Dimethyl heptadecane	ug/kg	310.000	310.000	310.00		1
Phthalate	ug/kg	2200.000	2200.000	2200.00		1
Methyltetradecane	ug/kg	1000.000	1000.000	1000.00		1
Pentadecanoic acid, 14-methyl-methylester	ug/kg	410.000	410.000	410.00		1

TABLE 7-10
ORGANIC AND INORGANIC CHEMICAL CONCENTRATIONS
AMERICAN CHEMICAL SERVICES RI/FS
GRIFFITH, INDIANA

'ATRIX: Sediment
SOURCE AREA: Drainage Area

CHEMICAL	UNITS	CHEMICAL CONCENTRATION MINIMUM	MAXIMUM	ARITHMETIC MEAN	NUMBER SAMPLES ANALYZED TOTAL	DETECTED
Tent. Ident. Compound-VOC					18	
Furan, tetrahydro-	ug/kg	160.000	160.000	160.00		1
3-Pentanone, 2,4-dimethyl-	ug/kg	15.000	15.000	15.00		1
3-Heptanone, 5-methyl-	ug/kg	25.000	25.000	25.00		1

This table includes all compounds identified above detection limits in the sediment samples (see table 7-1 for samples included in this area), and is provided as the starting point in the development of a Set of Chemical Data for use in the Risk Assessment, as discussed in Section 7.1.2.1. Refer to appropriate appendices to determine the total parameters analyzed and their associated detection limits. Refer to appendix U for values used in risk calulations. The data values presented contain a maximum of three significant digits for the results of metals analyses and two significant digits for organic chemical analyses: additional digits are due to limitations in the computer program used to prepare these tables, and do not infer an increase in accuracy. The number of tentatively identified compounds designated as unknowns may exceed the total number of samples analyzed because more than one unknown compound may be present in a given sample.

M

GUIDE TO HAZARDOUS MATERIALS

SUBJECT: MW EMPLOYEE GUIDE TO HAZARDOUS MATERIALS
ACS - GRIFFITH, INDIANA

Introduction

As a MW employee at ACS, duties may require you to work with substances which are potentially hazardous to your health. Training you to work safely with these hazardous substances is a critical step in providing a workplace which is designed to protect your health and safety. This guide was developed as part of the MW Hazard Communication Program and together with training will provide you with information on current regulations, health hazards, safety procedures and emergency procedures associated with the hazardous substances you work with.

Specifically, this guide will introduce and explain the requirements of two regulations which have been established by the Occupational Safety and Health Administration (OSHA). These regulations are known as "Access to Employee Exposure and Medical Records" (29 CFR 1910.20) and the "Hazard Communication Standard" (29 CFR 1910.1200). (Note: Approved State OSHA plans have their corresponding, equivalent standards.)

I. ACCESS TO EMPLOYEE EXPOSURE AND MEDICAL RECORDS

This regulation requires that MW provide employees or their designated representative access to their Exposure and Medical Records.

Employee Exposure Record includes any environmental and biological monitoring that has been taken to estimate your exposure to toxic substances or harmful physical agents.

Employee Medical Record contains information concerning the health status of an employee. Maintained by a physician or nurse, this record includes any medical history questionnaires, medical opinions, and diagnoses. It also contains descriptions of treatments, prescriptions and employee complaints.

Written requests for these records should be directed to the Corporate Health & Safety Manager.

II. INTRODUCTION TO TOXICOLOGY AND CHEMICAL HAZARDS

A. What Are Hazardous Substances?

Hazardous substances are chemicals which due to their toxic effects, physical properties like flammability, explosivity and reactivity, or potential to adversely affect the environment have been identified as requiring special precautions during their use. Very simply, they are materials that can cause you harm.

The Hazard Communication Regulation is specifically concerned with potential harm that these materials can cause to workers. The types of hazardous materials you might commonly find in your workplace are: acids, bases, solvents, sealants, cleaners, and insulation or other dusts.

B. What Does the Term "Toxic" Mean?

While you may easily understand the hazard that a flammable liquid poses to you, what is a "toxic" substance? Simply stated, "toxic" means poisonous. However, you must understand that all chemicals, including common table salt and sugar, are toxic if consumed in large enough quantities. Therefore, you should look at the term "toxic" from the standpoint of how toxic is the substance, and how much has been absorbed by the body.

For example, very little exposure to a highly toxic substance will cause you harm. For a less toxic substance, a much larger exposure would be necessary to cause harm.

C. What Are "Exposure Limits"?

OSHA (the Occupational Safety and Health Administration) has reviewed medical and toxicological data on many hazardous substances. It has set airborne levels for many hazardous substances below which an average worker can safely work with the substance. These levels are called "Permissible Exposure Limits (PELs)". An employer must reduce worker exposure below the PEL by using control measures.

There is another source of exposure limits which are not set by the government, but by a private organization called the American Conference of Governmental Industrial Hygienists (ACGIH). These levels are called **Threshold Limit Values (TLVs)**. They are not legal limits, but are usually more restrictive than legal limits and, therefore, used as guidelines for worker exposure to hazardous substances.

Other factors discussed below are also important in understanding how hazardous substances may result in a toxic effect.

D. How Do Hazardous Substances Enter the Body?

There are three common routes of entry for hazardous substances into your body: inhalation, absorption, and ingestion.

Inhalation: Gases, vapors, mists, dusts, and fumes can either harm the lungs directly or be absorbed into the bloodstream and affect other organs, like the liver and kidneys. Because inhalation is the most common type of exposure, nearly all PELs and TLVs refer to airborne levels of toxic substances.

Absorption: Some substances that come into contact with your skin or eyes can be absorbed into your bloodstream through your intact skin or if your eyes are splashed or come in contact with airborne concentrations of the substance. The MSDS will indicate if skin absorption or direct skin injury may occur with a hazardous material.

Ingestion: Ingestion is not a common way that a hazardous substance enters your body. However, even small amounts of some highly toxic materials can be ingested and cause harm to you from bad personal hygiene practices (such as eating or smoking without first washing your hands).

E. What Are the Types of Toxic Effects?

In general, there are two major types of toxic effects: acute and chronic.

Acute effects can occur when your exposure to a chemical is large enough so that it affects you right away. Examples of acute toxicity are chemical skin burns, asphyxiation and sudden poisoning.

Chronic effects can occur with repeated exposures after a long period of time. These effects may occur with fairly low-level exposures, so that the damage may not be obvious at first, but can eventually result in harm to you. The resulting injury may be slight (for example, skin irritation), or it may involve severe damage to organs and systems of your body (such as lung disease, cancer, or impaired reproductive function).

Some hazardous chemicals have only acute or chronic effects, but some have both.

F. Hazard Groups

It is important for you to understand the potential hazards of the substance with which you work so that you can help maintain a safe environment for yourself and your fellow workers. ***Most hazardous substances can be used safely if you combine a basic understanding of the potential hazards with care, common sense, and appropriate control measures.***

Commonly used groups of these substances and their potential hazards are reviewed on the following pages.

Flammables

Substances that are easily ignited and which burn rapidly are called flammables. There are three factors that must exist to have a fire: fuel, oxidizer (supplies oxygen in a chemical reaction), and ignition source. These three components make up the fire triangle.

Flammable liquids are a common cause of fire in industry. A flammable liquid can form an ignitable mixture with air at room temperatures. The flammable liquid is the fuel, the air is the oxidizer, and the flame or spark, the ignition source.

Corrosives

Substances that can cause destruction or irreversible damage to human tissues are called corrosives. They may be liquid, solid, or gas, although they most commonly occur in the liquid state as acids or bases.

Corrosives are also defined in terms of pH. Strong acids, such as sulfuric acid and hydrochloric acid, usually have a pH less than 2. Strong bases, also referred to as caustics, such as ammonium hydroxide and potassium hydroxide, usually have a pH greater than 12. Pure water has a neutral pH of around 7.

Corrosives are mainly damaging to the skin and eyes. Strong bases have a more corrosive effect on tissue than most strong acids. Bases are capable of dissolving skin fat, softening the skin layers, and sensitizing the skin to chemicals. Acids cause symptoms that resemble severe burns, such as redness, blistering, cracking, and rashes.

Irritants

Irritants are substances that may cause an inflammation when in contact with human tissue. Epoxy resin systems and organic solvents are two common examples. The areas most commonly affected by irritants are the skin, eyes, and respiratory tract.

Sensitizers

Sensitizers do not always cause noticeable skin effects on first contact. They may cause unseen changes in the body's immune system, making the person allergic to future exposures to the same substance. Examples of sensitizers are epoxy resins and hardeners, and phenolic plastics.

Photosensitizers are chemicals which sensitize the skin to sunlight so that the skin becomes sunburned unusually quickly. Coal tar pitch and crude petroleum are examples.

Asphyxiants

Asphyxiants are substances that deprive the body of oxygen, which must be transported from the lungs via the bloodstream to the cells. With complete deprivation of oxygen, brain cells perish in 4 to 6 minutes. If allowed to continue, oxygen deprivation results in death. Asphyxiants are classified as either simple or chemical.

Simple asphyxiants are inert gases which displace the oxygen in the atmosphere to levels below that required for sufficient oxygen supply to body cells. Some common examples include carbon dioxide, ethane, helium, hydrogen, methane, and nitrogen.

Chemical asphyxiants are gasses that prevent the uptake of oxygen by the blood or interfere with oxygen transportation from the lungs to the tissues. Common examples include carbon monoxide, hydrogen cyanide, and hydrogen sulfide.

Cryogens

Cryogens are very cold liquids usually contained within pressurized cylinders. Among the most common are oxygen, nitrogen, natural gas, argon, helium, and hydrogen. Hazards associated with these materials include explosive atmospheres (where liquid natural gas or hydrogen is used), asphyxiation (where the cryogenic vapors have displaced the breathable air), and skin and eye hazards due to the extremely low temperatures of these materials.

Carcinogens

Carcinogens are defined as substances which are capable of causing or producing cancer in humans or animals. The substances that induce cancer do so in a way that is still not understood. No one really knows why some substances are carcinogenic and others are not. We can be exposed to carcinogens not only through the air we breathe and the water we drink, but also by our diet. Certain elements of our lifestyle, both on and off the job, may contribute to cancer.

OSHA lists carcinogens with which employers must use special precautions to prevent harmful exposure to workers. Exposures to these carcinogens is reduced by limiting their amount in solid or liquid mixtures, using localized ventilation, providing employee training, using protective clothing, and prohibiting eating, drinking, and smoking in regulated areas.

Incompatibles

Certain materials will react violently when combined with each other. They are called incompatibles. Their reactions may produce fire, explosion, toxic gases, or tremendous heat. Some examples are:

Acids and Cyanides — the reaction between acids and cyanide salts gives off poisonous hydrogen cyanide gas. Many electroplating operations use both cyanide solutions and acid solutions. The two should never be mixed.

Acids and Bases — the reaction between strong acids and strong bases will give off large amounts of heat, often violently. Care must be taken not to mix the two.

Water Plus Strong Acids or Bases — strong acids and bases will also react by giving off large amounts of heat when mixed with water. When diluting strong solutions, always add the acid or base slowly to a large amount of water.

Oxidizers and Flammables — an oxidizer is an efficient source of oxygen which can keep a fire burning. It may be reactive enough to start a fire. Oxidizers sometimes supply enough heat to make fire extinguishers ineffective. Examples of oxidizers are nitric acid and potassium permanganate. (Flammables were discussed earlier.)

REMEMBER, incompatible materials must be stored separately at all times to avoid hazardous reactions that can occur during spills, container leakages, fire, or earthquakes.

III. THE HAZARD COMMUNICATION LAW — 29 CFR 1910.1200

A. Purpose of the Hazard Communication Law

The purpose of this standard is to communicate to you and all employees the hazards of the materials that you work with. It is also called the "Employee Right-to-Know" law. This information is provided through the MW **Hazard Communication Program** which includes the following:

- Written Hazard Communication Program
- Hazardous Substances Listing and Inventory
- Material Safety Data Sheet Inventory
- Labeling and Hazard Warning System
- Employee Information and Training Program

B. Scope and Application of the Law

This law requires manufacturers or importers to find out the hazards of materials which they produce or import, then provide this information to employers by way of MSDSs (Material Safety Data Sheets). The employer is then required to supply the MSDS and other hazardous material information to employees. This law applies to any hazardous material which is in the workplace and used in a way that could cause exposure to employees under normal conditions of use or in an emergency.

V. MAJOR COMPONENTS OF THE HAZARD COMMUNICATION LAW:

A. The Written Program

1. Details how the company is fulfilling all the requirements of the Hazard Communication Law.
2. Is now part of the MW Corporate Health and Safety Manual (See Bulletin III–1.)
3. Is available, upon request, to you and your designated representatives.

B. List of Hazardous Substances

1. The list must be posted in every work area.

2. The list must also be in every department MSDS binder.

3. The list itemizes the hazardous substances used in the Cost/Profit Center or specific work area.

4. The list can be utilized as a reference to the MSDSs in the binder and for hazardous substances used.

C. Hazardous Substances Training

1. Is required for all employees exposed to hazardous substances.

2. Informs you of the physical and health hazards of the substances which you work with, how you can protect yourself, and the requirements of the law.

3. Training will cover:
   a. The general requirements of the law, the details of the Hazard Communication Program, the location and availability of MSDSs, the list of hazardous substances, the written program and other general hazardous substances information.
   b. Additional training will be given as needed on the specific health and physical hazards of substances which you work with.

D. Container Labeling

1. Original Manufacturer's Containers

a. Manufacturers, importers and distributors of substances which MW purchases must label, tag or mark each container of hazardous substance(s) with the following information:
   - Identity of the hazardous substance(s).
   - Appropriate hazard warnings.
   - Name and address of the manufacturer, importer or other responsible party.

b. No container of hazardous substances shall be released for use in the workplace unless the container is correctly labelled and the label is legible.

c. Any containers with damaged labels must be kept separate and not used until they are relabeled. A supply of new labels must be obtained from the manufacturer, importer or distributor for this purpose.

2. **Secondary Containers**

   a. Appropriate hazard warning labels must also be placed on secondary containers (i.e., containers used to store material dispensed from the manufacturer's original container).

   b. The secondary container must be labeled with either a copy of the manufacturer's label or a department produced label that includes:

      - Product identity
      - Fire, physical and health hazards
      - First Aid procedures
      - Manufacturer's name

   c. This label information can be obtained from the manufacturer's original container or the applicable Material Safety Data Sheet (MSDS).

   d. Cost Center Supervisors must ensure that all labels on secondary containers are clearly visible, legible and include the required information.

E. Material Safety Data Sheets (MSDSs)

1. MSDSs for every hazardous substance used in your work area should be in the plainly marked MSDS binder which is located in your Cost Center Supervisor's office. In some cases, there will be an MSDS binder in other work areas as well.

2. Each MSDS should contain the following information:

   a. Source of the MSDS (manufacturer)
      1. The name, address and emergency phone number of the preparer of the MSDS and the date of MSDS preparation.

   b. Identity of the substance
      1. Common name.
      2. Scientific or chemical name.
      3. Trade name or abbreviation.
      4. Chemical formula.
      5. Chemical Abstract Service (CAS) number.

   c. List of hazardous ingredients
      1. Exception: trade secrets don't need to be listed, but the information must be made available to safety and health professionals.

   d. Physical and chemical characteristics
      1. Boiling point, specific gravity, vapor pressure, appearance and odor, etc.

   e. Fire and explosion information
      1. Conditions which could result in a fire or explosion.
      2. Appropriate fire extinguisher.
      3. Approved fire fighting methods.

f. Physical hazards

1. Materials which are incompatible with the substance.
2. Any conditions to be avoided.

g. Health hazards

1. Signs and symptoms of overexposure.
2. Acute and chronic effects.
3. Routes of entry.
4. Medical conditions aggravated by exposure.
5. Listing as carcinogen or potential carcinogen.
6. Occupational exposure limits:
   a) OSHA PELs.
   b) ACGIH TLVs.

h. Special protection information

1. Personal protective equipment to be used.
2. Safe handling requirements.
3. Engineering and administrative controls.

i. Emergency and first aid procedures

j. Special precautions

1. Special handling and storage requirements.
2. Spill and leak procedures.

F. Employee Rights

OSHA and the Hazard Communication laws give you the following rights:

1. You can personally receive all information regarding any hazardous substances you work with or are exposed to.
2. Your doctor or collective bargaining agent can receive information regarding any hazardous substances you work with or are exposed to.
3. The company cannot discharge you or discriminate against you for exercising any of your rights under this law.
4. You can refuse to work with a hazardous substance if the company cannot find out the hazards and communicate them to you.

IV. PREVENTING EMPLOYEE EXPOSURE

A. Employer Measures

Ways the company limits or prevents your exposure:

1. **Engineering controls:** Ventilation systems and physical isolation of the chemical from the worker are examples of engineering controls. Engineering controls are the surest means of controlling your exposure to hazardous substances. They are also the most expensive and are sometimes not practical to install. Proper design and maintenance are important to keep them operating at maximum efficiency.

2. **Administrative controls:** Substitution of less hazardous materials, providing rest periods, and rotating employees (where appropriate), are examples of reducing exposure through administrative controls. Cost Center Supervisors should use information provided in MSDS's to determine whether administrative controls can be used to further protect you from hazardous substances.

3. **Personal protection equipment:** Respirators and impervious gloves are examples of personal protective equipment (PPE). PPE reduces a worker's exposure to hazardous substances, but does not improve the overall workplace environment. Some PPE, like respirators, require special training and fitting to ensure proper protection, as well as a medical examination.

B. Employee Responsibilities

1. **Use safe work practices:** Certain practices over which you have personal control (for example how fast a machine operates or how ingredients are added to a mixing vessel) can significantly affect your exposure. You should be carefully trained to recognize this fact and always work according to prescribed procedures.

2. **Personal hygiene:** Measures as simple as washing your hands before eating, or smoking, or showering at the end of a work shift can significantly reduce your exposure to hazardous substances. Personal hygiene is particularly important when handling highly toxic substances. OSHA regulations for certain substances (like lead) require specific personal hygiene practices.

3. **Read and follow label warnings:** Labeling (as required by the Hazard Communication Law) can be an important control measure if workers read, understand, and follow label instructions. If you see the words: "danger," "warning," or "caution," make sure you read the label carefully and refer to the MSDS for more information.

C. Detecting Hazardous Substances

The following methods or reactions can be used to help you detect the presence of, release of or exposure to hazardous substances:

Air Sampling	Industrial hygienists are trained to use a variety of sampling equipment which is designed to detect mists, vapors, dusts or fumes in the air.
Visual Appearance	Some hazardous substances will form colored "clouds" or stain surfaces which they contact.
Odor	In some cases a hazardous substance will have a particular odor and be easily detected, e.g. ammonia. Although many hazardous substances will not have any odor at all, e.g. carbon monoxide.
Dizziness/ Headache	Exposure to some hazardous substances will result in headache and dizziness.
Skin/Eye/ Throat Irritation	Many hazardous substances will cause irritation of the eyes, skin and/or throat.

It is very important that you understand the health hazards and other properties of the hazardous substances you work with so as to predict, prevent or detect potentially hazardous releases or exposures.

Glossary

Acute effect — an adverse effect, usually as a result of a short-term but high-level exposure.

ACGIH — American Conference of Governmental Industrial Hygienists. ACGIH publishes recommended occupational exposure limits for hundreds of chemical substances and physical agents.

Carcinogen — a substance or agent capable of causing or producing cancer in humans or animals.

Chronic effect — an adverse effect with symptoms that develop over a long period of time or which recur frequently. This effect is usually a result of a long-term exposure.

Combustible substance — any substance which after ignition will continue to burn in air.

Designated representative — any individual or organization to whom an employee gives written authorization to exercise a right of access to exposure and/or medical records.

DOT — Department of Transportation

Emergency — Any potential occurrence such as, but not limited to, equipment failure, rupture of containers, or failure of control equipment, which may or does result in a release of a hazardous substance into the workplace.

Exposure or Exposed — Any situation arising from work operation where an employee may ingest, inhale, absorb through the skin or eyes, or otherwise come into contact with a hazardous substance.

Flammable liquids — liquids with a flash point below 100_F.

Flash point — the minimum temperature at which a liquid gives off vapor at sufficient concentrations to form an ignitible mixture with air.

Fumes — small, solid particles usually created by heating metals above their melting point.

General exhaust ventilation — provides air circulation throughout a room or building by natural infiltration of air or with an air moving device.

Hazard — possibility that exposure to a material will cause injury or harm when used under certain conditions.

Hazard warning — Any words, pictures, symbols, or combination thereof appearing on a label or other appropriate form of warning which convey the health hazards and physical hazards of the substance(s) in the containers(s).

Hazardous substance — Any substance which is a physical hazard or a health hazard. In a broad sense, any substance with properties capable of producing adverse effects on the safety or health of a human being.

Health Hazard — A substance for which there is evidence that acute or chronic health effects may occur in exposed employees. The term "health hazard" includes substances which are carcinogens, toxic agents, irritants, corrosives, sensitizers, and agents which damage the lungs, skin, eyes or mucous membranes.

Ingestion — the swallowing of substances.

Inhalation — the breathing in of a gas, mist, fume, vapor, or dust.

Label — Any written, printed, or graphic material displayed on or affixed to containers of hazardous substances.

LC — lethal concentration; a concentration of a substance that is fatal for a test animal.

LD — lethal dose; a dose, usually in grams or milligrams, that is fatal for a test animal.

LD50 — Lethal dose–50; a dose at which 50 percent of a population of the same species will die within a specified time.

LEL — lower explosive limit; the lowest concentration of a substance that will produce an explosion when an ignition source is present.

Local exhaust ventilation — captures and removes the contaminant being controlled at or near the place where it is created or dispersed.

Local health effect — damage which occurs where the chemical makes initial contact with the body.

Organic — chemicals that contain carbon.

OSHA — Occupational Safety and Health Administration of the U.S. Department of Labor.

Oxygen deficiency — an atmosphere with less than the percentage of oxygen found in normal air. OSHA defines an oxygen deficient atmosphere as having less than 19.5 percent oxygen.

Particulate — solid substance which may be suspended in air.

PEL — permissible exposure limit; an exposure level set by OSHA which may either be a time-weighted average (TWA) or a maximum concentration exposure limit.

pH — a scale from 0 to 14 which is used to measure the strength of acids and bases, with neutrality indicated at 7. Acids have a pH less than 7 and bases have a pH greater than 7.

Physical hazard — A substance for which there is evidence that it is a combustible liquid, a compressed gas, explosive, flammable, an oxidizer, unstable (reactive) or water-reactive.

ppm — parts per million; a unit for measuring the concentration of a gas, vapor, or other contaminant in the air. It is a measure of the parts of gas, vapor, or other contaminant per million parts of air.

Polymerization — a chemical reaction in which small molecules combine to form larger molecules. This becomes a hazard when a large amount of heat energy is released during the process.

Sensitizer — a substance that may cause some individuals to develop an allergic reaction after extended or repeated exposure.

Stability — the ability of a material to remain unchanged.

Systemic health effect — damage which occurs when a chemical is absorbed and travels through the body to a specific organ.

TLV — threshold limit value; an estimate of the chemical levels, in parts per million or milligrams per cubic meter of air, that most people can be exposed to without adverse effects. TLV's are recommendations established by the American Conference of Governmental Industrial Hygienists and are used only as guidelines.

TLV-ceiling — the airborne concentration which should not be exceeded, even for an instant.

TLV-STEL — short-term exposure level; the maximum concentration to which workers can be exposed for a period of up to 15 minutes, no more than 4 times per day.

TLV-TWA — the allowable time-weighted average concentration for a normal 8 hour workday or 40 hour workweek.

Toxic material — a substance which produces injury or illness if it is ingested, inhaled, or absorbed.

Toxicity — The capacity of a substance to produce an unwanted health effect on the body.

UEL — upper exposure limit; the highest concentration of a substance that will produce an explosion when an ignition source is present.

Unstable — the tendency of a material to decompose or to change chemically during normal handling or storage.

Vapors — the gaseous form of substances which are normally in the solid or liquid state at room temperature and pressure.

J:\4077\0072\HAZCOM.DOC

List 1: Chemicals (potentially) used in the field

GEORGIA STEEL & CHEMICAL CO., INC.

Safety Products Division

MATERIAL SAFETY DATA SHEET **A-33 Dry**

MEDICAL EMERGENCY ONLY, 24 HOUR SERVICE: 1-800-328-0026
Airkem Professional Products
Division of Ecolab Inc.

Date of Issue: February 17, 1991

SECTION 1 - IDENTIFICATION

Product Name: A-33 Dry; Component of Fresh Kit Systems
(Georgia Steel & Chemical Co., Inc.,
"Special Cleaner", Catalog No. FK240)
Product Type: Powdered Quaternary Ammonium Disinfectant

SECTION 2 - HAZARDOUS COMPONENTS

	%	TLV (mg/m3) PEL	Other
o Ethylenediamine tetraacetic acid, tetrasodium salt 64-02-8	5	None	UNK
o Quaternary ammonium chlorides 68956-79-6 & 68391-01-5	12	None	UNK

This product contains no other component considered hazardous according to the criteria of 29 CFR 1910.1200.

SECTION 3 - PHYSICAL DATA

- o Appearance and Odor: Green powder; non-descript odor
- o Solubility in Water: Complete
- o pH: 10-11 (1%)

SECTION 4 - FIRE AND EXPLOSION DATA

- o Special Fire Hazards: None
- o Fire Fighting Methods: Product does not support combustion.

SECTION 5 - REACTIVITY DATA

- o Stability: Stable under normal conditions of handling.
- o Conditions to Avoid: Do not mix with chlorine (bleach).

SECTION 6 - SPILL OR LEAK PROCEDURES

- o Clean-up: Pick up without raising dust. Flush area with water.
- o Waste Disposal: Consult state and local authorities for restriction on disposal of chemical waste.

UNK = Unknown at this time PEL = Permissible Exposure Limit.
TLV = Threshold Limit Value STEL = Short Term Exposure Level
C = Ceiling Limit, Not To Be Exceeded.

10810 Guilford Road • Annapolis Junction, MD 20701 • (301) 317-5502 • (800) 296-0351 • Fax: (301) 470-6313

GEORGIA STEEL & CHEMICAL CO., INC.

Safety Products Division

Product: A-33 Dry (Georgia Steel & Chem. Catalog No. FK240)

MEDICAL EMERGENCY ONLY, 24 HOUR SERVICE: 1-800-328-0026

SECTION 7 - HEALTH HAZARD DATA

- Effects of Overexposure:
  EYES: Corrosive. Causes eye damage.
  SKIN: May cause irritation.
  IF SWALLOWED: Harmful. Causes irritation, stomach distress.
  IF INHALED: Can cause irritation of lungs and airways through overexposure.

SECTION 8 - FIRST AID

- EYES: Immediately flush with plenty of cool running water. Remove contact lenses. Continue flushing for at least 15 minutes, holding eyelids apart to ensure rinsing the entire eye. Call a physician.

SKIN: If skin irritation is experienced, stop using the product and immediately flush skin area with plenty of cool running water. Call a physician if irritation continues.

IF SWALLOWED: Drink promptly a large quantity of milk, egg white or gelatin solution or if these are not available, drink large quantity of water.
CALL A POISON CONTROL CENTER OR PHYSICIAN IMMEDIATELY

IF INHALED: Move to fresh air.

SECTION 9 - SPECIAL PROTECTION INFORMATION

- Eyes: Splashproof glasses, goggles or face shield.
  Skin: Rubber gloves - protective cuff or gauntlet type.

SECTION 10 - ADDITIONAL INFORMATION/PRECAUTIONS

- DOT Class: Not Regulated.
- Avoid Contamination of food or food products. Do not store with food products.
- EPA REG. #4296-19

KEEP OUT OF REACH OF CHILDREN

The above information is believed to be correct with respect to the formula used to manufacture the product. As data, standards and regulations lchange, and conditions of use and handling are beyond our control, NO WARRANTY, EXPRESS OR IMPLIED, IS MADE AS TO THE COMPLETENESS OR CONTINUING ACCURACY OF THIS INFORMATION.

January 1, 1994

Prepared by: Jean Freund

10810 Guilford Road • Annapolis Junction, MD 20701 • (301) 317-5502 • (800) 296-0351 • Fax: (301) 470-6313

MATERIAL SAFETY DATA SHEET

MSDS1015

AMEREX CORPORATION
POST OFFICE BOX 81, TRUSSVILLE, ALABAMA 35173-0081

RESPONSIBLE PERSONS: D. EMERICH OR D. ELLISON
TELEPHONE: (205)655-3271

DATE PREPARED: 6/22/88
SUPERCEDES: 1/15/87

ABC Dry Chemical

IDENTIFICATION

PRODUCT NAME: ABC DRY CHEMICAL
SYNONYMS: Multi-Purpose Dry Chemical, MAP, (Mono) Ammonium Phosphate, All-Purpose Dry Chemical

HAZARDOUS INGREDIENTS

MATERIAL	CAS NO.	OSHA PEL	ACGIH TLV
Muscovite Mica	12001-26-2	NA	20mppcf*
Silica	7631-86-9	NA	10 mg/m^3

*million particles per cubic foot

OTHER INGREDIENTS

MATERIAL	CAS NO.
Monoammonium Phosphate	7722-76-1
Ammonium Sulfate	7783-20-2
Methyl Hydrogen Polysiloxane	63148-57-2
Yellow Pigment	5468-75-7

PHYSICAL AND CHEMICAL CHARACTERISTICS

BOILING POINT (° F): NA	SPECIFIC GRAVITY (H_2O=1): 0.85	VAPOR PRESSURE(MM HG): NA
PERCENT VOLATILE (%): NA	VAPOR DENSITY(AIR = 1): NA	EVAPORATION RATE: NA
SOLUBILITY IN WATER: Water repellant coated.	REACTIVITY IN WATER: None	MELTING POINT (° F): NA
pH: 4.4	APPEARANCE & ODOR: Yellow powder. No characteristic odor.	
FLASH POINT(° F): None	AUTO IGNITION TEMPERATURE (° F): NA	FLAMMABLE LIMITS IN AIR BY VOL.: NA
EXTINGUISHER MEDIA: None. This material is an extinguishing agent.		
SPECIAL FIRE FIGHTING PROCEDURES: None		
UNUSUAL FIRE AND EXPLOSION HAZARDS: None		

PHYSICAL HAZARDS

STABILITY: Stable	CONDITIONS TO AVOID: NA
INCOMPATIBILITY (MATERIALS TO AVOID): Strong alkalis, Mg.	
HAZARDOUS DECOMPOSITION PRODUCTS: Ammonia, Carbon Monoxide and Oxides of Nitrogen	
HAZARDOUS POLYMERIZATION: Will not occur	
CONDITIONS TO AVOID: NA	

HEALTH EFFECTS AND FIRST AID

EFFECTS OF ACUTE OVEREXPOSURE FOR PRODUCT:

EYES:	Slight irritant.
SKIN:	Slight irritant.
BREATHING:	Irritant to respiratory tract. Treat as a mineral dust.
SWALLOWING:	Harmful if swallowed. May cause sore throat, abdominal pain, nausea, vomiting.

FIRST AID:

IF IN EYES:	Flush with water for 15 minutes. If irritation persists, seek medical attention.
IF ON SKIN:	Wash with soap and water. If irritation persists, seek medical attention.
IF BREATHED:	Remove victim to fresh air. Seek medical attention if discomfort continues.
IF SWALLOWED:	Rinse mouth and drink large amounts of water. Seek medical attention.

PRIMARY ROUTES OF ENTRY: Eyes, Skin Contact, Breathing, Swallowing

MEDICAL CONDITIONS GENERALLY AGGRAVATED BY EXPOSURE: None known

EFFECTS OF CHRONIC OVEREXPOSURE FOR PRODUCT: No adverse chronic effects could be found for this substance.

PRODUCT LISTED AS CARCINOGEN OR POTENTIAL CARCINOGEN:

NATIONAL TOXICOLOGY PROGRAM	[ ] YES	IARC MONOGRAPHS	[ ] YES	OSHA	[ ] YES
	[X] NO		[X] NO		[X] NO

CONTROL MEASURES AND PROTECTIVE EQUIPMENT

RESPIRATORY PROTECTION (TYPE): Dust respirator required when TLV is exceeded. Nuisance dust (total) 15 mg/m^3. Dust respirator recommended whenever airborne dust is present.

VENTILATION: GENERAL AREA: Recommended LOCAL EXHAUST: Recommended

SKIN PROTECTION: Protective Gloves EYE PROTECTION: Safety Glasses

OTHER PROTECTIVE CLOTHING OR EQUIPMENT: None required

WORK/HYGIENE PRACTICES: Use good personal hygiene and good housekeeping practices.

SPECIAL PRECAUTIONS AND SPILL/LEAK PROCEDURES

PRECAUTIONS TO BE TAKEN IN HANDLING AND STORAGE: Store in closed, moisture-free containers in a cool, dry location. Avoid unnecessary dustiness.

OTHER PRECAUTIONS: Do not cross contaminate with other extinguisher agents.

STEPS TO BE TAKEN IN CASE PRODUCT IS RELEASED OR SPILLED: Contain and sweep up. Dispose of in accordance with local, state and federal regulations.

HMIS RATINGS:

HEALTH	1
FLAMMABILITY	0
REACTIVITY	0

HMIS HAZARD INDEX

MINIMAL	0
SLIGHT	1
MODERATE	2
SERIOUS	3
SEVERE	4

Material Safety Data Sheet

from Genium's Reference Collection
Genium Publishing Corporation
1145 Catalyn Street
Schenectady, NY 12303-1836 USA
(518) 377-8855

GENIUM PUBLISHING CORP.

Acetone

Issued: September 1985
Revised: November 1988

SECTION 1. MATERIAL IDENTIFICATION

Material Name: ACETONE

Description (Origin/Uses): Used as a solvent for fats, oils, waxes, resins, rubber, plastics, varnishes, and rubber cements; also used in the manufacture of methyl isobutyl ketone, mesityl oxide, acetic acid, diacetone alcohol, chloroform, iodoform, bromoform, explosives, rayon, photographic films, and isoprene. Used to store acetylene gas. Widely used in the chemical process industry (CPI).

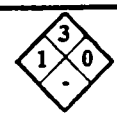

NFPA

HMIS

H 1	R 1
F 3	I 1
R 0	S 2
PPG*	K 4

*See sect. 8

Other Designations: Dimethylformaldehyde; Dimethylketal; Dimethyl Ketone; Ketone Propane; Pyroacetic Acid; Pyroacetic Ether; C_3H_6O; CAS No. 0067-64-1

Manufacturer: Contact your supplier or distributor. Consult the latest edition of the *Chemicalweek Buyers' Guide* (Genium ref. 73) for a list of suppliers.

SECTION 2. INGREDIENTS AND HAZARDS

SECTION 2. INGREDIENTS AND HAZARDS	%	EXPOSURE LIMITS
Acetone, CAS No. 0067-64-1	Ca 100	**OSHA PELs** 8-Hr TWA: 750 ppm, 1800 mg/m³ STEL: 1000 ppm, 2400 mg/m³ **ACGIH TLVs, 1988-89** TLV-TWA: 750 ppm, 1780 mg/m³ TVL-STEL: 1000 ppm, 2375 mg/m³ **Toxicity Data*** Man, Inhalation, TD_{Lo}: 440 µg/m³ (6 Mins) Man, Inhalation, TD_{Lo}: 10 mg/m³ (6 Hrs)
*See NIOSH, *RTECS* (AL3150000), for additional data with references to reproductive, mutagenic, and irritative effects.		

SECTION 3. PHYSICAL DATA

Boiling Point: 134°F (56°C)
Melting Point: -137°F (-94°C)
Vapor Density (Air = 1): 2
Vapor Pressure: 180 Torrs at 68°F (20°C)
Evaporation Rate: Faster than That of *n*-Butyl Acetate

Molecular Weight: 58 Grams/Mole
Solubility in Water (%): Complete
Specific Gravity (H_2O = 1): 0.778 at 77°F (25°C)
% Volatile by Volume: 100

Appearance and Odor: A clear, colorless, highly flammable, volatile liquid with a characteristic, pleasant, sweetish odor.

SECTION 4. FIRE AND EXPLOSION DATA

Flash Point: 1.4°F (-17°C) CC	Autoignition Temperature: 869°F (465°C)	LEL: 2.9% v/v	UEL: 12.8% v/v

Extinguishing Media: Use "alcohol" foam, dry chemical, or carbon dioxide. Use a blanketing effect to smother flames. Use water spray to reduce the rate of burning and to cool containers. Water will probably not be effective in directly extinguishing an acetone fire.

Unusual Fire or Explosion Hazards: Acetone vapor is heavier than air and may travel a considerable distance to a low-lying source of ignition and flash back.

Special Fire-fighting Procedures: Wear a self-contained breathing apparatus (SCBA) with a full facepiece operated in the pressure-demand or positive-pressure mode.

SECTION 5. REACTIVITY DATA

Stability/Polymerization: Acetone is stable in closed containers during routine operations. Hazardous polymerization cannot occur.

Chemical Incompatibilities: Acetone can react dangerously with strong oxidizing agents such as nitrates, perchlorates, permanganates, and concentrated sulfuric acid; chromic anhydride; chromyl chloride; hydrogen peroxide; hexachloromelamine; nitrosyl chloride; permonosulfuric acid; mixtures of sulfuric acid and nitric acid; mixtures of nitric acid and acetic acid; and potassium *tert*-butoxide.

Conditions to Avoid: Do not expose acetone to sources of ignition and incompatible chemicals.

Hazardous Products of Decomposition: Carbon monoxide and carbon dioxide can be produced during acetone fires.

Copyright © 1988 Genium Publishing Corporation
Any commercial use or reproduction without the publisher's permission is prohibited

SECTION 6. HEALTH HAZARD INFORMATION

Carcinogenicity: Acetone is not listed as a carcinogen by the NTP, IARC, or OSHA.

Summary of Risks: Inhalation of high concentrations of acetone vapor can cause dryness of the mouth and throat; dizziness, nausea, incoordination, slurred speech, drowsiness, and, in severe exposures, coma. Inhalation of small quantities of acetone vapor for an extended period causes irritation of the respiratory tract, coughing, and headache. Prolonged or repeated skin contact with acetone has a defatting effect causing dryness, irritation, and mild dermatitis. Under routine operating conditions the amount of acetone absorbed through the skin is small. Ingestion of acetone may cause irritation of the gastrointestinal tract and narcosis. Acetone acts primarily as a depressant to the central nervous system (CNS) when exposures are severe or prolonged. **Medical Conditions Aggravated by Long-Term Exposure:** None reported. **Target Organs:** Skin, eyes, respiratory system, and CNS. **Primary Entry:** Inhalation, skin contact. **Acute Effects:** See Summary of Risks, above. **Chronic Effects:** None reported. **FIRST AID: Eyes.** Immediately flush eyes, including under the eyelids, gently but thoroughly with flooding amounts of running water for at least 15 minutes. **Skin.** Rinse the affected area with flooding amounts of water, then wash it with soap and water. **Inhalation.** Remove the exposed person to fresh air; restore and/or support his or her breathing as needed. Have qualified medical personnel administer oxygen as required. Monitor the exposed person for symptoms of depression of the CNS such as incoordination and drowsiness. **Ingestion.** Unlikely.* If a small amount is ingested, dilute it slowly with 1 to 2 glasses of water or milk. **Get medical help (in plant, paramedic, community) for all exposures.** Seek prompt medical assistance for further treatment, observation, and support after first aid. *Note to Physician: Treatment for accidental ingestion of a small amount of acetone is unnecessary. If a large amount has been ingested, administer a charcoal slurry, either aqueous or mixed with a saline cathartic or sorbital.

SECTION 7. SPILL, LEAK, AND DISPOSAL PROCEDURES

Spill/Leak: Notify safety personnel, evacuate unnecessary personnel, eliminate all sources of ignition immediately, and provide adequate ventilation. Cleanup personnel need protection against this liquid's contact with skin or eyes as well as inhalation of its vapor (see sect. 8). Contain large spills and collect waste or absorb it with an inert material such as sand, earth, or vermiculite. Use nonsparking tools to place waste liquid or absorbent into closable containers for disposal. Keep waste out of sewers, watersheds, and waterways.
Waste Disposal: Contact your supplier or a licensed contractor for detailed recommendations. Follow Federal, state, and local regulations. Consider saving the waste hydrochloric acid for use as a neutralizing agent during cleanup operations of basic materials.

OSHA Designations
Listed as an Air Contaminant (29 CFR 1910.1000 Subpart Z).
EPA Designations (40 CFR 302.4)
RCRA Hazardous Waste, No. U002
CERCLA Hazardous Substance, Reportable Quantity: 5000 lbs (2270 kg), per the Resource Conservation and Recovery Act, § 3001.

SECTION 8. SPECIAL PROTECTION INFORMATION

Goggles: Always wear protective eyeglasses or chemical safety goggles. Where splashing is possible, wear a full face shield. Follow OSHA eye- and face-protection regulations (29 CFR 1910.133). **Respirator:** Use a NIOSH-approved respirator per Genium reference 88 for the maximum-use concentrations and/or the exposure limits cited in section 2. Follow OSHA respirator regulations (29 CFR 1910.134). For emergency or nonroutine operations (spills or cleaning reactor vessels and storage tanks), wear an SCBA. **Warning:** Air-purifying respirators will *not* protect workers in oxygen-deficient atmospheres. **Other:** Wear impervious butyl or natural rubber gloves, boots, aprons, and gauntlets, etc., to prevent prolonged or repeated contact with this material. **Ventilation:** Install and operate general and local maximum, explosion-proof ventilation systems powerful enough to maintain airborne levels of acetone below the OSHA PEL standard cited in section 2. Local exhaust ventilation is preferred because it prevents dispersion of the contaminant into the general work area by eliminating it at its source. Consult the latest edition of Genium reference 103 for detailed recommendations. **Safety Stations:** Make emergency eyewash stations, safety/quick-drench showers, and washing facilities available in work areas. **Contaminated Equipment:** Contact lenses pose a special hazard; soft lenses may absorb irritants, and all lenses concentrate them. Do *not* wear contact lenses in any work area. Remove contaminated clothing and launder it before wearing it again; clean this material from your shoes and equipment. **Other:** Automatic sprinkler systems for fire protection are desirable in work areas. **Comments:** Practice good personal hygiene; always wash thoroughly after using this material. Keep it off your clothing and equipment. Avoid transferring it from your hands to your mouth while eating, drinking, or smoking. Do *not* eat, drink, or smoke in any work area. Do not inhale acetone vapor.

SECTION 9. SPECIAL PRECAUTIONS AND COMMENTS

Storage/Segregation: Store acetone in closed containers (carbon steel is recommended) in a cool, dry, well-ventilated area away from sources of ignition and strong oxidizers. Protect containers from physical damage. **Engineering Controls:** Make sure all engineering systems (production, transportation) are of maximum explosion-proof design. Electrically ground and bond all containers and pipelines, etc., used in shipping, transferring, reacting, production, and sampling operations to prevent generating static sparks. **Other Precautions:** Use labeled safety cans when handling small amounts of acetone. Acetone presents a dangerous fire hazard; perform all work operations involving it carefully and in a way that will prevent exposing the liquid or its vapor to sources of ignition.

Transportation Data (49 CFR 172.101-2)

DOT Shipping Name: Acetone
DOT Hazard Class: Flammable Liquid
ID No. UN1090
DOT Label: Flammable Liquid

IMO Hazard Class: 3.1
IMO Label: Flammable Liquid
IMDG Packaging Group: II

References: 1, 26, 38, 84-94, 100, 116, 117, 120, 122.

Judgments as to the suitability of information herein for purchaser's purposes are necessarily purchaser's responsibility. Therefore, although reasonable care has been taken in the preparation of such information, Genium Publishing Corp. extends no warranties, makes no representations and assumes no responsibility as to the accuracy or suitability of such information for application to purchaser's intended purposes or for consequences of its use.

Prepared by PJ Igoe, BS
Industrial Hygiene Review: DJ Wilson, CIH
Medical Review: MJ Hardies, MD

Copyright © 1988 Genium Publishing Corporation
Any commercial use or reproduction without the publisher's permission is prohibited

MATERIAL SAFETY DATA SHEET

SENSIDYNE, INC.
16333 BAY VISTA DRIVE
CLEARWATER, FLORIDA 34620
800/451-9444, 813/530-3602
TELEX 756223, FAX 813-539-0550

MSDS #0501

Revised: 4/89

PART 1, MATERIAL IDENTIFICATION

Material Name: AIR FLOW INDICATOR TUBES
Chemical Name & Synonyms: Smoke tubes

Chemical Family: Metal Chloride
Formula: $SnCl_4$

PART II, Ingredients & Hazards	%	TLV
Stannic chloride reacts with ambient humidity to liberate a white smoke consisting of HCl and tin compounds.	ca 100 (comb.)	5 ppm ceiling for HCl 2 mg/M^3 for tin compounds

PART III, Physical Data

Boiling Point, 1 Atm, °F (°C): -121 (-85)* **Specific Gravity:** N/A
Vapor Pressure, mm Hg: 41.6 @ 20°C* **Evaporation Rate:** N/A
Solubility in Water: 37% by weight @ rt*
*Physical data for HCl
Appearance & Odor: Hydrogen chloride is a colorless gas with a pungent odor. It fumes strongly in moist air forming white hydrochloric acid fume. The emitted tin compound has a strong irritating odor.

PART IV, Fire & Explosion Data

Flash Point & Method	Auto Ingition Temp. °C	Flammability Limits in Air, Vol. %	Lower	Upper
none	none		none	none

Extinguishing Media: Suitable for surrounding fire.

Special Firefighting Procedures: Fire fighters should wear SCBA units to protect against possible toxic decomposition products.

Unusual Fire & Explosion Hazards: Fires encompassing the tubes will emit toxic fumes of chlorides.

PART V, Health Hazard Information

Applicable TLV's: HCl = 5 ppm ceiling (1988-89 TLV Book). OSHA PEL = 5 ppm ceiling
Tin compounds = 2 mg/M^3 as tin (1988-89 TLV Book). OSHA PEL = 2 mg/M^3

Effects of Overexposure: Hydrogen chloride gas (and the acid fume) is corrosive to all human tissue. Prolonged inhalation of gas concentrations moderately above the TLV can damage the teeth and irritate nasal passages. Inhalation of higher concentrations (above 50 ppm) for a short period of time can cause choking and coughing, and produce severe irritation and damage to the mucous membranes of the upper respiratory tract. The NIOSH-recommended IDLH* level is 100 ppm. HCl can cause severe irritation and tissue burns. (Anhydrous HCl is more dangerous than the acid mist, since it has an additional dehydrating effect on tissues.) If deeply inhaled, pulmonary edema may occur.

The emitted tin compound is also an irritant to eyes, skin and muicous membranes, due to its acidity.

Emergency & First Aid Procedure:

Eyes: Flush immediately with running water for at least 15 minutes, including under eyelids. Contact a physician!

Skin: Flush affected areas with running water. Get medical help in case of large area contact or if irritation persists.

Inhalation: Remove victim to fresh air. Restore and/or support breathing, as necessary. Provide oxygen therapy for persistent coughing or if breathing is difficult. Keep victim warm and at rest. Get medical help.

*IDLH - immediately dangerous to life and health.

PART VI, Reactivity Information

Stability: HCl is a stable compound. It does not undergo hazardous polymerization, however HCl can catalyze some polymerizations of other compounds.

Conditions to Avoid: Incompatable materials include alkalines, metal oxides and metals.

Hazardous Decomposition Products: When heated to decomposition, the smoke tubes will emit chloride fume.

PART VII, Spill, Leak & Disposal Procedures

Spills Procedure: Does not apply.

Disposal Procedure: Soak used tubes in water and neutralize with sodium carbonate or equivalent alkaline substance. Dispose tubes via landfill. Consult local authorities to assure compliance with local, state and federal regulations.

PART VIII, Special Protection Information

Protective Equipment: No respiratory protection is required during normal use. Local ventilation is adequate. Safety glasses with side shields should be worn to minimize eye contact. Safety gloves are not necessary for normal use, although skin contact with HCl and the broken glass tubes should be avoided.

PART IX, Special Precautions & Comments

Handling & Storage: Store in the original container in a cool dry place. Protect against light, heat and physical damage.

Other Precautions: Avoid eye and skin contact with smoke. Do not breath smoke. Use only as directed. Use in well ventilated areas. Wash hands prior to eating, drinking, smoking or applying cosmetics. Avoid cuts from broken ends of glass tubes.

PROPRIETARY INFORMATION AND DISCLAIMER

THIS DOCUMENT CONTAINS SENSIDYNE, INC.'S PROPRIETARY INFORMATION AND SUCH INFORMATION MAY NOT BE USED, DUPLICATED, COPIED, REPRODUCED OR DISCLOSED TO OTHERS IN WHOLE OR IN PART FOR ANY PURPOSE WITHOUT THE EXPRESS WRITTEN PERMISSION OF SENSIDYNE, INC. INFORMATION CONTAINED IN THIS DOCUMENT IS OFFERED WITHOUT CHARGE SOLELY FOR USE BY TECHNICALLY QUALIFIED PERSONNEL AT THEIR DISCRETION AND RISK. READ AND UNDERSTAND THE SENSIDYNE OPERATION AND MAINTENANCE MANUAL AND ALL WARNING LABELS BEFORE USING SENSIDYNE, INC.'S PRODUCTS. ALL STATEMENTS, TECHNICAL INFORMATION AND RECOMMENDATIONS (HEREINAFTER REFERRED TO AS "INFORMATION") CONTAINED HEREIN ARE BASED UPON TESTS AND DATA WHICH SENSIDYNE BELIEVES TO BE RELIABLE, BUT THE ACCURACY OR COMPLETENESS THEREOF IS NOT GUARANTEED AND NO WARRANTY OF ANY KIND IS MADE WITH RESPECT THERETO. THIS INFORMATION IS NOT INTENDED AS A LICENSE TO OPERATE UNDER OR A RECOMMENDATION TO PRACTICE OR INFRINGE UPON ANY PATENT OR TRADE SECRET OR PROPRIETARY INFORMATION OF SENSIDYNE, INC. OR OTHERS COVERING ANY PROCESS, COMPOSITION OF MATTER OR USE. SINCE SENSIDYNE SHALL HAVE NO CONTROL OF THE USE OF THE PRODUCT DESCRIBED HEREIN, SENSIDYNE SHALL NOT BE LIABLE FOR DIRECT OR INDIRECT, CONSEQUENTIAL, INCIDENTAL OR OTHER DAMAGE OR LOSS RESULTING FROM THE SALE AND PROPER OR IMPROPER USE OF EITHER SENSIDYNE, INC. GOODS OR ANY INFORMATION CONTAINED HEREIN. SENSIDYNE DOES NOT WARRANTY OR GUARANTEE, INCLUDING BUT NOT LIMITED TO, EXPRESS OR IMPLIED WARRANTIES, WARRANTIES OF MERCHANTABILITY AND FITNESS FOR USE OR FITNESS FOR A PARTICULAR PURPOSE, WHICH ARE EXPRESSLY DISCLAIMED, THE ACCURACY OR COMPLETENESS OF ANY INFORMATION CONTAINED HEREIN.

MSDS1614

terial Safety Data Sheet

MATERIAL — 1942
UN N° — 6484-52-2
CAS N° — GCD-0086-848
CIL N° —

Emergency Tel. No	Halifax, N.S. (902) 469-9690 Montreal, Que. (514) 861-1211 Toronto, Ont. (416) 226-6117 Winnipeg, Man. (204) 943-8827 Edmonton, Alb. (403) 424-1754 Vancouver, B.C. (604) 685-5036

HAZARD RATING NFPA

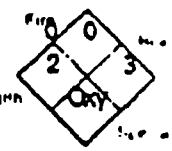

4 - EXTREME
3 - HIGH
2 - MODERATE
1 - SLIGHT
0 - INSIGNIFICANT
* - CHRONIC HEALTH HAZARD SEE SECTION 6

tion I. Identification of Product

DE NAME & SYNONYMS	CHEMICAL NAME & SYNONYMS
Norway Saltpeter	Ammonium Nitrate
MICAL AND PHYSICAL STATE Nitrate, solid	MOLECULAR FORMULA NH_4NO_3

CTION II Physical Properties

EARANCE AND ODOUR

Free-flowing, odourless, hygroscopic, white, deliquescent crystals or granules

ING POINT (°C)	MELTING POINT (°C) - FREEZING POINT (°C)
210°C @ 1.47 kPa decomp @ 230°C @ 101.3 kPa	169°C
OUR PRESSURE (MM HG)	SPECIFIC GRAVITY (WATER = 1 AT 4°C)
Not applicable	1.725 at 25°C
C DENSITY	VAPOUR DENSITY (AIR = 1)
Not available	Not applicable
UBILITY IN WATER	OTHER SOLVENTS
2 g/ml of water	Methyl Alcohol, Ethyl Alcohol

tion III Fire and Explosion Hazard Data

SH POINT (°C) METHOD	AUTOIGNITION TEMPERATURE (°C)
Non-flammable	—

MMABLE LIMITS (% BY VOL IN AIR)	LOWER	UPPER
	—	

OLD ANY MATERIAL SATURATED WITH THIS PRODUCT SUBJECT TO SPONTANEOUS COMBUSTION? ☐ YES ☒ NO — MATERIALS:

E EXTINGUISHING DATA

Water

CIAL FIREFIGHTING CEDURES	Controllable fires should be sprayed with water with adequate ventilation to dissipate heat of reaction & toxic gases. Approach should always be made from upwind side. Attempts to smother a fire involving the material are ineffectual as it is its own 'oxygen source'.
SUAL FIRE AND LOSION HAZARDS	If the fire is out of control, the area should be evacuated in case of detonation. Material will detonate if heated while confined or contaminated. A self-contained breathing apparatus should be worn in a fire. Thermal decomposition may cause the release of toxic oxides of nitrogen.

ction IV Reactivity Data

BILITY			
	UNSTABLE	XX	CONDITIONS TO AVOID: Heating in closed containers, contamination of material
	STABLE		

OMPATIBILITY (MATERIALS TO AVOID) Contact with oxidizable materials &/or metal powders at moderately high temp. will se self-ignition. Incompatible with copper, fuels (e.g., lubricants, machine oils), fluorocarbon lubricants, acids, ive liquids, Chlorates, Sulphur, charcoal, coke and sawdust.

ZARDOUS DECOMPOSITION PRODUCTS Toxic gases & vapours (oxides of nitrogen) will be released by thermal decompositic (about > 300°C). At higher temperatures, decomposition may be explosive.

ARDOUS YMERIZATION			
	MAY OCCUR		CONDITIONS TO AVOID
	WILL NOT OCCUR	XX	

HOLD LIMIT VALUE (TLV-TWA)	LC_{50}
Not available	Not available

S OF EXPOSURE WHEN: NHALED	Allergen, possible faintness & lowered blood pressure. Also see 'Ingested'.
NTACT WITH EYES	Irritation
N CONTACT WITH SKIN	Irritation
NGESTED	Dizziness, cramps, vomiting, possible methemoglobinemia, weakness, depression, headache
ENCY AND AID PROCEDURES NHALATION	Remove to fresh air. If not breathing, give artificial respiration. Keep warm & at rest. Obtain medical attention.
YES	Flush eyes with running water for at least 20 minutes, holding eyelids open. Obtain medical attention.
SKIN	Remove contaminated clothing. Flush affected area with running water for 20 minutes. If irritation persists, obtain medical attention.
NGESTION	If conscious, give large amounts of water or milk to induce vomiting. Obtain medical attention.

ion VI — Special Protection Information

ATION REQUIREMENTS	Local ventilation preferred	
ATORY PROTECTION	Air purifying respirator approved by NIOSH/MSHA equipped with dust, mist, fume cartridges, if necessary	
CTIVE GLOVES	Impermeable gloves	EYE PROTECTION Safety glasses
PROTECTIVE EQUIPMENT	Protective clothing as required	

VII — Special Requirements

ION IN HANDLING TORING	Protect containers against physical damage. Store in cool dry well-ventilated building, preferably noncombustible equipped with automatic sprinkler protection. Floor drains &
ITIONS	recesses should be plugged or eliminated to prevent entrapment of flowing molten nitrate during fire. Separate from incompatibles (Sec IV) acids, corrosive liquids, organic materials, Chlorates, Sulphur, powdered metals, charcoal, coke, sawdust

ion VIII — Spill or Leak Procedures

TO BE TAKEN IN EVENT OF R RELEASE. IN ALL CASES APPLICABLE GOVERNMENT ITY IF SPILL IS SIGNIFICANT	Stop & contain leak or spill. If in solid form or solution, absorb in earth or sand and shovel into containers for disposal. If contamination has not occurred, collect for reclaim.
ONMENTAL EFFECTS	Contaminated water is toxic to children & cattle. Toxic to fish at low concentrations (4.2 mg/l); aesthetic critical concentration (0.5 mg/l); fish toxicity critical concentrations (300 mg/l); used as fertilizer on land.
ALIZING CHEMICALS	Remove slowly into a large container of water. Add Soda Ash slightly by stirring. After 24 hours, decant or siphon into another container. Neutralize with 6M-HCl.
DISPOSAL	Consult federal, provincial & local regulations on chemical waste disposal. May be possible to neutralize, flush & disperse with large quantities of water. May also be possible to dispose of in a secure sanitary landfill site.

ion IX — References

1. SAX, N.I., Dangerous Properties of Industrial Materials, 5th Ed., Van Nostrand Reinhold, 1979.
2. Toxic and Hazardous Industrial Chemicals Safety Manual, The International Tech. Info. Inst., Japan, 1979.

"Information contained herein is provided without any warranty, and C-I-L Inc. will not be liable for any damage which may result from the use or reliance on any information contained herein." Before any product is used, the label should be carefully read.

C-I-L Inc. Chemicals

Section V — Reactivity Data

Stability	Unstable		Conditions to Avoid: NONE
	Stable	XX	

Incompatibility (*Materials to Avoid*): AVOID STRONG ACIDS

Hazardous Decomposition or Byproducts: MAY RELEASE CO_2 GAS ON BURNING

Hazardous Polymerization	May Occur		Conditions to Avoid: NONE
	Will Not Occur	XX	

Section VI — Health Hazard Data

Route(s) of Entry: Inhalation? YES Skin? NO Ingestion? YES

Health Hazards (*Acute and Chronic*): INHALATION OF POWDER MAY PROVE LOCALLY IRRITATING TO MUCOUS MEMBRANES. INGESTION MAY CAUSE DISCOMFORT AND/OR DIARRHEA.

Carcinogenicity: NTP? NO IARC Monographs? NO OSHA Regulated? NO

Signs and Symptoms of Exposure: EXPOSURE MAY IRRITATE MUCOUS MEMBRANES. MAY CAUSE SNEEZING.

Medical Conditions Generally Aggravated by Exposure: RESPIRATORY CONDITIONS MAY BE AGGRAVATED BY POWDER.

Emergency and First Aid Procedures: EYES-FLUSH WITH PLENTY OF WATER FOR 15 MINUTES SKIN-FLUSH WITH PLENTY OF WATER INGESTION-DRINK LARGE QUANTITIES OF WATER.GET MEDICAL ATTENTION FOR DISCOMFORT

Section VII — Precautions for Safe Handling and Use

Steps to Be Taken in Case Material is Released or Spilled: MATERIAL FOAMS PROFUSELY. SHOVEL AND RECOVER AS MUCH AS POSSIBLE. RINSE REMAINDER TO SEWER. MATERIAL IS COMPLETELY BIODEGRADABLE.

Waste Disposal Method: SMALL QUANTITIES MAY BE DISPOSED OF IN SEWER. LARGE QUANTITIES SHOULD BE DISPOSED OF ACCORDING TO LOCAL REQUIREMENTS FOR NON-HAZARDOUS DETERGENT.

Precautions to Be Taken in Handling and Storing: STORE IN A DRY AREA TO PREVENT CAKING.

Other Precautions: NO SPECIAL REQUIREMENTS OTHER THAN THE GOOD INDUSTRIAL HYGIENE AND SAFETY PRACTICES EMPLOYED WITH ANY INDUSTRIAL CHEMICAL.

Section VIII — Control Measures

Respiratory Protection (*Specify Type*): DUST MASK

Ventilation	Local Exhaust: NORMAL	Special: N.A.	
	Mechanical (General): N.A.	Other: N.A.	
Protective Gloves: USEFUL-NOT REQUIRED		Eye Protection: USEFUL-NOT REQUIRED	

Other Protective Clothing or Equipment: NOT REQUIRED

Work/Hygienic Practices: NO SPECIAL PRACTICES REQUIRED

• USGPO 1986-491-529/45775

Genium Publishing Corporation
1145 Catalyn Street
Schenectady, NY 12303-1836 USA
(518) 377-8854

Automotive Gasoline, Lead-free

Issued: 10/81 Revision: A, 9/91

Section 1. Material Identification

35

Automotive Gasoline, Lead-free, Description: A mixture of volatile hydrocarbons composed mainly of branched-chain paraffins, cycloparaffins, olefins, naphthenes, and aromatics. In general, gasoline is produced from petroleum, shale oil, Athabasca tar sands, and coal. Motor gasolines are made chiefly by cracking processes, which convert heavier petroleum fractions into more volatile fractions by thermal or catalytic decomposition. Widely used as fuel in internal combustion engines of the spark-ignited, reciprocating type. Automotive gasoline has an octane number of approximately 90. A high content of aromatic hydrocarbons and a consequent high toxicity are also associated with a high octane rating. Some gasolines sold in the US contain a minor proportion of tetraethyllead, which is added in concentrations not exceeding 3 ml per gallon to prevent engine "knock." However, methyl-tert-butyl ether (MTBE) has almost completely replaced tetraethyllead.

R 1
I 2
S 2*
K 4
* Skin absorption

NFPA

HMIS
H 2
F 3
R 1
PPG†
† Sec. 8

Other Designations: CAS No. 8006-61-9, benzin, gasoline, gasolene, motor spirits, natural gasoline, petrol.

Manufacturer: Contact your supplier or distributor. Consult latest *Chemical Week Buyers' Guide*(73) for a suppliers list.

Cautions: Inhalation of automotive gasoline vapors can cause intense burning in throat and lungs, central nervous system (CNS) depression, and possible fatal pulmonary edema. Gasoline is a dangerous fire and explosion hazard when exposed to heat and flames.

Section 2. Ingredients and Occupational Exposure Limits

Automotive gasoline, lead-free*

1990 OSHA PELs
8-hr TWA: 300 ppm, 900 mg/m³
15-min STEL: 500 ppm, 1500 mg/m³

1990-91 ACGIH TLVs
TWA: 300 ppm, 890 mg/m³
STEL: 500 ppm, 1480 mg/m³

1990 NIOSH REL
None established

1985-86 Toxicity Data*
Man, inhalation, TC_{Lo}: 900 ppm/1 hr; toxic effects include sense organs and special senses (conjunctiva irritation), behavioral (hallucinations, distorted perceptions), lungs, thorax, or respiration (cough)
Human, eye: 140 ppm/8 hr; toxic effects include mild irritation
Rat, inhalation, LC_{50}: 300 g/m³/5 min

* A typical modern gasoline composition is 80% paraffins, 14% aromatics, and 6% olefins. The mean benzene content is approximately 1%. Other additives include sulfur, phosphorus, and MTBE.
† See NIOSH, *RTECS* (LX3300000), for additional toxicity data.

Section 3. Physical Data

Boiling Point: Initially, 102 °F (39 °C); after 10% distilled, 140 °F (60 °C); after 50% distilled, 230 °F (110 °C); after 90% distilled, 338 °F (170 °C); final boiling point, 399 °F (204 °C)
Vapor Density (air = 1): 3.0 to 4.0
Density/Specific Gravity: 0.72 to 0.76 at 60 °F (15.6 °C)
Water Solubility: Insoluble

Appearance and Odor: A clear (gasoline may be colored with dye), mobile liquid with a characteristic odor recognizable at about 10 ppm in air.

Section 4. Fire and Explosion Data

Flash Point: -45 °F (-43 °C) | **Autoignition Temperature:** 536 to 853 °F (280 to 456 °C) | **LEL:** 1.3% v/v | **UEL:** 6.0% v/v

Extinguishing Media: Use dry chemical, carbon dioxide, or alcohol foam as extinguishing media. Use of water may be ineffective to extinguish fire, but use water spray to knock down vapors and to cool fire-exposed drums and tanks to prevent pressure rupture. Do not use a solid stream of water since it may spread the fuel.

Unusual Fire or Explosion Hazards: Automobile gasoline is an OSHA Class IB flammable liquid and a dangerous fire and explosion hazard when exposed to heat and flames. Vapors can flow to an ignition source and flash back. Automobile gasoline can also react violently with oxidizing agents.

Special Fire-fighting Procedures: Isolate hazard area and deny entry. Since fire may produce toxic fumes, wear a self-contained breathing apparatus (SCBA) with a full facepiece operated in pressure-demand or positive-pressure mode, and full protective clothing. When the fire is extinguished, use nonsparking tools for cleanup. Be aware of runoff from fire control methods. Do not release to sewers or waterways.

Section 5. Reactivity Data

Stability/Polymerization: Automotive gasoline is stable at room temperature in closed containers under normal storage and handling conditions. Hazardous polymerization cannot occur.

Chemical Incompatibilities: Automotive gasoline can react with oxidizing materials such as peroxides, nitric acid, and perchlorates.

Conditions to Avoid: Avoid heat and ignition sources.

Hazardous Products of Decomposition: Thermal oxidative decomposition of automotive gasoline can produce oxides of carbon and partially oxidized hydrocarbons.

Copyright © 1991 Genium Publishing Corporation.
Any commercial use or reproduction without the publisher's permission is prohibited.

Section 6. Health Hazard Data

Carcinogenicity: In 1990 reports, the IARC list gasoline as a possible human carcinogen (Group 2B). Although the IARC has assigned an overall evaluation to gasoline, it has not assigned an overall evaluation to specific substances within this group (inadequate human evidence).
Summary of Risks: Gasoline vapors are considered moderately poisonous. Vapor inhalation can cause central nervous system (CNS) depression and mucous membrane and respiratory tract irritation. Brief inhalations of high concentrations can cause a fatal pulmonary edema. Reported responses to gasoline vapor concentrations are: 160 to 270 ppm causes eye and throat irritation in several hours; 500 to 900 ppm causes eye, nose, and throat irritation, and dizziness in 1 hr; and 2000 ppm produces mild anesthesia in 30 min. Higher concentrations are intoxicating in 5 to 10 minutes. If large areas of skin are exposed to gasoline, toxic amounts may be absorbed. Repeated or prolonged skin exposure causes dermatitis. Certain individuals may develop hypersensitivity. Ingestion can cause CNS depression. Pulmonary aspiration after ingestion can cause severe pneumonitis. In adults, ingestion of 20 to 50 g gasoline may produce severe symptoms of poisoning.
Medical Conditions Aggravated by Long-Term Exposure: None reported.
Target Organs: Skin, eye, respiratory and central nervous systems.
Primary Entry Routes: Inhalation, ingestion, skin contact.
Acute Effects: Acute inhalation produces intense nose, throat, and lung irritation; headaches; blurred vision; conjunctivitis; flushing of the face; mental confusion; staggering gait; slurred speech; and unconsciousness, sometimes with convulsions. Ingestion causes inebriation (drunkenness), vomiting, dizziness, fever, drowsiness, confusion, and cyanosis (a blue to dark purplish coloration of skin and mucous membranes caused by lack of oxygen). Aspiration causes choking, cough, shortness of breath, increased rate of respiration, excessively rapid heartbeat, fever, bronchitis, and pneumonitis. Other symptoms following acute exposure include acute hemorrhage of the pancreas, fatty degeneration of the liver and kidneys, and passive congestion of spleen.
Chronic Effects: Chronic inhalation results in appetite loss, nausea, weight loss, insomnia, and unusual sensitivity (hyperesthesia) of the distal extremities followed by motor weakness, muscular degeneration, and diminished tendon reflexes and coordination. Repeated skin exposure can cause blistering, drying, and lesions.
FIRST AID
Eyes: Gently lift the eyelids and flush immediately and continuously with flooding amounts of water until transported to an emergency medical facility. Consult a physician immediately.
Skin: *Quickly* remove contaminated clothing. Rinse with flooding amounts of water for at least 15 min. For reddened or blistered skin, consult a physician. Wash affected area with soap and water.
Inhalation: Remove exposed person to fresh air and support breathing as needed.
Ingestion: Never give anything by mouth to an unconscious or convulsing person. If ingested, *do not induce vomiting* due to aspiration hazard. Give conscious victim a mixture of 2 tablespoons of activated charcoal mixed in 8 oz of water to drink. Consult a physician immediately.
After first aid, get appropriate in-plant, paramedic, or community medical support.

Section 7. Spill, Leak, and Disposal Procedures

Spill/Leak: Notify safety personnel, evacuate all unnecessary personnel, remove heat and ignition sources, and provide maximum explosion-proof ventilation. Cleanup personnel should protect against vapor inhalation and liquid contact. Use nonsparking tools. Take up small spills with sand or other noncombustible adsorbent. Dike storage areas to control leaks and spills. Follow applicable OSHA regulations (29 CFR 1910.120).
Aquatic Toxicity: Bluegill, freshwater, LC_{50}, 8 ppm/96 hr.
Disposal: Contact your supplier or a licensed contractor for detailed recommendations. Follow applicable Federal, state, and local regulations.
EPA Designations
RCRA Hazardous Waste (40 CFR 261.21): Characteristic of ignitability
CERCLA Hazardous Substance (40 CFR 302.4): Not listed
SARA Extremely Hazardous Substance (40 CFR 355): Not listed
SARA Toxic Chemical (40 CFR 372.65): Not listed
OSHA Designations
Listed as an Air Contaminant (29 CFR 1910.1000, Table Z-1-A)

Section 8. Special Protection Data

Goggles: Wear protective eyeglasses or chemical safety goggles, per OSHA eye- and face-protection regulations (29 CFR 1910.133). Since contact lens use in industry is controversial, establish your own policy.
Respirator: Seek professional advice prior to respirator selection and use. Follow OSHA respirator regulations (29 CFR 1910.134) and, if necessary, wear a NIOSH-approved respirator. There are no specific NIOSH recommendations. However, for vapor concentrations not immediately dangerous to life or health, use chemical cartridge respirator equipped with organic vapor cartridge(s), or a supplied-air respirator. For emergency or nonroutine operations (cleaning spills, reactor vessels, or storage tanks), wear an SCBA. *Warning! Air-purifying respirators do not protect workers in oxygen-deficient atmospheres.*
Other: Wear impervious gloves, boots, aprons, and gauntlets to prevent prolonged or repeated skin contact. Materials such as neoprene or polyvinyl alcohol provide excellent/good resistance for protective clothing. **Note:** Resistance of specific materials can vary from product to product.
Ventilation: Provide general and local explosion-proof exhaust ventilation systems to maintain airborne concentrations below the OSHA PELs (Sec. 2). Local exhaust ventilation is preferred since it prevents contaminant dispersion into the work area by controlling it at its source.[1(en)]
Safety Stations: Make available in the work area emergency eyewash stations, safety/quick-drench showers, and washing facilities.
Contaminated Equipment: Remove this material from your shoes and equipment. Launder contaminated clothing before wearing.
Comments: Never eat, drink, or smoke in work areas. Practice good personal hygiene after using this material, especially before eating, drinking, smoking, using the toilet, or applying cosmetics.

Section 9. Special Precautions and Comments

Storage Requirements: Store in closed containers in a cool, dry, well-ventilated area away from heat and ignition sources and strong oxidizing agents. Protect containers from physical damage. Avoid direct sunlight. Storage must meet requirements of OSHA Class IB liquid. Outside or detached storage preferred.
Engineering Controls: Avoid vapor inhalation and skin or eye contact. Consider a respiratory protection program that includes regular training, maintenance, inspection, and evaluation. Indoor use of this material requires explosion-proof exhaust ventilation to remove vapors. Only use gasoline as a fuel source due to its volatility and flammable/explosive nature. Practice good personal hygiene and housekeeping procedures. Wear clean work clothing daily.

Transportation Data (49 CFR 172.101, .102)

DOT Shipping Name: Gasoline (*including casing-head and natural*)
DOT Hazard Class: Flammable liquid
ID No.: UN1203
DOT Label: Flammable liquid
DOT Packaging Exceptions: 173.118
DOT Packaging Requirements: 173.119

IMO Shipping Name: Gasoline
IMO Hazard Class: 3.1
ID No.: UN1203
IMO Label: Flammable liquid
IMDG Packaging Group: II

MSDS Collection **References:** 26, 73, 89, 100, 101, 103, 124, 126, 127, 132, 133, 136, 138, 140, 143, 146, 153, 159
Prepared by: M Allison, BS; **Industrial Hygiene Review:** DJ Wilson, CIH; **Medical Review:** W Silverman, MD; **Edited by:** JR Stuart, MS

Copyright © 1991 by Genium Publishing Corporation. Any commercial use or reproduction without the publisher's permission is prohibited. Judgments as to the suitability of information herein for the purchaser's purposes are necessarily the purchaser's responsibility. Although reasonable care has been taken in the preparation of such information, Genium Publishing Corporation extends no warranties, makes no representations, and assumes no responsibility as to the accuracy or suitability of such information for application to the purchaser's intended purpose or for consequences of its use.

CAT. NO. 43816

MATERIAL SAFETY DATA SH

Battery, 6V, J Type

MSDS DATE: 6/16/92
CHANGE NO.: 8745

For Assistance, Contact:
Regulatory Affairs Dept.
PO Box 907 Ames, IA 50010
(800) 227-4224

HACH COMPANY
PO BOX 907
AMES, IA 50010

Emergency Telephone #
Rocky Mountain Poison Ctr.
(303) 623-5716

I. PRODUCT IDENTIFICATION

PRODUCT NAME: Battery, 6V, J Type
CAS NO.: NA CHEMICAL NAME: Not applicable
FORMULA: Not applicable CHEMICAL FAMILY: Not applicable

II. INGREDIENTS

Manganese Dioxide
PCT: <50 CAS NO.: 1313-13-9 SARA: LISTED
TLV: C: 5 mg/M3 as Mn PEL: C: 5 mg/M3 as Mn
HAZARD: Strong oxidizer

Zinc
PCT: <25 CAS NO.: 7440-66-6 SARA: LISTED
TLV: 5 mg/M3 ZnO fume PEL: 5 mg/M3 ZnO fume
HAZARD: Flammable solid; may cause irritation

Potassium Hydroxide
PCT: <10 CAS NO.: 1310-58-3 SARA: NOT LISTED
TLV: 2 mg/M3 ceiling PEL: 2 mg/M3 ceiling
HAZARD: Very corrosive; very toxic

Mercury
PCT: <0.1 CAS NO.: 7439-97-6 SARA: LISTED
TLV: 0.05 mg/M3 skin PEL: 0.05 mg/M3 skin
RCRA: U151
HAZARD: Very toxic by inhalation and skin absorption

III. PHYSICAL DATA

STATE: solid APPEARANCE: Battery ODOR: None
SOLUBILITY IN: WATER: Insoluble ACID: Insoluble OTHER: Not determined
BOILING POINT: NA MELTING PT.: NA SPEC GRAVITY: NA pH: Not applicable
VAPOR PRESSURE: Not applicable VAPOR DENSITY (air=1): NA
EVAPORATION RATE: NA METAL CORROSIVITY - ALUMINUM: None STEEL: None
STABILITY: Stable
STORAGE PRECAUTIONS: Store in a cool, dry place.

IV. FIRE, EXPLOSION HAZARD AND REACTIVITY DATA

FLASH PT.: Not applicable METHOD: NA
FLAMMABILITY LIMITS - LOWER: NA UPPER: NA
SUSCEPTIBILITY TO SPONTANEOUS HEATING: None
SHOCK SENSITIVITY: None AUTOIGNITION PT.: NA
EXTINGUISHING MEDIA: water, dry chemical, alcohol foam or carbon dioxide
FIRE/EXPLOSION HAZARDS: Burning may release the chemical ingredients or their combustion products
HAZARDOUS DECOMP. PRODUCTS: May emit toxic fumes in fire
OXIDIZER: No NFPA Codes: Health: 2 Flammability: 0 Reactivity: 1
CONDITIONS TO AVOID: Flames

V. HEALTH HAZARD DATA

ACUTE TOXICITY: Not applicable
ROUTES OF EXPOSURE: Not applicable
TARGET ORGANS: Not applicable
CHRONIC TOXICITY: Not applicable
ROUTES OF EXPOSURE: Not applicable
TARGET ORGANS: Not applicable
CANCER INFORMATION: Not applicable
ROUTES OF EXPOSURE: Not applicable
TARGET ORGANS: Not applicable
OVEREXPOSURE: No effects anticipated
MEDICAL CONDITIONS AGGRAVATED BY EXPOSURE: None

VI. PRECAUTIONARY MEASURES

Not applicable
PROTECTIVE EQUIPMENT: Not applicable

VII. FIRST AID

EYE AND SKIN CONTACT: Immediately flush eyes and skin with water fo minutes. Remove contaminated clothing. Call physician.
INGESTION: Give large quantities of water. Call physician immediately.
INHALATION: Not applicable

VIII. SPILL AND DISPOSAL PROCEDURES

IN CASE OF SPILL OR RELEASE: Dispose of in an approved chemical landfill.
DISPOSE OF IN ACCORDANCE WITH ALL FEDERAL, STATE, AND LOCAL REGULATIONS.

IX. TRANSPORTATION DATA

D.O.T. PROPER SHIPPING NAME: Not Currently Regulated
HAZARD CLASS: Not applicable ID: NA

I.C.A.O. PROPER SHIPPING NAME: Not Currently Regulated
HAZARD CLASS: NA ID: NA GROUP: NA

I.M.O. PROPER SHIPPING NAME: Not Currently Regulated
HAZARD CLASS: NA ID: NA GROUP: NA

X. REFERENCES

1) TLV's Threshold Limit Values and Biological Exposure Indices for 1988-1989. American Conference of Governmental Industrial Hygienists, 1988.
2) Air Contaminants, Federal Register, Vol. 54, No. 12, Thursday, January 19, 1989. pp. 2332-2983.
3) Vender information.

SPECIAL NOTE: This sheet is provided for your information only. This battery is an article and, as such, is not subject to the OSHA Hazard Communication Standard requirement for preparation of a material safety data sheet. As an article, this battery and its contents are not subject to the requirements of the Emergency Planning and Community Right-To-Know Act.

THE INFORMATION CONTAINED HEREIN IS BASED ON DATA CONSIDERED TO BE ACCURATE. HOWEVER, NO WARRANTY IS EXPRESSED OR IMPLIED REGARDING THE ACCURACY OF THESE DATA OR THE RESULTS TO BE OBTAINED FROM THE USE THEREOF.

(C) HACH CO. 1993

U.S. DEPARTMENT OF LABOR
Occupational Safety and Health Administration

MATERIAL SAFETY DATA SHEET

Required under USDL Safety & Health Regulations for Ship Repairing, Shipbuilding and Shipbreaking (29 CFR 1915, 1916, 1917)

SECTION I - GENERAL INFORMATION

Allegro Industries
6403 E. Alondra Boulevard
Paramount, CA 90723
(213) 633-4861

PRODUCT NO: 3001 Alcohol Free Towelettes

Chemical Name & Synonyms: Benzalkonium Chloride
Trade Name & Synonyms: BTC, Zephrian Chloride

Chemical Family: Amide Salt

Formula: $C_6H_5CH_2(CH_3)_2R+Cl-R=C_6H_{17}$ to $C_{16}H_{37}$

Prepared by: Thomas J. Johnston Date: 12/10/92

Hazardous mixtures of other Liquids, Solids or Gases: N/A
Percent: N/A
TLV Unit: N/A

SECTION II - PHYSICAL DATA

Boiling Point (Degrees Fahrenheit): 212
Vapor Pressure (mm Hg): 23.8
Density (Air = 1): 0.997
Solubility in Water: Very Soluble
Appearance & Odor: Colorless liquid, faint medicinal odor
Specific Gravity (Water = 1): 0.999
Percent Volatile by Volume (%): 99.9%
Evaporation Rate (IPA = 1): 0.11

SECTION III - FIRE AND EXPLOSION HAZARD DATA

Flash Point (method used): 175 Degrees Fahrenheit Flammable Limits (ASTM D93-78)
Extinguishing Media: Water, CO_2, Dry Chemical
Special Fire Fighting Procedures: None
Unusual Fire and Explosion Hazards: None

SECTION IV - HEALTH HAZARD DA

Threshold Limit Value: None listed
Effects of Overexposure: Eye Irritant
Emergency & First Aid Procedures:
Ingestion - N/A
Inhalation - N/A
Skin - N/A
Eyes - Flush with water

SECTION V - REACTIVITY DATA

Stability: Unstable ( )
Stable (x)
Incompatability (Materials to Avoid): None
Hazardous Decomposition Products: CO, CO_2, H_2O
Hazardous Polymerization: May Occur ( )
Will not Occur (x)

SECTION VI - SPILL OR LEAK PROCEDURES

Steps to be taken in case material is released or spilled: Flush with water to drain or absorb with inert absorbant.

Waste disposal method: Dry absorbant and landfill. Not a hazardous waste.

SECTION VII - SPECIAL PROTECTION INFORMATION

Respiratory Protection (Specify Type): Not required
Ventilation:
Local Exhaust: Not required
Special: Other
Mechanical: Normal air changes
Other: N/A
Protective Gloves: PVC gloves
Eye Protection: Safety glasses
Other Protective Equipment: Not required

SECTION VIII - SPECIAL PRECAUTIONS

Precautions to be taken in handling and storing: Normal handling and storage procedures.

Other precuations: None

Genium Publishing Corporation
1145 Catalyn Street
Schenectady, NY 12303-1836 USA
(518) 377-8854

Material Safety Data Sheets Collection:

Sheet No. 316
Benzene

Issued: 11/78 Revision: E, 8/90

Section 1. Material Identification

32

Benzene (C_6H_6) Description: Derived by fractional distillation of coal tar, hydrodealkylation of toluene or pyrolysis of gasoline, catalytic reforming of petroleum, and transalkylation of toluene by disproportionation reaction. Used as a fuel; a chemical reagent; a solvent for a large number of materials such as paints, plastics, rubber, inks, oils, and fats; in manufacturing phenol, ethylbenzene (for styrene monomer), nitrobenzene (for aniline), dodecylbenzene (for detergents), cyclohexane (for nylon), chlorobenzene, diphenyl, benzene hexachloride, maleic anhydride, benzene-sulfonic acid, artificial leather, linoleum, oil cloth, varnishes, and lacquers; for printing and lithography; in dry cleaning; in adhesives and coatings; for extraction and rectification; as a degreasing agent; in the tire industry; and in shoe factories. Benzene has been banned as an ingredient in products intended for household use and is no longer used in pesticides.

Other Designations: CAS No. 0071-43-2, benzol, carbon oil, coal naphtha, cyclohexatriene, mineral naphtha, nitration benzene, phene, phenyl hydride, pyrobenzol.

Manufacturer: Contact your supplier or distributor. Consult the latest *Chemicalweek Buyers' Guide*™ for a suppliers list.

R 1
I 4
S 2*
K 4
*Skin absorption

NFPA

HMIS
H 3
F 3
R 0
PPG†
† Sec. 8

Cautions: Benzene is a confirmed *human carcinogen* by the IARC. *Chronic low-level exposure may cause cancer (leukemia) and bone marrow damage, with injury to blood-forming tissue.* It is also a dangerous fire hazard when exposed to heat or flame.

Section 2. Ingredients and Occupational Exposure Limits

Benzene, ca 100%*

1989 OSHA PELs
(29 CFR 1910.1000, Table Z-1-A)
8-hr TWA: 1 ppm, 3 mg/m³
15-min STEL: 5 ppm, 15 mg/m³

(29 CFR 1910.1000, Table Z-2)
8-hr TWA: 10 ppm
Acceptable Ceiling Concentration: 25 ppm
Acceptable Maximum Peak: 50 ppm (10 min)†

1989-90 ACGIH
TLV-TWA: 10 ppm, 32 mg/m³

1988 NIOSH RELs
TWA: 0.1 ppm, 0.3 mg/m³
Ceiling: 1 ppm, 3 mg/m³

1985-86 Toxicity Data‡
Man, oral, LD_{Lo}: 50 mg/kg; no toxic effect noted
Man, inhalation, TC_{Lo}: 150 ppm inhaled intermittently over 1 yr in a number of discrete, separate doses affects the blood (other changes) and nutritional and gross metabolism (body temperature increase)
Rabbit, eye: 2 mg administered over 24 hr produces severe irritation

* OSHA 29 CFR 1910.1000, Subpart Z, states that the final benzene standard in 29 CFR 1910.1028 applies to all occupational exposures to benzene except in some subsegments of industry where exposures are consistently under the action level (i.e., distribution and sale of fuels, sealed containers and pipelines, coke production, oil and gas drilling and production, natural gas processing, and the percentage exclusion for liquid mixtures); for the excepted subsegments, the benzene limits in Table Z-2 apply.
† Acceptable maximum peak above the acceptable ceiling concentration for an 8-hr shift.
‡ See NIOSH, *RTECS* (CY1400000), for additional irritative, mutative, reproductive, tumorigenic, and toxicity data.

Section 3. Physical Data

Boiling Point: 176 °F (80 °C)
Melting Point: 42 °F (5.5 °C)
Vapor Pressure: 100 mm Hg at 79 °F (26.1 °C)
Vapor Density (Air = 1): 2.7
Evaporation Rate (Ether = 1): 2.8

Molecular Weight: 78.11
Specific Gravity (15 °C/4 °C): 0.8787
Water Solubility: Slightly (0.180 g/100 g of H_2O at 25 °C)
% Volatile by Volume: 100
Viscosity: 0.6468 mPa at 20 °C

Appearance and Odor: A colorless liquid with a characteristic sweet, aromatic odor. The odor recognition threshold (100% of panel) is approximately 5 ppm (unfatigued) in air. Odor *is not* an adequate warning of hazard.

Section 4. Fire and Explosion Data

Flash Point: 12 °F (-11.1 °C), CC	Autoignition Temperature: 928 °F (498 °C)	LEL: 1.3% v/v	UEL: 7.1% v/v

Extinguishing Media: Use dry chemical, foam, or carbon dioxide to extinguish benzene fires. Water may be ineffective as an extinguishing agent since it can scatter and spread the fire. Use water spray to cool fire-exposed containers, flush spills away from exposures, disperse benzene vapor, and protect personnel attempting to stop an unignited benzene leak.
Unusual Fire or Explosion Hazards: Benzene is a Class 1B flammable liquid. A concentration exceeding 3250 ppm is considered a potential fire explosion hazard. Benzene vapor is heavier than air and can collect in low lying areas or travel to an ignition source and flash back. Explosive and flammable benzene vapor-air mixtures can easily form at room temperature. Eliminate all ignition sources where benzene is used, handled, or stored.
Special Fire-fighting Procedures: Isolate hazard area and deny entry. Since fire may produce toxic fumes, wear a self-contained breathing apparatus (SCBA) with a full facepiece operated in the pressure-demand or positive-pressure mode and full protective equipment. Structural firefighter's protective clothing provides limited protection. Stay out of low areas. Be aware of runoff from fire control methods. Do not release to sewers or waterways. Runoff to sewer can create pollution, fire, and explosion hazard.

Section 5. Reactivity Data

Stability/Polymerization: Benzene is stable at room temperature in closed containers under normal storage and handling conditions. Hazardous polymerization cannot occur.
Chemical Incompatibilities: Benzene explodes on contact with diborane, permanganic acid, bromine pentafluoride, peroxodisulfuric acid, and peroxomonosulfuric acid. It ignites on contact with dioxygen difluoride, dioxygenyl tetrafluoroborate, iodine heptafluoride, and sodium peroxide + water. Benzene forms sensitive, explosive mixture with iodine pentafluoride, ozone, liquid oxygen, silver perchlorate, nitryl perchlorate, nitric acid, and arsenic pentafluoride + potassium methoxide (explodes above 30 °C). A vigorous or incandescent reaction occurs with bromine trifluoride, uranium hexafluoride, and hydrogen + Raney nickel [above 410 °F (210 °C)]. Benzene is incompatible with oxidizing materials.
Conditions to Avoid: Avoid heat and ignition sources.
Hazardous Products of Decomposition: Thermal oxidative decomposition of benzene can produce toxic gases and vapors such as carbon monoxide.

Copyright © 1990 Genium Publishing Corporation.
Any commercial use or reproduction without the publisher's permission is prohibited.

Section 6. Health Hazard Data

Carcinogenicity: The ACGIH, OSHA, and IARC list benzene as, respectively, a supected human carcinogen, a cancer hazard, and, based on sufficient human and animal evidence, a human carcinogen (Group 1).
Summary of Risks: Prolonged skin contact or excessive inhalation of benzene vapor may cause headache, weakness, appetite loss, and fatigue. The most important health hazards are cancer (leukemia) and bone marrow damage with injury to blood-forming tissue from chronic low-level exposure. Higher level exposures may irritate the respiratory tract and cause central nervous system (CNS) depression.
Medical Conditions Aggravated by Long-Term Exposure: Exposure may worsen ailments of the heart, lungs, liver, kidneys, blood, and CNS.
Target Organs: Blood, central nervous system, bone marrow, eyes, upper respiratory tract, and skin.
Primary Entry Routes: Inhalation, skin contact.
Acute Effects: Symptoms of acute overexposure include irritation of the eyes, nose, and respiratory tract, breathlessness, euphoria, nausea, drowsiness, headache, dizziness, and intoxication. Severe exposure may lead to convulsions and unconsciousness. Skin contact may cause a drying rash (dermatitis).
Chronic Effects: Long-term chronic exposure may result in many blood disorders ranging from aplastic anemia (an inability to form blood cells) to leukemia.
FIRST AID
Eyes: Gently lift the eyelids and flush immediately and continuously with flooding amounts of water until transported to an emergency medical facility. Consult a physician immediately.
Skin: *Quickly* remove contaminated clothing. Immediately rinse with flooding amounts of water for at least 15 min. For reddened or blistered skin, consult a physician. Wash affected area with soap and water.
Inhalation: Remove exposed person to fresh air. Emergency personnel should protect against inhalation exposure. Provide CPR to support breathing or circulation as necessary. Keep awake and transport to a medical facility.
Ingestion: Never give anything by mouth to an unconscious or convulsing person. If ingested, *do not induce vomiting* since aspiration may be fatal. Call a physician immediately.
After first aid, get appropriate in-plant, paramedic, or community medical support.
Physician's Note: Evaluate chronic exposure with a CBC, peripheral smear, and reticulocyte count for signs of myelotoxicity. Follow up any early indicators of leukemia with a bone marrow biopsy. Urinary phenol conjugates may be used for biological monitoring of recent exposure. Acute management is primarily supportive for CNS depression.

Section 7. Spill, Leak, and Disposal Procedures

Spill/Leak: *Design and practice a benzene spill control and countermeasure plan (SCCP).* Notify safety personnel, evacuate all unnecessary personnel, eliminate all heat and ignition sources, and provide adequate ventilation. Cleanup personnel should protect against vapor inhalation, eye contact, and skin absorption. Absorb as much benzene as possible with an inert, noncombustible material. For large spills, dike far ahead of spill and contain liquid. Use nonsparking tools to place waste liquid or absorbent into closable containers for disposal. Keep waste out of confined spaces such as sewers, watersheds, and waterways because of explosion danger. Follow applicable OSHA regulations (29 CFR 1910.120).
Disposal: Contact your supplier or a licensed contractor for detailed recommendations. Follow applicable Federal, state, and local regulations.
EPA Designations
Listed as a RCRA Hazardous Waste (40 CFR 261.33), Hazardous Waste No. U019
Listed as a CERCLA Hazardous Substance* (40 CFR 302.4), Reportable Quantity (RQ): 1000 lb (454 kg) [* per Clean Water Act, Sec. 307 (a), 311 (b)(4), 112; and per RCRA, Sec. 3001]
SARA Extremely Hazardous Substance (40 CFR 355): Not listed
Listed as SARA Toxic Chemical (40 CFR 372.65)
OSHA Designations
Listed as an Air Contaminant (29 CFR 1910.1000, Tables Z-1-A and Z-2)

Section 8. Special Protection Data

Goggles: Wear protective eyeglasses or chemical safety goggles, per OSHA eye- and face-protection regulations (29 CFR 1910.133).
Respirator: Seek professional advice prior to respirator selection and use. Follow OSHA respirator regulations (29 CFR 1910.134) and, if necessary, wear a NIOSH-approved respirator. For emergency or nonroutine operations (cleaning spills, reactor vessels, or storage tanks), wear an SCBA. *Warning! Air-purifying respirators do not protect workers in oxygen-deficient atmospheres.*
Other: Wear impervious gloves, boots, aprons, and gauntlets to prevent skin contact.
Ventilation: Provide general and local explosion-proof ventilation systems to maintain airborne concentrations at least below the OSHA PELs (Sec. 2). Local exhaust ventilation is preferred since it prevents contaminant dispersion into the work area by controlling it at its source.[107]
Safety Stations: Make available in the work area emergency eyewash stations, safety/quick-drench showers, and washing facilities.
Contaminated Equipment: Never wear contact lenses in the work area: soft lenses may absorb, and all lenses concentrate, irritants. Remove this material from your shoes and equipment. Launder contaminated clothing before wearing.
Comments: Never eat, drink, or smoke in work areas. Practice good personal hygiene after using this material, especially before eating, drinking, smoking, using the toilet, or applying cosmetics.

Section 9. Special Precautions and Comments

Storage Requirements: Store in tightly closed containers in a cool, dry, well-ventilated area away from all heat and ignition sources and incompatible materials. *Caution! Benzene vapor may form explosive mixtures in air.* To prevent static sparks, electrically ground and bond all containers and equipment used in shipping, receiving, or transferring operations in production and storage areas. When opening or closing benzene containers, use nonsparking tools. Keep fire extinguishers readily available.
Engineering Controls: Because OSHA specifically regulates benzene (29 CFR 1910.1028), educate workers about its potential hazards and dangers. Minimize all possible exposures to carcinogens. If possible, substitute less toxic solvents for benzene; use this material with extreme caution and only if absolutely essential. Avoid vapor inhalation and skin and eye contact. Use only with adequate ventilation and appropriate personal protective gear. Institute a respiratory protection program that includes regular training, maintenance, inspection, and evaluation. Designate regulated areas of benzene use (see legend in the box below) and label benzene containers with "DANGER, CONTAINS BENZENE, CANCER HAZARD."
Other Precautions: Provide preplacement and periodic medical examinations with emphasis on a history of blood disease or previous exposure.

Transportation Data (49 CFR 172.101, .102)

DOT Shipping Name: Benzene (*benzol*)
DOT Hazard Class: Flammable liquid
ID No.: UN1114
DOT Label: Flammable liquid
DOT Packaging Exceptions: 173.118
DOT Packaging Requirements: 173.119

IMO Shipping Name: Benzene
IMO Hazard Class: 3.2
ID No.: UN1114
IMO Label: Flammable liquid
IMDG Packaging Group: II

DANGER
BENZENE
CANCER HAZARD
FLAMMABLE-NO SMOKING
AUTHORIZED PERSONNEL ONLY
RESPIRATOR REQUIRED

MSDS Collection **References:** 1, 2, 12, 26, 73, 84-94, 100, 101, 103, 109, 124, 126, 127, 132, 134, 136, 138, 139, 143
Prepared by: MJ Allison, BS; **Industrial Hygiene Review:** DJ Wilson, CIH; **Medical Review:** MJ Upfal, MD, MPH; **Edited by:** JR Stuart, MS

Copyright © 1990 by Genium Publishing Corporation. Any commercial use or reproduction without the publisher's permission is prohibited. Judgments as to the suitability of information herein for the purchaser's purposes are necessarily the purchaser's responsibility. Although reasonable care has been taken in the preparation of such information, Genium Publishing Corporation extends no warranties, makes no representations, and assumes no responsibility as to the accuracy or suitability of such information for application to the purchaser's intended purpose or for consequences of its use.

DATE 7/13/94 MATERIAL SAFETY DATA SHEET PAGE 1

SECTION I -GENERAL INFORMATION

CATALOG NO 40004 (REORDER PRODUCT BY THIS NO.)
PRODUCT NAME BENZENE, 1X1ML, MEOH, 5000UG/ML
DATA SHEET NO I400040
BENZENE
FORMULA MIXTURE FORMULA WEIGHT
CAS NRTECS
SYNONYM ANALYTICAL STANDARD IN METHANOL
MANUFACTURER SUPELCO INC. PHONE 814-359-3441
ADDRESS SUPELCO PARK, BELLEFONTE, PA 16823-0048

SECTION II - HAZARDOUS INGREDIENTS OF MIXTURES

CHEMICAL NAME
COMMON NAME - PERCENTAGE - CAS #
(FORMULA) - PEL(UNITS) - TLV(UNITS)
LD50 VALUE - CONDITIONS

METHANOL
METHANOL 99-100 67-56-1
CH3OH 260 MG/M3 262 MG/M3
5628 MG/KG ORAL RAT SEE FOOTNOTE(6)
BENZENE
BENZENE 0.5 71-43-2
C6H6 1 PPM 10 PPM
4894 MG/KG ORAL RAT SEE FOOTNOTE(2,5,6,7)

FOOTNOTES

2 CLASSIFIED BY IARC AS A CLASS 2A CARCINOGEN.
5 OSHA REGULATED CARCINOGEN, 29 CFR 1910.
6 SUBJECT TO THE REPORTING REQUIREMENTS OF SARA TITLE III, SECTION 313.
7 CLASSIFIED BY NTP AS A GROUP A CARCINOGEN.

SECTION III - PHYSICAL DATA

BOILING POINT 65 C MM MELTING POINT -98 C
VAPOR PRESSURE 100 MM C VAPOR DENSITY 1.10 C (AIR=1)
SPECIFIC GRAVITY .790 G/ML C (WATER=1) PERCENT VOLATILE BY VOLUME 100
WATER SOLUBILITY 100 EVAPORATION RATE >1 (ETHER=1)
APPEARANCE CLEAR COLORLESS LIQUID

SECTION IV - FIRE AND EXPLOSION HAZARD DATA

FLASH POINT 50 F FLAMMABLE LIMITS LEL 6.0 UEL 36.5

EXTINGUISHING MEDIA

CO2
DRY CHEMICAL
ALCOHOL FOAM.

SPECIAL FIRE FIGHTING PROCEDURES

WEAR SELF CONTAINED BREATHING APPARATUS WHEN FIGHTING A CHEMICAL FIRE.

UNUSUAL FIRE AND EXPLOSION HAZARDS

N/A

CATALOG NO 40004 (RECORDER PRODUCT BY THIS NO.)
PRODUCT NAME BENZENE, 1X1ML, MEOH, 5000UG/ML
DATA SHEET NO 1400040
BENZENE

* CONTINUED *

SECTION V - HEALTH HAZARD DATA

LD50 5628 MG/KG ORAL RAT TLV 262 MG/M3
PEL 260 MG/M3

EMERGENCY AND FIRST AID PROCEDURES

EYES
FLUSH EYES WITH WATER FOR 15 MINUTES.
CONTACT A PHYSICIAN.

SKIN
FLUSH SKIN WITH LARGE VOLUMES OF WATER.

INHALATION
IMMEDIATELY MOVE TO FRESH AIR.
IF BREATHING STOPS, GIVE ARTIFICIAL RESPIRATION
CONTACT A PHYSICIAN

INGESTION
NEVER GIVE ANYTHING BY MOUTH TO AN UNCONSCIOUS PERSON
NEVER TRY TO MAKE AN UNCONSCIOUS PERSON VOMIT
GIVE 2 TABLESPOONS OF BAKING SODA IN A GLASS OF WATER
PRESS FINGERS TO BACK OF TONGUE TO INDUCE VOMITING.
IMMEDIATELY CONTACT A PHYSICIAN.

EFFECTS OF OVEREXPOSURE

HARMFUL IF INHALED
MAY BE FATAL IF SWALLOWED
CONTAINS MATERIAL(S) KNOWN TO THE STATE OF CALIFORNIA TO CAUSE CANCER.
HEADACHE
NAUSEA
GASTROINTESTINAL DISTURBANCES
REPORTED HUMAN CARCINOGEN.
CARCINOGENICITY - INDEFINITE IN ANIMALS.
BLINDNESS
LEUKEMIA

SECTION VI - REACTIVITY DATA

STABILITY STABLE.

CONDITIONS TO AVOID

N/A

CATALOG NO 40004 (REORDER PRODUCT BY THIS NO.)
PRODUCT NAME BENZENE, 1X1ML, MEOH, 5000UG/ML
DATA SHEET NO I400040
BENZENE

SECTION VI - REACTIVITY DATA

* CONTINUED *

INCOMPATIBILITY

OXIDIZING AGENTS
CHROMIC ANHYDRIDE, LEAD PERCHLORATE, PERCHLORIC ACIDS

HAZARDOUS DECOMPOSITION PRODUCTS

N/A

HAZARDOUS POLYMERIZATION WILL NOT OCCUR.

CONDITIONS TO AVOID

N/A

SECTION VII - SPILL OR LEAK PROCEDURES

STEPS TO BE TAKEN IN CASE MATERIAL IS RELEASED OR SPILLED

TAKE UP WITH ABSORBENT MATERIAL.
VENTILATE AREA.
ELIMINATE ALL IGNITION SOURCES.

WASTE DISPOSAL METHOD

COMPLY WITH ALL APPLICABLE FEDERAL, STATE, OR LOCAL REGULATIONS

SECTION VIII - SPECIAL PROTECTION INFORMATION

RESPIRATORY PROTECTION (SPECIFIC TYPE)

WEAR FACE MASK WITH ORGANIC VAPOR CANISTER.

PROTECTIVE GLOVES

WEAR RUBBER GLOVES.

EYE PROTECTION

WEAR PROTECTIVE GLASSES.

VENTILATION

USE ONLY IN WELL VENTILATED AREA.

CATALOG NO 40004 (REORDER PRODUCT BY THIS NO.)
PRODUCT NAME BENZENE, 1X1ML, MEOH, 5000UG/ML
DATA SHEET NO I400040
BENZENE

SECTION VIII - SPECIAL PROTECTION INFORMATION

* CONTINUED *

SPECIAL

N/A

OTHER PROTECTIVE EQUIPMENT

N/A

SECTION IX - SPECIAL PRECAUTIONS

STORAGE AND HANDLING

REFRIGERATE IN SEALED CONTAINER.
KEEP AWAY FROM OXIDIZERS.
KEEP AWAY FROM IGNITION SOURCES.

OTHER PRECAUTIONS

AVOID EYE OR SKIN CONTACT.
AVOID BREATHING VAPORS.

WHILE THE INFORMATION AND RECOMMENDATIONS SET FORTH HEREIN ARE BELIEVED TO BE ACCURATE AS OF THE DATE HEREOF, SUPELCO, INC. MAKES NO WARRANTY WITH RESPECT THERETO AND DISCLAIMS ALL LIABILITY FROM RELIANCE THEREON.

LAST REVISED 5/17/94

COPYRIGHT 1985 SUPELCO, INC. SUPELCO PARK BELLEFONTE, PA 16823-0048
ALL RIGHTS RESERVED TWX 510-670-3600
CUSTOMER P.O. NO. 52593

SECTION I -GENERAL INFORMATION

CATALOG NO 40136 (REORDER PRODUCT BY THIS NO.)
PRODUCT NAME BROMOCHLOROMETHANE 5000UG/ML, 1ML
DATA SHEET NO I401360
BROMOCHLOROMETHANE
FORMULA MIXTURE FORMULA WEIGHT
CAS NRTECS
SYNONYM ANALYTICAL STANDARD IN METHANOL
MANUFACTURER SUPELCO INC. PHONE 814-359-3441
ADDRESS SUPELCO PARK, BELLEFONTE, PA 16823-0048

SECTION II - HAZARDOUS INGREDIENTS OF MIXTURES

CHEMICAL NAME
COMMON NAME - PERCENTAGE - CAS #
(FORMULA) - PEL(UNITS) - TLV(UNITS)
LD50 VALUE - CONDITIONS

METHANE, BROMOCHLORO-
BROMOCHLOROMETHANE 0.5 74-97-5
CH2BRCL 200 PPM 200 PPM
5000 MG/KG ORAL RAT
METHANOL
METHANOL 99-100 67-56-1
CH3OH 260 MG/M3 262 MG/M3
5628 MG/KG ORAL RAT SEE FOOTNOTE(6)

FOOTNOTES

(6) SUBJECT TO THE REPORTING REQUIREMENTS OF SARA TITLE III, SECTION 313.

SECTION III - PHYSICAL DATA

BOILING POINT 65 C MM MELTING POINT -98 C
VAPOR PRESSURE 100 MM C VAPOR DENSITY 1.10 C (AIR=1)
SPECIFIC GRAVITY .790 G/ML C (WATER=1) PERCENT VOLATILE BY VOLUME 10
WATER SOLUBILITY 100 EVAPORATION RATE >1 (ETHER=1)
APPEARANCE CLEAR COLORLESS LIQUID

SECTION IV - FIRE AND EXPLOSION HAZARD DATA

FLASH POINT 50 F FLAMMABLE LIMITS LEL 6.0 UEL 3.

EXTINGUISHING MEDIA

CO2
DRY CHEMICAL
ALCOHOL FOAM.

SPECIAL FIRE FIGHTING PROCEDURES

WEAR SELF CONTAINED BREATHING APPARATUS WHEN FIGHTING A CHEMICAL FIRE.

UNUSUAL FIRE AND EXPLOSION HAZARDS

THE FOLLOWING TOXIC VAPORS ARE FORMED WHEN THIS MATERIAL IS HEATED TO DECOMPOSITION.

DATE 5/25/93 MATERIAL SAFETY DATA SHEE

.TALOG NO 40136 (REORDER PRODUCT BY THI
.RODUCT NAME BROMOCHLOROMETHANE 5000UG/ML, 1ML
DATA SHEET NO I401360
BROMOCHLOROMETHANE
* CONTINUED *
HYDROGEN CHLORIDE, HYDROGEN BROMIDE.

SECTION V - HEALTH HAZARD DATA

LD50	5628	MG/KG	ORAL RAT	TLV	262	MG/M3
PEL	260	MG/M3				

EMERGENCY AND FIRST AID PROCEDURES

EYES
FLUSH EYES WITH WATER FOR 15 MINUTES.
CONTACT A PHYSICIAN.

SKIN
FLUSH SKIN WITH LARGE VOLUMES OF WATER.

INHALATION
IMMEDIATELY MOVE TO FRESH AIR.
IF BREATHING STOPS, GIVE ARTIFICIAL RESPIRATION
CONTACT A PHYSICIAN

INGESTION
NEVER GIVE ANYTHING BY MOUTH TO AN UNCONSCIOUS PERSON
NEVER TRY TO MAKE AN UNCONSCIOUS PERSON VOMIT
IVE 2 TABLESPOONS OF BAKING SODA IN A GLASS OF WATER
PRESS FINGERS TO BACK OF TONGUE TO INDUCE VOMITING.
IMMEDIATELY CONTACT A PHYSICIAN.

EFFECTS OF OVEREXPOSURE

CAUSES SEVERE RESPIRATORY BURNS
HARMFUL IF INHALED
MAY BE FATAL IF SWALLOWED
HEADACHE
NAUSEA
GASTROINTESTINAL DISTURBANCES
BLINDNESS

SECTION VI - REACTIVITY DATA

STABILITY STABLE.

CONDITIONS TO AVOID

N/A

INCOMPATIBILITY

XIDIZING AGENTS

CATALOG NO 40136 (REORDER PRODUCT BY THIS NO.)
PRODUCT NAME BROMOCHLOROMETHANE 5000UG/ML, 1ML
DATA SHEET NO I401360
BROMOCHLOROMETHANE

SECTION VI - REACTIVITY DATA

* CONTINUED *
CHROMIC ANHYDRIDE, LEAD PERCHLORATE, PERCHLORIC ACIDS

HAZARDOUS DECOMPOSITION PRODUCTS

HYDROGEN CHLORIDE, HYDROGEN BROMIDE.

HAZARDOUS POLYMERIZATION WILL NOT OCCUR.

CONDITIONS TO AVOID

N/A

SECTION VII - SPILL OR LEAK PROCEDURES

STEPS TO BE TAKEN IN CASE MATERIAL IS RELEASED OR SPILLED

TAKE UP WITH ABSORBENT MATERIAL.
VENTILATE AREA.
ELIMINATE ALL IGNITION SOURCES.

WASTE DISPOSAL METHOD

COMPLY WITH ALL APPLICABLE FEDERAL, STATE, OR LOCAL REGULATIONS

SECTION VIII - SPECIAL PROTECTION INFORMATION

RESPIRATORY PROTECTION (SPECIFIC TYPE)

WEAR FACE MASK WITH ORGANIC VAPOR CANISTER.

PROTECTIVE GLOVES

WEAR RUBBER GLOVES.

EYE PROTECTION

WEAR PROTECTIVE GLASSES.

VENTILATION

USE ONLY IN WELL VENTILATED AREA.

SPECIAL

N/A

CATALOG NO 40136 (REORDER PRODUCT BY THIS NO.)
PRODUCT NAME BROMOCHLOROMETHANE 5000UG/ML, 1ML
DATA SHEET NO I401360
BROMOCHLOROMETHANE

SECTION VIII - SPECIAL PROTECTION INFORMATION

* CONTINUED *

OTHER PROTECTIVE EQUIPMENT

N/A

SECTION IX - SPECIAL PRECAUTIONS

STORAGE AND HANDLING

REFRIGERATE IN SEALED CONTAINER.
KEEP AWAY FROM OXIDIZERS.
KEEP AWAY FROM IGNITION SOURCES.

OTHER PRECAUTIONS

AVOID EYE OR SKIN CONTACT.
AVOID BREATHING VAPORS.

WHILE THE INFORMATION AND RECOMMENDATIONS SET FORTH HEREIN ARE BELIEVED TO BE ACCURATE AS OF THE DATE HEREOF, SUPELCO, INC. MAKES NO WARRANTY WITH RESPECT THERETO AND DISCLAIMS ALL LIABILITY FROM RELIANCE THEREON.

LAST REVISED 11/24/92

CALCIUM HYPOCHLORITE

CHY

Common Synonyms	Solid granules	White	Household bleaching powder odor
HTH HTH Dry Chlorine Neutral anhydrous calcium hypochlorite Senery	Sinks and mixes with water.		

- Avoid contact with solid and dust. Keep people away.
- Wear goggles and self-contained breathing apparatus.
- Isolate and remove discharged material.
- Notify local health and pollution control agencies.

Fire

Not flammable.
May cause fire on contact with combustibles.
POISONOUS GASES ARE PRODUCED WHEN HEATED.
Wear chemical protective suit including self-contained breathing apparatus.
Extinguish adjacent fires with water.

Exposure

CALL FOR MEDICAL AID.
SOLID
Irritating to skin and eyes.
If swallowed, will cause nausea, vomiting or loss of consciousness.
Remove contaminated clothing and shoes.
For contacted areas, flush with plenty of water.
IF IN EYES, hold eyelids open and flush with plenty of water.
IF SWALLOWED and victim is CONSCIOUS, have victim drink water or milk.
IF SWALLOWED and victim is UNCONSCIOUS OR HAVING CONVULSIONS, do nothing except keep victim warm.
DO NOT INDUCE VOMITING.

Water Pollution

HARMFUL TO AQUATIC LIFE IN VERY LOW CONCENTRATIONS.
May be dangerous if it enters water intakes.

Notify local health and wildlife officials.
Notify operators of nearby water intakes.

1. RESPONSE TO DISCHARGE

(See Response Methods Handbook)

Issue warning-corrosive
Dispose and flush

2. LABEL

2.1 Category: Oxidizer
2.2 Class: 5

3. CHEMICAL DESIGNATIONS

3.1 CG Compatibility Class: Not listed
3.2 Formula: $Ca(OCl)_2$
3.3 IMO/UN Designation: 5.1/1748
3.4 DOT ID No.: 1748
3.5 CAS Registry No.: 7778-54-3

4. OBSERVABLE CHARACTERISTICS

4.1 Physical State (as shipped): Solid
4.2 Color: White
4.3 Odor: Like bleaching powder

5. HEALTH HAZARDS

5.1 Personal Protective Equipment: Protective goggles, dust mask.
5.2 Symptoms Following Exposure: INHALATION: hypochlorous acid fumes given off only if compound comes in contact with acid, cause severe respiratory tract irritation and pulmonary edema. INGESTION: pain and inflammation of mouth, pharynx, esophagus, and stomach; erosion of mucous membranes, chiefly of the stomach; vomiting (hemorrhaging may cause vomitus to resemble coffee grounds); circulatory collapse, with cold and clammy skin, cyanosis, and shallow respiration; confusion, delirium, coma; edema of pharynx, glottis, and larynx, with stridor and obstruction; perforation of esophagus or stomach, with mediastinitis or peritonitis. SKIN CONTACT: may cause vascular eruptions and eczematoid dermatitis.
5.3 Treatment of Exposure: INGESTION: swallow immediately milk, egg white, starch paste, milk of magnesia, aluminum hydroxide gel, or magnesium trisilicate gel. Avoid sodium bicarbonate because of the release of carbon dioxide. Do not use acidic antidotes; cautious gastric lavage with tap water or a 1% solution of sodium thiosulfate; milk of magnesia (1 oz) left in the stomach is useful as a mild antacid, adsorbent, demulcent, and cathartic demulcents, such as starch, egg white, milk, gruel; opiates for the control of pain. Treat shock vigorously with intravenous fluids. Prompt surgical intervention when indicated, e.g., tracheotomy, gastrectomy. SKIN: wash with liberal quantities of water and apply a paste of baking soda.
5.4 Threshold Limit Value: Not pertinent
5.5 Short Term Inhalation Limits: Not pertinent
5.6 Toxicity by Ingestion: Grade 6; LD_{50} above 15 g/kg
5.7 Late Toxicity: None
5.8 Vapor (Gas) Irritant Characteristics: Not pertinent
5.9 Liquid or Solid Irritant Characteristics: Irritates eyes, skin, and mucous membranes.
5.10 Odor Threshold: Not pertinent
5.11 IDLH Value: Data not available

6. FIRE HAZARDS

6.1 Flash Point: Not flammable
6.2 Flammable Limits in Air: Not flammable
6.3 Fire Extinguishing Agents: Not pertinent
6.4 Fire Extinguishing Agents Not to be Used: Not pertinent
6.5 Special Hazards of Combustion Products: Not pertinent
6.6 Behavior in Fire: Poisonous gases may be produced when heated
6.7 Ignition Temperature: Not flammable
6.8 Electrical Hazard: Not pertinent
6.9 Burning Rate: Not flammable
6.10 Adiabatic Flame Temperature: Data not available
6.11 Stoichiometric Air to Fuel Ratio: Data not available
6.12 Flame Temperature: Data not available

7. CHEMICAL REACTIVITY

7.1 Reactivity With Water: No reaction
7.2 Reactivity With Common Materials: May cause fire in contact with wood or straw. Corrosive to most metals.
7.3 Stability During Transport: The 70% grade may decompose violently if exposed to heat or direct sunlight. Gives off chlorine and chlorine monoxide above 350°F (poisonous gases).
7.4 Neutralizing Agents for Acids and Caustics: Dilute with water.
7.5 Polymerization: Not pertinent
7.6 Inhibitor of Polymerization: Not pertinent
7.7 Molar Ratio (Reactant to Product): Data not available
7.8 Reactivity Group: Data not available

8. WATER POLLUTION

8.1 Aquatic Toxicity: 0.5 ppm/*/trout/killed/fresh water
*Time period not specified
8.2 Waterfowl Toxicity: Data not available
8.3 Biological Oxygen Demand (BOD): Not pertinent
8.4 Food Chain Concentration Potential: Not pertinent

9. SHIPPING INFORMATION

9.1 Grades of Purity: 70% (self-propagating); 65% (non propagating)
9.2 Storage Temperature: Data not available
9.3 Inert Atmosphere: Data not available
9.4 Venting: Data not available

10. HAZARD ASSESSMENT CODE

(See Hazard Assessment Handbook)

SS

11. HAZARD CLASSIFICATIONS

11.1 Code of Federal Regulations: Oxidizer
11.2 NAS Hazard Rating for Bulk Water Transportation: Not rated
11.3 NFPA Hazard Classification:

Category	Classification*	
Health Hazard (Blue)	1	2
Flammability (Red)	0	0
Reactivity (Yellow)	2	2
	dry	dry

*First column refers to non-fire situation.

12. PHYSICAL AND CHEMICAL PROPERTIES

12.1 Physical State at 16°C and 1 atm: Oxidizer
12.2 Molecular Weight: 174.99
12.3 Boiling Point at 1 atm: Not pertinent
12.4 Freezing Point: Not pertinent
12.5 Critical Temperature: Not pertinent
12.6 Critical Pressure: Not pertinent
12.7 Specific Gravity: 2.35 at 20°C (solid)
12.8 Liquid Surface Tension: Not pertinent
12.9 Liquid Water Interfacial Tension: Not pertinent
12.10 Vapor (Gas) Specific Gravity: Not pertinent
12.11 Ratio of Specific Heats of Vapor (Gas): Not pertinent
12.12 Latent Heat of Vaporization: Not pertinent
12.13 Heat of Combustion: Not pertinent
12.14 Heat of Decomposition: Not pertinent
12.15 Heat of Solution: Not pertinent
12.16 Heat of Polymerization: Not pertinent
12.17 Heat of Fusion: Data not available
12.18 Limiting Value: Data not available
12.19 Reid Vapor Pressure: Data not available

NOTES

CALCIUM HYPOCHLORITE

12.17 SATURATED LIQUID DENSITY		12.18 LIQUID HEAT CAPACITY		12.19 LIQUID THERMAL CONDUCTIVITY		12.20 LIQUID VISCOSITY	
Temperature (degrees F)	Pounds per cubic foot	Temperature (degrees F)	British thermal unit per pound-F	Temperature (degrees F)	British thermal unit-inch per hour-square foot-F	Temperature (degrees F)	Centipoise
	NOT PERTINENT		NOT PERTINENT		NOT PERTINENT		NOT PERTINENT

12.21 SOLUBILITY IN WATER		12.22 SATURATED VAPOR PRESSURE		12.23 SATURATED VAPOR DENSITY		12.24 IDEAL GAS HEAT CAPACITY	
Temperature (degrees F)	Pounds per 100 pounds of water	Temperature (degrees F)	Pounds per square inch	Temperature (degrees F)	Pounds per cubic foot	Temperature (degrees F)	British thermal unit per pound-F
	VERY SOLUBLE		NOT PERTINENT		NOT PERTINENT		NOT PERTINENT

J.T.BAKER INC. 222 RED SCHOOL LANE, PHILLIPSBURG, NJ 08865
MATERIAL SAFETY DATA SHEET
24-HOUR EMERGENCY TELEPHONE -- (201) 859-2151
CHEMTREC # (800) 424-9300 -- NATIONAL RESPONSE CENTER # (800) 424-8802

J.T.BAKER INC., 222 RED SCHOOL LANE, PHILLIPSBURG, NJ 08865

SECTION I - PRODUCT IDENTIFICATION

PRODUCT NAME: CALCIUM NITRATE, 4-HYDRATE
COMMON SYNONYMS: CALCIUM (II) NITRATE, TETRAHYDRATE; NITRIC ACID, CALCIUM SALT, TETRAHYDRATE
CHEMICAL FAMILY: CALCIUM COMPOUNDS
FORMULA: CA(NO3)2 4H2O
FORMULA WT.: 236.15
CAS NO.: 13477-34-4
NIOSH/RTECS NO.: EW3000000
PRODUCT USE: LABORATORY REAGENT
PRODUCT CODES: 1395

PRECAUTIONARY LABELING

BAKER SAF-T-DATA* SYSTEM

HEALTH	-	1	SLIGHT
FLAMMABILITY	-	0	NONE
REACTIVITY	-	3	SEVERE (OXIDIZER)
CONTACT	-	2	MODERATE

LABORATORY PROTECTIVE EQUIPMENT

GOGGLES; LAB COAT

U.S. PRECAUTIONARY LABELING

DANGER
CAUSES IRRITATION. STRONG OXIDIZER. CONTACT WITH OTHER MATERIAL MAY CAUSE FIRE.
KEEP FROM CONTACT WITH CLOTHING AND OTHER COMBUSTIBLE MATERIALS. DO NOT STORE NEAR COMBUSTIBLE MATERIALS. AVOID CONTACT WITH EYES, SKIN, CLOTHING. AVOID BREATHING DUST. KEEP IN TIGHTLY CLOSED CONTAINER. USE WITH ADEQUATE VENTILATION. WASH THOROUGHLY AFTER HANDLING. IN CASE OF FIRE, SOAK WITH WATER. IN CASE OF SPILL, SWEEP UP AND REMOVE. FLUSH SPILL AREA WITH WATER.

CONTINUED ON PAGE: 2

PRECAUTIONARY LABELING (CONTINUED)

INTERNATIONAL LABELING

AVOID CONTACT WITH EYES. AFTER CONTACT WITH SKIN, WASH IMMEDIATELY WITH PLENTY OF WATER. KEEP CONTAINER TIGHTLY CLOSED.

SAF-T-DATA* STORAGE COLOR CODE: YELLOW (REACTIVE)

SECTION II - COMPONENTS

COMPONENT	CAS NO.	WEIGHT %	OSHA/PEL	ACGIH/TLV
CALCIUM NITRATE, 4-HYDRATE	13477-34-4	99-100	N/E	N/E

SECTION III - PHYSICAL DATA

_ING POINT: N/A

VAPOR PRESSURE (MMHG): N/A

MELTING POINT: 45 C (113 F)
(AT 760 MM HG)

VAPOR DENSITY (AIR=1): N/A

SPECIFIC GRAVITY: 1.82
(H2O=1)

EVAPORATION RATE: N/A

SOLUBILITY(H2O): APPRECIABLE (>10%)

% VOLATILES BY VOLUME: 0
(21 C)

PH: N/A

ODOR THRESHOLD (P.P.M.): N/A

PHYSICAL STATE: SOLID

COEFFICIENT WATER/OIL DISTRIBUTION: N/A

APPEARANCE & ODOR: WHITE CRYSTALS. ODORLESS.

CONTINUED ON PAGE: 3

SECTION IV - FIRE AND EXPLOSION HAZARD DATA

FLASH POINT (CLOSED CUP): N/A

AUTOIGNITION TEMPERATURE: N/A

FLAMMABLE LIMITS: UPPER - N/A LOWER - N/A

FIRE EXTINQUISHING MEDIA
USE WATER SPRAY.

SPECIAL FIRE-FIGHTING PROCEDURES
FIREFIGHTERS SHOULD WEAR PROPER PROTECTIVE EQUIPMENT AND SELF-CONTAINED BREATHING APPARATUS WITH FULL FACEPIECE OPERATED IN POSITIVE PRESSURE MODE. MOVE CONTAINERS FROM FIRE AREA IF IT CAN BE DONE WITHOUT RISK. USE WATER TO KEEP FIRE-EXPOSED CONTAINERS COOL.

UNUSUAL FIRE & EXPLOSION HAZARDS
STRONG OXIDIZER. CONTACT WITH OTHER MATERIAL MAY CAUSE FIRE. CAN REACT VIOLENTLY WITH SHOCK, FRICTION OR HEAT.

TOXIC GASES PRODUCED
OXIDES OF NITROGEN

EXPLOSION DATA-SENSITIVITY TO MECHANICAL IMPACT
NONE IDENTIFIED.

EXPLOSION DATA-SENSITIVITY TO STATIC DISCHARGE
NONE IDENTIFIED.

SECTION V - HEALTH HAZARD DATA

THRESHOLD LIMIT VALUE (TLV/TWA): NOT ESTABLISHED

SHORT-TERM EXPOSURE LIMIT (STEL): NOT ESTABLISHED

PERMISSIBLE EXPOSURE LIMIT (PEL): NOT ESTABLISHED

TOXICITY OF COMPONENTS

ORAL RAT LD50 FOR CALCIUM NITRATE, 4-HYDRATE 3900 MG/KG
CARCINOGENICITY: NTP: NO IARC: NO Z LIST: NO OSHA REG: NO

CONTINUED ON PAGE: 4

SECTION V - HEALTH HAZARD DATA (CONTINUED)

CARCINOGENICITY
NONE IDENTIFIED.

REPRODUCTIVE EFFECTS
NONE IDENTIFIED.

EFFECTS OF OVEREXPOSURE

INHALATION: IRRITATION OF UPPER RESPIRATORY TRACT

SKIN CONTACT: IRRITATION

EYE CONTACT: IRRITATION

SKIN ABSORPTION: NONE IDENTIFIED

INGESTION: GASTROINTESTINAL IRRITATION, NAUSEA, VOMITING

CHRONIC EFFECTS: NONE IDENTIFIED

TARGET ORGANS
EYES, SKIN

MEDICAL CONDITIONS GENERALLY AGGRAVATED BY EXPOSURE
NONE IDENTIFIED

PRIMARY ROUTES OF ENTRY
SKIN CONTACT, EYE CONTACT, INHALATION, INGESTION

EMERGENCY AND FIRST AID PROCEDURES

INGESTION: CALL A PHYSICIAN. IF SWALLOWED, IF CONSCIOUS, GIVE LARGE AMOUNTS OF WATER. INDUCE VOMITING.

INHALATION: IF INHALED, REMOVE TO FRESH AIR. IF NOT BREATHING, GIVE ARTIFICIAL RESPIRATION. IF BREATHING IS DIFFICULT, GIVE OXYGEN.

SKIN CONTACT: IN CASE OF CONTACT, IMMEDIATELY FLUSH SKIN WITH PLENTY OF WATER FOR AT LEAST 15 MINUTES WHILE REMOVING CONTAMINATED CLOTHING AND SHOES. WASH CLOTHING BEFORE RE-USE.

CONTINUED ON PAGE: 5

SECTION V - HEALTH HAZARD DATA (CONTINUED)

EYE CONTACT: IN CASE OF EYE CONTACT, IMMEDIATELY FLUSH WITH PLENTY OF WATER FOR AT LEAST 15 MINUTES.

SARA/TITLE III HAZARD CATEGORIES AND LISTS

ACUTE: YES CHRONIC: YES FLAMMABILITY: YES PRESSURE: NO REACTIVITY: NO

EXTREMELY HAZARDOUS SUBSTANCE: NO
CERCLA HAZARDOUS SUBSTANCE: NO
TOXIC CHEMICALS: NO
TSCA INVENTORY: YES

SECTION VI - REACTIVITY DATA

STABILITY: STABLE HAZARDOUS POLYMERIZATION: WILL NOT OCCUR

CONDITIONS TO AVOID: HEAT, FLAME, SHOCK

INCOMPATIBLES: COMBUSTIBLE MATERIALS, STRONG REDUCING AGENTS, ORGANIC MATERIALS, AMMONIA

DECOMPOSITION PRODUCTS: OXIDES OF NITROGEN

SECTION VII - SPILL & DISPOSAL PROCEDURES

STEPS TO BE TAKEN IN THE EVENT OF A SPILL OR DISCHARGE
WEAR SELF-CONTAINED BREATHING APPARATUS AND FULL PROTECTIVE CLOTHING. KEEP COMBUSTIBLES (WOOD, PAPER, OIL, ETC.) AWAY FROM SPILLED MATERIAL. WITH CLEAN SHOVEL, CAREFULLY PLACE MATERIAL INTO CLEAN, DRY CONTAINER AND COVER; REMOVE FROM AREA. FLUSH SPILL AREA WITH WATER.

DISPOSAL PROCEDURE
DISPOSE IN ACCORDANCE WITH ALL APPLICABLE FEDERAL, STATE, AND LOCAL ENVIRONMENTAL REGULATIONS.

EPA HAZARDOUS WASTE NUMBER: D001 (IGNITABLE WASTE)

CONTINUED ON PAGE: 6

SECTION VIII - INDUSTRIAL PROTECTIVE EQUIPMENT

VENTILATION: USE ADEQUATE GENERAL OR LOCAL EXHAUST VENTILATION TO KEEP FUME OR DUST LEVELS AS LOW AS POSSIBLE.

RESPIRATORY PROTECTION: NONE REQUIRED WHERE ADEQUATE VENTILATION CONDITIONS EXIST. IF AIRBORNE CONCENTRATION IS HIGH, USE AN APPROPRIATE RESPIRATOR OR DUST MASK.

EYE/SKIN PROTECTION: SAFETY GOGGLES, UNIFORM, BUTYL RUBBER GLOVES ARE RECOMMENDED.

SECTION IX - STORAGE AND HANDLING PRECAUTIONS

SAF-T-DATA* STORAGE COLOR CODE: YELLOW (REACTIVE)

STORAGE REQUIREMENTS
KEEP CONTAINER TIGHTLY CLOSED. STORE SEPARATELY AND AWAY FROM FLAMMABLE AND COMBUSTIBLE MATERIALS.

SPECIAL PRECAUTIONS
DO NOT EXPOSE TO HEAT. PRODUCT MELTS AT 45 C (113 F). STORE/TRANSPORT AT OR BELOW 30 C (86 F).

SECTION X - TRANSPORTATION DATA AND ADDITIONAL INFORMATION

DOMESTIC (D.O.T.)

PROPER SHIPPING NAME: CALCIUM NITRATE
HAZARD CLASS: OXIDIZER
UN/NA: UN1454
LABELS: OXIDIZER
REGULATORY REFERENCES: 49CFR 172.101; 173.182

INTERNATIONAL (I.M.O.)

PROPER SHIPPING NAME: CALCIUM NITRATE
HAZARD CLASS: 5.1 I.M.O. PAGE: 5030
UN: UN1454 MARINE POLLUTANTS: NO PACKAGING GROUP: III
LABELS: OXIDIZING AGENT
REGULATORY REFERENCES: 49CFR 172.102; PART 176; IMO

CONTINUED ON PAGE: 7

SECTION X - TRANSPORTATION DATA AND ADDITIONAL INFORMATION (CONTINUED)

AIR (I.C.A.O.)

PROPER SHIPPING NAME: CALCIUM NITRATE
HAZARD CLASS: 5.1
UN: UN1454 PACKAGING GROUP: III
LABELS: OXIDIZING AGENT
REGULATORY REFERENCES: 49CFR 172.101; 173.6; PART 175; ICAO/IATA

U.S. CUSTOMS HARMONIZATION NUMBER: 28342900005

N/A = NOT APPLICABLE OR NOT AVAILABLE
N/E = NOT ESTABLISHED

THE INFORMATION IN THIS MATERIAL SAFETY DATA SHEET MEETS THE REQUIREMENTS OF THE UNITED STATES OCCUPATIONAL SAFETY AND HEALTH ACT AND RE ULATIONS PROMULGATED THEREUNDER (29 CFR 1910.1200 ET. SEQ.) AND THE CA...DIAN WORKPLACE HAZARDOUS MATERIALS INFORMATION SYSTEM. THIS DOCUMENT IS INTENDED ONLY AS A GUIDE TO THE APPROPRIATE PRECAUTIONARY HANDLING OF THE MATERIAL BY A PERSON TRAINED IN, OR SUPERVISED BY A PERSON TRAINED IN, CHEMICAL HANDLING. THE USER IS RESPONSIBLE FOR DETERMINING THE PRECAUTIONS AND DANGERS OF THIS CHEMICAL FOR HIS OR HER PARTICULAR APPLICATION. DEPENDING ON USAGE, PROTECTIVE CLOTHING INCLUDING EYE AND FACE GUARDS AND RESPIRATORS MUST BE USED TO AVOID CONTACT WITH MATERIAL OR BREATHING CHEMICAL VAPORS/FUMES.
EXPOSURE TO THIS PRODUCT MAY HAVE SERIOUS ADVERSE HEALTH EFFECTS. THIS CHEMICAL MAY INTERACT WITH OTHER SUBSTANCES. SINCE THE POTENTIAL USES ARE SO VARIED, BAKER CANNOT WARN OF ALL OF THE POTENTIAL DANGERS OF USE OR INTERACTION WITH OTHER CHEMICALS OR MATERIALS. BAKER WARRANTS THAT THE CHEMICAL MEETS THE SPECIFICATIONS SET FORTH ON THE LABEL.
BAKER DISCLAIMS ANY OTHER WARRANTIES, EXPRESSED OR IMPLIED WITH REGARD TO THE PRODUCT SUPPLIED HEREUNDER, ITS MERCHANTABILITY OR ITS FITNESS FOR A PARTICULAR PURPOSE.
THE USER SHOULD RECOGNIZE THAT THIS PRODUCT CAN CAUSE SEVERE INJURY AND EVEN DEATH, ESPECIALLY IF IMPROPERLY HANDLED OR THE KNOWN DANGERS OF USE ARE NOT HEEDED. READ ALL PRECAUTIONARY INFORMATION. AS NEW DOCUMENTED GENERAL SAFETY INFORMATION BECOMES AVAILABLE, BAKER WILL PERIODICALLY REVISE THIS MATERIAL SAFETY DATA SHEET. IF YOU HAVE ANY QUESTIONS, PLEASE CALL CUSTOMER SERVICE (1-800-JTBAKER) FOR ASSISTANCE.

COPYRIGHT 1989 J.T.BAKER INC.
* TRADEMARKS OF J.T.BAKER INC.

CONTINUED ON PAGE: 8

==========

===

APPROVED BY QUALITY ASSURANCE DEPARTMENT.

-- LAST PAGE --

CHLORINE

CLX

Common Synonyms	Liquefied compressed gas	Greenish yellow	Irritating, bleach-like choking odor

Sinks and boils in water. Poisonous, visible vapor cloud is produced.

AVOID CONTACT WITH LIQUID AND VAPOR. Keep people away.
Wear goggles, self-contained breathing apparatus and rubber overclothing (including gloves).
Stop discharge if possible.
Evacuate area in case of large discharge.
Stay upwind and use water spray to knock down vapor.
Notify local health and pollution control agencies.

Fire

Not flammable.
May cause fire on contact with combustibles.
POISONOUS GASES ARE PRODUCED IN FIRES.
Stop flow of gas if possible.
Cool exposed containers and protect men effecting shutoff with water.
Wear goggles, self-contained breathing apparatus, and rubber overclothing (including gloves).

Exposure

CALL FOR MEDICAL AID.

VAPOR
POISONOUS IF INHALED.
Will burn eyes.
Move to fresh air.
If breathing has stopped, give artificial respiration, but NOT mouth-to-mouth.
If breathing is difficult, give oxygen.
IF IN EYES: hold eyelids open and flush with plenty of water.

LIQUID
Will burn skin and eyes.
Will cause frostbite.
Flush affected areas with plenty of water.
IF IN EYES: hold eyelids open and flush with plenty of water.
DO NOT RUB AFFECTED AREAS.

Water Pollution

HARMFUL TO AQUATIC LIFE IN VERY LOW CONCENTRATIONS.
May be dangerous if it enters water intakes.

Notify local health and wildlife officials.
Notify operators of nearby water intakes.

1. RESPONSE TO DISCHARGE

(See Response Methods Handbook)

Issue warning-poison
Restrict access
Evacuate area

2. LABEL

2.1 Category: Nonflammable gas; Poison
2.2 Class: 2 and 6

3. CHEMICAL DESIGNATIONS

3.1 CG Compatibility Class: Not listed
3.2 Formula: Cl_2
3.3 IMO/UN Designation: 2.0/1017
3.4 DOT ID No.: 1017
3.5 CAS Registry No.: 7782-50-5

4. OBSERVABLE CHARACTERISTICS

4.1 Physical State (as shipped): Liquefied compressed gas
4.2 Color: Greenish yellow
4.3 Odor: Characteristic choking

5. HEALTH HAZARDS

5.1 Personal Protective Equipment: Quick-opening safety shower and eye fountain; respiratory equipment approved for chlorine service. Wear safety goggles at all times when in vicinity of liquid chlorine.

5.2 Symptoms Following Exposure: Eye irritation, tearing, copious salivation, general discomfort and restlessness. Irritation may persist for several days. High concentrations cause respiratory distress and violent coughing, often with retching. Death may result from suffocation.

5.3 Treatment of Exposure: INHALATION: remove victim from source of exposure; call a doctor; support respiration; administer oxygen. EYES: flush with copious amounts of water for at least 15 min.

5.4 Threshold Limit Value: 1 ppm

5.5 Short Term Inhalation Limits: 3 ppm for 5 min.

5.6 Toxicity by Ingestion: Not pertinent; ingestion unlikely (chlorine is a gas above -34.5°C)

5.7 Late Toxicity: None

5.8 Vapor (Gas) Irritant Characteristics: Vapors cause severe irritation of eyes and throat and can cause eye and lung injury. They cannot be tolerated even at low concentrations.

5.9 Liquid or Solid Irritant Characteristics: Causes smarting of the skin and first-degree burns on short exposure; may cause secondary burns on long exposure.

5.10 Odor Threshold: 3.5 ppm

5.11 IDLH Value: 25 ppm

6. FIRE HAZARDS

6.1 Flash Point: Not flammable
6.2 Flammable Limits in Air: Not flammable
6.3 Fire Extinguishing Agents: Data not available
6.4 Fire Extinguishing Agents Not to be Used: Not pertinent
6.5 Special Hazards of Combustion Products: Toxic products are generated when combustibles burn in chlorine
6.6 Behavior in Fire: Most combustibles will burn in chlorine, although gas is not flammable
6.7 Ignition Temperature: Not flammable
6.8 Electrical Hazard: Data not available
6.9 Burning Rate: Not flammable
6.10 Adiabatic Flame Temperature: Data not available

(Continued)

7. CHEMICAL REACTIVITY

7.1 Reactivity With Water: Forms a corrosive solution
7.2 Reactivity with Common Materials: Reacts vigorously with most metals at high temperature. Copper may burn spontaneously.
7.3 Stability During Transport: Stable
7.4 Neutralizing Agents for Acids and Caustics: Not pertinent
7.5 Polymerization: Not pertinent
7.6 Inhibitor of Polymerization: Not pertinent
7.7 Molar Ratio (Reactant to Product): Data not available
7.8 Reactivity Group: See Table 1, Compatibility Guide

8. WATER POLLUTION

8.1 Aquatic Toxicity:
0.08 ppm/168 hr/trout/TL_m/fresh water
10 ppm/1 hr/tunicates/killed/salt water
8.2 Waterfowl Toxicity: Data not available
8.3 Biological Oxygen Demand (BOD): None
8.4 Food Chain Concentration Potential: None

9. SHIPPING INFORMATION

9.1 Grades of Purity: Research purity; ultra high purity; high purity
9.2 Storage Temperature: Ambient
9.3 Inert Atmosphere: No requirement
9.4 Venting: Safety relief (300 psi)

10. HAZARD ASSESSMENT CODE

(See Hazard Assessment Handbook)

A-C-I-J

11. HAZARD CLASSIFICATIONS

11.1 Code of Federal Regulations: Nonflammable gas
11.2 NAS Hazard Rating for Bulk Water Transportation:

Category	Rating
Fire	0
Health	
Vapor Irritant	4
Liquid or Solid Irritant	2
Poisons	4
Water Pollution	
Human Toxicity	2
Aquatic Toxicity	3
Aesthetic Effect	2
Reactivity	
Other Chemicals	4
Water	1
Self Reaction	0

11.3 NFPA Hazard Classification:

Category	Classification
Health Hazard (Blue)	3
Flammability (Red)	0
Reactivity (Yellow)	0

Key

12. PHYSICAL AND CHEMICAL PROPERTIES

12.1 Physical State at 15°C and 1 atm: Gas
12.2 Molecular Weight: 70.91
12.3 Boiling Point at 1 atm: −29.4°F = −34.1°C = 239.1°K
12.4 Freezing Point: −150°F = −101°C = 172°K
12.5 Critical Temperature: 291°F = 144°C = 417°K
12.6 Critical Pressure: 1118 psa = 76.05 atm = 7.704 MN/m²
12.7 Specific Gravity: 1.424 at 15°C (liquid)
12.8 Liquid Surface Tension: 26.56 dynes/cm at −35.3°C
12.9 Liquid Water Interfacial Tension: Not pertinent
12.10 Vapor (Gas) Specific Gravity: 2.4
12.11 Ratio of Specific Heats of Vapor (Gas): 1.335
12.12 Latent Heat of Vaporization: 124 Btu/lb = 68.7 cal/g = 2.87 X 10⁴ J/kg
12.13 Heat of Combustion: Not pertinent
12.14 Heat of Decomposition: Not pertinent
12.15 Heat of Solution: Not pertinent
12.16 Heat of Polymerization: Not pertinent
12.17 Heat of Fusion: 22.8 cal/g
12.18 Limiting Value: Data not available
12.19 Reid Vapor Pressure: 166 psia

6. FIRE HAZARDS (Continued)

6.11 Stoichiometric Air to Fuel Ratio: Data not available
6.12 Flame Temperature: Data not available

CHLORINE

12.17 TURATED LIQUID DENSITY		12.18 LIQUID HEAT CAPACITY		12.19 LIQUID THERMAL CONDUCTIVITY		12.20 LIQUID VISCOSITY	
Temperature (degrees F)	Pounds per cubic foot	Temperature (degrees F)	British thermal unit per pound-F	Temperature (degrees F)	British thermal unit-inch per hour-square foot-F	Temperature (degrees F)	Centipoise
—35	97.179		NOT PERTINENT		NOT PERTINENT		NOT PERTINENT
—30	96.730						

12.21 SOLUBILITY IN WATER		12.22 SATURATED VAPOR PRESSURE		12.23 SATURATED VAPOR DENSITY		12.24 IDEAL GAS HEAT CAPACITY	
Temperature (degrees F)	Pounds per 100 pounds of water	Temperature (degrees F)	Pounds per square inch	Temperature (degrees F)	Pounds per cubic foot	Temperature (degrees F)	British thermal unit per pound-F
77.02	.650	—55	7.491	—55	.12230	0	.112
		—50	8.580	—50	.13840	25	.113
		—45	9.795	—45	.15600	50	.114
		—40	11.150	—40	.17550	75	.114
		—35	12.650	—35	.19670	100	.115
		—30	14.310	—30	.22000	125	.116
		—25	16.140	—25	.24530	150	.116
		—20	18.150	—20	.27280	175	.117
		—15	20.370	—15	.30280	200	.118
		—10	22.790	—10	.33490	225	.118
		—5	25.450	—5	.36970	250	.119
		0	28.340	0	.40720	275	.119
		5	31.490	5	.44760	300	.120
		10	34.910	10	.49090	325	.120
		15	38.610	15	.53730	350	.120
		20	42.620	20	.58700	375	.121
		25	46.950	25	.63990	400	.121
		30	51.620	30	.69640	425	.121
		35	56.650	35	.75650	450	.122
		40	62.050	40	.82030	475	.122
		45	67.839	45	.88790	500	.122
		50	74.040	50	.95960	525	.122
						550	.122
						575	.122
						600	.122

Genium Publishing Corporation
1145 Catalyn Street
Schenectady, NY 12303-1836 USA
(518) 377-8854

Material Safety Data Sheets Collection:

Sheet No. 366
Chlorobenzene

Issued: 11/82 Revision: B, 11/90

Section 1. Material Identification

33

Chlorobenzene (C_6H_5Cl) Description: Produced by chlorinating benzene in the presence of a catalyst. Used in dry cleaning; as a solvent in manufacturing paints, adhesives, polishes, waxes, diisocyanates, natural rubber, and pharmaceuticals; a chemical intermediate for phenol, *o*-, and *p*-chloronitrobenzene, DDT, and aniline; and an intermediate in manufacturing dyestuffs.

Other Designations: CAS No. 0108-90-7, benzene chloride; chlorobenzol; MCB; monochlorobenzene; phenyl chloride.

Manufacturer: Contact your supplier or distributor. Consult the latest *Chemicalweek Buyers' Guide*[73] for a suppliers list.

R 1
I 3
S 2
K 3

NFPA

HMIS
H 2
F 3
R 0
PPG*
* Sec. 8

Cautions: Chlorobenzene is a skin and mucous membrane irritant, a fairly strong narcotic, and a central nervous system (CNS) depressant. Chronic inhalation may cause *lung, liver, and kidney damage*. This material is a dangerous fire hazard when exposed to heat or flame.

Section 2. Ingredients and Occupational Exposure Limits

Chlorobenzene, ca 100%

1989 OSHA PEL	1990-91 ACGIH TLV*	1988 NIOSH REL	1985-86 Toxicity Data†
8-hr TWA: 75 ppm, 350 mg/m³	TWA: 75 ppm, 345 mg/m³	None established	Rat, oral, LD_{50}: 2910 mg/kg; toxic effects not yet reviewed
			Rat, inhalation, TC_{Lo}: 210 ppm administered for 6 hr to a 6- to 15-day pregnant female produces specific developmental abnormalities
1987 IDLH Level			
2400 ppm			

* In its "Notice of Intended Changes (for 1990-91)," the ACGIH lists a proposed lower level TWA for chlorobenzene: 10 ppm, 46 mg/m³.[139]
†See NIOSH, *RTECS* (CZ0175000), for additional mutative, reproductive, and toxicity data.

Section 3. Physical Data

Boiling Point: 270 °F (132 °C) at 760 mm Hg
Melting Point: -50.1 °F (-45.6 °C)
Vapor Pressure: 11.8 mm Hg at 77 °F (25 °C)
Vapor Density (Air = 1): 3.88
Viscosity: 0.790 centipoise at 70 °F (21 °C)
Molecular Weight: 112.56
Specific Gravity (20 °C/4 °C): 1.1058
Water Solubility: Insoluble

Appearance and Odor: A clear, colorless, volatile liquid with a faint, almond-like odor. Threshold odor concentration: 100% recognition, 0.21 ppm.

Section 4. Fire and Explosion Data

Flash Point: 85 °F (29.5 °C), CC	Autoignition Temperature: 1180 °F (638 °C)	LEL: 1.8% v/v	UEL: 9.6% v/v

Extinguishing Media: Use carbon dioxide, dry chemical, halon, water spray, or standard foam to extinguish fires involving chlorobenzene. Use water in flooding quantities as fog since solid streams of water may spread fire. Apply water spray from as far as possible to cool fire-exposed containers.

Unusual Fire or Explosion Hazards: Chlorobenzene is dangerous when exposed to heat or flame. Vapor may travel to an ignition source and flash back.

Special Fire-fighting Procedures: Isolate hazard area and deny entry. Since fire may produce toxic fumes, wear a self-contained breathing apparatus (SCBA) with a full facepiece operated in the pressure-demand or positive-pressure mode. Do not extinguish fire unless flow can be stopped. Be aware of runoff from fire control methods. Do not release to sewers or waterways.

Section 5. Reactivity Data

Stability/Polymerization: Chlorobenzene is stable at room temperature in closed containers under normal storage and handling conditions. Hazardous polymerization cannot occur.

Chemical Incompatibilities: Chlorobenzene is incompatible with strong oxidizers; contact may cause fires and explosions. It reacts violently with dimethyl sulfoxide. Silver perchlorate forms a solvated, shock-sensitive salt with chlorobenzene (explosion). Chlorobenzene is potentially explosive with powdered sodium or phosphorus trichloride + sodium.

Conditions to Avoid: Avoid all heat and ignition sources and incompatible materials.

Hazardous Products of Decomposition: Thermal oxidative decomposition products of chlorobenzene can include soot, hydrogen chloride, phosgene, and carbon monoxide.

Copyright © 1990 Genium Publishing Corporation.
Any commercial use or reproduction without the publisher's permission is prohibited.

Section 6. Health Hazard Data

Carcinogenicity: The NTP, IARC, and OSHA do not list chlorobenzene as a carcinogen.
Summary of Risks: Chlorobenzene is a fairly strong narcotic and can cause central nervous system (CNS) depression. Overexposure is irritating to the eyes, nasal passages, and upper respiratory tract. It is moderately toxic by inhalation or ingestion and can be absorbed slowly through the skin. Short exposures to liquid may cause skin irritation and defatting, while prolonged or repeated skin contact may result in dermatitis or skin burns. Following absorption of toxic doses, liver and kidney degeneration are also observed. Chlorobenzene may also cause hemolysis.
Medical Conditions Aggravated by Long-Term Exposure: Individuals with skin, liver, kidney, or chronic respiratory disease may be at increased risk from exposure.
Target Organs: Respiratory system, eyes, skin, central nervous system, and liver.
Primary Entry Routes: Inhalation, ingestion, eye and skin contact.
Acute Effects: Symptoms to be expected from acute exposure are headache, eye and upper respiratory tract irritation, dizziness, drowsiness, cyanosis, spastic contractions of extremities, and loss of consciousness, depending on the exposure's concentration and duration. Symptoms of ingestion include pallor, cyanosis, and coma, followed by complete recovery.
Chronic Effects: Frequently repeated contact with chlorobenzene may result in skin burns, eye and upper respiratory tract irritation, headaches, dizziness, somnolence, and dyspeptic disorders (indigestion). Chronic inhalation may result in lung, liver, and kidney damage.
FIRST AID
Eyes: Gently lift the eyelids and flush immediately and continuously with flooding amounts of water until transported to an emergency medical facility. Consult a physician immediately.
Skin: *Quickly* remove contaminated clothing. Rinse with flooding amounts of water for at least 15 min. For reddened or blistered skin, consult a physician. Wash affected area with soap and water.
Inhalation: Remove exposed person to fresh air and support breathing as needed.
Ingestion: Never give anything by mouth to an unconscious or convulsing person. If ingested, have that *conscious* person drink 1 to 2 glasses of water. Consult a physician immediately. If vomiting occurs, administer more water.
After first aid, get appropriate in-plant, paramedic, or community medical support.
Note to Physicians: In a *conscious* patient, attempt to induce vomiting with Syrup of Ipecac. Consider activated charcoal cathartic. Administer charcoal slurry with saline, water, or sorbitol. In an *unconscious* patient, do gastric lavage with suction.

Section 7. Spill, Leak, and Disposal Procedures

Spill/Leak: *Design and practice a chlorobenzene spill control and counter measure plan (SCCP).* Notify safety personnel, evacuate all unnecessary personnel, eliminate all heat and ignition sources, and provide maximum explosion-proof ventilation. Cleanup personnel should protect against vapor inhalation and contact with liquid. Take up spilled material with a noncombustible absorbent material and place into containers for disposal. For large spills, dike far ahead of spill to contain. Do not release runoff to sewers or waterways since chlorobenzene is harmful to aquatic life in very low concentrations. Aquatic toxicity: A 20-ppm concentration of chlorobenzene administered to bluegill in fresh water during a 96-hr test period is the median tolerance limit (TLm) at which 50% of the aquatic organisms survive. Follow applicable OSHA regulations (29 CFR 1910.120).
Disposal: Contact your supplier or a licensed contractor for detailed recommendations. Follow applicable Federal, state, and local regulations.
EPA Designations
Listed as a RCRA Hazardous Waste (40 CFR 261.33), Hazardous Waste No. U037
CERCLA Hazardous Substance* (40 CFR 302.4), Reportable Quantity (RQ): 100 lb (45.4 kg) [* per Clean Water Act, Sec. 311(b)(4), Sec. 307(a), and per RCRA, Sec. 3001]
SARA Extremely Hazardous Substance (40 CFR 355): Not listed
Listed as a SARA Toxic Chemical (40 CFR 372.65)
OSHA Designations
Listed as an Air Contaminant (29 CFR 1910.1000, Table Z-1-A)

Section 8. Special Protection Data

Goggles: Wear protective eyeglasses or chemical safety goggles, per OSHA eye- and face-protection regulations (29 CFR 1910.133).
Respirator: Seek professional advice prior to respirator selection and use. Follow OSHA respirator regulations (29 CFR 1910.134) and, if necessary, wear a NIOSH-approved respirator. Use an organic vapor-acid gas respirator where appropriate. For emergency or nonroutine operations (cleaning spills, reactor vessels, or storage tanks), wear an SCBA. *Warning! Air-purifying respirators do not protect workers in oxygen-deficient atmospheres.*
Other: Wear impervious gloves, boots, aprons, and gauntlets (polyvinyl alcohol is recommended) to prevent prolonged or repeated skin contact.
Ventilation: Provide general and local explosion-proof ventilation systems to maintain airborne concentrations below the OSHA PEL and ACGIH TLV (Sec. 2). Local exhaust ventilation is preferred since it prevents contaminant dispersion into the work area by controlling it at its source.[107]
Safety Stations: Make available in the work area emergency eyewash stations, safety/quick-drench showers, and washing facilities.
Contaminated Equipment: Never wear contact lenses in the work area: soft lenses may absorb, and all lenses concentrate, irritants. Remove this material from your shoes and equipment. Launder contaminated clothing before wearing.
Comments: Never eat, drink, or smoke in work areas. Practice good personal hygiene after using this material, especially before eating, drinking, smoking, using the toilet, or applying cosmetics.

Section 9. Special Precautions and Comments

Storage Requirements: Store in tightly closed containers in a well-ventilated, fire-resistant area away from heat and ignition sources and oxidizing agents. Outside or detached storage is preferred. Storage and handling must be suitable for an OSHA Class IC flammable liquid. To prevent static sparks, electrically ground and bond all containers and equipment used in shipping, receiving, or transferring operations in production and storage areas. Protect containers from physical damage.
Engineering Controls: Avoid vapor inhalation and contact with liquid. Use only with adequate ventilation and appropriate personal protective gear. Institute a respiratory protection program that includes regular training, maintenance, inspection, and evaluation. Practice good personal hygiene and housekeeping procedures.
Other Precautions: Provide a preplacement questionnaire that emphasizes detecting a history of skin, liver, kidney, or chronic respiratory disease.

Transportation Data (49 CFR 172.101, .102)

DOT Shipping Name: Chlorobenzene	**IMO Shipping Name:** Chlorobenzene
DOT Hazard Class: Flammable liquid	**IMO Hazard Class:** 3.3
ID No.: UN1134	**ID No.:** UN1134
DOT Label: Flammable liquid	**IMO Label:** Flammable liquid
DOT Packaging Exceptions: 173.118	**IMDG Packaging Group:** II
DOT Packaging Requirements: 173.119	

MSDS Collection **References:** 38, 73, 84, 85, 89, 100, 101, 103, 124, 126, 131, 132, 133, 136, 138, 139, 140, 143, 146, 148
Prepared by: MJ Allison, BS; **Industrial Hygiene Review:** DJ Wilson, CIH; **Medical Review:** AC Darlington, MD; **Edited by:** JR Stuart, MS

Copyright © 1990 by Genium Publishing Corporation. Any commercial use or reproduction without the publisher's permission is prohibited. Judgments as to the suitability of information herein for the purchaser's purposes are necessarily the purchaser's responsibility. Although reasonable care has been taken in the preparation of such information, Genium Publishing Corporation extends no warranties, makes no representations, and assumes no responsibility as to the accuracy or suitability of such information for application to the purchaser's intended purpose or for consequences of its use.

ALL RIGHTS RESERVED
TWX 510-670-3600
CUSTOMER P.O. NO. VERBAL /JOHN

DATE 7/06/92 MATERIAL SAFETY DATA SHEET

SECTION I -GENERAL INFORMATION

CATALOG NO 40006 (REORDER PRODUCT BY THIS NO.)
PRODUCT NAME CHLOROBENZENE 5000UG/ML, 1ML
DATA SHEET NO I400060
CHLOROBENZENE
FORMULA MIXTURE FORMULA WEIGHT
CAS NRTECS
SYNONYM ANALYTICAL STANDARD IN METHANOL
MANUFACTURER SUPELCO INC. PHONE 814-359-3441
ADDRESS SUPELCO PARK, BELLEFONTE, PA 16823-0048

SECTION II - HAZARDOUS INGREDIENTS OF MIXTURES

CHEMICAL NAME
COMMON NAME - PERCENTAGE - CAS #
(FORMULA) - PEL(UNITS) - TLV(UNITS)
LD50 VALUE - CONDITIONS

BENZENE, CHLORO-
CHLOROBENZENE 0.5 108-90-
C6H5Cl 75 PPM 75 PPM
2190 MG/KG ORAL RAT SEE FOOTNOTE(6)
METHANOL
METHANOL 99.5 67-56-
CH3OH 260 MG/M3 262 MG/M3
5628 MG/KG ORAL RAT SEE FOOTNOTE(6)

FOOTNOTES

6 SUBJECT TO THE REPORTING REQUIREMENTS OF SARA TITLE III, SECTION 313.

SECTION III - PHYSICAL DATA

BOILING POINT 65 C MM MELTING POINT -98 C
VAPOR PRESSURE 100 MM C VAPOR DENSITY 1.10 C (AIR=1)
SPECIFIC GRAVITY .790 G/ML C (WATER=1) PERCENT VOLATILE BY VOLUME 10
WATER SOLUBILITY 100 EVAPORATION RATE >1 (ETHER=1)
APPEARANCE CLEAR COLORLESS LIQUID

SECTION IV - FIRE AND EXPLOSION HAZARD DATA

FLASH POINT 50 F FLAMMABLE LIMITS LEL 6.0 UEL 3(

EXTINGUISHING MEDIA

CO2
DRY CHEMICAL
ALCOHOL FOAM.

SPECIAL FIRE FIGHTING PROCEDURES

WEAR SELF CONTAINED BREATHING APPARATUS WHEN FIGHTING A CHEMICAL FIRE.

UNUSUAL FIRE AND EXPLOSION HAZARDS

THE FOLLOWING TOXIC VAPORS ARE FORMED WHEN THIS MATERIAL IS HEATED TO DECOMPOSITION.

CATALOG NO 40006 (REORDER PRODUCT BY THIS NO.)
PRODUCT NAME CHLOROBENZENE 5000UG/ML, 1ML
DATA SHEET NO I400060
CHLOROBENZENE

* CONTINUED *
HYDROGEN CHLORIDE

SECTION V - HEALTH HAZARD DATA

LD50	5628	MG/KG	ORAL RAT	TLV	262	MG/M3
PEL	260	MG/M3				

EMERGENCY AND FIRST AID PROCEDURES

EYES
FLUSH EYES WITH WATER FOR 15 MINUTES.
CONTACT A PHYSICIAN.

SKIN
FLUSH SKIN WITH LARGE VOLUMES OF WATER.

INHALATION
IMMEDIATELY MOVE TO FRESH AIR.
IF BREATHING STOPS, GIVE ARTIFICIAL RESPIRATION
CONTACT A PHYSICIAN

INGESTION
NEVER GIVE ANYTHING BY MOUTH TO AN UNCONSCIOUS PERSON
NEVER TRY TO MAKE AN UNCONSCIOUS PERSON VOMIT
GIVE 2 TABLESPOONS OF BAKING SODA IN A GLASS OF WATER
PRESS FINGERS TO BACK OF TONGUE TO INDUCE VOMITING.
IMMEDIATELY CONTACT A PHYSICIAN.

EFFECTS OF OVEREXPOSURE

HARMFUL IF INHALED
MAY BE FATAL IF SWALLOWED
CONTAINS MATERIAL(S) KNOWN TO THE STATE OF CALIFORNIA TO CAUSE CANCER.
HEADACHE
NAUSEA
GASTROINTESTINAL DISTURBANCES
BLINDNESS

SECTION VI - REACTIVITY DATA

STABILITY STABLE.

CONDITIONS TO AVOID

N/A

INCOMPATIBILITY

OXIDIZING AGENTS

(REORDER PRODUCT BY THIS NO.)
.BENZENE 5000UG/ML, 1ML
0060
CHLOROBENZENE

SECTION VI - REACTIVITY DATA

LEAD PERCHLORATE, PERCHLORIC ACIDS

TION PRODUCTS

TION WILL NOT OCCUR.

SECTION VII - SPILL OR LEAK PROCEDURES

CASE MATERIAL IS RELEASED OR SPILLED

ENT MATERIAL.

TION SOURCES.

-

ICABLE FEDERAL, STATE, OR LOCAL REGULATIONS

TION VIII - SPECIAL PROTECTION INFORMATION

ON (SPECIFIC TYPE)

..IC VAPOR CANISTER.

.

SSES.

ILATED AREA.

CATALOG NO 40006 (REORDER PRODUCT BY THIS NO.)
PRODUCT NAME CHLOROBENZENE 5000UG/ML, 1ML
DATA SHEET NO I400060
CHLOROBENZENE

SECTION VIII - SPECIAL PROTECTION INFORMATION

* CONTINUED *

OTHER PROTECTIVE EQUIPMENT

N/A

SECTION IX - SPECIAL PRECAUTIONS

STORAGE AND HANDLING

REFRIGERATE IN SEALED CONTAINER.
KEEP AWAY FROM OXIDIZERS.
KEEP AWAY FROM IGNITION SOURCES.

OTHER PRECAUTIONS

AVOID EYE OR SKIN CONTACT.
AVOID BREATHING VAPORS.

WHILE THE INFORMATION AND RECOMMENDATIONS SET FORTH HEREIN ARE BELIEVED TO BE ACCURATE AS OF THE DATE HEREOF, SUPELCO, INC. MAKES NO WARRANTY WITH RESPECT TO RETO AND DISCLAIMS ALL LIABILITY FROM RELIANCE THEREON.

AST REVISED 11/25/91

Material Safety Data Sheet

From Genium's Reference Collection
Genium Publishing Corporation
1145 Catalyn Street
Schenectady, NY 12303-1836 USA
(518) 377-8855

GENIUM PUBLISHING CORP.

No. 315

CHLOROFORM
(Revision D)
Issued: August 1979
Revised: April 1988

SECTION 1. MATERIAL IDENTIFICATION

25

Material Name: CHLOROFORM

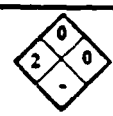

Description (Origin/Uses): Used as a solvent for fats, oils, rubber, alkaloids, waxes, and resins; as a cleansing agent.

Other Designations: Trichloromethane; $CHCl_3$; NIOSH *RTECS* No. FS9100000; CAS No. 0067-66-3

Manufacturer: Contact your supplier or distributor. Consult the latest edition of the *Chemicalweek Buyers' Guide* (Genium ref. 73) for a list of suppliers.

HMIS	
H 2	
F 0	R 1
R 0	I 3
PPG*	S 2
*See sect. 8	K 0

SECTION 2. INGREDIENTS AND HAZARDS	%	EXPOSURE LIMITS
Chloroform, CAS No. 0067-66-3	Ca 100	**OSHA PEL** Ceiling: 50 ppm, 240 mg/m³ **ACGIH TLV, 1987-88** TLV-TWA: 10 ppm, 50 mg/m³ **NIOSH REL** Ceiling: 2 ppm, 9.78 mg/m³ **Toxicity Data*** Human, Oral, LD_{Lo}: 140 mg/kg Rat, Oral, LD_{50}: 908 mg/kg
*See NIOSH, *RTECS*, for additional toxicity data with references to mutagenic, reproductive, tumorigenic, and irritative effects.		

SECTION 3. PHYSICAL DATA

Boiling Point: 142°F (61°C)
Melting Point: -82.3°F (-63.5°C)
Vapor Pressure: 158.4 Torrs at 68°F (20°C)
Vapor Density (Air = 1): 4.13
Water Solubility (%): 0.822 ml of $CHCl_3$ per 100 ml of H_2O at 68°F (20°C)
% Volatile by Volume: 100
Molecular Weight: 119 Grams/Mole
Specific Gravity (H_2O = 1): 1.484 at 68°F (20°C)

Appearance and Odor: A heavy, colorless, clear, volatile liquid; characteristic, pleasant, ethereal, sweet odor (recognition threshold: 0.3 mg/m³); sweet taste.

SECTION 4. FIRE AND EXPLOSION DATA

Flash Point and Method	Autoignition Temperature	Flammability Limits in Air	LOWER	UPPER
•	•	% by Volume	•	•

Extinguishing Media: •Chloroform does not burn. Use an agent that will put out the surrounding fire.

Unusual Fire or Explosion Hazards: None reported.

Special Fire-fighting Procedures: Wear a self-contained breathing apparatus (SCBA) with a full facepiece operated in the pressure-demand or positive-pressure mode.

SECTION 5. REACTIVITY DATA

Chloroform is stable if kept in closed containers and protected from air and sunlight. It does not undergo hazardous polymerization; however, even when stabilized with ethanol, this material develops acidity from prolonged exposure to air and light.

Chemical Incompatibilities: This material is incompatible with strong alkalies.

Conditions to Avoid: Avoid prolonged exposure to air and light and to strong alkalies.

Hazardous Products of Decomposition: Toxic and corrosive gases like hydrochloric acid (HCl), chlorine (Cl_2), carbon monoxide (CO), and oxides of chlorine (ClO_2) can be produced during fires.

Copyright © 1988 Genium Publishing Corporation.
Any commercial use or reproduction without the publisher's permission is prohibited.

SECTION 6. HEALTH HAZARD INFORMATION

Chloroform is listed as a suspected human carcinogen by ACGIH.

Summary of Risks: Exposure to this material affects the central nervous system (anesthesia); heart (arrhythmia, ventricular tachycardia, bradycardia); liver (necrosis, hepatoma); kidney (necrosis); and it is an embryonic toxin. Fatalities are associated with cardiovascular depression and ventricular fibrillation.
Medical Conditions Aggravated by Long-Term Exposure: Ailments of the heart, liver, and kidneys may be worsened by exposure to chloroform. **Target Organs:** Liver, kidneys, heart, skin, eyes. **Primary Entry:** Skin contact, inhalation.
Acute Effects: Dizziness, mental dullness, nausea, headache, fatigue, and anesthesia. **Chronic Effects:** Possible cancer.
FIRST AID
Eyes: Immediately flush eyes, including under the eyelids, gently but thoroughly with plenty of running water for at least 15 minutes.
Skin: Immediately wash the affected area with soap and water. **Inhalation:** Remove the exposed person to fresh air; restore and/or support his or her breathing as needed.
Ingestion: Never give anything by mouth to someone who is unconscious or convulsing. If the exposed person is responsive, give him or her several glasses of milk or water to drink and induce vomiting. Repeat if large quantities were ingested.
Comments: Workers who are regularly exposed to chloroform require preplacement and periodic medical exams emphasizing kidney, liver, skin, and central nervous system functions. Carefully evaluate each exposure that produces a noticeable effect to determine the extent to which factors like alcohol or drugs have affected it.

GET MEDICAL HELP (IN PLANT, PARAMEDIC, COMMUNITY) FOR ALL EXPOSURES. Seek prompt medical assistance for further treatment, observation, and support after first aid.

SECTION 7. SPILL, LEAK, AND DISPOSAL PROCEDURES

Spill/Leak: Notify safety personnel of a chloroform spill or leak. Provide ventilation. Cleanup personnel need protection against contact with and inhalation of vapor (see sect. 8). Chloroform vapor is heavier than air and will collect in low-lying areas. Contain large spills and collect waste or absorb it with an inert material such as sand, earth, or vermiculite. Place waste liquid or absorbent into closable containers for disposal. Keep waste out of sewers, watersheds, and waterways.
Waste Disposal: Contact your supplier or a licensed contractor for detailed recommendations. Follow Federal, state, and local regulations.
OSHA Designations
Air Contaminant (29 CFR 1910.1000 Subpart Z)
EPA Designations (40 CFR 302.4)
RCRA Hazardous Waste, No. U044
CERCLA Hazardous Substance, Reportable Quantity: 5000 lbs (2270 kg)

SECTION 8. SPECIAL PROTECTION INFORMATION

Goggles: Always wear protective eyeglasses or chemical safety goggles. Where splashing is possible, wear a full face shield as a supplementary protective measure. Follow the eye- and face-protection guidelines in 29 CFR 1910.133. **Respirator:** Wear a NIOSH-approved respirator per the *NIOSH Pocket Guide to Chemical Hazards* for the maximum-use concentrations and/or the exposure limits cited in section 2. Follow the respirator guidelines in 29 CFR 1910.134. For emergency or nonroutine use (e.g., cleaning reactor vessels or storage tanks), wear an SCBA with a full facepiece operated in the pressure-demand or positive-pressure mode. **Warning:** Air-purifying respirators will *not* protect workers in oxygen-deficient atmospheres. **Other:** To prevent contact with skin, wear impervious gloves, boots, aprons, gauntlets, etc., as required by the specific work environment. **Ventilation:** Install and operate general and local ventilation systems that are powerful enough to maintain airborne levels of chloroform below the OSHA PEL standard cited in section 2.
Safety Stations: Make eyewash stations, washing facilities, and safety showers available in use and handling areas. **Contaminated Equipment:** Contact lenses pose a special hazard; soft lenses may absorb irritants and all lenses concentrate them. Do *not* wear contact lenses in any work area. Remove contaminated clothing and launder it before wearing it again; clean this material from shoes and equipment. **Comments:** Practice good personal hygiene; always wash thoroughly after using this material. Keep it off of your clothing and equipment. Avoid transferring it from your hands to your mouth while eating, drinking, or smoking. Do *not* eat, drink, or smoke in any work area. Avoid inhalation of vapor!

SECTION 9. SPECIAL PRECAUTIONS AND COMMENTS

Storage/Segregation: Store chloroform in closed containers away from light and alkalies.

Special Handling/Storage: Protect containers from physical damage. Do not transfer chloroform through plastic or rubber hoses or pipes.

Transportation Data (49 CFR 172.101-2)

DOT Shipping Name: Chloroform	**DOT Label:** None	**IMO Label:** Poison
DOT Class: ORM-A	**DOT ID No.** UN1888	**IMO Class:** 6.1

References: 1, 2, 12, 73, 84-94, 100, 103.

Judgments as to the suitability of information herein for purchaser's purposes are necessarily purchaser's responsibility. Therefore, although reasonable care has been taken in the preparation of such information, Genium Publishing Corp. extends no warranties, makes no representations and assumes no responsibility as to the accuracy or suitability of such information for application to purchaser's intended purposes or for consequences of its use.

Prepared by PJ Igoe, BS
Industrial Hygiene Review: DJ Wilson, CIH
Medical Review: MJ Hardies, MD

Copyright © 1988 Genium Publishing Corporation.
Any commercial use or reproduction without the publisher's permission is prohibited.

09-30A-11

Conductivity Calibrator
1,000 micromho/cm

Material Data Safety Sheet

Product: YSI 3161 Conductivity Calibrator 1000 micromho/cm

Components	CAS #	%
Potassium Chloride	7447407	<1.0
Iodine, resublimed	7553562	<1.0

Balance - Water

The hazards associated with this product are those related to the constituent chemicals. Material Safety Data Sheets for these materials are attached.

*****Multiple Component Spill or Leak Procedures*****

Steps to take if material is released or spilled

Wear appropriate protective equipment.
Wipe up the spill with absorbent material.
Wash the spill area.

Waste Disposal

Dispose in accordance with local, state and federal regulations.

YSI, Inc. October 30, 1990

09-390-18

Conductivity Calibrator
10,000 micromho/cm

Material Data Safety Sheet

Product: YSI 3163 Conductivity Calibrator 10,000 micromho/cm

Components	CAS #	%
Potassium Chloride	7447407	<1.0
Iodine, resublimed	7553562	<1.0

Balance - Water

The hazards associated with this product are those related to the constituent chemicals. Material Safety Data Sheets for these materials are attached.

*****Multiple Component Spill or Leak Procedures*****

Steps to take if material is released or spilled

Wear appropriate protective equipment.
Wipe up the spill with absorbent material.
Wash the spill area.

Waste Disposal

Dispose in accordance with local, state and federal regulations.

YSI, Inc. October 30, 1990

ATTN: SAFETY DIRECTOR
MARC VON KEITZ
MONTGOMERY AND WATSON
365 LENNON LANE
WALNUT CREEK, CA 94598

EMERGENCY PHONE 1-314-771-5765
PO BOX 14508 ST LOUIS MO 63175
DATE: 07/13/94
CUST#: 9-009-99999

M A T E R I A L S A F E T Y D A T A S H E E T PAGE 1

SECTION 1. - - - - - - - - - CHEMICAL IDENTIFICATION- - - - - - - - - -

PRODUCT #: P4504 NAME: POTASSIUM CHLORIDE

SECTION 2. - - - - - COMPOSITION/INFORMATION ON INGREDIENTS - - - - - -

CAS #:7447-40-7
MF: CL1K1

SYNONYMS

CHLORID DRASELNY (CZECH) * CHLOROPOTASSURIL * DIPOTASSIUM DICHLORIDE * EMPLETS POTASSIUM CHLORIDE * ENSEAL * KALITABS * KAOCHLOR * KAON-CL * KAON-CL 10 * KAON-CL TABS * KAY CIEL * K-LOR * KLOTRIX * K-LYTE/CL * K-PREDNE-DOME * MONOPOTASSIUM CHLORIDE * PFIKLOR * POTASSIUM MONOCHLORIDE * POTAVESCENT * REKAWAN * SLOW-K * TRIPOTASSIUM TRICHLORIDE *

SECTION 3. - - - - - - - - - - HAZARDS IDENTIFICATION - - - - - - - - - -

LABEL PRECAUTIONARY STATEMENTS

HARMFUL
HARMFUL BY INHALATION, IN CONTACT WITH SKIN AND IF SWALLOWED.
IRRITATING TO EYES, RESPIRATORY SYSTEM AND SKIN.
IN CASE OF CONTACT WITH EYES, RINSE IMMEDIATELY WITH PLENTY OF WATER AND SEEK MEDICAL ADVICE.
WEAR SUITABLE PROTECTIVE CLOTHING.

SECTION 4. - - - - - - - - - - FIRST-AID MEASURES- - - - - - - - - - -

IN CASE OF CONTACT, IMMEDIATELY FLUSH EYES WITH COPIOUS AMOUNTS OF WATER FOR AT LEAST 15 MINUTES.
IN CASE OF CONTACT, IMMEDIATELY WASH SKIN WITH SOAP AND COPIOUS AMOUNTS OF WATER.
IF INHALED, REMOVE TO FRESH AIR. IF NOT BREATHING GIVE ARTIFICIAL RESPIRATION. IF BREATHING IS DIFFICULT, GIVE OXYGEN.
IF SWALLOWED, WASH OUT MOUTH WITH WATER PROVIDED PERSON IS CONSCIOUS.
CALL A PHYSICIAN.
WASH CONTAMINATED CLOTHING BEFORE REUSE.

SECTION 5. - - - - - - - - - FIRE FIGHTING MEASURES - - - - - - - - - -

EXTINGUISHING MEDIA

WATER SPRAY.
CARBON DIOXIDE, DRY CHEMICAL POWDER OR APPROPRIATE FOAM.

SPECIAL FIREFIGHTING PROCEDURES

WEAR SELF-CONTAINED BREATHING APPARATUS AND PROTECTIVE CLOTHING TO

CONTINUED ON NEXT PAGE

FAX: USA/CANADA 1-800-325-5052

OUTSIDE THE USA/CANADA CALL COLLECT

FAX: 314-771-5757

M A T E R I A L S A F E T Y D A T A S H E E T PAGE 2

- -

DATE: 07/13/94

CUST#: 9-009-99999

PRODUCT #: P4504 NAME: POTASSIUM CHLORIDE

PREVENT CONTACT WITH SKIN AND EYES.
UNUSUAL FIRE AND EXPLOSIONS HAZARDS
EMITS TOXIC FUMES UNDER FIRE CONDITIONS.
SECTION 6. - - - - - - - - - ACCIDENTAL RELEASE MEASURES- - - - - - - - -

WEAR SELF-CONTAINED BREATHING APPARATUS, RUBBER BOOTS AND HEAVY RUBBER GLOVES.
SWEEP UP, PLACE IN A BAG AND HOLD FOR WASTE DISPOSAL.
AVOID RAISING DUST.
VENTILATE AREA AND WASH SPILL SITE AFTER MATERIAL PICKUP IS COMPLETE.
SECTION 7. - - - - - - - - - - - HANDLING AND STORAGE- - - - - - - - - - -

REFER TO SECTION 8.

SECTION 8. - - - - - - EXPOSURE CONTROLS/PERSONAL PROTECTION- - - - - -
CHEMICAL SAFETY GOGGLES.
RUBBER GLOVES.
NIOSH/MSHA-APPROVED RESPIRATOR.
SAFETY SHOWER AND EYE BATH.
MECHANICAL EXHAUST REQUIRED.
AVOID CONTACT AND INHALATION.
DO NOT GET IN EYES, ON SKIN, ON CLOTHING.
WASH THOROUGHLY AFTER HANDLING.
HARMFUL SOLID.
IRRITANT.
KEEP TIGHTLY CLOSED.
HYGROSCOPIC
STORE IN A COOL DRY PLACE.
SECTION 9. - - - - - - - PHYSICAL AND CHEMICAL PROPERTIES - - - - - - -

APPEARANCE AND ODOR
WHITE CRYSTALS
MELTING POINT: 770 C
SPECIFIC GRAVITY: 1.984

CONTINUED ON NEXT PAGE

FAX: USA/CANADA 1-800-325-5052

OUTSIDE THE USA/CANADA CALL COLLECT

FAX: 314-771-5757

MATERIAL SAFETY DATA SHEET

DATE: 07/13/94

CUST#: 9-009-99999

PRODUCT #: P4504 NAME: POTASSIUM CHLORIDE

SECTION 10 - - - - - - - - - -STABILITY AND REACTIVITY - - - - - - - - - -

INCOMPATIBILITIES
- STRONG OXIDIZING AGENTS
- STRONG ACIDS

HAZARDOUS COMBUSTION OR DECOMPOSITION PRODUCTS
- HYDROGEN CHLORIDE GAS

SECTION 11 - - - - - - - - - - TOXICOLOGICAL INFORMATION - - - - - - - -

ACUTE EFFECTS
- HARMFUL IF SWALLOWED, INHALED, OR ABSORBED THROUGH SKIN.
- CAUSES EYE AND SKIN IRRITATION.
- MATERIAL IS IRRITATING TO MUCOUS MEMBRANES AND UPPER RESPIRATORY TRACT.
- TO THE BEST OF OUR KNOWLEDGE, THE CHEMICAL, PHYSICAL, AND TOXICOLOGICAL PROPERTIES HAVE NOT BEEN THOROUGHLY INVESTIGATED.

ADDITIONAL INFORMATION
- INGESTION OF LARGE QUANTITIES CAN CAUSE WEAKNESS, GASTROINTESTINAL IRRITATION AND CIRCULATORY DISTURBANCES.

RTECS NO: TS8050000

POTASSIUM CHLORIDE

IRRITATION DATA

EYE-RBT 500 MG/24H MLD	28ZPAK -,8,72

TOXICITY DATA

ORL-INF LDLO:938 MG/KG/2D	JAMAAP 240,1339,78
ORL-MAN LDLO:20 MG/KG	LANCAO 2,919,80
ORL-RAT LD50:2600 MG/KG	28ZPAK -,8,72
IPR-RAT LD50:660 MG/KG	FCTXAV 3,597,65
IVN-RAT LD50:142 MG/KG	ARZNAD 14,1128,64
ORL-MUS LD50:1500 MG/KG	IYKEDH 21,257,90
IPR-MUS LD50:1181 MG/KG	COREAF 256,1043,63
IVN-MUS LD50:117 MG/KG	EJTXAZ 8,188,75
ORL-GPG LD50:2500 MG/KG	JPETAB 35,1,29

TARGET ORGAN DATA

CONTINUED ON NEXT PAGE

FAX: USA/CANADA 1-800-325-5052

OUTSIDE THE USA/CANADA CALL COLLECT

FAX: 314-771-5757

BEHAVIORAL (CONVULSIONS OR EFFECT ON SEIZURE THRESHOLD)
BEHAVIORAL (CHANGE IN MOTOR ACTIVITY)
BEHAVIORAL (COMA)
CARDIAC (ARRYTHMIAS)
LUNGS, THORAX OR RESPIRATION (DYSPNAE)
LUNGS, THORAX OR RESPIRATION (CYANOSIS)
LUNGS, THORAX OR RESPIRATION (OTHER CHANGES)
GASTROINTESTINAL (NAUSEA OR VOMITING)
BLOOD (CHANGE IN CLOTTING FACTORS)
NUTRITIONAL AND GROSS METABOLIC (CHANGES IN: K)
ONLY SELECTED REGISTRY OF TOXIC EFFECTS OF CHEMICAL SUBSTANCES (RTECS) DATA IS PRESENTED HERE. SEE ACTUAL ENTRY IN RTECS FOR COMPLETE INFORMATION.

SECTION 12. - - - - - - - - - - ECOLOGICAL INFORMATION - - - - - - - - - -

DATA NOT YET AVAILABLE.

SECTION 13. - - - - - - - - - - DISPOSAL CONSIDERATIONS - - - - - - - - -

FOR SMALL QUANTITIES: CAUTIOUSLY ADD TO A LARGE STIRRED EXCESS OF WATER. ADJUST THE PH TO NEUTRAL, SEPARATE ANY INSOLUBLE SOLIDS OR LIQUIDS AND PACKAGE THEM FOR HAZARDOUS-WASTE DISPOSAL. FLUSH THE AQUEOUS SOLUTION DOWN THE DRAIN WITH PLENTY OF WATER. THE HYDROLYSIS AND NEUTRALIZATION REACTIONS MAY GENERATE HEAT AND FUMES WHICH CAN BE CONTROLLED BY THE RATE OF ADDITION.
OBSERVE ALL FEDERAL, STATE AND LOCAL ENVIRONMENTAL REGULATIONS.

SECTION 14. - - - - - - - - - - - TRANSPORT INFORMATION - - - - - - - - - -

CONTACT SIGMA CHEMICAL COMPANY FOR TRANSPORTATION INFORMATION.

SECTION 15. - - - - - - - - - - REGULATORY INFORMATION - - - - - - - - - -

REVIEWS, STANDARDS, AND REGULATIONS
NOHS 1974: HZD 60360; NIS 97; TNF 14471; NOS 88; TNE 122749

CONTINUED ON NEXT PAGE

FAX: USA/CANADA 1-800-325-5052

OUTSIDE THE USA/CANADA CALL COLLECT

FAX: 314-771-5757

M A T E R I A L S A F E T Y D A T A S H E E T

DATE: 07/13/94

CUST#: 9-009-99999

PRODUCT #: P4504 NAME: POTASSIUM CHLORIDE

NOES 1983: HZD 60360; NIS 125; TNF 13762; NOS 119; TNE 345538; TFE 159316
EPA TSCA CHEMICAL INVENTORY, JUNE 1993
EPA TSCA TEST SUBMISSION (TSCATS) DATA BASE, JANUARY 1994

SECTION 16 - - - - - - - - - - - - OTHER INFORMATION- - - - - - - - - - - -

THE ABOVE INFORMATION IS BELIEVED TO BE CORRECT BUT DOES NOT PURPORT TO BE ALL INCLUSIVE AND SHALL BE USED ONLY AS A GUIDE. SIGMA SHALL NOT BE HELD LIABLE FOR ANY DAMAGE RESULTING FROM HANDLING OR FROM CONTACT WITH THE ABOVE PRODUCT. SEE REVERSE SIDE OF INVOICE OR PACKING SLIP FOR ADDITIONAL TERMS AND CONDITIONS OF SALE.
COPYRIGHT 1994 SIGMA CHEMICAL CO.

SIGMA® CHEMICAL COMPANY

THE WORLD'S FOREMOST MANUFACTURER OF RESEARCH BIOCHEMICALS AND DIAGNOSTIC REAGENTS

ATTN: SAFETY DIRECTOR
MARC VON KEITZ
MONTGOMERY AND WATSON
365 LENNON LANE
WALNUT CREEK, CA 94598

EMERGENCY PHONE 1-314-771-5765
PO BOX 14508 ST LOUIS MO 63175
DATE: 07/13/94
CUST#: 9-009-99999

M A T E R I A L S A F E T Y D A T A S H E E T PAGE 1

SECTION 1. - - - - - - - - - CHEMICAL IDENTIFICATION- - - - - - - - - -

PRODUCT #: I0385 NAME: IODINE ACS REAGENT

SECTION 2. - - - - - - COMPOSITION/INFORMATION ON INGREDIENTS - - - - - -

CAS #:7553-56-2
MF: I1

SYNONYMS
IODE (FRENCH) * IODINE (ACGIH,OSHA) * IODINE CRYSTALS * IODINE SUBLIMED * IODIO (ITALIAN) * JOD (GERMAN, POLISH) * JOOD (DUTCH) *

SECTION 3. - - - - - - - - - - HAZARDS IDENTIFICATION - - - - - - - - - -

LABEL PRECAUTIONARY STATEMENTS
HIGHLY TOXIC (USA DEFINITION)
TOXIC (EUROPEAN DEFINITION)
TOXIC BY INHALATION, IN CONTACT WITH SKIN AND IF SWALLOWED.
CAUSES BURNS.
MAY CAUSE SENSITIZATION BY INHALATION AND SKIN CONTACT.
SEVERE LACHRYMATOR.
TARGET ORGAN(S):
THYROID
IN CASE OF ACCIDENT OR IF YOU FEEL UNWELL, SEEK MEDICAL ADVICE IMMEDIATELY (SHOW THE LABEL WHERE POSSIBLE).
IN CASE OF CONTACT WITH EYES, RINSE IMMEDIATELY WITH PLENTY OF WATER AND SEEK MEDICAL ADVICE.
WEAR SUITABLE PROTECTIVE CLOTHING, GLOVES AND EYE/FACE PROTECTION.

SECTION 4. - - - - - - - - - - FIRST-AID MEASURES- - - - - - - - - - -

IN CASE OF CONTACT, IMMEDIATELY FLUSH EYES OR SKIN WITH COPIOUS AMOUNTS OF WATER FOR AT LEAST 15 MINUTES WHILE REMOVING CONTAMINATED CLOTHING AND SHOES.
ASSURE ADEQUATE FLUSHING OF THE EYES BY SEPARATING THE EYELIDS WITH FINGERS.
IF INHALED, REMOVE TO FRESH AIR. IF NOT BREATHING GIVE ARTIFICIAL RESPIRATION. IF BREATHING IS DIFFICULT, GIVE OXYGEN.
IF SWALLOWED, WASH OUT MOUTH WITH WATER PROVIDED PERSON IS CONSCIOUS.
CALL A PHYSICIAN.
DISCARD CONTAMINATED CLOTHING AND SHOES.

SECTION 5. - - - - - - - - - FIRE FIGHTING MEASURES - - - - - - - - - -

CONTINUED ON NEXT PAGE

FAX: USA/CANADA 1-800-325-5052

OUTSIDE THE USA/CANADA CALL COLLECT

FAX: 314-771-5757

M A T E R I A L S A F E T Y D A T A S H E E T

DATE: 07/13/94

CUST#: 9-009-99999

PRODUCT #: I0385 NAME: IODINE ACS REAGENT

EXTINGUISHING MEDIA
DRY CHEMICAL POWDER.
SPECIAL FIREFIGHTING PROCEDURES
WEAR SELF-CONTAINED BREATHING APPARATUS AND PROTECTIVE CLOTHING TO PREVENT CONTACT WITH SKIN AND EYES.
UNUSUAL FIRE AND EXPLOSIONS HAZARDS
EMITS TOXIC FUMES UNDER FIRE CONDITIONS.

SECTION 6. - - - - - - - - - ACCIDENTAL RELEASE MEASURES- - - - - - - - -

EVACUATE AREA.
WEAR SELF-CONTAINED BREATHING APPARATUS, RUBBER BOOTS AND HEAVY RUBBER GLOVES.
COVER WITH DRY LIME OR SODA ASH, PICK UP, KEEP IN A CLOSED CONTAINER AND HOLD FOR WASTE DISPOSAL.
VENTILATE AREA AND WASH SPILL SITE AFTER MATERIAL PICKUP IS COMPLETE.

SECTION 7. - - - - - - - - - - - - HANDLING AND STORAGE- - - - - - - - - - - -

REFER TO SECTION 8.

ADDITIONAL INFORMATION
MIXING IODINE, ANTIMONY AND AMMONIA RESULTED IN AN EXPLOSION. A VIOLENT REACTION OCCURS BETWEEN IODINE AND ACETALDEHYDE.

SECTION 8. - - - - - - - EXPOSURE CONTROLS/PERSONAL PROTECTION- - - - - -

WEAR APPROPRIATE NIOSH/MSHA-APPROVED RESPIRATOR, CHEMICAL-RESISTANT GLOVES, SAFETY GOGGLES, OTHER PROTECTIVE CLOTHING.
SAFETY SHOWER AND EYE BATH.
USE ONLY IN A CHEMICAL FUME HOOD.
DO NOT BREATHE VAPOR.
AVOID CONTACT WITH EYES, SKIN AND CLOTHING.
AVOID PROLONGED OR REPEATED EXPOSURE.
WASH THOROUGHLY AFTER HANDLING.
CORROSIVE.
HIGHLY TOXIC.
SEVERE LACHRYMATOR.
HARMFUL VAPOR.
SENSITIZER.
KEEP TIGHTLY CLOSED.

CONTINUED ON NEXT PAGE

FAX: USA/CANADA 1-800-325-5052

OUTSIDE THE USA/CANADA CALL COLLECT

FAX: 314-771-5757

MATERIAL SAFETY DATA SHEET

DATE: 07/13/94

CUST#: 9-009-99999

PRODUCT #: I0385 NAME: IODINE ACS REAGENT

STORE IN A COOL DRY PLACE.

SECTION 9. - - - - - - - - PHYSICAL AND CHEMICAL PROPERTIES - - - - - - -

APPEARANCE AND ODOR
SOLID.
BOILING POINT: 184.4 C
MELTING POINT: 113.5 C
VAPOR PRESSURE: 0.31MM 25 C
VAPOR DENSITY: 9
SPECIFIC GRAVITY: 4.930

SECTION 10 - - - - - - - - - - -STABILITY AND REACTIVITY - - - - - - - - -

INCOMPATIBILITIES
MAGNESIUM
ZINC
AMMONIA
ALUMINUM
CORRODES STEEL
HAZARDOUS COMBUSTION OR DECOMPOSITION PRODUCTS
NATURE OF DECOMPOSITION PRODUCTS NOT KNOWN.

SECTION 11 - - - - - - - - - - TOXICOLOGICAL INFORMATION - - - - - - - -

ACUTE EFFECTS
MAY BE FATAL IF INHALED, SWALLOWED, OR ABSORBED THROUGH SKIN.
MATERIAL IS EXTREMELY DESTRUCTIVE TO TISSUE OF THE MUCOUS MEMBRANES AND UPPER RESPIRATORY TRACT, EYES AND SKIN.
INHALATION MAY BE FATAL AS A RESULT OF SPASM, INFLAMMATION AND EDEMA OF THE LARYNX AND BRONCHI, CHEMICAL PNEUMONITIS AND PULMONARY EDEMA.
SYMPTOMS OF EXPOSURE MAY INCLUDE BURNING SENSATION, COUGHING, WHEEZING, LARYNGITIS, SHORTNESS OF BREATH, HEADACHE, NAUSEA AND VOMITING.
EXPOSURE CAN CAUSE:
STOMACH PAINS, VOMITING, DIARRHEA.
DAMAGE TO THE EYES
DERMATITIS

CONTINUED ON NEXT PAGE

FAX: USA/CANADA 1-800-325-5052

OUTSIDE THE USA/CANADA CALL COLLECT

FAX: 314-771-5757

MATERIAL SAFETY DATA SHEET

DATE: 07/13/94

CUST#: 9-009-99999

PRODUCT #: I0385 NAME: IODINE ACS REAGENT

MAY CAUSE ALLERGIC REACTION.
TARGET ORGAN(S):
THYROID
RTECS NO: NN1575000

IODINE
TOXICITY DATA

ORL-HMN LDLO:28 MG/KG	34ZIAG -,330,69
UNR-MAN LDLO:29 MG/KG	85DCAI 2,73,70
ORL-RAT LD50:14 GM/KG	DRFUD4 4,876,79
SCU-RAT LD50:10500 MG/KG	NIIRDN -,1226,90
ORL-MUS LD50:22 GM/KG	DRFUD4 4,876,79
SCU-MUS LD50:>8650 MG/KG	NIIRDN -,1226,90
ORL-RBT LD50:10 GM/KG	DRFUD4 4,876,79

TARGET ORGAN DATA
GASTROINTESTINAL (HYPERMOTILITY, DIARRHEA)
GASTROINTESTINAL (OTHER CHANGES)
ENDOCRINE (EVIDENCE OF THYROID HYPERFUNCTION)
EFFECTS ON NEWBORN (VIABILITY INDEX)
EFFECTS ON NEWBORN (GROWTH STATISTICS)
ADDITIONAL INFORMATION
SKN-RBT LD50: 220MG/KG.
ONLY SELECTED REGISTRY OF TOXIC EFFECTS OF CHEMICAL SUBSTANCES (RTECS) DATA IS PRESENTED HERE. SEE ACTUAL ENTRY IN RTECS FOR COMPLETE INFORMATION.

SECTION 12 - - - - - - - - - - ECOLOGICAL INFORMATION - - - - - - - - - -

DATA NOT YET AVAILABLE.

SECTION 13 - - - - - - - - - - DISPOSAL CONSIDERATIONS - - - - - - - - - -

MATERIAL IN THE ELEMENTAL STATE SHOULD BE RECOVERED FOR REUSE OR RECYCLING.
OBSERVE ALL FEDERAL, STATE AND LOCAL ENVIRONMENTAL REGULATIONS.

CONTINUED ON NEXT PAGE

FAX: USA/CANADA 1-800-325-5052

OUTSIDE THE USA/CANADA CALL COLLECT

FAX: 314-771-5757

M A T E R I A L S A F E T Y D A T A S H E E T PAGE 5

- -

DATE: 07/13/94

CUST#: 9-009-99999

PRODUCT #: I0385 NAME: IODINE ACS REAGENT

SECTION 14. - - - - - - - - - - TRANSPORT INFORMATION - - - - - - - - - -

CONTACT SIGMA CHEMICAL COMPANY FOR TRANSPORTATION INFORMATION.

SECTION 15. - - - - - - - - - - REGULATORY INFORMATION - - - - - - - - - -

REVIEWS, STANDARDS, AND REGULATIONS

ACGIH TLV-CL 0.1 PPM 85INA8 6,799,91

EPA FIFRA 1988 PESTICIDE SUBJECT TO REGISTRATION OR RE-REGISTRATION
FEREAC 54,7740,89

MSHA STANDARD:AIR-CL 0.1 PPM (1 MG/M3)
DTLVS* 3,135,71

OSHA PEL:CL 0.1 PPM (1 MG/M3)
FEREAC 54,2923,89

OSHA PEL FINAL:CL 0.1 PPM (1 MG/M3)
FEREAC 54,2923,89

OEL-ARAB REPUBLIC OF EGYPT:TWA 0.1 PPM (0.1 MG/M3) JAN93

OEL-AUSTRALIA:TWA 0.1 PPM (1 MG/M3) JAN93

OEL-BELGIUM:STEL 0.1 PPM (1 MG/M3) JAN93

OEL-DENMARK:.STEL 1 PPM (1 MG/M3) JAN93

OEL-FINLAND:STEL 0.1 PPM (1 MG/M3);SKIN JAN93

OEL-FRANCE:STEL 0.1 PPM (1 MG/M3) JAN93

OEL-GERMANY:TWA 0.1 PPM (1 MG/M3) JAN93

OEL-HUNGARY:TWA 1 MG/M3;STEL 2 MG/M3 JAN93

OEL-JAPAN:TWA 0.1 PPM (1 MG/M3);STEL 1 MG/M3 JAN93

OEL-THE NETHERLANDS:TWA 0.1 PPM (1 MG/M3) JAN93

OEL-THE PHILIPPINES:TWA 0.1 PPM (1 MG/M3) JAN93

OEL-POLAND:TWA 1 MG/M3 JAN93

OEL-RUSSIA:TWA 0.1 PPM;STEL 1 MG/M3;SKIN JAN93

OEL-SWEDEN:STEL 0.1 PPM (1 MG/M3) JAN93

OEL-SWITZERLAND:TWA 0.1 PPM (1 MG/M3);STEL 0.2 PPM (2 MG/M3) JAN93

OEL-THAILAND:TWA 0.1 PPM (1 MG/M3) JAN93

OEL-TURKEY:TWA 0.1 PPM (1 MG/M3) JAN93

OEL-UNITED KINGDOM:STEL 0.1 PPM (1 MG/M3) JAN93

OEL IN BULGARIA, COLOMBIA, JORDAN, KOREA CHECK ACGIH TLV

CONTINUED ON NEXT PAGE

FAX: USA/CANADA 1-800-325-5052

OUTSIDE THE USA/CANADA CALL COLLECT

FAX: 314-771-5757

MATERIAL SAFETY DATA SHEET PAGE 6

DATE: 07/13/94

CUST#: 9-009-99999

PRODUCT #: I0385 NAME: IODINE ACS REAGENT

OEL IN NEW ZEALAND, SINGAPORE, VIETNAM CHECK ACGIH TLV
NIOSH REL TO IODINE-AIR:CL 0.1 PPM
NIOSH* DHHS #92-100,92
NOHS 1974: HZD 40030; NIS 51; TNF 7490; NOS 46; TNE 124917
NOES 1983: HZD 40030; NIS 62; TNF 5853; NOS 76; TNE 200010; TFE 127060
EPA TSCA CHEMICAL INVENTORY, JUNE 1993
EPA TSCA TEST SUBMISSION (TSCATS) DATA BASE, JANUARY 1994
NIOSH ANALYTICAL METHODS: SEE IODINE, 6005
OSHA ANALYTICAL METHOD #ID-177

SECTION 16 - - - - - - - - - - - OTHER INFORMATION- - - - - - - - - - - -

THE ABOVE INFORMATION IS BELIEVED TO BE CORRECT BUT DOES NOT PURPORT TO BE ALL INCLUSIVE AND SHALL BE USED ONLY AS A GUIDE. SIGMA SHALL NOT BE HELD LIABLE FOR ANY DAMAGE RESULTING FROM HANDLING OR FROM CONTACT WITH THE ABOVE PRODUCT. SEE REVERSE SIDE OF INVOICE OR PACKING SLIP FOR ADDITIONAL TERMS AND CONDITIONS OF SALE.
COPYRIGHT 1994 SIGMA CHEMICAL CO.

LICENSE GRANTED TO MAKE UNLIMITED PAPER COPIES FOR INTERNAL USE ONLY.

Material Safety Data Sheet
May be used to comply with
OSHA's Hazard Communication Standard,
29 CFR 1910.1200. Standard must be
consulted for specific requirements.

U.S. Department of Labor
Occupational Safety and Health Administration
(Non-Mandatory Form)
Form Approved
OMB No. 1218-0072

IDENTITY *(As Used on Label and List)* ALCOJET

Note: Blank spaces are not permitted. If any item is not applicable, or no information is available, the space must be marked to indicate that

Section I

Manufacturer's Name: ALCONOX, INC.	Emergency Telephone Number: (212) 473-1300
Address *(Number, Street, City, State, and ZIP Code)*: 215 PARK AVENUE SOUTH	Telephone Number for Information: (212) 473-1300
NEW YORK, N.Y. 10003	Date Prepared: JULY 1, 1987
	Signature of Preparer *(optional)*

Section II — Hazardous Ingredients/Identity Information

Hazardous Components (Specific Chemical Identity; Common Name(s))	OSHA PEL	ACGIH TLV	Other Limits Recommended	% *(optional)*
THERE ARE NO INGREDIENTS IN ALCOJET WHICH APPEARED ON THE OSHA STANDARD 29 CFR 1910 SUBPART Z.				

Section III — Physical/Chemical Characteristics

Boiling Point	N.A.	Specific Gravity (H_2O = 1)	N.A.
Vapor Pressure (mm Hg.)	N.A.	Melting Point	N.A.
Vapor Density (AIR = 1)	N.A.	Evaporation Rate (Butyl Acetate = 1)	N.A.

Solubility in Water: MODERATE

Appearance and Odor: WHITE POWDER AND GRANULES - SLIGHT ACRID ODOR.

Section IV — Fire and Explosion Hazard Data

Flash Point (Method Used)	Flammable Limits	LEL	UEL
N.A.		N.A.	N.A.

Extinguishing Media: WATER, DRY CHEMICAL, FOAM, CO_2

Special Fire Fighting Procedures: FOR FIRES INVOLVING THIS MATERIAL, DO NOT ENTER WITHOUT PROTECTIVE EQUIPMENT AND SELF CONTAINED BREATHING APPARATUS.

Unusual Fire and Explosion Hazards: NONE

Section V — Reactivity Data

Stability	Unstable		Conditions to Avoid: LOSES AVAILABLE CHLORINE AT HIGH
	Stable	XX	TEMPERATURE AND HUMIDITY.

Incompatibility (*Materials to Avoid*): STRONG ACIDS

Hazardous Decomposition or Byproducts: MAY RELEASE CHLORINE GAS UPON BURNING.

Hazardous Polymerization	May Occur		Conditions to Avoid: NONE
	Will Not Occur	XX	

Section VI — Health Hazard Data

Route(s) of Entry: Inhalation? YES Skin? NO Ingestion? YES

Health Hazards (*Acute and Chronic*): INHALATION OF POWDER WILL IRRITATE MUCOUS MEMBRANES. WILL IRRITATE SKIN AND EYES UPON CONTACT.

Carcinogenicity: NTP? NO IARC Monographs? NO OSHA Regulated? NO

Signs and Symptoms of Exposure: EXPOSURE WILL IRRITATE MUCOUS MEMBRANES. MAY CAUSE SNEEZING.

Medical Conditions Generally Aggravated by Exposure: RESPIRATORY CONDITIONS MAY BE AGGRAVATED BY POWDER.

Emergency and First Aid Procedures: EYES-FLUSH WITH PLENTY OF WATER FOR 15 MINUTES AND CALL A PHYSICIAN. SKIN-FLUSH WITH PLENTY OF WATER. INGESTION-DO NOT INDUCE VOMITING. GIVE PLENTY OF WATER. VOMITING OCCURS GIVE WATER AGAIN. CALL A PHYSICIAN

Section VII — Precautions for Safe Handling and Use

Steps to Be Taken in Case Material is Released or Spilled: SHOVEL AND RECOVER AS MUCH AS POSSIBLE. RINSE REMAINDER TO SEWER. MATERIAL IS COMPLETELY BIODEGRADABLE. WEAR DUST MASK TO PREVENT INHALATION.

Waste Disposal Method: SMALL QUANTITIES MAY BE DISPOSED OF IN SEWER. LARGE QUANTITIES SHOULD BE DISPOSED OF ACCORDING TO LOCAL REQUIREMENTS FOR ALKALINE DETERGENTS.

Precautions to Be Taken in Handling and Storing: SHOULD BE STORED IN A DRY AREA TO PREVENT CAKING. HIGH TEMPERATURE AND/OR HUMIDITY CAN CAUSE LOSS OF AVAILABLE CHLORINE.

Other Precautions: NO SPECIAL REQUIREMENTS OTHER THAN THE GOOD INDUSTRIAL HYGIENE AND SAFETY PRACTICES EMPLOYED WITH ANY INDUSTRIAL CHEMICAL.

Section VIII — Control Measures

Respiratory Protection (*Specify Type*): DUST MASK

Ventilation	Local Exhaust	NORMAL	Special	N.A.
	Mechanical (General)	N.A.	Other	N.A.

Protective Gloves: REQUIRED Eye Protection: RECOMMENDED

Other Protective Clothing or Equipment: NOT REQUIRED

Work/Hygienic Practices: NO SPECIAL PRACTICES REQUIRED

• USGPO 1986-491-529/45775

Material Safety Data Sheet
May be used to comply with
OSHA's Hazard Communication Standard,
29 CFR 1910.1200. Standard must be
consulted for specific requirements.

U.S. Department of Labor
Occupational Safety and Health Administration
(Non-Mandatory Form)
Form Approved
OMB No. 1218-0072

IDENTITY *(As Used on Label and List)*: ALCONOX

Note: Blank spaces are not permitted. If any item is not applicable, or no information is available, the space must be marked to indicate that

Section I

Manufacturer's Name: ALCONOX, INC.	Emergency Telephone Number: (212) 473-1300
Address *(Number, Street, City, State, and ZIP Code)*: 215 PARK AVENUE SOUTH	Telephone Number for Information: (212) 473-1300
NEW YORK, N.Y. 10003	Date Prepared: FEB.1, 1991
	Signature of Preparer *(optional)*

Section II — Hazardous Ingredients/Identity Information

Hazardous Components (Specific Chemical Identity; Common Name(s))	OSHA PEL	ACGIH TLV	Other Limits Recommended	% *(optional)*
THERE ARE NO INGREDIENTS IN ALCONOX WHICH APPEARED ON THE OSHA STANDARD 29 CFR 1910 SUBPART Z.				

Section III — Physical/Chemical Characteristics

Boiling Point	N.A.	Specific Gravity (H_2O = 1)	N.A.
Vapor Pressure (mm Hg.)	N.A.	Melting Point	N.A.
Vapor Density (AIR = 1)	N.A.	Evaporation Rate (Butyl Acetate = 1)	N.A.

Solubility in Water: APPRECIABLE (GREATER THAN 10 PER CENT)

Appearance and Odor: WHITE POWDER INTERSPERED WITH CREAN COLORED FLAKES - ODORLESS

Section IV — Fire and Explosion Hazard Data

Flash Point (Method Used)	Flammable Limits	LEL	UEL
NONE		N.A.	N.A.

Extinguishing Media: WATER, CO_2, DRY CHEMICAL, FOAM, SAND/EARTH

Special Fire Fighting Procedures: FOR FIRES INVOLVING THIS MATERIAL DO NOT ENTER WITHOUT PROTECTIVE EQUIPMENT AND SELF CONTAINED BREATHING APPARATUS.

Unusual Fire and Explosion Hazards: NONE

Section V — Reactivity Data

Stability	Unstable		Conditions to Avoid NONE
	Stable	XX	

Incompatibility (*Materials to Avoid*): AVOID STRONG ACIDS

Hazardous Decomposition or Byproducts: MAY RELEASE CO_2 GAS ON BURNING

Hazardous Polymerization	May Occur		Conditions to Avoid NONE
	Will Not Occur	XX	

Section VI — Health Hazard Data

Route(s) of Entry: Inhalation? YES Skin? NO Ingestion? YES

Health Hazards (*Acute and Chronic*): INHALATION OF POWDER MAY PROVE LOCALLY IRRITATING TO MUCOUS MEMBRANES. INGESTION MAY CAUSE DISCOMFORT AND/OR DIARRHEA.

Carcinogenicity: NTP? NO IARC Monographs? NO OSHA Regulated? NO

Signs and Symptoms of Exposure: EXPOSURE MAY IRRITATE MUCOUS MEMBRANES. MAY CAUSE SNEEZING.

Medical Conditions Generally Aggravated by Exposure: RESPIRATORY CONDITIONS MAY BE AGGRAVATED BY POWDER.

Emergency and First Aid Procedures: EYES-FLUSH WITH PLENTY OF WATER FOR 15 MINUTES SKIN-FLUSH WITH PLENTY OF WA INGESTION-DRINK LARGE QUANTITIES OF WATER. GET MEDICAL ATTENTION FOR DISCOMFO

Section VII — Precautions for Safe Handling and Use

Steps to Be Taken in Case Material is Released or Spilled: MATERIAL FOAMS PROFUSELY. SHOVEL AND RECOVER AS MUCH AS POSSIBLE. RINSE REMAINDER TO SEWER. MATERIAL IS COMPLETELY BIODEGRADABLE.

Waste Disposal Method: SMALL QUANTITIES MAY BE DISPOSED OF IN SEWER. LARGE QUANTITIES SHOULD BE DISPOSED OF ACCORDING TO LOCAL REQUIREMENTS FOR NON-HAZARDOUS DETERGENT.

Precautions to Be Taken in Handling and Storing: STORE IN A DRY AREA TO PREVENT CAKING.

Other Precautions: NO SPECIAL REQUIREMENTS OTHER THAN THE GOOD INDUSTRIAL HYGIENE AND SAFETY PRACTICES EMPLOYED WITH ANY INDUSTRIAL CHEMICAL.

Section VIII — Control Measures

Respiratory Protection (*Specify Type*): DUST MASK

Ventilation	Local Exhaust: NORMAL	Special: N.A.
	Mechanical (General): N.A.	Other: N.A.

Protective Gloves: USEFUL-NOT REQUIRED

Eye Protection: USEFUL-NOT REQUIRED

Other Protective Clothing or Equipment: NOT REQUIRED

Work/Hygienic Practices: NO SPECIAL PRACTICES REQUIRED

• USGPO 1986-491-529/45775

Material Safety Data Sheet
May be used to comply with OSHA's Hazard Communication Standard, 29 CFR 1910.1200. Standard must be consulted for specific requirements.

U.S. Department
Occupational Safety and
(Non-Mandatory Form)
Form Approved
OMB No. 1218-0072

IDENTITY *(As Used on Label and List)* ALCOTABS

Note: Blank spaces are not permitted. If any item is not applicable, or no information is available, the space must be marked to indicate that

Section I

Manufacturer's Name: ALCONOX, INC.	Emergency Telephone Number: (212) 473-1300
Address *(Number, Street, City, State, and ZIP Code)*: 215 PARK AVENUE SOUTH NEW YORK, N.Y. 10003	Telephone Number for Information: (212) 473-1300
	Date Prepared: JULY 1, 1987
	Signature of Preparer *(optional)*

Section II — Hazardous Ingredients/Identity Information

Hazardous Components (Specific Chemical Identity; Common Name(s))	OSHA PEL	ACGIH TLV	Other Limits Recommended	% *(optional)*
THERE ARE NO INGREDIENTS IN ALCOTABS WHICH APPEARED ON THE OSHA STANDARD 29 CFR 1910 SUBPART Z.				

Section III — Physical/Chemical Characteristics

Boiling Point	N.A.	Specific Gravity (H_2O = 1)	N.A.
Vapor Pressure (mm Hg.)	N.A.	Melting Point	N.A.
Vapor Density (AIR = 1)	N.A.	Evaporation Rate (Butyl Acetate = 1)	N.A.

Solubility in Water: COMPLETE

Appearance and Odor: WHITE TABLET ABOUT 3/4 INCH IN DIAMETER - ODORLESS

Section IV — Fire and Explosion Hazard Data

Flash Point (Method Used)	Flammable Limits	LEL	UEL
N.A.		N.A.	N.A.

Extinguishing Media: WATER, CO_2, DRY CHEMICAL, FOAM, SAND/EARTH

Special Fire Fighting Procedures: FOR FIRES INVOLVING THIS MATERIAL DO NOT ENTER WITHOUT PROTECTIVE EQUIPMENT AND SELF CONTAINED BREATHING APPARATUS.

Unusual Fire and Explosion Hazards: NONE

Section V — Reactivity Data

Stability	Unstable		Conditions to Avoid NONE
	Stable	XX	

Incompatibility (*Materials to Avoid*) NONE

Hazardous Decomposition or Byproducts MAY RELEASE CO_2 GAS UPON BURNING.

Hazardous Polymerization	May Occur		Conditions to Avoid NONE
	Will Not Occur	XX	

Section VI — Health Hazard Data

Route(s) of Entry: Inhalation? NO Skin? NO Ingestion? YES

Health Hazards (*Acute and Chronic*) INGESTION MAY CAUSE DISCOMFORT AND/OR DIARRHEA.

Carcinogenicity: NTP? NO IARC Monographs? NO OSHA Regulated? NO

Signs and Symptoms of Exposure PROLONGED SKIN CONTACT WITH DISSOLVED TABLET MAY CAUSE DRYING AND/OR CHAPPING.

Medical Conditions Generally Aggravated by Exposure NONE

Emergency and First Aid Procedures
IF SOLUTION IS SPLASHED IN EYES FLUSH WITH PLENTY OF WATER FOR 15 MINUTES. IF ACCIDENTALLY SWALLOWED INDUCE VOMITING AND SEE A PHYSICIAN.

Section VII — Precautions for Safe Handling and Use

Steps to Be Taken in Case Material is Released or Spilled MATERIAL FOAMS PROFUSELY. SHOVEL AND RECOVER AS MUCH AS POSSIBLE. RINSE REMAINDER TO SEWER. MATERIAL IS COMPLETELY BIODEGRADABLE.

Waste Disposal Method
SMALL QUANTITIES MAY BE DISPOSED OF IN SEWER. LARGE QUANTITIES SHOULD BE DISPOSED OF ACCORDING TO LOCAL REQUIREMENTS FOR NON-HAZARDOUS DETERGENT.

Precautions to Be Taken in Handling and Storing STORE IN A COOL DRY PLACE. MATERIAL IS HYDROSCOPIC.

Other Precautions NO SPECIAL PRECAUTIONS OTHER THAN THE GOOD INDUSTRIAL HYGIENE AND SAFETY PRACTICES EMPLOYED WITH ANY INDUSTRIAL CHEMICAL.

Section VIII — Control Measures

Respiratory Protection (*Specify Type*) NONE REQUIRED

Ventilation	Local Exhaust NORMAL	Special N.A.	
	Mechanical (General) N.A.	Other N.A.	
Protective Gloves	NOT REQUIRED	Eye Protection	NOT REQUIRED

Other Protective Clothing or Equipment NOT REQUIRED

Work/Hygienic Practices NO SPECIAL PRACTICES REQUIRED

• U.S.G.P.O. 1986-491-529/45775

Detergent, Citranox

Material Safety Data Sheet

May be used to comply with OSHA's Hazard Communication Standard, 29 CFR 1910.1200. Standard must be consulted for specific requirements.

U.S. Department o
Occupational Safety and H
(Non-Mandatory Form)
Form Approved
OMB No. 1218-0072

IDENTITY *(As Used on Label and List)* CITRANOX

Note: Blank spaces are not permitted. If any item is not applicable, or no information is available, the space must be marked to indicate that.

Section I

Manufacturer's Name ALCONOX, INC.	Emergency Telephone Number (212)473-1300
Address *(Number, Street, City, State, and ZIP Code)* 215 PARK AVENUE SOUTH	Telephone Number for Information (212)473-1300
NEW YORK, NY 10003	Date Prepared FEB. 1, 1991
	Signature of Preparer *(optional)*

Section II — Hazardous Ingredients/Identity Information

Hazardous Components (Specific Chemical Identity; Common Name(s))	OSHA PEL	ACGIH TLV	Other Limits Recommended	% *(optional)*
THERE ARE NO INGREDIENTS IN CITRANOX WHICH APPEARED ON THE OSHA STANDARD 29 CFR 1910 SUBPART Z.				

Section III — Physical/Chemical Characteristics

Boiling Point	217°F	Specific Gravity (H_2O = 1)	1.120
Vapor Pressure (mm Hg.)	NO DATA	Melting Point	N.A.
Vapor Density (AIR = 1)	NO DATA	Evaporation Rate (Butyl Acetate = 1)	NO DATA

Solubility in Water
COMPLETELY SOLUBLE IN ALL PROPORTIONS

Appearance and Odor
PALE LIQUID - NEARLY ODORLESS

Section IV — Fire and Explosion Hazard Data

Flash Point (Method Used)	Flammable Limits	LEL	UEL
NONE (OPEN CUP)		N.A.	N.A.

Extinguishing Media
WATER SPRAY, DRY CHEMICAL, FOAM, CARBON DIOXIDE

Special Fire Fighting Procedures
FOR FIRES INVOLVING THIS MATERIAL DO NOT ENTER WITHOUT PROTECTIVE EQUIPMENT AND SELF CONTAINED BREATHING APPARATUS.

Unusual Fire and Explosion Hazards
NONE

Section V — Reactivity Data

Stability			
	Unstable		Conditions to Avoid: NOT APPLICABLE
	Stable	X	

Incompatibility (*Materials to Avoid*): OXIDIZING OR HIGHLY ALKALINE SOLUTIONS

Hazardous Decomposition or Byproducts: AMMONIA, CARBON MONOXIDE OR CARBON DIOXIDE MAY BE RELEASED ON BURNING

Hazardous Polymerization			
	May Occur		Conditions to Avoid: NOT APPLICABLE
	Will Not Occur	X	

Section VI — Health Hazard Data

Route(s) of Entry: Inhalation? NO Skin? YES Ingestion? YES

Health Hazards (*Acute and Chronic*): MATERIAL WILL CAUSE EYE BURNS. MAY CAUSE SKIN IRRITATION AND/OR BURNS

Carcinogenicity: NTP? NO IARC Monographs? NO OSHA Regulated? NO

Signs and Symptoms of Exposure: MATERIAL IS LOCALLY IRRITATING UPON EXPOSURE. CAN CAUSE BURNS.

Medical Conditions Generally Aggravated by Exposure: PREEXISTING SKIN DISORDERS MAY BE AGGRAVATED BY EXPOSURE

Emergency and First Aid Procedures: IMMEDIATELY FLUSH SKIN AND EYES WITH PLENTY OF WATER FOR 15 MINUTES. FOR INGESTION DO NOT INDUCE VOMITING. GIVE PLENTY OF WATER. CALL A PHYSICIAN.

Section VII — Precautions for Safe Handling and Use

Steps to Be Taken in Case Material Is Released or Spilled: SMALL SPILLS MAY BE FLUSHED TO SEWER. LARGE SPILLS SHOULD BE NEUTRALIZED WITH LIME OR SODA ASH. USE ABSORBENT MATERIAL TO RECOVER AS MUCH AS POSSIBLE. DISPOSE OF ACCORDING TO LOCAL REGULATIONS. RINSE TRACES WITH PLENTY OF WATER.

Waste Disposal Method: COMPLY WITH FEDERAL, STATE AND LOCAL REGULATIONS. IF APPROVED MAY BE NEUTRALIZED WITH LIME OR SODA ASH AND FLUSHED TO SEWER.

Precautions to Be Taken in Handling and Storing: NO SPECIAL PRECAUTIONS IN STORING. USE PROTECTIVE EQUIPMENT WHEN HANDLING UNDILUTE MATERIAL.

Other Precautions: NO SPECIAL REQUIREMENTS. AVOID SPLASHING AND SPRAYING UNDILUTE MATERIAL. USE GOOD INDUSTRIAL HYGIENE AS WITH ANY INDUSTRIAL CHEMICAL.

Section VIII — Control Measures

Respiratory Protection (*Specify Type*): NOT REQUIRED

Ventilation				
	Local Exhaust	NORMAL	Special	N.A.
	Mechanical (General)	N.A.	Other	N.A.

Protective Gloves	Eye Protection
REQUIRED	REQUIRED

Other Protective Clothing or Equipment: EYE WASH STATION SHOULD BE AVAILABLE

Work/Hygienic Practices: WASH HANDS BEFORE EATING, DRINKING OR SMOKING.

U.S.G.P.O.: 1986-491-529/45775

Material Safety Data Sheet
May be used to comply with
OSHA's Hazard Communication Standard,
29 CFR 1910.1200. Standard must be
consulted for specific requirements.

U.S. Department
Occupational Safety and
(Non-Mandatory Form)
Form Approved
OMB No. 1218-0072

IDENTITY *(As Used on Label and List)* DETERGENT 8

Note: Blank spaces are not permitted. If any item is not applicable, or no information is available, the space must be marked to indicate that

Section I

Manufacturer's Name: ALCONOX, INC.	Emergency Telephone Number: (212) 473-1300
Address *(Number, Street, City, State, and ZIP Code)*: 215 PARK AVENUE SOUTH NEW YORK, N.Y. 10003	Telephone Number for Information: (212) 473-1300
	Date Prepared: FEB. 1, 1991
	Signature of Preparer *(optional)*

Section II — Hazardous Ingredients/Identity Information

Hazardous Components (Specific Chemical Identity; Common Name(s))	OSHA PEL	ACGIH TLV	Other Limits Recommended	% *(optional)*
ETHYLENE GLYCOL MONOBUTYL ETHER	50 PPM	25 PPM		
DIPROPYLENE GLYCOL METHYL ETHER	100 PPM	100 PPM		

NO OTHER INGREDIENTS IN DETERGENT 8 APPEARED ON THE OSHA STANDARD 29 CFR 1910 SUBPART Z.

Section III — Physical/Chemical Characteristics

Boiling Point	235°F	Specific Gravity (H_2O = 1)	.994
Vapor Pressure (mm Hg.)	NO DATA	Melting Point	N.A.
Vapor Density (AIR = 1)	NO DATA	Evaporation Rate (Butyl Acetate = 1)	NO DATA

Solubility in Water: COMPLETE

Appearance and Odor: CLEAR LIQUID-SLIGHT AMMONIA ODOR

Section IV — Fire and Explosion Hazard Data

Flash Point (Method Used)	Flammable Limits	LEL	UEL
191°F (OPEN CUP)		NO DATA	NO DATA

Extinguishing Media: ALCOHOL FOAM, CO_2, DRY CHEMICAL, WATER FOG

Special Fire Fighting Procedures: FOR FIRES INVOLVING THIS MATERIAL DO NOT ENTER WITHOUT PROTECTIVE EQUIPMENT AND SELF CONTAINED BREATHING APPARATUS.

Unusual Fire and Explosion Hazards: NONE

Section V — Reactivity Data

Stability	Unstable		Conditions to Avoid NONE
	Stable	XX	

Incompatibility (*Materials to Avoid*): STRONG ACIDS, OXIDIZERS

Hazardous Decomposition or Byproducts: THERMAL DECOMPOSITION MAY RELEASE NITROUS OXIDES

Hazardous Polymerization	May Occur		Conditions to Avoid NONE
	Will Not Occur	XX	

Section VI — Health Hazard Data

Route(s) of Entry: Inhalation? YES Skin? YES Ingestion? YES

Health Hazards (*Acute and Chronic*): INHALATION OF VAPORS MAY PROVE LOCALLY IRRITATING. SKIN CONTACT MAY PROVE LOCALLY IRRITATING. INGESTION MAY CAUSE DISCOMFORT AND/OR NAUSEA.

Carcinogenicity: NTP? NO IARC Monographs? NO OSHA Regulated? NO

Signs and Symptoms of Exposure: INHALATION MAY CAUSE DROWSINESS IN POORLY VENTILLATED AREAS. SKIN CONTACT MAY PROVE LOCALLY IRRITATING.

Medical Conditions Generally Aggravated by Exposure: PREEXISTING SKIN DISORDERS MAY BE AGGRAVATED UPON EXPOSURE.

Emergency and First Aid Procedures: EYES-FLUSH WITH PLENTY OF WATER FOR 15 MINUTES.SEEK MEDICAL ATTENTION. SK: FLUSH WITH PLENTY OF WATER. INGESTION-GIVE WATER.DO NOT INDUCE VOMITING.IF VOMITING OCCURS READMINISTER FLUIDS. SEE A PHYSICIAN.

Section VII — Precautions for Safe Handling and Use

Steps to Be Taken in Case Material Is Released or Spilled: USE ABSORBENT MATERIAL AND REMOVE WITH A SHOVEL. RINSE REMAINDER TO SEWER. MATERIAL IS COMPLETELY BIODEGRADABLE.

Waste Disposal Method: SMALL QUANTITIES MAY BE DISPOSED OF IN SEWER. LARGE QUANTITIES SHOULD BE DISPOSED OF ACCORDING TO LOCAL REQUIREMENTS FOR ALKALINE LIQUID:

Precautions to Be Taken in Handling and Storing: NO SPECIAL PRECAUTIONS IN STORING. OPEN CONTAINER SLOWLY TO RELEASE PRESSURE BUILD-UP.

Other Precautions: USE PROTECTIVE EQUIPMENT WHEN HANDLING UNDILUTE MATERIAL. AVOID SPLASHING AND SPRAYING UNDILUTE MAT: R

Section VIII — Control Measures

Respiratory Protection (*Specify Type*): NOT REQUIRED

Ventilation	Local Exhaust	NORMAL	Special	N.A.
	Mechanical (General)	N.A.	Other	N.A.
Protective Gloves		REQUIRED	Eye Protection	RECOMMENDED

Other Protective Clothing or Equipment: EYE WASH STATION SHOULD BE AVAILABLE.

Work/Hygienic Practices: USE GOOD INDUSTRIAL HYGIENE AND SAFETY PRACTICES EMPLOYED WITH ANY INDUSTRI. CHEMICAL

• U.S.G.P.O. 1986-491-529/45775

Detergent, Det-O-Jet

Material Safety Data Sheet

May be used to comply with OSHA's Hazard Communication Standard, 29 CFR 1910.1200. Standard must be consulted for specific requirements.

U.S. Department
Occupational Safety ar
(Non-Mandatory Form,
Form Approved
OMB No. 1218-0072

IDENTITY (As Used on Label and List) DET-O-JET	Note: Blank spaces are not permitted. If any item is not applicable, or no information is available, the space must be marked to indicate that.

Section I

Manufacturer's Name	Emergency Telephone Number
ALCONOX, INC.	(201)-312-6970 CALL BEEPER ENTER PHONE NUMBER AT TONE
Address (Number, Street, City, State, and ZIP Code)	Telephone Number for Information
215 PARK AVENUE SOUTH	(212) 473-1300
NEW YORK, N.Y. 10003	Date Prepared JAN. 1, 1991
	Signature of Preparer (optional)

Section II — Hazardous Ingredients/Identity Information

Hazardous Components (Specific Chemical Identity; Common Name(s))	OSHA PEL	ACGIH TLV	Other Limits Recommended	% (optional)
POTASSIUM HYDROXIDE	NONE	2 mg/m^3		
SODIUM HYPOCHLORITE	NONE	NONE		

THERE ARE NO INGREDIENTS IN DET-O-JET (INCLUDING THE TWO INGREDIENTS LISTED ABOVE) WHICH APPEARED ON THE OSHA STANDARD 29 CFR 1910 SUBPART Z. THE TWO INGREDIENTS LISTED ABOVE WERE DISCLOSED DUE TO THE CORROSIVE NATURE OF THE CHEMICALS.

Section III — Physical/Chemical Characteristics

Boiling Point	212°F	Specific Gravity (H_2O = 1)	1.282
Vapor Pressure (mm Hg.)	NO DATA	Melting Point	NO DATA
Vapor Density (AIR = 1)	NO DATA	Evaporation Rate (Butyl Acetate = 1)	NO DATA

Solubility in Water
COMPLETE

Appearance and Odor
CLEAR LIQUID - PRACTICALLY ODORLESS

Section IV — Fire and Explosion Hazard Data

Flash Point (Method Used)	Flammable Limits	LEL	UEL
NONE (CLOSED CUP)		N.A.	N.A.

Extinguishing Media
WATER, DRY CHEMICAL, FOAM, CO_2

Special Fire Fighting Procedures
FOR FIRES INVOLVING THIS MATERIAL DO NOT ENTER WITHOUT PROTECTIVE EQUIPMENT AND SELF CONTAINED BREATHING APPARATUS.

Unusual Fire and Explosion Hazards
NONE

Section V — Reactivity Data

Stability	Unstable		Conditions to Avoid NONE
	Stable	XX	

Incompatibility (*Materials to Avoid*): WILL REACT (POSSIBLY VIOLENTLY) WITH STRONG ACIDS

Hazardous Decomposition or Byproducts: HYPOCHLOROUS ACID, HYDROCHLORIC ACID, CHLORINE

Hazardous Polymerization	May Occur		Conditions to Avoid NONE
	Will Not Occur	XX	

Section VI — Health Hazard Data

Route(s) of Entry: Inhalation? YES Skin? YES Ingestion? YES

Health Hazards (*Acute and Chronic*): MATERIAL IS CORROSIVE TO ALL BODY TISSUES WITH WHICH IT COMES IN CONTACT. INHALATION OF SPRAY OR MIST MAY RESULT IN VARYING DEGRESS OF IRRITATION.

Carcinogenicity: NTP? NO IARC Monographs? NO OSHA Regulated? NO

Signs and Symptoms of Exposure: MATERIAL IS CORROSIVE TO SKIN AND MUCOUS MEMBRANES. WILL CAUSE RAPID AND SEVERE BURNS.

Medical Conditions Generally Aggravated by Exposure: SKIN CONTACT WITH PREEXISTING DISORDERS (SUCH AS OPEN WOUNDS). RESPIRATORY CONDITIONS WILL BE AGGRAVATED BY SPRAY OR MIST.

Emergency and First Aid Procedures: EYES-IMMEDIATELY FLUSH EYES WITH COPIOUS AMOUNTS OF WATER FOR 15 MINUTES AND SEEK MEDICAL ATTENTION IMMEDIATELY. SKIN-FLUSH WITH PLE OF WATER.SEE A PHYSICIAN IF BURNS OCCUR.INGESTION-DRINK LARGE QUANTITIES O WATER OR MILK.DO NOT INDUCE VOMITING.IF VOMITING OCCURS READMINISTER FLUIDS.SE A PHYSICIAN IMMEDIATELY.

Section VII — Precautions for Safe Handling and Use

Steps to Be Taken in Case Material Is Released or Spilled: GET PROTECTIVE EQUIPMENT. FLUSH WITH AN ABUNDANT SUPPLY OF WATER. DILUTE ACETIC ACID MAY BE USED TO NEUTRALIZE FINAL TRACES. AVOID EXTREME HEAT.

Waste Disposal Method: DILUTE WELL WITH WATER. ADJUST pH DOWNWARD, KEEPING ON ALKALINE SIDE. FLUSH TO SEWER. MATERIAL IS COMPLETELY BIODEGRADABL

Precautions to Be Taken in Handling and Storing: AVOID EXTREME HEAT IN STORING. USE PROTECTIVE EQUIPMENT WHEN HANDLING.

Other Precautions: DANGER. MATERIAL IS CORROSIVE. PRACTICE GOOD INDUSTRIAL HYGIENE WHEN HANDLING.

Section VIII — Control Measures

Respiratory Protection (*Specify Type*): NOT REQUIRED.

Ventilation	Local Exhaust	NORMAL	Special	N.A.
	Mechanical (General)	N.A.	Other	N.A.

Protective Gloves: REQUIRED

Eye Protection: GOBBLES OR SHIELDS RECOMMEN

Other Protective Clothing or Equipment: EYE WASH STATION SHOULD BE AVAILABLE

Work/Hygienic Practices: WASH HANDS BEFORE EATING, DRINKING OR SMOKING.

• U.S.G.P.O. 1986-491-529/45775

Detergent, Liqui-nox

Material Safety Data Sheet
May be used to comply with
OSHA's Hazard Communication Standard,
29 CFR 1910.1200. Standard must be
consulted for specific requirements.

U.S. Departmen
Occupational Safety a
(Non-Mandatory Form,
Form Approved
OMB No. 1218-0072

IDENTITY *(As Used on Label and List)* LIQUI-NOX

Note: Blank spaces are not permitted. If any item is not applicable, or no information is available, the space must be marked to indicate that

Section I

Manufacturer's Name	Emergency Telephone Number
ALCONOX, INC.	(212) 473-1300
Address *(Number, Street, City, State, and ZIP Code)*	Telephone Number for Information
215 PARK AVENUE SOUTH	(212) 473-1300
NEW YORK, NEW YORK 10003	Date Prepared JANUARY 1, 1991
	Signature of Preparer *(optional)*

Section II — Hazardous Ingredients/Identity Information

Hazardous Components (Specific Chemical Identity; Common Name(s))	OSHA PEL	ACGIH TLV	Other Limits Recommended	% *(optional)*

THERE ARE NO INGREDIENTS IN LIQUI-NOX WHICH APPEARED ON THE OSHA STANDARD 29 CFR 1910 SUBPART Z. ALL OF THE INGREDIENTS IN LIQUI-NOX ARE CONSIDERED TO BE PROPRIETARY INFORMATION AND WE SHALL EXERCISE THE RIGHT TO CONFIDENTIALITY AFFORDED US UNDER THE FEDERAL LAW.

Section III — Physical/Chemical Characteristics

Boiling Point	214°F	Specific Gravity (H_2O = 1) ---	1.075
Vapor Pressure (mm Hg.)	NO DATA	Melting Point	N.A.
Vapor Density (AIR = 1)	NO DATA	Evaporation Rate (Butyl Acetate = 1)	SLOWER

Solubility in Water
COMPLETELY SOLUBLE IN ALL PROPORTIONS

Appearance and Odor
YELLOW LIQUID - PRACTICALLY ODORLESS

Section IV — Fire and Explosion Hazard Data

Flash Point (Method Used)	Flammable Limits	LEL	UEL
NONE (CLEVELAND OPEN CUP)		N.A.	N.A.

Extinguishing Media
WATER, DRY CHEMICAL, FOAM, CO_2, SAND/EARTH

Special Fire Fighting Procedures
FOR FIRES INVOLVING THIS MATERIAL, DO NOT ENTER WITHOUT PROTECTIVE EQUIPMENT AND SELF CONTAINED BREATHING APPARATUS.

Unusual Fire and Explosion Hazards
NONE

Section V — Reactivity Data

Stability	Unstable		Conditions to Avoid NONE
	Stable	XX	

Incompatibility (*Materials to Avoid*) NONE

Hazardous Decomposition or Byproducts SO_2, MAY BE RELEASED ON BURNING

Hazardous Polymerization	May Occur		Conditions to Avoid NONE
	Will Not Occur	XX	

Section VI — Health Hazard Data

Route(s) of Entry: Inhalation? NO Skin? YES Ingestion? YES

Health Hazards (*Acute and Chronic*)
SKIN CONTACT MAY PROVE LOCALLY IRRITATIN. INGESTION MAY CAUSE DISCOMFORT AND/OR DIARRHEA.

Carcinogenicity: NTP? NO IARC Monographs? NO OSHA Regulated? NO

Signs and Symptoms of Exposure
PROLONGED SKIN CONTACT MAY CAUSE DRYING AND/OR CHAPPING.

Medical Conditions Generally Aggravated by Exposure NONE

Emergency and First Aid Procedures
EYES - FLUSH WITH PLENTY OF WATER FOR 15 MINUTES. SKIN-FLUSH WITH WATER.
INGESTION - DRINK LARGE QUANTITIES OF WATER. GET MEDICAL ATTENTION FOR DISCOMFORT

Section VII — Precautions for Safe Handling and Use

Steps to Be Taken in Case Material is Released or Spilled
MATERIAL FOAMS PROFUSELY. RECOVER AS MUCH AS POSSIBLE WITH ABSORBENT MATERIAL AND RINSE REMAINDER TO SEWER, MATERIAL IS COMPLETELY BIODEGRADABLE.

Waste Disposal Method
SMALL QUANTITIES MAY BE DISPOSED OF IN SEWER. LARGE QUANTITIES SHOULD BE SOAKED UP WITH ABSORBENT MATERIAL AND DISPOSED OF ACCORDING TO LOCAL ORDINANCES

Precautions to Be Taken in Handling and Storing
NON REQUIRED - VISCOSITY OF MATERIAL INCREASE AT VERY LOW TEMPERATURE.

Other Precautions
NO SPECIAL REQUIREMENTS OTHER THAN THE GOOD INDUSTRIAL HYGIENE AND SAFETY PRACTICES EMPLOYED WITH ANY INDUSTRIAL CHEMICAL.

Section VIII — Control Measures

Respiratory Protection (*Specify Type*)

Ventilation	Local Exhaust	NORMAL	Special	N.A.
	Mechanical (General)	N.A.	Other	N.A.

Protective Gloves RECOMMENDED Eye Protection RECOMMENDED

Other Protective Clothing or Equipment NOT REQUIRED

Work/Hygienic Practices NO SPECIAL PRACTICES REQUIRED.

• U.S.G.P.O. 1984-491-529/45775

MATERIAL SAFETY DATA SHEET
(EFFECTIVE DATE: 3/30/90)

Detergent, Micro Liquid Laboratory Cleaner

SECTION I - MATERIAL IDENTIFICATION AND USE

MATERIAL NAME/IDENTIFIER

MICRO LIQUID LABORATORY CLEANER

N.F.P.A
H.M.I.S. 0
2 0
-

TO COMPLY WITH OSHA'S HAZARD COMMUNICATION STANDARD 29 CFR 1910.1200

MANUFACTURER'S NAME: INTERNATIONAL PRODUCTS CORPORATION
STREET ADDRESS: P.O. BOX 70
CITY: BURLINGTON, NJ 08016
COUNTRY: U.S.A.
POSTAL CODE:
EMERGENCY PHONE NO.: 609-386-8770

SUPPLIERS NAME: NOT APPLICABLE
STREET ADDRESS: NOT APPLICABLE
CITY: NOT APPLICABLE
COUNTRY: NOT APPLICABLE
TELEPHONE NO. FOR INFORMATION: 609-386-8770

CHEMICAL NAME: A MIXTURE
CHEMICAL FAMILY: A MIXTURE
CHEMICAL FORMULA: NOT APPLICABLE
TRADE NAMES AND SYNONYMS: MICRO
MOLECULAR WEIGHT: NOT APPLICABLE
MATERIAL USE: CLEANER

SECTION II - HAZARDOUS INGREDIENTS OF MATERIAL

HAZARDOUS INGREDIENTS	APPROXIMATE CONCENTRATION %	CAS, NA OR U.N. NUMBERS	LD50 (SPECIFY ROUTE)	LD50 SPECIES &

NO MICRO INGREDIENT, PRESENT AT 1% OR MORE, IS CONTAINED IN THE SARA TITLE III, 313 LIST. HOWEVER, THE FOLLOWING COMPOSITION INFORMATION IS PROVIDED FOR MEDICAL REFERENCE PURPOSES.

MAJOR INGREDIENTS

WATER	7732-18-5
GLYCINE, N,N'-1,2-ETHANEDIYLBIS(N-(CARBOXYMETHYL)-, TETRA-SODIUM SALT	64-02-8
BENZENESULFONIC ACID, DIMETHYL-, AMMONIUM SALT	26447-10-9
BENZENESULFONIC ACID, DODECYL-, CPD. WITH 2,2' ,2" NITRILOTRIS-(ETHANOL)	27323-41-7
POLY(OXY-1,2-ETHANEDIYL), ALPHA-(NONYLPHENYL)-OMEGA-HYDROXY	9016-45-9

SECTION III - PHYSICAL DATA FOR MATERIAL

PHYSICAL STATE: LIQUID
ODOR THRESHOLD(PPM): NOT DETERMINED
EVAPORATION RATE: ABOUT SAME AS WATER
% VOLATILE (BY VOLUME): NOT DETERMINED
VISCOSITY: 8.2 CP
SPECIFIC GRAVITY: 1.14
BOILING POINT (C): CA 212 F (100 C)
PH: 9.7 (CONCENTRATE)
ODOR AND APPEARANCE: PALE YELLOW LIQUID WITH SLIGHT AMMONIA ODOR.
VAPOR PRESSURE(MM): ABOUT SAME AS WATER
VAPOR DENSITY (AIR=1): ABOUT SAME AS WATER
FREEZING POINT(C): CA.-8 C
SOLUBILITY IN WATER (20 C): MISCIBLE
MELTING POINT: FREEZING PT. CA.-8 C
COEFFICIENT OF WATER/OIL DISTRIBUTION: NOT DETERMINED

* SECTION IV - FIRE AND EXPLOSION HAZARD DATA

FLAMMABILITY: NO
IF YES, UNDER WHICH CONDITIONS?:

MEANS OF EXTINCTION: AQUEOUS PRODUCT. FOR FIRES INVOLVING DRIED MATERIAL USE WATER, CARBON DIOXIDE, DRY CHEMICALS, OR FOAM.

SPECIAL PROCEDURES: NOT APPLICABLE

FLASH POINT (C) AND METHOD: NONE-AQUEOUS SYSTEM

UPPER EXPLOSION LIMIT (% BY VOLUME): NOT DETERMINED

LOWER EXPLOSION LIMIT (% BY VOLUME): NOT DETERMINED

AUTOIGNITION TEMPERATURE(C): NOT APPLICABLE

HAZARDOUS COMBUSTION PRODUCTS: NOT APPLICABLE

EXPLOSION DATA
SENSITIVITY TO MECHANICAL IMPACT: NONE
SENSITIVITY TO STATIC DISCHARGE: NONE

SECTION V - REACTIVITY DATA

CHEMICAL STABILITY: YES
IF NO, UNDER WHICH CONDITIONS?:

INCOMPATIBILITY TO OTHER SUBSTANCES?: YES
IF SO, WHICH ONES?: MAY ETCH ALUMINUM AND ZINC

REACTIVITY AND UNDER WHAT CONDITIONS: NOT DETERMINED

HAZARDOUS DECOMPOSITION PRODUCTS: NOT DETERMINED

HAZARDOUS POLYMERIZATION: WILL NOT OCCUR

SECTION VI - TOXICOLOGICAL PROPERTIES OF MATERIAL (HEALTH HAZARD DATA)

NOTE: ALL TEST RESULTS WERE OBTAINED ON UNDILUTED PRODUCT. RECOMMENDED CONCENTRATION OF MICRO FOR MOST APPLICATIONS IS 2% BY VOLUME. COPIES OF TEST RESULTS AVAILABLE ON REQUEST.

ROUTE OF ENTRY: SKIN CONTACT, INHALATION ACUTE, EYE CONTACT

EFFECTS OF ACUTE EXPOSURE TO MATERIAL
EYE: MICRO IS CONSIDERED AN EYE IRRITANT (DID NOT AFFECT CORNEA).

SKIN: MODERATE IRRITANT (PII = 3.88, RABBITS), NO EVIDENCE OF CORROSIVITY.

INHALATION: PROLONGED EXPOSURE MAY CAUSE SLIGHT NOSE AND THROAT IRRITATION.

SWALLOWING: VERY LARGE AMOUNTS COULD CAUSE CRAMPS AND MUSCLE SPASMS.
LD50 GREATER THAN 5G/KG (RATS, ORAL).

EFFECTS OF CHRONIC EXPOSURE TO MATERIAL: NOT DETERMINED
HOWEVER NOTE:
SKIN: PROLONGED USE MAY CAUSE DRYING/CHAPPING.
INHALATION: PROLONGED USE MAY CAUSE SLIGHT NOSE AND THROAT IRRITATION.

SIGNS AND SYMPTOMS OF EXPOSURE: REDNESS OF EYES AND/OR SKIN

MEDICAL CONDITIONS GENERALLY AGGRAVATED BY EXPOSURE: NOT DETERMINED

LD50 OF MATERIAL (SPECIFY SPECIES & ROUTE): LD50 IS GREATER THAN 5G/KG (RATS, ORAL)

LC50 OF MATERIAL (SPECIFY SPECIES & ROUTE): NOT DETERMINED

EXPOSURE (LIMITS): NOT DETERMINED

IRRITANCY OF MATERIAL: EYE IRRITANT

SENSITIZATION OF MATERIAL: NOT DETERMINED

SYNERGISTIC MATERIALS: NONE KNOWN

CARCINOGENICITY, REPRODUCTIVE EFFECTS, TERATOGENICITY, MUTAGENICITY:
U.S.A.: ACCORDING TO DEFINITIONS AND LIMITATIONS OF THE U.S. HAZARD COMMUNICATION STANDARD, NONE OF THE INGREDIENTS ARE LISTED ON THE NTP, IARC, OR OSHA CARCINOGEN LISTS.

CANADA: ACCORDING TO DEFINITIONS AND LIMITATIONS OF THE CANADIAN WHMIS REGULATIONS, NONE OF THE INGREDIENTS ARE LISTED ON THE IARC OR ACGIH CARCINOGEN LISTS.

SECTION VII - PREVENTIVE MEASURES

PERSONAL PROTECTIVE EQUIPMENT

GLOVES (SPECIFY): WATERPROOF GLOVES

EYE (SPECIFY): GOGGLES OR PROTECTIVE GLASSES. AS A GENERAL RULE, DO NOT WEAR CONTACT LENSES WHEN HANDLING CHEMICALS.

RESPIRATORY (SPECIFY): NOT NORMALLY NEEDED.

OTHER (SPECIFY): SAFETY EYE BATH SHOULD BE AVAILABLE. WASH WITH SOAP AND WATER AFTER USE.

ENGINEERING CONTROLS (E.G. VENTILATION, ENCLOSED PROCESS, SPECIFY): GENERAL INDUSTRIAL SYSTEM REQUIREMENTS.

LEAK AND SPILL PROCEDURE: SMALL SPILLS (LESS THAN ONE GALLON)-FLUSH WITH WATER.

LARGE SPILLS-COLLECT LIQUID WITH ABSORBENT MATERIAL AND PACKAGE FOR DISPOSAL ACCORDING TO LOCAL, STATE, AND COUNTRY REGULATIONS.

CONSULT WITH APPROPRIATE AUTHORITIES; BIODEGRADABLE, PH OF CONCENTRATE=9.7

WASTE DISPOSAL: SEE ABOVE (LEAK AND SPILL PROCEDURE)

HANDLING PROCEDURES AND EQUIPMENT: VENTILATION: TYPICAL GENERAL INDUSTRIAL SYSTEMS ARE SUFFICIENT. PROTECTIVE EQUIPMENT: GOGGLES, WATERPROOF GLOVES A WATERPROOF CLOTHING TO PREVENT EYE AND SKIN CONTACT.

STORAGE REQUIREMENTS: STORE IN COOL, DRY, WELL VENTILATED AREAS. KEEP

CONTAINERS CLOSED. USE ONLY STAINLESS STEEL, POLYETHYLENE, OR PLASTIC LINED CONTAINERS FOR STORAGE. DO NOT STORE IN CONTACT WITH ALUMINUM, ZINC, COPPER OR THEIR ALLOYS.

SPECIAL SHIPPING INFORMATION: NOT APPLICABLE

SECTION VIII - EMERGENCY AND FIRST AID MEASURES

EYE CONTACT: IMMEDIATELY FLUSH WITH LARGE QUANTITIES OF WATER FOR AT LEAST 15 MINUTES WHILE HOLDING THE EYELIDS OPEN. DO NOT ATTEMPT TO NEUTRALIZE WITH CHEMICAL AGENTS. CONTACT A PHYSICIAN IMMEDIATELY.

SKIN CONTACT: IMMEDIATELY REMOVE CONTAMINATED CLOTHING AND FLUSH AREA WITH LARGE QUANTITIES OF WATER FOR AT LEAST 15 MINUTES. DO NOT ATTEMPT TO NEUTRALIZE WITH CHEMICALS AGENTS. CONTACT A PHYSICIAN IF IRRITATION DEVELOPS.

INGESTION: IF PATIENT IS CONSCIOUS, GIVE SEVERAL GLASSES OF WATER FOR DILUTION EFFECT AND CONTACT A PHYSICIAN. DO NOT INDUCE VOMITING. DO NOT GIVE AN UNCONSCIOUS PERSON ANYTHING BY MOUTH.

INHALATION: REMOVE FROM CONTAMINATED ATMOSPHERE. IF BREATHING HAS STOPPED, GIVE ARTIFICIAL RESPIRATION THEN OXYGEN IF NEEDED. CONTACT A PHYSICIAN.

OTE TO PHYSICIAN: NONE

ADDITIONAL INFORMATION: NOT APPLICABLE

SECTION IX - PREPARATION DATE OF M.S.D.S.

PREPARED BY (GROUP, DEPARTMENT, ETC.):
CHARLES E. GRANITO, PRESIDENT
INTERNATIONAL PRODUCTS CORPORATION
P.O. BOX 70, BURLINGTON, NJ 08016 U.S.A.
TELEPHONE NUMBER: 609-386-8770
DATE: 3-30-90

ADDITIONAL NOTES OR REFERENCES:
U.S. TSCA LISTING: ALL MICRO INGREDIENTS ARE LISTED IN THE U.S. EPA TSCA INVENTORY.

U.S. SARA CLASSIFICATIONS: NO MICRO INGREDIENT PRESENT AT 1% OR MORE IS CONTAINED IN THE SARA TITLE III, 313 LIST.

WHILE INTERNATIONAL PRODUCTS CORPORATION BELIEVES THE INFORMATION CONTAINED HEREIN TO BE TRUE AND ACCURATE, IT HAS RELIED ON INFORMATION PROVICED BY OTHERS. INTERNATIONAL PRODUCTS CORPORATION MAKES NO WARRANTIES, EXPRESS OR IMPLIED, AS TO THE ACCURACY OR ADEQUACY OF THE INFORMATION CONTAINED HEREIN OR WITH RESPECT TO THE RESULTS TO BE OBTAINED FROM THE USE OF THE PRODUCT. INTERNATIONAL PRODUCTS CORPORATION DISCLAIMS ALL LIABILITY WITH

RESPECT TO THE USE OF THIS PRODUCT, INCLUDING WITHOUT LIMITATION, LIABILITY FOR INJURY TO THE USER OR THIRD PERSONS.

"ISSUED BY VWR 11/25/93"

Material Safety Data Sheet

May be used to comply with OSHA's Hazard Communication Standard, 29 CFR 1910.1200. Standard must be consulted for specific requirements.

U.S. Departmen
Occupational Safety a.
(Non-Mandatory Form)
Form Approved
OMB No. 1218-0072

IDENTITY (As Used on Label and List)	Note: Blank spaces are not permitted. If any item is not applicable, or no information is available, the space must be marked to indicate that.
TERG-A-ZYME	

Section I

Manufacturer's Name: ALCONOX, INC.	Emergency Telephone Number: (212) 473-1300
Address (Number, Street, City, State, and ZIP Code): 215 PARK AVENUE SOUTH NEW YORK, N.Y. 10003	Telephone Number for Information: (212) 473-1300
	Date Prepared: JAN. 1, 1991
	Signature of Preparer (optional):

Section II — Hazardous Ingredients/Identity Information

Hazardous Components (Specific Chemical Identity; Common Name(s))	OSHA PEL	ACGIH TLV	Other Limits Recommended	% (optional)
THERE ARE NO INGREDIENTS IN TERG-A-ZYME WHICH APPEARED ON THE OSHA STANDARD 29 CFR 1910 SUBPART Z.				

Section III — Physical/Chemical Characteristics

Boiling Point	N.A.	Specific Gravity (H_2O = 1)	N.A.
Vapor Pressure (mm Hg.)	N.A.	Melting Point	N.A.
Vapor Density (AIR = 1)	N.A.	Evaporation Rate (Butyl Acetate = 1)	N.A.

Solubility in Water: APPRECIABLE (GREATER THAN 10 PER CENT)

Appearance and Odor: WHITE POWDER INTERSPERSED WITH CREAM COLORED FLAKES AND BROWN SPECKS - ODORLESS

Section IV — Fire and Explosion Hazard Data

Flash Point (Method Used)	Flammable Limits	LEL	UEL
NONE		N.A.	N.A.

Extinguishing Media: WATER, CO_2, DRY CHEMICAL, FOAM, SAND/EARTH

Special Fire Fighting Procedures: FOR FIRES INVOLVING THIS MATERIAL DO NOT ENTER WITHOUT PROTECTIVE EQUIPMENT AND SELF CONTAINED BREATHING APPARATUS.

Unusual Fire and Explosion Hazards: NONE

Section V — Reactivity Data

Stability			Conditions to Avoid
	Unstable		NONE
	Stable	XX	

Incompatibility (*Materials to Avoid*): AVOID STRONG ACIDS.

Hazardous Decomposition or Byproducts: MAY RELEASE CO_2 ON BURNING.

Hazardous Polymerization			Conditions to Avoid
	May Occur		NONE
	Will Not Occur	XX	

Section VI — Health Hazard Data

Route(s) of Entry: Inhalation? YES Skin? NO Ingestion? YES

Health Hazards (*Acute and Chronic*): INHALATION OF POWDER MAY PROVE LOCALLY IRRITATING TO MUCOUS MEMBRANES. INGESTION MAY CAUSE DISCOMFORT AND/OR DIARRHEA.

Carcinogenicity: NTP? NO IARC Monographs? NO OSHA Regulated? NO

Signs and Symptoms of Exposure: EXPOSURE MAY IRRITATE MUCOUS MEMBRANES. INHALATION MAY CAUSE SNEEZING.

Medical Conditions Generally Aggravated by Exposure: RESPIRATORY CONDITIONS MAY BE AGGRAVATED BY POWDER. PERSONNEL MAY NEED TO BE EVALUATED FOR ENZYME SENSITIVITY/ALLERGIC RESP-

Emergency and First Aid Procedures: EYES-FLUSH WITH PLENTY OF WATER FOR 15 MINUTES. SKIN-FLUSH WITH PLENT OF WATER. INGESTION-DRINK LARGE QUANTITIES OF WATER.GET MEDICAL ATTENT FOR DISCOMFORT.

Section VII — Precautions for Safe Handling and Use

Steps to Be Taken in Case Material is Released or Spilled: MATERIAL FOAMS PROFUSELY. SHOVEL AND RECOVER AS MUCH AS POSSIBLE. RINSE REMAINDER TO SEWER. MATERIAL IS COMPLETELY BIODEGRADABLE.

Waste Disposal Method: SMALL QUANTITIES MAY BE DISPOSED OF IN SEWER.LARGE QUANTITIES SHOULD BE DISPOSED OF ACCORDING TO LOCAL REQUIREMENTS FOR NON-HAZARDOUS DETERGENT

Precautions to Be Taken in Handling and Storing: STORE IN A DRY AREA TO PREVENT CAKING.

Other Precautions: NO SPECIAL REQUIREMENTS OTHER THAN THE GOOD INDUSTRIAL HYGIENE AND SAFETY PRACTICES EMPLOYED WITH ANY INDUSTRIAL CHEMICAL.

Section VIII — Control Measures

Respiratory Protection (*Specify Type*): DUST MASK

Ventilation				
	Local Exhaust	NORMAL	Special	N.A.
	Mechanical (General)	N.A.	Other	N.A.

Protective Gloves: REQUIRED

Eye Protection: USEFUL - NOT REQUIRED

Other Protective Clothing or Equipment: NOT REQUIRED

Work/Hygienic Practices: NO SPECIAL PRACTICES REQUIRED

* U.S.G.P.O. 1986-491-529/45771

Genium Publishing Corporation
1145 Catalyn Street
Schenectady, NY 12303-1836 USA
(518) 377-8854

Diesel Fuel Oil No. 2-D

Issued: 10/81 Revision: A, 11/90

Section 1. Material Identification

Diesel Fuel Oil No. 2-D Description: Diesel fuel is obtained from the middle distillate in petroleum separation; a distillate oil of low sulfur content. It is composed chiefly of unbranched paraffins. Diesel fuel is available in various grades, one of which is synonymous with fuel oil No. 2-D. This diesel fuel oil requires a minimum Cetane No. (efficiency rating for diesel fuel comparable to octane number ratings for gasoline) of 40 (ASTM D613). Used as a fuel for trucks, ships, and other automotive engines; as mosquito control (coating on breeding waters); and for drilling muds.

R 1
I -
S 2
K 2

NFPA

HMIS
H 0
F 2
R 0
PPG*
* Sec. 8

Other Designations: CAS No. 68334-30-5, diesel fuel.

Manufacturer: Contact your supplier or distributor. Consult the latest *Chemicalweek Buyers' Guide*[73] for a suppliers list.

Cautions: Diesel fuel oil No. 2-D is a skin irritant and central nervous depressant with high mist concentrations. It is an environmental hazard and moderate fire risk.

Section 2. Ingredients and Occupational Exposure Limits

Diesel fuel oil No. 2-D*

1989 OSHA PEL	*1990-91 ACGIH TLV*	*1988 NIOSH REL*	*1985-86 Toxicity Data‡*
None established	Mineral Oil Mist TWA: 5 mg/m³† *STEL:* 10 mg/m³	None established	Rat, oral, LD_{50}: 9 g/kg produces gastrointestinal (hypermotility, diarrhea) effects

* Diesel fuel No. 2-D tends to be low in aromatics and high in paraffinics. This fuel oil is complex mixture of: 1) >95% paraffinic, olefinic, naphthenic, and aromatic hydrocarbons, 2) sulfur (<0.5%), and 3) benzene (<100 ppm). [A low benzene level reduces carcinogenic risk. Fuel oils can be exempted under the benzene standard (29 CFR 1910.1028)]. Although low in the fuel itself, benzene concentrations are likely to be much higher in processing areas.
† As sampled by nonvapor-collecting method.
‡ Monitor NIOSH, *RTECS* (HZ1800000), for future toxicity data.

Section 3. Physical Data

Boiling Point Range: 340 to 675 °F (171 to 358 °C)
Viscosity: 1.9 to 4.1 centistoke at 104 °F (40 °C)
Specific Gravity: <0.86
Water Solubility: Insoluble

Appearance and Odor: Brown, slightly viscous liquid.

Section 4. Fire and Explosion Data

Flash Point: 125 °F (52 °C) min.	Autoignition Temperature: >500 °F (932 °C)	LEL: 0.6% v/v	UEL: 7.5% v/v

Extinguishing Media: Use dry chemical, carbon dioxide, or foam to fight fire. Use a water spray to cool fire-exposed containers. Do not use a forced water spray directly on burning oil since this will scatter the fire. Use a smothering technique for extinguishing fire.
Unusual Fire or Explosion Hazards: Diesel fuel oil No. 2-D is a OSHA Class II combustible liquid. Its volatility is similar to that of gas oil. Vapors may travel to a source of ignition and flash back.
Special Fire-fighting Procedures: Isolate hazard area and deny entry. Since fire may produce toxic fumes, wear a self-contained breathing apparatus (SCBA) with a full facepiece operated in the pressure-demand or positive-pressure mode and full protective clothing. If feasible, remove containers from fire. Be aware of runoff from fire control methods. Do not release to sewers or waterways due to pollution and fire or explosion hazard.

Section 5. Reactivity Data

Stability/Polymerization: Diesel fuel oil No. 2-D is stable at room temperature in closed containers under normal storage and handling conditions. Hazardous polymerization cannot occur.
Chemical Incompatibilities: It is incompatible with strong oxidizing agents; heating greatly increases the fire hazard.
Conditions to Avoid: Avoid heat and ignition sources.
Hazardous Products of Decomposition: Thermal oxidative decomposition of diesel fuel oil No. 2-D can produce various hydrocarbons and hydrocarbon derivatives, and other partial oxidation products such as carbon dioxide, carbon monoxide, and sulfur dioxide.

Copyright © 1990 Genium Publishing Corporation.
Any commercial use or reproduction without the publisher's permission is prohibited.

Section 6. Health Hazard Data

Carcinogenicity: Although the IARC has not assigned an overall evaluation to diesel fuels as a group, it has evaluated occupational exposures in petroleum refining as an IARC probable human carcinogen (Group 2A). It has evaluated distillate (light) diesel oils as not classifiable as human carcinogens (Group 3).
Summary of Risks: Although diesel fuel's toxicologic effects should resemble kerosine's, they are somewhat more pronounced due to additives such as sulfurized esters. Excessive inhalation of aerosol or mist can cause respiratory tract irritation, headache, dizziness, nausea, vomiting, and loss of coordination, depending on concentration and exposure time. When removed from exposure area, affected persons usually recover completely. If vomiting occurs after ingestion and if oil is aspirated into the lungs, hemorrhaging and pulmonary edema, progressing to renal involvement and chemical pneumonitis, may result. A comparative ratio of oral to aspirated lethal doses may be 1 pt vs. 5 ml. Aspiration may also result in transient CNS depression or excitement. Secondary effects may include hypoxia (insufficient oxygen in body cells), infection, pneumatocele formation, and chronic lung dysfunction. Inhalation may result in euphoria, cardiac dysrhythmias, respiratory arrest, and CNS toxicity. Prolonged or repeated skin contact may irritate hair follicles and block sebaceous glands, producing a rash of acne pimples and spots, usually on arms and legs.
Medical Conditions Aggravated by Long-Term Exposure: None reported.
Target Organs: Central nervous system, skin, and mucous membranes.
Primary Entry Routes: Inhalation, ingestion.
Acute Effects: Systemic effects from ingestion include gastrointestinal irritation, vomiting, diarrhea, and in severe cases central nervous system depression, progressing to coma or death. Inhalation of aerosols or mists may result in increased rate of respiration, tachycardia (excessively rapid heart beat), and cyanosis (dark purplish discoloration of the skin and mucous membranes caused by deficient blood oxygenation).
Chronic Effects: Repeated contact with the skin causes dermatitis.
FIRST AID
Eyes: Gently lift the eyelids and flush immediately and continuously with flooding amounts of water until transported to an emergency medical facility. Consult a physician immediately.
Skin: *Quickly* remove contaminated clothing. Rinse with flooding amounts of water for at least 15 min. If large areas of the body have been exposed or if irritation persists, get medical help immediately. Wash affected area with soap and water.
Inhalation: Remove exposed person to fresh air and support breathing as needed.
Ingestion: Never give anything by mouth to an unconscious or convulsing person. If ingested, *do not induce vomiting* due to aspiration hazard. Contact a physician immediately. Position to avoid aspiration.
After first aid, get appropriate in-plant, paramedic, or community medical support.
Note to Physicians: Gastric lavage is contraindicated due to aspiration hazard. Preferred antidotes are charcoal and milk. In cases of severe aspiration pneumonitis, consider monitoring arterial blood gases to ensure adequate ventilation. Observe the patient for 6 hr. If vital signs become abnormal or symptoms develop, obtain a chest x-ray.

Section 7. Spill, Leak, and Disposal Procedures

Spill/Leak: Notify safety personnel, evacuate area for large spills, remove all heat and ignition sources, and provide maximum explosion-proof ventilation. Cleanup personnel should protect against vapor inhalation and liquid contact. Clean up spills promptly to reduce fire or vapor hazards. Use a noncombustible absorbent material to pick up small spills or residues. For large spills, dike far ahead to contain. Pick up liquid for reclamation or disposal. Do not release to sewers or waterways due to health and fire and/or explosion hazard. Follow applicable OSHA regulations (29 CFR 1910.120). Diesel fuel oil No. 2-D spills may be environmental hazards. Report large spills.
Disposal: Contact your supplier or a licensed contractor for detailed recommendations. Follow applicable Federal, state, and local regulations.
EPA Designations
RCRA Hazardous Waste (40 CFR 261.21): Ignitable waste
CERCLA Hazardous Substance (40 CFR 302.4): Not listed
SARA Extremely Hazardous Substance (40 CFR 355): Not listed
SARA Toxic Chemical (40 CFR 372.65): Not listed
OSHA Designations
Air Contaminant (29 CFR 1910.1000, Subpart Z): Not listed

Section 8. Special Protection Data

Goggles: Wear protective eyeglasses or chemical safety goggles, per OSHA eye- and face-protection regulations (29 CFR 1910.133).
Respirator: Seek professional advice prior to respirator selection and use. Follow OSHA respirator regulations (29 CFR 1910.134) and, if necessary, use a NIOSH-approved respirator with a mist filter and organic vapor cartridge. For emergency or nonroutine operations (cleaning spills, reactor vessels, or storage tanks), wear an SCBA. *Warning! Air-purifying respirators do not protect workers in oxygen-deficient atmospheres.*
Other: Wear impervious gloves, boots, aprons, and gauntlets to prevent skin contact.
Ventilation: Provide general and local explosion-proof ventilation systems to maintain airborne concentrations that promote worker safety and productivity. Local exhaust ventilation is preferred since it prevents contaminant dispersion into the work area by controlling it at its source.[107]
Safety Stations: Make available in the work area emergency eyewash stations, safety/quick-drench showers, and washing facilities.
Contaminated Equipment: Never wear contact lenses in the work area: soft lenses may absorb, and all lenses concentrate, irritants. Remove this material from your shoes and equipment. Launder contaminated clothing before wearing.
Comments: Never eat, drink, or smoke in work areas. Practice good personal hygiene after using this material, especially before eating, drinking, smoking, using the toilet, or applying cosmetics.

Section 9. Special Precautions and Comments

Storage Requirements: Use and storage conditions should be suitable for a OSHA Class II combustible liquid. Store in closed containers in a well-ventilated area away from heat and ignition sources and strong oxidizing agents. Protect containers from physical damage. To prevent static sparks, electrically ground and bond all containers and equipment used in shipping, receiving, or transferring operations. Use nonsparking tools and explosion-proof electrical equipment. No smoking in storage or use areas.
Engineering Controls: Avoid vapor or mist inhalation and prolonged skin contact. Wear protective rubber gloves and chemical safety glasses where contact with liquid or high mist concentration may occur. Additional suitable protective clothing may be required depending on working conditions. Institute a respiratory protection program that includes regular training, maintenance, inspection, and evaluation. Practice good personal hygiene and housekeeping procedures. Do not wear oil contaminated clothing. At least weekly laundering of work clothes is recommended. Do not put oily rags in pockets. When working with this material, wear gloves or use barrier cream.
Transportation Data (49 CFR 172.101)
DOT Shipping Name: Fuel oil
DOT Hazard Class: Combustible liquid
ID No.: NA1993
DOT Label: None
DOT Packaging Exceptions: 173.118a
DOT Packaging Requirements: None

MSDS Collection **References:** 1, 6, 7, 12, 73, 84, 101, 103, 126, 127, 132, 133, 136, 143, 146
Prepared by: MJ Allison, BS; **Industrial Hygiene Review:** DJ Wilson, CIH; **Medical Review:** AC Darlington, MD; **Edited by:** JR Stuart, MS

Copyright © 1990 by Genium Publishing Corporation. Any commercial use or reproduction without the publisher's permission is prohibited. Judgments as to the suitability of information herein for the purchaser's purposes are necessarily the purchaser's responsibility. Although reasonable care has been taken in the preparation of such information, Genium Publishing Corporation extends no warranties, makes no representations, and assumes no responsibility as to the accuracy or suitability of such information for application to the purchaser's intended purpose or for consequences of its use.

CAT. NO. 14070

MATERIAL SAFETY DATA SHEE

DPD Free Chlorine Reagent

MSDS DATE: 4/28/98
CHANGE NO.: 8745

For Assistance, Contact:
Regulatory Affairs Dept.
PO Box 907 Ames, IA 50010
(800) 227-4224

HACH COMPANY
PO BOX 907
AMES, IA 50010

Emergency Telephone #
Rocky Mountain Poison Ctr.
(303) 623-5716

I. PRODUCT IDENTIFICATION

PRODUCT NAME: DPD Free Chlorine Reagent
CAS NO.: NA CHEMICAL NAME: Not applicable
FORMULA: Not applicable CHEMICAL FAMILY: Not applicable

II. INGREDIENTS

Organic Salt (Trade Secret)
PCT: <60 CAS NO.: Confidential SARA: NOT LISTED
TLV: Not established PEL: Not established
HAZARD: Toxicity unknown

Sodium Phosphate, Dibasic, Anhydrous
PCT: <40 CAS NO.: 7558-79-4 SARA: NOT LISTED
TLV: Not established PEL: Not established
HAZARD: Moderately toxic; may cause irritation

DPD Salt (Trade Secret)
PCT: <5 CAS NO.: Confidential SARA: NOT LISTED
TLV: Not established PEL: Not established
HAZARD: Moderately toxic; may cause skin sensitization

Other component
PCT: <1 CAS NO.: NA SARA: NOT LISTED
TLV: Not applicable PEL: Not applicable
HAZARD: Not applicable

Any component of this mixture not specifically listed (eg. "other components") is not considered to present a carcinogen hazard.

III. PHYSICAL DATA

STATE: solid APPEARANCE: White to pale pink powder ODOR: None
SOLUBILITY IN: WATER: Soluble ACID: Soluble OTHER: Not determined
BOILING POINT: NA MELTING PT.: ND SPEC GRAVITY: ND pH: Not determined
VAPOR PRESSURE: Not applicable VAPOR DENSITY (air=1): NA
EVAPORATION RATE: NA METAL CORROSIVITY - ALUMINUM: ND STEEL: ND
STABILITY: Stable
STORAGE PRECAUTIONS: Store in a cool, dry, dark place.

IV. FIRE, EXPLOSION HAZARD AND REACTIVITY DATA

FLASH PT.: Not applicable METHOD: NA
FLAMMABILITY LIMITS - LOWER: NA UPPER: NA
SUSCEPTIBILITY TO SPONTANEOUS HEATING: None
SHOCK SENSITIVITY: None AUTOIGNITION PT.: ND
EXTINGUISHING MEDIA: water, dry chemical, alcohol foam or carbon dioxide
FIRE/EXPLOSION HAZARDS: May emit toxic fumes in fire
HAZARDOUS DECOMP. PRODUCTS: May emit toxic fumes of phosphorus oxides in fire
OXIDIZER: No NFPA Codes: Health: 1 Flammability: 1 Reactivity: 0
CONDITIONS TO AVOID: Extreme temperatures, excess moisture, exposure to light

V. HEALTH HAZARD DATA

THIS PRODUCT MAY BE: irritating to eyes and respiratory tract, and may cause allergic skin reaction.
ACUTE TOXICITY: Slightly toxic
ROUTES OF EXPOSURE: ingestion, inhalation
TARGET ORGANS: Not determined
CHRONIC TOXICITY: Not determined
ROUTES OF EXPOSURE: ingestion, inhalation
TARGET ORGANS: Not determined
CANCER INFORMATION: Not determined
ROUTES OF EXPOSURE: Not determined
TARGET ORGANS: Not determined
OVEREXPOSURE: Contact may cause irritation, skin sensitization
MEDICAL CONDITIONS AGGRAVATED BY EXPOSURE: Allergy or sensitivity to salts of N,N-Diethyl-p-Phenylenediamine

VI. PRECAUTIONARY MEASURES

Avoid contact with eyes.
Avoid prolonged or repeated contact with skin.
Do not breathe dust.
Wash thoroughly after handling.
PROTECTIVE EQUIPMENT: adequate ventilation, safety glasses, disposable gloves

VII. FIRST AID

EYE AND SKIN CONTACT: Immediately flush eyes with water for 15 minutes. Call physician. Remove contaminated clothing. Wash skin with soap and plenty of water.
INGESTION: Give large quantities of water or milk. Call physician immediately.
INHALATION: Remove to fresh air.

VIII. SPILL AND DISPOSAL PROCEDURES

IN CASE OF SPILL OR RELEASE: Sweep up powder. Avoid breathing material. Dissolve in water. Flush down the drain with excess water.
DISPOSE OF IN ACCORDANCE WITH ALL FEDERAL, STATE, AND LOCAL REGULATIONS.

IX. TRANSPORTATION DATA

D.O.T. PROPER SHIPPING NAME: Not Currently Regulated
HAZARD CLASS: Not applicable ID: NA

I.C.A.O. PROPER SHIPPING NAME: Not Currently Regulated
HAZARD CLASS: NA ID: NA GROUP: NA

I.M.O. PROPER SHIPPING NAME: Not Currently Regulated
HAZARD CLASS: NA ID: NA GROUP: NA

X. REFERENCES

1) TLV's Threshold Limit Values and Biological Exposure Indices for 1988-1989. American Conference of Governmental Industrial Hygienists, 1988.
2) Air Contaminants, Federal Register, Vol. 54, No. 12, Thursday, January 19, 1989. pp. 2332-2983.
3) In-house information
4) Technical judgment

SPECIAL NOTE: This product may only be used as an analytical reagent for the determination of chlorine in water due to requirements of the Toxic Substances Control Act (TSCA).

THE INFORMATION CONTAINED HEREIN IS BASED ON DATA CONSIDERED TO BE ACCURATE. HOWEVER, NO WARRANTY IS EXPRESSED OR IMPLIED REGARDING THE ACCURACY OF THESE DATA OR THE RESULTS TO BE OBTAINED FROM THE USE THEREOF.

(C) HACH CO. 1998

CAT. NO. 14064

MATERIAL SAFETY DATA SHEE

DPD Total Chlorine Reagent

MSDS DATE: 6/28/90
CHANGE NO.: 8276

For Assistance, Contact:
Regulatory Affairs Dept.
PO Box 907 Ames, IA 50010
(800) 227-4224

HACH COMPANY
PO BOX 907
AMES, IA 50010

Emergency Telephone #
Rocky Mountain Poison Ctr.
(303) 623-5716

I. PRODUCT IDENTIFICATION

PRODUCT NAME: DPD Total Chlorine Reagent
CAS NO.: NA CHEMICAL NAME: Not applicable
FORMULA: Not applicable CHEMICAL FAMILY: Not applicable

II. INGREDIENTS

Organic Salt (Trade Secret)
PCT: <50 CAS NO.: Confidential SARA: NOT LISTED
TLV: Not established PEL: Not established
HAZARD: Toxicity unknown

Sodium Phosphate, Dibasic, Anhydrous
PCT: <30 CAS NO.: 7558-79-4 SARA: NOT LISTED
TLV: Not established PEL: Not established
HAZARD: Moderately toxic; may cause irritation

Potassium Iodide
PCT: <30 CAS NO.: 7681-11-0 SARA: NOT LISTED
TLV: Not established PEL: Not established
HAZARD: May cause irritation

DPD Salt (Trade Secret)
PCT: <5 CAS NO.: Confidential SARA: NOT LISTED
TLV: Not established PEL: Not established
HAZARD: Moderately toxic; may cause skin sensitization

Other component
PCT: <1 CAS NO.: NA SARA: NOT LISTED
TLV: Not applicable PEL: Not applicable
HAZARD: Not applicable

Any component of this mixture not specifically listed (eg. "other components") is not considered to present a carcinogen hazard.

III. PHYSICAL DATA

STATE: solid APPEARANCE: White to pale pink powder ODOR: None
SOLUBILITY IN: WATER: Soluble ACID: Soluble OTHER: Not determined
BOILING POINT: NA MELTING PT.: ND SPEC GRAVITY: ND pH: Not determined
VAPOR PRESSURE: Not applicable VAPOR DENSITY (air=1): NA
EVAPORATION RATE: NA METAL CORROSIVITY - ALUMINUM: ND STEEL: ND
STABILITY: Stable
STORAGE PRECAUTIONS: Store in a cool, dry, dark place.

IV. FIRE, EXPLOSION HAZARD AND REACTIVITY DATA

FLASH PT.: Not applicable METHOD: NA
FLAMMABILITY LIMITS - LOWER: NA UPPER: NA
SUSCEPTIBILITY TO SPONTANEOUS HEATING: None
SHOCK SENSITIVITY: None AUTOIGNITION PT.: ND
EXTINGUISHING MEDIA: water, dry chemical, alcohol foam or carbon dioxide
FIRE/EXPLOSION HAZARDS: May emit toxic fumes in fire
HAZARDOUS DECOMP. PRODUCTS: May emit toxic fumes of phosphorus oxides, iodine, iodine compounds in fire
OXIDIZER: No NFPA Codes: Health: 1 Flammability: 1 Reactivity: 0
CONDITIONS TO AVOID: Extreme temperatures, excess moisture, exposure to light

V. HEALTH HAZARD DATA

THIS PRODUCT MAY BE: irritating to eyes and respiratory tract, and may cause allergic skin reaction.
ACUTE TOXICITY: Moderately toxic
ROUTES OF EXPOSURE: ingestion, inhalation
TARGET ORGANS: Not determined
CHRONIC TOXICITY: Not determined
ROUTES OF EXPOSURE: ingestion, inhalation
TARGET ORGANS: Not determined
CANCER INFORMATION: Not determined
ROUTES OF EXPOSURE: Not determined
TARGET ORGANS: Not determined
OVEREXPOSURE: Contact may cause irritation, skin sensitization. May cause chronic "iodism": skin rash, conjunctivitis, runny nose, sneezing, bronchitis, headache, fever, irritation of mucous membranes.
MEDICAL CONDITIONS AGGRAVATED BY EXPOSURE: Allergy or sensitivity to salts of N,N-Diethyl-p-Phenylenediamine

VI. PRECAUTIONARY MEASURES

Avoid contact with eyes.
Avoid prolonged or repeated contact with skin.
Do not breathe dust.
Wash thoroughly after handling.
PROTECTIVE EQUIPMENT: adequate ventilation, safety glasses, disposable gloves

VII. FIRST AID

EYE AND SKIN CONTACT: Immediately flush eyes with water for 15 minutes. physician. Remove contaminated clothing. Wash skin with soap and plen water.
INGESTION: Give large quantities of water or milk. Call physician immediately.
INHALATION: Remove to fresh air.

VIII. SPILL AND DISPOSAL PROCEDURES

IN CASE OF SPILL OR RELEASE: Sweep up powder. Avoid breathing material Dissolve in water. Flush down the drain with excess water.
DISPOSE OF IN ACCORDANCE WITH ALL FEDERAL, STATE, AND LOCAL REGULATIONS

IX. TRANSPORTATION DATA

D.O.T. PROPER SHIPPING NAME: Not Currently Regulated
HAZARD CLASS: Not applicable ID: NA

I.C.A.O. PROPER SHIPPING NAME: Not Currently Regulated
HAZARD CLASS: NA ID: NA GROUP: NA

I.M.O. PROPER SHIPPING NAME: Not Currently Regulated
HAZARD CLASS: NA ID: NA GROUP: NA

X. REFERENCES

1) TLV's Threshold Limit Values and Biological Exposure Indices for 1' 1989. American Conference of Governmental Industrial Hygienists, 1'
2) Air Contaminants, Federal Register, Vol. 54, No. 12, Thursday, Januar 19, 1989. pp. 2332-2983.
3) In-house information
4) Technical judgment

SPECIAL NOTE: This product may only be used as an analytical reagent fo determination of chlorine in water due to requirements of the Toxic Substances Control Act (TSCA).

THE INFORMATION CONTAINED HEREIN IS BASED ON DATA CONSIDERED TO BE ACCURATE. HOWEVER, NO WARRANTY IS EXPRESSED OR IMPLIED REGARDING THE ACCURACY OF THESE DATA OR THE RESULTS TO BE OBTAINED FROM THE USE THEREOF.

(C) HACH CO.

COPYRIGHT 1985 SUPELCO, INC. SUPELCO PARK BELLEFONTE
ALL RIGHTS RESERVED

CUSTOMER P.O. NO. 5/27/93

Drying Tube

DATE 5/27/93

MATERIAL SAFETY DATA SHEET

SECTION I -GENERAL INFORMATION

CATALOG NO 20618 (REORDER PRODUCT BY THIS NO.)
PRODUCT NAME DRYING TUBE
DATA SHEET NO R100045
MOLECULAR SIEVE
CHEMICAL NAME SILICIC ACID, ALUMINUM CALCIUM SODIUM SALT
FORMULA FORMULA WEIGHT
CAS 1344-01-0 NRTECS
SYNONYM SODIUM CALCIUM ALUMINOSILICATE
MANUFACTURER SUPELCO INC. PHONE 814-359-3441
ADDRESS SUPELCO PARK, BELLEFONTE, PA 16823-0048

SECTION II - HAZARDOUS INGREDIENTS OF MIXTURES

CHEMICAL NAME
COMMON NAME - PERCENTAGE - CAS #
(FORMULA) - PEL(UNITS) - TLV(UNITS)
LD50 VALUE - CONDITIONS

N/A

SECTION III - PHYSICAL DATA

BOILING POINT N/A MELTING POINT N/A
VAPOR PRESSURE N/A VAPOR DENSITY N/A
SPECIFIC GRAVITY 2.100 G/ML C (WATER=1) PERCENT VOLATILE BY VOLUME N/A
WATER SOLUBILITY N/A EVAPORATION RATE N/A
APPEARANCE OFF WHITE TO TAN SOLID

SECTION IV - FIRE AND EXPLOSION HAZARD DATA

FLASH POINT N/A FLAMMABLE LIMITS LEL N/A UEL N/A

EXTINGUISHING MEDIA

THIS MATERIAL IS NOT FLAMMABLE.
DETERMINED BY SUPPORTING FIRE.

SPECIAL FIRE FIGHTING PROCEDURES

WEAR SELF CONTAINED BREATHING APPARATUS WHEN FIGHTING A CHEMICAL FIRE.

UNUSUAL FIRE AND EXPLOSION HAZARDS

N/A

SECTION V - HEALTH HAZARD DATA

LD50 N/A TLV N/A
PEL N/A

EMERGENCY AND FIRST AID PROCEDURES
EYES
FLUSH EYES WITH WATER FOR 15 MINUTES.

SKIN
FLUSH SKIN WITH LARGE VOLUMES OF WATER.

CATALOG NO 20618 (REORDER PRODUCT BY THIS NO.)
PRODUCT NAME DRYING TUBE
DATA SHEET NO R100045
MOLECULAR SIEVE

SECTION V - HEALTH HAZARD DATA

* CONTINUED *
CONTACT A PHYSICIAN.

INHALATION
IMMEDIATELY MOVE TO FRESH AIR.

INGESTION
GIVE LARGE AMOUNTS OF WATER

EFFECTS OF OVEREXPOSURE

NUISANCE DUST

SECTION VI - REACTIVITY DATA

STABILITY STABLE.

CONDITIONS TO AVOID

N/A

INCOMPATIBILITY

N/A

HAZARDOUS DECOMPOSITION PRODUCTS

N/A

HAZARDOUS POLYMERIZATION WILL NOT OCCUR.

CONDITIONS TO AVOID

REACTS WITH HF AND STRONG ACIDS OR ALKALIES.

SECTION VII - SPILL OR LEAK PROCEDURES

STEPS TO BE TAKEN IN CASE MATERIAL IS RELEASED OR SPILLED

SWEEP UP MATERIAL.
AVOID GENERATING DUST.

WASTE DISPOSAL METHOD

COMPLY WITH ALL APPLICABLE FEDERAL, STATE, OR LOCAL REGULATIONS

NOT A REGULATED HAZARDOUS WASTE.

.TALOG NO 20618 (REORDER PRODUCT BY THIS NO.)
PRODUCT NAME DRYING TUBE
DATA SHEET NO R100045
MOLECULAR SIEVE
* CONTINUED *

SECTION VIII - SPECIAL PROTECTION INFORMATION

RESPIRATORY PROTECTION (SPECIFIC TYPE)

WEAR APPROVED DUST RESPIRATOR.

PROTECTIVE GLOVES

WEAR GLOVES.

EYE PROTECTION

WEAR PROTECTIVE GLASSES.

VENTILATION

USE ONLY IN WELL VENTILATED AREA.

SPECIAL

N/A

HER PROTECTIVE EQUIPMENT

N/A

SECTION IX - SPECIAL PRECAUTIONS

STORAGE AND HANDLING

STORE IN SEALED CONTAINER IN COOL, DRY LOCATION.

OTHER PRECAUTIONS

AVOID EYE OR SKIN CONTACT.
AVOID BREATHING VAPORS.

WHILE THE INFORMATION AND RECOMMENDATIONS SET FORTH HEREIN ARE BELIEVED TO BE ACCURATE AS OF THE DATE HEREOF, SUPELCO, INC. MAKES NO WARRANTY WITH RESPECT THERETO AND DISCLAIMS ALL LIABILITY FROM RELIANCE THEREON.

LAST REVISED 10/26/89

Material Safety Data Sheet

MSDS 1058

Date last revised 12-3-91

I. General Information

Chemical Name & Synonyms: ENCON FOG-FIXER	Trade Name & Synonyms:
Chemical Family: ANTI-FOG CLOTH	Formula:
Proper DOT Shipping Name:	DOT Hazard Classification:
Manufacturer: EXXENE CORPORATION	Manufacturer's Phone Number: 512-991-8391
Manufacturer's Address: 5939 HOLLY ROAD CORPUS CHRISTI, TX 78414	Chemtrec Phone Number:

II. Ingredients

Principal Hazardous Components	Percent	Threshold Limit Value (units)
EXXENE AF-091	75	10,000 ppm
WATER	25	

III. Physical Data

Boiling Point (°F): 200-500°F	Specific Gravity (H_2O = 1): 1.03
Vapor Pressure (mm Hg.): N/A	Percent Volatile By Volume (%):
Vapor Density (Air = 1): less than 0.1	Evaporation Rate (_____ = 1): Mixture
Solubility in Water: 100%	pH:
Appearance & Odor: Neutral Clear Liquid	

IV. Fire & Explosion Rage

Flash Point (Test Method): None	Auto Ignition Temperature:	
Flammable Limits: None	LEL:	UEL:
Extinguishing Media: N/A		
Special Fire Fighting Procedures: N/A		
Unusual Fire & Explosion Hazards: N/A		

V. Health Hazard Data

OSHA Permissible Exposure Limit	ACGIH Threshold Lin
	10,000 p.p.m.
Carcinogen - NTP Program: NO	Carcinogen - IARC Program: NO

Symptoms of Exposure

Medical Conditions Aggravated by Exposure

Primary Route(s) of Entry

Emergency First Aid

VI. Reactivity Data

Stability		Unstable	Conditions To Avoid: High Heat
	X	Stable	
Incompatability			Materials To Avoid
Hazardous Polymerization		May Occur	Conditions To Avoid: High Heat
	X	Will Not Occur	

Hazardous Decomposition Products: CO or CO_2

VII. Environmental Protection Procedures

Spill Response: Clean up with absorbent and dispose of in an approved facility.

Waste Disposal Method: Any approved methods

VIII. Special Protection Information

Eye Protection	Skin Protection
NONE	NONE
Respiratory Protection (Specific Type): NONE	Ventilation Recommended: General Dilution

Other Protection: Wash Hands After Contacts

IX. Special Precautions

Hygienic Practices in Handling & Storage: NONE

Precautions For Repair & Maintenance Of Contaminated Equipment

Other Precautions: N/A

COPYRIGHT 1985 SUPELCO, INC. SUPELCO PARK BELLEFONTE, PA 16823-0048
ALL RIGHTS RESERVED TWX 510-670-3600

CUSTOMER P.O. NO. 040193

DATE 4/01/93 MATERIAL SAFETY DATA SHEET

SECTION I -GENERAL INFORMATION

CATALOG NO 40036 (REORDER PRODUCT BY THIS NO.)
PRODUCT NAME ETHYLBENZENE 5000 UG/ML 1ML
DATA SHEET NO I400360
ETHYLBENZENE
FORMULA MIXTURE FORMULA WEIGHT
CAS NRTECS
SYNONYM ANALYTICAL STANDARD IN METHANOL
MANUFACTURER SUPELCO INC. PHONE 814-359-3441
ADDRESS SUPELCO PARK, BELLEFONTE, PA 16823-0048

SECTION II - HAZARDOUS INGREDIENTS OF MIXTURES

CHEMICAL NAME
COMMON NAME - PERCENTAGE - CAS #
(FORMULA) - PEL(UNITS) - TLV(UNITS)
LD50 VALUE - CONDITIONS

BENZENE, ETHYL-
ETHYLBENZENE 0.5 100-41-
C2H5C6H5 100 PPM 100 PPM
3500 MG/KG ORAL RAT SEE FOOTNOTE(6)
METHANOL
METHANOL 99-100 67-56-
CH3OH 260 MG/M3 262 MG/M3
5628 MG/KG ORAL RAT SEE FOOTNOTE(6)

FOOTNOTES

6 SUBJECT TO THE REPORTING REQUIREMENTS OF SARA TITLE III, SECTION 313.

SECTION III - PHYSICAL DATA

BOILING POINT 65 C MM MELTING POINT -98 C
VAPOR PRESSURE 100 MM C VAPOR DENSITY 1.10 C (AIR=1)
SPECIFIC GRAVITY .790 G/ML C (WATER=1) PERCENT VOLATILE BY VOLUME
WATER SOLUBILITY 100 EVAPORATION RATE >1 (ETHER=1)
APPEARANCE CLEAR COLORLESS LIQUID

SECTION IV - FIRE AND EXPLOSION HAZARD DATA

FLASH POINT 50 F FLAMMABLE LIMITS LEL 6.0 UEL 3

EXTINGUISHING MEDIA

CO2
DRY CHEMICAL
ALCOHOL FOAM.

SPECIAL FIRE FIGHTING PROCEDURES

WEAR SELF CONTAINED BREATHING APPARATUS WHEN FIGHTING A CHEMICAL FIRE.

UNUSUAL FIRE AND EXPLOSION HAZARDS

N/A

SECTION V - HEALTH HAZARD DATA

50 5628 MG/KG ORAL RAT TLV 262 MG/M3
PEL 260 MG/M3

EMERGENCY AND FIRST AID PROCEDURES
EYES

DATE 4/01/93 MATERIAL SAFETY DATA SHEET Ethyl Benzene

CATALOG NO 40036 (REORDER PRODUCT BY THIS
PRODUCT NAME ETHYLBENZENE 5000 UG/ML 1ML
DATA SHEET NO I400360
ETHYLBENZENE

SECTION V - HEALTH HAZARD DATA

* CONTINUED *
FLUSH EYES WITH WATER FOR 15 MINUTES.
CONTACT A PHYSICIAN.

SKIN
FLUSH SKIN WITH LARGE VOLUMES OF WATER.

INHALATION
IMMEDIATELY MOVE TO FRESH AIR.
IF BREATHING STOPS, GIVE ARTIFICIAL RESPIRATION
CONTACT A PHYSICIAN

INGESTION
NEVER GIVE ANYTHING BY MOUTH TO AN UNCONSCIOUS PERSON
NEVER TRY TO MAKE AN UNCONSCIOUS PERSON VOMIT
GIVE 2 TABLESPOONS OF BAKING SODA IN A GLASS OF WATER
PRESS FINGERS TO BACK OF TONGUE TO INDUCE VOMITING.
IMMEDIATELY CONTACT A PHYSICIAN.

EFFECTS OF OVEREXPOSURE

HARMFUL IF INHALED
MAY BE FATAL IF SWALLOWED
HEADACHE
NAUSEA
GASTROINTESTINAL DISTURBANCES
BLINDNESS

SECTION VI - REACTIVITY DATA

STABILITY STABLE.

CONDITIONS TO AVOID

N/A

INCOMPATIBILITY

OXIDIZING AGENTS
CHROMIC ANHYDRIDE, LEAD PERCHLORATE, PERCHLORIC ACIDS

HAZARDOUS DECOMPOSITION PRODUCTS

N/A

HAZARDOUS POLYMERIZATION WILL NOT OCCUR.

CATALOG NO 40036 (REORDER PRODUCT BY THIS NO.)
PRODUCT NAME ETHYLBENZENE 5000 UG/ML 1ML
DATA SHEET NO I400360
ETHYLBENZENE

SECTION VI - REACTIVITY DATA

* CONTINUED *

CONDITIONS TO AVOID

N/A

SECTION VII - SPILL OR LEAK PROCEDURES

STEPS TO BE TAKEN IN CASE MATERIAL IS RELEASED OR SPILLED

TAKE UP WITH ABSORBENT MATERIAL.
VENTILATE AREA.
ELIMINATE ALL IGNITION SOURCES.

WASTE DISPOSAL METHOD

COMPLY WITH ALL APPLICABLE FEDERAL, STATE, OR LOCAL REGULATIONS

SECTION VIII - SPECIAL PROTECTION INFORMATION

RESPIRATORY PROTECTION (SPECIFIC TYPE)

WEAR FACE MASK WITH ORGANIC VAPOR CANISTER.

PROTECTIVE GLOVES

WEAR RUBBER GLOVES.

EYE PROTECTION

WEAR PROTECTIVE GLASSES.

VENTILATION

USE ONLY IN WELL VENTILATED AREA.

SPECIAL

N/A

OTHER PROTECTIVE EQUIPMENT

N/A

SECTION IX - SPECIAL PRECAUTIONS

STORAGE AND HANDLING

REFRIGERATE IN SEALED CONTAINER.

CATALOG NO 40036 (REORDER PRODUCT BY THIS NO.)
PRODUCT NAME ETHYLBENZENE 5000 UG/ML 1ML
DATA SHEET NO I400360
ETHYLBENZENE

SECTION IX - SPECIAL PRECAUTIONS

* CONTINUED *
KEEP AWAY FROM OXIDIZERS.
KEEP AWAY FROM IGNITION SOURCES.

OTHER PRECAUTIONS

AVOID EYE OR SKIN CONTACT.
AVOID BREATHING VAPORS.

WHILE THE INFORMATION AND RECOMMENDATIONS SET FORTH HEREIN ARE BELIEVED TO BE ACCURATE AS OF THE DATE HEREOF, SUPELCO, INC. MAKES NO WARRANTY WITH RESPECT THERETO AND DISCLAIMS ALL LIABILITY FROM RELIANCE THEREON.

LAST REVISED 11/23/92

Material Safety Data Sheet

from Genium's Reference Collection
Genium Publishing Corporation
1145 Catalyn Street
Schenectady, NY 12303-1836 USA
(518) 377-8855

GENIUM PUBLISHING CORP.

No. 385

ETHYL BENZENE
(Revision A)
Issued: August 1978
Revised: November 1988

SECTION 1. MATERIAL IDENTIFICATION

27

Material Name: ETHYL BENZENE

Description (Origin/Uses): Used as a solvent and as an intermediate in the production of styrene monomer.

Other Designations: Phenylethane; Ethylbenzol; $C_2H_5C_6H_5$; CAS No. 0100-41-4

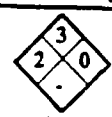

NFPA

Manufacturer: Contact your supplier or distributor. Consult the latest edition of the *Chemicalweek Buyers' Guide* (Genium ref. 73) for a list of suppliers.

HMIS

H 2	R 1
F 3	I 3
R 0	S 2
PPG*	K 4

*See sect. 8

SECTION 2. INGREDIENTS AND HAZARDS

	%	EXPOSURE LIMITS
Ethyl Benzene, CAS No. 0100-41-4	Ca 100	**OSHA PELs** 8-Hr TWA: 100 ppm, 435 mg/m³ 15- Min STEL: 125 ppm, 545 mg/m³ **ACGIH TLVs, 1988-89** TLV-TWA: 100 ppm, 435 mg/m³ TLV-STEL: 125 ppm, 545 mg/m³ **Toxicity Data*** Human, Inhalation, TC_{Lo}: 100 ppm (8 Hrs) Rat, Oral, LD_{50}: 3500 mg/kg

*See NIOSH, *RTECS* (DA0700000), for additional data with references to reproductive, irritative, and mutagenic effects.

SECTION 3. PHYSICAL DATA

Boiling Point: 277°F (136°C)
Melting Point: -139°F (-95°C)
Vapor Pressure: 7.1 Torrs at 68°F (20°C)
Vapor Density (Air = 1): 3.7
% Volatile by Volume: Ca 100
Molecular Weight: 106 Grams/Mole
Solubility in Water (%): Slight
Specific Gravity (H_2O = 1): 0.86258 at 77°F (25°C)

Appearance and Odor: A clear, colorless, flammable liquid; characteristic aromatic hydrocarbon odor.

SECTION 4. FIRE AND EXPLOSION DATA

Flash Point and Method: 64°F (18°C) CC	Autoignition Temperature: 810°F (432.22°C)	LEL: 1% v/v	UEL: 6.7% v/v

Extinguishing Media: Use foam, dry chemical, or carbon dioxide to put out ethyl benzene fires. A water spray may be ineffective in extinguishing the fire, because it can scatter and spread the burning liquid. Use water spray to cool fire-exposed containers of ethyl benzene, to disperse ethyl benzene vapor, and to protect personnel attempting to stop an ethyl benzene leak. **Unusual Fire or Explosion Hazards:** This liquid can readily form explosive vapor-air mixtures, especially when heated. Ethyl benzene vapor is heavier than air and may travel a considerable distance to a low-lying source of ignition and flash back to its origin. **Special Fire-fighting Procedures:** Wear a self-contained breathing apparatus (SCBA) with a full facepiece operated in the pressure-demand or positive-pressure mode.

SECTION 5. REACTIVITY DATA

Stability/Polymerization: Ethyl benzene is stable in closed containers during routine operations. Hazardous polymerization cannot occur. **Chemical Incompatibilities:** Hazardous chemical reactions can occur between ethyl benzene and strong oxidizing agents, acids, ammonia, and bases. **Conditions to Avoid:** Avoid any exposure to sources of ignition such as heat, sparks, open flame, and lighted tobacco products, etc., and to incompatible chemicals. Use caution when entering confined spaces, particularly low-lying areas where explosive concentrations of ethyl benzene vapor may be present. Provide good ventilation to such areas to prevent the concentration of this vapor. **Hazardous Products of Decomposition:** Thermal-oxidative degradation can include toxic gases such as carbon monoxide and/or aromatic hydrocarbon gases.

SECTION 6. HEALTH HAZARD INFORMATION

Carcinogenicity: Ethyl benzene is not listed as a carcinogen by the NTP, IARC, or OSHA.
Summary of Risks: Ethyl benzene vapor is severely irritating to the eyes and to the mucous membranes of the respiratory system. Sustained inhalation of excessive levels can cause depression of the central nervous system (CNS) characterized by dizziness, headache, narcosis, and coma. Skin contact with liquid ethyl benzene causes irritation; dermatitis and defatting can also develop. The acute oral toxicity of ethyl benzene is low; however, ingestion of it presents a serious aspiration hazard. Aspirating even a small amount into the lungs can result in extensive edema (lungs filled with fluid) and hemorrhaging of the lung tissue. No systemic effects are expected at the levels that produce pronounced, unignorable, disagreeable skin and eye irritation. The TLVs cited in section 2 are set to prevent this intolerable irritation. **Medical Conditions Aggravated by Long-Term Exposure:** None reported. **Target Organs:** Skin, eyes, respiratory system, and CNS. **Primary Entry:** Inhalation, skin contact **Acute Effects:** Irritation of the skin, eyes, and respiratory system. Also, cardiac-rhythm disturbance due to sensitization; acute bronchitis, bronchospasm, pulmonary and laryngeal edema; euphoria; headache; giddiness; dizziness; and incoordination, as well as possible depression; confusion; and coma. **Chronic Effects:** None reported. **First Aid:** Eyes. Immediately

Copyright © 1988 by Genium Publishing Corporation
Any commercial use or reproduction without the publisher's permission is prohibited

SECTION 6. HEALTH HAZARD INFORMATION, cont.

flush eyes, including under the eyelids, gently but thoroughly with flooding amounts of running water for at least 15 minutes. Skin. Rinse the affected area with plenty of water, then wash it with soap and water. Inhalation. Remove the exposed person to fresh air; restore and/or support his or her breathing as needed. Have qualified medical personnel administer oxygen as required. Ingestion. Unlikely. Should this type of exposure occur, the aspiration hazard must be considered. Do not induce vomiting unless directed to do so by a physician. To prevent aspiration by spontaneous vomiting, keep the victim's head low (between his or her knees). Get medical help (in plant, paramedic, community) for all exposures. Seek prompt medical assistance for further treatment, observation, and support after first aid. Note to Physician: Professional judgment is required as to whether or not to induce vomiting because of the possibility of aspiration. A gastric lavage may be administered, followed by saline catharsis, if this procedure is appropriate to the specific incident. Monitor cardiac and pulmonary functions.

SECTION 7. SPILL, LEAK, AND DISPOSAL PROCEDURES

Spill/Leak: Notify safety personnel, evacuate unnecessary personnel, eliminate all sources of ignition immediately, and provide adequate explosion-proof ventilation. Cleanup personnel need protection against skin or eye contact with this liquid as well as inhalation of its vapor (see sect. 8). Contain large spills and collect waste or absorb it with an inert material such as sand, earth, or vermiculite. Use nonsparking tools to place waste liquid or absorbent into closable containers for disposal. Keep waste out of sewers, watersheds, and waterways. **Waste Disposal:** Contact your supplier or a licensed contractor for detailed recommendations. Follow Federal, state, and local regulations.

OSHA Designations
Listed as an Air Contaminant (29 CFR 1910.1000 Subpart Z).
EPA Designations (40 CFR 302.4)
CERCLA Hazardous Substance, Reportable Quantity: 1000 lbs (454 kg), per the Clean Water Act (CWA), §§ 311 (b) (4) and 307 (a).

SECTION 8. SPECIAL PROTECTION INFORMATION

Goggles: Always wear protective eyeglasses or chemical safety goggles. Where splashing is possible, wear a full face shield. Follow OSHA eye- and face-protection regulations (29 CFR 1910.133). **Respirator:** Wear a NIOSH-approved respirator per Genium reference 88 for the maximum-use concentrations and/or the exposure limits cited in section 2. Follow OSHA respirator regulations (29 CFR 1910.134). For emergency or nonroutine operations (spills or cleaning reactor vessels and storage tanks), wear an SCBA. **Warning:** Air-purifying respirators will *not* protect workers in oxygen-deficient atmospheres. **Other:** Wear impervious gloves, boots, aprons, and gauntlets, etc., to prevent prolonged or repeated skin contact with this material. **Ventilation:** Install and operate general and local maximum, explosion-proof ventilation systems powerful enough to maintain airborne levels of this material below the OSHA PEL standard cited in section 2. Local exhaust ventilation is preferred because it prevents dispersion of the contaminant into the general work area by eliminating it at its source. Consult the latest edition of Genium reference 103 for detailed recommendations. **Safety Stations:** Make emergency eyewash stations, safety/quick-drench showers, and washing facilities available in work areas. **Contaminated Equipment:** Contact lenses pose a special hazard; soft lenses may absorb irritants, and all lenses concentrate them. Do *not* wear contact lenses in any work area. Remove contaminated clothing and launder it before wearing it again; clean this material from shoes and equipment. **Comments:** Practice good personal hygiene; always wash thoroughly after using this material and before eating, drinking, smoking, using the toilet, or applying cosmetics. Keep it off your clothing and equipment. Avoid transferring it from your hands to your mouth while eating, drinking, or smoking. Do *not* eat, drink, or smoke in any work area. Do not inhale ethyl benzene vapor.

SECTION 9. SPECIAL PRECAUTIONS AND COMMENTS

Storage/Segregation: Store ethyl benzene in closed containers in a cool, dry, well-ventilated area away from sources of ignition and strong oxidizers. Protect containers from physical damage. **Special Handling/Storage:** Outside, isolated, detached, or remote storage is recommended for large quantities of ethyl benzene. Isolate bulk storage areas from acute fire hazards. **Engineering Controls:** Make sure all engineering systems (production, transportation) are of maximum explosion-proof design. To prevent static sparks, electrically ground and bond all containers, pipelines, etc., used in shipping, transferring, reacting, production, and sampling operations. **Other:** Use safety cans for transferring small amounts of ethyl benzene.

Transportation Data (49 CFR 172.101-2)

DOT Shipping Name: Ethyl Benzene
DOT Hazard Class: Flammable Liquid
ID No. UN1175
DOT Label: Flammable Liquid
DOT Packaging Exceptions: 49 CFR 173.118
DOT Packaging Requirements: 49 CFR 173.119

IMO Shipping Name: Ethylbenzene
IMO Hazard Class: 3.2
IMO Label: Flammable Liquid
IMDG Packaging Group: II

References: 1, 26, 38, 84-94, 100, 116, 117, 120, 122.

Judgments as to the suitability of information herein for purchaser's purposes are necessarily purchaser's responsibility. Therefore, although reasonable care has been taken in the preparation of such information, Genium Publishing Corp. extends no warranties, makes no representations and assumes no responsibility as to the accuracy or suitability of such information for application to purchaser's intended purposes or for consequences of its use.

Prepared by PJ Igoe, BS
Industrial Hygiene Review: DJ Wilson, CIH
Medical Review: W Silverman, MD

Copyright © 1988 by Genium Publishing Corporation
Any commercial use or reproduction without the publisher's permission is prohibited

OPYRIGHT 1985 SUPELCO, INC. SUPELCO PARK BELLEFONTE, PA
ALL RIGHTS RESERVED TWX 510-670-3600
USTOMER P.O. NO. 040193

DATE 4/01/93 MATERIAL SAFETY DATA SHEET

SECTION I -GENERAL INFORMATION

ATALOG NO 40171 (REORDER PRODUCT BY THIS NO.)
RODUCT NAME ETHYLENE DIBROMIDE 5000UG/ML 1ML
DATA SHEET NO I401710
ETHYLENE DIBROMIDE
'ORMULA MIXTURE FORMULA WEIGHT
:AS NRTECS
:YNONYM ANALYTICAL STANDARD IN METHANOL
IANUFACTURER SUPELCO INC. PHONE 814-359-3441
ADDRESS SUPELCO PARK, BELLEFONTE, PA 16823-0048

SECTION II - HAZARDOUS INGREDIENTS OF MIXTURES

CHEMICAL NAME
COMMON NAME - PERCENTAGE - CAS #
(FORMULA) - PEL(UNITS) - TLV(UNITS)
LD50 VALUE - CONDITIONS

ETHANE, 1,2-DIBROMO-
1,2-DIBROMOETHANE 0.5 106-93-4
C2H4BR2 20 PPM N/A
108 MG/KG ORAL RAT SEE FOOTNOTE(2,6,8)

METHANOL
METHANOL 99-100 67-56-1
CH3OH 260 MG/M3 262 MG/M3
5628 MG/KG ORAL RAT SEE FOOTNOTE(6)

FOOTNOTES

2 CLASSIFIED BY IARC AS A CLASS 2A CARCINOGEN.
6 SUBJECT TO THE REPORTING REQUIREMENTS OF SARA TITLE III, SECTION 313.
8 CLASSIFIED BY NTP AS A GROUP B CARCINOGEN.

SECTION III - PHYSICAL DATA

BOILING POINT 65 C MM MELTING POINT -98 C
VAPOR PRESSURE 100 MM C VAPOR DENSITY 1.10 C (AIR=1)
SPECIFIC GRAVITY .790 G/ML C (WATER=1) PERCENT VOLATILE BY VOLUME 10
WATER SOLUBILITY 100 EVAPORATION RATE >1 (ETHER=1)
APPEARANCE CLEAR COLORLESS LIQUID

SECTION IV - FIRE AND EXPLOSION HAZARD DATA

FLASH POINT 50 F FLAMMABLE LIMITS LEL 6.0 UEL 36.5

EXTINGUISHING MEDIA

CO2
DRY CHEMICAL
ALCOHOL FOAM.

SPECIAL FIRE FIGHTING PROCEDURES

WEAR SELF CONTAINED BREATHING APPARATUS WHEN FIGHTING A CHEMICAL FIRE.

UNUSUAL FIRE AND EXPLOSION HAZARDS

THE FOLLOWING TOXIC VAPORS ARE FORMED WHEN THIS MATERIAL IS HEATED TO DECOMPOSITION.

DATE 4/01/93 MATERIAL SAFETY DATA SHEET

Ethylene Dibromide

CATALOG NO 40171 (REORDER PRODUCT BY THIS N
PRODUCT NAME ETHYLENE DIBROMIDE 5000UG/ML 1ML
DATA SHEET NO I401710
ETHYLENE DIBROMIDE
* CONTINUED *
HYDROGEN BROMIDE

SECTION V - HEALTH HAZARD DATA

LD50 5628 MG/KG ORAL RAT TLV 262 MG/M3
PEL 260 MG/M3

EMERGENCY AND FIRST AID PROCEDURES

EYES
FLUSH EYES WITH WATER FOR 15 MINUTES.
CONTACT A PHYSICIAN.

SKIN
FLUSH SKIN WITH LARGE VOLUMES OF WATER.

INHALATION
IMMEDIATELY MOVE TO FRESH AIR.
IF BREATHING STOPS, GIVE ARTIFICIAL RESPIRATION
CONTACT A PHYSICIAN

INGESTION
NEVER GIVE ANYTHING BY MOUTH TO AN UNCONSCIOUS PERSON
NEVER TRY TO MAKE AN UNCONSCIOUS PERSON VOMIT
GIVE 2 TABLESPOONS OF BAKING SODA IN A GLASS OF WATER
PRESS FINGERS TO BACK OF TONGUE TO INDUCE VOMITING.
IMMEDIATELY CONTACT A PHYSICIAN.

EFFECTS OF OVEREXPOSURE

HARMFUL IF INHALED
MAY BE FATAL IF SWALLOWED
CONTAINS MATERIAL(S) KNOWN TO THE STATE OF CALIFORNIA TO CAUSE CANCER.
HEADACHE
NAUSEA
GASTROINTESTINAL DISTURBANCES
BLINDNESS

SECTION VI - REACTIVITY DATA

STABILITY STABLE.

CONDITIONS TO AVOID

N/A

INCOMPATIBILITY

OXIDIZING AGENTS

CATALOG NO 40171 (REORDER PRODUCT BY THIS NO.)
PRODUCT NAME ETHYLENE DIBROMIDE 5000UG/ML 1ML
DATA SHEET NO I401710
ETHYLENE DIBROMIDE

SECTION VI - REACTIVITY DATA

* CONTINUED *
CHROMIC ANHYDRIDE, LEAD PERCHLORATE, PERCHLORIC ACIDS

HAZARDOUS DECOMPOSITION PRODUCTS

HYDROGEN BROMIDE

HAZARDOUS POLYMERIZATION WILL NOT OCCUR.

CONDITIONS TO AVOID

N/A

SECTION VII - SPILL OR LEAK PROCEDURES

STEPS TO BE TAKEN IN CASE MATERIAL IS RELEASED OR SPILLED

TAKE UP WITH ABSORBENT MATERIAL.
VENTILATE AREA.
ELIMINATE ALL IGNITION SOURCES.

WASTE DISPOSAL METHOD

COMPLY WITH ALL APPLICABLE FEDERAL, STATE, OR LOCAL REGULATIONS

SECTION VIII - SPECIAL PROTECTION INFORMATION

RESPIRATORY PROTECTION (SPECIFIC TYPE)

WEAR FACE MASK WITH ORGANIC VAPOR CANISTER.

PROTECTIVE GLOVES

WEAR RUBBER GLOVES.

EYE PROTECTION

WEAR PROTECTIVE GLASSES.

VENTILATION

USE ONLY IN WELL VENTILATED AREA.

SPECIAL

N/A

.G NO 40171 (REORDER PRODUCT BY THIS NO.)
)DUCT NAME ETHYLENE DIBROMIDE 5000UG/ML 1ML
.TA SHEET NO I401710
ETHYLENE DIBROMIDE

SECTION VIII - SPECIAL PROTECTION INFORMATION

* CONTINUED *

ER PROTECTIVE EQUIPMENT

N/A

SECTION IX - SPECIAL PRECAUTIONS

)RAGE AND HANDLING

:EFRIGERATE IN SEALED CONTAINER.
:EEP AWAY FROM OXIDIZERS.
KEEP AWAY FROM IGNITION SOURCES.

IER PRECAUTIONS

AVOID EYE OR SKIN CONTACT.
AVOID BREATHING VAPORS.

E THE INFORMATION AND RECOMMENDATIONS SET FORTH HEREIN ARE BELIEVED TO BE
ATE AS OF THE DATE HEREOF, SUPELCO, INC. MAKES NO WARRANTY WITH RESPECT
..ETO AND DISCLAIMS ALL LIABILITY FROM RELIANCE THEREON.

.ST REVISED 11/24/92

ETHYLENE GLYCOL

EGL

Common Synonyms	Think Issue	Colorless	Odorless
Glycol Monoethylene glycol 1,2-Ethanediol 1,2-Dihydroxyethane Ethylene dihydrate	Sinks and mixes with water		

[illegible] discharge if possible
Call fire department
Isolate and remove discharged material
Notify local health and pollution control agencies

Fire

Combustible.
Extinguish with dry chemical, alcohol foam, or carbon dioxide
Water may be ineffective on fire
Cool exposed containers with water

Exposure

CALL FOR MEDICAL AID

LIQUID
Irritating to skin and eyes.
If swallowed, will cause loss of consciousness.
Remove contaminated clothing and shoes
Flush affected areas with plenty of water
IF IN EYES, hold eyelids open and flush with plenty of water
IF SWALLOWED and victim is CONSCIOUS, have victim rinse mouth [illegible] and have victim induce vomiting
IF SWALLOWED and victim is UNCONSCIOUS OR HAVING CONVULSIONS, do nothing except keep victim warm

Water Pollution

Effect of low concentrations on aquatic life is unknown.
May be dangerous if it enters water intakes.

Notify local health and wildlife officials
Notify operators of nearby water intakes

1. RESPONSE TO DISCHARGE

(See Response Methods Handbook)

Dispersal: Dilute

2. LABEL

2.1 Category: None
2.2 Class: Not pertinent

3. CHEMICAL DESIGNATIONS

3.1 CG Compatibility Class: Alcohol, Glycol
3.2 Formula: $HOCH_2CH_2OH$
3.3 IMO/UN Designation: Not listed
3.4 DOT ID No.: Data Not Available
3.5 CAS Registry No.: 107-21-1

4. OBSERVABLE CHARACTERISTICS

4.1 Physical State (at ambient): Liquid
4.2 Color: Colorless
4.3 Odor: Slight odor

5. HEALTH HAZARDS

5.1 Personal Protective Equipment: Goggles; shower and eye bath
5.2 Symptoms Following Exposure: Inhalation of vapor is not hazardous. Ingestion causes stupor or coma, somewhat leading to fatal kidney injury
5.3 Treatment of Exposure: INGESTION: induce vomiting and call a physician. SKIN AND EYES: flush with water
5.4 Threshold Limit Value: 50 ppm
5.5 Short Term Inhalation Limits: Not pertinent
5.6 Toxicity by Ingestion: Grade 1; LD_{50} = 5 to 15 g/kg [rat, guinea pig, mouse]
5.7 Late Toxicity: Fatal kidney injury may result if ingested
5.8 Vapor (Gas) Irritant Characteristics: Vapors are nonirritating to the eyes and throat.
5.9 Liquid or Solid Irritant Characteristics: No appreciable hazard. Practically harmless to the skin
5.10 Odor Threshold: Not pertinent
5.11 IDLH Value: Data Not Available

6. FIRE HAZARDS

6.1 Flash Point: 240°F O.C., 232°F C.C.
6.2 Flammable Limits in Air: LEL = 3.2%, UEL not listed
6.3 Fire Extinguishing Agents: Water fog, alcohol foam, carbon dioxide, or dry chemical
6.4 Fire Extinguishing Agents Not to be Used: Water or foam may cause frothing
6.5 Special Hazards of Combustion Products: Not pertinent
6.6 Behavior in Fire: Not pertinent
6.7 Ignition Temperature: 775°F
6.8 Electrical Hazard: Not pertinent
6.9 Burning Rate: 1.0 mm/min.
6.10 Adiabatic Flame Temperature: Data Not Available
6.11 Stoichiometric Air to Fuel Ratio: Data Not Available
6.12 Flame Temperature: Data Not Available

7. CHEMICAL REACTIVITY

7.1 Reactivity With Water: No reaction
7.2 Reactivity with Common Materials: No reaction
7.3 Stability During Transport: Stable
7.4 Neutralizing Agents for Acids and Caustics: Not pertinent
7.5 Polymerization: Not pertinent
7.6 Inhibitor of Polymerization: Not pertinent
7.7 Molar Ratio (Reactant to Product): Data Not Available
7.8 Reactivity Group: 20

8. WATER POLLUTION

8.1 Aquatic Toxicity:
> 100 ppm/48 hr/sunfish/LC_{50}/soft water
8.2 Waterfowl Toxicity: Data not available
8.3 Biological Oxygen Demand (BOD): 12.5% (theor.), 5 days, 75% (theor.), 20 days
8.4 Food Chain Concentration Potential: None

9. SHIPPING INFORMATION

9.1 Grades of Purity: Industrial grade; low-conductivity grade
9.2 Storage Temperature: Ambient
9.3 Inert Atmosphere: No requirement
9.4 Venting: Open (flame arrester)

10. HAZARD ASSESSMENT CODE

(See Hazard Assessment Handbook)

A-P-O

11. HAZARD CLASSIFICATIONS

11.1 Code of Federal Regulations: Not listed
11.2 NAS Hazard Rating for Bulk Water Transportation:

Category	Rating
Fire	1
Health	
Vapor Irritant	0
Liquid or Solid Irritant	0
Poisons	1
Water Pollution	
Human Toxicity	2
Aquatic Toxicity	1
Aesthetic Effect	1
Reactivity	
Other Chemicals	2
Water	0
Self Reaction	0

11.3 NFPA Hazard Classification:

Category	Classification
Health Hazard (Blue)	1
Flammability (Red)	1
Reactivity (Yellow)	0

12. PHYSICAL AND CHEMICAL PROPERTIES

12.1 Physical State at 15°C and 1 atm: Liquid
12.2 Molecular Weight: 62.07
12.3 Boiling Point at 1 atm: 387.1°F = 197.8°C = 470.8°K
12.4 Freezing Point: 8.6°F = -13°C = 260°K
12.5 Critical Temperature: Not pertinent
12.6 Critical Pressure: Not pertinent
12.7 Specific Gravity: 1.115 at 20°C (liquid)
12.8 Liquid Surface Tension: Not pertinent
12.9 Liquid-Water Interfacial Tension: Not pertinent
12.10 Vapor (Gas) Specific Gravity: Not pertinent
12.11 Ratio of Specific Heats of Vapor (Gas): 1.086
12.12 Latent Heat of Vaporization: 344 Btu/lb = 191 cal/g = 8.00 X 10^4 J/kg
12.13 Heat of Combustion: -7259 Btu/lb = -4033 cal/g = -168.8 X 10^4 J/kg
12.14 Heat of Decomposition: Not pertinent
12.15 Heat of Solution: (est.) -20 Btu/lb = -12 cal/g = -0.5 X 10^4 J/kg
12.16 Heat of Polymerization: Not pertinent
12.17 Heat of Fusion: 43.36 cal/g
12.18 Limiting Value: Data Not Available
12.19 Reid Vapor Pressure: 0.008 psia

NOTES

EGL	ETHYLENE GLYCOL	Ethylene Glycol

12.17 SATURATED LIQUID DENSITY

Temperature (degrees F)	Pounds per cubic foot
40	70.129
50	69.910
60	69.690
70	69.459
80	69.209
90	68.959
100	68.690
110	68.419
120	68.129
130	67.830
140	67.520
150	67.200
160	66.870
170	66.530
180	66.179
190	65.820
200	65.440
210	65.059

12.18 LIQUID HEAT CAPACITY

Temperature (degrees F)	British thermal unit per pound-F
20	.536
40	.549
60	.563
80	.576
100	.589
120	.603
140	.616
160	.629
180	.643
200	.656
220	.669
240	.683
260	.696
280	.709
300	.723

12.19 LIQUID THERMAL CONDUCTIVITY

Temperature (degrees F)	British thermal unit-inch per hour-square foot-F
75	1.700
80	1.697
85	1.694
90	1.691
95	1.688
100	1.685
105	1.683
110	1.680
115	1.677
120	1.674
125	1.671
130	1.668
135	1.665
140	1.662
145	1.659
150	1.656
155	1.653
160	1.650
165	1.647
170	1.644
175	1.641
180	1.638
185	1.635

12.20 LIQUID VISCOSITY

Temperature (degrees F)	Centipoise
	N
	O
	T
	P
	E
	R
	T
	I
	N
	E
	N
	T

12.21 SOLUBILITY IN WATER

Temperature (degrees F)	Pounds per 100 pounds of water
	M
	I
	S
	C
	I
	B
	L
	E

12.22 SATURATED VAPOR PRESSURE

Temperature (degrees F)	Pounds per square inch
60	.001
70	.001
80	.002
90	.003
100	.005
110	.008
120	.012
130	.017
140	.026
150	.037
160	.053
170	.075
180	.106
190	.146
200	.201
210	.273
220	.369
230	.493
240	.653
250	.859
260	1.120
270	1.451
280	1.867
290	2.386
300	3.029

12.23 SATURATED VAPOR DENSITY

Temperature (degrees F)	Pounds per cubic foot
60	.00001
70	.00001
80	.00002
90	.00003
100	.00005
110	.00008
120	.00012
130	.00017
140	.00025
150	.00035
160	.00050
170	.00069
180	.00095
190	.00130
200	.00176
210	.00236
220	.00314
230	.00413
240	.00540
250	.00700
260	.00900
270	.01150
280	.01460
290	.01840
300	.02305

12.24 IDEAL GAS HEAT CAPACITY

Temperature (degrees F)	British thermal unit per pound-F
0	.344
25	.354
50	.364
75	.373
100	.382
125	.391
150	.400
175	.409
200	.417
225	.425
250	.433
275	.440
300	.448
325	.455
350	.462
375	.468
400	.475
425	.481
450	.487
475	.493
500	.498
525	.504
550	.509
575	.514
600	.518

MATERIAL SAFETY DATA SHEET

("ESSENTIALLY SIMILAR" TO FORM OSHA-20)

WHERE APPLICABLE, THIS PRODUCT HAS BEEN REPORTED FOR THE EPA'S CHEMICAL SUBSTANCE INVENTORY.

SECTION I – IDENTIFICATION OF PRODUCT

MANUFACTURER'S NAME: PHILLIPS PETROLEUM COMPANY

EMERGENCY TELEPHONE NUMBER — DURING BUSINESS HOURS: (918) 661-[illegible]; OUTSIDE BUSINESS HOURS: (918) 661-[illegible]

ADDRESS (NUMBER, STREET, CITY, STATE & ZIP CODE): BARTLESVILLE, OK 7400[illegible]

CAS NUMBER: 107-21-1

X TRADE NAME: Ethylene Glycol (Mono)

CHEMICAL NAME: 1,2-Ethanediol

CHEMICAL FAMILY: Glycol (dihydroxy alcohol)

CHEMICAL FORMULA: CH_2OHCH_2OH

DOT CLASSIFICATION: None

SECTION II – HAZARDOUS COMPONENTS OF MIXTURES

INGREDIENTS	% BY WT.	THRESHOLD LIMIT VALUE (UNITS)
XXX-119		
Ethylene Glycol 4-1-80	[illegible]00	

SECTION III – TYPICAL PHYSICAL DATA

APPEARANCE AND ODOR: Colorless, odorless, slightly viscous liquid

SPECIFIC GRAVITY: 1.1 (60/60°F)

BOILING POINT (°F): 388 (198°C)

PERCENT VOLATILE (BY VOLUME):

VAPOR PRESSURE: 0.05mm @ 20°C

EVAPORATION RATE: (_____ = 1)

VAPOR DENSITY (AIR): 2.11

SOLUBILITY IN WATER: Complete

SECTION IV – FIRE AND EXPLOSION – HAZARD DATA

FLASH POINT (METHOD): 232°F (ASTM D 56)

FLAMMABLE LIMITS (% BY VOLUME): Lel 3.2 Uel

FIRE EXTINGUISHING MEDIA: Alcohol foam; water; foam; carbon dioxide; dry chemical.

SPECIAL FIRE FIGHTING PROCEDURES: Shut off source. Use water fog or spray to cool exposed equipment.

UNUSUAL FIRE AND EXPLOSION HAZARDS:

NO GUARANTY IS MADE AS TO THE ACCURACY OF ANY DATA OR STATEMENT CONTAINED HEREIN. WHILE THIS MATERIAL IS FURNISHED IN GOOD FAITH, NO WARRANTY EXPRESS OR IMPLIED, OF MERCHANTABILITY, FITNESS OR OTHERWISE IS MADE. THIS MATERIAL IS OFFERED ONLY FOR YOUR CONSIDERATION, INVESTIGATION AND VERIFICATION AND PHILLIPS, INCLUDING ITS DIVISIONS, AFFILIATES AND SUBSIDIARIES, SHALL NOT IN ANY EVENT BE LIABLE FOR SPECIAL, INCIDENTAL OR CONSEQUENTIAL DAMAGES IN CONNECTION WITH ITS PUBLICATION. LIKEWISE, NO STATEMENT MADE HEREIN SHALL BE CONSTRUED AS A PERMISSION OR RECOMMENDATION FOR THE USE OF ANY PRODUCT IN A MANNER THAT MIGHT INFRINGE EXISTING PATENTS.

(SEE REVERSE SIDE)

SECTION V – HEALTH HAZARD DATA

THRESHOLD LIMIT VALUE: ACGIH: 100 ppm (1979).
ACGIH: 50 ppm (1980 proposed change).

EFFECTS OF OVEREXPOSURE:

Inhalation of high concentrations produce symptoms similar to alcohol intoxication; pulmonary edema may develop.
Eye Contact may produce irritation.
Skin Contact may produce irritation.
Ingestion may damage the liver, kidneys, and bladder.

EMERGENCY AND FIRST AID PROCEDURES:

Inhalation: Remove victim to fresh air and get medical attention.
Eye Contact: Irrigate with water for 10 minutes and get medical attention.
Skin Contact: Wash with soap and water.
Ingestion: Give three (3) glasses of milk or water then induce vomiting. Seek prompt medical attention.

SECTION VI – REACTIVITY DATA

STABILITY	UNSTABLE		CONDITIONS TO AVOID:
	STABLE	Y	

INCOMPATIBILITY MATERIALS TO AVOID FOR PURPOSES OF TRANSPORT, HANDLING AND STORAGE ONLY!: Oxygen and strong oxidizing materials.

HAZARDOUS DECOMPOSITION PRODUCTS:

HAZARDOUS POLYMERIZATION	MAY OCCUR		CONDITIONS TO AVOID:
	WILL NOT OCCUR	X	

SECTION VII – SPILL OR LEAK PROCEDURES

STEPS TO BE TAKEN IN CASE MATERIAL IS RELEASED OR SPILLED:

Protect from ignition. Contain spill. Keep out of water sources and sewers. Wear a NIOSH approved self-contained breathing apparatus.

WASTE DISPOSAL (INSURE CONFORMITY WITH LOCAL DISPOSAL REGULATIONS):

Burn under controlled conditions.

SECTION VIII – PERSONAL PROTECTION INFORMATION

RESPIRATORY PROTECTION: NIOSH approved self-contained breathing apparatus.

VENTILATION	LOCAL EXHAUST	Recommended	SPECIAL
	MECHANICAL (GENERAL)	Recommended	OTHER

PROTECTIVE GLOVES: Yes | EYE PROTECTION: Goggles if splashes could occur.

OTHER PROTECTIVE EQUIPMENT:

SECTION IX – HANDLING AND STORAGE PRECAUTIONS

PRECAUTIONS TO BE TAKEN IN HANDLING AND STORING:

Provide means of controlling leaks and spills. Avoid sources of ignition.

OTHER PRECAUTIONS:

MATERIAL SAFETY DATA SHEET

#2131065
2131070
2131090
2131095
2132040
2132050
2132070
2132075

MANUFACTURER

Fend All Company
5 E. College Drive
Arlington Heights, Illinois 60004
(708) 577-7400

I. Trade Name

EYESALINE SOLUTION

Synonyms

NONE

II. Hazardous Ingredients

Alkyl Dimethyl Benzyl Ammonium Chloride (Less than 0.5% w/v)

III. Physical Data

Boiling Point: 212° F	Specific Gravity: ND
Vapor Pressure: 760 mm HG	Percent Volatile by Volume: ND
Vapor Density: ND	Evaporation Rate: ND
Solubility in Water: 100%	

Appearance and Odor: Colorless liquid with no discernable odor.

IV. Fire and Explosion Hazard Data

Nonflammable Aqeous Solution.

V. Health Hazard Information

Routes of Exposure:

Inhalation: Not Applicable
Skin Contact: Non-Irritating
Skin Absorption: Not Applicable
Eye Contact: Non-Irritating
Ingestion: Ingestion of volumes in excess of 20 liters may cause gastric irritation.

Emergency and First Aid Procedures:

Eye: Not Applicable
Skin: Not Applicable
Inhalation: Not Applicable.
Ingestion: See Notes to Physician

MSDS - EYESALINE SOLUTION

Notes to Physician: In the unlikely event of rapid ingestion of large volumes of the solution, induce vomiting and observe the patient for gastric irritation.

VI. Reactivity Data

The solution is considered non-reactive and stable under normal conditions of storage and usage.

VII. Spill or Leak Procedures

Flush area with water.

The solution is not an RCRA hazardous waste.

VIII. Special Protection Information

Not Applicable

IX. Special Precautions

Do not freeze or expose to temperatures in excess of 110°F for extended periods.

Prepared by John W. Bornhoeft, Ph.D.
J.W.B. Associates

Prepared for the exclusive use of the Fend All Company

ND = Not Determined

This information is furnished to you as of June 10, 1990, without warranty, expressed or implied, except it is accurate to the best knowledge of J.W.B. Associates and the Fend All Company. The data on this sheet relates only to the specific product designated herein as Eyesaline Solution. J.W.B. Associates and the Fend All Company assume no legal responsibility for use or reliance upon this data. The Fend All Company does not accept any obligations to update you with respect to the subject matter hereof.

Attachment 1

Material Safety Data Sheet

EYESALINE
EYEWASH SOLUTION

Date December 1, 1988

MSDS1080

Prepared by FENDALL COMPANY, 5 EAST COLLEGE DRIVE, ARLINGTON HTS., ILL. 60004 (312)577-
Company name | Address | Phone

Section I

Manufacturer's Name: FENDALL COMPANY

Emergency Telephone Number: (312) 577-7400

Address (Number, Street, City, State, and ZIP Code): 5 EAST COLLEGE DRIVE
ARLINGTON HTS., ILL. 60004

Chemical Name and Synonyms: MIXTURE

Trade Name and Synonyms: EYESALINE SOLUTION

Chemical Family:

Formula: MIXTURE

Section II - Hazardous Ingredients

Paints, Preservatives, and Solvents	%	TLV (Units)	Alloys and Metallic Coatings	%	TLV (Units)
Pigments: NONE			Base Metal: NONE		
Catalyst: NONE			Alloys: NONE		
Vehicle: NONE			Metallic Coatings: NONE		
Solvents: NONE			Filler Metal Plus Coating or Core Flux: NONE		
Additives: NONE			Others: NONE		
Others: NONE					

Hazardous Mixtures of Other Liquids, Solids or Gases

	%	TLV (Units)

Section III - Physical Data

Boiling Point (°F)	212° F	Specific Gravity (H_2O=1)	ND
Vapor Pressure (mm Hg.)	760	Percent Volatile by Volume (%)	ND
Vapor Density (AIR=1)	ND	Evaporation Rate (_____=1)	ND

Solubility in Water: 100%

Appearance and Odor: Colorless liquid with no discernable odor

Section IV - Fire and Explosion Hazard Data

Flash Point (Method Used)	Flammable Limits	Lel	Uel
200° F PMCC	ND		

Extinguishing Media: Water fog or spray, CO_2, Dry chemical, Foam

Special Fire Fighting Procedures: None Known

Unusual Fire and Explosion Hazards: None Known

Section V - Health Hazard Data

Threshold Limit Value

Effects of Overexposure

Emergency First Aid Procedures

Not considered irritating to the skin or to the eyes.

Not considered an inhalation hazard.

Section VI - Reactivity Data

Stability	Unstable		Conditions to Avoid
	Stable	X	

Incompatability (Materials to Avoid)

NA

Hazardous Decomposition Products

NA

Hazardous Polymerization	May Occur		Conditions to Avoid
	Will Not Occur	X	

Section VII - Spill or Leak Procedures

Steps to be Taken in Case Material is Released or Spilled

Flush with water.

Waste Disposal Method

Not an RCRA Hazardous Waste.

Section VIII - Special Protection Information

Respiratory Protection (Specify Type)

NA

Ventilation	Local Exhaust NA	Special
	Mechanical (General) NA	Other

Protective Gloves NA	Eye Protection NA

Other Protective Equipment

Section IX - Special Precautions

Precautions to be Taken in Handling and Storing

DO NOT FREEZE OR EXPOSE TO TEMPERATURES IN EXCESS OF 110° F FOR EXTENDED PERIODS.

Other Precautions

NOR-AM.

NOR-AM Chemical Company
A Schering Berlin Company
Little Falls Centre One
2711 Centreville Road
Wilmington, DE 19808

Material Safety Data Sheet

Issue Date: 07/05/93
Supersedes: 09/18/92

FICAM® W

SECTION 1. CHEMICAL PRODUCT AND COMPANY IDENTIFICATION

NOR-AM Chemical Company
Specialty Products Division
Little Falls Centre One
2711 Centerville Road
Wilmington, DE 19808

EMERGENCY TELEPHONE NUMBERS
(302)892-3000 (Days)
Chemtrec (800)424-9300 (Nights/Weekends)

PRODUCT NAME: *FICAM® W*
PRODUCT CODE: *CR 4944*
CHEMICAL NAME: *2,2-dimethyl-1,3-benzodioxol-4-yl methyl carbamate (active ingredient)*
CHEMICAL FAMILY: *Carbamate*
CHEMICAL FORMULA: *Mixture (active ingredient:$C_{11}H_{13}NO_4$)*

EPA REGISTRY NUMBER: *45639-1*
MSDS IDENTIFICATION CODE/NUMBER: *000041*

SYNONYMS: *CR 4944 (FICAM 76 W)*

CANADIAN REG. NO.: *14378 P.C.P. ACT*

SECTION 2. COMPOSITION/INFORMATION ON INGREDIENTS

INGREDIENT NAME	EXPOSURE LIMITS	CONCENTRATION PERCENT BY WEIGHT
Bendiocarb CAS NUMBER: 22781-23-3	OSHA or ACGIH Limits: Not established World Health Organization recommended limit: 0.2 mg/m3	76.0
Inert Ingredients CAS NUMBER: Trade Secret		24.0
Alkylnaphthalene sulfonic acid (Polymer, Na salt) CAS NUMBER: 9084-06-4	Limits for Nuisance dust: Total dust: ACGIH-TLV=OSHA-PEL =10 mg/m3; Respiratory dust: ACGIH-TLV=OSHA-PEL= 5 mg/m3	< 3.0
Amorphous silica (hydrated) CAS NUMBER: 7631-86-9	OSHA-PEL: 6 mg/m3 ACGIH-TLV: 6 mg/m3	< 9.0

INERT INGREDIENTS (24.0%): *only the regulated ingredients are listed above. For a complete regulatory listing of components, please refer to Section 15* (Regulatory Information). OSHA-PEL: *The OSHA Final Rule limits were used.*

SECTION 3. HAZARDS IDENTIFICATION

********** EMERGENCY OVERVIEW **********

HIGHLY TOXIC BY ORAL AND INHALATION ROUTES. CAUSES SYMPTOMS ASSOCIATED WITH CHOLINESTERASE INHIBITION. A SLIGHT IRRITANT TO THE SKIN. THE PRODUCT IS WHITE, ODORLESS POWDER.

****

POTENTIAL HEALTH EFFECTS

Issue Date: 07/08/93
Supersedes: 09/18/92

FICAM® W

SECTION 3. HAZARDS IDENTIFICATION - Continued

PRIMARY ROUTE(S) OF ENTRY
Dust inhalation, skin contact.

EYES
Not likely to cause eye irritation. May cause temporary and reversible miosis (constriction of the pupil of the eye).

SKIN
A slight skin irritant. May be absorbed through the skin. Not a skin sensitizer.

INGESTION
Harmful or fatal if swallowed (see Signs & Symptoms below). However, such ingestion hazards are considered unlikely to the end users of this product (the consumer). When a consumer product-package is applied by the Pest Control Operator in accordance with the product label, the bendiocarb concentrations used were very low (0.25 % to 0.5% in water).

INHALATION
Excessive dust or mist inhalation can cause symptoms associated with cholinesterase inhibition (see Signs & Symptoms below). However, such inhalation hazards are considered unlikely to the end-users of this product (the consumer). When a consumer product-package is applied/used according to the product label, the bendiocarb concentrations used were very low (0.25% - to 0.5% in water).

CHRONIC (CANCER INFORMATION)
Bendiocarb technical is not listed as carcinogenic by NTP, IARC, or OSHA.

SIGNS AND SYMPTOMS
May be fatal if swallowed. May be poisonous if inhaled. Overexposure to bendiocarb produces symptoms associated with cholinesterase inhibition. The threshold dose for symptoms of cholinesterase inhibition in humans was determined to be 0.15-0.2 mg/kg and the no-effect-level is 0.10 mg/kg. Symptoms of cholinesterase inhibition are: a sense of "tightness" in chest, sweating, headache, nausea, dizziness, constricted pupils, reversible vision impairment, salivation, vomiting, abdominal cramps, diarrhea, incontinence, muscular incoordination and twitching.

MEDICAL CONDITIONS AGGRAVATED BY OVEREXPOSURE
May possibly aggravate pre-existing respiratory conditions.

NOTE: For detailed toxicological information, please refer to Section 11.

SECTION 4. FIRST AID MEASURES

EYES
Wash thoroughly with clean water for at least 15 minutes (see "Note to Physician").

SKIN
Wash thoroughly with soap and water.

INGESTION
Drink 1 or 2 glasses of water and induce vomiting by touching back of victim's throat with finger. Do not induce vomiting or give anything by mouth to an unconscious person. Get medical attention.

INHALATION
Keep patient at rest; tranfer AT ONCE to hospital for medical attention.

FICAM® W

SECTION 4. FIRST AID MEASURES - Continued

NOTE TO PHYSICIAN
Contains anticholinesterase carbamate insecticide. In case of overexposure, 2 mg atropine sulfate (equivalent to 1/30 grain adult dose) should be given and repeated as necessary until fully atropinized. Use of morphine is contraindicated. Control convulsions with 10-20 mg diazepam intravenously. Miosis due to direct eye contact will reverse spontaneously without specific treatment.

SECTION 5. FIRE FIGHTING MEASURES

FLAMMABLE PROPERTIES
FLASH POINT: Not applicable

FIRE AND EXPLOSION HAZARDS
When heated to the point of decomposition (above 140°C or 280°F), bendiocarb gives off a toxic fume which is rapidly eliminated by fire or water. Dispersion of fine dust in the air may form an explosion mixture.

EXTINGUISHING MEDIA
Dry chemical, foam, carbon dioxide, water.

FIRE FIGHTING INSTRUCTIONS
Remove product from area of fire at first opportunity. Wear positive pressure self-contained breathing apparatus. Use water to cool fire-exposed containers and personnel.

SECTION 6. ACCIDENTAL RELEASE MEASURES

GENERAL AND DISPOSAL: Use proper protective equipment to minimize exposure (see Section 8). Take all necessary action to prevent and to remedy the adverse effect of the spill. Notify the appropriate authorities immediately. Ensure that the disposal is in compliance with federal requirements and state/local regulations.

LAND SPILL OR LEAK: KEEP UNNECESSARY PEOPLE AWAY AND ISOLATE HAZARD AREA. DO NOT BREATHE DUST. USE PROPER PROTECTIVE EQUIPMENT (see Section 8). Take up with sand or other non-combustible absorbent materials. Carefully sweep up; AVOID THE FORMATION OF A DUST CLOUD. Place material in a suitable and dry container and SEAL for disposal. Wash contaminated areas with water and detergent, but keep out of sewers or watercourses. Inform proper authorities if contamination occurs.

SECTION 7. HANDLING AND STORAGE

HANDLING PRECAUTIONS
Harmful or fatal if swallowed. May be absorbed through the skin. Avoid contact with the eyes, skin, and clothing. If contact occurs, wash skin and clothing immediately with soap and warm water, and wash eyes with clean water.
DO NOT rub eyes or mouth with hands. If you feel sick in any way, STOP WORK and get help right away. (See Section 4 - FIRST AID MEASURES).

AVOID BREATHING AND WORKING IN SPRAY MIST OR DUST. When applying in outdoor sites, keep all unprotected persons, children, and animals away from treated area or where there is danger of drift.

WASH HAND AND EXPOSED SKIN before eating, drinking or smoking and after spraying or handling. Wash all contaminated clothing thoroughly before reuse.

DO NOT apply to humans, their clothing or bedding. DO NOT permit children or

FICAM® W

SECTION 7. HANDLING AND STORAGE - Continued

HANDLING PRECAUTIONS - Continued
pets to contact treated surfaces until spray has dried completely.

With proper spraying, FICAM W does not result in a visible deposit. However, if unevenly applied, or sprayed to run-off, a visible deposit may occur on some dark surfaces. DO NOT spray where electrical short circuits might result.

DO NOT use on or contaminate fruit, vegetables or other feed or food crops. DO NOT store near food or feed products. DO NOT contaminate these or food preparation surfaces, dishes, kitchen utensils and food containers with either concentrate or the spray.

STORAGE PRECAUTIONS
Store in a dry place. FICAM W is stable in normal storage temperatures. (should avoid extreme temperatures; see Section 5-Hazardous Decomposition Products).

SECTION 8. EXPOSURE CONTROLS/PERSONAL PROTECTION

ENGINEERING CONTROLS
Control airborne concentrations below the exposure guideline (see Section 2 for OSHA/ACGIH exposure limits). Use with adequate ventilation. Local exhaust ventilation may be necessary, especially when used in a confined area.

EYE/FACE PROTECTION
Safety glasses; faceshield

SKIN PROTECTION
Impervious (neoprene, butyl rubber) gloves

RESPIRATORY PROTECTION
ENSURE GOOD VENTILATION IN HANDLING AREA. USE A SUITABLE DUST RESPIRATOR. Use of a self-contained breathing apparatus or airline hood or mask is recommended to give complete face protection.

OTHER/GENERAL PROTECTION
Synthetic (PVC) aprons, boots, overalls are recommended, Wash clothes thoroughly after each use or at the end of every shift. In addition, users of contact lens must wear the protective safety glasses for proper protection during the handling & use of the product.

Although general guidance has been provided, the degree of protection required in a particular situation depends on factors such as concentration and duration. More detailed advice on protective devices is available from NOR-AM.

SECTION 9. PHYSICAL AND CHEMICAL PROPERTIES

APPEARANCE
White powder

ODOR
Odorless

BASIC PHYSICAL PROPERTIES
PHYSICAL STATE: Solid
BOILING POINT: Not applicable°F
MELTING POINT: about 264°F 128-130 °°C
VAPOR PRESSURE: 3.5 X 10(-5) mm Hg°°
VAPOR DENSITY (AIR=1): not volatile

FICAM® W

SECTION 9. PHYSICAL AND CHEMICAL PROPERTIES - Continued

PACKING DENSITY: *Approx 36 lbs/cu ft*
SOLUBILITY (H2O): *0.024% (240 ppm) (for a.i.)**

****VAPOR PRESSURE:** *the data above was for bendiocarb tec. at 25 °C*
* **SOLUBILITY:** *the data above was for bendiocarb technical.*

SECTION 10. STABILITY AND REACTIVITY

STABILITY: *Stable (normal storage temperatures)*

CONDITIONS TO AVOID (STABILITY)
Extreme heat or moisture

HAZARDOUS DECOMPOSITION PRODUCTS
When heated to the point of decomposition (above 140°C or 280°F), bendiocarb gives off a toxic fume which is rapidly eliminated by fire or water.

HAZARDOUS POLYMERIZATION: *Will not occur*

SECTION 11. TOXICOLOGICAL INFORMATION

SKIN EFFECTS
DERMAL LD50 (rat): *1,000-2,000 mg/kg (low toxicity)*

ACUTE ORAL EFFECTS
ORAL LD50 (rat): *141-250 mg/kg (toxic)*

ACUTE INHALATION EFFECTS

INHALATION LC50 (rat-4hrs): *data from an inhalation study in rats exposed to FICAM W for 4 hours is not available. However, a relevant inhalation LC50 data is available for the concentrated bendiocarb technical (97.9%): the* **LC50 (rat-4hrs):** *is 0.55 mg/liter of air. This indicates that, for FICAM W (76% technical), the* **LC50 (rat-4hrs)** *is likely to be:* ≥ *0.55 mg/liter (highly toxic). For tranportation purpose, the equivalent LC 50 (rat-1hr) (for product dust) is:* ≥*2.2 mg/liter of air.*

The studies reported below were carried out with Bendiocarb Technical (≥96%), the active ingredient.

SUBCHRONIC (TARGET ORGAN EFFECTS)
Results from 90-day animal studies suggest no target organ effects under the recommended conditions of normal handling and use.

CHRONIC (CANCER INFORMATION)
In two year feeding studies with bendiocarb in animals, no clinical signs or mortalities related to treatment were observed in rats and dogs at dose levels up to 200 ppm and 500 ppm, respectively. The effects observed at the highest dose were reduced blood cholinesterase level in rats and lower blood and brain cholinesterase levels in dogs. Similarly, bendiocarb administered chronically to mice at dietary dose levels up to 1250 ppm showed only an effect in increased testes weight at the highest dose.

CARCINOGENICITY: **NTP:** *No* **IARC:** *No* **OSHA:** *No*

TERATOGENICITY (BIRTH DEFECTS)
No evidence of teratogenic effects of bendiocarb was observed in offspring of rats and rabbits fed during gestation dose levels up to 4 mg/kg/day and 5 mg/kg/day, respectively.

REPRODUCTIVE EFFECTS
Bendiocarb showed no adverse effects on fertility or on reproduction in rats

FICAM® W

SECTION 11. TOXICOLOGICAL INFORMATION - Continued

REPRODUCTIVE EFFECTS - Continued
fed dietary levels up to 800 ppm prior to mating and during gestation.

NEUROTOXICITY
No evidence of neurological lesions or irreversible or delayed neurotoxic effects were observed when bendiocarb was administered to hens by single doses up to 757 mg/kg.

MUTAGENICITY (GENETIC EFFECTS)
Bendiocarb is not mutagenic or genotoxic when tested in Ames gene mutation assay and in four other mutagenesis assays of bacteria, yeast, and rodents. In an in vitro analysis of metaphase chromosomes from human lymphocyte cell cultures, a positive result was observed only in the presence of metabolic activation. However, an in vivo analysis of metaphase chromosomes of bone marrow cells did not show any evidence of chromosomal damages, both in the absence or presence of metabolic activation. It is concluded from the results of these mutagenesis studies that bendiocarb does not damage chromosomes in humans and animals under conditions of normal handling and use.

SECTION 12. ECOLOGICAL INFORMATION

ECOTOXICOLOGICAL INFORMATION
This product is toxic to wildlife. DO NOT apply directly to water or wetlands (swamps, bogs, marshes, and potholes). Runoff from treated areas may be hazardous to aquatic organisms in neighboring areas. Do not contaminate water when disposing of equipment washwaters.

TOXICITY TO BENEFICIAL ORGANISMS
This product is highly toxic to bees exposed to direct treatment on blooming crops or weeds. DO NOT apply this product or allow it to drift to blooming crops or weeds if bees are visiting the treatment area.

ENVIRONMENTAL FATE INFORMATION
The active ingredient, bendiocarb technical, breaks down readily in the natural environment, especially under alkaline conditions and at the concentrations applied in treatments (up to 0.5% dilutions in water).

SECTION 13. DISPOSAL CONSIDERATIONS

PROPER DISPOSAL: *Handling and disposal of pesticide wastes, including spills or rinsates, must be in accordance with Federal requirements under the Resource Conservation and Recovery Act (RCRA). Also ensure that the waste disposal is in compliance with state and local regulations which may be more restrictive or otherwise different from the RCRA requirements. Do not contaminate water, food or feed.*

RCRA INFORMATION
None of the product ingredients are listed as hazardous waste chemicals under RCRA.

SECTION 14. TRANSPORT INFORMATION

PROPER SHIPPING NAME: *Carbamate pesticide, solid, toxic, n.o.s., 6.1, UN2757, PG III, Volume in net pounds (USA) or kilos(International) Limited Quantity.*

DOT SHIPPING LABEL: *Keep Away From Foodstuffs*
FREIGHT CLASSIFICATION: *Insecticides, Other Than Agricultural, Dry, N.O.I*

FICAM® W

SECTION 15. REGULATORY INFORMATION

U.S. FEDERAL REGULATORY INFORMATION
TSCA: *Bendiocarb technical, the active ingredient, is a registered pesticide under FIFRA regulations and is therefore exempt from TSCA. All other inert ingredients are as Listed chemicals under TSCA.*

SARA TITLE III, Section 302 (EHS) Ingredients: *Not listed*
SARA TITLE III, Section 304 (CERCLA & EHS) Ingredients (RQ): *Not listed*

SARA TITLE III NOTIFICATIONS AND INFORMATION

SARA TITLE III - HAZARD CLASSES: *Acute Health Hazard - "Yes"*
Chronic Health Hazard - "No"
Fire Hazard - "No"
Sudden Release of Pressure Hazard - "No"
Reactivity Hazard - "No"

SARA TITLE III - SECTION 313 SUPPLIER NOTIFICATION
None of the product components are as SARA 313 Listed chemicals

U.S. STATE REGULATORY INFORMATION
State Right-to-know (RTK) Hazardous Substance List: *Bendiocarb (New Jersey RTK): Substance No. = 0191, DOT No. = 2757.*

CANADIAN REGULATORY INFORMATION
CANADA WHMIS CONTROLLED PRODUCT REGULATIONS: *FICAM W is a registered pesticide under US-FIFRA regulations and is therefore exempted from WHMIS classification. It is identified as "PEST" for Canadian inventory reporting purposes. For hazard communication purposes, the toxicity data indicate an equivalent WHMIS classification as: Inhalation hazard (Class D; Division 1/Subdivision A) less D; Division 1/Subdivision A)*

SECTION 16. OTHER INFORMATION

HMIS HAZARD RATING - HEALTH: 3 High
- FIRE: 1 Slight
- REACTIVITY: 0 Negligible
*- PPE: F**

NFPA HAZARD RATING - HEALTH: 3 High
- FIRE: 1 Slight
- REACTIVITY: 0 Negligible
- Spec. Haz.: Non

MSDS IDENTIFICATION CODE/NUMBER: *000041*

PREPARED BY: *Dept. of Regulatory Affairs* PHONE: *(302)892-3051*
SUPERCEDES MSDS DATED: *09/18/92*

DATE AND TIME OF PRINTING: 06/07/94 14:44:31

*HMIS PPE: *F (minimum)*

REVISION INDICATOR: *Change to a new MSDS format (ANSI Z 400); minor text revisions, retyped text from MSDS dated 9/18/92.*

DISCLAIMER OF EXPRESSED AND IMPLIED WARRANTIES

THIS INFORMATION IS PROVIDED IN GOOD FAITH BUT WITHOUT EXPRESS OR IMPLIED WARRANTY

Material Safety Data Sheet

from Genium's Reference Collection
Genium Publishing Corporation
1145 Catalyn Street
Schenectady, NY 12303-1836 USA
(518) 377-8855

GENIUM PUBLISHING CORP.

Issued: March 1981
Revised: November 1988

SECTION 1. MATERIAL IDENTIFICATION

Material Name: FORMALIN

Description (Origin/Uses): Used as a disinfectant; as a germicide and fungicide for plants and vegetables; to destroy flies and other insects; to manufacture phenolic resins (formerly used in home construction but banned in 1982), artificial silks, cellulose esters, dyes, organic chemicals, glass mirrors, and explosives; in improving fastness of dyes in fabrics; tanning and preserving hides; and mordanting and waterproofing fabrics; also used in rubber latex applications and in embalming fluids.

Other Designations: Formal; Formaldehyde Solution; Morbicide

Manufacturer: Contact your supplier or distributor. Consult the latest edition of the *Chemicalweek Buyers' Guide* (Genium ref. 73) for a list of suppliers.

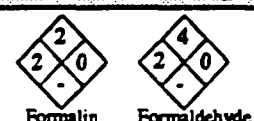

NFPA

HMIS			
H	2	R	1
F	2	I	4
R	0	S	2
PPG*		K	2

*See sect. 8

SECTION 2. INGREDIENTS AND HAZARDS

	%	EXPOSURE LIMITS
Formaldehyde,* HCHO, CAS No. 0050-00-0	37 to 55	**OSHA PELs** 8-Hr TWA: 1 ppm 15-Min STEL: 2 ppm 8-Hr TWA Action Level: 0.5 ppm **ACGIH TLVs, 1988-89** TLV-TWA: 1 ppm, 1.5 mg/m³ TLV-STEL: 2 ppm, 3 mg/m³
Methanol, CAS No. 0067-56-1	0 to 15	**OSHA PELs (Skin*)** 8-Hr TWA: 200 ppm, 260 mg/m³ 15-Min STEL: 250 ppm, 310 mg/m³ **ACGIH TLVs (Skin*), 1988-89** TLV-TWA: 200 ppm, 260 mg/m³ TLV-STEL: 250 pm, 310 mg/m³

*See Comments in section 3.
**Methyl alcohol may be absorbed through intact skin, which contributes to overall exposure.
Comments: See NIOSH, *RTECS* (LP8925000), for toxicity data on both free formaldehyde gas and formaldehyde-in-water solution (formalin); see *RTECS* (PC1400000) for toxicity data for the methanol stabilizer component of formalin.

SECTION 3. PHYSICAL DATA

Boiling Point: 205°F (96°C)
Melting Point: <32°F (0°C)
Specific Gravity (H_2O = 1): 1.0 to 1.15
pH: 2.8 to 4.0 (Basic)
% Volatile by Volume: 37 to 55
Appearance and Odor: A clear, water white liquid; with pungent, characteristic, formaldehyde odor (detection level: ca 1 ppm).
Comments: Commercial formalin solutions contain varying amounts of formaldehyde gas, methanol, and water. Contact your supplier for the specifications of the purchased product; the physical properties listed are representative values for the common 37%-by-weight formaldehyde-gas-in-water solution containing methanol as a stabilizer.

SECTION 4. FIRE AND EXPLOSION DATA

Flash Point: 122°F (50°C)*	Autoignition Temperature: 795°F (424°C), Formaldehyde Gas	LEL: 7%**	UEL: 73%**

*Determined for a formalin solution containing 37% formaldehyde and 15% methanol.

Extinguishing Media: Use dry chemical, carbon dioxide, water spray, or "alcohol" foam to extinguish formalin fires. Use a water spray to cool fire-exposed containers, to flush spills away from sources of ignition, and to dilute spills to nonflammable mixtures. If free formaldehyde gas is burning, direct fire-fighting operations toward stopping the flow of this gas; use a water spray to protect personnel attempting to do so. **Unusual Fire or Explosion Hazards:** Formalin liquid itself presents a moderate fire and explosion hazard. The formaldehyde gas that can be evolved from work operations is flammable. If the formalin solution is stabilized with methanol, take into account the increased possibility of flammability associated with the methanol vapor. **Special Fire-Fighting Procedures:** Wear a self-contained breathing apparatus (SCBA) with a full facepiece operated in the pressure-demand or positive-pressure mode.
**Mixtures of air and free formaldehyde gas are highly flammable; the wide range of explosibility is from 7 to 73%. Formalin is a combustible liquid. The flash point of a 37% formaldehyde and 0% methanol solution (a "37% methanol-free solution") is 185°F (85°C). The flash point of formalin solutions decreases as the amount of methanol increases.

SECTION 5. REACTIVITY DATA

Formalin is stable during routine use and handling. It cannot undergo hazardous polymerization. Formalin solutions can undergo a nonhazardous self-polymerization to form paraformaldehye, which precipitates out of solution as an undissolved solid at the bottom of the container. **Chemical Incompatibilities:** Formaldehyde gas reacts dangerously with nitrogen dioxide, perchloric acid and aniline, and performic acid. Atmospheric oxygen can oxidize formaldehyde to form corrosive formic acid, especially when the formalin solution is heated. Strong oxidizing agents and active organic materials such as phenol may promote unintended accidental polymerization reactions. **Conditions to Avoid:** Avoid direct contact with incompatible chemicals or exposure to sources of ignition. Always establish compatibility between formalin solutions and another material by testing small quantities of materials to replicate the expected conditions of bulk operations. **Hazardous Products of Decomposition:** Toxic gases such as carbon monoxide can be produced during formalin or formaldehyde fires. **Warning:** Formaldehyde can react with hydrogen chloride under certain atmospheric conditions to form bis (chloromethyl) ether, which is widely recognized as a confirmed human carcinogen. Prevent accidental contact between formaldehyde and hydrogen chloride.

Copyright © 1988 Genium Publishing Corporation
Any commercial use or reproduction without the publisher's permission is prohibited

SECTION 6. HEALTH HAZARD INFORMATION

Carcinogenicity: Formaldehyde is classified by the ACGIH as a group A2 (suspected human) carcinogen; by the IARC as a group 2B (probable human) carcinogen; and by the NTP as a group b (reasonably anticipated) carcinogen. **Summary of Risks:** Formaldehyde gas is irritating to the eyes, nose, throat, and upper respiratory tract (URT); coughing, difficulty in breathing, pulmonary edema, pneumonitis, and even death can result from inhalation of high concentrations. Skin contact with strong formalin solutions or with formaldehyde gas have caused primary skin irritation. Ingestion of formalin solutions causes corrosive gastritis with a high likelihood of perforation. Severe stomach pain, nausea, vomiting, coma, and even death can result. Approximately 2 ounces constitute a mean lethal dose of 37% formalin. Formalin solutions splashed into the eyes have caused severe injury and corneal damage. Sensitive individuals may develop symptoms from an exposure that is as low as 0.05 ppm. Exposure at 10 to 20 ppm causes profuse tearing, a severe burning sensation, and cough; it can be tolerated for only a few minutes. **Medical Conditions Aggravated by Long-Term Exposure:** None reported. **Target Organs:** Skin, eyes, URT. **Primary Entry:** Inhalation, skin contact. The formalin solution may contain methanol that can be absorbed through the skin. **Acute Effects:** Irritation of the eyes, skin, and URT. **Chronic Effects:** Cancer may be caused by chronic exposure to formaldehyde gas. Formalin solutions and resins that contain formaldehyde cause sensitization dermatitis. Sensitization to formaldehyde has been reported following chronic low-level exposures resulting in asthmatic symptoms after minimal exposure. **FIRST AID:** Eyes. Immediately flush eyes, including under the eyelids, gently but thoroughly with plenty of running water for at least 15 minutes. Skin. Rinse the area with water and then wash it with soap and water. Inhalation. Remove the exposed person to fresh air; restore and/or support his or her breathing as needed. Have qualified medical personnel administer oxygen as required. Ingestion (applicable only to accidental ingestion of formalin solutions, not applicable to formaldehyde gas): Never give anything by mouth to someone who is unconscious or convulsing. Begin immediate dilution with 4 to 8 ounces of water or milk. Get medical help (in plant paramedic, community) for all exposures. Seek prompt medical assistance for further treatment, observation, and support after first aid. **Note to physician:** Severe inhalation exposures (ca 50 ppm) may cause pulmonary edema. Treatment for accidental ingestion includes a gastric lavage with water or saline until clear, followed by activated charcoal with saline or sorbital catharsis. Treat exposed person for anion-gap acidosis; monitor blood methanol levels concurrently. The rapidly metabolized formic acid requires attention: treat for acidosis and use dialysis to remove the formic acid.

SECTION 7. SPILL, LEAK, AND DISPOSAL PROCEDURES

Spill/Leak: Notify safety personnel, eliminate all sources of ignition, provide adequate ventilation, and evacuate all nonessential personnel. Cleanup personnel need protection against skin contact with the liquid and inhalation of its vapor (see sect. 8). Contain large spills and collect waste. Neutralize the spilled formalin with aqueous ammonia or mix it with sodium sulfite. Wash the residues with dilute ammonia to eliminate vapor. Prevent runoff from entering streams, surface waters, waterways, watersheds, and sewers. Preplan for emergency response. **Waste Disposal:** Consider reclamation, recycling, or destruction rather than disposal in a landfill. Waste formalin can be burned in an approved incinerator. Approved landfills may accept properly neutralized formalin solutions. Follow Federal, state, and local regulations.

OSHA Designations
Listed as a specifically regulated substance (29 CFR 1910.1028).
EPA Designations (40 CFR 302.4)
RCRA Hazardous Waste, No. U122
CERCLA Hazardous Substance, Reportable Quantity: 1000 lbs (454 kg), per the Clean Water Act (CWA), Section 311 (b) (4), and the Resource Conservation and Recovery Act (RCRA), Section 3001.

SECTION 8. SPECIAL PROTECTION INFORMATION

Goggles: Always wear protective eyeglasses or chemical safety goggles. Where splashing of formalin solutions is possible, wear a full face shield. Follow OSHA eye- and face-protection regulations (29 CFR 1910.133). **Respirator:** Wear a NIOSH-approved respirator per Genium reference 88 for the maximum-use concentrations and/or the exposure limits cited in section 2. Follow OSHA respirator regulations (29 CFR 1910.134). For emergency or nonroutine operations (spills or cleaning reactor vessels and storage tanks), wear an SCBA. **Warning:** Air-purifying respirators will *not* protect workers in oxygen-deficient atmospheres. **Other:** Wear impervious nitrile, butyl rubber, or Viton gloves, boots, aprons, and gauntlets, etc., to prevent excessive or prolonged skin contact. **Ventilation:** Install and operate general and local exhaust-ventilation systems powerful enough to maintain airborne levels of formaldehyde below the OSHA PEL standard cited in section 2. Design all ventilation systems to be explosion proof in order to minimize sources of ignition. These recommendations apply to work areas where either formaldehyde gas or formalin solutions are used. **Safety Stations:** Make emergency eyewash stations, safety/quick-drench showers, and washing facilities available in work areas. **Contaminated Equipment:** Contact lenses pose a special hazard; soft lenses may absorb irritants, and all lenses concentrate them. Do *not* wear contact lenses in any work area. Remove contaminated clothing and launder it before wearing it again; clean this material from shoes and equipment. **Other:** Design all engineering systems in a manner that minimizes sources of ignition such as open flame, uninsulated heaters, etc. Electrically ground and bond all containers and equipment used in shipping, receiving, manufacturing, and sampling operations that involve formaldehyde or formalin to prevent static sparks that could start a fire or explosion. **Comments:** Practice good personal hygiene; always wash thoroughly after using this material. Avoid transferring it from your hands to your mouth while eating, drinking, or smoking. Do *not* eat, drink, or smoke in any work area. Avoid any direct contact with formalin solutions or formaldehyde.

SECTION 9. SPECIAL PRECAUTIONS AND COMMENTS

Storage/Segregation: Store formalin solutions in insulated, closed containers in a cool, dry, well-ventilated area separate from oxidizing agents and alkaline materials. The minimum storage temperature required to prevent polymerization reactions and subsequent degradation of the formalin product ranges from 83°F (28°C, or 37% formalin containing 0.05% methanol), to 29°F (-2°C, or 37% formalin containing 15% methanol). **Special Handling/Storage:** Control the inventory of formalin solutions. Protect formalin containers from physical damage. Before using this material in bulk operations, test a small quantity of it to ascertain its quality. **Engineering Controls:** Follow established safety procedures during transfers of formalin. **Comments:** Train personnel who work with formaldehyde in its safe use and in proper emergency response. Remove from further exposure any worker who exhibits signs of skin-sensitization reactions.

Transportation Data (49 CFR 172.101-2)*

DOT Shipping Name: Formaldehyde Solutions
DOT Class: ORM-A or Combustible Liquid

DOT Label: None
ID NOs. UN1198 or UN2209

*Formalin solutions vary in their flash points and the capacity of their shipping containers; the DOT regulations vary accordingly.

References: 1, 2, 26, 38, 84, 86-94, 100, 112, 113, 114, 116, 117, 120, 122.

Judgments as to the suitability of information herein for purchaser's purposes are necessarily purchaser's responsibility. Therefore, although reasonable care has been taken in the preparation of such information, Genium Publishing Corp. extends no warranties, makes no representations and assumes no responsibility as to the accuracy or suitability of such information for application to purchaser's intended purposes or for consequences of its use.

Prepared by PJ Igoe, BS
Industrial Hygiene Review: DJ Wilson, CIH
Medical Review: MJ Hardies, MD; W Silverman, MD

Copyright © 1988 Genium Publishing Corporation
Any commercial use or reproduction without the publisher's permission is prohibited

CAT. NO. 2461

MATERIAL SAFETY DATA SHEI Formazin Turbidity Standard 4000 NTU

MSDS DATE: 2/03/93
CHANGE NO.: 8745

For Assistance, Contact:
Regulatory Affairs Dept.
PO Box 907 Ames, IA 50010
(800) 227-4224

HACH COMPANY
PO BOX 907
AMES, IA 50010

Emergency Telephone #
Rocky Mountain Poison Ctr.
(303) 623-5716

I. PRODUCT IDENTIFICATION

PRODUCT NAME: Formazin Turbidity Standard 4000 NTU
CAS NO.: NA CHEMICAL NAME: Not applicable
FORMULA: Not applicable CHEMICAL FAMILY: Not applicable

II. INGREDIENTS

Hexamethylenetetramine
PCT: <10 CAS NO.: 100-97-0 SARA: NOT LISTED
TLV: Not determined PEL: Not determined
HAZARD: Moderately toxic; may cause irritation; flammable

Formazin Polymer
PCT: <1 CAS NO.: NA SARA: NOT LISTED
TLV: Not established PEL: Not established
HAZARD: None known

Formaldehyde
PCT: <0.1 CAS NO.: 50-00-0 SARA: LISTED
TLV: C: 0.3ppm PEL: 0.75ppm
HAZARD: Suspected carcinogen via inhalation; strong sensitizer

Demineralized Water
PCT: to 100 CAS NO.: 7732-18-5 SARA: NOT LISTED
TLV: Not applicable PEL: Not applicable
HAZARD: None

III. PHYSICAL DATA

STATE: liquid APPEARANCE: Turbid, milky suspension ODOR: None
SOLUBILITY IN: WATER: Miscible ACID: Miscible OTHER: Not determined
BOILING POINT: ~100°C MELTING PT.: NA SPEC GRAVITY: 1.002 pH: 6.4
VAPOR PRESSURE: Not determined VAPOR DENSITY (air=1): ND
EVAPORATION RATE: 0.63 METAL CORROSIVITY - ALUMINUM: None STEEL: None
STABILITY: See Conditions to Avoid
STORAGE PRECAUTIONS: Store tightly closed in a cool, dry place.

IV. FIRE, EXPLOSION HAZARD AND REACTIVITY DATA

FLASH PT.: Not applicable METHOD: NA
FLAMMABILITY LIMITS - LOWER: NA UPPER: NA
SUSCEPTIBILITY TO SPONTANEOUS HEATING: None
SHOCK SENSITIVITY: None AUTOIGNITION PT.: ND
EXTINGUISHING MEDIA: Not applicable
FIRE/EXPLOSION HAZARDS: May emit toxic fumes in fire
HAZARDOUS DECOMP. PRODUCTS: May emit toxic fumes of formaldehyde, ammonia, carbon monoxide and nitrogen oxides
OXIDIZER: No NFPA Codes: Health: 2 Flammability: 0 Reactivity: 0
CONDITIONS TO AVOID: Heat, light, contact with oxidizers

V. HEALTH HAZARD DATA

THIS PRODUCT MAY BE: irritating to eyes and skin, and may cause allergic skin reaction.
ACUTE TOXICITY: Moderately toxic
ROUTES OF EXPOSURE: ingestion
TARGET ORGANS: kidneys
CHRONIC TOXICITY: Not determined
ROUTES OF EXPOSURE: Not determined
TARGET ORGANS: Not determined
CANCER INFORMATION: An ingredient of this mixture is a suspected carcinogen.
ROUTES OF EXPOSURE: inhalation
TARGET ORGANS: nasal cavity
OVEREXPOSURE: May cause irritation of eyes, allergic skin reaction. If swallowed, may cause gastrointestinal irritation, kidney damage.
MEDICAL CONDITIONS AGGRAVATED BY EXPOSURE: Allergies or sensitivity to hexamethylenetetramine or formaldehyde

VI. PRECAUTIONARY MEASURES

Avoid contact with eyes and skin.
Do not breathe mist or vapor.
Wash thoroughly after handling.
PROTECTIVE EQUIPMENT: adequate ventilation, lab grade goggles, disposable latex gloves

VII. FIRST AID

EYE AND SKIN CONTACT: Immediately flush eyes with water for 15 minutes. C. physician. Flush skin with plenty of water.
INGESTION: Induce vomiting by sticking finger down throat. Never give anything by mouth to an unconscious person. Call physician.
INHALATION: Remove to fresh air.

VIII. SPILL AND DISPOSAL PROCEDURES

IN CASE OF SPILL OR RELEASE: Dilute with water. Pour down the drain with excess water.
DISPOSE OF IN ACCORDANCE WITH ALL FEDERAL, STATE, AND LOCAL REGULATIONS.

IX. TRANSPORTATION DATA

D.O.T. PROPER SHIPPING NAME: Not Currently Regulated
HAZARD CLASS: Not applicable ID: NA

I.C.A.O. PROPER SHIPPING NAME: Not Currently Regulated
HAZARD CLASS: NA ID: NA GROUP: NA

I.M.O. PROPER SHIPPING NAME: Not Currently Regulated
HAZARD CLASS: NA ID: NA GROUP: NA

X. REFERENCES

1) TLV's Threshold Limit Values and Biological Exposure Indices for 1988-1989. American Conference of Governmental Industrial Hygienists, 1988
2) Air Contaminants, Federal Register, Vol. 54, No. 12, Thursday, January 19, 1989. pp. 2332-2983.
3) In-house information
4) Technical judgment
5) IARC Monographs on the Evaluation of the Carcinogenic Risks to Humans World Health Organization (Volumes 1-42) Supplement 7, 1987, France.

SARA: This product contains a chemical or chemicals subject to the reporting requirements of section 313 of Title III of the *Superfund Amendments and* Reauthorization Act of 1986 and 40 CFR Part 372.

THE INFORMATION CONTAINED HEREIN IS BASED ON DATA CONSIDERED TO BE ACCURATE. HOWEVER, NO WARRANTY IS EXPRESSED OR IMPLIED REGARDING THE ACCURACY OF THESE DATA OR THE RESULTS TO BE OBTAINED FROM THE USE THEREOF.

(C) HACH CO. 1993

ULTRA Scientific 250 SMITH STREET, NO. KINGSTOWN, RI 02852
Telephone (401) 294-9400
"The Research Company"

MATERIAL SAFETY DATA SHEET

DATE: 4/13/92 HALOGENATED VOLATILES MIXTURE

SECTION I PRODUCT IDENTIFICATION

Catalog Number: HCM-801

Name: Halogenated Volatiles Mixture at 100 µg/mL in Methanol

SECTION II HAZARDOUS INGREDIENTS

Component	CAS #	%	LD_{50}	RTECS #
methanol	67-56-1	99.53	12,900 mg/kg oral rat	PC1400000
allyl chloride	107-05-1	0.013	64 mg/kg oral rat	UC7350000
bromodichloromethane	75-27-4	0.013	916 mg/kg oral rat	PA5310000
bromoform	75-25-2	0.013	1147 mg/kg oral rat	PB5600000
bromomethane	74-83-9	0.013	<100 mg/kg oral rat	PA4900000
carbon tetrachloride	56-23-5	0.013	1770 mg/kg oral rat	FG4900000
chlorobenzene	108-90-7	0.013	2910 mg/kg oral rat	CZ0175000
chloroethane	75-00-3	0.013	N/A	KH7525000
chloroform	67-66-3	0.013	800 mg/kg oral rat	FS9100000
chloromethane	74-87-3	0.013	N/A	PA6300000
dibromochloromethane	124-48-1	0.013	848 mg/kg oral rat	PA6360000
1,2-dibromo-3-chloropropane	96-12-8	0.013	173 mg/kg oral rat	TX8750000
1,2-dibromoethane	106-93-4	0.013	140 mg/kg oral rat	KH9275000
dibromomethane	74-95-3	0.013	3738 mg/kg scu mouse	PA7350000
1,2-dichlorobenzene	95-50-1	0.013	500 mg/kg oral rat	CZ4500000
1,3-dichlorobenzene	541-73-1	0.013	N/A	CZ4499000
1,4-dichlorobenzene	106-46-7	0.013	500 mg/kg oral rat	CZ4550000
trans-1,4-dichloro-2-butene	110-57-6	0.013	89 mg/kg oral rat	EM4903000
dichlorodifluoromethane	75-71-8	0.013	N/A	PA8200000
1,1-dichloroethane	75-34-3	0.013	725 mg/kg oral rat	KI0175000
1,2-dichloroethane	107-06-2	0.013	680 mg/kg oral rat	KI0525000
1,1-dichloroethene	75-35-4	0.013	200 mg/kg oral rat	KV9275100
trans-1,2-dichloroethene	156-60-5	0.013	7536 mg/kg oral rat	KV9400000
1,2-dichloropropane	78-87-5	0.013	2196 mg/kg oral rat	TX9625000
cis-1,3-dichloropropene	10061-01-5	0.013	250 mg/kg oral rat	UC8310000
trans-1,3-dichloropropene	10061-02-6	0.013	250 mg/kg oral rat	UC8310000
methylene chloride	75-09-2	0.013	2136 mg/kg oral rat	PA8050000
methyl iodide	74-88-4	0.013	220 mg/kg oral rat	PA9450000
1,1,1,2-tetrachloroethane	630-20-6	0.013	N/A	KI8450000
1,1,2,2-tetrachloroethane	79-34-5	0.013	200 mg/kg oral rat	KI8575000
tetrachloroethene	127-18-4	0.013	8850 mg/kg oral rat	KX3850000
1,1,1-trichloroethane	71-55-6	0.013	5660 mg/kg oral rat	KJ2975000
1,1,2-trichloroethane	79-00-5	0.013	1140 mg/kg oral rat	KJ3150000
trichloroethene	79-01-6	0.013	4920 mg/kg oral rat	KX4550000
trichlorofluoromethane	75-69-4	0.013	1743 mg/kg oral rat	PB6125000
1,2,3-trichloropropane	96-18-4	0.013	320 mg/kg oral rat	TX9275000
vinyl chloride	75-01-4	0.013	500 mg/kg oral rat	KU9625000

ULTRA *Scientific* 250 SMITH STREET, NO. K
Telephone (401) 294-9400
"The Research Company"

MATERIAL SAFETY DATA SHEET

SECTION III PHYSICAL DATA

Appearance: liquid

SECTION IV FIRE AND EXPLOSION HAZARD DATA

Flash Pt.: N/A Combustible

Extinguishing Media: Carbon dioxide, dry chemical powder, or water spray

SECTION V HEALTH HAZARD DATA

Contains carcinogen(s) or cancer suspect agent(s)

Toxic; irritant

All chemicals should be considered hazardous - direct physical contact should be avoided.

FIRST AID: In case of eye or skin contact, flush with copious amounts of water. If inhaled remove to fresh air - give oxygen, if necessary. Contact physician.

SECTION VI REACTIVITY DATA

Stability: stable

Incompatibilities: strong oxidizers

Hazardous decomposition products: N/A

SECTION VII SPILL OR LEAK PROCEDURES

Spills or leaks: Due to the small quantity involved, spills or leaks should not pose a significant problem. A leaking bottle may be placed in a plastic bag and normal disposal procedures followed. Liquid samples may be absorbed on vermiculite or sand.

Waste disposal: Burn in a chemical incinerator equipped with an afterburner and scrubber. Observe all federal, state, and local laws concerning disposal.

SECTION VIII PRECAUTIONS TO BE TAKEN IN HANDLING AND STORAGE

Use appropriate OSHA/MSHA approved safety equipment. Wear chemical goggles, face shield, gloves, and chemical resistant clothing such as a laboratory coat and/or a rubber apron to prevent contact with eyes, skin, and clothing. Keep tightly closed, and store in a cool, dry place.

SECTION IX SPECIAL PRECAUTIONS AND COMMENTS

This material should only be used by those persons trained in the safe handling of hazardous chemicals.

The above information is believed to be correct, but does not purport to be all inclusive. This data should be used only as a guide in handling the material. ULTRA SCIENTIFIC, INC. shall not be held liable for any damage resulting from handling or from contact with the above product.

M A T E R I A L S A F E T Y D A T A S H E E T

EM SCIENCE
A DIVISION OF EM INDUSTRIES
111 WOODCREST
CHERRY HILL, N.J. 08034-0395

PREPARATION DATE .....: OCT 27, '87

INFORMATION PHONE NUMBER.:
(609) 354-9200
CHEMTREC EMERGENCY NUMBER:
1-800-424-9300

NFPA HAZARD RATINGS

HEALTH ....: 1	FLAMMABILITY ...: 3
REACTIVITY : 0	SPECIAL HAZARDS.: N/A

SECTION I - GENERAL INFORMATION

CATALOG NUMBER(S): HX0293 HX0294 HX0296 HX0297 HX0298
HX0299 HX0299P HX0299S HX0300 HX0310
CHEMICAL NAME....: HEXANE
TRADE NAME.....: HEXANES
C.A.S. NUMBER....: 110-54-3
CHEMICAL FAMILY..: ALIPHATIC HYDROCARBON
FORMULA.....: C6H14
MOLECULAR WEIGHT.: 86.18
DOT SHIPPING NAME: N/A
DOT NUMBER.....: N/A

SECTION II - HAZARDOUS INGREDIENTS

-NONE OTHER THAN SPECIFIED PRODUCT

SECTION III- PHYSICAL DATA

BOILING POINT (C 760 MM HG).: 65C
MELTING POINT (C).....: - 95C
SPECIFIC GRAVITY(H.2.0 = 1)....: 0.6603
VAPOR PRESSURE..(MM HG).....: 125 20C
PERCENT VOLATILE BY VOL (%)..: 100
VAPOR DENSITY (AIR=1).....: 3.0
EVAPORATION RATE (BUAC=1)....: 9.0
SOLUBILITY IN WATER (%).....: SLIGHT
APPEARANCE AND ODOR.....: CLEAR, COLORLESS LIQUID
CHARACTERISTIC ODOR

SECTION IV - FIRE & EXPLOSION HAZARD DATA

FLASH POINT (F).....: -7F (CC)
FLAMMABLE LIMITS LEL %.: 1.2
FLAMMABLE LIMITS UEL %.: 7.5
EXTINGUISHING MEDIA....:
CO2, DRY CHEMICAL, FOAM

WEAR SELF-CONTAINED BREATHING APPARATUS
FIRE FIGHTING PROC.....:
VAPOR CAN TRAVEL DISTANCES TO IGNITION SOURCE AND FLASH BACK
FIRE & EXPL. HAZARDS...:
-DANGEROUS FIRE AND EXPLOSION HAZARD

SECTION V - HEALTH HAZARD DATA (ACUTE AND CHRONIC)

ACGIH TLV/OSHA PEL (TWA).....:
50 PPM (TWA) OSHA-PEL: 500 PPM (TWA)
TOXICITY DATA.....:
-IHL-HMN TCLO: 5000 PPM/10M ORL-RAT LD50: 28710 MG/KG
SYMPTOMS OF EXPOSURE .....:
-TOXIC BY INGESTION AND INHALATION
VAPOR INHALATION CAUSES IRRITATION OF NASAL AND RESPIRATORY PASSAGES, HEADACHE, DIZZINESS, NAUSEA, CENTRAL NERVOUS SYSTEM DEPRESSION
CHRONIC OVEREXPOSURE CAN CAUSE SEVERE NERVE DAMAGE
MAY CAUSE IRRITATION ON CONTACT WITH SKIN OR EYES
MEDICAL COND. AGGRAVATED BY EXP: DATA NOT AVAILABLE.
ROUTES OF ENTRY.....: INHALATION, INGESTION OR SKIN CONTACT.
CARCINOGENICITY.....: SEE COMMENTS, SECTION X; IF NO INFORMATION APPEARS, THE MATERIAL IS NOT LISTED AS A CANCER CAUSING AGENT.
EMERGENCY FIRST AID.....:
GET MEDICAL ASSISTANCE FOR ALL CASES OF OVEREXPOSURE
EYES: IMMEDIATELY FLUSH THOROUGHLY WITH LARGE AMOUNTS OF WATER
SKIN: WASH THOROUGHLY WITH SOAP AND WATER
INHALATION: REMOVE TO FRESH AIR; GIVE ARTIFICIAL RESPIRATION IF BREATHING HAS STOPPED
INGESTION: DO NOT INDUCE VOMITING; GET MEDICAL ATTENTION

SECTION VI - REACTIVITY DATA

STABILITY.....: YES
CONDITIONS TO AVOID .....:
-HEAT; CONTACT WITH IGNITION SOURCE
MATERIALS TO AVOID.....: ( ) WATER ( ) ACIDS
( ) BASES ( ) CORROSIVES (X) OXIDIZERS
( ) OTHER (SPECIFY)-N/A
HAZARDOUS POLYMERIZATION.: DATA NOT AVAILABLE.
HAZARDOUS DECOMPOSITION..: -COX

SECTION VII - ENVIRONMENTAL PROTECTION PROCEDURES

SPILL RESPONSE:
-DIKE SPILL; TAKE UP WITH ABSORBENT; CONTAINERIZE FOR PROPER DISPOSAL
WASTE DISPOSAL: TO BE PERFORMED IN COMPLIANCE WITH ALL CURRENT LOCAL, STATE AND FEDERAL REGULATIONS.

SECTION VIII - SPECIAL PROTECTION INFORMATION

VENTILATION, RESPIRATORY PROTECTION, PROTECTIVE CLOTHING, EYE PROTECTION:
-MATERIAL SHOULD BE HANDLED OR TRANSFERRED IN AN APPROVED FUME HOOD OR WITH ADEQUATE VENTILATION

PROTECTIVE GLOVES (NITRILE, VITON OR EQUIVALENT) SHOULD BE WORN
TO PREVENT SKIN CONTACT
SAFETY GLASSES WITH SIDE SHIELDS SHOULD BE WORN AT ALL TIMES

SECTION IX - SPECIAL PROTECTION INFORMATION

HANDLING & STORAGE ....:
-KEEP CONTAINER CLOSED
STORE IN A COOL AREA AWAY FROM IGNITION SOURCES AND OXIDIZERS
DO NOT BREATHE VAPOR
DO NOT GET IN EYES
AVOID PROLONGED OR REPEATED SKIN CONTACT
DO NOT TAKE INTERNALLY
ELECTRICALLY GROUND ALL EQUIPMENT WHEN HANDLING THIS PRODUCT
RETAINED RESIDUE MAY MAKE EMPTY CONTAINERS HAZARDOUS; USE CAUTION!
WORK/HYGIENIC PRACTICES: WASH THOROUGHLY AFTER HANDLING. DO NOT TAKE
INTERNALLY. EYE WASH AND SAFETY EQUIPMENT SHOULD BE READILY AVAILABLE.

SECTION X - OTHER INFORMATION

COMMENTS.....:
-TESTS ON LABORATORY ANIMALS INDICATE MATERIAL MAY PRODUCE ADVERSE
MUTAGENIC AND REPRODUCTIVE EFFECTS

REV. B/87

N/A
REVISION HISTORY.....: 05/01/85, N/A
OCT 27, '87
N/A = NOT AVAILABLE:

Genium Publishing Corporation
1145 Catalyn Street
Schenectady, NY 12303-1836 USA
(518) 377-8854

Material Safety Data Sheets Collection:

Sheet No. 397
n-Hexane

Issued: 8/83 Revision: C, 8/89

Section 1. Material Identification

***n*-Hexane Description:** *n*-Hexane is the chief constituent of petroleum ether or ligroin. Used to determine the refractive index of minerals; and as a mercury replacement in thermometers (usually with blue or red dye).
Other Designations: Normal-hexane; C_6H_{14}; CAS No. 0110-54-3.
Manufacturer: Contact your supplier or distributor. Consult the latest *Chemicalweek Buyers' Guide* (Genium ref. 73) for a suppliers list.
Comments: See *MSDS Colletion*, No. 397A, for isohexanes.

R 1
I 3
S 2
K 4

NFPA

HMIS
H 1
F 3
R 0
PPG*
* Sec. 8

Section 2. Ingredients and Occupational Exposure Limits

n-Hexane, ca 100%*

OSHA PEL
8-hr TWA: 50 ppm, 180 mg/m³

ACGIH TLV, 1988-89
TLV-TWA: 50 ppm, 180 mg/m³

Toxicity Data†
Human, inhalation, TC_{Lo}: 5000 ppm/10 min
Rat, oral, LD_{50}: 28,710 mg/kg

* *n*-Hexane is this product's major component; however, possible contaminants are other isomers of hexane, C_5 to C_7 saturated hydrocarbons, C_5 to C_7 olefinic hydrocarbons, and aromatic hydrocarbons.
† See NIOSH, *RTECS* (MN9275000), for additional data with references to reproductive, irritative, and neurological effects.

Section 3. Physical Data

Boiling Point: 156.11 °F (68.95 °C)
Melting Point: ca -139 °F (-95 °C)
Vapor Pressure: 124 torr at 68 °F (20 °C)
Vapor Density (Air = 1): 3.0

Molecular Weight: 86 g/mol
Specific Gravity (H_2O = 1): 0.66 at 68 °F (20 °C)
Water Solubility: Insoluble

Appearance and Odor: A clear, colorless, mobile, volatile, flammable liquid: a mild hydrocarbon odor.

Section 4. Fire and Explosion Data

Flash Point: -22 °F (-30 °C) CC	Autoignition Temperature: 473 °F (223 °C)	LEL: 1.2% v/v	UEL: 8% v/v

Extinguishing Media: Use carbon dioxide (CO_2), foams, or dry chemical to put out *n*-hexane fires. Never direct solid streams of water into burning pools of liquid since this can scatter and spread the fire. Use water sprays to cool fire-exposed containers, prevent dangerous pressure rise and/or rupture, disperse vapors, and flush unignited spills away from sensitive exposures.
Unusual Fire or Explosion Hazards: *n*-Hexane is a very flammable, volatile liquid which burns like gasoline. It represents a dangerous fire and explosion hazard. Since it evaporates quickly, the resulting denser-than-air vapors can flow along surfaces, collect in low-lying or enclosed areas like sumps and utility rooms, reach distant sources of ignition, and flash back to the original liquid.
Special Fire-fighting Procedures: Wear a self-contained breathing apparatus (SCBA) with a full facepiece operated in the pressure-demand or positive-pressure mode.

Section 5. Reactivity Data

Stability/Polymerization: *n*-Hexane is stable at room temperature during routine operations. Hazardous polymerization cannot occur.
Chemical Incompatibilities: *n*-Hexane can react violently with strong oxidizing agents.
Conditions to Avoid: Never expose this liquid to any ignition source (heat, sparks, open flames, or uninsulated heating elements).
Hazardous Products of Decomposition: Thermal oxidative degradation of *n*-hexane can produce carbon dioxide and toxic carbon monoxide (CO).

Copyright © 1989 Genium Publishing Corporation.
Any commercial use or reproduction without the publisher's permission is prohibited.

Section 6. Health Hazard Data

Carcinogenicity: Neither the NTP, IARC, nor OSHA lists *n*-hexane as a carcinogen.
Summary of Risks: The metabolic products of *in vivo* partial oxidation of *n*-hexane include 2, 5-hexanedione. This metabolite is the most highly neurotoxic compound formed from *n*-hexane. Occupational exposures to *n*-hexane are associated with chronic neurotoxic damage to the central nervous system (CNS) and the peripheral nervous system (PNS). The effects are not permanent; Genium reference 100 notes that recovery from neuropathy is usually complete within a year after the exposure. Methyl *n*-butyl ketone (MBK) (*MSDS Collection*, No. 425) produces the neurotoxic metabolite 2, 5-hexadione in even greater quantities than the *n*-hexane. Prevent simultaneous exposures to *n*-hexane and MBK. Genium reference 89 notes: "...concurrent exposure to methyl ethyl ketone, and possibly other chemicals or drugs which boost liver oxidative mechanisms, reduces the time for neuropathy to appear as a result of exposure to both *n*-hexane and MBK." **Medical Conditions Aggravated by Long-Term Exposure:** CNS and PNS disorders, vision defects, and memory diminution. **Target Organs:** Skin, eyes, CNS, PNS. **Primary Entry:** Inhalation, skin contact. **Acute Effects:** Irritation of eyes, nose, and upper respiratory tract (URT); dermal erythema (abnormally red skin from capillary congestion), edema (abnormal accumulation of clear, watery fluid in body tissue), and vesiculation (blistering). Acute inhalation causes headache, dizziness, nausea, narcosis, and coma. High concentrations may act as asphyxiants. **Chronic Effects:** Anorexia, nausea, weight loss, malaise; muscular weakness, pain, and spasms in extremities; neurotoxic effects like sensorimotor polyneuropathy, generalized polyneuropathy, and other degenerative changes in the peripheral nervous system (PNS).

FIRST AID

Eyes: Flush immediately, including under the eyelids, gently but thoroughly with flooding amounts of running water for at least 15 min.
Skin: After rinsing affected area with flooding amounts of water, wash it with soap and water. **Inhalation:** Remove exposed person to fresh air and support breathing as needed. Have a qualified medical personnel adminsister oxygen as required. **Ingestion:** Never induce vomiting! Severe aspiration hazard exists. If vomiting occurs spontaneously, lower victim's head to the knee level. Never give anything by mouth to an unconscious or convulsing person. Administer several ounces of edible oil to drink.
After first aid, get appropriate in-plant, paramedic, or community medical attention and support.

Section 7. Spill, Leak, and Disposal Procedures

Spill/Leak: *Design and practice a n-hexane spill control and countermeasure plan (SCCP).* When a spill occurs, notify safety personnel, evacuate unnecessary personnel, eliminate heat and ignition sources, provide maximum explosion-proof ventilation, and implement the SCCP. Cleanup personnel should wear fireproof personal protective equipment (Sec. 8).
Disposal: Contact your supplier or a licensed contractor for detailed recommendations. Follow applicable Federal, state, and local regulations.

OSHA Designations
Listed as an Air Contaminant (29 CFR 1910.1000, Subpart Z)
EPA Designations
Assigned the RCRA Hazardous Waste No. D001 (40 CFR 261.21, Ignitability)
Assigned as a CERCLA Hazardous Substance (40 CFR 302.4), Reportable Quantity (RQ): 100 lb (45.4 kg)
SARA Extremely Hazardous Substance (40 CFR 355): Not listed
SARA Toxic Chemical (40 CFR 372.65): Not listed

Section 8. Special Protection Data

Goggles: Wear protective eyeglasses or chemical safety goggles, per OSHA eye- and face-protection regulations (29 CFR 1910.133). Where splashing is possible, wear a full face shield. **Respirator:** Wear a NIOSH-approved respirator if necessary. Follow OSHA respirator regulations (29 CFR 1910.134). For emergency or nonroutine operations (spills or cleaning reactor vessels and storage tanks), wear an SCBA.
Warning: Air-purifying respirators do *not* protect workers in oxygen-deficient atmospheres. **Other:** Wear impervious gloves, boots, aprons, and gauntlets to prevent skin contact. **Ventilation:** Provide general and local explosion-proof ventilation systems to maintain airborne concentrations below the OSHA PEL standard (Sec. 2). Local exhaust ventilation is preferred since it prevents contaminant dispersion into the work area by eliminating it at its source (Genium ref. 103). **Safety Stations:** Make available in the work area emergency eyewash stations, safety/quick-drench showers, washing facilities, and properly serviced fire extinguishers. **Contaminated Equipment:** Never wear contact lenses in the work area: soft lenses may absorb, and all lenses concentrate, irritants. Launder contaminated clothing before wearing. Remove this material from your shoes and equipment. **Other:** Preplacement and periodic medical exams focusing on the skin nd the central nervous system are advised.
Comments: Never eat, drink, or smoke in work areas. Practice good personal hygiene after using this material, especially before eating, drinking, smoking, using the toilet, or applying cosmetics. Handle this flammable, volatile material with appropriate caution.

Section 9. Special Precautions and Comments

Storage Requirements: Store *n*-hexane in closed containers in a cool, dry, well-ventilated, fireproof area away from heat and ignition sources and incompatible chemicals. Protect these containers from physical damage; shield them from direct sunlight.
Engineering Controls: To prevent static sparks, electrically ground and bond all containers, tank cars, and pipes used in shipping, receiving, or transferring operations in production and storage areas. All electrical services, including lights, must be sparkproof.

Transportation Data (49 CFR 172.101-2)

DOT Shipping Name: Hexane
DOT Hazard Class: Flammable liquid
DOT ID No.: UN1208
DOT Label: Flammable liquid
DOT Packaging Requirements: 49 CFR 173.119
DOT Packaging Exceptions: 49 CFR 173.118

IMO Shipping Name: Hexane *(and its isomers)*
IMO Hazard Class: 3.1
IMO Label: Flammable liquid
IMDG Packaging Group: II

MSDS Collection **References:** 1, 6, 7, 84-94, 100, 116, 117, 119, 120, 122
Prepared by: PJ Igoe, BS; **Industrial Hygiene Review:** DJ Wilson, CIH; **Medical Review:** W Silverman, MD

Copyright © 1989 by Genium Publishing Corporation. Any commercial use or reproduction without the publisher's permission is prohibited. Judgments as to the suitability of information herein for the purchaser's purposes are necessarily the purchaser's responsibility. Although reasonable care has been taken in the preparation of such information, Genium Publishing Corporation extends no warranties, makes no representations, and assumes no responsibility as to the accuracy or suitability of such information for application to the purchaser's intended purpose or for consequences of its use.

Material Safety Data Sheet

from Genium's Reference Collection
Genium Publishing Corporation
1145 Catalyn Street
Schenectady, NY 12303-1836 USA
(518) 377-8855

GENIUM PUBLISHING CORP.

HYDROCHLORIC ACID
(Revision B)
Issued: October 1977
Revised: November 1988

SECTION 1. MATERIAL IDENTIFICATION 27

Material Name: HYDROCHLORIC ACID

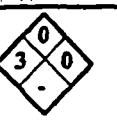

NFPA

Description (Origin/Uses): Used in the production of chlorides; in refining ore in the production of tin and tantalum; for the neutralization of bases; for pickling and cleaning metal products; for oil- and gas-well treatments; and in removing scale from boilers and heat-exchange equipment.

Other Designations: Aqueous Hydrogen Chloride; Muriatic Acid; HCl/H_2O; CAS No. 7647-01-0

Manufacturer: Contact your supplier or distributor. Consult the latest edition of the *Chemicalweek Buyers' Guide* (Genium ref. 73) for a list of suppliers.

HMIS	
H 3	R 1
F 0	I 4
R 0	S 4
PPG*	K 0
*See sect. 8	

SECTION 2. INGREDIENTS AND HAZARDS	%	EXPOSURE LIMITS
Hydrogen Chloride, CAS No. 7647-01-0	38 or Less	OSHA PEL Ceiling: 5 ppm, 7 mg/m³
Water	Balance*	ACGIH TLV, 1988-89 TLV-Ceiling: 5 ppm, 7 mg/m³
*Impurities such as iron, chlorine, and traces of organic matter may be present in small amounts, depending on the grade of acid. **See NIOSH, *RTECS* (MW4025000), for additional data with references to reproductive and mutagenic effects. Continue to monitor NIOSH, *RTECS* (MW40300000), for toxicity data on hydrochloric acid itself.		Toxicity Data** Human, Inhalation, LC_{Lo}: 1300 ppm (30 Mins) Rat, Inhalation, LC_{50}: 3124 ppm (1 Hr) Rabbit, Oral, LD_{50}: 900 mg/kg

SECTION 3. PHYSICAL DATA

Boiling Point: 227°F (109°C) (20.22%)
Melting Point: -85°F (-65°C) (20.69%)
Vapor Density (Air = 1): 1.268
pH: Strong Mineral Acid
Molecular Weight: Not Applicable
Solubility in Water (%): Complete
Specific Gravity (H_2O = 1): >1
% Volatile by Volume: Ca 100

Appearance and Odor: A clear, colorless-to-lightly yellowed, fuming liquid; sharp, pungent, characteristic, irritating odor of hydrogen chloride gas. This odor is detectable at 1 to 5 ppm and becomes unpleasant and irritating at 5 to 10 ppm; however, the odor serves as a good warning property.

Comments: The specific physical properties of aqueous hydrochloric acid solutions vary with the amount of dissolved hydrogen chloride gas. Hydrochloric acid forms a constant boiling azeotrope (a mixture of hydrochloric acid and water that behaves like a single substance in that its vapor has the same composition as the mixture itself) with water (at 227°F or 109°C) that contains 20.22% hydrogen chloride and has a density of 1.096. Boiling weaker or stronger aqueous solutions results in the loss of either component until the constant boiling acid is produced.

SECTION 4. FIRE AND EXPLOSION DATA

Flash Point and Method	Autoignition Temperature	LEL	UEL
*	*	*	*

Extinguishing Media: *Hydrochloric acid solutions do not burn. Use extinguishing agents that will put out the surrounding fire. **Unusual Fire or Explosion Hazards:** Use a water spray to cool fire-exposed containers of hydrochloric acid to prevent ruptures. Explosive hydrogen gas can be produced by the reaction of hydrochloric acid with metals such as iron. Neutralize spilled hydrochloric acid with limestone, slaked lime, or soda ash to minimize the possible generation of hydrogen gas. **Special Fire-fighting Procedures:** Wear a self-contained breathing apparatus (SCBA) with a full facepiece operated in the pressure-demand or positive-pressure mode. Special neutralization procedures, if applicable, include the application of chemically basic substances such as soda ash or slaked lime.

SECTION 5. REACTIVITY DATA

Stability/Polymerization: Hydrochloric acid is stable in closed containers during routine operations at room temperature. Hazardous polymerization cannot occur. **Chemical Incompatibilities:** Hydrochloric acid reacts dangerously with acetic anhydride, 2-aminoethanol, ammonium hydroxide, calcium phosphide, chlorosulfonic acid, ethylene diamine, ethylenimine, oleum, perchloric acid, ß-propiolactone, propylene oxide, silver perchlorate and carbon tetrachloride, sodium hydroxide, sulfuric acid, uranium phosphide, vinyl acetate, sodium, and many carbide compounds (Genium ref. 84). This material is a strong mineral acid that is very reactive with bases. **Conditions to Avoid:** Avoid exposure to incompatible chemicals and to any other material whose compatibility with hydrochloric acid or its vapor has not yet been established. The corrosive action of hydrochloric acid on most metals can liberate extremely flammable/explosive hydrogen gas (H_2); piping systems and containment systems must be chosen carefully. **Hazardous Products of Decomposition:** During fires hydrochloric acid may decompose by reacting with certain metals to produce very flammable and explosive hydrogen gas (H_2). Significant amounts of hydrogen chloride gas (HCl) are given off at room temperature; the rate of this generation increases as the temperature and the strength (1%) by weight of HCl in H_2O increase. **Comments:** Reactions between hydrochloric acid and cyanides, sulfides, and formaldehyde, will produce extremely toxic hydrogen cyanide (HCN), hydrogen sulfide (H_2S), sulfur dioxide (SO_2), and *bis*chloromethylether, respectively.

Copyright © 1988 Genium Publishing Corporation
Any commercial use or reproduction without the publisher's permission is prohibited

SECTION 6. HEALTH HAZARD INFORMATION

Carcinogenicity: Hydrochloric acid is not listed as a carcinogen by the NTP, IARC, or OSHA.
Summary of Risks: See Genium Industrial MSDS 30 for details of the health effects of hydrogen chloride gas. Hydrochloric acid solutions will generate hydrogen chloride gas with all its health effects. These are irritating to the skin, eyes, and mucous membranes of the upper respiratory tract (URT). The severity of eye injury from splashes depends upon quantity, concentration/strength, and duration of the contact. Permanent visual damage has been reported. Ingestion of hydrochloric acid causes corrosion of the mucous membranes, esophagus, and stomach, as well as nausea, vomiting, intense thirst, and diarrhea. Erosion of exposed teeth may occur. Circulatory collapse and death are possible. **Medical Conditions Aggravated by Long-Term Exposure:** None reported. **Target Organs:** Skin, eyes, URT. **Primary Entry:** Inhalation, skin contact. **Acute Effects:** Corrosive skin and eye burns, tissue damage, and severe irritation of the URT. **Chronic Effects:** None reported. **FIRST AID: Eyes.** Immediately flush eyes, including under the eyelids, gently but thoroughly with plenty of running water for at least 15 minutes. **Skin.** Rinse the affected area with flooding amounts of water and then wash it with soap and water. Remove contaminated clothing under a safety shower. **Inhalation.** Remove the exposed person to fresh air; restore and/or support his or her breathing as needed. Have qualified medical personnel administer oxygen as required. **Ingestion.** Not likely. Should this type of exposure occur, and the exposed person is responsive, give him or her 2 to 3 glasses of water, then milk of magnesia or limewater to drink. Do not induce vomiting. Spontaneous laryngeal spasms can occur. Never give anything by mouth to someone who is unconscious or convulsing. **Get medical help (in plant, paramedic, community) for all exposures.** Seek prompt medical assistance for further treatment, observation, and support after first aid. **Note to physician:** Treatment for respiratory effects following inhalation of hydrogen chloride gas includes using a 5% sodium bicarbonate solution as an aerosol; maintaining a proper fluid balance (diuretics may be useful); and decreasing the inflammatory response of the lungs by administering steroids on a short-term basis (2 to 4 days). Severe inhalation exposure requires hospitalization and observation (72-hour minimum) for the delayed onset of pulmonary edema. Serial chest X rays and respiratory support, including intubation, may be required as an early intervention.

SECTION 7. SPILL, LEAK, AND DISPOSAL PROCEDURES

Spill/Leak: Notify safety personnel, evacuate unnecessary personnel, eliminate all sources of ignition immediately (hydrogen gas may be generated), and provide adequate ventilation. Cleanup personnel need a full set of protective clothing, including a self-contained breathing apparatus (SCBA). Small spills and residue can be covered with an excess of a mixture of soda ash and slaked lime. After neutralization, do not flush waste directly to a sewer or into lakes, ponds, or streams. **Waste Disposal:** Contact your supplier or a licensed contractor for detailed recommendations. The allowable concentration of neutral salt in the effluent discharge is apt to be regulated; study and follow Federal, state, and local regulations. Consider saving the waste hydrochloric acid for use as a neutralizing agent during cleanup operations of basic materials.

OSHA Designations
Listed as an Air Contaminant (29 CFR 1910.1000 Subpart Z).
EPA Designations (40 CFR 302.4)
CERCLA Hazardous Substance, Reportable Quantity: 5000 lbs (2270 kg), per the Clean Water Act (CWA), §311 (b) (4)

SECTION 8. SPECIAL PROTECTION INFORMATION

Goggles: Always wear protective eyeglasses or chemical safety goggles. Where splashing is possible, wear a full face shield. Follow OSHA eye- and face-protection regulations (29 CFR 1910.133). **Respirator:** Wear a NIOSH-approved respirator per Genium reference 88 for the maximum-use concentrations and/or the exposure limits cited in section 2. Follow OSHA respirator regulations (29 CFR 1910.134). For emergency or nonroutine operations (spills or cleaning reactor vessels and storage tanks), wear an SCBA. All respirators must be acid resistant. **Warning:** Air-purifying respirators will *not* protect workers in oxygen-deficient atmospheres. **Other:** Wear impervious gloves, boots, aprons, gauntlets, etc., to prevent any contact with this material. All clothing must be acid resistant. **Ventilation:** Install and operate general and local maximum-explosion-proof ventilation systems powerful enough to maintain airborne levels of hydrogen chloride below the OSHA PEL cited in section 2. Local exhaust ventilation is preferred because it prevents dispersion of the contaminant into the general work area by eliminating it at its source. Consult the latest edition of Genium reference 103 for detailed recommendations. Make ventilation system ductwork and exposed fan components acid resistant. **Safety Stations:** Make emergency eyewash stations, safety/quick-drench showers, and washing facilities available in work areas. **Contaminated Equipment:** Contact lenses pose a special hazard; soft lenses may absorb irritants, and all lenses concentrate them. Do *not* wear contact lenses in any work area. Remove contaminated clothing and launder it before wearing it again; clean this material from your shoes and equipment. **Other:** Design all engineering systems to be acid resistant and explosion proof (hydrogen gas may be accidentally generated). **Comments:** Practice good personal hygiene; always wash thoroughly after using this material and before eating, drinking, smoking, using the toilet, or applying cosmetics. Keep it off your clothing and equipment. Avoid transferring it from your hands to your mouth while eating, drinking, or smoking. Do *not* eat, drink, or smoke in any work area. Do not inhale hydrochloric acid vapor.

SECTION 9. SPECIAL PRECAUTIONS AND COMMENTS

Storage/Segregation: Store hydrochloric acid in closed containers in a cool, dry, well-ventilated area away from sources of ignition, strong oxidizers, strong bases, out of direct sunlight, and away from incompatible chemicals (see sect. 5). Protect containers from physical damage. **Special Handling/Storage:** Storage areas should have acid-resistant floors and approved drainage facilities. Use nonsparking tools in areas around tanks and pipes where hydrogen gas may be generated. **Engineering Controls:** Make sure all engineering systems (production, transportation) are of maximum-explosion-proof design. Ground and bond all containers and pipelines, etc., used in shipping, transferring, reacting, production, and sampling operations to prevent static sparks. Hydrogen gas may become concentrated inside metal equipment; perform operations to search out possible hidden areas of hydrogen gas carefully. **Other Precautions:** Carefully follow your supplier's recommendations concerning the proper handling and storage procedures for hydrochloric acid. Provide emergency neutralization materials (soda ash, limestone, or slaked lime) and equipment near storage and use areas.

Transportation Data (49 CFR 172.101-2)

DOT Shipping Name: Hydrochloric Acid
DOT Hazard Class: Corrosive Material
ID No. UN1789
DOT Label: Corrosive
DOT Packaging Requirements, DOT Packaging Exceptions: 49 CFR 173.263

IMO Shipping Name: Hydrochloric Acid, Solution
IMO Hazard Class: 8
IMO Label: Corrosive
IMDG Packaging Group: II

References: 1, 26, 38, 84-94, 100, 116, 117, 120, 122.

Judgments as to the suitability of information herein for purchaser's purposes are necessarily purchaser's responsibility. Therefore, although reasonable care has been taken in the preparation of such information, Genium Publishing Corp. extends no warranties, makes no representations and assumes no responsibility as to the accuracy or suitability of such information for application to purchaser's intended purposes or for consequences of its use.

Prepared by PJ Igoe, BS
Industrial Hygiene Review: DJ Wilson, CIH
Medical Review: W Silverman, MD

Copyright © 1988 Genium Publishing Corporation
Any commercial use or reproduction without the publisher's permission is prohibited

J.T.BAKER INC., 222 RED SCHOOL LANE, PHILLIPSBURG, NJ 08865

SECTION I - PRODUCT IDENTIFICATION

PRODUCT NAME: DILUTE HYDROCHLORIC ACID
COMMON SYNONYMS: N/A
CHEMICAL FAMILY: VOLUMETRIC SOLUTIONS AND CONCENTRATES
FORMULA: HCL IN H2O
FORMULA WT.: 36.46
CAS NO.: 7647-01-0
NIOSH/RTECS NO.: MW4025000
PRODUCT USE: LABORATORY REAGENT
PRODUCT CODES: 5620

PRECAUTIONARY LABELING

BAKER SAF-T-DATA* SYSTEM

HEALTH	-	3	SEVERE (POISON)
FLAMMABILITY	-	0	NONE
REACTIVITY	-	2	MODERATE
CONTACT	-	3	SEVERE (CORROSIVE)

LABORATORY PROTECTIVE EQUIPMENT

GOGGLES & SHIELD; LAB COAT & APRON; VENT HOOD; PROPER GLOVES

U.S. PRECAUTIONARY LABELING

POISON DANGER
CAUSES BURNS. MAY BE FATAL IF SWALLOWED OR INHALED.
DO NOT GET IN EYES, ON SKIN, ON CLOTHING. DO NOT BREATHE VAPOR. KEEP IN TIGHTLY CLOSED CONTAINER. LOOSEN CLOSURE CAUTIOUSLY. USE WITH ADEQUATE VENTILATION. WASH THOROUGHLY AFTER HANDLING. IN CASE OF SPILL NEUTRALIZE WITH SODA ASH OR LIME AND PLACE IN DRY CONTAINER.

INTERNATIONAL LABELING

AVOID CONTACT WITH EYES. AFTER CONTACT WITH SKIN, WASH IMMEDIATELY WITH PLENTY OF WATER. KEEP CONTAINER TIGHTLY CLOSED.

SAF-T-DATA* STORAGE COLOR CODE: WHITE (CORROSIVE)

CONTINUED ON PAGE: 2

SECTION II - COMPONENTS

COMPONENT	CAS NO.	WEIGHT %	OSHA/PEL	ACGIH/TLV
HYDROCHLORIC ACID	7647-01-0	3-4	5 PPM	5 PPM
WATER	7732-18-5	96-97	N/E	N/E

SECTION III - PHYSICAL DATA

BOILING POINT: N/A

VAPOR PRESSURE (MMHG): N/A

MELTING POINT: N/A

VAPOR DENSITY (AIR=1): 1.3

SPECIFIC GRAVITY: 1.02 (H2O=1)

EVAPORATION RATE: N/A

SOLUBILITY(H2O): COMPLETE (100%)

% VOLATILES BY VOLUME: 100 (21 C)

PH: 1.0 (0.1M SOLUTION)

ODOR THRESHOLD (P.P.M.): N/A

PHYSICAL STATE: LIQUID

COEFFICIENT WATER/OIL DISTRIBUTION: N/A

APPEARANCE & ODOR: COLORLESS LIQUID. HYDROCHLORIC ACID ODOR.

SECTION IV - FIRE AND EXPLOSION HAZARD DATA

FLASH POINT (CLOSED CUP): N/A

NFPA 704M RATING: 3-0-0

AUTOIGNITION TEMPERATURE: N/A

FLAMMABLE LIMITS: UPPER - N/A LOWER - N/A

FIRE EXTINQUISHING MEDIA
USE EXTINGUISHING MEDIA APPROPRIATE FOR SURROUNDING FIRE.

SPECIAL FIRE-FIGHTING PROCEDURES
FIREFIGHTERS SHOULD WEAR PROPER PROTECTIVE EQUIPMENT AND SELF-CONTAINED BREATHING APPARATUS WITH FULL FACEPIECE OPERATED IN POSITIVE PRESSURE MODE. MOVE CONTAINERS FROM FIRE AREA IF IT CAN BE DONE WITHOUT RISK. US

CONTINUED ON PAGE: 3

SECTION IV - FIRE AND EXPLOSION HAZARD DATA (CONTINUED)

WATER TO KEEP FIRE-EXPOSED CONTAINERS COOL.

UNUSUAL FIRE & EXPLOSION HAZARDS
REACTS WITH MOST METALS TO PRODUCE HYDROGEN GAS, WHICH CAN FORM AN EXPLOSIVE MIXTURE WITH AIR.

TOXIC GASES PRODUCED
HYDROGEN CHLORIDE, HYDROGEN

EXPLOSION DATA-SENSITIVITY TO MECHANICAL IMPACT
NONE IDENTIFIED.

EXPLOSION DATA-SENSITIVITY TO STATIC DISCHARGE
NONE IDENTIFIED.

SECTION V - HEALTH HAZARD DATA

THRESHOLD LIMIT VALUE (TLV/TWA): 7 MG/M3 (5 PPM)

TLV LISTED DENOTES CEILING LIMIT.

SHORT-TERM EXPOSURE LIMIT (STEL): NOT ESTABLISHED

PERMISSIBLE EXPOSURE LIMIT (PEL): 7 MG/M3 (5 PPM)

PEL LISTED DENOTES CEILING LIMIT.

TOXICITY OF COMPONENTS

INTRAPERITONEAL MOUSE LD50 FOR HYDROCHLORIC ACID	40	MG/K
ORAL RABBIT LD50 FOR HYDROCHLORIC ACID	900	MG/K
INHALATION-1HR RAT LC50 FOR HYDROCHLORIC ACID	3124	PPM
INTRAPERITONEAL MOUSE LD50 FOR WATER	190	G/KG
INTRAVENOUS MOUSE LD50 FOR WATER	25	G/KG

CARCINOGENICITY: NTP: NO IARC: NO Z LIST: NO OSHA REG: NO

CARCINOGENICITY
NONE IDENTIFIED.

CONTINUED ON PAGE: 4

SECTION V - HEALTH HAZARD DATA (CONTINUED)

REPRODUCTIVE EFFECTS
NONE IDENTIFIED.

EFFECTS OF OVEREXPOSURE

INHALATION: PULMONARY EDEMA, CIRCULATORY FAILURE, RESPIRATORY SYS DAMAGE, COLLAPSE, COUGHING, DIFFICULT BREATHING

SKIN CONTACT: BURNS

EYE CONTACT: BURNS

SKIN ABSORPTION: NONE IDENTIFIED

INGESTION: IS HARMFUL AND MAY BE FATAL, SEVERE BURNS TO MOUTH, THROAT, AND STOMACH, NAUSEA, VOMITING

CHRONIC EFFECTS: NONE IDENTIFIED

TARGET ORGANS
RESPIRATORY SYSTEM, EYES, SKIN

MEDICAL CONDITIONS GENERALLY AGGRAVATED BY EXPOSURE
NONE IDENTIFIED

PRIMARY ROUTES OF ENTRY
INGESTION, INHALATION, SKIN CONTACT, EYE CONTACT

EMERGENCY AND FIRST AID PROCEDURES

INGESTION: CALL A PHYSICIAN. IF SWALLOWED, DO NOT INDUCE VOMITING. CONSCIOUS, GIVE WATER, MILK, OR MILK OF MAGNESIA.

INHALATION: IF INHALED, REMOVE TO FRESH AIR. IF NOT BREATHING, GIV ARTIFICIAL RESPIRATION. IF BREATHING IS DIFFICULT, GIVE OXYGEN.

SKIN CONTACT: IN CASE OF CONTACT, IMMEDIATELY FLUSH SKIN WITH PLENTY OF WATER FOR AT LEAST 15 MINUTES WHILE REMOVING CONTAMINATED CLOTHING AND SHOES. WASH CLOTHING BEFORE RE-USE.

CONTINUED ON PAGE: 5

SECTION V - HEALTH HAZARD DATA (CONTINUED)

EYE CONTACT: IN CASE OF EYE CONTACT, IMMEDIATELY FLUSH WITH PLENTY OF WATER FOR AT LEAST 15 MINUTES.

SARA/TITLE III HAZARD CATEGORIES AND LISTS

ACUTE: YES CHRONIC: YES FLAMMABILITY: NO PRESSURE: NO REACTIVITY: NO

EXTREMELY HAZARDOUS SUBSTANCE:	YES	CONTAINS HYDROGEN CHLORIDE (RQ = 1 LB, = 500 LBS)
CERCLA HAZARDOUS SUBSTANCE:	YES	CONTAINS HYDROCHLORIC ACID (RQ = 5000 L
SARA 313 TOXIC CHEMICALS:	YES	CONTAINS HYDROCHLORIC ACID
GENERIC CLASS:		C16
TSCA INVENTORY:	YES	

SECTION VI - REACTIVITY DATA

STABILITY: STABLE HAZARDOUS POLYMERIZATION: WILL NOT OCCU

CONDITIONS TO AVOID: HEAT

INCOMPATIBLES: MOST COMMON METALS, STRONG BASES, METAL OXIDES, AMINES, CARBONATES, SULFURIC ACID, CHLOROSULFONIC A

DECOMPOSITION PRODUCTS: HYDROGEN CHLORIDE, HYDROGEN, CHLORINE

SECTION VII - SPILL & DISPOSAL PROCEDURES

STEPS TO BE TAKEN IN THE EVENT OF A SPILL OR DISCHARGE
WEAR SELF-CONTAINED BREATHING APPARATUS AND FULL PROTECTIVE CLOTHING. STOP LEAK IF YOU CAN DO SO WITHOUT RISK. VENTILATE AREA. NEUTRALIZE SPILL WITH SODA ASH OR LIME. WITH CLEAN SHOVEL, CAREFULLY PLACE MATERI INTO CLEAN, DRY CONTAINER AND COVER; REMOVE FROM AREA. FLUSH SPILL ARE WITH WATER.

J. T. BAKER NEUTRASORB(R) OR TEAM(R) 'LOW NA+' ACID NEUTRALIZERS ARE FOR SPILLS OF THIS PRODUCT.

CONTINUED ON PAGE: 6

SECTION VII - SPILL & DISPOSAL PROCEDURES (CONTINUED)

DISPOSAL PROCEDURE
DISPOSE IN ACCORDANCE WITH ALL APPLICABLE FEDERAL, STATE, AND LOCAL ENVIRONMENTAL REGULATIONS.

EPA HAZARDOUS WASTE NUMBER: D002 (CORROSIVE WASTE)

SECTION VIII - INDUSTRIAL PROTECTIVE EQUIPMENT

EYE/SKIN PROTECTION: THIS IS A LABORATORY-USE PRODUCT FOR WHICH NO INDUSTRIAL PROTECTIVE EQUIPMENT HAS BEEN DESIGNATED

SECTION IX - STORAGE AND HANDLING PRECAUTIONS

SAF-T-DATA* STORAGE COLOR CODE: WHITE (CORROSIVE)

STORAGE REQUIREMENTS
KEEP CONTAINER TIGHTLY CLOSED. STORE IN CORROSION-PROOF AREA. ISOLATE FROM INCOMPATIBLE MATERIALS.

SECTION X - TRANSPORTATION DATA AND ADDITIONAL INFORMATION

DOMESTIC (D.O.T.)

PROPER SHIPPING NAME: CHEMICALS, N.O.S. (NON-REGULATED)

INTERNATIONAL (I.M.O.)

PROPER SHIPPING NAME: CHEMICALS, N.O.S. (NON-REGULATED)
MARINE POLLUTANTS: NO

AIR (I.C.A.O.)

PROPER SHIPPING NAME: CHEMICALS, N.O.S. (NON-REGULATED)

U.S. CUSTOMS HARMONIZATION NUMBER: 28061000000

CONTINUED ON PAGE: 7

==========

N/A = NOT APPLICABLE OR NOT AVAILABLE
N/E = NOT ESTABLISHED

THE INFORMATION IN THIS MATERIAL SAFETY DATA SHEET MEETS THE REQUIREMENTS OF THE UNITED STATES OCCUPATIONAL SAFETY AND HEALTH ACT AND REGULATIONS PROMULGATED THEREUNDER (29 CFR 1910.1200 ET. SEQ.) AND THE CANADIAN WORKPLACE HAZARDOUS MATERIALS INFORMATION SYSTEM. THIS DOCUMENT IS INTENDED ONLY AS A GUIDE TO THE APPROPRIATE PRECAUTIONARY HANDLING OF THE MATERIAL BY A PERSON TRAINED IN, OR SUPERVISED BY A PERSON TRAINED IN, CHEMICAL HANDLING. THE USER IS RESPONSIBLE FOR DETERMINING THE PRECAUTIONS AND DANGERS OF THIS CHEMICAL FOR HIS OR HER PARTICULAR APPLICATION. DEPENDING ON USAGE, PROTECTIVE CLOTHING INCLUDING EYE AND FACE GUARDS AND RESPIRATORS MUST BE USED TO AVOID CONTACT WITH MATERIAL OR BREATHING CHEMICAL VAPORS/FUMES.

EXPOSURE TO THIS PRODUCT MAY HAVE SERIOUS ADVERSE HEALTH EFFECTS. THIS CHEMICAL MAY INTERACT WITH OTHER SUBSTANCES. SINCE THE POTENTIAL USES ARE SO VARIED, BAKER CANNOT WARN OF ALL OF THE POTENTIAL DANGERS OF USE OR INTERACTION WITH OTHER CHEMICALS OR MATERIALS. BAKER WARRANTS THAT THE CHEMICAL MEETS THE SPECIFICATIONS SET FORTH ON THE LABEL.

BAKER DISCLAIMS ANY OTHER WARRANTIES, EXPRESSED OR IMPLIED WITH REGARD TO THE PRODUCT SUPPLIED HEREUNDER, ITS MERCHANTABILITY OR ITS FITNESS FOR A PARTICULAR PURPOSE.

THE USER SHOULD RECOGNIZE THAT THIS PRODUCT CAN CAUSE SEVERE INJURY AND EVEN DEATH, ESPECIALLY IF IMPROPERLY HANDLED OR THE KNOWN DANGERS OF USE ARE NOT HEEDED. READ ALL PRECAUTIONARY INFORMATION. AS NEW DOCUMENTED GENERAL SAFETY INFORMATION BECOMES AVAILABLE, BAKER WILL PERIODICALLY REVISE THIS MATERIAL SAFETY DATA SHEET.

NOTE: CHEMTREC, CANUTEC, AND NATIONAL RESPONSE CENTER EMERGENCY TELEPHONE NUMBERS ARE TO BE USED ONLY IN THE EVENT OF CHEMICAL EMERGENCIES INVOLVING A SPILL, LEAK, FIRE, EXPOSURE, OR ACCIDENT INVOLVING CHEMICALS. ALL NON-EMERGENCY QUESTIONS SHOULD BE DIRECTED TO CUSTOMER SERVICE (1-800-JTBAKER) FOR ASSISTANCE.

COPYRIGHT 1992 J.T.BAKER INC.
* TRADEMARKS OF J.T.BAKER INC.

===

APPROVED BY QUALITY ASSURANCE DEPARTMENT.

-- LAST PAGE --
"ISSUED BY VWR 02/05/94"

Material Safety Data Sheet

From Genium's Reference Collection
Genium Publishing Corporation
1145 Catalyn Street
Schenectady, NY 12303-1836 USA
(518) 377-8855

GENIUM PUBLISHING CORP.

(Revision A)
Issued: May 1980
Revised: April 1986

SECTION 1. MATERIAL IDENTIFICATION

MATERIAL NAME: HYDROGEN, GAS
DESCRIPTION: Supplied as a compressed (2000 psig) gas in cylinders.
OTHER DESIGNATIONS: H_2; CAS #1333-74-0
MANUFACTURER/SUPPLIER: Available from several suppliers, including:
Airco Industrial Gases of the BOC Group, Inc., 575 Mountain Ave., Murray Hill, NJ 07974;
Telephone: (201) 464-8100

Union Carbide Corp., Linde Division, 37 Old Ridgebury Rd., Danbury, CT 06817;
Telephone: (203) 794-5300

HMIS
H: 0
F: 4
R: 0
PPE*
*See Sect. 8

R 2
I 1
S -
K 4

SECTION 2. INGREDIENTS AND HAZARDS

	%	HAZARD DATA
Hydrogen, Gas, CAS #1333-74-0	>99.9	Simple Asphyxiant*

* The TLV for a simple asphyxiant gas (ACGIH, 1985-86). ACGIH does not recommend a TLV for certain asphyxiants because the limiting factor is the air-oxygen content. Oxygen concentrations should not go below 18% by volume.

SECTION 3. PHYSICAL DATA

Boiling Point, 760 mm Hg ... -423.2°F (-252.7°C)
Melting Point ... -434.5°F (-259.2°C)
Specific Gravity (Air = 1) ... 0.069
Solubility in Water @ 60°F, 1 atm, vol/vol H_2O ... 0.019
Viscosity, @ 15°C, atm, cps ... 0.0087
Critical Temperature ... -399.8°F (-239.9°C)
Critical Pressure, atm ... 12.8
Molecular Weight ... 2.02

Appearance and odor: Colorless, tasteless, odorless gas.

SECTION 4. FIRE AND EXPLOSION DATA

Flash Point and Method	Autoignition Temp.	Flammability Limits in Air	LOWER	UPPER
NA (Gaseous Mat'l)	1075°F (580°C)	% by Volume	4	75

EXTINGUISHING MEDIA: Small fires can be extinguished with carbon dioxide, dry chemical, or halogenated gas. However, don't extinguish a hydrogen fire until surroundings have been cooled and the hydrogen (flow) has been controlled or shut off in order to eliminate the danger of reignition and/or possible explosion. UNUSUAL FIRE/EXPLOSION HAZARDS: Hydrogen is extremely flammable. It forms explosive mixtures with air. In case of a pipeline fire, when possible, gradually reduce the H_2 flow to a small jet. Do not stop the flow completely before an inert gas or steam system has been activated to control flashback. Fires at cylinders or storage tanks should be allowed to burn until nearly empty before they are closed off, keeping the containers and surroundings as cool as possible by using water spray.

SECTION 5. REACTIVITY DATA

Hydrogen is extremely flammable. It forms explosive mixtures with air, oxygen, and oxidizing agents. It is a stable material in closed containers at room temperature. It does not polymerize. It will react vigorously or explosively with many oxidizing agents. A mixture of flammable hydrogen gas and air is stable in the absence of catalysts until an ignition source is supplied. (An electric spark with the energy of as little as 0.017 mJ can be sufficient.) A mixture of hydrogen gas with air can burn with a very hot nonluminous flame that is difficult to see, or it can explode. Hydrogen/chlorine mixtures in the dark are stable, but they will explode if exposed to light. Fluorine reacts with hydrogen at -418°F (-250°C) when impurities are present in the mixture. A hydrogen/oxygen mixture with a platinum catalyst will explode. Lithium metal will burn in a hydrogen atmosphere to form the hydride. Hydrogen can interact with some metals (i.e., hardened steels) to cause embrittlement.

Copyright © 1986 Genium Publishing Corporation.
Any commercial use or reproduction without the publisher's permission is prohibited.

SECTION 6. HEALTH HAZARD INFORMATION

Hydrogen is not listed as a carcinogen by the NTP, IARC, or OSHA.
It is nontoxic. It can act as a simple asphyxiant by displacing the oxygen in the air. Symptoms of exposure depend on the degree and duration of oxygen deficiency. Persons exposed to an oxygen-deficient atmosphere can become cyanotic and experience diminished mental alertness, impaired muscular coordination, and breathing impairment, followed by collapse and even death if exposure is prolonged at low oxygen levels.

PRIMARY ENTRY: Inhalation. ACUTE EFFECTS: Simple asphyxiation by displacement of oxygen.

FIRST AID: (CAUTION! Would-be rescuers must be concerned for their own safety in oxygen-deficient atmospheres and use approved breathing apparatus.)

EYE CONTACT: Get medical help.*

SKIN CONTACT: Get medical help.*

INHALATION: Remove victim to fresh air. Quickly proceed to restore and/or support his breathing as required (mouth-to-mouth resuscitation should probably be used initially). Have a trained person administer oxygen if it is available. Get medical help.*

INGESTION: Get medical help.*

* GET MEDICAL ASSISTANCE = In plant, paramedic, community. Get medical help for further treatment, observation, and support after first aid.

SECTION 7. SPILL, LEAK, AND DISPOSAL PROCEDURES

Establish emergency procedures and training. Evacuate the area. Notify safety personnel of leaks. Keep upwind of leaks. Provide optimum explosion-proof ventilation. Shut off the source of the hydrogen leak, if possible. A vapor-explosion hazard exists in confined areas and sewers. Remove combustibles and sources of heat if you can do so without risk. Small leaks can be detected by bubbles that form when a suspected leak area has been painted with soapy water. Note: Because hydrogen ignites readily and burns with a nearly invisible flame in daylight, leaks must be approached in a manner to protect against a jet flame. Ventilate area sufficiently before permitting personnel to reenter it. Remove a leaking cylinder to an isolated area outdoors or place it into a hood with good forced ventilation. Allow gas to be discharged at a slow rate. Tag the defective cylinder to indicate the defect, then close the valve and return it to the supplier.

SECTION 8. SPECIAL PROTECTION INFORMATION

RESPIRATOR: Provide air-supplied or self-contained breathing equipment for emergency or nonroutine situations where the hydrogen level is excessive.

VENTILATION: Provide adequate general and local exhaust ventilation (explosion proof) to prevent the workplace atmosphere from becoming deficient or from approaching the LEL (lower explosive limit) for hydrogen.

OTHER PRECAUTIONS: Safety shoes, insulated gloves, and safety glasses are recommended when handling hydrogen cylinders. Contact lenses pose a special hazard; soft lenses may absorb irritants and all lenses concentrate them.

SPECIAL CONSIDERATIONS: Hydrogen gas will rise and accumulate in high places. Confined areas need special attention to prevent buildup of hydrogen gas concentrations.

COMMENTS: Those involved in handling and using hydrogen should be trained in its safe use.

SECTION 9. SPECIAL PRECAUTIONS AND COMMENTS

Store hydrogen cylinders in a clean, cool, dry, well-ventilated, low fire-risk area away from combustible materials, oxidizing agents, and sources of heat or ignition. Use explosion-proof motors, lights, and fixtures in work area. Follow the general safety procedures for handling a compressed flammable gas in cylinders, including keeping it separate from oxygen cylinders, never exposing any part of the cylinder to a temperature that exceeds 125° F (51.6°C), and grounding cylinders and hydrogen-handling equipment to prevent a buildup of static charge. Use nonsparking tools. Vessels and piping systems should be designed to the DOT, ASME, and ANSI pressure-piping codes. Piping systems and vessels from hydrogen service should be made inert by suitable purging procedures.

DOT Classification: Flammable Gas Label: Flammable Gas UN1049

Data Source(s) Code: 1-12, 17, 18, 25, 51, 63, 82. CK

Judgements as to the suitability of information herein for purchaser's purposes are necessarily purchaser's responsibility. Therefore, although reasonable care has been taken in the preparation of such information, Genium Publishing Corp. extends no warranties, makes no representations and assumes no responsibility as to the accuracy or suitability of such information for application to purchaser's intended purposes or for consequences of its use.

Approvals J.O. Accrocco, 1/87.

Indust. Hygiene/Safety DJW 12-86

Medical Review [signature] Dec 86

Copyright © 1986 Genium Publishing Corporation.
Any commercial use or reproduction without the publisher's permission is prohibited.

Copyright © April 1, 1986

Genium Publishing Corporation
1145 Catalyn Street
Schenectady, NY 12303-1836 USA
(518) 377-8854

Material

Sheet No. 686
Hydrogen Cyanide

Issued: 8/89

Section 1. Material Identification

Hydrogen Cyanide Description: Large-scale preparation by the catalytic oxidation of ammonia-methane mixtures. Used in the fumigation of ships, railroad cars, orchards, buildings, tabacco, and various foods. Can be produced in petroleum refining, electroplating, metallurgy, and photographic development.
Other Designations: Hydrocyanic acid; prussic acid; anhydrous hydrogen cyanide; HCN; CAS No. 0074-90-8.
Manufacturer: Contact your supplier or distributor. Consult the latest *Chemicalweek Buyers' Guide* (Genium ref. 73) for a suppliers list.

R 1
I 4
S -
K 4

NFPA

HMIS
H 4
F 4
R 2
PPG*
* Sec. 8

Section 2. Ingredients and Occupational Exposure Limits

Hydrogen cyanide, ca 100%

OSHA PEL (Skin*)
Ceiling: 10 ppm, 10 mg/m³

ACGIH TLV (Skin*), 1988-89
TLV Ceiling: 10 ppm, 10 mg/m³

NIOSH REL, 1976
10-min ceiling: 4.7 ppm CN, 5 mg CN/m³

Toxicity Data†
Human, oral, LD_{L_o}: 570 µg/kg
Human, inhalation, LC_{L_o}: 200 mg/m³/10 min
Rat, inhalation, LC_{50}: 484 ppm/5 min

* This material can be absorbed through intact skin, which contributes to overall exposure.
† See NIOSH, *RTECS* (MW6825000), for additional data with references.

Section 3. Physical Data

Boiling Point: 79 °F (29 °C)
Melting Point: 7.88 °F (-13.4 °C)
Vapor Pressure: 620 torr at 68 °F (20 °C)
Vapor Density (Air = 1): 0.941
Molecular Weight: 27 g/mol
Specific Gravity (H_2O = 1): 0.7
Water Solubility: Miscible
% Volatile by Volume: 100

Appearance and Odor: A colorless gas or blue-white liquid; a characteristic faint odor resembling bitter almonds for those individuals able to perceive its presence by smell.

Section 4. Fire and Explosion Data

Flash Point: 0 °F (-17.78 °C) CC	Autoignition Temperature: 1000 °F (538 °C)	LEL: 5.6% v/v	UEL: 40% v/v

Extinguishing Media: Hydrogen cyanide is an extremely toxic, flammable material. In advanced or massive fires, firefighting should be done from a safe, protected location. Use carbon dioxide (CO_2), dry chemical, or foams to put out hydrogen cyanide fires. Use water sprays to cool fire-exposed containers, protect the personnel attempting to seal the source of the leaking gas, flush spills away from sensitive exposures (heat, sources of ignition, or incompatible chemicals), disperse the vapors, and dilute spills to nonflammable mixtures.
Unusual Fire or Explosion Hazards: This gas is extremely poisonous and flammable. Consider evacuation of the incident area in large fires.
Special Fire-fighting Procedures: Wear a self-contained breathing apparatus (SCBA) with a full facepiece operated in the pressure-demand or positive-pressure mode. Fire fighters must wear a complete set of personal protective equipment to prevent virtually any contact with this deadly poison. They must not have exposed skin surfaces since their skin can absorb fatal amounts of hydrogen cyanide.

Section 5. Reactivity Data

Stability/Polymerization: Hydrogen cyanide is stable at room temperature in during routine operations.. Hazardous polymerization cannot occur.
Chemical Incompatibilities: Hydrogen cyanide can react dangerously with acetaldehyde..
Conditions to Avoid: *Specially trained personnel must handle hydrogen cyanide. Never permit inexperienced workers to handle it.* Never expose this material to any heat or ignition sources such as lighted cigarettes or pipes, open flames, or uninsulated heating elements.
Hazardous Products of Decomposition: Thermal oxidative degradation of hydrogen cyanide can produce carbon dioxide, toxic oxides of nitrogen (N_xO_y) and carbon monoxide (CO). Hydrogen cyanide is a very toxic material even when not decomposed during fires.

Section 6. Health Hazard Data

Carcinogenicity: Neither the NTP, IARC, nor OSHA lists hydrogen cyanide as a carcinogen.
Summary of Risks: Inhalation of high concentrations of hydrogen cyanide causes tachypnea (rapid breathing) resulting in increased cyanide intake; then dyspnea, paralysis, convulsions, and respiratory arrest. Death may occur within minutes. Lesser concentrations can cause headache, vertigo, nausea, and vomiting. Concentrations of 270 ppm are immediately fatal; 181 ppm in 10 min are fatal; 135 ppm in 30 min are fatal; 110 to 135 ppm in 1 hr are potentially fatal; 45 to 54 ppm are tolerable for 30 to 60 min without immediate or late effects; and 18 to 36 ppm cause slight symptoms after several hours of exposure. **Medical Conditions Aggravated by Long-Term Exposure:** None reported. **Target Organs:** All body cells. **Primary Entry:** Inhalation, skin contact/absorption. **Acute Effects:** Burning sensation in mouth and throat. Initially rapid pulse and high blood pressure followed by decreasing blood pressure and pulse. Cherry-red mucous membranes may be noted. Headache, weakness, mental

Continue on next page

Copyright © 1989 Genium Publishing Corporation.
Any commercial use or reproduction without the publisher's permission is prohibited.

Section 6. Health Hazard Data (continued)

confusion, nausea, vomiting, shock, convulsions, coma, and possible death. Chronic Effects: Enlargement of the thyroid gland, fatique, weakness, headache, changes in taste and smell, irritation of throat, effort dyspnea, nervous instability, lachrymation, abdominal colic, and precordial pain were reported in workers exposed at concentrations between 4 and 12 ppm for approximately 7 years.

FIRST AID

Eyes: Flush immediately, including under the eyelids, gently but thoroughly with flooding amounts of running water for at least 15 min. Skin: Immediately remove all contaminated clothing. After rinsing affected area with flooding amounts of water, wash it with soap and water. Avoid contact with this chemical. Inhalation: Remove the exposed person to fresh air and support breathing as needed. Have qualified medical personnel administer oxygen as required. Ingestion: Never induce vomiting or perform mouth-to-mouth respiration! Provide 100% oxygen as soon as possible. Institute gastric lavage after endotracheal intubation. After first aid, get appropriate in-plant, paramedic, or community medical attention and support. Seek prompt medical assistance for further observation and treatment.

Physician's Note: *Treat all exposures as life-threatening emergencies.* An antidote to hydrogen cyanide is sodium nitrite and sodium thiosulfate. Commercially available cyanide poisoning first-aid kits should be purchased. Competent medical personnel should carefully train appropriately selected workers on how to use these kits in emergencies. Several detailed medical treatments are available for cyanide poisoning. After reviewing the specific uses of hydrogen cyanide in their operation, the safety personnel and/or the industrial hygienists should develop a precise emergency first-aid treatment protocol before an incident occurs. Heart monitorings should be instituted.

Section 7. Spill, Leak, and Disposal Procedures

Spill Leak: *Design and practice a hydrogen cyanide spill control and countermeasure plan (SCCP). Immediately evacuate the incident area and alert the appropriate local officials to the specifics of the hydrogen cyanide release.* When a spill occurs, notify safety personnel, eliminate heat or ignition sources, provide optimum explosion-proof ventilation, and implement the SCCP. Cleanup personnel must wear a complete ensemble of personal protective equipment (Sec. 8), including self-contained breathing apparatus and total body-covering clothes, to prevent skin contact or inhalation. Use nonsparking tools and equipment. Use water sprays to protect personnel attempting to locate and seal the source of the escaping hydrogen cyanide gas. Waste Management/ Disposal: Contact your supplier or a licensed contrator for detailed recommendations. Follow applicable Federal, state, and local regulations.

OSHA Designations

Listed as Air Contaminant (29 CFR 1910.1000, Subpart Z)

EPA Designations

Listed as RCRA Hazardous Waste No. P063 (40 CFR 261.33)

Listed as a CERCLA Hazardous Substance* (40 CFR 302.4), Reportable Quantity (RQ): 10 lb (4.54 kg) [* per CWA, Sec. 311(b)(4) and RCRA, Sec. 3001]

SARA Extremely Hazardous Substance (40 CFR 355), Threshold Planning Quantity (TPQ): 100 lb

SARA Toxic Chemical* (40 CFR 372.65) [* EPA Form R may apply to your facility; see 40 CFR 372.85 for instructions]

Section 8. Special Protection Data

Goggles: Always wear protective eyeglasses or chemical safety goggles, per OSHA eye- and face-protection regulations (29 CFR 1910.133). Respirator: Wear a NIOSH-approved respirator if necessary. Follow OSHA respirator regulations (29 CFR 1910.134). For emergency or nonroutine operations (leaks or cleaning reactor vessels and storage tanks), wear an SCBA. Warning: Air-purifying respirators do *not* protect workers in oxygen-deficient atmospheres. Other: Wear impervious gloves, boots, aprons, and gauntlets to prevent prolonged or repeated skin contact. Ventilation: Provide general and local explosion-proof ventilation systems to maintain airborne concentrations below the OSHA PEL standard (Sec. 2). Local exhaust ventilation is preferred since it prevents contaminant dispersion into the work area by eliminating it at its source (Genium ref. 103). Safety Stations: Make available in the work area emergency eyewash stations, safety/quick-drench showers, and washing facilities. Contaminated Equipment: Never wear contact lenses in the work area: soft lenses may absorb, and all lenses concentrate, irritants. Launder contaminated clothing before wearing. Remove this material from your shoes and equipment. Other: Use hydrogen cyanide in closed-confinement, pressurized engineering systems. Automatic shutoff valves/sensors to the main feed lines are recommended in the event of a catastrophic pressure drop from the rupture of a pressurized HCN pipeline. Comments: Never eat, drink, or smoke in work areas. Practice good personal hygiene after using this material, especially before eating, drinking, smoking, using the toilet, or applying cosmetics.

Section 9. Special Precautions and Comments

Storage Requirements: Store hydrogen cyanide in tightly closed, airtight, moisture-proof containers in a cool, dry, well-ventilated, fireproof area away from heat or ignition sources and incompatible chemicals (Sec. 5.) Protect these containers from physical damage; shield them from direct sunlight. Limit access to the storage area to authorized personnel only. Special Handling/Storage: Proper stock rotation of hydrogen cyanide is vital for safety. Individual HCN cylinders should not be sored longer than 90 days. Check with your supplier for detailed recommendations concerning proper shelf rotation of stock, and proper dispensing equipment such as valves, flanges, and manifolds. Engineering Controls: To prevent static sparks, electrically ground and bond all containers, cylinders, and pipelines used in shipping, receiving, or transferring operations in production and storage areas. Other Precautions: Consider installing automatic sensing equipment which alerts workers to airborne concentrations of hydrogen cyanide greater than the 10 ppm ceiling (Sec. 2).

Transportation Data (49 CFR 172.101-2)

DOT Shipping Name: Hydrocyanic acid solution
DOT Hazard Class: Poison A *or* Poison B
DOT ID No.: UN1613 *or* NA1051
DOT Label: Poison gas and flammable gas

IMO Shipping Name: Hydrogen cyanide
IMO Hazard Class: 6.1
IMO Label: Poison and flammable liquid
IMDG Packaging Group: I

Proper shipping names, hazard classes, labels, and identification numbers vary with the hydrogen cyanide's concentration or strength.

MSDS Collection **References:** 1, 6, 7, 84-94, 100, 116, 117, 119, 120, 122

Prepared by: PJ Igoe, BS; Industrial Hygiene Review: DJ Wilson, CIH; Medical Review: W Silverman, MD PIO

Copyright © 1989 by Genium Publishing Corporation. Any commercial use or reproduction without the publisher's permission is prohibited. Judgments as to the suitability of information herein for the purchaser's purposes are necessarily the purchaser's responsibility. Although reasonable care has been taken in the preparation of such information, Genium Publishing Corporation extends no warranties, makes no representations, and assumes no responsibility as to the accuracy or suitability of such information for application to the purchaser's intended purpose or for consequences of its use.

VWR SCIENTIFIC
POST OFFICE BOX 41720
PHILADELPHIA, PA 19101-1720
TELEPHONE: (215)431-1700

Hydrogen Peroxide

01 021472938
ATTN SAFETY OFFICER
JAMES M. MONTGOMERY
CONSULTING/STE 200
365 LENNON LANE
WALNUT CREEK CA 94598

07/17/93

DEAR CUSTOMER:

ENCLOSED ARE THE MATERIAL SAFETY DATA SHEETS (MSDS'S) FOR THE PRODUCT(S) THAT YOUR COMPANY RECENTLY PURCHASED FROM VWR SCIENTIFIC. PLEASE FORWARD THESE MSDS(S) TO YOUR SAFETY OFFICER OR OTHER INDIVIDUAL IN YOUR ORGANIZATION RESPONSIBLE FOR IMPLEMENTING THESE REGULATIONS.

"ALL DATA OR INFORMATION REGARDING THE PARTICULAR PRODUCT YOU HAVE PURCHASED FROM VWR SCIENTIFIC, WHICH IS PROVIDED IN THE ENCLOSED MATERIAL SAFETY DATA SHEET, IS OFFERED GRATUITOUSLY AND IN GOOD FAITH AS ACCURATE, BUT IS FURNISHED WITHOUT GUARANTY. VWR SCIENTIFIC MAKES NO REPRESENTATION AS TO THE ACCURACY OF THE INFORMATION IN THE MSDS. WHILE THE INFORMATION IS BELIEVED TO BE CORRECT, YOU SHOULD PERFORM YOUR OWN INVESTIGATION AND INDEPENDENT VERIFICATION. THE CONDITIONS OF THE USE OF THE PRODUCT, AND THE SUITABILITY OF THE PRODUCT FOR YOUR PARTICULAR PURPOSES, ARE BEYOND THE CONTROL OF VWR SCIENTIFIC. THUS, ALL RISKS OF THE USE OF THE PRODUCT ARE THEREFORE ASSUMED BY YOU, THE USER, EXCEPT AS TO SUCH WARRANTIES AS MAY BE PUBLISHED BY VWR SCIENTIFIC, WITH RESPECT TO A PARTICULAR PRODUCT. VWR SCIENTIFIC EXPRESSLY DISCLAIMS ALL WARRANTIES OF EVERY KIND, AND NATURE, INCLUDING WARRANTIES OF MERCHANTIBILITY AND FITNESS FOR A PARTICULAR PURPOSE WITH RESPECT TO THE USE OR SUITABILITY OF THE PRODUCT. VWR SCIENTIFIC SHALL IN NO EVENT BE RESPONSIBLE FOR ANY DAMAGES OF WHATEVER NATURE, DIRECTLY OR INDIRECTLY, RESULTING FROM USE OF THE PRODUCT, OR FROM THE PUBLICATION OF USE OF OR RELIANCE UPON DATA CONTAINED IN THE ENCLOSED MSDS. NOTHING IN THE MSDS IS INTENDED AS A RECOMMENDATION FOR USES WHICH INFRINGE VALID PATENTS, OR WHICH EXTEND LICENSES UNDER VALID PATENTS. IF YOU RESELL THE PRODUCT, YOU ARE RESPONSIBLE TO PASS ON TO YOUR CUSTOMER THE INFORMATION CONTAINED IN THE MSDS, AND GIVE TO THEM APPROPRIATE WARNINGS AND SAFE HANDLING INSTRUCTIONS AS NECESSARY TO MAKE THE PRODUCT SAFE FOR THE INTENDED USES BY YOUR CUSTOMER.

THANK YOU,

VWR SCIENTIFIC

P.O. NUMBER	INVOICE NUMBER	SALE DATE	CATALOG NUMBER	MSDS FORM/DOC NUMBER
5130	5082124	07/12/93	EM -HX0630-1	HX0630

1. CHEMICAL PRODUCT AND COMPANY IDENTIFICATION

MANUFACTURER.....:

EM SCIENCE
A DIVISION OF EM INDUSTRIES
P.O. BOX 70
480 DEMOCRAT RD.
GIBBSTOWN, N.J. 08027

PREPARATION DATE.: 03/01/91
DATE MSDS PRINTED.: JUN 11, 1992

INFORMATION PHONE NUMBER.: 609-354-9200
HOURS: MON. TO FRI. 8:30-5
CHEMTREC EMERGENCY NUMBER: 800-424-9300
HOURS: 24 HRS A DAY

CATALOG NUMBER(S):
HX0630

CHEMICAL NAME....: HYDROGEN PEROXIDE SOLUTION, 50%
TRADE NAME.....: HYDROGEN DIOXIDE
CHEMICAL FAMILY..: PEROXIDE
FORMULA.....: H2O2

MOLECULAR WEIGHT.: 34.02

2. COMPOSITION / INFORMATION ON INGREDIENTS

COMPONENT	CAS #	APPR %
HYDROGEN PEROXIDE	7722-84-1	50%
WATER	7732-18-5	50%

3. HAZARDS IDENTIFICATION

EMERGENCY OVERVIEW
STRONG OXIDIZER.
LABORATORY TESTS INDICATE MATERIAL MAY BE CARCINOGENIC.
CAUSES BURNS.
CAN BE TOXIC BY INGESTION.
HARMFUL IF INHALED.
MAY CONTAIN GAS UNDER PRESSURE.
CONTAMINATION MAY RESULT IN DANGEROUS PRESSURE.
APPEARANCE.....:
CLEAR, COLORLESS LIQUID WITH SHARP ODOR

POTENTIAL HEALTH EFFECTS (ACUTE AND CHRONIC)

SYMPTOMS OF EXPOSURE:
EYES: SEVERE DAMAGE, POSSIBLY DELAYED; POSSIBLE BLINDNESS.
INHALATION: IRRITATION OF NASAL & RESPIRATORY PASSAGES.
BLEACHING, BLISTERING OF SKIN ON CONTACT.
TOXIC AND CORROSIVE BY INGESTION.
MEDICAL COND. AGGRAVATED BY EXPOSURE:
DATA NOT AVAILABLE.
ROUTES OF ENTRY.....:
INHALATION, INGESTION
CARCINOGENICITY.....:
THERE IS "LIMITED EVIDENCE" THAT H2O2 IS CARCINOGENIC TO EXPERIMENTAL ANIMALS (IARC: 36, 1985) HOWEVER, IT IS IMPROBABLE THAT HUMANS WILL BE EXPOSED TO HIGH ORAL DOSES DUE TO ACUTE TOXICITY OF CONCENTRATED SOLUTIONS AND CORROSIVITY OF H2O2 TO MUCOUS MEMBRANES.

4. FIRST AID MEASURES

EMERGENCY FIRST AID:
GET MEDICAL ASSISTANCE FOR ALL CASES OF OVEREXPOSURE.
SKIN: IMMEDIATELY FLUSH THOROUGHLY WITH LARGE AMOUNTS OF WATER.
EYES: IMMEDIATELY FLUSH THOROUGHLY WITH WATER FOR AT LEAST 15 MINUTES.
INHALATION: REMOVE TO FRESH AIR; GIVE ARTIFICIAL RESPIRATION IF BREATHING HAS STOPPED.
INGESTION: DO NOT INDUCE VOMITING; IF CONSCIOUS, GIVE WATER FREELY AND GET MEDICAL ATTENTION.
REMOVE CONTAMINATED CLOTHING AND WASH BEFORE REUSE.

5. FIRE FIGHTING MEASURES

FLASH POINT (F).....: NONCOMBUSTIBLE
FLAMMABLE LIMITS LEL (%).: N/A
FLAMMABLE LIMITS UEL (%).: N/A
EXTINGUISHING MEDIA.....:
WATER; FLOOD FIRE-EXPOSED CONTAINERS WITH WATER TO COOL.
FIRE FIGHTING PROCEDURES.:
WEAR SELF-CONTAINED BREATHING APPARATUS AND PROTECTIVE CLOTHING.
FIRE & EXPLOSION HAZARDS.:
DECOMPOSITION RELEASES OXYGEN WHICH MAY INTENSIFY FIRE.

6. ACCIDENTAL RELEASE MEASURES

SPILL RESPONSE:
EVACUATE THE AREA OF ALL UNNECESSARY PERSONNEL.
WEAR SUITABLE PROTECTIVE EQUIPMENT LISTED UNDER EXPOSURE / PERSONAL PROTECTION.
ELIMINATE ANY IGNITION SOURCES UNTIL THE AREA IS DETERMINED TO BE FREE FROM EXPLOSION OR FIRE HAZARDS.
CONTAIN THE RELEASE AND ELIMINATE ITS SOURCE, IF THIS CAN BE DONE WITHOUT RISK.
TAKE UP AND CONTAINERIZE FOR PROPER DISPOSAL AS DESCRIBED UNDER DISPOSAL.
COMPLY WITH FEDERAL, STATE, AND LOCAL REGULATIONS ON REPORTING RELEASES. REFER TO REGULATORY INFORMATION FOR REPORTABLE QUANTITY AND OTHER REGULATORY DATA.
EM SCIENCE RECOMMENDS SPILL-X NEUTRALIZERS AND ABSORBENT AGENTS FOR VARIOUS TYPES OF SPILLS.
ADDITIONAL INFORMATION ON THE SPILL-X PRODUCTS CAN BE PROVIDED THROUGH THE EM SCIENCE TECHNICAL SERVICE DEPARTMENT (609) 354-9200.
THE FOLLOWING EM SCIENCE SPILL-X NEUTRALIZER AND ABSORBENT IS RECOMMENDED FOR THIS PRODUCT:

SX0861 ACID SPILL TREATMENT KIT

7. HANDLING AND STORAGE

HANDLING & STORAGE:
VENT ALL CONTAINERS TO PREVENT PRESSURE BUILD-UP; KEEP UPRIGHT.
DO NOT BREATHE VAPOR.
STORE IN A COOL AREA AWAY FROM COMBUSTIBLE MATERIAL AND CATALYTIC METALS.
DO NOT GET IN EYES, ON SKIN, OR ON CLOTHING.
AVOID EXCESSIVE HEAT AND CONTAMINATION OF ANY KIND.
RETAINED RESIDUE MAY MAKE EMPTY CONTAINERS HAZARDOUS; USE CAUTION.
NEVER RETURN UNUSED HYDROGEN PEROXIDE TO ORIGINAL CONTAINER.

8. EXPOSURE CONTROLS / PERSONAL PROTECTION

ENGINEERING CONTROLS AND PERSONAL PROTECTIVE EQUIPMENT:

VENTILATION, RESPIRATORY PROTECTION, PROTECTIVE CLOTHING, EYE PROTECTION
RESPIRATORY PROTECTION: IF WORKPLACE EXPOSURE LIMIT(S) OF PRODUCT OR ANY COMPONENT IS EXCEEDED (SEE TLV/PEL), A NIOSH/MSHA APPROVED AIR SUPPLIED RESPIRATOR IS ADVISED IN ABSENCE OF PROPER ENVIRONMENTAL CONTROL. OSHA REGULATIONS ALSO PERMIT OTHER NIOSH/MSHA RESPIRATORS (NEGATIVE PRESSURE TYPE) UNDER SPECIFIED CONDITIONS (SEE YOUR SAFETY EQUIPMENT SUPPLIER). ENGINEERING

AND/OR ADMINISTRATIVE CONTROLS SHOULD BE IMPLEMENTED TO REDUCE EXPOSURE.
MATERIAL SHOULD BE HANDLED OR TRANSFERRED IN AN APPROVED FUME HOOD OR WITH ADEQUATE VENTILATION.
PROTECTIVE GLOVES (RUBBER, NEOPRENE OR EQUIVALENT) MUST BE WORN TO PREVENT SKIN CONTACT.
PROTECTIVE CLOTHING (IMPERVIOUS) SHOULD BE WORN WHEN HANDLING THIS MATERIAL.
SAFETY GLASSES WITH SIDE SHIELDS MUST BE WORN AT ALL TIMES.

WORK / HYGENIC PRACTICES:
WASH THOROUGHLY AFTER HANDLING.
DO NOT TAKE INTERNALLY.
EYE WASH AND SAFETY EQUIPMENT SHOULD BE READILY AVAILABLE.

EXPOSURE GUIDELINES

OSHA - PEL:

	TWA		STEL		CL		
COMPONENT	PPM	MG/M3	PPM	MG/M3	PPM	MG/M3	SKIN
HYDROGEN PEROXIDE	1	1.4					
WATER							

ACGIH - TLV:

	TWA		STEL		CL		
COMPONENT	PPM	MG/M3	PPM	MG/M3	PPM	MG/M3	SKIN
HYDROGEN PEROXIDE	1	1.4					
WATER							

9. PHYSICAL AND CHEMICAL PROPERTIES

BOILING POINT (C 760 MMHG).: 114C
MELTING POINT (C).....: -52C
SPECIFIC GRAVITY (H2O = 1).: 1.196
VAPOR PRESSURE (MM HG).....: 18 30C
PERCENT VOLATILE BY VOL (%): 50

VAPOR DENSITY (AIR = 1)....: 0.9
EVAPORATION RATE (BUAC = 1): >1
SOLUBILITY IN WATER (%)....: MISCIBLE
APPEARANCE.....:
CLEAR, COLORLESS LIQUID WITH SHARP ODOR

10. STABILITY AND REACTIVITY

STABILITY.....: NO
HAZARDOUS POLYMERIZATION:
DOES NOT OCCUR

HAZARDOUS DECOMPOSITION.:
OXYGEN WHICH SUPPORTS COMBUSTION

CONDITIONS TO AVOID.....:

CONTAMINATION OF ANY KIND.
EXCESSIVE HEAT WHICH ACCELERATES DECOMPOSITION.

MATERIALS TO AVOID.....:
( )WATER
( )ACIDS
( )BASES
( )CORROSIVES
( )OXIDIZERS
(X)OTHER :

COMBUSTIBLE MATERIALS, POWDERED METALS, RUST, DIRT, ORGANICS

11. TOXICOLOGICAL INFORMATION

TOXICITY DATA:
NONE ESTABLISHED
TOXICOLOGICAL FINDINGS:
TESTS ON LABORATORY ANIMALS INDICATE MATERIAL MAY CAUSE TUMORS
CITED IN REGISTRY OF TOXIC EFFECTS OF SUBSTANCES (RTECS)

12. DISPOSAL CONSIDERATIONS

EPA WASTE NUMBERS: D002
TREATMENT:
INCINERATION, FUELS BLENDING OR RECYCLE. CONTACT YOUR LOCAL
PERMITTED WASTE DISPOSAL SITE (TSD) FOR PERMISSIBLE TREATMENT
SITES.
ALWAYS CONTACT A PERMITTED WASTE DISPOSER (TSD) TO ASSURE

COMPLIANCE WITH ALL CURRENT LOCAL, STATE AND FEDERAL REGULATIONS.

13. TRANSPORT INFORMATION

DOT PROPER SHIPPING NAME...:
HYDROGEN PEROXIDE SOLUTION, 50%
DOT ID NUMBER.....: UN2014

14. REGULATORY INFORMATION

TSCA INVENTORY.....:
THIS PRODUCT IS A "MIXTURE". THE CAS NUMBERS OF ALL COMPONENTS ARE LISTED ON THE TSCA INVENTORY.

COMPONENT	SARA EHS (302)	SARA EHS TPQ (LBS)	CERCLA RQ (LBS)
HYDROGEN PEROXIDE	Y	1000	1
WATER			

COMPONENT	OSHA FLOOR LIST	SARA 313	DEMINIMIS FOR SARA 313 (%)
HYDROGEN PEROXIDE	Y		
WATER			

15. OTHER INFORMATION

COMMENTS:
NONE
NFPA HAZARD RATINGS:

HEALTH : 2
FLAMMABILITY : 0
REACTIVITY : 1
SPECIAL HAZARDS: OXY

REVISION HISTORY:
08/01/84 04/01/85 06/29/87 10/27/87 03/27/90

= REVISED SECTION
N/A = NOT AVAILABLE
N/E = NONE ESTABLISHED

THE STATEMENTS CONTAINED HEREIN ARE OFFERED FOR INFORMATIONAL PURPOSES ONLY AND ARE BASED UPON TECHNICAL DATA THAT EM SCIENCE BELIEVES TO BE ACCURATE. IT IS INTENDED FOR USE ONLY BY PERSONS HAVING THE NECESSARY TECHNICAL SKILL AND AT THEIR OWN DESCRETION AND RISK. SINCE CONDITIONS AND MANNER OF USE ARE OUTSIDE OUR CONTROL, WE MAKE NO WARRANTY, EXPRESS OR IMPLIED, OF MERCHANTABILITY, FITNESS OR OTHERWISE.

PORTIONS COPYRIGHT ARIEL RESEARCH CORPORATION, 1991.
RESTRICTED USE CONDITIONS APPLY. SELECTED REGULATORY INFORMATION IN THIS MSDS HAS BEEN DERIVED FROM ARIEL RESEARCH CORPORATION'S INTERNATIONAL CHEMICAL REGULATORY MONITORING SYSTEM (ICRMS). USE OF THIS DATA IS PROVIDED SUBJECT TO THE TERMS OF THE LICENSE AGREEMENT BETWEEN EM INDUSTRIES AND ARIEL RESEARCH CORPORATION. FURTHER DISTRIBUTION IS PROHIBITED WITHOUT AUTHORIZATION.

"ISSUED BY VWR 07/17/93"

Material Safety Data Sheet

From Genium's Reference Collection
Genium Publishing Corporation
1145 Catalyn Street
Schenectady, NY 12303-1836 USA
(518) 377-8855

GENIUM PUBLISHING CORP.

No. 52

HYDROGEN SULFIDE
(Revision A)
Issued: July 1979
Revised: April 1988

SECTION 1. MATERIAL IDENTIFICATION

Material Name: HYDROGEN SULFIDE

Description (Origin/Uses): Used as a reagent in analytical chemistry and in metallurgy; used to make heavy water.

Other Designations: Sulfureted Hydrogen; H_2S; NIOSH *RTECS* No. MX1225000; CAS No. 7783-06-4

Manufacturer: Contact your supplier or distributor. Consult the latest edition of the *Chemicalweek Buyers' Guide* (Genium ref. 73) for a list of suppliers.

HMIS	
H 4	
F 4	R 1
R 3	I 3
PPG*	S 2
*See sect. 8	K 4

SECTION 2. INGREDIENTS AND HAZARDS

SECTION 2. INGREDIENTS AND HAZARDS	%	EXPOSURE LIMITS
Hydrogen Sulfide, CAS No. 7783-06-4	*	IDLH** Level: 300 ppm **OSHA PEL** Ceiling:*** 20 ppm **ACGIH TLVs, 1987-88** TLV-TWA: 10 ppm, 14 mg/m³ TLV-STEL: 15 ppm, 21 mg/m³ **NIOSH REL** 10-Min Ceiling: 10 ppm, 15 mg/m³ **Toxicity Data**** Human, Inhalation, LC_{Lo}: 600 ppm (30 Mins)

*Contact your supplier to determine the exact composition of this gas and if any contaminants are present.
**Immediately dangerous to life and health.
***OSHA sets the maximum peak above ceiling PEL as 50 ppm only in an 8-hour shift with no other measurable exposures.
****See NIOSH, *RTECS*, for additional data.

SECTION 3. PHYSICAL DATA

Boiling Point: -76°F (-60°C)
Melting Point: -117°F (-83°C)
Vapor Density: 1.2
Vapor Pressure: >760 Torrs (Normal Atmospheric Pressure)

Water Solubility (%): At 68°F (20°C), 1 gram of H_2S dissolves in 242 ml of water.
Molecular Weight: 34 Grams/Mole

Appearance and Odor: A colorless gas; odor of rotten eggs. **Warning:** Paralysis of olfactory sense occurs at 200 ppm.

SECTION 4. FIRE AND EXPLOSION DATA

Flash Point and Method	Autoignition Temperature	Flammability Limits in Air	LOWER	UPPER
Not Applicable	500°F (260°C)	% by Volume	4.3	46

Extinguishing Media: Hydrogen sulfide gas is a severe fire and explosion hazard; treat any fire involving it as an emergency. Try to shut off the gas; use a water spray to protect personnel attempting this. **Unusual Fire or Explosion Hazards; Danger:** Fire-exposed cylinders containing hydrogen sulfide gas can rupture violently. If it is safe to do so, remove them from the fire area or try to cool them with a direct water spray. This gas is denser than air and can travel a considerable distance to a low-lying source of ignition and flash back. It is flammable or explosive over a wide range of gas/air mixtures (see LEL and UEL). **Special Fire-fighting Procedures:** Wear a self-contained breathing apparatus (SCBA) with a full facepiece operated in the pressure-demand or positive-pressure mode. Fire fighters must use the maximum personal protective equipment available. Fight fires from explosion-proof or unmanned locations.

SECTION 5. REACTIVITY DATA

Hydrogen sulfide is stable in closed, airtight, pressurized containers at room temperature under normal storage and handling conditions. It does not undergo hazardous polymerization.

Chemical Incompatibilities: This material is very reactive; hazardous reactions occur between it and strong oxidizing agents, nitric acid, soda lime, sodium, sodium peroxide, acetaldehyde, copper, and others (see Genium ref. 84, p. 491M-107).

Conditions to Avoid: Do not allow sources of ignition such as open flame, unprotected heaters, lighted tobacco products, electric sparks or excessive heat in work areas because of the extreme flammability of hydrogen sulfide.

Hazardous Products of Decomposition: During fires hydrogen sulfide may produce toxic gases such as sulfur oxides (SO_x).

Copyright © 1988 Genium Publishing Corporation.
Any commercial use or reproduction without the publisher's permission is prohibited.

SECTION 6. HEALTH HAZARD INFORMATION

Hydrogen sulfide is not listed as a carcinogen by the NTP, IARC, or OSHA.

Summary of Risks: High concentrations (500-1000 ppm) of this material can cause systemic poisoning symptomized by respiratory paralysis, and unconsciousness, followed by death. Exposures of 50 to 500 ppm are characterized by respiratory irritation (coughing, difficulty in breathing). Eye and upper respiratory tract (URT) irritation start around 20 ppm; the severity increases with the duration and intensity of exposure. The sense of smell can be paralyzed immediately by exposure to 200 ppm. Collapse quickly followed by coma and possibly death can occur after breathing only a small amount at >1000 ppm.

Medical Conditions Aggravated by Long-Term Exposure: None reported. **Target Organs:** Eyes, respiratory system.

Primary Entry: Skin contact, inhalation. **Acute Effects:** Eye and URT irritation, dizziness, headache, and nausea.

Chronic Effects: None reported.

FIRST AID

Eyes: Immediately flush eyes, including under the eyelids, gently but thoroughly with plenty of running water for at least 15 minutes.

Skin: Treat for possible frostbite damage (cryogenic injury) if liquid hydrogen sulfide touches skin. Treat also for corrosive, acidic burns from either the gas or liquid. **Inhalation:** Remove the exposed person to fresh air; restore and/or support his or her breathing as needed. Rescuers must use good judgment to minimize their own personal risk. **Ingestion:** Unlikely.

GET MEDICAL HELP (IN PLANT, PARAMEDIC, COMMUNITY) FOR ALL EXPOSURES. Seek prompt medical assistance for further treatment, observation, and support after first aid.

SECTION 7. SPILL, LEAK, AND DISPOSAL PROCEDURES

Spill/Leak: *Treat any hydrogen sulfide gas leak as an emergency.* Preplan for gas leaks and make these preparations known to all relevant personnel. Notify safety personnel, evacuate all nonessential personnel, provide maximum explosion-proof ventilation, and eliminate all sources of ignition immediately. Try to stop the flow of gas; use a water spray to protect personnel attempting to do this. Cleanup personnel require a complete set of protective clothing, including an SCBA.

Waste Disposal: Contact your supplier or a licensed contractor for detailed recommendations. Follow Federal, state, and local regulations.

OSHA Designations

Air Contaminant (29 CFR 1910.1000 Subpart Z)

EPA Designations (40 CFR 302.4)

RCRA Hazardous Waste, No. U135

CERCLA Hazardous Substance, Reportable Quantity: 100 lbs (45.4 kg)

SECTION 8. SPECIAL PROTECTION INFORMATION

Goggles: Always wear protective eyeglasses or chemical safety goggles. Follow the eye- and face-protection guidelines in 29 CFR 1910.133. **Respirator:** Wear a NIOSH-approved respirator per the *NIOSH Pocket Guide to Chemical Hazards* for the maximum-use concentrations and/or the exposure limits cited in section 2. Follow the respirator guidelines in 29 CFR 1910.134. For emergency or nonroutine use (e.g., cleaning reactor vessels or storage tanks), wear an SCBA with a full facepiece operated in the pressure-demand or positive-pressure mode. **Warning:** Air-purifying respirators will *not* protect workers in oxygen-deficient atmospheres.

Other: Wear impervious gloves; boots; aprons; and clean, impervious, body-covering clothing to prevent any possibility of hydrogen sulfide's contact with skin. All clothing must be flame resistant. **Ventilation:** Install and operate general and local ventilation systems powerful enough to maintain airborne levels of hydrogen sulfide below the exposure limit cited in section 2. Make all ventilation systems of maximum explosion-proof design (e.g., nonsparking, electrically grounded and bonded, etc.)

Safety Stations: Make eyewash stations, washing facilities, and safety showers available in use and handling areas.

Contaminated Equipment: Contact lenses pose a special hazard; soft lenses may absorb irritants and all lenses concentrate them. Do *not* wear contact lenses in any work area. **Other:** All piping and equipment used with this gas must be pressure checked and leak tight.

Comments: Practice good personal hygiene; always wash thoroughly after using this material. Avoid transferring it from your hands to your mouth while eating, drinking, or smoking. Do *not* eat, drink, or smoke in any work area.

SECTION 9. SPECIAL PRECAUTIONS AND COMMENTS

Storage/Segregation: Store hydrogen sulfide in a cool, dry, well-ventilated area away from oxidizing agents, sources of heat or ignition, any flammable/explosive materials, cylinders containing oxygen, and incompatible chemicals (see sect. 5). Use outside or detached storage. Store cylinders upright and secure them tightly. **Special Handling/Storage:** Hydrogen sulfide is shipped and stored as a pressurized gas in cylinders or tank cars. Protect them against physical damage and regularly inspect them for cracks, leaks, or faulty valves. Electrically ground and bond all containers used in shipping or transferring operations to prevent static sparks. Do not drag or slide cylinders; move them in a carefully supervised manner with a suitable hand truck. Do not smoke in any use or storage area. Shade containers from radiant heat and direct sunlight. **Engineering Controls:** Make all engineering systems (ventilation, production, etc.) of maximum explosion-proof design. Hydrogen sulfide must be used in closed engineering systems because of its explosibility (see sect. 4). Evacuate and purge all lines with an inert gas such as nitrogen (N_2) before and after using hydrogen sulfide. **Comments:** Perform all operations with hydrogen sulfide carefully to prevent accidental ignition. Keep the valve-protection cap in place until immediately before use. Insert a check valve or trap into the transferral line to prevent a dangerous backflow into the original container. Use pressure-reducing regulators when connecting a cylinder to a lower-pressure piping system. Obtain detailed handling, shipping, and storage information from your supplier. A trained chemist or safety specialist familiar with the physical and chemical properties of this material should be present during all work operations.

Transportation Data (49 CFR 172.101-2)

DOT Shipping Name: Hydrogen Sulfide
DOT ID No. UN1053
DOT Label: Flammable Gas and Poison
DOT CLass: Flammable Gas
IMO Class: 2.1
IMO Label: Flammable Gas and Poison Gas

References: 1, 2, 12, 73, 84-94, 100, 103.

Judgments as to the suitability of information herein for purchaser's purposes are necessarily purchaser's responsibility. Therefore, although reasonable care has been taken in the preparation of such information, Genium Publishing Corp. extends no warranties, makes no representations and assumes no responsibility as to the accuracy or suitability of such information for application to purchaser's intended purposes or for consequences of its use.

Prepared by PJ Igoe, BS

Industrial Hygiene Review: DJ Wilson, CIH

Medical Review: MJ Hardies, MD

Copyright © 1988 Genium Publishing Corporation.
Any commercial use or reproduction without the publisher's permission is prohibited.

Black Hills Bentonite Co.

PRODUCT NAME

HYO 200

MATERIAL SAFETY DATA SHEET

SECTION 1 — **PRODUCT IDENTIFICATION**

MANUFACTURERS NAME

Black Hills Bentonite Co. (Kaycee Bentonite Corp.)

TELEPHONE NO.

(307) 265-3740

ADDRESS

P.O. Box 9, Mills, WY 82644

CHEMICAL NAME AND SYNONYMS

Hydrous Silicate of Alumina / Wyoming Sodium Bentonite

SECTION 2 — **HAZARDOUS INGREDIENTS**

MATERIAL OR COMPONENT	%	HAZARD DATA
Free Crystalline Silica	1-8	Chronic exposure over the TLV may result in silicosis or other respiratory ailments.

SECTION 3 — **PHYSICAL DATA**

BOILING POINT (°F) Not Applicable	SPECIFIC GRAVITY (H_2O=1) 2.8
VAPOR PRESSURE (mm Hg) Not Applicable	VAPOR DENSITY (AIR = 1) Not Applicable
EVAPORATION RATE Not Applicable	SOLUBILITY IN WATER Negligible
APPEARANCE AND ODOR Yellow, Blue, brown granules or powder. Earthy odor.	DENSITY @ 20° C: UNCOMPACTED: 62 lbs/cubic foot

HAZARDOUS MATERIALS IDENTIFICATION

1 Health Hazard

0 Flammability

0 Reactivity

DEGREE OF HAZARD

4 = EXTREME
3 = High
2 = Moderate
1 = Slight

FIRE AND EXPLOSION DATA

FLASH POINT

Not Applicable

FLAMMABLE

Non Flammable

SECTION 5 HEALTH HAZARD DATA

THRESHOLD LIMIT VALUE

Use TLV formula for crystalline free silica. OSHA permissible exposure limit

4 mg/M³, Total Dust, 1.6 mg/M³ respirable dust.

Bodium Bentonite Cas. No. 1302-78-9
Free Silica Cas. No. 14808-60-7

EFFECTS OF OVEREXPOSURE

Chronic exposure over TLV may result in silicosis or other respiratory ailments.

CARCINOGENICITY IARC, 1987., concluces that there is limited evidence to suggest that overexposure to crystalline silica (through inhalation) may be carcinogenic to humans.

Crystalline Silica/Alpha Quartz has been listed by the IARC as 2A carcinogens.

SKIN	EYE	INHALATION
Potential irritant.	Potential irritant.	Irritation to lungs, nose, and throat.

EMERGENCY FIRST AID PROCEDURES

EYES: Flush with water. Skin: Wash with soap and water.

If inhaled and effects occur, move to fresh air.

SECTION 6 REACTIVITY DATA

CONDITIONS CONTRIBUTING TO INSTABILITY

Stable

INCOMPATIBILITY

None

HAZARDOUS DECOMPOSITION PRODUCTS

None

HAZARDOUS POLYMERIZATION

Will not occur.

SECTION 7 SPILL OR LEAK PROCEDURES

STEPS TO TAKE IF MATERIAL IS RELEASED OR SPILLED

If uncontaminated, sweep up or collect, and reuse product.

WASTE DISPOSAL METHOD

Can be disposed of in approved landfill.

NEUTRALIZING CHEMICALS

Not Applicable

SECTION 8 — SPECIAL PROTECTION INFORMATION

RESPIRATORY PROTECTION

Use NIOSH approved dust respirators, with approval TC-21C-XXX.

VENTILATION

Sufficient to keep dust levels below the TLV for crystalline silica.

PROTECTIVE GLOVES

General duty work gloves.

EYE PROTECTION

If high dust conditions exist, tight fitting goggles are recommended.

OTHER PROTECTIVE EQUIPMENT

Eyewash

SECTION 9 — SPECIAL PRECAUTIONS

PRECAUTIONS TO BE TAKEN IN HANDLING AND STORING

Store out of the weather. Product becomes slippery when wet. Avoid contact water in walk areas.

OTHER PRECAUTIONS

None

PREPARED BY: BLACK HILLS BENTONITE CO. **DATE:** JUNE, 1990

Material Safety Data Sheet

from Genium's Reference Collection
Genium Publishing Corporation
1145 Catalyn Street
Schenectady, NY 12303-1836 USA
(518) 377-8855

GENIUM PUBLISHING CORP.

No. Iso-Butylene

ISO

Issued: November 1988

SECTION 1. MATERIAL IDENTIFICATION 27

Material Name: ISOBUTYLENE

Description (Origin/Uses): Obtained from refinery steams by absorption on 65% sulfuric acid (H_2SO_4) at 59°F (15°C). Used primarily to produce diisobutylene, trimers, butyl rubber, and other polymers; also used to produce *antioxidants* for foods, plastics, and packaging food supplements.

NFPA

Other Designations: Isobutene; 2-Methylpropene; *gamma*-Butylene; $CH_2=C(CH_3)_2$; CAS No. 0115-11-7

HMIS

H 1	R 1
F 4	I 1
R 0	S 1
PPG*	K 4

*See sect. 8

Manufacturer: Contact your supplier or distributor. Consult the latest edition of the *Chemicalweek Buyers' Guide* (Genium ref. 73) for a list of suppliers.

SECTION 2. INGREDIENTS AND HAZARDS	%	EXPOSURE LIMITS
Isobutylene, CAS No. 0115-11-57	Ca 100	**OSHA PEL** None Established **ACGIH TLV, 1988-89** None Established **NIOSH REL** None Established **Toxicity Data*** Rat, Inhalation, LC_{50}: 620 g/m³ (4 Hrs) Mouse, Inhalation, LC_{50}: 415 g/m³ (2 Hrs)
*Monitor NIOSH, *RTECS* (UD0890000), for additional data.		

SECTION 3. PHYSICAL DATA

Boiling Point: -19.6°F (-6.9°C)
Melting Point: -220°F (-140°C)
Vapor Density (Air = 1): 1.9
Specific Gravity (H_2O = 1): Ca 0.6
Molecular Weight: 56 Grams/Mole
Solubility in Water (%): Insoluble*
% Volatile by Volume: 100

Appearance and Odor: A colorless, extremely flammable gas; odor not listed.

*Isobutylene is very soluble in alcohol, ether, and sulfuric acid.

SECTION 4. FIRE AND EXPLOSION DATA

Flash Point*	Autoignition Temperature: 869°F (465°C)	LEL: 1.8% v/v	UEL: 9.6% v/v

Extinguishing Media: Isobutylene gas is an extremely flammable gas that has a substantial explosive air-gas range. For isobutylene fires, the recommended fire-fighting technique is to stop the flow of gas instead of extinguishing the fire. If the flames are extinguished and the isobutylene gas continues to escape or leak, an explosive air-gas mixture can form quickly and ignite without warning. A resulting explosion could cause greater damage than that which would be caused by allowing the fire to burn itself out. If the fire must be extinguished to allow safe access to shutoff valves, recommended extinguishing agents include CO_2 and dry chemical. **Unusual Fire or Explosion Hazards:** In many cases, the preferred strategy is to allow the flames to continue to burn and to cool the surroundings with water spray to prevent ignition of nearby combustibles. Isobutylene gas is heavier than air and can collect in low-lying, confined spaces. Potentially explosive air-gas mixtures are especially likely to build up in such an area, so enter it with extreme caution whether or not it is presently involved in a fire. Possible sources of ignition must not be brought into any area suspected of containing substantial concentrations of isobutylene gas. **Special Fire-fighting Procedures:** Wear a self-contained breathing apparatus (SCBA) with a full facepiece operated in the pressure-demand or positive-pressure mode.

* Sax (Genium ref. 6) reports a flash point of -105°F (-76°C) for isobutylene.

SECTION 5. REACTIVITY DATA

Stability/Polymerization: Isobutylene is stable in closed, pressurized containers during routine operations at room temperature. Hazardous polymerization cannot occur. **Chemical Incompatibilities:** Isobutylene can react dangerously with strong oxidizing materials. **Conditions to Avoid:** Prevent exposing isobutylene to any source of ignition such as an open flame, sparks, lighted tobacco products, or steam lines. **Hazardous Products of Decomposition:** Isobutylene fires can produce toxic gases such as carbon monoxide (CO) or lower-molecular-weight hydrocarbons. **Comments:** The extreme flammability of isobutylene means that any reactions involving this material, including nonhazardous ones, must be performed carefully in order to prevent fires and/or explosions.

SECTION 6. HEALTH HAZARD INFORMATION

Carcinogenicity: Isobutylene is not listed as a carcinogen by the NTP, IARC, or OSHA.
Summary of Risks: Isobutylene is a simple asphyxiant. As such it will not cause significant physiological responses, but it can displace the minimum required atmospheric oxygen level. Significant displacement by isobutylene results in an oxygen-deficient atmosphere with no adequate warning properties. Asphyxiation fatalities can occur especially in confined, low-lying, poorly ventilated spaces because isobuty-

Copyright © 1988 by Genium Publishing Corporation
Any commercial use or reproduction without the publisher's permission is prohibited

SECTION 6. HEALTH HAZARD INFORMATION, cont.

lene gas is almost twice as dense as air itself (see sect. 3). **Medical Conditions Aggravated by Long-Term Exposure:** None reported. **Target Organs:** None reported. **Primary Entry:** Inhalation. **Acute Effects:** Initial symptoms of the effects of simple asphyxiant gases are rapid respiration and air hunger, diminished mental alertness, and impaired muscular coordination. Continuing lack of oxygen causes faulty judgment, depression of all sensations, rapid fatigue, and emotional instability. As the asphyxia continues, nausea; vomiting; prostration; loss of consciousness; and, finally, convulsions; deep coma; and death can occur. **Chronic Effects:** None reported. **FIRST AID: Inhalation.** Would-be rescuers need to be concerned about their own safety when entering confined, poorly ventilated, oxygen-deficient areas. Self-contained breathing equipment must be readily available for rescuers. Station standby workers outside the immediate area so that they can summon additional help if it is needed. Remove the exposed person to fresh air; restore and/or support his or her breathing as needed. Have qualified medical personnel administer oxygen as required. **Comments:** The extreme flammability of isobutylene gas warrants special attention even during rescue operations. Rescue personnel must not smoke. All emergency lamps and floodlights that must be lowered into enclosed areas for rescue operations must be explosion proof. Obtain this equipment before any emergency occurs and make it accessible to emergency-response personnel. Get **medical help (in plant, paramedic, community)** for all exposures. Seek prompt medical assistance for further treatment, observation, and support after first aid.

SECTION 7. SPILL, LEAK, AND DISPOSAL PROCEDURES

Spill/Leak: *Treat any isobutylene gas leak as an emergency.* If the leaking gas has not yet ignited, use water spray to direct flammable gas-air mixtures away from sources of ignition. Extinguish all sources of ignition as quickly as possible; however, if the leaking gas is burning, do not attempt to extinguish the flames until the source of the isobutylene gas is located and sealed. Otherwise, flammable isobutylene gas-air mixtures can explode without warning and cause widespread damage that might not have occurred if the original fire had been allowed to burn itself out. *If it is necessary to extinguish isobutylene flames in order to gain access to a shutoff valve, use dry chemical or carbon dioxide as extinguishing agents.* **Waste Disposal:** Contact your supplier or a licensed contractor for detailed recommendations. Follow Federal, state, and local regulations.

OSHA Designations

Air Contaminant (29 CFR 1910.1000 Subpart Z): Not Listed

EPA Designations (40 CFR 302.4): Not Listed

SECTION 8. SPECIAL PROTECTION INFORMATION

Respirator: Follow OSHA respirator regulations (29 CFR 1910.134). For emergency or nonroutine operations (leaks or cleaning reactor vessels and storage tanks), wear an SCBA. **Warning:** Air-purifying respirators will *not* protect workers in oxygen-deficient atmospheres, which lack warning properties; to work in them safely requires that an SCBA be worn. **Ventilation:** Install and operate general and local maximum, explosion-proof ventilation systems powerful enough to maintain airborne levels of this material below the lower explosive limit cited in section 4. Local exhaust ventilation is preferred because it prevents dispersion of the contaminant into the general work area by eliminating it at its source. Consult the latest edition of Genium reference 103 for detailed recommendations. **Safety Stations:** Make emergency eyewash stations, safety/quick-drench showers, and washing facilities available in work areas. **Contaminated Equipment:** Contact lenses pose a special hazard; soft lenses may absorb irritants, and all lenses concentrate them. Do *not* wear contact lenses in any work area. **Comments:** Practice good personal hygiene; always wash thoroughly after using this material and before eating, drinking, smoking, using the toilet, or applying cosmetics. Keep it off your clothing and equipment. Avoid transferring it from your hands to your mouth while eating, drinking, or smoking. Do *not* eat, drink, or smoke in any work area. Do not inhale isobutylene vapor.

SECTION 9. SPECIAL PRECAUTIONS AND COMMENTS

Storage/Segregation: Store isobutylene in closed, pressurized containers in a cool, dry, well-ventilated area away from sources of ignition, combustible materials, and strong oxidizers. Protect containers from physical damage. **Engineering Controls:** Make sure all engineering systems (production, transportation) are of maximum explosion-proof design. Electrically ground and bond all containers, pipelines, etc., used in shipping, transferring, reacting, production, and sampling operations to prevent static sparks. **Comments:** Isobutylene is an extremely explosive and flammable gas. It must not be exposed to any possible source of ignition in work or storage areas.

Transportation Data (49 CFR 172.101-2)

DOT Shipping Name: Liquefied Petroleum Gas
DOT Hazard Class: Flammable Gas
ID No. UN1055
DOT Label: Flammable Gas
DOT Packaging Requirements: 49 CFR 173.304, 314, 315
DOT Packaging Exceptions: 49 CFR 173.306

IMO Shipping Name: Isobutylene
IMO Hazard Class: 2.1
IMO Label: Flammable Gas

References: 1, 6, 84-94, 116, 117, 120, 122.

Judgments as to the suitability of information herein for purchaser's purposes are necessarily purchaser's responsibility. Therefore, although reasonable care has been taken in the preparation of such information, Genium Publishing Corp. extends no warranties, makes no representations and assumes no responsibility as to the accuracy or suitability of such information for application to purchaser's intended purposes or for consequences of its use.

Prepared by PJ Igoe, BS
Industrial Hygiene Review: DJ Wilson, CIH
Medical Review: W Silverman, MD

Copyright © 1988 by Genium Publishing Corporation
Any commercial use or reproduction without the publisher's permission is prohibited

MATERIAL SAFETY DATA SHEET

GENIUM PUBLISHING CORPORATION
1145 CATALYN ST., SCHENECTADY, NY 12303 USA (518) 377-8854

Revision D
Issued: October 1982
Revised: September 1985

From Genium's MSDS Collection, to be used as a reference.

SECTION 1. MATERIAL IDENTIFICATION

18

MATERIAL NAME: ISOPROPYL ALCOHOL
OTHER DESIGNATIONS: Isopropanol, 2-Propanol, sec-Propyl Alcohol, Dimethyl Carbinol, Isohol, Petrohol, IPA, C_3H_8O, CAS # 0067 63 0
MANUFACTURER/SUPPLIER: Available from several sources, including:
Allied Corporation
PO Box 2064R
Morristown, NJ 07960 (201) 455-4400 - (800) 631-8050

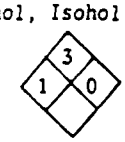

SECTION 2. INGREDIENTS AND HAZARDS

	%	HAZARD DATA
ISOPROPYL ALCOHOL * Current OSHA PEL and ACGIH TLV (1985-86). The ACGIH STEL is 500 ppm, 1225 mg/m^3. NIOSH has recommended a 15-minute ceiling of 800 ppm. NOTE: NTP and IARC list CAS #0067-63-0," isopropyl alcohol manufacture (strong acid process)" as a human carcinogen. We believe this refers to the process and not necessarily the product. Check with your suppliers.	ca 100	8-hr TWA: 400 ppm or 980 mg/m^3* Human, Eye: 20 ppm Primary irritation dose Human, Inhalation: 400 ppm: IRR Man, Oral LDLo: 8600 mg/kg Rat, Oral: 5840 mg/kg

SECTION 3. PHYSICAL DATA

Boiling point, 1 atm	180°F, (82°C)	Specific gravity (H_2O=1)	0.786
Vapor pressure @ 20°C, mmHg ...	33	Melting point	-127.3°F (-88.5°C)
Vapor density (Air=1)	2.07	% Volatile by volume, 20°C ...	ca 100
Viscosity, 20°C, cps	2.4	Evaporation rate (CCl_4=1)	2.6
Solubility in water	Completely soluble	Molecular weight	60.11

APPEARANCE & ODOR: Clear, colorless liquid with a slight non-residual alcohol type odor. Threshold odor concentration, 100% recognition by test panel, is 28.2 ppm.

SECTION 4. FIRE AND EXPLOSION DATA

Flash Point and Method	Autoignition Temp.	Flammability Limits in Air	Lower	Upper
55°F (11.7°C) closed cup	750°F (399°C)	% by volume	2.0	12.0

EXTINGUISHING MEDIA: Carbon dioxide, dry chemical, alcohol foam. Use water spray to cool fire-exposed tanks/containers. A fine water mist may be used to smother fire or to disperse vapors. Do not use a solid stream of water since the stream will scatter and spread the fire.
Isopropyl alcohol is an OSHA Class IB flammable liquid. It is a dangerous fire hazard and a moderate explosion hazard when exposed to heat, flames or oxidizers. At 20°C, the vapor space (saturated) above isopropyl alcohol contains about 4.3 volume % of vapor. Vapors are heavier than air and may travel a considerable distance to an ignition source and flashback. Firefighters should wear self-contained breathing apparatus and full protective clothing when fighting fires involving this material.

SECTION 5. REACTIVITY DATA

This material is stable in closed containers at room temperature under normal storage and handling conditions. It does not polymerize. Isopropyl alcohol is incompatible with acetaldehyde, chlorine, ethylene oxide, hydrogen-palladium combination, hydrogen peroxide-sulfuric acid combination, potassium tert-butoxide, hypochlorous acid, isocyanates, nitroform, phosgene, oleum, perchloric acid, and strong oxidizing agents. Do not store isopropyl alcohol in aluminum containers.

Thermal-oxidative degradation products can include carbon monoxide.

Copyright © as issue date, Genium Publishing Corporation
Any commercial use without publisher's specific permission is prohibited.

SECTION 6. HEALTH HAZARD INFORMATION

TLV 400 ppm (see Section 2)

At 400 ppm, vapors of isopropanol (IPA) may cause mild irritation of the eyes, nose, and throat. Prolonged exposures above the TLV may cause nausea, headache, and mild narcosis. The liquid is irritating to the eyes and produces intense stinging and burning. If not promptly removed, IPA may cause eye damage. Repeated or prolonged contact with the skin may cause irritation and dermatitis. While toxic skin absorption is unlikely, it should be considered in meeting the TLV. Ingestion of IPA will cause burning of the gastrointestinal tract, nausea, vomiting, bleeding, CNS depression, hemolysis, and pulmonary damage. Ingestion of as little as 10 ml may cause serious injury, while ingestion of 100 ml can be fatal. The single lethal dose for an adult is approximately 250 ml. The TLV for this material is set on the basis of eye, nose, and throat irritation. IPA has good warning properties.

FIRST AID: EYE CONTACT: Flush eyes, including under eyelids, with running water for at least 15 minutes. Get medical attention (Inplant, community, paramedic). SKIN CONTACT: Flush exposed area with water while removing contaminated clothing. Get medical attention if irritation persists. INHALATION: Remove victim to fresh air. Restore and/or support breathing as required. Get medical help. INGESTION: Give victim milk or water. Induce vomiting by sticking finger to back of throat. Contact a physician or Poison Control Center. Never give anything by mouth to a person who is unconscious or is having convulsions.

SECTION 7. SPILL, LEAK AND DISPOSAL PROCEDURES

Notify safety personnel of large spills or leaks. Remove all sources of heat and ignition. Provide maximum explosion-proof ventilation. Evacuate all personnel from area, except for those involved in clean-up. Remove leaking container to safe place if feasible. Clean-up personnel need protection against liquid contact and vapor inhalation. Absorb small spills with paper towels, evaporate flammable alcohol in exhaust hood and burn dry paper. Contain large spills and collect liquid, if feasible, or absorb with vermiculite or sand. Place waste or absorbent into closed container (using non-sparking tools) for disposal. Water spray can be used to dilute and flush spill if necessary, but do not flush to water course or to sewer or enclosed area.

DISPOSAL: Burn waste liquid in an approved incinerator or dispose of via licensed waste disposal company. Absorbed liquid can be landfilled. Follow Federal, State and Local regulations.

AQUATIC TOXICITY TLm 96: 1000-100 ppm.

SECTION 8. SPECIAL PROTECTION INFORMATION

Provide general and local exhaust ventilation (explosion proof) to meet TLV requirements. For emergency or nonroutine exposures where the TLV may be exceeded, use an appropriate NIOSH approved respirator. Fume hoods should have a minimum face velocity of 100 lfm. All electrical service in use or storage areas should have an explosion-proof design. Wear impervious gloves and safety glasses to prevent contact with the skin and eyes. If repeated or prolonged contact with liquid or mist is likely, wear protective clothing including boots, apron, and face-shield or splash goggles. Remove contaminated clothing immediately and do not reuse until it has been properly laundered.

Eye wash stations and safety showers should be available in use and handling areas.

Contact lenses pose a special hazard; soft lenses may absorb and all lenses concentrate irritants.

SECTION 9. SPECIAL PRECAUTIONS AND COMMENTS

Store in closed containers in a cool, dry, well-ventilated area away from oxidizers, heat, sparks, and open flame. Protect containers from physical damage.

Use only with adequate ventilation. Avoid inhalation of vapor and repeated or prolonged contact with the skin. Remove contaminated clothing immediately. Wash thoroughly after handling.

Ground and bond containers and equipment when transferring or pouring liquid. Use non-sparking tools.

Do not eat or smoke in areas where this material is being used or handled.

DOT CLASSIFICATION: Flammable liquid. DOT I.D. NO.: UN1219

DATA SOURCE(S) CODE (See Glossary) 1-12, 19, 20, 23, 26, 31, 34, 37, 39, 43, 47, 59, 79.R.

Judgements as to the suitability of information herein for purchaser's purpose are necessarily purchaser's responsibility. Therefore, although reasonable care has been taken in the preparation of such information, Genium Publishing Corporation extends no warranties, makes no representations and assumes no responsibility as to the accuracy or suitability of such information for application to purchaser's intended purposes or for consequences of its use.

APPROVALS J.O. Accrocco, 11/85

INDUST. HYGIENE/SAFETY 11-85

MEDICAL REVIEW: Dec 85

Copyright © September 1, 1985

US DEPARTMENT OF LABOR
Occupational Safety and Health Administration

MATERIAL SAFETY DATA SHEET

Required under USDL Safety & Health Regulations for Ship Repairing, Shipbuilding and Shipbreaking (29 CFR 1915,1916,1917)

SECTION I

ALLEGRO INDUSTRIES
6403 E. ALONDRA BLVD.
PARAMOUNT, CA 90723

Telephone No: (213)633-4861

PRODUCT:	PRODUCT NO:
Personal Safety Equipment Cleaning Pad	1001

Chemical Name & Synonyms:	Trade Name & Synonyms:
Isopropyl Alcohol	Steri-Wipe

Chemical Family:	Formula:
Alcohol	$CH_3CHOHCH_3$

Prepared by	Date
Thomas J. Johnston	1/5/90

Hazardous mixtures of other Liquids, Solids or Gases		%	TLV Unit
Isopropyl Alcohol	CAS #67-63-0	70	400 ppm

SECTION III - PHYSICAL DATA

Boiling Point (°F)	190	Specific Gravity (H_2O = 1)	0.874
Vapor Pressure (mm Hg)		Percent Volatile by Volume (%)	100%
Isopropyl Alcohol	44		
Density (Air=1)		Evaporation Rate (IPA=1)	0.69
Isopropyl Alcohol	1.06		
Solubility in Water	Soluble		
Appearance & Odor	Colorless liquid, medicinal alcoholic odor		

SECTION IV - FIRE AND EXPLOSION HAZARD DATA

Flash Point (method used)>	77°F TCC	Flammable Limits	LEL 2	UEL 12

Extinguishing Media: Water, CO_2, Dry Chemical
Special Fire Fighting Procedures: Self-contained breathing apparatus.
Unusual Fire and Explosion Hazards: None

SECTION V - HEALTH HAZARD DATA

Threshold Limit Value: 400 ppm, 490 mg/M³
Effects of Overexposure: Ingestion - Headache, dizziness, nausea, coma.
Skin - Dryness Eyes - Irritant
Inhalation: headache, dizziness, nausea.
Emergency & First Aid Procedures:
Ingestion - Consult physician.
Skin - Rinse with water. Eyes - Flush with water.
Inhalation - Remove to fresh air.

SECTION VI - REACTIVITY DATA

STABILITY: Unstable CONDITIONS TO AVOID:
Stable X Flame, ignition sources,
Incompatability (Materials to Avoid): Oxidizers
Hazardous Decomposition Products: CO; CO_2
Hazardous Polymerization: May Occur
Will not Occur X

SECTION VII - SPILL OR LEAK PROCEDURES

Steps to be taken in case material is released or spilled:
Absorb with inert absorbant
Waste Disposal Method:
Incineration or evaporate and landfill.

SECTION VIII - SPECIAL PROTECTION INFORMATION

Respiratory Protection: (Specify Type) Not required.
Ventilation: Local Exhaust: May be needed
Special: NA
Mechanical: (General) Use in well ventilated area.
Other: NA
Protective Gloves: PVC or rubber Eye Protection: Safety glasses
Other protective Equipment: Not required.

SECTION IX - SPECIAL PRECAUTIONS

Precautions to be taken in handling and storing:
Keep away from oxidizers, flame, ignition sources.
Other precautions: NA

MATERIAL SAFETY DATA SHEET

EM SCIENCE

1. CHEMICAL PRODUCT AND COMPANY IDENTIFICATION

MANUFACTURER.....:

EM SCIENCE
A DIVISION OF EM INDUSTRIES
P.O. BOX 70
480 DEMOCRAT RD.
GIBBSTOWN, N.J. 08027

PREPARATION DATE.: 12/08/92
DATE MSDS PRINTED.: DEC 21, 1992

INFORMATION PHONE NUMBER.: 609-354-9200
HOURS: MON. TO FRI. 8:30-5
CHEMTREC EMERGENCY NUMBER: 800-424-9300
HOURS: 24 HRS A DAY

CATALOG NUMBER(S):

PX1830	PX1834	PX1834PM	PX1835	PX1835P	PX1835S
PX1835T	PX1836	PX1837	PX1838	PX1838P	

CHEMICAL NAME....:
ISO-PROPYL ALCOHOL
TRADE NAME.....:
ISOPROPANOL, 2-PROPANOL
CHEMICAL FAMILY..: ALIPHATIC ALCOHOL
FORMULA.....: 1000 PPM BA IN SOLUTION

MOLECULAR WEIGHT.: 60.10

2. COMPOSITION / INFORMATION ON INGREDIENTS

COMPONENT	CAS #	APPR %
ISO-PROPYL ALCOHOL	67-63-0	100%

3. HAZARDS IDENTIFICATION

EMERGENCY OVERVIEW
FLAMMABLE LIQUID AND VAPOR.
MAY CAUSE EYE INJURY.
HARMFUL IF INHALED OR SWALLOWED.

APPEARANCE.....:
CLEAR, COLORLESS LIQUID;
CHARACTERISTIC ODOR

POTENTIAL HEALTH EFFECTS (ACUTE AND CHRONIC)

SYMPTOMS OF EXPOSURE:

EFFECTS OF INGESTION OR INHALATION: NAUSEA, INTOXICATION, CENTRAL NERVOUS SYSTEM DEPRESSION, HEADACHE, DECREASED BLOOD RATE, COMA.
HIGH VAPOR CONCENTRATIONS CAUSE IRRITATION OF EYES AND RESPIRATORY SYSTEM.
CONTACT MAY CAUSE EYE INJURY, SKIN IRRITATION.

MEDICAL COND. AGGRAVATED BY EXPOSURE:
RESPIRATORY AND SKIN CONDITIONS.

ROUTES OF ENTRY.....:
INHALATION, INGESTION OR SKIN CONTACT

CARCINOGENICITY.....:
THE MATERIAL IS NOT LISTED (IARC, NTP, OSHA) AS CANCER CAUSING AGENT.

4. FIRST AID MEASURES

EMERGENCY FIRST AID:
GET MEDICAL ASSISTANCE FOR ALL CASES OF OVEREXPOSURE.
SKIN: WASH THOROUGHLY WITH SOAP AND WATER.
EYES: IMMEDIATELY FLUSH THOROUGHLY WITH WATER FOR AT LEAST 15 MINUTES.
INHALATION: REMOVE TO FRESH AIR; GIVE ARTIFICIAL RESPIRATION IF BREATHING HAS STOPPED.
INGESTION: IF CONSCIOUS, DRINK WATER AND INDUCE VOMITING IMMEDIATELY AS DIRECTED BY MEDICAL PERSONNEL. NEVER GIVE ANYTHING BY MOUTH TO AN UNCONSCIOUS PERSON.

5. FIRE FIGHTING MEASURES

FLASH POINT (F).....: 53F (TCC)
FLAMMABLE LIMITS LEL (%).: 2
FLAMMABLE LIMITS UEL (%).: 12
EXTINGUISHING MEDIA.....:
DRY CHEMICAL, CO2, "ALCOHOL" FOAM; WATER SPRAY TO COOL FIRE-EXPOSED CONTAINERS AND DISPERSE VAPORS.

FIRE FIGHTING PROCEDURES.:
WEAR SELF-CONTAINED BREATHING APPARATUS.

FIRE & EXPLOSION HAZARDS.:
DANGEROUS FIRE AND EXPLOSIVE HAZARD.
VAPOR CAN TRAVEL DISTANCES TO IGNITION SOURCE AND FLASH BACK.
HOT ORGANIC CHEMICAL VAPORS OR MISTS ARE SUSCEPTIBLE TO SUDDEN SPONTANEOUS COMBUSTION WHEN MIXED WITH AIR. IGNITION MAY OCCUR AT TEMPERATURES BELOW PUBLISHED AUTOIGNITION OR IGNITION TEMPERATURES.
IGNITION TEMPERATURES DECREASE WITH INCREASING VAPOR VOLUME AND VAPOR/AIR CONTACT TIME AND ARE INFLUENCED BY PRESSURE CHANGES.

IGNITION MAY OCCUR AT TYPICAL ELEVATED TEMPERATURE PROCESS CONDITIONS, ESPECIALLY IN PROCESS OPERATING UNDER VACUUM IF SUBJECTED TO SUDDEN INGRESS OF AIR, OR OUTSIDE PROCESS EQUIPMENT OPERATING UNDER ELEVATED PRESSURE IF SUDDEN ESCAPE OF VAPORS OR MISTS TO THE ATMOSPHERE OCCURS.

6. ACCIDENTAL RELEASE MEASURES

SPILL RESPONSE:
EVACUATE THE AREA OF ALL UNNECESSARY PERSONNEL.
WEAR SUITABLE PROTECTIVE EQUIPMENT LISTED UNDER EXPOSURE / PERSONAL PROTECTION.
ELIMINATE ANY IGNITION SOURCES UNTIL THE AREA IS DETERMINED TO BE FREE FROM EXPLOSION OR FIRE HAZARDS.
CONTAIN THE RELEASE AND ELIMINATE ITS SOURCE, IF THIS CAN BE DONE WITHOUT RISK.
TAKE UP AND CONTAINERIZE FOR PROPER DISPOSAL AS DESCRIBED UNDER DISPOSAL.
COMPLY WITH FEDERAL, STATE, AND LOCAL REGULATIONS ON REPORTING RELEASES. REFER TO REGULATORY INFORMATION FOR REPORTABLE QUANTITY AND OTHER REGULATORY DATA.
EM SCIENCE RECOMMENDS SPILL-X ABSORBENT AGENTS FOR VARIOUS TYPES OF SPILLS. ADDITIONAL INFORMATION ON THE SPILL-X PRODUCTS CAN BE PROVIDED THROUGH THE EM SCIENCE TECHNICAL SERVICE DEPARTMENT (609) 354-9200.
THE FOLLOWING EM SCIENCE SPILL-X ABSORBENT IS RECOMMENDED FOR THIS PRODUCT:

SX0863 SOLVENT SPILL TREATMENT KIT

7. HANDLING AND STORAGE

HANDLING & STORAGE:
KEEP CONTAINER CLOSED.
STORE IN A COOL AREA AWAY FROM IGNITION SOURCES AND OXIDIZERS.
DO NOT BREATHE VAPOR.
DO NOT GET IN EYES.
AVOID PROLONGED, OR REPEATED, SKIN CONTACT.
ELECTRICALLY GROUND ALL EQUIPMENT WHEN HANDLING THIS PRODUCT.

8. EXPOSURE CONTROLS / PERSONAL PROTECTION

ENGINEERING CONTROLS AND PERSONAL PROTECTIVE EQUIPMENT:

VENTILATION, RESPIRATORY PROTECTION, PROTECTIVE CLOTHING, EYE PROTECTION
RESPIRATORY PROTECTION: IF WORKPLACE EXPOSURE LIMIT(S) OF PRODUCT OR ANY COMPONENT IS EXCEEDED (SEE TLV/PEL), A NIOSH/MSHA APPROVED AIR SUPPLIED RESPIRATOR IS ADVISED IN ABSENCE OF PROPER

ENVIRONMENTAL CONTROL. OSHA REGULATIONS ALSO PERMIT OTHER NIOSH/MSHA RESPIRATORS (NEGATIVE PRESSURE TYPE) UNDER SPECIFIED CONDITIONS (SEE YOUR SAFETY EQUIPMENT SUPPLIER). ENGINEERING AND/OR ADMINISTRATIVE CONTROLS SHOULD BE IMPLEMENTED TO REDUCE EXPOSURE.
MATERIAL SHOULD BE HANDLED OR TRANSFERRED IN AN APPROVED FUME HOOD OR WITH ADEQUATE VENTILATION.
PROTECTIVE GLOVES (BUTYL RUBBER, PVC OR EQUIVALENT) SHOULD BE WORN TO PREVENT SKIN CONTACT.
SAFETY GLASSES WITH SIDE SHIELDS MUST BE WORN AT ALL TIMES.

WORK / HYGENIC PRACTICES:
WASH THOROUGHLY AFTER HANDLING.
DO NOT TAKE INTERNALLY.
EYE WASH AND SAFETY EQUIPMENT SHOULD BE READILY AVAILABLE.

EXPOSURE GUIDELINES

OSHA - PEL:

	TWA		STEL		CL		
COMPONENT	PPM	MG/M3	PPM	MG/M3	PPM	MG/M3	SKIN
ISO-PROPYL ALCOHOL	400	980	500	1225			

ACGIH - TLV:

	TWA		STEL		CL		
COMPONENT	PPM	MG/M3	PPM	MG/M3	PPM	MG/M3	SKIN
ISO-PROPYL ALCOHOL	400	983	500	1230			

9. PHYSICAL AND CHEMICAL PROPERTIES

BOILING POINT (C 760 MMHG).: 82.3C
MELTING POINT (C).....: -88.5C
SPECIFIC GRAVITY (H2O = 1).: 0.7854
VAPOR PRESSURE (MM HG).....: 33 20C
PERCENT VOLATILE BY VOL (%): 100
VAPOR DENSITY (AIR = 1)....: 2.07
EVAPORATION RATE (BUAC = 1): 2.88
SOLUBILITY IN WATER (%)....: MISCIBLE
APPEARANCE.....:
CLEAR, COLORLESS LIQUID;
CHARACTERISTIC ODOR

10. STABILITY AND REACTIVITY

STABILITY.....: YES

HAZARDOUS POLYMERIZATION:
DOES NOT OCCUR

HAZARDOUS DECOMPOSITION.:
COX

CONDITIONS TO AVOID.....:
HEAT, CONTACT WITH IGNITION SOURCE.

MATERIALS TO AVOID.....:
( )WATER
(X)ACIDS
( )BASES
( )CORROSIVES
(X)OXIDIZERS
(X)OTHER :
HALOGENS AND HALOGEN COMPOUNDS; ALDEHYDES

11. TOXICOLOGICAL INFORMATION

TOXICITY DATA:
ORL-HMN LDLO: 3570 MG/KG ORL-RAT LD50: 5045 MG/KG
IHL-RAT LC50: 16000 PPM/8H

TOXICOLOGICAL FINDINGS:
TESTS ON LABORATORY ANIMALS INDICATE MATERIAL MAY PRODUCE ADVERSE MUTAGENIC AND REPRODUCTIVE EFFECTS.
CITED IN REGISTRY OF TOXIC EFFECTS OF SUBSTANCES (RTECS)

12. DISPOSAL CONSIDERATIONS

EPA WASTE NUMBERS: D001
TREATMENT:
INCINERATION, FUELS BLENDING OR RECYCLE. CONTACT YOUR LOCAL PERMITTED WASTE DISPOSAL SITE (TSD) FOR PERMISSIBLE TREATMENT SITES.
ALWAYS CONTACT A PERMITTED WASTE DISPOSER (TSD) TO ASSURE COMPLIANCE WITH ALL CURRENT LOCAL, STATE AND FEDERAL REGULATIONS.

13. TRANSPORT INFORMATION

DOT PROPER SHIPPING NAME...:
ISOPROPANOL

DOT ID NUMBER.....: UN1219

14. REGULATORY INFORMATION

TSCA INVENTORY.....:
THE CAS NUMBER OF THIS PRODUCT IS LISTED ON THE TSCA INVENTORY.

COMPONENT	SARA EHS (302)	SARA EHS TPQ (LBS)	CERCLA RQ (LBS)
ISO-PROPYL ALCOHOL			

COMPONENT	OSHA FLOOR LIST	SARA 313	DEMINIMIS FOR SARA 313 (%)
ISO-PROPYL ALCOHOL	Y	Y	0.1

15. OTHER INFORMATION

COMMENTS:
NONE
NFPA HAZARD RATINGS:
HEALTH : 1
FLAMMABILITY : 3
REACTIVITY : 0
SPECIAL HAZARDS :
REVISION HISTORY:
08/01/81 08/01/83 11/20/86 10/27/87 04/26/89 10/09/89 01/19/91
03/01/91 08/07/91 03/06/92
= REVISED SECTION
N/A = NOT AVAILABLE
N/E = NONE ESTABLISHED

THE STATEMENTS CONTAINED HEREIN ARE OFFERED FOR INFORMATIONAL PURPOSES ONLY AND ARE BASED UPON TECHNICAL DATA THAT EM SCIENCE BELIEVES TO BE ACCURATE. IT IS INTENDED FOR USE ONLY BY PERSONS HAVING THE NECESSARY TECHNICAL SKILL AND AT THEIR OWN DESCRETION AND RISK. SINCE CONDITIONS AND MANNER OF USE ARE OUTSIDE OUR CONTROL, WE MAKE NO WARRANTY, EXPRESS OR IMPLIED, OF MERCHANTABILITY, FITNESS OR OTHERWISE.

PORTIONS COPYRIGHT ARIEL RESEARCH CORPORATION, 1991.
RESTRICTED USE CONDITIONS APPLY. SELECTED REGULATORY INFORMATION IN THIS MSDS HAS BEEN DERIVED FROM ARIEL RESEARCH CORPORATION'S INTERNATIONAL CHEMICAL REGULATORY MONITORING SYSTEM (ICRMS). USE OF THIS DATA IS PROVIDED SUBJECT TO THE TERMS OF THE LICENSE AGREEMENT BETWEEN EM INDUSTRIES AND ARIEL RESEARCH CORPORATION. FURTHER DISTRIBUTION IS PROHIBITED WITHOUT AUTHORIZATION.

"ISSUED BY VWR 08/28/93"

Genium Publishing Corporation
1145 Catalyn Street
Schenectady, NY 12303-1836 USA
(518) 377-8854

Issued: 7/80 Revision: A, 8/89

Section 1. Material Identification

Methane Description: Widely distributed in nature, methane comprises 0.00022% by volume of the earth's atmosphere. American natural gas is mostly methane (85%). At temperatures greater than 2012 °F (1100 °C), pure carbon combines with pure hydrogen to form methane. Above 2732 °F (1500 °C), the amount of methane produced increases with temperature. Obtained from sodium acetate and sodium hydroxide or from aluminum carbide and water. Commercially prepared from natural gas or by fermentation of cellulose and sewage sludge. Constituent of illuminating and cooking gas. Used in the manufacture of hydrogen, hydrogen cyanide, ammonia, acetylene, formaldehyde, and many other organics.
Other Designations: Fire damp; marsh gas; methyl hydride; CH_4; CAS No. 0074-82-8.
Manufacturer: Contact your supplier or distributor. Consult the latest *Chemicalweek Buyers' Guide* (Genium ref. 73) for a suppliers list.

R 1
I -
S -
K 4

NFPA

HMIS
H 1
F 4
R 0
PPG*
* Sec. 8

Section 2. Ingredients and Occupational Exposure Limits

Methane, ca 100%*

OSHA PEL	ACGIH TLV, 1988-89	NIOSH REL	Toxicity Data†
None established	None established	None established	Not listed

* Check with your supplier to determine the exact composition of the purchased methane. Possible contaminants are ethane (C_2H_6), propane (C_3H_8), butane (C_4H_{10}), higher molecular weight alkanes, carbon dioxide (CO_2), nitrogen (N_2), and oxygen(O_2).
† Monitor NIOSH, *RTECS* (PA1490000), for future toxicity data.

Section 3. Physical Data

Boiling Point: -259 °F (161.6 °C)
Vapor Density (Air = 1): 0.544 at 32 °F (0 °C)
Molecular Weight: 16 g/mol
Water Solubility: Slight*
Melting Point: -296.5 °F (-182.5 °C)

Appearance and Odor: A colorless, odorless, tasteless, extremely flammable gas. Commercial methane's trace amounts of a suitable mercaptan compound give it natural gas's familiar rotten egg smell.

*Soluble in alcohol and ether.

Section 4. Fire and Explosion Data

Flash Point: -213 °F (-136.11 °C)	Autoignition Temperature: 999 °F (537 °C)	LEL: 5% v/v*	UEL: 15% v/v*

Extinguishing Media: Methane's extreme flammability, extensive explosibility range, and very low flash point represent dangerous fire and explosion risks. *Treat any fire situation involving rapidly escaping and burning methane gas as an emergency.* Extinguish methane fires by shutting off the source of the gas. Use water sprays to cool fire-exposed containers and to protect the personnel attempting to seal the source of the escaping gas.
Unusual Fire or Explosion Hazards: Methane gas is very flammable with an extensive explosibility range. The best fire-fighting technique may be simply to let the burning gas escape from the pressurized cylinder, tank car, or pipelines. Never extinguish the burning gas without first locating and sealing its source. Otherwise, the still leaking gas could explosively re-ignite without warning and cause more damage than if it burned itself out.
Special Fire-fighting Procedures: Wear a self-contained breathing apparatus (SCBA) with a full facepiece operated in the pressure-demand or positive-pressure mode.

* The loudest methane-air explosions occur when 1 volume of methane is mixed with 10 volumes of air (or 2 volumes of oxygen). **Warning:** Air with more than 14% by volume methane burns *noiselessly*. Methane burns with a pale, faintly luminous, not always easily detected flame.

Section 5. Reactivity Data

Stability/Polymerization: Methane is stable at room temperature in closed, pressurized containers during routine operations. Hazardous polymerization cannot occur.
Chemical Incompatibilities: Genium reference 84 reports that methane can react violently with bromine pentafluoride, chlorine, chlorine dioxide, nitrogen trifluoride, liquid oxygen, and oxygen difluoride.
Conditions to Avoid: Never expose methane to ignition sources such as open flame, lighted cigarettes or pipes, uninsulated heating elements, or electrical or mechanical sparks. Prevent any accidental or uncontrollably rapid release of methane gas from high-pressure cylinders, tank cars, or pipelines.
Hazardous Products of Decomposition: Thermal oxidative degradation of methane can produce carbon dioxide and toxic carbon monoxide (CO).

Copyright © 1989 Genium Publishing Corporation.
Any commercial use or reproduction without the publisher's permission is prohibited.

Section 6. Health Hazard Data

Carcinogenicity: Neither the NTP, IARC, nor OSHA lists methane as a carcinogen. **Summary of Risks:** As a simple asphyxiant, methane does not cause significant physiological responses, but it can displace the minimum required atmospheric oxygen level. Significant displacement results in an oxygen-deficient atmosphere with no adequate warning properties. Asphyxiation can occur especially in confined, poorly ventilated, undisturbed spaces infrequently entered by workers. Frostbite (cryogenic damage) can result from contact with liquid methane's extremely low temperature. **Medical Conditions Aggravated by Long-Term Exposure:** None reported. **Target Organs:** None reported. **Primary Entry:** Inhalation. **Acute Effects:** The initial symptoms of simple asphyxiant gases's effects are rapid respiration and air hunger, diminished mental alertness, and impaired muscular coordination. Continuing lack of oxygen causes faulty judgement, depression of all sensations, rapid fatique, emotional instability, nausea, vomiting, prostration, unconsciousness, and finally, convulsions, coma, and death. **Chronic Effects:** None reported.

FIRST AID

Skin: (Liquid methane): Promptly flush the affected area with lots of tepid/lukewarm water to reduce freezing of tissues. Never apply direct heat to frostbitten areas. Loosely apply dry, bulky dressings to protect the area from further injury. Get treatment from qualified medical personnel. **Inhalation:** Rescuers must consider their own safety when entering confined, poorly ventilated, oxygen-deficient areas. Self-contained breathing equipment must be readily available. Rescuers must use nonsparking tools and equipment; e.g., floodlights lowered into any incident area must be electrically grounded and bonded, shatter-resistant, and sparkproof. **After first aid, get appropriate in-plant, paramedic, or community medical attention and support for inhalation exposures in oxygen-deficient atmospheres.** Seek prompt medical assistance for further observation and treatment.

Section 7. Spill, Leak, and Disposal Procedures

Spill/Leak: *Design and practice a methane spill control and countermeasure plan (SCCP).* When a leak occurs, notify safety personnel, eliminate heat and ignition sources, evacuate unnecessary personnel, provide maximum explosion-proof ventilation, and implement the SCCP. Use only nonsparking tools and equipment. Locate and seal the source of the leaking gas. Use water sprays to protect the personnel attempting this shutoff. Large methane releases can result in spectacular explosions. If attempts to shut off the leaking gas are unsuccessful, evacuate the likely explosion area. **Disposal:** Contact your supplier or a licensed contractor for detailed recommendations. Follow applicable Federal, state, and local regulations. Remove leaking or defective cylinders to a safe, outside, posted, discharge location. Let the methane gas discharge at a moderate rate. When it is empty, return the cylinder to the supplier after it is properly tagged, labelled, or stenciled MT (empty) or defective.

OSHA Designations

Air Contaminant (29 CFR 1910.1000, Subpart Z): Not listed

EPA Designations

RCRA Hazardous Waste (40 CFR 261.33): Not listed
CERCLA Hazardous Substance (40 CFR 302.4): Not listed
SARA Extremely Hazardous Substance (40 CFR 355): Not listed
SARA Toxic Chemical (40 CFR 372.65): Not listed

Section 8. Special Protection Data

Goggles: Wear protective eyeglasses or chemical safety goggles, per OSHA eye- and face-protection regulations (29 CFR 1910.133). **Gloves:** To prevent skin contact, workers handling liquid methane should wear appropriate insulating gloves, safety glasses, and splash aprons, as required by the particular work conditions. **Respirator:** Wear a NIOSH-approved respirator if necessary. Follow OSHA respirator regulations (29 CFR 1910.134). For emergency or nonroutine operations (spills or cleaning reactor vessels and storage tanks), wear an SCBA. **Warning:** Air-purifying respirators do *not* protect workers in oxygen-deficient atmospheres; use self-contained breathing equipment there. **Ventilation:** Provide general and local explosion-proof ventilation systems to maintain airborne concentrations below the 5% v/v LEL (Sec. 4). Local exhaust ventilation is preferred since it prevents methane dispersion into the work area by eliminating it at its source (Genium ref. 103). Give special attention to proper ventilation of enclosed areas. **Safety Stations:** Make available in the work area emergency eyewash stations, safety/quick-drench showers, washing facilities, fire extinguishers, and oxygen bottles for emergency first-aid. **Contaminated Equipment:** Never wear contact lenses in the work area: soft lenses may absorb, and all lenses concentrate, irritants. Launder contaminated clothing before wearing. Remove this material from your shoes and equipment. **Other:** If appropriate, consider installing automatic sensing equipment that warns workers of oxygen-deficient atmospheres or of potentially explosive air-gas mixtures. All engineering systems in any methane gas storage, handling, or processing area must be explosion-proof so they have no spark potential or hot spots. Pressurized systems must use only approved valves, manifolds, flanges, and flame arrestors. **Comments:** Methane gas presents dangerous fire, explosion, and reactivity risks. Regularly inspect and service all the piping systems which transport methane gas in production and storage areas. Before use, thoroughly test methane lines with nitrogen gas for leaking, especially in enclosed areas.

Section 9. Special Precautions and Comments

Storage Requirements: Store methane in closed, pressurized cylinders, tank cars, pipelines, or other containers in a cool, dry, well-ventilated, fireproof area away from heat and ignition sources and incompatible chemicals (Sec. 5). Protect these containers from physical damage and heat. Shield them from direct sunlight. **Special Handling/Storage:** Electrically ground and bond all containers, tanks, cylinders, tank cars and pipelines used in methane shipping, receiving, or transferring operations. Never smoke in any work area where the possibility of exposure to methane gas (fire hazard) exits. Recommended storage containers include steel.

Transportation Data (49 CFR 172.101-2)

DOT Shipping Name: Methane
DOT Hazard Class: Flammable gas
DOT ID No.: UN1971
DOT Label: Flammable gas
DOT Packaging Requirements: 49 CFR 173.302
DOT Packaging Exceptions: 49 CFR 173.306

IMO Shipping Name: Methane, compressed
IMO Hazard Class: 2.1
IMO Label: Flammable gas

MSDS Collection **References:** 1, 6, 7, 84-94, 100, 116, 117, 119, 120, 122
Prepared by: PJ Igoe, BS; **Industrial Hygiene Review:** DJ Wilson, CIH; **Medical Review:** MJ Hardies, MD

Copyright © 1989 by Genium Publishing Corporation. Any commercial use or reproduction without the publisher's permission is prohibited. Judgments as to the suitability of information herein for the purchaser's purposes are necessarily the purchaser's responsibility. Although reasonable care has been taken in the preparation of such information, Genium Publishing Corporation extends no warranties, makes no representations, and assumes no responsibility as to the accuracy or suitability of such information for applications to the purchaser's intended purpose or for consequences of its use.

MATERIAL SAFETY DATA SHEET

GENIUM PUBLISHING CORPORATION
1145 CATALYN ST., SCHENECTADY, NY 12303 USA (518) 377-8854

From Genium's MSDS Collection, to be used as a reference.

METHYL ALCOHOL
Revision C
Issued:
Revised: September, 1985

SECTION 1. MATERIAL IDENTIFICATION

17

MATERIAL NAME: METHYL ALCOHOL
OTHER DESIGNATIONS: Methanol, Wood Alcohol, Carbinol, Wood Naphtha, Methyl Hydroxide, Monohydroxy Methane, CH_3OH, CAS #67-56-1
MANUFACTURER/SUPPLIER: Available from several suppliers, including: E.I. DuPont DeNemours & Co. (302- 774-2230
Chemicals & Pigments Dept (800) 441-3442
1007 Market St. Wilmington, DE 19898

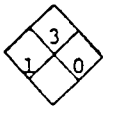

SECTION 2. INGREDIENTS AND HAZARDS

	%	HAZARD DATA
METHYL ALCOHOL CH_3-OH	ca 100	8 hr TWA: 200 ppm, or 260 mg/m^3* (Skin) STEL: 250 ppm, or 310 mg/m^3 HUMAN Eye: 5 ppm, primary irritation dose Oral: LDLo: 340 mg/kg Inhalation: TCLo: 86,000 mg/m^3 - Toxic irritant effects (systemic)

* Current OSHA Standard; ACGIH (1985-86) TLV adds (skin) notation.

NIOSH has recommended a TWA standard of 200 ppm with a fifteen minute ceiling of 800 ppm. This ceiling is well above the TLV STEL of 250 ppm.

SECTION 3. PHYSICAL DATA

Boiling Point, 1 atm	148.5°F (64.7°C)
Vapor density (Air=1)	1.11
Vapor pressure @ 21°C, mmHg ...	100
@ 50°C, mmHg ...	400
Water Solubility	Totally Miscible
Viscosity @ 20°C, cps	0.59
Specific gravity, 20°/4°C ...	0.791
Melting point	-144°F (-97.8°C)
Volatiles, %	ca 100
Evaporation rate (BuAc=1) ...	5.9
Molecular weight	32.04

APPEARANCE & ODOR: Clear, colorless, highly polar liquid with a characteristic alcohol odor. The odor recognition threshold (100% of test panel) is 53.3 ppm

SECTION 4. FIRE AND EXPLOSION DATA

Flash Point and Method	Autoignition Temp.	Flammability Limits in Air	Lower	Upper
60.8°F (12°C) Closed Cup	725°F (385°C)	% by Volume	6	36.5

EXTINGUISHING MEDIA: Use carbon dioxide, dry chemical, or alcohol type foam. Do not use a solid stream of water since the stream will scatter and spread the fire. Use water spray to cool fire-exposed tanks/containers. Fires involving Methyl Alcohol are Class IB; use a blanketing effect to smother fire.
Methyl Alcohol is a moderate explosion hazard and a dangerous fire hazard when exposed to heat, sparks, flame or oxidizers. Its vapors are heavier than air and may travel a considerable distance to an ignition source and flashback. Firefighters should wear self-contained breathing apparatus and full protective clothing when fighting fires involving Methyl Alcohol.

SECTION 5. REACTIVITY DATA

Methyl Alcohol is stable in closed containers at room temperature under normal storage and handling conditions. It does not undergo hazardous polymerization. This material may react violently with chromic anhydride; iodine plus ethyl alcohol, and mercuric oxide; lead perchlorate; perchloric acid plus ethyl alcohol; dimethyl formamide plus phosphorous; potassium hydroxide plus chlorloform; sodium hydroxide plus chloroform. It may also react with metallic aluminum at high temperatures.
Methyl Alcohol is incompatible with strong oxidizing agents (eg., nitrates, perchlorate or sulfuric acid), active metals, acetaldehyde, ethylene oxide, isocyanates, beryllium dihydride, chloroform, and potassium tert-butoxide. It may attack some forms of plastics and rubber. Thermal decomposition or burning will produce carbon monoxide, carbon dioxide and possible toxic formaldehyde and unburned methanol.

Copyright © on issue date, Genium Publishing Corporation
Any commercial use without publisher's specific permission is prohibited.

SECTION 6. HEALTH HAZARD INFORMATION

TLV 200 ppm (skin) or 260 mg/m^3

Methanol is a poisonous, narcotic chemical that may exert its effects through inhalation, skin absorption, or ingestion. Elimination of Methanol from the body is slow, and the toxic effects can be compounded by repeated excessive exposures over several days. Toxic effects are exerted upon the CNS, especially the optic nerve and possibly the retinae. Symptoms of overexposure include dizziness, visual impairment, nausea, respiratory failure, muscular incoordination and narcosis. Visual disturbances may clear temporarily then re-occur and progress to blindness. Prolonged or repeated contact with the skin may cause dermatitis, erythema, and scaling. Vapors of Methanol are mildly irritating to the eyes, while direct contact with the liquid may cause irritation, pain and transient corneal opacity. Ingestion of Methanol can cause blindness and death. The fatal dose is 100-250 ml, although death from ingestion of less than 33 ml has been reported.
FIRST AID: EYE CONTACT: Immediately flush eyes, including under eyelids, with plenty of running water for at least 15 minutes. Get medical attention if irritation persists. SKIN CONTACT: Flush exposed area with water while removing contaminated clothing. Wash with soap and water. Get medical attention if irritation persists. INHALATION: Remove victim to fresh air. Restore and/or support breathing as needed. Get medical help (Inplant Paramedic, community). INGESTION: Give victim 3-4 glasses of water or milk and induce vomiting by sticking finger to back of throat. Contact a Poison Control Center or physician. Transport victim to a medical facility immediately. Do not induce vomiting or give anything to drink if victim is unconscious or having convulsions. Get medical attention (Inplant, paramedic, community).

SECTION 7. SPILL, LEAK AND DISPOSAL PROCEDURES

Notify safety personnel of large spills or leaks. Remove all sources of heat and ignition. Provide maximum explosion-proof ventilation. Evacuate all personnel from the area except for those involved in clean-up. Remove leaking container to safe place if feasible. Clean-up personnel should wear protective clothing, gloves, boots, and a self-contained breathing apparatus. Absorb small quantities on paper towel, vermiculite, or other absorbent and place in closed container for disposal. Dike large spills and collect for reclamation or disposal. Water spray may be used to knock down vapor and to dilute and flush spill away from sensitive areas. Do not flush to sewer. Keep out of watersheds and waterways.
DISPOSAL: Place in suitable container for disposal by a licensed contractor or burn in an approved incinerator. Waste solvent may be reclaimed via filtration and distillation procedures. Methyl Alcohol has been designated as a hazardous waste by the EPA (RCRA CFR 261.33). The EPA Hazardous Waste No. is U154. Aquatic Toxicity Rating: TLm96: Over 1000 ppm.

SECTION 8. SPECIAL PROTECTION INFORMATION

Provide general and local exhaust ventilation (explosion-proof) to meet TLV requirements. For emergency or non-routine exposures where the TLV may be exceeded, wear an appropriate NIOSH-approved respirator. All electrical service in use or storage areas should have an explosion-proof design.
Prevent skin and eye contact by wearing rubber gloves and splash goggles or safety glasses. Use protective aprons, boots and face shield as necessary when splashing may occur.
Eyewash stations and safety showers should be available in areas of use and handling. Provide suitable training to those working with Methanol. Monitor the workplace and keep accurate records.

Contact lenses pose a special hazard; soft lenses may absorb and all lenses concentrate irritants.

SECTION 9. SPECIAL PRECAUTIONS AND COMMENTS

Store in tightly closed containers in a dry, well-ventilated area away from strong oxidizing agents, heat, sparks and open flame. Protect container from physical damage. When transferring or pouring Methyl Alcohol, ground and bond containers and equipment to prevent static sparks. Use non-sparking tools.
Do not smoke in areas of use or storage. Use with adequate ventilation. Do not breathe vapors. Avoid contact with eyes and skin. This material is poisonous when introduced into the body metabolism. DO NOT INGEST!!!
Provide preplacement medical exams and periodic medical surveillance for industrially exposed workers with emphasis on neurological and visual functions, liver, and kidney systems.
DOT CLASSIFICATION: Flammable liquid, UN1230 DOT LABEL: Flammable liquid.

DATA SOURCE(S) CODE (See Glossary) 1, 2, 4-12, 16, 19, 20, 23-26, 31, 34, 37-39, 43, 47, 63, 79, R.

Judgements as to the suitability of information herein for purchaser's purposes are necessarily purchaser's responsibility. Therefore, although reasonable care has been taken in the preparation of such information, Genium Publishing Corporation extends no warranties, makes no representations and assumes no responsibility as to the accuracy or suitability of such information for application to purchaser's intended purposes or for consequences of its use

APPROVALS [illegible], 11/85
INDUST. HYGIENE/SAFETY [illegible] 11-85
MEDICAL REVIEW: [illegible] Dec 85

GENIUM PUBLISHING
Copyright © September 1, 1985

MATERIAL SAFETY DATA SHEET

IDENTITY: Methanol
CAS NUMBER: 67-56-1

SECTION I

Manufacturer: Radian Corporation
8501 North Mopac Blvd.
P.O. Box 201088
Austin, TX 78720-1088

Emergency Telephone Number: (512) 454-4797

Date Prepared: September 10, 1992

SECTION II - HAZARDOUS INGREDIENTS/IDENTITY INFORMATION

Hazardous Components	OSHA PEL	ACGIH TLV	Other Limits	%
Methanol	Transitional TWA 200ppm Final TWA 200ppm STEL 250ppm	TWA 200ppm STEL 250ppm	---	100

SECTION III - PHYSICAL/CHEMICAL CHARACTERISTICS

Boiling Point(degrees C): 64.6 (148°F)

Specific Gravity (Water=1): 0.7913

Vapor Pressure (mmHg): 97 @ 20°C

Melting Point(degrees C): -98

Vapor Density (Air=1): 1.11

Evaporation Rate (Butyl Acetate=1): 5.9

Solubility in Water: Soluble

Appearance and Odor: Clear, colorless liquid, slight alcoholic odor.

SECTION IV - FIRE AND EXPLOSION HAZARD DATA

Flash Point: 52°F (11°C)
Method Used: Closed Cup

Flammable Limits
LEL: 6.0% UEL: 36.5%

Extinguishing Media: Dry chemical, carbon dioxide or Halon extinguisher.

Special Fire Fighting Procedures: N/A

Unusual Fire and Explosion Hazards: Flashback along vapor trail may occur.

****
The information contained herein is believed to be accurate and is supplied in good faith. Radian Corporation makes no warranty with respect to and assumes no legal responsibility for use of or reliance upon this information. Individuals receiving this data must exercise their own judgement in determining its suitability for a particular purpose.
****

SECTION V - REACTIVITY DATA

Stability - Unstable:
Stable: X

Conditions to Avoid: Heat, sparks or other sources of ignition.

Incompatible Materials: Acids, acid chlorides, acid anhydrides, oxidizing agents, reducing agents, and alkali metals.

Hazardous Decmp Pdts: Toxic fumes of carbon monoxide and carbon dioxide.

Hazardous Polymerization - May Occur:
Will Not Occur: X

Conditions to Avoid: N/A

SECTION VI - HEALTH HAZARD DATA

Routes of Entry: Inhalation? Yes Skin? Yes Ingestion? Yes

Health Hazards: Exposure to Methanol may result in severe skin and eye irritation, blindness and narcosis. It can be absorbed through the skin.

Carcinogenicity: NTP? N/A IARC? N/A OSHA? N/A

Symptoms of Exposure: Exposure to Methanol may cause burning sensation, coughing, wheezing, laryngitis, shortness of breath, headache, nausea, vomiting, eye damage, convulsions, fatigue, drowsiness, and central nervous system depression.

Medical Conditions Aggravated by Exposure: N/A

Emergency and First Aid Procedures: If ingested, give victim large quantities of liquid and transport to a medical facility. In case of external exposure, wash affected areas with large amounts of water and transport to a medical facility. If breathing is disturbed, give artificial respiration while transporting to a medical facility.

SECTION VII - PRECAUTIONS FOR SAFE HANDLING AND USE

Steps to be Taken in Case Material is Released or Spilled: Remove all sources of ignition. Use absorbent paper to pick up all spilled material. If necessary, soak absorbent paper in an appropriate solvent such as toluene or alcohol to pick up remaining traces.

Waste Disposal Method: Waste materials should be disposed of under conditions which meet Federal, State, and Local environmental control regulations.

Precautions to be Taken in Handling and Storing: Store at 0°C.
Protect from light.

Other Precautions: N/A

SECTION VIII - CONTROL MEASURES

Respiratory Protection: Avoid inhalation of vapors. Cartridge type respirator with organic vapor cartridges recommended.

Ventilation - Local Exhaust: Use with forced ventilation.
General Mechanical: Normal laboratory air exchange.
Special: N/A

Protective Gloves: Use two dissimilar types. PVC or Neoprene over latex.

Other Protective Clothing or Equipment: N/A

Work/Hygienic Practices: Only experienced personnel should be allowed to handle this material.

END

J.T.BAKER INC. 222 RED SCHOOL LANE, PHILLIPSBURG, NJ 08865
M A T E R I A L S A F E T Y D A T A S H E E T
24-HOUR EMERGENCY TELEPHONE -- (908) 859-2151
CHEMTREC # (800) 424-9300 -- NATIONAL RESPONSE CENTER # (800) 424-8802

J.T.BAKER INC., 222 RED SCHOOL LANE, PHILLIPSBURG, NJ 08865

SECTION I - PRODUCT IDENTIFICATION

PRODUCT NAME: METHANOL
COMMON SYNONYMS: METHYL ALCOHOL; WOOD ALCOHOL; CARBINOL; METHYLOL; WOOD SPIRIT
CHEMICAL FAMILY: ALCOHOLS
FORMULA: CH3OH
FORMULA WT.: 32.04
CAS NO.: 67-56-1
NIOSH/RTECS NO.: PC1400000
PRODUCT USE: LABORATORY REAGENT
PRODUCT CODES: 9049,9063,9076,9091,5370,9074,6808,9127,9098,5807,9073,9071 5811,5217,9075,9090,9093,P704,9069,5536,9263,9070,9077,9072 9068

PRECAUTIONARY LABELING

KER SAF-T-DATA* SYSTEM

HEALTH	-	3	SEVERE (POISON)
FLAMMABILITY	-	3	SEVERE (FLAMMABLE)
REACTIVITY	-	1	SLIGHT
CONTACT	-	1	SLIGHT

LABORATORY PROTECTIVE EQUIPMENT

GOGGLES & SHIELD; LAB COAT & APRON; VENT HOOD; PROPER GLOVES; CLASS B EXTINGUISHER

U.S. PRECAUTIONARY LABELING

POISON DANGER

FLAMMABLE. HARMFUL IF INHALED. CANNOT BE MADE NON-POISONOUS. MAY BE FATAL OR CAUSE BLINDNESS IF SWALLOWED.
KEEP AWAY FROM HEAT, SPARKS, FLAME. DO NOT GET IN EYES, ON SKIN, ON CLOTHING. AVOID BREATHING VAPOR. KEEP IN TIGHTLY CLOSED CONTAINER. USE WITH ADEQUATE VENTILATION. WASH THOROUGHLY AFTER HANDLING. IN CASE OF FIRE, USE ALCOHOL FOAM, DRY CHEMICAL, CARBON DIOXIDE - WATER MAY BE INEFFECTIVE. FLUSH SPILL AREA WITH WATER SPRAY.

CONTINUED ON PAGE: 2

PRECAUTIONARY LABELING (CONTINUED)

INTERNATIONAL LABELING

HIGHLY FLAMMABLE. TOXIC BY INHALATION AND IF SWALLOWED.
KEEP OUT OF REACH OF CHILDREN. KEEP CONTAINER TIGHTLY CLOSED. KEEP AWAY FROM SOURCES OF IGNITION - NO SMOKING. AVOID CONTACT WITH SKIN.

SAF-T-DATA* STORAGE COLOR CODE: RED (FLAMMABLE)

SECTION II - COMPONENTS

COMPONENT	CAS NO.	WEIGHT %	OSHA/PEL	ACGIH/TLV
METHANOL	67-56-1	90-100	200 PPM	200 PPM

SECTION III - PHYSICAL DATA

BOILING POINT: 65 C (149 F)
(AT 760 MM HG)

VAPOR PRESSURE (MMHG): 96
(20 C)

MELTING POINT: -98 C (-144 F)
(AT 760 MM HG)

VAPOR DENSITY (AIR=1): 1.11

SPECIFIC GRAVITY: 0.79
(H2O=1)

EVAPORATION RATE: 4.6
(BUTYL ACETATE = 1)

SOLUBILITY(H2O): COMPLETE (100%)

% VOLATILES BY VOLUME: 100
(21 C)

PH: N/A

ODOR THRESHOLD (P.P.M.): N/A

PHYSICAL STATE: LIQUID

COEFFICIENT WATER/OIL DISTRIBUTION: N/A

APPEARANCE & ODOR: CLEAR, COLORLESS LIQUID. PUNGENT ODOR.

CONTINUED ON PAGE: 3

SECTION IV - FIRE AND EXPLOSION HAZARD DATA

FLASH POINT (CLOSED CUP): 12 C (54 F) NFPA 704M RATING: 1-3-0

AUTOIGNITION TEMPERATURE: 463 C (867 F)

FLAMMABLE LIMITS: UPPER - 36.0 % LOWER - 6.0 %

FIRE EXTINQUISHING MEDIA
USE ALCOHOL FOAM, DRY CHEMICAL OR CARBON DIOXIDE. (WATER MAY BE INEFFECTIVE.)

SPECIAL FIRE-FIGHTING PROCEDURES
FIREFIGHTERS SHOULD WEAR PROPER PROTECTIVE EQUIPMENT AND SELF-CONTAINED BREATHING APPARATUS WITH FULL FACEPIECE OPERATED IN POSITIVE PRESSURE MODE. MOVE CONTAINERS FROM FIRE AREA IF IT CAN BE DONE WITHOUT RISK. USE WATER TO KEEP FIRE-EXPOSED CONTAINERS COOL.

UNUSUAL FIRE & EXPLOSION HAZARDS
VAPORS MAY FLOW ALONG SURFACES TO DISTANT IGNITION SOURCES AND FLASH BACK. CLOSED CONTAINERS EXPOSED TO HEAT MAY EXPLODE. CONTACT WITH STRONG OXIDIZERS MAY CAUSE FIRE. BURNS WITH A CLEAR, ALMOST INVISIBLE FLAME.

TOXIC GASES PRODUCED
CARBON MONOXIDE, CARBON DIOXIDE, FORMALDEHYDE

EXPLOSION DATA-SENSITIVITY TO MECHANICAL IMPACT
NONE IDENTIFIED.

EXPLOSION DATA-SENSITIVITY TO STATIC DISCHARGE
NONE IDENTIFIED.

SECTION V - HEALTH HAZARD DATA

THRESHOLD LIMIT VALUE (TLV/TWA): 260 MG/M3 (200 PPM)

THE TLV LISTED DENOTES TLV (SKIN).

SHORT-TERM EXPOSURE LIMIT (STEL): 310 MG/M3 (250 PPM)

PERMISSIBLE EXPOSURE LIMIT (PEL): 260 MG/M3 (200 PPM)

CONTINUED ON PAGE: 4

SECTION V - HEALTH HAZARD DATA (CONTINUED)

TOXICITY OF COMPONENTS

ORAL RAT LD50 FOR METHANOL	5628 MG/KG
INTRAPERITONEAL RAT LD50 FOR METHANOL	9540 MG/KG
SUBCUTANEOUS MOUSE LD50 FOR METHANOL	9800 MG/KG
SKIN RABBIT LD50 FOR METHANOL	20 G/KG

CARCINOGENICITY: NTP: NO IARC: NO Z LIST: NO OSHA REG: NO

CARCINOGENICITY
NONE IDENTIFIED.

REPRODUCTIVE EFFECTS
NONE IDENTIFIED.

EFFECTS OF OVEREXPOSURE

INHALATION: IS HARMFUL AND MAY BE FATAL, HEADACHE, NAUSEA, VOMITING, DIZZINESS, NARCOSIS, RESPIRATORY FAILURE, LOW BLOOD PRESSURE, CENTRAL NERVOUS SYSTEM DEPRESSION

SKIN CONTACT: IRRITATION, PROLONGED CONTACT MAY CAUSE DERMATITIS

EYE CONTACT: IRRITATION, MAY CAUSE TEMPORARY CORNEAL DAMAGE

SKIN ABSORPTION: NONE IDENTIFIED

INGESTION: IS HARMFUL AND MAY BE FATAL, BLINDNESS, HEADACHE, NAUSEA, VOMITING, DIZZINESS, GASTROINTESTINAL IRRITATION, CENTRAL NERVOUS SYSTEM DEPRESSION, HEARING LOSS

CHRONIC EFFECTS: KIDNEY DAMAGE, LIVER DAMAGE

TARGET ORGANS
EYES, SKIN, CENTRAL NERVOUS SYSTEM, GI TRACT, RESPIRATORY SYSTEM, LUNGS

MEDICAL CONDITIONS GENERALLY AGGRAVATED BY EXPOSURE
EYE DISORDERS, SKIN DISORDERS, LIVER OR KIDNEY DISORDERS

PRIMARY ROUTES OF ENTRY
INHALATION, INGESTION, EYE CONTACT, SKIN CONTACT, ABSORPTION

CONTINUED ON PAGE: 5

SECTION V - HEALTH HAZARD DATA (CONTINUED)

EMERGENCY AND FIRST AID PROCEDURES

INGESTION: CALL A PHYSICIAN. IF SWALLOWED, IF CONSCIOUS, GIVE LARGE AMOUNTS OF WATER. INDUCE VOMITING.

INHALATION: IF INHALED, REMOVE TO FRESH AIR. IF NOT BREATHING, GIVE ARTIFICIAL RESPIRATION. IF BREATHING IS DIFFICULT, GIVE OXYGEN.

SKIN CONTACT: IN CASE OF CONTACT, IMMEDIATELY FLUSH SKIN WITH PLENTY OF WATER FOR AT LEAST 15 MINUTES WHILE REMOVING CONTAMINATED CLOTHING AND SHOES. WASH CLOTHING BEFORE RE-USE.

EYE CONTACT: IN CASE OF EYE CONTACT, IMMEDIATELY FLUSH WITH PLENTY OF WATER FOR AT LEAST 15 MINUTES.

SARA/TITLE III HAZARD CATEGORIES AND LISTS

ACUTE: YES CHRONIC: YES FLAMMABILITY: YES PRESSURE: NO REACTIVITY: NO

EXTREMELY HAZARDOUS SUBSTANCE: NO
CERCLA HAZARDOUS SUBSTANCE: YES CONTAINS METHANOL (RQ = 5000 LBS)
SARA 313 TOXIC CHEMICALS: YES CONTAINS METHANOL
GENERIC CLASS: C05
TSCA INVENTORY: YES

SECTION VI - REACTIVITY DATA

STABILITY: STABLE HAZARDOUS POLYMERIZATION: WILL NOT OCCUR

CONDITIONS TO AVOID: HEAT, FLAME, OTHER SOURCES OF IGNITION

INCOMPATIBLES: STRONG OXIDIZING AGENTS, STRONG ACIDS, ZINC, ALUMINUM, MAGNESIUM

DECOMPOSITION PRODUCTS: CARBON MONOXIDE, CARBON DIOXIDE, FORMALDEHYDE

CONTINUED ON PAGE: 6

SECTION VII - SPILL & DISPOSAL PROCEDURES

STEPS TO BE TAKEN IN THE EVENT OF A SPILL OR DISCHARGE
WEAR SELF-CONTAINED BREATHING APPARATUS AND FULL PROTECTIVE CLOTHING. SHUT OFF IGNITION SOURCES; NO FLARES, SMOKING OR FLAMES IN AREA. STOP LEAK IF YOU CAN DO SO WITHOUT RISK. USE WATER SPRAY TO REDUCE VAPORS. TAKE UP WITH SAND OR OTHER NON-COMBUSTIBLE ABSORBENT MATERIAL AND PLACE INTO CONTAINER FOR LATER DISPOSAL. FLUSH AREA WITH WATER.

J. T. BAKER SOLUSORB(R) SOLVENT ADSORBENT IS RECOMMENDED FOR SPILLS OF THIS PRODUCT.

DISPOSAL PROCEDURE
DISPOSE IN ACCORDANCE WITH ALL APPLICABLE FEDERAL, STATE, AND LOCAL ENVIRONMENTAL REGULATIONS.

EPA HAZARDOUS WASTE NUMBER: U154 (TOXIC WASTE)

SECTION VIII - INDUSTRIAL PROTECTIVE EQUIPMENT

VENTILATION: USE GENERAL OR LOCAL EXHAUST VENTILATION TO MEET TLV REQUIREMENTS.

RESPIRATORY PROTECTION: RESPIRATORY PROTECTION REQUIRED IF AIRBORNE CONCENTRATION EXCEEDS TLV. AT CONCENTRATIONS ABOVE 200 PPM, A SELF-CONTAINED BREATHING APPARATUS IS ADVISED.

EYE/SKIN PROTECTION: SAFETY GOGGLES AND FACE SHIELD, UNIFORM, PROTECTIVE SUIT, RUBBER GLOVES ARE RECOMMENCED.

SECTION IX - STORAGE AND HANDLING PRECAUTIONS

SAF-T-DATA* STORAGE COLOR CODE: RED (FLAMMABLE)

STORAGE REQUIREMENTS
KEEP CONTAINER TIGHTLY CLOSED. STORE IN A COOL, DRY, WELL-VENTILATED, FLAMMABLE LIQUID STORAGE AREA.

SPECIAL PRECAUTIONS
BOND AND GROUND CONTAINERS WHEN TRANSFERRING LIQUID.

CONTINUED ON PAGE: 7

SECTION X - TRANSPORTATION DATA AND ADDITIONAL INFORMATION

DOMESTIC (D.O.T.)

PROPER SHIPPING NAME: METHYL ALCOHOL
HAZARD CLASS: FLAMMABLE LIQUID
UN/NA: UN1230 REPORTABLE QUANTITY: 5000 LBS.
LABELS: FLAMMABLE LIQUID
REGULATORY REFERENCES: 49CFR 172.101; 173.119

INTERNATIONAL (I.M.O.)

PROPER SHIPPING NAME: METHANOL
HAZARD CLASS: 3.2, 6.1 I.M.O. PAGE: 3251
UN: UN1230 MARINE POLLUTANTS: NO PACKAGING GROUP: II
LABELS: FLAMMABLE LIQUID, POISON
REGULATORY REFERENCES: 49CFR 172.102; PART 176; IMO

AIR (I.C.A.O.)

PROPER SHIPPING NAME: METHANOL
HAZARD CLASS: 3.2, 6.1
UN: UN1230 PACKAGING GROUP: II
LABELS: FLAMMABLE LIQUID, POISON
REGULATORY REFERENCES: 49CFR 172.101; 173.6; PART 175; ICAO/IATA=== WE BELIEVE THE TRANSPORTATION DATA AND REFERENCES CONTAINED HEREIN TO BE FACTUAL AND THE OPINION OF QUALIFIED EXPERTS. THE DATA IS MEANT AS A GUIDE TO THE OVERALL CLASSIFICATION OF THE PRODUCT AND IS NOT PACKAGE SIZE SPECIFIC, NOR SHOULD IT BE TAKEN AS A WARRANTY OR REPRESENTATION FOR WHICH THE COMPANY ASSUMES LEGAL RESPONSIBILITY.=== THE INFORMATION IS OFFERED SOLELY FOR YOUR CONSIDERATION, INVESTIGATION, AND VERIFICATION. ANY USE OF THE INFORMATION MUST BE DETERMINED BY THE USER TO BE IN ACCORDANCE WITH APPLICABLE FEDERAL, STATE, AND LOCAL LAWS AND REGULATIONS. SEE SHIPPER REQUIREMENTS 49CFR 172.3 AND EMPLOYEE TRAINING 49CFR 173.1.

U.S. CUSTOMS HARMONIZATION NUMBER: 29051100009

CONTINUED ON PAGE: 8

J.T.BAKER INC. 222 RED SCHOOL LANE, PHILLIPSBURG, NJ 08865

M A T E R I A L S A F E T Y D A T A S H E E T

24-HOUR EMERGENCY TELEPHONE -- (908) 859-2151
CHEMTREC # (800) 424-9300 -- NATIONAL RESPONSE CENTER # (800) 424-8802

EFFECTIVE: 03/09/92 ISSUED: 03/28/92

==========

N/A = NOT APPLICABLE OR NOT AVAILABLE
N/E = NOT ESTABLISHED

THE INFORMATION IN THIS MATERIAL SAFETY DATA SHEET MEETS THE REQUIREMENTS OF THE UNITED STATES OCCUPATIONAL SAFETY AND HEALTH ACT AND REGULATIONS PROMULGATED THEREUNDER (29 CFR 1910.1200 ET. SEQ.) AND THE CANADIAN WORKPLACE HAZARDOUS MATERIALS INFORMATION SYSTEM. THIS DOCUMENT IS INTENDED ONLY AS A GUIDE TO THE APPROPRIATE PRECAUTIONARY HANDLING OF THE MATERIAL BY A PERSON TRAINED IN, OR SUPERVISED BY A PERSON TRAINED IN, CHEMICAL HANDLING. THE USER IS RESPONSIBLE FOR DETERMINING THE PRECAUTIONS AND DANGERS OF THIS CHEMICAL FOR HIS OR HER PARTICULAR APPLICATION. DEPENDING ON USAGE, PROTECTIVE CLOTHING INCLUDING EYE AND FACE GUARDS AND RESPIRATORS MUST BE USED TO AVOID CONTACT WITH MATERIAL OR BREATHING CHEMICAL VAPORS/FUMES.
EXPOSURE TO THIS PRODUCT MAY HAVE SERIOUS ADVERSE HEALTH EFFECTS. THIS CHEMICAL MAY INTERACT WITH OTHER SUBSTANCES. SINCE THE POTENTIAL USES ARE SO VARIED, BAKER CANNOT WARN OF ALL OF THE POTENTIAL DANGERS OF USE OR INTERACTION WITH OTHER CHEMICALS OR MATERIALS. BAKER WARRANTS THAT THE CHEMICAL MEETS THE SPECIFICATIONS SET FORTH ON THE LABEL.
BAKER DISCLAIMS ANY OTHER WARRANTIES, EXPRESSED OR IMPLIED WITH REGARD TO THE PRODUCT SUPPLIED HEREUNDER, ITS MERCHANTABILITY OR ITS FITNESS FOR A PARTICULAR PURPOSE.
THE USER SHOULD RECOGNIZE THAT THIS PRODUCT CAN CAUSE SEVERE INJURY AND EVEN DEATH, ESPECIALLY IF IMPROPERLY HANDLED OR THE KNOWN DANGERS OF USE ARE NOT HEEDED. READ ALL PRECAUTIONARY INFORMATION. AS NEW DOCUMENTED GENERAL SAFETY INFORMATION BECOMES AVAILABLE, BAKER WILL PERIODICALLY REVISE THIS MATERIAL SAFETY DATA SHEET.
NOTE: CHEMTREC, CANUTEC, AND NATIONAL RESPONSE CENTER EMERGENCY TELEPHONE NUMBERS ARE TO BE USED ONLY IN THE EVENT OF CHEMICAL EMERGENCIES INVOLVING A SPILL, LEAK, FIRE, EXPOSURE, OR ACCIDENT INVOLVING CHEMICALS. ALL NON-EMERGENCY QUESTIONS SHOULD BE DIRECTED TO CUSTOMER SERVICE (1-800-JTBAKER) FOR ASSISTANCE.

COPYRIGHT 1992 J.T.BAKER INC.
* TRADEMARKS OF J.T.BAKER INC.
===
APPROVED BY QUALITY ASSURANCE DEPARTMENT.

-- LAST PAGE --
"ISSUED BY VWR 01/15/94"

Dry Chemical Fire Extinguishing Powder

Monoammonium Phosphate

Material Safety Data Sheet

May be used to comply with OSHA's Hazard Communication Standard, 29 CFR 1910.1200. Standard must be consulted for specific requirements.

U.S. Department of Labor
Occupational Safety and Health Administration
(Non-Mandatory Form)
Form Approved
OMB No. 1218-0072

WALTER KIDDE CO.
1394 S. Third Street
Mebane, N.C. 27302

IDENTITY (As Used on Label and List)
Pyro Chem ABC Multipurpose

Note: Blank spaces are not permitted. If any item is not applicable, or no information is available, the space must be marked to indicate that.

Section I

Manufacturer's Name: PYRO CHEM, INC.	Emergency Telephone Number: (201) 335-9750
Address (Number, Street, City, State, and ZIP Code): 301 Division Street	Telephone Number for Information: (201) 335-9750
Boonton, New Jersey 07005	Date Prepared: Revised: October 1, 1987
	Signature of Preparer (optional): -

Section II — Hazardous Ingredients/Identity Information

Hazardous Components (Specific Chemical Identity; Common Name(s))	OSHA PEL	ACGIH TLV	Other Limits Recommended	% (optional)
Monoammonium phosphate, $NH_4H_2PO_4$ (M.A.P.; ammonium phosphate monobasic) CAS No. 7722-76-1	none	none	-	90 plus
Mica CAS No. 12001-26-2	20 mppfc	-	-	less than 5

Section III — Physical/Chemical Characteristics

Boiling Point: not applicable		Specific Gravity (H_2O = 1): n.a.	
Vapor Pressure (mm Hg.): n.a.		Melting Point: n.a.	
Vapor Density (AIR = 1): n.a.		Evaporation Rate (Butyl Acetate = 1): n.a.	

Solubility in Water: limited

Appearance and Odor: odorless fine yellow powder

Section IV — Fire and Explosion Hazard Data

Flash Point (Method Used)	Flammable Limits	LEL	UEL
not combustible	n.a.	n.a.	n.a.

Extinguishing Media: not combustible

Special Fire Fighting Procedures: not combustible

Unusual Fire and Explosion Hazards: none

(Reproduce locally)

Section V — Reactivity Data

Stability	Unstable		Conditions to Avoid
	Stable	X	

Incompatibility (*Materials to Avoid*)
alkaline compounds

Hazardous Decomposition or Byproducts
ammonia generation under alkaline conditions

Hazardous Polymerization	May Occur		Conditions to Avoid
	Will Not Occur	X	

Section VI — Health Hazard Data

Route(s) of Entry: Inhalation? yes Skin? yes Ingestion? -

Health Hazards (*Acute and Chronic*)
inhalation may irritate respiratory tract;
contact may cause irritation of skin and eyes

Carcinogenicity: NTP? no IARC Monographs? no OSHA Regulated? no

Signs and Symptoms of Exposure
slight to severe irritation of eyes, skin and/or respiratory tract depending upon degree and duration of exposure

Medical Conditions Generally Aggravated by Exposure
skin sensitivity; respiratory disorder

Emergency and First Aid Procedures
Eyes: flush with copious amounts of water. Skin: wash well with water. Inhalation: remove from area of exposure. Obtain medical care for irritation, discomfort or gross ingestion.

Section VII — Precautions for Safe Handling and Use

Steps to Be Taken in Case Material Is Released or Spilled
Simple cleanup, containment, and disposal
Removal via vacuuming recommended.

Waste Disposal Method
Consult with Federal, State or local environmental regulatory agencies for acceptable disposal procedures.

Precautions to Be Taken in Handling and Storing
Store in closed containers. Keep dry and at moderate temperatures.

Other Precautions
Avoid contamination with alkaline materials.

Section VIII — Control Measures

Respiratory Protection (*Specify Type*)
NIOSH/MSHA approved dust respirator

Ventilation	Local Exhaust: when required for dust control	Special: -
	Mechanical (General): -	Other: -

Protective Gloves: none normally required
Eye Protection: safety goggles
Other Protective Clothing or Equipment: washing facilities
Work/Hygienic Practices

This product data is supplied as stipulated by the OSHA "Right To Know" Regulation 29 CFR 1910.1200 and is offered in good faith as typical and not as a product specification. The information contained herein is based on available data and is believed to be true and accurate. No warranty expressed or implied, regarding the accuracy of this data, hazards connected with the use of the material, or the results to be obtained from the use thereof, is made. Pyro Chem, Inc. assumes no responsibility for damage or injury from the use of the product described herein.

Material Safety Data Sheet

From Genium's Reference Collection
Genium Publishing Corporation
1145 Catalyn Street
Schenectady, NY 12303-1836 USA
(518) 377-8855

GENIUM PUBLISHING CORP.

Nitric Acid

Issued: October 1980
Revised: August 1988

SECTION 1. MATERIAL IDENTIFICATION

Material Name: NITRIC ACID

Description (Origin/Uses): Used to dissolve noble metals, for etching and cleaning metals, to make organic nitrates and nitrocompounds, to destroy residues of organic matter, and in explosives.

Other Designations: Red Fuming Nitric Acid; HNO_3; CAS No. 7697-37-2

Manufacturer: Contact your supplier or distributor. Consult the latest edition of the *Chemicalweek Buyers' Guide* (Genium ref. 73) for a list of suppliers.

NFPA

HMIS	
H 3	R 1
F 0	I 4
R 1	S 4
PPG*	K 0
*See sect. 8	

SECTION 2. INGREDIENTS AND HAZARDS	%	EXPOSURE LIMITS
Nitric Acid, CAS No. 7697-37-2	*	**OSHA PEL** 8-Hr TWA: 2 ppm, 5 mg/m³ **ACGIH TLVs, 1987-88** TLV-TWA: 2 ppm, 5 mg/m³ TLV-STEL: 4 ppm, 10 mg/m³ **Toxicity Data**** Mouse, Inhalation, LC_{50}: 67 ppm/4 Hrs

*Contact your supplier to determine the percent by weight of nitric acid in the purchased product. Water is the other component of the product.
**See NIOSH, *RTECS* (QU5775000, QU5900000), for additional data with references to reproductive effects.

SECTION 3. PHYSICAL DATA

Boiling Point: Ca 251°F (122°C)*
Specific Gravity (H_2O = 1): 1.4*
pH: Very Acidic
Water Solubility (%): Complete
Molecular Weight: 63 Grams/Mole
Melting Point: Ca -30°F (-34°C)*

Appearance and Odor: A water white to slightly yellow liquid that darkens to a brownish color on aging and exposure to light; characteristic nitrogen dioxide (NO_2) odor.

*These properties are for the approximately 68%-by-weight nitric acid that is commercially available.

SECTION 4. FIRE AND EXPLOSION DATA

Flash Point and Method	Autoignition Temperature	Flammability Limits in Air	LOWER	UPPER
*	*	% by Volume	*	*

Extinguishing Media: *Nitric acid does not burn. Use extinguishing agents that will put out the surrounding fire. Use a water spray to dilute nitric acid during fires and to absorb liberated oxides of nitrogen.

Unusual Fire or Explosion Hazards: Although nitric acid does not burn, it is a strong oxidizing agent that can react with combustible materials to cause fires. Also, it can react with metals to liberate extremely flammable hydrogen gas. If this happens, direct fire-fighting procedures at this evolved hydrogen gas.

Special Fire-fighting Procedures: Wear a self-contained breathing apparatus (SCBA) with a full facepiece operated in the pressure-demand or positive-pressure mode. Choose protective equipment carefully (see sect. 5, Conditions to Avoid).

SECTION 5. REACTIVITY DATA

Nitric acid is stable in closed containers at room temperature under normal storage and handling conditions. It cannot undergo hazardous polymerization.

Chemical Incompatibilities: Nitric acid reacts explosively with metallic powders, carbides, hydrogen sulfide, and turpentine. Contact with organic materials such as wood, paper, sawdust, or alcohol, etc., may cause fires. Combustible materials can attain an increased flammability after being exposed to nitric acid even if they do not immediately catch fire.

Conditions to Avoid: Avoid any contact with incompatible chemicals. Because it is so reactive, always establish another material's compatibility with nitric acid before mixing the two materials. This applies to the selection of safety and handling equipment, because nitric acid can attack some forms of coatings, plastics, and rubber.

Hazardous Products of Decomposition: Various nitrogen oxides, including nitric oxide (NO), nitrogen dioxide (NO_2), nitrous oxide (N_2O), as well as nitric acid mist or vapor, can be produced by the decomposition reactions that can affect the nitric acid during fires.

Copyright © 1988 Genium Publishing Corporation.
Any commercial use or reproduction without the publisher's permission is prohibited.

SECTION 6. HEALTH HAZARD INFORMATION

Nitric acid is not listed as a carcinogen by the NTP, IARC, or OSHA.
Summary of Risks: This material is corrosive to any body tissue it contacts. Dental erosion is also reported.
Medical Conditions Aggravated by Long-Term Exposure: None reported. **Target Organs:** Skin, eyes, mucous membranes of the respiratory tract, teeth. **Primary Entry:** Inhalation, skin contact. **Acute Effects:** Irritation and/or corrosive burns of skin, eyes, and upper respiratory tract (URT), delayed pulmonary edema, pneumonitis, bronchitis, and dental erosion. **Chronic Effects:** None reported.

FIRST AID: Eyes. Immediately flush eyes, including under the eyelids, gently but thoroughly with plenty of running water for at least 15 minutes. Treat for eye burns. **Skin.** Immediately wash the affected area with soap and water. Watch for chemical skin burns and treat them accordingly. **Inhalation.** Remove the exposed person to fresh air; restore and/or support his or her breathing as needed. If the exposure is severe, hospitilization with careful monitoring by trained medical personnel to detect the delayed onset of severe pulmonary edema (lungs filled with fluid) is recommended for at least 72 hours. **Ingestion.** Call a poison control center. Never give anything by mouth to someone who is unconscious or convulsing. Do not induce vomiting. If the exposed person is responsive, give him or her one or two glasses of milk or water to drink as quickly as possible after exposure.
GET MEDICAL HELP (IN PLANT, PARAMEDIC, COMMUNITY) FOR ALL EXPOSURES. Seek prompt medical assistance for further treatment, observation, and support after first aid. NOTE TO PHYSICIAN: Wash affected skin areas with a 5% solution of sodium bicarbonate ($NaHCO_3$). If ingested, the risk versus the benefit of the passage of a naso-gastric tube is debatable. Activated charcoal is of *no* value. Do *not* give the exposed person bicarbonate to neutralize the material.

SECTION 7. SPILL, LEAK, AND DISPOSAL PROCEDURES

Spill/Leak: Notify safety personnel, provide ventilation, and eliminate all sources of ignition immediately in case contact with metals should produce highly flammable hydrogen gas. Cleanup personnel need protection against contact with and inhalation of nitric acid (see sect. 8). Contain large spills and collect waste. Use water sprays to direct nitric acid away from incompatible chemicals (see sect. 5). Neutralize the spilled nitric acid with soda ash or sodium bicarbonate. Use an absorbent such as sand, earth, or vermiculite on the resulting slurry and place the neutralized nitric acid material into containers suitable for eventual disposal, reclamation, or destruction.
Waste Disposal: Consider reclamation, recycling, or destruction rather than disposal in a landfill. Contact your supplier or a licensed contractor for detailed recommendations. Follow Federal, state, and local regulations.
OSHA Designations
Air Contaminant (29 CFR 1910.1000 Subpart Z)
EPA Designations (40 CFR 302.4)
CERCLA Hazardous Substance, Reportable Quantity: 1000 lbs (454 kg), per Clean Water Act (CWA), Section 311 (b) (4)

SECTION 8. SPECIAL PROTECTION INFORMATION

Goggles: Always wear protective eyeglasses or chemical safety goggles. Where splashing of nitric acid solution is possible, wear a full face shield as a supplementary protective measure. Follow OSHA eye- and face-protection regulations (29 CFR 1910.133).
Respirator: Consult the *NIOSH Pocket Guide to Chemical Hazards* (Genium ref. 88) for general recommendations on proper respiratory procedures. Follow OSHA respirator regulations (29 CFR 1910.134). For emergency or nonroutine use (leaks or cleaning reactor vessels and storage tanks), wear an SCBA with a full facepiece operated in the pressure-demand or positive-pressure mode. **Warning:** Air-purifying respirators will *not* protect workers in oxygen-deficient atmospheres. **Other:** Wear impervious gloves, boots, aprons, gauntlets, etc., to prevent skin contact with nitric acid. Choose protective equipment carefully (see sect. 5, Conditions to Avoid).
Ventilation: Install and operate both general and local exhaust-ventilation systems powerful enough to maintain airborne concentrations of nitric acid below the OSHA PEL standard cited in section 2. Construct exhaust ducts and systems with material such as fiberglass, which resists attack by nitric acid. **Safety Stations:** Make emergency eyewash stations, washing facilities, and safety/quickdrench showers available in work areas. **Contaminated Equipment:** Contact lenses pose a special hazard; soft lenses may absorb irritants and all lenses concentrate them. Do *not* wear contact lenses in any work area. Remove contaminated clothing and launder it before wearing it again; clean nitric acid from shoes and equipment. **Comments:** Practice good personal hygiene; always wash thoroughly after using this material. Keep it off of your clothing and equipment. Avoid transferring it from your hands to your mouth while eating, drinking, or smoking. Do *not* eat, drink, or smoke in any work area. Provide preplacement and annual medical exams with emphasis on skin irritation to workers who are regularly exposed to nitric acid. Workers must receive training before handling this material in the workplace; even experienced workers should undergo refresher training periodically.

SECTION 9. SPECIAL PRECAUTIONS AND COMMENTS

Storage/Segregation: Store nitric acid in a cool, dry, well-ventilated area away from incompatible chemicals (see sect. 5). Consider outside, isolated, or detached storage. Protect containers from direct sunlight.
Special Handling/Storage: Build all storage facilities of nonflammable materials that are resistant to chemical attack by nitric acid. Protect containers from physical damage. Preplan for routine use and emergency response.
Engineering Controls: Proper ventilation is essential in bulk storage areas; consider installing an automatic monitoring system to detect hazardous levels of nitrogen oxides that can develop from this material.
Comments: Separate nitric acid from hydrazine, diethylenetriamine, fluorides, and all other corrosives except sulfuric acid and sulfur trioxide when shipping or transferring it.
Transportation Data (49 CFR 172.101-2)
DOT Shipping Name: (I) Nitric Acid, Fuming or (II) Nitric Acid, Over 40% or (III) Nitric Acid, 40% or Less
DOT Label: (I) Oxidizer and Poison or (II) Oxidizer and Corrosive or (III) Corrosive
DOT Hazard Class: (I) and (II) Oxidizer or (III) Corrosive Material
DOT ID Nos. (I) UN2032; (II) UN2031; (III) NA1760
IMO Class: 8 (All Types of Nitric Acid)
IMO Label: (I) Corrosive, Oxidizer, Poison; or (II) and (III) Corrosive
References: 1, 2, 26, 38, 84-94, 100, 112, 113, 114.

Judgments as to the suitability of information herein for purchaser's purposes are necessarily purchaser's responsibility. Therefore, although reasonable care has been taken in the preparation of such information, Genium Publishing Corp. extends no warranties, makes no representations and assumes no responsibility as to the accuracy or suitability of such information for application to purchaser's intended purposes or for consequences of its use.

Prepared by PJ Igoe, BS
Industrial Hygiene Review: DJ Wilson, CIH
Medical Review: MJ Hardies, MD

Copyright © 1988 Genium Publishing Corporation.
Any commercial use or reproduction without the publisher's permission is prohibited.

@@@ DOC. NO. 4320

I.C. NO. X44190, 44220, 44450, 44460, 44470, 44500

MATERIAL SAFETY DATA SHEET
ANDERSON LABORATORIES, INC.
5901 FITZHUGH AVENUE
FORT WORTH, TEXAS 76119
TELEPHONE 817-457-4474 EMERGENCY TEL. 800-424-9300(CHEMTREC)

DATE 4/24/85
THE MATERIALS LISTED IN THIS DATA SHEET ARE CLASSIFIED IN ACCORDANCE WITH THE DEFINITIONS SET FORTH IN 29CFR PARTS 1915, 1916 AND 1917.

I. PRODUCT NAMES: NITRIC ACID, PERCENTAGE SOLUTIONS TO 25% V/V
NITRIC ACID, 1 + 4 ASTM D-2576
NITRIC ACID, 2.0 NORMAL
NITRIC ACID, 2.85 NORMAL
NITRIC ACID, 3.10 NORMAL
NITRIC ACID, 6.00 NORMAL

CHEMICAL FAMILY INORGANIC ACID TRADE NAME BANCO
DOT SHIPPING NAME NITRIC ACID 40% OR LESS.
DOT HAZARD CLASS CORROSIVE MATERIAL DOT I.D. NO. NA1760

II. COMPONENTS: NITRIC ACID (CAS NO 7697-37-2) 12.6 TO 37% W/V

III. PERTINENT PHYSICAL DATA:
BOILING PT.100 C MAX FLASH PT. N/A VAPOR PRESSURE 20MM MIN HG AT 20 C.
APPEARANCE AND ODOR: COLORLESS LIQUID WITH CHARACTERISTIC ODOR.

IV. FIRE AND EXPLOSION DATA: REACTS WITH MOST METALS TO RELEASE HYDROGEN GAS WHICH CAN FORM EXPLOSIVE MIXTURES WITH AIR.

V. HEALTH HAZARD DATA: SEE X

VI. REACTIVITY DATA: AVOID CONTACT WITH STRONG ALKALIES, ORGANIC MATERIALS, AND REDUCING MATERIALS.

VII. SPILL AND LEAK PROCEDURES: SMALL SPILL: COVER THE CONTAMINATED SURFACE WITH SODIUM BICARBONATE OR A SODA ASH/SLAKED LIME MIXTURE (50-50). MIX AND ADD WATER IF NECESSARY TO FORM A SLURRY. SCOOP UP SLURRY AND WASH SITE WITH SODA ASH SOLUTION.

VIII. SPECIAL PROTECTION INFORMATION: USE NORMAL LABORATORY SAFETY DEVICES.

IX. SPECIAL PRECAUTIONARY INFORMATION: USE PRUDENT LABORATORY PRACTICES.

X. FIRST AID AND OTHER PROCEDURES: IF SWALLOWED: DO NOT INDUCE VOMITING. VOMITING WILL CAUSE FURTHER DAMAGE TO THE THROAT. DILUTE BY GIVING WATER. GIVE MILK OF MAGNESIA. KEEP WARM, QUIET. GET MEDICAL ATTENTION IMMEDIATELY.

@@@ DOC. NO. 4320

I.C. NO. X44190, 44220, 44450, 44460, 44470, 44500

MATERIAL SAFETY DATA SHEET
ANDERSON LABORATORIES, INC.
5901 FITZHUGH AVENUE
FORT WORTH, TEXAS 76119
TELEPHONE 817-457-4474 EMERGENCY TEL. 800-424-9300(CHEMTREC)

DATE 4/24/85
THE MATERIALS LISTED IN THIS DATA SHEET ARE CLASSIFIED IN ACCORDANCE WITH THE DEFINITIONS SET FORTH IN 29CFR PARTS 1915, 1916 AND 1917.

DISCLAIMER OF LIABILITY

THE INFORMATION IN THIS MSDS WAS OBTAINED FROM SOURCES WHICH WE BELIEVE ARE RELIABLE. HOWEVER, THE INFORMATION IS PROVIDED WITHOUT ANY REPRESENTATION OR WARRANTY, EXPRESS OR IMPLIED, REGARDING ITS ACCURACY OR CORRECTNESS.

THE CONDITIONS OR METHODS OF HANDLING, STORAGE, USE AND DISPOSAL OF THE PRODUCT ARE BEYOND OUR CONTROL AND MAY BE BEYOND OUR KNOWLEDGE. FOR THIS AND OTHER REASONS, WE DO NOT ASSUME RESPONSIBILITY DIRECTLY OR INDIRECTLY AND EXPRESSLY DISCLAIM LIABILITY FOR LOSS, DAMAGE OR EXPENSE ARISING OUT OF OR IN ANY WAY CONNECTED WITH THE HANDLING, STORAGE, USE OR DISPOSAL OF THE PRODUCT OR THE INFORMATION FURNISHED THEREWITH.***

Material Safety Data Sheet

From Genium's Reference Collection
Genium Publishing Corporation
1145 Catalyn Street
Schenectady, NY 12303-1836 USA
(518) 377-8855

GENIUM PUBLISHING CORP.

Nitrogen, Gas

Issued: April 1980
Revised: April 1986

SECTION 1. MATERIAL IDENTIFICATION 21

MATERIAL NAME: NITROGEN

DESCRIPTION: Gas supplied in cylinders (2000+ psig) or cold liquid supplied in vented Dewar containers.

OTHER DESIGNATIONS: N_2, CAS #7727-37-9, ASTM #D1933

MANUFACTURER/SUPPLIER: Available from several suppliers, including:
Air Products & Chemicals, Inc., Industrial Gas Division, PO Box 538, Allentown, PA 18105; Telephone: (215) 481-4911
Airco Industrial Gases of the Boc Group, Inc., 575 Mountain Avenue, Murray Hill, NJ 07974; Telephone: (201) 464-81000
Union Carbide Corp., Linde Div., 39 Old Ridgebury Rd., Danbury, CT 06817; Telephone: (203) 794-5300

HMIS
H: 2
F: 0
R: 0
PPE*
*See Sect. 8

(Liquified)
R 1
I 1
S 2 (Liquid)
K 0

SECTION 2. INGREDIENTS AND HAZARDS

	%	HAZARD DATA
Nitrogen, CAS #7727-37-9	>99.5	No TLV Established.
Oxygen, CAS # 7782-44-7	< 0.5	

SECTION 3. PHYSICAL DATA

Boiling Point, 760 mm Hg ... -320.4°F (-195.8°C)
Vapor Density (Air = 1) ... 0.967
Solubility in Water @ 20°C, Vols./100 vols. ... 1.6
Density (liq.), g/cm^3 ... 0.8
Melting Point ... -345.7°F (-209.86°C)
Critical Temperature ... -232.8°F (-147.1°C)
Critical Pressure, Atm ... 33.5
Molecular Weight ... 28.01
Expansion Ratio, Liquid to Gas @ 70°F ... 1:696

Appearance and odor: A colorless, odorless, tasteless gas or a cryogenic liquid.

SECTION 4. FIRE AND EXPLOSION DATA

Flash Point and Method	Autoignition Temp.	Flammability Limits in Air	LOWER	UPPER
Not Found	Not Found	Nonflammable	Not Found	Not Found

Use extinguishing media that are appropriate to the surrounding fire. Do not discharge solid streams of water into liquid N_2. Use water spray to cool fire-exposed containers or, if desirable, to increase the rate of evaporation of the liquid if the increased rate can be controlled (cryogenic liquid will rapidly freeze water). Nitrogen is a nonflammable material that will not support combustion. It presents no unusual explosion hazard unless the compressed gas is exposed to fire; then containers may rupture violently. Nitrogen cylinders are equipped with pressure-relief devices that are designed to vent N_2 when they are exposed to elevated temperatures and pressures. When liquid nitrogen is spilled it can release a rapidly vaporizing cloud that will create an oxygen-deficient atmosphere.

SECTION 5. REACTIVITY DATA

Nitrogen is stable when stored in closed containers. It does not polymerize. Nitrogen is noncorrosive and is nearly inert at room temperature. At high temperatures it can combine with oxygen to form oxides, and with hydrogen to form ammonia. When heated with carbon in the presence of alkalies or barium oxide it may form cyanides. It can form nitrides with lithium, silicon, calcium, strontium, and barium when it is at a red heat.

It has been reported that nitrogen can be oxidized explosively by ozone.

Lithium and titanium at an elevated temperature can burn in a nitrogen atmosphere. Berylium can be ignited in a mixed nitrogen-and-carbon dioxide atmosphere.

Nitrogen will react with oxygen in the presence of sparking (from an electric arc or a gas-fired furnace) to produce nitric oxide gas.

Copyright © 1986 Genium Publishing Corporation.
Any commercial use or reproduction without the publisher's permission is prohibited.

SECTION 6. HEALTH HAZARD INFORMATION

Nitrogen is not listed as a carcinogen by the NTP, IARC, or OSHA.
This material is nontoxic and is classified as a simple asphyxiant by virtue of its displacement of oxygen. Symptoms of exposure depend on the degree and the duration of oxygen deficiency. They can include increased frequency and volume of breathing, increased pulse rate, muscular incoordination, fatigue, nausea, vomiting, and collapse. Inhalation of pure nitrogen atmosphere produces immediate loss of consciousness; death follows unless air/oxygen breathing can be quickly restored. Contact with liquid nitrogen or cold vapors can cause cryogenic burns (severe frostbite/freeze burns).
FIRST AID: CONTACT WITH LIQUID NITROGEN: Promptly flush areas affected with lots of tepid water to reduce freezing of tissue. (Do not apply direct heat to affected areas!) Do not rub frozen areas. Loosely apply dry, sterile, bulky dressings to protect area from infection and from further injury. Get medical help.*
INHALATION: Caution! Would-be rescuers need to be concerned with their own safety in oxygen-deficient areas. Use self-contained breathing equipment. Remove victim to fresh air. Quickly restore and/or support his breathing as required, administering oxygen if available. Get medical help.*
INGESTION: Get medical help.* ACUTE EFFECTS: Gas - Simple asphyxiation by displacement of oxygen. Liquid - Cryogenic burns. PRIMARY ENTRY: Inhalation
* GET MEDICAL ASSISTANCE = In plant, paramedic, community. Get medical help for further treatment, observation, and support after first aid.

SECTION 7. SPILL, LEAK, AND DISPOSAL PROCEDURES

Notify safety personnel of major nitrogen leaks or spills. Shut off leak if you can do so without risk. Evacuate all personnel from the danger area until ventilation can restore a safe oxygen level. Emergency personnel need self-contained breathing equipment. Minor leaks (which are dangerous in enclosed areas) can be detected by painting the suspected area of leakage with a soap solution. Prevent liquid nitrogen from contacting vulnerable steel structures and vehicle tires (see sect. 9). Allow spilled liquid to evaporate.

DISPOSAL: Remove a liquid nitrogen container or leaking cylinder outdoors or place into a hood with good forced ventilation. Allow gas to discharge at a moderate rate. Defective cylinders should be tagged to indicate defect. Close the valve and return the defective cylinder to supplier.

SECTION 8. SPECIAL PROTECTION INFORMATION

Provide adequate general and local exhaust ventilation to prevent workplace atmospheres from becoming oxygen deficient (minimum O_2 volume = 18%). Provide air-supplied or self-contained breathing equipment for emergency or nonroutine situations where the nitrogen level is excessive. Use a safety line and a standby worker when respirator-protected personnel enter a hazardously nitrogen-enriched area. (The standby worker should have a self-contained breathing apparatus immediately available.) Those working with liquid nitrogen should wear approved insulating gloves, safety glasses, and other protective clothing as required by use conditions to prevent any skin contact with liquid nitrogen. Cuffless trousers should be worn outside high-topped shoes. Safety shoes are recommended for those handling cylinders of gases.

Wear safety gloves and approved insulated gloves. Use air-supplied or self-contained breathing apparatus.

Contact lenses pose a special hazard; soft lenses may absorb irritants, and all lenses concentrate them.

SECTION 9. SPECIAL PRECAUTIONS AND COMMENTS

STORAGE SEGREGATION: Store in a cool, dry, well-ventilated, low fire-risk area. Protect containers against physical damage.
SPECIAL HANDLING/STORAGE: Protect containers from extremes of temperature and weather. (Do not allow any part of a compressed gas cylinder to be exposed to temperatures above 125°F [51.6°C]). Follow general safety procedures for handling and securing compressed gas cylinders. Liquid nitrogen storage areas should be kept clean and free from flammable materials. Make sure that liquid nitrogen containers are properly vented to prevent buildup of pressure. All pressure equipment and process lines should be designed so that the minimum burst pressure is at least four (4) times the expected maximum pressure. Certain materials are unsuitable for service in contact with liquid nitrogen because they become extremely brittle and can be readily shattered by impact.
DOT Classification: Nonflammable Gas UN1066 (Compressed); UN1977 (Cryogenic Liquid)
LABEL: Nonflammable Gas
Data Source(s) Code: 1, 4-11, 14, 17, 25, 51, 63, 82, 84. CK

Judgements as to the suitability of information herein for purchaser's purposes are necessarily purchaser's responsibility. Therefore, although reasonable care has been taken in the preparation of such information, Genium Publishing Corp. extends no warranties, makes no representations and assumes no responsibility as to the accuracy or suitability of such information for application to purchaser's intended purposes or for consequences of its use.

Approvals J.D. Accrocco 1/87.
Indust. Hygiene/Safety DJW 12-86
Medical Review

Copyright © 1986 Genium Publishing Corporation.
Any commercial use or reproduction without the publisher's permission is prohibited.

Copyright © April 1, 1986

Material Safety Data Sheet

From Genium's Reference Collection
Genium Publishing Corporation
1145 Catalyn Street
Schenectady, NY 12303-1836 USA
(518) 377-8855

GENIUM PUBLISHING CORP.

Issued: October 1986
Revised: August 1987

SECTION 1. MATERIAL IDENTIFICATION

MATERIAL NAME: *n*-PENTANE

DESCRIPTION (Origin/Uses): Prepared by dehydration and subsequent hydrogenation of 2- and 3-pentanol. Found in petroleum and is a constituent of petroleum ether. Used as an industrial solvent.

OTHER DESIGNATIONS: Amyl Hydride; C_5H_{12}; NIOSH *RTECS* #RZ9450000; CAS #0109-66-0

HMIS
H 1
F 4
R 0
PPE*
*See sect. 8

R 1
I -
S 1
K 4

MANUFACTURER/SUPPLIER: Available from several suppliers, including: Ashland Chemical Co., Industrial Chemicals & Solvents Division, PO Box 2219, Columbus, OH 43216; Telephone: (614) 889-3844

COMMENTS: *n*-Pentane is a serious fire and explosion hazard.

SECTION 2. INGREDIENTS AND HAZARDS

	%	HAZARD DATA
n-Pentane, CAS #0109-66-0; NIOSH *RTECS* #RZ9450000 $H_3C-CH_2-CH_2-CH_2-CH_3$ NIOSH REL 1986 10-Hr TWA: 120 ppm, 350 mg/m^3 15-Min Ceiling: 610 ppm, 1800 mg/m^3 Current OSHA PEL-TWA: 1000 ppm (2950 mg/m^3). The 1987-88 ACGIH TLVs are TWA = 600 ppm (1800 mg/m^3) and STEL = 750 ppm (2250 mg/m^3). *Immediately dangerous to life and health	>99	TOXICITY DATA Human, Inhalation, LC_{Lo}: 130000 ppm Human, Inhalation, TC_{Lo}: 90000 ppm/5 Min. Mouse, Intravenous, LD_{50}: 446 mg/kg IDLH* Level: 15000 ppm

SECTION 3. PHYSICAL DATA

Boiling Point ... 97°F (36.1°C)
Vapor Pressure ... 400 Torr at 65.3°F (18.5°C)
Vapor Density (Air = 1) ... 2.5
Solubility in Water ... 0.04% at 68°F (20°C)
Viscosity ... 0.43 at 32°F (0°C)
Specific Gravity ... 0.626 at 68°F (20°C)
Melting Point ... -202°F (-130°C)
Evaporation Rate (n-BuAc = 1) ... 28.6
Volatiles, % ... 100
Molecular Weight ... 72.15 Grams/Mole

Appearance and odor: Clear, colorless, mobile liquid. Mild gasolinelike odor. Threshold odor concentration: 50% recognition at 990 ppm.

COMMENTS: *n*-Pentane's high vapor density, volatility, and evaporation rate will generate explosive and flammable concentrations of vapor.

SECTION 4. FIRE AND EXPLOSION DATA

Flash Point and Method	Autoignition Temperature	Flammability Limits in Air	LOWER	UPPER
<-40°F (<-40°C)	500°F (260°C)	% by Volume	1.5%	7.8%

EXTINGUISHING MEDIA: Use carbon dioxide, dry chemical, or foam. Water is ineffective in putting out a fire involving *n*-pentane, and a water stream will spread flames; but a water spray should be used to cool fire-exposed containers to prevent pressure rupture. Also, water spray may be used to flush spills away from exposures to sources of ignition. This flammable liquid is a dangerous fire hazard and a dangerous explosion hazard. Fight fire from a safe distance. UNUSUAL FIRE/EXPLOSION HAZARDS: The heavier-than-air vapors of *n*-pentane may travel along low-lying surfaces to distant sources of ignition and then flash back to the original source of the material. SPECIAL FIRE-FIGHTING PROCEDURES: *n*-Pentane is an OSHA class IA flammable liquid. Wear a self-contained breathing apparatus with a full facepiece operated in a pressure-demand or other positive-pressure mode. This material is extremely flammable. Exercise due caution to protect against flashbacks.

SECTION 5. REACTIVITY DATA

n-Pentane is stable. Hazardous polymerization cannot occur.

CHEMICAL INCOMPATIBILITIES: *n*-Pentane is incompatible with oxidizing agents.

CONDITIONS TO AVOID: Avoid sources of ignition such as sparks, excessive heat, open flame, and lighted tobacco products.

PRODUCTS OF HAZARDOUS DECOMPOSITION can include oxides of carbons.

Copyright © 1987 Genium Publishing Corporation.
Any commercial use or reproduction without the publisher's permission is prohibited.

SECTION 6. HEALTH HAZARD INFORMATION

n-Pentane is not listed as a carcinogen by the NTP, IARC, or OSHA.

SUMMARY OF RISKS: Vapors of this material are mildly narcotic and may cause irritation to the respiratory passages. (It has been reported that human exposures at 5000 ppm for 10 minutes did not cause mucous membrane irritation.) Extremely high and sustained concentrations may cause central nervous system depression and narcosis. This material is a defatting agent; repeated or prolonged skin contact with its liquid may result in drying, cracking, and dermatitis. Eye contact can be irritating. Swallowed liquid can vaporize (BP 97°F [36.1°C]) in the trachea. Aspiration into the lungs will cause dilution of alveolar air (asphyxiation hazard). TARGET ORGANS: Eyes, skin, respiratory system. PRIMARY ENTRY: Inhalation. ACUTE EFFECTS: Eyes, skin, and respiratory tract irritation; and possibly central nervous system depression. CHRONIC EFFECTS: Unknown. MEDICAL CONDITIONS AGGRAVATED BY LONG-TERM EXPOSURE: None reported.

FIRST AID: EYE CONTACT: Immediately flush eyes, including under the eyelids, gently but thoroughly with plenty of running water for at least 15 minutes. Get medical help.* SKIN CONTACT: Remove contaminated clothing. Flush affected area with water; wash with soap and water. Get medical help.* INHALATION: Remove victim to fresh air. Restore and/or support his breathing as required. Get medical help.* INGESTION: Do not induce vomiting. Never give anything by mouth to someone who is unconscious or convulsing. Get medical help.*

* GET MEDICAL ASSISTANCE = IN PLANT, PARAMEDIC, COMMUNITY. Get medical help for further treatment, observation, and support after first aid.

SECTION 7. SPILL, LEAK, AND DISPOSAL PROCEDURES

SPILL/LEAK: Notify safety personnel of *n*-pentane spills or leaks.. If a spill or leak has not ignited, use water spray to disperse the gas or vapor and to protect those who are attempting to stop a leak. Keep upwind of a leak or spill. Remove sources of heat or ignition. Provide maximum explosion-proof ventilation. Cleanup personnel need protection against inhalation of vapors and contact with liquid. Flush waste to the ground and away from sensitive areas with a cold water spray. Small spills can be absorbed with vermiculite, picked up with nonsparking tools, or allowed to evaporate with good ventilation or in a hood or open area. Pick up large spills if it is safe to do so and place them into an appropriate container for recovery or disposal. Keep waste out of sewers or places where it can vaporize into confined spaces. DISPOSAL: Burn properly (because of material's low flash point) in an approved incinerator. Follow Federal, state, and local regulations. Aquatic Toxicity, TLm 96: 100-10 ppm. *n*-Pentane is reported in the 1980 EPA TSCA Inventory. EPA Hazardous Waste Number (40 CFR 261.21, Ignitability): D001. *n*-Pentane is not designated as a hazardous substance by the EPA (40 CFR 116.4). EPA Reportable Quantity (40 CFR 117.3): Not Listed.

SECTION 8. SPECIAL PROTECTION INFORMATION

GOGGLES: Wear chemical safety goggles or eyeglasses to prevent eye contact where splashing is possible.

GLOVES: Wear rubber or neoprene gloves to prevent skin contact.

RESPIRATOR: For emergency or nonroutine exposures above the TLV, use a NIOSH-approved respirator with an organic vapor canister or air-supplied or self-contained breathing apparatus below 5000 ppm.

VENTILATION: Provide general and local explosion-proof exhaust ventilation to meet TLV requirements. The ventilation systems must be explosion proof and nonsparking.

SAFETY STATIONS: Make eyewash stations, washing facilities, and safety showers available in areas of use and handling.

CONTAMINATED EQUIPMENT: Contact lenses pose a special hazard; soft lenses may absorb irritants, and all lenses concentrate them.

OTHER PERSONAL PROTECTIVE EQUIPMENT: Wear protective clothing appropriate to the work situation to prevent skin contact. Remove soiled clothing and launder it before wearing it again, because it is a health and fire hazard.

COMMENTS: Practice good personal hygiene. Keep materials off of your clothes and equipment. Avoid transferring materials from hands to mouth while eating, drinking, or smoking.

SECTION 9. SPECIAL PRECAUTIONS AND COMMENTS

STORAGE SEGREGATION: Store *n*-pentane in tightly closed containers in a cool, well-ventilated area away from oxidizing agents and sources of heat and ignition. Protect containers from physical damage. SPECIAL HANDLING/STORAGE: Ground and bond containers during transfers to prevent the generation of static sparks. Use nonsparking tools. Use metal safety cans for handling small amounts. Storage and handling must be suitable for an OSHA Class IA flammable liquid. Do not smoke where this material is stored or used. ENGINEERING CONTROLS: The heavier-than-air *n*-pentane vapors may travel to distant sources of ignition and flash back. These vapors collect in low-lying areas; minimize sources of ignition there.

OTHER PRECAUTIONS: Avoid breathing *n*-pentane vapors! Prevent its contact with skin and eyes! Do not eat this material! Institute exposure-monitoring and record-keeping requirements that have been proposed by NIOSH for alkanes.

TRANSPORTATION DATA (per 49 CFR 172.101-2):

DOT Shipping Name: Pentane
DOT Hazard Class: Flammable Liquid
DOT Required Label: Flammable Liquid
DOT ID No. UN1265
IMO Class: 3.1
IMO Label: Flammable Liquid

References: 1-12, 14, 16, 23, 25, 27, 31, 34, 38, 42, 45, 47, 49, 54, 55, 58, 59, 63, 73, 75, 82, 87-94. CK

Judgements as to the suitability of information herein for purchaser's purposes are necessarily purchaser's responsibility. Therefore, although reasonable care has been taken in the preparation of such information, Genium Publishing Corp. extends no warranties, makes no representations and assumes no responsibility as to the accuracy or suitability of such information for application to purchaser's intended purposes or for consequences of its use.

Approvals

Indust. Hygiene/Safety 12/87

Medical Review 12/87

Copyright © August 1, 1987

Copyright © 1987 Genium Publishing Corporation.
Any commercial use or reproduction without the publisher's permission is prohibited.

ENSYS INC.

MATERIAL SAFETY DATA SHEET

Trade Name: PETRO RISc™ Test Kit

Description: An immunoassay test kit for the determination of Petroleum Hydrocarbons in soil samples

Hazardous Ingredients	CAS Number
1. Extraction and dilution reagent * Methanol	67-56-1
2. Substrate A * N,N-Dimethylformamide	68-12-2
3. Stop Solution * Sulfuric acid, 1 M (6% v/v)	7664-93-9

*See attached Material Safety Data Sheet for this particular hazardous chemical.

The information presented in this MSDS is believed to be accurate and represents the best information currently available to us. However, we make no warranty of merchantability or any other warranty, expressed or implied with respect to such information, and we assume no liability resulting from its use. Users should make their own investigations to determine the suitability of the information for their particular purposes.

Gerald L. Alvey, Director of Manufacturing
EnSys Inc.
P.O. Box 14063
Research Triangle Park, NC 27709
(800) 242-7472

Revised: 10/20/92

SECTION V - REACTIVITY DATA

Stability - Unstable:
Stable: X

Conditions to Avoid: Heat, sparks or other sources of ignition.

Incompatible Materials: Acids, acid chlorides, acid anhydrides, oxidizing agents, reducing agents, and alkali metals.

Hazardous Dcmp Pdts: Toxic fumes of carbon monoxide and carbon dioxide.

Hazardous Polymerization - May Occur:
Will Not Occur: X

Conditions to Avoid: N/A

SECTION VI - HEALTH HAZARD DATA

Routes of Entry: Inhalation? Yes Skin? Yes Ingestion? Yes

Health Hazards: Exposure to Methanol may result in severe skin and eye irritation, blindness and narcosis. It can be absorbed through the skin.

Carcinogenicity: NTP? N/A IARC? N/A OSHA? N/A

Symptoms of Exposure: Exposure to Methanol may cause burning sensation, coughing, wheezing, laryngitis, shortness of breath, headache, nausea, vomiting, eye damage, convulsions, fatigue, drowsiness, and central nervous system depression.

Medical Conditions Aggravated by Exposure: N/A

Emergency and First Aid Procedures: If ingested, give victim large quantities of liquid and transport to a medical facility. In case of external exposure, wash affected areas with large amounts of water and transport to a medical facility. If breathing is disturbed, give artificial respiration while transporting to a medical facility.

SECTION VII - PRECAUTIONS FOR SAFE HANDLING AND USE

Steps to be Taken in Case Material is Released or Spilled: Remove all sources of ignition. Use absorbent paper to pick up all spilled material. If necessary, soak absorbent paper in an appropriate solvent such as toluene or alcohol to pick up remaining traces.

Waste Disposal Method: Waste materials should be disposed of under conditions which meet Federal, State, and Local environmental control regulations.

Precautions to be Taken in Handling and Storing: Store at 0°C.
Protect from light.

Other Precautions: N/A

SECTION VIII - CONTROL MEASURES

Respiratory Protection: Avoid inhalation of vapors. Cartridge type respirator with organic vapor cartridges recommended.

Ventilation - Local Exhaust: Use with forced ventilation.
General Mechanical: Normal laboratory air exchange.
Special: N/A

Protective Gloves: Use two dissimilar types. PVC or Neoprene over latex.

Other Protective Clothing or Equipment: N/A

Work/Hygienic Practices: Only experienced personnel should be allowed to handle this material.

END

MATERIAL SAFETY DATA SHEET

IDENTITY: Methanol
CAS NUMBER: 67-56-1

SECTION I

Manufacturer: Radian Corporation
8501 North Mopac Blvd.
P.O. Box 201088
Austin, TX 78720-1088

Emergency Telephone Number: (512) 454-4797

Date Prepared: September 10, 1992

SECTION II - HAZARDOUS INGREDIENTS/IDENTITY INFORMATION

Hazardous Components	OSHA PEL	ACGIH TLV	Other Limits	%
Methanol	Transitional TWA 200ppm Final TWA 200ppm STEL 250ppm	TWA 200ppm STEL 250ppm	---	100

SECTION III - PHYSICAL/CHEMICAL CHARACTERISTICS

Boiling Point(degrees C): 64.6 (148°F)

Specific Gravity (Water=1): 0.7913

Vapor Pressure (mmHg): 97 @ 20°C

Melting Point(degrees C): -98

Vapor Density (Air=1): 1.11

Evaporation Rate (Butyl Acetate=1): 5.9

Solubility in Water: Soluble

Appearance and Odor: Clear, colorless liquid, slight alcoholic odor.

SECTION IV - FIRE AND EXPLOSION HAZARD DATA

Flash Point: 52°F (11°C)
Method Used: Closed Cup

Flammable Limits
LEL: 6.0% UEL: 36.5%

Extinguishing Media: Dry chemical, carbon dioxide or Halon extinguisher.

Special Fire Fighting Procedures: N/A

Unusual Fire and Explosion Hazards: Flashback along vapor trail may occur.

The information contained herein is believed to be accurate and is supplied in good faith. Radian Corporation makes no warranty with respect to and assumes no legal responsibility for use of or reliance upon this information. Individuals receiving this data must exercise their own judgement in determining its suitability for a particular purpose.

MATERIAL: SUBSTRATE A

DESCRIPTION: A polyethylene dropper bottle (yellow cap) containing 5 mL liquid reagent.

HAZARDOUS INGREDIENTS:

Reagent	Weight %	Nature of Hazard
N,N-Dimethylformamide	26	Skin and eye irritant

PHYSICAL DATA:

Appearance: Clear to slightly bluish colored solution

Melting or freezing point: < 0° C/32° F (water)

Boiling point: > 100° C/212° F (water)

Solubility in water: Dilutable

FIRE AND EXPLOSION HAZARD DATA:

Extinguishing media: Foam, alcohol foam, CO_2, dry chemical, or water/fog

Special fire-fighting procedures: Wear self-contained breathing apparatus and protective clothing to prevent contact with skin and eyes.

Unusual fire and explosion hazards: N/A

HEALTH HAZARD DATA:

Effects of Overexposure:

Inhalation: Adverse health effects from vapors and spray mists in poorly ventilated areas may include irritation of the mucous membranes of the nose, throat, respiratory tract and symptoms of headache and nausea.

Skin Contact: Prolonged and repeated contact with product may cause skin irritation.

Eye Contact: Direct contact with product may result in eye irritation.

Emergency and First-Aid Procedures:

Inhalation: Remove subject to fresh air. Seek medical attention if necessary.

Eye and Skin Contact: Flush eyes or skin with copious amounts of water. Wash contaminated clothing before reuse. Consult a physician if irritation persists.

REACTIVITY DATA:

Stability: Stable

Conditions to avoid: N/A

Hazardous decomposition products: Carbon monoxide, carbon dioxide, nitrogen oxides

Hazardous polymerization: Will not occur

Conditions to avoid: N/A

Incompatible materials to avoid: Acid chlorides, oxidizing agents, chloroformates, reducing agents, halogens

---

SPILL OR LEAK PROCEDURE:

Steps to be taken in case of spill: Contain spill and then clean-up with copious amounts of water. Avoid contact with skin and clothing.

Waste disposal methods: Observe all Federal, State, and local laws concerning health and pollution.

SPECIAL PROTECTION INFORMATION:

Respiratory protection:	None required if good ventilation is maintained. Otherwise, wear MSHA/NIOSH approved respirator suitable for vapor or mist concentrations encountered.

STORAGE AND LABELING:

Storage temperature: Store at 25° C (room temperature)

This product is a mixture that may contain one or more hazardous chemicals. The hazardous ingredients listed are only those as required by 29 CFR 1910.1200.

While the information and recommendations set forth in this document are believed to be accurate as of the revision date, ENSYS INC. makes no warranty with respect to such information, and we assume no liability resulting from its use. Users should make their own investigations to determine the suitability of the information for their particular purposes.

Revised 10/20/92

MATERIAL: STOP SOLUTION

DESCRIPTION: A polyethylene dropper bottle (red cap) containing 5 mL liquid reagent.

HAZARDOUS INGREDIENT:

Reagent	Concentration
Sulfuric Acid	6% v/v (1 M)

PRECAUTIONARY MEASURES

Danger! Corrosive. Liquid and mist cause severe burns to all body tissue. May be fatal if swallowed. Harmful if inhaled. Inhalation may cause lung damage.

Do not get in eyes, on skin, or on clothing.
Do not breathe mist.
Keep container closed.
Use only with adequate ventilation.
Wash thoroughly after handling.
This substance is classified as a POISON under the Federal Caustic Poison Act.

EMERGENCY/FIRST AID

In all cases call a physician. In case of contact, immediately flush skin or eyes with plenty of water for at least 15 minutes. If swallowed, DO NOT INDUCE VOMITING! Give large quantities of water. Never give anything by mouth to an unconscious person. If inhaled, remove to fresh air. If not breathing, give artificial respiration. If breathing is difficult, give oxygen.

DOT Hazard Class: Corrosive Material

PHYSICAL DATA:

Appearance: Colorless liquid

Odor: Odorless

Solubility: Infinite @ 20° C.

Boiling point: > 100°C.

Melting point: < 0°C.

Specific gravity: 1.05

Vapor density: Not available

Vapor pressure (mm Hg): < 760

Evaporation rate: No information found.

FIRE AND EXPLOSION INFORMATION:

Fire: Not combustible, but substance is a strong oxidizer and its heat of reaction with reducing agents or combustibles may cause ignition. Reacts with most metals releasing flammable, potentially explosive hydrogen gas.

Explosion: Not combustible, but substance is a strong oxidizer and its heat of reaction with reducing agents or combustibles may cause ignition.

Fire extinguishing media: Dry chemical, foam or carbon dioxide. Water spray may be used to keep fire exposed containers cool.

Special information: In the event of a fire, wear full protective clothing and NIOSH-approved self-contained breathing apparatus with full facepiece operated in the pressure demand or other positive pressure mode.

REACTIVITY DATA:

Stability: Stable under ordinary conditions of use and storage.

Hazardous decomposition products: Toxic fumes of oxides of sulfur. Reacts with carbonates to generate carbon dioxide gas, and with cyanides and sulfides to form poisonous hydrogen cyanide and hydrogen sulfide respectivel

Hazardous polymerization: Will not occur.

Incompatibilities: Bases, organic material, halogens, metal acetylides, oxides and hydrides, strong oxidizing and reducing agents and many other reactive substances.

LEAK/SPILL DISPOSAL INFORMATION:

Dike and cover leaking or spilled liquid with dirt, vermiculite, kitty-litter or other inert absorbent. Cover spill with sodium bicarbonate or soda ash and mix. Clean-up personnel require protective clothing and respiratory protection from vapors and mists. Neutralized waste may be containerized and disposed in a RCRA approved waste disposal facility. Flush area of spill with dilute soda ash solution and discard to sewer.

Reportable Quantity (RQ)(CWA/CERCLA): 1000 lbs.

NFPA Ratings: Health: 3
Flammability: 0
Reactivity: 2
Other: None

While the information and recommendations set forth in this document are believed to be accurate as of the revision date, ENSYS INC,. makes no warranty with respect to such information, and we assume no liability resulting from its use. Users should make their own investigations to determine the suitability of the information for their particular purposes.

Revised 10/20/92

MYRON L COMPANY

6115 CORTE DEL CEDRO
CARLSBAD, CA. 92009

MATERIAL SAFETY DATA SHEET

ESSENTIALLY SIMILAR TO U.S. DEPT OF LABOR FORM OSHA-20

SECTION 1 NAME & PRODUCT

CHEMICAL NAME: BUFFERED PHTHALATE SOLUTION

CATALOG NUMBER (CAS#)

877-24-7

TRADE NAME & SYNONYMS:

PH REFERENCE BUFFER SOLUTION
PH 4.0

FORMULA:

$HOCOC_6H_4COOK$

CHEMICAL FAMILY: BUFFERED PHTHALATE DILUTE SOLUTION

SECTION 2 PHYSICAL DATA

BOILING POINT, 760mm Hg (°C)	100	SPECIFIC GRAVITY	>1.0
MELTING POINT (°C)	APPROX 0	SOLUBILITY IN H_2O,% BY WT.@20°C	MISCIBLE
VAPOR PRESSURE @ 20°C	<20 TORR	APPEARANCE AND ODOR	
VAPOR DENSITY (AIR = 1)	.023Kg/M^3	CLEAR OR PINK ODORLESS LIQUID	
PERCENT VOLATILES BY VOLUME	>90	EVAPORATION RATE	1.0

SECTION 3 FIRE & EXPLOSION HAZARD DATA

FLASH POINT (TEST METHOD)	N/A	FLAMMABLE LIMITS N/A	Lel -	Uel -
EXTINGUISHING MEDIA	NON-FLAMMABLE			
SPECIAL HAZARDS & PROCEDURES	N/A			
UNUSUAL FIRE & EXPLOSION HAZARDS	N/A			

SECTION 4 REACTIVITY DATA

STABLE XX	CONDITIONS TO AVOID N/A
UNSTABLE	MATERIALS TO AVOID N/A
	( )WATER ( )ACIDS ( )BASES ( )OTHER SPECIFY

SECTION 5 SPILL OR LEAK PROCEDURES AND DISPOSAL

STEPS TO BE TAKEN IN CASE MATERIAL IS RELEASED OR SPILLED:

CLEAN SPILL USING ABSORBENT MATERIALS USING SOAP AND WATER, AND THEN VENTILATE AREA

WASTE DISPOSAL METHOD: NO SPECIAL INSTRUCTIONS

NOTE: DISPOSE OF ALL WASTES IN ACCORDANCE WITH FEDERAL,STATE & LOCAL REGULATIONS

SECTION 6 HEALTH HAZARD DATA

THRESHOLD LIMIT VALUE: NONE KNOWN

EFFECTS OF OVEREXPOSURE: IRRITATING TO EYES & MUCOUS MEMBRANES, AND DIGESTIVE TRACT

FIRST AID PROCEDURES:

EYE CONTACT: FLUSH WITH WATER
SKIN CONTACT: WASH WITH SOAP & WATER
IF SWALLOWED: DRINK PLENTY OF WATER, DO NOT INDUCE VOMITING

SECTION 7 SPECIAL PROTECTION INFORMATION

VENTILATION, RESPIRATORY PROTECTION, PROTECTIVE CLOTHING, EYE PROTECTION

SAFETY GLASSES, LATEX OR RUBBER GLOVES, AND STANDARD LAB CLOTHES

SECTION 8 SPECIAL HANDLING AND STORING PRECAUTIONS

STORE AT ROOM TEMPERATURE,
NORMAL USE DOES NOT GENERATE A HAZARDOUS SITUATION

SECTION 9 HAZARDOUS INGREDIENTS

(REFER TO SECTIONS 3 THROUGH 8)

CHEMICAL NAME	CAS NUMBER
N/A	

SECTION 10 OTHER INFORMATION

ORION MATERIAL SAFETY DATA SHEET

Orion Research Incorporated
THE SCHRAFFT CENTER
529 MAIN STREET, BOSTON, MA 02129 USA
TELEPHONE: 617-242-3900

I. PRODUCT IDENTIFICATION

PRODUCT NAME: Orion Application Solution pH 4.01 Buffer	CATALOG NO.: 910104 or 330004	EFFECTIVE DATE: 12/4/89
HAZARDOUS SHIPMENT LABELLING: DOT: NA	IATA: NA	
PREPARED BY: Thomas F. Gleason	TITLE: Safety Chemist	
APPROVED BY: Lynn Orlando	TITLE: Director Regulatory Matters	

II. HAZARDOUS INGREDIENTS (IDENTITY INFORMATION)

HAZARDOUS COMPONENTS * (SPECIFIC CHEMICAL IDENTITY; COMMON NAME(S))	CAS NO.	%	OSHA PEL	ACGIH TLV	LD 50
Potassium Hydrogen Phthalate (KHP)	877-21-7	1.01	None	None	NA*
Amaranth Red Dye	915-67-3 0 0005		None	None	NA
Deionized Water**	7732-18-5 98.99		NA	NA	NA

III. PHYSICAL DATA

BOILING POINT 760 mm Hg: 100°C	FREEZING POINT: 0°C
SPECIFIC GRAVITY (H_2O = 1): 1.0	VAPOR PRESSURE @: NA
pH @ °C: 4.01 25°C	SOLUBILITY IN WATER, % BY WT. @: Miscible
VOLATILES, % BY WT.:	EVAPORATION RATE (BUTYL ACETATE = 1): NA
VAPOR DENSITY (AIR = 1): NA	
APPEARANCE AND ODOR: Light red, odorless liquid	

IV. FIRE AND EXPLOSION HAZARD DATA

FLASH POINT (TEST METHOD): Not Flammable	AUTOIGNITION TEMPERATURE: NA	
FLAMMABLE LIMITS IN AIR, % BY VOLUME:	LOWER: NA	UPPER: NA
EXTINGUISHING MEDIA: Any		
SPECIAL FIRE-FIGHTING PROCEDURES: None, non flammable		
UNUSUAL FIRE AND EXPLOSION HAZARDS: None		

* Chemicals which are not classified as hazardous per U.S. OSHA guidelines (29CFR Parts 1915.2 or 1916.2) or the Massachusetts Substance List (105CMR670.000 Appendix A), will not necessarily be listed on this form even though one or more may be a constituent of this product.

Liability is expressly disclaimed for any loss or injury arising out of the use of this information or the use of any materials designated, safe use of the materials is the responsibility of the user.

Document No. 205487-001 Rev B

*NA = Not available/Not applicable
** = Non Hazardous Component
*** = Refers to Amaranth Red Dye

Printed in U.S.A.
Form MSDS/6880

ORION MATERIAL SAFETY DATA SHEET

PRODUCT NAME: Orion Application Solution pH 4.01 Buffer **CATALOG NO.:** 910104 or 330004

V. REACTIVITY DATA

STABILITY: UNSTABLE ☐ STABLE ☒ **CONDITIONS TO AVOID:** None

INCOMPATIBILITY (MATERIALS TO AVOID): HNO_3

HAZARDOUS DECOMPOSITION PRODUCTS: None

HAZARDOUS POLYMERIZATION: MAY OCCUR ☐ WILL NOT OCCUR ☒ **CONDITIONS TO AVOID:** None

VI. HEALTH HAZARD DATA

ROUTE(S) OF ENTRY:	INHALATION?	SKIN?	INGESTION?
	No	Yes	Yes

HEALTH HAZARDS (ACUTE AND CHRONIC)

Acute: Low hazard for acute because of low concentration of salts.

Chronic: Possible skin irritant for prolonged exposure.

CARCINOGENICITY:	NTP?	IARC MONOGRAPHS? ***	OSHA REGULATED?
	Amaranth is suspected/Not found	(animal positive)	Not found

SIGNS AND SYMPTOMS OF EXPOSURE

Irritation of skin

MEDICAL CONDITIONS GENERALLY AGGRAVATED BY EXPOSURE

Could aggravate diseases of skin

EMERGENCY AND FIRST AID PROCEDURES

Wash off contact area with water. If ingested, give large amounts of water. Consult physician.

VII. PRECAUTIONS (SAFE HANDLING AND USE)

STEPS TO BE TAKEN IN CASE MATERIAL IS RELEASED OR SPILLED

Wash down drain with excess water.

WASTE DISPOSAL METHOD

Same as above.

PRECAUTIONS TO BE TAKEN IN HANDLING AND STORING

Suitable for any general handling and storage. This product is not regulated under SARA TITLE III.

OTHER PRECAUTIONS

Hazard Ratings: Scale (0-3), health 1, flammability 0, reactivity 1, persistance 0.

VIII. CONTROL MEASURES

RESPIRATORY PROTECTION (SPECIFY TYPE): None

VENTILATION		
	LOCAL EXHAUST: No	SPECIAL: No
	MECHANICAL (GENERAL): No	OTHER: No

PROTECTIVE GLOVES: Yes **EYE PROTECTION:** Safety Glasses

OTHER PROTECTIVE CLOTHING OR EQUIPMENT: No

WORK/HYGIENIC PRACTICES: No eating or drinking while working with this product.

BECKMAN

MATERIAL SAFETY DATA SHEET

MANUFACTURER: BECKMAN INSTRUMENTS, INC.
TELEPHONE (714) 773-8061
ADDRESS: 2500 HARBOR BLVD., BOX 3100, FULLERTON, CA 92634-3100
PRODUCT: LIQUID BUFFER, COLORED OR CLEAR

BUFFER VALUE:	pH 4.00	pH 7.00	pH 10.01
PART NUMBER(S):	3506 139347 566001 582511 582517 582822 534033	3501 139348 566000 566002 566003 582512 582521 582823 534034	3505 188098 566005 582513 582525 582824 534035

SECTION I — GENERAL

Chemical Name & Synonym	Phthalate Buffer	Phosphate Buffer	Carbonate Buffer
Trade Name & Synonyms	pH 4 Buffer Solution	pH 7 Buffer Solution	pH 10 Buffer Solution
Chemical Family	Aqueous Salt Solution	Aqueous Salt Solution	Aqueous Salt Solution
Formula	See below	See below	See below

SECTION II — HAZARDOUS INGREDIENTS

Not Considered Hazardous		Not Considered Hazardous		Not Considered Hazardous	
Potassium Hydrogen Phthalate (CAS 877-24-7)	<1%	Potassium Dihydrogen Phosphate (CAS 7778-77-0)	<5%	Sodium Carbonate (CAS 497-19-8)	<5%
Thimerosal (CAS 54-64-8)	0.02%	Disodium Hydrogen Phosphate (CAS 7558-79-4)	<5%	Sodium Bicarbonate (CAS 144-55-8)	<5%
Red Food Coloring	Trace	Thimerosal (CAS 54-64-8)	0.02%	Thimerosal (CAS 54-64-8)	0.02%
(3506, 139347 & 582511 are Colorless)		Green Food Coloring	Trace	Blue Food Coloring	Trace
		(3501, 139348 & 582812 are Colorless)		(3505, 188098 & 582513 are Colorless)	

SECTION III — PHYSICAL DATA

Boiling Point (Deg. C)	100	100	100
Vapor Pressure (mmHg)	24mm @ 20°C	24mm @ 20°C	24mm @ 20°C
Vapor Density (Air = 1)	0.6	0.6	0.6
Specific Gravity (H_2O = 1)	1	1	1
% Volatile by Volume	99%	95 + %	95 + %
Evaporation Rate (H_2O = 1)	1	1	1
Solubility in Water	Aqueous Solution	Aqueous Solution	Aqueous Solution
Appearance & Odor	Red or Colorless Solution No Odor	Green or Colorless Solution No Odor	Blue or Colorless Solution No Odor
Other	None	None	None

SECTION IV — FIRE AND EXPLOSION HAZARD

Flammable Limits (%)	NA	NA	NA
—LEL	NA	NA	NA
—UEL	NA	NA	NA
Flash Point (Method Used)	Not Flammable	Not Flammable	Not Flammable
Extinguishing Media	NA	NA	NA
Special Fire-Fighting Procedures	NA	NA	NA
Unusual Fire & Explosion Hazards	NA	NA	NA

SECTION V — HEALTH HAZARD DATA

Threshold Limit Value	Not Determined	Not Determined	Not Determined
Effects Of Overexposure	May be slight eye or skin irritant. Wash affected areas thoroughly with water.	May be slight eye or skin irritant. Wash affected areas thoroughly with water.	May be slight eye or skin irritant. Wash affected areas thoroughly with water.
Emergency & First Aid Procedures	Contains small amounts of Mercury salts, consult physician if ingested.	Contains small amounts of Mercury salts, consult physician if ingested.	Contains small amounts of Mercury salts, consult physician if ingested.

SECTION VI — REACTIVITY DATA

Stability	Stable	Stable	Stable
Incompatibility (Materials To Avoid)	None	None	None
Hazardous Decomposition Products	Traces of Mercury Compounds	Traces of Mercury Compounds	Traces of Mercury Compounds
Hazardous Polymerization	Will Not Occur	Will Not Occur	Will Not Occur

SECTION VII — SPILL OR LEAK PROCEDURE

Steps To Be Taken In Case of Leak Or Spill	Absorb And Discard	Absorb And Discard	Absorb And Discard
Waste Disposal Method	Liquid buffer may be a hazardous waste and should be managed in accordance with appropriate federal, state and local regulations.	Liquid buffer may be a hazardous waste and should be managed in accordance with appropriate federal, state and local regulations.	Liquid buffer may be a hazardous waste and should be managed in accordance with appropriate federal, state and local regulations.

SECTION VIII — SPECIAL PROTECTION INFORMATION

Respiratory Protection	None Required	None Required	None Required
Ventilation	No Special Requirement	No Special Requirement	No Special Requirement
Protective Gloves	Not Required	Not Required	Not Required
Eye Protection	Safety Glasses Suggested	Safety Glasses Suggested	Safety Glasses Suggested
Other Protective Equipment	None	None	None

SECTION IX — SPECIAL PRECAUTIONS

Storage and Handling	No Special Precautions	No Special Precautions	No Special Precautions
Other	None	None	None
Administrative Reference	009-SID	007-SID	008-SID-6823
Date, Last Revision	4/15/87	4/15/87	4/15/87

NOTICE: While Beckman Instruments, Inc. believes the information contained herein is accurate and valid, Beckman makes no warranty or representation as to its validity, accuracy, or currency. Beckman shall not be liable or otherwise responsible in any way for use of either this information, or the material to which it applies. Disposal of hazardous material may be subject to federal, state, or local laws or regulations.

MSDS VERSION 4.1, CPAD

© 1987 Beckman Instruments, Inc.

BECKMAN
MADE IN U.S.A.

011-247999-A

MATERIAL SAFETY DATA SHEET

MANUFACTURER: BECKMAN INSTRUMENTS, INC.
TELEPHONE NO.: (714) 773-8061
ADDRESS: *2500 HARBOR BLVD., BOX 3100, FULLERTON, CA 92634-3100*

PRODUCT:	**Electrode Storage Solution**	**Electrode Filling Solution**	**Electrode Filling Solution 1M KCl, SAT AgCl**	**Electrode Filling Solution 4M KCl, SAT AgCl**
PART NUMBER(S):	566576 534148	566468 3502	598943	566467 4787 8262 531012 531055

SECTION I — GENERAL

Chemical Name & Synonym	None	Potassium Chloride Solution	Potassium Chloride, Silver Chloride, Water	Potassium Chloride, Silver Chloride, Water
Trade Name & Synonyms	Electrode Storage Solution	Electrode Filling Solution	Electrode Filling Solution	Electrode Filling Solution
Chemical Family	Aqueous Solution	Aqueous Salt Solution	Aqueous Salt Solution	Aqueous Salt Solution
Formula	See Below	See Below	See Below	See Below

SECTION II — INGREDIENTS

	Potassium Hydrogen Phthalate (CAS 877-24-7)	<1.0%	Potassium Chloride (CAS 7447-40-7)	30.0%	Potassium Chloride (CAS 7447-40-7)	7.5%
	Potassium Chloride (CAS 7447-40-7)	1.5%	Water	70.0%	Silver Chloride (CAS 7783-90-6)	<1.0%
	Water	97.5%			Water	Balance

	Potassium Chloride (CAS 7447-40-7)	30.0%		
	Silver Chloride (CAS 7783-90-6)	<1.0%		
	Water	70.0%		

SECTION III — PHYSICAL AND CHEMICAL DATA

Boiling Point (Deg. C)	100	104	100	104
Vapor Pressure (mmHg) @ 20°C	24	24	24	24
Vapor Density (Air = 1)	0.5	0.5	0.6	0.5
Specific Gravity (H_2O = 1)	1	1.2	1	1.2
% Volatile by Volume	90+	70	Approx. 92	70
Evaporation Rate (H_2O = 1)	1	1	1	1
Solubility in Water	Water Solution	Aqueous Solution	Aqueous Solution	Aqueous Solution
Appearance & Odor	Clear Solution, No Odor	Clear, Colorless Solution, No Odor	Colorless Solution, Few White Crystals May Be Present	Colorless Solution, Few White Crystals May Be Present
Others	None	None	None	None

SECTION IV — FIRE AND EXPLOSION HAZARD DATA

Flammable Limits (%)	Not Applicable	Not Applicable	Not Applicable	Not Applicable
—LEL	Not Applicable	Not Applicable	Not Applicable	Not Applicable
—UEL	Not Applicable	Not Applicable	Not Applicable	Not Applicable
Flash Point (Method Used)	Not Flammable	Not Flammable	Not Flammable	Not Flammable
Extinguishing Media	Not Applicable	Not Applicable	Not Applicable	Not Applicable
Special Fire-Fighting Procedures	Not Applicable	Not Applicable	Not Applicable	Not Applicable
Unusual Fire & Explosion Hazards	Not Applicable	Not Applicable	Not Applicable	Not Applicable

SECTION V — HEALTH HAZARD DATA

Route Of Entry	Primary route of entry is ingestion.	Primary route of entry is ingestion.	Primary route of entry is ingestion.	Primary route of entry is ingestion
Carcinogenic Assessment	Not Applicable	Not Applicable	This material has not been identified as a known or suspect carcinogen by NTP, IARC or OSHA.	This material has not been identified as a known or suspect carcinogen by NTP, IARC or OSHA.
Threshold Limit Value	Not Assigned	None	.01/mg/M^3	.01/mg/M^3
Effects Of Overexposure	Not Applicable	Large doses by mouth can cause GI irritation, purging, weakness, and circulatory disturbances.	Large doses by mouth can cause GI irritation, purging, weakness, and circulatory disturbances.	Large doses by mouth can cause GI irritation, purging, weakness, and circulatory disturbances.
Emergency & First Aid Procedures	Consult Physician	Consult Physician	Consult Physician	Consult Physician

SECTION VI — REACTIVITY DATA

Stability	Stable	Stable	Stable	Stable
Incompatibility (Materials To Avoid)	None	None	None	None
Hazardous Decomposition Products	None	None	None	None
Hazardous Polymerization	Will Not Occur	Will Not Occur	Will Not Occur	Will Not Occur

SECTION VII — SPILL OR LEAK PROCEDURE

Steps To Be Taken In Case Material Is Released Or Spilled	Clean up spills with absorbent material, flush with water.	Clean up spills with absorbent material, flush with water.	Clean up spills with absorbent material, flush with water.	Clean up spills with absorbent material, flush with water.
Waste Disposal Method	Ensure Compliance With Local, State And Federal Regulations	Ensure Compliance With Local, State And Federal Regulations	Ensure Compliance With Local, State And Federal Regulations	Ensure Compliance With Local State And Federal Regulations

SECTION VIII — SPECIAL PROTECTION INFORMATION

Respiratory Protection	Not Required	Not Required	Not Required	Not Required
Ventilation	No Special Requirement	No Special Requirement	No Special Requirement	No Special Requirement
Protective Gloves	Not Required	Not Required	Not Required	Not Required
Eye Protection	Safety Glasses Suggested	Safety Glasses Suggested	Safety Glasses Suggested	Safety Glasses Suggested
Other Protective Equipment	None	None	None	None

SECTION IX — SPECIAL PRECAUTIONS

Precautions To Be Taken In Handling And Storing	No Special Requirement	No Special Requirement	No Special Requirement	No Special Requirement
Other Precautions	None	None	None	None
Administrative Reference	002-SID-3441	011-SID-3495	344-SID-5589	006-SID-5629
Date Of Last Revision	7-5-88	7-5-88	7-5-88	7-5-88

NOTICE: While Beckman Instruments, Inc. believes the information contained herein is accurate and valid, Beckman makes no warranty or representation as to its validity, accuracy, or currency. Beckman shall not be liable or otherwise responsible in any way for use of either this information, or the material to which it applies. Disposal of hazardous material may be subject to federal, state, or local laws or regulations.

MSDS VERSION 5.0, CPAD

© 1988 Beckman Instruments, Inc.

CAT: NO. 22269

MATERIAL SAFETY DATA SHEET

PO#: DAMIAN SANDOVAL
HACH ORDER#: 478803

MSDS DATE: 1/06/93
CHANGE NO.: 8745

For Assistance, Contact:
Regulatory Affairs Dept.
PO Box 907 Ames, IA 50010
(800) 227-4224

HACH COMPANY
PO BOX 907
AMES, IA 50010

Emergency Telephone #
Rocky Mountain Poison Ctr.
(303) 623-5716

I. PRODUCT IDENTIFICATION

PRODUCT NAME: Buffer Powder Pillows pH 4.01 ± 0.02 @ 25°C
CAS NO.: NA CHEMICAL NAME: Not applicable
FORMULA: Not applicable CHEMICAL FAMILY: Not applicable

II. INGREDIENTS

Potassium Acid Phthalate ACS Grade
PCT: <100 CAS NO.: 877-24-7 SARA: NOT LISTED
TLV: Not established PEL: Not established
HAZARD: May cause irritation

SPADNS
PCT: <1 CAS NO.: 23647-14-5 SARA: NOT LISTED
TLV: Not established PEL: Not established
HAZARD: Toxicity unknown; may cause irritation

III. PHYSICAL DATA

STATE: solid APPEARANCE: Violet, red or orange powder
ODOR: Not determined SOLUBILITY IN: WATER: Soluble
ACID: Not determined OTHER: Not determined BOILING POINT: NA
MELTING PT.: ND SPEC GRAVITY: ND pH: of 10% soln = 4.0
VAPOR PRESSURE: Not applicable VAPOR DENSITY (air=1): NA
EVAPORATION RATE: NA METAL CORROSIVITY - ALUMINUM: ND STEEL: ND
STABILITY: Stable
STORAGE PRECAUTIONS: Store in a cool, dry place.

IV. FIRE, EXPLOSION HAZARD AND REACTIVITY DATA

FLASH PT.: Not applicable METHOD: NA
FLAMMABILITY LIMITS - LOWER: NA UPPER: NA
SUSCEPTIBILITY TO SPONTANEOUS HEATING: None
SHOCK SENSITIVITY: None AUTOIGNITION PT.: ND
EXTINGUISHING MEDIA: water, carbon dioxide, or dry chemical
FIRE/EXPLOSION HAZARDS: May emit toxic fumes in fire
HAZARDOUS DECOMP. PRODUCTS: May emit toxic fumes of carbon monoxide, carbon dioxide and potassium oxide in fire
OXIDIZER: No NFPA Codes: Health: 1 Flammability: 0 Reactivity: 0
CONDITIONS TO AVOID: Heat, moisture

V. HEALTH HAZARD DATA

THIS PRODUCT MAY BE: irritating to eyes.
ACUTE TOXICITY: Slightly toxic
ROUTES OF EXPOSURE: Not determined
TARGET ORGANS: Not determined
CHRONIC TOXICITY: Not determined
ROUTES OF EXPOSURE: Not determined
TARGET ORGANS: Not determined
CANCER INFORMATION: An ingredient of this mixture is a potential carcinogen.
ROUTES OF EXPOSURE: Not determined
TARGET ORGANS: Not determined
OVEREXPOSURE: May cause eye irritation
MEDICAL CONDITIONS AGGRAVATED BY EXPOSURE: None reported

VI. PRECAUTIONARY MEASURES

Avoid contact with eyes.
Do not breathe dust.
Wash thoroughly after handling.
PROTECTIVE EQUIPMENT: adequate ventilation, lab grade goggles, rubber gloves, lab coat

VII. FIRST AID

EYE AND SKIN CONTACT: Immediately flush eyes with water for 15 minutes. Call physician. Wash skin with soap and plenty of water.
INGESTION: Give large quantities of water. Call physician immediately.
INHALATION: Remove to fresh air.

VIII. SPILL AND DISPOSAL PROCEDURES

IN CASE OF SPILL OR RELEASE: Sweep up powder. Avoid breathing material. Dissolve in water. Flush down the drain with excess water.
DISPOSE OF IN ACCORDANCE WITH ALL FEDERAL, STATE, AND LOCAL REGULATIONS.

IX. TRANSPORTATION DATA

D.O.T. PROPER SHIPPING NAME: Not Currently Regulated
HAZARD CLASS: Not applicable ID: NA

I.C.A.O. PROPER SHIPPING NAME: Not Currently Regulated
HAZARD CLASS: NA ID: NA GROUP: NA

I.M.O. PROPER SHIPPING NAME: Not Currently Regulated
HAZARD CLASS: NA ID: NA GROUP: NA

X. REFERENCES

1) TLV's Threshold Limit Values and Biological Exposure Indices for 1988-1989. American Conference of Governmental Industrial Hygienists, 1988.
2) Air Contaminants, Federal Register, Vol. 54, No. 12, Thursday, January 19, 1989. pp. 2332-2983.
3) In-house information
4) Technical judgment
5) Fourth Annual Report on Carcinogens, 1985. National Toxicology Program Public Information Office NTP 85-002.

THE INFORMATION CONTAINED HEREIN IS BASED ON DATA CONSIDERED TO BE ACCURATE. HOWEVER, NO WARRANTY IS EXPRESSED OR IMPLIED REGARDING THE ACCURACY OF THESE DATA OR THE RESULTS TO BE OBTAINED FROM THE USE THEREOF.

(C) HACH CO. 1993

BDH INC.

M A T E R I A L S A F E T Y D A T A S H E E T

SECTION I CHEMICAL PRODUCT AND COMPANY IDENTIFICATION

MANUFACTURER:

BDH INC.
350 EVANS AVENUE
TORONTO, ONTARIO
CANADA, M8Z 1K5

INFORMATION PHONE NO.: 416-255-8521
HOURS: MON. TO FRI. (0830 - 1630)
CHEMTREC TRANSPORTATION EMERGENCY CENTER
(CHEMTREC) 24-HOUR...1-800-424-9300

PRODUCT NAME: BUFFER, PH 4.00, RED
CATALOGUE NUMBER(S): 34170-127, 34170-145, 34170-154, 34170-172
CHEMICAL NAME/OTHER NAME: BUFFER, PH 4.00, RED
CHEMICAL FORMULA: H2O, C12H9O, HOOCC6H4COOK, C20H11O10N2S3NA3
CHEMICAL FAMILY: MIXTURE

SECTION II COMPOSITION/INFORMATION ON INGREDIENTS

CHEMICAL NAME	CAS NO.	OSHA PEL	ACGIH TLV	%(W/V)
DOWICIDE A	132-27-4	-	-	0.05
POTASSIUM HYDROGEN PHTHALATE	877-24-7	-	-	1.02
AMARANTH	915-67-3	-	-	0.0028
WATER	7732-18-5	-	-	

SECTION III HAZARDS IDENTIFICATION

APPEARANCE: CLEAR, RED LIQUID

********** EMERGENCY OVERVIEW **********
* HANDLE IN ACCORDANCE WITH GOOD LABORATORY/ *
* INDUSTRIAL HYGIENE AND SAFETY PRACTICES *
****

POTENTIAL HEALTH EFFECTS (ACUTE & CHRONIC)

SYMPTOMS OF EXPOSURE: NO INFORMATION AVAILABLE
MEDICAL CONDITION AGGRAVATED BY EXPOSURE: NONE IDENTIFIED
ROUTES OF ENTRY: INHALATION, INGESTION
CARCINOGENICITY: DOWICIDE A IS LISTED AS A POSSIBLE CARCINOGEN BY IARC

SECTION IV FIRST AID MEASURES

EYE: IN CASE OF EYE CONTACT, FLUSH WITH PLENTY OF WATER FOR AT LEAST 15 MINUTES WHILE HOLDING THE EYELIDS OPEN. HAVE EYES EXAMINED BY MEDICAL PERSONNEL.

SKIN: IN CASE OF SKIN CONTACT, WASH WITH SOAP AND WATER. GET MEDICAL ATTENTION IF IRRITATION DEVELOPS OR PERSISTS.

INGESTION: IF SWALLOWED, DO NOT INDUCE VOMITING. GIVE VICTIM A GLASS OF WATER OR MILK. CALL A PHYSICIAN IMMEDIATELY. NEVER GIVE ANYTHING BY

MOUTH TO AN UNCONSCIOUS PERSON.

INHALATION: IF INHALED, REMOVE TO FRESH AIR.

SECTION V FIRE FIGHTING MEASURES

FLAMMABILITY CLASSIFICATION: NONCOMBUSTIBLE
EXTINGUISHING MEDIA: USE ANY SUITABLE FOR ADJACENT MATERIAL
FLASH POINT(F)/METHOD: NOT APPLICABLE
FIRE & EXPLOSION HAZARD: NONE IDENTIFIED
UPPER FLAMMABLE LIMIT (%): NOT APPLICABLE
LOWER FLAMMABLE LIMIT (%): NOT APPLICABLE
AUTOIGNITION TEMPERATURE: NOT APPLICABLE
FIREFIGHTING PROCEDURES: FIREFIGHTERS SHOULD WEAR A SELF CONTAINED BREATHING APPARATUS.
HAZARDOUS COMBUSTION PRODUCTS: COX
SENSITIVITY TO STATIC DISCHARGE: NO
SENSITIVITY TO MECHANICAL IMPACT: NO

SECTION VI ACCIDENTAL RELEASE MEASURES

LEAK OR SPILL CLEANUP: EVACUATE THE AREA OF ALL UNNECESSARY PERSONNEL. WEAR SUITABLE PROTECTIVE EQUIPMENT LISTED IN EXPOSURE CONTROLS/PERSONAL PROTECTION.
CONTAIN THE RELEASE AND ELIMINATE IT'S SOURCE, IF THIS CAN BE DONE WITHOUT RISK.
TAKE UP AND CONTAINERIZE FOR PROPER DISPOSAL AS DESCRIBED UNDER DISPOSAL.
COMPLY WITH FEDERAL, STATE, AND LOCAL REGULATIONS ON REPORTING RELEASES.
REFER
TO REGULATORY INFORMATION FOR REPORTABLE QUANTITY AND OTHER REGULATORY DATA.

SECTION VII HANDLING & STORAGE

HANDLING & STORAGE: STORE IN A COOL, DRY AREA.

SECTION VIII EXPOSURE CONTROLS/PERSONAL PROTECTION

ENGINEERING CONTROLS: ENGINEERING AND/OR ADMINISTRATIVE CONTROLS SHOULD BE IMPLEMENTED TO REDUCE EXPOSURE.

PERSONAL PROTECTIVE EQUIPMENT

GLOVES: NEOPRENE, PVC OR EQUIVALENT
RESPIRATORY PROTECTION: NONE SPECIFIED
EYE PROTECTION: SAFETY GLASSES
CLOTHING: NONE SPECIFIED

SECTION IX PHYSICAL & CHEMICAL PROPERTIES

PHYSICAL STATE: LIQUID
APPEARANCE: CLEAR, RED LIQUID
ODOR: ODORLESS
ODOR THRESHOLD: NOT APPLICABLE
VAPOR PRESSURE: NOT AVAILABLE
VAPOR DENSITY: NOT AVAILABLE
SPECIFIC GRAVITY: APPROX. 1
BOILING POINT (F): APPROX. 212$
MELTING POINT (F): APPROX 32$
EVAPORATION RATE: NOT AVAILABLE

PH: 4.00
SOLUBILITY IN WATER: SOLUBLE
OCTANOL/WATER PARTITION COEFFICIENT: NOT AVAILABLE
PER CENT VOLATILE BY VOL (%): 99
MOLECULAR WEIGHT: THIS PRODUCT IS A MIXTURE

SECTION X STABILITY & REACTIVITY

CHEMICAL STABILITY: NORMALLY STABLE
CONDITIONS TO AVOID: HEAT
MATERIALS TO AVOID: OXIDIZERS
HAZARDOUS POLYMERIZATION: DOES NOT OCCUR
HAZARDOUS DECOMPOSITION PRODUCTS: NONE

SECTION XI TOXICOLOGICAL INFORMATION

EFFECTS OF ACUTE EXPOSURE: NO INFORMATION AVAILABLE
EFFECTS OF CHRONIC EXPOSURE: NO INFORMATION AVAILABLE
LD50: 656 MG/KG (ORAL-RAT) DOWICIDE A
LC50: NOT AVAILABLE
IRRITANCY (DRAIZE TEST RESULTS): NO INFORMATION AVAILABLE
CARCINOGENICITY: DOWICIDE A IS LISTED AS A POSSIBLE CARCINOGEN
TERATOGENICITY: NO INFORMATION AVAILABLE
MUTAGENICITY: NO INFORMATION AVAILABLE
REPRODUCTIVE EFFECTS: NO INFORMATION AVAILABLE
SENSITIZATION TO PRODUCT: NO INFORMATION AVAILABLE
TARGET ORGANS: NONE IDENTIFIED

SECTION XII DISPOSAL CONSIDERATIONS

EPA WASTE NUMBER(S): THIS MATERIAL DOES NOT HAVE AN EPA WASTE NUMBER. ALWAYS CONTACT A PERMITTED WASTE DISPOSER (TSD) TO ASSURE COMPLIANCE WITH ALL CURRENT LOCAL, STATE AND FEDERAL REGULATIONS

SECTION XIII TRANSPORT INFORMATION

DOT SHIPPING NAME: NOT REGULATED
DOT NUMBER (UN): NOT REGULATED
PACKING GROUP: NOT REGULATED
HAZARD CLASS: NOT REGULATED

SECTION XIV REGULATORY INFORMATION

TSCA INVENTORY (YES/NO): YES, THIS MATERIAL IS A MIXTURE.THE CAS NUMBERS OF ALL COMPONENTS ARE LISTED ON THE TSCA INVENTORY.

COMPONENT	SARA EHS (302)	SARA EHS TPQ (LBS)	CERCLA RQ (LBS)
WATER	-	-	-
DOWICIDE A	-	-	-
POTASSIUM HYDROGEN PHTHALATE	-	-	-
AMARANTH	-	-	-

COMPONENT	OSHA FLOOR LIST	SARA 313	DEMINIMIS (SARA 313)(%)
WATER	-	-	-

DOWICIDE A	-	-	-
POTASSIUM HYDROGEN PHTHALATE	-	-	-
AMARANTH	-	-	-

SECTION XV OTHER INFORMATION

NFPA HAZARD RATINGS (0-4)

HEALTH: 0 FLAMMABILITY: 0 REACTIVITY: 0

NFPA SPECIAL WARNINGS: NONE
PREPARATION DATE: AUGUST 4, 1993
REVISION HISTORY: AUGUST 4, 1993
COMMENTS: NONE

PREPARED BY: TECHNICAL AFFAIRS DEPARTMENT, BDH INC.,
TORONTO, ONTARIO, CANADA
(416) 255-8521

THE STATEMENTS CONTAINED HEREIN ARE OFFERED FOR INFORMATIONAL PURPOSES ONLY AND ARE BASED UPON TECHNICAL DATA THAT BDH INC BELIEVES TO BE ACCURATE. IT IS INTENDED FOR USE ONLY BY PERSONS HAVING THE NECESSARY TECHNICAL SKILLS AND AT THEIR OWN DISCRETION AND RISK. SINCE CONDITIONS AND MANNER OF USE ARE OUTSIDE OUR CONTROL, WE MAKE NO WARRANTY, EXPRESS OR IMPLIED OF MERCHANTABILITY, FITNESS OR OTHERWISE.

COPYRIGHT BDH, 1993

"ISSUED BY VWR 11/25/93"

BDH INC.

M A T E R I A L S A F E T Y D A T A S H E E T

SECTION I CHEMICAL PRODUCT AND COMPANY IDENTIFICATION

MANUFACTURER:

BDH INC.
350 EVANS AVENUE
TORONTO, ONTARIO
CANADA, M8Z 1K5

INFORMATION PHONE NO.: 416-255-8521
HOURS: MON. TO FRI. (0830 - 1630)
CHEMTREC TRANSPORTATION EMERGENCY CENTER
(CHEMTREC) 24-HOUR...1-800-424-9300

PRODUCT NAME: BUFFER, PH 4.00
CATALOGUE NUMBER(S): 34170-106, 34170-136, 34170-163
CHEMICAL NAME/OTHER NAME: BUFFER, PH 4.00
CHEMICAL FORMULA: H2O, C12H9O, HOOCC6H4COOK
CHEMICAL FAMILY: MIXTURE

SECTION II COMPOSITION/INFORMATION ON INGREDIENTS

CHEMICAL NAME	CAS NO.	OSHA PEL	ACGIH TLV	%(W/V)
DOWICIDE A	132-27-4	-	-	0.05
POTASSIUM HYDROGEN PHTHALATE	877-24-7	-	-	1.02
WATER	7732-18-5	-	-	

SECTION III HAZARDS IDENTIFICATION

APPEARANCE: CLEAR, COLORLESS LIQUID

********** EMERGENCY OVERVIEW **********
* HANDLE IN ACCORDANCE WITH GOOD LABORATORY/ *
* INDUSTRIAL HYGIENE AND SAFETY PRACTICES *
****

POTENTIAL HEALTH EFFECTS (ACUTE & CHRONIC)

SYMPTOMS OF EXPOSURE: NO INFORMATION AVAILABLE
MEDICAL CONDITION AGGRAVATED BY EXPOSURE: NONE IDENTIFIED
ROUTES OF ENTRY: INHALATION, INGESTION
CARCINOGENICITY: DOWICIDE A IS LISTED AS A POSSIBLE CARCINOGEN BY IARC

SECTION IV FIRST AID MEASURES

EYE: IN CASE OF EYE CONTACT, FLUSH WITH PLENTY OF WATER FOR AT LEAST 15 MINUTES WHILE HOLDING THE EYELIDS OPEN. HAVE EYES EXAMINED BY MEDICAL PERSONNEL.

SKIN: IN CASE OF SKIN CONTACT, WASH WITH SOAP AND WATER. GET MEDICAL ATTENTION IF IRRITATION DEVELOPS OR PERSISTS.

INGESTION: IF SWALLOWED, DO NOT INDUCE VOMITING. GIVE VICTIM A GLASS OF WATER OR MILK. CALL A PHYSICIAN IMMEDIATELY. NEVER GIVE ANYTHING BY MOUTH TO AN UNCONSCIOUS PERSON.

INHALATION: IF INHALED, REMOVE TO FRESH AIR.

SECTION V FIRE FIGHTING MEASURES

FLAMMABILITY CLASSIFICATION: NONCOMBUSTIBLE
EXTINGUISHING MEDIA: USE ANY SUITABLE FOR ADJACENT MATERIAL
FLASH POINT(F)/METHOD: NOT APPLICABLE
FIRE & EXPLOSION HAZARD: NONE IDENTIFIED
UPPER FLAMMABLE LIMIT (%): NOT APPLICABLE
LOWER FLAMMABLE LIMIT (%): NOT APPLICABLE
AUTOIGNITION TEMPERATURE: NOT APPLICABLE
FIREFIGHTING PROCEDURES: FIREFIGHTERS SHOULD WEAR A SELF CONTAINED BREATHING APPARATUS.
HAZARDOUS COMBUSTION PRODUCTS: COX
SENSITIVITY TO STATIC DISCHARGE: NO
SENSITIVITY TO MECHANICAL IMPACT: NO

SECTION VI ACCIDENTAL RELEASE MEASURES

LEAK OR SPILL CLEANUP: EVACUATE THE AREA OF ALL UNNECESSARY PERSONNEL. WEAR SUITABLE PROTECTIVE EQUIPMENT LISTED IN EXPOSURE CONTROLS/PERSONAL PROTECTION.
CONTAIN THE RELEASE AND ELIMINATE IT'S SOURCE, IF THIS CAN BE DONE WITHOUT RISK.
TAKE UP AND CONTAINERIZE FOR PROPER DISPOSAL AS DESCRIBED UNDER DISPOSAL.
COMPLY WITH FEDERAL, STATE, AND LOCAL REGULATIONS ON REPORTING RELEASES.
REFER
TO REGULATORY INFORMATION FOR REPORTABLE QUANTITY AND OTHER REGULATORY DATA.

SECTION VII HANDLING & STORAGE

HANDLING & STORAGE: STORE IN A COOL, DRY AREA.

SECTION VIII EXPOSURE CONTROLS/PERSONAL PROTECTION

ENGINEERING CONTROLS: ENGINEERING AND/OR ADMINISTRATIVE CONTROLS SHOULD BE IMPLEMENTED TO REDUCE EXPOSURE.

PERSONAL PROTECTIVE EQUIPMENT

GLOVES: NEOPRENE, PVC OR EQUIVALENT
RESPIRATORY PROTECTION: NONE SPECIFIED
EYE PROTECTION: SAFETY GLASSES
CLOTHING: NONE SPECIFIED

SECTION IX PHYSICAL & CHEMICAL PROPERTIES

PHYSICAL STATE: LIQUID
APPEARANCE: CLEAR, COLORLESS LIQUID
ODOR: ODORLESS
ODOR THRESHOLD: NOT APPLICABLE
VAPOR PRESSURE: NOT AVAILABLE
VAPOR DENSITY: NOT AVAILABLE
SPECIFIC GRAVITY: APPROX. 1
BOILING POINT (F): APPROX. 212
MELTING POINT (F): APPROX 32
EVAPORATION RATE: NOT AVAILABLE
PH: 4.00

SOLUBILITY IN WATER: SOLUBLE
OCTANOL/WATER PARTITION COEFFICIENT: NOT AVAILABLE
PER CENT VOLATILE BY VOL (%): 99
MOLECULAR WEIGHT: THIS PRODUCT IS A MIXTURE

SECTION X STABILITY & REACTIVITY

CHEMICAL STABILITY: NORMALLY STABLE
CONDITIONS TO AVOID: HEAT
MATERIALS TO AVOID: OXIDIZERS
HAZARDOUS POLYMERIZATION: DOES NOT OCCUR
HAZARDOUS DECOMPOSITION PRODUCTS: NONE

SECTION XI TOXICOLOGICAL INFORMATION

EFFECTS OF ACUTE EXPOSURE: NO INFORMATION AVAILABLE
EFFECTS OF CHRONIC EXPOSURE: NO INFORMATION AVAILABLE
LD50: 656 MG/KG (ORAL-RAT) DOWICIDE A
LC50: NOT AVAILABLE
IRRITANCY (DRAIZE TEST RESULTS): NO INFORMATION AVAILABLE
CARCINOGENICITY: DOWICIDE A IS LISTED AS A POSSIBLE CARCINOGEN
TERATOGENICITY: NO INFORMATION AVAILABLE
MUTAGENICITY: NO INFORMATION AVAILABLE
REPRODUCTIVE EFFECTS: NO INFORMATION AVAILABLE
SENSITIZATION TO PRODUCT: NO INFORMATION AVAILABLE
TARGET ORGANS: NONE IDENTIFIED

SECTION XII DISPOSAL CONSIDERATIONS

EPA WASTE NUMBER(S): THIS MATERIAL DOES NOT HAVE AN EPA WASTE NUMBER.
ALWAYS CONTACT A PERMITTED WASTE DIPOSER (TSD) TO ASSURE COMPLIANCE WITH ALL CURRENT LOCAL, STATE AND FEDERAL REGULATIONS

SECTION XIII TRANSPORT INFORMATION

DOT SHIPPING NAME: NOT REGULATED
DOT NUMBER (UN): NOT REGULATED
PACKING GROUP: NOT REGULATED
HAZARD CLASS: NOT REGULATED

SECTION XIV REGULATORY INFORMATION

TSCA INVENTORY (YES/NO): YES, THIS MATERIAL IS A MIXTURE.THE CAS NUMBERS OF ALL
COMPONENTS ARE LISTED ON THE TSCA INVENTORY.

COMPONENT	SARA EHS (302)	SARA EHS TPQ (LBS)	CERCLA RQ (LBS)
WATER	-	-	-
DOWICIDE A	-	-	-
POTASSIUM HYDROGEN PHTHALATE	-	-	-

COMPONENT	OSHA FLOOR LIST	SARA 313	DEMINIMIS (SARA 313)(%)
WATER	-	-	-
DOWICIDE A	-	-	-
POTASSIUM HYDROGEN PHTHALATE	-	-	-

SECTION XV OTHER INFORMATION

NFPA HAZARD RATINGS (0-4)

HEALTH: 0 FLAMMABILITY: 0 REACTIVITY: 0

NFPA SPECIAL WARNINGS: NONE
PREPARATION DATE: AUGUST 4, 1993
REVISION HISTORY: AUGUST 4, 1993
COMMENTS: NONE

PREPARED BY: TECHNICAL AFFAIRS DEPARTMENT, BDH INC.,
TORONTO, ONTARIO, CANADA
(416) 255-8521

THE STATEMENTS CONTAINED HEREIN ARE OFFERED FOR INFORMATIONAL PURPOSES ONLY AND ARE BASED UPON TECHNICAL DATA THAT BDH INC BELIEVES TO BE ACCURATE. IT IS INTENDED FOR USE ONLY BY PERSONS HAVING THE NECESSARY TECHNICAL SKILLS AND AT THEIR OWN DISCRETION AND RISK. SINCE CONDITIONS AND MANNER OF USE ARE OUTSIDE OUR CONTROL, WE MAKE NO WARRANTY,EXPRESS OR IMPLIED OF MERCHANTABILITY,FITNESS OR OTHERWISE.

COPYRIGHT BDH, 1993

"ISSUED BY VWR 11/25/93"

MYRON L COMPANY

6115 CORTE DEL CEDRO
CARLSBAD, CA. 92009

MATERIAL SAFETY DATA SHEET

ESSENTIALLY SIMILAR TO U.S. DEPT OF LABOR FORM OSHA-20

SECTION 1 NAME & PRODUCT

CHEMICAL NAME: BUFFERED PHOSPHATE SOLUTION

CATALOG NUMBER (CAS#)
10049-21-5
7778-77-0

TRADE NAME & SYNONYMS:
PH REFERENCE BUFFER SOLUTION
PH 7.0

FORMULA:

NaH_2PO_4 & KH_2PO_4

CHEMICAL FAMILY:
BUFFERED PHOSPHATE
DILUTE SOLUTION

SECTION 2 PHYSICAL DATA

BOILING POINT, 760mm Hg ($^{\circ}C$)	100	SPECIFIC GRAVITY	>1.0
MELTING POINT ($^{\circ}C$)	0	SOLUBILITY IN H_2O,% BY WT.@20$^{\circ}C$	MISCIBLE
VAPOR PRESSURE @ 20$^{\circ}C$	<20 TORR	APPEARANCE AND ODOR	
VAPOR DENSITY (AIR = 1)	.023Kg/M^3	CLEAR OR YELLOW ODORLESS LIQUID	
PERCENT VOLATILES BY VOLUME	>90	EVAVORATION RATE	1.0

SECTION 3 FIRE & EXPLOSION HAZARD DATA

FLASH POINT (TEST METHOD)	N/A	FLAMMABLE LIMITS N/A	Lel -	Uel -
EXTINGUISHING MEDIA	NON-FLAMMABLE			
SPECIAL HAZARDS & PROCEDURES	N/A			
UNUSUAL FIRE & EXPLOSION HAZARDS	N/A			

SECTION 4 REACTIVITY DATA

STABLE XX	CONDITIONS TO AVOID N/A
UNSTABLE	MATERIALS TO AVOID N/A
	( )WATER ( )ACIDS ( )BASES ( )OTHER SPECIFY

SECTION 5 SPILL OR LEAK PROCEDURES AND

STEPS TO BE TAKEN IN CASE MATERIAL IS RELEASED OR SPILLED:

CLEAN SPILL USING ABSORBENT MATERIALS USING SOAP AND WATER, AND THEN VENTILATE AREA

WASTE DISPOSAL METHOD: NO SPECIAL INSTRUCTIONS

NOTE: DISPOSE OF ALL WASTES IN ACCORDANCE WITH FEDERAL,STATE & LOCAL REGULATIONS

SECTION 6 HEALTH HAZARD DATA

THRESHOLD LIMIT VALUE: NONE KNOWN

EFFECTS OF OVEREXPOSURE: IRRITATING TO EYES & MUCOUS MEMBRANES, AND DIGESTIVE TRACT

FIRST AID PROCEDURES:

EYE CONTACT: FLUSH WITH WATER
SKIN CONTACT: WASH WITH SOAP & WATER
IF SWALLOWED: DRINK PLENTY OF WATER, DO NOT INDUCE VOMITING

SECTION 7 SPECIAL PROTECTION INFORMATION

VENTILATION, RESPIRATORY PROTECTION, PROTECTIVE CLOTHING, EYE PROTECTION

SAFETY GLASSES, LATEX OR RUBBER GLOVES, AND STANDARD LAB CLOTHES

SECTION 8 SPECIAL HANDLING AND STORING PRECAUTIONS

STORE AT ROOM TEMPERATURE,
NORMAL USE DOES NOT GENERATE A HAZARDOUS SITUATION

SECTION 9 HAZARDOUS INGREDIENTS

(REFER TO SECTIONS 3 THROUGH 8)

CHEMICAL NAME	CAS NUMBER
N/A	

SECTION 10 OTHER INFORMATION

ORION MATERIAL SAFETY DATA SHEET

Orion Research Incorporated
THE SCHRAFFT CENTER
529 MAIN STREET, BOSTON, MA 02129 USA
TELEPHONE: 617-242-3900

I. PRODUCT IDENTIFICATION

PRODUCT NAME	CATALOG NO.	EFFECTIVE DATE
Orion Application Solution pH 7.00 Buffer	910107 & 330007	12/4/89

HAZARDOUS SHIPMENT LABELLING:	DOT	IATA
	NA	NA

PREPARED BY	TITLE
Thomas F. Flynn	Safety Chemist
APPROVED BY Lynn Orlowski	TITLE Director Regulatory Matters

II. HAZARDOUS INGREDIENTS (IDENTITY INFORMATION)

HAZARDOUS COMPONENTS * SPECIFIC CHEMICAL IDENTITY; COMMON NAME(S)	CAS NO.	%	OSHA PEL	ACGIH TLV	LD 50 mg/kg
Potassium Phosphate (KH_2PO_4)	7778-77-0	0.284	None	None	
Sodium Phosphate (Na_2HPO_4)	7558-79-4	0.413	None	None	Ivn-Dog 298
Sodium Chromate (Na_2CrO_4)	7775-11-3	0.013	50ug/m^3	50ug/m^3	IPR-Rat 57
Potassium Dichromate (K_2CrO_7)	778-50-9	0.00305	50ug/m^3	50ug/m^3	IPR-Rat 37
Deionized Water **	7732185	(99.28645)	None	None*	NA

III. PHYSICAL DATA

BOILING POINT 760 mm Hg: 100°C	FREEZING POINT: 0°C
SPECIFIC GRAVITY (H_2O = 1): 1.0	VAPOR PRESSURE @: NA***
pH @ 25 °C: 7.00	SOLUBILITY IN WATER, % BY WT. @: Miscible
VOLATILES, % BY WT.: NA	EVAPORATION RATE (BUTYL ACETATE = 1): NA
VAPOR DENSITY (AIR = 1): NA	
APPEARANCE AND ODOR: Light yellow, odorless liquid	

IV. FIRE AND EXPLOSION HAZARD DATA

FLASH POINT (TEST METHOD): Not flammable	AUTOIGNITION TEMPERATURE: NA
FLAMMABLE LIMITS IN AIR, % BY VOLUME:	LOWER: NA; UPPER: NA
EXTINGUISHING MEDIA: Any	
SPECIAL FIRE-FIGHTING PROCEDURES: None, non flammable	
UNUSUAL FIRE AND EXPLOSION HAZARDS: None	

* Chemicals which are not classified as hazardous per U.S. OSHA guidelines (29CFR Parts 1915.2 or 1916.2) or the Massachusetts Substance List (105CMR670.000 Appendix A), will not necessarily be listed on this form even though one or more may be a constituent of this product.

Liability is expressly disclaimed for any loss or injury arising out of the use of this information or the use of any materials designated, safe use of the materials is the responsibility of the user

Document No. 205489-001 Rev B

* = LD Lo
** = Non Hazardous Component
*** = Not applicable

Printed in U.S.A.
Form MSDS/6880

ORION MATERIAL SAFETY DATA SHEET

SHEET 2 OF 2

PRODUCT NAME: Orion Application Solution pH 7.00 Buffer **CATALOG NO.:** 910107 & 330007

V. REACTIVITY DATA

STABILITY: UNSTABLE ☐ STABLE ☒ CONDITIONS TO AVOID: None

INCOMPATIBILITY (MATERIALS TO AVOID): Mg and Na^+ Metals

HAZARDOUS DECOMPOSITION PRODUCTS: When heated phosphates can emit highly toxic fumes but for the amount of phosphates present in this solution it can be considered non hazardous.

HAZARDOUS POLYMERIZATION: MAY OCCUR ☐ WILL NOT OCCUR ☒ CONDITIONS TO AVOID: None

VI. HEALTH HAZARD DATA

ROUTE(S) OF ENTRY:	INHALATION?	SKIN?	INGESTION?
	No	No	Yes

HEALTH HAZARDS (ACUTE AND CHRONIC): Low hazard for both acute and chronic because of low concentration of phosphate salts.

CARCINOGENICITY:	NTP?	IARC MONOGRAPHS?	OSHA REGULATED?
	Not found	Not found	Not found

SIGNS AND SYMPTOMS OF EXPOSURE: Irritation of skin

MEDICAL CONDITIONS GENERALLY AGGRAVATED BY EXPOSURE: Could aggravate diseases of the skin.

EMERGENCY AND FIRST AID PROCEDURES: Wash off contact area with water. Give large amounts of water if ingested, contact physician.

VII. PRECAUTIONS (SAFE HANDLING AND USE)

STEPS TO BE TAKEN IN CASE MATERIAL IS RELEASED OR SPILLED: Wash down drain with excess water.

WASTE DISPOSAL METHOD: Dilute and wash down drain with excess water.

PRECAUTIONS TO BE TAKEN IN HANDLING AND STORING: Suitable for any general handling and storage. SARA TITLE III: Releases of (Na_2HPO_4) are subject to reporting under sec. 304 of TITLE III CERCLA.

OTHER PRECAUTIONS: Hazard Rating: Scale (0-3), health 0, flammability, 0, reactivity 0, persistance 0.

VIII. CONTROL MEASURES

RESPIRATORY PROTECTION (SPECIFY TYPE): None

VENTILATION			
LOCAL EXHAUST: No	SPECIAL: No		
MECHANICAL (GENERAL): No	OTHER: No		
PROTECTIVE GLOVES: No	EYE PROTECTION: Safety Glasses		
OTHER PROTECTIVE CLOTHING OR EQUIPMENT: No			

WORK/HYGIENIC PRACTICES: No eating or drinking while working with this product.

CAT. NO. 22270

MATERIAL SAFETY DATA SHEET

PO#: DAMIAN SANDOVAL
HACH ORDER#: 478603

MSDS DATE: 1/25/93
CHANGE NO.: 8745

For Assistance, Contact:
Regulatory Affairs Dept.
PO Box 907 Ames, IA 50010
(800) 227-4224

HACH COMPANY
PO BOX 907
AMES, IA 50010

Emergency Telephone #
Rocky Mountain Poison Ctr.
(303) 623-5716

I. PRODUCT IDENTIFICATION

PRODUCT NAME: Buffer Powder Pillows pH 7.00 ± 0.02 @ 25°C
CAS NO.: NA CHEMICAL NAME: Not applicable
FORMULA: Not applicable CHEMICAL FAMILY: Not applicable

II. INGREDIENTS

Sodium Phosphate, Dibasic, Anhydrous
PCT: <70 CAS NO.: 7558-79-4 SARA: NOT LISTED
TLV: Not established PEL: Not established
HAZARD: Moderately toxic; may cause irritation

Potassium Phosphate, Monobasic
PCT: <45 CAS NO.: 7778-77-0 SARA: NOT LISTED
TLV: Not established PEL: Not established
HAZARD: Moderately toxic; may cause irritation

Other component
PCT: <1 CAS NO.: NA SARA: NOT LISTED
TLV: Not applicable PEL: Not applicable
HAZARD: Not applicable

Any component of this mixture not specifically listed (eg. "other components") is not considered to present a carcinogen hazard.

III. PHYSICAL DATA

STATE: solid APPEARANCE: Yellow powder (darkens with age)
ODOR: Not determined SOLUBILITY IN: WATER: Soluble
ACID: Not determined OTHER: Not determined BOILING POINT: NA
MELTING PT.: ~160°C SPEC GRAVITY: ND pH: of 15.8% soln = 7.0
VAPOR PRESSURE: Not applicable VAPOR DENSITY (air=1): NA
EVAPORATION RATE: NA METAL CORROSIVITY - ALUMINUM: None STEEL: None
STABILITY: Stable
STORAGE PRECAUTIONS: Store in a cool, dry place.

IV. FIRE, EXPLOSION HAZARD AND REACTIVITY DATA

FLASH PT.: Not applicable METHOD: NA
FLAMMABILITY LIMITS - LOWER: NA UPPER: NA
SUSCEPTIBILITY TO SPONTANEOUS HEATING: None
SHOCK SENSITIVITY: None AUTOIGNITION PT.: ND EXTINGUISHING MEDIA: water
FIRE/EXPLOSION HAZARDS: May emit toxic fumes in fire.
HAZARDOUS DECOMP. PRODUCTS: May emit toxic fumes of phosphorus oxides in fire.
OXIDIZER: No NFPA Codes: Health: 1 Flammability: 0 Reactivity: 0
CONDITIONS TO AVOID: Heat, flames, exposure to moisture

V. HEALTH HAZARD DATA

THIS PRODUCT MAY BE: irritating to eyes.
ACUTE TOXICITY: Moderately toxic
ROUTES OF EXPOSURE: ingestion
TARGET ORGANS: Not determined
CHRONIC TOXICITY: Not determined
ROUTES OF EXPOSURE: Not determined
TARGET ORGANS: Not determined
CANCER INFORMATION: Not applicable
ROUTES OF EXPOSURE: Not applicable
TARGET ORGANS: Not applicable
OVEREXPOSURE: May cause eye irritation
MEDICAL CONDITIONS AGGRAVATED BY EXPOSURE: Pre-existing eye conditions.

VI. PRECAUTIONARY MEASURES

Protect from moisture
Avoid contact with eyes.
Do not breathe dust.
PROTECTIVE EQUIPMENT: adequate ventilation, lab grade goggles

VII. FIRST AID

EYE AND SKIN CONTACT: Flush with plenty of water.
INGESTION: Give large quantities of water. Call physician immediately.
INHALATION: Remove to fresh air.

VIII. SPILL AND DISPOSAL PROCEDURES

IN CASE OF SPILL OR RELEASE: Sweep up powder. Avoid breathing material. Dissolve in water. Flush down the drain with excess water.
DISPOSE OF IN ACCORDANCE WITH ALL FEDERAL, STATE, AND LOCAL REGULATIONS.

IX. TRANSPORTATION DATA

D.O.T. PROPER SHIPPING NAME: Not Currently Regulated
HAZARD CLASS: Not applicable ID: NA

I.C.A.O. PROPER SHIPPING NAME: Not Currently Regulated
HAZARD CLASS: NA ID: NA GROUP: NA

I.M.O. PROPER SHIPPING NAME: Not Currently Regulated
HAZARD CLASS: NA ID: NA GROUP: NA

X. REFERENCES

1) TLV's Threshold Limit Values and Biological Exposure Indices for 1988-1989. American Conference of Governmental Industrial Hygienists, 1988.
2) Air Contaminants, Federal Register, Vol. 54, No. 12, Thursday, January 19, 1989. pp. 2332-2983.
3) In-house information
4) Technical judgment
5) Vendor information.
6) Gosselin, R.E. et al. Clinical Toxicology of Commercial Products, 5th Ed. Baltimore: The Williams and Wilkins Co., 1984.

THE INFORMATION CONTAINED HEREIN IS BASED ON DATA CONSIDERED TO BE ACCURATE. HOWEVER, NO WARRANTY IS EXPRESSED OR IMPLIED REGARDING THE ACCURACY OF THESE DATA OR THE RESULTS TO BE OBTAINED FROM THE USE THEREOF.

(C) HACH CO. 1993

BDH INC.

M A T E R I A L S A F E T Y D A T A S H E E T

SECTION I CHEMICAL PRODUCT AND COMPANY IDENTIFICATION

MANUFACTURER:

BDH INC.
350 EVANS AVENUE
TORONTO, ONTARIO
CANADA, M8Z 1K5

INFORMATION PHONE NO.: 416-255-8521
HOURS: MON. TO FRI. (0830 - 1630)
CHEMTREC TRANSPORTATION EMERGENCY CENTER
(CHEMTREC) 24-HOUR...1-800-424-9300

PRODUCT NAME: BUFFER, PH 7.00, PH 6.86
CATALOGUE NUMBER(S): 34170-115, 34170-139, 34170-166, 34170-186
CHEMICAL NAME/OTHER NAME: BUFFER, PH 7.00, PH 6.86
CHEMICAL FORMULA: H2O, C12H9O, KH2PO4, NA2HPO4
CHEMICAL FAMILY: MIXTURE

SECTION II COMPOSITION/INFORMATION ON INGREDIENTS

CHEMICAL NAME	CAS NO.	OSHA PEL	ACGIH TLV	%(W/V)
DOWICIDE A	132-27-4	-	-	0.05
POTASSIUM DIHYDROGEN PHOSPHATE	7778-77-0	-	-	0.34-0.35
DI-SODIUM HYDROGEN PHOSPHATE	7558-79-4	-	-	0.35-0.58
WATER	7732-18-5	-	-	

SECTION III HAZARDS IDENTIFICATION

APPEARANCE: CLEAR, COLORLESS LIQUID

********** EMERGENCY OVERVIEW **********
* HANDLE IN ACCORDANCE WITH GOOD LABORATORY/ *
* INDUSTRIAL HYGIENE AND SAFETY PRACTICES *
****

POTENTIAL HEALTH EFFECTS (ACUTE & CHRONIC)

SYMPTOMS OF EXPOSURE: NO INFORMATION AVAILABLE
MEDICAL CONDITION AGGRAVATED BY EXPOSURE: NONE IDENTIFIED
ROUTES OF ENTRY: INHALATION, INGESTION
CARCINOGENICITY: DOWICIDE A IS LISTED AS A POSSIBLE CARCINOGEN BY IARC

SECTION IV FIRST AID MEASURES

EYE: IN CASE OF EYE CONTACT, FLUSH WITH PLENTY OF WATER FOR AT LEAST MINUTES WHILE HOLDING THE EYELIDS OPEN. HAVE EYES EXAMINED BY MEDICAL PERSONNEL.

SKIN: IN CASE OF SKIN CONTACT, WASH WITH SOAP AND WATER. GET MEDICAL ATTENTION IF IRRITATION DEVELOPS OR PERSISTS.

INGESTION: IF SWALLOWED, DO NOT INDUCE VOMITING. GIVE VICTIM A GLASS OF WATER

OR MILK. CALL A PHYSICIAN IMMEDIATELY. NEVER GIVE ANYTHING BY MOUTH TO AN UNCONSCIOUS PERSON.

INHALATION: IF INHALED, REMOVE TO FRESH AIR.

SECTION V FIRE FIGHTING MEASURES

FLAMMABILITY CLASSIFICATION: NONCOMBUSTIBLE
EXTINGUISHING MEDIA: USE ANY SUITABLE FOR ADJACENT MATERIAL
FLASH POINT(F)/METHOD: NOT APPLICABLE
FIRE & EXPLOSION HAZARD: NONE IDENTIFIED
UPPER FLAMMABLE LIMIT (%): NOT APPLICABLE
LOWER FLAMMABLE LIMIT (%): NOT APPLICABLE
AUTOIGNITION TEMPERATURE: NOT APPLICABLE
FIREFIGHTING PROCEDURES: FIREFIGHTERS SHOULD WEAR A SELF CONTAINED BREATHING APPARATUS.
HAZARDOUS COMBUSTION PRODUCTS: COX
SENSITIVITY TO STATIC DISCHARGE: NO
SENSITIVITY TO MECHANICAL IMPACT: NO

SECTION VI ACCIDENTAL RELEASE MEASURES

LEAK OR SPILL CLEANUP: EVACUATE THE AREA OF ALL UNNECESSARY PERSONNEL. WEAR SUITABLE PROTECTIVE EQUIPMENT LISTED IN EXPOSURE CONTROLS/PERSONAL PROTECTION.
CONTAIN THE RELEASE AND ELIMINATE IT'S SOURCE, IF THIS CAN BE DONE WITHOUT RISK.
TAKE UP AND CONTAINERIZE FOR PROPER DISPOSAL AS DESCRIBED UNDER DISPOSAL.
COMPLY WITH FEDERAL, STATE, AND LOCAL REGULATIONS ON REPORTING RELEASES.
REFER
TO REGULATORY INFORMATION FOR REPORTABLE QUANTITY AND OTHER REGULATORY DATA.

SECTION VII HANDLING & STORAGE

HANDLING & STORAGE: STORE IN A COOL, DRY AREA.

SECTION VIII EXPOSURE CONTROLS/PERSONAL PROTECTION

ENGINEERING CONTROLS: ENGINEERING AND/OR ADMINISTRATIVE CONTROLS SHOULD BE IMPLEMENTED TO REDUCE EXPOSURE.

PERSONAL PROTECTIVE EQUIPMENT

GLOVES: NEOPRENE, PVC OR EQUIVALENT
RESPIRATORY PROTECTION: NONE SPECIFIED
EYE PROTECTION: SAFETY GLASSES
CLOTHING: NONE SPECIFIED

SECTION IX PHYSICAL & CHEMICAL PROPERTIES

PHYSICAL STATE: LIQUID
APPEARANCE: CLEAR, COLORLESS LIQUID
ODOR: ODORLESS
ODOR THRESHOLD: NOT APPLICABLE
VAPOR PRESSURE: NOT AVAILABLE
VAPOR DENSITY: NOT AVAILABLE
SPECIFIC GRAVITY: APPROX. 1
BOILING POINT (F): APPROX. 212$
MELTING POINT (F): APPROX 32$

EVAPORATION RATE: NOT AVAILABLE
PH: 7.00 (34170-115, 34170-139, 34170-166)
6.86 (34170-186)
SOLUBILITY IN WATER: SOLUBLE
OCTANOL/WATER PARTITION COEFFICIENT: NOT AVAILABLE
PER CENT VOLATILE BY VOL (%): 99
MOLECULAR WEIGHT: THIS PRODUCT IS A MIXTURE

SECTION X STABILITY & REACTIVITY

CHEMICAL STABILITY: NORMALLY STABLE
CONDITIONS TO AVOID: HEAT
MATERIALS TO AVOID: OXIDIZERS
HAZARDOUS POLYMERIZATION: DOES NOT OCCUR
HAZARDOUS DECOMPOSITION PRODUCTS: NONE

SECTION XI TOXICOLOGICAL INFORMATION

EFFECTS OF ACUTE EXPOSURE: NO INFORMATION AVAILABLE
EFFECTS OF CHRONIC EXPOSURE: NO INFORMATION AVAILABLE
LD50: 656 MG/KG (ORAL-RAT) DOWICIDE A
LC50: NOT AVAILABLE
IRRITANCY (DRAIZE TEST RESULTS): NO INFORMATION AVAILABLE
CARCINOGENICITY: DOWICIDE A IS LISTED AS A POSSIBLE CARCINOGEN
TERATOGENICITY: NO INFORMATION AVAILABLE
MUTAGENICITY: NO INFORMATION AVAILABLE
REPRODUCTIVE EFFECTS: NO INFORMATION AVAILABLE
SENSITIZATION TO PRODUCT: NO INFORMATION AVAILABLE
TARGET ORGANS: NONE IDENTIFIED

SECTION XII DISPOSAL CONSIDERATIONS

EPA WASTE NUMBER(S): THIS MATERIAL DOES NOT HAVE AN EPA WASTE NUMBER.
ALWAYS CONTACT A PERMITTED WASTE DISPOSER (TSD) TO ASSURE COMPLIANCE WITH ALL CURRENT LOCAL, STATE AND FEDERAL REGULATIONS

SECTION XIII TRANSPORT INFORMATION

DOT SHIPPING NAME: NOT REGULATED
DOT NUMBER (UN): NOT REGULATED
PACKING GROUP: NOT REGULATED
HAZARD CLASS: NOT REGULATED

SECTION XIV REGULATORY INFORMATION

TSCA INVENTORY (YES/NO): YES, THIS MATERIAL IS A MIXTURE.THE CAS NUMBERS OF ALL COMPONENTS ARE LISTED ON THE TSCA INVENTORY.

COMPONENT	SARA EHS (302)	SARA EHS TPQ (LBS)	CERCLA RQ (LBS)
WATER	-	-	-
DOWICIDE A	-	-	-
POTASSIUM DIHYDROGEN PHOSPHATE	-	-	-
DI-SODIUM HYDROGEN PHOSPHATE	-	-	-

COMPONENT	OSHA FLOOR LIST	SARA 313	DEMINIMIS (SARA 313)(%

WATER	-	-	-
DOWICIDE A	-	-	-
POTASSIUM DI-HYDROGEN PHOSPHATE	-	-	-
DI-SODIUM HYDROGEN PHOSPHATE	-	-	-

SECTION XV OTHER INFORMATION

NFPA HAZARD RATINGS (C-4)

HEALTH: 0 FLAMMABILITY: 0 REACTIVITY: 0

NFPA SPECIAL WARNINGS: NONE
PREPARATION DATE: AUGUST 4, 1993
REVISION HISTORY: AUGUST 4, 1993
COMMENTS: NONE

PREPARED BY: TECHNICAL AFFAIRS DEPARTMENT, BDH INC.,
TORONTO, ONTARIO, CANADA
(416) 255-8521

THE STATEMENTS CONTAINED HEREIN ARE OFFERED FOR INFORMATIONAL PURPOSES ONLY AND ARE BASED UPON TECHNICAL DATA THAT BDH INC BELIEVES TO BE ACCURATE. IT IS INTENDED FOR USE ONLY BY PERSONS HAVING THE NECESSARY TECHNICAL SKILLS AND AT THEIR OWN DISCRETION AND RISK. SINCE CONDITIONS AND MANNER OF USE ARE OUTSIDE OUR CONTROL, WE MAKE NO WARRANTY,EXPRESS OR IMPLIED OF MERCHANTABILITY,FITNESS OR OTHERWISE.

COPYRIGHT BDH, 1993

"ISSUED BY VWR 11/25/93"

ORION MATERIAL SAFETY DATA SHEET

Orion Research Incorporated
THE SCHRAFFT CENTER
529 MAIN STREET, BOSTON, MA 02129 USA
TELEPHONE: 617-242-3900

I. PRODUCT IDENTIFICATION

PRODUCT NAME: Orion Application Solution pH 10.01 Buffer	CATALOG NO.: 910110 & 330010	EFFECTIVE DATE: 12/4/89
HAZARDOUS SHIPMENT LABELLING: DOT: NA	IATA: NA	
PREPARED BY: Thomas F. Glynn	TITLE: Safety Chemist	
APPROVED BY: Lynn Orlando	TITLE: Director Regulatory Matters	

II. HAZARDOUS INGREDIENTS (IDENTITY INFORMATION)

HAZARDOUS COMPONENTS * SPECIFIC CHEMICAL IDENTITY, COMMON NAME(S)	CAS NO.	%	OSHA PEL	ACGIH TLV	LD 50 mg/kg
Sodium Bicarbonate ($NaHCO_3$)	144-55-8	0.209	None	None	ORL-Rat 4220
Sodium Carbonate (Na_2CO_3)	497-19-8	0.264	None	None	IPR-Mus 117
Phenylmercuric Acetate ($C_8H_8H_gO_2$)	62-38-4	0.0005	0.1mg/m^3	0.1mg/m^3	ORL-Rat 22mg/kg
FD & C Blue #1	384445-9	0.0005	None	None	None
Deionized Water **	7732-18-5	99.526	None	None	None

III. PHYSICAL DATA

BOILING POINT 760 mm Hg: 100°C	FREEZING POINT: 0°C
SPECIFIC GRAVITY (H_2O = 1): 1.0	VAPOR PRESSURE @: NA
pH @ 25 °C: 10.01	SOLUBILITY IN WATER, % BY WT. @: Miscible
VOLATILES, % BY WT.: NA	EVAPORATION RATE (BUTYL ACETATE = 1): NA
VAPOR DENSITY (AIR = 1): NA	
APPEARANCE AND ODOR: Light blue, odorless liquid	

IV. FIRE AND EXPLOSION HAZARD DATA

FLASH POINT (TEST METHOD): Not flammable	AUTOIGNITION TEMPERATURE: NA	
FLAMMABLE LIMITS IN AIR, % BY VOLUME:	LOWER: NA	UPPER: NA
EXTINGUISHING MEDIA: Any		
SPECIAL FIRE-FIGHTING PROCEDURES: None, non flammable		
UNUSUAL FIRE AND EXPLOSION HAZARDS: None		

* Chemicals which are not classified as hazardous per U.S. OSHA guidelines (29CFR Parts 1915.2 or 1916.2) or the Massachusetts Substance List (105CMR670.000 Appendix A), will not necessarily be listed on this form even though one or more may be a constituent of this product.

Liability is expressly disclaimed for any loss or injury arising out of the use of this information or the use of any materials designated. safe use of the materials is the responsibility of the user

Document No. 205488-001 Rev C

*NA = Not applicable/Not available
** = Non Hazardous Component
*** = F D & C Blue No. 1 is on IARC Listing.

ORION MATERIAL SAFETY DATA

pH-Buffer, pH 10.0

SHEET 2 OF 2

PRODUCT NAME: Orion Application Solution pH 10.01 Buffer CATALOG NO.: 910110 & 330010

V. REACTIVITY DATA

STABILITY: UNSTABLE ☐ STABLE ☒

CONDITIONS TO AVOID: None

INCOMPATIBILITY (MATERIALS TO AVOID): NaK alloy, $NH_4H_2PO_4$, AL, P_2O_5, H_2SO_4

HAZARDOUS DECOMPOSITION PRODUCTS: CO_2, CO and mercury vapor upon heating to decomposition.

HAZARDOUS POLYMERIZATION: MAY OCCUR ☐ WILL NOT OCCUR ☒

CONDITIONS TO AVOID: None

VI. HEALTH HAZARD DATA

ROUTE(S) OF ENTRY:	INHALATION?	SKIN?	INGESTION?
	No	Yes	Yes

HEALTH HAZARDS (ACUTE AND CHRONIC)

Acute: This solution is considered non-hazardous due to the low level of salts present.

Chronic: Possible irritation of skin upon prolonged exposure.

CARCINOGENICITY:	NTP?	IARC MONOGRAPHS? ***	OSHA REGULATED?
	Not found	(annimal positive)	Not found

SIGNS AND SYMPTOMS OF EXPOSURE: Irritation of skin

MEDICAL CONDITIONS GENERALLY AGGRAVATED BY EXPOSURE: Could aggravate diseases of skin.

EMERGENCY AND FIRST AID PROCEDURES: Wash off contact area with water. Give large amounts of water if ingested. Consult physician.

VII. PRECAUTIONS (SAFE HANDLING AND USE)

STEPS TO BE TAKEN IN CASE MATERIAL IS RELEASED OR SPILLED: Clean up and set aside for disposal.

WASTE DISPOSAL METHOD: Consult federal, state and local laws for proper disposal.

PRECAUTIONS TO BE TAKEN IN HANDLING AND STORING: Suitable for any general handling and storage. ($C_8H_8H_8O_2$) is regulated under sections 302 and 304 of SARA TITLE III, RCRA No. P092.

OTHER PRECAUTIONS: Hazardous Ratings: Scale (0-3), health 1, flammability 0, reactivity 0, Persistance 0.

VIII. CONTROL MEASURES

RESPIRATORY PROTECTION (SPECIFY TYPE): None

VENTILATION	LOCAL EXHAUST	SPECIAL
	No	No
	MECHANICAL (GENERAL): No	OTHER: No

PROTECTIVE GLOVES: Yes

EYE PROTECTION: Safety Glasses

OTHER PROTECTIVE CLOTHING OR EQUIPMENT: No

WORK/HYGIENIC PRACTICES: No eating or drinking while working with this product.

MYRON L COMPANY

6115 CORTE DEL CEDRO
CARLSBAD, CA. 92009

MATERIAL SAFETY DATA SHEET

ESSENTIALLY SIMILAR TO U.S. DEPT OF LABOR FORM OSHA-20

SECTION 1 NAME & PRODUCT

CHEMICAL NAME: BUFFERED CARBONATE SOLUTION

TRADE NAME & SYNONYMS:
PH REFERENCE BUFFER SOLUTION
PH 10.0

FORMULA:

Na_2CO_3 & NaCO

CATALOG NUMBER (CAS #)

497-19-8
1310-73-2

CHEMICAL FAMILY:

BUFFERED CARBONATE
DILUTE SOLUTION

SECTION 2 PHYSICAL DATA

BOILING POINT, 760mm Hg (°C)	100	SPECIFIC GRAVITY	>1.0
MELTING POINT (°C)	0	SOLUBILITY IN H_2O,% BY WT.@20°C	MISCIBLE
VAPOR PRESSURE @ 20°C	<20 TORR	APPEARANCE AND ODOR	
VAPOR DENSITY (AIR = 1)	.023Kg/M^3	CLEAR OR BLUE ODORLESS LIQUID	
PERCENT VOLATILES BY VOLUME	>90	EVAPORATION RATE	1.0

SECTION 3 FIRE & EXPLOSION HAZARD DATA

FLASH POINT (TEST METHOD)	N/A	FLAMMABLE LIMITS N/A	- Lel -	Uel
EXTINGUISHING MEDIA	NON-FLAMMABLE			
SPECIAL HAZARDS & PROCEDURES	N/A			
UNUSUAL FIRE & EXPLOSION HAZARDS	N/A			

SECTION 4 REACTIVITY DATA

STABLE XX	CONDITIONS TO AVOID N/A
UNSTABLE	MATERIALS TO AVOID N/A
	( )WATER ( )ACIDS ( )BASES ( )OTHER SPECIFY

BDH INC.

M A T E R I A L S A F E T Y D A T A S H E E T

SECTION I CHEMICAL PRODUCT AND COMPANY IDENTIFICATION

MANUFACTURER:

BDH INC.
350 EVANS AVENUE
TORONTO, ONTARIO
CANADA, M8Z 1K5

INFORMATION PHONE NO.: 416-255-8521
HOURS: MON. TO FRI. (0830 - 1630)
CHEMTREC TRANSPORTATION EMERGENCY CENTER
(CHEMTREC) 24-HOUR...1-800-424-9300

PRODUCT NAME: BUFFER PH 10.00, BLUE
CATALOGUE NUMBER(S): 34170-133, 34170-151, 34170-160, 34170-178
CHEMICAL NAME/OTHER NAME: BUFFER PH 10.00, BLUE
CHEMICAL FORMULA: H2O, NA2CO3, C37H35N2C6S2NA, NAHCO3, C12H9O
CHEMICAL FAMILY: MIXTURE

SECTION II COMPOSITION/INFORMATION ON INGREDIENTS

CHEMICAL NAME	CAS NO.	OSHA PEL	ACGIH TLV	%(W/V)
WATER	7732-18-5	-	-	
SODIUM CARBONATE	497-19-8	-	-	0.26
SODIUM BICARBONATE	144-55-8	-	-	0.21
PATENT BLUE A	3486-30-4	-	-	0.001
DOWICIDE A	132-27-4	-	-	0.05

SECTION III HAZARDS IDENTIFICATION

APPEARANCE: CLEAR, BLUE LIQUID; ODORLESS

********** EMERGENCY OVERVIEW **********
* HANDLE IN ACCORDANCE WITH GOOD LABORATORY/ *
* INDUSTRIAL HYGIENE AND SAFETY PRACTICES *
****

POTENTIAL HEALTH EFFECTS (ACUTE & CHRONIC)

SYMPTOMS OF EXPOSURE: NO INFORMATION AVAILABLE
MEDICAL CONDITION AGGRAVATED BY EXPOSURE: NONE IDENTIFIED
ROUTES OF ENTRY: INHALATION, INGESTION
CARCINOGENICITY: DOWICIDE A IS LISTED AS A POSSIBLE CARCINOGEN BY IARC

SECTION 5 SPILL OR LEAK PROCEDURES AND DISPOSAL

STEPS TO BE TAKEN IN CASE MATERIAL IS RELEASED OR SPILLED:

CLEAN SPILL USING ABSORBENT MATERIALS USING SOAP AND WATER, AND THEN VENTILATE AREA

WASTE DISPOSAL METHOD: NO SPECIAL INSTRUCTIONS

NOTE: DISPOSE OF ALL WASTES IN ACCORDANCE WITH FEDERAL,STATE & LOCAL REGULATIONS

SECTION 6 HEALTH HAZARD DATA

THRESHOLD LIMIT VALUE: NONE KNOWN

EFFECTS OF OVEREXPOSURE: IRRITATING TO EYES & MUCOUS MEMBRANES, AND DIGESTIVE TRACT

FIRST AID PROCEDURES:

EYE CONTACT: FLUSH WITH WATER
SKIN CONTACT: WASH WITH SOAP & WATER
IF SWALLOWED: DRINK PLENTY OF WATER, DO NOT INDUCE VOMITING

SECTION 7 SPECIAL PROTECTION INFORMATION

VENTILATION, RESPIRATORY PROTECTION, PROTECTIVE CLOTHING, EYE PROTECTION

SAFETY GLASSES, LATEX OR RUBBER GLOVES, AND STANDARD LAB CLOTHES

SECTION 8 SPECIAL HANDLING AND STORING PRECAUTIONS

STORE AT ROOM TEMPERATURE.
NORMAL USE DOES NOT GENERATE A HAZARDOUS SITUATION

SECTION 9 HAZARDOUS INGREDIENTS

(REFER TO SECTIONS 3 THROUGH 8)

CHEMICAL NAME	CAS NUMBER
N/A	

SECTION 10 OTHER INFORMATION

SECTION VIII EXPOSURE CONTROLS/PERSONAL PROTECTION

ENGINEERING CONTROLS: ENGINEERING AND/OR ADMINISTRATIVE CONTROLS SHOULD BE IMPLEMENTED TO REDUCE EXPOSURE.

PERSONAL PROTECTIVE EQUIPMENT

GLOVES: NONE SPECIFIED
RESPIRATORY PROTECTION: NONE SPECIFIED
EYE PROTECTION: SAFETY GLASSES
CLOTHING: NO SPECIAL REQUIREMENTS

SECTION IX PHYSICAL & CHEMICAL PROPERTIES

PHYSICAL STATE: LIQUID
APPEARANCE: CLEAR, BLUE LIQUID
ODOR: ODORLESS
ODOR THRESHOLD: NOT APPLICABLE
VAPOR PRESSURE: NOT AVAILABLE
VAPOR DENSITY: NOT AVAILABLE
SPECIFIC GRAVITY: APPROX. 1
BOILING POINT (F): APPROX. 212$
MELTING POINT (F): APPROX. 320

EVAPORATION RATE: NOT AVAILABLE
PH: NOT AVAILABLE
SOLUBILITY IN WATER: SOLUBLE
OCTANOL/WATER PARTITION COEFFICIENT: NOT AVAILABLE
PER CENT VOLATILE BY VOL (%): 100
MOLECULAR WEIGHT: THIS IS A MIXTURE

SECTION X STABILITY & REACTIVITY

CHEMICAL STABILITY: NORMALLY STABLE
CONDITIONS TO AVOID: NONE IDENTIFIED
MATERIALS TO AVOID: NONE
HAZARDOUS POLYMERIZATION: DOES NOT OCCUR
HAZARDOUS DECOMPOSITION PRODUCTS: SOX

SECTION XI TOXICOLOGICAL INFORMATION

EFFECTS OF ACUTE EXPOSURE: NO INFORMATION AVAILABLE
EFFECTS OF CHRONIC EXPOSURE: NO INFORMATION AVAILABLE
LD50: NOT AVAILABLE
LC50: NOT AVAILABLE
IRRITANCY (DRAIZE TEST RESULTS): NO INFORMATION AVAILABLE
CARCINOGENICITY: DOWICIDE A IS LISTED AS A POSSIBLE CARCINOGEN BY IARC
TERATOGENICITY: NO INFORMATION AVAILABLE
MUTAGENICITY: NO INFORMATION AVAILABLE
REPRODUCTIVE EFFECTS: NO INFORMATION AVAILABLE
SENSITIZATION TO PRODUCT: NO INFORMATION AVAILABLE
TARGET ORGANS: NONE IDENTIFIED

SECTION IV FIRST AID MEASURES

EYE: IN CASE OF EYE CONTACT, FLUSH WITH PLENTY OF WATER FOR AT LEAST MINUTES WHILE HOLDING THE EYELIDS OPEN. HAVE EYES EXAMINED BY MEDICAL PERSONNEL.

SKIN: IN CASE OF SKIN CONTACT, WASH WITH SOAP AND WATER. GET MEDICAL ATTENTION IF IRRITATION DEVELOPS OR PERSISTS.

INGESTION: IF SWALLOWED, DO NOT INDUCE VOMITING. GIVE VICTIM A GLASS OF WATER OR MILK. CALL A PHYSICIAN IMMEDIATELY. NEVER GIVE ANYTHING BY MOUTH

TO AN UNCONSCIOUS PERSON.

INHALATION: IF INHALED, REMOVE TO FRESH AIR.

SECTION V FIRE FIGHTING MEASURES

FLAMMABILITY CLASSIFICATION: NONCOMBUSTIBLE
EXTINGUISHING MEDIA: USE AN EXTINGUISHER APPROPRIATE TO THE SURROUNDING MATERIAL THAT IS BURNING.
FLASH POINT(F)/METHOD: NOT APPLICABLE
FIRE & EXPLOSION HAZARD: NONE IDENTIFIED
UPPER FLAMMABLE LIMIT (%): NOT APPLICABLE
LOWER FLAMMABLE LIMIT (%): NOT APPLICABLE
AUTOIGNITION TEMPERATURE: NOT APPLICABLE
FIREFIGHTING PROCEDURES: FIREFIGHTERS SHOULD WEAR A SELF CONTAINED BREATHING APPARATUS.
HAZARDOUS COMBUSTION PRODUCTS: SOX, NOX, COX
SENSITIVITY TO STATIC DISCHARGE: NO
SENSITIVITY TO MECHANICAL IMPACT: NO

SECTION VI ACCIDENTAL RELEASE MEASURES

LEAK OR SPILL CLEANUP: EVACUATE THE AREA OF ALL UNNECESSARY PERSONNEL. WEAR SUITABLE PROTECTIVE EQUIPMENT LISTED IN EXPOSURE CONTROLS/PERSONAL PROTECTION. CONTAIN THE RELEASE AND ELIMINATE IT'S SOURCE, IF THIS CAN BE DONE WITHOUT RISK.
TAKE UP AND CONTAINERIZE FOR PROPER DISPOSAL AS DESCRIBED UNDER DISPOSAL. COMPLY WITH FEDERAL, STATE, AND LOCAL REGULATIONS ON REPORTING RELEASES. REFER TO REGULATORY INFORMATION FOR REPORTABLE QUANTITY AND OTHER REGULATORY DATA.

SECTION VII HANDLING & STORAGE

HANDLING & STORAGE: STORE IN A COOL, DRY , WELL VENTILATED AREA.

SECTION XV OTHER INFORMATION

NFPA HAZARD RATINGS (0-4)

HEALTH: 0 FLAMMABILITY: 0 REACTIVITY: 0

NFPA SPECIAL WARNINGS: NONE
PREPARATION DATE: AUGUST 24, 1993
REVISION HISTORY: AUGUST 24, 1993
COMMENTS: NONE
PREPARED BY: TECHNICAL AFFAIRS DEPARTMENT, BDH INC.,
TORONTO, ONTARIO, CANADA
(416) 255-8521

THE STATEMENTS CONTAINED HEREIN ARE OFFERED FOR INFORMATIONAL PURPOSES ONLY AND ARE BASED UPON TECHNICAL DATA THAT BDH INC BELIEVES TO BE ACCURATE. IT IS INTENDED FOR USE ONLY BY PERSONS HAVING THE NECESSARY TECHNICAL SKILLS AND AT THEIR OWN DISCRETION AND RISK. SINCE CONDITIONS AND MANNER OF USE ARE OUTSIDE OUR CONTROL, WE MAKE NO WARRANTY,EXPRESS OR IMPLIED OF MERCHANTABILITY,FITNESS OR OTHERWISE.

COPYRIGHT BDH, 1993

"ISSUED BY VwR 11/25/93"

SECTION XII DISPOSAL CONSIDERATIONS

EPA WASTE NUMBER(S): MATERIAL DOES NOT HAVE AN EPA WASTE NUMBER AND IS NOT A LISTED WASTE, HOWEVER CONSULTATION WITH A PERMITTED WASTE DISPOSAL SITE (TSD) SHOULD BE ACCOMPLISHED.
ALWAYS CONTACT A PERMITTED WASTE DIPOSER (TSD) TO ASSURE COMPLIANCE WITH ALL CURRENT LOCAL, STATE AND FEDERAL REGULATIONS

SECTION XIII TRANSPORT INFORMATION

DOT SHIPPING NAME: NOT REGULATED
DOT NUMBER (UN): NOT REGULATED
PACKING GROUP: NOT REGULATED
HAZARD CLASS: NOT REGULATED

SECTION XIV REGULATORY INFORMATION

TSCA INVENTORY (YES/NO): YES, THIS MATERIAL IS A MIXTURE. THE CAS NUMBERS OF ALL COMPONENTS ARE LISTED ON THE TSCA INVENTORY.

COMPONENT	SARA EHS (302)	SARA EHS TPQ (LBS)	CERCLA RQ (LBS)
SODIUM CARBONATE	-	-	-
SODIUM BICARBONATE	-	-	-
DOWICIDE A	-	-	-
PATENT BLUE A	-	-	-
WATER	-	-	-

COMPONENT	OSHA FLOOR LIST	SARA 313	DEMINIMIS (SARA 313)(%)
SODIUM CARBONATE	-	-	-
SODIUM BICARBONATE	-	-	-
DOWICIDE A	-	-	-
PATENT BLUE A	-	-	-
WATER	-	-	-

Section 6. Health Hazard Data, *continued*

Phenol ingestion can cause gangrene and corrosion of lips, mouth, throat, esophagus, and stomach if not properly decontaminated (see First Aid). Although not immediately painful, skin contact can cause serious burns and systemic toxicity. In addition to skin burns and respiratory tract irritation, systemic absorption may cause pallor, anorexia (appetite loss), nausea, vomiting, diarrhea, weakness, muscle aches, darkened urine, headache, tinnitus (ringing in ears), sweating, convulsions, cyanosis (bluish coloration of lips and/or fingertips), shock, unconsciousness, respiratory failure, and death. After ingestion, major percutaneous (skin), or inhalation exposures, collapse and death can be rapid. Ingestion can cause severe tissue corrosion or gangrene affecting lips, mouth, throat, esophagus, and stomach. Eye contact can cause severe corrosive damage to the eye (conjunctival edema, corneal opacification, and hypesthesia) and possible blindness.

Chronic Effects: Chronic phenol poisoning is rarely reported. Symptoms include vomiting, difficulty swallowing, diarrhea, appetite loss, headache, fainting, dizziness, darkened urine, and mental disturbances. Chronic exposure can cause death from liver and kidney damage. Repeated skin contact with phenol or phenol-bearing products can result in dermatitis with dark pigmentation (ochronosis) of skin and whites of eyes (sclerae).

FIRST AID

Eyes: Gently lift the eyelids and flush immediately and continuously with flooding amounts of water for at least 15 min. Consult a physician immediately.

Skin: Speedy action is critical. Flood exposed area with water and quickly remove contaminated clothing. *As soon as possible*, repeatedly spray or swab with the decontaminating agent polyethyleneglycol-300 (PEG). Immerse extremities in PEG. Rescue personnel should protect themselves from skin contact with phenol. Do not use greases, powders, or ointments to treat phenol burns. *Never* delay phenol removal if PEG is not readily available. Use soap and water instead.

Inhalation: Remove exposed person to fresh air and support breathing as needed.

Ingestion: *Speed is essential in the treatment of oral poisoning.* Immediately consult a physician and poison center. Never give anything by mouth to an unconscious or convulsing person. Administer to that *conscious* person 15 to 30 cc castor oil or another vegetable oil, and be prepared to induce vomiting upon a physician's advice. Vegetable oils slow phenol absorption and reduce local damage.

After first aid, get appropriate in-plant, paramedic, or community medical support.

Note to Physicians: Treat ingestion with gastric lavage using 40% aqueous Bacto-Peptone, milk, or water until phenolic odor is eliminated. Then give 15 to 50 cc castor or vegetable oil. Debride necrotic skin. Monitor vital signs, fluid status, electrolytes, BUN, renal and hepatic function, and electrocardiogram. Manage sedation, seizures, renal failure, and fluid electrolyte imbalances symptomatically as indicated.

Section 7. Spill, Leak, and Disposal Procedures

Spill/Leak: Notify safety personnel, evacuate all unnecessary personnel, remove all heat and ignition sources, and provide maximum explosion-proof ventilation. Cleanup personnel should protect against vapor inhalation and skin and eye contact with a self-contained breathing apparatus and full personal protective clothing and equipment. Absorb small spills with some noncombustible inert material and place in a closed metal container for disposal. Dike large spills and allow material to cool and solidify. Using nonsparking tools, shovel solid into steel containers for disposal. Thoroughly flush spill area with water, use caustic soda solution for neutralization, and collect flushings and wash water for disposal. Do not allow phenol to enter sewers, watersheds, or waterways. Follow applicable OSHA regulations (29 CFR 1910.120). Notify proper authorities including the National Response Center (800-424-8802).

Disposal: Contact your supplier or a licensed contractor for detailed recommendations. Follow applicable Federal, state, and local regulations.

EPA Designations

Listed as a RCRA Hazardous Waste (40 CFR 261.33)

Listed as a CERCLA Hazardous Substance* (40 CFR 302.4): Reportable Quantity (RQ), 1000 lb (454 kg) [* per Clean Water Act, Sec. 311(b)(4), Sec. 307(a), and per RCRA, Sec. 3001]

Listed as a SARA Extremely Hazardous Substance (40 CFR 355): RQ, 1000 lb; Threshold Planning Quantity (TPQ), 500/10,000 lb

Listed as a SARA Toxic Chemical (40 CFR 372.65)

OSHA Designations

Listed as an Air Contaminant (29 CFR 1910.1000, Table Z-1-A)

Section 8. Special Protection Data

Goggles: Wear protective eyeglasses or chemical safety goggles, per OSHA eye- and face-protection regulations (29 CFR 1910.133).

Respirator: Seek professional advice prior to respirator selection and use. Follow OSHA respirator regulations (29 CFR 1910.134) and, if necessary, wear a NIOSH-approved respirator. Where potential exists for exposures near or over 19 mg/m^3, use a MSHA/NIOSH-approved full facepiece respirator with an organic vapor cartridge/canister and dust/mist prefilter. Increased protection is obtained from full facepiece powered-air purifying respirators. For emergency or nonroutine operations (cleaning spills, reactor vessels, or storage tanks), wear an SCBA. *Warning! Air-purifying respirators do not protect workers in oxygen-deficient atmospheres.*

Other: Wear impervious gloves, boots, aprons, and gauntlets to prevent skin contact. ACGIH recommends neoprene or butyl rubber as good-to-excellent protective materials.

Ventilation: Provide general and local exhaust ventilation systems to maintain airborne concentrations below the OSHA PEL and ACGIH TLV (Sec. 2). Local exhaust ventilation is preferred since it prevents contaminant dispersion into the work area by controlling it at its source.[103]

Safety Stations: Make available in the work area emergency eyewash stations, safety/quick-drench showers, and washing facilities.

Contaminated Equipment: Never wear contact lenses in the work area: soft lenses may absorb, and all lenses concentrate, irritants. Remove this material from your shoes and equipment. Launder contaminated clothing before wearing.

Comments: Never eat, drink, or smoke in work areas. Practice good personal hygiene after using this material, especially before eating, drinking, smoking, using the toilet, or applying cosmetics.

Section 9. Special Precautions and Comments

Storage Requirements: Store in closed containers in a cool, dry, well-ventilated area away from heated surfaces, open flame, and ignition sources. Outside or detached storage is preferred. Protect containers from physical damage.

Engineering Controls: Enclose all operations, eliminating all possible phenol exposure routes. Educate workers about phenol's hazards and potential dangers. Use only with appropriate personal protective gear and adequate ventilation. Institute a respiratory protection program that includes regular training, maintenance, inspection, and evaluation. Provide local exhaust ventilation at the site of chemical release. Practice good personal hygiene and housekeeping procedures.

Medical Surveillance: Provide preplacement or periodic medical examinations that emphasize central nervous system (CNS), hepatic, renal, and skin. Tests should include BUN, creatinine, LFTs, and urinalysis. Phenol can be detected in urine in free or conjugated forms. The ACGIH biological exposure index (BEI) is 250 mg total phenol/g creatinine or 15 mg/hr.

Transportation Data (49 CFR 172.101, .102)

DOT Shipping Name: Phenol	IMO Shipping Name: Phenol
DOT Hazard Class: Poison B	IMO Hazard Class: 6.1
ID No.: UN1671	ID No.: UN1671
DOT Label: Poison	IMO Label: Poison
DOT Packaging Exceptions: 173.364	IMDG Packaging Group: II
DOT Packaging Requirements: 173.369	

MSDS Collection References: 1, 2-12, 15, 19, 23, 24, 26, 31, 34, 37, 38, 59, 73, 79, 84, 85, 89, 100, 101, 103, 124, 126, 127, 132, 133, 136, 138-140, 143, 146, 148, 149

Prepared by: MJ Allison, BS; Industrial Hygiene Review: DJ Wilson, CIH; Medical Review: MJ Upfal, MD, MPH; Edited by: JR Stuart, MS

Copyright © 1990 by Genium Publishing Corporation. Any commercial use or reproduction without the publisher's permission is prohibited. Judgments as to the suitability of information herein for the purchaser's purposes are necessarily the purchaser's responsibility. Although reasonable care has been taken in the preparation of such information, Genium Publishing Corporation extends no warranties, makes no representations, and assumes no responsibility as to the accuracy or suitability of such information for application to the purchaser's intended purpose or for consequences of its use.

Genium Publishing Corporation
1145 Catalyn Street
Schenectady, NY 12303-1836 USA
(518) 377-8854

Section 1. Material Identification

Phenol (C_6H_5OH) Description: One of many aromatic compounds in coal tar. Made by alkylating benzene with propylene then oxidizing the resulting cumene to produce phenol and acetone. Used as a feedstock in manufacturing various phenolic resins, caprolactum, bis-phenol-A, and other chemicals and drugs; a disinfectant; a fuel-oil sludge inhibitor; a reagent in chemical analysis; in producing or manufacturing a large variety of aromatic compounds including fertilizers, illuminating gas, coke, explosives, lampblack, paints, paint removers, asbestos goods, wood preservatives, textiles, perfumes, bakelite, rubber, and other plastics; in medical and industrial organic compounds and dyes; and in germicidal paints and slimicides. Phenol has been identified in cigarette smoke and automobile exhaust.
Other Designations: CAS No. 0108-95-2, carbolic acid, hydroxybenzene, monohydroxy benzene, oxybenzene, phenic acid, phenyl alcohol, phenyl hydroxide.
Manufacturer: Contact your supplier or distributor. Consult the latest *Chemicalweek Buyers' Guide*(7) for a suppliers list.

R 1
I 4
S 3*
K 2
* Skin absorption

NFPA
2
3 0
-

HMIS
H 3
F 2
R 0
PPG†
† Sec. 8

Cautions: Phenol has a marked corrosive effect on any tissue. Eye contact may cause severe damage and *blindness*. Its primary entry route is through *skin absorption*. Systemic absorption may cause *liver and kidney damage, convulsions (seizures), or death.*

Section 2. Ingredients and Occupational Exposure Limits

Phenol, ca 100%

1989 OSHA PEL (Skin)
8-hr TWA: 5 ppm, 19 mg/m³

1990-91 ACGIH TLV (Skin)
TWA: 5 ppm, 19 mg/m³

1988 NIOSH REL
TWA: 5 ppm, 19 mg/m³
Ceiling: 15.6 ppm, 60 mg/m³

1985-86 Toxicity Data*
Mammal, inhalation, LC_{50}: 74 mg/m³
Rat, oral, LD_{50}: 317 mg/kg; toxic effects include behavorial changes (convulsions or effect on seizure threshold)
Rabbit, eye, TC_{Lo}: 5 mg produces severe irritation

1987 IDLH Level
250 ppm

* See NIOSH, *RTECS* (SJ3325000), for additional irritative, mutative, reproductive, tumorigenic, and toxicity data.

Section 3. Physical Data

Boiling Point: 359.15 °F (181.75 °C) at 760 mm Hg
Melting Point: 109.4 °F (43 °C)
Vapor Pressure: 0.3513 mm Hg at 77 °F (25 °C)
Vapor Density (Air = 1): 3.24
pH: 6 (aqueous solution)
Molecular Weight: 94.11
Specific Gravity (20 °C/4 °C): 1.0576
Water Solubility: 1 g dissolves in about 15 ml H_2O
Viscosity: 12.7 centipoise at 64.9 °F (18.3 °C)

Appearance and Odor: White crystalline solid with a characteristic sharp medicinal sweet, tangy odor detectable above 0.05 ppm. Phenol turns pink or red if it contains impurities or is exposed to heat or light.

Section 4. Fire and Explosion Data

Flash Point: 175 °F (79 °C), CC	Autoignition Temperature: 1319 °F (715 °C)	LEL: 1.7% v/v	UEL: 8.6% v/v

Extinguishing Media: Use water spray, carbon dioxide, dry chemical, or alcohol-type foam to extinguish fires involving phenol. Do not use a solid stream of water since the stream scatters and spreads fire. Use water spray to cool fire-exposed tanks/containers.
Unusual Fire or Explosion Hazards: Phenol presents a moderate fire hazard when exposed to heat, flame, or oxidizers. When heated, it emits toxic fumes and vapors that form explosive mixtures with air. Air mixtures containing 3 to 10% phenol are explosive. Solid phenol burns with difficulty, giving off heavy smoke.
Special Fire-fighting Procedures: Since fire may produce toxic fumes, wear a self-contained breathing apparatus (SCBA) with a full facepiece operated in the pressure-demand or positive-pressure mode and full protective clothing. Be aware of runoff from fire control methods. Water containing phenol can cause severe chemical burns. Do not release to sewers or waterways.

Section 5. Reactivity Data

Stability/Polymerization: Phenol is stable at room temperature in closed containers under normal storage and handling conditions. Hazardous polymerization cannot occur.
Chemical Incompatibilities: In general, phenol is incompatible with strong oxidizing agents and halogens. It coagulates colodion and proteins. A potentially explosive reaction occurs with formaldehyde, peroxydisulfuric acid, peroxymonosulfuric acid, sodium nitrite + heat, and aluminum chloride + nitromethane (at 110 °C/100 bar). A violent reaction occurs with butadiene, sodium nitrite + trifluoroacetic acid, and aluminum chloride + nitrobenzene at 248 °F (120 °C). Combining phenol with mineral oxidizing acids results in fire; with acetaldehyde results in violent condensation; with isocyanates results in heat generation and violent polymerization, with calcium hypochlorite results in an exothermic reaction producing toxic fumes which may ignite; and with nitrides results in heat and flammable gas generation. Hot phenol is corrosive to many metals, including aluminum, lead, magnesium, and zinc. Reaction with these materials causes phenol to discolor.
Conditions to Avoid: Avoid heating phenol above 122 °F (90 °C).
Hazardous Products of Decomposition: Thermal oxidative decomposition of phenol can produce oxides of carbon and water.

Section 6. Health Hazard Data

Carcinogenicity: The NTP, IARC, and OSHA do not list phenol as a carcinogen. Although no specific evidence of human cancer exists, its carcinogenicity to mice emphasizes the need for precaution when handling this material. Phenol also causes human mutations (genetic changes).
Summary of Risks: Phenol is a general protoplasmic poison that is corrosive to any living tissue it contacts. Toxicity most likely results from dermal (skin) contact or ingestion. Skin absorption occurs readily with a rapid onset of symptoms or death (within 30 min to several hours). Contact with eyes may cause severe damage and blindness. Ingestion of 1 g may be fatal. Although phenol is irritating to the respiratory tract due to its low volatility and good warning properties, inhalation is typically less of a concern. Chronic toxic effects are uncommon, but may include digestive disturbances, neurological disorders, skin rash (dermatitis), and liver and kidney damage.
Medical Conditions Aggravated by Long-Term Exposure: Individuals with chronic respiratory disorders, pre-existing skin disorders, convulsive disorders, or kidney or liver abnormalities may be at increased risk from phenol exposure.
Target Organs: Liver, kidneys, nervous system, and skin.
Primary Entry Routes: Skin absorption, eye contact, ingestion, and inhalation.
Acute Effects: Skin contact results in white, wrinkled discoloration, followed by a severe burn or systemic poisoning if removed improperly.

Continue on next page

Copyright © 1990 Genium Publishing Corporation.
Any commercial use or reproduction without the publisher's permission is prohibited.

SECTION VI - REACTIVITY and STABILITY DATA

STABILITY	Unstable		Conditions to avoid
	Stable	X	None

INCOMPATIBILITY (Materials to Avoid): Strong acids, bases, oxidizing agents, selected amines. Chemically active metals, powders.

HAZARDOUS DECOMPOSITION or BY PRODUCTS: Carbon Monoxide, Carbon Dioxide, possibly Phosgene and Hydrogen Chloride

HAZARDOUS POLYMERIZATION	May Occur		Conditions to avoid
	Will not Occur	X	None

SECTION VII - HEALTH HAZARD DATA

Routes of entry	Inhalation? X	Skin? X	Ingestion? X	Eyes? X
Health Hazards	Acute	X	See Signs and Symptoms of Exposure Below.	
	Chronic	X	Brain and Nervous System Damage (Referred to as solvents or painters syndrome). Drying or Cracking of Skin.	

Carcinogenicity: NO NTP? IARC Monographs? OSHA Regulated?

Signs and Symptoms of Exposure: Headache, Dizziness, Drowsiness, Fatigue, Irregular Heartbeat, Skin and Eye Irritation.
Target Organs: CNS, CVS, PNS, Liver, Kidneys, Lungs, Respiratory System, Skin.

Medical Conditions Generally Aggravated by Exposure: Pre-existing Heart, Liver, Kidney and Lung disorders.

Emergency and First Aid Procedures:
Ingestion: Contact Physician or Poison Control Immediately.
Inhalation: Remove to fresh air. Administer Oxygen or Artificial Respiration if Necessary.
Eye Contact: Flush with large amounts of water. If irritation persists, contact physician.
Skin: Wash with soap and water.

SECTION VIII - PRECAUTIONS FOR SAFE HANDLING and USE

Steps to be Taken In Case Material Is Released or Spilled:
Wipe up with floor absorbent. Transfer to hood. Prevent run-off to sewers.
Eliminate all sources of ignition. Ventilate to maintain exposure below P.E.L.'s

Waste Disposal Method: Dispose of product in accordance with local, county, state and federal regulations.

Precautions to be Taken in Handling & Storage: Keep away from sparks, flame and high heat sources. Do not store above 120°F.

Other Precautions: Keep Container Closed When Not In Use.

SECTION IX - CONTROL MEASURES

Respiratory Protection (Specify Type)	Organic Vapor Cartridge, NIOSH/MSHA Approved	Protective Gloves	Impervious
Ventilation	Local Exhaust Supplemental (If Needed)	Special	None
	Mechanical (General) To maintain exposure below P.E.L.'s	Other	None
Eye Protection	Chemical Splash Goggles	Other Protective Clothing or Equipment	Impervious Clothing/Boots as needed

Work Hygenic Practices: Wash thoroughly after handling product.

SECTION X - TRANSPORTATION INFORMATION (optional)

D.O.T. Proper Shipping Name	Paint	D.O.T. Hazard Class	Flammable Liquid
If a "Consumer Commodity ORM-D", What is the qualifying Chemical?	Petroleum Naphtha ORM-D (Less than 1 gallon)		
D.O.T. I.D. No. (UN or NA)	UN 1263	Hazard Label or Marking Required on Shipper Ctn.	Flammable Liquid
IATA Proper Shipping Name	Paint	IATA Hazard Class	Flammable Liquid
IMO NO.	N/A		

This is the "back" when printed in duplex. Page 2 of 2 pages if not duplex.

Prepared by Charles H. Nelson

Approved by Thomas M. Miller

Date, June 1, 1989

THE INFORMATION PROVIDED HEREIN IS BASED ON DATA CONSIDERED ACCURATE. NO WARRANTY IS EXPRESSED OR IMPLIED REGARDING THE ACCURACY OF THE DATA OR THE RESULTS OBTAINED FROM ITS USE. SINCE THE INFORMATION CONTAINED HEREIN MAY BE APPLIED UNDER CONDITIONS BEYOND THE VENDORS CONTROL AND SINCE SUBSEQUENT DATA MAY SUGGEST MODIFICATION OF THE INFORMATION, VENDOR ASSUMES NO RESPONSIBILITY FOR THE RESULTS OF ITS USE

PDI, INC.
Mailing Address: P.O. Box 130, Circle Pines, MN 55014
Shipping Address: 3760 Flowerfield Rd., Blaine, MN 55434
Phone: (612) 785-2156 FAX: (612) 785-2068

PDI
The PDI Family of Products That Work

MATERIAL SAFETY DATA SHEET

*-Estimated
N/A-Not Applicable
N/R-Not Restricted
N/E-Not Established

Note: Blank spaces are not permitted. If any item is not applicable, or no information is available, the space must be marked to indicate that.

IDENTITY (As shown on Label or package) PLASTI DIP	PART NO. IF APPLICABLE

SECTION I

Manufacturer's Name P.D.I. Incorporated	Emergency Phone No. (612) 785-2156
Address (Number, Street, City, State, and Zip Code) 3760 Flowerfield Road	Signature of Preparer: (Optional)
Blaine, Minnesota 55434	Manufacturer's Phone No. for Information (612) 785-2156
	Date MSDS was prepared June 1, 1989

SECTION II - HAZARDOUS INGREDIENTS INFORMATION. All Health Hazards which comprise 1% or greater of the composition and all carcinogens if 0.1% of the composition or greater.

Hazardous Components Chemical Identity and Common Name(s)	% Weight (OPTIONAL)	CAS NO.	OSHA PEL	ACGIH TLV	OTHER LIMITS RECOMMENDED
1,1,1, Trichloroethane	22-24	71-55-6	350 ppm	350 ppm	None
VM & P Naphtha	24-26	64742-48-9	500 ppm	300 ppm	None
Toluene	12-14	108-88-3	200 ppm	100 ppm	None
Heptane	11-13	142-82-5	500 ppm	400 ppm	None
Resins	27	N/A	N/A	N/A	N/A

SECTION III - PHYSICAL / CHEMICAL CHARACTERISTICS

Boiling Point 160°F*	Specific Gravity (H_2O=1) 0.92 - 0.94	Melting Point N/A
Vapor Pressure (mm Hg.) 55 mmHg*	Vapor Density (AIR=1) 4.6*	Evaporation Rate (Butyl Acetate=1) 4.5*
Solubility in Water Insoluble	% Volatile by Volume 80 - 81%	Other (if any) None
*Appearance and Odor Various Colors - Honey Like Substance - Characteristic Odor		

SECTION IV-FIRE AND EXPLOSION HAZARD DATA

Flash Point (Method Used) 24°F TCC-ASTM D-93	Flammable Limits	LEL 1.1	UEL 10.5
Extinguishing Media: Carbon Dioxide, Dry Chemical, or Foam.			
Special Fire Fighting Procedures: Self contained breathing apparatus with a full face piece, operated in pressure demand or other positive pressure mode.			
Unusual Fire and Explosion Hazards: This material is flammable and may be ignited by heat, sparks, flame or static electricity.			
Hazardous products formed by fire or thermal decomposition: Carbon Monoxide and/or Carbon Dioxide.			
Explosive Limits (% by volume in air) 1.1 - 10.5			

SECTION V-OPTIONAL HAZARD RATINGS IDENTIFICATION

HAZARD RATING
4-EXTREME
3-HIGH
2-MODERATE
1-SLIGHT
0-INSIGNIFICANT
**SEE SECTION IV

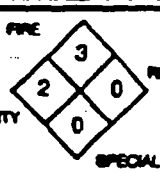

National Fire Protection Association (NFPA)
FIRE 3 REACTIVITY 0
HEALTH 2 SPECIAL HAZARDS None

02342 (30-36-01) 02338 (30-16-04) 02332 (29-50-01) 02333 (53-33-01) 02337 (30-35-01) 02340 (30-34-01) 02341 (30-34-01) 02323 (30-06-04) 02325 (30-03-04) 02328 (30-34-04) 02329 (30-34-05) 02330 (30-36-04)

Section 6. Health Hazard Data

Carcinogenicity: The NTP, IARC, and OSHA do not list portland cement as a carcinogen.
Summary of Risks: Portland cement is a nuisance dust and skin, eyes, and mucous membrane irritant. Its principle health hazard–with the addition of water–occurs when it forms alkaline, abrasive, hygroscopic (moisture-absorbing) calcium hydroxide (slaked lime). Dry cement alone does not cause an alkaline burn. Some individuals appear to tolerate brief skin contact with wet cement, but others develop extensive skin burns. Repeated and prolonged skin contact can cause dermatitis including skin dryness, fissures, eczematous rashes, and dystrophy of nails. Allergic dermatitis may result from the presence of heavy metals such as chromium in the mixture. In one study, 15 of 95 cement workers reported dermatitis of the hands.
Medical Conditions Aggravated by Long-Term Exposure: Individuals with chronic respiratory disorders or skin diseases should minimize inhalation and skin contact.
Target Organs: Respiratory system, skin, eyes.
Primary Entry Routes: Inhalation, ingestion, skin contact.
Acute Effects: Inhalation symptoms include eye, nose, and upper respiratory tract irritation, cough, expectoration, shortness of breath, and wheezing. Eye contact (splashes) cause burning and possible corneal edema. Direct contact with wet cement may result in extensive skin burns with dermal necrosis. Within 12 to 48 hr after 1- to 6-hr exposures, first, second, and third degree burns may occur. There may be no obvious pain at the time of exposure. Ingestion of the powder or liquid form causes esophagus and stomach burns.
Chronic Effects: Chronic bronchitis and chronic dermatitis may result from chronic exposure. There are reports of x-ray changes without symptoms in cement workers exposed to portland cement. Other studies showing x-ray changes with pulmonary symptoms are noted in workers exposed primarily to the silica-containing products in portland cement. The contact dermatitis it causes may clear up only after a prolonged time after the exposures end.
FIRST AID
Eyes: Gently lift the eyelids and flush immediately and continuously with flooding amounts of water until transported to an emergency medical facility. Consult a physician immediately.
Skin: *Quickly* remove contaminated clothing. Rinse with flooding amounts of water for at least 15 min. Rinsing the exposed area with dextrose water may slow the hardening process. For reddened or blistered skin, consult a physician. Wash affected area with soap and water. Treat acute dermal reactions to wet cement as you would lye burns. Consult a physician immediately.
Inhalation: Remove exposed person to fresh air and support breathing as needed.
Ingestion: Never give anything by mouth to an unconscious or convulsing person. If ingested, have that *conscious* person drink 4 to 8 oz. of milk or water. Consult a physician immediately.
After first aid, get appropriate in-plant, paramedic, or community medical support.
Physician's Note: Ingestion of large amounts of cement is unlikely. However, to prevent re-exposing the esophagus and stomach, do not induce emesis or perform gastric lavage. Immediate dilution may prevent esophageal burns. For severe esophageal burns, consider esophagoscopy within the first 24 hr. Neutralization with acidic agents is not advised because of increased risks of exothermic burns. Water-mineral oil soaks may aid in removing hardened cement from the skin. Dried on cement is extremely difficult to remove; surgical debridement and even skin grafting may be necessary. Consult an opthalmologist for ocular burns. Consider topical mydriatic-cycloplegics to guard against development of posterior synechiae and ciliary spasm.

Section 7. Spill, Leak, and Disposal Procedures

Spill/Leak: Notify safety personnel of spill and provide adequate ventilation. Cleanup personnel should protect against dust inhalation and direct contact with wet cement. Avoid creating airborne dust conditions. Cleanup methods such as vacuuming (with an appropriate filter) or wet mopping minimizes dust dispersion. Carefully scoop spilled dry material into a suitable container (with a secure lid) for disposal or reclamation. Follow applicable OSHA regulations (29 CFR 1910.120).
Disposal: Contact your supplier or a licensed contractor for detailed recommendations. Follow applicable Federal, state, and local regulations.

EPA Designations
RCRA Hazardous Waste (40 CFR 261.33): Not listed
CERCLA Hazardous Substance (40 CFR 302.4): Not listed
SARA Extremely Hazardous Substance (40 CFR 355): Not listed
SARA Toxic Chemical (40 CFR 372.65): Not listed

OSHA Designations
Listed as an Air Contaminant (29 CFR 1910.1000, Table Z-1-A)

Section 8. Special Protection Data

Goggles: Wear protective eyeglasses or chemical safety goggles, per OSHA eye- and face-protection regulations (29 CFR 1910.133).
Respirator: Seek professional advice prior to respirator selection and use. Follow OSHA respirator regulations (29 CFR 1910.134) and, if necessary, wear a NIOSH-approved respirator. For emergency or nonroutine operations (cleaning spills, reactor vessels, or storage tanks), wear an SCBA. *Warning! Air-purifying respirators do not protect workers in oxygen-deficient atmospheres.*
Other: Wear impervious gloves, boots, aprons, and gauntlets to prevent skin contact.
Ventilation: Provide general and local ventilation systems to maintain airborne concentrations below the OSHA PELs and ACGIH TLV (Sec. 2). Local exhaust ventilation is preferred since it prevents contaminant dispersion into the work area by controlling it at its source.[105]
Safety Stations: Make available in the work area emergency eyewash stations, safety/quick-drench showers, and washing facilities.
Contaminated Equipment: Never wear contact lenses in the work area: soft lenses may absorb, and all lenses concentrate, irritants. Remove this material from your shoes and equipment. Launder contaminated clothing before wearing.
Comments: Never eat, drink, or smoke in work areas. Practice good personal hygiene after using this material, especially before eating, drinking, smoking, using the toilet, or applying cosmetics.

Section 9. Special Precautions and Comments

Storage Requirements: Store in tightly closed containers in a cool, dry, well-ventilated area. Protect containers from physical damage.
Engineering Controls: Avoid dust inhalation and direct contact with skin and eyes. Wear gloves, impervious boots, and other protective gear when pouring cement. Institute a respiratory protection program that includes regular training, maintenance, inspection, and evaluation. Differentiate between cement and concrete usage and the degree of hazard. Practice good personal hygiene and housekeeping procedures.
Other Precautions: Provide preplacement and annual physical examinations with emphasis on the respiratory tract, eyes, and skin. Avoid exposing individuals sensitive to hexachromium salts. Adding iron to cements reduces chromium levels.
Transportation Data (49 CFR 172.101, .102): Not listed

MSDS Collection **References:** 26, 38, 73, 88, 89, 100, 101, 103, 126, 127, 132, 133, 134, 136, 138, 143
Prepared by: MJ Allison, BS; **Industrial Hygiene Review:** DJ Wilson, CIH; **Medical Review:** W Silverman, MD; **Edited by:** JR Stuart, MS

Copyright © 1990 by Genium Publishing Corporation. Any commercial use or reproduction without the publisher's permission is prohibited. Judgments as to the suitability of information herein for the purchaser's purposes are necessarily the purchaser's responsibility. Although reasonable care has been taken in the preparation of such information, Genium Publishing Corporation extends no warranties, makes no representations, and assumes no responsibility as to the accuracy or suitability of such information for application to the purchaser's intended purpose or for consequences of its use.

Genium Publishing Corporation
1145 Catalyn Street
Schenectady, NY 12303-1836 USA
(518) 377-8854

Material Portland Cement

Sheet No
Portland

Issued: 8/90

Section 1. Material Identification

32

Portland Cement (<1% quartz) Description: Tricalcium silicate ($3CaO \cdot SiO_2$) and dicalcium silicate ($2CaO \cdot SiO_2$) are portland cement's essential constituents, along with varying amounts of alumina, tricalcium aluminate, and iron oxide as tetracalcium aluminoferrate. Small amounts of magnesia, sodium, potassium, and sulfur are also present. Chromium may be present in the finished cement since the kiln's refractory lining and the steel balls used in the finish-milling operations are possible sources. To improve adhesion, strength, and flexibility, cement may be modified with various plastic latexes. Portland cement is used as a binding agent in concrete (a mixture of cement, gravel, and sand) and mortar. Concrete is cement diluted with 15% sand or other coarse particles, and approximately 3.75% calcium oxide.

Other Designations: CAS No. 65997-15-1, hydraulic cement, portland cement silicate.

Manufacturer: Contact your supplier or distributor. Consult the latest *Chemicalweek Buyers' Guide*(TM) for a suppliers list.

Cautions: *Portland cement's primary danger is its alkalinity.* Calcium hydroxide, an alkaline, abrasive, and hygroscopic (moisture-absorbing) material, forms when water is added to dry cement. *Acute contact with wet cement may cause extensive burns; chronic exposure may lead to dermatitis.* Severe tissue damage may result if the cement hardens.

R 0
I 2
S 3
K 0

Genium

HMIS
H 2
F 0
R 1
PPG*
* Sec. 8

Section 2. Ingredients and Occupational Exposure Limits

Portland cement, ca 100%
Average Composition of Portland Cement:

	%
CaO (calcium oxide)	64.0
SiO_2 (silicon dioxide)	21.0
Al_2O_3 (aluminum oxide)	5.8
Fe_2O_3 [iron (III) oxide]	2.9
MgO (magnesium oxide)	2.5
Alkali Oxides	1.4
SO_3 (sulfur trioxide)	1.7

1989 OSHA PELs	1989-90 ACGIH TLV	1988 NIOSH REL	1985-86 Toxicity Data*
8-hr TWA: 10 mg/m³ (total dust) 8-hr TWA: 5 mg/m³ (respirable fraction)	TLV-TWA: 10 mg/m³ nuisance dust	None established	None listed

* Monitor NIOSH, *RTECS* (VV8770000), for future data.

Section 3. Physical Data

Vapor Pressure: Approximately 0 mm **pH:** 12 (wet cement)* **Water Solubility:** Insoluble

Appearance and Odor: Odorless, gray powder with <1% crystalline silica.

* Cement's alkalinity varies from batch to batch, depending on the excessive calcium oxides the manufacturer uses.

Section 4. Fire and Explosion Data

Flash Point: None reported	Autoignition Temperature: None reported	LEL: None reported	UEL: None reported

Extinguishing Media: This material is noncombustible. Use extinguishing media appropriate to the surrounding fire.

Special Fire-fighting Procedures: Since fire may produce toxic fumes, wear a self-contained breathing apparatus (SCBA) with a full facepiece operated in the pressure-demand or positive-pressure mode. Calcium hydroxide forms when water is added to portland cement. Do not expose skin to wet cement. Be aware of runoff from fire control methods. Do not release to sewers or waterways.

Section 5. Reactivity Data

Stability/Polymerization: Portland cement is stable at room temperature in closed containers under normal storage and handling conditions. Hazardous polymerization cannot occur.

Chemical Incompatibilities: No hazardous incompatibilities are reported.

Hazardous Products of Decomposition: None reported.

Copyright © 1990 Genium Publishing Corporation.
Any commercial use or reproduction without the publisher's permission is prohibited.

SPECIAL FIRE FIGHTING PROCEDURES: Keep fire exposed cylinders cool with water spray.

UNUSUAL FIRE AND EXPLOSION HAZARDS: None.

SECTION V - REACTIVITY DATA

STABILITY: Stable.

INCOMPATABILITY (MATERIALS TO AVOID): Propane reacts with oxidizing agents.

HAZARDOUS DECOMPOSITION PRODUCTS: Propane can produce carbon monoxide when oxidized with a deficiency or oxygen.

HAZARDOUS POLYMERIZATION: Will not occur.

SECTION VI - HEALTH HAZARD DATA

THRESHOLD LIMIT VALUE: See Section II.

EFFECTS OF OVER EXPOSURE: None.

EMERGENCY AND FIRST AID PROCEDURES: None.

SECTION VII - SPILL OR LEAK PROCEDURES

STEPS TO BE TAKEN IN CASE MATERIAL IS RELEASED OR SPILLED: Ventilate area. Remove leaking cylinder to exhaust hood or safe outdoors area. Eliminate sources of ignition. Try to stop leak or remove the cylinder.

WASTE DISPOSAL METHOD: Allow gas to discharge at a slow rate. Return defective cylinder to supplier. Propane gas can be disposed of by burning it off in a furnace.

SECTION VIII - SPECIAL PROTECTION INFORMATION

RESPIRATORY PROTECTION (SPECIFY TYPE): Self-contained breathing apparatus.

VENTILATION: Explosion proof.

OTHER PROTECTIVE EQUIPMENT: Safety glasses, safety shoes when handling cylinders.

SECTION IX - SPECIAL PRECAUTIONS

PRECAUTIONS TO BE TAKEN IN HANDLING AND STORING: Store in a well ventilated area away from oxidizers, heat and sources of ignition.

OTHER PRECAUTIONS: Do not deface cylinders or labels. Move with cylinders with an adequate hand truck.

Scott Specialty Gase

FOUTE 611 NORTH. PLUMSTEADVILLE. PA 18949 (215) 76

Electronics Group

3330 HAMILTON BOULEVARD. P O BOX 648. SOUTH PLAINFIELD. N.J. 07080 (201) 754-7700

Propane

REGIONAL PHONE NUMBERS

PA (215) 766-8861	CA (714) 887-2571	MI (313) 589-2950	TX (713) 644-4820
NJ (201) 754-7700	CA (415) 659-0162	CO (303) 442-4700	MA (617) 245-8707

SECTION I - MATERIAL IDENTIFICATION

CHEMICAL NAME: Propane in Air (HC Free)

CHEMICAL FORMULA: C_3H_8/Air

CHEMICAL FAMILY: Hydrocarbon in Gas Mixture

OTHER DESIGNATION: None

SUPPLIER: Scott Specialty Gases

ADDRESS: Route 611 North
Plumsteadville, PA 18949

IN CASE OF EMERGENCY CONTACT YOUR REGIONAL PLANT MANAGER

SECTION II - HAZARDOUS INGREDIENTS

COMPONENT	CONCENTRATION	TLV
Propane Air (HC Free)	1 ppm - 1000 ppm Balance	1000 ppm ---

SECTION III - PHYSICAL DATA

BOILING POINT (°F): N/A

SPECIFIC GRAVITY (H_2O = 1): N/A

VAPOR PRESSURE: N/A

PERCENT, VOLATILE BY VOLUME (%): N/A

VAPOR DENSITY (AIR = 1): 1.00

EVAPORATION RATE (_____=1): N/A

SOLUBILITY IN WATER v/v @20°C: 0.085

APPEARANCE AND ODOR: Colorless, pungent odor

SECTION IV - FIRE AND EXPLOSION HAZARD DATA

FLASH POINT AND METHOD	FLAMMABLE LIMITS	LEL	UEL
N/A	Nonflammable		

EXTINGUISHING MEDIA: Use what is appropriate for surrounding fire.

DISCLAIMER: The information in this Material Safety Data Sheet is offered without charge for use by technically qualified personnel at their discretion and risk. Scott Specialty Gases has made this sheet available with data we believe is reliable, but the accuracy and completeness of the data is not guaranteed and no warranty is either expressed or implied. Since Scott Specialty Gases has no control over the use of the product described herein, we assume no liability for loss or damage incurred from the proper or improper use of such product. This form is essentially similar to U.S. Department of Labor form OSHA-20.

ULTRA *Scientific* 250 SMITH STREET, NO. KINGSTOWN, RI 02852
Telephone (401) 294-9400
"The Research Company"

MATERIAL SAFETY DATA SHEET

SECTION V HEALTH HAZARD DATA

Contains carcinogen(s) or cancer suspect agent(s)
Toxic; irritant
All chemicals should be considered hazardous - direct physical contact should be avoided.

FIRST AID: In case of eye or skin contact, flush with copious amounts of water. If inhaled remove to fresh air - give oxygen, if necessary. Contact physician.

SECTION VI REACTIVITY DATA

Low Reactivity

SECTION VII SPILL OR LEAK PROCEDURES

Spills or leaks: Due to the small quantity involved, spills or leaks should not pose a significant problem. A leaking bottle may be placed in a plastic bag and normal disposal procedures followed. Liquid samples may be absorbed on vermiculite or sand.

Waste disposal: Burn in a chemical incinerator equipped with an afterburner and scrubber. Observe all federal, state, and local laws concerning disposal.

SECTION VIII PRECAUTIONS TO BE TAKEN IN HANDLING AND STORAGE

Use appropriate OSHA/MSHA approved safety equipment. Wear chemical goggles, face shield, gloves, and chemical resistant clothing such as a laboratory coat and/or a rubber apron to prevent contact with eyes, skin, and clothing. Keep tightly closed, and store in a cool, dry place.

SECTION IX SPECIAL PRECAUTIONS AND COMMENTS

This material should only be used by those persons trained in the safe handling of hazardous chemicals.

The above information is believed to be correct, but does not purport to be all inclusive. This data should be used only as a guide in handling the material. ULTRA SCIENTIFIC, INC. shall not be held liable for any damage resulting from handling or from contact with the above product.

ULTRA *Scientific* 250 SMITH STREET, NO. K
"The Research Company"
Telephone (401) 294-9400

MATERIAL SAFETY DATA SHEET

DATE: 1/17/92 PURGEABLE HALOCARBONS MIXTURE

SECTION I PRODUCT IDENTIFICATION

Catalog Number: HCM-601

Name: Purgeable Halocarbon Mixture at 100 µg/mL in Methanol

SECTION II HAZARDOUS INGREDIENTS

Component	CAS #	%	LD_{50}	RTECS #
methanol	67-56-1	99.95	12,900 mg/kg oral rat	PC1400000
bromodichloromethane	75-27-4	0.01	916 mg/kg oral rat	PA5310000
bromoform	75-25-2	0.01	1147 mg/kg oral rat	PB5600000
bromomethane	74-83-9	0.01	<100 mg/kg oral rat	PA4900000
carbon tetrachloride	56-23-5	0.01	1770 mg/kg oral rat	FG4900000
chlorobenzene	108-90-7	0.01	2910 mg/kg oral rat	CZ0175000
chloroethane	75-00-3	0.01	N/A	KH7525000
chloroform	67-66-3	0.01	800 mg/kg oral rat	FS9100000
chloromethane	74-87-3	0.01	N/A	PA6300000
dibromochloromethane	124-48-1	0.01	848 mg/kg oral rat	PA6360000
1,2-dichlorobenzene	95-50-1	0.01	500 mg/kg oral rat	CZ45000C
1,3-dichlorobenzene	541-73-1	0.01	N/A	CZ4499000
1,4-dichlorobenzene	106-46-7	0.01	500 mg/kg oral rat	CZ4550000
dichlorodifluoromethane	75-71-8	0.01	N/A	PA8200000
1,1-dichloroethane	75-34-3	0.01	725 mg/kg oral rat	KI0175000
1,2-dichloroethane	107-06-2	0.01	680 mg/kg oral rat	KI0525000
1,1-dichloroethene	75-35-4	0.01	200 mg/kg oral rat	KV9275100
trans-1,2-dichloroethene	156-60-5	0.01	7536 mg/kg oral rat	KV9400000
1,2-dichloropropane	78-87-5	0.01	2196 mg/kg oral rat	TX9625000
cis-1,3-dichloropropene	10061-01-5	0.01	250 mg/kg oral rat	UC8310000
trans-1,3-dichloropropene	10061-02-6	0.01	250 mg/kg oral rat	UC8310000
methylene chloride	75-09-2	0.01	2136 mg/kg oral rat	PA8050000
1,1,2,2-tetrachloroethane	79-34-5	0.01	200 mg/kg oral rat	KI8575000
tetrachloroethene	127-18-4	0.01	8850 mg/kg oral rat	KX3850000
1,1,1-trichloroethane	71-55-6	0.01	5660 mg/kg oral rat	KJ2975000
1,1,2-trichloroethane	79-00-5	0.01	1140 mg/kg oral rat	KJ3150000
trichloroethene	79-01-6	0.01	4920 mg/kg oral rat	KX4550000
trichlorofluoromethane	75-69-4	0.01	1743 mg/kg oral rat	PB6125000
vinyl chloride	75-01-4	0.01	500 mg/kg oral rat	KU9625000

SECTION III PHYSICAL DATA

Appearance: colorless liquid

SECTION IV FIRE AND EXPLOSION HAZARD DATA

Flash Pt.: N/A Combustible

Extinguishing Media: Carbon dioxide, dry chemical powder, or water spray

CAT. NO. 1269

MATERIAL SAFETY DATA S

MSDS DATE: 8/05/91
CHANGE NO.: 6745

For Assistance, Contact:
Regulatory Affairs Dept.
PO Box 907 Ames, IA 50010
(800) 227-4224

HACH COMPANY
PO BOX 907
AMES, IA 50010

Silicone Oil

I. PRODUCT IDENTIFICATION

PRODUCT NAME: Silicone Oil
CAS NO.: 63148-62-9 CHEMICAL NAME: Silicone Oil
FORMULA: Proprietary CHEMICAL FAMILY: Silicones

II. INGREDIENTS

Silicone Oil
PCT: 100 CAS NO.: 63148-62-9 SARA: NOT LISTED
TLV: Not established PEL: Not established
HAZARD: May cause irritation

III. PHYSICAL DATA

STATE: liquid APPEARANCE: Colorless ODOR: Slight
SOLUBILITY IN: WATER: less than 0.1% ACID: Not determined
OTHER: Not determined BOILING POINT: >149C MELTING PT.: NA
SPEC GRAVITY: 0.98 pH: Not applicable VAPOR PRESSURE: <5 mm
VAPOR DENSITY (air=1): NA EVAPORATION RATE: <1
METAL CORROSIVITY - ALUMINUM: ND STEEL: ND STABILITY: Stable
STORAGE PRECAUTIONS: Store in a cool, dry place away from oxidizers.

IV. FIRE, EXPLOSION HAZARD AND REACTIVITY DATA

FLASH PT.: >204C; >400F METHOD: open cup
FLAMMABILITY LIMITS - LOWER: NA UPPER: NA
SUSCEPTIBILITY TO SPONTANEOUS HEATING: None
SHOCK SENSITIVITY: None AUTOIGNITION PT.: ND
EXTINGUISHING MEDIA: alcohol foam, carbon dioxide
FIRE/EXPLOSION HAZARDS: May emit toxic fumes in fire
HAZARDOUS DECOMP. PRODUCTS: May emit toxic fumes of silicon dioxide, carbon monoxide and carbon dioxide in fire
OXIDIZER: No NFPA Codes: Health: 1 Flammability: 1 Reactivity: 0
CONDITIONS TO AVOID: Extreme temperatures, contact with oxidizers

V. HEALTH HAZARD DATA

THIS PRODUCT MAY BE: irritating to eyes.
ACUTE TOXICITY: Practically non-toxic
ROUTES OF EXPOSURE: Not applicable
TARGET ORGANS: Not applicable
CHRONIC TOXICITY: Not determined
ROUTES OF EXPOSURE: Not determined
TARGET ORGANS: Not determined
CANCER INFORMATION: Not applicable
ROUTES OF EXPOSURE: Not applicable
TARGET ORGANS: Not applicable
OVEREXPOSURE: May irritate eyes
MEDICAL CONDITIONS AGGRAVATED BY EXPOSURE: None reported

VI. PRECAUTIONARY MEASURES

Avoid contact with eyes and skin.
Wash thoroughly after handling.
PROTECTIVE EQUIPMENT: adequate ventilation, lab grade goggles

VII. FIRST AID

EYE AND SKIN CONTACT: Immediately flush eyes with water for 15 minutes. physician. Wash skin with soap and plenty of water.
INGESTION: Do not induce vomiting. Call physician immediately.
INHALATION: Remove to fresh air.

VIII. SPILL AND DISPOSAL PROCEDURES

IN CASE OF SPILL OR RELEASE: Absorb on paper. Burn in a chemical incinerator equipped with an afterburner and scrubber.
DISPOSE OF IN ACCORDANCE WITH ALL FEDERAL, STATE, AND LOCAL REGULATIONS.

IX. TRANSPORTATION DATA

D.O.T. PROPER SHIPPING NAME: Not Currently Regulated
HAZARD CLASS: Not applicable ID: NA

I.C.A.O. PROPER SHIPPING NAME: Not Currently Regulated
HAZARD CLASS: NA ID: NA GROUP: NA

I.M.O. PROPER SHIPPING NAME: Not Currently Regulated
HAZARD CLASS: NA ID: NA GROUP: NA

X. REFERENCES

1) TLV's Threshold Limit Values and Biological Exposure Indices for 198 1989. American Conference of Governmental Industrial Hygienists, 198
2) Air Contaminants, Federal Register, Vol. 54, No. 12, Thursday, Januar 19, 1989. pp. 2332-2983.
3) Vendor information.
4) Technical judgment
5) Sax, N. Irving. Dangerous Properties of Industrial Materials, 6th E New York: Van Nostrand Reinhold Co. 1984.
6) Gosselin, R.E. et al. Clinical Toxicology of Commercial Products, 5t Ed. Baltimore: The Williams and Wilkins Co., 1984.

THE INFORMATION CONTAINED HEREIN IS BASED ON DATA CONSIDERED TO BE ACCURATE. HOWEVER, NO WARRANTY IS EXPRESSED OR IMPLIED REGARDING THE ACCURACY OF THESE DATA OR THE RESULTS TO BE OBTAINED FROM THE USE THEREOF.

(C) HACH CO. 1993

CAT. NO. 21750 MATERIAL SAFETY DATA S

MSDS DATE: 1/12/93
CHANGE NO.: 8745

For Assistance, Contact:
Regulatory Affairs Dept.
PO Box 907 Ames, IA 50010
(800) 227-4224

HACH COMPANY
PO BOX 907
AMES, IA 50010

Reference Electrolyte Solution

I. PRODUCT IDENTIFICATION

PRODUCT NAME: Hach One Reference Electrolyte Solution
CAS NO.: NA CHEMICAL NAME: Not applicable
FORMULA: Not applicable CHEMICAL FAMILY: Not applicable

II. INGREDIENTS

Glycerin
PCT: <45 CAS NO.: 56-81-5 SARA: NOT LISTED
TLV: 10 mg/M3 mist PEL: Not established
HAZARD: Irritating to mucous membranes

Potassium Chloride
PCT: <20 CAS NO.: 7447-40-7 SARA: NOT LISTED
TLV: Not established PEL: Not established
HAZARD: May cause irritation

Other components, each
PCT: <0.1 CAS NO.: NA SARA: NOT LISTED
TLV: Not applicable PEL: Not applicable
HAZARD: Not applicable

Demineralized Water
PCT: to 100 CAS NO.: 7732-18-5 SARA: NOT LISTED
TLV: Not applicable PEL: Not applicable
HAZARD: None

Any component of this mixture not specifically listed (eg. "other components") is not considered to present a carcinogen hazard.

III. PHYSICAL DATA

STATE: liquid APPEARANCE: Clear, colorless ODOR: Not determined
SOLUBILITY IN: WATER: Miscible ACID: Miscible OTHER: Not determined
BOILING POINT: ~99°C MELTING PT.: NA SPEC GRAVITY: 1.21 pH: 6.16
VAPOR PRESSURE: Not determined VAPOR DENSITY (air=1): ND
EVAPORATION RATE: ND METAL CORROSIVITY - ALUMINUM: ND STEEL: ND
STABILITY: Stable
STORAGE PRECAUTIONS: Store tightly closed.

IV. FIRE, EXPLOSION HAZARD AND REACTIVITY DATA

FLASH PT.: Not applicable METHOD: NA
FLAMMABILITY LIMITS - LOWER: NA UPPER: NA
SUSCEPTIBILITY TO SPONTANEOUS HEATING: None
SHOCK SENSITIVITY: None AUTOIGNITION PT.: ND
EXTINGUISHING MEDIA: water, dry chemical, alcohol foam or carbon dioxide
FIRE/EXPLOSION HAZARDS: None reported
HAZARDOUS DECOMP. PRODUCTS: None reported
OXIDIZER: No NFPA Codes: Health: 0 Flammability: 0 Reactivity: 0
CONDITIONS TO AVOID: Heat, flames; contact with strong oxidizers such as chromium trioxide, potassium chlorate or potassium permanganate

V. HEALTH HAZARD DATA

ACUTE TOXICITY: Practically non-toxic
ROUTES OF EXPOSURE: Not applicable
TARGET ORGANS: Not applicable
CHRONIC TOXICITY: Practically non-toxic
ROUTES OF EXPOSURE: Not applicable
TARGET ORGANS: Not applicable
CANCER INFORMATION: Not applicable
ROUTES OF EXPOSURE: Not applicable
TARGET ORGANS: Not applicable
OVEREXPOSURE: No effects anticipated
MEDICAL CONDITIONS AGGRAVATED BY EXPOSURE: None reported

VI. PRECAUTIONARY MEASURES

Avoid contact with eyes and skin.
Wash thoroughly after handling.
PROTECTIVE EQUIPMENT: adequate ventilation, lab grade goggles

VII. FIRST A.

EYE AND SKIN CONTACT: Immediately flush eyes with water for 15 minut. . c. physician. Flush skin with plenty of water.
INGESTION: Give large quantities of water. Call physician immediately.
INHALATION: Remove to fresh air.

VIII. SPILL AND DISPOSAL PROCEDURES

IN CASE OF SPILL OR RELEASE: Dilute with water. Pour down the drain w/ excess water.
DISPOSE OF IN ACCORDANCE WITH ALL FEDERAL, STATE, AND LOCAL REGULATIONS.

IX. TRANSPORTATION DATA

D.O.T. PROPER SHIPPING NAME: Not Currently Regulated
HAZARD CLASS: Not applicable ID: NA

I.C.A.O. PROPER SHIPPING NAME: Not Currently Regulated
HAZARD CLASS: NA ID: NA GROUP: NA

I.M.O. PROPER SHIPPING NAME: Not Currently Regulated
HAZARD CLASS: NA ID: NA GROUP: NA

X. REFERENCES

1) TLV's Threshold Limit Values and Biological Exposure Indices for 1988-1989. American Conference of Governmental Industrial Hygienists, 1988
2) Air Contaminants, Federal Register, Vol. 54, No. 12, Thursday, Jan[illegible] 19, 1989. pp. 2332-2985.
3) In-house information
4) Technical judgment

THE INFORMATION CONTAINED HEREIN IS BASED ON DATA CONSIDERED TO BE ACCURATE. HOWEVER, NO WARRANTY IS EXPRESSED OR IMPLIED REGARDING THE ACCURACY OF THESE DATA OR THE RESULTS TO BE OBTAINED FROM THE USE THEREOF.

(C) HACH CO. 199

SECTION II - COMPONENTS

COMPONENT	CAS NO.	WEIGHT %	OSHA/PEL	ACGIH/TLV
SODIUM BICARBONATE	144-55-8	99-100	N/E	N/E

SECTION III - PHYSICAL DATA

BOILING POINT: N/A

VAPOR PRESSURE (MMHG): N/A

MELTING POINT: 50 C (122 F)
(AT 760 MM HG)

VAPOR DENSITY (AIR=1): N/A

SPECIFIC GRAVITY: 2.16
(H2O=1)

EVAPORATION RATE: N/A

SOLUBILITY(H2O): MODERATE (1-10%)

% VOLATILES BY VOLUME: 0
(21 C)

PH: N/A

ODOR THRESHOLD (P.P.M.): N/A

PHYSICAL STATE: SOLID

COEFFICIENT WATER/OIL DISTRIBUTION: N/A

APPEARANCE & ODOR: WHITE CRYSTALLINE POWDER. ODORLESS.

SECTION IV - FIRE AND EXPLOSION HAZARD DATA

FLASH POINT (CLOSED CUP): N/A

AUTOIGNITION TEMPERATURE: N/A

FLAMMABLE LIMITS: UPPER - N/A LOWER - N/A

FIRE EXTINQUISHING MEDIA
USE EXTINGUISHING MEDIA APPROPRIATE FOR SURROUNDING FIRE.

SPECIAL FIRE-FIGHTING PROCEDURES
FIREFIGHTERS SHOULD WEAR PROPER PROTECTIVE EQUIPMENT AND SELF-CONTAINED BREATHING APPARATUS WITH FULL FACEPIECE OPERATED IN POSITIVE PRESSURE MODE.

CONTINUED ON PAGE: 3

J.T.BAKER INC. 222 RED SCHOOL LANE, PHILL
M A T E R I A L S A F E T Y D A T A
24-HOUR EMERGENCY TELEPHONE -- (201) 859-2151
CHEMTREC # (800) 424-9300 -- NATIONAL RESPONSE CENTER # (800) 424-8802

S2954 D02 SODIUM BICARBONATE PAGE: 1
EFFECTIVE: 05/01/89 ISSUED: 05/17/89

J.T.BAKER INC., 222 RED SCHOOL LANE, PHILLIPSBURG, NJ 08865

SECTION I - PRODUCT IDENTIFICATION

PRODUCT NAME: SODIUM BICARBONATE
COMMON SYNONYMS: BAKING SODA; SODIUM ACID CARBONATE
CHEMICAL FAMILY: INORGANIC SODIUM COMPOUNDS
FORMULA: NAHCO3
FORMULA WT.: 84.01
CAS NO.: 144-55-8
NIOSH/RTECS NO.: VZ0950000
PRODUCT USE: LABORATORY REAGENT
PRODUCT CODES: 3506,3508,3509

PRECAUTIONARY LABELING

BAKER SAF-T-DATA* SYSTEM

HEALTH	-	0	NONE
FLAMMABILITY	-	0	NONE
REACTIVITY	-	1	SLIGHT
CONTACT	-	1	SLIGHT

LABORATORY PROTECTIVE EQUIPMENT

GOGGLES; LAB COAT

U.S. PRECAUTIONARY LABELING

CAUTION

MAY CAUSE IRRITATION.
DURING USE AVOID CONTACT WITH EYES, SKIN, CLOTHING. WASH THOROUGHLY AFTER HANDLING. WHEN NOT IN USE KEEP IN TIGHTLY CLOSED CONTAINER.

INTERNATIONAL LABELING

DO NOT BREATHE DUST. AVOID CONTACT WITH SKIN AND EYES.

SAF-T-DATA* STORAGE COLOR CODE: ORANGE (GENERAL STORAGE)

CONTINUED ON PAGE: 2

SECTION V - HEALTH HAZARD DATA (CONTINUED)

SKIN ABSORPTION: NONE IDENTIFIED

INGESTION: NONE IDENTIFIED

CHRONIC EFFECTS: NONE IDENTIFIED

TARGET ORGANS
NONE IDENTIFIED

MEDICAL CONDITIONS GENERALLY AGGRAVATED BY EXPOSURE
NONE IDENTIFIED

PRIMARY ROUTES OF ENTRY
SKIN CONTACT, EYE CONTACT

EMERGENCY AND FIRST AID PROCEDURES

INGESTION: IF SWALLOWED AND THE PERSON IS CONSCIOUS, IMMEDIATELY GIVE LARGE AMOUNTS OF WATER. GET MEDICAL ATTENTION.

INHALATION: IF A PERSON BREATHES IN LARGE AMOUNTS, MOVE THE EXPOSED PERSON TO FRESH AIR.

SKIN CONTACT: IN CASE OF CONTACT, IMMEDIATELY WASH SKIN WITH PLENTY OF SOAP AND WATER FOR AT LEAST 15 MINUTES.

EYE CONTACT: IN CASE OF EYE CONTACT, IMMEDIATELY FLUSH WITH PLENTY OF WATER FOR AT LEAST 15 MINUTES.

SARA/TITLE III HAZARD CATEGORIES AND LISTS

ACUTE: NO CHRONIC: NO FLAMMABILITY: NO PRESSURE: NO REACTIVITY: NO

EXTREMELY HAZARDOUS SUBSTANCE: NO
CERCLA HAZARDOUS SUBSTANCE: NO
TOXIC CHEMICALS: NO
TSCA INVENTORY: YES

CONTINUED ON PAGE: 5

SECTION IV - FIRE AND EXPLOSION HAZARD DATA (CONTINUED)

UNUSUAL FIRE & EXPLOSION HAZARDS
NONE IDENTIFIED.

TOXIC GASES PRODUCED
CARBON MONOXIDE, CARBON DIOXIDE

EXPLOSION DATA-SENSITIVITY TO MECHANICAL IMPACT
NONE IDENTIFIED.

EXPLOSION DATA-SENSITIVITY TO STATIC DISCHARGE
NONE IDENTIFIED.

SECTION V - HEALTH HAZARD DATA

THRESHOLD LIMIT VALUE (TLV/TWA): NOT ESTABLISHED

SHORT-TERM EXPOSURE LIMIT (STEL): NOT ESTABLISHED

PERMISSIBLE EXPOSURE LIMIT (PEL): NOT ESTABLISHED

TOXICITY OF COMPONENTS

ORAL RAT LD50 FOR SODIUM BICARBONATE 4220 MG/KG
CARCINOGENICITY: NTP: NO IARC: NO Z LIST: NO OSHA REG: NO

CARCINOGENICITY
NONE IDENTIFIED.

REPRODUCTIVE EFFECTS
NONE IDENTIFIED.

EFFECTS OF OVEREXPOSURE

INHALATION: NONE IDENTIFIED

SKIN CONTACT: IRRITATION

EYE CONTACT: IRRITATION

CONTINUED ON PAGE: 4

SECTION X - TRANSPORTATION DATA AND ADDITIONAL INFORMATION

DOMESTIC (D.O.T.)

PROPER SHIPPING NAME: CHEMICALS, N.O.S. (NON-REGULATED)

INTERNATIONAL (I.M.O.)

PROPER SHIPPING NAME: CHEMICALS, N.O.S. (NON-REGULATED)
MARINE POLLUTANTS: NO

AIR (I.C.A.O.)

PROPER SHIPPING NAME: CHEMICALS, N.O.S. (NON-REGULATED)

U.S. CUSTOMS HARMONIZATION NUMBER: 2836300C000

N = NOT APPLICABLE OR NOT AVAILABLE
N/E = NOT ESTABLISHED

THE INFORMATION IN THIS MATERIAL SAFETY DATA SHEET MEETS THE REQUIREMENTS OF THE UNITED STATES OCCUPATIONAL SAFETY AND HEALTH ACT AND REGULATIONS PROMULGATED THEREUNDER (29 CFR 1910.1200 ET. SEQ.) AND THE CANADIAN WORKPLACE HAZARDOUS MATERIALS INFORMATION SYSTEM. THIS DOCUMENT IS INTENDED ONLY AS A GUIDE TO THE APPROPRIATE PRECAUTIONARY HANDLING OF THE MATERIAL BY A PERSON TRAINED IN, OR SUPERVISED BY A PERSON TRAINED IN, CHEMICAL HANDLING. THE USER IS RESPONSIBLE FOR DETERMINING THE PRECAUTIONS AND DANGERS OF THIS CHEMICAL FOR HIS OR HER PARTICULAR APPLICATION. DEPENDING ON USAGE, PROTECTIVE CLOTHING INCLUDING EYE AND FACE GUARDS AND RESPIRATORS MUST BE USED TO AVOID CONTACT WITH MATERIAL OR BREATHING CHEMICAL VAPORS/FUMES.
EXPOSURE TO THIS PRODUCT MAY HAVE SERIOUS ADVERSE HEALTH EFFECTS. THIS CHEMICAL MAY INTERACT WITH OTHER SUBSTANCES. SINCE THE POTENTIAL USES ARE SO VARIED, BAKER CANNOT WARN OF ALL OF THE POTENTIAL DANGERS OF USE OR INTERACTION WITH OTHER CHEMICALS OR MATERIALS. BAKER WARRANTS THAT THE CHEMICAL MEETS THE SPECIFICATIONS SET FORTH ON THE LABEL.
BAKER DISCLAIMS ANY OTHER WARRANTIES, EXPRESSED OR IMPLIED WITH REGARD TO THE PRODUCT SUPPLIED HEREUNDER, ITS MERCHANTABILITY OR ITS FITNESS FOR A PARTICULAR PURPOSE.
THE USER SHOULD RECOGNIZE THAT THIS PRODUCT CAN CAUSE SEVERE INJURY AND EVEN DEATH, ESPECIALLY IF IMPROPERLY HANDLED OR THE KNOWN DANGERS OF USE ARE NOT HEEDED. READ ALL PRECAUTIONARY INFORMATION. AS NEW DOCUMENTED GENERAL SAFETY INFORMATION BECOMES AVAILABLE, BAKER WILL PERIODICALLY REVISE THIS MATERIAL SAFETY DATA SHEET. IF YOU HAVE ANY QUESTIONS,

CONTINUED ON PAGE: 7

SECTION VI - REACTIVITY DATA

STABILITY: STABLE HAZARDOUS POLYMERIZATION: WILL NOT OCCUR

CONDITIONS TO AVOID: HEAT, HUMIDITY

INCOMPATIBLES: NONE IDENTIFIED

DECOMPOSITION PRODUCTS: CARBON MONOXIDE, CARBON DIOXIDE

SECTION VII - SPILL & DISPOSAL PROCEDURES

STEPS TO BE TAKEN IN THE EVENT OF A SPILL OR DISCHARGE
WEAR SUITABLE PROTECTIVE CLOTHING. CAREFULLY SWEEP UP AND REMOVE.

DISPOSAL PROCEDURE
DISPOSE IN ACCORDANCE WITH ALL APPLICABLE FEDERAL, STATE, AND LOCAL ENVIRONMENTAL REGULATIONS.

SECTION VIII - INDUSTRIAL PROTECTIVE EQUIPMENT

VENTILATION: USE ADEQUATE GENERAL OR LOCAL EXHAUST VENTILATION TO KEEP FUME OR DUST LEVELS AS LOW AS POSSIBLE.

RESPIRATORY PROTECTION: NONE REQUIRED WHERE ADEQUATE VENTILATION CONDITIONS EXIST. IF AIRBORNE CONCENTRATION IS HIGH, USE AN APPROPRIATE RESPIRATOR OR DUST MASK.

EYE/SKIN PROTECTION: SAFETY GOGGLES, PROPER GLOVES ARE RECOMMENDED.

SECTION IX - STORAGE AND HANDLING PRECAUTIONS

SAF-T-DATA* STORAGE COLOR CODE: ORANGE (GENERAL STORAGE)

STORAGE REQUIREMENTS
KEEP CONTAINER TIGHTLY CLOSED. SUITABLE FOR ANY GENERAL CHEMICAL STORAGE AREA.

CONTINUED ON PAGE: 6

GALLADE CHEMICAL INC.

ORANGE COUNTY • SAN DIEGO COUNTY • SAN BERNARDINO COUNTY

MATERIAL SAFETY DATA SHEET (MSDS) ATTACHED

SODIUM HEXAMETAPHOSPHATE

MANUFACTURED BY: RHONE-POULENC BASIC CHEMICALS CO.

DISTRIBUTED BY

ORANGE COUNTY CHEMICAL
1230 EAST ST. GERTRUDE PLACE
SANTA ANA, CALIFORNIA 92707
(714) 540-9901

GALLADE CHEMICAL OF SAN DIEGO
425 NORTH ANDREASEN DRIVE
ESCONDIDO, CALIFORNIA 92029
(619) 489-0798 (619) 566-4940

GALLADE CHEMICAL OF FONTANA
15120 SANTA ANA AVENUE
FONTANA, CALIFORNIA 92335
(800) 325-8431 (800) 228-8906

==========

PLEASE CALL CUSTOMER SERVICE (1-800-JTBAKER) FOR ASSISTANCE.

COPYRIGHT 1989 J.T.BAKER INC.
* TRADEMARKS OF J.T.BAKER INC.

===

APPROVED BY QUALITY ASSURANCE DEPARTMENT.

-- LAST PAGE --

III. PHYSICAL DATA

BULK DENSITY:	55 - 81 lbs./cu.ft.
MELTING POINT °C (°F):	628°C (1130.4°F)
pH (1% solution):	7.0
SOLUBILITY IN WATER [@ 25°C]:	Very soluble in water
APPEARANCE AND ODOR:	White granular solid, powder, or glass plates; odorless

(For additional technical information call 1-800-642-4200)

IV. FIRE AND EXPLOSION HAZARD DATA

FLASH POINT [°C (°F)]: Noncombustible

FLAMMABLE LIMITS IN AIR: Not applicable

AUTOIGNITION TEMPERATURE [°C (°F)]: Not applicable

EXTINGUISHING MEDIA:
Not combustible. Use appropriate extinguishing media for material that is supplying fuel.

SPECIAL FIRE FIGHTING PROCEDURES:
Wear a NIOSH/MSHA approved self-contained breathing apparatus and full protective clothing. Dike area to prevent runoff and contamination of water sources.

UNUSUAL FIRE AND EXPLOSION HAZARDS:
Product does not present any unusual fire hazards.

V. REACTIVITY DATA

STABILITY: Stable.

CONDITIONS TO AVOID: Hygroscopic, protect from moisture.

MATERIALS TO AVOID: None known.

HAZARDOUS DECOMPOSITION PRODUCTS:
Decomposition products may be hazardous. These may include phosphorus oxides and sodium oxides.

HAZARDOUS POLYMERIZATION: Will not occur.

RHONE-POULENC BASIC CHEMICALS C
1 Corporate Drive Box 881 Shelton, CT. 06484 (203)925-3300
24-HOUR EMERGENCY TELEPHONE CHEMTREC 1-800-424-9300

PRODUCT NAME:

SODIUM POLYPHOSPHATE, GLASSY

Effective Date: JANUARY 17, 1992
Supercedes: NOVEMBER 9, 1989

I. IDENTIFICATION

CHEMICAL NAME OF PRIMARY COMPONENT(S): Sodium hexametaphosphate

FORMULA: $H_6P_6O_{18} \cdot 6Na$ FORMULA WEIGHT: Polymeric

SYNONYMS: VITRAFOS®; Calgon; Chemi-Charl; HMP; sodium polymetaphosphate; Graham's salt; Hexametaphosphate, sodium salt

CAS# & NAME: 10124-56-8 Metaphosphoric acid, hexasodium salt

II. INGREDIENTS/SUMMARY OF HAZARDS

INGREDIENT(S)	CAS NUMBER	OSHA HAZARDOUS (H)/ NON-HAZARDOUS (NH)	PERCENT
Sodium hexametaphosphate	10124-56-8	NH	100

WARNING STATEMENTS:

NONE REQUIRED. Not found to be hazardous by OSHA criteria. Observe normal industrial hygiene practices when handling.

GRAS (Generally Regarded As Safe) by FDA.

(See Section VI for complete Health Hazard Data)

NATIONAL FIRE PROTECTION ASSOCIATION RATING

HAZARDOUS MATERIALS IDENTIFICATION SYSTEM

	NFPA	HMIS
HEALTH	0	0
FIRE	0	0
REACTIVITY	0	0

(4=Extreme/Severe 3=High/Serious
2=Moderate 1=Slight 0=Minimum)

SARA TITLE III HAZARD CLASSIFICATION

IMMEDIATE (ACUTE) HEALTH	NO
DELAYED (CHRONIC) HEALTH	NO
FIRE	NO
SUDDEN RELEASE OF PRESSURE	NO
REACTIVE	NO

VI. HEALTH HAZARD DATA/FIRST AID PROCEDURES (continued)

EMERGENCY AND FIRST AID PROCEDURES:

Swallowing: If patient is conscious and alert, give two or more glasses of water or milk to drink. If available, give one tablespoon of Syrup of Ipecac to induce vomiting. If vomiting has not occurred in 20 minutes, the same dose of Syrup of Ipecac may be repeated one additional time. Alternatively, induce vomiting by touching the back of the throat with a finger. NEVER give anything by mouth to an unconscious or convulsing person. GET MEDICAL ATTENTION.

Skin: Wash all affected areas with plenty of water for several minutes while removing contaminated clothing and shoes. Wash contaminated clothing separately and clean shoes before reuse. GET MEDICAL ATTENTION if skin irritation occurs.

Inhalation: Remove patient to fresh air. If breathing is difficult or irritation develops, GET MEDICAL ATTENTION.

Eyes: In case of contact, immediately flush eyes with plenty of water for at least 15 minutes using an eyewash fountain, if available. Lift upper and lower lids and rinse well under them. GET MEDICAL ATTENTION if irritation occurs.

NOTES TO PHYSICIANS:
All treatments should be based on observed signs and symptoms of distress in the patient. Consideration should be given to the possibility that overexposure to materials other than this product may have occurred.

VII. PRECAUTIONS FOR SAFE HANDLING AND USE

STEPS TO BE TAKEN IF MATERIAL IS RELEASED OR SPILLED:

Sweep or vacuum spilled material, being careful not to create dust. Place sweepings into an appropriate waste container. DO NOT RETURN MATERIAL TO ITS ORIGINAL CONTAINER ! Seal container for disposal.
Residual material should be cleaned from hard surfaces as appropriate.
Do not flush material to public sewer systems or any waterway.
Ensure adequate decontamination of tools and equipment following cleanup.

WASTE DISPOSAL METHOD:
Dispose of in accordance with Local, State and Federal regulations.

PRECAUTIONS TO BE TAKEN IN HANDLING AND STORING:
Store in a cool, dry place. Keep containers closed when not in use. Exercise due caution to prevent damage to the container.

VI. HEALTH HAZARD DATA/FIRST AID PROCEDURES

EXPOSURE LIMITS No exposure limits have been set for this product, however, the following limits may apply:

Chemical Name(s)	ACGIH (TWA)	OSHA (TWA)
Particulates Not Otherwise Classified	10 mg/m³ total dust	15 mg/m³ total dust 5 mg/m³ respirable fraction

TOXICOLOGY DATA:

Oral LD50 (rats):	>3,053 mg/kg body weight	(1)
Dermal LD50 (rabbits):	No data available	
Inhalation LC50 (rats):	No data available	
Skin Effects (rabbits):	Mild irritant	(2)
Eye Effects (rabbits):	Minimal irritant to unwashed eyes	
	Non-irritant to washed eyes	(3)

CARCINOGENICITY:
This product does not contain any ingredient designated by IARC, NTP, ACGIH OR OSHA as a probable human carcinogen.

EFFECTS OF SINGLE OVEREXPOSURE:

Swallowing: If ingested in large amounts, discomfort including nausea, vomiting, cramps, and diarrhea are probable. Ingestion may cause a shock-like state, fall of blood pressure, slow pulse, cyanosis, coma and sometimes, tetany. (4,5)

Skin Absorption: No evidence of adverse effects from available information.

Inhalation: Inhalation of high airborne concentrations of dusts may result in non-specific irritation of the respiratory tract.

Skin Contact: No significant adverse effects are anticipated based on available information. May cause mild irritation.

Eye Contact: May cause irritation.

EFFECTS OF REPEATED OVEREXPOSURE:
No evidence of additional adverse effects from available information.

OTHER EFFECTS OF OVEREXPOSURE:
Hypocalcemia may occur after ingestion of large amounts of material because of the potential binding of serum calcium. (5)

EXISTING MEDICAL CONDITIONS POSSIBLY AGGRAVATED BY EXPOSURE:
Skin irritation may be aggravated in persons with existing skin lesions. Breathing of dust may aggravate acute or chronic asthma and other chronic pulmonary disease.

X. REFERENCES

(1) RTECS, 7/91
(2) Unpublished Rhone-Poulenc sponsored toxicity study.
(3) FMC Study I86-915 as reported on MSDS dated 9/7/88
(4) Dreisbach, Handbook of Poisoning, 12th edition.
(5) Gosselin, Clinical Toxicology of Commercial Products, 5th ed.

The information herein is given in good faith
but no warranty, expressed or implied, is made.

VIII. SPECIAL PROTECTION INFORMATION

PROTECTIVE EQUIPMENT SHOULD BE USED DURING THE FOLLOWING PROCEDURES:
- Manufacture or formulation of this product
- Repair and maintenance of contaminated equipment
- Clean up of leaks and spills

RESPIRATORY PROTECTION:
If use conditions generate airborne dust, handle material in an open or well-ventilated area. Where adequate ventilation is not available, use a NIOSH/MSHA approved respirator for dust.

VENTILATION:
Provide adequate ventilation. Use local exhaust as needed to maintain airborne exposure below control limits.

PROTECTIVE CLOTHING: Work clothing and gloves.

EYE PROTECTION: Safety glasses with side shields.

OTHER PROTECTIVE EQUIPMENT:
Maintain a sink, safety shower and eyewash fountain in the work area. Have oxygen readily available.

IX. REGULATORY STATUS

TSCA Inventory Status: This product is listed on the TSCA inventory.

Transportation Status: DOT: Not regulated

Reportable quantity (RQ) under 49 CFR 172.101 Appendix: Not listed

SARA Title III
Section 302 Extremely Hazardous Substance List: Not listed
Section 313 Toxic Chemicals: Not listed

Reportable Quantity (RQ) under US EPA CERCLA: RQ = 5000 lb (sodium hexametaphosphate)

RCRA Hazardous Waste: Not listed

State/International Right-to-Know Regulations:

	Sodium Hexametaphosphate
California:	Not listed
Connecticut:	Survey
Florida:	Not listed
Illinois:	Chemical List
Louisiana:	Spill, RQ = 5000 lb
Massachusetts:	RTK, Spill list RQ=100 lb
New Jersey:	RTK, ID# 3045; TAX
New York:	Spill RQ = 5000 lb (Air); 100 lb (L/W)
Pennsylvania:	RTK, ENV
Rhode Island:	Not listed
Canada:	Not listed

Section 6. Health Hazard Data, *continued*

Acute Effects: Ingestion causes immediate burning of mouth, esophagus, and stomach; painful swallowing; excessive salivation; edematous (excess fluid in surrounding tissue) lips, chin, tongue, and pharynx covered with exudate (fluid oozed from swollen tissue); esophageal edema (swelling from fluid buildup in esophagus walls that can prevent all swallowing within hours); possibly edematous, gelatinous, and necrotic (localized tissue death) mucous membranes; vomiting (sometimes coffee grounds-like material due to digestive hemorrhage); and rapid, faint pulse; and cold, clammy skin. Death results commonly from shock, asphyxia (oxygen loss due to interrupted breathing), or pneumonia by the second or third day after ingestion. Dust inhalation can cause many small burns, temporary hair loss (in nasal passages since sodium hydroxide breaks down keratin), and possibly pulmonary edema (fluid in lungs). Skin contact causes slippery, soapy feeling that is not usually painful for 3 min after contact—even though skin damage begins immediately. It causes burns, keratin (hair and nails) destruction, and intracellular edema (excess fluid in skin cells), with damage progressing to severe burns, tissue corrosion, deep ulcerations, and permanent scarring if not immediately washed off. The cornea begins to corrode on contact. Disintegration and sloughing of conjunctival and corneal epithelium may progress to temporary or permanent corneal opacification (cloudiness, becoming impervious to light) or symblepharon (adhesion of lid to eyeball).
Chronic Effects: Dermatitis may result from repeated exposure to dilute solutions. Cases of squamous cell carcinoma (malignant tumors of epithelial origin) of the esophagus are reported 12 to 42 years after sodium hydroxide ingestion, although it is unclear whether the cancer results from scar formation caused by tissue destruction or directly from the chemical's possible carcinogenicity.
FIRST AID: Emergency personnel should protect against contamination.
Eyes: Gently lift the eyelids and flush immediately and continuously with flooding amounts of cold water until transported to an emergency medical facility. *Do not* allow victim to keep eyes tightly shut. *Warning!* Although splashed directly in only one eye, sodium hydroxide may affect the other eye's sight if prompt medical attention is not received. Consult a physician immediately.
Skin: *Quickly* remove contaminated clothing. Rinse with flooding amounts of water for at least 15 min. *Be aware* that this substance can become very hot when in contact with water. For reddened or blistered skin, consult a physician. Wash affected area with soap and water.
Inhalation: Remove exposed person to fresh air and support breathing as needed.
Ingestion: Never give anything by mouth to an unconscious or convulsing person. If ingested, have that *conscious and alert* person drink 1 to 2 glasses of water, followed by vinegar or fruit juice to neutralize the poison. *Do not induce vomiting!*
After first aid, get appropriate in-plant, paramedic, or community medical support.
Note to Physicians: Perform endoscopy in all suspected cases of sodium hydroxide ingestion. Perform blood analysis to determine if dehydration, acidosis, or other electrolyte imbalances have occurred.

Section 7. Spill, Leak and Disposal Procedures

Spill/Leak: Notify safety personnel, isolate hazard area, deny entry, and stay upwind of spills. Cleanup personnel should protect against vapor inhalation and skin or eye contact. Use water spray to disperse vapors, but do not spray directly on spills. For small dry spills, avoid excess dust generation by carefully scooping or vacuuming (with appropriate filter) into a suitable container (above 60 °C sodium hydroxide corrodes steel) for later disposal. For large dry spills, cover with plastic sheet or other impermeable layer and contain for later disposal. Follow applicable OSHA regulations (29 CFR 1910.120).
Environmental Transport: Sodium hydroxide is not mobile in solid form, although it absorbs moisture very easily. Once liquid, sodium hydroxide leaches rapidly into soil, possibly contaminating water sources.
Environmental Degradation: Ecotoxicity values: TLm, mosquito fish, 125 ppm/96 hr (fresh water); TLm, bluegill, 99 mg/48 hr (tap water).
Disposal: Contact your supplier or a licensed contractor for detailed recommendations. Follow applicable Federal, state, and local regulations.
EPA Designations
Listed as a RCRA Hazardous Waste (40 CFR 261.22): Characteristic of corrosivity
Listed as a CERCLA Hazardous Substance* (40 CFR 302.4), Reportable
Quantity (RQ): 1000 lb (454 kg) [* per Clean Water Act, Sec. 311 (b)(4)]
SARA Extremely Hazardous Substance (40 CFR 355): Not listed
SARA Toxic Chemical (40 CFR 372.65): Not listed
OSHA Designations
Listed as an Air Contaminant (29 CFR 1910.1000, Table Z-1-A)

Section 8. Special Protection Data

Goggles: Wear protective eyeglasses or chemical safety goggles, per OSHA eye- and face-protection regulations (29 CFR 1910.133). Since contact lens use in industry is controversial, establish your own policy.
Respirator: Seek professional advice prior to respirator selection and use. Follow OSHA respirator regulations (29 CFR 1910.134) and, if necessary, wear a NIOSH-approved respirator. Select the respirator based on its suitability to provide adequate worker protection for the given working conditions, level of airborne contamination, and presence of sufficient oxygen. For emergency or nonroutine operations (cleaning spills, reactor vessels, or storage tanks), wear an SCBA. *Warning! Air-purifying respirators do not protect workers in oxygen-deficient atmospheres.*
Other: Wear impervious gloves, boots, aprons, and gauntlets to prevent any skin contact.
Ventilation: Provide general and local exhaust ventilation systems to maintain airborne concentrations below the OSHA PEL (Sec. 2). Local exhaust ventilation is preferred since it prevents contaminant dispersion into the work area by controlling it at its source.[165]
Safety Stations: Make available in the work area emergency eyewash stations, safety/quick-drench showers, and washing facilities.
Contaminated Equipment: Separate contaminated work clothes from street clothes. Launder contaminated work clothing before wearing. Remove this material from your shoes and clean personal protective equipment.
Comments: Never eat, drink, or smoke in work areas. Practice good personal hygiene after using this material, especially before eating, drinking, smoking, using the toilet, or applying cosmetics.

Section 9. Special Precautions and Comments

Storage Requirements: Avoid physical damage to containers. Store in dry, well-ventilated area away from water, acids, metals, flammable liquids, and organic halogens. Keep containers tightly closed since sodium hydroxide can decompose to sodium carbonate and carbon dioxide upon exposure to air. Since corrosion occurs easily above 140 °F (60 °C), do not store or transport sodium hydroxide in aluminum or steel containers at temperatures near this level. Store containers in rooms equipped with trapped floor drains, curbs, or gutters.
Engineering Controls: To reduce potential health hazards, use sufficient dilution or local exhaust ventilation to control hazardous contaminants and to maintain concentrations at the lowest practical level.
Other Precautions: Consider preplacement and periodic medical examinations of exposed workers that emphasize eyes, skin, and respiratory tract. Consider a respiratory protection program that includes regular training, maintenance, inspection, and evaluation. Inform employees of the possible hazards in using sodium hydroxide.

Transportation Data (49 CFR 172.101, .102)

DOT Shipping Name: Sodium hydroxide; dry, solid, flake, bead *or* granular
DOT Hazard Class: Corrosive material
ID No.: UN1823
DOT Label: Corrosive
DOT Packaging Exceptions: 173.244
DOT Packaging Requirements: 173.245b

IMO Shipping Name: Sodium hydroxide, solid
IMO Hazard Class: 8
ID No.: UN1823
IMO Label: Corrosive
IMDG Packaging Group: II

MSDS Collection References: 26, 38, 73, 89, 100, 101, 103, 124, 126, 127, 132, 133, 136, 139, 140, 143, 146, 148, 149, 153, 159, 161, 163
Prepared by: M Gannon, BA; **Industrial Hygiene Review:** DJ Wilson, CIH; **Medical Review:** W Silverman, MD; **Edited by:** ER O'Connor, MS

Copyright © 1991 by Genium Publishing Corporation. Any commercial use or reproduction without the publisher's permission is prohibited. Judgments as to the suitability of information herein for the purchaser's purposes are necessarily the purchaser's responsibility. Although reasonable care has been taken in the preparation of such information, Genium Publishing Corporation extends no warranties, makes no representations, and assumes no responsibility as to the accuracy or suitability of such information for application to the purchaser's intended purpose or for consequences of its use.

Genium Publishing Corporation
1145 Catalyn Street
Schenectady, NY 12303-1836 USA
(518) 377-8854

Material.

Sheet No. .
Sodium Hydroxide

Issued: 10/77 Revision: C, 11/91

Section 1. Material Identification

Sodium Hydroxide (NaOH) Description: Derived by electrolysis of sodium chloride brines, by reacting calcium chloride with sodium carbonate, or by electrolytic production using the diaphragm cell. Sodium hydroxide often contains as impurities minimal amounts of sodium chloride, sodium carbonate, sodium sulfate, sodium chlorate, iron, or nickel. Used to hydrolyze fats and form soaps; in making plastics to dissolve casein; in treating cellulose to make rayon and cellophane; in explosives, dyestuffs, electrolytic extraction of zinc, reclaiming rubber, tin plating, oxide coating, etching and electroplating, laundering and bleaching, pulp and paper manufacture; in vegetable oil refining; in peeling of fruits and vegetables in the food industry; and in veterinary medicine as a disinfectant.

Other Designations: CAS No. 1310-73-2; Aetznatron; caustic soda; Collo-Grillrein; Collo-Tapette; Feurs Rohp; Lewis-Red Devil Lye; soda, hydrate; soda lye; sodium hydrate.

Manufacturer: Contact your supplier or distributor. Consult latest *Chemical Week Buyers' Guide*(73) for a suppliers list.

Cautions: Sodium hydroxide is moderately toxic by ingestion and inhalation and can be seriously corrosive to eyes, skin, and mucous membranes.

R	0	NFPA
I	2	
S	4	
K	0	

HMIS
H ?
F 0
R 1
PPG*
* Sec.

Section 2. Ingredients and Occupational Exposure Limits

Sodium hydroxide, ca 100%

1990 OSHA PEL
Ceiling: 2 mg/m³

1990 DFG (Germany) MAK
2 mg/m³

1985-86 Toxicity Data*
Rabbit, oral, LD_{Lo}: 500 mg/kg; no toxic effect noted
Rabbit, skin: 500 mg applied over 24 hr causes severe irritation
Mouse, intraperitoneal, LD_{50}: 40 mg/kg; toxic effects not yet reviewed

1990 IDLH Level
250 mg/m³ (solution mists)

1990 NIOSH REL
Ceiling: 2 mg/m³

1991-92 ACGIH TLV
Ceiling: 2 mg/m³

* See NIOSH, *RTECS* (WB4900000), for additional irritation, mutation, and toxicity data.

Section 3. Physical Data

Boiling Point: 2534 °F (1390 °C)
Melting Point: 605 °F (318.4 °C)
Vapor Pressure: 1 mm Hg at 1362 °F (739 °C)
pH (0.5% solution): 13
Molecular Weight: 40.01

Specific Gravity: 2.13 at 77 °F (25 °C)
Water Solubility: 1 g/0.9 ml water, 1 g/0.3 ml boiling water
Other Solubilities: 1 g/7.2 ml alcohol, 1 g/4.2 ml methanol, soluble in glycerol; insoluble in acetone and ether

Appearance and Odor: Odorless, hydroscopic (readily absorbs water) white flakes, cake, lumps, chips, pellets, or sticks.

Section 4. Fire and Explosion Data

Flash Point: None reported	Autoignition Temperature: None reported	LEL: None reported	UEL: None reported

Extinguishing Media: Although noncombustible as a solid, when in contact with moisture or water sodium hydroxide can generate enough heat to ignite surrounding combustibles. If possible without risk, remove containers from area. Use extinguishing agents suitable for surrounding fire. For small fire, use dry chemical, carbon dioxide (CO_2), or regular foam. Avoid water spray since water reacts with sodium hydroxide to generate substantial heat. If you must use water, be sure it is as cold as possible. For large fires, use fog or regular foam.

Unusual Fire or Explosion Hazards: Sodium hydroxide may melt and flow when heated.

Special Fire-fighting Procedures: Since fire may produce toxic thermal decomposition products, wear a self-contained breathing apparatus (SCBA) with a full facepiece operated in pressure-demand or positive-pressure mode. Also, wear fully protective clothing. Structural firefighters' protective clothing provides limited protection. Apply cooling water to fire-exposed sides of container until fire is well out. *Do not* splatter or splash this material. Stay away from ends of tanks. Be aware of runoff from fire control methods. Do not release to sewers or waterways.

Section 5. Reactivity Data

Stability/Polymerization: Sodium hydroxide is stable at room temperature in closed containers under normal storage and handling conditions. Hazardous polymerization cannot occur. Violent polymerization can occur when in contact with acrolein or acrylonitrile. Since sodium hydroxic readily absorbs water and carbon dioxide from air, keep containers tightly closed.

Chemical Incompatibilities: Sodium hydroxide generates large amounts of heat when in contact with water and may steam and splatter. It reacts with mineral acids to form corresponding salts; reacts with weak-acid gases like hydrogen sulfide, sulfur dioxide, and carbon dioxide; ignites when in contact with cinnamaldehyde or zinc; and has exploded when exposed to a mixture of chloroform and methane. Sodium hydroxide can very corrosive to metals such as aluminum, tin, and zinc as well as to alloys such as steel, and may cause formation of flammable hydrogen gas. An increase in temperature and pressure occurs in closed containers when sodium hydroxide is mixed with: acetic anhydride, glacial acetic acid, chlorohydrin, chlorosulfonic acid, ethylene cyanohydrin, glyoxal, oleum, 36% hydrochloric acid, 48.7% hydrofluoric acid, 70% nitric acid, or 96% sulfuric acid.

Conditions to Avoid: Avoid generation of sodium hydroxide dusts, and contact with water, metals, and the chemicals listed above.

Hazardous Products of Decomposition: Thermal oxidative decomposition of sodium hydroxide can produce toxic sodium oxide (Na_2O) and sodium peroxide (Na_2O_2) fumes.

Section 6. Health Hazard Data

Carcinogenicity: In 1990 reports, the IARC, NTP, and OSHA do not list sodium hydroxide as a carcinogen (see Chronic Effects).

Summary of Risks: Sodium hydroxide is toxic by inhalation of dusts or mists, ingestion, or direct skin or eye contact. Damage is immediate without prompt medical attention can become permanent. This strong, corrosive alkali dissolves any living tissue it contacts.

Medical Conditions Aggravated by Long-Term Exposure: None reported.

Target Organs: Eyes, digestive tract, respiratory system, and skin.

Primary Entry Routes: Ingestion, inhalation, and skin and eye contact.

Continue on next page

Copyright © 1991 Genium Publishing Corporation.
Any commercial use or reproduction without the publisher's permission is prohibited.

MATERIAL SAFETY DATA SHEET

SANI-CLOR SODIUM HYPOCHLORITE

GPS INDUSTRIES
13280 Amar Road
P.O. Box 326
City Of Industry, CA 91746
(818) 369-1255

SECTION I. PRODUCT IDENTIFICATION

Trade/Material Name: Sani-Clor Liquid Sanitizer

Chemical Name: Sodium Hypochlorite

Manufacturer: GPS Industries

Phone: 818/369-1255

CAS: 7681-52-9

SECTION II. INGREDIENTS AND HAZARDS

Ingredient Name: Sodium Hypochlorite **Percent:** 10-15%

Hazard: Corrosive

CAS: 7681-52-9

SECTION III. PHYSICAL DATA

Appearance & Odor: Yellow to greenish yellow clear liquid; chlorine odor.

Water Solubility (%): 100% **pH:** 11.0 - 12.0

Boiling Point: Decomposes **Specific Gravity:** (H_2O=1): 1.216

Vapor Density: N/A **% Volatile by Volume:** 90%

Vapor Pressure: V.P. of Water

Sodium Hypochlorite

GALLADE CHEMICAL

ORANGE COUNTY • SAN DIEGO COUNTY • SAN BERNARDINO COUNTY

MATERIAL SAFETY DATA SHEET ATTACHED

SODIUM HYPOCHLORITE

Manufactured by: GPS Industries

DISTRIBUTED BY

ORANGE COUNTY CHEMICAL
1230 EAST ST. GERTRUDE PLACE
SANTA ANA, CALIFORNIA 92707

GALLADE CHEMICAL OF SAN DIEGO
425 NORTH ANDREASEN DRIVE
ESCONDIDO, CALIFORNIA 92025

GALLADE CHEMICAL OF FONTANA
15120 SANTA ANA AVENUE
FONTANA, CALIFORNIA 92335

MATERIAL SAFETY DATA SHEET

SANI-CLOR SODIUM HYPOCHLORITE

SECTION VII. SPILL, LEAK AND DISPOSAL PROCEDURES

Aquatic Toxicity (e.g., 96 HR. TLM): Not established, but if not dilute may seriously affect aquatic life. Do not allow spilled material to enter sewers or streams.

Waste Disposal Method: Reduce with chemicals listed below. Keep on alkaline side and dilute with copious quantities of water. Main and product is salt water. ($NaCl$)

Handling Spills: Flush with water to dilute as much as possible, avoid heat and contamination with acid materials. Do not use combustible materials such as sawdust to absorb hypochlorite.

Absorbing Chemicals: Diatomaceous Earth or Soda Ash.

SECTION VIII. SPECIAL PROTECTION INFORMATION

Ventilation Requirements: No special ventilation required unless bleach is exposed to decomposition condition; i.e., spills or acidic conditions.

Specific Personal Protective Equipment
Respiratory: When fumes are present use NIOSH approved respirator with acid type canister.

Eyes: Use goggles when dispensing solutions stronger than household bleach (7%).

Gloves: Use rubber or plastic gloves when exposed to solutions stronger than household bleach (7%).

Other: Use rubber apron, etc. to protect body from any splashing conditions. Use rubber protective shoes if spills occur. Safety showers and eyewash fountains should be available in storage and handling area.

SECTION IX. SPECIAL PRECAUTIONS

Storage Segregation: Store in cool area out of sunlight in plastic or lined metal containers.

Other Precautions: Do not mix with other household chemicals.

UFC: Corrosive

SECTION IV. FIRE AND EXPLOSION DATA

Flash Point: Nonflammable

Special Fire Fighting Procedures: Avoid fumes from spilled or exposed liquid, dilute copiously, ventilate, and be prepared to use respiratory protection if needed. Acid contamination will produce very irritating fumes.

Usual Fire and Explosion Hazards: Bleach decomposes when heated; decomposition products may cause containers to rupture or explode. Vigorous reaction possible with organic materials or oxidizing agents; may result in a fire.

SECTION V. REACTIVITY DATA

Conditions Contributing to Instability: Solutions of sodium hypochlorite are fairly stable in concentrations below 1%. Stability decreases with concentration, heat, light exposure, decrease in pH, and contamination with heavy metals, such as, nickel, cobalt, copper, and iron.

Compatibility: Avoid contamination with heavy metals (act as catalysts), reducing agents, organics, ether, ammonia, acids.

Hazardous Decomposition Products: Hypochlorous acid (HOCl), chlorine hydrochloric acid. Composition depends upon temperature and decrease in pH. Additional decomposition products, which depend upon pH, temperature and time, are sodium chloride, sodium chlorite and oxygen.

SECTION VI. HEALTH HAZARD INFORMATION

First Aid:

Health Hazard Data Inhalation: Fumes from spills are very irritating to mucous membranes. Very little hazard from properly stored solution.

Skin Contact: Irritant, reddening of skin, skin damage.

Eye Contact: Severe irritation.

Ingestion: Causes irritation of membranes of the mouth, throat, and stomach pain and possible ulceration. LD_{50} (oral, rat) for 5.25% $NaOCl$ is approximately 13g/kg body weight and for 12.5% $NaOCl$ is approximately 5g/kg body weight.

J.T.BAKER INC. 222 RED SCHOOL LANE, PHILLIPSBURG, NJ 08865
M A T E R I A L S A F E T Y D A T A S H E E T
24-HOUR EMERGENCY TELEPHONE -- (201) 859-2151
CHEMTREC # (800) 424-9300 -- NATIONAL RESPONSE CENTER # (800) 424-8802

EFFECTIVE: 05/01/89 ISSUED: 05/17/89

J.T.BAKER INC., 222 RED SCHOOL LANE, PHILLIPSBURG, NJ 08865

SECTION I - PRODUCT IDENTIFICATION

PRODUCT NAME: SODIUM PHOSPHATE, MONOBASIC, MONOHYDRATE
COMMON SYNONYMS: SODIUM DIHYDROGEN PHOSPHATE, MONOHYDRATE; SODIUM BIPHOSPHATE, MONOHYDRATE
CHEMICAL FAMILY: INORGANIC SODIUM COMPOUNDS
FORMULA: NAH2PO4 H2O
FORMULA WT.: 137.99
CAS NO.: 10049-21-5
NIOSH/RTECS NO.: WA1900000
PRODUCT USE: LABORATORY REAGENT
PRODUCT CODES: 3818,3820

PRECAUTIONARY LABELING

BAKER SAF-T-DATA* SYSTEM

HEALTH	-	1	SLIGHT
FLAMMABILITY	-	0	NONE
REACTIVITY	-	1	SLIGHT
CONTACT	-	2	MODERATE

LABORATORY PROTECTIVE EQUIPMENT

GOGGLES; LAB COAT

U.S. PRECAUTIONARY LABELING

WARNING
CAUSES IRRITATION. HARMFUL IF SWALLOWED OR INHALED.
AVOID CONTACT WITH EYES, SKIN, CLOTHING. AVOID BREATHING DUST. KEEP IN TIGHTLY CLOSED CONTAINER. USE WITH ADEQUATE VENTILATION. WASH THOROUGHLY AFTER HANDLING.

INTERNATIONAL LABELING

AVOID CONTACT WITH EYES. AFTER CONTACT WITH SKIN, WASH IMMEDIATELY WITH PLENTY OF WATER. KEEP CONTAINER TIGHTLY CLOSED.

SAF-T-DATA* STORAGE COLOR CODE: ORANGE (GENERAL STORAGE)

CONTINUED ON PAGE: 2

MATERIAL SAFETY DATA SHEET

SANI-CLOR SODIUM HYPOCHLORITE

SECTION IX. SPECIAL PRECAUTIONS (Continued)

UN Register: UN1791

Prepared/Revised By: BILL LANDMAN
June 04, 1990

As of date of preparation of this document, the foregoing information is believed to be accurate and is provided in good faith to comply with applicable Federal and State law(s). However, no warranty or representation with respect to such information is intended or given.

SECTION IV - FIRE AND EXPLOSION HAZARD DATA (CONTINUED)

UNUSUAL FIRE & EXPLOSION HAZARDS
CLOSED CONTAINERS EXPOSED TO HEAT MAY EXPLODE.

TOXIC GASES PRODUCED
OXIDES OF PHOSPHORUS

EXPLOSION DATA-SENSITIVITY TO MECHANICAL IMPACT
NONE IDENTIFIED.

EXPLOSION DATA-SENSITIVITY TO STATIC DISCHARGE
NONE IDENTIFIED.

SECTION V - HEALTH HAZARD DATA

THRESHOLD LIMIT VALUE (TLV/TWA): NOT ESTABLISHED

SHORT-TERM EXPOSURE LIMIT (STEL): NOT ESTABLISHED

PERMISSIBLE EXPOSURE LIMIT (PEL): NOT ESTABLISHED

TOXICITY OF COMPONENTS

ORAL RAT LD50 FOR SODIUM PHOSPHATE, MONOHYDRATE 8290 MG/KG
CARCINOGENICITY: NTP: NO IARC: NO Z LIST: NO OSHA REG: NO

CARCINOGENICITY
NONE IDENTIFIED.

REPRODUCTIVE EFFECTS
NONE IDENTIFIED.

EFFECTS OF OVEREXPOSURE

INHALATION: IRRITATION OF UPPER RESPIRATORY TRACT

SKIN CONTACT: IRRITATION, PROLONGED CONTACT MAY CAUSE DERMATITIS

EYE CONTACT: IRRITATION

CONTINUED ON PAGE: 4

J.T.BAKER INC. 222 RED SCHOOL LANE, PHILL
M A T E R I A L S A F E T Y D A T
24-HOUR EMERGENCY TELEPHONE -- (201) 859-2151
CHEMTREC # (800) 424-9300 -- NATIONAL RESPONSE CENTER # (800) 424-8802

S4750 D03 SODIUM PHOSPHATE, MONOBASIC, MONOHYDRATE PAGE: 2
EFFECTIVE: 05/01/89 ISSUED: 05/17/89

SECTION II - COMPONENTS

COMPONENT	CAS NO.	WEIGHT %	OSHA/PEL	ACGIH/TLV
SODIUM PHOSPHATE, MONOHYDRATE	10049-21-5	98-100	N/E	N/E

SECTION III - PHYSICAL DATA

BOILING POINT: N/A

VAPOR PRESSURE (MMHG): N/A

MELTING POINT: N/A

VAPOR DENSITY (AIR=1): N/A

SPECIFIC GRAVITY: 2.04 (H2O=1)

EVAPORATION RATE: N/A

SOLUBILITY(H2O): APPRECIABLE (>10%)

% VOLATILES BY VOLUME: 0 (21 C)

PH N/A

ODOR THRESHOLD (P.P.M.): N/A

PHYSICAL STATE: SOLID

COEFFICIENT WATER/OIL DISTRIBUTION: N/A

APPEARANCE & ODOR: WHITE CRYSTALS. ODORLESS.

SECTION IV - FIRE AND EXPLOSION HAZARD DATA

FLASH POINT (CLOSED CUP): N/A

AUTOIGNITION TEMPERATURE: N/A

FLAMMABLE LIMITS: UPPER - N/A LOWER - N/A

FIRE EXTINQUISHING MEDIA
USE EXTINGUISHING MEDIA APPROPRIATE FOR SURROUNDING FIRE.

SPECIAL FIRE-FIGHTING PROCEDURES
FIREFIGHTERS SHOULD WEAR PROPER PROTECTIVE EQUIPMENT AND SELF-CONTAINED BREATHING APPARATUS WITH FULL FACEPIECE OPERATED IN POSITIVE PRESSURE MODE. MOVE CONTAINERS FROM FIRE AREA IF IT CAN BE DONE WITHOUT RISK. USE WATER TO KEEP FIRE-EXPOSED CONTAINERS COOL.

CONTINUED ON PAGE: 3

SECTION VI - REACTIVITY DATA

STABILITY: STABLE HAZARDOUS POLYMERIZATION: WILL NOT OCCUR

CONDITIONS TO AVOID: MOISTURE, HEAT

INCOMPATIBLES: IRON AND OTHER HEAVY METALS, STRONG ACIDS

DECOMPOSITION PRODUCTS: OXIDES OF PHOSPHORUS

SECTION VII - SPILL & DISPOSAL PROCEDURES

STEPS TO BE TAKEN IN THE EVENT OF A SPILL OR DISCHARGE
WEAR SELF-CONTAINED BREATHING APPARATUS AND FULL PROTECTIVE CLOTHING. WITH CLEAN SHOVEL, CAREFULLY PLACE MATERIAL INTO CLEAN, DRY CONTAINER AND COVER; REMOVE FROM AREA. FLUSH SPILL AREA WITH WATER.

DISPOSAL PROCEDURE
DISPOSE IN ACCORDANCE WITH ALL APPLICABLE FEDERAL, STATE, AND LOCAL ENVIRONMENTAL REGULATIONS.

SECTION VIII - INDUSTRIAL PROTECTIVE EQUIPMENT

VENTILATION: USE ADEQUATE GENERAL OR LOCAL EXHAUST VENTILATION TO KEEP FUME OR DUST LEVELS AS LOW AS POSSIBLE.

RESPIRATORY PROTECTION: NONE REQUIRED WHERE ADEQUATE VENTILATION CONDITIONS EXIST. IF AIRBORNE CONCENTRATION IS HIGH, USE AN APPROPRIATE RESPIRATOR OR DUST MASK.

EYE/SKIN PROTECTION: SAFETY GOGGLES, UNIFORM, PROPER GLOVES ARE RECOMMENDED.

SECTION IX - STORAGE AND HANDLING PRECAUTIONS

SAF-T-DATA* STORAGE COLOR CODE: ORANGE (GENERAL STORAGE)

STORAGE REQUIREMENTS
KEEP CONTAINER TIGHTLY CLOSED. SUITABLE FOR ANY GENERAL CHEMICAL STORAGE AREA.

CONTINUED ON PAGE: 6

SECTION V - HEALTH HAZARD DATA (CONTINUED)

SKIN ABSORPTION: NONE IDENTIFIED

INGESTION: NAUSEA, VOMITING, DIARRHEA, IRRITATION AND BURNS TO MOUTH AND STOMACH

CHRONIC EFFECTS: NONE IDENTIFIED

TARGET ORGANS
EYES, SKIN

MEDICAL CONDITIONS GENERALLY AGGRAVATED BY EXPOSURE
NONE IDENTIFIED

PRIMARY ROUTES OF ENTRY
INHALATION, INGESTION, SKIN CONTACT, EYE CONTACT

EMERGENCY AND FIRST AID PROCEDURES

INGESTION: CALL A PHYSICIAN. IF SWALLOWED, IF CONSCIOUS, IMMMEDIATEL INDUCE VOMITING.

INHALATION: IF INHALED, REMOVE TO FRESH AIR. IF NOT BREATHING, GIVE ARTIFICIAL RESPIRATION. IF BREATHING IS DIFFICULT, GIVE OXYGEN.

SKIN CONTACT: IN CASE OF CONTACT, FLUSH SKIN WITH WATER.

EYE CONTACT: IN CASE OF EYE CONTACT, IMMEDIATELY FLUSH WITH PLENTY OF WATER FOR AT LEAST 15 MINUTES.

SARA/TITLE III HAZARD CATEGORIES AND LISTS

ACUTE: YES CHRONIC: YES FLAMMABILITY: NO PRESSURE: NO REACTIVITY: NO

EXTREMELY HAZARDOUS SUBSTANCE: NO
CERCLA HAZARDOUS SUBSTANCE: NO
TOXIC CHEMICALS: NO
TSCA INVENTORY: YES

CONTINUED ON PAGE: 5

==========

BAKER DISCLAIMS ANY OTHER WARRANTIES, EXPRESSED OR IMPLIED WITH REGARD TO THE PRODUCT SUPPLIED HEREUNDER, ITS MERCHANTABILITY OR ITS FITNESS FOR A PARTICULAR PURPOSE.
THE USER SHOULD RECOGNIZE THAT THIS PRODUCT CAN CAUSE SEVERE INJURY AND EVEN DEATH, ESPECIALLY IF IMPROPERLY HANDLED OR THE KNOWN DANGERS OF USE ARE NOT HEEDED. READ ALL PRECAUTIONARY INFORMATION. AS NEW DOCUMENTED GENERAL SAFETY INFORMATION BECOMES AVAILABLE, BAKER WILL PERIODICALLY REVISE THIS MATERIAL SAFETY DATA SHEET. IF YOU HAVE ANY QUESTIONS, PLEASE CALL CUSTOMER SERVICE (1-800-JTBAKER) FOR ASSISTANCE.

COPYRIGHT 1989 J.T.BAKER INC.
* TRADEMARKS OF J.T.BAKER INC.
===
APPROVED BY QUALITY ASSURANCE DEPARTMENT.

-- LAST PAGE --

SECTION IX - STORAGE AND HANDLING PRECAUTIONS (CONTINUED)

SPECIAL PRECAUTIONS
MATERIAL IS HYGROSCOPIC.

SECTION X - TRANSPORTATION DATA AND ADDITIONAL INFORMATION

DOMESTIC (D.O.T.)

PROPER SHIPPING NAME: CHEMICALS, N.O.S. (NON-REGULATED)

INTERNATIONAL (I.M.O.)

PROPER SHIPPING NAME: CHEMICALS, N.O.S. (NON-REGULATED)
MARINE POLLUTANTS: NO

AIR (I.C.A.O.)

PROPER SHIPPING NAME: CHEMICALS, N.O.S. (NON-REGULATED)

U.S. CUSTOMS HARMONIZATION NUMBER: 28352200001

N/A = NOT APPLICABLE OR NOT AVAILABLE
N/E = NOT ESTABLISHED

THE INFORMATION IN THIS MATERIAL SAFETY DATA SHEET MEETS THE REQUIREMENTS OF THE UNITED STATES OCCUPATIONAL SAFETY AND HEALTH ACT AND REGULATIONS PROMULGATED THEREUNDER (29 CFR 1910.1200 ET. SEQ.) AND THE CANADIAN WORKPLACE HAZARDOUS MATERIALS INFORMATION SYSTEM. THIS DOCUMENT IS INTENDED ONLY AS A GUIDE TO THE APPROPRIATE PRECAUTIONARY HANDLING OF THE MATERIAL BY A PERSON TRAINED IN, OR SUPERVISED BY A PERSON TRAINED IN, CHEMICAL HANDLING. THE USER IS RESPONSIBLE FOR DETERMINING THE PRECAUTIONS AND DANGERS OF THIS CHEMICAL FOR HIS OR HER PARTICULAR APPLICATION. DEPENDING ON USAGE, PROTECTIVE CLOTHING INCLUDING EYE AND FACE GUARDS AND RESPIRATORS MUST BE USED TO AVOID CONTACT WITH MATERIAL OR BREATHING CHEMICAL VAPORS/FUMES.
EXPOSURE TO THIS PRODUCT MAY HAVE SERIOUS ADVERSE HEALTH EFFECTS. THIS CHEMICAL MAY INTERACT WITH OTHER SUBSTANCES. SINCE THE POTENTIAL USES ARE SO VARIED, BAKER CANNOT WARN OF ALL OF THE POTENTIAL DANGERS OF USE OR INTERACTION WITH OTHER CHEMICALS OR MATERIALS. BAKER WARRANTS THAT THE CHEMICAL MEETS THE SPECIFICATIONS SET FORTH ON THE LABEL.

CONTINUED ON PAGE: 7

CONTROL MEASURES

IF AIRBORNE CONTAMINANTS ARE GENERATED WHEN THE MATERIAL IS HEATED OR HANDLED, SUFFICIENT VENTILATION IN VOLUME AND AIR FLOW PATTERNS SHOULD BE PROVIDED TO KEEP AIR CONTAMINANT CONCENTRATION LEVELS BELOW ACCEPTABLE CRITERIA.

ENGINEERING CONTROLS: THE FOLLOWING EXPOSURE CONTROL TECHNIQUES MAY BE USED TO EFFECTIVELY MINIMIZE EMPLOYEE EXPOSURE: LOCAL EXHAUST VENTILATION, ENCLOSED SYSTEM DESIGN, PROCESS ISOLATION AND REMOTE CONTROL IN COMBINATION WITH APPROPRIATE USE OF PERSONAL PROTECTIVE EQUIPMENT AND PRUDENT WORK PRACTICES. THESE TECHNIQUES MAY NOT NECESSARILY ADDRESS ALL ISSUES PERTAINING TO YOUR OPERATIONS. WE, THEREFORE, RECOMMEND THAT YOU CONSULT WITH EXPERTS OF YOUR CHOICE TO DETERMINE WHETHER OR NOT YOUR PROGRAMS ARE ADEQUATE.

PERSONAL PROTECTION INFORMATION

WHERE AIR CONTAMINANTS CAN EXCEED ACCEPTABLE CRITERIA, USE NIOSH/MSHA APPROVED RESPIRATORY PROTECTION EQUIPMENT. RESPIRATORS SHOULD BE SELECTED BASED ON THE FORM AND CONCENTRATION OF CONTAMINANTS IN AIR IN ACCORDANCE WITH OSHA 29 CFR 1910.134 OR OTHER APPLICABLE STANDARDS OR GUIDELINES.

USE GOGGLES IF CONTACT IS LIKELY.

WEAR IMPERVIOUS GLOVES AS REQUIRED TO PREVENT SKIN CONTACT.

SPILL OR LEAK PROCEDURES

ELIMINATE ALL IGNITION SOURCES

SOAK UP WITH ABSORBENT MATERIAL AND REMOVE TO A CHEMICAL DISPOSAL AREA.

PREVENT ENTRY INTO NATURAL BODIES OF WATER.

WASTE DISPOSAL METHOD

DISPOSE OF ACCORDING TO LOCAL, STATE, AND FEDERAL REQUIREMENTS.

EMPTY CONTAINER: MAY CONTAIN EXPLOSIVE VAPORS. DO NOT CUT, PUNCTURE OR WELD ON OR NEARBY. INCINERATION WILL CAUSE CONTAINER TO BURST VIOLENTLY.

STORAGE PRECAUTIONS

DO NOT STORE AT TEMPERATURES OVER 120 F.

DOT CLASSIFICATION

ORM-D CONSUMER COMMODITY

MATERIAL SAFETY DATA SHEET

The Sherwin-Williams Company
THE SPECIALTY DIVISION
6830 Cochran Rd.
Solon, OH 44139-3908

Emergency Telepho
216-292-7400

For ordering information, additional copies of MSDS, etc., 1-8
For technical information only, 216-292-7400

THE OSHA HAZARD COMMUNICATION STANDARD 29 CFR 1
CONTAINED ON THIS SHEET BE MADE AVAILABLE TO YOUR

Spray Paint, Krylon Fiel
Marker

INSTRUCT YOUR WORKERS TO HANDLE THIS PRODUCT PROPERLY

NAME: **KRYLON FIELD MARKER SPRAY PAINT AEROSOL**
TYPE: **MARKING PAINT FOR GRASS**
APPLICATION: **ITEM NOS: 7130 WHITE; 7131 YELLOW; 7132 RED**

30-Jun-86

SIGNAL WORD-DANGER!

THIS MATERIAL IS A "HEALTH HAZARD" AND/OR A "PHYSICAL HAZARD" AS DETERMINED WHEN REVIEWED ACCORDING TO THE REQUIREMENTS OF THE OCCUPATIONAL SAFETY AND HEALTH ADMINISTRATION 29 CFR PART 1910.1200 "HAZARD COMMUNICATION" STANDARD.

CHEMICAL HAZARD RATING

HEALTH=2(MODERATE)
FIRE=4(EXTREME)
REACTIVITY=0(LEAST)
CHRONIC=*

29CFR1910.1200 HAZARDOUS INGREDIENTS/REPORTED HEALTH EFFECTS

CAS REGISTRY NO. MATERIAL DESCRIPTION % BY WT.

74-98-6 PROPANE 16.5-17.3

THIS MATERIAL IS A SIMPLE ASPHYXIANT. SIGNS AND SYMPTOMS OF OVEREXPOSURE INCLUDE CYANOSIS, RESPIRATORY DISTRESS, HEADACHE, DIZZINESS, DROWSINESS, UNCONSCIOUSNESS AND ASPHYXIATION.
CAN CAUSE CENTRAL NERVOUS SYSTEM DEPRESSION.
ACGIH TLV: SIMPLE ASPHXIANT-SEE ACGIH TLVS, APPENDIX E
OSHA PEL: 1000 PPM (1800 MG/M3) TWA

75-28-5 ISOBUTANE 11.-11.5

107-21-1 ETHYLENE GLYCOL 6.3

OVEREXPOSURE MAY CAUSE LIVER DAMAGE.
OVEREXPOSURE MAY CAUSE KIDNEY DAMAGE.
CAN CAUSE CENTRAL NERVOUS SYSTEM DEPRESSION. SIGNS AND SYMPTOMS MAY INCLUDE HEADACHE, DIZZINESS, NAUSEA, VOMITING, UNCONSCIOUSNESS AND EVEN ASPHYXIATION.
ACGIH TLV: VAPOR 50 PPM (125 MG/M3) CEILING

108-88-3 TOLUENE 7.1-9.4

OVEREXPOSURE MAY CAUSE LIVER DAMAGE.
OVEREXPOSURE MAY CAUSE KIDNEY DAMAGE. CAN CAUSE CENTRAL NERVOUS SYSTEM DEPRESSION. SIGNS AND SYMPTOMS MAY INCLUDE HEADACHE, DIZZINESS, NAUSEA, VOMITING, UNCONSCIOUSNESS AND ASPHYXIATION. REPORTS HAVE ASSOCIATED REPEATED AND PROLONGED OCCUPATIONAL OVEREXPOSURE WITH PERMANENT BRAIN AND NERVOUS SYSTEM DAMAGE. INTENTIONAL MISUSE BY DELIBERATELY CONCENTRATING AND INHALING THE CONTENTS MAY LEAD TO ADDICTION AND MAY BE HARMFUL OR FATAL.
ACGIH TLV: 100 PPM (375 MG/M3) TWA; 150 PPM (560 MG/M3) STEL
OSHA PEL: 200 PPM TWA; 300 PPM CEILING; 500 PPM 10-MIN. PEAK
NIOSH DOCUMENT NUMBER: 73-11023

1330-20-7 XYLENE 2.3-3.9

OVEREXPOSURE MAY CAUSE LIVER DAMAGE.
OVEREXPOSURE MAY CAUSE KIDNEY DAMAGE.
CAN CAUSE CENTRAL NERVOUS SYSTEM DEPRESSION. SIGNS AND SYMPTOMS MAY INCLUDE HEADACHE, DIZZINESS, NAUSEA, VOMITING, UNCONSCIOUSNESS AND EVEN ASPHYXIATION.
ACGIH TLV: 100 PPM (435 MG/M3) TWA; 150 PPM (655 MG/M3) STEL
OSHA PEL: 100 PPM (435 MG/M3) TWA
NIOSH DOCUMENT NUMBER: 75-168

8032-32-4 V.M.&P. NAPHTHA 1.5-1.8

CAN CAUSE CENTRAL NERVOUS SYSTEM DEPRESSION. SIGNS AND SYMPTOMS MAY INCLUDE HEADACHE, DIZZINESS, NAUSEA, VOMITING, UNCONSCIOUSNESS AND EVEN ASPHYXIATION.
ACGIH TLV: 300 PPM (1350 MG/M3) TWA; 400 PPM (1800 MG/M3) STEL
NIOSH DOCUMENT NUMBER: 77-192

PHYSICAL DATA

VAPOR PRESSURE -- SEE CAN PRESSURE
VAPOR DENSITY HEAVIER THAN AIR
SOLUBILITY IN WATER -- SLIGHT
SPECIFIC GRAVITY LIGHTER THAN WATER
EVAP RATE FASTER THAN BUTYL ACETATE
BOILING POINT; APPEARANCE; ODOR -- N.A.
PERCENT VOLATILE BY WEIGHT 80
PERCENT NON-VOLATILE BY WEIGHT 20
PRESSURE IN CONTAINER, PSIG @ 70 F APPROX 50

ACUTE HEALTH HAZARD DATA

SKIN ABSORPTION: NO HAZARDS KNOWN TO BORDEN
INGESTION: MAY BE HARMFUL IF SWALLOWED.
INHALATION: MAY BE HARMFUL IF INHALED. LIQUID OR VAPOR CAN CAUSE IRRITATION OF NOSE, THROAT AND LUNGS
SKIN: CAUSES IRRITATION.
EYES: CAUSES IRRITATION.

HANDLING PRECAUTIONS

INHALATION: AVOID BREATHING VAPOR OR MIST.
USE WITH ADEQUATE VENTILATION.
SKIN: AVOID CONTACT WITH SKIN.
EYES: AVOID CONTACT WITH EYES.
HANDLE IN ACCORDANCE WITH GOOD INDUSTRIAL HYGIENE AND SAFETY PRACTICES. THESE PRACTICES INCLUDE AVOIDING UNNECESSARY EXPOSURE AND REMOVAL OF THE MATERIAL FROM EYES, SKIN AND CLOTHING.
WASH THOROUGHLY AFTER HANDLING.

EMERGENCY AND FIRST AID PROCEDURES

INGESTION: IF SWALLOWED, DO NOT INDUCE VOMITING. CALL A PHYSICIAN IMMEDIATELY
INHALATION: REMOVE TO FRESH AIR. IF NOT BREATHING, GIVE ARTIFICIAL RESPIRATION, PREFERABLY MOUTH-TO-MOUTH. IF BREATHING IS DIFFICULT, GIVE OXYGEN. CALL A PHYSICIAN.
SKIN CONTACT: FLUSH SKIN WITH WATER. IF IRRITATION PERSISTS, CALL A PHYSICIAN.
EYE CONTACT: IMMEDIATELY FLUSH EYES WITH PLENTY OF WATER FOR AT LEAST 15 MINUTES. EYELIDS SHOULD BE HELD APART DURING IRRIGATION TO INSURE WATER CONTACT WITH ENTIRE SURFACE OF EYES AND LIDS. CALL A PHYSICIAN.

FIRE AND EXPLOSION HAZARD DATA

EXTREMELY FLAMMABLE.
CONTENTS UNDER PRESSURE: EXPOSURE TO HIGH TEMPERATURE MAY CAUSE BURSTING. AVOID RADIATORS, STOVES, DIRECT SUNLIGHT, OR OTHER HEAT SOURCE. DO NOT PUNCTURE OR INCINERATE CONTAINER. DO NOT SPRAY NEAR OPEN FLAME.
IN CASE OF FIRE, USE DRY CHEMICAL, FOAM OR CO2. WATER MAY BE INEFFECTIVE, BUT SHOULD BE USED TO KEEP FIRE-EXPOSED CONTAINERS COOL.

REACTIVITY DATA

NORMALLY STABLE AS DEFINED IN NFPA 704-1974-3.1).
MAJOR DECOMPOSITION PRODUCTS: CO, CO2
HAZARDOUS POLYMERIZATION WILL NOT OCCUR

SEE REVERSE SIDE

HANDLE IN ACCORDANCE WITH GOOD INDUSTRIAL HYGIENE AND SAFETY PRACTICES. THESE PRACTICES INCLUDE AVOIDING UNNECESSARY EXPOSURE AND REMOVAL OF THE MATERIAL FROM EYES, SKIN AND CLOTHING.

WASH THOROUGHLY AFTER HANDLING.

EMERGENCY AND FIRST AID PROCEDURES

INGESTION: IF ACCIDENTLY SWALLOWED, DILUTE BY DRINKING LARGE QUANTITIES OF WATER. IMMEDIATELY CONTACT POISON CONTROL CENTER OR HOSPITAL EMERGENCY ROOM FOR ANY OTHER ADDITIONAL TREATMENT DIRECTIONS.

INHALATION: IF INHALED, REMOVE TO FRESH AIR. IF NOT BREATHING, GIVE ARTIFICIAL RESPIRATION, PREFERABLY MOUTH-TO-MOUTH. CALL A PHYSICIAN.

SKIN CONTACT: FLUSH SKIN WITH PLENTY OF WATER. REMOVE CONTAMINATED CLOTHING. CALL A PHYSICIAN IF IRRITATION PERSISTS.

EYE CONTACT: IMMEDIATELY FLUSH EYES WITH PLENTY OF WATER FOR AT LEAST 15 MINUTES. EYELIDS SHOULD BE HELD APART DURING IRRIGATION TO INSURE WATER CONTACT WITH ENTIRE SURFACE OF EYES AND LIDS. CALL A PHYSICIAN.

FIRE AND EXPLOSION HAZARD DATA

EXTREMELY FLAMMABLE.

DO NOT INCINERATE (BURN) CONTAINER. AVOID HEAT.

KEEP CONTAINER BELOW 120 F. (50 C) HIGH TEMPERATURES MAY CAUSE BURSTING. DO NOT PLACE CONTAINER ON RADIATOR, STOVE, IN DIRECT SUNLIGHT OR NEAR OTHER HEAT SOURCES. **DO NOT PUNCTURE CONTAINER.** CONTENTS UNDER PRESSURE WILL DISCHARGE. **AVOID OPEN FLAMES, SPARKS, PILOT LIGHTS. DO NOT SMOKE.** VAPOR MAY IGNITE EXPLOSIVELY. SPRAY MIST OR VAPOR EVAPORATING FROM A DEPOSITED FILM IS HEAVIER THAN AIR AND MAY SETTLE IN LOW PLACES OR TRAVEL OUTWARD TO A SOURCE OF IGNITION AND FLASHBACK.

IN CASE OF FIRE, USE DRY CHEMICAL, FOAM OR CO2. WATER MAY BE INEFFECTIVE, BUT SHOULD BE USED TO KEEP FIRE-EXPOSED CONTAINERS COOL.

REACTIVITY DATA

NORMALLY STABLE AS DEFINED IN NFPA 704-12(4-3.1).

HAZARDOUS POLYMERIZATION: WILL NOT OCCUR.

INCOMPATIBILITIES: STRONG OXIDIZERS.

OTHER HAZARDS: NONE KNOWN TO BORDEN.

DECOMPOSITION PRODUCTS MAY INCLUDE: OXIDES OF CARBON.

CONTROL MEASURES

IF AIRBORNE CONTAMINANTS ARE GENERATED WHEN THE MATERIAL IS HEATED OR HANDLED, SUFFICIENT VENTILATION IN VOLUME AND AIR FLOW PATTERNS SHOULD BE PROVIDED TO KEEP AIR CONTAMINANT CONCENTRATION LEVELS BELOW ACCEPTABLE CRITERIA.

ENGINEERING CONTROLS: THE FOLLOWING EXPOSURE CONTROL TECHNIQUES MAY BE USED TO EFFECTIVELY MINIMIZE EMPLOYEE EXPOSURE: LOCAL EXHAUST VENTILATION, ENCLOSED SYSTEM DESIGN, PROCESS ISOLATION AND REMOTE CONTROL IN COMBINATION WITH APPROPRIATE USE OF PERSONAL PROTECTIVE EQUIPMENT AND PRUDENT WORK PRACTICES. THESE TECHNIQUES MAY NOT NECESSARILY ADDRESS ALL ISSUES PERTAINING TO YOUR OPERATIONS. WE, THEREFORE, RECOMMEND THAT YOU CONSULT WITH EXPERTS OF YOUR CHOICE TO DETERMINE WHETHER OR NOT YOUR PROGRAMS ARE ADEQUATE.

PERSONAL PROTECTION INFORMATION

WHERE AIR CONTAMINANTS CAN EXCEED ACCEPTABLE CRITERIA, USE NIOSH/MSHA APPROVED RESPIRATORY PROTECTION EQUIPMENT. RESPIRATORS SHOULD BE SELECTED BASED ON THE FORM AND CONCENTRATION OF CONTAMINANTS IN AIR IN ACCORDANCE WITH OSHA 29 CFR 1910.134 OR OTHER APPLICABLE STANDARDS OR GUIDELINES.

USE GOGGLES IF CONTACT IS LIKELY.

WEAR IMPERVIOUS GLOVES AS REQUIRED TO PREVENT SKIN CONTACT.

SPILL OR LEAK PROCEDURES

ELIMINATE ALL IGNITION SOURCES.

SOAK UP WITH ABSORBENT MATERIAL AND REMOVE TO A CHEMICAL DISPOSAL AREA.

PREVENT ENTRY INTO NATURAL BODIES OF WATER.

WASTE DISPOSAL

DISPOSE OF ACCORDING TO LOCAL, STATE/PROVINCIAL, AND FEDERAL REQUIREMENTS.

EMPTY CONTAINER: MAY CONTAIN EXPLOSIVE VAPORS. DO NOT CUT, PUNCTURE OR WELD ON OR NEARBY.

INCINERATION WILL CAUSE CONTAINER TO BURST VIOLENTLY.

STORAGE PRECAUTIONS

KEEP CONTAINER CLOSED.

STORE IN A COOL, WELL-VENTILATED AREA.

DO NOT STORE AT TEMPERATURES ABOVE 120 F.

AVOID RADIATORS, STOVES, DIRECT SUNLIGHT, OR OTHER HEAT SOURCE.

KEEP AWAY FROM HEAT, SPARKS, FLAME AND OTHER IGNITION SOURCES.

DO NOT STORE NEAR STRONG OXIDIZING CHEMICALS.

DOT CLASSIFICATION

ORM-D CONSUMER COMMODITY.

SARA TITLE III SECTION 313
AND 40 CFR PART 372
TOXIC CHEMICAL NOTIFICATION SHEET

KRYLON FLUORESCENT SPRAY PAINT

THIS PRODUCT CONTAINS THE FOLLOWING TOXIC CHEMICAL(S) SUBJECT TO THE REPORTING REQUIREMENTS OF SECTION 313 OF TITLE III OF THE SUPERFUND AMENDMENTS AND REAUTHORIZATION ACT OF 1986, AND SUBPART C-SUPPLIER NOTIFICATION REQUIREMENT OF 40 CFR PART 372.

CAS REGISTRY NUMBER	CHEMICAL NAME	PCT. BY WEIGHT
108-88-3	TOLUENE	16.56

THIS TOXIC CHEMICAL NOTIFICIATION SHEET MUST NOT BE DETACHED FROM THE MATERIAL SAFETY DATA SHEET (MSDS). ANY COPYING AND REDISTRIBUTION OF THE MSDS SHALL INCLUDE COPYING AND REDISTRIBUTION OF THIS NOTIFICATION SHEET ATTACHED TO COPIES OF THE MSDS SUBSEQUENTLY REDISTRIBUTED.

MATERIAL SAFETY DATA SHEET

KRYLON®

The Sherwin-Williams Company
THE SPECIALTY DIVISION
6830 Cochran Rd.
Solon, OH 44139-3908

Emergency Telephone
216-292-7400

For ordering information, additional copies of MSDS, etc., 1-80
For technical information only, 216-292-7400

THE OSHA HAZARD COMMUNICATION STANDARD 29 CFR 19
CONTAINED ON THIS SHEET BE MADE AVAILABLE TO YOUR

Spray Paint, Krylon Fluorescent

INSTRUCT YOUR WORKERS TO HANDLE THIS PRODUCT PROPERLY

DESCRIPTION: **KRYLON FLUORESCENT SPRAY PAINT**
PRODUCT TYPE: **"AEROSOL" SPRAY PAINT** **06-APR-90**
APPLICATION: **ITEM NOS.: 3101 RED ORANGE, 3102 YELLOW ORANGE, 3103 SUNSET ORANGE, 3104 LEMON YELLOW, 3105 CERISE, 3106 GREEN, 3107 BLUE, 3110 OXNORD ORANGE, 3111 YUBA YELLOW, 3112 ROMONA RED, 3113 GARDENA GREEN, 3114 BAJA BLUE, 3115 PASADENA PINK.**

SIGNAL WORD DANGER!

THIS MATERIAL IS A "HEALTH HAZARD" AND/OR A "PHYSICAL HAZARD" AS DETERMINED WHEN REVIEWED ACCORDING TO THE REQUIREMENTS OF THE OCCUPATIONAL SAFETY AND HEALTH ADMINISTRATION 29 CFR PART 1910.1200 "HAZARD COMMUNICATION" STANDARD.

CHEMICAL HAZARD RATING
HEALTH=2(MODERATE)
FIRE=4(EXTREME)
REACTIVITY=0(LEAST)
CHRONIC=*

29CFR1910.1200 HAZARDOUS INGREDIENTS/REPORTED HEALTH EFFECTS
CAS/REGISTRY NO. MATERIAL DESCRIPTION % RANGE

THE INGREDIENTS LISTED BELOW HAVE BEEN ASSOCIATED WITH ONE OR MORE OF THE LISTED IMMEDIATE AND/OR DELAYED (*) HEALTH HAZARDS. RISK OF DAMAGE AND EFFECTS DEPENDS UPON DURATION AND LEVEL OF EXPOSURE. BEFORE USING OR HANDLING, READ AND UNDERSTAND THE MSDS.

74-98-6 PROPANE 10-30
THIS MATERIAL IS A SIMPLE ASPHYXIANT. SIGNS AND SYMPTOMS OF OVEREXPOSURE INCLUDE CYANOSIS, RESPIRATORY DISTRESS, HEADACHE, DIZZINESS, DROWSINESS, UNCONSCIOUSNESS AND ASPHYXIATION.
CAN CAUSE CENTRAL NERVOUS SYSTEM DEPRESSION.
— SEE FOOTNOTE C.
ACGIH TLV: SIMPLE ASPHYXIANT - SEE ACGIH TLVS, INTRODUCTION
OSHA PEL: 1000 PPM (1800 MG/M3) TWA

75-28-5 ISOBUTANE 10-30
— SEE FOOTNOTE C.
ACGIH TLV: NONE ESTABLISHED
OSHA PEL: NONE ESTABLISHED

108-88-3 *TOLUENE 10-30
NOTE REVISED OSHA PEL
CAN CAUSE LIVER DAMAGE.
CAN CAUSE KIDNEY DAMAGE.
CAN CAUSE CENTRAL NERVOUS SYSTEM DEPRESSION. SIGNS AND SYMPTOMS MAY INCLUDE HEADACHE, DIZZINESS, NAUSEA, VOMITING, UNCONSCIOUSNESS AND ASPHYXIATION.
REPORTS HAVE ASSOCIATED REPEATED AND PROLONGED OCCUPATIONAL OVEREXPOSURE TO SOLVENTS WITH PERMANENT BRAIN AND NERVOUS SYSTEM DAMAGE. INTENTIONAL MISUSE BY DELIBERATELY CONCENTRATING AND INHALING THE CONTENTS MAY LEAD TO ADDICTION AND MAY BE HARMFUL OR FATAL.
— SEE FOOTNOTE C.
ACGIH TLV: 100 PPM (375 MG/M3) TWA; 150 PPM (560 MG/M3) STEL
OSHA PEL: 100 PPM (375 MG/M3) TWA; 150 PPM (560 MG/M3) STEL
NIOSH DOCUMENT NUMBER: 73-11023

110-54-3 *HEXANE 10-30
NOTE REVISED OSHA PEL
CHRONIC EXPOSURES MAY CAUSE PERIPHERAL NEUROPATHY.
CAN CAUSE CENTRAL NERVOUS SYSTEM DEPRESSION. SIGNS AND SYMPTOMS MAY INCLUDE HEADACHE, DIZZINESS, NAUSEA, VOMITING, AND DROWSINESS.
— SEE FOOTNOTE C.
ACGIH TLV: 50 PPM (180 MG/M3) TWA
OSHA PEL: 50 PPM (180 MG/M3) TWA
NIOSH DOCUMENT NUMBER: 77-151

142-82-5 HEPTANE 10-30
NOTE REVISED OSHA PEL
CAN CAUSE CENTRAL NERVOUS SYSTEM DEPRESSION. SIGNS AND SYMPTOMS MAY INCLUDE HEADACHE, DIZZINESS, NAUSEA, VOMITING, UNCONSCIOUSNESS AND EVEN ASPHYXIATION.
— SEE FOOTNOTE C.
ACGIH TLV: 400 PPM (1600 MG/M3) TWA; 500 PPM (2000 MG/M3) STEL
OSHA PEL: 400 PPM (1600 MG/M3) TWA; 500 PPM (2000 MG/M3) STEL
NIOSH DOCUMENT NUMBER: 77-151

64742-89-8 LIGHT ALIPHATIC SOLVENT NAPHTHA (PETROLEUM) 1(0
CAN CAUSE CENTRAL NERVOUS SYSTEM DEPRESSION. SIGNS AND SYMPT(S MAY INCLUDE HEADACHE, DIZZINESS, NAUSEA, VOMITING, UNCONSCIOUSNESS AND EVEN ASPHYXIATION.
— SEE FOOTNOTE C.
ACGIH TLV: NONE ESTABLISHED
OSHA PEL: NONE ESTABLISHED

FOOTNOTE C: AS OF THE DATE OF ISSUANCE OF THIS DOCUMENT, THIS MATERIAL HAS NOT BEEN LISTED BY NTP, IARC OR OSHA AS A CARCINOGEN.

PHYSICAL DATA

APPEARANCE AND PHYSICAL STATE	LIQUID & LIQUIFIED (S
AUTOIGNITION TEMPERATURE, DEG F	NOT AVAILABLE
BOILING POINT, DEG F @ 760 MM HG	> -49 (PROPEL ANT)
EVAPORATION RATE (BUTYL ACETATE=1)	1
FHSA: 16CFR1500.3(C) (6)	EXTREMELY FLAN E
FLASH POINT, DEG F	> -4
FLASH POINT, PROPELLANT, DEG F	< -99 (ESTIMATED)
ODOR	HYDROCARBON SOLV T
ODOR THRESHOLD, PPM	NOT AVAILA E
PERCENT VOLATILE BY WEIGHT	8 4
PH @ 68 DEG F	ESSENTIALLY NEUTRAL
PRESSURE IN CONTAINER, PSIG @ 70 F	APPROX. 50
SOLUBILITY IN WATER @ 68 DEG F	SL T
SPECIFIC GRAVITY	0.72 +/- 2
UP/LOW FLAMMABLE LIMITS, % BY VOL	NOT AVAILA E
VAPOR DENSITY (AIR =1) @ 68 DEG F	>1
VAPOR PRESSURE - SEE CAN PRESSURE	
COEFFICIENT OF WATER/OIL DISTRIB.	NOT AVAILA E

IMMEDIATE HEALTH HAZARD DATA
SKIN ABSORPTION: NO HAZARDS KNOWN TO BORDEN.
INGESTION: NOT EXPECTED TO BE HARMFUL UNDER NORMAL CONDITIONS OF USE.
IF ACCIDENTLY SWALLOWED, BURNS OR IRRITATION TO MUCOUS MEMBRA ESOPHAGUS OR GI TRACT CAN RESULT.
INHALATION: MAY BE HARMFUL IF INHALED. LIQUID OR VAPOR MAY CAUSE IRRITATION OF NOSE, THROAT AND LUNGS.
CAN CAUSE CENTRAL NERVOUS SYSTEM DEPRESSION.
SKIN: CAUSES IRRITATION.
EYES: CAUSES IRRITATION.

HANDLING PRECAUTIONS
INHALATION: **USE WITH ADEQUATE VENTILATION.** TO AVOID BREATHING VAPORS OR SPRAY MIST, OPEN WINDOWS AND DOORS OR USE OTHER MEANS, SUCH AS AN EXHAUST FAN TO ENSURE FRESH AIR ENTRY DURING APPLICATION AND DRYING. IF YOU EXPERIENCE EYE WATERING, HEADACHE OR DIZZINESS, INCREASE FRESH AIR, WEAR RESPIRATORY PROTECTION (NIOSH/MSHA TC23C OR EQUIVALENT), OR LEAVE THE AR
SKIN: AVOID CONTACT WITH SKIN.
EYES: AVOID CONTACT WITH EYES.

SEE REVERSE SIDE

SECTION IV - FIRE AND EXPLOSION HAZARD DATA

DOT Category: CONSUMER COMMODITY ORM-D Flash Point: PROPELLANT BELOW 20 F (T.O.C.) LEL: SEE SECTION II

Extinguishing Media: CARBON DIOXIDE, DRY CHEMICAL OR FOAM.

Usual Fire and Explosion Hazards: DO NOT SPRAY NEAR OPEN FLAME. KEEP AT ROOM TEMPERATURE AS EXPOSURE TO DIRECT SUNLIGHT OR OTHER HEAT MAY CAUSE BURSTING.

Special Fire Fighting Procedures: WATER MAY BE INEFFECTIVE - WATER MAY BE USED TO KEEP FIRE EXPOSED CONTAINERS COOL.

SECTION V - HEALTH HAZARD DATA

Threshold Limit Value: (SEE SECTION II HAZARDOUS INGREDIENTS)

Effects of Overexposure: IN A CONFINED AREA VAPORS IN HIGH CONCENTRATION ARE ANESTHETIC. IRRITANT TO SKIN AND UPPER RESPIRATORY SYSTEM. OVER-EXPOSURE MAY RESULT IN LIGHT-HEADEDNESS, STAGGERING GAIT, GIDDINESS AND POSSIBLE NAUSEA. CONTAINS PETROLEUM DISTILLATES - HARMFUL OR FATAL IF SWALLOWED

Chronic: REPORTS HAVE ASSOCIATED REPEATED AND PROLONGED OVEREXPOSURE TO SOLVENTS WITH PERMANENT BRAIN AND NERVOUS SYSTEM DAMAGE, ALSO KIDNEY AND LIVER DAMAGE.

Medical Conditions Prone to Aggravation by Exposure: NONE ESTABLISHED.

Routes of Entry: Inhalation: YES Skin: YES Ingestion: YES

Emergency and First Aid Procedures:

Breathing: REMOVE PATIENT TO FRESH AIR.
Eyes: FLUSH WITH WATER FOR AT LEAST 15 MINUTES.
Skin: WASH WITH SOAP AND WATER.
Swallowing: CALL PHYSICIAN IMMEDIATELY. DO NOT INDUCE VOMITING.

SECTION VI - REACTIVITY DATA

Stability: STABLE Conditions to Avoid: DO NOT STORE ABOVE 120 F

Incompatability (NONE)

Hazardous Decomposition Products By open flame: CARBON MONOXIDE, CARBON DIOXIDE

Hazardous Polymerization: WILL NOT OCCUR

SECTION VII - SPILL OR LEAK PROCEDURES

Steps to be taken in case material is released or spilled:
REMOVE ALL SOURCES OF IGNITION, VENTILATE AVOID BREATHING VAPORS (SEE SECTION X) AND REMOVE WITH INERT ABSORBENT

Waste disposal method:
DO NOT INCINERATE - DISPOSE IN ACCORDANCE WITH FEDERAL, STATE AND LOCAL REGULATIONS REGARDING POLLUTION.

(CONTINUED)

FOR COATINGS, RESINS AND RELATED MATEF
(APPROVED BY U.S. DEPARTMENT OF LAI

Spray Paint, Krylon Red Orange Fluorescent

SECTION I

Iar acturers Name: KRYLON-HARDWARE PROGRAM Emergency Phone No: 216/292- 0
It eet Address: 26300 FARGO AVENUE

:ity, State, and Zip Code: BEDFORD HTS. , OH 44146 Code Identification: 44844
Rev. Date: 01/27/92
'r duct Class (AEROSOL) COATINGS Date: 04/14/9
'rade Name: 3101 RED ORANGE FLUORESCENT Lab No.: 55220

SECTION II - HAZARDOUS INGREDIENTS

:N REDIENT	* PERCENT*	OSHA* PEL *	TLV * PPM *	TLV * MG/M3*	* LEL *	* CAS NUM
TOLUENE	* 20 *	100 *	100 *	375.00*	1.4 *	00108-88-
HEPTANE	* 15 *	500 *	500 *	2000.00*	1.1 *	00142-8
VM & P NAPHTHA	* 5 *	N/E *	400 *	2000.00*	.9 *	64742-4
A ISOBUTANE	* 15 *	1000 *	1000 *	1800.00*	1.8 *	00075-2
A PROPANE	* 15 *	1000 *	1000 *	1800.00*	2.3 *	00074-98-
@ = SARA TITLE III See Below	* *	*	*	*	*	

EROSOL - CONTENTS UNDER PRESSURE 55 +/- 5 PSIG

:cinogenicity: THIS PRODUCT IS NOT CONSIDERED TO BE A CARCINOGEN BY THE NATIONAL TOXICOLOGY PROGRAM, THE INTERNATIONAL AGENCY FOR RESEARCH ON ANCER, THE OCCUPATIONAL SAFETY AND HEALTH ADMINISTRATION, OR NATIONAL TITUTE FOR OCCUPATIONAL SAFETY & HEALTH.

SARA: These ingredients are subject to SARA TITLE III Section 313 reporting for Superfund Amendments and Reauthorization Act of 1986 and CFR 40 part 372.

SARA: Aerosol products are subject to SARA TITLE III Section 312 reporting for Superfund Amendments and Reauthorization Act of 1986 and CFR 40 part 372.

ursuant to Proposition 65: CERTAIN RAW MATERIALS USED IN MAKING THIS RODUCT MAY CONTAIN SMALL AMOUNTS OF MATERIALS AS IMPURITIES WHICH ARE EGULATED BY PROPOSITION 65. SEE SECTION IX.

SECTION III - PHYSICAL DATA

ld ling Range: PROPELLANT BELOW 0.0 F Vapor Density: HEAVIER THAN AIR

:VAPORATION RATE FASTER THAN ETHER *PROPELLANTS Percent Volatile By Weight: 67 Weight Per Gallon: NOT APPLIC..3

:cific Gravity: NOT APPLICABLE Appearance & Odor: COATINGS
'H: NOT APPLICABLE Vapor Pressure: NOT APPLICABLE
:olubility in Water: NOT APPLICABLE Melting Point: NOT APPLICABLE

(CONTINUED)

SECTION X HAZARDOUS MATERIAL IDENTIFICATION

COMMUNICATION OF PHYSICAL PROPERTY, HEALTH, AND SAFETY INFORMATION IS A KEY FACTOR IN OUR PRODUCT SAFETY PROGRAM. WITH THIS INFORMATION YOU CAN BETTER FULFILL YOUR OBLIGATION TO EDUCATE EXPOSED PERSONNEL IN THE PROPER HANDLING TECHNIQUES REQUIRED TO MAINTAIN SAFETY IN THE WORKPLACE. LISTED IN THIS SECTION IS NPCA-HMIS CLASSIFICATION FOR THIS PRODUCT.

	HMIS. CLASSIFICATION	CODE
Health:	2	MODERATE HAZARD
Flammability:	4	SEVERE HAZARD
Reactivity:	0	MINIMAL HAZARD
Personal protection:	D	FACE SHIELD, GLOVES, APRON

THE ABOVE INFORMATION PERTAINS TO THIS PRODUCT AS CURRENTLY FORMULATED, AND IS BASED ON THE INFORMATION AVAILABLE AT THIS TIME. ADDITION OF REDUCERS OR OTHER ADDITIVES TO THIS PRODUCT MAY SUBSTANTIALLY ALTER THE COMPOSITION AND HAZARDS OF THE PRODUCT. SINCE CONDITIONS OF USE ARE OUTSIDE OUR CONTROL, WE MAKE NO WARRANTIES, EXPRESS OR IMPLIED, AND ASSUME NO LIABILITY IN CONNECTION WITH ANY USE OF THIS INFORMATION.

SECTION VIII - SPECIAL PROTECTION INFORMATION

Respiratory Protection: AVOID BREATHING OF VAPOR OR SPRAY MIST (SEE SECTION X

IF PERSONAL EXPOSURE CANNOT BE CONTROLLED BELOW APPLICABLE LIMITS BY VENTILATION, WEAR A PROPERLY FITTED ORGANIC VAPOR/PARTICULATE RESPIRATOR APPROVED BY NIOSH/MSHA FOR PROTECTION AGAINST MATERIALS IN SECTION II.
WHEN SANDING OR ABRADING THE DRIED FILM, WEAR A DUST/MIST RESPIRATOR APPROVED BY NIOSH/MSHA FOR DUST WHICH MAY BE GENERATED FROM THIS PRODUCT, UNDERLYING PAINT, OR THE ABRASIVE.
THE APPLICABLE LIMITS FOR NUISANCE DUSTS ARE ACGIH TLV 10 mg/m3 (TOTAL DUST), OSHA PEL 15 mg/m3 (TOTAL DUST), 5 mg/m3 RESPIRABLE FRACTION).

Ventilation: PROVIDE LOCAL EXHAUST VENTILATION IN VOLUME AND PATTERN TO KEEP TLV OF ALL HAZARDOUS INGREDIENTS IN SECTION II BELOW ACCEPTABLE LIMIT, AND LEL IN SECTION II BELOW STATED LIMIT.

Protective Gloves: FOR PROLONGED OR REPEATED CONTACT, WEAR GLOVES WHICH ARE RECOMMENDED BY GLOVE SUPPLIER FOR PROTECTION AGAINST MATERIALS IN SECTION II.

Eye Protection: FOR PROLONGED USE IN CLOSE QUARTERS RECOMMEND SAFETY GLASSES WITH UNPERFORATED SIDESHIELDS.

ther Protective Equipment:

SECTION IX - SPECIAL PRECAUTIONS

r[tautions to be taken in handling and storing:
DO NOT STORE ABOVE 120 F. KEEP AT ROOM TEMPERATURE AS EXPOSURE TO DIRECT SUNLIGHT OR HEAT MAY CAUSE BURSTING.

t[ar Precautions:
KEEP AWAY FROM CHILDREN.
DO NOT PUNCTURE OR INCINERATE.
DO NOT SPRAY NEAR FIRE OR OPEN FLAME.

ursuant to Proposition 65:
PROPOSITION 65 APPLIES TO A LIST OF CHEMICALS NAMED BY THE GOVERNOR OF CALIFORNIA AS CARCINOGENS OR REPRODUCTIVE TOXINS. WARNING REQUIREMENTS FOR SPECIFIC CHEMICALS TAKE EFFECT ONE YEAR AFTER THEY ARE ADDED TO THE GOVERNOR'S LIST. OTHER CHEMICALS ALREADY ADDED TO THE GOVERNOR'S LIST WILL BE REGULATED LATER UNDER PROPOSITION 65.

(CONTINUED)

IN CASE OF FIRE USE DRY CHEMICAL, FOAM OR CO2. WATER MAY BE INEFFECTIVE, BUT SHOULD BE USED TO KEEP FIRE-EXPOSED CONTAINERS COOL.

REACTIVITY DATA

NORMALLY STABLE AS DEFINED IN NFPA 704-12 (4-3.1).
HAZARDOUS POLYMERIZATION: WILL NOT OCCUR.
INCOMPATIBILITIES: OXIDIZERS, ACIDS OR BASES
OTHER HAZARDS: NONE KNOWN TO BORDEN.
DECOMPOSITION PRODUCTS MAY INCLUDE: OXIDES OF CARBON.

CONTROL MEASURES

IF AIRBORNE CONTAMINANTS ARE GENERATED WHEN THE MATERIAL IS HEATED OR HANDLED, SUFFICIENT VENTILATION IN VOLUME AND AIR FLOW PATTERNS SHOULD BE PROVIDED TO KEEP AIR CONTAMINANT CONCENTRATION LEVELS BELOW ACCEPTABLE CRITERIA.
ENGINEERING CONTROLS: THE FOLLOWING EXPOSURE CONTROL TECHNIQUES MAY BE USED TO EFFECTIVELY MINIMIZE EMPLOYEE EXPOSURE: LOCAL EXHAUST VENTILATION, ENCLOSED SYSTEM DESIGN, PROCESS ISOLATION AND REMOTE CONTROL IN COMBINATION WITH APPROPRIATE USE OF PERSONAL PROTECTIVE EQUIPMENT AND PRUDENT WORK PRACTICES. THESE TECHNIQUES MAY NOT NECESSARILY ADDRESS ALL ISSUES PERTAINING TO YOUR OPERATIONS. WE, THEREFORE, RECOMMEND THAT YOU CONSULT WITH EXPERTS OF YOUR CHOICE TO DETERMINE WHETHER OR NOT YOUR PROGRAMS ARE ADEQUATE.

PERSONAL PROTECTION INFORMATION

WHERE AIR CONTAMINANTS CAN EXCEED ACCEPTABLE CRITERIA, USE NIOSH/MSHA APPROVED RESPIRATORY PROTECTION EQUIPMENT. RESPIRATORS SHOULD BE SELECTED BASED ON THE FORM AND CONCENTRATION OF CONTAMINANTS IN AIR IN ACCORDANCE WITH OSHA 29 CFR 1910.134 OR OTHER APPLICABLE STANDARDS OR GUIDELINES.
USE GOGGLES IF CONTACT IS LIKELY.
WEAR IMPERVIOUS GLOVES AS REQUIRED TO PREVENT SKIN CONTACT.

SPILL OR LEAK PROCEDURES

ELIMINATE ALL IGNITION SOURCES.
SOAK UP WITH ABSORBENT MATERIAL AND REMOVE TO A CHEMICAL DISPOSAL AREA.
PREVENT ENTRY INTO NATURAL BODIES OF WATER.

WASTE DISPOSAL

DISPOSE OF ACCORDING TO LOCAL, STATE PROVINCIAL, AND FEDERAL REQUIREMENTS.
EMPTY CONTAINER: MAY CONTAIN EXPLOSIVE VAPORS. DO NOT CUT, PUNCTURE OR WELD ON OR NEARBY.
INCINERATION WILL CAUSE CONTAINER TO BURST VIOLENTLY.

STORAGE PRECAUTIONS

DO NOT STORE AT TEMPERATURES ABOVE 120 F.
KEEP AWAY FROM HEAT, SPARKS, FLAME AND OTHER IGNITION SOURCES.

DOT CLASSIFICATION

ORM-D CONSUMER COMMODITY.

CUSTOMER INFORMATION

20 F OR LOWER WHEN TESTED BY THE METHOD DESCRIBED IN 16 CFR 1500.46 OF THE REGULATIONS UNDER FHSA AND FLASHBACK IS OBTAINED AT ANY DEGREE OF VALVE OPENING WHEN TESTED BY METHOD PRESCRIBED IN 16 CFR 1500.45 OF THE REGULATIONS UNDER FHSA.

MATERIAL SAFETY DATA SHEET

The Sherwin-Williams Company
THE SPECIALTY DIVISION
6830 Cochran Rd.
Solon, OH 44139-3908

Emergency Telephone
216-292-7400

For ordering information, additional copies of MSDS, etc., 1-800-
For technical information only, 216-292-7400

THE OSHA HAZARD COMMUNICATION STANDARD 29 CFR 191(
CONTAINED ON THIS SHEET BE MADE AVAILABLE TO YOUR W

Spray Paint, Krylon Upside Down

INSTRUCT YOUR WORKERS TO HANDLE THIS PRODUCT PROPERLY

DESCRIPTION: **KRYLON UPSIDE DOWN SPRAY PAINT**
PRODUCT TYPE: **AEROSOL SPARY PAINT** **19-Jan-89**
APPLICATION: **MARKING PAINT — FLUORESCENT COLORS — 7150 RED ORANGE, 7151 ORANGE, 7152 RED, 7153 GREEN, 7154 YELLOW**

SIGNAL WORD DANGER!

THIS MATERIAL IS A "HEALTH HAZARD" AND/OR A "PHYSICAL HAZARD" AS DETERMINED WHEN REVIEWED ACCORDING TO THE REQUIREMENTS OF THE OCCUPATIONAL SAFETY AND HEALTH ADMINISTRATION 29 CFR PART 1910.1200 "HAZARD COMMUNICATION" STANDARD.

CHEMICAL HAZARD RATING

HEALTH=2(MODERATE)
FIRE=4(EXTREME)
REACTIVITY=0(LEAST)
CHRONIC=*

29CFR1910.1200 HAZARDOUS INGREDIENTS/REPORTED HEALTH EFFECTS

CAS/REGISTRY NO. MATERIAL DESCRIPTION % RANGE

THE INGREDIENTS LISTED BELOW HAVE BEEN ASSOCIATED WITH ONE OR MORE OF THE LISTED IMMEDIATE AND/OR DELAYED (*) HEALTH HAZARDS. RISK OF DAMAGE AND EFFECTS DEPENDS UPON DURATION AND LEVEL OF EXPOSURE. BEFORE USING OR HANDLING, READ AND UNDERSTAND THE MSDS.

74-98-6 PROPANE **10-30**

THIS MATERIAL IS A SIMPLE ASPHYXIANT. SIGNS AND SYMPTOMS OF OVEREXPOSURE INCLUDE CYANOSIS, RESPIRATORY DISTRESS, HEADACHE, DIZZINESS, DROWSINESS, UNCONSCIOUSNESS AND ASPHYXIATION.
CAN CAUSE CENTRAL NERVOUS SYSTEM DEPRESSION.
—SEE FOOTNOTE C.
ACGIH TLV: SIMPLE ASPHYXIANT - SEE ACGIH TLVS, APPENDIX E
OSHA PEL: 1000 PPM (1800 MG/M3) TWA

108-88-3 *TOLUENE **10-30**

CAN CAUSE LIVER DAMAGE.
CAN CAUSE KIDNEY DAMAGE.
CAN CAUSE CENTRAL NERVOUS SYSTEM DEPRESSION. SIGNS AND SYMPTOMS MAY INCLUDE HEADACHE, DIZZINESS, NAUSEA, VOMITING, UNCONSCIOUSNESS AND ASPHYXIATION.
REPORTS HAVE ASSOCIATED REPEATED AND PROLONGED OCCUPATIONAL OVEREXPOSURE TO SOLVENTS WITH PERMANENT BRAIN AND NERVOUS SYSTEM DAMAGE. INTENTIONAL MISUSE BY DELIBERATELY CONCENTRATING AND INHALING THE CONTENTS MAY LEAD TO ADDICTION AND MAY BE HARMFUL OR FATAL.
—SEE FOOTNOTE C.
ACGIH TLV: 100 PPM (375 MG/M3) TWA; 150 PPM (560 MG/M3) STEL
OSHA PEL: 200 PPM TWA;300 PPM CEILING;500 PPM 10-MIN. PEAK
NIOSH DOCUMENT NUMBER: 73-11023

110-54-3 *HEXANE **10-30**

CHRONIC EXPOSURES MAY CAUSE PERIPHERAL NEUROPATHY.
CAN CAUSE CENTRAL NERVOUS SYSTEM DEPRESSION. SIGNS AND SYMPTOMS MAY INCLUDE HEADACHE, DIZZINESS, NAUSEA, VOMITING AND DROWSINESS.
—SEE FOOTNOTE C.
ACGIH TLV: 50 PPM (180 MG/M3) TWA
OSHA PEL: 500 PPM (1800 MG/M3) TWA
NIOSH DOCUMENT NUMBER: 77-151

64742-89-8 LIGHT ALIPHATIC SOLVENT NAPHTHA (PETROLEUM) **10-30**

CAN CAUSE CENTRAL NERVOUS SYSTEM DEPRESSION. SIGNS AND SYMPTONS MAY INCLUDE HEADACHE, DIZZINESS, NAUSEA, VOMITING, UNCONSCIOUSNESS AND EVEN ASPHYXIATION.
—SEE FOOTNOTE C.
ACGIH TLV: NONE ESTABLISHED
OSHA PEL: NONE ESTABLISHED

FOOTNOTE C: AS OF THE DATE OF ISSUANCE OF THIS DOCUMENT, THIS MATERIAL HAS NOT BEEN LISTED BY NTP, IARC OR OSHA AS A CARCINOGEN.

PHYSICAL DATA

VAPOR PRESSURE — SEE CAN PRESSURE
VAPOR DENSITY HEAVIER THAN AIR

SOLUBILITY IN WATER	SLIGHT
SPECIFIC GRAVITY LIGHTER THAN WATER	
EVAP RATE FASTER THAN BUTYL ACETATE	
PERCENT VOLATILE BY WEIGHT	[illegible]
PERCENT NON-VOLATILE BY WEIGHT	[illegible]
PRESSURE IN CONTAINER, PSIG @ 70 F.	APPROX. 60
BOILING RANGE, DEGREES F.	N/A
FLASH POINT — DEGREES F.	N
16CFR1500.3(C) (6)	EXTREMELY FLAMMAB
SEE CUSTOMER INFORMATION	

IMMEDIATE HEALTH HAZARD DATA

SKIN ABSORPTION: NO HAZARDS KNOWN TO BORDEN.
INGESTION: NOT EXPECTED TO BE HARMFUL UNDER NORMAL CONDITIONS OF USE.
IF ACCIDENTLY SWALLOWED, BURNS OR IRRITATION TO MUCOUS MEMBRANES, ESOPHAGUS OR GI TRACT CAN RESULT.
INHALATION: MAY BE HARMFUL IF INHALED. LIQUID OR VAPOR MAY CAUS IRRITATION OF NOSE, THROAT AND LUNGS.
CAN CAUSE CENTRAL NERVOUS SYSTEM DEPRESSION.
SKIN: CAUSES IRRITATION.
EYES: CAUSES IRRITATION.

HANDLING PRECAUTIONS

INHALATION: AVOID BREATHING VAPOR OR MIST.
USE WITH ADEQUATE VENTILATION.
SKIN: AVOID CONTACT WITH SKIN.
EYES: AVOID CONTACT WITH EYES.
HANDLE IN ACCORDANCE WITH GOOD INDUSTRIAL HYGIENE AND SAFETY PRACTICES. THESE PRACTICES INCLUDE AVOIDING UNNECESSARY EXPOSURE AND REMOVAL OF THE MATERIAL FROM EYES, SKIN AND CLOTHING.
WASH THOROUGHLY AFTER HANDLING.

EMERGENCY AND FIRST AID PROCEDURES

INGESTION: IF ACCIDENTLY SWALLOWED, DILUTE BY DRINKING LARGE QUANTITIES OF WATER. IMMEDIATELY CONTACT POISON CONTR CENTER OR HOSPITAL EMERGENCY ROOM FOR ANY OTHER ADDITIONA TREATMENT DIRECTIONS.
INHALATION: IF INHALED, REMOVE TO FRESH AIR. IF NOT BREATHING, GIVE ARTIFICIAL RESPIRATION, PREFERABLY MOUTH-TO-MOUTH.
SKIN CONTACT: FLUSH SKIN WITH PLENTY OF WATER. REMOVE CONTAMINATED CLOTHING. CALL A PHYSICIAN IF IRRITATION PERSISTS.
EYE CONTACT: IMMEDIATELY FLUSH EYES WITH PLENTY OF WATER FOR AT LEAST 15 MINUTES. EYELIDS SHOULD BE HELD APART DURIN IRRIGATION TO INSURE WATER CONTACT WITH ENTIRE SURFACE OF E AND LIDS. CALL A PHYSICIAN.

FIRE AND EXPLOSION HAZARD DATA

EXTREMELY FLAMMABLE.
DO NOT INCINERATE (BURN) CONTAINER.
AVOID HEAT. KEEP CONTAINER BELOW 120 F. HIGH TEMPERATURES MAY CAUSE BURSTING. DO NOT PLACE CONTAINER ON RADIATOR, STOVE, IN DIRECT SUNLIGHT OR NEAR OTHER HEAT SOURCES. **DO NOT PUNCTURE CONTAINER.** CONTENTS UNDER PRESSURE WILL DISCHARGE. **AVOID OP FLAMES, SPARKS, PILOT LIGHTS. DO NOT SMOKE.** VAPOR MAY IGNITE EXPLOSIVELY. SPRAY MIST OR VAPOR EVAPORATING FROM A DE FILM IS HEAVIER THAN AIR AND MAY SETTLE IN LOW PLACES O. OUTWARD TO A SOURCE OF IGNITION AND FLASHBACK.

SEE REVERSE SIDE

Seymour (cont.)

25. S-C 150 Solvent	64742-94-5	.12 - 3.03	N/D	N/D	100	563	.90
26. Toluene (1)	108-88-3	.21 - 59.98	see below*	see below*	100	377	1.27
27. Carbon Black (dust)	1333-86-4	.11 - 1.02	N/D	350	N/D	350	N/D
28. Ethyl Benzene (1)	100-41-4	.18 - 4.11	100	425	100	434	1.20
29. Complex Organic Phosphate Esters	Proprietary	.10 - .26	1	N/D	1	N/D	N/D
30. Propylene Oxide	75-56-9	.12 - .12	20	50	20	48	2.80
31. Copper Powder (1)	7440-50-8	5.78 - 6.22	N/D	1	N/D	1	N/D
32. Ethyl Alcohol	64-17-5	.11 - .11	1000	1900	1000	1880	3.30
33. Zinc Stearate (dust) (1)	557-05-1	.19 - .23	N/D	10	N/D	10	N/D
34. Alphatic Hydrocarbon Solvent (140)	64742-47-8	.29 - .29	N/D	N/D	N/D	N/D	1.80
35. 398 Silcosil (Silicon Dioxide)	7631-86-9	1.11 - 1.31	N/D	10	N/D	10	N/D
36. Iron Manganese Oxide Black (dust) (1)	11115-19-6	3.77 - 3.77	N/D	5	N/D	5	N/D
37. Molybdate Orange (R) (A-1) (1)	12656-85-8	2.08 - 3.70	N/D	10	N/D	10	N/D
38. Phthalocyanine Blue (1)	147-14-8	.10 - 1.01	N/D	15	N/D	10	N/D
39. Molybdate Orange (Y) (A-1) (1)	12656-85-8	.48 - 3.39	N/D	10	N/D	10	N/D
40. Phthalocyanine Green (1)	1328-53-6	.22 - .72	N/D	N/D	N/D	N/D	N/D
41. Lead Chromate (Med) (A-1) (1)	7758-97-6	3.59 - 5.64	N/D	.05	N/D	.05	N/D
42. Lead Chromate (Lt) (A-1) (1)	7758-97-6	1.86 - 1.86	N/D	.05	N/D	.05	N/D
43. Quinacridone Violet (1)	1047-16-7	.36 - .36	N/D	N/D	N/D	N/D	N/D
44. Varnish Makers and Painters Naphtha	8032-32-4	.10 - 26.23	300	1350	300	1370	1.10
45. Xylene (1)	1330-20-7	.15 - 16.44	100	435	100	434	1.00
46. Propane	74-98-6	10.40 - 19.30	1000	1800	N/D	N/D	2.30
47. Isobutane	75-28-5	7.00 - 12.90	N/D	N/D	N/D	N/D	1.90

(1) This chemical is subject to the reporting requirements of Section 3 of SARA TITLE III.

MATERIAL	8 HR TIME WEIGHTED AVG.	ACCEPTABLE CEILING CONCENTRATION	ACCEPTABLE MAX. PEAK ABOVE ACCEPTANCE CEILING CONCENTRATION/8 HR. SHIFT	
			CONCENTRATION	MAX. DURATION
*Methylene Chloride	500 ppm	1000 ppm	2000 ppm	5 min. in any 2 hours
*Toluene	200 ppm	300 ppm	500 ppm	10 minutes

SECTION 3 - PHYSICAL DATA

Boiling Point:	N/A	Vapor Density:	Heavier than air
Evaporation Rate:	Faster than ether	Melting Point:	N/A
Vapor Pressure:	Aerosol can 40 psia @ 70 F.	Specific Gravity:	N/A
Water Soluble:	Insoluble	Odor & Appearance:	Paint Solvent odor
% Volatile. by Volume:	Approximately 85%		

Material Safety Data Sheet

Issue Date: October, 1991

SECTION 1 - MANUFACTURER:

Seymour of Sycamore, Inc.
917 Crosby Avenue
Sycamore, IL 60178
Telephone: 815/895-9101

HMIS

Health	1
Flammability	4
Reactivity	3
Personal Protection	B

PRODUCT: Seymour Spray Paint (aerosol)

Hi-Tech Enamels 16-111 - 16-140
Farm & Industry 16-210 - 16-286
Lacquers (Gloss & Primers)16-805-838
Zinc Chromate Primers 16-396 - 16-398
Vinyl Coat 16-402 - 16-452
Wrinkle Finish 16-1303
Hot Spot 16-1201 - 16-1203
Hi-Tech Engine Paints EN-41 - EN-73
Fluorescents 16-1617 - 16-1620
Epoxy EP-502 - EP-522
Trunk Paints TP-56 - TP-77

PRODUCT CLASS: Aerosol Paint-See Section 9 for Resin Types

SECTION 2 - HAZARDOUS INGREDIENTS/IDENTITY INFORMATION

PRIMARY INGREDIENTS	CAS #	Percent	OSHA PEL (ppm)	OSHA PEL (mg/m3)	ACGIH TLV (ppm)	ACGIH TLV (mg/m3)	LEL
1. Titanium Dioxide (dust)	13463-67-7	.10 - 8.20	N/D	10	N/D	10	N/D
2. Aluminum Flake (1)	7429-90-5	1.64 - 4.07	N/D	15	N/D	10	N/D
3. Zinc Chromate (A-1) (as dust) (1)	13530-65-9	6.70 - 6.72	N/D	N/D	N/D	.01	N/D
4. Lead Chromate (A-2)	1344-37-2	6.85 - 18.05	N/D	N/D	N/D	0.05	1.90
5. Ammonium Hydroxide (1)	7664-41-7	.15 - .15	N/D	N/D	25	17	N/D
6. Zinc Dust (1)	7440-66-6	.64 - .69	N/D	10	N/D	10	N/D
7. Lead Borosilicate (dust) (1)	65997-17-3	2.64 - 2.64	N/D	N/D	0.1	N/D	N/D
8. Acetone (1)	67-64-1	11.76 - 49.45	750	1800	750	1780	2.60
9. Amyl Acetate (STD)	628-63-7	4.49 - 4.49	100	525	100	532	7.50
10. Dibutyl Phthalate (1)	84-74-2	1.33 - 2.45	N/D	5	N/D	5	N/D
11. Ethyl Acetate (85%)	141-78-6	.72 - .72	400	1400	400	1440	2.50
12. Ethyl Alcohol (denatured-Tescol A)	64-17-5	2.24 - 4.06	1000	1900	1000	1880	3.30
13. Ethylene Glycol Mono Butyl Ether (1)	111-76-2	2.65 - 10.74	N/D	N/D	25	120	1.10
14. Ethylene Glycol Mono Propyl Ether (1)	2807-30-9	1.20 - 3.19	N/D	N/D	N/D	N/D	1.26
15. Hexane	110-54-3	3.37 - 16.28	50	180	50	176	1.20
(other isomers in Hexane)			500	1,800	500	1800	
16. Isopropyl Acetate	108-21-4	3.10 - 3.22	250	950	250	1040	1.76
17. Isopropyl Alcohol (1)	67-63-0	.23 - 2.12	400	980	400	985	2.00
18. Methyl Alcohol (Skin) (1)	67-56-1	.10 - .19	200	260	200	262	6.00
19. Methylene Chloride (A-2)	75-09-2	23.35 - 23.40	see below*	see below*	100	174	N/D
20. Methyl Ethyl Ketone (1)	78-93-3	3.83 - 12.28	200	590	200	590	1.80
21. Methyl Isobutyl Ketone (1)	108-10-1	8.08 - 17.76	50	205	50	205	1.40
22. Mineral Spirits	64742-47-8	.11 - 8.22	100	525	100	N/D	.70
23. Propylene Glycol Methyl Ether Acetate	108-65-6	.18 - 1.68	N/D	N/D	N/D	N/D	1.30
24. S-C-100 Solvent	64742-95-6	.13 - 5.51	N/D	N/D	50	245	1.00

Seymour (cont.)

Carbon Black (dust): Overexposure - None recognized. Carbon Black contains trace amounts of adsorbed polynuclear aromatic compounds (PNA). In non-adsorbed form, some PNA's have been found to be carcinogens in certain studies. No carcinogenic effect has been found in animals or humans due to exposure to Carbon Black. Carbon Black is not considered a potential carcinogen by IARC, OSHA, or NTP.
Complex Organic Phosphate: Overexposure - Unknown- This is a proprietary product.
Copper Powder: Overexposure - None currently known.
Dibutyl Phthalate: Overexposure - None currently known.
Ethyl Acetate (85%): Overexposure - None currently known.
Ethyl Alcohol: Overexposure - Prolonged exposure to excessive concentrations of Ethanol may result in irritaion of mucous membranes, headache, drowsiness, fatigue, and narcosis.
Denatured Ethyl Alcohol: Overexposure - This product is denatured Ethyl Alcohol. Contains ethanol, isopropanol, methanol, and methyl isobutyl ketone. Prolonged exposure to excessive concentrations of Ethanol may result in irritation of mucous membranes, headache, drowsiness, fatigue, and narcosis. Methanol is also narcotic in effect and its effects are cumulative. Overexposure to Methanol can result in acidosis and visual distrubances which may progress to permanent loss of vision.
Ethyl Benzene: Overexposure - May cause severe eye irritaion, redness, tearing, and blurred vision. Prolonged or repeated exposure can cause irritation, defatting and dermititis. Excessive inhalation of vapors can cause nasal and respiratory irritation, central nervous system effects include dizziness, weakness, fatigue, nausea, headache, possible unconsciousness, and even death. Can cause gastro-intestinal irritation, vomiting, and diarrhea. Aspiration of material into the lungs can cause chemical pneumontis which can be fatal.
Ethylene Glycol Mono Butyl Ether: Overexposure - Studies in experimental animals have produced damage to the red blood cell by inhalation, skin absorption, and ingestion. Red blood cell osmotic fragility (a sensitive indicator of red blood cell toxicity) was not increased in two men and a woman exposed to 195 PPM for eight (8) hours. The odor threshold has been reported to as low as 0.48 PPM (100% recognition). Others report the odor at 40 PPM to be unpleasant while 60 PPM was a maximum tolerated level. Irritation of the eyes, nose, and throat occurs at 100 PPM. Thus, the odor does not have good warning properties. Predicted effects listed above are based on experimental animal data. Only three cases of human illiness possibly related to exposure to 2-Butoxyethanol have been reported, thus, its use has been remarkably free of serious complications.
Ethylene Glycol Mono Propyl Ether: Overexposure - exposure of experimental animals via inhalation, skin contact, or ingestion produces a toxic effect on the red blood cell. In studies of the related chemical, 2-Butoxyethanol, rats were at least three (3) times more sensitive than humans to this toxic effect.
Hexane: Overexposure - The presence (up to 50%) of N-Hexane in the solvent mixture for hexane represent a distinct hazard of producing peripheral polyneuropathy, a progressive disorder of the nervous system, which with sufficient high exposure has the potential of becoming irreversible. This disorder has been observed in individuals exposed repeatedly to high vapor concentrations (1000-1500 PPM) of N-Hexane over a period of several months. Exposure to this product should be controlled to keep the maximum level below 100 PPM which

will result in N-Hexane exposure of 50 PPM or less, as recommended by ACGIH (1985-1986).
Iron Manganese Oxide Black: Overexposure - Excessive exposure to airborn dust will result in effects similar to that of nuisance type dust.
Isopropyl Acetate: Overexposure - None currently known.
Isopropyl Alcohol: Overexposure - Can be irritating to mucosal membranes. Damages developing fetus. Severe eye irritant.

Seymour (cont.)

SECTION 4 - FIRE AND EXPLOSION DATA

Flash Point:	Aerosol -10 F. (T.O.C.)	LEL.	0.70	UEL.	9.5

Flammability Class: 1A
DOT: Consumer Commodity - ORM-D
Extinguishing Media: Use Carbon Dioxide, Dry Chemical or Foam
Special Fire Fighting Procedures: Water spray may be ineffective. Water may be used to cool containers to prevent bursting. If water is used, fog nozzles are preferable. Wear goggles and self-contained breathing apparatus.

SECTION 5 - HEALTH HAZARD
Threshold Limit Value: See section 2
ACUTE OVEREXPOSURE/First Aid:

Inhalation: Exposure to solvent vapors concentration exceeding the established threshold limit values can cause respiratory system irritation. Symptoms of overexposure are irritation, headache, dizziness, nausea, possible unconsciousness and asphyxiation. FIRST AID: Remove patient to fresh air. If breathing stops, begin artificial respiration. Seek immediate medical attention.

Eye Contact: May cause eye irritation especially upon direct contact with the spray. FIRST AID: Immediately flush eyes with plenty of water for at least 15 minutes. Get medical attention.

Skin Contact: Prolonged or repeated liquid contact may cause defatting of the skin, leading to irritation and dermatitis. FIRST AID: Wash with soap and water.

Ingestion: Accidental ingestion is unlikely from an aerosol can. If ingested, call a physician immediately. FIRST AID: Call a physician immediately.

CHRONIC OVEREXPOSURE:
Acetone: Overexposure - High vapor concentrations may irritate the eyes and mucous membrances of the nose and throat, severe overexposure (i.e.) 12,000 PPM can cause Central Nervous System depression including nausea, vomiting, headaches, incoordination and dizziness. Repeated or prolonged contact of the liquid with the skin can cause redness and a dry, scaly and fissured dematitis. Eye contact resulting from splashes or high vapor concentration exposure is irritating. When acetone was absorbed systemically, it caused cataracts in laboratory animals, when ingested the effects are intoxicating. These acute systems might include early emotional instability, impaired motor coordination, nausea, vomiting, drowsiness, stuper and finally coma. 10 to 20 ML has been taken orally without ill effects.
Alphatic Hydrocarbon Solvent: Overexposure - Reports have associated repeated and

prolonged occupational overexposure to solvents with permanent brain and nervous system damage. Intentional misuse by deliberately concentrating and inhaling the contents may be harmful or fatal.
Aluminum Flake (Powder): Overexposure - None currently known.
Ammonium Hydroxide: Overexposure - Can cause conjuctivities, dyspnea, vomiting and dizziness.
Std. Amyl Acetate: Overexposure - None currently known.

Seymour (cont.)

Molybdate Orange (Y): Overexposure - Harmful if inhaled or swallowed. Repeated and prolonged exposures may cause delayed effects involving the blood, gastro-intestinal, nervous and reproductive systems. (See OSHA Standard 29 CFR 1910.1025 for more information on lead.) THis material contains the following chemicals subject to reporting requirements of SARA Title III, Section 313 Chemicals, Antimony - approximately 3%, Barium - approximately 5%, Chromium - approximately 15%, and Lead, approximately 66%.
Molybdate Orange (R): Overexposure - Harmful if inhaled or swallowed. Repeated and prolonged exposures may cause delayed effects involving the blood, gastro-intestinal, nervous and reproductive systems. (See OSHA Standard 29 CFR 1910.1025 for more information on lead.) THis material contains the following chemicals subject to reporting requirements of SARA Title III, Section 313 Chemicals, Antimony - approximately 3%, Barium - approximately 5%, Chromium - approximately 15%, and Lead, approximately 66%.
Phthalocyanine Blue: Overexposure - None known, contains copper compounds- 24% by weight. As copper- 12% by weight.
Phthalocyanine Green: Overexposure - None currently known. Contains 18-22% by weight of copper compound or 6% copper as metal.
Propylene Glycol Methyl Ether Acetate: Overexposure - None currently known.
Propylene Oxide: Overexposure - A skin and eye irritant.
Quinacridone Violet: Overexposure - None known. Contains nickel compounds, 20%. As nickel, 12%.
SC-100 Solvent: Overexposure - Health studies have shown that many petroleum hydrocarbons pose potential human health risks which may vary from person to person. As a precaution, exposure to liquids, vapors, mist or fumes should be minimized.
SC-150 Solvent: Overexposure - Health studies have shown that many petroleum hydrocarbons pose potential human health risks which may vary from person to person. As a precaution, exposure to liquids, vapors, mist or fumes should be minimized. High vapor concentrations (greater than approximately 1000 PPM) are irritating to the eyes and respiratory tract, may cause headache and dizziness, are anesthetic, and may have other central nervous system effects.
398 Silcosil (Silicon Dioxide): Overexposure - Pulmonary fibrosis (Silicosis) with long term exposure. Note - avoid exposure to hydrofluoric acid (HF) in which silica will dissolve and produce the corrosive gas silicon tetrafluoride.
Titanium Dioxide (dust): Overexposure - None known. Inhalation test in rats: Dust from dried products produce an inert or nuisance dust response in the lungs.
Toluene: Overexposure - While there is no evidence that industrial acceptable levels of toluene (E.G. the TLV) have produced cardiac effects in humans, animal studies have shown that inhalation of high levels of toluene produced cardiac sensitization. Such sensitization may cause fatal changes in heart rhythms. This latter effect was shown to be enhanced by hypoxia or the injection of adrenalin-like agents. Rats exposed to 1400 PPM or 1200 PPM of toluene for 14H/Day for 4 or 5 weeks (respectively) exhibited high frequency hearing deficts. The significance of this information to man is unknown.
Varnish Makers & Painter: Overexposure - May cause skin irritation upon prolonged or repeated contact. Central nervous system depression in high concentrations.
Xylene: Overexposure - Health studies have shown that many petroleum hydrocarbons pose potential human health risk which may vary from person to person. As a precaution, exposure to liquids, vapors, mists or fumes should be minimized. Reports of animal test studies have shown possible effects to the liver, kidneys, and lungs. Reports of animal test studies have shown embroy/fetoxic effects. The revelance of these effects to man is unknown.
Zinc Chromate: Overexposure - acute - cough. Overexposure - chronic - stomach cramps
Zinc Dust: Overexposure - Excessive inhalation of the freshly formed fume may produce characteristic symptoms known as metal fume fever or "zinc shakes". Only the freshly formed fume is potent.

First Aid: Usually not important. Remove from exposure. Symptomatic treatment such as bed rest and aspirin may afford some relief from the chills and fever, however, recovery is complete in 24 to 48 hours.

Zinc Stearate (dust): Overexposure - Respiratory congestion due to dust.

Seymour (cont.)

Lead Borosilicate: Overexposure - Early effects of lead ingestion difficult to detect. Continued ingestion will result in increase in blood lead above a base entry level. Overexposure may cause symptoms - such as fatigue, sleep disturbance, headache, aching bones and muscles, constipation, abdominal pains and loss of appetite. Prolonged ingestion may be indicated by intense periodic cramps and constipation, nausea and vomiting. Excessive exposure may affect blood, nervous, digestive systems. Synthesis of hemoglobin inhibited will result in anemia. Apathy and depression may be symptoms.

Lead Chromate (Lt): Overexposure - Harmful if inhaled or swallowed. Repeated and prolonged exposures may cause delayed effects involving the blood, gastro-intestinal, nervous and reproductive systems. (See OSHA Standard 29 CFR 1910.1025 for more information on lead.)

Lead Chromate (Med): Overexposure - Harmful if inhaled or swallowed. Repeated and prolonged exposures may cause delayed effects involving the blood, gastro-intestinal, nervous and reproductive systems. (See OHSA Standard 29 CFR 1910.1025 for more information on lead.) This material contains between 1-5% lead sulfate.

Methyl Alcohol: Overexposure - Toxic Effects from repeated overexposure to methanol are accumulative and effect the central nervous system, especially the optic nerve. These symptoms may linger for several days after exposures. May be fatal or cause blindness if ingested. Cannot be made non-poisonous.

Methylene Chloride: Overexposure - Excessive exposure may carboxyhemoglobinemia, thereby imparing the blood's ability to transport oxygen. Excessive exposure may cause central nervous system, liver or kidney effects. Methylene Chloride has been shown to increase the rate of spontaneously occurring malignant tumors in one strain of laboratory mouse and benign tumors in laboratory rats. Other animal studies, as well as several human epidemiology studies, failed to show a tumorigenic response relatable to Methylene Chloride. Methylene Chloride is not believed to pose a measurable carcinogenic risk to man when handled as recommended. Birth defects are unlikely. Exposures having no effect on the mother should have no effect on the fetus. Did not cause birth defects in animals; other effects were seen in the fetus only at doses which caused toxic effects to the mother. In animal studies, has been shown not to interfere with reproduction. Negative or equivocal results have been obtained in mutagenicity test using mammalian cells or animals. This is consistent with the lack of interaction with DNA in rats and hamsters. Although results of Ames Bacterial test have generally been positive, overall the data suggest that genotoxic potential does not appear to be a significant factor in the toxicity of methylene chloride.

Methyl Ethyl Ketone: Overexposure - Concentration os 100-300 PPM cause nose and throat irritation. Higher concentrations cause more severe irritation, headache, nausea, drowsiness, dizziness, and incoordination. Prolonged exposure to the skin of liquid or vapors of Methyl Ethyl Ketone at concentrations greater than the TLV cause moderate irritation. Eye contact with the liquid causes severe irritation. Vapors cause slight to moderate irritation. Long-term repeated overexposure to high concentration of vapor may result in Central Nervous System depression and narcosis. Methyl Ethyl Ketone has been demonstrated to potentiate (i.E., shorten the time of onset) the Peripheral Neurophathy caused by either N-Hexane or Methyl N-Butyl Ketone. MEK by itself has not been demonstrated to cause Peripheral Neuropathy.

Methyl Isobutyl Ketone: Overexposure - In humans, levels of 1000 PPM produced Central Nervous System depression and narcosis. Workers exposed to Methyl Isobutyl Ketone at concentrations up to 500 PPM, 30 minutes per day over 5 years complained of headache, weakness, eye and upper respiratory tract irritation, and gastrointestinal symptoms. At 200-400 PPM, eye, nose, and throat irritation occurs, while at 100 PPM, the only problem observed is an objectional odor.

Mineral Spirits: Overexposure - Narcosis in high concentration. May cause skin irritation upon prolonged or repeated contact.

Seymour (cont.)

SECTION 9 - NOTES

RESINS TYPES

Alpha-Methylstyrene Lacquer Resin	A
Chain Stopped Alkyd Resin	B
Acrylic Lacquer	C
Vinyl/Acrylic Lacquer	D
Silicone Resin	E
Vinyl Toluene Alkyd Resin	F
Vinyl Copolymer	G
Epoxy Ester Resin	H
Nitrocellulose Lacquer	I
Modified Short Oil Alkyd Resin	J
Short Oil (Linseed) Alkyd Resin	K
Phenolic Tung Oil Alkyd Resin	L

SECTION 10 - SPECIAL PRECAUTIONS

Precautions to be taken in handling and storing; do not store above 120 degree F. Exposure to heat or prolong exposure to sun may cause bursting.
Other precautions: Use only as directed. Intential misuse by diliberately concentrating vapors and inhaling contents can be harmful or fatal.

SECTION 11 - PRODUCT INFORMATION

Products	Ingredients	Resin Type
16-111 Shiny Aluminum	2,22,26,46,47	A
16-112 Dove Gray	1,8,14,22,26,28,44,45,46,47	B
16-113 Gloss White	1,8,14,26,28,44,45,46,47	B
16-114 Gloss Appliance White	1,8,14,26,28,44,45,46,47	B
16-115 Gloss Black	8,14,22,24,26,27,28,44,45,46,47	B
16-116 Safety Yellow	1,8,14,22,26,28,44,45,46,47	B
16-117 Gloss Dark Gray	1,8,14,22,24,26,27,28,44,45,46,47	B
16-120 Safety Orange	1,14,22,26,28,44,45,46,47	B
16-122 Gloss True Red	8,14,25,26,28,44,45,46,47	B
16-126 Gloss Green	1,8,14,22,26,28,40,45,46,47	B
16-127 Gloss Blue	1,8,14,22,26,28,38,44,45,46,47	B
16-128 Hunter Green	1,8,14,22,24,26,27,28,40,44,45,46,47	B
16-129 Safety Blue	1,8,14,22,26,28,38,44,45,46,47	B
16-130 Gloss Brown	1,8,14,22,24,26,27,28,44,45,46,47	B
16-131 Vista Green	1,8,14,22,25,26,28,40,44,45,46,47	B
16-132 Dull Aluminum Metallic	2,22,26,28,46,47	C
16-133 Flat Black	8,22,24,26,27,28,44,45,46,47	B
16-134 Flat White	1,8,14,22,26,28,44,45,46,47	B
16-136 Gloss Magenta (Purple)	1,8,14,22,23,26,28,43,44,45,46,47	B
16-140 Colonial White	1,8,14,26,28,44,45,46,47	B
16-121 Clear Acrylic	8,14,26,28,34,44,45,46,47	C
16-139 Semi-Gloss Black	8,22,24,26,27,28,44,45,46,47	B

Seymour (cont.)

SECTION 6 - REACTIVITY DATA

Stability: Stable
Conditions to avoid: Do not store above 120 F. Keep from sparks, pilot light or open flame.
Incompatability: (materials to avoid)
Modified Alkyd Polyester, Alpha Methylstyrene, Vinyl toluene Alkyd and Vinyl copolymer resins - none known.
Acrylic Ester Resin - avoid strong acids and strong oxidizing agents.
Silicone Alkyd, Vinyl/Acrylic, Polyurethane short oil Alkyd, Polymethylphenyl, Siloxene, Phenolic tung Oil/Tung Oil and Epoxy ester resins - avoid strong oxidizing agents.
Shellac - avoid water, acid, and oxidizing agents.
Nitrocellulose - avoid amines, alkaline materials and strong acids.

Hazardous decomposition products: Modified Alkyd Polyester, Alpha-Methyl-Styrene, Acrylic Ester Resin, Short Oil Alkyd, Phenolic Tung Oil/Tung Oil, Vinyl Toluene Alkyd, and Epoxy Ester Resins: May produce hazardous fumes when heated to decomposition. Fumes may contain carbon dioxide and/or carbon monoxide.

Nitrocellulose Resin: May produce hazardous fumes when heated to decomposition. Fumes may contain oxides of nitrogen, hydrogen cyanide, Carbon monoxide from combustion of cellulose nitrate.

Vinyl/Acrylic Resin: May product hazardous fumes when heated to decomposition. Fumes may contain carbon monoxide, carbon dioxide, and oxides of barium, cadmiun and zinc.

Silicone Alkyd and Polymethylphenyl Siloxene Resin: May produce hazardous fumes when heated to decomposition. Fumes may contain carbon dioxide, carbon monoxide, silicone dioxide and water.

Vinyl Copolymer: May produce hazardous fumes when heated to decomposition. Fumes may contain carbon dioxide, carbon monoxide, and halogen acids.

Hazardous polymerzation: Will not occur.
Conditions to avoid: N/A

SECTION 7 - SPILL OR LEAK PROCEDURES

Steps to be taken in case material is released or spilled: Remove all sources of ignition, avoid breathing vapors, ventilate area. Wipe up with inert materials and place in appropriate container.
Waste disposal methods: Do not incinerate aerosol, dispose of in accordance with local, state and fedeal regulations. Do not place aerosol cans in home compactor. Do not puncture.
Precautions to be taken in handling and storing: Do not store above 120 F.

Exposure to heat or prolong exposure to sun may cause bursting.
Other precautions: Use only as directed. Intentional misuse by diliberately concentrating vapors and inhaling contents can be harmful or fatal.

SECTION 8 - SPECIAL PROTECTION INFORMATION

Respiratory Protection: Avoid continuous breathing of vapors and spray mist. A self contained breathing apparatus required for concentrations above TLV limits.
Ventilation: Use with adequate ventilation, sufficient to prevent inhalation of solvent vapors.
Protection Gloves: Optional
Eye Protection: Only under conditions where spray mist might get into eyes.

Seymour (cont.)

Products	Ingredients	Resin Type
EN-41 Chrome Aluminum	2,8,22,26,46,47	C
EN-42 Universal Black G.M.	8,14,22,24,26,27,28,44,45,46,47	B
EN-43 Ford Gray	1,8,14,22,24,26,27,28,44,45,46,47	B
EN-44 Ford Chrysler Red	1,4,8,14,22,26,28,37,44,45,47	B
EN-45 Chevy 6 Blue	1,8,14,22,25,26,28,38,44,45,46,47	B
EN-46 Ford Blue	1,8,14,22,26,28,38,44,45,46,47	B
EN-48 Chevy Moly Orange	4,8,22,25,26,28,37,39,44,45,46,47	B
EN-50 Universal Gold	6,8,22,26,31,46,47	C
EN-56 Ford Mustang Blue	1,8,14,22,25,26,28,38,44,45,46,47	B
EN-57 Pontiac Blue Metallic	2,8,22,26,28,38,44,45,46,47	B
EN-59 General Motors Red	4,8,14,22,25,26,28,37,44,45,46,47	B
EN-60 Alpine Green Detroit Diesel	1,8,14,22,26,28,44,45,46,47	B
EN-63 Chrysler Blue	1,8,14,22,26,28,38,44,45,46,47	B
EN-64 Olds Buick/GMC V-6 Blue	2,8,14,22,26,28,38,44,45,46,47	B
EN-65 Pontiac Blue Late Model	1,8,14,22,26,28,38,44,45,46,47	B
EN-66 AMC Blue	2,8,22,26,28,38,40,44,45,46,47	B
EN-67 GM Blue Chevy Pontiac Buick	1,8,14,22,25,26,28,38,44,45,46,47	B
EN-71 Dull Aluminum	2,8,22,26,28,44,45,46,47	B
EN-73 Cummins Beige	1,8,14,22,26,28,44,45,46,47	B
EN-70 Clear Engine Coating	8,14,26,28,44,45,46,47	B

The information contained herein is based on data believed to be reliable by Seymour of Sycamore, Inc. It is true and accurate to the best of our knowledge, but is not intended to be all inclusive. Users should consider this information as a supplement to other information gathered by them and must make their own determination of suitability and completeness to assure proper safe use and disposal of these materials.

ABBREVIATIONS:

N/D	No Data
N/A	Not Applicable
ACGIH (TLV)	American Conference of Government Industrial Hygienists (threshold limit value)
PEL	Permissible Exposure Limits
ppm	Parts per Million
mgm3	Milligrams per cubic meter
CAS #	Chemical Abstract Service Number
psia	Pounds per square inch - absolute
F.	Degrees Fahrenheit
TOC	Tag Open Cup
(A-1)	Confirmed Human Carcinogens (A-2) Suspected Human Carcinogens

Seymour (cont.)

Products	Ingredients	Resin Type
16-210 Allis Chalmers Orange	4,8,14,25,26,28,37,39,44,45,46,47	B
16-212 Cat Yellow	1,4,8,14,22,26,28,41,44,45,46,47	B
16-213 New Cat Yellow	1,8,14,22,26,28,44,45,46,47	B
16-214 IHC Red	1,8,14,25,26,28,44,45,46,47	B
16-224 Case & Deere Green	1,4,8,14,22,25,26,28,38,42,44,45,46,47	B
16-242 Ford Blue	1,8,14,22,26,28,38,44,45,46,47	B
16-286 School Bus Yellow	1,4,8,14,22,26,28,41,44,45,46,47	B
16-402 Satin White Vinyl Coat	1,8,10,14,20,21,26,28,45,46,47	D
16-403 High Sheen Black Vinyl	8,10,14,20,21,22,23,27,29,46,47	D
16-420 Satin Black Vinyl	8,14,20,21,22,23,26,27,28,29,45,46,47	D
16-421 High Sheen White Vinyl	1,8,10,14,20,21,26,28,45,46,47	D
16-452 Buckskin Vinyl	1,8,10,14,20,21,22,23,26,28,29,45,46,47	D
16-1201 Aluminum Hot Spot	2,8,15,17,22,26,28,35,45,46,47	E
16-1202 White Hot Spot	1,4,7,8,15,17,18,26,28,35,45,46,47	E
16-1203 Black Hot Spot	4,8,15,17,18,26,28,35,36,45,46,47	E
16-1617 Fluorescent Orange	15,24,25,28,44,45,46,47	F
16-1618 Fluorescent Red	15,24,25,28,44,45,46,47	F
16-1619 Fluorescent Yellow	15,24,25,28,44,45,46,47	F
16-1620 Fluorescent Green	15,24,25,28,44,45,46,47	F
16-1621 Fluorescent Blue	15,24,25,28,44,45,46,47	F
TP-56 Gray-White-Black	1,5,26,27,44,46,47	G
TP-58 Dark Green-Aqua Trunk Paint	1,5,26,27,44,46,47	G
TP-77 Black-Gray	1,5,26,27,44,46,47	G
EP-502 Appliance White Epoxy	1,8,12,17,18,22,28,44,45,46,47	H
EP-507 Gloss Black Epoxy	8,22,23,26,27,28,29,44,45,46,47	H
EP-522 Almond Epoxy	1,8,12,17,18,22,28,44,45,46,47	H
16-806 Dull Black Lacquer	8,14,20,26,27,28,45,46,47	C
16-812 Gold Metallic	6,8,22,26,31,46,47	C
16-813 Gloss White Lacquer	1,8,9,10,12,13,16,17,18,20,21,26,45,46,47	I
16-815 Gloss Black Lacquer	8,10,11,12,13,16,17,18,20,21,26,27,32,46,47	I
16-838 Semi-Gloss Black Lacquer	8,14,20,26,27,28,45,46,47	C
16-805 White Primer	1,8,12,17,18,26,28,33,45,46,47	J
16-807 Red Iron Oxide Primer	8,12,17,18,26,28,33,45,46,47	J
16-828 Black Primer	8,12,17,18,26,27,28,33,45,46,47	J
16-831 Light Gray Primer	1,8,12,17,18,26,28,33,45,46,47	J
16-821 Clear Gloss Lacquer	8,13,26,28,34,44,45,46,48	C
16-396 Yellow Zinc Chromate Primer	3,8,12,17,18,19,22,26,28,30,45,46,47	K
16-398 Green Zinc Chromate Primer	3,8,12,17,18,19,22,26,28,30,45,46,47	K
16-1303 Black Wrinkle	8,15,18,22,23,26,27,28,29,45,46,47	L

Section III — PHYSICAL DATA

PRODUCT WEIGHT	– N.A.	*EVAPORATION RATE*	– Faster than Ether
SPECIFIC GRAVITY	– N.A.	*VAPOR DENSITY*	– Heavier than Air
BOILING RANGE	– <0-395 °F	*MELTING POINT*	– N.A.
VOLATILE VOLUME	– >75 %	*SOLUBILITY IN WATER*	– N.A.

Section IV — FIRE AND EXPLOSION HAZARD DATA

FLAMMABILITY CLASSIFICATION *FLASH POINT* <0 F PMCC *LEL* 0.7 *UEL* 12.8
RED LABEL – Extremely Flammable, Flash below 21 °F
EXTINGUISHING MEDIA
Carbon Dioxide, Dry Chemical, Foam
UNUSUAL FIRE AND EXPLOSION HAZARDS
Closed containers may explode (due to the build-up of pressure) when exposed to extreme heat.
SPECIAL FIRE FIGHTING PROCEDURES
Full protective equipment including self-contained breathing apparatus should be used. Water spray may be ineffective. If water is used, fog nozzles are preferable. Water may be used to cool closed containers to prevent pressure build-up and possible autoignition or explosion when exposed to extreme heat.

Section V — HEALTH HAZARD DATA

ROUTES OF EXPOSURE
Exposure may be by INHALATION and/or SKIN or EYE contact, depending on conditions of use. To minimize exposure, follow recommendations for proper use, ventilation, and personal protective equipment.
ACUTE Health Hazards
EFFECTS OF OVEREXPOSURE
Irritation of eyes, skin and respiratory system. May cause nervous system depression. Extreme overexposure may result in unconsciousness and possibly death.
SIGNS AND SYMPTOMS OF OVEREXPOSURE
Headache, dizziness, nausea, and loss of coordination are indications of excessive exposure to vapors or spray mists.
Redness and itching or burning sensation may indicate eye or excessive skin exposure.
MEDICAL CONDITIONS AGGRAVATED BY EXPOSURE
None generally recognized.
EMERGENCY AND FIRST AID PROCEDURES
If INHALED: If affected, remove from exposure. Restore breathing. Keep warm and quiet.
If on SKIN: Wash affected area thoroughly with soap and water. Remove contaminated clothing and launder before re-use.
If in EYES: Flush eyes with large amounts of water for 15 minutes. Get medical attention.
If SWALLOWED: Never give anything by mouth to an unconscious person. DO NOT INDUCE VOMITING. Give several glasses of water. Seek medical attention.
CHRONIC Health Hazards
Crystalline silica (Quartz, Cristobalite) is listed by IARC. Long term exposure to high levels of silica dust, which can occur only when sanding or abrading the dry film, may cause lung damage (silicosis) and possibly cancer.
No other ingredient in these products is an IARC, NTP or OSHA listed carcinogen.
Prolonged and repeated exposure to Hexane may cause damage to nerve tissue of the arms and legs (peripheral neuropathy), resulting in muscular weakness and loss of sensation. This effect may be increased by the presence of Methyl Ethyl Ketone.
Prolonged overexposure to solvent ingredients in Section II may cause adverse effects to the liver, urinary, blood-forming, cardiovascular, and reproductive systems.
Reports have associated repeated and prolonged overexposure to solvents with permanent brain and nervous system damage.

Section VI — REACTIVITY DATA

STABILITY – Stable
INCOMPATIBILITY
None known.
HAZARDOUS DECOMPOSITION PRODUCTS
By fire: Carbon Dioxide, Carbon Monoxide
HAZARDOUS POLYMERIZATION – Will Not Occur

Section VII — SPILL OR LEAK PROCEDURES

STEPS TO BE TAKEN IN CASE MATERIAL IS RELEASED OR SPILLED
Remove all sources of ignition. Ventilate and remove with inert absorbent.
WASTE DISPOSAL METHOD
Waste from this product may be hazardous as defined under the Resource Conservation and Recovery Act (RCRA) 40 CFR 261. Waste must be tested for ignitability to determine the applicable EPA hazardous waste numbers.
Do not incinerate. Depressurize container. Dispose of in accordance with Federal, State, and Local regulations regarding pollution.

Section VIII — PROTECTION INFORMATION

PRECAUTIONS TO BE TAKEN IN USE
Use only with adequate ventilation. Avoid breathing vapor and spray mist. Avoid contact with skin and eyes. Wash hands after using.
This coating may contain materials classified as nuisance particulates (listed "as Dust" in Section II) which may be present at hazardous levels only during sanding or abrading of the dried film. If no specific dusts are listed in Section II, the applicable limits for nuisance dusts are ACGIH TLV 10 mg./m3 (total dust), OSHA PEL 15 mg./m3 (total dust), 5 mg./m3 (respirable fraction).
VENTILATION
Local exhaust preferable. General exhaust acceptable if the exposure to materials in Section II is maintained below applicable exposure limits. Refer to OSHA Standards 1910.94, 1910.107, 1910.108.
RESPIRATORY PROTECTION
If personal exposure cannot be controlled below applicable limits by ventilation, wear a properly fitted organic vapor/particulate respirator approved by NIOSH/MSHA for protection against materials in Section II.
When sanding or abrading the dried film, wear a dust/mist respirator approved by NIOSH/MSHA for dust which may be generated from this product, underlying paint, or the abrasive.
PROTECTIVE GLOVES
Wear gloves which are recommended by glove supplier for protection against materials in Section II.
EYE PROTECTION
Wear safety spectacles with unperforated sideshields.

Section IX — PRECAUTIONS

DOL STORAGE CATEGORY – 1A
PRECAUTIONS TO BE TAKEN IN HANDLING AND STORING
Contents are EXTREMELY FLAMMABLE. Keep away from heat, sparks, and open flame. Vapors will accumulate readily and may ignite explosively.
During use and until all vapors are gone: Keep area ventilated - Do not smoke - Extinguish all flames, pilot lights, and heaters - Turn off stoves, electric tools and appliances, and any other sources of ignition.
Consult NFPA Code. Use approved Bonding and Grounding procedures.
Contents under pressure. Do not puncture, incinerate, or expose to temperature above 120 °F. Heat from sunlight, radiators, stoves, hot water, and other heat sources could cause container to burst. Do not take internally. Keep out of the reach of children.
OTHER PRECAUTIONS
Intentional misuse by deliberately concentrating and inhaling the contents can be harmful or fatal.

This Material Safety Data Sheet conforms to the Hazard Communication standard, 29 CFR 1910.1200(g)(4), for similar complex mixtures.
The above information pertains to this product as currently formulated, and is based on the information available at this time. Addition of reducers or other additives to this product may substantially alter the composition and hazards of the product. Since conditions of use are outside our control, we make no warranties, express or implied, and assume no liability in connection with any use of this information.

Spray Paint, Sprayon Upside Down Marking Paints

MATERIAL SAFETY DATA SHEET

SECTION I

SPRAYON PRODUCTS
DIVISION OF THE SHERWIN-WILLIAMS CO.
6830 COCHRAN ROAD
SOLON, OH 44139

EMERGENCY TELEPHONE NO.
(216) 292-7400
INFORMATION TELEPHONE NO.
(800) 777-2966

DATE OF PREPARATION
1 - FEB - 92

Upside Down Marking Paints - 1

UPSIDE/ISD1

SECTION II — CAS No.	HAZARDOUS INGREDIENT (percent by weight)	ACGIH TLV <STEL>	OSHA PEL <STEL>	Units	Vapor Pressure (mm Hg)	*Fluorescent Solvent Base* 03613 Safety Red	03614 Neon Green	03622 Hot Pink	03701 Alert Orange	03702 Blaze Orange	03703 Red Orange	*Fluorescent Water Base* 03610 Safety Red	03612 Hot Pink	03620 Caution Blue	03630 Safety Green	03700 Alert Orange
74-98-6	Propane (propellant)		1000	PPM	760.0	12	14	12	14	14	13	8	8	8	8	8
75-28-5	2-Methylpropane (propellant)	Not Established			760.0	12	14	12	14	14	13	8	8	8	8	8
110-54-3	Hexane	50	50	PPM	127.0	17	10	18	7	13	10					
142-82-5	Heptane	400 <500>	400 <500>	PPM	50.0						1					
64742-47-8	Aliphatic Petroleum Distillates	100	100	PPM	2.0				4		8					
64742-88-7	Medium Mineral Spirits	100	100	PPM	2.0	2		2			1					
8052-41-3	Mineral Spirits (Odorless)	100	100	PPM	2.0	7	6	7				6	6	6	6	6
108-87-2	Methyl Cyclohexane	400	400	PPM					1		1					
8032-32-4	V. M. & P. Naphtha	300	300 <400>	PPM	12.0					7						
71-55-6 §	1,1,1-Trichloroethane	350 <450>	350 <450>	PPM	100.0	17	22	16								
108-88-3 §	Toluene	100 <150>	100 <150>	PPM	22.0	2	2	2	10	10	16	11	11	11	11	10
64742-89-8	Lacolene	100	100	PPM	2.0							16	16	16	16	16
64742-94-5	*Heavy Aromatic Naphtha*	Not Established			0.1						2					
67-64-1 §	Acetone	750 <1000>	750 <1000>	PPM	180.0					9						
14808-60-7	Quartz	0.1	0.1	Mg/M3	as Resp. Dust	11		11			13					
7631-86-9	Amorphous Silica	10	6	Mg/M3	as Dust		10									
471-34-1	Calcium Carbonate	10	15[5]	Mg/M3	as Dust [Resp. Fraction]					19						
	VOC as a percent by weight, BAAQMD Rule 49					68	68	68	75	65	65	47	49	49	51	50
	HMIS®Ratings (Health - Flammability - Reactivity)					2*-4-0	2-4-0	2*-4-0	2-4-0	2*-4-0	2-4-0	2-4-0	2-4-0	2-4-0	2-4-0	2-4-0

§ Ingredient subject to the reporting requirements of the Superfund Amendments and Reauthorization Act (SARA) Section 313, 40 CFR 372.65 C

Section III — PHYSICAL DATA

PRODUCT WEIGHT	– N.A.	*EVAPORATION RATE*	– Faster than Ether
SPECIFIC GRAVITY	– N.A.	*VAPOR DENSITY*	– Heavier than Air
BOILING RANGE	– <0-395 °F	*MELTING POINT*	– N.A.
VOLATILE VOLUME	– >75 %	*SOLUBILITY IN WATER*	– N.A.

Section IV — FIRE AND EXPLOSION HAZARD DATA

FLAMMABILITY CLASSIFICATION *FLASH POINT* <0 F PMCC *LEL* 0.7 *UEL* 12.8
RED LABEL – Extremely Flammable, Flash below 21 °F
EXTINGUISHING MEDIA
Carbon Dioxide, Dry Chemical, Foam
UNUSUAL FIRE AND EXPLOSION HAZARDS
Closed containers may explode (due to the build-up of pressure) when exposed to extreme heat.
SPECIAL FIRE FIGHTING PROCEDURES
Full protective equipment including self-contained breathing apparatus should be used. Water spray may be ineffective. If water is used, fog nozzles are preferable. Water may be used to cool closed containers to prevent pressure build-up and possible autoignition or explosion when exposed to extreme heat.

Section V — HEALTH HAZARD DATA

ROUTES OF EXPOSURE
Exposure may be by INHALATION and/or SKIN or EYE contact, depending on conditions of use. To minimize exposure, follow recommendations for proper use, ventilation, and personal protective equipment.
ACUTE Health Hazards
EFFECTS OF OVEREXPOSURE
Irritation of eyes, skin and respiratory system. May cause nervous system depression. Extreme overexposure may result in unconsciousness and possibly death.
03800 Utility Yellow contains Lead. (See Table and product label). Acute occupational exposure to Lead is uncommon, but results in effects and symptoms similar to chronic overexposure described below.
SIGNS AND SYMPTOMS OF OVEREXPOSURE
Headache, dizziness, nausea, and loss of coordination are indications of excessive exposure to vapors or spray mists.
Redness and itching or burning sensation may indicate eye or excessive skin exposure.
MEDICAL CONDITIONS AGGRAVATED BY EXPOSURE
None generally recognized.
EMERGENCY AND FIRST AID PROCEDURES
If INHALED: If affected, remove from exposure. Restore breathing. Keep warm and quiet.
If on SKIN: Wash affected area thoroughly with soap and water. Remove contaminated clothing and launder before re-use.
If in EYES: Flush eyes with large amounts of water for 15 minutes. Get medical attention.
If SWALLOWED: Never give anything by mouth to an unconscious person. DO NOT INDUCE VOMITING. Give several glasses of water. Seek medical attention.
CHRONIC Health Hazards
03800 Utility Yellow contains Lead and Chromates (See TABLE and PRODUCT LABEL).
Chronic overexposure to Lead may result in damage to the blood-forming, nervous, urinary, and reproductive systems (including embryotoxic effects). Symptoms include nervous irritability, weakness, muscle and joint pains, headache, and dizziness.
Chromates are listed by IARC and NTP. Although studies have associated exposure to Chromium VI compounds with an increased risk of respiratory cancer, availabl evidence indicates that Lead Chromate (Chrome Yellow, Molybdate Orange) DOES NOT present this hazard.
No other ingredients in these products is an IARC, NTP or OSHA listed carcinogen.
Prolonged and repeated exposure to Hexane may cause damage to nerve tissue of the arms and legs (peripheral neuropathy), resulting in muscular weakness and loss of sensation. This effect may be increased by the presence of Methyl Ethyl Ketone. Prolonged overexposure to solvent ingredients in Section II may cause adverse effects to the liver, urinary, blood-forming, cardiovascular, and reproductive systems.
Rats exposed to titanium dioxide dust at 250 mg./m3 developed lung cancer, however, such exposure levels are not attainable in the workplace.
Reports have associated repeated and prolonged overexposure to solvents with permanent brain and nervous system damage.

Section VI — REACTIVITY DATA

STABILITY – Stable
INCOMPATIBILITY
None known.
HAZARDOUS DECOMPOSITION PRODUCTS
By fire: Carbon Dioxide, Carbon Monoxide, Oxides of Metal Listed in Section II
HAZARDOUS POLYMERIZATION – Will Not Occur

Section VII — SPILL OR LEAK PROCEDURES

STEPS TO BE TAKEN IN CASE MATERIAL IS RELEASED OR SPILLED
Remove all sources of ignition. Ventilate and remove with inert absorbent.
WASTE DISPOSAL METHOD
Waste from this product may be hazardous as defined under the Resource Conservation and Recovery Act (RCRA) 40 CFR 261. Waste must be tested for ignitability to determine the applicable EPA hazardous waste numbers.
Do not incinerate. Depressurize container. Dispose of in accordance with Federal, State, and Local regulations regarding pollution.

Section VIII — PROTECTION INFORMATION

PRECAUTIONS TO BE TAKEN IN USE
Use only with adequate ventilation. Avoid breathing vapor and spray mist. Avoid contact with skin and eyes. Wash hands after using.
03800 Utility Yellow contains Lead (See TABLE and PRODUCT LABEL). Before initial use, consult OSHA'S Standard for Occupational Exposure to Lead (29 CFR 1910.1025).
These coatings may contain materials classified as nuisance particulates (listed "as Dust" in Section II) which may be present at hazardous levels only during sanding or abrading of the dried film. If no specific dusts are listed in Section II, the applicable limits for nuisance dusts are ACGIH TLV 10 mg./m3 (total dust), OSHA PEL 15 mg./m3 (total dust), 5 mg./m3 (respirable fraction).
VENTILATION
Local exhaust preferable. General exhaust acceptable if the exposure to materials in Section II is maintained below applicable exposure limits. Refer to OSHA Standards 1910.94, 1910.107, 1910.108.
RESPIRATORY PROTECTION
If personal exposure cannot be controlled below applicable limits by ventilation, wear a properly fitted organic vapor/particulate respirator approved by NIOSH/MSHA for protection against materials in Section II.
When sanding or abrading the dried film, wear a dust/mist respirator approved by NIOSH/MSHA for dust which may be generated from this product, underlying paint, or the abrasive.
PROTECTIVE GLOVES
Wear gloves which are recommended by glove supplier for protection against materials in Section II.
EYE PROTECTION
Wear safety spectacles with unperforated sideshields.

Section IX — PRECAUTIONS

DOL STORAGE CATEGORY – 1A
PRECAUTIONS TO BE TAKEN IN HANDLING AND STORING
Contents are EXTREMELY FLAMMABLE. Keep away from heat, sparks, and open flame. Vapors will accumulate readily and may ignite explosively.
During use and until all vapors are gone: Keep area ventilated - Do not smoke - Extinguish all flames, pilot lights, and heaters - Turn off stoves, electric tools and appliances, and any other sources of ignition.
Consult NFPA Code. Use approved Bonding and Grounding procedures.
Contents under pressure. Do not puncture, incinerate, or expose to temperature above 120 °F. Heat from sunlight, radiators, stoves, hot water, and other heat sources could cause container to burst. Do not take internally. Keep out of the reach of children.
OTHER PRECAUTIONS
03800 Utility Yellow contains Lead (See TABLE and PRODUCT LABEL). Do not apply Lead-containing paint on toys and other children's articles, furniture, or any interior surface of a dwelling or facility which may be occupied by children. Do not apply on any exterior surface of dwelling units, such as window sills, porches, stairs, or railings to which children may be commonly exposed.
Intentional misuse by deliberately concentrating and inhaling the contents can be harmful or fatal.

This Material Safety Data Sheet conforms to the Hazard Communication standard, 29 CFR 1910.1200(g)(4). for similar complex mixtures.
The above information pertains to this product as currently formulated, and is based on the information available at this time. Addition of reducers or other additives to this product may substantially alter the composition and hazards of the product. Since conditions of use are outside our control, we make no warranties, express or implied, and assume no liability in connection with any use of this information.

MATERIAL SAFETY DATA SHEET

—SECTION I—

SPRAYON PRODUCTS
DIVISION OF THE SHERWIN-WILLIAMS CO.
6830 COCHRAN ROAD
SOLON, OH 44139

EMERGENCY TELEPHONE NO.
(216) 292-7400
INFORMATION TELEPHONE NO.
(800) 777-2966

DATE OF PREPARATION
1 - FEB - 92

Upside Down Marking Paints - 2

UPSIDE/ISD2

—SECTION II— CAS No.	HAZARDOUS INGREDIENT (percent by weight)	ACGIH TLV <STEL>	OSHA PEL <STEL>	Units	Vapor Pressure (mm Hg)	A.P.W.A. - Solvent Base: 03611 Red	03621 Blue	03631 Green	03731 Bright Orange	03800 Utility Yellow	03821 Hi-Visibility Yellow	03900 Utility White	Water Base: 03801 Utility Yellow	03901 Brilliant White
74-98-6	Propane (propellant)		1000	PPM	760.0	12	12	13	12	14	12	14	14	14
75-28-5	2-Methylpropane (propellant)	Not Established			760.0	12	13	13	13	14	13	14		
110-54-3	Hexane	50	50	PPM	127.0		5	5	5	8		8	14	14
64742-89-8	Aliphatic Petroleum Distillate	100	100	PPM	2.0						12			
8032-32-4	V. M. & P. Naphtha	300	300 <400>	PPM	12.0	12	8	8	14	6		6	3	4
71-55-6	1,1,1-Trichloroethane	350 <450>	350 <450>	PPM	100.0	6					10			
108-88-3 §	Toluene	100 <150>	100 <150>	PPM	22.0	18	14	13	8		16	9	13	13
1330-20-7 §	Xylene	100 <150>	100 <150>	PPM	5.9					8			1	
67-64-1 §	Acetone	750 <1000>	750 <1000>	PPM	180.0	20	19	20	19	20	10	19		
108-21-4	Isopropyl Acetate	250 <310>	250 <310>	PPM	47.5								1	
14807-96-6	Talc	2	2	Mg/M3	as Resp. Dust		8	8	7	10	5	8	6	5
471-34-1	Calcium Carbonate	10	15[5]	Mg/M3	as Dust [Resp. Fraction]		10	9	10	7	5	10	6	6
13463-67-7	Titanium Dioxide	10	10[5]	Mg/M3	as Dust [Resp. Fraction]		2	2	1		2	6		4
7758-97-6 §	Lead Chromate	0.05	0.05	Mg/M3						7				
	VOC as a percent by weight, BAAQMD Rule 49					79	71	70	71	69	72	69	47	46
	HMIS® Ratings (Health - Flammability - Reactivity)					2-4-0	2-4-0	2-4-0	2-4-0	2*-4-0	2-4-0	2-4-0	2-4-0	2-4-0

§ Ingredient subject to the reporting requirements of the Superfund Amendments and Reauthorization Act (SARA) Section 313, 40 CFR 372.65 C

Section III — PHYSICAL DATA

PRODUCT WEIGHT	- N.A.	*EVAPORATION RATE*	- Faster than Ether
SPECIFIC GRAVITY	- N.A.	*VAPOR DENSITY*	- Heavier than Air
BOILING RANGE	- <0-395 °F	*MELTING POINT*	- N.A.
VOLATILE VOLUME	- >75 %	*SOLUBILITY IN WATER*	- N.A.

Section IV — FIRE AND EXPLOSION HAZARD DATA

FLAMMABILITY CLASSIFICATION *FLASH POINT* <0 F PMCC *LEL* 0.7 *UEL* 12.8

RED LABEL - Extremely Flammable, Flash below 21 °F

EXTINGUISHING MEDIA

Carbon Dioxide, Dry Chemical, Foam

UNUSUAL FIRE AND EXPLOSION HAZARDS

Closed containers may explode (due to the build-up of pressure) when exposed to extreme heat.

SPECIAL FIRE FIGHTING PROCEDURES

Full protective equipment including self-contained breathing apparatus should be used. Water spray may be ineffective. If water is used, fog nozzles are preferable. Water may be used to cool closed containers to prevent pressure build-up and possible autoignition or explosion when exposed to extreme heat.

Section V — HEALTH HAZARD DATA

ROUTES OF EXPOSURE

Exposure may be by INHALATION and/or SKIN or EYE contact, depending on conditions of use. To minimize exposure, follow recommendations for proper use, ventilation, and personal protective equipment.

ACUTE Health Hazards

EFFECTS OF OVEREXPOSURE

Irritation of eyes, skin and respiratory system. May cause nervous system depression. Extreme overexposure may result in unconsciousness and possibly death.

SIGNS AND SYMPTOMS OF OVEREXPOSURE

Headache, dizziness, nausea, and loss of coordination are indications of excessive exposure to vapors or spray mists.

Redness and itching or burning sensation may indicate eye or excessive skin exposure.

MEDICAL CONDITIONS AGGRAVATED BY EXPOSURE

None generally recognized.

EMERGENCY AND FIRST AID PROCEDURES

If INHALED: If affected, remove from exposure. Restore breathing. Keep warm and quiet.
If on SKIN: Wash affected area thoroughly with soap and water. Remove contaminated clothing and launder before re-use.
If in EYES: Flush eyes with large amounts of water for 15 minutes. Get medical attention.
If SWALLOWED: Never give anything by mouth to an unconscious person. DO NOT INDUCE VOMITING. Give several glasses of water. Seek medical attention.

CHRONIC Health Hazards

Crystalline silica (Quartz, Cristobalite) is listed by IARC. Long term exposure to high levels of silica dust, which can occur only when sanding or abrading the dry film, may cause lung damage (silicosis) and possibly cancer.

No other ingredients in these products is an IARC, NTP or OSHA listed carcinogen.

Methyl Ethyl Ketone may increase the nervous system effects of other solvents.

Prolonged and repeated exposure to Hexane may cause damage to nerve tissue of the arms and legs (peripheral neuropathy), resulting in muscular weakness and loss of sensation. This effect may be increased by the presence of Methyl Ethyl Ketone.

Prolonged overexposure to solvent ingredients in Section II may cause adverse effects to the liver, urinary, blood-forming, cardiovascular, and reproductive systems.

Reports have associated repeated and prolonged overexposure to solvents with permanent brain and nervous system damage.

Section VI — REACTIVITY DATA

STABILITY - Stable

INCOMPATIBILITY

None known.

HAZARDOUS DECOMPOSITION PRODUCTS

By fire: Carbon Dioxide, Carbon Monoxide

HAZARDOUS POLYMERIZATION - Will Not Occur

Section VII — SPILL OR LEAK PROCEDURES

STEPS TO BE TAKEN IN CASE MATERIAL IS RELEASED OR SPILLED

Remove all sources of ignition. Ventilate and remove with inert absorbent.

WASTE DISPOSAL METHOD

Waste from this product may be hazardous as defined under the Resource Conservation and Recovery Act (RCRA) 40 CFR 261. Waste must be tested for ignitability to determine the applicable EPA hazardous waste numbers.

Do not incinerate. Depressurize container. Dispose of in accordance with Federal, State, and Local regulations regarding pollution.

Section VIII — PROTECTION INFORMATION

PRECAUTIONS TO BE TAKEN IN USE

Use only with adequate ventilation. Avoid breathing vapor and spray mist. Avoid contact with skin and eyes. Wash hands after using.

This coating may contain materials classified as nuisance particulates (listed "as Dust" in Section II) which may be present at hazardous levels only during sanding or abrading of the dried film. If no specific dusts are listed in Section II, the applicable limits for nuisance dusts are ACGIH TLV 10 mg./m3 (total dust), OSHA PEL 15 mg./m3 (total dust), 5 mg./m3 (respirable fraction).

VENTILATION

Local exhaust preferable. General exhaust acceptable if the exposure to materials in Section II is maintained below applicable exposure limits. Refer to OSHA Standards 1910.94, 1910.107, 1910.108.

RESPIRATORY PROTECTION

If personal exposure cannot be controlled below applicable limits by ventilation, wear a properly fitted organic vapor/particulate respirator approved by NIOSH/MSHA for protection against materials in Section II.

When sanding or abrading the dried film, wear a dust/mist respirator approved by NIOSH/MSHA for dust which may be generated from this product, underlying paint, or the abrasive.

PROTECTIVE GLOVES

Wear gloves which are recommended by glove supplier for protection against materials in Section II.

EYE PROTECTION

Wear safety spectacles with unperforated sideshields.

Section IX — PRECAUTIONS

DOL STORAGE CATEGORY - 1A

PRECAUTIONS TO BE TAKEN IN HANDLING AND STORING

Contents are EXTREMELY FLAMMABLE. Keep away from heat, sparks, and open flame. Vapors will accumulate readily and may ignite explosively.

During use and until all vapors are gone: Keep area ventilated - Do not smoke - Extinguish all flames, pilot lights, and heaters - Turn off stoves, electric tools and appliances, and any other sources of ignition.

Consult NFPA Code. Use approved Bonding and Grounding procedures.

Contents under pressure. Do not puncture, incinerate, or expose to temperature above 120 °F. Heat from sunlight, radiators, stoves, hot water, and other heat sources could cause container to burst. Do not take internally. Keep out of the reach of children.

OTHER PRECAUTIONS

Intentional misuse by deliberately concentrating and inhaling the contents can be harmful or fatal.

This Material Safety Data Sheet conforms to the Hazard Communication standard, 29 CFR 1910.1200(g)(4), for similar complex mixtures.

The above information pertains to this product as currently formulated, and is based on the information available at this time. Addition of reducers or other additives to this product may substantially alter the composition and hazards of the product. Since conditions of use are outside our control, we make no warranties, express or implied, and assume no liability in connection with any use of this information.

—SECTION I—

MATERIAL SAFETY DATA SHEET

SPRAYON PRODUCTS
DIVISION OF THE SHERWIN-WILLIAMS CO.
6830 COCHRAN ROAD
SOLON, OH 44139

EMERGENCY TELEPHONE NO.
(216) 292-7400
INFORMATION TELEPHONE NO.
(800) 777-2966

DATE OF PREPARATION
1 - FEB - 92

Upside Down Marking Paints - 3

UPSIDE/ISD3

—SECTION II— CAS No.	HAZARDOUS INGREDIENT (percent by weight)	ACGIH TLV <STEL>	OSHA PEL <STEL>	Units	Vapor Pressure (mm Hg)	*Specialty Colors* 03550 Asphalt Black	03640 Aluminum		*Chalks - A.P.W.A. Colors* 03500 Clear	03501 Orange	03502 Yellow	03503 Red	03504 Blue	03505 White	03506 Green
74-98-6	Propane (propellant)		1000	PPM	760.0	12	12		11	15	13	13	15	15	15
75-28-5	2-Methylpropane (propellant)	Not Established			760.0	12	12		11	15	13				
110-54-3	Hexane	50	50	PPM	127.0								5	10	12
142-82-5	Heptane	400 <500>	400 <500>	PPM								1			
64742-95-6	Aromatic Petroleum Distillate	Not Established			3.8							10			
8052-41-3	Mineral Spirits (Odorless)	100	100	PPM	2.0		2						5	5	8
64742-95-6	Light Aromatic Naphtha	Not Established			3.8		9			4	6	10	4	4	
64742-48-9	Aliphatic Petroleum Distillate	100	100	PPM	2.0							9		19	
25551-13-7	Trimethyl Benzene	25	25	PPM	2.0		5					14			
25550-14-5	Ethyl Toluene	Not Established					2								
108-87-2	Methyl Cyclohexane	400	400	PPM								1			
64742-89-8	V. M. & P. Naphtha	300	300 <400>	PPM	12.0					23	25	9	22		
71-55-6 §	1,1,1-Trichloroethane	350 <450>	350 <450>	PPM	100.0		21		30						
108-88-3 §	Toluene	100 <150>	100 <150>	PPM	22.0	18	21		3		5	18	3	1	30
1330-20-7 §	Xylene	100 <150>	100 <150>	PPM	5.9	2				6	6		13	12	
64742-94-5	Heavy Aromatic Naphtha	Not Established			0.1							2			
67-64-1 §	Acetone	750 <1000>	750 <1000>	PPM	180.0	29			27						
78-93-3 §	Methyl Ethyl Ketone	200 <300>	200 <300>	PPM	70.0										
763-69-9	Ethyl 3-Ethoxypropionate	Not Established			1.1				9						
14808-60-7	Quartz	0.1	0.1	Mg/M3	as Resp. Dust							13			
14807-96-6	Talc	2	2	Mg/M3	as Resp. Dust	6									
471-34-1	Calcium Carbonate	10	15[5]	Mg/M3 [Resp.	as Dust Fraction]	14				30	27		30	27	31
13463-67-7	Titanium Dioxide	10	10[5]	Mg/M3 [Resp.	as Dust Fraction]	1					3		2	6	
	VOC as a percent by weight, BAAQMD Rule 49					73	84		96	63	67	66	66	65	66
	HMIS® Ratings (Health - Flammability - Reactivity)					2-4-0	2-4-0		2-4-0	2-4-0	2-4-0	2*-4-0	2-4-0	2-4-0	2-4-0

§ Ingredient subject to the reporting requirements of the Superfund Amendments and thorization Act (SARA) Section 313, 40 CFR 372.65 C

SECTION 6. HEALTH HAZARD INFORMATION TLV

Stannous chloride is not listed as a carcinogen by the NTP, IARC, or OSHA.*

SUMMARY OF RISKS: Stannous chloride is mildly irritating to the skin, eyes, and mucous membranes due to a mild acid reaction from traces of free HCl. Inhalation of the dust or fumes of this material for extended periods may result in a benign pneumoconiosis. This disease produces distinctive changes in the lungs that can be diagnosed by X-ray; there are no resulting fibrosis, disability, or complicating factors.

TARGET ORGANS: Skin, eyes. PRIMARY ENTRY: Inhalation. ACUTE EFFECTS: Irritation to the skin, eyes, and mucous membranes. CHRONIC EFFECTS: Unknown.

FIRST AID: EYE CONTACT: Flush eyes thoroughly, including under the eyelids, with running water for 15 minutes. Get medical help.** SKIN CONTACT: Remove contaminated clothing. Flush affected area with water; wash with soap and water. Get medical help.** INHALATION: Remove victim to fresh air. Restore and/or support his breathing as required. Get medical help.** INGESTION: Rinse victim's mouth with water. Give him 2 to 3 glasses of water to drink to dilute this material. Induce vomiting. Never give anything by mouth to someone who is unconscious or convulsing. Get medical help.**

* National Cancer Institute carcinogenesis bioassay results: mouse, rat, negative (NCI-CG-Tr-231, 1982).

** GET MEDICAL ASSISTANCE = In plant, paramedic, community. Get medical help for further treatment, observation, and support after first aid.

SECTION 7. SPILL, LEAK, AND DISPOSAL PROCEDURES

SPILL/LEAK: Notify safety personnel of stannous chloride spills. Provide adequate ventilation. Cleanup personnel need protection against inhalation of dust or aqueous solutions, which are acidic. Sweep up or vacuum the waste, avoid dusting conditions, and place it in a corrosive-resistent container for reclamation or disposal. Flush spill area with a lot of water. Neutralize the waste with soda ash or lime. Do not flush it to sewers or open waters. It may be injurious to aquatic organisms.

DISPOSAL: Reclaim dry material for salvage or reuse. Contact your supplier for procedures or recovery and salvage. Follow Federal, state, and local regulations.

EPA, Clean Water Act, Reportable Spill Quantity: Not Listed.

SECTION 8. SPECIAL PROTECTION INFORMATION

Use a NIOSH-approved dust respirator where stannous chloride dust prevails. An acid-fume mask has been recommended under certain conditions.

Provide general dilution and local exhaust ventilation in sufficient volume and pattern to keep the concentration of hazardous ingredients listed in section 2 below the lowest exposure level stated.

Wear body-protective clothing appropriate to the work situation to minimize contact of this material with skin. Prevent eye contact by wearing chemical safety goggles where dusty conditions occur or where splashing is possible. Wear rubber gloves to prevent repeated or prolonged skin contact. Launder soiled clothing before wearing it again.

Contact lenses pose a special hazard; soft lenses may absorb irritants and all lenses concentrate them. Particles may adhere to contact lenses and cause corneal damage.

SECTION 9. SPECIAL PRECAUTIONS AND COMMENTS

Store stannous chloride in tightly closed containers in a cool, dry, well-ventilated area and keep it separated from strong oxidizing agents and alkalies. Protect its containers from physical damage.

Practice good housekeeping to prevent accumulation and generation of dust. Aqueous solutions are acidic and should be handled like dilute hydrochloric acid. Do not reuse a stannous chloride container.

Do not breathe dust or mist. Do not let this material come in contact with skin, eyes, or clothing. Practice good personal hygiene. Wash thoroughly after handling and before eating, drinking, or smoking. Do not take this material out of your work area or to your home on your clothing or equipment. Do not eat stannous chloride.

DOT Classification: ORM-B DOT ID No. NA1759

Data Source(s) Code: 1-7, 9-12, 14, 25-27, 31, 34, 38, 42, 47, 49, 55, 58, 81, 82, 84. CK

Judgements as to the suitability of information herein for purchaser's purposes are necessarily purchaser's responsibility. Therefore, although reasonable care has been taken in the preparation of such information, Genium Publishing Corp. extends no warranties, makes no representations and assumes no responsibility as to the accuracy or suitability of such information for application to purchaser's intended purposes or for consequences of its use.

Approvals	
Indust. Hygiene/Safety	4/87
Medical Review	May 87

Copyright © 1986 Genium Publishing Corporation.
Any commercial use or reproduction without the publisher's permission is prohibited.

Copyright © February 1, 1987

Material Safety Data Sheet

From Genium's Reference Collection
Genium Publishing Corporation
1145 Catalyn Street
Schenectady, NY 12303-1836 USA
(518) 377-8855

GENIUM PUBLISHING CORP.

(Revision A)

Issued: July 1980
Revised: February 1987

SECTION 1. MATERIAL IDENTIFICATION

22

MATERIAL NAME: STANNOUS CHLORIDE

DESCRIPTION/USES: Derived from dissolving tin in hydrochloric acid. Used as a reducing agent in the manufacture of chemicals, intermediates, dyes, polymers, and phosphors; in galvanizing tin, silvering mirrors; as a food preservative; stabilizer for perfume in soaps; as a catalyst; soldering flux; and sensitizing agent for glass, paper, and plastics.

OTHER DESIGNATIONS: Tin (II) Chloride, Tin Dichloride, Tin Crystals, Tin Salt, Tin Protochloride, $SnCl_2$, CAS #7772-99-8

MANUFACTURER/SUPPLIER: Available from several suppliers, including: Vulcan Materials Co., Metals Div., PO Box 7588, Birmingham, AL 35253; Telephone: (205) 877-3661; Emergency No.: (412) 331-0770 (Pittsburgh)

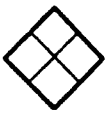

HMIS	Not Found
H 1	
F 0	R 1
R 0	I 2
PPE*	S 2
*See Sect. 8	K 0

SECTION 2. INGREDIENTS AND HAZARDS

	%	HAZARD DATA
Stannous Chloride, CAS #7772-99-8	ca 100	8-hr. TWA: 2 mg/m^3 (as Sn)* Rat, Oral, LD_{50}: 700 mg/kg Rabbit, Oral, LDLo: 40 mg/kg

* Current OSHA PEL and ACGIH (1986-87) TLV.

SECTION 3. PHYSICAL DATA

Boiling Point ... 1205.6°F (652°C)
Vapor Pressure ... Not Found
Water Solubility, g/100cc @ 0°C ... 83.9
Vapor Density (Air = 1) ... Not Found
Evaporation Rate ... Not Found

Specific Gravity (H_2O = 1) ... 3.95
Melting Point ... 474.8°F (246°C)
% Volatile by Volume ... Not Found
Molecular Weight ... 189.6

Appearance and odor: White orthorhombic crystals or flakes with a fatty appearance. Odorless.

SECTION 4. FIRE AND EXPLOSION DATA

Flash Point and Method	Autoignition Temperature	Flammability Limits in Air	LOWER	UPPER
Nonflammable	Not Found	Not Found	Not Found	Not Found

EXTINGUISHING MEDIA: Stannous chloride is a nonflammable solid. Use suitable extinguishing media for surrounding fire. When this material is involved in a fire situation, it may release irritating fumes. See section 5 for unusual fire or explosion hazards.

SPECIAL FIRE-FIGHTING PROCEDURES: Aqueous solutions of stannous chloride are acidic. Avoid its contact with eyes and skin. Avoid breathing its fumes or dust. Fire fighters should use self-contained breathing apparatus and wear fully protective clothing.

SECTION 5. REACTIVITY DATA

Stannous chloride is stable. Hazardous polymerization cannot occur.
This material is a powerful reducing agent that can absorb oxygen from the air. It catalyzes the violent exothermal polymerization of ethylene oxide. Explosions result from the reaction of nitrates or hydrogen peroxide (in >3% solutions) with stannous chloride. It can react with sodium or potassium to form an impact-sensitive mixture.
It will ignite on contact with bromine trifluoride. When mixed with calcium carbide or calcium acetylide, the mixture can be ignited with a match; the reaction then proceeds with incandescence. Contact with strong oxidizing agents or alkalies will generate heat and fumes.
Stannous chloride may yield irritating fumes that can include HCl.

Copyright © 1986 Genium Publishing Corporation.
Any commercial use or reproduction without the publisher's permission is prohibited.

SECTION 6. HEALTH HAZARD INFORMATION | TLV

Concentrated sulfuric acid is a strong mineral acid, an oxidizing agent, and a dehydrating agent that is rapidly damaging to all human tissue with which it comes in contact. Ingestion may cause severe injury or death. Eye contact produces severe or permanent injury. Inhalation of mists can damage both the upper respiratory tract and the lungs. Sulfuric acid is not listed as a carcinogen by the NTP, IARC, or OSHA.

FIRST AID: EYE CONTACT: Immediately flush eyes (including under eyelids) with plenty of running water for at least 15 minutes. Speed in diluting and rinsing out acid with water is extremely important if permanent eye damage is to be avoided. Obtain medical help as soon as possible.* SKIN CONTACT: Immediately flush affected areas with water, removing contaminated clothing while under the safety shower. Continue washing with water and get medical attention.* INHALATION: Remove to fresh air. Restore breathing. Call a physician immediately. INGESTION: Dilute acid immediately with large amounts of milk or water, then give milk of magnesia to neutralize. Never give anything by mouth to an unconscious person. Do not induce vomiting; if it occurs spontaneously, continue to administer fluid. Obtain medical attention as soon as possible.*

Maintain observation of patient for possible delayed onset of pulmonary edema.

* GET MEDICAL HELP = In plant, paramedic, community.

SECTION 7. SPILL, LEAK, AND DISPOSAL PROCEDURES

Handle major spills by a predetermined plan. Contact supplier for assistance in this planning, in meeting local regulations, and for disposing of large amounts. Notify safety personnel. Provide optimum ventilation; vapors are extremely irritating. Stop leak if you can do so without risk.

Cleanup personnel need protection against inhalation or contact. Keep upwind. Contain spill. Minor leaks or spills can be diluted with much water and neutralized with soda ash or lime. If water is not available, cover contaminated area with sand, ashes, or gravel and neutralize cautiously with soda ash or lime.

DISPOSAL: Follow Federal, state, and local regulations. Runoff to sewer may create hydrogen gas, which is a fire or explosion hazard. EPA (CWA) RQ 1000 lbs. (40 CFR 117).

SECTION 8. SPECIAL PROTECTION INFORMATION

Provide general ventilation to meet current TLV requirements in the workplace. Where mists are up to 50 mg/m^3, a high-efficiency particulate respirator with full facepiece is warranted; a type-C supplier-air respirator with full facepiece operated in pressure-demand mode is used to 100 mg/m^3.

Avoid eye contact by use of chemical safety goggles or face shield where splashing may occur. Acid-resistant protective clothing, such as rubber gloves, aprons, boots, and suits, is recommended to avoid body contact.

Eyewash fountain and safety showers with deluge type of heads should be readily available where this material is handled or stored.

Contact lenses pose a special hazard; soft lenses may absorb and all lenses concentrate irritants.

Comprehensive preplacement and annual medical examinations with emphasis on dental erosion, cardiopulmonary system, and mucous membrane irritation and cough are indicated.

SECTION 9. SPECIAL PRECAUTIONS AND COMMENTS

Sulfuric acid in carboys or drums should be stored in clean, ventilated storage areas having acid-resistant floors with good drainage. Keep out of direct sunlight, do not store above 89.6°F (32°C). Storage facilities are to be separate from organic materials, metallic powders, chromates, chlorates, nitrates, carbides, oxidizables, etc. Soda ash, sand, or lime should be kept in general storage or work areas for emergency use. Protect containers against physical damage. Glass bottles need extra protection. Sulfuric acid is highly corrosive to most metals, especially below 77% H_2SO_4. Avoid breathing mist or vapors. Avoid contact with skin or eyes. Do not ingest. Do not add water to concentrated acid. Drums may contain hydrogen gas, so open cautiously. Use nonsparking tools free of oil, dirt, and grit and vapor-proof electrical fixtures

DOT Classification: Corrosive Material. ID No.: UN1830 Label: Corrosive

Data Source(s) Code: 1-12, 19, 20, 24, 26, 31, 37-39, 42, 82. CK

Judgements as to the suitability of information herein for purchaser's purposes are necessarily purchaser's responsibility. Therefore, although reasonable care has been taken in the preparation of such information, Genium Publishing Corp. extends no warranties, makes no representations and assumes no responsibility as to the accuracy or suitability of such information for application to purchaser's intended purposes or for consequences of its use.

Approvals J. Marocco, 6/86.

Indust. Hygiene/Safety

Medical Review

Copyright © 1986 Genium Publishing Corporation.
Any commercial use or reproduction without the publisher's permission is prohibited.

Copyright © February 1, 1986

Material Safety Data Sheet

Genium Publishing Corporation
1145 Catalyn Street
Schenectady, NY 12303-1836 USA
(518) 377-8855

Revision C
Issued: October 1980
Revised: February 1986

SECTION 1. MATERIAL IDENTIFICATION

MATERIAL NAME: SULFURIC ACID, CONCENTRATED

OTHER DESIGNATIONS: Oil of Vitriol, Hydrogen Sulfate; H_2SO_4; CAS #7664-93-9

MANUFACTURER/SUPPLIER: Available from many suppliers, including:
Allied Corporation, PO Box 2064R, Morristown, NJ 07960; Telephone: 800 631-8050

HMIS
H:3
F: 0
R: 2
PPE: *
* See Sect. 8

R 1
I 3
S 4
K 0

SECTION 2. INGREDIENTS AND HAZARDS

	%	HAZARD DATA
Hydrogen Sulfate (H_2SO_4) Water	93-98 Balance*	8-hr TWA: 1 mg/m^3 Human, Mist Inhalation, TCLo: 3 mg/m^3, 24 wk. (Toxic Mouth Effects) Rat, Oral, LD_{50}: 2140 mg/kg

* Material is obtained by the reaction of SO_3 and water. Can contain low impurity levels, such as 0.02% max of iron as Fe. Properties vary with H_2SO_4 content.

Current OSHA standard and ACGIH (1985-86) TLV. NIOSH has a 10-hr TWA, 40-hr. work week, of 1 mg/m^3.

SECTION 3. PHYSICAL DATA

	93.19% H_2SO_4	98.33% H_2SO_4	100% H_2SO_4
Boiling Point, 1 atm, deg C	ca 281	ca 338	ca 330 (dc)
Specific Gravity (60/60°F)	1.8354	1.84	1.84
Volatiles, % @ 340°C	ca 100	ca 100	ca 100
Melting Point, deg C	ca -34	ca 3	10.4

Water Solubility ... Complete Miscible

Vapor Pressure, mm Hg @ 100°F ... <1 (93.19% H_2SO_4); Deg. Baume ... 66 (93.19% H_2SO_4) - Density of H_2SO_4 is often reported in degrees Baume Be). Formula is Be=145 [145/sp gr for liquids heavier than water].

Appearance and odor: Clear, colorless, hygroscopic, oily liquid with no odor. Mists greater than 1 mg/m^3 are easily recognizable. Those at 5 mg/m^3 are distinctly objectionable.

SECTION 4. FIRE AND EXPLOSION DATA

Flash Point and Method	Autoignition Temp.	Flammability Limits In Air	LOWER	UPPER
None - Nonflammable	NA	NA	NA	NA

Sulfuric acid is nonflammable; however, it is a strong oxidizing agent and may cause ignition by contact with combustible materials. Small fires may be smothered with suitable dry chemical. Cool exterior of storage tanks of H_2SO_4 with water to avoid rupture if exposed to fire. Do not add water or other liquid to the acid! The acid, especially when diluted with water, can react with metals to liberate flammable hydrogen gas.

Sulfuric acid mists and vapors from a fire area are corrosive (see sect. 5).

Fire fighters must wear self-contained breathing equipment and fully protective clothing.

SECTION 5. REACTIVITY DATA

Sulfuric acid is stable under normal conditions of use and storage. It does not undergo hazardous polymerization. It is a strong mineral acid reacting with bases and metals. The concentrated acid is also a dehydrating agent, picking up moisture readily from the air or other materials. Hydrogen gas may be generated within a H_2SO_4 container. Vent drums cautiously.

This material reacts exothermically with water. (Acid should always be added slowly to water. Water added to acid can cause boiling and uncontrolled splashing of the acid.) Sulfur oxides can result from decomposition and from oxidizing reactions of sulfuric acid.

Copyright © 1986 Genium Publishing Corporation.
Any commercial use or reproduction without the publisher's permission is prohibited.

CATALOG NO 48483 (REORDER PRODUCT BY THIS NO.)
PRODUCT NAME MTBE 2000 UG/ML, 1ML
DATA SHEET NO I484830
TERT-BUTYLMETHYLETHER

SECTION V - HEALTH HAZARD DATA

* CONTINUED *
FLUSH EYES WITH WATER FOR 15 MINUTES.
CONTACT A PHYSICIAN.

SKIN
FLUSH SKIN WITH LARGE VOLUMES OF WATER.

INHALATION
IMMEDIATELY MOVE TO FRESH AIR.
IF BREATHING STOPS, GIVE ARTIFICIAL RESPIRATION
CONTACT A PHYSICIAN

INGESTION
NEVER GIVE ANYTHING BY MOUTH TO AN UNCONSCIOUS PERSON
NEVER TRY TO MAKE AN UNCONSCIOUS PERSON VOMIT
GIVE 2 TABLESPOONS OF BAKING SODA IN A GLASS OF WATER
PRESS FINGERS TO BACK OF TONGUE TO INDUCE VOMITING.
IMMEDIATELY CONTACT A PHYSICIAN.

EFFECTS OF OVEREXPOSURE

HARMFUL IF INHALED
MAY BE FATAL IF SWALLOWED
HEADACHE
NAUSEA
GASTROINTESTINAL DISTURBANCES
BLINDNESS

SECTION VI - REACTIVITY DATA

STABILITY STABLE.

CONDITIONS TO AVOID

N/A

INCOMPATIBILITY

OXIDIZING AGENTS
CHROMIC ANHYDRIDE, LEAD PERCHLORATE, PERCHLORIC ACIDS

HAZARDOUS DECOMPOSITION PRODUCTS

N/A

HAZARDOUS POLYMERIZATION WILL NOT OCCUR.

ALL RIGHTS RESERVED TWX 510-670-3600
CUSTOMER P.O. NO. 52593

DATE 5/25/93 MATERIAL SAFETY DATA SHEET **Tert-Butylmethylether**

SECTION I -GENERAL INFORMATION

CATALOG NO 48483 (REORDER PRODUCT BY THIS NO
PRODUCT NAME MTBE 2000 UG/ML, 1ML
DATA SHEET NO I484830
TERT-BUTYLMETHYLETHER
FORMULA MIXTURE FORMULA WEIGHT
CAS NRTECS
SYNONYM ANALYTICAL STANDARD IN METHANOL
MANUFACTURER SUPELCO INC. PHONE 814-359-3441
ADDRESS SUPELCO PARK, BELLEFONTE, PA 16823-0048

SECTION II - HAZARDOUS INGREDIENTS OF MIXTURES

CHEMICAL NAME
COMMON NAME - PERCENTAGE - CAS #
(FORMULA) - PEL(UNITS) - TLV(UNITS)
LD50 VALUE - CONDITIONS

PROPANE, 2-METHOXY-2-METHYL-
METHYL-TERT-BUTYL ETHER 0.2 1634-04-4
C5H12O N/A 50 PPM
4000 MG/KG ORAL RAT SEE FOOTNOTE(6)
METHANOL
METHANOL 99.8 67-56-1
CH3OH 260 MG/M3 262 MG/M3
5628 MG/KG ORAL RAT SEE FOOTNOTE(6)

FOOTNOTES

6 SUBJECT TO THE REPORTING REQUIREMENTS OF SARA TITLE III, SECTION 313.

SECTION III - PHYSICAL DATA

BOILING POINT 65 C MM MELTING POINT -98 C
VAPOR PRESSURE 100 MM C VAPOR DENSITY 1.10 C (AIR=1,
SPECIFIC GRAVITY .790 G/ML C (WATER=1) PERCENT VOLATILE BY VOLUME 100
WATER SOLUBILITY 100 EVAPORATION RATE >1 (ETHER=1)
APPEARANCE CLEAR COLORLESS LIQUID

SECTION IV - FIRE AND EXPLOSION HAZARD DATA

FLASH POINT 50 F FLAMMABLE LIMITS LEL 6.0 UEL 36.

EXTINGUISHING MEDIA

CO2
DRY CHEMICAL
ALCOHOL FOAM.

SPECIAL FIRE FIGHTING PROCEDURES

WEAR SELF CONTAINED BREATHING APPARATUS WHEN FIGHTING A CHEMICAL FIRE.

UNUSUAL FIRE AND EXPLOSION HAZARDS

N/A

SECTION V - HEALTH HAZARD DATA

LD50 5628 MG/KG ORAL RAT TLV 262 MG/M3
PEL 260 MG/M3

EMERGENCY AND FIRST AID PROCEDURES
EYES

CATALOG NO 48483 (REORDER PRODUCT BY THIS NO.)
PRODUCT NAME MTBE 2000 UG/ML, 1ML
DATA SHEET NO I484830
TERT-BUTYLMETHYLETHER

SECTION IX - SPECIAL PRECAUTIONS

* CONTINUED *
KEEP AWAY FROM OXIDIZERS.
KEEP AWAY FROM IGNITION SOURCES.

OTHER PRECAUTIONS

AVOID EYE OR SKIN CONTACT.
AVOID BREATHING VAPORS.

WHILE THE INFORMATION AND RECOMMENDATIONS SET FORTH HEREIN ARE BELIEVED TO BE ACCURATE AS OF THE DATE HEREOF, SUPELCO, INC. MAKES NO WARRANTY WITH RESPECT THERETO AND DISCLAIMS ALL LIABILITY FROM RELIANCE THEREON.

LAST REVISED 1/17/92

CATALOG NO 48483 (REORDER PRODUCT BY THIS NO.)
PRODUCT NAME MTBE 2000 UG/ML, 1ML
DATA SHEET NO I484830
TERT-BUTYLMETHYLETHER

SECTION VI - REACTIVITY DATA

* CONTINUED *

CONDITIONS TO AVOID

N/A

SECTION VII - SPILL OR LEAK PROCEDURES

STEPS TO BE TAKEN IN CASE MATERIAL IS RELEASED OR SPILLED

TAKE UP WITH ABSORBENT MATERIAL.
VENTILATE AREA.
ELIMINATE ALL IGNITION SOURCES.

WASTE DISPOSAL METHOD

COMPLY WITH ALL APPLICABLE FEDERAL, STATE, OR LOCAL REGULATIONS

SECTION VIII - SPECIAL PROTECTION INFORMATION

RESPIRATORY PROTECTION (SPECIFIC TYPE)

WEAR FACE MASK WITH ORGANIC VAPOR CANISTER.

PROTECTIVE GLOVES

WEAR RUBBER GLOVES.

EYE PROTECTION

WEAR PROTECTIVE GLASSES.

VENTILATION

USE ONLY IN WELL VENTILATED AREA.

SPECIAL

N/A

OTHER PROTECTIVE EQUIPMENT

N/A

SECTION IX - SPECIAL PRECAUTIONS

STORAGE AND HANDLING

REFRIGERATE IN SEALED CONTAINER.

Section III - Physical/Chemical Characteristics (continued)

APPEARANCE AND ODOR
White to off-white liquid; mild odor.

Section IV - Fire And Explosion Hazard Data

Flash Point:	Limits: Lel:	Uel:
> 200 F		

EXTINGUISHING MEDIA
Based on the NFPA guide, use dry chemical, foam, carbon dioxide or other extinguishing agent suitable for Class B fires. Use water to cool containers exposed to fire. For large fires, use water spray or fog, thoroughly drenching the burning material.

SPECIAL FIREFIGHTING PROCEDURES
None listed

UNUSUAL FIRE AND EXPLOSION HAZARDS
May evolve fluorine compounds under fire conditions.

Section V - Reactivity Data

STABILITY: Unspecified

CONDITIONS TO AVOID FOR STABILITY
None listed.

INCOMPATABILITY (Materials To Avoid)'
Avoid contact with strong oxidizers (eg. chlorine, peroxides chromates, nitric acid, perchlorates, concentrated oxygen, permaganates) which can generate heat, fires, explosions, and the release of toxic fumes.

HAZARDOUS DECOMPOSITION PRODUCTS
In the event of combustion Co, Co2, fluorine compounds may be formed. Do not breathe smoke or fumes. Wear suitable protective clothing.

HAZARDOUS POLYMERIZATION: Unspecified

Section V continued on next page

Printed: 01/01/1980 08:20:05

MATERIAL SAFETY DATA SHEET

Identity (As used on label and list)	Note: Blank fields are not permitted
THREADSAFE LUBRICANT	

Section I

Manufacturer's Name	Emergency Phone #
NALCO CHEMICAL COMPANY	(708) 920-1310
Address	**Information Phone #**
ONE NALCO CENTER	(708) 305-1000
City, State, Zip Code	**Date Prepared**
NAPERVILLE, IL 60563-1198	11/28/91

Section II - Hazardous Ingredients

Ingredient	Percent	CAS Number
SILICA	5.00	7631869
Common Names and Synonyms		
PEL: 6 MG/M3 TWA	TLV: 10 MG/M3 TWA	
Other Limits Recommended:		

Section III - Physical/Chemical Characteristics

Boiling Point: NOT LISTED	Specific Gravity: 1.05 @ 75 F
Vapor Pressure: NOT LISTED	Melting Point: NOT LISTED
Vapor Density: NOT LISTED	Evaporation Rate: NOT LISTED
SOLUBILITY IN WATER Not listed.	

Section III continued on next page

Section VII - Precautions for Safe Handling and Use

STEPS TO BE TAKEN IN CASE MATERIAL IS RELEASED OR SPILLED

Call the following 24-hour telephone number (708) 920-1510. Sweep or vacuum up and reclaim into recovery or salvage drums for disposal. Wear the protective equipment specified in Personal Protection Equipment section. Notification of spills of this product is not required.

WASTE DISPOSAL METHOD

If this product becomes a waste, it does not meet the criteria of a hazardous waste as defined under the Resource Conservation and Recovery Act (RCRA) 40 CFR 261. As a non-hazardous waste, it can be disposed of in an industrial waste landfill in accordance with local, state, and federal regulations.

PRECAUTIONS TO BE TAKEN IN HANDLING AND STORING

Empty containers may contain residual product. Do not reuse container unless properly reconditioned.

OTHER PRECAUTIONS

CAUTION: May cause irritation to skin and eyes. Avoid contact with skin, eyes, and clothing. Avoid prolonged or repeated breathing of vapor. Use with adequate ventilation. Do not take internally.

NOTE TO PHYSICIAN: Based on the individual reactions of the patient, the physician's judgement should be used to control symptoms and clinical condition.

Section VIII - Control Measures

RESPIRATORY PROTECTION

Respiratory protection is not normally needed since the volatility and toxicity are low. If significant vapors are generated, wear a NIOSH approved or equivalent respirator.

For large spills, entry into large tanks, vessels, or pressure-demand, self-contained breathing apparatus is recommended.

Section VIII continued on next page

Section V - Reactivity Data (continued)

POLYMERIZING CONDITIONS TO AVOID
None listed.

Section VI - Health Hazard Data

CARCINOGENICITY	NTP?	IARC?	OSHA REGULATED?

Effects and Hazards of Overexposure (Acute and Chronic)

EFFECTS AND HAZARDS OF EYE CONTACT
May cause irritation with prolonged contact.

EFFECTS AND HAZARDS OF SKIN CONTACT
May cause irritation with prolonged contact.

EFFECTS AND HAZARDS OF INHALATION (Breathing)
None listed.

EFFECTS AND HAZARDS OF INGESTION (Swallowing)
None listed.

Emergency And First Aid Procedures

TREATMENT FOR EYE CONTACT
Immediately flush for at least 15 minutes while holding eyelids open. Cal a physician at once.

TREATMENT FOR SKIN CONTACT
Wash thoroughly withsoap abnd rinse with water. Call a physician.

TREATMENT FOR INHALATION (Breathing)
Remove to fresh air. Treat symptoms. Call a physician.

TREATMENT FOR INGESTION (Swallowing)
Do not induce vomiting. Give water. Call a physician. If unconscious, having trouble breathing or in convulsions, do not induce vomiting or give water.

Genium Publishing Corporation
1145 Catalyn Street
Schenectady, NY 12303-1836 USA
(518) 377-8854

Material Safety Data Sheets Collection:

Sheet No. 291
Titanium Tetrachloride

Issued: 4/90

Section 1. Material Identification

Titanium Tetrachloride Description: Derived by heating titanium dioxide or titanium ores and carbon to redness in a current of chlorine. Used to manufacture mordant dye, titanium pigments, and titanium salts; and as a chemical intermediate for titanium dioxide and titanium metal, an agent in smoke screens, an irridescent agent in pearl and glass manufacturing, and a polymerization catalyst.

R 1
I -
S 3
K 0

NFP

HMI
H
F
R
PPG
* Se

Other Designations: CAS No. 7550-45-0, $TiCl_4$; titanic chloride; titanium chloride.

Manufacturer: Contact your supplier or distributor. Consult the latest *Chemicalweek Buyers' Guide*[73] for a suppliers list.

Section 2. Ingredients and Occupational Exposure Limits

Titanium tetrachloride, ca 100%

OSHA PEL	ACGIH TLV, 1989-90	NIOSH REL, 1987	Toxicity Data*
None established	None established	None established	Mouse, inhalation, LC_{50}: inhalation at a 100-mg/m³ concentration over 2 hr produces no toxic effects Rat, inhalation, LC_{50}: 460 mg/m³ inhaled over 4 hr affects the lungs, thorax, and respiration (chronic pulmonary edema or congestion)

* Monitor NIOSH, *RTECS* (XR1925000), for future toxicity data.

Section 3. Physical Data

Boiling Point: 277.5°F/136.4 °C
Melting Point: -11.4 °F/-24.1 °C
Vapor Pressure: 100 mm Hg at 196°F/91 °C
Molecular Weight: 189.73 g/mol
Specific Gravity (H_2O = 1 at 39 °F/4 °C): 1.726
Water Solubility: Soluble in cold water

Appearance and Odor: A colorless to light-yellow liquid that fumes in moist air. Titanium tetrachloride has a penetrating acid odor.

Section 4. Fire and Explosion Data

Flash Point: None reported	Autoignition Temperature: None reported	LEL: None reported	UEL: None reported

Extinguishing Media: For small fires, use CO_2 or dry chemical. For large fires flood fire area with water from a distance. Do not use a solid stream of water on spilled material or inside containers.

Unusual Fire or Explosion Hazards: This material reacts strongly with water to release hydrochloric acid and heat. The acid formed by react with water attacks metals, forming flammable hydrogen gas. This acid can be neutralized with lime or soda ash.

Special Fire-fighting Procedures: Since fire may produce toxic fumes, wear a self-contained breathing apparatus (SCBA) with a full facepiec operated in the pressure-demand or positive-pressure mode. Since titanium tetrachloride is poisonous if inhaled and can severely burn unprotec eyes and skin, wear a fully encapsulating suit. Be aware of runoff from fire control methods. Do not release to sewers or waterways.

Section 5. Reactivity Data

Stability/Polymerization: Concentrated aqueous solutions of titanium tetrachloride are stable at room temperature in closed containers under normal storage and handling conditions. Since it absorbs moisture from the air and produces irritating fumes in moist air, store titanium tetrach ride in tightly closed containers. Hazardous polymerization cannot occur.

Chemical Incompatibilities: Reacts strongly with water to release hydrochloric acid and heat. The acid formed by the reaction with water att metals, forming flammable hydrogen gas.

Conditions to Avoid: Avoid contact with water.

Hazardous Products of Decomposition: Thermal oxidative decomposition of titanium tetrachloride can produce toxic fumes of Cl^-.

Copyright © 1990 Genium Publishing Corporation.

Section VIII - Control Measures (continued)

Ventilation

LOCAL EXHAUST VENTILATION
None listed.

SPECIAL VENTILATION
None listed.

MECHANICAL (General) VENTILATION
General ventilation is recommended.

OTHER VENTILATION
None listed.

PROTECTIVE GLOVES
Use impermeable gloves when attaching feeding equipment, doing maintenance, or handling produce. Examples of impermeable gloves available on the market are neoprene, nitrile, PVC, natural rubber, viton, and butyl (compatibility studies have not been performed).

EYE PROTECTION
Use chemical splash goggles when attaching feeding equipment doing maintenance or handling product. The availability of an eye wash fountain and safety shower is recommended.

OTHER PROTECTIVE EQUIPMENT
None listed.

WORK AND HYGIENIC PRACTICES
If clothing is contamninated, remove clothing and thoroughly wash the affected area. Launder contaminated clothing before reuse.

Material Safety Data Sheet

Genium Publishing Corporation
1145 Catalyn Street
Schenectady, NY 12303-1836 USA
(518) 377-8855

GENIUM PUBLISHING CORP.

No. 317
TOLUENE
(Revision D)

Issued: August 1979
Revised: April 1986

SECTION 1. MATERIAL IDENTIFICATION

MATERIAL NAME: TOLUENE

OTHER DESIGNATIONS: Methyl Benzene, Methyl Benzol, Phenylmethane, Toluol, C_7H_8, CAS #0108-88-3

MANUFACTURER/SUPPLIER: Available from many suppliers, including: Allied Corp., PO Box 2064R, Morristown, NJ 07960; Telephone: (201) 455-4400 Ashland Chemical Co., Industrial Chemicals & Solvents Div., PO Box 2219, Columbus, OH; Telephone: (614) 889-3844

HMIS
H: 2
F: 3
R: 0
PPE*
*See sect. 8

R 1
I 3
S 2
K 4

SECTION 2. INGREDIENTS AND HAZARDS

	%	HAZARD DATA
Toluene	ca 100	8-hr TLV: 100 ppm, or 375 mg/m^3* (Skin)** Man, Inhalation, TCLo: 100 ppm: Psychotropic*** Rat, Oral, LD_{50}: 5000 mg/kg Rat, Inhalation, LCLo: 4000 ppm/4 hrs. Rabbit, Skin, LD_{50}: 14 gm/kg Human, Eye: 300 ppm

* Current (1985-86) ACGIH TLV. The OSHA PEL is 200 ppm with an acceptable ceiling concentration of 300 ppm and an acceptable maximum peak of 500 ppm/10 minutes.

** Skin designation indicates that toluene can be absorbed through intact skin and contribute to overall exposure.

*** Affects the mind.

SECTION 3. PHYSICAL DATA

Boiling Point ... 231°F (111°C)
Vapor Pressure @ 20°C, mm Hg ... 22
Water Solubility @ 20°C, wt. % ... 0.05
Vapor Density (Air = 1) ... 3.14
Evaporation Rate (BuAc = 1) ... 2.24
Specific Gravity (H_2O = 1) ... 0.866
Melting Point ... -139°F (-95°C)
Percent Volatile by Volume ... ca 100
Molecular Weight ... 92.15

Appearance and odor: Clear, colorless liquid with a characteristic aromatic odor. The odor is detectable to most individuals in the range of 10 to 15 ppm. Because olfactory fatigue occurs rapidly upon exposure to toluene, odor is not a good warning property.

SECTION 4. FIRE AND EXPLOSION DATA

Flash Point and Method	Autoignition Temp.	Flammability Limits In Air	LOWER	UPPER
		% by Volume		
40°F (4°C) CC	896°F (480°C)		1.27	7.1

EXTINGUISHING MEDIA: Carbon dioxide, dry chemical, alcohol foam. Do not use a solid stream of water because the stream will scatter and spread the fire. Use water spray to cool tanks/containers that are exposed to fire and to disperse vapors.

UNUSUAL FIRE/EXPLOSION HAZARDS: This OSHA class IB flammable liquid is a dangerous fire hazard. It is a moderate fire hazard when exposed to oxidizers, heat, sparks, or open flame. Vapors are heavier than air and may travel a considerable distance to an ignition source and flash back.

SPECIAL FIRE-FIGHTING PROCEDURES: Fire fighters should wear self-contained breathing apparatus with full facepiece operated in a positive-pressure mode when fighting fires involving toluene.

SECTION 5. REACTIVITY DATA

CHEMICAL INCOMPATIBILITIES: Toluene is stable in closed containers at room temperature under normal storage and handling conditions. It does not undergo hazardous polymerization. This material is incompatible with strong oxidizing agents, dinitrogen tetraoxide, silver perchlorate, tetranitromethane, and uranium hexafluoride. Contact with these materials may cause fire or explosion. Nitric acid and toluene, especially in the presence of sulfuric acid, will produce nitrated compounds that are dangerously explosive.

CONDITIONS TO AVOID: Avoid exposure to sparks, open flame, hot surfaces, and all sources of heat and ignition. Toluene will attack some forms of plastics, rubber, and coatings. Thermal decomposition or burning produces carbon dioxide and/or carbon monoxide.

Copyright © 1986 Genium Publishing Corporation.
Any commercial use or reproduction without the publisher's permission is prohibited.

Section 6. Health Hazard Data

Carcinogenicity: Neither the NTP, IARC, nor OSHA lists titanium tetrachloride as a carcinogen.
Summary of Risks: Exposure to titanium tetrachloride during normal use can cause death or permanent injury. Because its liquid fumes upon *mixture with moisture in the ambient air and because it is extremely irritating and corrosive, this material is dangerous to handle.* It is a poison by inhalation and a corrosive irritant to the skin, eyes, and mucous membranes. The upper respiratory tract and bronchi are also susceptible to injury by inhalation. Even brief contact with the eyes may cause a suppurative conjunctivitis and keratitis followed by clouding of the cornea.
Medical Conditions Aggravated by Long-Term Exposure: None.
Target Organs: Skin, eyes, mucous membranes.
Primary Entry Routes: Inhalation, skin and eye contact.
Acute Effects: If inhaled, its vapors irritate the eyes, nose, and throat and can cause coughing, headache, eye and lung damage, dizziness, and bronchial pneumonia. After a few minutes' contact, liquid titanium tetrachloride may cause second-degree thermal and acid burns to the skin, eyes, throat, and stomach. If ingested, this material causes nausea, vomiting, cramps, diarrhea, and possible tissue ulceration.
Chronic Effects: None reported.
FIRST AID
Eyes: Flush immediately, including under the eyelids, gently but thoroughly with flooding amounts of running water for at least 15 min.
Skin: *Quickly* remove contaminated clothing. After rinsing affected skin with flooding amounts of water, wash it with soap and water.
Inhalation: Remove exposed person to fresh air and support breathing as needed.
Ingestion: Never give anything by mouth to an unconscious or convulsing person. If ingested, have a *conscious* person drink 1 to 2 glasses of water, then induce vomiting. Give milk, eggs, or olive oil and call a doctor immediately.
After first aid, get appropriate in-plant, paramedic, or community medical support.
Physician's Note: *The human intestine does not absorb titanium tetrachloride.*

Section 7. Spill, Leak, and Disposal Procedures

Spill/Leak: Notify safety personnel, evacuate all unnecessary personnel from hazard area, and provide adequate ventilation. Cleanup crews should avoid both contact with its liquid and vapor inhalation. Wear an SCBA and rubber overclothing and gloves. Use water spray to reduce vapors, but do not let water touch spilled material. Keep combustibles such as wood, paper, or oil away from the spilled material. Absorb spilled material with an inert ingredient such as sand or vermiculite and place in appropriate disposal containers. Since titanium tetrachloride is dangerous to aquatic life in high concentrations, do not release to sewers or waterways. Notify local pollution control and health agencies. Follow applicable OSHA regulations (29 CFR 1910.120).
Disposal: Contact your supplier or a licensed contractor for detailed recommendations. Follow applicable Federal, state, and local regulations.
EPA Designations
RCRA Hazardous Waste (40 CFR 261.33): Not listed
CERCLA Hazardous Substance (40 CFR 302.4): Not listed
Listed as a SARA Extremely Hazardous Substance (40 CFR 355)
Listed as SARA Toxic Chemical (40 CFR 372.65)
OSHA Designations
Air Contaminant (29 CFR 1910.1000, Subpart Z): Not listed

Section 8. Special Protection Data

Goggles: Wear protective eyeglasses or chemical safety goggles, per OSHA eye- and face-protection regulations (29 CFR 1910.133).
Respirator: Follow OSHA respirator regulations (29 CFR 1910.134) and, if necessary, wear a NIOSH-approved respirator. For emergency or nonroutine operations (cleaning spills, reactor vessels, or storage tanks), wear an SCBA.
Warning: Air-purifying respirators do *not* protect workers in oxygen-deficient atmospheres.
Other: Wear impervious gloves, boots, aprons, and gauntlets to prevent skin contact.
Ventilation: Provide general and local explosion-proof ventilation systems to maintain airborne concentrations that promote worker safety and productivity. Local exhaust ventilation is preferred since it prevents contaminant dispersion into the work area by controlling it at its source.[103]
Safety Stations: Make available in the work area emergency eyewash stations, safety/quick-drench showers, and washing facilities.
Contaminated Equipment: Never wear contact lenses in the work area: soft lenses may absorb, and all lenses concentrate, irritants. Remove this material from your shoes and equipment. Launder contaminated clothing before wearing.
Comments: Never eat, drink, or smoke in work areas. Practice good personal hygiene after using this material, especially before eating, drinking, smoking, using the toilet, or applying cosmetics.

Section 9. Special Precautions and Comments

Storage Requirements: Store in tightly closed containers in a well-ventilated, dry area. Protect against physical damage. Outside or detached storage is preferred.
Engineering Controls: Since titanium tetrachloride is poisonous and incapacitating, it requires special handling, precautions, and education. Avoid vapor inhalation and skin or eye contact. Use only with adequate ventilaton and personal protective gear. Do not let titanium tetrachloride *contact water. Practice good personal hygiene* procedures. Reports show that in $TiCl_4$ operations with an enlightened hygiene program, workers had no pulmonary difficulties.

Transportation Data (49 CFR 172.101, .102)

DOT Shipping Name: Titanium tetrachloride	**IMO Shipping Name:** Titanium tetrachloride
DOT Hazard Class: Corrosive material	**IMO Hazard Class:** 8
ID No.: UN1838	**IMO Label:** Corrosive
DOT Label: Corrosive	**IMDG Packaging Group:** II
DOT Packaging Requirements: 173.247	**ID No.:** UN1838
DOT Packaging Exceptions: 173.244	

MSDS Collection **References:** 7, 26, 73, 84, 85, 100, 103, 123, 124, 126, 127, 136
Prepared by: MJ Allison, BS; **Industrial Hygiene Review:** DJ Wilson, CIH; **Medical Review:** W Silverman, MD F3

Copyright © 1990 by Genium Publishing Corporation. Any commercial use or reproduction without the publisher's permission is prohibited. Judgments as to the suitability of information herein for the purchaser's purposes are necessarily the purchaser's responsibility. Although reasonable care has been taken in the preparation of such information, Genium Publishing Corporation extends no warranties, makes no representations, and assumes

ALL RIGHTS RESERVED
TWX 510-670-3600

CUSTOMER P.O. NO. VERBAL /JOHN

DATE 7/06/92 MATERIAL SAFETY DATA SHEET

SECTION I -GENERAL INFORMATION

CATALOG NO 40084 (REORDER PRODUCT BY THIS NO.)
PRODUCT NAME TOLUENE 5000UG/ML, 1ML
DATA SHEET NO I400840
TOLUENE
FORMULA MIXTURE FORMULA WEIGHT
CAS NRTECS
SYNONYM ANALYTICAL STANDARD IN METHANOL
MANUFACTURER SUPELCO INC. PHONE 814-359-3441
ADDRESS SUPELCO PARK, BELLEFONTE, PA 16823-0048

SECTION II - HAZARDOUS INGREDIENTS OF MIXTURES

CHEMICAL NAME
COMMON NAME - PERCENTAGE - CAS #
(FORMULA) - PEL(UNITS) - TLV(UNITS)
LD50 VALUE - CONDITIONS

METHANOL
METHANOL 99-100 67-56-
CH3OH 260 MG/M3 262 MG/M3
5628 MG/KG ORAL RAT SEE FOOTNOTE(6)
BENZENE, METHYL-
TOLUENE 0.5 108-88-
C6H5CH3 100 PPM 100 PPM
7000 MG/KG ORAL RAT SEE FOOTNOTE(6)

FOOTNOTES

6 SUBJECT TO THE REPORTING REQUIREMENTS OF SARA TITLE III, SECTION 313.

SECTION III - PHYSICAL DATA

BOILING POINT 105 C MM MELTING POINT -71 C
VAPOR PRESSURE 22 MM 68.0 C VAPOR DENSITY 3.20 C (AIR=1)
SPECIFIC GRAVITY .870 G/ML C (WATER=1) PERCENT VOLATILE BY VOLUME 1
WATER SOLUBILITY 0.05 EVAPORATION RATE 2.0 (BUTYL ACETATE=1)
APPEARANCE CLEAR COLORLESS LIQUID

SECTION IV - FIRE AND EXPLOSION HAZARD DATA

FLASH POINT 40 F FLAMMABLE LIMITS LEL 1.0 UEL 7

EXTINGUISHING MEDIA

CO2
DRY CHEMICAL
ALCOHOL FOAM.

SPECIAL FIRE FIGHTING PROCEDURES

WEAR SELF CONTAINED BREATHING APPARATUS WHEN FIGHTING A CHEMICAL FIRE.

UNUSUAL FIRE AND EXPLOSION HAZARDS

N/A

SECTION V - HEALTH HAZARD DATA

No. 317 4/86 TOLUENE

SECTION 6. HEALTH HAZARD INFORMATION | TLV

Toluene is not considered a carcinogen by the NTP, IARC, or OSHA. SUMMARY OF RISKS: Vapors of toluene may cause irritation of the eyes, nose, upper respiratory tract, and skin. Exposure to 200 ppm for 8 hours causes mild fatigue, weakness, confusion, lacrimation (tearing) and paresthesia (a sensation of prickling, tingling, or creeping on the skin that has no objective cause). Exposure to higher concentrations may cause headache, nausea, dizziness, dilated pupils, and euphoria, and, in severe cases, may cause unconsciousness and death. The liquid is irritating to the eyes and skin. Contact with the eyes may cause transient corneal damage, conjunctival irritation, and burns if not promptly removed. Repeated and/or prolonged contact with the skin may cause drying and cracking. It may be absorbed through the skin in toxic amounts. Ingestion causes irritation of the gastrointestinal tract and may cause effects resembling those from inhalation of the vapor. Chronic overexposure to toluene may cause reversible kidney and liver injury. FIRST AID: EYE CONTACT: Immediately flush eyes, including under eyelids, with running water for at least 15 minutes. Get medical attention if irritation persists.* SKIN CONTACT: Immediately flush skin (for at least 15 minutes) while removing contaminated shoes and clothing. Wash exposed area with soap and water. Get medical attention if irritation persists or if a large area has been exposed.* INHALATION: Remove victim to fresh air. Restore and/or support breathing as required. Keep victim warm and quiet. Get medical help.* INGESTION: Give victim 1 to 2 glasses of water or milk. Contact a poison control center. Do not induce vomiting unless directed to do so. Transport victim to a medical facility. Never give anything by mouth to a person who is unconscious or convulsing. * GET MEDICAL ASSISTANCE = In plant, paramedic, community. Get medical help for further treatment, observation, and support after first aid, if indicated.

SECTION 7. SPILL, LEAK, AND DISPOSAL PROCEDURES

SPILL/LEAK: Notify safety personnel of large spills or leaks. Remove all sources of heat and ignition. Provide maximum explosion-proof ventilation. Limit access to spill area to necessary personnel only. Remove leaking containers to safe place if feasible. Cleanup personnel need protection against contact with liquid and inhalation of vapor (see sect. 8). WASTE DISPOSAL: Absorb small spills with paper towel or vermiculite. Contain large spills and collect if feasible, or absorb with vermiculite or sand. Place waste solvent or absorbent into closed containers for disposal using nonsparking tools. Liquid can be flushed with water to an open holding area for handling. Do not flush to sewer, watershed, or waterway. COMMENTS: Place in suitable container for disposal by a licensed contractor or burn in an approved incinerator. Consider reclaiming by distillation. Contaminated absorbent can be buried in a sanitary landfill. Follow all Federal, state, and local regulations. TLm 96: 100-10 ppm. Toluene is designated as a hazardous waste by the EPA. The EPA (RCRA) HW No. is U220 (40 CFR 261). The reportable quantity (RQ) is 1000 lbs/454 kg (40 CFR 117).

SECTION 8. SPECIAL PROTECTION INFORMATION

Provide general and local exhaust ventilation to meet TLV requirements. Ventilation fans and other electrical service must be nonsparking and have an explosion-proof design. Exhaust hoods should have a face velocity of at least 100 lfm (linear feet per minute) and be designed to capture heavy vapor. For emergency or nonroutine exposures where the TLV may be exceeded, use an organic chemical cartridge respirator if concentration is less than 200 ppm and an approved canister gas mask or self-contained breathing apparatus with full facepiece if concentration is greater than 200 ppm.

Safety glasses or splash goggles should be worn in all work areas. Neoprene gloves, apron, face shield, boots, and other appropriate protective clothing and equipment should be available and worn as necessary to prevent skin and eye contact. Remove contaminated clothing immediately and do not wear it until it has been properly laundered.

Eyewash stations and safety showers should be readily available in use and handling areas.

Contact lenses pose a special hazard; soft lenses may absorb irritants and all lenses concentrate them.

SECTION 9. SPECIAL PRECAUTIONS AND COMMENTS

STORAGE SEGREGATION: Store in a cool, dry, well-ventilated area away from oxidizing agents, heat, sparks, or open flame. Storage areas must meet OSHA requirements for class IB flammable liquids. Use metal safety cans for handling small amounts. Protect containers from physical damage. Use only with adequate ventilation. Avoid contact with eyes, skin, or clothing. Do not inhale or ingest. Use caution when handling this compound because it can be absorbed through intact skin in toxic amounts. SPECIAL HANDLING/STORAGE: Ground and bond metal containers and equipment to prevent static sparks when making transfers. Do not smoke in use or storage areas. Use nonsparking tools. ENGINEERING CONTROLS: Preplacement and periodic medical exams emphasizing the liver, kidneys, nervous system, lungs, heart, and blood should be provided. Workers exposed to concentrations greater than the action level (50 ppm) should be examined at least once a year. Use of alcohol can aggravate the toxic effects of toluene.

COMMENTS: Emptied containers contain product residues. Handle accordingly!

Toluene is designated as a hazardous substance by the EPA (40 CFR 116). DOT Classification: Flammable liquid. UN1294.

Data Source(s) Code: 1-9, 12, 16, 20, 21, 24, 26, 34, 81, 82. CR

Judgements as to the suitability of information herein for purchaser's purposes are necessarily purchaser's responsibility. Therefore, although reasonable care has been taken in the preparation of such information, Gemtum Publishing Corp. extends no warranties, makes no representations and assumes no responsibility as to the accuracy or suitability of such information for application to purchaser's intended purposes or for consequences of its use.

Approvals J.O. Accacco, 11/86.

Indust. Hygiene/Safety 10-86

Medical Review Oct 86

Copyright © 1986 Gemtum Publishing Corporation.
Any commercial use or reproduction without the publisher's permission is prohibited.

Copyright © April 1, 1986

CATALOG NO 40084 (REORDER PRODUCT BY THIS NO.)
PRODUCT NAME TOLUENE 5000UG/ML, 1ML
DATA SHEET NO I400840
TOLUENE

SECTION VI - REACTIVITY DATA

* CONTINUED *

HAZARDOUS DECOMPOSITION PRODUCTS

N/A

HAZARDOUS POLYMERIZATION WILL NOT OCCUR.

CONDITIONS TO AVOID

N/A

SECTION VII - SPILL OR LEAK PROCEDURES

STEPS TO BE TAKEN IN CASE MATERIAL IS RELEASED OR SPILLED

TAKE UP WITH ABSORBENT MATERIAL.
VENTILATE AREA.
ELIMINATE ALL IGNITION SOURCES.

STE DISPOSAL METHOD

COMPLY WITH ALL APPLICABLE FEDERAL, STATE, OR LOCAL REGULATIONS

SECTION VIII - SPECIAL PROTECTION INFORMATION

RESPIRATORY PROTECTION (SPECIFIC TYPE)

WEAR FACE MASK WITH ORGANIC VAPOR CANISTER.

PROTECTIVE GLOVES

WEAR RUBBER GLOVES.

EYE PROTECTION

WEAR PROTECTIVE GLASSES.

VENTILATION

USE ONLY IN WELL VENTILATED AREA.

SPECIAL

N/A

CATALOG NO 40084 (REORDER PRODUCT BY THIS NO.)
PRODUCT NAME TOLUENE 5000UG/ML, 1ML
DATA SHEET NO I400840
TOLUENE

SECTION V - HEALTH HAZARD DATA

* CONTINUED *

LD50	7000	MG/KG	ORAL RAT	TLV	100	PPM
PEL	100	PPM				

EMERGENCY AND FIRST AID PROCEDURES

EYES
FLUSH EYES WITH WATER FOR 15 MINUTES.
CONTACT A PHYSICIAN.

SKIN
FLUSH SKIN WITH LARGE VOLUMES OF WATER.

INHALATION
IMMEDIATELY MOVE TO FRESH AIR.
IF BREATHING STOPS, GIVE ARTIFICIAL RESPIRATION
CONTACT A PHYSICIAN

INGESTION
NEVER GIVE ANYTHING BY MOUTH TO AN UNCONSCIOUS PERSON
NEVER TRY TO MAKE AN UNCONSCIOUS PERSON VOMIT
GIVE 2 TABLESPOONS OF BAKING SODA IN A GLASS OF WATER
PRESS FINGERS TO BACK OF TONGUE TO INDUCE VOMITING.
IMMEDIATELY CONTACT A PHYSICIAN.

EFFECTS OF OVEREXPOSURE

HARMFUL IF INHALED
MAY BE FATAL IF SWALLOWED
HEADACHE
NAUSEA
GASTROINTESTINAL DISTURBANCES
BLINDNESS

SECTION VI - REACTIVITY DATA

STABILITY STABLE.

CONDITIONS TO AVOID

N/A

INCOMPATIBILITY

OXIDIZING AGENTS
CHROMIC ANHYDRIDE, LEAD PERCHLORATE, PERCHLORIC ACIDS

AMERICAN COLLOID COMPANY

One North Arlington • 1500 West Shure Drive
Arlington Heights, Illinois 60004-1434 • USA
(708) 392-4600 • Telex ITT 4330321
Fax (708) 506-6199

1401
101

MATERIAL SAFETY DATA SHEET - May be used to comply with OSHA's Hazard Communication Standard, 29 CFR 1910.1200. Standard must be consulted for specific requirements.

PRODUCT NAME: VOLCLAY SUPER GEL-X

Section I MANUFACTURER'S INFORMATION

Manufacturer's Name & Address:

American Colloid Company
1500 West Shure Drive
One North Arlington
Arlington Heights, Illinois 60004

Emergency Telephone Number: 708-392-4600
Telephone Number for Information: 708-392-4600
Date Prepared: June 30, 1992

Section II HAZARDOUS INGREDIENTS/IDENTITY INFORMATION

Hazardous Components (Specific Chemical Identity: Common Name(s))	OSHA PEL	ACGIH TLV	Other Limits Recommended	% (optional)
Crystalline Quartz CAS# 14808-60-7	-	-	*	2-6%
Respirable Crystalline Quartz			NIOSH	
present (TWA)	0.1mg/m^3	0.1mg/m^3 TWA	50ug/m^3 TWA	<2%
proposed (TWA)		50ug/m^3 TWA	-	-
Nuisance Dust				
- Respirable	5mg/m^3	5mg/m^3	-	-
- Total Dust	15mg/m^3	10mg/m^3	-	-

* **WARNING:**
This clay product contains a small amount of crystalline silica which may cause delayed respiratory disease if inhaled over a prolonged period of time. Avoid breathing dust. Use NIOSH/MSHA approved respirator where TLV for crystalline silica may be exceeded. IARC Monographs on the evaluation of the Carcinogenic Risk of Chemicals to Humans (volume 42, 1987) concludes that there is "limited evidence" of the carcinogenicity of crystalline silica to humans. IARC classification 2A.

PRODUCT IDENTIFICATION

Chemical Name: Bentonite Clay
Chemical Family: Natural Mineral, Montmorillonite
CAS No.: 1302-78-9 Bentonite is on the TSCA inventory.
FORMULA: Naturally occurring hydrated aluminosilicate of sodium, calcium, magnesium, and iron
NFPA/HMIS: Health - 1, Fire - 0, Reactivity - 0, Specific Hazard - See Section VI
Dot Class: Not Regulated

TALOG NO 40084 (REORDER PRODUCT BY THIS NO.)
ODUCT NAME TOLUENE 5000UG/ML, 1ML
DATA SHEET NO I400840
TOLUENE

SECTION VIII - SPECIAL PROTECTION INFORMATION

* CONTINUED *

OTHER PROTECTIVE EQUIPMENT

N/A

SECTION IX - SPECIAL PRECAUTIONS

STORAGE AND HANDLING

REFRIGERATE IN SEALED CONTAINER.
KEEP AWAY FROM OXIDIZERS.
KEEP AWAY FROM IGNITION SOURCES.

OTHER PRECAUTIONS

AVOID EYE OR SKIN CONTACT.
AVOID BREATHING VAPORS.

WHILE THE INFORMATION AND RECOMMENDATIONS SET FORTH HEREIN ARE BELIEVED TO BE A[ ]RATE AS OF THE DATE HEREOF, SUPELCO, INC. MAKES NO WARRANTY WITH RESPECT THERETO AND DISCLAIMS ALL LIABILITY FROM RELIANCE THEREON.

LAST REVISED 6/13/90

AMERICAN COLLOID COMPAN

One North Arlington • 1500 West Shure Drive
Arlington Heights, Illinois 60004-1434 • USA
(708) 392-4600 • Telex ITT 4330321
Fax (708) 506-6199

1401
101

PRODUCT NAME: VOLCLAY SUPER GEL-X

Section VII PRECAUTIONS FOR SAFE HANDLING AND USE

Steps to be Taken in Case Material is Released or Spilled - Vacuum if possible to avoid generating airborne dust. Avoid breathing dust. Wear an approved respirator. Avoid adding water, the product will become slippery when wet.

Waste Disposal Method - Follow federal, state and local regulations for solid waste.

Precautions to Be Taken in Handling and Storing - Avoid breathing dust, use NIOSH/MSHA approved respirator where TLV limits for Crystalline Silica may be exceeded.

Other Precautions - Slippery when wet.

Section VIII CONTROL MEASURES

Respiratory Protection (Specify Type) - OSHA standard 1910.134 or ANSI Z88.2-1980 specification.

Ventilation	- Local Exhaust	- As appropriate	Special	- None
	- Mechanical (General)	- As appropriate	Other	- None
Protective Gloves	- Not Required		Eye Protection	- Recommended

Other Protective Clothing or Equipment - None
Work/Hygienic Practices - Use good housekeeping practices.

The information herein has been compiled from sources believed to be reliable and is accurate to the best of our knowledge. However, American Colloid Company cannot give any guarantees regarding information from other sources, and expressly does not make any warranties, nor assumes any liability, for its use.

AMERICAN COLLOID COMPAN

One North Arlington • 1500 West Shure Drive
Arlington Heights, Illinois 60004-1434 • USA
(708) 392-4600 • Telex ITT 4330321
Fax (708) 506-6199

PRODUCT NAME: VOLCLAY SUPER GEL-X

Section III PHYSICAL/CHEMICAL CHARACTERISTICS

Boiling Point	- Not Applicable	Specific Gravity (H_2O = 1)	- 2.5
Vapor Pressure (mm Hg.)	- Not Applicable	Melting Point	- Not Applicable
Vapor Density (AIR = 1)	- Not Applicable	Evaporation Rate (Butyl Acetate = 1)	- Not Applicable
Solubility in Water	- Negligible		
Appearance and Odor	- Pale grey to buff powder or granules, odorless		

Section IV FIRE AND EXPLOSION HAZARD DATA

Flash Point (Method Used) - Not Applicable
Flammable Limits - Not Applicable LEL- - UEL- -
Extinguishing Media - Not Applicable
Special Fire Fighting Procedures - Inorganic Mineral/Non-Flammable
Unusual Fire and Explosion Hazards - Not Applicable

Section V REACTIVITY DATA

Stability Unstable -
Stable - X
Conditions to Avoid - None Known

Incompatibility (Materials to Avoid) - None Known
Hazardous Decomposition or By-products - None Known

Hazardous Polymerization May Occur -
Will Not Occur - X
Conditions to Avoid - None Known

Section VI HEALTH HAZARD DATA

Route(s) of Entry: Inhalation? Yes Skin? No Ingestion? No

Health Hazards (Acute and Chronic) - May cause delayed respiratory disease if dust inhaled over a prolonged period of time.

Carcinogenicity: NTP? No IARC Monographs? Yes OSHA Regulated? No

IARC Monographs on the evaluation of the Carcinogenic Risk of Chemicals to Humans (volume 42, 1987) concludes that there is "limited evidence" of the carcinogenicity of crystalline silica to humans. IARC classification 2A.

Signs and Symptoms of Exposure - Excessive inhalation of dust may result in shortness of breath and reduced pulmonary function.

Medical Conditions Generally Aggravated by Exposure - Individuals with pulmonary and/or respiratory disease including but not limited to asthma and bronchitis should be precluded from exposure to dust.

Emergency and First Aid Procedures - Eyes - Flush with water.
- Gross inhalation of dust - Remove to fresh air; give oxygen or artificial respiration if necessary; get medical attention.

AMERICAN COLLOID COMPANY

One North Arlington • 1500 West Shure Drive
Arlington Heights, Illinois 60004-1434 • USA
(312) 392-4600 • Telex ITT 4330321
Fax (312) 506-6199

51601
5161

PRODUCT NAME: 1/4" VOLCLAY TABLETS

Section III PHYSICAL/CHEMICAL CHARACTERISTICS

Boiling Point	• Not Applicable	Specific Gravity (H_2O = 1)	• 2.5
Vapor Pressure (mm Hg.)	• Not Applicable	Melting Point	• Not Applicable
Vapor Density (AIR = 1)	• Not Applicable	Evaporation Rate (Butyl Acetate = 1)	• Not Applicable
Solubility in Water	• Negligible		
Appearance and Odor	• Pale grey to buff tablets, odorless		

Section IV FIRE AND EXPLOSION HAZARD DATA

Flash Point (Method Used) • Not Applicable
Flammable Limits • Not Applicable LEL- • UEL- •
Extinguishing Media • Not Applicable
Special Fire Fighting Procedures • Inorganic Mineral/Non-Flammable
Unusual Fire and Explosion Hazards • Not Applicable

Section V REACTIVITY DATA

Stability Unstable •
Stable - X
Conditions to Avoid - None Known

Incompatibility (Materials to Avoid) - None Known
Hazardous Decomposition or By-products • None Known

Hazardous Polymerization May Occur •
Will Not Occur - X
Conditions to Avoid • None Known

Section VI HEALTH HAZARD DATA

Route(s) of Entry: Inhalation? Yes Skin? No Ingestion? No

Health Hazards (Acute and Chronic) • May cause delayed respiratory disease if dust inhaled over a prolonged period of time.

Carcinogenicity: NTP? No IARC Monographs? Yes OSHA Regulated? No

IARC Monographs on the evaluation of the Carcinogenic Risk of Chemicals to Humans (volume 42, 1987) concludes that there is "limited evidence" of the carcinogenicity of crystalline silica to humans. IARC classification 2A.

Signs and Symptoms of Exposure - Excessive inhalation of dust may result in shortness of breath and reduced pulmonary function.

Medical Conditions Generally Aggravated by Exposure - Individuals with pulmonary and/or respiratory disease including but not limited to asthma and bronchitis should be precluded from exposure to dust.

Emergency and First Aid Procedures • Eyes • Flush with water.
• Gross inhalation of dust - Remove to fresh air; give oxygen or artificial respiration if necessary; get medical attention.

AMERICAN COLLOID COMPANY

One North Arlington • 1500 West Shure Drive
Arlington Heights, Illinois 60004-1434 • USA
(312) 392-4600 • Telex ITT 4330321
Fax (312) 506-6199

51601
5141

MATERIAL SAFETY DATA SHEET - May be used to comply with OSHA's Hazard Communication Standard, 29 CFR 1910.1200. Standard must be consulted for specific requirements.

PRODUCT NAME: 1/4" VOLCLAY TABLETS

Section I MANUFACTURER'S INFORMATION

Manufacturer's Name & Address:

American Colloid Company
1500 West Shure Drive
One North Arlington
Arlington Heights, Illinois 60004

Emergency Telephone Number: 312-392-4600
Telephone Number for Information: 312-392-4600
Date Prepared: August 31, 1988

Section II HAZARDOUS INGREDIENTS/IDENTITY INFORMATION

Hazardous Components (Specific Chemical Identity: Common Name(s))		OSHA PEL	ACGIH TLV	Other Limits Recommended	% (optional)
Crystalline Quartz CAS# 14808-60-7		*	*	*	2-6%
Total Dust (Quartz)	$\frac{30mg/m^3}{\%SiO_2+2}$ =	$3mg/m^3$	*	*	*
Respirable Crystalline Quartz					
present (TWA)	$\frac{10mg/m^3}{\%SiO_2+2}$ =	$1mg/m^3$	$0.1mg/m^3$ TWA	NIOSH $50ug/m^3$ TWA	<2%
proposed (TWA)		$0.1mg/m^3$	$50ug/m^3$ TWA	*	*
Total Nuisance Dust		$15mg/m^3$	$10mg/m^3$	*	*
Respirable Nuisance Dust		$5mg/m^3$	$5mg/m^3$	*	*

* WARNING:
This clay product contains a small amount of crystalline silica which may cause delayed respiratory disease if inhaled over a prolonged period of time. Avoid breathing dust. Use NIOSH/MSHA approved respirator where TLV for crystalline silica may be exceeded. IARC Monographs on the evaluation of the Carcinogenic Risk of Chemicals to Humans (volume 42, 1987) concludes that there is "limited evidence" of the carcinogenicity of crystalline silica to humans. IARC classification 2A.

PRODUCT IDENTIFICATION

Chemical Name: Bentonite Clay
Chemical Family: Natural Mineral, Montmorillonite
CAS No.: 1302-78-9
FORMULA: Naturally occurring hydrated aluminosilicate of sodium, calcium, magnesium, and iron
NFPA/HMIS: Health - 0, Fire - 0, Reactivity - 0, Specific Hazard - See Section VI
Dot Class: Not Regulated

AMERICAN COLLOID COMPANY

One North Arlington • 1500 West Shure Drive
Arlington Heights, Illinois 60004-1434 • USA
(312) 392-4600 • Telex ITT 4330321
Fax (312) 506-6199

51601
5141

PRODUCT NAME: 1/4" VOLCLAY TABLETS

Section VII PRECAUTIONS FOR SAFE HANDLING AND USE

Steps to be Taken in Case Material is Released or Spilled • Vacuum if possible to avoid generating airborne dust. Avoid breathing dust. Wear an approved respirator. Avoid adding water, the product will become slippery when wet.

Waste Disposal Method • Follow federal, state and local regulations for solid waste.

Precautions to Be Taken in Handling and Storing • Avoid breathing dust, use NIOSH/MSHA approved respirator where TLV limits for Crystalline Silica may be exceeded.

Other Precautions - Slippery when wet.

Section VIII CONTROL MEASURES

Respiratory Protection (Specify Type) • OSHA standard 1910.134 or ANSI Z88.2-1980 specification.

Ventilation • Local Exhaust • As appropriate
• Mechanical (General) • As appropriate
Protective Gloves • Not Required
Other Protective Clothing or Equipment • None Required
Work/Hygienic Practices • Use good housekeeping practices.
Special • None Required
Other • None Required
Eye Protection • Recommended

The information herein has been compiled from sources believed to be reliable and is accurate to the best of our knowledge. However, American Colloid Company cannot give any guarantees regarding information from other sources, and expressly does not make any warranties, nor assumes any liability, for its use.

Material Safety Data Sheet

From Genium's Reference Collection
Genium Publishing Corporation
1145 Catalyn Street
Schenectady, NY 12303-1836 USA
(518) 377-8855

GENIUM PUBLISHING CORP.

No. 318

XYLENE (Mixed Isomers)
(Revision D)
Issued: November 1980
Revised: August 1988

SECTION 1. MATERIAL IDENTIFICATION

Material Name: XYLENE (Mixed Isomers)

Description (Origin/Uses): Used as a raw material for the production of benzoic acid, phthalic anhydride, isophthalic and terephthalic acids and their dimethyl esters in the manufacture of polyester fibers; in sterilizing catgut; with Canadian balsam as oil-immersion in microscopy; and as a cleaning agent in microscopic techniques.

Other Designations: Dimethylbenzene; Xylol; C_8H_{10}; CAS No. 1330-20-7

Manufacturer: Contact your supplier or distributor. Consult the latest edition of the *Chemicalweek Buyers' Guide* (Genium ref. 73) for a list of suppliers.

Comments: Although there are three different isomers of xylene (*ortho*, *meta*, and *para*), the health and physical hazards of all three isomers are very similar. This MSDS is written for a xylene mixture of all three isomers, which is usually commercial xylene.

NFPA

HMIS	
H	2
F	3
R	0
PPG*	
*See sect. 8	

R	1
I	3
S	2
K	3

SECTION 2. INGREDIENTS AND HAZARDS

Xylene (Mixed Isomers), CAS No. 1330-20-7*

*o-Xylene, CAS No. 0095-47-6
m-Xylene, CAS No. 0108-38-3
p-Xylene, CAS No. 0106-42-3

**Check with your supplier to determine if there are additions, contaminants, or impurities (such as benzene) that are present in reportable quantities per 29 CFR 1910.

***Immediately dangerous to life and health.

**** See NIOSH, *RTECS* (No. ZE2100000), for additional data with references to reproductive, irritative, and mutagenic effects.

%

**

EXPOSURE LIMITS

IDLH*** Level: 1000 ppm

OSHA PEL
8-Hr TWA: 100 ppm, 435 mg/m³

ACGIH TLVs, 1987-88
TLV-TWA: 100 ppm, 435 mg/m³
TLV-STEL: 150 ppm, 655 mg/m³

Toxicity Data**
Human, Inhalation, TC_{Lo}: 200 ppm
Man, Inhalation, LC_{Lo}: 10000 ppm/6 Hrs
Rat, Oral, LD_{50}: 4300 mg/kg

SECTION 3. PHYSICAL DATA

Boiling Point: 275°F to 293°F (135°C to 145°C)*
Melting Point: -13°F (-25°C)
Evaporation Rate: 0.6 Relative to BuAc = 1
Specific Gravity (H_2O = 1): 0.86

Water Solubility (%): Insoluble
Molecular Weight: 106 Grams/Mole
% Volatile by Volume: Ca 100
Vapor Pressure: 7 to 9 Torrs at 68°F (20°C)
Vapor Density (Air = 1): 3.7

Appearance and Odor: A clear liquid; aromatic hydrocarbon odor.

*Materials with wider and narrower boiling ranges are commercially available.

SECTION 4. FIRE AND EXPLOSION DATA

Flash Point and Method	Autoignition Temperature	Flammability Limits in Air	LOWER	UPPER
81°F to 90°F (27°C to 32°C)	867°F (464°C)	% by Volume	1%	7%

Extinguishing Media: Use foam, dry chemical, or carbon dioxide. Use water sprays to reduce the rate of burning and to cool containers.

Unusual Fire or Explosion Hazards: Xylene vapor is heavier than air and may travel a considerable distance to a low-lying source of ignition and flash back.

Special Fire-fighting Procedures: Wear a self-contained breathing apparatus (SCBA) with a full facepiece operated in the pressure-demand or positive-pressure mode.

SECTION 5. REACTIVITY DATA

Xylene is stable in closed containers during routine operations. It does not undergo hazardous polymerization.

Chemical Incompatibilities: This material may react dangerously with strong oxidizers.

Conditions to Avoid: Avoid any exposure to sources of ignition and to strong oxidizers.

Hazardous Products of Decomposition: Carbon monoxide (CO) may be evolved during xylene fires.

Copyright © 1988 Genium Publishing Corporation.
Any commercial use or reproduction without the publisher's permission is prohibited.

SECTION 6. HEALTH HAZARD INFORMATION

Xylene is not listed as a carcinogen by the IARC, NTP, or OSHA.

Summary of Risks: Liquid xylene is a skin irritant and causes erythema, dryness, and defatting; prolonged contact may cause blistering. Inhaling xylene can depress the central nervous system (CNS), and ingesting it can result in gastrointestinal disturbance; and possibly hematemesis (vomiting blood). Effects on the eyes, kidneys, liver, lungs, and the CNS are also reported. **Medical Conditions Aggravated by Long-Term Exposure:** Problems with eyes, skin, central nervous system, kidneys, and liver may be worsened by exposure to xylene. **Target Organs:** CNS, eyes, gastrointestinal tract, blood, liver, kidneys, skin. **Primary Entry:** Inhalation, skin contact/absorption. **Acute Effects:** Dizziness; excitement; drowsiness; incoordination; staggering gait; irritation of eyes, nose, and throat; corneal vacuolization; anorexia; nausea; vomiting; abdominal pain; and dermatitis. **Chronic Effects:** Reversible eye damage, headache, loss of appetite, nervousness, pale skin, and skin rash.

FIRST AID: Eyes. Immediately flush eyes, including under the eyelids, gently but thoroughly with plenty of running water for at least 15 minutes. **Skin.** Immediately wash the affected area with soap and water. **Inhalation.** Remove the exposed person to fresh air; restore and/or support his or her breathing as needed. Have a trained person administer oxygen. **Ingestion.** Never give anything by mouth to someone who is unconscious or convulsing. Vomiting may occur spontaneously, but do not induce it. If vomiting should occur, keep exposed person's head below his or her hips to prevent aspiration (breathing the liquid xylene into the lungs). Severe hemorrhagic pneumonitis with grave, possibly fatal, pulmonary injury can occur from aspiring very small quantities of xylene.

GET MEDICAL HELP (IN PLANT, PARAMEDIC, COMMUNITY) FOR ALL EXPOSURES. Seek prompt medical assistance for further treatment, observation, and support after first aid. If exposure is severe, hospitilization for at least 72 hours with careful monitoring for delayed onset of pulmonary edema is recommended.

SECTION 7. SPILL, LEAK, AND DISPOSAL PROCEDURES

Spill/Leak: Notify safety personnel, provide ventilation, and eliminate all sources of ignition immediately. Cleanup personnel need protection against contact with and inhalation of xylene vapor (see sect. 8). Contain large spills and collect waste or absorb it with an inert material such as sand, earth, or vermiculite. Use nonsparking tools to place waste liquid or absorbent into closable containers for disposal. Keep waste out of sewers, watersheds, and waterways.

Waste Disposal: Contact your supplier or a licensed contractor for detailed recommendations. Follow Federal, state, and local regulations.

OSHA Designations

Air Contaminant (29 CFR 1910.1000 Subpart Z)

EPA Designations (40 CFR 302.4)

RCRA Hazardous Waste, No. U239

CERCLA Hazardous Substance, Reportable Quantity: 1000 lbs (454 kg), per the Clean Water Act (CWA), section 311 (b) (9)

SECTION 8. SPECIAL PROTECTION INFORMATION

Goggles: Always wear protective eyeglasses or chemical safety goggles. Where splashing is possible, wear a full face shield as a supplementary protective measure. Follow OSHA eye- and face-protection regulations (29 CFR 1910.133). **Respirator:** Use a NIOSH-approved respirator per the *NIOSH Pocket Guide to Chemical Hazards* for the maximum-use concentrations and/or the exposure limits cited in section 2. Follow OSHA respirator regulations (29 CFR 1910.134). For emergency or nonroutine use (leaks or cleaning reactor vessels and storage tanks), wear an SCBA with a full facepiece operated in the pressure-demand or positive-pressure mode. **Warning:** Air-purifying respirators will *not* protect workers in oxygen-deficient atmospheres. **Other:** Wear impervious gloves, boots, aprons, gauntlets, etc., as required by the specifics of the work operation to prevent prolonged or repeated skin contact with xylene. **Ventilation:** Install and operate general and local maximum, explosion-proof ventilation systems powerful enough to maintain airborne levels of xylene below the OSHA PEL standard cited in section 2. Local exhaust ventilation is preferred because it prevents dispersion of xylene into general work areas by eliminating it at its source. Consult the latest edition of Genium reference 103 for detailed recommendations. **Safety Stations:** Make eyewash stations, safety/quick-drench showers, and washing facilities available in areas of use and handling. **Contaminated Equipment:** Contact lenses pose a special hazard; soft lenses may absorb irritants and all lenses concentrate them. Do *not* wear contact lenses in any work area. Remove contaminated clothing and launder it before wearing it again; clean xylene from shoes and equipment. **Comments:** Practice good personal hygiene; always wash thoroughly after using this material. Keep it off of your clothing and equipment. Avoid transferring it from your hands to your mouth while eating, drinking, or smoking. Do *not* eat, drink, or smoke in any work area. Do not inhale xylene vapor.

SECTION 9. SPECIAL PRECAUTIONS AND COMMENTS

Storage/Segregation: Store xylene in a cool, dry, well-ventilated area away from sources of ignition and strong oxidizers. Protect containers from physical damage.

Special Handling/Storage: Make sure all engineering systems (production, transportation) are of maximum explosion-proof design. Ground and bond all containers, pipelines, etc., used in shipping, transferring, reacting, producing, and sampling operations.

Transportation Data (49 CFR 172.101-2)

DOT Shipping Name: Xylene
DOT ID No. UN1307
DOT Label: Flammable Liquid
DOT Hazard Class: Flammable Liquid
IMO Label: Flammable Liquid
IMO Class: 3.2 or 3.3

References: 1, 2, 12, 73, 84-94, 100, 103.

Judgments as to the suitability of information herein for purchaser's purposes are necessarily purchaser's responsibility. Therefore, although reasonable care has been taken in the preparation of such information, Genium Publishing Corp. extends no warranties, makes no representations and assumes no responsibility as to the accuracy or suitability of such information for application to purchaser's intended purposes or for consequences of its use.

Prepared by PJ Igoe, BS
Industrial Hygiene Review: DJ Wilson, CIH
Medical Review: MJ Hardies, MD

Copyright © 1988 Genium Publishing Corporation.
Any commercial use or reproduction without the publisher's permission is prohibited.

COPYRIGHT 1985 SUPELCO, INC. SUPELCO PARK BELLEFONTE, PA 16823-0048 1165
ALL RIGHTS RESERVED TWX 510-670-3600
CUSTOMER P.O. NO. 040193

TE 4/01/93 MATERIAL SAFETY DATA SHEET

SECTION I -GENERAL INFORMATION

CATALOG NO 40202 (REORDER PRODUCT BY THIS NO.)
PRODUCT NAME M-XYLENE 5000UG/ML, 1ML
DATA SHEET NO I402020
M-XYLENE
FORMULA MIXTURE FORMULA WEIGHT
CAS NRTECS
SYNONYM ANALYTICAL STANDARD IN METHANOL
MANUFACTURER SUPELCO INC. PHONE 814-359-3441
ADDRESS SUPELCO PARK, BELLEFONTE, PA 16823-0048

SECTION II - HAZARDOUS INGREDIENTS OF MIXTURES

CHEMICAL NAME
COMMON NAME - PERCENTAGE - CAS #
(FORMULA) - PEL(UNITS) - TLV(UNITS)
LD50 VALUE - CONDITIONS

BENZENE, 1,3-DIMETHYL-
M-XYLENE 0.5 108-38-
CH3C6H4CH3 100 PPM 100 PPM
5000 MG/KG ORAL RAT SEE FOOTNOTE(6)

METHANOL
METHANOL 99-100 67-56-
CH3OH 260 MG/M3 262 MG/M3
5628 MG/KG ORAL RAT SEE FOOTNOTE(6)

FOOTNOTES

(6) SUBJECT TO THE REPORTING REQUIREMENTS OF SARA TITLE III, SECTION 313.

SECTION III - PHYSICAL DATA

BOILING POINT 65 C MM MELTING POINT -98 C
VAPOR PRESSURE 100 MM C VAPOR DENSITY 1.10 C (AIR=1)
SPECIFIC GRAVITY .790 G/ML C (WATER=1) PERCENT VOLATILE BY VOLUME 1
WATER SOLUBILITY 100 EVAPORATION RATE >1 (ETHER=1)
APPEARANCE CLEAR COLORLESS LIQUID

SECTION IV - FIRE AND EXPLOSION HAZARD DATA

FLASH POINT 50 F FLAMMABLE LIMITS LEL 6.0 UEL 36.

EXTINGUISHING MEDIA

CO2
DRY CHEMICAL
ALCOHOL FOAM.

SPECIAL FIRE FIGHTING PROCEDURES

WEAR SELF CONTAINED BREATHING APPARATUS WHEN FIGHTING A CHEMICAL FIRE.

UNUSUAL FIRE AND EXPLOSION HAZARDS

N/A

SECTION V - HEALTH HAZARD DATA

LD50 5628 MG/KG ORAL RAT TLV 262 MG/M3
PEL 260 MG/M3

EMERGENCY AND FIRST AID PROCEDURES
EYES

CATALOG NO 40202 (REORDER PRODUCT BY THIS NO.)
PRODUCT NAME M-XYLENE 5000UG/ML, 1ML
DATA SHEET NO I402020
M-XYLENE

SECTION V - HEALTH HAZARD DATA

* CONTINUED *

FLUSH EYES WITH WATER FOR 15 MINUTES.
CONTACT A PHYSICIAN.

SKIN
FLUSH SKIN WITH LARGE VOLUMES OF WATER.

INHALATION
IMMEDIATELY MOVE TO FRESH AIR.
IF BREATHING STOPS, GIVE ARTIFICIAL RESPIRATION
CONTACT A PHYSICIAN

INGESTION
NEVER GIVE ANYTHING BY MOUTH TO AN UNCONSCIOUS PERSON
NEVER TRY TO MAKE AN UNCONSCIOUS PERSON VOMIT
GIVE 2 TABLESPOONS OF BAKING SODA IN A GLASS OF WATER
PRESS FINGERS TO BACK OF TONGUE TO INDUCE VOMITING.
IMMEDIATELY CONTACT A PHYSICIAN.

EFFECTS OF OVEREXPOSURE

HARMFUL IF INHALED
MAY BE FATAL IF SWALLOWED
HEADACHE
NAUSEA
GASTROINTESTINAL DISTURBANCES
BLINDNESS

SECTION VI - REACTIVITY DATA

STABILITY STABLE.

CONDITIONS TO AVOID

N/A

INCOMPATIBILITY

OXIDIZING AGENTS
CHROMIC ANHYDRIDE, LEAD PERCHLORATE, PERCHLORIC ACIDS

HAZARDOUS DECOMPOSITION PRODUCTS

N/A

HAZARDOUS POLYMERIZATION WILL NOT OCCUR.

CATALOG NO 40202 (REORDER PRODUCT BY THIS NO.)
PRODUCT NAME M-XYLENE 5000UG/ML, 1ML
DATA SHEET NO I402020
M-XYLENE

SECTION VI - REACTIVITY DATA

* CONTINUED *

CONDITIONS TO AVOID

N/A

SECTION VII - SPILL OR LEAK PROCEDURES

STEPS TO BE TAKEN IN CASE MATERIAL IS RELEASED OR SPILLED

TAKE UP WITH ABSORBENT MATERIAL.
VENTILATE AREA.
ELIMINATE ALL IGNITION SOURCES.

WASTE DISPOSAL METHOD

COMPLY WITH ALL APPLICABLE FEDERAL, STATE, OR LOCAL REGULATIONS

SECTION VIII - SPECIAL PROTECTION INFORMATION

RESPIRATORY PROTECTION (SPECIFIC TYPE)

WEAR FACE MASK WITH ORGANIC VAPOR CANISTER.

PROTECTIVE GLOVES

WEAR RUBBER GLOVES.

EYE PROTECTION

WEAR PROTECTIVE GLASSES.

VENTILATION

USE ONLY IN WELL VENTILATED AREA.

SPECIAL

N/A

OTHER PROTECTIVE EQUIPMENT

N/A

SECTION IX - SPECIAL PRECAUTIONS

STORAGE AND HANDLING

REFRIGERATE IN SEALED CONTAINER.

CATALOG NO 40202 (REORDER PRODUCT BY THIS NO.)
PRODUCT NAME M-XYLENE 5000UG/ML, 1ML
DATA SHEET NO I402020
M-XYLENE

SECTION IX - SPECIAL PRECAUTIONS

* CONTINUED *
KEEP AWAY FROM OXIDIZERS.
KEEP AWAY FROM IGNITION SOURCES.

OTHER PRECAUTIONS

AVOID EYE OR SKIN CONTACT.
AVOID BREATHING VAPORS.

WHILE THE INFORMATION AND RECOMMENDATIONS SET FORTH HEREIN ARE BELIEVED TO BE ACCURATE AS OF THE DATE HEREOF, SUPELCO, INC. MAKES NO WARRANTY WITH RESPECT THERETO AND DISCLAIMS ALL LIABILITY FROM RELIANCE THEREON.

LAST REVISED 11/24/92

COPYRIGHT 1985 SUPELCO, INC. SUPELCO PARK BELLEFONTE, PA 16823-0048
ALL RIGHTS RESERVED TWX 510-670-3600
CUSTOMER P.O. NO. 091892

DATE 9/21/92 MATERIAL SAFETY DATA SHEET PAGE 1

SECTION I -GENERAL INFORMATION

CATALOG NO 40203 (REORDER PRODUCT BY THIS NO.)
PRODUCT NAME P-XYLENE 5000 UG/ML 1ML
DATA SHEET NO I402030
P-XYLENE
FORMULA MIXTURE FORMULA WEIGHT
CAS NRTECS
SYNONYM ANALYTICAL STANDARD IN METHANOL
MANUFACTURER SUPELCO INC. PHONE 814-359-3441
ADDRESS SUPELCO PARK, BELLEFONTE, PA 16823-0048

SECTION II - HAZARDOUS INGREDIENTS OF MIXTURES

CHEMICAL NAME
COMMON NAME - PERCENTAGE - CAS #
(FORMULA) - PEL(UNITS) - TLV(UNITS)
LD50 VALUE - CONDITIONS

BENZENE, 1,4-DIMETHYL-
P-XYLENE 0.5 106-4
CH3C6H4CH3 100 PPM 100 PPM
5000 MG/KG ORAL RAT SEE FOOTNOTE(6)

METHANOL
METHANOL 99-100 67-5
CH3OH 260 MG/M3 262 MG/M3
5628 MG/KG ORAL RAT SEE FOOTNOTE(6)

FOOTNOTES

(6) SUBJECT TO THE REPORTING REQUIREMENTS OF SARA TITLE III, SECTION 313.

SECTION III - PHYSICAL DATA

BOILING POINT 65 C MM MELTING POINT -98 C
VAPOR PRESSURE 100 MM C VAPOR DENSITY 1.10 C (AIR=1)
SPECIFIC GRAVITY .790 G/ML C (WATER=1) PERCENT VOLATILE BY VOLUME
WATER SOLUBILITY 100 EVAPORATION RATE >1 (ETHER=1)
APPEARANCE CLEAR COLORLESS LIQUID

SECTION IV - FIRE AND EXPLOSION HAZARD DATA

FLASH POINT 50 F FLAMMABLE LIMITS LEL 6.0 UEL

EXTINGUISHING MEDIA

CO2
DRY CHEMICAL
ALCOHOL FOAM.

SPECIAL FIRE FIGHTING PROCEDURES

WEAR SELF CONTAINED BREATHING APPARATUS WHEN FIGHTING A CHEMICAL FIRE.

UNUSUAL FIRE AND EXPLOSION HAZARDS

N/A

SECTION V - HEALTH HAZARD DATA

LD50 5628 MG/KG ORAL RAT TLV 262 MG/M3
PEL 260 MG/M3

EMERGENCY AND FIRST AID PROCEDURES
EYES

CATALOG NO 40203 (REORDER PRODUCT BY THIS NO.)
PRODUCT NAME P-XYLENE 5000 UG/ML 1ML
DATA SHEET NO I402030
P-XYLENE

SECTION V - HEALTH HAZARD DATA

* CONTINUED *
FLUSH EYES WITH WATER FOR 15 MINUTES.
CONTACT A PHYSICIAN.

SKIN
FLUSH SKIN WITH LARGE VOLUMES OF WATER.

INHALATION
IMMEDIATELY MOVE TO FRESH AIR.
IF BREATHING STOPS, GIVE ARTIFICIAL RESPIRATION
CONTACT A PHYSICIAN

INGESTION
NEVER GIVE ANYTHING BY MOUTH TO AN UNCONSCIOUS PERSON
NEVER TRY TO MAKE AN UNCONSCIOUS PERSON VOMIT
GIVE 2 TABLESPOONS OF BAKING SODA IN A GLASS OF WATER
PRESS FINGERS TO BACK OF TONGUE TO INDUCE VOMITING.
IMMEDIATELY CONTACT A PHYSICIAN.

EFFECTS OF OVEREXPOSURE

HARMFUL IF INHALED
MAY BE FATAL IF SWALLOWED
HEADACHE
NAUSEA
GASTROINTESTINAL DISTURBANCES
BLINDNESS

SECTION VI - REACTIVITY DATA

STABILITY STABLE.

CONDITIONS TO AVOID

N/A

INCOMPATIBILITY

OXIDIZING AGENTS
CHROMIC ANHYDRIDE, LEAD PERCHLORATE, PERCHLORIC ACIDS

HAZARDOUS DECOMPOSITION PRODUCTS

N/A

HAZARDOUS POLYMERIZATION WILL NOT OCCUR.

CATALOG NO 40203 (REORDER PRODUCT BY THIS NO.)
PRODUCT NAME P-XYLENE 5000 UG/ML 1ML
DATA SHEET NO I402030
P-XYLENE

SECTION VI - REACTIVITY DATA

* CONTINUED *

CONDITIONS TO AVOID

N/A

SECTION VII - SPILL OR LEAK PROCEDURES

STEPS TO BE TAKEN IN CASE MATERIAL IS RELEASED OR SPILLED

TAKE UP WITH ABSORBENT MATERIAL.
VENTILATE AREA.
ELIMINATE ALL IGNITION SOURCES.

WASTE DISPOSAL METHOD

COMPLY WITH ALL APPLICABLE FEDERAL, STATE, OR LOCAL REGULATIONS

SECTION VIII - SPECIAL PROTECTION INFORMATION

RESPIRATORY PROTECTION (SPECIFIC TYPE)

WEAR FACE MASK WITH ORGANIC VAPOR CANISTER.

PROTECTIVE GLOVES

WEAR RUBBER GLOVES.

EYE PROTECTION

WEAR PROTECTIVE GLASSES.

VENTILATION

USE ONLY IN WELL VENTILATED AREA.

SPECIAL

N/A

OTHER PROTECTIVE EQUIPMENT

N/A

SECTION IX - SPECIAL PRECAUTIONS

STORAGE AND HANDLING

REFRIGERATE IN SEALED CONTAINER.

CATALOG NO 40203 (REORDER PRODUCT BY THIS NO.)
PRODUCT NAME P-XYLENE 5000 UG/ML 1ML
DATA SHEET NO I402030
P-XYLENE

SECTION IX - SPECIAL PRECAUTIONS

* CONTINUED *
KEEP AWAY FROM OXIDIZERS.
KEEP AWAY FROM IGNITION SOURCES.

OTHER PRECAUTIONS

AVOID EYE OR SKIN CONTACT.
AVOID BREATHING VAPORS.

WHILE THE INFORMATION AND RECOMMENDATIONS SET FORTH HEREIN ARE BELIEVED TO BE ACCURATE AS OF THE DATE HEREOF, SUPELCO, INC. MAKES NO WARRANTY WITH RESPECT THERETO AND DISCLAIMS ALL LIABILITY FROM RELIANCE THEREON.

LAST REVISED 8/20/90

ALL RIGHTS RESERVED
TWX 510-670-3600
CUSTOMER P.O. NO. VERBAL /JOHN

DATE 7/06/92 MATERIAL SAFETY DATA SHEET PAGE 1

SECTION I -GENERAL INFORMATION

CATALOG NO 40201 (REORDER PRODUCT BY THIS NO.)
PRODUCT NAME O-XYLENE 5000 UG/ML 1ML
DATA SHEET NO I402010
O-XYLENE
FORMULA MIXTURE FORMULA WEIGHT
CAS NRTECS
SYNONYM ANALYTICAL STANDARD IN METHANOL
MANUFACTURER SUPELCO INC. PHONE 814-359-3441
ADDRESS SUPELCO PARK, BELLEFONTE, PA 16823-0048

SECTION II - HAZARDOUS INGREDIENTS OF MIXTURES

CHEMICAL NAME
COMMON NAME - PERCENTAGE - CAS #
(FORMULA) - PEL(UNITS) - TLV(UNITS)
LD50 VALUE - CONDITIONS

O-XYLENE
O-XYLENE 0.5 95-47
CH3C6H4CH3 100 PPM 100 PPM
5000 MG/KG ORAL RAT SEE FOOTNOTE(6)
METHANOL
METHANOL 99-100 67-56
CH3OH 260 MG/M3 262 MG/M3
5628 MG/KG ORAL RAT SEE FOOTNOTE(6)

FOOTNOTES

6 SUBJECT TO THE REPORTING REQUIREMENTS OF SARA TITLE III, SECTION 313.

SECTION III - PHYSICAL DATA

BOILING POINT 65 C MM MELTING POINT -98 C
VAPOR PRESSURE 100 MM C VAPOR DENSITY 1.10 C (AIR=1)
SPECIFIC GRAVITY .790 G/ML C (WATER=1) PERCENT VOLATILE BY VOLUME
WATER SOLUBILITY 100 EVAPORATION RATE >1 (ETHER=1)
APPEARANCE CLEAR COLORLESS LIQUID

SECTION IV - FIRE AND EXPLOSION HAZARD DATA

FLASH POINT 50 F FLAMMABLE LIMITS LEL 6.0 UEL 3.

EXTINGUISHING MEDIA

CO2
DRY CHEMICAL
ALCOHOL FOAM.

SPECIAL FIRE FIGHTING PROCEDURES

WEAR SELF CONTAINED BREATHING APPARATUS WHEN FIGHTING A CHEMICAL FIRE.

UNUSUAL FIRE AND EXPLOSION HAZARDS

N/A

SECTION V - HEALTH HAZARD DATA

CATALOG NO 40201 (REORDER PRODUCT BY THIS NO.)
PRODUCT NAME O-XYLENE 5000 UG/ML 1ML
DATA SHEET NO I402010
O-XYLENE

SECTION V - HEALTH HAZARD DATA

* CONTINUED *

LD50	5628	MG/KG	ORAL RAT	TLV	262	MG/M3
PEL	260	MG/M3				

EMERGENCY AND FIRST AID PROCEDURES

EYES
FLUSH EYES WITH WATER FOR 15 MINUTES.
CONTACT A PHYSICIAN.

SKIN
FLUSH SKIN WITH LARGE VOLUMES OF WATER.

INHALATION
IMMEDIATELY MOVE TO FRESH AIR.
IF BREATHING STOPS, GIVE ARTIFICIAL RESPIRATION
CONTACT A PHYSICIAN

INGESTION
NEVER GIVE ANYTHING BY MOUTH TO AN UNCONSCIOUS PERSON
NEVER TRY TO MAKE AN UNCONSCIOUS PERSON VOMIT
GIVE 2 TABLESPOONS OF BAKING SODA IN A GLASS OF WATER
PRESS FINGERS TO BACK OF TONGUE TO INDUCE VOMITING.
IMMEDIATELY CONTACT A PHYSICIAN.

EFFECTS OF OVEREXPOSURE

HARMFUL IF INHALED
MAY BE FATAL IF SWALLOWED
HEADACHE
NAUSEA
GASTROINTESTINAL DISTURBANCES
BLINDNESS

SECTION VI - REACTIVITY DATA

STABILITY STABLE.

CONDITIONS TO AVOID

N/A

INCOMPATIBILITY

OXIDIZING AGENTS
CHROMIC ANHYDRIDE, LEAD PERCHLORATE, PERCHLORIC ACIDS

CATALOG NO 40201 (REORDER PRODUCT BY THIS NO.)
ODUCT NAME O-XYLENE 5000 UG/ML 1ML
DATA SHEET NO I402010
O-XYLENE

SECTION VI - REACTIVITY DATA

* CONTINUED *

HAZARDOUS DECOMPOSITION PRODUCTS

N/A

HAZARDOUS POLYMERIZATION WILL NOT OCCUR.

CONDITIONS TO AVOID

N/A

SECTION VII - SPILL OR LEAK PROCEDURES

STEPS TO BE TAKEN IN CASE MATERIAL IS RELEASED OR SPILLED

TAKE UP WITH ABSORBENT MATERIAL.
VENTILATE AREA.
ELIMINATE ALL IGNITION SOURCES.

W TE DISPOSAL METHOD

COMPLY WITH ALL APPLICABLE FEDERAL, STATE, OR LOCAL REGULATIONS

SECTION VIII - SPECIAL PROTECTION INFORMATION

RESPIRATORY PROTECTION (SPECIFIC TYPE)

WEAR FACE MASK WITH ORGANIC VAPOR CANISTER.

PROTECTIVE GLOVES

WEAR RUBBER GLOVES.

EYE PROTECTION

WEAR PROTECTIVE GLASSES.

VENTILATION

USE ONLY IN WELL VENTILATED AREA.

SPECIAL

N/A

CATALOG NO 40201 (REORDER PRODUCT BY THIS NO.)
RODUCT NAME O-XYLENE 5000 UG/ML 1ML
DATA SHEET NO I402010
O-XYLENE

SECTION VIII - SPECIAL PROTECTION INFORMATION

* CONTINUED *

OTHER PROTECTIVE EQUIPMENT

N/A

SECTION IX - SPECIAL PRECAUTIONS

STORAGE AND HANDLING

REFRIGERATE IN SEALED CONTAINER.
KEEP AWAY FROM OXIDIZERS.
KEEP AWAY FROM IGNITION SOURCES.

OTHER PRECAUTIONS

AVOID EYE OR SKIN CONTACT.
AVOID BREATHING VAPORS.

WHILE THE INFORMATION AND RECOMMENDATIONS SET FORTH HEREIN ARE BELIEVED TO BE ACCURATE AS OF THE DATE HEREOF, SUPELCO, INC. MAKES NO WARRANTY WITH RESPECT THERETO AND DISCLAIMS ALL LIABILITY FROM RELIANCE THEREON.

LAST REVISED 8/20/90

Genium Publishing Corporation
1145 Catalyn Street
Schenectady, NY 12303-1836 USA
(518) 377-8854

Material Safety Data Sheets Collection:

Sheet No. 550
Zinc Acetate

Issued: 8/85 Revision: A, 7/91

Section 1. Material Identification

Zinc Acetate ($C_4H_6O_4Zn$) Description: Derived by action of acetic acid on zinc oxide, or by a preparation of anhydrous salts from zinc nitrate and acetic anhydride. Used in tobacco filters, textile dyeing (mordant and resist), preserving wood; as a laboratory reagent in testing for albumin, tannin, urobilin, and phosphate; a cross-linking agent for polymers; a feed additive; a topical fungicide; an astringent in medicine, an ingredient in dietary supplements; and previously an emetic for animals.

R	1
I	2
S	2
K	0

Genium

Other Designations: CAS No. 557-34-6; acetic acid, zinc salt; dicarbomethoxyzinc; zinc diacetate.
Manufacturer: Contact your supplier or distributor. Consult latest *Chemical Week Buyers' Guide*(73) for a suppliers list.

HMIS
H 1
F 0
R 0
PPG*
* Sec. 8

Cautions: Zinc acetate dust is irritating to eyes, nose, and throat.

Section 2. Ingredients and Occupational Exposure Limits

Zinc acetate, ca 100%

1989 OSHA PELs*
8-hr TWA: 15 mg/m³ (total); 5 mg/m³ (respirable)

1990-91 ACGIH TLVs*
TWA: 10 mg/m³ (total); 5 mg/m³ (respirable)

1988 NIOSH REL
None established

1985-86 Toxicity Data†
Rat, oral, LD_{50}: 2510 mg/kg
Rabbit, oral, LD_{Lo}: 976 mg/m³
Rabbit, intravenous, LD_{Lo}: 5 mg/kg

* Reported as a classified nuisance dust.
† See NIOSH, *RTECS* (AK1500000), for additional toxicity data.

Section 3. Physical Data

Boiling Point: Decomposes at 392 °F (200 °C)
Melting Point: 458 °F (237 °C)
pH: 5 to 6 (aqueous solution)
Molecular Weight: 183.47
Specific Gravity: 1.735
Water Solubility: 1 g /2.3 ml of water

Appearance and Odor: White, monoclinic crystals with a pearly luster and a faint acetous (vinegar) odor.

Section 4. Fire and Explosion Data

Flash Point: None reported	**Autoignition Temperature:** None reported	**LEL:** None reported	**UEL:** None reported

Extinguishing Media: Since zinc acetate is nonflammable, use extinguishing agents suitable for surrounding fire. Use dry chemical, water spray, or foam.
Unusual Fire or Explosion Hazards: Since fire may produce irritating or poisonous gases, be prepared.
Special Fire-fighting Procedures: Since fire may produce toxic fumes, wear a self-contained breathing apparatus (SCBA) with a full facepiece operated in pressure-demand or positive-pressure mode. Be aware of runoff from fire control methods. Do not release to sewers or waterways.

Section 5. Reactivity Data

Stability/Polymerization: Zinc acetate is stable at room temperature in closed containers under normal storage and handling conditions. Hazardous polymerization cannot occur.
Chemical Incompatibilities: Zinc acetate may react with acacia, alkalies and their carbonates, oxalates, phosphates, sulfides, lime water, and vegetable decoctions and infusions.
Conditions to Avoid: Avoid contact with flames, heat and the above-mentioned incompatible materials.
Hazardous Products of Decomposition: Thermal oxidative decomposition of zinc acetate can produce oxides of carbon and toxic zinc oxide smoke and fumes.

Copyright © 1991 Genium Publishing Corporation.
Any commercial use or reproduction without the publisher's permission is prohibited.

Section 6. Health Hazard Data

Carcinogenicity: In 1990 reports, the IARC and NTP do not list zinc acetate as a carcinogen.
Summary of Risks: Zinc acetate dust is irritating to eyes, nose and throat. The solid form is irritating to skin and eyes.
Medical Conditions Aggravated by Long-Term Exposure: Chronic pulmonary disorders may be aggravated by inhalation of irritant dusts.
Target Organs: Eyes, skin, respiratory and digestive tracts.
Primary Entry Routes: Ingestion, inhalation, skin and eye contact
Acute Effects: Ingestion may cause nausea, vomiting, headache, and abdominal pain. Inhalation may be irritating to nose, throat, and lungs.
Chronic Effects: Human chronic effects are not known to occur. Rats fed above 0.25% zinc acetate in their diet for an undetermined amount of time suffered breakdown of homeostatic mechanisms, producing growth retardation, hypochromic anemia, and defective bone mineralizations.
FIRST AID
Eyes: Gently lift the eyelids and flush immediately and continuously with flooding amounts of water until transported to an emergency medical facility. Consult a physician immediately.
Skin: *Quickly* remove contaminated clothing. Rinse with flooding amounts of water for at least 15 min. For reddened or blistered skin, consult a physician. Wash affected area with soap and water.
Inhalation: Remove exposed person to fresh air and support breathing as needed.
Ingestion: Never give anything by mouth to an unconscious or convulsing person. If ingested, have that *conscious* person drink 1/2 to 1 glass of milk or water, then seek medical attention or call poison control center.
After first aid, get appropriate in-plant, paramedic, or community medical support.

Section 7. Spill, Leak, and Disposal Procedures

Spill/Leak: Immediately notify safety personnel. Keep unnecessary personnel away, isolate hazard area, and deny entry. If possible without risk, stop leak. For small dry spills, place material in suitable container and cover. For small wet spills, take up with sand or other noncombustible, absorbent material and place in containers for later disposal. Move containers from spill area. For large spills, dike ahead for later disposal. Cover powder spill with plastic sheet or tarp to minimize spreading. Follow applicable OSHA regulations (29 CFR 1910.120).
Environmental Transport: Soil studied from the new lead belt of southeast Missouri showed that zinc acetate's soil cationic exchange capacity was high enough for disposal, and thus would not endanger shallow groundwater tables.
Environmental Degradation: Ecotoxicity values for *Pimephales promelas* (fathead minnow), TLm, 0.88 ppm/96 hr (soft water).
Disposal: Contact your supplier or a licensed contractor for detailed recommendations. Follow applicable Federal, state, and local regulations.
EPA Designations
RCRA Hazardous Waste (40 CFR 261.33): Not listed
Listed as a CERCLA Hazardous Substance* (40 CFR 302.4), Reportable Quantity (RQ): 1000 lb (454 kg) [* per Clean Water Act; Sec. 307(a)(1)]
SARA Extremely Hazardous Substance (40 CFR 355): Not listed
SARA Toxic Chemical (40 CFR 372.65): Not listed
OSHA Designations
Listed as an Air Contaminant (29 CFR 1910.1000, Table Z-1-A)

Section 8. Special Protection Data

Goggles: Wear protective eyeglasses or chemical safety goggles, per OSHA eye- and face-protection regulations (29 CFR 1910.133). Since contact lens use in industry is controversial, establish your own policy.
Respirator: Seek professional advice prior to respirator selection and use. Follow OSHA respirator regulations (29 CFR 1910.134) and, if necessary, wear a NIOSH-approved respirator.
Other: Wear impervious gloves, boots, aprons, and gauntlets to prevent skin contact.
Ventilation: Provide general and local ventilation systems to maintain airborne concentrations below the OSHA PEL (Sec. 2). Local exhaust ventilation is preferred since it prevents contaminant dispersion into the work area by controlling it at its source.[105]
Safety Stations: Make available in the work area emergency eyewash stations, safety/quick-drench showers, and washing facilities.
Contaminated Equipment: Remove this material from your shoes and equipment. Launder contaminated clothing before wearing.
Comments: Never eat, drink, or smoke in work areas. Practice good personal hygiene after using this material, especially before eating, drinking, smoking, using the toilet, or applying cosmetics.

Section 9. Special Precautions and Comments

Storage Requirements: Prevent physical damage to storage containers. Store in a cool, dry, well-ventilated place away from acute fire risks, open flames, and powerful oxidizing agents.
Engineering Controls: Institute a respiratory protection program that includes regular training, maintenance, inspection, and evaluation.
Other Precautions: Avoid breathing dust and vapors. Consider preplacement and periodic exams of exposed workers.

Transportation Data (49 CFR 172.101)
DOT Shipping Name: Zinc acetate
DOT Hazard Class: ORM-E
ID No.: NA9153
DOT Label: None

MSDS Collection **References:** 73, 101, 103, 124, 126, 132, 136, 145
Prepared by: M Gannon, BA; **Industrial Hygiene Review:** DJ Wilson, CIH; **Medical Review:** MJ Upfal, MD, MPH; **Edited by:** JR Stuart, MS

Copyright © 1991 by Genium Publishing Corporation. Any commercial use or reproduction without the publisher's permission is prohibited. Judgments as to the suitability of information herein for the purchaser's purposes are necessarily the purchaser's responsibility. Although reasonable care has been taken in the preparation of such information, Genium Publishing Corporation extends no warranties, makes no representations, and assumes no responsibility as to the accuracy or suitability of such information for application to the purchaser's intended purpose or for consequences of its use.

N

RESPIRATORY PROTECTION

I/HW POLICY NO. 630.09

Subject: RESPIRATORY PROTECTION EQUIPMENT

I. PURPOSE

To adopt the use of the Montgomery Corporate Respiratory Protection Equipment Program within the Industrial/Hazardous Waste Operations (I/HW).

II. ATTACHMENT

A. Montgomery Corporate Environmental/Occupational Health and Safety Manual Bulletin VIII-2, Respiratory Protection Equipment.

III. DISCUSSION

Controlling exposures to potentially hazardous material via engineering and work practice controls at hazardous waste sites is extremely difficult due to the transient nature of the work. For this reason, many I/HW Operations field activities require the use of respiratory protective equipment.

IV. PROCEDURE

A. All Montgomery I/HW Operations employees required to wear respiratory protective equipment shall do so in accordance with Attachment A.

B. During initial instruction on respiratory protective equipment and during annual 8-hour hazardous waste site refresher briefings, information regarding respirator selection, use, limitations, storage, maintenance and care will be provided.

C. The annual hazardous waste site worker medical surveillance examinations include the necessary screening to evaluate an employee's ability to wear a respirator.

D. Montgomery I/HW Operations Program Health and Safety Coordinators are responsible for providing suitable supplies and facilities for respirator cleaning.

SUBJECT: RESPIRATORY PROTECTION EQUIPMENT

I. PURPOSE

To prescribe the requirements of the Montgomery respiratory protection program, and to provide information and guidance on the proper selection, use and care of respiratory protective devices, and adequate personnel instruction and training.

II. REFERENCES

- Title 29, Code of Federal Regulations, Section 1910.134
- NIOSH, A Guide to Industrial Respiratory Protection, June, 1976
- NIOSH, Certified Equipment List, October 1985
- Corresponding Code Requirements for state-administered OSHA programs
- Bulletin II-6 in this manual

III. ATTACHMENTS

A. Montgomery Respiratory Fit Testing Protocol

B. Montgomery Respiratory Training Completion Form

IV. DISCUSSION

It is safest, most practical and least costly to control employee exposure to hazardous air contaminants by use of engineering controls such as process isolation, ventilation and substitution with less toxic material. Administrative control, such as reducing length of work shifts subject to exposure or reducing the number of employees potentially expose, is also a preferred method of exposure control.

Because engineering and administrative controls are not entirely suitable for removal of potentially hazardous air contaminants during some Montgomery operations, employee exposure must be controlled by use of respiratory protective equipment.

This procedure describes the general requirements of the respiratory protection program with regard to proper selection, use and care of respirators, and requirements for employee instruction and training. OSHA regulations, both federal and state programs, specify that a particular type of respirator be used for confined space entry and for work with certain regulated materials (i.e., asbestos and carcinogens). In all cases where OSHA mandates use of a specific type of respirator, supervisors should reference the applicable federal or state regulation. For respiratory protection in confined space work, refer to Bulletin VII-9 in this manual.

V. PROCEDURE

A. General Program Requirements

1. Management Responsibility

a. Montgomery shall provide respiratory equipment whenever it is necessary to protect employee health.

b. Only respiratory equipment that has been approved by the National Institute for Occupational Safety and Health (NIOSH) or the Mine Safety and Health Administration (MSHA) shall be provided to employees by Montgomery.

c. Respirators shall be selected on the basis of respiratory hazards to which the employee is exposed,.

d. Employees shall be instructed and trained in the use, limitations, testing and sanitary care of each type of respiratory equipment that they use.

e. Montgomery shall maintain, repair or replace respiratory equipment as required due to wear and deterioration.

f. Montgomery shall provide means for proper cleaning of respiratory equipment utilized by Montgomery personnel.

g. Supervisors shall ensure that only those employees who are medically qualified to wear respirators are assigned work tasks that require usage of respiratory protective equipment.

h. The Montgomery Health and Safety Coordinator shall regularly inspect and evaluate the respiratory protection program to assess its continued effectiveness.

2. Employee Responsibility

a. The employee shall use the respiratory protective equipment provided in accordance with instructions and training received.

b. The employee shall guard against damage to the respirator.

c. The employee shall immediately report any malfunction of the respirator to the supervisor, or the supervisor's designee.

B. Respiratory Equipment Selection Criteria

Selection of respiratory protection shall be reviewed with the Montgomery Health and Safety Coordinator in all cases, and shall be based on the following considerations:

1. Nature of the hazard - Chemical and physical properties, toxicity and concentration of hazardous material or mixture of materials.

2. Oxygen-deficient atmospheres - Only air supplied respiratory protective equipment with supplementary escape air supply shall be used in atmospheres containing less than 19.5% oxygen.

3. Immediately Dangerous to Life and Health (IDLH) Atmospheres - Montgomery employees shall not enter IDLH atmospheres, regardless of respiratory equipment use.

4. Irritant or Corrosive Atmospheres - Respirators selected for use shall provide adequate face and eye protection.

5. Limitations on Air-purifying Respirator Usage - The contaminant or mixture of contaminants must have adequate warning properties (odor, irritation or taste) at concentrations less than the established exposure limit; the atmosphere must contain at least 19.5% oxygen; and, there must be an acceptable NIOSH/MSHA cartridge or canister available for the contaminant(s).

C. Employee Training and Instruction

The basic respiratory protection training program shall include, as a minimum, the following:

1. Instruction in the selection, inspection, use, limitations and proper care and storage of respiratory equipment.

2. Instruction in the nature of respiratory hazards (acute and/or chronic) and a description of potential health effects if respiratory protection is not used.

3. Proper respirator fitting, including demonstrations and employee practice in wearing, adjusting and determining the fit of each particular respirator.

4. Test of the facepiece to face seal of air-purifying respirators by means of qualitative fit testing, using oxystannic chloride smoke tubes. The suggested fit test procedure to be used for air-purifying respirators is found in Attachment A. Respirators shall not be worn when conditions prevent a good face seal.

5. Each employee shall complete the Montgomery Respirator Training completion Form (see Attachment B) upon completion of the requisite instruction and fit testing.

6. Supervisors shall forward copies of employee Respiratory Training Completion Forms to the Montgomery Health and Safety Coordinator.

D. Respirator Inspection, Cleaning, Maintenance and Storage

The program for maintenance and care of respirators will be adjusted to the location (Montgomery facility or client work site), working conditions and the airborne contaminant(s) involved. At minimum, the program shall include the following steps:

1. All respirators shall be routinely inspected before and after each use.

2. Respirators maintained for emergency use shall be inspected before and after each use, and at least monthly, to assure that they are in satisfactory working conditions. A record of the most recent inspection shall be kept on the respirator or its storage container; the record shall consist of the inspector's initials, the date and the respirators identification number.

3. Routinely used respiratory equipment shall be regularly collected, cleaned and disinfected to insure that proper protection is provided for the wearer.

4. Respirator repair or parts replacement shall be performed only by qualified maintenance persons.

5. Respirators shall be stored to protect them against dust, sunlight, extreme temperatures, excessive moisture, damaging chemicals or physical pressure than may distort the facepiece.

E. Compressed Breathing Air

Compressed air used for human respiration shall be of high purity, and shall meet as a minimum the requirements of Grade D breathing air as described in the Compressed Gas Association Commodity Specification G-7.1.

F. Medical Surveillance

1. No employee shall be assigned a task that requires use of respiratory equipment unless it has been determined that they are physically able to perform the work while wearing the required equipment.

2. Facial deformities or any facial hair in contact with the respirator facepiece may prohibit personnel from wearing respiratory equipment due to lack of an adequate face to facepiece seal.

3. Contact lenses shall not be worn by personnel while using respiratory equipment.

All personnel will be fit-tested with air-purifying respirators prior to initiation of work. Fit testing will be qualitative using the oxystannic chloride testing method. Personnel will be allowed to select a respirator with which they can achieve a proper face seal. A written record of results of the fit tests and the equipment issued is necessary. The Health and Safety Coordinator is responsible to assure that a **Montgomery Respiratory Training Completion Form** is completed by each worker wearing an air-purifying respirator. Fit testing is to be completed annually.

Personnel will be instructed in the uses and limitations of air-purifying respirators. It will be stressed that any breakthrough (odor, taste or irritation) or an increased inhalation resistance is cause to immediately leave the area. The respirator must then be thoroughly inspected in a safe area. Cartridges will be replaced as appropriate.

Non-disposable respirators will be cleaned with a mild detergent, air dried and inspected after each use. Each respirator will be packaged in a clear, sealed plastic bag pending the next use.

STANDING OPERATING PROTOCOL

RESPIRATOR FIT TESTING USING OXYSTANNIC CHLORIDE IRRITANT SMOKE

Qualitative fit testing involves two distinct steps: performance of positive/negative pressure checks and then fit testing using oxystannic chloride (smoke tubes) or isoamyl acetate (banana oil). Testing with isoamyl acetate is less satisfactory for three reasons: people have varying odor thresholds for the substance, the possibility of olfactory fatigue and the fact that personnel may not acknowledge breakthrough even when they are aware that it is occurring. Oxystannic chloride is an irritant smoke that will elicit an involuntary cough upon breakthrough.

Before conducting the negative and positive pressure checks, the wearer shall be told to "seat" his/her mask by rapidly moving the head side-to-side and up and down, taking a few deep breaths.

Negative pressure check: the wearer closes off the respirator inhalation valve and inhales. A vacuum and partial inward collapse of the mask should result. If a vacuum cannot be maintained for at least 10 seconds, re-adjust the facepiece and try again.

Positive pressure check: the wearer closes off the respirator exhalation valve and breathes out gently. Air will escape through any gaps in the seal. This mask should puff outward without releasing air.

After the pressure checks are completed the wearer shall be questioned regarding the comfort of the respirator. If it has become uncomfortable, another size or model of respirator shall be tried.

When the respirator has passed the pressure checks, the wearer is ready to proceed with the qualitative fit test using oxystannic chloride smoke tubes:

1. Facepieces equipped with high efficiency dust/mist or combination acid gas/HEPA filters will be used for the qualitative fit test.

2. A large transparent plastic bag may be used as the fit test chamber by hanging it from a door frame.

3. Personnel will be instructed to keep their eyes tightly closed when being fit tested for half-face air purifying respirators.

4. The tester shall direct a stream of irritant smoke towards the faceseal and gradually move to within one inch, moving around the whole perimeter of the mask.

5. The test subject will move his/her head around, count out loud slowly from one to ten, and take deep breaths while the respirator face seal is being challenged by the irritant smoke.

6. If the irritant smoke produces an involuntary reaction (cough) by the test subject, the test shall be stopped and the respirator rejected. If the test subject feels comfortable with the face seal achieved, the brand, model number and size shall be noted on the **Montgomery Respiratory Training Completion Form** (Attachment B) and submitted to the Health and Safety Coordinator.

   Optional: Have employee recite the Rainbow Passage.

MONTGOMERY RESPIRATORY TRAINING COMPLETION FORM

Name (Please Print) Social Security No. _____ Date: _____	Initial Only the Appropriate Blocks*				
	Full Face Air Purifying Respirator	Half Face Air Purifying Respirator	SCBA	Airline Respirator	Other
1. I understand why respiratory protection is needed and where and when it should be used.					
2. I know how to use this respirator properly.					
3. I know how to clean and inspect this respirator.					
4. I understand the limitations and restrictions of this respirator.					
5. I wore this respiratory equipment in normal air and checked the facepiece fit.					
6. I wore this respiratory equipment in a test atmosphere generated by smoke tubes or other means.					
7. I understand that a good gas-tight face seal cannot be achieved with obstruction such as facial hair or glasses (with full face mask).					

*Brand, Model No., and mask size must indicated for all types of respiratory equipment.

Signature _____

Montgomery Location _____

O

Drum Handling Protocol

11. Handling Drums and Other Containers

Contents

Introduction 11-1

Inspection 11-1

Planning 11-3

Handling 11-3

- Drums Containing Radioactive Waste 11-4
- Drums that May Contain Explosive or Shock-Sensitive Wastes 11-4
- Bulging Drums 11-4
- Drums Containing Packaged Laboratory Wastes (Lab Packs) 11-4
- Leaking, Open, and Deteriorated Drums 11-4
- Buried Drums 11-5

Opening 11-5

Sampling 11-6

Characterization 11-7

Staging 11-8

Bulking 11-9

Shipment 11-9

Special Case Problems 11-11

- Tanks and Vaults 11-11
- Vacuum Trucks 11-12
- Elevated Tanks 11-12
- Compressed Gas Cylinders 11-12
- Ponds and Lagoons 11-12

References 11-12

Introduction

Accidents may occur during handling of drums and other hazardous waste containers. Hazards include detonations, fires, explosions, vapor generation, and physical injury resulting from moving heavy containers by hand and working around stacked drums, heavy equipment, and deteriorated drums. While these hazards are always present, proper work practices—such as minimizing handling and using equipment and procedures that isolate workers from hazardous substances—can minimize the risks to site personnel.

This chapter defines practices and procedures for safe handling of drums and other hazardous waste containers. It is intended to aid the Project Team Leader in setting up a waste container handling program. In addition to reading this chapter, the Project Team Leader should also be aware of all pertinent regulations. OSHA regulations (29 CFR Parts 1910 and 1926) include general requirements and standards for storing, containing, and handling chemicals and containers, and for maintaining equipment used for handling materials. EPA regulations (40 CFR Part 265) stipulate requirements for types of containers, maintenance of containers and containment structures, and design and maintenance of storage areas. DOT regulations (49 CFR Parts 171 through 178) also stipulate requirements for containers and procedures for shipment of hazardous wastes.

Containers are handled during characterization and removal of their contents and during other operations. A flow chart showing one set of possible procedures for drum handling is given in Figure 11-1. Guidance for safely performing the procedures shown in Figure 11-1 is provided in the following sections of this chapter. The final section, *Special Case Problems*, describes the handling of tanks, vaults, vacuum trucks, elevated tanks, and compressed gas cylinders.

Inspection

The appropriate procedures for handling drums depend on the drum contents. Thus, prior to any handling, drums should be visually inspected to gain as much information as possible about their contents. The inspection crew should look for:

- Symbols, words, or other marks on the drum indicating that its contents are hazardous, e.g., radioactive, explosive, corrosive, toxic, flammable.
- Symbols, words, or other marks on a drum indicating that it contains discarded laboratory chemicals, reagents, or other potentially dangerous materials in small-volume individual containers (see Table 11-1).
- Signs of deterioration such as corrosion, rust, and leaks.
- Signs that the drum is under pressure such as swelling and bulging.
- Drum type (see Table 11-1).
- Configuration of the drumhead (see Table 11-2).

Conditions in the immediate vicinity of the drums may provide information about drum contents and their associated hazards. Monitoring should be conducted around the drums using instruments such as a gamma radiation survey instrument, organic vapor monitors, and a combustible gas meter.

The results of this survey can be used to classify the drums into preliminary hazard categories, for example:

- Radioactive.
- Leaking/deteriorated.
- Bulging.
- Explosive/shock-sensitive.
- Contains small-volume individual containers of laboratory wastes or other dangerous materials.

As a precautionary measure, personnel should assume that unlabelled drums contain hazardous materials until their contents are characterized. Also, they should bear in mind that drums are frequently mislabelled—particularly drums that are reused. Thus, a drum's label may not accurately describe its contents.

If buried drums are suspected, ground-penetrating systems, such as electromagnetic wave, electrical resistivity, ground-penetrating radar, magnetometry, and metal detection, can be used to estimate the location and depth of the drums.

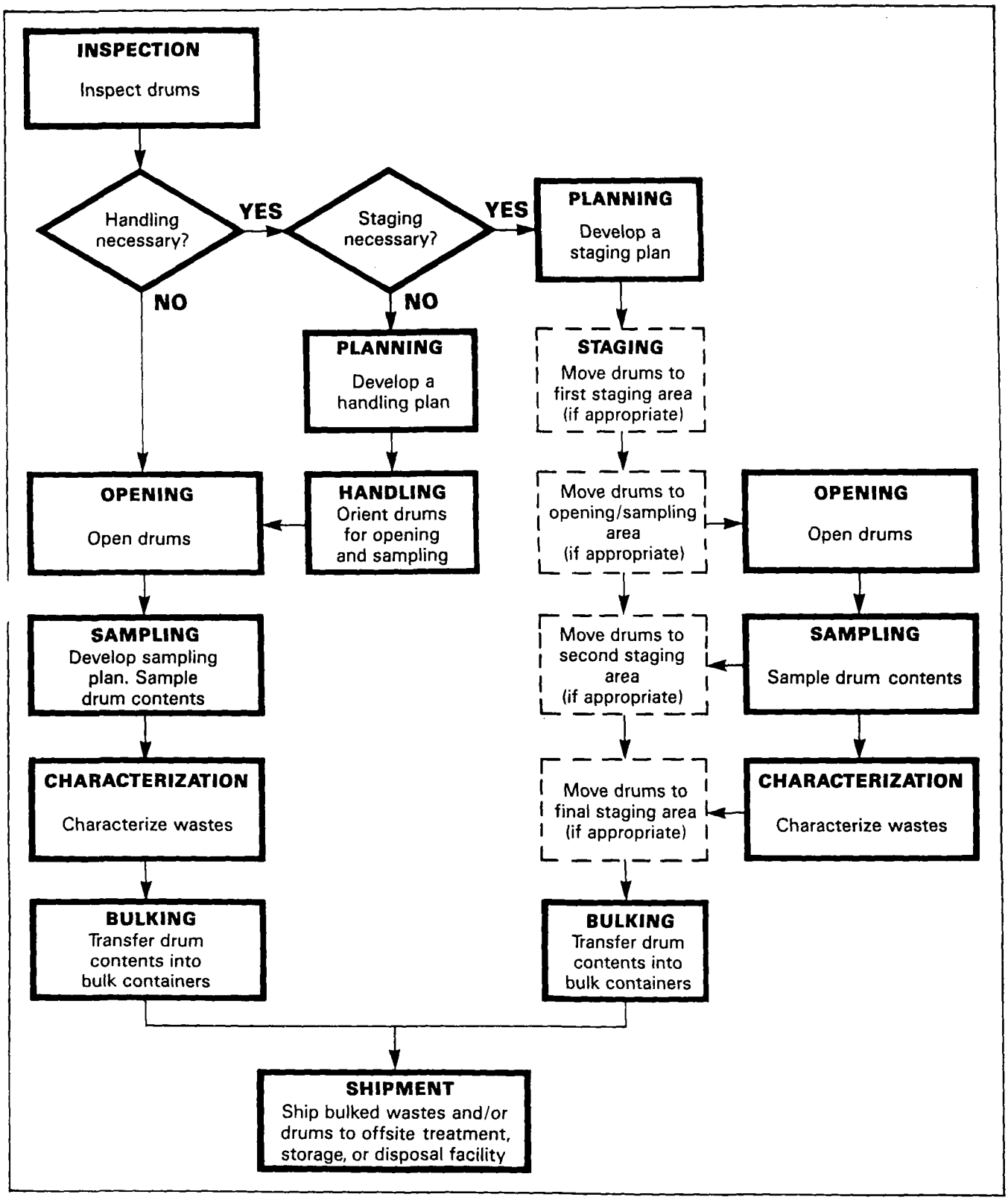

jure 11-1. Flow Chart for Drum Handling. (Dashed boxes indicate optional steps. Number of staging areas necessary is site specific.)

Table 11-1. Special Drum Types and Their Associated Hazards

Polyethylene or PVC-Lined Drums	Often contain strong acids or bases. If the lining is punctured, the substance usually quickly corrodes the steel, resulting in a significant leak or spill.
Exotic Metal Drums (e.g., aluminum, nickel, stainless, steel, or other unusual metal)	Very expensive drums that usually contain an extremely dangerous material.
Single-Walled Drums Used as a Pressure Vessel	These drums have fittings for both product filling and placement of an inert gas, such as nitrogen. May contain reactive, flammable, or explosive substances.
Laboratory Packs	Used for disposal of expired chemicals and process samples from university laboratories, hospitals, and similar institutions. Individual containers within the lab pack are often not packed in absorbent material. They may contain incompatible materials, radioisotopes, shock-sensitive, highly volatile, highly corrosive, or very toxic exotic chemicals. Laboratory packs can be an ignition source for fires at hazardous waste sites.

Table 11-2. Information Provided by Drumhead Configuration

CONFIGURATION	INFORMATION
Whole lid removable.	Designed to contain solid material.
Has a bung.	Designed to contain a liquid.
Contains a liner.	May contain a highly corrosive or otherwise hazardous material.

Planning

Since drum handling is fraught with danger, every step of the operation should be carefully planned, based on all the information available at the time. The results of the preliminary inspection can be used to determine (1) if any hazards are present and the appropriate response, and (2) which drums need to be moved in order to be opened and sampled. A preliminary plan should be developed which specifies the extent of handling necessary, the personnel selected for the job, and the most appropriate procedures based on the hazards associated with the probable drum contents as determined by visual inspection. This plan should be revised as new information is obtained during drum handling.

Handling

The purpose of handling is to (1) respond to any obvious problems that might impair worker safety, such as radioactivity, leakage, or the presence of explosive substances, (2) unstack and orient drums for sampling, and (3) if necessary, to organize drums into different areas on site to facilitate characterization and remedial action (see *Staging* in this chapter). Handling may or may not be necessary, depending on how the drums are positioned at a site.

Since accidents occur frequently during handling, particularly initial handling, drums should only be handled if necessary. Prior to handling, all personnel should be warned about the hazards of handling, and instructed to minimize handling as much as possible and to avoid unnecessary handling. In all phases of handling, personnel should be alert for new information about potential hazards. These hazards should be responded to before continuing with more routine handling operations. Overpack drums (larger drums in which leaking or damaged drums are placed for storage or shipment [see 49 CFR Part 173.3(c)]) and an adequate volume of absorbent should be kept near areas where minor spills may occur. Where major spills may occur, a containment berm adequate to contain the entire volume of liquid in the drums should be constructed before any handling takes place. If the drum contents spill, personnel trained in spill response should be used to isolate and contain the spill.

Several types of equipment can be used to move drums: (1) A drum grappler attached to a hydraulic excavator; (2) a small front-end loader, which can be either loaded manually or equipped with a bucket sling; (3) a rough terrain forklift; (4) a roller conveyor equipped with solid rollers; and (5) drum carts designed specifically for drum handling. Drums are also sometimes moved manually. The drum grappler is the preferred piece of equipment for drum handling. It keeps the operator removed from the drums so that there is less likelihood of injury if the drums detonate or rupture. If a drum is leaking, the operator can stop the leak by rotating the drum and immediately placing it into an overpack. In case of an explosion, grappler claws help protect the operator by partially deflecting the force of the explosion.

Backhoe with drum grappler.

The following procedures can be used to maximize worker safety during drum handling and movement:

- Train personnel in proper lifting and moving techniques to prevent back injuries.
- Make sure the vehicle selected has sufficient rated load capacity to handle the anticipated loads, and

make sure the vehicle can operate smoothly on the available road surface.

- Air condition the cabs of vehicles to increase operator efficiency; protect the operator with heavy splash shields.
- Supply operators with appropriate respiratory protective equipment when needed. Normally either a combination SCBA/SAR with the air tank fastened to the vehicle, or an airline respirator and an escape SCBA are used because of the high potential hazards of drum handling. This improves operator efficiency and provides protection in case the operator must abandon the equipment.
- Have overpacks ready before any attempt is made to move drums.
- Before moving anything, determine the most appropriate sequence in which the various drums and other containers should be moved. For example, small containers may have to be removed first to permit heavy equipment to enter and move the drums.
- Exercise extreme caution in handling drums that are not intact and tightly sealed.
- Ensure that operators have a clear view of the roadway when carrying drums. Where necessary, have ground workers available to guide the operator's motion.

Drums Containing Radioactive Waste

- If the drum exhibits radiation levels above background (see Table 6-2), immediately contact a health physicist. Do *not* handle any drums that are determined to be radioactive until persons with expertise in this area have been consulted.

Drums that May Contain Explosive or Shock-Sensitive Waste

- If a drum is suspected to contain explosive or shock-sensitive waste as determined by visual inspection, seek specialized assistance before any handling.
- If handling is necessary, handle these drums with *extreme caution.*
- Prior to handling these drums, make sure all non-essential personnel have moved a safe distance away.
- Use a grappler unit constructed for explosive containment for initial handling of such drums.
- Palletize the drums prior to transport. Secure drums to pallets.
- Use an audible siren signal system, similar to that employed in conventional blasting operations, to signal the commencement and completion of explosive waste handling activities.
- Maintain continuous communication with the Site Safety Officer and/or the command post until drum handling operations are complete.

Bulging Drums

- Pressurized drums are extremely hazardous. Wherever possible, do not move drums that may be under internal pressure, as evidenced by bulging or swelling.
- If a pressurized drum has to be moved, whenever possible handle the drum with a grappler unit constructed for explosive containment. Either move the bulged drum only as far as necessary to allow seating on firm ground, or carefully overpack the drum. Exercise extreme caution when working with or adjacent to potentially pressurized drums.

Drums Containing Packaged Laboratory Wastes (Lab Packs)

Laboratory packs (i.e., drums containing individual containers of laboratory materials normally surrounded by cushioning absorbent material) can be an ignition source for fires at hazardous waste sites. They sometimes contain shock-sensitive materials. Such containers should be considered to hold explosive or shock-sensitive wastes until otherwise characterized. If handling is required, the following precautions are among those that should be taken:

- Prior to handling or transporting lab packs, make sure all non-essential personnel have moved a safe distance away.
- Whenever possible, use a grappler unit constructed for explosive containment for initial handling of such drums.
- Maintain continuous communication with the Site Safety Officer and/or the command post until handling operations are complete.
- Once a lab pack has been opened, have a chemist inspect, classify, and segregate the bottles within it, without opening them, according to the hazards of the wastes. An example of a system for classifying lab pack wastes is provided in Table 11-3. The objective of a classification system is to ensure safe segregation of the lab packs' contents. Pack these bottles with sufficient cushioning and absorption materials to prevent excessive movement of the bottles and to absorb all free liquids, and ship them to an approved disposal facility.
- If crystalline material is noted at the neck of any bottle, handle it as a shock-sensitive waste, due to the potential presence of picric acid or other similar material, and get expert advice before attempting to handle it.
- Palletize the repacked drums prior to transport. Secure the drums to pallets.

Leaking, Open, and Deteriorated Drums

- If a drum containing a liquid cannot be moved without rupture, immediately transfer its contents to a sound drum using a pump designed for transfering that liquid.
- Using a drum grappler, place immediately in overpack containers:

  Leaking drums that contain sludges or semi-solids.

  Open drums that contain liquid or solid waste.

  Deteriorated drums that can be moved without rupture.

Table 11-3. Example of Lab Pack Content Classification System for Disposal

CLASSIFICATION	EXAMPLES
Inorganic acids	Hydrochloric Sulfuric
Inorganic bases	Sodium hydroxide Potassium hydroxide
Strong oxidizing agents	Ammonium nitrate Barium nitrate Sodium chlorate Sodium peroxide
Strong reducing agents	Sodium thiosulfate Oxalic acid Sodium sulphite
Anhydrous organics and organometallics	Tetraethyl lead Phenylmercuric chloride
Anhydrous inorganics and metal hydrides	Potassium hydride Sodium hydride Sodium metal Potassium
Toxic organics	PCBs Insecticides
Flammable organics	Hexane Toluene Acetone
Inorganics	Sodium carbonate Potassium chloride
Inorganic cyanides	Potassium cyanide Sodium cyanide Copper cyanide
Organic cyanides	Cyanoacetamide
Toxic metals	Arsenic Cadmium Lead Mercury

Buried Drums

- Prior to initiating subsurface excavation, use ground-penetrating systems to estimate the location and depth of the drums (see *Inspection* in this chapter).
- Remove soil with great caution to minimize the potential for drum rupture.
- Have a dry chemical fire extinguisher on hand to control small fires.

Opening

Drums are usually opened and sampled in place during site investigations. However, remedial and emergency operations may require a separate drum opening area (see *Staging* in this chapter). Procedures for opening drums are the same, regardless of where the drums are opened. To enhance the efficiency and safety of drum-opening personnel, the following procedures should be instituted.

- If a supplied-air respiratory protection system is used, place a bank of air cylinders outside the work area and supply air to the operators via airlines and escape SCBAs. This enables workers to operate in relative comfort for extended periods of time.
- Protect personnel by keeping them at a safe distance from the drums being opened. If personnel must be located near the drums, place explosion-resistant plastic shields between them and the drums to protect them in case of detonation. Locate controls for drum opening equipment, monitoring equipment, and fire suppression equipment behind the explosion-resistant plastic shield.
- If possible, monitor continuously during opening. Place sensors of monitoring equipment, such as colorimetric tubes, dosimeters, radiation survey instruments, explosion meters, organic vapor analyzers, and oxygen meters, as close as possible to the source of contaminants, i.e., at the drum opening.
- Use the following remote-controlled devices for opening drums:

  Pneumatically operated impact wrench to remove drum bungs.

  Hydraulically or pneumatically operated drum piercers (see Figure 11-2).

  Backhoes equipped with bronze spikes for penetrating drum tops in large-scale operations (see Figure 11-3).
- Do *not* use picks, chisels and firearms to open drums.
- Hang or balance the drum opening equipment to minimize worker exertion.
- If the drum shows signs of swelling or bulging, perform all steps slowly. Relieve excess pressure prior to opening and, if possible, from a remote location using such devices as a pneumatic impact wrench or hydraulic penetration device. If pressure must be relieved manually, place a barrier such as explosion-resistant plastic sheeting between the worker and bung to deflect any gas, liquid, or solids which may be expelled as the bung is loosened.

Two drums with rusted bungs were opened by backhoes with bronze spikes and now await sampling. Drum in foreground has been labelled "150" for sample documentation purposes.

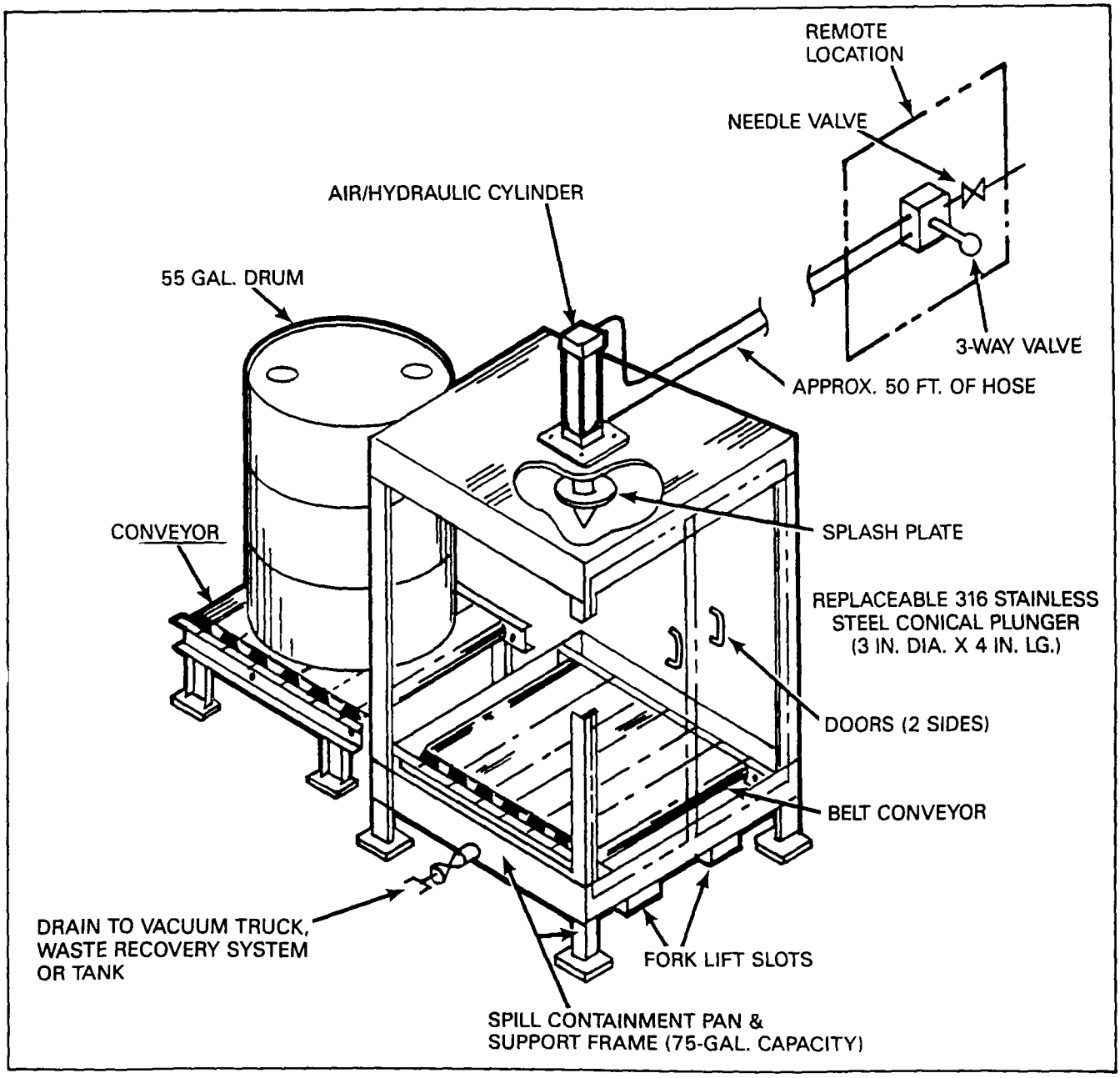

Figure 11-2. Air/Hydraulic-Operated Single-Drum Puncture Device.
Source: Reference [1].

- Open exotic metal drums and polyethylene or polyvinyl chloride-lined (PVC-lined) drums through the bung by removal or drilling. Exercise extreme caution when manipulating these containers.
- Do *not* open or sample individual containers within laboratory packs.
- Reseal open bungs and drill openings as soon as possible with new bungs or plugs to avoid explosions and/or vapor generation. If an open drum cannot be resealed, place the drum into an overpack. Plug any openings in pressurized drums with pressure-venting caps set to a 5-psi (pounds per square inch) release to allow venting of vapor pressure.
- Decontaminate equipment after each use to avoid mixing incompatible wastes.

Sampling

Drum sampling can be one of the most hazardous activities to worker safety and health because it often involves direct contact with unidentified wastes. Prior to collecting any sample, develop a sampling plan:

- Research background information about the waste.
- Determine which drums should be sampled.
- Select the appropriate sampling device(s) and container(s).

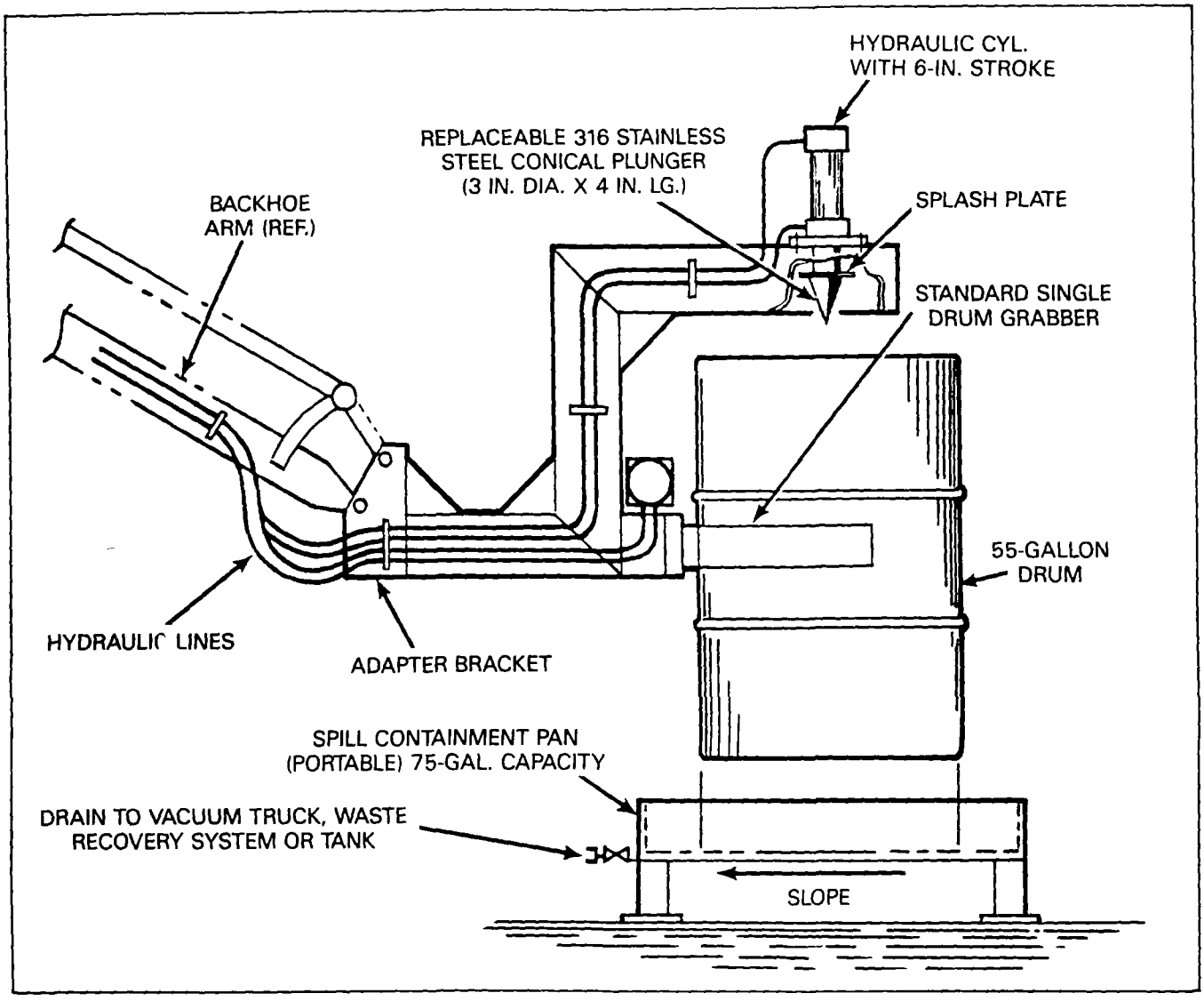

Figure 11-3. Backhoe-Mounted Drum Puncture Device. Source: Reference [1].

- Develop a sampling plan which includes the number, volume, and locations of samples to be taken.
- Develop Standard Operating Procedures for opening drums, sampling, and sample packaging and transportation. Some guidance in designing proper sampling procedures can be found in References [2] and [3].
- Have a trained health and safety professional determine, based on available information about the wastes and site conditions, the appropriate personal protection to be used during sampling, decontamination, and packaging of the sample.

When manually sampling from a drum, use the following techniques:

- Keep sampling personnel at a safe distance while drums are being opened. Sample only after opening operations are complete.
- Do *not* lean over other drums to reach the drum being sampled, unless absolutely necessary.
- Cover drum tops with plastic sheeting or other suitable noncontaminated materials to avoid excessive contact with the drum tops.
- *Never* stand on drums. This is extremely dangerous. Use mobile steps or another platform to achieve the height necessary to safely sample from the drums.
- Obtain samples with either glass rods or vacuum pumps. Do *not* use contaminated items such as discarded rags to sample. The contaminants may contaminate the sample and may not be compatible with the waste in the drum. Glass rods should be removed prior to pumping to minimize damage to pumps.

Characterization

The goal of characterization is to obtain the data necessary to determine how to safely and efficiently package and transport the wastes for treatment and/or disposal. If wastes are bulked, they must be sufficiently character-

SITE: _____
DRUM SIZE:
0 unknown ___
1 55 gal. ___
2 30 gal. ___
3 other ___
specify ___

DRUM NO. _____
DRUM OPENING:
0 unknown ___
1 ring top ___
2 closed top ___
3 open top ___
4 other ___
specify ___

SAMPLE NO. ___
DRUM TYPE:
0 unknown ___
1 metal ___
2 plastic ___
3 fiber ___
4 glass ___
5 other ___
specify ___

SCREENING RESULTS (AREA):
0 unknown ___
1 radioactive ___
2 acid/oxidizer ___
3 caustic/reducer/cyanide ___
4 flammable organic ___
5 nonflammable organic ___
6 peroxide ___
7 air or water reactive ___
8 inert ___

DRUM COLOR:	PRI	SEC
0 unknown		
1 cream	___	___
2 clear	___	___
3 black	___	___
4 white	___	___
5 red	___	___
6 green	___	___
7 blue	___	___
8 brown	___	___
9 pink	___	___
10 orange	___	___
11 yellow	___	___
12 gray	___	___
13 purple	___	___
14 amber	___	___
15 green-blue	___	___

DRUM CONTENTS COLOR:
0 unknown ___ ___
1 cream ___ ___
2 clear ___ ___
3 black ___ ___
4 white ___ ___
5 red ___ ___
6 green ___ ___
7 blue ___ ___
8 brown ___ ___
9 pink ___ ___
10 orange ___ ___
11 yellow ___ ___
12 gray ___ ___
13 purple ___ ___
14 amber ___ ___
15 green-blue ___ ___

DRUM CONDITION:
0 unknown ___
1 good ___
2 fair ___
3 poor ___

DRUM MARKING KEYWORD 1
_____
DRUM MARKING KEYWORD 2
_____
DRUM MARKING KEYWORD 3
_____

DRUM CONTENTS STATE:	PRI	SEC
0 unknown		
1 solid	___	___
2 liquid	___	___
3 sludge	___	___
4 gas	___	___
5 trash	___	___
6 dirt	___	___
7 gel	___	___

DRUM CONTENT AMOUNT:
0 unknown ___
1 full ___
2 part ___
3 empty ___

CHEMICAL ANALYSIS:	YES	NO
radiation	___	___
ignitable	___	___
water reactive	___	___
cyanide	___	___
oxidizer	___	___
organic vapor	_____ ppm	
pH	_____	

SCREENING DATA:

	YES	NO	
RADIOACTIVE	___	___	≥ 1 mR over background
ACIDIC	___	___	pH ≤ 3
CAUSTIC	___	___	pH ≥ 12
AIR REACTIVE	___	___	Reaction of ≥ 10°F temp. change
WATER REACTIVE	___	___	Reaction of ≥ 10°F temp. change
WATER SOLUBLE	___	___	Dissolves in water
WATER BATH OVA	___	___	Reading = ____ ≥ 10 ppm = Yes
COMBUSTIBLE	___	___	Catches fire when torched in water bath
HALIDE	___	___	Green flame when heated with copper
INORGANIC	___	___	WATER BATH OVA and COMBUSTIBLE = No
ORGANIC	___	___	INORGANIC = No
ALCOHOL/ALDEHYDE	___	___	WATER BATH OVA, WATER SOLUBLE and COMBUSTIBLE = Yes
CYANIDE	___	___	Draeger tube over water bath ≥ 2 ppm
FLAMMABLE	___	___	COMBUSTIBLE = Yes, and SETA flashpoint ≤ 140°F
OXIDIZER	___	___	Starch iodine paper shows positive reaction
INERT OR OTHER	___	___	Everything "No" except INORGANIC or ORGANIC

Figure 11-4. Sample Drum Characterization Sheet.
Source: EPA Region VII Emergency Planning and Response Branch.
(This figure is provided only as an example. Values were selected by EPA Region VII and should be modified as appropriate.)

ized to determine which of them can be safely combined (see *Bulking* later in this chapter). As a first step in obtaining these data, standard tests should be used to classify the wastes into general categories, including auto-reactives, water reactives, inorganic acids, organic acids, heavy metals, pesticides, cyanides, inorganic oxidizers, and organic oxidizers. In some cases, further analysis should be conducted to more precisely identify the waste materials. See Figure 11-4 for an example of a characterization sheet for drums.

When possible, materials should be characterized using an onsite laboratory. This provides data as rapidly as possible, and minimizes the time lag before appropriate action can be taken to handle any hazardous materials. Also, it precludes any potential problems associated with transporting samples to an offsite laboratory (e.g., sample packaging, waste incompatibility, fume generation).

If samples must be analyzed off site, samples should be packaged on site in accordance with DOT regulations (49 CFR) and shipped to the laboratory for analysis.

Staging

Although every attempt should be made to minimize drum handling, drums must sometimes be staged (i.e., moved in an organized manner to predesignated areas) to facilitate characterization and remedial action, and to protect

drums from potentially hazardous site conditions (e.g., movement of heavy equipment and high temperatures that might cause explosion, ignition, or pressure buildup). Staging involves a trade-off between the increased hazards associated with drum movement and the decreased hazards associated with the enhanced organization and accessibility of the waste materials.

The number of staging areas necessary depends on site-specific circumstances such as the scope of the operation, the accessibility of drums in their original positions, and the perceived hazards. Investigation usually involves little, if any, staging; remedial and emergency operations can involve extensive drum staging. The extent of staging must be determined individually for each site, and should always be kept to a minimum. Up to five separate areas have been used (see Figure 11-5):

- An *initial staging area* where drums can be (1) organized according to type, size, and suspected contents, and (2) stored prior to sampling.
- An *opening area* where drums are opened, sampled, and resealed. Locate this area a safe distance from the original waste disposal or storage site and from all staging areas to prevent a chain reaction in case of fire or explosion.
- During large-scale remedial or emergency tasks, a separate *sampling area* may be set up at some distance from the opening area to reduce the number of people present in the opening area, and to limit potential casualties in case of an explosion.
- A *second staging area*, also known as a holding area, where drums are temporarily stored after sampling pending characterization of their contents. Do *not* place unsealed drums with unknown contents in the second staging area in case they contain incompatible materials. (Either remove the contents or overpack the drum.)
- A *final staging area*, also known as a bulking area, where substances that have been characterized are bulked for transport to treatment or disposal facilities.

  Locate the final staging area as close as possible to the site's exit.

  Grade the area and cover it with plastic sheeting.

  Construct approximately 1-foot-high (0.3-m-high) dikes around the entire area.

  Segregate drums according to their basic chemical categories (acids, heavy metals, pesticides, etc.) as determined by characterization. Construct separate areas for each type of waste present to preclude the possibility of intermingling incompatible chemicals when bulking.

In all staging areas, stage the drums two wide in two rows per area (see Figure 11-6), and space these rows 7 to 8 feet (2 to 2.5 m) apart to enable movement of the drum handling equipment.

Bulking

Wastes that have been characterized are often mixed together and placed in bulk containers such as tanks or vacuum trucks for shipment to treatment or disposal facilities. This increases the efficiency of transportation. Bulking should be performed only after thorough waste characterization by trained and experienced personnel. The preliminary tests described earlier under *Characterization* provide only a general indication of the nature of the individual wastes. In most cases, additional sampling and analysis to further characterize the wastes, and compatibility tests (in which small quantities of different wastes are mixed together under controlled conditions and observed for signs of incompatibility such as vapor generation and heat of reaction) should be conducted. Bulking is performed at the final staging area using the following procedures:

Crushed drums awaiting landfill. Note the staging of drums on the left in a row two drums wide.

- Inspect each tank trailer and remove any residual materials from the trailer prior to transferring any bulked materials. This will prevent reactions between incompatible chemicals.
- To move hazardous liquids, use pumps that are properly rated (see National Fire Protection Association [NFPA] 70 Articles 500-503 and NFPA 497M) and that have a safety relief valve with a splash shield. Make sure the pump hoses, casings, fittings, and gaskets are compatible with the material being pumped.
- Inspect hose lines before beginning work to ensure that all lines, fittings, and valves are intact with no weak spots.
- Take special precautions when handling hoses as they often contain residual material that can splash or spill on the personnel operating the hoses. Protect personnel against accidental splashing. Protect lines from vehicular and pedestrian traffic.
- Store flammable liquids in approved containers.

Shipment

Shipment of materials to offsite treatment, storage, or disposal facilities involves the entry of waste hauling vehicles into the site. U.S. Department of Transportation (DOT) regulations (49 CFR Parts 171-178) and EPA regulations (40 CFR Part 263) for shipment of hazardous

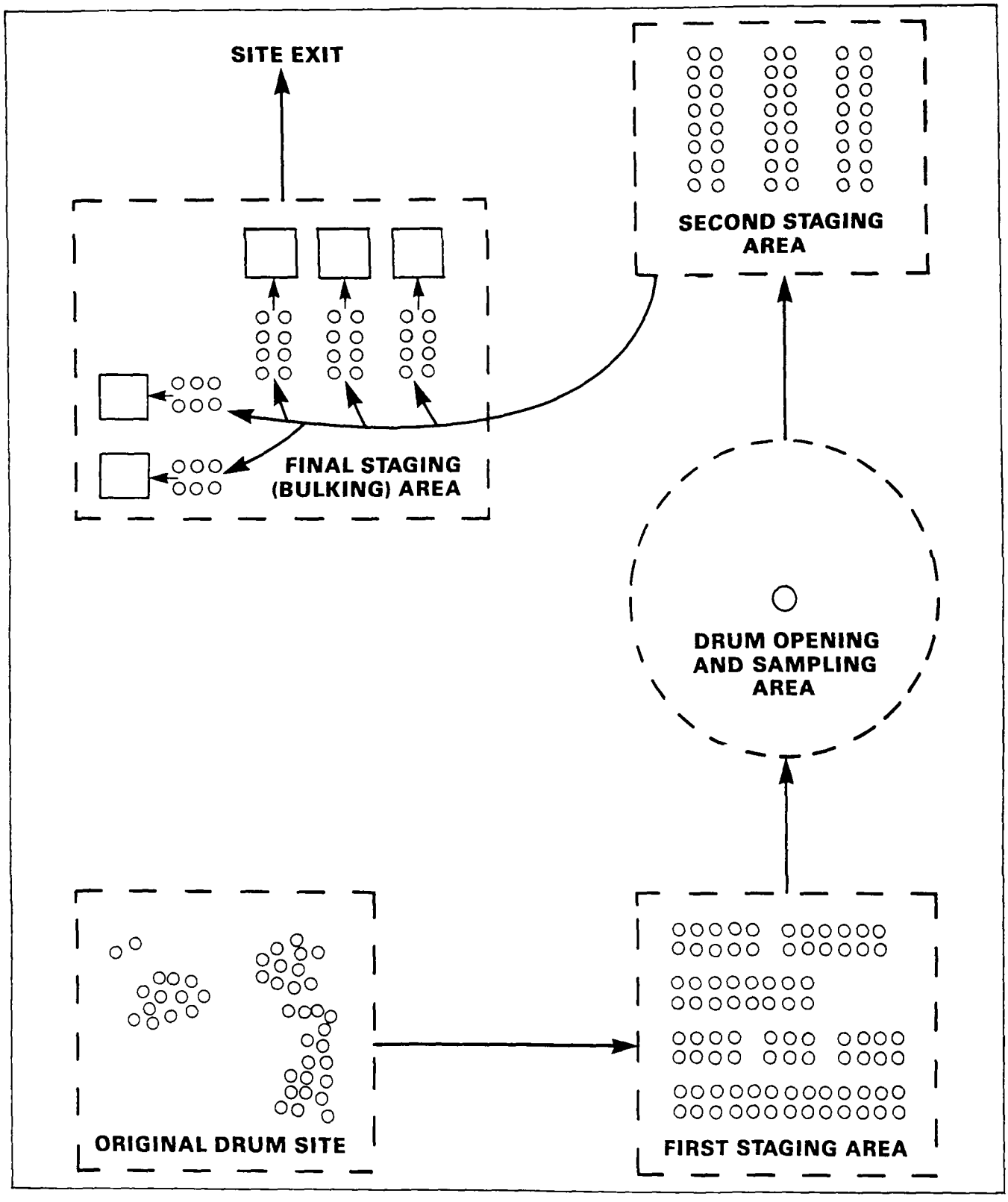

Figure 11-5. Possible Staging Areas at a Hazardous Waste Site.

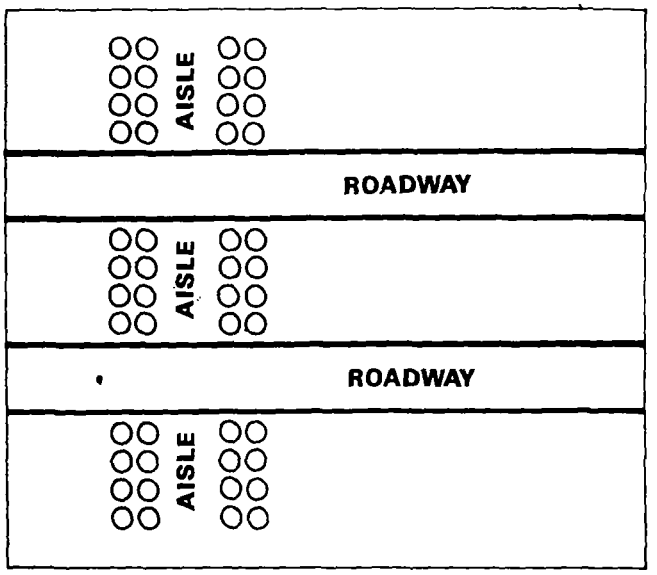

Figure 11-6. Sample Drum Staging Layout.
Source: Reference [1].

Single-stacked overpack drums awaiting transport off site. Worker suited in Level C personal protective equipment will spread a tarp over the drums to protect them during transport.

wastes must be complied with. The following guidelines can enhance the safety of these operations:

- Locate the final staging (bulking) area as close as possible to the site exit.
- Prepare a circulation plan that minimizes conflict between cleanup teams and waste haulers. Install traffic signs, lights, and other control devices as necessary.
- Provide adequate area for onsite and hauling vehicles to turn around. Where necessary, build or improve onsite roads.
- Stage hauling vehicles in a safe area until ready for loading with drivers remaining in cab. Minimize the time that drivers spend in hazardous areas.
- Outfit the driver with appropriate protective equipment.
- If drums are shipped, tightly seal the drums prior to loading. Overpack leaking or deteriorated drums prior to shipment. (Under most circumstances, overpack drums used for hazardous wastes may not be reused [49 CFR Part 173.3(c)]). Make sure that truck bed and walls are clean and smooth to prevent damage to drums. Do *not* double stack drums. Secure drums to prevent shifting during transport.
- Keep bulk solids several inches below the top of the truck container. Cover loads with a layer of clean soil, foam, and/or tarp. Secure the load to prevent shifting or release during transport.
- Weigh vehicles periodically to ensure that vehicle and road weight limits are not exceeded.
- Decontaminate vehicle tires prior to leaving the site to ensure that contamination is not carried onto public roads.
- Check periodically to ensure that vehicles are not releasing dust or vapor emissions off site.
- Develop procedures for responding quickly to offsite vehicle breakdown and accidents to ensure minimal public impact.

Special Case Problems

Tanks and Vaults

For tanks and vaults, which are often found on hazardous waste sites, the following procedures are recommended:

- In general, when opening a tank or vault follow the same procedures as for a sealed drum. If necessary, vent excess pressure if volatile substances are stored. Place deflecting shields between workers and the opening to prevent direct contamination of workers by materials forced out by pressure when the tank is opened.
- Guard manholes or access portals to prevent personnel from falling into the tank.
- Identify the contents through sampling and analysis. If characterization indicates that the contents can be safely moved with the available equipment, vacuum them into a trailer for transportation to a disposal or recycling facility.
- Empty and decontaminate the tank or vault before disposal.
- If it is necessary to enter a tank or vault (i.e., confined spaces) for any reason (e.g., to clean off solid materials or sludges on the bottom or sides of the tank or vault), the following precautions should be taken [4]:

  Ventilate thoroughly prior to entry.

  Disconnect connecting pipelines.

  Prior to entry, take air samples to prove the absence of flammable or other hazardous vapors and to demonstrate that adequate levels of oxygen exist.

Equip the entry team with appropriate respiratory protection, protective clothing, safety harnesses, and ropes.

Equip a safety observer with appropriate respiratory protection, protective clothing, a safety harness, and rope.

Establish lifeline signals prior to entry so that the worker and safety observer can communicate by tugs on the rope.

Have an additional person available in the immediate vicinity to assist the safety observer if needed.

Instruct the safety observer not to enter the space until additional personnel are on scene.

Vacuum Trucks

- Wear appropriate protective clothing and equipment when opening the hatch.
- If possible, use mobile steps or suitable scaffolding consistent with 29 CFR Part 1910, Subpart D. Avoid climbing up the ladder and walking across the tank catwalk.
- If the truck must be climbed, raise and lower equipment and samples in carriers to enable workers to use two hands while climbing.
- If possible, sample from the top of the vehicle. If it is necessary to sample from the drain spigot, take steps to prevent spraying of excessive substances. Have all personnel stand off to the side. Have sorbent materials on hand in the event of a spill.

Elevated Tanks

In general, observe the safety precautions described for vacuum trucks. In addition:

- Use a safety line and harness.
- Maintain ladders and railings in accordance with OSHA requirements (29 CFR Part 1910, Subpart D).

Compressed Gas Cylinders

- Obtain expert assistance in moving and disposing of compressed gas cylinders.
- Handle compressed gas cylinders with extreme caution. The rupture of a cylinder may result in an explosion, and the cylinder may become a dangerous projectile.
- Record the identification numbers on the cylinders to aid in characterizing their contents.

Ponds and Lagoons

- Drowning is a very real danger for personnel suited in protective equipment because the weight of protective equipment increases an individual's overall density and severely impairs their swimming ability. Where there is danger of drowning, provide necessary safety gear such as lifeboats, tag lines, railings, nets, safety harnesses, and flotation gear.
- Wherever possible, stay on shore. Avoid going out over the water.
- Be aware that some solid wastes may float and give the appearance of solid cracked mud. Caution should be exercised when working along shorelines.

References

1. Mayhew, Joe J.; G.M. Sodear; and D.W. Carroll. 1982. A Hazardous Waste Site Management Plan. Chemical Manufacturers Association, Inc., Washington DC.

2. deVera, E.R.; B.P. Simmons; R.D. Stephens; and D.L. Storm. 1980. Samplers and Sampling Procedures for Hazardous Waste Streams. EPA-600/2-80-018. U.S. Environmental Protection Agency, Cincinnati, OH.

3. U.S. EPA. 1984. Characterization of Hazardous Waste Sites—A Methods Manual: Volume II. Available Sampling Methods. Second edition. EPA 600/4-84-076.

4. NIOSH. 1979. Criteria for a Recommended Standard: Working in Confined Spaces. NIOSH No. 80-106. Also available from U.S. Government Printing Office (#017-033-00353-0) and National Technical Information Service (PB-80-183015).