OPERATION & MAINTENANCE MANUAL
GROUNDWATER TREATMENT PLANT

US EPA RECORDS CENTER REGION 5
446689

Volume 4A of 11

AS-BUILTS FOR THE GROUNDWATER TREATMENT PLANT UPGRADES

AMERICAN CHEMICAL SERVICE NPL SITE
GRIFFITH, INDIANA

MWH File No.: 2090601

Prepared For:

American Chemical Service NPL Site RD/RA Executive Committee
Griffith, Indiana

Prepared By:

MWH
27755 Diehl Road, Suite 300
Warrenville, Illinois 60555

July 2002

OPERATION & MAINTENANCE MANUAL
GROUNDWATER TREATMENT PLANT

Volume 4A of 11

AS-BUILTS FOR THE GROUNDWATER TREATMENT PLANT UPGRADES

AMERICAN CHEMICAL SERVICE NPL SITE
GRIFFITH, INDIANA

MWH File No.: 2090601

Prepared For:

American Chemical Service NPL Site RD/RA Executive Committee
Griffith, Indiana

OPERATION & MAINTENANCE MANUAL FOR THE GROUNDWATER TREATMENT PLANT

AMERICAN CHEMICAL SERVICE NPL SITE GRIFFITH, INDIANA

VOLUME 1	Operations and Maintenance Plan/Contingency Plan
VOLUME 2	Performance Standard Verification Plans A. PGCS PSVP and QAPP B. BWES PSVP and QAPP
VOLUME 3	Construction Completion Report/Completion of Remedial Action Report
VOLUME 4	As-builts for the PGCS and BWES
VOLUME 4A	***As-Builts for the GWTP Upgrades***
VOLUME 5	Equipment Manufacturer's Manual – Instrumentation and Control Equipment
VOLUME 6	Equipment Manufacturer's Manuals
VOLUME 7	Equipment Manufacturer's Manuals
VOLUME 8	Equipment Manufacturer's Manual – UV Oxidation Unit
VOLUME 9	Equipment Manufacturer's Manuals - GWTP Upgrade Equipment
VOLUME 10	Equipment Manufacturer's Manuals – Activated Sludge Plant and Catalytic Oxidizer/Scrubber
VOLUME 11	PLC Programming Logic

VOLUME 4A OF 11

TABLE OF CONTENTS

SECTION

1 – AS-BUILT DRAWINGS FROM GROUNDWATER TREATMENT PLANT (GWTP) UPGRADES

Sheet 1	Symbols Sheet
Sheet 2	Groundwater Treatment Plant Process Block Diagram
Sheet 3-1	Piping and Instrumentation Diagram
Sheet 3-2	Piping and Instrumentation Diagram
Sheet 3-3	Piping and Instrumentation Diagram
Sheet 3-4	Piping and Instrumentation Diagram
Sheet 3-5	Piping and Instrumentation Diagram
Sheet 3-6	Piping and Instrumentation Diagram
Sheet 3-7	Piping and Instrumentation Diagram
Sheet 3-8	Piping and Instrumentation Diagram
Sheet 4	Groundwater Treatment Plant Building Layout
Sheet 5	Hydraulic Profile – Main Treatment Train
Sheet 6	Hydraulic Profile – Sludge Handling System
Sheet 9	Foundation Plan
Sheet 10	Activated Sludge Plant Foundation Plan
Sheet 11-1	Structural Concrete Details
Sheet 11-2	Structural Concrete Details
Sheet 11-3	Structural Concrete Details
Sheet 11-4	Structural Concrete Details
Drawing 991076-1	Secondary Containment Wall Details
Drawing 991076-2	Secondary Containment Liner Details

2 - AS-BUILT DRAWINGS FROM APPROVED CONSTRUCTION COMPLETION REPORTS (CCR)

a. Separation Barrier Wall CCR

Figure 1	Off-Site Area Separation Barrier Wall Alignment As-Built

TMK/PJV/jmf
J:\209\0601 ACS\0116 GWTP\6010116a054.doc

1

1 – AS-BUILT DRAWINGS FROM GROUNDWATER TREATMENT PLANT (GWTP) UPGRADES

CONCRETE (PLAN AND SECTION)
AGGREGATE BASE (PLAN AND SECTION)
BRICK (PLAN AND SECTION)
CMU (PLAN AND SECTION)
STEEL/METAL/FRP (SMALL SCALE SECTION)
CHECKERPLATE OR SOLID FRP GRATING (PLAN)
CHECKERPLATE (SECTION)
GRATING (PLAN)
GRATING OR SOLID FRP GRATING (SECTION)
SAFETY GRATING (PLAN)
SAFETY GRATING (SECTION)
RAILING (PLAN)
STRUCTURE OR FACILITY
FUTURE STRUCTURE OR FACILITY
OPENING
SPAN ARROW
EARTH
PIPE IN SECTION
CL OR ℄ — CENTERLINE
PL OR ℘ — PROPERTY LINE
R/W — RIGHT-OF-WAY LINE
ESMT — EASEMENT LINE
— — G — — UTILITIES

G	GAS LINE (SIZE NOTED WHERE LARGER THAN 3-INCH)
HP GAS	HIGH PRESSURE GAS
2" W	WATER LINE (SIZE INDICATED)
TEL	UNDERGROUND TELEPHONE
HVAC	HIGH VOLTAGE AC POWER LINE
27" SS	SANITARY SEWER (SIZE INDICATED)
OHW	OVERHEAD WIRES
27" SD	STORM DRAIN (SIZE INDICATED)
FOC	FIBER OPTIC CABLE
COMM	COMMUNICATIONS CABLE

FENCE (NEW)
FENCE (EXISTING)
WATER COURSE
TRAIL OF DIRT ROAD
125 — MAJOR CONTOUR LINE (NEW)
125 — MAJOR CONTOUR LINE (NEW)
125 — MAJOR CONTOUR LINE (EXISTING)
VEGETATION

PIPING IDENTIFICATION

MATERIAL
2" PVC
PIPE DIAMETER

EQUIPMENT IDENTIFICATION
SEE EQUIPMENT SCHEDULE/SPECIFICATIONS

EQUIPMENT DESIGNATOR
ME-1
EQUIPMENT NUMBER

12x24 — DUCT (FIRST DIMENSION DUCT SIDE SHOWN, SECOND DIMENSION DUCT SIDE NOT SHOWN)
24x12 — SUPPLY OR OUTSIDE AIR DUCT (FIRST DIMENSION, DUCT WIDTH)
24x12 — EXHAUST OR RETURN AIR DUCT (FIRST DIMENSION, DUCT WIDTH)
SIZE / CFM — CEILING SUPPLY DIFFUSER (SIZE IN INCHES)
SIZE / CFM — CEILING RETURN OR EXHAUST AIR GRILLE OR REGISTER (SIZE IN INCHES, WIDTH X HEIGHT)
SIZE / CFM — EXHAUST OR RETURN AIR GRILLE OR R REGISTER (SIZE IN INCHES, WIDTH X HEIGHT)
SIZE / CFM — SUPPLY GRILLE OR REGISTER (SIZE IN INCHES, WIDTH X HEIGHT)
AIR TURNING VANES IN DUCT
DD — DEFLECTING DAMPER
FHC — FIRE HOSE CABINET
FE — FIRE EXTINGUISHER
UNIT HEATER
BALL VALVE
PRESSURE REGULATING VALVE
PRESSURE REGULATOR
M, P — MOTOR OPERATOR FOR VALVES (M - ELECTRIC, P - PNEUMATIC)
T — TEMPERATURE CONTROL VALVE
S — SOLENOID VALVE
MULTIPORT VALVE - 3 WAY
MULTIPORT VALVE - 4 WAY
FLOAT OPERATED VALVE
NEEDLE VALVE
PRESSURE RELIEF VALVE
ANGLE VALVE
INJECTOR OR EDUCTOR
AIR VACUUM AND AIR RELEASE ASSEMBLY
WATER SURFACE
STATIC MIXER
FLOW METER
SIGHT GLASS
S — PRESSURE SWITCH
S — PRESSURE SWITCH WITH DIAPHRAGM SEAL

PP — POWER POLE
PIPELINE (CIVIL SHEETS) 24" DIA AND LARGER
PIPELINE (CIVIL SHEETS) 12" DIA TO 20" DIA
PIPELINE (CIVIL SHEETS) 10" DIA AND SMALLER
ISOLATION VAULT & MAJOR BLOWOFF VAULT (IN PLAN)
FH — FIRE HYDRANT
MH — MANHOLE
PCOTG — PRESSURE CLEANOUT TO GRADE
COTG — CLEANOUT TO GRADE
REDUCER OR INCREASER (PROVIDE SIZE)
HUB DRAIN
FLOOR DRAIN
FLOOR SINK
CHANGE IN PIPING MATERIAL
BACKWATER VALVE
BACKFLOW PREVENTER
STOP GATE
SLIDE GATE
SLUICE GATE
GATE VALVE, BURIED WITH VALVE BOX
BUTTERFLY VALVE, BURIED WITH VALVE BOX
ECCENTRIC PLUG VALVE, BURIED WITH VALVE BOX
LUBRICATED PLUG VALVE, BURIED WITH VALVE BOX
GATE VALVE
BUTTERFLY VALVE
ECCENTRIC PLUG VALVE
LUBRICATED PLUG VALVE
GLOBE VALVE
G — PRESSURE GAUGE
G — PRESSURE GAUGE WITH DIAPHRAGM SEAL

STANDARD DETAIL IDENTIFICATION

DETAIL NUMBER
C-302
DETAIL C-302

STANDARD DETAILS ARE LOCATED ON DISCIPLINE GENERAL SHEETS, IN NUMERICAL ORDER

FLANGED FITTING
MECHANICAL-TYPE FITTING (GROOVED)
SCREWED, WELDED, SOCKET-WELD, BELL AND SPIGOT OR HUBLESS FITTING
SLEEVE TYPE COUPLING
FLANGED ADAPTER - SET SCREW TYPE
MECHANICAL TYPE COUPLING
FLEXIBLE COUPLING
UNION
QUICK DISCONNECT COUPLER
CAPPED END OR PLUGGED END
BLIND FLANGE
STRAINER
DRAIN
FLOW TUBE
M M — MAGNETIC METER
D M — TURBIDITY METER
P M — PROPELLER METER
ORIFICE PLATE AND FLANGES
T — CONDENSATE TRAP
PIPE SUPPORT (IN PLAN)
M — CENTRIFUGAL PUMP
VFD — VARIABLE FREQUENCY DRIVE PUMP
DOUBLE DIAPHRAGM PUMP
BLOWER
METERING PUMP
BOUNDARY FOR PACKAGE EQUIPMENT

SECTION AND DETAIL IDENTIFICATION

SECTION IDENTIFICATION

SECTION LETTER
A
3S-5
SHEET ON WHICH SECTION IS SHOWN
SECTION A
3S-1
SHEET ON WHICH SECTION IS CUT

SECTION AND DETAIL IDENTIFICATION

DETAIL IDENTIFICATION

DETAIL NUMBER
3
2M-3
SHEET ON WHICH DETAIL IS SHOWN
DETAIL 3
2M-2
SHEET ON WHICH DETAIL IS CALLED-OUT

CAL — LOW pH ALARM
CAH — HIGH pH ALARM
LAH — HIGH LEVEL ALARM
LAL — LOW LEVEL ALARM
RUN — RUN LIGHT
DIC — TURBIDITY INDICATOR
DAH — HIGH TURBIDITY ALARM
FIT — FLOW INDICATOR CONTROLLER
HAH — HIGH TORQUE ALARM
LSL — LEVEL SWITCH - LOW
LSH — LEVEL SWITCH - HIGH
LSHH — LEVEL SWITCH - HIGH HIGH
KS — TIMER SWITCH
PROGRAMABLE LOGIC CONTROL
HS — HAND SWITCH
DS — ALTERNATOR SWITCH
FS — FLOW SWITCH
LE — LEVEL METER
LIT — LEVEL CONTROLLER
CE — pH PROBE
I — INTERLOCK
1 — INTERLOCK CONNECTION
PROCESS CONTROL CONNECTION
AUTO — AUTOMATIC SWITCH
AIR SUPPLY LINE
HOA — HAND/OFF/AUTO
ON/OFF — ON/OFF

DISCIPLINE SPECIFIC SYMBOLS ARE SHOWN ON THE DISCIPLINE GENERAL DRAWINGS.

FOR WELDING SYMBOLS USE AMERICAN WELDING SOCIETY STANDARD SYMBOLS.

REV 042898

REV	DATE	BY	DESCRIPTION

SCALE: NONE

WARNING: 0 ½ 1 — IF THIS BAR DOES NOT MEASURE 1" THEN DRAWING IS NOT TO SCALE

DESIGNED RAA
DRAWN RC
CHECKED RAA

SUBMITTED BY
ROBERT A. ADAMS (PROJECT MANAGER'S NAME) LICENSE NO. DATE
(COMPANY OFFICER'S NAME) LICENSE NO. DATE

MWH
MONTGOMERY WATSON HARZA

AMERICAN CHEMICAL SERVICE, INC.
GROUNDWATER TREATMENT SYSTEM UPGRADE
GRIFFITH, INDIANA

SYMBOLS SHEET

SHEET 1

Plot Date: 3/20/99 Job No: MW Job # Filer: J:/209/60J/0116 gwtp/drawings/asbuilts/acssymb.dgn

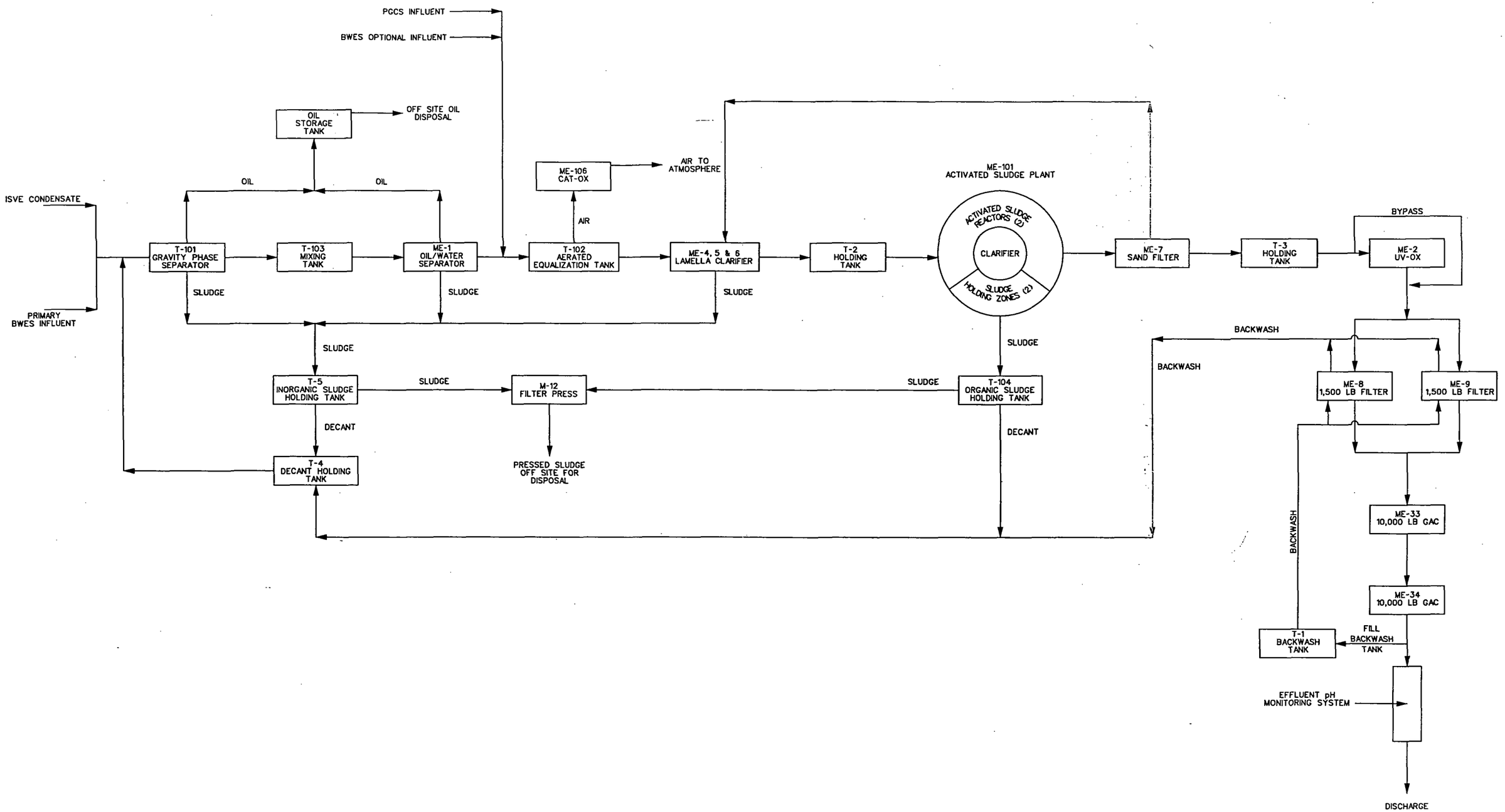

NOTES
ONLY PRIMARY PROCESS PIPES ARE SHOWN

REV	DATE	BY	DESCRIPTION
1	1/31/02	RAA	AS-BUILT AS OF 1/31/02

SCALE: NOT TO SCALE

WARNING: 0 ½ 1 — IF THIS BAR DOES NOT MEASURE 1" THEN DRAWING IS NOT TO SCALE

DESIGNED RAA
DRAWN RC
CHECKED *

SUBMITTED BY
(PROJECT MANAGER'S NAME) LICENSE NO. DATE
(COMPANY OFFICER'S NAME) LICENSE NO. DATE

MWH
MONTGOMERY WATSON HARZA

AMERICAN CHEMICAL SERVICE, INC.
GRIFFITH, INDIANA
OPERATION & MAINTENANCE MANUAL

GROUNDWATER TREATMENT PLANT
PROCESS BLOCK DIAGRAM

SHEET 2

Job No: MW Job # J:\209\0801 ACS\0118 GWTP\Drawings\Asbuilts\209801ace116b.dgn Plot Date: 09-JUL-2 14:54

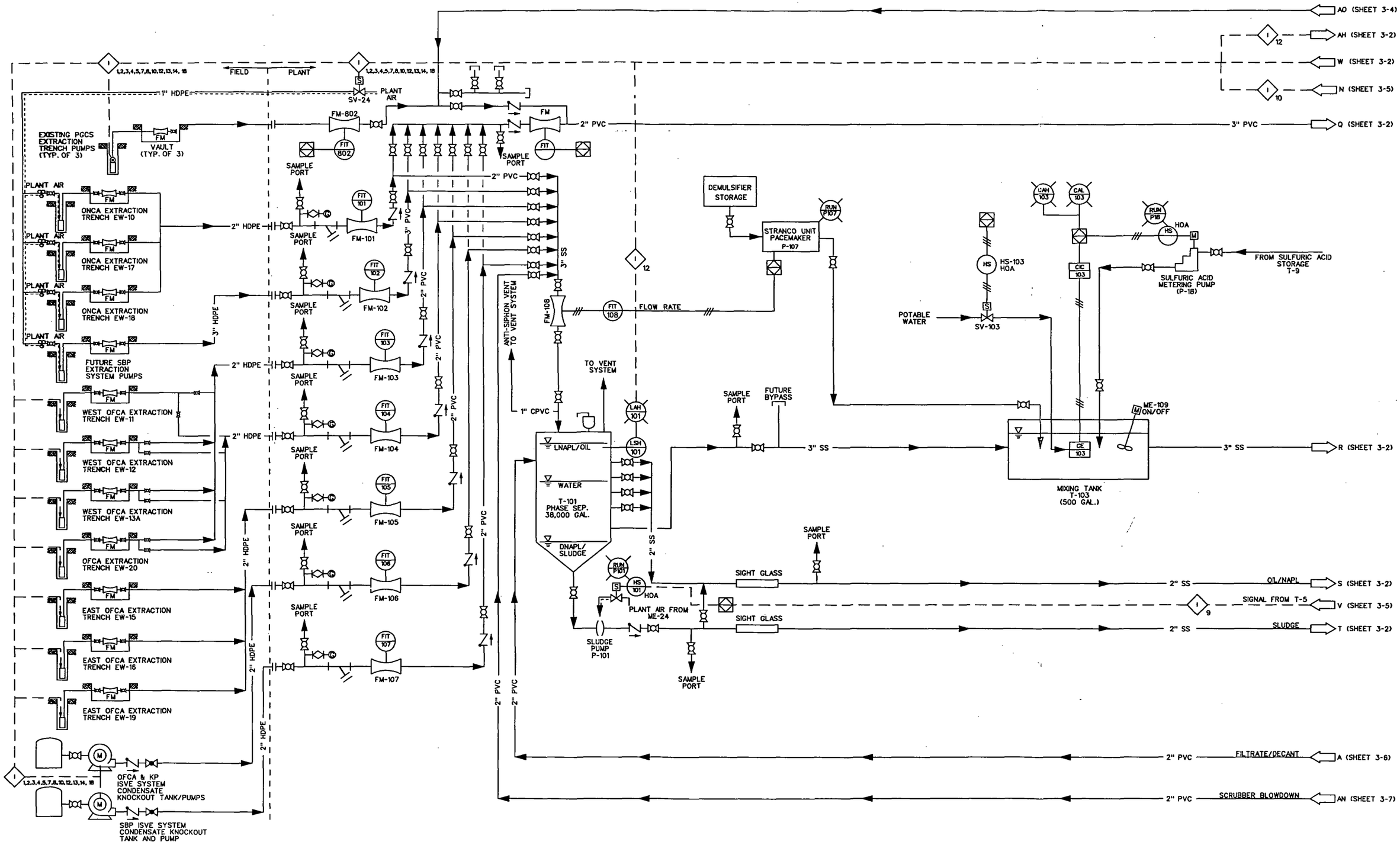

REV	DATE	BY	DESCRIPTION
1	1/31/02	RAA	AS-BUILT AS OF 1/31/02

SCALE: NONE

WARNING: 0 ½ 1 — IF THIS BAR DOES NOT MEASURE ½" THEN DRAWING IS NOT TO SCALE

DESIGNED RAA
DRAWN RC
CHECKED RAA

SUBMITTED BY
ROBERT A. ADAMS (PROJECT MANAGER'S NAME) LICENSE NO. DATE
(COMPANY OFFICER'S NAME) LICENSE NO. DATE

MWH
MONTGOMERY WATSON HARZA

AMERICAN CHEMICAL SERVICE, INC.
GROUNDWATER TREATMENT SYSTEM UPGRADE
GRIFFITH, INDIANA

PIPING & INSTRUMENTATION DIAGRAM

SHEET 3-1

Job No: MW Job # J-/209/0601 ACS/016 GWTP/drawings/Abuilts/aca29p01A.dgn Plot Date:

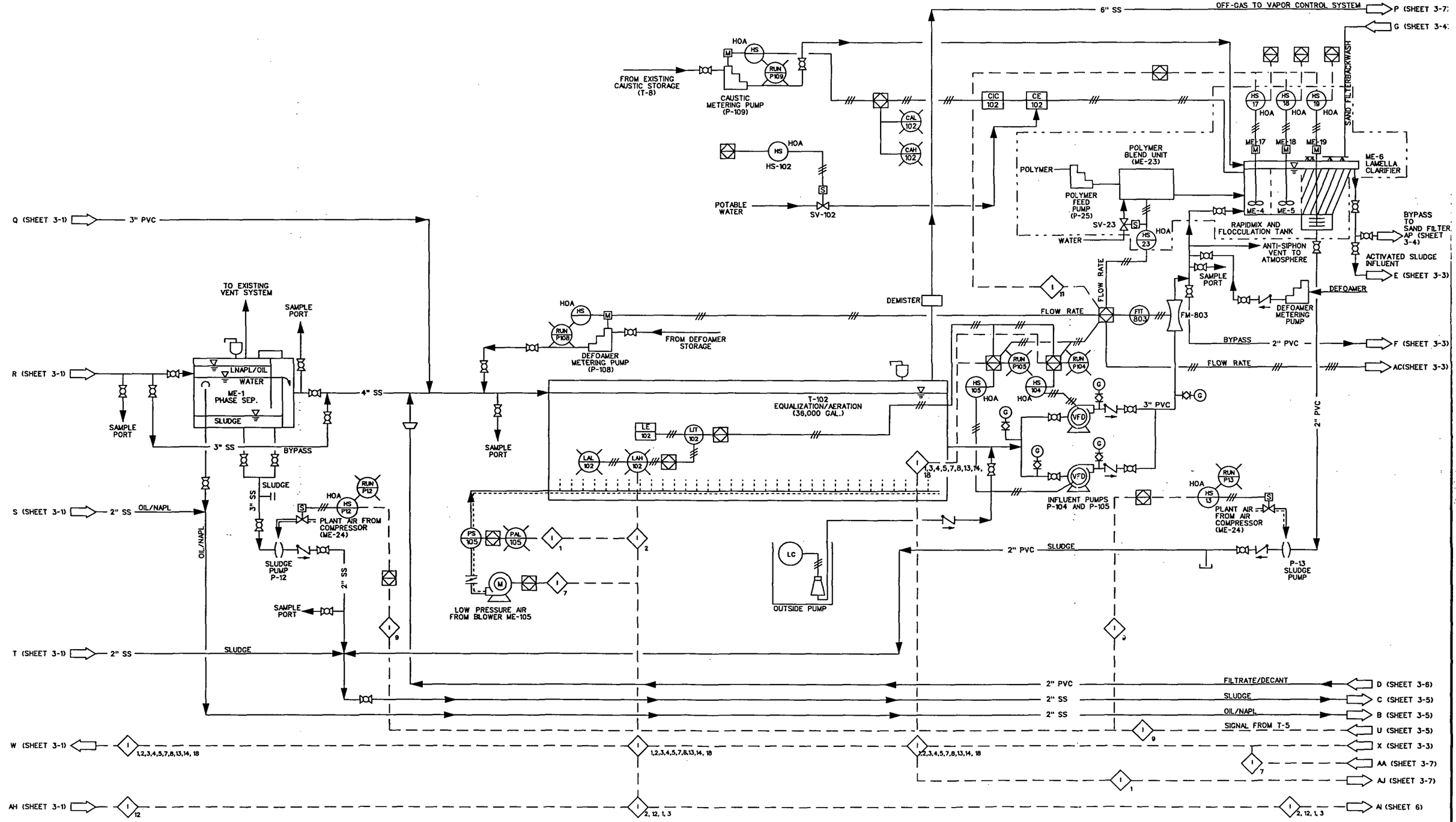

REV	DATE	BY	DESCRIPTION
1	1/31/02	RAA	AS-BUILT AS OF 1/31/02

SCALE: NONE

WARNING: 0 ½ 1 — IF THIS BAR DOES NOT MEASURE 1" THEN DRAWING IS NOT TO SCALE

DESIGNED RAA
DRAWN RC
CHECKED RAA

SUBMITTED BY
ROBERT A. ADAMS (PROJECT MANAGER'S NAME) LICENSE NO. DATE
(COMPANY OFFICER'S NAME) LICENSE NO. DATE

MWH
MONTGOMERY WATSON HARZA

AMERICAN CHEMICAL SERVICE, INC.
GROUNDWATER TREATMENT SYSTEM UPGRADE
GRIFFITH, INDIANA

PIPING & INSTRUMENTATION DIAGRAM

SHEET 3-2

Job No: MW Job # File: J:/209/0601 ACS/0116 GWTP/drawings/Asbuilts/acs29p02A.dgn Plot Date:

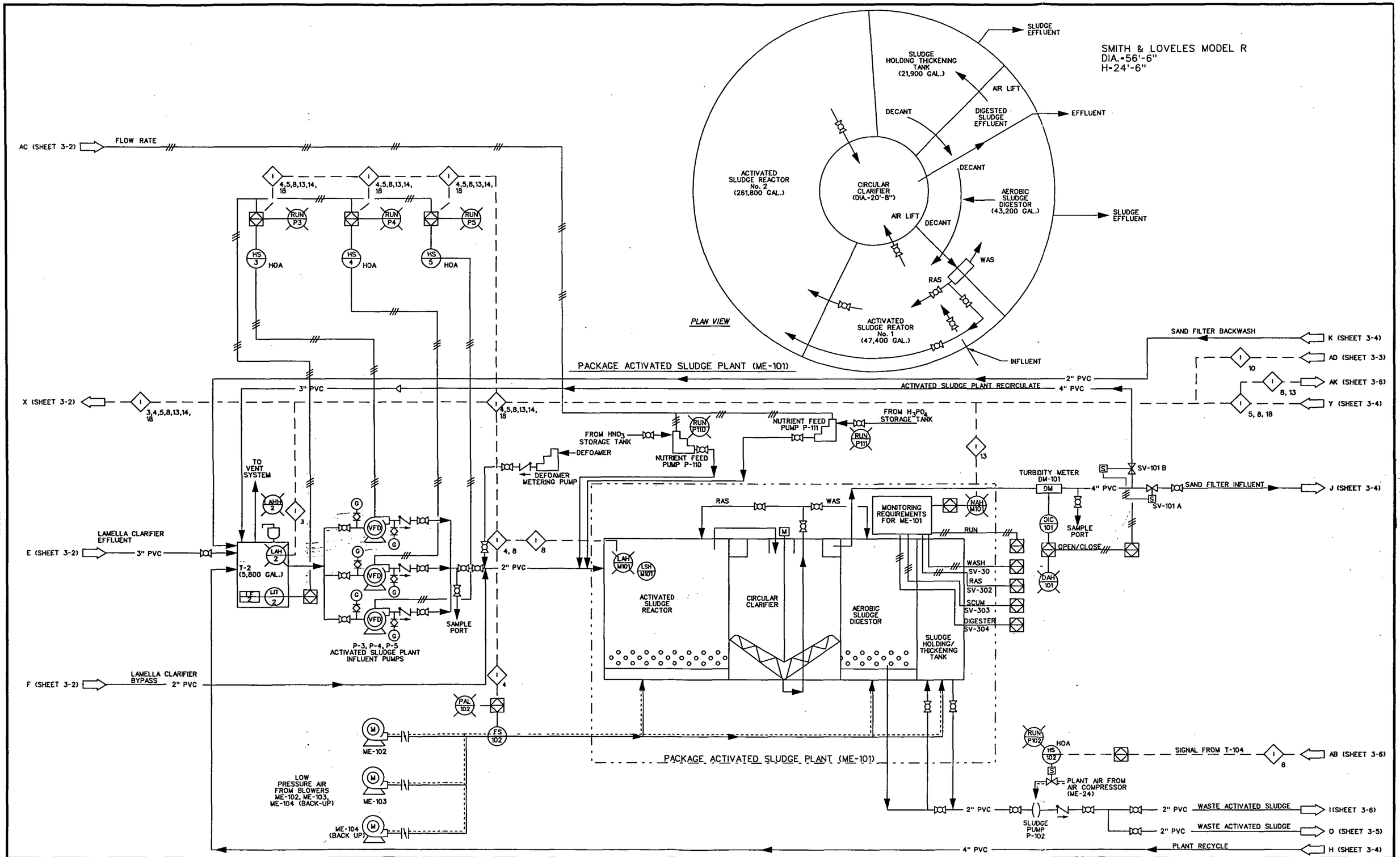

REV	DATE	BY	DESCRIPTION
1	1/31/02	RAA	AS-BUILT AS OF 1/31/02

SCALE: NONE

WARNING: 0 ½ 1 — IF THIS BAR DOES NOT MEASURE 1" THEN DRAWING IS NOT TO SCALE

DESIGNED RAA
DRAWN RC
CHECKED RAA

SUBMITTED BY
ROBERT A. ADAMS (PROJECT MANAGER'S NAME) LICENSE NO. DATE
(COMPANY OFFICER'S NAME) LICENSE NO. DATE

MWH
MONTGOMERY WATSON HARZA

AMERICAN CHEMICAL SERVICE, INC.
GROUNDWATER TREATMENT SYSTEM UPGRADE
GRIFFITH, INDIANA

PIPING & INSTRUMENTATION DIAGRAM

SHEET 3-3

Plot Date:
File: J:/209/061 acs/116 gwtp/drawings/asbuilts/acs29p03A.dgn
Job No: 209601

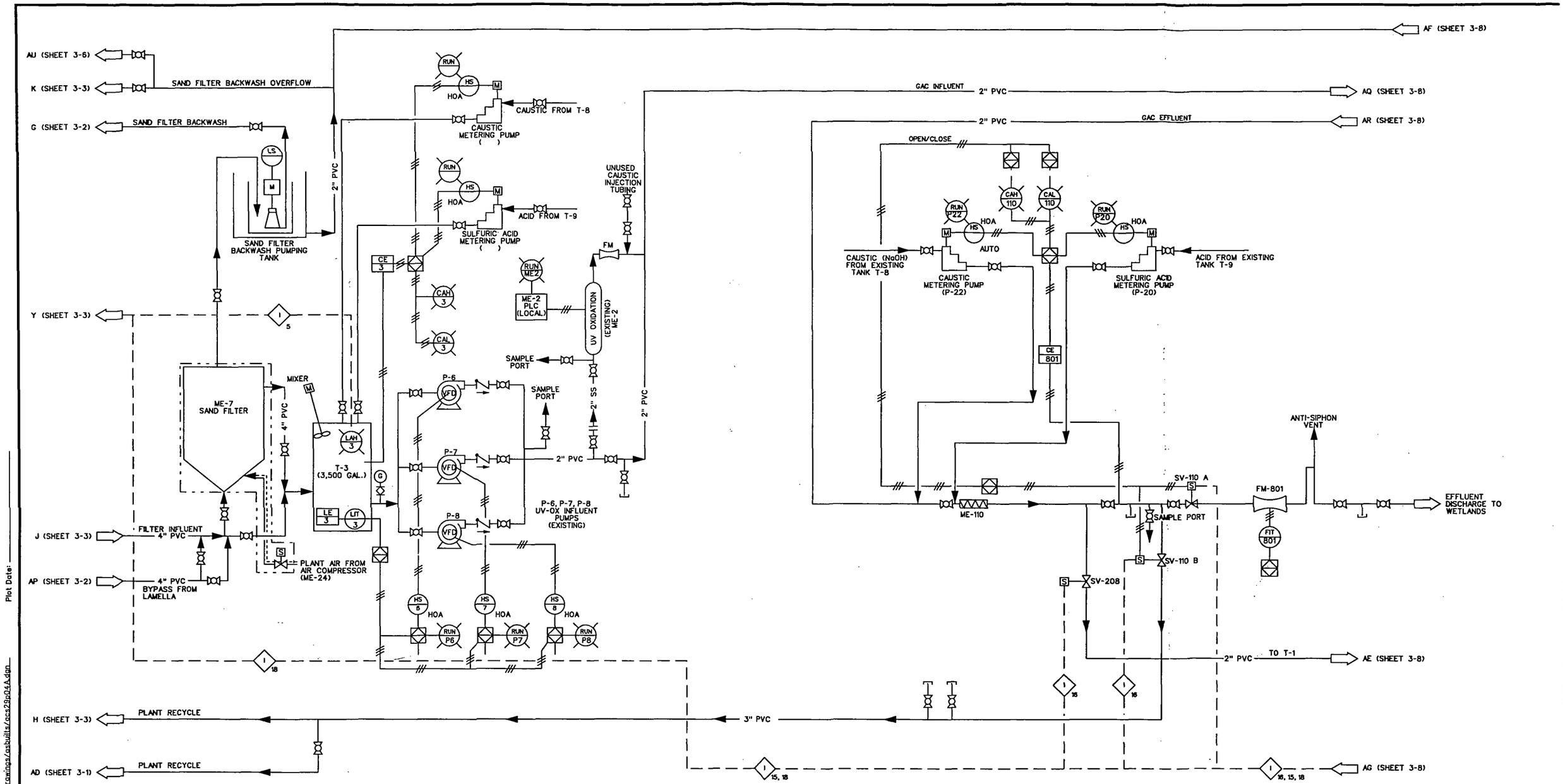

REV	DATE	BY	DESCRIPTION
1	1/31/02	RAA	AS-BUILTS AS OF 1/31/02

SCALE: NONE

WARNING: 0 ½ 1 — IF THIS BAR DOES NOT MEASURE 1" THEN DRAWING IS NOT TO SCALE

DESIGNED RAA
DRAWN RC
CHECKED RAA

SUBMITTED BY
ROBERT A. ADAMS (PROJECT MANAGER'S NAME) LICENSE NO. DATE
(COMPANY OFFICER'S NAME) LICENSE NO. DATE

MWH
MONTGOMERY WATSON HARZA

AMERICAN CHEMICAL SERVICE, INC.
GROUNDWATER TREATMENT SYSTEM UPGRADE
GRIFFITH, INDIANA

PIPING & INSTRUMENTATION DIAGRAM

SHEET 3-4

Job No: MW Job #
File: J:/209/061ACS/0116_GWTP/drawings/asbuilts/acs29p04A.dgn
Plot Date:

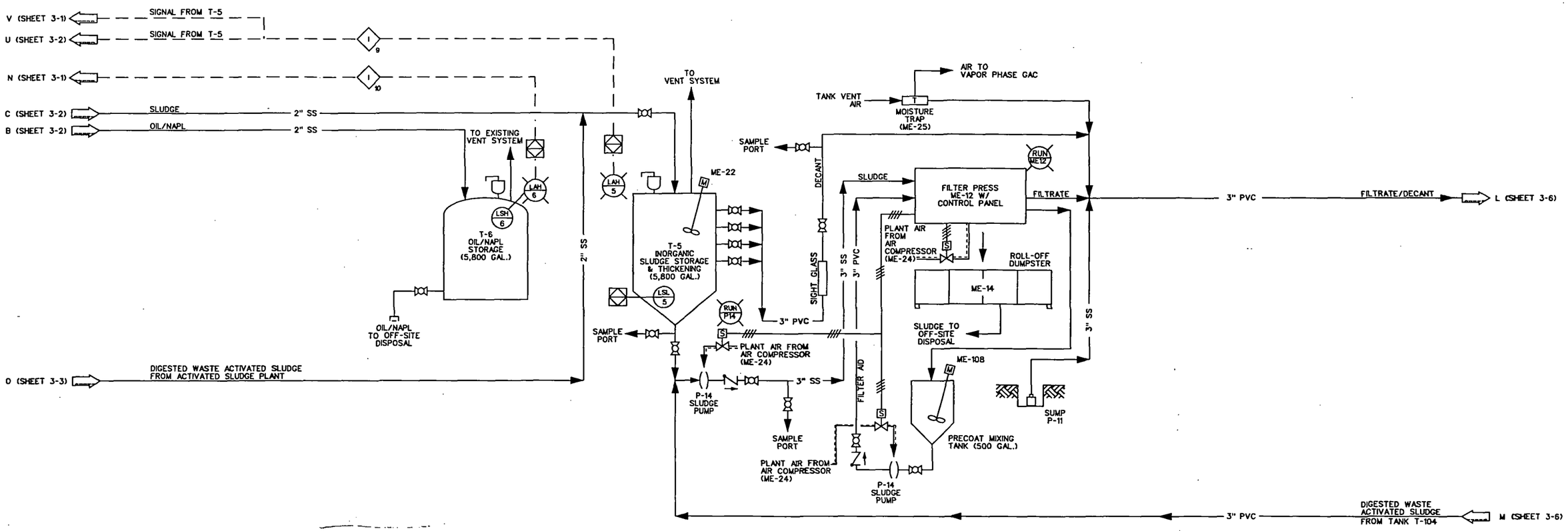

REV	DATE	BY	DESCRIPTION
1	1/31/02	RAA	AS-BUILT AS OF 1/31/02

SCALE: NONE

WARNING: 0 ½ 1 — IF THIS BAR DOES NOT MEASURE 1" THEN DRAWING IS NOT TO SCALE

DESIGNED RAA
DRAWN RC
CHECKED RAA

SUBMITTED BY
ROBERT A. ADAMS (PROJECT MANAGER'S NAME) LICENSE NO. DATE
(COMPANY OFFICER'S NAME) LICENSE NO. DATE

MWH
MONTGOMERY WATSON HARZA

AMERICAN CHEMICAL SERVICE, INC.
GROUNDWATER TREATMENT SYSTEM UPGRADE
GRIFFITH, INDIANA

PIPING & INSTRUMENTATION DIAGRAM

SHEET 3-5

Job No: 209601 File: J1/209/061 ACS/116 GWTP/drawings/asbuilts/ac29p08.dgn Plot Date:

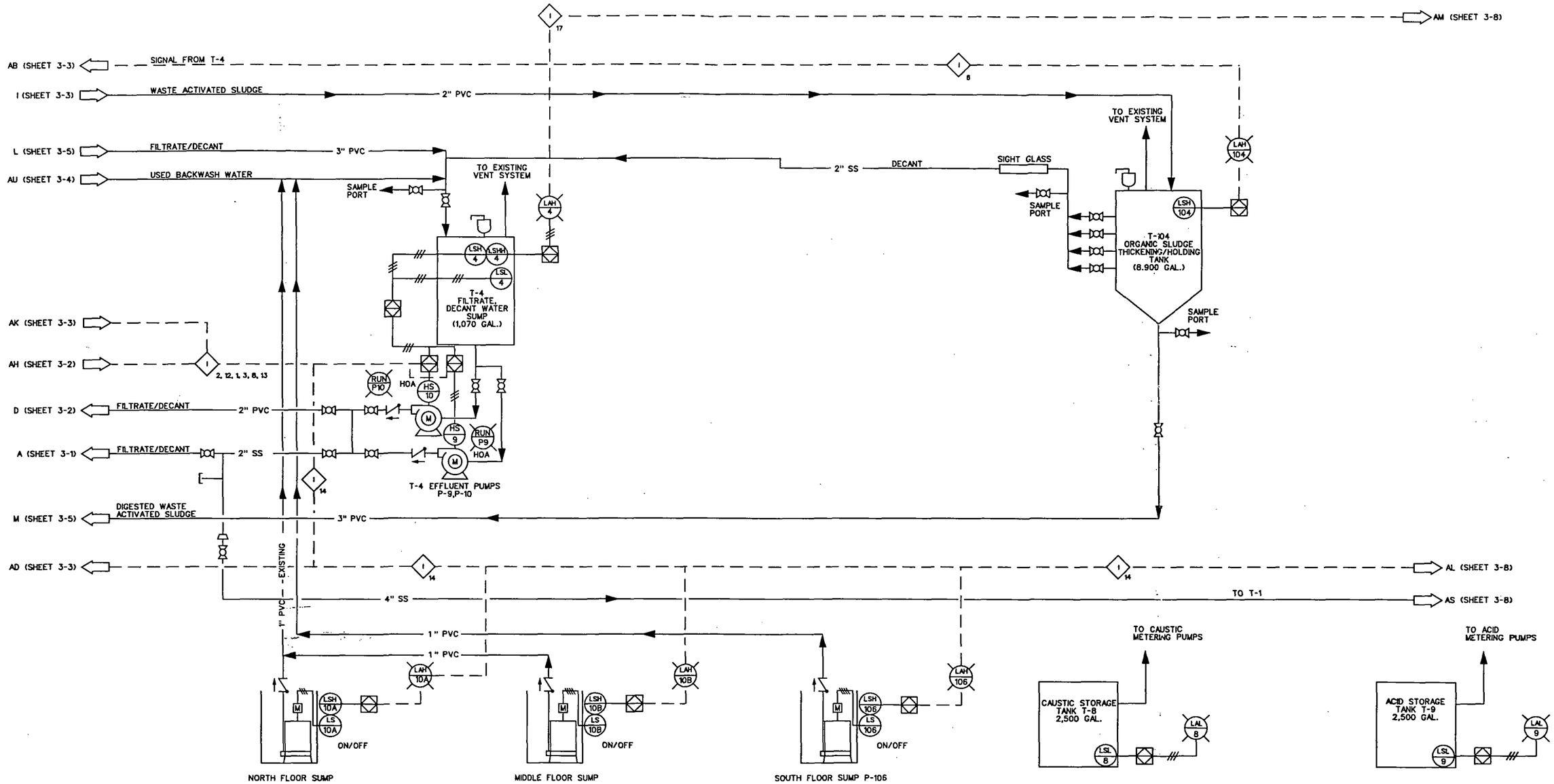

REV	DATE	BY	DESCRIPTION
1	1/31/02	RAA	AS-BUILT AS OF 1/31/02

SCALE: NONE

WARNING: 0 ½ 1 — IF THIS BAR DOES NOT MEASURE 1" THEN DRAWING IS NOT TO SCALE

DESIGNED RAA
DRAWN RC
CHECKED RAA

SUBMITTED BY
ROBERT A. ADAMS (PROJECT MANAGER'S NAME) LICENSE NO. DATE
(COMPANY OFFICER'S NAME) LICENSE NO. DATE

MWH
MONTGOMERY WATSON HARZA

AMERICAN CHEMICAL SERVICE, INC.
GROUNDWATER TREATMENT SYSTEM UPGRADE
GRIFFITH, INDIANA

PIPING & INSTRUMENTATION DIAGRAM

SHEET 3-6

Job No: MW Job
File: J:/209/061 ACS/116 GWTP/drawings/ASBUILT/acs29p06A.dgn
Plot Date:

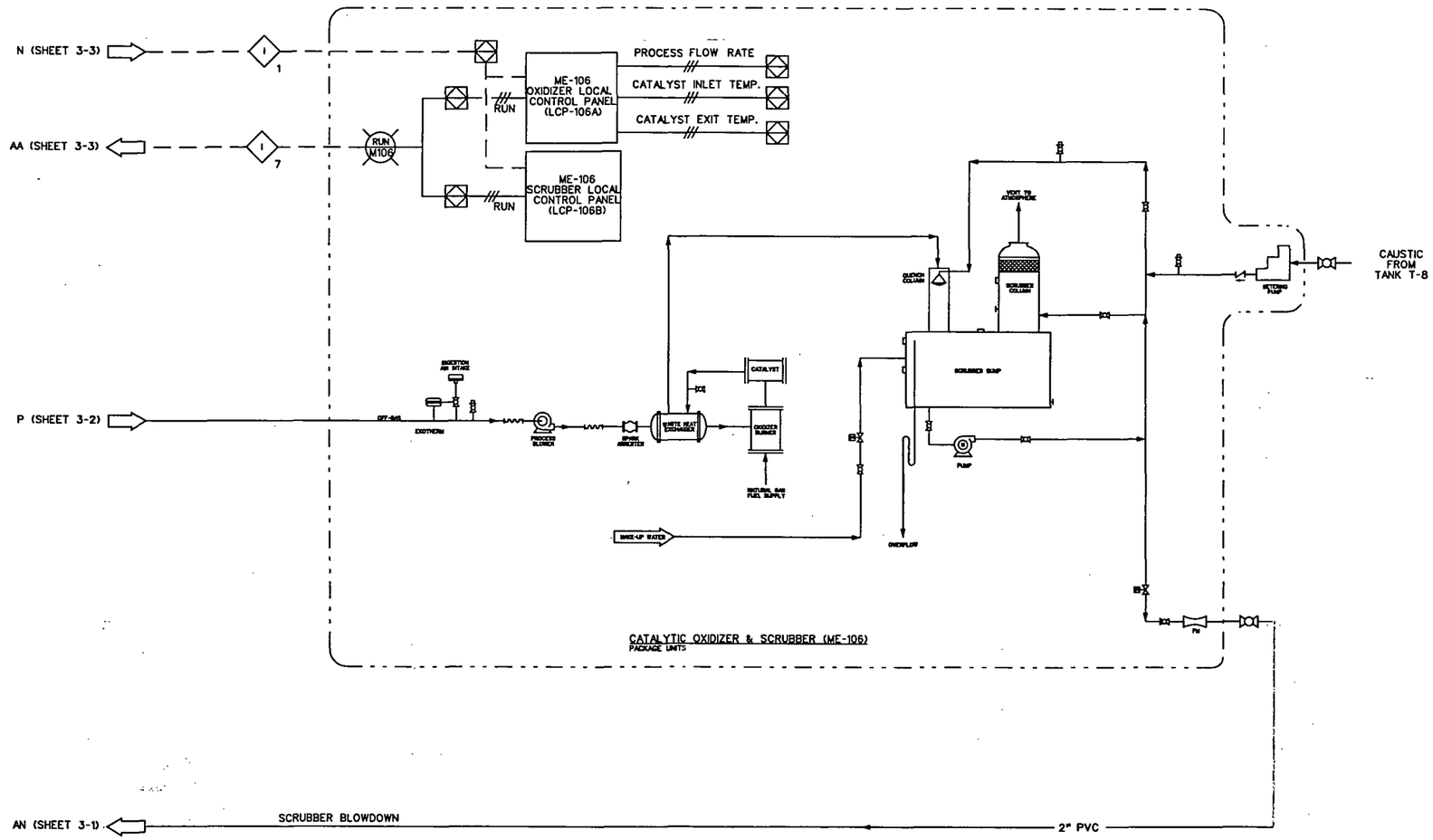

REV	DATE	BY	DESCRIPTION
1	1/31/02	RAA	AS-BUILT AS OF 1/31/02

SCALE: NONE

WARNING: 0 ½ 1 — IF THIS BAR DOES NOT MEASURE 1" THEN DRAWING IS NOT TO SCALE

DESIGNED RAA
DRAWN RC
CHECKED RAA

SUBMITTED BY
ROBERT A. ADAMS (PROJECT MANAGER'S NAME) LICENSE NO. DATE
(COMPANY OFFICER'S NAME) LICENSE NO. DATE

MWH
MONTGOMERY WATSON HARZA

AMERICAN CHEMICAL SERVICE, INC.
GROUNDWATER TREATMENT SYSTEM UPGRADE
GRIFFITH, INDIANA

PIPING & INSTRUMENTATION DIAGRAM

SHEET 3-7

Job No: MW Job # File: J:/209/061/116 GWTP/drawings/ASBUILTS/acs29p07A.dgn Plot Date:

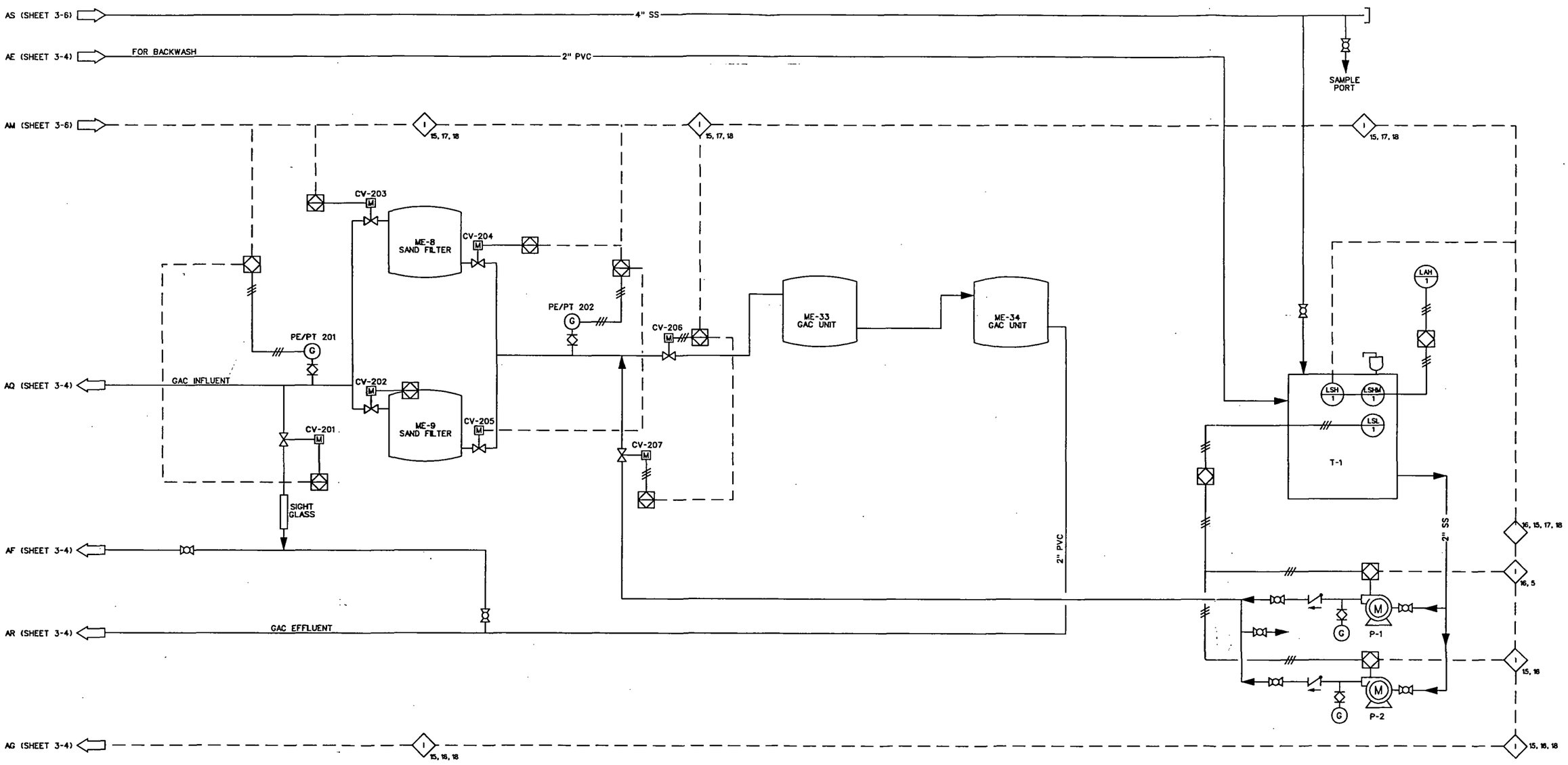

REV	DATE	BY	DESCRIPTION
1	1/31/02	RAA	AS-BUILT AS OF 1/31/02

SCALE: NONE

WARNING: 0 ½ 1 — IF THIS BAR DOES NOT MEASURE 1" THEN DRAWING IS NOT TO SCALE

DESIGNED RAA
DRAWN RC
CHECKED RAA

SUBMITTED BY
ROBERT A ADAMS (PROJECT MANAGER'S NAME) LICENSE NO. DATE
(COMPANY OFFICER'S NAME) LICENSE NO. DATE

MWH
MONTGOMERY WATSON HARZA

AMERICAN CHEMICAL SERVICE, INC.
GROUNDWATER TREATMENT SYSTEM UPGRADE
GRIFFITH, INDIANA

PIPING & INSTRUMENTATION DIAGRAM

SHEET 3-8

Job No: MW Job # File: J:/209/061 ACS/116 GWTP/drawings/ASBUILTS/acs29p_piping_inst.dgn Plot Date:

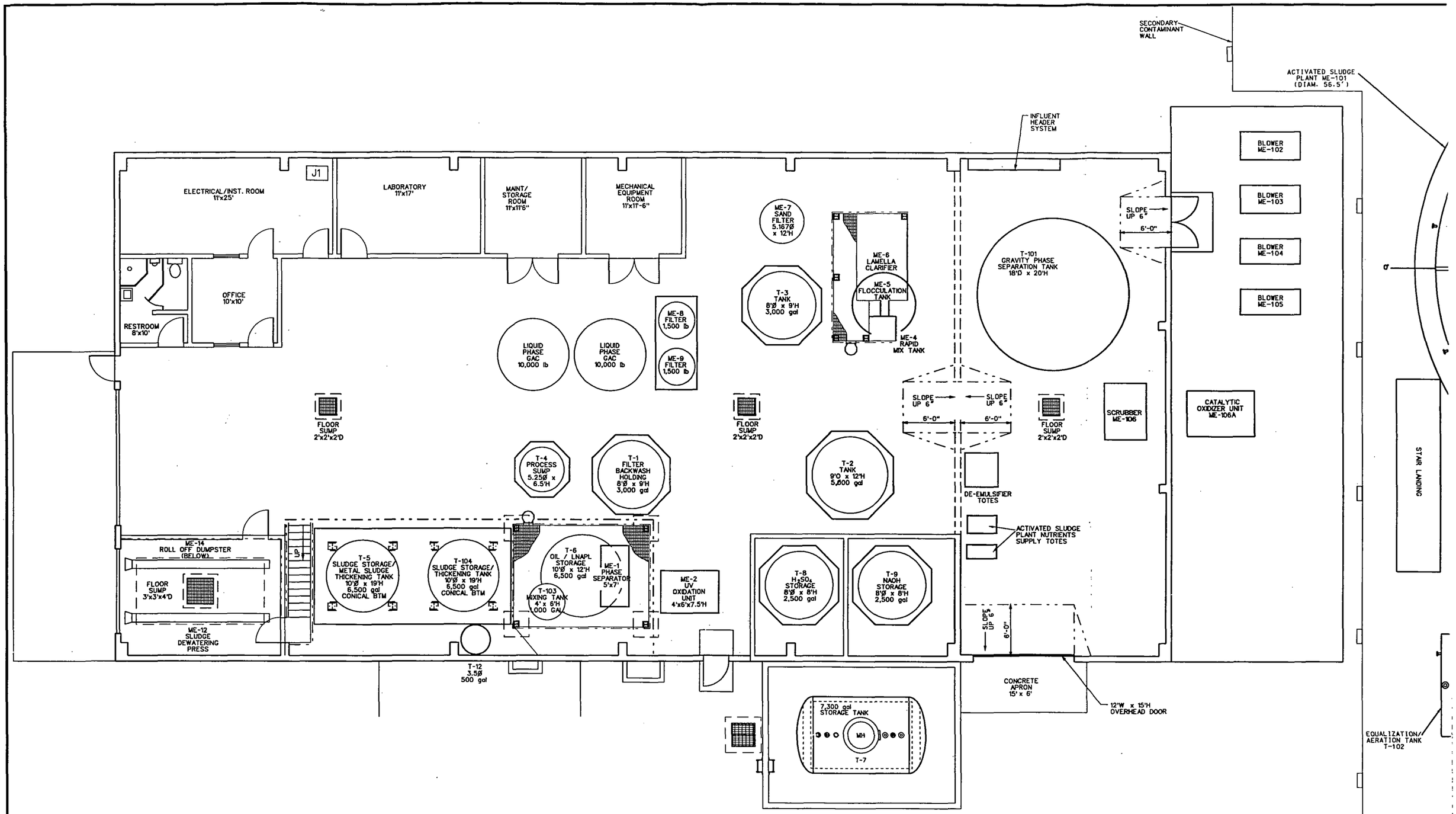

REV	DATE	BY	DESCRIPTION
1	1/31/02	RAA	AS-BUILT AS OF 1/31/02

SCALE: 3/32" = 1'-0"

WARNING: 0 ½ 1 — IF THIS BAR DOES NOT MEASURE 1" THEN DRAWING IS NOT TO SCALE

DESIGNED ____ DRAWN ____ CHECKED ____

SUBMITTED BY: ROBERT A. ADAMS (PROJECT MANAGER'S NAME) LICENSE NO. DATE

(COMPANY OFFICER'S NAME) LICENSE NO. DATE

MWH MONTGOMERY WATSON HARZA

AMERICAN CHEMICAL SERVICE, INC.
GROUNDWATER TREATMENT SYSTEM UPGRADE
GRIFFITH, INDIANA

GROUNDWATER TREATMENT PLANT BUILDING LAYOUT

SHEET 4

Job No: MW Job # File: J:/209/0601 acs/0115GWTP/MWDWG/ASBUILTS/209601acs115c.dgn Plot Date: 09-JUL-2002 12:56

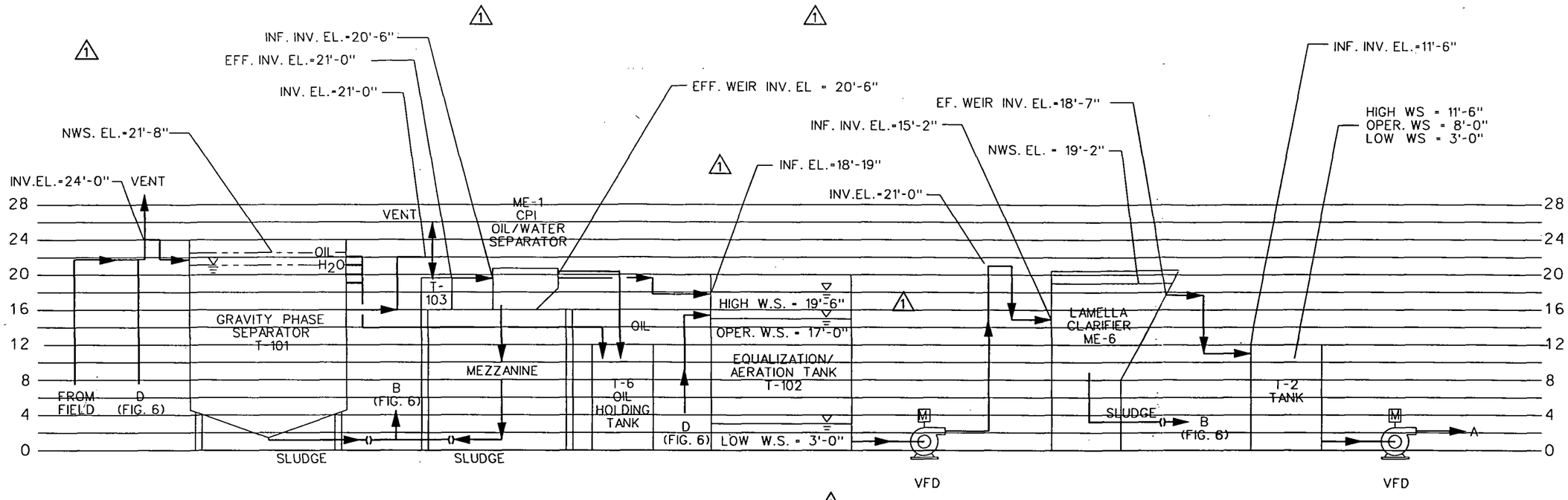

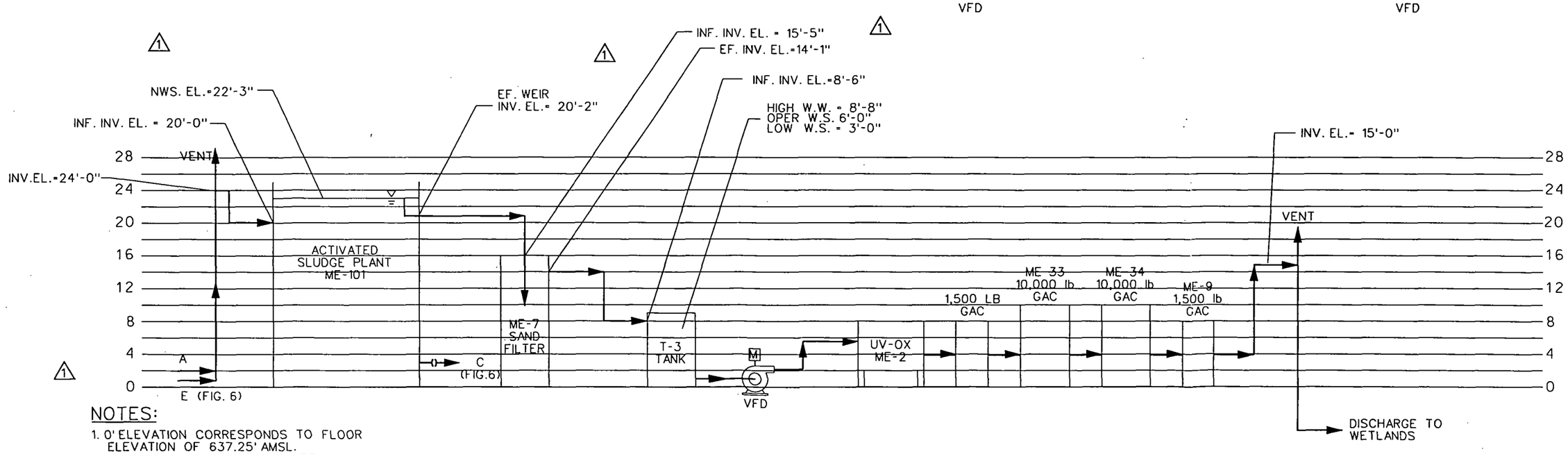

NOTES:

1. 0' ELEVATION CORRESPONDS TO FLOOR ELEVATION OF 637.25' AMSL.
2. SUSBTRACT 12" FROM MEASUREMENTS TAKEN FROM TOB OF CURB.

REV	DATE	BY	DESCRIPTION
1	1/31/02	RAA	AS-BUILT AS OF 1/31/02

SCALE: NONE

WARNING: 0 ½ 1 — IF THIS BAR DOES NOT MEASURE 1" THEN DRAWING IS NOT TO SCALE

DESIGNED RAA
DRAWN RC
CHECKED RAA

SUBMITTED BY
ROBERT A. ADAMS (PROJECT MANAGER'S NAME) LICENSE NO. DATE
(COMPANY OFFICER'S NAME) LICENSE NO. DATE

MWH
MONTGOMERY WATSON HARZA

AMERICAN CHEMICAL SERVICE, INC.
GROUNDWATER TREATMENT SYSTEM UPGRADE
GRIFFITH, INDIANA

HYDRAULIC PROFILE-
MAIN TREATMENT TRAIN

SHEET 5

Job No: 209601
File: J:/209/0601 ACS/116 GWTP/drawings/ASBUILTS/acs29pr1.dgn
Plot Date:

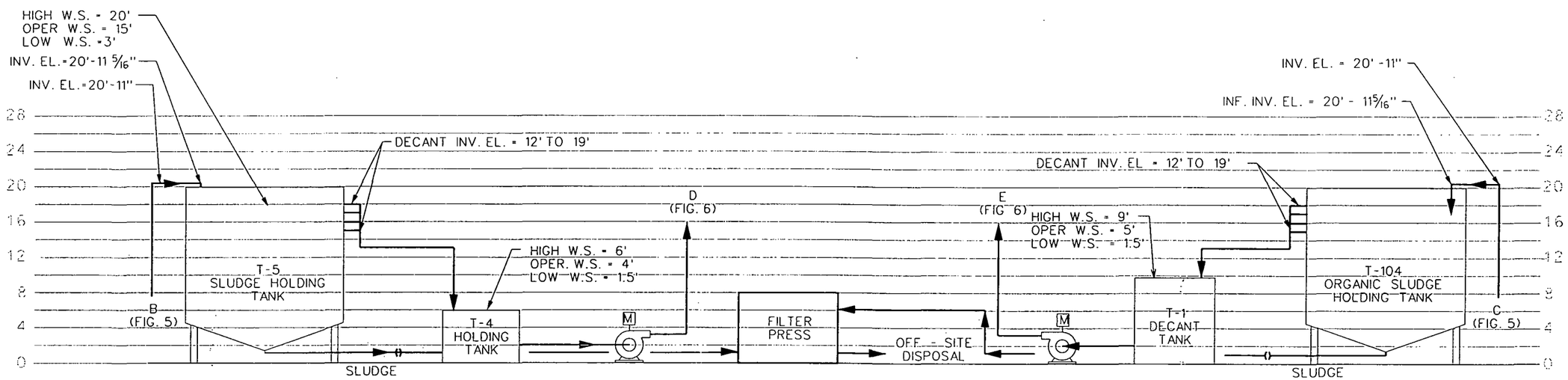

NOTE:
0' ELEVATION CORRESPONDS TO FLOOR ELEVATION OF 637.25' AMSL.

REV	DATE	BY	DESCRIPTION
1	1/31/02	RAA	AS-BUILTS AS OF 1/31/02

SCALE: NONE

WARNING: 0 1/2 1 — IF THIS BAR DOES NOT MEASURE 1" THEN DRAWING IS NOT TO SCALE

DESIGNED RAA
DRAWN RC
CHECKED RAA

SUBMITTED BY
ROBERT A. ADAMS (PROJECT MANAGER'S NAME) LICENSE NO. DATE
(COMPANY OFFICER'S NAME) LICENSE NO. DATE

MWH

AMERICAN CHEMICAL SERVICE, INC.
GROUNDWATER TREATMENT SYSTEM UPGRADE
GRIFFITH, INDIANA

HYDRAULIC PROFILE-
SLUDGE HANDLING SYSTEM

SHEET 6

Job No: 209601
File: J:/209/0601 ACS/116 GWTP/drawings/ASBUILTS/acs29pr1a.dgn
Plot Date:

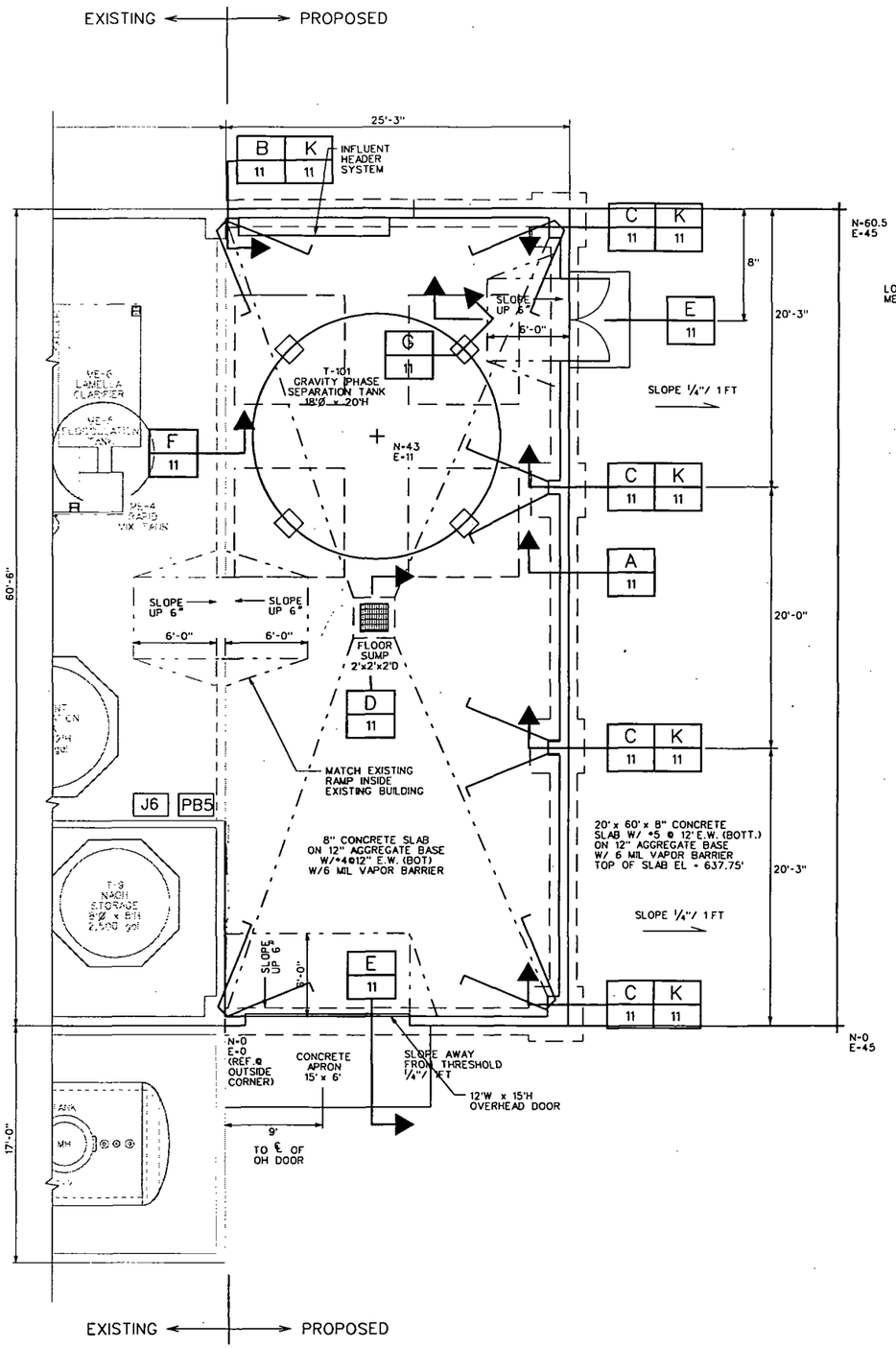

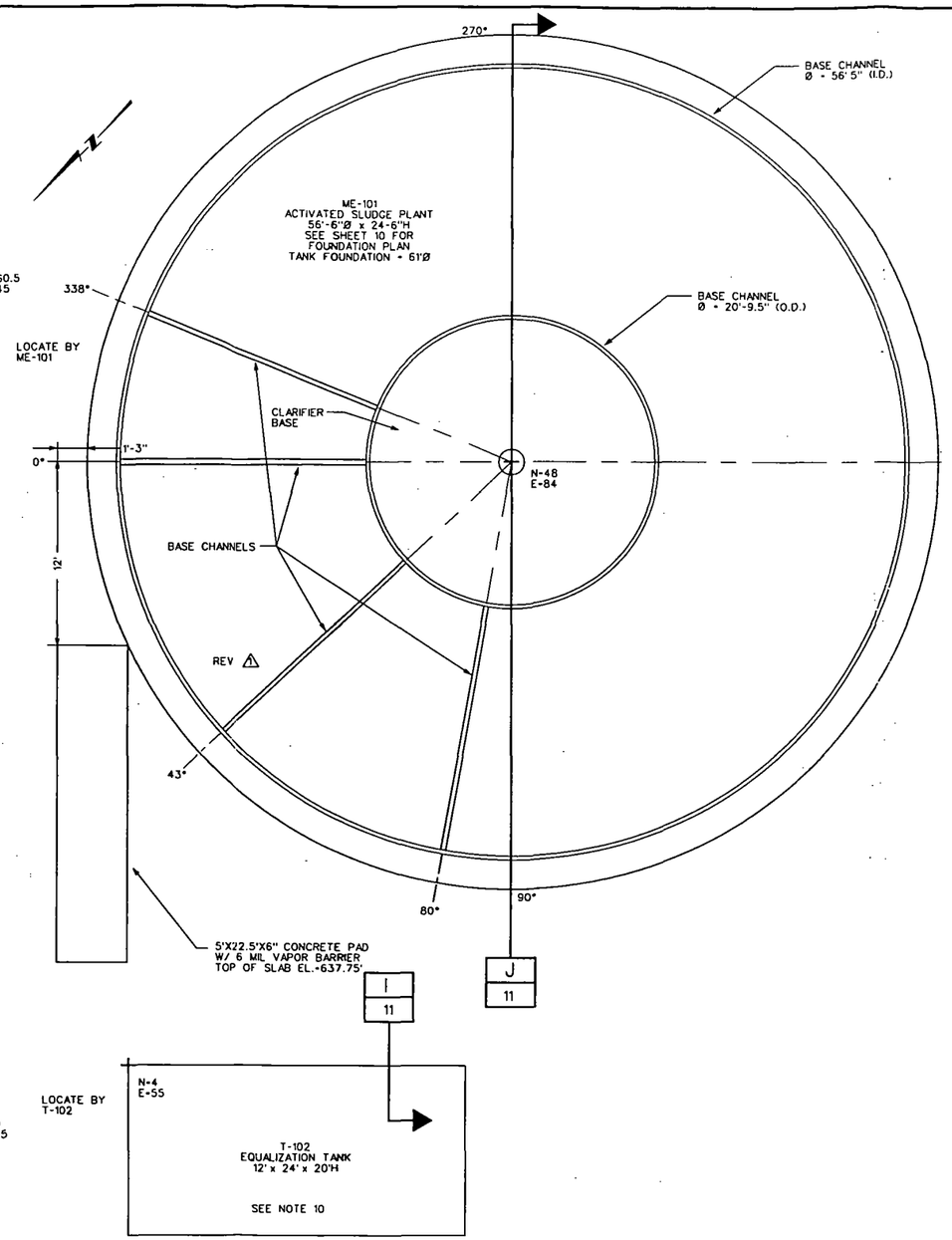

LEGEND

- — · · — INDICATES PITCHED FLOOR
- — — — INDICATES EDGE OF EXISTING FLOOR
- — — — INDICATES SUBSURFACE CONCRETE COMPONENT

NOTES:

1. ALL CONCRETE SHALL HAVE A MINIMUM 28 DAY COMPRESSIVE STRENGTH OF 3,500 POUNDS PER SQUARE INCH (PSI).
2. ALL REBAR SHALL HAVE A MINIMUM YIELD STRENGTH OF 60,000 PSI.
3. ALL CONCRETE CONTRUCTION SHALL CONFORM TO AMERICAN CONCRETE INSTITUTE (ACI) 301 (LATEST EDITION) UNLESS NOTED OTHERWISE.
4. DOWELS, PIPES, WATERSTOPS, AND OTHER EMBEDDED MATERIALS SHALL BE HELD SECURELY IN POSITION WHILE CONCRETE IS BEING PLACED.
5. REINFORCING BARS AND ACCESSORIES SHALL NOT BE IN CONTACT WITH ANY PIPE, PIPE FLANGE, METAL CONDIUT, OR OTHER METAL PARTS EMBEDDED IN CONCRETE. A MINIMUM OF 2 INCHES CLEARANCE SHALL BE PROVIDED IN ALL CASES UNLESS APPROVED.
6. EXCEPT AS OTHERWISE REQUIRED, EXPOSED CONCRETE CORNERS AND EDGES SHALL HAVE 3/4" CHAMFERS. RE-ENTRANT CORNERS SHALL NOT HAVE FILLETS.
7. NO WATER SHALL BE ADDED TO CONCRETE ON SITE UNLESS AT THE DIRECTION OF THE ENGINEER.
8. AGGREGATE BASE SHALL CONSIST OF CA-6 AGGREGATE. THE BASE SHALL BE COMPACTED IN TWO LIFTS, TO A MINIMUM IN-PLACE DENSITY OF 98% OF THE MAXIMUM LABORATORY DENSITY, AS DETERMINED IN ACCORDANCE WITH ASTM STANDARD METHOD D-98.
9. SUBGRADE SURFACES FOR ALL CONCRETE SLABS AND FOUNDATIONS SHALL BE PROOF ROLLED USING A LOADED TANDEM-AXLE DUMP TRUCK OR A MINIMUM 20 TON STEEL DRUM ROLLER. ANY AREAS EXHIBITING PUMPING OR DEFLECTION ARE TO BE STABILIZED BY UNDERCUTTING AND REPLACEMENT OF THE SOFT SOILS WITH 3" BREAKER ROCK.
10. FOUNDATION ELEVATION DIFFERENCE SHALL NOT EXCEED ±0.5 INCH BETWEEN TWO POINTS AROUND EQUALIZATION TANK (T-102) PERIMETER
11. WHERE CONCRETE IS TO BE CAST AGAINST OLD CONCRETE (ANY CONCRETE WHICH IS OLDER THAN 60 DAYS OF AGE), THE SURFACE OF THE OLD CONCRETE SHALL BE THOROUGHLY CLEANED AND ROUGHENED BY SAND-BLASTING (EXPOSED AGGREGATE) PRIOR TO THE APPLICATION OF AN EPOXY BONDING AGENT. APPLICATION SHALL BE ACCORDING TO THE BONDING AGENT MANUFACTURER'S INSRTUCTIONS AND RECOMMENDATIONS.
12. PLACE 6-MIL VAPOR BARRIER UNDER ALL CONCRETE SLABS.
13. FOUNDATIONS HAVE BEEN DESIGNED FOR A ALLOWABLE SOIL BEARING CAPICITY OF 2,000 PSF. IF SOILS OF THIS VALUE ARE NOT FOUND AT THE DESIGNED FOUNDATION ELEVATIONS, NOTIFY ENGINEER PRIOR TO PROCEEDING
14. COORDINATE SYSTEM FOR EQUIPMENT ARE BASED ON SYSTEM FOR THIS DRAWING ONLY. E. COORDINATES ARE MEASURED TO THE RIGHT (PERPENDICULAR) OF THE EXISTING BUILDING WALL, AND N. COORDINATES ARE MEASURED PARALLEL TO BUILDING WALL.

REV	DATE	BY	DESCRIPTION
1	8/7/00	RAA	AS BUILT

SCALE: 3/16" = 1'-0"

WARNING: 0 1/2 1 — IF THIS BAR DOES NOT MEASURE 1" THEN DRAWING IS NOT TO SCALE

DESIGNED ____ DRAWN ____ CHECKED ____

SUBMITTED BY
ROBERT A. ADAMS (PROJECT MANAGER'S NAME) LICENSE NO. DATE
(COMPANY OFFICER'S NAME) LICENSE NO. DATE

MWH
MONTGOMERY WATSON HARZA

AMERICAN CHEMICAL SERVICE, INC.
GROUNDWATER TREATMENT SYSTEM UPGRADE
GRIFFITH, INDIANA

FOUNDATION PLAN

SHEET 9

Job No: MW Job File: J:/1252/042/29/drawings/as built/acs29a02.dgn Plot Date: $$$date$$ $$$time$$

BILL OF MATERIAL							
ITEM	QTY	UM	PORT NUMBER	RAW MATL	DESCRIPTION	SIZE	WT EQ
1	1	EA	X410641-1		CHANNEL RING 8"@18.75# (LEG IN)	20'-9½" O.D.	
2	1	EA	X410641-2		CHANNEL RING 8"@18.75# (LEG OUT)	56'-5" I.D.	
3	4	EA	X410641-3		CHANNEL, 8" @ 18.75#	17'-9¾"	

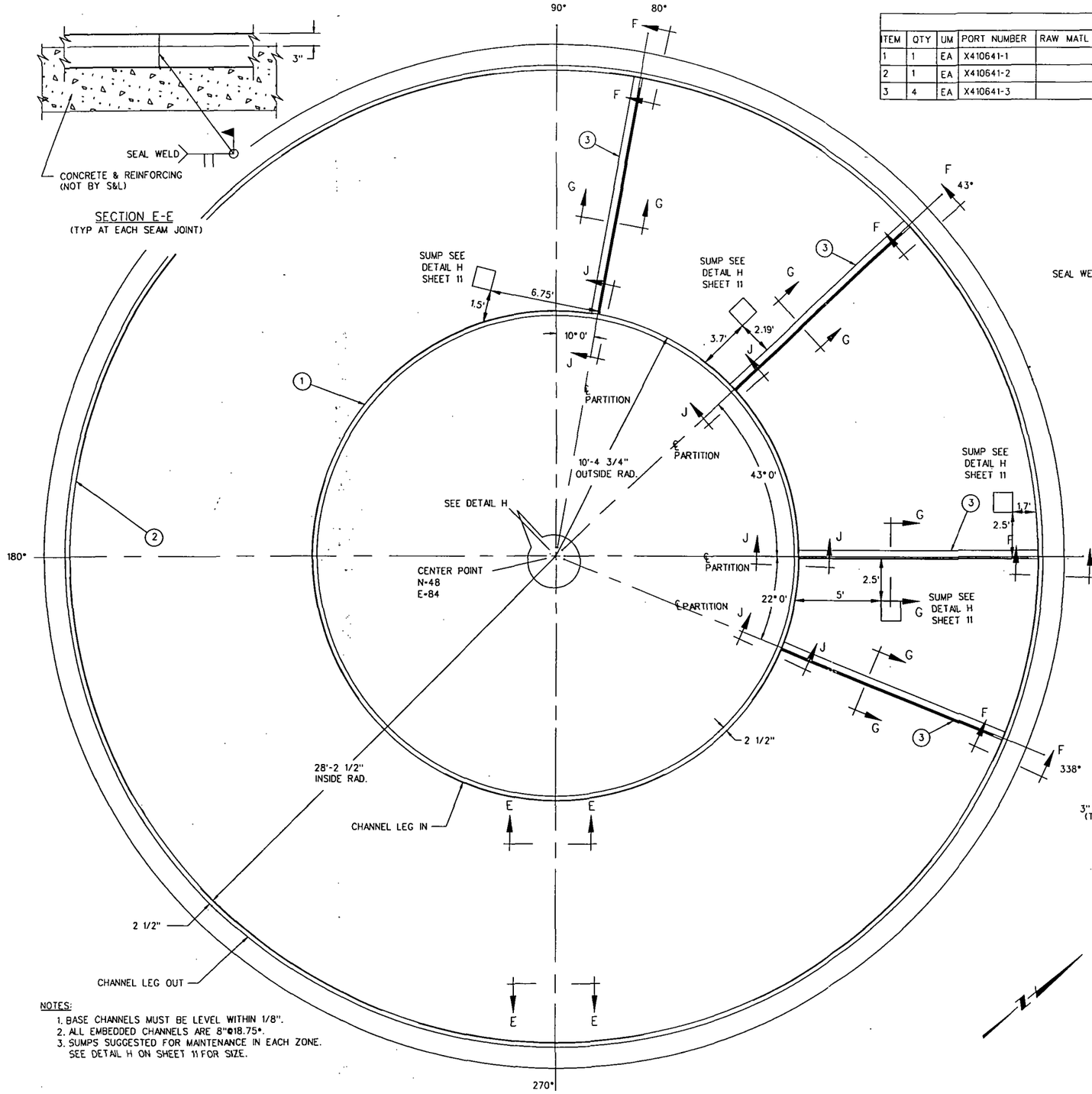

NOTES:
1. BASE CHANNELS MUST BE LEVEL WITHIN 1/8".
2. ALL EMBEDDED CHANNELS ARE 8"@18.75#.
3. SUMPS SUGGESTED FOR MAINTENANCE IN EACH ZONE. SEE DETAIL H ON SHEET 11 FOR SIZE.

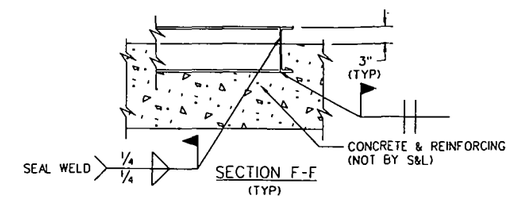

SECTION F-F
(TYP)

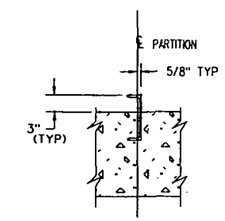

SECTION G-G

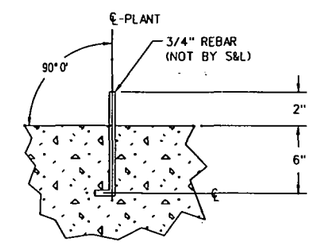

DETAIL H

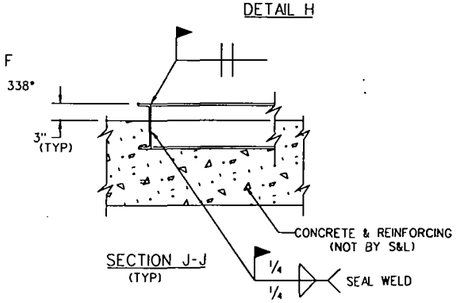

SECTION J-J
(TYP)

BUILDING EXPANSION

NOTE:
FOUNDATION PLANS PROVIDED BY SMITH & LOVELESS, INC.

REV	DATE	BY	DESCRIPTION
1	8/7/00	RAA	AS BUILT

SCALE: NONE

WARNING: 0 ½ 1 — IF THIS BAR DOES NOT MEASURE 1" THEN DRAWING IS NOT TO SCALE

DESIGNED RAA
DRAWN RC
CHECKED RAA

SUBMITTED BY
ROBERT A. ADAMS (PROJECT MANAGER'S NAME) LICENSE NO. DATE
(COMPANY OFFICER'S NAME) LICENSE NO. DATE

MWH
MONTGOMERY WATSON HARZA

AMERICAN CHEMICAL SERVICE, INC.
GROUNDWATER TREATMENT SYSTEM UPGRADE
GRIFFITH, INDIANA

ACTIVATED SLUDGE PLANT
FOUNDATION PLAN

SHEET 10

Job No: MW Job File: J:/1252/042/29/drawings/as built/acsfound.dgn Plot Date: $$$$date$$ $$$$time$$

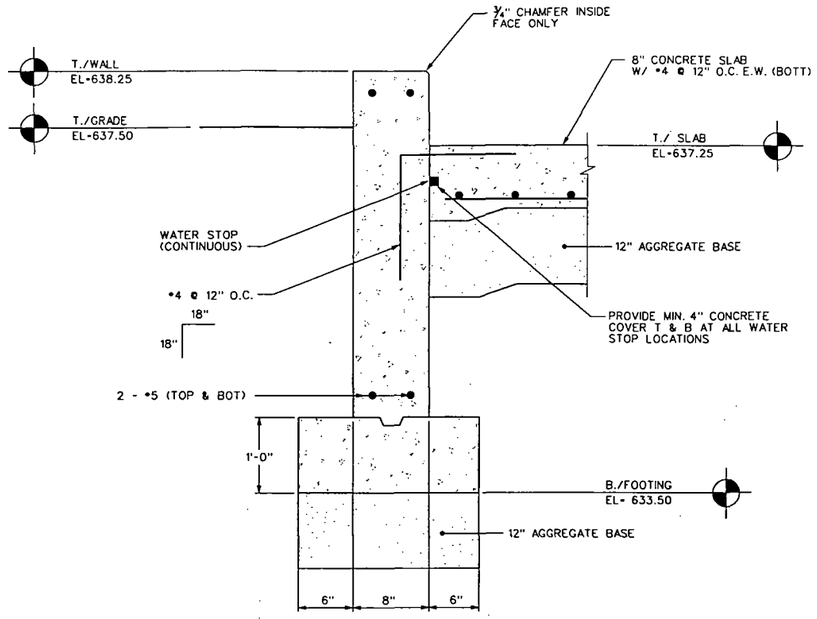

REV 1

TYPICAL EXTERIOR WALL | A
NTS | 9

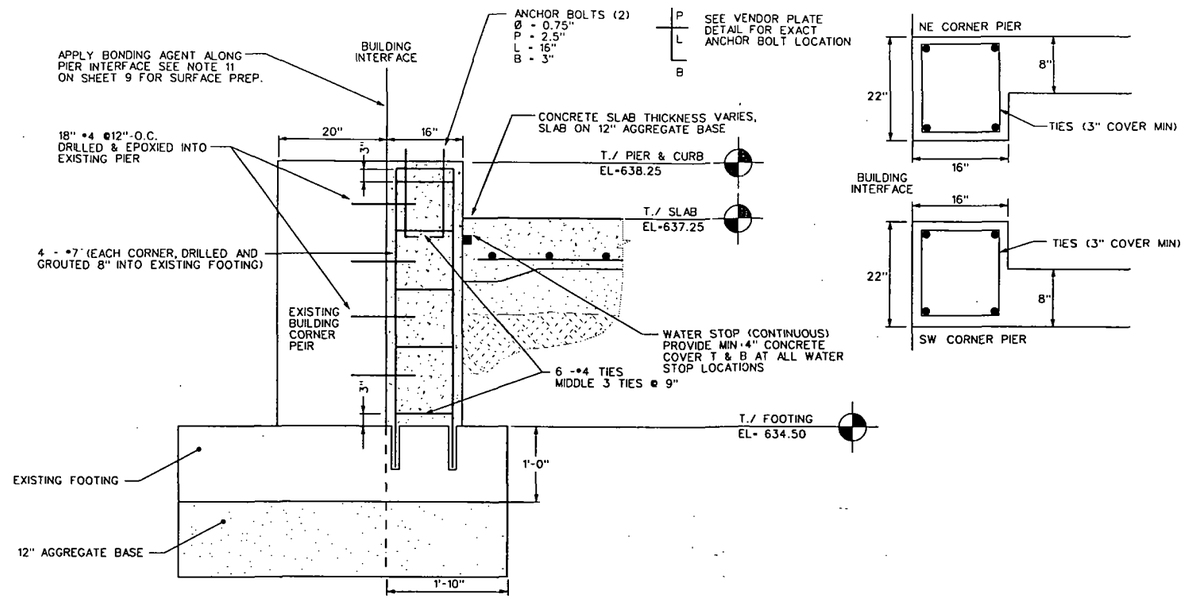

NE & NW BUILDING
PIER DETAIL (TYP OF 2) | B
NTS | 9

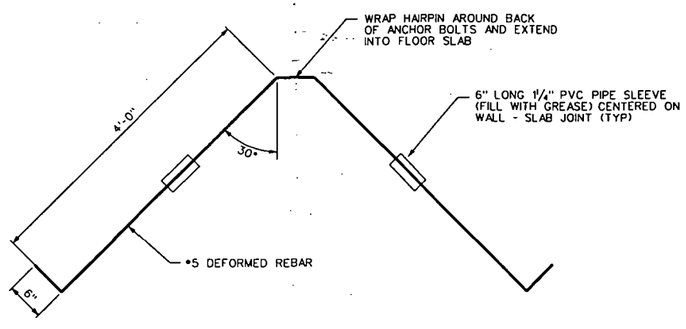

HAIRPIN DETAIL | C
NTS | 9

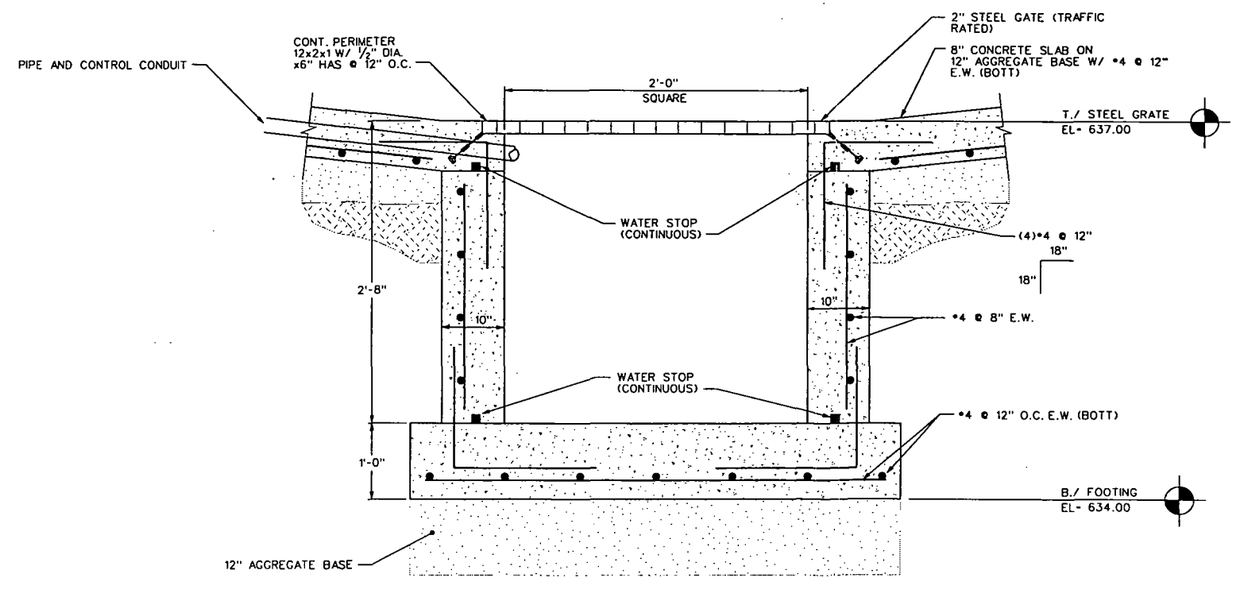

SUMP PIT DETAIL | D
NTS | 9

REV	DATE	BY	DESCRIPTION
1	8/7/00	RAA	AS BUILT

SCALE: NONE

WARNING: 0 1/2 1 — IF THIS BAR DOES NOT MEASURE 1" THEN DRAWING IS NOT TO SCALE

DESIGNED RAA
DRAWN RC
CHECKED RAA

SUBMITTED BY
ROBERT A. ADAMS (PROJECT MANAGER'S NAME) LICENSE NO. DATE
(COMPANY OFFICER'S NAME) LICENSE NO. DATE

MWH
MONTGOMERY WATSON HARZA

AMERICAN CHEMICAL SERVICE, INC.
GROUNDWATER TREATMENT SYSTEM UPGRADE
GRIFFITH, INDIANA

STRUCTURAL CONCRETE DETAILS

SHEET 11-1

Job No: MW Job File: J:/1252/042/29/drawings/as built/cdt11042.dgn Plot Date: $$$$date $$time$$

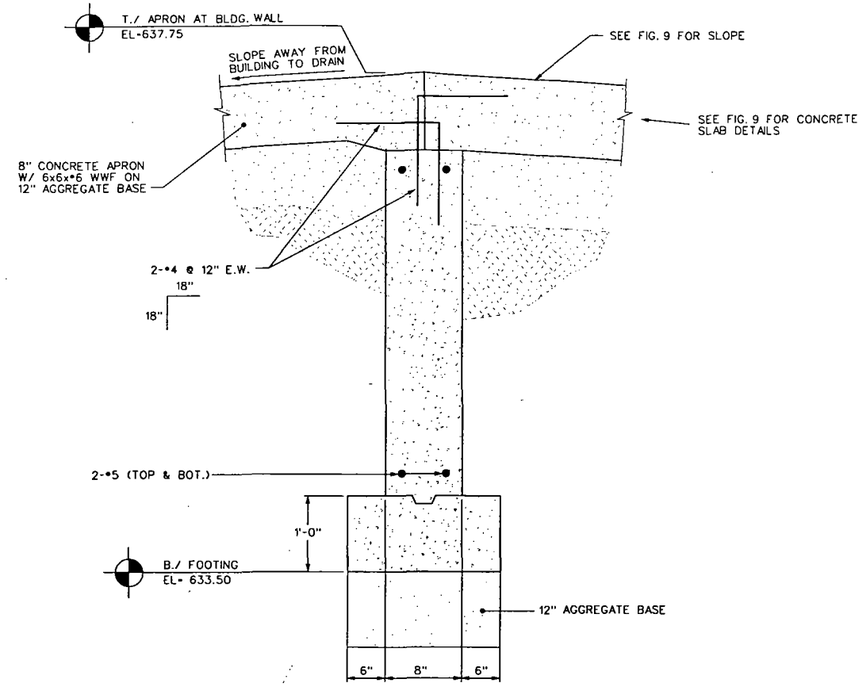

DOOR DETAIL | E | 9
NTS

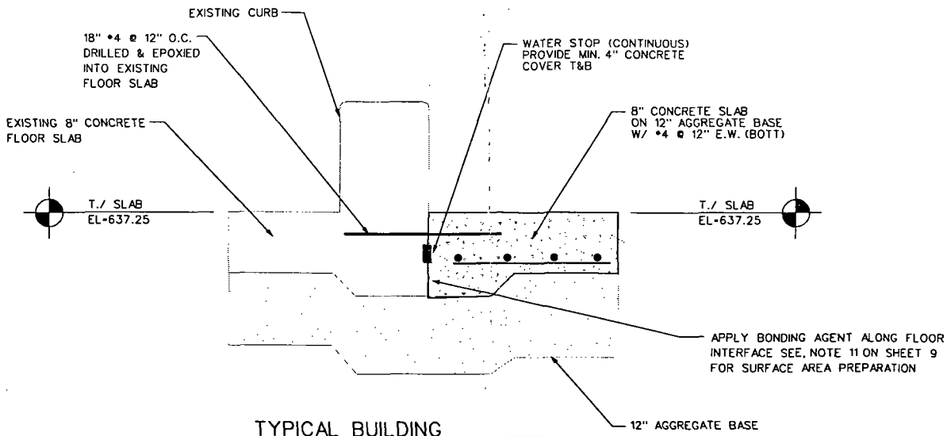

TYPICAL BUILDING FLOOR TIE-IN | F | 9
NTS

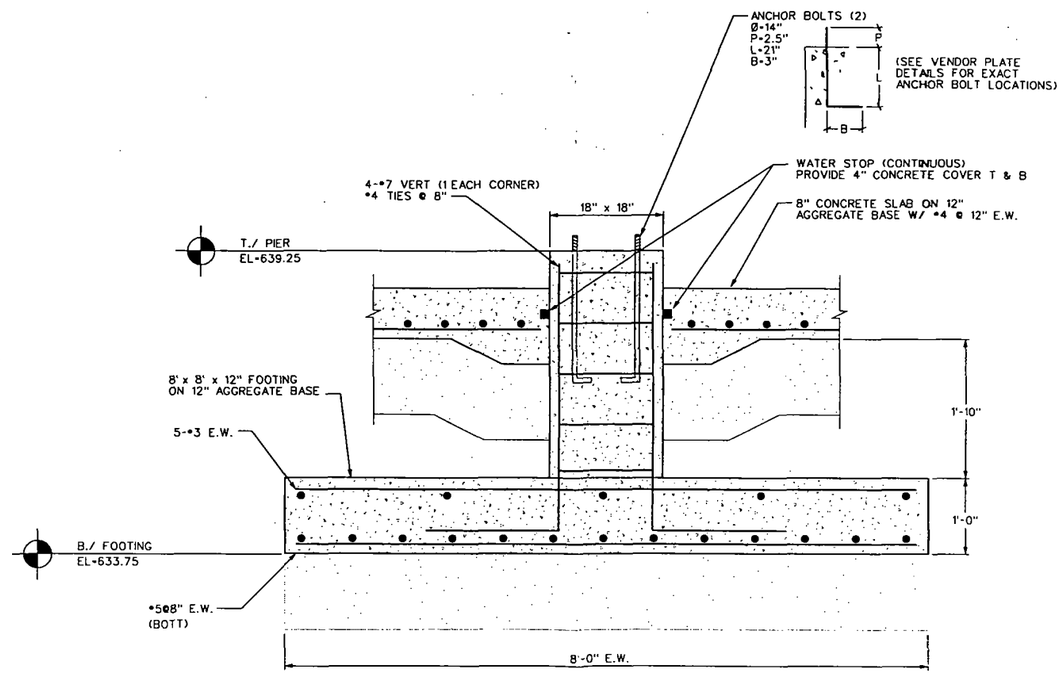

GRAVITY PHASE SEPARATOR PIER (TYP. 1 OF 4) | G | 9
NTS

REV	DATE	BY	DESCRIPTION
1	8/7/00	RAA	AS BUILT

SCALE: NONE

WARNING: 0 ½ 1 — IF THIS BAR DOES NOT MEASURE 1" THEN DRAWING IS NOT TO SCALE

DESIGNED RAA
DRAWN RC
CHECKED RAA

SUBMITTED BY
ROBERT A. ADAMS (PROJECT MANAGER'S NAME) LICENSE NO. DATE
(COMPANY OFFICER'S NAME) LICENSE NO. DATE

MWH
MONTGOMERY WATSON HARZA

AMERICAN CHEMICAL SERVICE, INC.
GROUNDWATER TREATMENT SYSTEM UPGRADE
GRIFFITH, INDIANA

STRUCTURAL CONCRETE DETAILS

SHEET 11-2

Job No: MW Job File: J:/1252/042/29/drawings/as built/cdt10042.dgn Plot Date: $$$$date$$

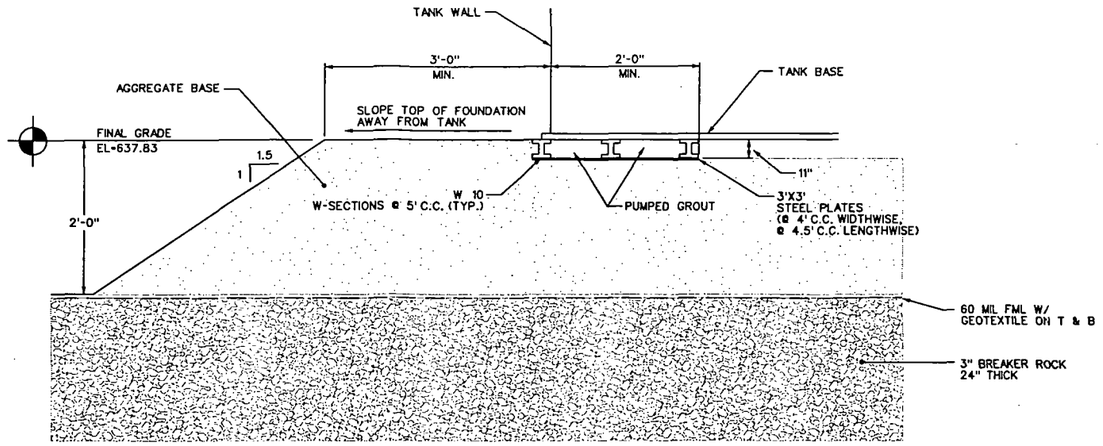

EQUALIZATION/AERATION TANK FOUNDATION

NTS

I
9

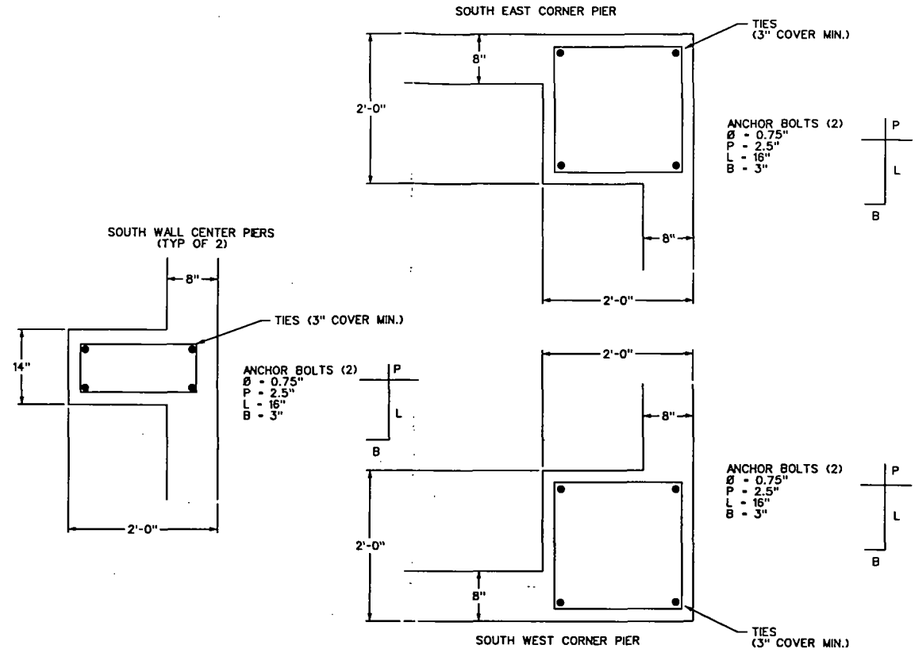

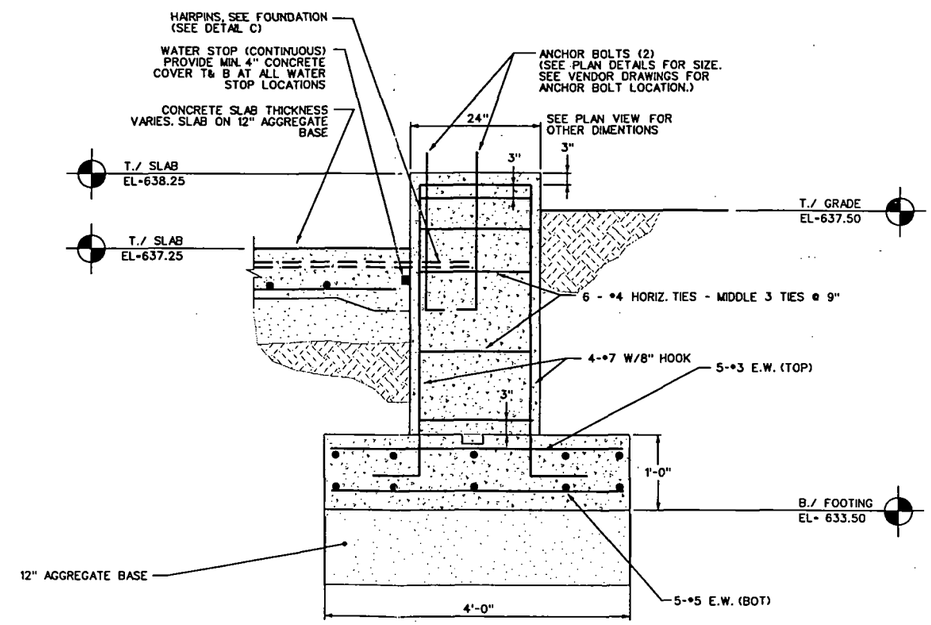

BUILDING SOUTH WALL PIER DETAIL

NTS

K
9

REV	DATE	BY	DESCRIPTION
1	8/7/00	RAA	AS BUILT

SCALE: NONE

WARNING: 0 ½ 1 — IF THIS BAR DOES NOT MEASURE 1" THEN DRAWING IS NOT TO SCALE

DESIGNED RAA
DRAWN RC
CHECKED RAA

SUBMITTED BY
ROBERT A. ADAMS (PROJECT MANAGER'S NAME) LICENSE NO. DATE
(COMPANY OFFICER'S NAME) LICENSE NO. DATE

MWH
MONTGOMERY WATSON HARZA

AMERICAN CHEMICAL SERVICE, INC.
GROUNDWATER TREATMENT SYSTEM UPGRADE
GRIFFITH, INDIANA

STRUCTURAL CONCRETE DETAILS

SHEET 11-3

Job No: MW_JC File: J:/1252/042/29/drawings/as built/cdt09042.dgn Plot Date: 25-OC 07:46

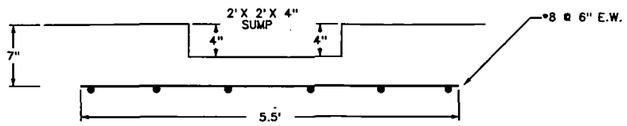

SUMP DETAIL (TYP OF 4)
SEE SHEET 10 FOR LOCATION

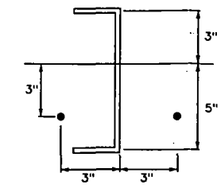

TYPICAL EMBEDMENT CHANEL DETAIL

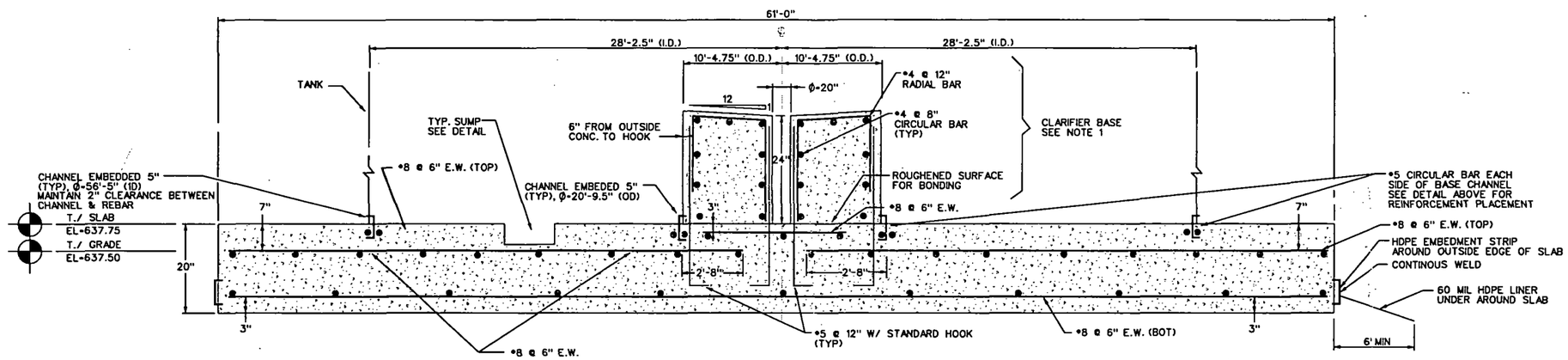

ACTIVATED SLUDGE
PLANT SUPPORT SLAB

NTS

J
9

NOTE 1:

INITIAL POUR WILL INCLUDE SLAB ONLY, WITH EMBEDDED CHANNELS AND HOOKS, FOLLOWING INSTALLATION OF CLARIFIER WALLS, CLARIFIER BASE WILL BE POURED.

REV	DATE	BY	DESCRIPTION
1	8/7/00	RAA	AS BUILT

SCALE: NONE

WARNING: 0 ½ 1 — IF THIS BAR DOES NOT MEASURE 1" THEN DRAWING IS NOT TO SCALE

DESIGNED RAA
DRAWN RC
CHECKED RAA

SUBMITTED BY
ROBERT A. ADAMS (PROJECT MANAGER'S NAME) LICENSE NO. DATE
(COMPANY OFFICER'S NAME) LICENSE NO. DATE

MWH
MONTGOMERY WATSON HARZA

AMERICAN CHEMICAL SERVICE, INC.
GROUNDWATER TREATMENT SYSTEM UPGRADE
GRIFFITH, INDIANA

STRUCTURAL CONCRETE DETAILS

SHEET 11-4

Job No: MW Job File: J:/1252/042/29/drawings/details/as built/cdt12042.dgn Plot Date: 25-OCT 07:45

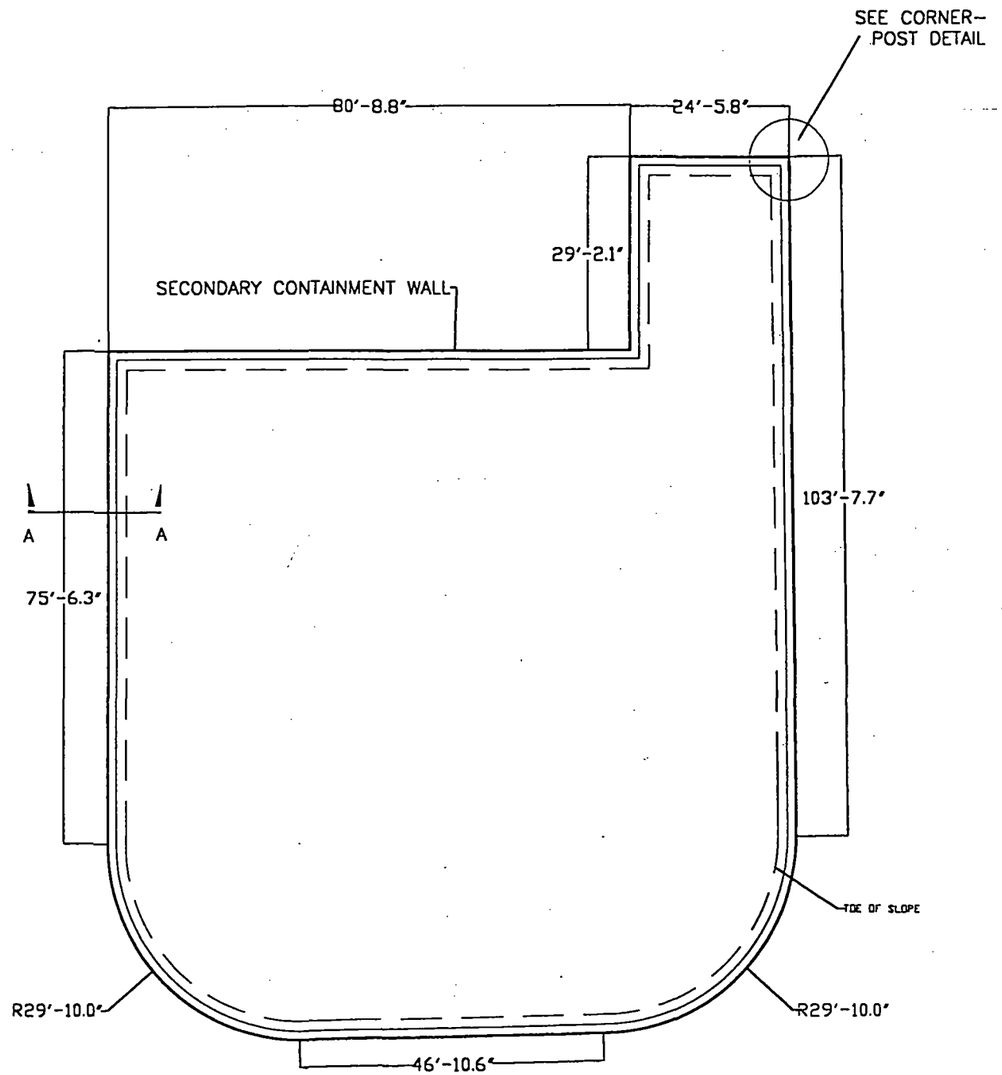

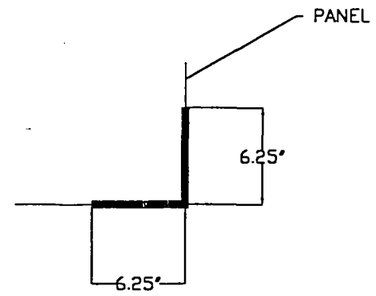

CORNER-POST DETAIL: TYPICAL

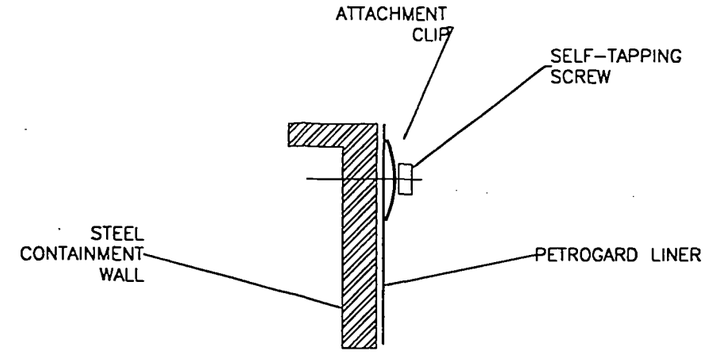

ATTACHMENT DETAIL

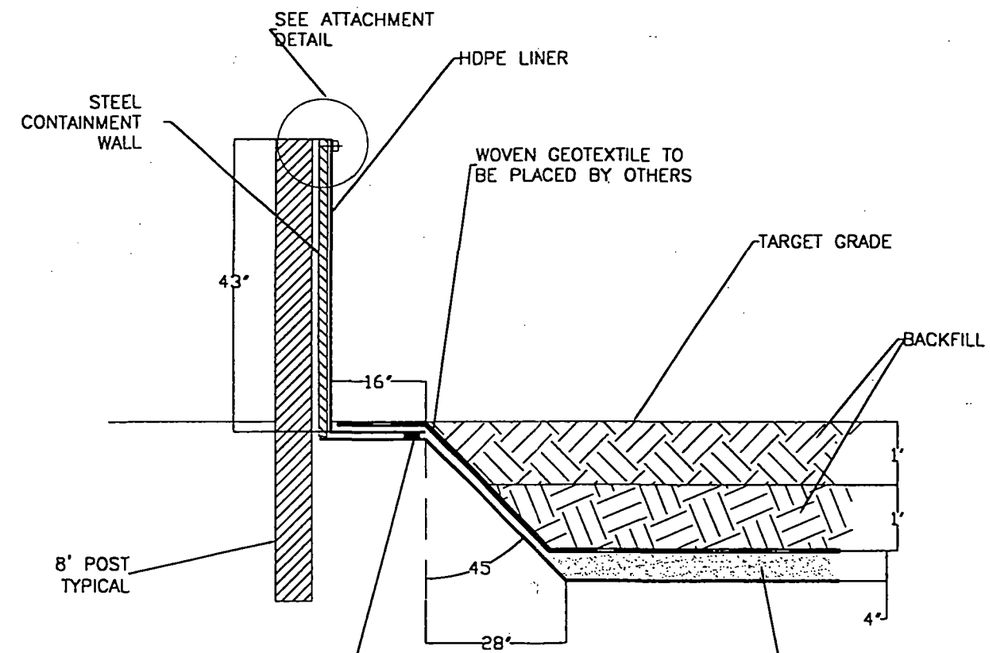

SECTION A–A

INDEX	DATE	CHECK
5	7/29/99	SK
4	7/28/99	SK
3	7/8/99	SK
2	7/2/99	SK
1	6/29/99	SK

REVISIONS

THIS DRAWING AND THE INFORMATION WITHIN ARE PROPRIETARY TO MPC CONTAINMENT SYSTEMS, LTD. AND ARE ISSUED IN STRICT CONFIDENCE ON THE CONDITION THAT NEITHER THIS DRAWING NOR THE INFORMATION WITHIN ARE USED FOR MANUFACTURE OR SALE, ARE COPIED, OR ARE TRANSMITTED OR DISCLOSED TO A THIRD PARTY, IN WHOLE OR IN PART, WITHOUT THE PRIOR WRITTEN CONSENT OF MPC CONTAINMENT.

THE PRODUCTS DEPICTED IN THIS DRAWING MAY BE COVERED BY ONE OR MORE OF THE FOLLOWING U.S. PATENTS: 4,516,151; 4,202,792; 4,778,310; 4,682,911; 4,635,958; AND 4,644,400.

© MPC CONTAINMENT SYSTEMS, LTD. ALL RIGHTS RESERVED.

DRAWING TITLE: **CONTAINMENT WALL DETAILS**

DRAWN: **SK** SCALE: **NTS**

DESIGNER: DATE: **6/18/99**

PROJECT: **GRIFFITH, INDIANA EXPANSION PROJECT**

DRAWING NUMBER: **991076-1**

MPC containment systems, ltd.
773/927-4120 Toll Free: 800/621-0146 4834 S. Oakley Chicago, IL 60609

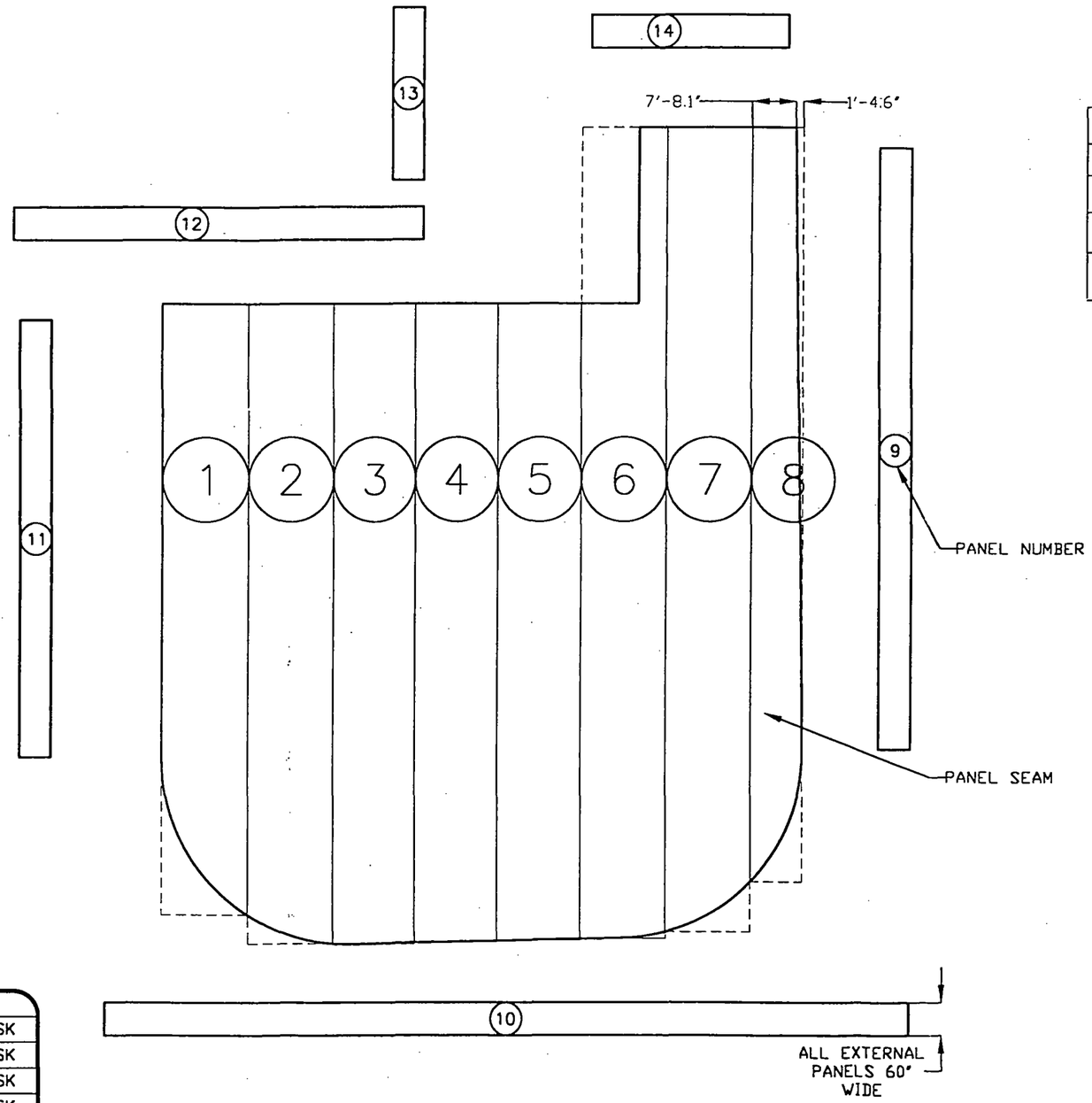

	BILL OF MATERIALS	
ITEM NO.	DESCRIPTION	QTY.
1.	60 MIL HDPE LINER (16,665 S.F. PER ROLL)	1 ROLL
2.	12 GAUGE GALVANIZED STEEL CONTAINMENT WALL, 43" HIGH W/ POSTS AND HARDWARE	1
3.	8 OZ. PER SQ. YD. GEOTEXTILE	27000 SQ.FT.

CUTTING LIST

PANEL NO.	LENGTH	WIDTH	QTY REQ'D
1	105'-6"	15'-0"	1
2	110'-5"		
3	110'-6"		
4	110'-1"		
5	109'-10"		
6	139'-7"		
7	138'-5"	15'-0"	
8	129'-11"	9'-0"	
9	103'-8"	5'-0"	
10	140'-8"		
11	75'-9"		
12	71'-7"		
13	29'-5"		
14	34'-1"	5'-0"	1

TOTAL SQUARE FEET: 16589
ALL MATERIAL 60 MIL HDPE

INDEX	DATE	CHECK
5		
4	7/30/99	SK
3	7/8/99	SK
2	7/2/99	SK
1	6/29/99	SK

REVISIONS

THIS DRAWING AND THE INFORMATION WITHIN ARE PROPRIETARY TO MPC CONTAINMENT SYSTEMS, LTD. AND ARE ISSUED IN STRICT CONFIDENCE ON THE CONDITION THAT NEITHER THIS DRAWING NOR THE INFORMATION WITHIN ARE USED FOR MANUFACTURE OR SALE, ARE COPIED, OR ARE TRANSMITTED OR DISCLOSED TO A THIRD PARTY, IN WHOLE OR IN PART, WITHOUT THE PRIOR WRITTEN CONSENT OF MPC CONTAINMENT.
THE PRODUCTS DEPICTED IN THIS DRAWING MAY BE COVERED BY ONE OR MORE OF THE FOLLOWING U.S. PATENTS: 4,818,151; 4,802,792; 4,778,310; 4,662,911; 4,635,956; AND 4,644,400.
© MPC CONTAINMENT SYSTEMS, LTD. ALL RIGHTS RESERVED.

DRAWING TITLE: **LINER DETAILS**
DRAWN: **SK** SCALE: **NTS**
DESIGNER: DATE: **6/18/99**

PROJECT: **GRIFFITH, INDIANA EXPANSION PROJECT**

DRAWING NUMBER: **991076-2**

MPC containment systems, ltd.
773/927-4120 Toll Free: 800/621-0146 4834 S. Oakley Chicago, IL 60609

2- AS-BUILT DRAWINGS FROM APPROVED CONSTRUCTION COMPLETIONREPORTS (CCR)

Separation Barrier Wall CCR

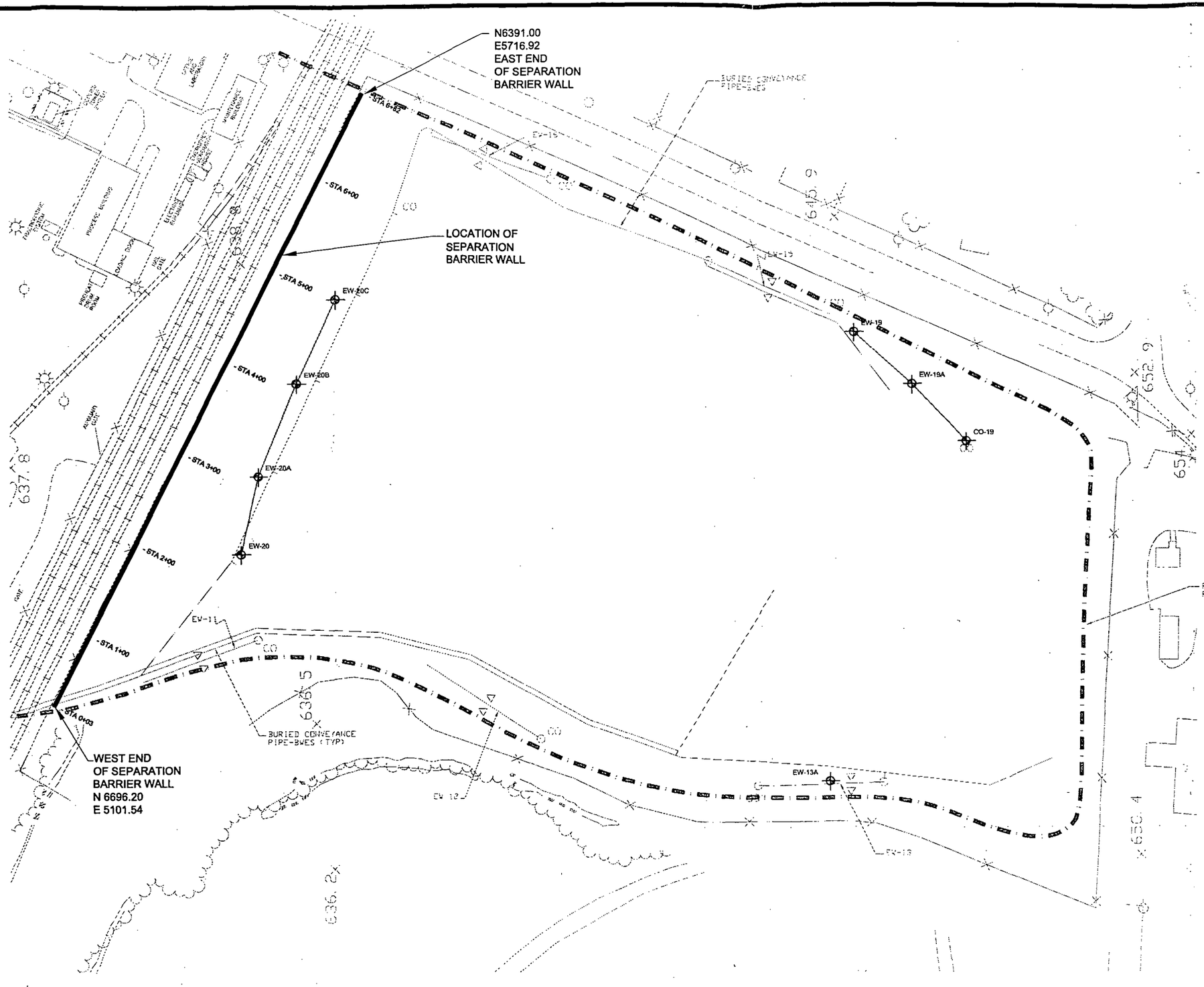

LEGEND:

- BWES TRENCHES
- PERIMETER CONTAINMENT BARRIER WALL
- SEPARATION BARRIER WALL
- EW-1 EXTRACTION WELL OR CLEANOUT

NOTE:

1. THE WEST END OF THE SEPARATION BARRIER WALL DOES NOT EXTEND THROUGH THE PERIMETER BARRIER WALL AS THE HANSON FIGURE SHOWS. BASED ON VISUAL OBSERVATION IN THE FIELD, THE PERIMETER BARRIER WALL IS LOCATED 3 FEET BEYOND THE ENDS OF THE SEPARATION BARRIER WALL. THE LOCATION OF THE PERIMETER BARRIER WALL ON THIS DRAWING IS APPROXIMATE. THE ERROR ON THE HANSON FIGURE IS BELIEVED TO BE THE RESULT OF INCORRECT SCALING OF THE EXISTING SITE CONDITIONS WITH THE NEW SEPARATION BARRIER WALL.

REV	DATE	BY	DESCRIPTION

SCALE: 1" = 50'-0"

WARNING: 0 1/2 1 — IF THIS BAR DOES NOT MEASURE 1" THEN DRAWING IS NOT TO SCALE

DESIGNED ____ DRAWN ____ CHECKED ____

SUBMITTED BY
(PROJECT MANAGER) LICENSE NO. DATE
(COMPANY OFFICER) LICENSE NO. DATE

MWH
MONTGOMERY WATSON HARZA

ACS RD/RA GROUP
AMERICAN CHEMICAL SERVICE SUPERFUND SITE
GRIFFITH, INDIANA

OFF-SITE AREA
SEPARATION BARRIER WALL ALIGNMENT
"AS BUILT"

FIGURE 1

Job No. MW_____ File: J:/209/0601 ACS/105/drawing/MWH_SBW_AS_BUILT.DWG