printed 09/18/2007 4:52PM by epa4561 p. 1/439 L 17000172446 3 0311715101 QUARRY RECLAMATION DIST TIF 4 31A
08/03/2007 921,279 L011593 B:59642 F:50497 I:00000006 11:41AM 08/21/2007 EPA4247 08/21/2007

07-34660

0311715101
Quarry Reclamation District TIF #4
SR/tech

BRADBURNE BRILLER & JOHNSON, LLC

July 30, 2007

RELEASABLE
AUG 07 2007
REVIEWER MD

Illinois Environmental Protection Agency
Bureau of Land
Remedial Project Management Section
Site Remediation Program
1021 North Grand Avenue East
P.O. Box 19276
Springfield, Illinois 62794-9276

ORIGINAL

RECEIVED
AUG 03 2007
IEPA/BOL

Re: Site Remediation Program Application

To Whom It May Concern:

Please find enclosed the following documents:

- Site Remediation Program Application and Service Agreement (**DRM-1**) Form, including:
  - Site Base Map; and,
  - $500 Advance Partial Payment.
- Site Remediation Program Form (**DRM-2**). Please note that there are three Project Documents being submitted:
  - *Limited and Preliminary Soil Gas Investigation Report*, dated February 23, 2007 (Limited Preliminary Soil Gas Investigation);
  - *Report of Phase II Environmental Site Assessment and Limited Surface Flux Assessment – Lyons Landfill: Future Use Evaluation*, dated June 13, 2007 (Phase II ESA – Lyons Landfill: Future Use Evaluation); and,
  - *Report of Phase II Environmental Site Assessment – Lyons Landfill Strategy and Sampling – Commercial Development*, dated June 13, 2007 (Strategy & Sampling – Commercial Development).

ORIGINAL

(Continued)

515 North State Street, Suite 2200, Chicago, Illinois 60610
Voice 312.644.8556 Fax 312.644.8555

BRADBURNE
BRILLER &
JOHNSON, LLC

If you have any questions or require any additional information please contact me at 312-644-8556. Thank you for your time and assistance.

Sincerely,

Kevin McCartney
Project Manager

515 North State Street, Suite 2200, Chicago, Illinois 60610
Voice 312.644.8556 Fax 312.644.8555

FOR ILLINOIS EPA USE:
LOG NO. _____

$500 Advance Partial Payment Included
DRM-2 SRP Form Included
DRM-3 Request for Assessment Included

Illinois Environmental Protection Agency
Bureau of Land
Remedial Project Management Section
1021 North Grand Avenue East
P.O. Box 19276
Springfield, Illinois 62794-9276

Site Remediation Program Application and Services Agreement (DRM- 1) Form

I. Site Identification:

Site Name: Quarry Reclamation District TIF #4
Street Address: South of the Southwest Corner of Ogden &Lawndale Avenues P.O. Box: _____
City: Lyons ZIP Code: 60534
County: Cook Approximate Size of Site (Acres): 15
Illinois Inventory I.D. Number: N/A USEPA I.D. Number : _____
Site Base Map Attached: ☑ Illinois EPA Permit(s): _____
LUST/IEMA Incident Number(s), if applicable: _____

RECEIVED
AUG 0 3 2007
IEPA/BOL

II. Remediation Applicant ("RA"):

RA's Name: Village of Lyons, IL c/o Robert K. Bush, Esq. Title: Attorney
Company: Ancil Glink Diamond Bush Dicianni & Krafthefer, P.C.
Street Address: 140 South Dearborn Street P.O. Box: n/a
City: Chicago State: IL ZIP Code: 60606
Phone: 312-782-7606 FEIN or SSN: 36-6005979

I hereby certify that I am authorized to sign this application and services agreement. I certify that the proposed project meets the eligibility criteria set forth in Section 58.1(a)(2) of the Environmental Protection Act (415 ILCS 5/58.1(a)(2)) and regulations promulgated thereunder and that this submittal and all attachments were prepared at my direction. In consideration for the Illinois EPA's agreement to provide (subject to applicable law, available resources, and receipt of the advance partial payment) review and evaluation services for activities carried out pursuant to Title 17 of the Illinois Environmental Protection Act (415 ILCS 5/58-58.12), I agree to:

(1) Conform with the procedures of Title 17 of the Illinois Environmental Protection Act (415 ILCS 5/58 - 58.12) and implementing regulations;
(2) Allow for or otherwise arrange site visits or other site evaluations by the Illinois EPA when requested;
(3) Pay any reasonable costs incurred and documented by the Illinois EPA in providing such services*; and
(4) Make an advance partial payment to the Illinois EPA for such anticipated services provided in Section V of this application.

As the Remediation Applicant, I understand that I may terminate this services agreement at any time, by notifying the Illinois EPA in writing that services previously requested under the services agreement are no longer wanted. Within 180 days after receipt of the notice, the Illinois EPA shall provide me with a final invoice for services provided until the date of receipt of such notification.

To the best of my knowledge and belief, this request and all attachments are true, accurate and complete. I hereby certify that I have the authority to enter into this agreement.

RA's Signature: _____ Date: 7-26-07

***In addition to the fees applicable under this Services Agreement, the recipient of a No Further Remediation Letter must pay to the Illinois EPA a No Further Remediation Assessment in the amount of the lesser of $2500 or an amount equal to the costs incurred by the Illinois EPA under this Agreement (35 IAC 740.615).**

AUG 17 2007

IL 532 2546
LPC 565 March-2006

FILE
SWEEVER MD

III. Project Objectives:

A. Release Letter Requested.
Please complete one of the subsections by checking applicable boxes and including other information (if necessary, additional information may be attached to this application form):

☑ Comprehensive No Further Remediation ("NFR") Letter

☐ Focused NFR Letter
Identify the focused contaminants of concern by checking the applicable box(es):
☐ Volatiles ☐ BTEX ☐ PCBs ☐ Metals ☐ Semivolatiles ☐ PNAs
☐ Pesticides ☐ Other (identify): _____

☐ 4(y) Letter
Identify the focused contaminants of concern by checking the applicable box(es):
☐ Volatiles ☐ BTEX ☐ PCBs ☐ Metals ☐ Semivolatiles ☐ PNAs
☐ Pesticides ☐ Other (identify): _____
Identify the media of concern by checking applicable boxes:
☐ Soil ☐ Sediments ☐ Other: _____
Identify the actions (e.g., drum removal, spill response, etc.):

B. Identify any support services being sought from the Illinois EPA in addition to the review and evaluation services (if necessary, additional information may be attached to this application form):

☑ No additional support services are being sought
☐ Assistance with community relations
☐ Sample collection and analyses
☐ Other (identify): _____

C. Anticipated Schedule

SRP Document	Projected Date of Receipt by Illinois EPA
Site Investigation Report	August 13, 2007
Remediation Objectives Report	September 10, 2007
Remedial Action Plan	October 15, 2007
Remedial Action Completion report	November 12, 2007

D. Identify the current and post-remediation uses of the remediation site (if necessary, additional information may be attached to this application form):

Current Use:
Clean construction and demolition debris (CCDD) landfill

Post-Remediation Use:
Mixed use development (possible community center, recreational park and commercial developments.

IV. Written Permission from the Property Owner (check one of the applicable boxes and provide additional information):

☑ RA is the property owner of the remediation site identified in Section I of this application.

☐ RA is not the property owner of the remediation site identified in Section I of this application.

Property Owner's Name: _____

Title: _____

Company: _____

Street Address: _____ P.O. Box: _____

City: _____ State: ____ ZIP Code: _____ Phone: _____

I hereby certify that the Remediation Applicant has my permission to enroll the site identified in Section I of this application into the Illinois EPA Site Remediation Program. I certify that the Remediation Applicant and designated representatives have permission to enter upon the indicated premises for the purpose of conducting remedial investigations or activities.

Owner's Signature: _____ Date: _____

For multiple property owners, attach additional sheets containing all the information above along with a signed, dated certification for each.

V. Advance Partial Payment:

The Remediation Applicant shall select one of the following advance partial payment plans:

☑ Plan 1: A $500 advance partial payment is included with this application. Please make the check payable to: "Illinois Environmental Protection Agency". Please include "For Deposit in the Hazardous Waste Fund" and the Remediation Applicant's FEIN or SSN on the check; or

☐ Plan 2: Request that the Illinois EPA determine the appropriate partial payment (i.e., approximately one-half of the total anticipated costs of the Illinois EPA, not to exceed $5,000). A completed DRM-3 form ("Request for Assessment of Advance Partial Payment for Anticipated Services") must accompany this application so that the Illinois EPA may determine the appropriate advance partial payment specific to the services requested.

NOTE: Illinois EPA cannot refund payments without a legislative appropriation. Payment under Plan 1 accelerates the review process but increases the risk of forfeiting the payment if the applicant is ineligible. Payment under Plan 2 may result in a larger advance partial payment when a final determination is made on the application, but it reduces the risk of forfeiture.

If this application contains plans and reports for review and evaluation by the Illinois EPA, a completed Form DRM-2 must also accompany this submittal.

The Illinois EPA is authorized to require this information under Section 415 ILCS 5/58-58.12 of the Environmental Protection Act and regulations promulgated thereunder. Disclosure of this information is required as a condition of participation in the Site Remediation Program. Failure to do so may prevent this form from being processed and could result in your application being rejected. This form has been approved by the Forms Management Center. All information submitted as part of this Application is available to the public except when specifically designated by the Remediation Applicant to be treated confidentially as a trade secret or secret process in accordance with the Illinois Compiled Statutes, Section 7(a) of the Environmental Protection Act, applicable Rules and Regulations of the Illinois Pollution Control Board and applicable Illinois EPA rules and guidelines.

Illinois Environmental Protection Agency
Bureau of Land
Remedial Project Management Section
1021 North Grand Avenue East
P.O. Box 19276
Springfield, Illinois 62794-9276

For Illinois EPA Use:
Log No. _____

Site Remediation Program Form (DRM-2)
(To Be Submitted with all Plans and Reports)

I. Site Identification:

Site Name: Quarry Reclamation District TIF #4
Street Address: South of the southwest corner of Ogden & Lawndale Avenue P.O. Box: _____
City: Lyons State: IL Zip: 60534 Phone: _____
Illinois Inventory I. D. Number: _____ IEMA Incident Number: _____

II. Remediation Applicant:

Applicant's Name: Mr. Robert K. Bush, Esq. Company: Village of Lyons, IL c/o Robert K. Bush Esq.
Street Address: 140 South Dearborn Street P.O. Box: n/a
City: Chicago State: IL ZIP Code: 60606 Phone: 312-782-7606

I hereby request that the Illinois EPA review and evaluate the attached project documents in accordance with the terms and conditions of the Environmental Protection Act (415 ILCS 5), implementing regulations, and the review and evaluation services agreement.

Remediation Applicant's Signature: _____ Date: 7-26-07

III. Contact Person:

Contact's Name: Kevin McCartney
Company: Bradburne, Briller & Johnson, LLC
Street Address: 515 North State Street - Suite 2200
P.O. Box: n/a
City: Chicago State: IL ZIP Code: 60610
Phone: 312-644-8556 ext. 211

Contact's Name: Andy Bajorat
Company: Bradburne, Briller & Johnson, LLC
Street Address: 515 North State Street - Suite 2200
P.O. Box: n/a
City: Chicago State: IL ZIP Code: 60610
Phone: 312-644-8556 ext. 213

IV. Review & Evaluation Licensed Professional Engineer or Geologist ("RELPEG"), if applicable:

RELPEG's Name: _____ Company: _____
Street Address: _____ P.O. Box: _____
City: _____ State: ____ ZIP Code: _____ Phone: _____
Registration Number: _____ License Expiration Date: _____

All information submitted is available to the public except when specifically designated by the Remediation Applicant to be treated confidentially as a trade secret or secret process in accordance with the Illinois Compiled Statutes, Section 7(a) of the Environmental Protection Act, applicable Rules and Regulations of the Illinois Pollution Control Board and applicable Illinois EPA rules and guidelines. The Illinois EPA is authorized to require this information under Sections 415 ILCS 5/58 - 58.12 of the Environmental Protection Act and regulations promulgated thereunder. Disclosure of this information is required as a condition of participation in the Site Remediation Program. Failure to do so may prevent this form from being processed and could result in your plan(s) or report(s) being rejected. This form has been approved by the Forms Management Center.

RECEIVED
AUG 03 2007
IEPA/BOL

V. Project Documents Being Submitted:

Document Title: Limited & Preliminary Soil Gas Investigation Date of Preparation of Plan or Report: 02/23/2007

Prepared by: Bradburne, Briller & Johnson, LLC Prepared for: Village of Lyons, IL c/o Robert K. Bush, Esq.

Type of Document Submitted:

- ☐ Site Investigation Report - Comprehensive
- ☐ Site Investigation Report - Focused
- ☐ Remediation Objectives Report-Tier 1or 2
- ☐ Remediation Objectives Report-Tier 3
- ☐ Remedial Action Plan
- ☐ Remedial Action Completion Report
- ☐ Sampling Plan
- ☐ Health and Safety Plan
- ☐ Community Relations Plan
- ☐ Risk Assessment
- ☐ Contaminant Fate & Transport Modeling
- ☑ Other: Report of Phase II Environmental Site Assessment

Document Title: Phase II ESA-Lyons Landfill: Future Use Evaluation Date of Preparation of Plan or Report: 06/13/2007

Prepared by: Bradburne, Briller & Johnson, LLC Prepared for: Village of Lyons, IL c/o Robert K. Bush Esq.

Type of Document Submitted:

- ☐ Site Investigation Report - Comprehensive
- ☐ Site Investigation Report - Focused
- ☐ Remediation Objectives Report-Tier 1or 2
- ☐ Remediation Objectives Report-Tier 3
- ☐ Remedial Action Plan
- ☐ Remedial Action Completion Report
- ☐ Sampling Plan
- ☐ Health and Safety Plan
- ☐ Community Relations Plan
- ☐ Risk Assessment
- ☐ Contaminant Fate & Transport Modeling
- ☑ Other: Report of Phase II Environmental Site Assessment

VI. Professional Engineer's or Geologist's Seal or Stamp:

I attest that all site investigations or remedial activities that are the subject of this plan(s) or report(s) were performed under my direction, and this document and all attachments were prepared under my direction or reviewed by me, and to the best of my knowledge and belief, the work described in the plan and report has been designed or completed in accordance with the Illinois Environmental Protection Act (415 ILCS 5), 35 Ill. Adm. Code 740, and generally accepted engineering practices or principles of professional geology, and the information presented is accurate and complete.

Engineer or Geologist Name: _____ Professional Engineer's or Geologist's Seal or Stamp:

Company: _____ Phone: _____

Registration Number: _____

Signature: _____ License Expiration Date: _____

Note: The authority of a Licensed Professional Geologist to certify documents submitted to the Illinois Environmental Protection Agency for review and evaluation pursuant to Title XVII of the Environmental Protection Act is limited to Site Investigation Reports (415 ILCS 58.7(f), as amended by P.A. 92-0735, effective July 25, 2002). A Licensed Professional Geologist cannot certify Remediation Objectives Reports, Remedial Action Plans or Remedial Action Completion Reports.

V. Project Documents Being Submitted:

Document Title: Strategy & Sampling - Commercial Development Date of Preparation of Plan or Report: 06/13/2007

Prepared by: Bradburne, Briller & Johnson, LLC Prepared for: Village of Lyons, IL c/o Robert K. Bush, Esq.

Type of Document Submitted:

- ☐ Site Investigation Report - Comprehensive
- ☐ Site Investigation Report - Focused
- ☐ Remediation Objectives Report-Tier 1or 2
- ☐ Remediation Objectives Report-Tier 3
- ☐ Remedial Action Plan
- ☐ Remedial Action Completion Report
- ☐ Sampling Plan
- ☐ Health and Safety Plan
- ☐ Community Relations Plan
- ☐ Risk Assessment
- ☐ Contaminant Fate & Transport Modeling
- ☑ Other: Report of Phase II Environmental Site Assessment

Document Title: _____ Date of Preparation of Plan or Report: _____

Prepared by: _____ Prepared for: _____

Type of Document Submitted:

- ☐ Site Investigation Report - Comprehensive
- ☐ Site Investigation Report - Focused
- ☐ Remediation Objectives Report-Tier 1or 2
- ☐ Remediation Objectives Report-Tier 3
- ☐ Remedial Action Plan
- ☐ Remedial Action Completion Report
- ☐ Sampling Plan
- ☐ Health and Safety Plan
- ☐ Community Relations Plan
- ☐ Risk Assessment
- ☐ Contaminant Fate & Transport Modeling
- ☐ Other: _____

VI. Professional Engineer's or Geologist's Seal or Stamp:

I attest that all site investigations or remedial activities that are the subject of this plan(s) or report(s) were performed under my direction, and this document and all attachments were prepared under my direction or reviewed by me, and to the best of my knowledge and belief, the work described in the plan and report has been designed or completed in accordance with the Illinois Environmental Protection Act (415 ILCS 5), 35 Ill. Adm. Code 740, and generally accepted engineering practices or principles of professional geology, and the information presented is accurate and complete.

Engineer or Geologist Name: _____ Professional Engineer's or Geologist's Seal or Stamp:

Company: _____ Phone: _____

Registration Number: _____

Signature: _____ License Expiration Date: _____

Note: The authority of a Licensed Professional Geologist to certify documents submitted to the Illinois Environmental Protection Agency for review and evaluation pursuant to Title XVII of the Environmental Protection Act is limited to Site Investigation Reports (415 ILCS 58.7(f), as amended by P.A. 92-0735, effective July 25, 2002). A Licensed Professional Geologist cannot certify Remediation Objectives Reports, Remedial Action Plans or Remedial Action Completion Reports.

BRADBURNE BRILLER & JOHNSON, LLC 1316

Illinois Environmental ProtMemo:

Date
7/20/07

Description	Net
PN7-174 Deposit in Hazardous Waste Fund	500.00
Total	500.00

1316

BRADBURNE BRILLER & JOHNSON, LLC
515 NORTH STATE STREET SUITE 2200
CHICAGO, ILLINOIS 60610

JPMORGAN CHASE BANK, N.A.
CHICAGO, ILLINOIS 60670
2-1-710

	DATE	AMOUNT
PAY TO THE ORDER OF ***500 Dollars and 00 Cents	7/20/07	***$500.00

Illinois Environmental Protection Agency
1021 North Grand Avenue East
P.O. Box 19276
Springfield, IL 62794-9276

⑈01316⑈ ⑆071000013⑆ 5330059151⑈

printed 09/18/2007 4:52PM by epa4561 p. 10/439

printed 09/18/2007 4:52PM by epa4561 p. 11/439

07-34660

0311715101
Quarry Reclamation
District TIF #4
ORIGINAL SR/tect
1 of 3

LIMITED AND PRELIMINARY SOIL GAS INVESTIGATION REPORT

Village of Lyons
c/o Robert K. Bush, Esq.
Ancel Glink Diamond Bush Dicianni & Krafthefer, P.C.
140 South Dearborn Street
Chicago Illinois 60603

RECEIVED
AUG 03 2007
IEPA/BOL

Submitted to:

Village of Lyons
c/o Robert K. Bush, Esq.
Ancel Glink Diamond Bush Dicianni & Krafthefer, P.C.
Chicago, Illinois

RELEASABLE
AUG 07 2007
REVIEWER MD

Prepared by:

BRADBURNE, BRILLER & JOHNSON, LLC
Chicago, Illinois

ORIGINAL

February 23, 2007

B&JB

printed 09/18/2007 4:52PM by epa4561 p. 12/439

Privileged and Confidential
Attorney Client Work Product

February 23, 2007

Village of Lyons c/o Robert K. Bush, Esq.
Ancel Glink Diamond Bush Dicianni & Krafthefer, P.C.
140 South Dearborn Street
Chicago Illinois 60603

Subject: **Report of Limited and Preliminary Soil Gas Investigation**
Lyons Landfill
Southwest Corner of Ogden and Lawndale Avenues
Lyons, Illinois
BB&J Project No. 0236901

Dear Mr. Bush:

Bradburne, Briller & Johnson, LLC (BB&J) is pleased to provide the Village of Lyons with this *Report of Limited and Preliminary Soil Gas Investigation* (Preliminary Soil Gas Investigation) for the parcel of land located at the southwest corner of Ogden and Lawndale Avenues in Lyons, Cook County, Illinois (Subject Property). This project was performed in accordance with the Scope of Work outlined in BB&J's Proposal No. PN6-0296, dated January 23, 2007.

We appreciate the opportunity to provide you with our environmental consulting services. If you have any questions or require additional information, please call.

RECEIVED
AUG 0 3 2007
IEPA/BOL

Sincerely,

BRADBURNE, BRILLER & JOHNSON, LLC

Kevin McCartney
Project Manager

Andy Bajorat, CHMM
Senior Scientist

J. Tim Bradburne, P. G.
Principal

RELEASABLE
AUG 0 7 2007
REVIEWER MD

162 N. Franklin Street, Fourth Floor, Chicago, Illinois
Voice 312.726.8556 Fax 312.726.8514
www.bbjgroup.com

printed 09/18/2007 4:52PM by epa4561 p. 13/439

TABLE OF CONTENTS

1.0 BACKGROUND 1

2.0 OBJECTIVE 1

3.0 SUBSURFACE INVESTIGATION 2
- 3.1 Pre-Mobilization Activities 2
- 3.2 Soil Gas Survey 2

4.0 FINDINGS AND ANALYTICAL RESULTS 3
- 4.1 Laboratory Analytical Results 3
- 4.2 Soil Gas Results 4

5.0 VAPOR INTRUSION MODELING 4
- 5.1 Johnson and Ettinger Calculations 4
- 5.2 Results 6
  - 5.2.1 Proposed Residential Area 6
  - 5.2.2 Proposed Community Center Area 7

6.0 CONCLUSIONS 8
- 6.1 Soil Gas Survey and Vapor Intrusion Modeling 8
- 6.2 Conclusions and Recommendations 9

TABLES

Table 1: Summary of Soil Gas Laboratory Analytical Results from Proposed Townhomes
Table 2: Summary of Soil Gas Laboratory Analytical Results from Proposed Community Center
Table 3: Summary of Soil Gas Laboratory Analytical Results from Proposed Community Center & OSHA PELs

FIGURES

Figure 1: Site Location Map
Figure 2: Site Plan Showing Soil Gas Survey Locations

APPENDICES

Appendix A: Field Procedures
Appendix B: Laboratory Analytical Reports

printed 09/18/2007 4:52PM by epa4561 p. 14/439

1.0 BACKGROUND

BB&J conducted a Preliminary Soil Gas Investigation for the parcel of land located on the southwest corner of Ogden and Lawndale Avenues in Lyons, Illinois (Subject Property). The Subject Property, which was formerly used as a quarry, appears to have been backfilled from 20 feet below ground surface to the surface with black cinders or coarse-graded asphalt (based on a review of soil boring logs prepared by H.H. Holmes) and fill material. It is unknown what type of fill material was present at greater depths. The origin of the deeper fill material is unknown, some of which may require excavation or be disturbed during site redevelopment.

BB&J understands that the entirety of the Subject Property will be redeveloped such that an engineered barrier would be constructed site-wide. Because the Subject Property is being considered for residential and commercial mixed-use development, it was requested of BB&J to conduct an investigation to evaluate the potential the subsurface to be impacted with constituents of concern (COCs). When the Subject Property was transferred by Materials Service Corporation to the Village of Lyons a provision in the real estate purchase agreement prevented the new owner from collecting samples for environmental profiling at depths greater than five feet below ground surface (bgs). Due to (1) the historic use of the Subject Property as construction and demolition debris landfill, (2) the area targeted for site redevelopment was situated on top of the historic fill area, and (3) given that there were restrictions placed on the depth at which soil and/or groundwater samples could be collected, it was determined that a limited shallow preliminary soil gas investigation could possibly reveal the presence and type of COCs that could be present onsite.

Based on the information known about the Subject Property and the surrounding properties, the unknown source of the fill material has been identified as a potential recognized environmental condition (REC).

2.0 OBJECTIVE

The objective of this project was to assess the potential for COCs to be present at the Subject Property in association with the fill material, as discussed in Section 1.0.

printed 09/18/2007 4:52PM by epa4561 p. 15/439

3.0 SUBSURFACE INVESTIGATION

The following sections present a summary of the subsurface assessment activities conducted for the Subject Property.

3.1 Pre-Mobilization Activities

Prior to initiating field activities, BB&J prepared a Health and Safety Plan (HSP) for use by BB&J's on-site representative to address known and suspected site-specific COCs, potential site and work-related hazards, and additional health and safety issues. In addition, BB&J contacted the approved Illinois utility-locating companies to clear the underground utilities on January 26, 2007 (over 72 hours prior to field work).

3.2 Soil Gas Survey

On February 1 and 2, 2007, BB&J conducted a soil gas survey throughout the Subject Property. Soil gas samples were collected using 400-milliliter summa canisters. Soil gas samples were collected at 15 soil boring locations (SB-1 through SB-15) at a depth of approximately five feet below ground surface (bgs). The samples were obtained from a 2-inch diameter probe hole created by a track-mounted Geoprobe® drill rig. The Geoprobe® sampler with a solid point was advanced to a depth of approximately five feet bgs then was retracted approximately six inches. Dedicated ¼-inch diameter poly tubing was then inserted through the rods through a discrete sampling point to the six-inch space created by the retracting of the sampler. The dedicated tubing then extended from the six-inch space up through the rods and approximately four feet beyond. This tubing was then connected to a 60 milliliter plastic syringe with a three-way valve. Three times the dead volume, approximately four milliliters per foot or a total of 40 milliliters, was then purged using the syringe. After purging, the syringe was then disconnected. The canister was then connected to the tubing using a ¼-inch swagelok fitting. Leak tracer, consisting of isopropyl alcohol, was then sprayed on paper towels and the towels were placed around the base of the rods where they entered the ground and around the sampling assembly (i.e., the poly tubing and swagelok connection). The valve was then opened on the canister and the reading on the vacuum gauge was then recorded. If the gauge read at least -25 inches of mercury, the canister was allowed to fill. When the gauge read zero inches of mercury the canister was disconnected, the canister was labeled with a ball point pen, wrapped in bubble wrap, and returned to the box in which it was shipped.

The sample name and collection time was then logged into the chain-of-custody to be sent along with the filled canisters back to the laboratory for analysis of volatile organic compounds (VOCs) by United States

printed 09/18/2007 4:52PM by epa4561 p. 16/439

Environmental Protection Agency (USEPA) Method TO-15 and methane by USEPA Method 8015B. The dedicated tubing was then removed and discarded and the rods and discrete sampling point were removed from the probe hole and decontaminated with a solution of Alconox®, non-phosphatic soap, and warm water. The drill rig was then moved to the next sample point and the aforementioned procedure was repeated.

4.0 FINDINGS AND ANALYTICAL RESULTS

The following sections present the subsurface assessment findings and a summary of the laboratory analytical results.

4.1 Laboratory Analytical Results

It is BB&J's understanding that the Subject Property is being considered for residential and commercial development. Therefore, BB&J utilized USEPA's on-line Johnson and Ettinger (J&E) (Johnson and Ettinger, 1991) calculator[1] to compare the results of the soil gas survey to potential vapor intrusion pathways into the proposed townhomes and community center buildings. In using the J&E calculator, BB&J utilized both residential and commercial exposure factors as the Subject Property is being developed for both residential and commercial use[2].

A summary of the soil gas analytical results for samples collected from proposed townhome locations are compared to J&E calculated Estimated Risk-based Soil Gas Standards for a residential scenario in Table 1. A summary of the soil gas analytical results for samples collected from community center locations are compared to J&E calculated Estimated Risk-based Soil Gas Standards for a commercial scenario in Table 2. Modeled indoor air concentrations at the proposed community center are compared to the Occupational Health and Safety Administration (OSHA) Permissible Exposure Limits (PELs) for Air Contaminants in Table 3[3,4].

---

[1] http://www.epa.gov/athens/learn2model/part-two/onsite/jne_results_forward.htm

[2] The default J&E calculator uses default exposure factors for residential land use. When using the J&E calculator to determine the concentrations of soil gas entering the proposed community center, commercial/industrial land use exposure factors were used in the J&E calculator. The specific commercial/industrial default exposure factors used can be found in the USEPA Office of Emergency and Remedial Response *Risk Assessment Guidance For Superfund Volume I: Human Health Evaluation Manual* (RAGS Volume I), dated March 25, 1991, Summary of Standard Default Exposure Factors, Commercial/Industrial Land Use, Inhalation of Contaminants Exposure Pathway.

[3] As discussed in the USEPA's 2002 *Draft Guidance For Evaluating the Vapor Intrusion to Indoor Air Pathway From Groundwater and Soils* (Vapor Intrusion Guidance), Section I.D.1 of the Vapor Intrusion Guidance states that the Occupational Safety and Health Administration (OSHA) and USEPA "have agreed that OSHA generally will take the lead in addressing occupational exposures." As such, BB&J compared the modeled indoor air concentrations to OSHA's PELs, which are expressed as time-weighted averages (TWAs).

[4] OSHA is the Federal agency responsible for workplace safety and health. OSHA created indoor air standards that are designed to protect workers in industrial occupational environments. In the past, OSHA focused primarily on

printed 09/18/2007 4:52PM by epa4561 p. 17/439

4.2 Soil Gas Results

Numerous VOCs were detected in soil gas samples throughout the Subject Property by USEPA TO-15 analysis, including:

- Acetone
- Benzene
- 2-Butanone
- Carbon disulfide
- Carbon tetrachloride
- Chloromethane
- Cyclohexane
- 1,2-Dichloroethane
- 1,1-Dichloroethene
- cis-1,2-Dichloroethene
- trans-1,2-Dichloroethene
- Ethylbenzene
- 4-Ethyltoluene
- n-Heptane
- n-Hexane
- 4-Methyl-2-pentanone
- Styrene
- Tetrachloroethene
- Toluene
- 1,1,1-Trichloroethane
- Trichloroethene (TCE)
- Trichlorofluoromethane
- 1,1,2-Trichlorotrifluoroethane
- 1,2,4-Trimethylbenzene
- 1,3,5-Trimethylbenzene
- Vinyl chloride
- m,p-Xylene
- o-Xylene

In addition, methane was detected in each of the 15 soil gas samples using a modified version of USEPA Method 8015B. Specific locations and concentrations of each of these are presented in Tables 1, 2 and 3. Further discussion of these results is provided in Section 5.2.

5.0 VAPOR INTRUSION MODELING

Vapor intrusion is the migration of volatile chemicals from the subsurface into overlying buildings. Volatile chemicals in buried wastes and/or impacted groundwater can emit vapors that may migrate through subsurface soil and into air spaces of overlying buildings.

5.1 Johnson and Ettinger Calculations

BB&J utilized USEPA's on-line Johnson and Ettinger (J&E) (Johnson and Ettinger, 1991) calculator[5] to evaluate the vapor intrusion pathway into the proposed townhomes and community center buildings. This J&E calculator replicates the implementation that the USEPA Office of Solid Waste and Emergency

---

industrial worksites, but most recently has broadened its efforts to address other worksite hazards. In spring 1994, OSHA introduced a proposed rule regarding indoor air quality in non-industrial environments, although the proposal was withdrawn in December 2001 (USEPA – Air Indoor Quality: http://www.epa.gov/iag/index.html).

[5] http://www.epa.gov/athens/learn2model/part-two/onsite/jne_results_forward.htm

printed 09/18/2007 4:52PM by epa4561 p. 18/439

Response (OSWER) Draft Guidance for Evaluating the Vapor Intrusion to Indoor Air Pathway from Groundwater and Soils (OSWER Vapor Intrusion Guidance) used in developing its Vapor Intrusion Guidance but includes a number of enhancements that are facilitated by web implementation. The J&E calculator has become increasingly popular with regulators and consultants over the last 10 years and several manuscripts have been published on its use. It should be noted that the State of Illinois does not provide any guidance or soil gas standards with regard to vapor intrusion.

Briefly, the calculator is a one-dimensional analytical solution, which incorporates both advection and diffusion transport mechanisms to produce a unitless "attenuation factor." This attenuation factor is a measure of how soil and building properties limit the intrusion of organic vapors into overlying buildings and is defined as the concentration of the compound in indoor air divided by the concentration of the compound in soil gas or ground water.

Although the J&E calculator is inherently conservative, BB&J also made the following conservative assumptions in running the calculator:

- The highest soil gas concentration of a given constituent identified site-wide was assumed to be the concentration present site-wide (even if lower concentrations were identified elsewhere) for the community center vapor intrusion scenario (i.e., as presented in Table 3);
- OSWER Vapor Intrusion Guidance[6] allows a site risk manager to select media-specific target concentrations for screening at three cancer risk levels: 10^{-4}, 10^{-5}, and 10^{-6}; however, BB&J compared the modeled results to the most conservative of these (10^{-6});
- A less protective, best estimate and more protective target concentration were computed for the maximum soil gas concentration of a given constituent detected at the Subject Property. These computed "backward" target concentrations served as comparison to the detected soil gas concentrations at the Subject Property. The best estimate concentrations are based on the best guesses of depth to the contamination source and residual moisture content for the chosen soil type. The less protective and more protective range of values is computed based on user-specified uncertainty in both depth to the contamination source and unsaturated zone moisture content;
- The default J&E calculator uses default exposure factors for residential land use. When using the J&E calculator to determine the concentrations of soil gas entering the proposed community center, commercial/industrial land use exposure factors were used in the J&E calculator. The specific commercial/industrial default exposure factors used can be found in the USEPA Office of Emergency and Remedial Response RAGS Volume I, dated March 25, 1991, Summary of Standard Default Exposure Factors, Commercial/Industrial Land Use, Inhalation of Contaminants Exposure Pathway; and,

[6] http://www.epa.gov/correctiveaction/eis/vapor/complete.pdf

printed 09/18/2007 4:52PM by epa4561 p. 19/439

- For use in comparing the concentrations of soil gas detected at the proposed community center to OSHA PELs, a low prediction estimate, best estimate, and high prediction estimate were all evaluated for each constituent. The "forward" predictions were then compared to the OSHA PELs for each constituent. The best estimate results are based on the estimated assumptions regarding depth to the sample location and residual moisture content for the chosen soil type. The low prediction and high prediction range of values is computed based on user-specified uncertainty in both depth to the sample and unsaturated zone moisture content.

Based on the results of the soil gas survey at the Subject Property, BB&J ran the J&E calculator for the constituents reported to be present in at least one soil gas sample (see Section 4.2).

5.2 Results

The soil gas survey results for both the residential and community center scenarios are presented below:

5.2.1 Proposed Residential Area

As indicated in Table 1, multiple VOCs, including constituents consistent with historic releases of gasoline, chlorinated solvents and oxygenated solvents, were detected in the soil gas samples collected site-wide. Of these, the following constituents of concern (COCs) were estimated to result in indoor concentrations greater than the modeled "more-protective" Target Concentration for Estimated Risk-based Soil Gas Standards[7]:

- Benzene;
- TCE; and,
- Vinyl Chloride.

Collectively, modeled cancer risks in the residential scenario were on the order of approximately 50 times greater than the 10^{-6} bench mark used for risk assessment purposes. Plainly stated, the modeled results indicate an approximately one in 20,000 chance per resident of developing cancer directly attributable to vapor intrusion into the townhomes due to on-site sources in some locations. Specifically, vinyl chloride has been identified by the United States Department of Health and Human Services to be associated with brain, liver, lung, and certain blood cancers[8]. Similarly, TCE is "reasonably anticipated" to be associated

[7] These J&E calculations used residential default exposure factors due to the intended residential use of the proposed townhomes.
[8] http://www.atsdr.cdc.gov/tfacts20.html#bookmark06

printed 09/18/2007 4:52PM by epa4561 p. 20/439

with liver, kidney, or lung cancer[9], and benzene is a known carcinogen associated with leukemia, particularly acute myelogenous leukemia[10].

In addition to the VOCs detected at the proposed townhomes, as indicated in Table 1 methane was detected in each soil gas sample from these locations. Two of the 11 soil gas samples contained concentrations within the lower explosive limit (LEL) and upper explosive limit (UEL), and are considered to be within the explosive range for methane[11].

5.2.2 Proposed Community Center Area

As indicated in Table 2, multiple VOCs, including constituents consistent with historic releases of gasoline, chlorinated solvents and oxygenated solvents, were detected in the soil gas samples collected sitewide.. Furthermore, the following COCs were estimated to result in indoor concentrations greater than the modeled "more-protective" Target Concentrations for Estimated Risk-based Soil Gas Standards[12]:

- Benzene;
- Carbon tetrachloride;
- 1,2-Dichloroethane;
- cis-1,2-Dichloroethane;
- Ethylbenzene;
- TCE; and,
- Vinyl chloride.

Using risk assessment parameters typical of an Illinois Environmental Protection Agency (IEPA) or USEPA-type Comprehensive Environmental Response, Compensation, and Liability Act (CERCLA, i.e., Superfund) risk assessment, modeled cancer risks in this scenario were on the order of approximately 1,000 times greater than the 10^{-6} bench mark used for risk assessment purposes. Plainly stated, the modeled results indicate an approximately one in 1,000 chance per employee developing cancer directly attributable to vapor intrusion into the community center due to on-site sources. This risk is driven

[9] http://www.atsdr.cdc.gov/tfacts19.html#bookmark06
[10] http://www.atsdr.cdc.gov/tfacts3.html#bookmark06
[11] According to the National Fire Protection Association (NFPA), the LEL for methane is 5.0%, while the UEL is 15%.
[12] These I&E calculations used commercial/industrial default exposure factors due to the intended commercial use of the proposed community center.

printed 09/18/2007 4:52PM by epa4561 p. 21/439

primarily by the high concentrations of vinyl chloride and TCE, which as described in Section 5.2.1., are known or suspected carcinogens.

In addition to the VOCs detected at the proposed community center, as indicated in Table 2 methane was detected in each soil gas sample from these locations. Two of the four soil gas samples contained concentrations within the explosive range for methane.

For purposes of comparison, Table 3 depicts whether the known concentrations of soil gas detected at the proposed community center would have the potential to exceed OSHA PELs for air contaminants, as identified in 29 Code of Federal Regulations (CFR) Part 1910 Occupational Safety and Health Standards "Limits for Air Contaminants" Tables Z-1 and Z-2. The OSHA PELs are based on 8-hour time weighted averages (TWAs). None of the COCs detected in the soil gas samples from the proposed community center exceeded the OSHA PELs; however, it should be noted that the OSHA PELs are more typically applied in industrial settings rather than a non-industrial workplace setting, such as the proposed community center. In addition, town hall meetings involving residents would likely be considered by IEPA or USEPA to constitute a non-workplace usage of the community center. Consequently, the OSHA PELs may constitute a less conservative standard, but possibly less applicable standard relative to those presented in Table 2.

6.0 CONCLUSIONS

Based on the information presented in Sections 1.0 through 5.0 of this Report, BB&J offers the following conclusions and recommendations for the Subject Property.

6.1 Soil Gas Survey and Vapor Intrusion Modeling

As indicated above, multiple VOCs, including constituents consistent with historic releases of gasoline, chlorinated solvents and oxygenated solvents, were detected in the soil gas samples collected sitewide. Based on modeled results using default exposure factors for residential and commercial scenarios, cancer risks exceeded the benchmark 10^{-6} (i.e., one in a million) cancer risk in both the residential and commercial scenarios. These elevated risks are driven primarily by the presence of vinyl chloride and TCE; however, a number of other known or suspected carcinogens were also identified.

With respect to the community center, modeled indoor air concentrations were compared to the OSHA PELs. None of the COCs detected in the soil gas samples from the proposed community center exceeded

printed 09/18/2007 4:52PM by epa4561 p. 22/439

the OSHA PELs (see Table 3). OSHA often asserts jurisdiction over state or federal environmental authorities in a workplace setting; however, it should be noted that the OSHA PELs are more typically applied in industrial settings rather than a non-industrial workplace setting, such as the proposed community center. In addition, town hall meetings involving residents would likely be considered by IEPA or USEPA to constitute a non-workplace usage of the community center. Consequently, the OSHA PELs may constitute a less conservative standard, but possibly less applicable standard relative to those presented in Table 2.

In addition to the chronic hazards potentially present at the Subject Property, concentrations of methane were reported to be present in four of the 15 samples collected site-wide at concentrations within the explosive range for methane.

A detailed discussion of all of these findings is presented in Section 5.2.

6.2 Conclusions and Recommendations

As indicated in Tables 1 and 2, concentrations of multiple VOCs were detected above the modeled "more-protective" Target Concentrations for Estimated Risk-based Soil Gas Standards. In particular, TCE and vinyl chloride were detected in concentrations two to three orders of magnitude greater than the modeled "more-protective" Target Concentrations for Estimated Risk-based Soil Gas Standards. Such concentrations suggest that these constituents have the potential to accumulate within the proposed townhomes and community center at concentrations that would pose a human health risk. Possible remedies to limit the exposure of these constituents to inhabitants of the proposed townhomes and community center include installation of a subsurface vapor barrier beneath the proposed buildings at the Subject Property combined with engineered venting systems. Both the subsurface vapor barrier and the venting subsurface would require maintenance and upkeep for the lifetime of the buildings. In addition, the venting system would require air permits from IEPA to discharge the VOCs into the ambient air.

The presence of methane within its explosive range at various locations at the Subject Property also should be noted and explored further. To ensure that methane would not accumulate beneath or within the proposed structures at the Subject Property, proper venting of those structures would be required to reduce the potential for explosions to occur. The presence of methane detected site-wide may indicate that material inconsistent with IEPA's definition of clean construction and demolition debris may be present beneath the surface of the Subject Property. As the material decomposes, shifting of the

printed 09/18/2007 4:52PM by epa4561 p. 23/439

subsurface may occur, causing structural damage to overlying structures, including the proposed townhomes and community center.

The specific sources of the VOCs and methane could not be determined by the limited scope of this investigation. However, BB&J understands that a gasoline station was formerly located on the northeast portion of the Subject Property near the intersection of Ogden Avenue and Lawndale Avenue. A leaking underground storage tank (LUST) incident was reported for the gasoline station and a No Further Remediation (NFR) letter was issued for the LUST incident. Despite the issuance of the NFR, the gasoline station may still be the source of the gasoline-related compounds, partly or wholly.

Sources of the chlorinated solvents and non-chlorinated solvents have not been identified. While these constituents were identified in varying concentrations site-wide, the highest concentrations were identified in the samples collected in the southeastern portion of the Subject Property.

The modeling conducted by BB&J should be regarded as preliminary and should be used for guidance purposes only. Factors that may impact the accuracy of the model include, but are not limited to:

- The limited number of samples collected at the Subject Property relative to the overall size;
- Effects of proposed future grading activities;
- Estimated building air exchange rates used in the model relative to actual building air exchange rates;
- Characteristics of the soil proposed to be placed on top of the existing fill material during proposed grading activities; and,
- The degree to which the concrete slabs crack in the future due to possible subsidence resultant from the continued decay of materials in the subsurface or other unknown subsurface conditions.

printed 09/18/2007 4:52PM by epa4561 p. 24/439

TABLES

Table 1: Summary of Soil Gas Laboratory Analytical Results from Proposed Townhomes

Soil Gas ID	SB-1	SB-2	SB-3	SB-4	SB-5	SB-6	SB-7	SB-8	SB-9	SB-10	SB-11	Maximum Concentration Detected at Townhomes	BACKWARD Results of Johnson & Ettinger Vapor Intrusion Model - Estimated Risk-based Soil Gas Standards[1]			Explosive Range	
Soil Sample Depth[2]	5.0 (µg/m³)	5.0 (µg/m³)	5.0 (µg/m³)	5.0 (µg/m³)	5.0 (µg/m³)	5.5 (µg/m³)	6.0 (µg/m³)	6.0 (µg/m³)	5.5 (µg/m³)	5.5 (µg/m³)	5.5 (µg/m³)	µg/m³	Less Protective Target Concentration (µg/m³)	Most Estimate Target Concentration (µg/m³)	More Protective Target Concentration (µg/m³)	Lower Explosive Limit (LEL)[3] (%)	Upper Explosive Limit (UEL)[3] (%)
USEPA Method TO-15 (VOCs)																	
Acetone	ND	62	310	190	ND	41	ND	ND	ND	200	ND	310	582,000	188,000	111,700	NA	NA
Benzene	11	ND	34	27	92	32	44	31	37	100[4]	130	100	938.8	228	114.4	NA	NA
2-Butanone (MEK)	14	7.6	25	37	14	15	16	7.6	11	37	11	78	2,389,000	767,700	461,100	NA	NA
Carbon disulfide	33	ND	24	28	230	96	28	10	ND	210	74	230	1,999,000	454,000	239,000	NA	NA
Chloromethane (Methyl Chloride)	ND	ND	ND	ND	18	6.3	ND	ND	ND	26	ND	38	5,277	1,152	773.2	NA	NA
Cyclohexane	110	ND	34	44	580	91	47	ND	390	80	580	580	NMD	NMD	NMD	NA	NA
1,1-Dichloroethane (1,1-Dichloroethylene)	ND	ND	ND	ND	ND	ND	ND	ND	ND	ND	8.0	8.0	791,000	143,000	72,800	NA	NA
cis-1,2-Dichloroethene (cis-1,2-Dichloroethylene)	11	ND	ND	ND	5.5	ND	ND	ND	ND	7.8	344	344	126,200	29,200	12,850	NA	NA
trans-1,2-Dichloroethene (trans-1,2-Dichloroethylene)	ND	ND	ND	ND	ND	ND	ND	ND	ND	ND	116	116	250,000	80,210	38,450	NA	NA
Ethylbenzene	7.1	ND	16	11	24	9.8	20	6.8	9.2	42	14	42	7,737	1,810	873.5	NA	NA
n-Heptane (Heptane)	100	6.7	31	25	2900[5]	29	60	20	18	190	1,600	2,900	NMD	NMD	NMD	NA	NA
n-Hexane (Hexane)	240	7.3	64	57	2300[5]	60	97	52	470	210	1,600	2,300	298,000	87,110	35,030	NA	NA
4-Methyl-2-pentanone (Methylisobutylketone)	ND	ND	ND	ND	ND	ND	ND	ND	58	ND	ND	35	243,000	68,490	31,990	NA	NA
Styrene	ND	ND	ND	ND	ND	ND	ND	ND	ND	ND	6.2	6.2	3,651,000	857,200	405,700	NA	NA
Tetrachloroethene (Tetrachloroethylene)	11	ND	ND	ND	ND	ND	ND	ND	ND	6.2	ND	11	2,853	686.1	303.8	NA	NA
Toluene	20	6.9	40	38	87	35	69	20	23	120	54	120	1,217,000	234,000	147,400	NA	NA
1,1,1-Trichloroethane	ND	ND	ND	ND	ND	ND	13	28	ND	ND	ND	28	7,428,000	1,737,000	902,000	NA	NA
Trichloroethene (Trichloroethylene)	12	ND	ND	ND	ND	ND	ND	ND	ND	18	100	100	73.7	17.8	8.5	NA	NA
Trichlorofluoromethane	ND	ND	ND	ND	24	ND	ND	ND	ND	ND	ND	34	2,136,000	518,000	257,000	NA	NA
1,1,2-Trichlorotrifluoroethane (1,1,2-Trichloro-1,2,2-Trifluoroethane)	21	17	ND	ND	10	13	29	18	15	ND	24	30	181,700,000	24,640,000	11,600,000	NA	NA
1,2,4-Trimethylbenzene	ND	ND	ND	ND	6.9	ND	8.3	ND	ND	8.9	ND	8.9	25,419	5,181	2,620	NA	NA
1,3,5-Trimethylbenzene	ND	ND	ND	ND	6.9	ND	ND	ND	ND	5.2	ND	6.9	26,819	5,790	2,630	NA	NA
2,2,4-Trimethylpentane	ND	ND	ND	42	ND	ND	ND	20	490	83	ND	490	NMD	NMD	NMD	NA	NA
Vinyl chloride	4.1	ND	13	ND	8.7	ND	ND	ND	730	22	2,900	2,900	782.3	177.4	93.7	NA	NA
m,p-Xylene	8.5	ND	7.6	7.9	14	8.3	15	7.3	11	21	7.7	21	NMD	NMD	NMD	NA	NA
o-Xylene	6.8	ND	6.9	6.9	26	7.6	14	6.2	12	38	8.2	38	Unlimited	9,100,000	2,870,000	NA	NA
USEPA Method 3810B	(%)	(%)	(%)	(%)	(%)	(%)	(%)	(%)	(%)	(%)	(%)	(%)					
Methane	1.0	0.031	0.30	0.2	0.088	1.9	1.8	0.42	0.3	1.3	0.53	9.3	NMD	NMD	NMD	5.0	15.0

Notes:

[1] Results based upon the calculation in the USEPA's Screening Level implementation of the Johnson and Ettinger Vapor Intrusion Model http://www.epa.gov/oswer/subsurfaceintrusion/models/part1-

[2] Depths indicated in feet below ground surface (bgs).

[3] According to the National Fire Protection Association, the LEL for methane is 5.0%, while the UEL is 15%.

[4] Numbers illustrated in bold indicate concentrations equal to or above Target Soil Gas Concentrations or within the explosive range for methane.

[5] As indicated by H&P Mobile Geochemistry, the concentration indicated for this analyte is an estimated value above the calibration range of the instrument. This value is considered an estimate.

Acronyms:
NA: Not applicable
ND: Not detected
NMD: No model data for constituent
µg/m³: micrograms per cubic meter
USEPA: United States Environmental Protection Agency
VOCs: Volatile organic compounds

Prepared By: [illegible]
Checked By: [illegible]

printed 09/18/2007 4:52PM by epa4561 p. 25/439

Table 2: Summary of Soil Gas Laboratory Analytical Results from Proposed Community Center

Soil - Gas ID	SG-12	SG-13	SG-14	SG-15	Maximum Concentration Detected at Proposed Community Center	BACKWARD Results of Johnson & Ettinger Vapor Intrusion Model - Estimated Risk-based Soil Gas Standards[1]			Explosive Range	
Soil Sample Depth[2]	6.0 (µg/m³)	6.0 (µg/m³)	6.0 (µg/m³)	6.0 (µg/m³)	(µg/m³)	Protective Target Concentration (µg/m³)	Best Estimate Target Concentration (µg/m³)	Protective Target Concentration (µg/m³)	Lower Explosive Limit (LEL)[3] (%)	Upper Explosive Limit (UEL)[3] (%)
USEPA Method TO-15 (VOCs)										
Acetone	40	200	ND	580	580	919,000	291,000	183,100	NA	NA
Benzene	120	380[4]	100	ND	380	1,587	340	192	NA	NA
2-Butanone (MEK)	25	87	5.1	ND	87	3,444,000	1,121,000	556,400	NA	NA
Carbon disulfide	86	200	29	630	630	2,642,000	864,000	349,000	NA	NA
Carbon tetrachloride	ND	ND	ND	490	490	926.7	217.7	105.6	NA	NA
Chloromethane (Methyl Chloride)	9.0	9.7	29	ND	29	8,585	3,539	1,287	NA	NA
Cyclohexane	55	37	180	11,000	11,000	NMD	NMD	NMD	NA	NA
1,2-Dichloroethane (Ethylene dichloride)	ND	ND	ND	190	190	991.6	102.1	53.49	NA	NA
1,1-Dichloroethene (1,1-Dichloroethylene)	5.1	ND	ND	770	770	862,000	317,000	108,000	NA	NA
cis-1,2-Dichloroethene (cis-1,2-Dichloroethylene)	110	19	30	22,000	22,000	161,300	42,600	20,370	NA	NA
trans-1,2-Dichloroethene (trans-1,2-Dichloroethylene)	29	ND	12	9,000	9,000	377,000	87,990	41,880	NA	NA
Ethylbenzene	30	900	12	4,000	4,000	19,600	3,047	1,494	NA	NA
4-Ethyltoluene	ND	25	ND	57	57	NMD	NMD	NMD	NA	NA
n-Heptane (Heptane)	230	39	120	8,000	8,000	NMD	NMD	NMD	NA	NA
n-Hexane (Hexane)	280	85	280	9,000	9,000	421,200	127,200	40,350	NA	NA
4-Methyl-2-pentanone (Methylisobutylketone)	ND	8.3	ND	67	67	334,000	82,050	45,120	NA	NA
Styrene	ND	17	ND	100	100	6,344,000	1,351,000	820,200	NA	NA
Tetrachloroethene (Tetrachloroethylene)	ND	ND	ND	84	84	4,951	1,115	849	NA	NA
Toluene	110	300	62	20,000	20,000	1,777,000	430,000	215,200	NA	NA
Trichloroethene (Trichloroethylene)	89	38	95	2,400	2,400	123.9	29.4	14.32	NA	NA
1,1,2-Trichlorotrifluoroethane (1,1,2-Trichloro-1,2,2-Trifluoroethane)	16	28	14	ND	28	148,600,000	35,100,000	17,080,000	NA	NA
1,2,4-Trimethylbenzene	8.4	57	ND	150	150	37,900	6,432	3,620	NA	NA
1,3,5-Trimethylbenzene	8.3	81	ND	200	200	37,100	8,465	3,840	NA	NA
2,2,4-Trimethylpentane	ND	ND	170	ND	170	NMD	NMD	NMD	NA	NA
Vinyl chloride	380	47	300	160,000	160,000[5]	1,180	298	157.4	NA	NA
m,p-Xylene	28	290	9.6	2,700	2,700	NMD	NMD	NMD	NA	NA
o-Xylene	35	920	7.8	9,000	9,000	Detection	7,893,000	3,790,000	NA	NA
USEPA Method 8015B	(%)	(%)	(%)	(%)	(%)					
Methane	2.3	0.85	5.8	8.3[6]	8.3	NMD	NMD	NMD	5.0	15.0

Notes:

[1] Results based upon the calculation in the USEPA's Screening Level Implementation of the Johnson and Ettinger Vapor Intrusion Model (http://www.epa.gov/athens/learn2model/part-two/oswer/JohnEttx_tbs_screen.htm). As the proposed community center will be used for commercial purposes, the standard default exposure parameters in the Johnson & Ettinger Vapor Intrusion Model were changed to reflect this use. The list of parameters that were changed can be found in the USEPA Risk Assessment Guidance for Superfund Volume I: Human Health Evaluation Manual (RAGS Volume I), dated March 25, 1991, "Summary of Standard Default Exposure Factors", Commercial/Industrial Use, Inhalation of Contaminants Exposure Pathway.

[2] Depths indicated in feet below ground surface (bgs).

[3] According to the National Fire Protection Association, the LEL for methane is 5.0%, while the UEL is 15%.

[4] Numbers illustrated in bold indicate concentrations equaling or above Target Soil Gas Concentrations or within the explosive range for methane.

[5] As indicated by H&P Mobile Geochemistry, the concentration indicated for this analyte is an estimated value along the calibration range of the instrument. This value is considered an estimate.

Acronyms:

NA: Not applicable

ND: Not detected

NMD: No model data for constituent

µg/m³: micrograms per cubic meter

USEPA: United States Environmental Protection Agency

VOCs: Volatile organic compounds

Prepared By: [illegible] 2/23/2007

Checked By: [illegible] 2/23/2007

printed 09/18/2007 4:52PM by epa4561 p. 26/439

Table 3: Summary of Soil Gas Laboratory Analytical Results from Proposed Community Center & OSHA PELs

					Maximum Concentration Detected at Proposed Community Center	FORWARD Results of Johnson & Ettinger Vapor Intrusion Model - Projected Indoor Air Concentrations[2]			OSHA Permissible Exposure Limits (PELs) for Air Contaminants[3]
Soil - Gas ID	SB-12	SB-13	SB-14	SB-15					
Soil Sample Depth[1]	8.0 (ug/m³)	8.0 (ug/m³)	8.0 (ug/m³)	8.0 (ug/m³)	(ug/m³)	Low Prediction (ug/m³)	Best Estimate (ug/m³)	High Prediction (ug/m³)	(ug/m³)
USEPA Method TO-15 (VOCs)									
Acetone	80	200	ND	680	530	0.343	0.9633	1.723	2,400,000
Benzene	130	260	160	ND	260	0.06641	0.3557	0.7082	3,190
2-Butanone (MEK)	28	87	5.1	ND	87	0.03888	0.1133	0.2283	590,000
Carbon disulfide	46	200	26	650	650	0.2437	0.9864	1.945	62,200
Carbon tetrachloride	ND	ND	ND	460	460	0.1421	0.6609	1.239	62,900
Dichloromethane (Methyl Chloride)	9.9	8.7	20	ND	20	0.00922	0.03497	0.06302	307,000
Cyclohexane	66	97	180	11,000	11,000	NMD	NMD	NMD	1,050,000
1,2-Dichloroethane (Ethylene dichloride)	ND	ND	ND	100	100	0.03625	0.184	0.2629	405,000
1,1-Dichloroethane (1,1-Dichloroethylene)	9.1	ND	ND	770	770	0.2908	1.02	2.121	NPEL
cis-1,2-Dichloroethene (cis-1,2-Dichloroethylene)	110	18	30	22,000	22,000	1.845	8.272	17.31	NPEL
trans-1,2-Dichloroethene (trans-1,2-Dichloroethylene)	26	ND	12	5,900	5,900	1.856	8.022	16.87	NPEL
Ethylbenzene	30	460	12	4,800	4,800	1.144	4.863	10.13	435,000
4-Ethyltoluene	ND	25	ND	57	57	NMD	NMD	NMD	NPEL
n-Heptane (Heptane)	250	39	120	6,900	6,900	NMD	NMD	NMD	2,000,000
n-Hexane (Hexane)	260	58	380	9,000	9,000	6.24	20.98	32.71	1,800,000
4-Methyl-2-pentanone (Methyl Isobutyl Ketone)	ND	8.3	ND	87	87	0.02867	0.1099	0.2203	410,000
Styrene	ND	17	ND	190	190	0.05592	0.1987	0.2456	426,000
Tetrachloroethene (Tetrachloroethylene)	ND	ND	ND	94	94	0.02367	0.07962	0.2065	678,000
Toluene	110	200	62	20,000	20,000	9.021	37.98	75.89	754,000
Trichloroethene (Trichloroethylene)	89	30	89	2,400	2,400	0.73	2.094	4.231	678,000
1,1,2-Trichlorotrifluoroethane (1,1,2-Trichloro-1,2,2-Trifluoroethan	15	28	14	ND	28	0.00769	0.03285	0.06709	760,000
1,2,4-Trimethylbenzene	8.4	57	ND	150	150	0.03813	0.1547	0.3406	NPEL
1,3,5-Trimethylbenzene	6.3	61	ND	260	260	0.04888	0.2062	0.4426	NPEL
2,2,4-Trimethylpentane	ND	ND	170	ND	170	NMD	NMD	NMD	NPEL
Vinyl chloride	300	47	200	190,000[4]	190,000	58.06	223.6	442.6	2,560
m,p-Xylene	26	260	9.0	2,700	2,700	NMD	NMD	NMD	435,000
o-Xylene	33	320	7.0	3,000	3,000	0.9675	4.07	8.14008	435,000
USEPA Method 8015B	(%)	(%)	(%)	(%)	(%)				
Methane	2.3	0.89	3.9	4.3	4.3	NMD	NMD	NMD	NPEL

Notes:

[1] Results based upon the calculation in the USEPA's Screening Level implementation of the Johnson and Ettinger Vapor Intrusion Model and the known maximum concentration detected at the proposed Community Center (http://www.epa.gov/oswer/riskassessment/ConceptualModel/indoor_ff_screen.htm). As the proposed community center will be used for commercial purposes, the standard default exposure parameters in the Johnson & Ettinger Vapor Intrusion Model were changed to reflect this use. The list of parameters that were changed can be found in the USEPA Risk Assessment Guidance for Superfund Volume I: Human Health Evaluation Manual (RAGS Volume I), dated March 25, 1991, "Summary of Standard Default Exposure Factors", Commercial/Industrial Use, Inhalation of Contaminants Exposure Pathway.

[2] As identified in 29 Code of Federal Regulations (CFR) Part 1910 Occupational Safety and Health Standards "Limits for Air Contaminants" Tables Z-1 and Z-2. The Permissible Exposure Limits (PELs) are 8-hr time weighted averages (TWAs).

[3] Depths indicated in feet below ground surface (bgs)

[4] According to the National Fire Protection Association, the LEL for methane is 5.0% , while the UEL is 15%

[5] As indicated by H&P Mobile Geochemistry, the concentration indicated for this analyte is an estimated value above the calibration range of the instrument. This value is considered an estimate.

Acronyms:

OSHA: Occupational Health and Safety Administration
NA: Not applicable
ND: Not detected
NMD: No model data for constituent
NPEL: No PEL for constituent
ug/m³: micrograms per cubic meter
USEPA: United States Environmental Protection Agency
VOCs: Volatile organic compounds

Prepared By: [illegible]
Checked By: [illegible]

printed 09/18/2007 4:52PM by epa4561 p. 27/439

printed 09/18/2007 4:52PM by epa4561 p. 28/439

FIGURES

Source: U.S. Geological Survey Brookfield, Illinois Quadrangle
7.5 Minute Series (Topographic), Dated 1992.

N

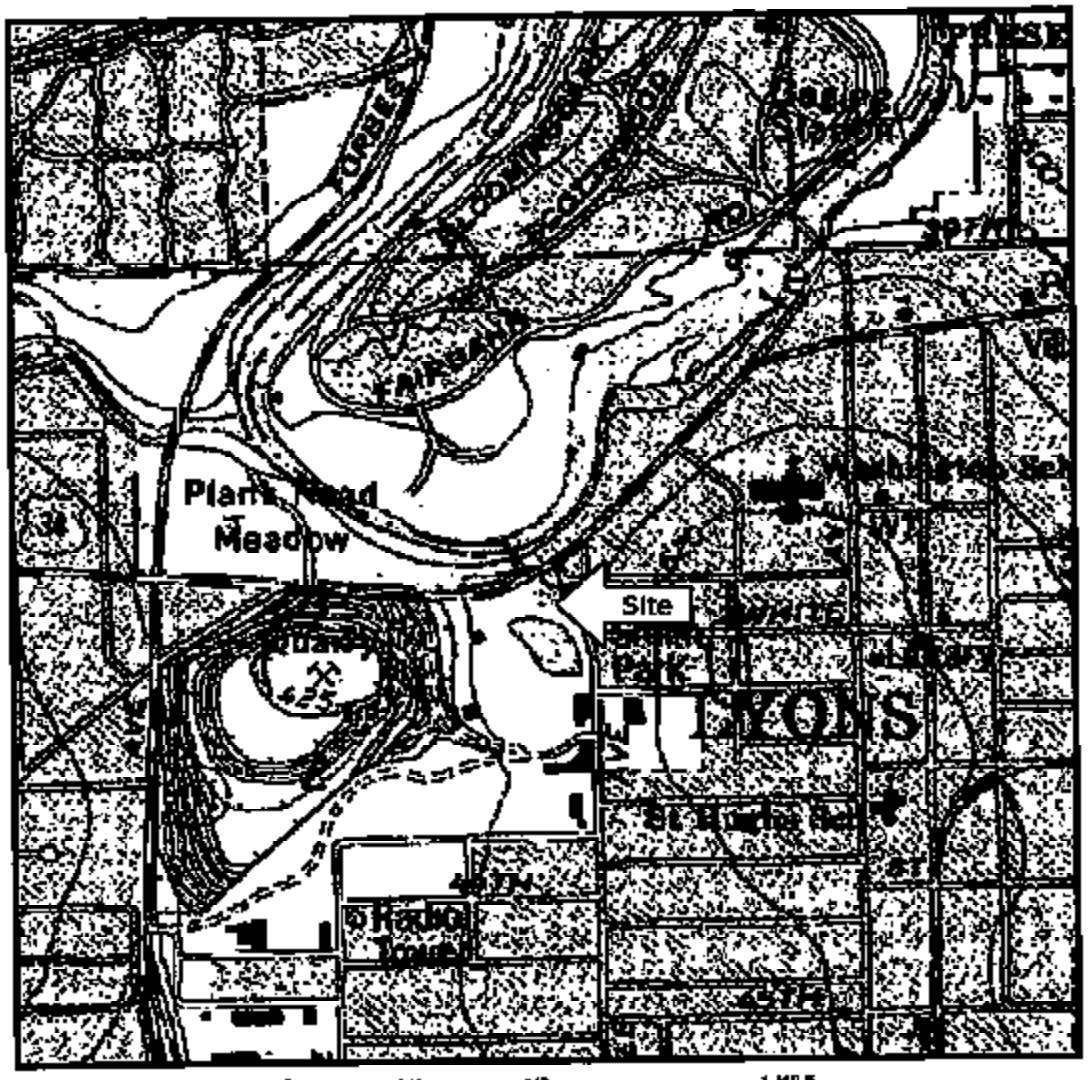

0 1/4 1/2 1 MILE

0 1000 3000 5000 FT

Quadrangle Location

Prepared by/Date: HJZ / 02.28.07
Checked by/Date: KLM / 02.28.07

Village of Lyons Lyons Landfill Southwest Corner of Ogden and Lawndale Avenues Lyons, Illinois	Bradburne, Briller & Johnson, LLC www.bbjgroup.com	Site Location Map Project 0236901 Figure 1

Based on site reconnaissance by Ms. Michele Hargraeves and Mr. Kevin McCartney of Bradburne, Briller & Johnson, LLC on February 1 and 2, 2007.

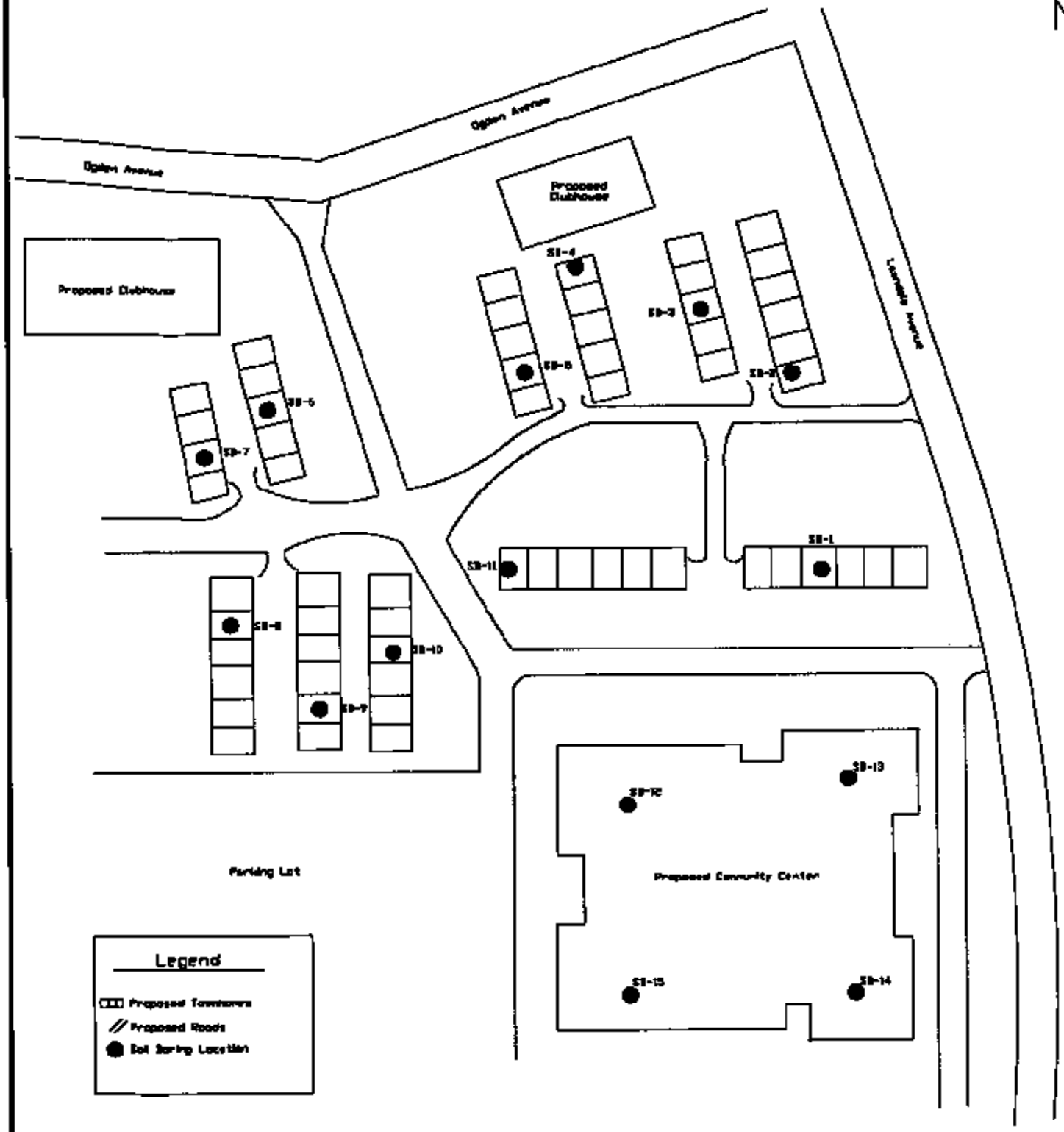

NOT TO SCALE

Prepared by/Date: MLH / 02.07.07
Checked by/Date: AWB / 02.XX.07

Village of Lyons Lyons Landfill Southwest Corner of Ogden and Lawndale Avenues Lyons, Illinois	Bradburne, Briller & Johnson, LLC	Site Plan with Soil Gas Survey Locations Project 0236901 Figure 2

printed 09/18/2007 4:52PM by epa4561 p. 31/439

APPENDIX A

FIELD PROCEDURES

printed 09/18/2007 4:52PM by epa4561 p. 32/439

APPENDIX A
FIELD PROCEDURES

The media targeted by this subsurface assessment and the sampling methods and protocol are described in this appendix.

A.1 Sampling Equipment

The following sampling equipment was used during field activities at the Subject Property:

- Geoprobe® direct-push technology (DPT) sampling equipment;
- Laboratory-supplied 400-milliliter summa canisters for the collection of soil-gas samples targeted for laboratory analyses;
- Phosphate-free soap, potable water and distilled water for equipment cleaning;
- Laboratory-supplied deionized water (purge water) for the preparation of quality assurance/quality control (QA/QC) samples;
- Disposable latex and/or nitrile gloves;
- Sample shipping containers (e.g., coolers); and,
- Sealed trip blanks, prepared by the laboratory using deionized water and shipped with the sample coolers.

A.2 Soil Boring/Soil Probe Advancement and Soil Sampling Procedures

This section describes the various types of soil probe and/or soil probe techniques that were used, as well as specific soil sample collection procedures.

A.2.1 DPT Advancement Procedures

A Geoprobe® DPT sampling machine was used to collect soil samples from the soil probes. The machine advances a soil probe by means of a hydraulic hammer that drove the sampler vertically into the ground. Soil samples were collected using a 1.5-inch diameter, 36-inch or 48-inch long sampling tube with dedicated, disposable acetate liners. Use of a releasable plunger inside the tube allows the sampler to be advanced to the desired depth and a discrete sample to be collected.

A.2.2 Soil-Gas Sample Screening and Collection Procedures

The samples were obtained from a 2-inch diameter probe hole created by a track-mounted Geoprobe® drill rig. The Geoprobe® sampler with a solid point was advanced to a depth of approximately five feet bgs then was retracted approximately six inches. Dedicated ¼-inch diameter poly tubing was then inserted through the rods through a discrete sampling point to the six-inch space created by the retracting of the sampler. The dedicated tubing then extended from the six-inch space up through the rods and approximately four feet beyond. This tubing was then connected to a 60 milliliter plastic syringe with a three-way valve. Three times the dead volume, approximately four milliliters per foot or a total of 40 milliliters, was then purged using the syringe. After purging, the syringe was then disconnected. The canister was then connected to the tubing using a ¼-inch swagelok fitting. Leak tracer, consisting of

printed 09/18/2007 4:52PM by epa4561 p. 33/439

isopropyl alcohol, was then sprayed on paper towels and the towels were placed around the base of the rods where they entered the ground and around the sampling assembly (i.e., the poly tubing and swagelok connection). The valve was then opened on the canister and the reading on the vacuum gauge was then recorded. If the gauge read at least -25 inches of mercury, the canister was allowed to fill. When the gauge read zero inches of mercury the canister was disconnected, the canister was labeled with a ball point pen, wrapped in bubble wrap, and returned to the box in which it was shipped.

A.3 Probehole Abandonment

Following the advancement of the soil probes, the probeholes were backfilled with bentonite chips to approximately 6 inches below ground surface (bgs) inside the Subject Property. The surface above the probehole was then patched with asphalt or concrete, as necessary, to restore the original surface.

A.4 Quality Assurance/Quality Control

The following sections outline QA/QC protocol, sample containers, sample preservation, sample identification and chain-of-custody procedures implemented during sampling activities.

A.4.1 QA/QC Samples

Trip Blanks

Trip blank samples that consisted of de-ionized water, provided by the analytical laboratory, accompanied the cooler(s) containing the samples from the laboratory, to the field and back to the laboratory. The trip blanks were used to assess potential cross-contamination from the cooler and handling practices, in addition to assessing potential cross-contamination between samples. Trip blanks were analyzed for USEPA method To-15. One trip blank was analyzed per cooler.

A.4.2 Sample Containers and Preservation

Sample containers prepared by a commercial vendor were provided by the laboratory.

A.4.3 Sample Identification

Prior to sample collection, the appropriate container (with preservative, if applicable) was labeled with the following information:

- Sample identification;
- Initials of collector;
- Date and time of collection;
- Analytical parameters requested; and,
- Preservative used.

Samples were packed in coolers (with containerized ice) complete with custody seals and transported via overnight courier to the laboratory. Chain-of-custody documentation outlined as follows accompanied each shipment of samples to the laboratory.

A.4.4 Chain-of-Custody Procedures

Chain-of-custody began when the pre-cleaned sample containers arrived in the field in coolers with signed and dated custody seals. At the time of sample collection, the labeled samples were placed into an iced cooler. A line-item chain-of-custody form was then completed by the sampler. Chain-of-custody

printed 09/18/2007 4:52PM by epa4561 p. 34/439

allowed the samples to be traced from the time of collection to their receipt in the laboratory. Upon completion of all line items, the sampler signed, dated, listed the time, and checked the completeness of all descriptive information contained on the form. One copy of the completed chain-of-custody was retained by the sampler. Each individual who subsequently assumed responsibility for the samples signed the chain-of-custody record. The following items were included on the chain-of-custody form:

- Sample identification;
- Signature of sampler;
- Date and time of collection;
- Sample type (i.e., aqueous or soil);
- Sample location;
- Number, size, and type of containers;
- Analytical parameters requested;
- Preservative (where applicable);
- Signatures of personnel involved in the chain of possession; and,
- Dates and times of relinquishment and receipt.

A.5 Cleaning and Disposal of Investigation-Derived Wastes (IDW)

Cleaning procedures were employed to minimize the potential for cross-contamination, off-site migration of potential COCs, and personal exposure to COCs. The following sections summarize cleaning procedures and disposal of IDW.

A.5.1 Equipment Cleaning

Equipment involved in field sampling activities was cleaned prior to probehole advancement, sampling, or leaving the Subject Property. During soil sampling, cleaning of the sampling equipment was conducted between each sample interval and included the following:

- Removal of visible sediment using brush and non-phosphate soap and potable water mixture; and,
- Potable water rinse.

A.6 Record Keeping

BB&J field personnel documented the field activities (with corresponding times) and pertinent information in a dedicated project filed logbook. Information that was recorded included: the names and companies of on-site personnel (BB&J, client, subcontractors, etc), weather conditions, and the purpose of activities and details of the fieldwork (e.g., soil conditions, sampling depths, etc.).

printed 09/18/2007 4:52PM by epa4561 p. 35/439

APPENDIX B

LABORATORY ANALYTICAL REPORTS

MOBILE GEOCHEMISTRY
H&P

Bradburn, Briller & Johnson, LLC 162 North Franklin Street, 4th Floor Chicago, IL 60606	Project: BBJ020507-11 Project Number: Lyons, Illinois Project Manager: Mr. Andy Bajorat	Reported: 15-Feb-07

ANALYTICAL REPORT FOR SAMPLES

Sample ID	Laboratory ID	Matrix	Date Sampled	Date Received
SB-14	E702013-01	Vapor	01-Feb-07	05-Feb-07
SB-15	E702013-02	Vapor	01-Feb-07	05-Feb-07
SB-12	E702013-03	Vapor	01-Feb-07	05-Feb-07
SB-13	E702013-04	Vapor	01-Feb-07	05-Feb-07
SB-5	E702013-05	Vapor	01-Feb-07	05-Feb-07
SB-6	E702013-06	Vapor	01-Feb-07	05-Feb-07
SB-7	E702013-07	Vapor	01-Feb-07	05-Feb-07
SB-8	E702013-08	Vapor	01-Feb-07	05-Feb-07
SB-9	E702013-09	Vapor	01-Feb-07	05-Feb-07
SB-10	E702013-10	Vapor	01-Feb-07	05-Feb-07
SB-1	E702013-11	Vapor	02-Feb-07	05-Feb-07
SB-2	E702013-12	Vapor	02-Feb-07	05-Feb-07
SB-3	E702013-13	Vapor	02-Feb-07	05-Feb-07
SB-4	E702013-14	Vapor	02-Feb-07	05-Feb-07
SB-11	E702013-15	Vapor	02-Feb-07	05-Feb-07

Sample SB-7 was mislabeled as SB-8. The sample identity was determined by the time the sample was collected.

MOBILE GEOCHEMISTRY
H&P

Bradburn, Briller & Johnson, LLC 162 North Franklin Street, 4th Floor Chicago, IL 60606	Project BBJ020507-11 Project Number Lyons, Illinois Project Manager Mr Andy Bajorat	Reported 15-Feb-07

Soil Gas and Vapor Analysis

H&P Mobile Geochemistry

Analyte	Result	Reporting Limit	Units	Dilution Factor	Batch	Prepared	Analyzed	Method	Notes
SB-14 (E702013-01) Vapor Sampled: 01-Feb-07 Received: 05-Feb-07									
Methane	59000	100	ppmv	10	EL62903	12-Feb-07	12-Feb-07	Modified EPA 8015B	
SB-15 (E702013-02) Vapor Sampled: 01-Feb-07 Received: 05-Feb-07									
Methane	63000	200	ppmv	20	EL62903	12-Feb-07	12-Feb-07	Modified EPA 8015B	
SB-12 (E702013-03) Vapor Sampled: 01-Feb-07 Received: 05-Feb-07									
Methane	23000	200	ppmv	20	EL62903	12-Feb-07	12-Feb-07	Modified EPA 8015B	
SB-13 (E702013-04) Vapor Sampled: 01-Feb-07 Received: 05-Feb-07									
Methane	8500	10	ppmv	1	EL62903	12-Feb-07	12-Feb-07	Modified EPA 8015B	
SB-5 (E702013-05) Vapor Sampled: 01-Feb-07 Received: 05-Feb-07									
Methane	680	10	ppmv	1	EB70605	06-Feb-07	06-Feb-07	Modified EPA 8015B	
SB-6 (E702013-06) Vapor Sampled: 01-Feb-07 Received: 05-Feb-07									
Methane	19000	20	ppmv	2	EB70605	06-Feb-07	06-Feb-07	Modified EPA 8015B	
SB-7 (E702013-07) Vapor Sampled: 01-Feb-07 Received: 05-Feb-07									
Methane	18000	50	ppmv	5	EB70605	06-Feb-07	06-Feb-07	Modified EPA 8015B	
SB-8 (E702013-08) Vapor Sampled: 01-Feb-07 Received: 05-Feb-07									
Methane	4200	10	ppmv	1	EB70605	06-Feb-07	06-Feb-07	Modified EPA 8015B	
SB-9 (E702013-09) Vapor Sampled: 01-Feb-07 Received: 05-Feb-07									
Methane	93000	200	ppmv	20	EB70605	06-Feb-07	06-Feb-07	Modified EPA 8015B	

MOBILE GEOCHEMISTRY
H&P

Burnham, Briller & Johnson, LLC 162 North Franklin Street, 4th Floor Chicago, IL 60606	Project: BBJ020507-11 Project Number: Lyons, Illinois Project Manager: Mr. Andy Bajorat	Reported: 15-Feb-07

Soil Gas and Vapor Analysis

H&P Mobile Geochemistry

Analyte	Result	Reporting Limit	Units	Dilution Factor	Batch	Prepared	Analyzed	Method	Notes
SB-10 (E702013-10) Vapor Sampled: 01-Feb-07 Received: 05-Feb-07									
Methane	13000	20	ppmv	2	EB70605	06-Feb-07	06-Feb-07	Modified EPA 8015B	
SB-1 (E702013-11) Vapor Sampled: 02-Feb-07 Received: 05-Feb-07									
Methane	10000	10	ppmv	1	EB70605	06-Feb-07	06-Feb-07	Modified EPA 8015B	
SB-2 (E702013-12) Vapor Sampled: 02-Feb-07 Received: 05-Feb-07									
Methane	380	10	ppmv	1	EB70605	06-Feb-07	06-Feb-07	Modified EPA 8015B	
SB-3 (E702013-13) Vapor Sampled: 02-Feb-07 Received: 05-Feb-07									
Methane	5800	10	ppmv	1	EB70605	06-Feb-07	06-Feb-07	Modified EPA 8015B	
SB-4 (E702013-14) Vapor Sampled: 02-Feb-07 Received: 05-Feb-07									
Methane	62000	100	ppmv	10	EB70605	06-Feb-07	06-Feb-07	Modified EPA 8015B	
SB-11 (E702013-15) Vapor Sampled: 02-Feb-07 Received: 05-Feb-07									
Methane	5300	10	ppmv	1	EB70605	06-Feb-07	06-Feb-07	Modified EPA 8015B	

MOBILE GEOCHEMISTRY
H&P

Bradburn, Briller & Johnson, LLC 162 North Franklin Street, 4th Floor Chicago, IL 60606	Project: BBJ020507-11 Project Number: Lyons, Illinois Project Manager: Mr Andy Bajorat	Reported: 15-Feb-07

Volatile Organic Compounds by EPA TO-15

H&P Mobile Geochemistry

Analyte	Result	Reporting Limit	Units	Dilution Factor	Batch	Prepared	Analyzed	Method	Notes
SB-14 (E702013-01) Vapor Sampled: 01-Feb-07 Received: 05-Feb-07									
Propene	ND	10	ug/m³ Air	1	EB71305	12-Feb-07	12-Feb-07	EPA TO-15	
Dichlorodifluoromethane	ND	10	"	"	"	"	"	"	
Chloromethane	20	5.0	"	"	"	"	"	"	
Dichlorotetrafluoroethane	ND	10	"	"	"	"	"	"	
Vinyl chloride	300	5.0	"	"	"	"	"	"	
Bromomethane	ND	5.0	"	"	"	"	"	"	
Chloroethane	ND	5.0	"	"	"	"	"	"	
Bromoethene	ND	5.0	"	"	"	"	"	"	
Trichlorofluoromethane	ND	5.0	"	"	"	"	"	"	
Acetone	ND	20	"	"	"	"	"	"	
1,1-Dichloroethene	ND	5.0	"	"	"	"	"	"	
1,1,2-Trichlorotrifluoroethane	14	10	"	"	"	"	"	"	
Allyl chloride	ND	5.0	"	"	"	"	"	"	
Methylene chloride	ND	5.0	"	"	"	"	"	"	
Carbon disulfide	28	5.0	"	"	"	"	"	"	
trans-1,2-Dichloroethene	12	5.0	"	"	"	"	"	"	
Methyl tert-butyl ether	ND	5.0	"	"	"	"	"	"	
Vinyl acetate	ND	5.0	"	"	"	"	"	"	
1,1-Dichloroethane	ND	5.0	"	"	"	"	"	"	
2-Butanone	5.1	5.0	"	"	"	"	"	"	
n-Hexane	360	5.0	"	"	"	"	"	"	
cis-1,2-Dichloroethene	30	5.0	"	"	"	"	"	"	
Ethyl acetate	ND	5.0	"	"	"	"	"	"	
Chloroform	ND	5.0	"	"	"	"	"	"	
Tetrahydrofuran	ND	5.0	"	"	"	"	"	"	
1,1,1-Trichloroethane	ND	5.0	"	"	"	"	"	"	
1,2-Dichloroethane	ND	5.0	"	"	"	"	"	"	
Benzene	100	5.0	"	"	"	"	"	"	
Carbon tetrachloride	ND	5.0	"	"	"	"	"	"	
Cyclohexane	180	5.0	"	"	"	"	"	"	
2,2,4-Trimethylpentane	170	5.0	"	"	"	"	"	"	
n-Heptane	120	5.0	"	"	"	"	"	"	
Trichloroethene	86	5.0	"	"	"	"	"	"	
1,2-Dichloropropane	ND	5.0	"	"	"	"	"	"	
1,4-Dioxane	ND	5.0	"	"	"	"	"	"	
Bromodichloromethane	ND	5.5	"	"	"	"	"	"	
cis-1,3-Dichloropropene	ND	5.0	"	"	"	"	"	"	
4-Methyl-2-pentanone	ND	5.0	"	"	"	"	"	"	

MOBILE GEOCHEMISTRY
H&P

Bradburn, Briller & Johnson, LLC 162 North Franklin Street, 4th Floor Chicago, IL 60606	Project: BBJ020507-11 Project Number: Lyons, Illinois Project Manager: Mr. Andy Bajorat	Reported: 15-Feb-07

Volatile Organic Compounds by EPA TO-15

H&P Mobile Geochemistry

Analyte	Result	Reporting Limit	Units	Dilution Factor	Batch	Prepared	Analyzed	Method	Notes
SB-14 (E702013-01) Vapor Sampled: 01-Feb-07 Received: 05-Feb-07									
trans-1,3-Dichloropropene	ND	5.0	ug/m³ Air	1	EB71305	12-Feb-07	12-Feb-07	EPA TO-15	
Toluene	62	5.0	"	"	"	"	"	"	
1,1,2-Trichloroethane	ND	5.0	"	"	"	"	"	"	
2-Hexanone	ND	5.0	"	"	"	"	"	"	
Dibromochloromethane	ND	5.0	"	"	"	"	"	"	
Tetrachloroethene	ND	5.0	"	"	"	"	"	"	
1,2-Dibromoethane (EDB)	ND	5.0	"	"	"	"	"	"	
Chlorobenzene	ND	5.0	"	"	"	"	"	"	
Ethylbenzene	12	5.0	"	"	"	"	"	"	
m,p-Xylene	9.0	5.0	"	"	"	"	"	"	
Styrene	ND	5.0	"	"	"	"	"	"	
o-Xylene	7.0	5.0	"	"	"	"	"	"	
Bromoform	ND	20	"	"	"	"	"	"	
1,1,2,2-Tetrachloroethane	ND	5.0	"	"	"	"	"	"	
4-Ethyltoluene	ND	5.0	"	"	"	"	"	"	
1,3,5-Trimethylbenzene	ND	5.0	"	"	"	"	"	"	
1,2,4-Trimethylbenzene	ND	5.0	"	"	"	"	"	"	
1,3-Dichlorobenzene	ND	10	"	"	"	"	"	"	
Benzyl chloride	ND	5.0	"	"	"	"	"	"	
1,4-Dichlorobenzene	ND	10	"	"	"	"	"	"	
1,2-Dichlorobenzene	ND	10	"	"	"	"	"	"	
1,2,4-Trichlorobenzene	ND	10	"	"	"	"	"	"	
Hexachlorobutadiene	ND	10	"	"	"	"	"	"	
Surrogate: 1,2-Dichloroethane-d4		*97.1 %*	*80-120*		"	"	"	"	
Surrogate: Toluene-d8		*102 %*	*80-120*		"	"	"	"	
Surrogate: 4-Bromofluorobenzene		*98.4 %*	*80-120*		"	"	"	"	

MOBILE GEOCHEMISTRY
H&P

Bradburn, Briller & Johnson, LLC 162 North Franklin Street, 4th Floor Chicago, IL 60606	Project BBJ020507-11 Project Number Lyons, Illinois Project Manager Mr Andy Bajorat	Reported 15-Feb-07

Volatile Organic Compounds by EPA TO-15

H&P Mobile Geochemistry

Analyte	Result	Reporting Limit	Units	Dilution Factor	Batch	Prepared	Analyzed	Method	Notes
SB-15 (E702013-02) Vapor Sampled: 01-Feb-07 Received: 05-Feb-07									
Propene	ND	100	ug/m³ Air	10	EB71385	12-Feb-07	12-Feb-07	EPA TO-15	
Dichlorodifluoromethane	ND	100	"	"	"	"	"	"	
Chloromethane	ND	50	"	"	"	"	"	"	
Dichlorotetrafluoroethane	ND	100	"	"	"	"	"	"	
Vinyl chloride	150000	120	"	25	"	"	14-Feb-07	"	E
Bromomethane	ND	50	"	10	"	"	12-Feb-07	"	
Chloroethane	ND	50	"	"	"	"	"	"	
Bromoethene	ND	50	"	"	"	"	"	"	
Trichlorofluoromethane	ND	50	"	"	"	"	"	"	
Acetone	550	200	"	"	"	"	"	"	
1,1-Dichloroethene	770	50	"	"	"	"	"	"	
1,1,2-Trichlorotrifluoroethane	ND	100	"	"	"	"	"	"	
Allyl chloride	ND	50	"	"	"	"	"	"	
Methylene chloride	ND	50	"	"	"	"	"	"	
Carbon disulfide	630	50	"	"	"	"	"	"	
trans-1,2-Dichloroethene	6900	50	"	"	"	"	"	"	
Methyl tert-butyl ether	ND	50	"	"	"	"	"	"	
Vinyl acetate	ND	50	"	"	"	"	"	"	
1,1-Dichloroethane	ND	50	"	"	"	"	"	"	
2-Butanone	ND	50	"	"	"	"	"	"	
n-Hexane	9000	120	"	25	"	"	14-Feb-07	"	
cis-1,2-Dichloroethene	22000	120	"	"	"	"	"	"	
Ethyl acetate	ND	50	"	10	"	"	12-Feb-07	"	
Chloroform	ND	50	"	"	"	"	"	"	
Tetrahydrofuran	ND	50	"	"	"	"	"	"	
1,1,1-Trichloroethane	ND	50	"	"	"	"	"	"	
1,2-Dichloroethane	100	50	"	"	"	"	"	"	
Benzene	ND	50	"	"	"	"	"	"	
Carbon tetrachloride	480	50	"	"	"	"	"	"	
Cyclohexane	11000	120	"	25	"	"	14-Feb-07	"	
2,2,4-Trimethylpentane	ND	50	"	10	"	"	12-Feb-07	"	
n-Heptane	6800	50	"	"	"	"	"	"	
Trichloroethene	2400	50	"	"	"	"	"	"	
1,2-Dichloropropane	ND	50	"	"	"	"	"	"	
1,4-Dioxane	ND	50	"	"	"	"	"	"	
Bromodichloromethane	ND	55	"	"	"	"	"	"	
cis-1,3-Dichloropropene	ND	50	"	"	"	"	"	"	
4-Methyl-2-pentanone	87	50	"	"	"	"	"	"	

MOBILE GEOCHEMISTRY
H&P

Bradburn, Briller & Johnson, LLC 162 North Franklin Street, 4th Floor Chicago, IL 60606	Project: BBJ020507-11 Project Number: Lyons, Illinois Project Manager: Mr. Andy Bajorat	Reported: 15-Feb-07

Volatile Organic Compounds by EPA TO-15

H&P Mobile Geochemistry

Analyte	Result	Reporting Limit	Units	Dilution Factor	Batch	Prepared	Analyzed	Method	Notes
SB-15 (E702013-02) Vapor Sampled: 01-Feb-07 Received: 05-Feb-07									
trans-1,3-Dichloropropene	ND	50	ug/m³ Air	10	EB71305	12-Feb-07	12-Feb-07	EPA TO-15	
Toluene	28000	120	"	25	"	"	14-Feb-07	"	
1,1,2-Trichloroethane	ND	50	"	10	"	"	12-Feb-07	"	
2-Hexanone	ND	50	"	"	"	"	"	"	
Dibromochloromethane	ND	50	"	"	"	"	"	"	
Tetrachloroethene	84	50	"	"	"	"	"	"	
1,2-Dibromoethane (EDB)	ND	50	"	"	"	"	"	"	
Chlorobenzene	ND	50	"	"	"	"	"	"	
Ethylbenzene	4000	50	"	"	"	"	"	"	
m,p-Xylene	2700	50	"	"	"	"	"	"	
Styrene	100	50	"	"	"	"	"	"	
o-Xylene	3000	50	"	"	"	"	"	"	
Bromoform	ND	200	"	"	"	"	"	"	
1,1,2,2-Tetrachloroethane	ND	50	"	"	"	"	"	"	
4-Ethyltoluene	57	50	"	"	"	"	"	"	
1,3,5-Trimethylbenzene	200	50	"	"	"	"	"	"	
1,2,4-Trimethylbenzene	150	50	"	"	"	"	"	"	
1,3-Dichlorobenzene	ND	100	"	"	"	"	"	"	
Benzyl chloride	ND	50	"	"	"	"	"	"	
1,4-Dichlorobenzene	ND	100	"	"	"	"	"	"	
1,2-Dichlorobenzene	ND	100	"	"	"	"	"	"	
1,2,4-Trichlorobenzene	ND	100	"	"	"	"	"	"	
Hexachlorobutadiene	ND	100	"	"	"	"	"	"	
Surrogate: 1,2-Dichloroethane-d4		*99.0 %*		*80-120*	"	"	"	"	
Surrogate: Toluene-d8		*106 %*		*80-120*	"	"	"	"	
Surrogate: 4-Bromofluorobenzene		*102 %*		*80-120*	"	"	"	"	

MOBILE GEOCHEMISTRY
H&P

Bradburn, Briller & Johnson, LLC 162 North Franklin Street, 4th Floor Chicago, IL 60606	Project: BBJ020507-11 Project Number: Lyons, Illinois Project Manager: Mr. Andy Bajorat	Reported: 15-Feb-07

Volatile Organic Compounds by EPA TO-15

H&P Mobile Geochemistry

Analyte	Result	Reporting Limit	Units	Dilution Factor	Batch	Prepared	Analyzed	Method	Notes
SB-12 (E702013-03) Vapor Sampled: 01-Feb-07 Received: 05-Feb-07									
Propene	ND	10	ug/m³ Air	1	EB71305	12-Feb-07	12-Feb-07	EPA TO-15	
Dichlorodifluoromethane	ND	10	"	"	"	"	"	"	
Chloromethane	9.9	5.0	"	"	"	"	"	"	
Dichlorotetrafluoroethane	ND	10	"	"	"	"	"	"	
Vinyl chloride	300	5.0	"	"	"	"	"	"	
Bromomethane	ND	5.0	"	"	"	"	"	"	
Chloroethane	ND	5.0	"	"	"	"	"	"	
Bromoethane	ND	5.0	"	"	"	"	"	"	
Trichlorofluoromethane	ND	5.0	"	"	"	"	"	"	
Acetone	80	20	"	"	"	"	"	"	
1,1-Dichloroethene	5.1	5.0	"	"	"	"	"	"	
1,1,2-Trichlorotrifluoroethane	15	10	"	"	"	"	"	"	
Allyl chloride	ND	5.0	"	"	"	"	"	"	
Methylene chloride	ND	5.0	"	"	"	"	"	"	
Carbon disulfide	88	5.0	"	"	"	"	"	"	
trans-1,2-Dichloroethene	28	5.0	"	"	"	"	"	"	
Methyl tert-butyl ether	ND	5.0	"	"	"	"	"	"	
Vinyl acetate	ND	5.0	"	"	"	"	"	"	
1,1-Dichloroethane	ND	5.0	"	"	"	"	"	"	
2-Butanone	26	5.0	"	"	"	"	"	"	
n-Hexane	280	5.0	"	"	"	"	"	"	
cis-1,2-Dichloroethene	110	5.0	"	"	"	"	"	"	
Ethyl acetate	ND	5.0	"	"	"	"	"	"	
Chloroform	ND	5.0	"	"	"	"	"	"	
Tetrahydrofuran	ND	5.0	"	"	"	"	"	"	
1,1,1-Trichloroethane	ND	5.0	"	"	"	"	"	"	
1,2-Dichloroethane	ND	5.0	"	"	"	"	"	"	
Benzene	120	5.0	"	"	"	"	"	"	
Carbon tetrachloride	ND	5.0	"	"	"	"	"	"	
Cyclohexane	88	5.0	"	"	"	"	"	"	
2,2,4-Trimethylpentane	ND	5.0	"	"	"	"	"	"	
n-Heptane	250	5.0	"	"	"	"	"	"	
Trichloroethene	83	5.0	"	"	"	"	"	"	
1,2-Dichloropropane	ND	5.0	"	"	"	"	"	"	
1,4-Dioxane	ND	5.0	"	"	"	"	"	"	
Bromodichloromethane	ND	5.5	"	"	"	"	"	"	
cis-1,3-Dichloropropene	ND	5.0	"	"	"	"	"	"	
4-Methyl-2-pentanone	ND	5.0	"	"	"	"	"	"	

MOBILE GEOCHEMISTRY
H&P

Bradburn, Briller & Johnson, LLC 162 North Franklin Street, 4th Floor Chicago, IL 60606	Project: BBJ020507-11 Project Number: Lyons, Illinois Project Manager: Mr. Andy Bajorat	Reported: 15-Feb-07

Volatile Organic Compounds by EPA TO-15

H&P Mobile Geochemistry

Analyte	Result	Reporting Limit	Units	Dilution Factor	Batch	Prepared	Analyzed	Method	Notes
SB-12 (E702013-03) Vapor Sampled: 01-Feb-07 Received: 05-Feb-07									
trans-1,3-Dichloropropene	ND	5.0	ug/m³ Air	1	EB71305	12-Feb-07	12-Feb-07	EPA TO-15	
Toluene	110	5.0	"	"	"	"	"	"	
1,1,2-Trichloroethane	ND	5.0	"	"	"	"	"	"	
2-Hexanone	ND	5.0	"	"	"	"	"	"	
Dibromochloromethane	ND	5.0	"	"	"	"	"	"	
Tetrachloroethene	ND	5.0	"	"	"	"	"	"	
1,2-Dibromoethane (EDB)	ND	5.0	"	"	"	"	"	"	
Chlorobenzene	ND	5.0	"	"	"	"	"	"	
Ethylbenzene	30	5.0	"	"	"	"	"	"	
m,p-Xylene	26	5.0	"	"	"	"	"	"	
Styrene	ND	5.0	"	"	"	"	"	"	
o-Xylene	33	5.0	"	"	"	"	"	"	
Bromoform	ND	20	"	"	"	"	"	"	
1,1,2,2-Tetrachloroethane	ND	5.0	"	"	"	"	"	"	
4-Ethyltoluene	ND	5.0	"	"	"	"	"	"	
1,3,5-Trimethylbenzene	6.3	5.0	"	"	"	"	"	"	
1,2,4-Trimethylbenzene	8.4	5.0	"	"	"	"	"	"	
1,3-Dichlorobenzene	ND	10	"	"	"	"	"	"	
Benzyl chloride	ND	5.0	"	"	"	"	"	"	
1,4-Dichlorobenzene	ND	10	"	"	"	"	"	"	
1,2-Dichlorobenzene	ND	10	"	"	"	"	"	"	
1,2,4-Trichlorobenzene	ND	10	"	"	"	"	"	"	
Hexachlorobutadiene	ND	10	"	"	"	"	"	"	
Surrogate: 1,2-Dichloroethane-d4		*94.8 %*	*80-120*		"	"	"	"	
Surrogate: Toluene-d8		*101 %*	*80-120*		"	"	"	"	
Surrogate: 4-Bromofluorobenzene		*102 %*	*80-120*		"	"	"	"	

MOBILE GEOCHEMISTRY
H&P

Bradburn, Briller & Johnson, LLC 162 North Franklin Street, 4th Floor Chicago, IL 60606	Project: BBJ020507-11 Project Number: Lyons, Illinois Project Manager: Mr. Andy Bajorat	Reported 15-Feb-07

Volatile Organic Compounds by EPA TO-15

H&P Mobile Geochemistry

Analyte	Result	Reporting Limit	Units	Dilution Factor	Batch	Prepared	Analyzed	Method	Notes
SB-13 (E702013-04) Vapor Sampled: 01-Feb-07 Received: 05-Feb-07									
Propene	ND	10	ug/m³ Air	1	EB71305	12-Feb-07	12-Feb-07	EPA TO-15	
Dichlorodifluoromethane	ND	10	"	"	"	"	"	"	
Chloromethane	8.7	5.0	"	"	"	"	"	"	
Dichlorotetrafluoromethane	ND	10	"	"	"	"	"	"	
Vinyl chloride	47	5.0	"	"	"	"	"	"	
Bromomethane	ND	5.0	"	"	"	"	"	"	
Chloroethane	ND	5.0	"	"	"	"	"	"	
Bromoethene	ND	5.0	"	"	"	"	"	"	
Trichlorofluoromethane	ND	5.0	"	"	"	"	"	"	
Acetone	280	20	"	"	"	"	"	"	
1,1-Dichloroethene	ND	5.0	"	"	"	"	"	"	
1,1,2-Trichlorotrifluoroethane	26	10	"	"	"	"	"	"	
Allyl chloride	ND	5.0	"	"	"	"	"	"	
Methylene chloride	ND	5.0	"	"	"	"	"	"	
Carbon disulfide	200	5.0	"	"	"	"	"	"	
trans-1,2-Dichloroethene	ND	5.0	"	"	"	"	"	"	
Methyl tert-butyl ether	ND	5.0	"	"	"	"	"	"	
Vinyl acetate	ND	5.0	"	"	"	"	"	"	
1,1-Dichloroethane	ND	5.0	"	"	"	"	"	"	
2-Butanone	87	5.0	"	"	"	"	"	"	
n-Hexane	65	5.0	"	"	"	"	"	"	
cis-1,2-Dichloroethene	19	5.0	"	"	"	"	"	"	
Ethyl acetate	ND	5.0	"	"	"	"	"	"	
Chloroform	ND	5.0	"	"	"	"	"	"	
Tetrahydrofuran	ND	5.0	"	"	"	"	"	"	
1,1,1-Trichloroethane	ND	5.0	"	"	"	"	"	"	
1,2-Dichloroethane	ND	5.0	"	"	"	"	"	"	
Benzene	260	5.0	"	"	"	"	"	"	
Carbon tetrachloride	ND	5.0	"	"	"	"	"	"	
Cyclohexane	37	5.0	"	"	"	"	"	"	
2,2,4-Trimethylpentane	ND	5.0	"	"	"	"	"	"	
n-Heptane	39	5.0	"	"	"	"	"	"	
Trichloroethene	30	5.0	"	"	"	"	"	"	
1,2-Dichloropropane	ND	5.0	"	"	"	"	"	"	
1,4-Dioxane	ND	5.0	"	"	"	"	"	"	
Bromodichloromethane	ND	5.5	"	"	"	"	"	"	
cis-1,3-Dichloropropene	ND	5.0	"	"	"	"	"	"	
4-Methyl-2-pentanone	5.3	5.0	"	"	"	"	"	"	

MOBILE GEOCHEMISTRY
H&P

Bradburn, Briller & Johnson, LLC 162 North Franklin Street, 4th Floor Chicago, IL 60606	Project: BBJ020507-11 Project Number: Lyons, Illinois Project Manager: Mr. Andy Bajorat	Reported: 15-Feb-07

Volatile Organic Compounds by EPA TO-15

H&P Mobile Geochemistry

Analyte	Result	Reporting Limit	Units	Dilution Factor	Batch	Prepared	Analyzed	Method	Notes
SB-13 (E702013-04) Vapor Sampled: 01-Feb-07 Received: 05-Feb-07									
trans-1,3-Dichloropropene	ND	5.0	ug/m³ Air	1	EB71305	12-Feb-07	12-Feb-07	EPA TO-15	
Toluene	300	5.0	"	"	"	"	"	"	
1,1,2-Trichloroethane	ND	5.0	"	"	"	"	"	"	
2-Hexanone	ND	5.0	"	"	"	"	"	"	
Dibromochloromethane	ND	5.0	"	"	"	"	"	"	
Tetrachloroethene	ND	5.0	"	"	"	"	"	"	
1,2-Dibromoethane (EDB)	ND	5.0	"	"	"	"	"	"	
Chlorobenzene	ND	5.0	"	"	"	"	"	"	
Ethylbenzene	560	5.0	"	"	"	"	"	"	
m,p-Xylene	290	5.0	"	"	"	"	"	"	
Styrene	17	5.0	"	"	"	"	"	"	
o-Xylene	320	5.0	"	"	"	"	"	"	
Bromoform	ND	20	"	"	"	"	"	"	
1,1,2,2-Tetrachloroethane	ND	5.0	"	"	"	"	"	"	
4-Ethyltoluene	25	5.0	"	"	"	"	"	"	
1,3,5-Trimethylbenzene	61	5.0	"	"	"	"	"	"	
1,2,4-Trimethylbenzene	57	5.0	"	"	"	"	"	"	
1,3-Dichlorobenzene	ND	10	"	"	"	"	"	"	
Benzyl chloride	ND	5.0	"	"	"	"	"	"	
1,4-Dichlorobenzene	ND	10	"	"	"	"	"	"	
1,2-Dichlorobenzene	ND	10	"	"	"	"	"	"	
1,2,4-Trichlorobenzene	ND	10	"	"	"	"	"	"	
Hexachlorobutadiene	ND	10	"	"	"	"	"	"	
Surrogate: 1,2-Dichloroethane-d4		*95.5 %*		*80-120*	"	"	"	"	
Surrogate: Toluene-d8		*102 %*		*80-120*	"	"	"	"	
Surrogate: 4-Bromofluorobenzene		*98.4 %*		*80-120*	"	"	"	"	

MOBILE GEOCHEMISTRY
H&P

Bradburn, Briller & Johnson, LLC 162 North Franklin Street, 4th Floor Chicago, IL 60606	Project BBJ020507-11 Project Number Lyons, Illinois Project Manager Mr Andy Bajorat	Reported 15-Feb-07

Volatile Organic Compounds by EPA TO-15

H&P Mobile Geochemistry

Analyte	Result	Reporting Limit	Units	Dilution Factor	Batch	Prepared	Analyzed	Method	Notes
SB-5 (E702013-05) Vapor Sampled: 01-Feb-07 Received: 05-Feb-07									
Propene	ND	10	ug/m³ Air	1	EB70704	06-Feb-07	06-Feb-07	EPA TO-15	
Dichlorodifluoromethane	ND	10	"	"	"	"	"	"	
Chloromethane	18	5.0	"	"	"	"	"	"	
Dichlorotetrafluoroethane	ND	10	"	"	"	"	"	"	
Vinyl chloride	6.7	5.0	"	"	"	"	"	"	
Bromomethane	ND	5.0	"	"	"	"	"	"	
Chloroethane	ND	5.0	"	"	"	"	"	"	
Bromoethene	ND	5.0	"	"	"	"	"	"	
Trichlorofluoromethane	24	5.0	"	"	"	"	"	"	
Acetone	ND	20	"	"	"	"	"	"	
1,1-Dichloroethene	ND	5.0	"	"	"	"	"	"	
1,1,2-Trichlorotrifluoroethane	10	10	"	"	"	"	"	"	
Allyl chloride	ND	5.0	"	"	"	"	"	"	
Methylene chloride	ND	5.0	"	"	"	"	"	"	
Carbon disulfide	230	5.0	"	"	"	"	"	"	
trans-1,2-Dichloroethene	ND	5.0	"	"	"	"	"	"	
Methyl tert-butyl ether	ND	5.0	"	"	"	"	"	"	
Vinyl acetate	ND	5.0	"	"	"	"	"	"	
1,1-Dichloroethane	ND	5.0	"	"	"	"	"	"	
2-Butanone	14	5.0	"	"	"	"	"	"	
n-Hexane	2300	5.0	"	"	"	"	"	"	E
cis-1,2-Dichloroethene	5.6	5.0	"	"	"	"	"	"	
Ethyl acetate	ND	5.0	"	"	"	"	"	"	
Chloroform	ND	5.0	"	"	"	"	"	"	
Tetrahydrofuran	ND	5.0	"	"	"	"	"	"	
1,1,1-Trichloroethane	ND	5.0	"	"	"	"	"	"	
1,2-Dichloroethane	ND	5.0	"	"	"	"	"	"	
Benzene	92	5.0	"	"	"	"	"	"	
Carbon tetrachloride	ND	5.0	"	"	"	"	"	"	
Cyclohexane	590	5.0	"	"	"	"	"	"	
2,2,4-Trimethylpentane	ND	5.0	"	"	"	"	"	"	
n-Heptane	2000	5.0	"	"	"	"	"	"	E
Trichloroethene	ND	5.0	"	"	"	"	"	"	
1,2-Dichloropropane	ND	5.0	"	"	"	"	"	"	
1,4-Dioxane	ND	5.0	"	"	"	"	"	"	
Bromodichloromethane	ND	5.5	"	"	"	"	"	"	
cis-1,3-Dichloropropene	ND	5.0	"	"	"	"	"	"	
4-Methyl-2-pentanone	ND	5.0	"	"	"	"	"	"	

MOBILE GEOCHEMISTRY
H&P

Bradburn, Briller & Johnson, LLC 162 North Franklin Street, 4th Floor Chicago, IL 60606	Project: BBJ020507-11 Project Number: Lyons, Illinois Project Manager: Mr. Andy Bajorat	Reported: 15-Feb-07

Volatile Organic Compounds by EPA TO-15

H&P Mobile Geochemistry

Analyte	Result	Reporting Limit	Units	Dilution Factor	Batch	Prepared	Analyzed	Method	Notes
SB-5 (E702013-05) Vapor Sampled: 01-Feb-07 Received: 05-Feb-07									
trans-1,3-Dichloropropene	ND	5.0	ug/m³ Air	1	EB70704	06-Feb-07	06-Feb-07	EPA TO-15	
Toluene	67	5.0	"	"	"	"	"	"	
1,1,2-Trichloroethane	ND	5.0	"	"	"	"	"	"	
2-Hexanone	ND	5.0	"	"	"	"	"	"	
Dibromochloromethane	ND	5.0	"	"	"	"	"	"	
Tetrachloroethene	ND	5.0	"	"	"	"	"	"	
1,2-Dibromoethane (EDB)	ND	5.0	"	"	"	"	"	"	
Chlorobenzene	ND	6.0	"	"	"	"	"	"	
Ethylbenzene	24	5.0	"	"	"	"	"	"	
m,p-Xylene	16	5.0	"	"	"	"	"	"	
Styrene	ND	5.0	"	"	"	"	"	"	
o-Xylene	20	5.0	"	"	"	"	"	"	
Bromoform	ND	20	"	"	"	"	"	"	
1,1,2,2-Tetrachloroethane	ND	5.0	"	"	"	"	"	"	
4-Ethyltoluene	ND	5.0	"	"	"	"	"	"	
1,3,5-Trimethylbenzene	5.9	5.0	"	"	"	"	"	"	
1,2,4-Trimethylbenzene	8.9	5.0	"	"	"	"	"	"	
1,3-Dichlorobenzene	ND	10	"	"	"	"	"	"	
Benzyl chloride	ND	5.0	"	"	"	"	"	"	
1,4-Dichlorobenzene	ND	10	"	"	"	"	"	"	
1,2-Dichlorobenzene	ND	10	"	"	"	"	"	"	
1,2,4-Trichlorobenzene	ND	10	"	"	"	"	"	"	
Hexachlorobutadiene	ND	10	"	"	"	"	"	"	
Surrogate: 1,2-Dichloroethane-d4		*101 %*	*80-120*		"	"	"	"	
Surrogate: Toluene-d8		*105 %*	*80-120*		"	"	"	"	
Surrogate: 4-Bromofluorobenzene		*101 %*	*80-120*		"	"	"	"	

MOBILE GEOCHEMISTRY
H&P

Bradburn, Briller & Johnson, LLC 162 North Franklin Street, 4th Floor Chicago, IL 60606	Project BBJ020507-11 Project Number Lyons, Illinois Project Manager Mr. Andy Bajorat	Reported: 15-Feb-07

Volatile Organic Compounds by EPA TO-15

H&P Mobile Geochemistry

Analyte	Result	Reporting Limit	Units	Dilution Factor	Batch	Prepared	Analyzed	Method	Notes
SB-6 (E702013-06) Vapor Sampled: 01-Feb-07 Received: 05-Feb-07									
Propane	ND	10	ug/m³ Air	1	EB70704	06-Feb-07	06-Feb-07	EPA TO-15	
Dichlorodifluoromethane	ND	10	"	"	"	"	"	"	
Chloromethane	6.3	5.0	"	"	"	"	"	"	
Dichlorotetrafluoroethane	ND	10	"	"	"	"	"	"	
Vinyl chloride	ND	5.0	"	"	"	"	"	"	
Bromomethane	ND	5.0	"	"	"	"	"	"	
Chloroethane	ND	5.0	"	"	"	"	"	"	
Bromoethene	ND	5.0	"	"	"	"	"	"	
Trichlorofluoromethane	ND	5.0	"	"	"	"	"	"	
Acetone	41	20	"	"	"	"	"	"	
1,1-Dichloroethene	ND	5.0	"	"	"	"	"	"	
1,1,2-Trichlorotrifluoroethane	12	10	"	"	"	"	"	"	
Allyl chloride	ND	5.0	"	"	"	"	"	"	
Methylene chloride	ND	5.0	"	"	"	"	"	"	
Carbon disulfide	99	5.0	"	"	"	"	"	"	
trans-1,2-Dichloroethene	ND	5.0	"	"	"	"	"	"	
Methyl tert-butyl ether	ND	5.0	"	"	"	"	"	"	
Vinyl acetate	ND	5.0	"	"	"	"	"	"	
1,1-Dichloroethane	ND	5.0	"	"	"	"	"	"	
2-Butanone	15	5.0	"	"	"	"	"	"	
n-Hexane	69	5.0	"	"	"	"	"	"	
cis-1,2-Dichloroethene	ND	5.0	"	"	"	"	"	"	
Ethyl acetate	ND	5.0	"	"	"	"	"	"	
Chloroform	ND	5.0	"	"	"	"	"	"	
Tetrahydrofuran	ND	5.0	"	"	"	"	"	"	
1,1,1-Trichloroethane	ND	5.0	"	"	"	"	"	"	
1,2-Dichloroethane	ND	5.0	"	"	"	"	"	"	
Benzene	32	5.0	"	"	"	"	"	"	
Carbon tetrachloride	ND	5.0	"	"	"	"	"	"	
Cyclohexane	91	5.0	"	"	"	"	"	"	
2,2,4-Trimethylpentane	ND	5.0	"	"	"	"	"	"	
n-Heptane	29	5.0	"	"	"	"	"	"	
Trichloroethene	ND	5.0	"	"	"	"	"	"	
1,2-Dichloropropane	ND	5.0	"	"	"	"	"	"	
1,4-Dioxane	ND	5.0	"	"	"	"	"	"	
Bromodichloromethane	ND	5.5	"	"	"	"	"	"	
cis-1,3-Dichloropropene	ND	5.0	"	"	"	"	"	"	
4-Methyl-2-pentanone	ND	5.0	"	"	"	"	"	"	

MOBILE GEOCHEMISTRY
H&P

Bradburn, Briller & Johnson, LLC 162 North Franklin Street, 4th Floor Chicago, IL 60606	Project: BBJ020507-11 Project Number: Lyons, Illinois Project Manager: Mr. Andy Bajorat	Reported: 15-Feb-07

Volatile Organic Compounds by EPA TO-15

H&P Mobile Geochemistry

Analyte	Result	Reporting Limit	Units	Dilution Factor	Batch	Prepared	Analyzed	Method	Notes
SB-6 (E702013-06) Vapor Sampled: 01-Feb-07 Received: 05-Feb-07									
trans-1,3-Dichloropropene	ND	5.0	ug/m³ Air	1	EB70704	06-Feb-07	06-Feb-07	EPA TO-15	
Toluene	35	5.0	"	"	"	"	"	"	
1,1,2-Trichloroethane	ND	5.0	"	"	"	"	"	"	
2-Hexanone	ND	5.0	"	"	"	"	"	"	
Dibromochloromethane	ND	5.0	"	"	"	"	"	"	
Tetrachloroethene	ND	5.0	"	"	"	"	"	"	
1,2-Dibromoethane (EDB)	ND	5.0	"	"	"	"	"	"	
Chlorobenzene	ND	5.0	"	"	"	"	"	"	
Ethylbenzene	9.8	5.0	"	"	"	"	"	"	
m,p-Xylene	8.3	5.0	"	"	"	"	"	"	
Styrene	ND	5.0	"	"	"	"	"	"	
o-Xylene	7.8	5.0	"	"	"	"	"	"	
Bromoform	ND	20	"	"	"	"	"	"	
1,1,2,2-Tetrachloroethane	ND	5.0	"	"	"	"	"	"	
4-Ethyltoluene	ND	5.0	"	"	"	"	"	"	
1,3,5-Trimethylbenzene	ND	5.0	"	"	"	"	"	"	
1,2,4-Trimethylbenzene	ND	5.0	"	"	"	"	"	"	
1,3-Dichlorobenzene	ND	10	"	"	"	"	"	"	
Benzyl chloride	ND	5.0	"	"	"	"	"	"	
1,4-Dichlorobenzene	ND	10	"	"	"	"	"	"	
1,2-Dichlorobenzene	ND	10	"	"	"	"	"	"	
1,2,4-Trichlorobenzene	ND	10	"	"	"	"	"	"	
Hexachlorobutadiene	ND	10	"	"	"	"	"	"	
Surrogate: 1,2-Dichloroethane-d4		*101 %*		*80-120*	"	"	"	"	
Surrogate: Toluene-d8		*101 %*		*80-120*	"	"	"	"	
Surrogate: 4-Bromofluorobenzene		*101 %*		*80-120*	"	"	"	"	

MOBILE GEOCHEMISTRY
H&P

Bradburn, Briller & Johnson, LLC 162 North Franklin Street, 4th Floor Chicago, IL 60606	Project BBJ020507-11 Project Number Lyons, Illinois Project Manager Mr Andy Bayoral	Reported 15-Feb-07

Volatile Organic Compounds by EPA TO-15

H&P Mobile Geochemistry

Analyte	Result	Reporting Limit	Units	Dilution Factor	Batch	Prepared	Analyzed	Method	Notes
SB-7 (E702013-07) Vapor Sampled: 01-Feb-07 Received: 05-Feb-07									
Propene	ND	10	ug/m³ Air	1	EB70704	06-Feb-07	06-Feb-07	EPA TO-15	
Dichlorodifluoromethane	ND	10	"	"	"	"	"	"	
Chloromethane	ND	5.0	"	"	"	"	"	"	
Dichlorotetrafluoroethane	ND	10	"	"	"	"	"	"	
Vinyl chloride	ND	5.0	"	"	"	"	"	"	
Bromomethane	ND	5.0	"	"	"	"	"	"	
Chloroethane	ND	5.0	"	"	"	"	"	"	
Bromoethene	ND	5.0	"	"	"	"	"	"	
Trichlorofluoromethane	ND	5.0	"	"	"	"	"	"	
Acetone	ND	20	"	"	"	"	"	"	
1,1-Dichloroethene	ND	5.0	"	"	"	"	"	"	
1,1,2-Trichlorotrifluoroethane	39	10	"	"	"	"	"	"	
Allyl chloride	ND	5.0	"	"	"	"	"	"	
Methylene chloride	ND	5.0	"	"	"	"	"	"	
Carbon disulfide	26	5.0	"	"	"	"	"	"	
trans-1,2-Dichloroethene	ND	5.0	"	"	"	"	"	"	
Methyl tert-butyl ether	ND	5.0	"	"	"	"	"	"	
Vinyl acetate	ND	5.0	"	"	"	"	"	"	
1,1-Dichloroethane	ND	5.0	"	"	"	"	"	"	
2-Butanone	18	5.0	"	"	"	"	"	"	
n-Hexane	97	5.0	"	"	"	"	"	"	
cis-1,2-Dichloroethene	ND	5.0	"	"	"	"	"	"	
Ethyl acetate	ND	5.0	"	"	"	"	"	"	
Chloroform	ND	5.0	"	"	"	"	"	"	
Tetrahydrofuran	ND	5.0	"	"	"	"	"	"	
1,1,1-Trichloroethane	13	5.0	"	"	"	"	"	"	
1,2-Dichloroethane	ND	5.0	"	"	"	"	"	"	
Benzene	84	5.0	"	"	"	"	"	"	
Carbon tetrachloride	ND	5.0	"	"	"	"	"	"	
Cyclohexane	47	5.0	"	"	"	"	"	"	
2,2,4-Trimethylpentane	ND	5.0	"	"	"	"	"	"	
n-Heptane	68	5.0	"	"	"	"	"	"	
Trichloroethene	ND	5.0	"	"	"	"	"	"	
1,2-Dichloropropane	ND	5.0	"	"	"	"	"	"	
1,4-Dioxane	ND	5.0	"	"	"	"	"	"	
Bromodichloromethane	ND	5.5	"	"	"	"	"	"	
cis-1,3-Dichloropropene	ND	5.0	"	"	"	"	"	"	
4-Methyl-2-pentanone	ND	5.0	"	"	"	"	"	"	

MOBILE GEOCHEMISTRY
H&P

Bradburn, Briller & Johnson, LLC 162 North Franklin Street, 4th Floor Chicago, IL 60606	Project: BBJ020507-11 Project Number: Lyons, Illinois Project Manager: Mr. Andy Bajorat	Reported: 15-Feb-07

Volatile Organic Compounds by EPA TO-15

H&P Mobile Geochemistry

Analyte	Result	Reporting Limit	Units	Dilution Factor	Batch	Prepared	Analyzed	Method	Notes
SB-7 (E702013-07) Vapor Sampled: 01-Feb-07 Received: 05-Feb-07									
trans-1,3-Dichloropropene	ND	5.0	ug/m³ Air	1	EB70704	06-Feb-07	06-Feb-07	EPA TO-15	
Toluene	84	5.0	"	"	"	"	"	"	
1,1,2-Trichloroethane	ND	5.0	"	"	"	"	"	"	
2-Hexanone	ND	5.0	"	"	"	"	"	"	
Dibromochloromethane	ND	5.0	"	"	"	"	"	"	
Tetrachloroethene	ND	5.0	"	"	"	"	"	"	
1,2-Dibromoethane (EDB)	ND	5.0	"	"	"	"	"	"	
Chlorobenzene	ND	5.0	"	"	"	"	"	"	
Ethylbenzene	20	5.0	"	"	"	"	"	"	
m,p-Xylene	15	5.0	"	"	"	"	"	"	
Styrene	ND	5.0	"	"	"	"	"	"	
o-Xylene	14	5.0	"	"	"	"	"	"	
Bromoform	ND	20	"	"	"	"	"	"	
1,1,2,2-Tetrachloroethane	ND	5.0	"	"	"	"	"	"	
4-Ethyltoluene	ND	5.0	"	"	"	"	"	"	
1,3,5-Trimethylbenzene	ND	5.0	"	"	"	"	"	"	
1,2,4-Trimethylbenzene	5.2	5.0	"	"	"	"	"	"	
1,3-Dichlorobenzene	ND	10	"	"	"	"	"	"	
Benzyl chloride	ND	5.0	"	"	"	"	"	"	
1,4-Dichlorobenzene	ND	10	"	"	"	"	"	"	
1,2-Dichlorobenzene	ND	10	"	"	"	"	"	"	
1,2,4-Trichlorobenzene	ND	10	"	"	"	"	"	"	
Hexachlorobutadiene	ND	10	"	"	"	"	"	"	
Surrogate: 1,2-Dichloroethane-d4		*99.0 %*	*80-120*		"	"	"	"	
Surrogate: Toluene-d8		*102 %*	*80-120*		"	"	"	"	
Surrogate: 4-Bromofluorobenzene		*100 %*	*80-120*		"	"	"	"	

MOBILE GEOCHEMISTRY
H&P

Bradburn, Briller & Johnson, LLC 162 North Franklin Street, 4th Floor Chicago, IL 60606	Project: BBJ020507-11 Project Number: Lyons, Illinois Project Manager: Mr Andy Bajorat	Reported 15-Feb-07

Volatile Organic Compounds by EPA TO-15

H&P Mobile Geochemistry

Analyte	Result	Reporting Limit	Units	Dilution Factor	Batch	Prepared	Analyzed	Method	Notes
SB-8 (E702013-08) Vapor Sampled: 01-Feb-07 Received: 05-Feb-07									
Propene	ND	10	ug/m³ Air	1	BB30706	07-Feb-07	07-Feb-07	EPA TO-15	
Dichlorodifluoromethane	ND	10	"	"	"	"	"	"	
Chloromethane	ND	5.0	"	"	"	"	"	"	
Dichlorotetrafluoroethane	ND	10	"	"	"	"	"	"	
Vinyl chloride	ND	5.0	"	"	"	"	"	"	
Bromomethane	ND	5.0	"	"	"	"	"	"	
Chloroethane	ND	5.0	"	"	"	"	"	"	
Bromoethene	ND	5.0	"	"	"	"	"	"	
Trichlorofluoromethane	ND	5.0	"	"	"	"	"	"	
Acetone	ND	20	"	"	"	"	"	"	
1,1-Dichloroethene	ND	5.0	"	"	"	"	"	"	
1,1,2-Trichlorotrifluoroethane	16	10	"	"	"	"	"	"	
Allyl chloride	ND	5.0	"	"	"	"	"	"	
Methylene chloride	ND	5.0	"	"	"	"	"	"	
Carbon disulfide	10	5.0	"	"	"	"	"	"	
trans-1,2-Dichloroethene	ND	5.0	"	"	"	"	"	"	
Methyl tert-butyl ether	ND	5.0	"	"	"	"	"	"	
Vinyl acetate	ND	5.0	"	"	"	"	"	"	
1,1-Dichloroethane	ND	5.0	"	"	"	"	"	"	
2-Butanone	7.5	5.0	"	"	"	"	"	"	
n-Hexane	62	5.0	"	"	"	"	"	"	
cis-1,2-Dichloroethene	ND	5.0	"	"	"	"	"	"	
Ethyl acetate	ND	5.0	"	"	"	"	"	"	
Chloroform	ND	5.0	"	"	"	"	"	"	
Tetrahydrofuran	ND	5.0	"	"	"	"	"	"	
1,1,1-Trichloroethane	28	5.0	"	"	"	"	"	"	
1,2-Dichloroethane	ND	5.0	"	"	"	"	"	"	
Benzene	24	5.0	"	"	"	"	"	"	
Carbon tetrachloride	ND	5.0	"	"	"	"	"	"	
Cyclohexane	ND	5.0	"	"	"	"	"	"	
2,2,4-Trimethylpentane	30	5.0	"	"	"	"	"	"	
n-Heptane	25	5.0	"	"	"	"	"	"	
Trichloroethene	ND	5.0	"	"	"	"	"	"	
1,2-Dichloropropane	ND	5.0	"	"	"	"	"	"	
1,4-Dioxane	ND	5.0	"	"	"	"	"	"	
Bromodichloromethane	ND	5.5	"	"	"	"	"	"	
cis-1,3-Dichloropropene	ND	5.0	"	"	"	"	"	"	
4-Methyl-2-pentanone	ND	5.0	"	"	"	"	"	"	

MOBILE GEOCHEMISTRY
H&P

Bradburn, Briller & Johnson, LLC 162 North Franklin Street, 4th Floor Chicago, IL 60606	Project: BBJ020507-11 Project Number: Lyons, Illinois Project Manager: Mr. Andy Bajorat	Reported: 15-Feb-07

Volatile Organic Compounds by EPA TO-15

H&P Mobile Geochemistry

Analyte	Result	Reporting Limit	Units	Dilution Factor	Batch	Prepared	Analyzed	Method	Notes
SB-8 (E702013-08) Vapor Sampled: 01-Feb-07 Received: 05-Feb-07									
trans-1,3-Dichloropropene	ND	5.0	ug/m³ Air	1	EB70706	07-Feb-07	07-Feb-07	EPA TO-15	
Toluene	20	5.0	"	"	"	"	"	"	
1,1,2-Trichloroethane	ND	5.0	"	"	"	"	"	"	
2-Hexanone	ND	5.0	"	"	"	"	"	"	
Dibromochloromethane	ND	5.0	"	"	"	"	"	"	
Tetrachloroethene	ND	5.0	"	"	"	"	"	"	
1,2-Dibromoethane (EDB)	ND	5.0	"	"	"	"	"	"	
Chlorobenzene	ND	5.0	"	"	"	"	"	"	
Ethylbenzene	6.8	5.0	"	"	"	"	"	"	
m,p-Xylene	7.3	5.0	"	"	"	"	"	"	
Styrene	ND	5.0	"	"	"	"	"	"	
o-Xylene	6.2	5.0	"	"	"	"	"	"	
Bromoform	ND	20	"	"	"	"	"	"	
1,1,2,2-Tetrachloroethane	ND	5.0	"	"	"	"	"	"	
4-Ethyltoluene	ND	5.0	"	"	"	"	"	"	
1,3,5-Trimethylbenzene	ND	5.0	"	"	"	"	"	"	
1,2,4-Trimethylbenzene	ND	5.0	"	"	"	"	"	"	
1,3-Dichlorobenzene	ND	10	"	"	"	"	"	"	
Benzyl chloride	ND	5.0	"	"	"	"	"	"	
1,4-Dichlorobenzene	ND	10	"	"	"	"	"	"	
1,2-Dichlorobenzene	ND	10	"	"	"	"	"	"	
1,2,4-Trichlorobenzene	ND	10	"	"	"	"	"	"	
Hexachlorobutadiene	ND	10	"	"	"	"	"	"	
Surrogate: 1,2-Dichloroethane-d4		*99.0 %*	*80-120*		"	"	"	"	
Surrogate: Toluene-d8		*101 %*	*80-120*		"	"	"	"	
Surrogate: 4-Bromofluorobenzene		*97.8 %*	*80-120*		"	"	"	"	

MOBILE GEOCHEMISTRY
H&P

Bradburn, Briller & Johnston, LLC 162 North Franklin Street, 4th Floor Chicago, IL 60606	Project BBJ020507-11 Project Number Lyons, Illinois Project Manager Mr. Andy Bajorat	Reported 15-Feb-07

Volatile Organic Compounds by EPA TO-15

H&P Mobile Geochemistry

Analyte	Result	Reporting Limit	Units	Dilution Factor	Batch	Prepared	Analyzed	Method	Notes
SB-9 (E702013-09) Vapor Sampled: 01-Feb-07 Received: 05-Feb-07									
Propane	ND	10	ug/m³ Air	1	EB70706	07-Feb-07	07-Feb-07	EPA TO-15	
Dichlorodifluoromethane	ND	10	"	"	"	"	"	"	
Chloromethane	ND	5.0	"	"	"	"	"	"	
Dichlorotetrafluoroethane	ND	10	"	"	"	"	"	"	
Vinyl chloride	710	5.0	"	"	"	"	"	"	
Bromomethane	ND	5.0	"	"	"	"	"	"	
Chloroethane	ND	5.0	"	"	"	"	"	"	
Bromoethene	ND	5.0	"	"	"	"	"	"	
Trichlorofluoromethane	ND	5.0	"	"	"	"	"	"	
Acetone	ND	20	"	"	"	"	"	"	
1,1-Dichloroethene	ND	5.0	"	"	"	"	"	"	
1,1,2-Trichlorotrifluoroethane	15	10	"	"	"	"	"	"	
Allyl chloride	ND	5.0	"	"	"	"	"	"	
Methylene chloride	ND	5.0	"	"	"	"	"	"	
Carbon disulfide	ND	5.0	"	"	"	"	"	"	
trans-1,2-Dichloroethene	ND	5.0	"	"	"	"	"	"	
Methyl tert-butyl ether	ND	5.0	"	"	"	"	"	"	
Vinyl acetate	ND	5.0	"	"	"	"	"	"	
1,1-Dichloroethane	ND	5.0	"	"	"	"	"	"	
2-Butanone	11	5.0	"	"	"	"	"	"	
n-Hexane	470	6.0	"	"	"	"	"	"	
cis-1,2-Dichloroethene	ND	5.0	"	"	"	"	"	"	
Ethyl acetate	ND	5.0	"	"	"	"	"	"	
Chloroform	ND	5.0	"	"	"	"	"	"	
Tetrahydrofuran	ND	5.0	"	"	"	"	"	"	
1,1,1-Trichloroethane	ND	5.0	"	"	"	"	"	"	
1,2-Dichloroethane	ND	5.0	"	"	"	"	"	"	
Benzene	37	5.0	"	"	"	"	"	"	
Carbon tetrachloride	ND	5.0	"	"	"	"	"	"	
Cyclohexane	390	5.0	"	"	"	"	"	"	
2,2,4-Trimethylpentane	490	5.0	"	"	"	"	"	"	
n-Heptane	35	5.0	"	"	"	"	"	"	
Trichloroethene	ND	5.0	"	"	"	"	"	"	
1,2-Dichloropropane	ND	5.0	"	"	"	"	"	"	
1,4-Dioxane	ND	5.0	"	"	"	"	"	"	
Bromodichloromethane	ND	5.5	"	"	"	"	"	"	
cis-1,3-Dichloropropene	ND	5.0	"	"	"	"	"	"	
4-Methyl-2-pentanone	35	5.0	"	"	"	"	"	"	

MOBILE GEOCHEMISTRY
H&P

Bradburn, Briller & Johnson, LLC 162 North Franklin Street, 4th Floor Chicago, IL 60606	Project: BBJ020507-11 Project Number: Lyons, Illinois Project Manager: Mr. Andy Bajorat	Reported: 15-Feb-07

Volatile Organic Compounds by EPA TO-15

H&P Mobile Geochemistry

Analyte	Result	Reporting Limit	Units	Dilution Factor	Batch	Prepared	Analyzed	Method	Notes
SB-9 (E702013-09) Vapor Sampled: 01-Feb-07 Received: 05-Feb-07									
trans-1,3-Dichloropropene	ND	5.0	ug/m³ Air	1	EB70706	07-Feb-07	07-Feb-07	EPA TO-15	
Toluene	23	5.0	"	"	"	"	"	"	
1,1,2-Trichloroethane	ND	5.0	"	"	"	"	"	"	
2-Hexanone	ND	5.0	"	"	"	"	"	"	
Dibromochloromethane	ND	5.0	"	"	"	"	"	"	
Tetrachloroethene	ND	5.0	"	"	"	"	"	"	
1,2-Dibromoethane (EDB)	ND	5.0	"	"	"	"	"	"	
Chlorobenzene	ND	5.0	"	"	"	"	"	"	
Ethylbenzene	9.2	5.0	"	"	"	"	"	"	
m,p-Xylene	11	5.0	"	"	"	"	"	"	
Styrene	ND	5.0	"	"	"	"	"	"	
o-Xylene	12	5.0	"	"	"	"	"	"	
Bromoform	ND	20	"	"	"	"	"	"	
1,1,2,2-Tetrachloroethane	ND	5.0	"	"	"	"	"	"	
4-Ethyltoluene	ND	5.0	"	"	"	"	"	"	
1,3,5-Trimethylbenzene	ND	5.0	"	"	"	"	"	"	
1,2,4-Trimethylbenzene	ND	5.0	"	"	"	"	"	"	
1,3-Dichlorobenzene	ND	10	"	"	"	"	"	"	
Benzyl chloride	ND	5.0	"	"	"	"	"	"	
1,4-Dichlorobenzene	ND	10	"	"	"	"	"	"	
1,2-Dichlorobenzene	ND	10	"	"	"	"	"	"	
1,2,4-Trichlorobenzene	ND	10	"	"	"	"	"	"	
Hexachlorobutadiene	ND	10	"	"	"	"	"	"	
Surrogate: 1,2-Dichloroethane-d4		*101 %*		*80-120*	"	"	"	"	
Surrogate: Toluene-d8		*104 %*		*80-120*	"	"	"	"	
Surrogate: 4-Bromofluorobenzene		*103 %*		*80-120*	"	"	"	"	

MOBILE GEOCHEMISTRY
H&P

Bradburn, Briller & Johnson, LLC 162 North Franklin Street, 4th Floor Chicago, IL 60606	Project BBJ030507-11 Project Number Lyons, Illinois Project Manager Mr Andy Bejorat	Reported 15-Feb-07

Volatile Organic Compounds by EPA TO-15

H&P Mobile Geochemistry

Analyte	Result	Reporting Limit	Units	Dilution Factor	Batch	Prepared	Analyzed	Method	Notes
SB-10 (E702013-10) Vapor Sampled: 01-Feb-07 Received: 05-Feb-07									
Propene	ND	10	ug/m³ Air	1	EB70706	07-Feb-07	07-Feb-07	EPA TO-15	
Dichlorodifluoromethane	ND	10	"	"	"	"	"	"	
Chloromethane	38	5.0	"	"	"	"	"	"	
Dichlorotetrafluoroethane	ND	10	"	"	"	"	"	"	
Vinyl chloride	22	5.0	"	"	"	"	"	"	
Bromomethane	ND	5.0	"	"	"	"	"	"	
Chloroethane	ND	5.0	"	"	"	"	"	"	
Bromoethene	ND	5.0	"	"	"	"	"	"	
Trichlorofluoromethane	ND	5.0	"	"	"	"	"	"	
Acetone	200	20	"	"	"	"	"	"	
1,1-Dichloroethene	ND	5.0	"	"	"	"	"	"	
1,1,2-Trichlorotrifluoroethane	ND	10	"	"	"	"	"	"	
Allyl chloride	ND	5.0	"	"	"	"	"	"	
Methylene chloride	ND	5.0	"	"	"	"	"	"	
Carbon disulfide	210	5.0	"	"	"	"	"	"	
trans-1,2-Dichloroethene	ND	5.0	"	"	"	"	"	"	
Methyl tert-butyl ether	ND	5.0	"	"	"	"	"	"	
Vinyl acetate	ND	5.0	"	"	"	"	"	"	
1,1-Dichloroethane	ND	5.0	"	"	"	"	"	"	
2-Butanone	37	5.0	"	"	"	"	"	"	
n-Hexane	210	5.0	"	"	"	"	"	"	
cis-1,2-Dichloroethene	7.9	5.0	"	"	"	"	"	"	
Ethyl acetate	ND	5.0	"	"	"	"	"	"	
Chloroform	ND	5.0	"	"	"	"	"	"	
Tetrahydrofuran	ND	5.0	"	"	"	"	"	"	
1,1,1-Trichloroethane	ND	5.0	"	"	"	"	"	"	
1,2-Dichloroethane	ND	5.0	"	"	"	"	"	"	
Benzene	160	5.0	"	"	"	"	"	"	
Carbon tetrachloride	ND	5.0	"	"	"	"	"	"	
Cyclohexane	80	5.0	"	"	"	"	"	"	
2,2,4-Trimethylpentane	83	5.0	"	"	"	"	"	"	
n-Heptane	190	5.0	"	"	"	"	"	"	
Trichloroethene	15	5.0	"	"	"	"	"	"	
1,2-Dichloropropane	ND	5.0	"	"	"	"	"	"	
1,4-Dioxane	ND	5.0	"	"	"	"	"	"	
Bromodichloromethane	ND	5.0	"	"	"	"	"	"	
cis-1,3-Dichloropropene	ND	5.0	"	"	"	"	"	"	
4-Methyl-2-pentanone	ND	5.0	"	"	"	"	"	"	

MOBILE GEOCHEMISTRY
H&P

Bradburn, Briller & Johnson, LLC 162 North Franklin Street, 4th Floor Chicago, IL 60606	Project: BBJ020507-11 Project Number: Lyons, Illinois Project Manager: Mr. Andy Bajorat	Reported: 15-Feb-07

Volatile Organic Compounds by EPA TO-15

H&P Mobile Geochemistry

Analyte	Result	Reporting Limit	Units	Dilution Factor	Batch	Prepared	Analyzed	Method	Notes
SB-10 (E702013-10) Vapor Sampled: 01-Feb-07 Received: 05-Feb-07									
trans-1,3-Dichloropropene	ND	5.0	ug/m³ Air	1	EB70706	07-Feb-07	07-Feb-07	EPA TO-15	
Toluene	120	5.0	"	"	"	"	"	"	
1,1,2-Trichloroethane	ND	5.0	"	"	"	"	"	"	
2-Hexanone	ND	5.0	"	"	"	"	"	"	
Dibromochloromethane	ND	5.0	"	"	"	"	"	"	
Tetrachloroethene	6.2	5.0	"	"	"	"	"	"	
1,2-Dibromoethane (EDB)	ND	5.0	"	"	"	"	"	"	
Chlorobenzene	ND	5.0	"	"	"	"	"	"	
Ethylbenzene	42	5.0	"	"	"	"	"	"	
m,p-Xylene	31	5.0	"	"	"	"	"	"	
Styrene	ND	5.0	"	"	"	"	"	"	
o-Xylene	30	5.0	"	"	"	"	"	"	
Bromoform	ND	20	"	"	"	"	"	"	
1,1,2,2-Tetrachloroethane	ND	5.0	"	"	"	"	"	"	
4-Ethyltoluene	ND	5.0	"	"	"	"	"	"	
1,3,5-Trimethylbenzene	5.2	5.0	"	"	"	"	"	"	
1,2,4-Trimethylbenzene	6.8	5.0	"	"	"	"	"	"	
1,3-Dichlorobenzene	ND	10	"	"	"	"	"	"	
Benzyl chloride	ND	5.0	"	"	"	"	"	"	
1,4-Dichlorobenzene	ND	10	"	"	"	"	"	"	
1,2-Dichlorobenzene	ND	10	"	"	"	"	"	"	
1,2,4-Trichlorobenzene	ND	10	"	"	"	"	"	"	
Hexachlorobutadiene	ND	10	"	"	"	"	"	"	
Surrogate: 1,2-Dichloroethane-d4		*95.9 %*		*80-120*	"	"	"	"	
Surrogate: Toluene-d8		*100 %*		*80-120*	"	"	"	"	
Surrogate: 4-Bromofluorobenzene		*99.5 %*		*80-120*	"	"	"	"	

MOBILE GEOCHEMISTRY
H&P

Bradburn, Briler & Johnson, LLC 162 North Franklin Street, 4th Floor Chicago, IL 60606	Project: BBJ020507-11 Project Number: Lyons, Illinois Project Manager: Mr Andy Bayorat	Reported: 15-Feb-07

Volatile Organic Compounds by EPA TO-15

H&P Mobile Geochemistry

Analyte	Result	Reporting Limit	Units	Dilution Factor	Batch	Prepared	Analyzed	Method	Notes
SB-1 (E702013-11) Vapor Sampled: 02-Feb-07 Received: 05-Feb-07									
Propene	ND	10	ug/m³ Air	1	EB70706	07-Feb-07	07-Feb-07	EPA TO-15	
Dichlorodifluoromethane	ND	10	"	"	"	"	"	"	
Chloromethane	ND	5.0	"	"	"	"	"	"	
Dichlorotetrafluoroethane	ND	10	"	"	"	"	"	"	
Vinyl chloride	8.1	5.0	"	"	"	"	"	"	
Bromomethane	ND	5.0	"	"	"	"	"	"	
Chloroethane	ND	5.0	"	"	"	"	"	"	
Bromoethene	ND	5.0	"	"	"	"	"	"	
Trichlorofluoromethane	ND	5.0	"	"	"	"	"	"	
Acetone	ND	20	"	"	"	"	"	"	
1,1-Dichloroethene	ND	5.0	"	"	"	"	"	"	
1,1,2-Trichlorotrifluoroethane	21	10	"	"	"	"	"	"	
Allyl chloride	ND	5.0	"	"	"	"	"	"	
Methylene chloride	ND	5.0	"	"	"	"	"	"	
Carbon disulfide	33	5.0	"	"	"	"	"	"	
trans-1,2-Dichloroethene	ND	5.0	"	"	"	"	"	"	
Methyl tert-butyl ether	ND	5.0	"	"	"	"	"	"	
Vinyl acetate	ND	5.0	"	"	"	"	"	"	
1,1-Dichloroethane	ND	5.0	"	"	"	"	"	"	
2-Butanone	14	5.0	"	"	"	"	"	"	
n-Hexane	240	5.0	"	"	"	"	"	"	
cis-1,2-Dichloroethene	11	5.0	"	"	"	"	"	"	
Ethyl acetate	ND	5.0	"	"	"	"	"	"	
Chloroform	ND	5.0	"	"	"	"	"	"	
Tetrahydrofuran	ND	5.0	"	"	"	"	"	"	
1,1,1-Trichloroethane	ND	5.0	"	"	"	"	"	"	
1,2-Dichloroethane	ND	5.0	"	"	"	"	"	"	
Benzene	11	5.0	"	"	"	"	"	"	
Carbon tetrachloride	ND	5.0	"	"	"	"	"	"	
Cyclohexane	110	5.0	"	"	"	"	"	"	
2,2,4-Trimethylpentane	ND	5.0	"	"	"	"	"	"	
n-Heptane	160	5.0	"	"	"	"	"	"	
Trichloroethene	12	5.0	"	"	"	"	"	"	
1,2-Dichloropropane	ND	5.0	"	"	"	"	"	"	
1,4-Dioxane	ND	5.0	"	"	"	"	"	"	
Bromodichloromethane	ND	5.5	"	"	"	"	"	"	
cis-1,3-Dichloropropene	ND	5.0	"	"	"	"	"	"	
4-Methyl-2-pentanone	ND	5.0	"	"	"	"	"	"	

MOBILE GEOCHEMISTRY
H&P

Bradburn, Briller & Johnson, LLC 162 North Franklin Street, 4th Floor Chicago, IL 60606	Project: BBJ020507-11 Project Number: Lyons, Illinois Project Manager: Mr. Andy Bajorat	Reported: 15-Feb-07

Volatile Organic Compounds by EPA TO-15

H&P Mobile Geochemistry

Analyte	Result	Reporting Limit	Units	Dilution Factor	Batch	Prepared	Analyzed	Method	Notes
SB-1 (E702013-11) Vapor Sampled: 02-Feb-07 Received: 05-Feb-07									
trans-1,3-Dichloropropene	ND	5.0	ug/m³ Air	1	EB70706	07-Feb-07	07-Feb-07	EPA TO-15	
Toluene	20	5.0	"	"	"	"	"	"	
1,1,2-Trichloroethane	ND	5.0	"	"	"	"	"	"	
2-Hexanone	ND	5.0	"	"	"	"	"	"	
Dibromochloromethane	ND	5.0	"	"	"	"	"	"	
Tetrachloroethene	11	5.0	"	"	"	"	"	"	
1,2-Dibromoethane (EDB)	ND	5.0	"	"	"	"	"	"	
Chlorobenzene	ND	5.0	"	"	"	"	"	"	
Ethylbenzene	7.1	5.0	"	"	"	"	"	"	
m,p-Xylene	6.5	5.0	"	"	"	"	"	"	
Styrene	ND	5.0	"	"	"	"	"	"	
o-Xylene	6.6	5.0	"	"	"	"	"	"	
Bromoform	ND	20	"	"	"	"	"	"	
1,1,2,2-Tetrachloroethane	ND	5.0	"	"	"	"	"	"	
4-Ethyltoluene	ND	5.0	"	"	"	"	"	"	
1,3,5-Trimethylbenzene	ND	5.0	"	"	"	"	"	"	
1,2,4-Trimethylbenzene	ND	5.0	"	"	"	"	"	"	
1,3-Dichlorobenzene	ND	10	"	"	"	"	"	"	
Benzyl chloride	ND	5.0	"	"	"	"	"	"	
1,4-Dichlorobenzene	ND	10	"	"	"	"	"	"	
1,2-Dichlorobenzene	ND	10	"	"	"	"	"	"	
1,2,4-Trichlorobenzene	ND	10	"	"	"	"	"	"	
Hexachlorobutadiene	ND	10	"	"	"	"	"	"	
Surrogate: 1,2-Dichloroethane-d4		*96.4 %*	*80-120*		"	"	"	"	
Surrogate: Toluene-d8		*99.1 %*	*80-120*		"	"	"	"	
Surrogate: 4-Bromofluorobenzene		*96.7 %*	*80-120*		"	"	"	"	

MOBILE GEOCHEMISTRY
H&P

Bradburn, Butler & Johnson, LLC 162 North Franklin Street, 4th Floor Chicago, IL 60606	Project BBJ020507-11 Project Number Lyons, Illinois Project Manager Mr Andy Bayont	Reported 15-Feb-07

Volatile Organic Compounds by EPA TO-15

H&P Mobile Geochemistry

Analyte	Result	Reporting Limit	Units	Dilution Factor	Batch	Prepared	Analyzed	Method	Notes
SB-2 (E702013-12) Vapor Sampled: 02-Feb-07 Received: 05-Feb-07									
Propene	ND	10	ug/m³ Air	1	EB70706	07-Feb-07	07-Feb-07	EPA TO-15	
Dichlorodifluoromethane	ND	10	"	"	"	"	"	"	
Chloromethane	ND	5.0	"	"	"	"	"	"	
Dichlorotetrafluoroethane	ND	10	"	"	"	"	"	"	
Vinyl chloride	ND	5.0	"	"	"	"	"	"	
Bromomethane	ND	5.0	"	"	"	"	"	"	
Chloroethane	ND	5.0	"	"	"	"	"	"	
Bromoethene	ND	5.0	"	"	"	"	"	"	
Trichlorofluoromethane	ND	5.0	"	"	"	"	"	"	
Acetone	62	20	"	"	"	"	"	"	
1,1-Dichloroethene	ND	5.0	"	"	"	"	"	"	
1,1,2-Trichlorotrifluoroethane	11	10	"	"	"	"	"	"	
Allyl chloride	ND	5.0	"	"	"	"	"	"	
Methylene chloride	ND	5.0	"	"	"	"	"	"	
Carbon disulfide	ND	5.0	"	"	"	"	"	"	
trans-1,2-Dichloroethene	ND	5.0	"	"	"	"	"	"	
Methyl tert-butyl ether	ND	5.0	"	"	"	"	"	"	
Vinyl acetate	ND	5.0	"	"	"	"	"	"	
1,1-Dichloroethane	ND	5.0	"	"	"	"	"	"	
2-Butanone	7.6	5.0	"	"	"	"	"	"	
n-Hexane	7.3	5.0	"	"	"	"	"	"	
cis-1,2-Dichloroethene	ND	5.0	"	"	"	"	"	"	
Ethyl acetate	ND	5.0	"	"	"	"	"	"	
Chloroform	ND	5.0	"	"	"	"	"	"	
Tetrahydrofuran	ND	5.0	"	"	"	"	"	"	
1,1,1-Trichloroethane	ND	5.0	"	"	"	"	"	"	
1,2-Dichloroethane	ND	5.0	"	"	"	"	"	"	
Benzene	ND	5.0	"	"	"	"	"	"	
Carbon tetrachloride	ND	5.0	"	"	"	"	"	"	
Cyclohexane	ND	5.0	"	"	"	"	"	"	
2,2,4-Trimethylpentane	ND	5.0	"	"	"	"	"	"	
n-Heptane	6.7	5.0	"	"	"	"	"	"	
Trichloroethene	ND	5.0	"	"	"	"	"	"	
1,2-Dichloropropane	ND	5.0	"	"	"	"	"	"	
1,4-Dioxane	ND	5.0	"	"	"	"	"	"	
Bromodichloromethane	ND	5.5	"	"	"	"	"	"	
cis-1,3-Dichloropropene	ND	5.0	"	"	"	"	"	"	
4-Methyl-2-pentanone	ND	5.0	"	"	"	"	"	"	

MOBILE GEOCHEMISTRY
H&P

Bradburn, Briller & Johnson, LLC 162 North Franklin Street, 4th Floor Chicago, IL 60606	Project: BBJ020507-11 Project Number: Lyons, Illinois Project Manager: Mr. Andy Bajorat	Reported: 15-Feb-07

Volatile Organic Compounds by EPA TO-15

H&P Mobile Geochemistry

Analyte	Result	Reporting Limit	Units	Dilution Factor	Batch	Prepared	Analyzed	Method	Notes
SB-2 (E702013-12) Vapor Sampled: 02-Feb-07 Received: 05-Feb-07									
trans-1,3-Dichloropropene	ND	5.0	ug/m³ Air	1	EB70706	07-Feb-07	07-Feb-07	EPA TO-15	
Toluene	6.8	5.0	"	"	"	"	"	"	
1,1,2-Trichloroethane	ND	5.0	"	"	"	"	"	"	
2-Hexanone	ND	5.0	"	"	"	"	"	"	
Dibromochloromethane	ND	5.0	"	"	"	"	"	"	
Tetrachloroethene	ND	5.0	"	"	"	"	"	"	
1,2-Dibromoethane (EDB)	ND	5.0	"	"	"	"	"	"	
Chlorobenzene	ND	5.0	"	"	"	"	"	"	
Ethylbenzene	ND	5.0	"	"	"	"	"	"	
m,p-Xylene	ND	5.0	"	"	"	"	"	"	
Styrene	ND	5.0	"	"	"	"	"	"	
o-Xylene	ND	5.0	"	"	"	"	"	"	
Bromoform	ND	20	"	"	"	"	"	"	
1,1,2,2-Tetrachloroethane	ND	6.0	"	"	"	"	"	"	
4-Ethyltoluene	ND	5.0	"	"	"	"	"	"	
1,3,5-Trimethylbenzene	ND	5.0	"	"	"	"	"	"	
1,2,4-Trimethylbenzene	ND	5.0	"	"	"	"	"	"	
1,3-Dichlorobenzene	ND	10	"	"	"	"	"	"	
Benzyl chloride	ND	5.0	"	"	"	"	"	"	
1,4-Dichlorobenzene	ND	10	"	"	"	"	"	"	
1,2-Dichlorobenzene	ND	10	"	"	"	"	"	"	
1,2,4-Trichlorobenzene	ND	10	"	"	"	"	"	"	
Hexachlorobutadiene	ND	10	"	"	"	"	"	"	
Surrogate: 1,2-Dichloroethane-d4		*100 %*		*80-120*	"	"	"	"	
Surrogate: Toluene-d8		*101 %*		*80-120*	"	"	"	"	
Surrogate: 4-Bromofluorobenzene		*97.8 %*		*80-120*	"	"	"	"	

MOBILE GEOCHEMISTRY
H&P

Bradburn, Briller & Johnson, LLC	Project: BBJ020507-11	
162 North Franklin Street, 4th Floor	Project Number: Lyons, Illinois	Reported
Chicago, IL 60606	Project Manager: Mr. Andy Bajorat	15-Feb-07

Volatile Organic Compounds by EPA TO-15

H&P Mobile Geochemistry

Analyte	Result	Reporting Limit	Units	Dilution Factor	Batch	Prepared	Analyzed	Method	Notes
SB-3 (E702013-13) Vapor Sampled: 02-Feb-07 Received: 05-Feb-07									
Propane	ND	10	ug/m³ Air	1	EB70706	07-Feb-07	07-Feb-07	EPA TO-15	
Dichlorodifluoromethane	ND	10	"	"	"	"	"	"	
Chloromethane	ND	5.0	"	"	"	"	"	"	
Dichlorotetrafluoroethane	ND	10	"	"	"	"	"	"	
Vinyl chloride	12	5.0	"	"	"	"	"	"	
Bromomethane	ND	5.0	"	"	"	"	"	"	
Chloroethane	ND	5.0	"	"	"	"	"	"	
Bromoethene	ND	5.0	"	"	"	"	"	"	
Trichlorofluoromethane	ND	5.0	"	"	"	"	"	"	
Acetone	310	20	"	"	"	"	"	"	
1,1-Dichloroethene	ND	5.0	"	"	"	"	"	"	
1,1,2-Trichlorotrifluoroethane	ND	10	"	"	"	"	"	"	
Allyl chloride	ND	5.0	"	"	"	"	"	"	
Methylene chloride	ND	5.0	"	"	"	"	"	"	
Carbon disulfide	75	5.0	"	"	"	"	"	"	
trans-1,2-Dichloroethene	ND	5.0	"	"	"	"	"	"	
Methyl tert-butyl ether	ND	5.0	"	"	"	"	"	"	
Vinyl acetate	ND	5.0	"	"	"	"	"	"	
1,1-Dichloroethane	ND	5.0	"	"	"	"	"	"	
2-Butanone	75	5.0	"	"	"	"	"	"	
n-Hexane	58	5.0	"	"	"	"	"	"	
cis-1,2-Dichloroethene	ND	5.0	"	"	"	"	"	"	
Ethyl acetate	ND	5.0	"	"	"	"	"	"	
Chloroform	ND	5.0	"	"	"	"	"	"	
Tetrahydrofuran	ND	5.0	"	"	"	"	"	"	
1,1,1-Trichloroethane	ND	5.0	"	"	"	"	"	"	
1,2-Dichloroethane	ND	5.0	"	"	"	"	"	"	
Benzene	34	5.0	"	"	"	"	"	"	
Carbon tetrachloride	ND	5.0	"	"	"	"	"	"	
Cyclohexane	38	5.0	"	"	"	"	"	"	
2,2,4-Trimethylpentane	ND	5.0	"	"	"	"	"	"	
n-Heptane	33	5.0	"	"	"	"	"	"	
Trichloroethene	ND	5.0	"	"	"	"	"	"	
1,2-Dichloropropane	ND	5.0	"	"	"	"	"	"	
1,4-Dioxane	ND	5.0	"	"	"	"	"	"	
Bromodichloromethane	ND	5.5	"	"	"	"	"	"	
cis-1,3-Dichloropropene	ND	5.0	"	"	"	"	"	"	
4-Methyl-2-pentanone	ND	5.0	"	"	"	"	"	"	

MOBILE GEOCHEMISTRY
H&P

Bradburn, Briller & Johnson, LLC 162 North Franklin Street, 4th Floor Chicago, IL 60606	Project: BBJ020507-11 Project Number: Lyons, Illinois Project Manager: Mr. Andy Bajorat	Reported: 15-Feb-07

Volatile Organic Compounds by EPA TO-15

H&P Mobile Geochemistry

Analyte	Result	Reporting Limit	Units	Dilution Factor	Batch	Prepared	Analyzed	Method	Notes
SB-3 (E702013-13) Vapor Sampled: 02-Feb-07 Received: 05-Feb-07									
trans-1,3-Dichloropropene	ND	5.0	ug/m³ Air	1	EB70706	07-Feb-07	07-Feb-07	EPA TO-15	
Toluene	40	5.0	"	"	"	"	"	"	
1,1,2-Trichloroethane	ND	5.0	"	"	"	"	"	"	
2-Hexanone	ND	5.0	"	"	"	"	"	"	
Dibromochloromethane	ND	5.0	"	"	"	"	"	"	
Tetrachloroethene	ND	5.0	"	"	"	"	"	"	
1,2-Dibromoethane (EDB)	ND	5.0	"	"	"	"	"	"	
Chlorobenzene	ND	5.0	"	"	"	"	"	"	
Ethylbenzene	10	5.0	"	"	"	"	"	"	
m,p-Xylene	7.6	5.0	"	"	"	"	"	"	
Styrene	ND	5.0	"	"	"	"	"	"	
o-Xylene	6.8	5.0	"	"	"	"	"	"	
Bromoform	ND	20	"	"	"	"	"	"	
1,1,2,2-Tetrachloroethane	ND	5.0	"	"	"	"	"	"	
4-Ethyltoluene	ND	5.0	"	"	"	"	"	"	
1,3,5-Trimethylbenzene	ND	5.0	"	"	"	"	"	"	
1,2,4-Trimethylbenzene	ND	5.0	"	"	"	"	"	"	
1,3-Dichlorobenzene	ND	10	"	"	"	"	"	"	
Benzyl chloride	ND	5.0	"	"	"	"	"	"	
1,4-Dichlorobenzene	ND	10	"	"	"	"	"	"	
1,2-Dichlorobenzene	ND	10	"	"	"	"	"	"	
1,2,4-Trichlorobenzene	ND	10	"	"	"	"	"	"	
Hexachlorobutadiene	ND	10	"	"	"	"	"	"	
Surrogate: 1,2-Dichloroethane-d4		*99.0 %*		*80-120*	"	"	"	"	
Surrogate: Toluene-d8		*99.0 %*		*80-120*	"	"	"	"	
Surrogate: 4-Bromofluorobenzene		*101 %*		*80-120*	"	"	"	"	

MOBILE GEOCHEMISTRY
H&P

Bradburn, Butler & Johnson, LLC 162 North Franklin Street, 4th Floor Chicago, IL 60606	Project: BBJ020507-11 Project Number: Lyons, Illinois Project Manager: Mr Andy Bajoral	Reported 15-Feb-07

Volatile Organic Compounds by EPA TO-15

H&P Mobile Geochemistry

Analyte	Result	Reporting Limit	Units	Dilution Factor	Batch	Prepared	Analyzed	Method	Notes
SB-4 (E702013-14) Vapor Sampled: 02-Feb-07 Received: 05-Feb-07									
Propane	ND	10	ug/m³ Air	1	EB70706	07-Feb-07	07-Feb-07	EPA TO-15	
Dichlorodifluoromethane	ND	10	"	"	"	"	"	"	
Chloromethane	ND	5.0	"	"	"	"	"	"	
Dichlorotetrafluoroethane	ND	10	"	"	"	"	"	"	
Vinyl chloride	ND	5.0	"	"	"	"	"	"	
Bromomethane	ND	5.0	"	"	"	"	"	"	
Chloroethane	ND	5.0	"	"	"	"	"	"	
Bromoethane	ND	5.0	"	"	"	"	"	"	
Trichlorofluoromethane	ND	5.0	"	"	"	"	"	"	
Acetone	100	20	"	"	"	"	"	"	
1,1-Dichloroethene	ND	5.0	"	"	"	"	"	"	
1,1,2-Trichlorotrifluoroethane	ND	10	"	"	"	"	"	"	
Allyl chloride	ND	5.0	"	"	"	"	"	"	
Methylene chloride	ND	5.0	"	"	"	"	"	"	
Carbon disulfide	28	5.0	"	"	"	"	"	"	
trans-1,2-Dichloroethene	ND	5.0	"	"	"	"	"	"	
Methyl tert-butyl ether	ND	5.0	"	"	"	"	"	"	
Vinyl acetate	ND	5.0	"	"	"	"	"	"	
1,1-Dichloroethane	ND	5.0	"	"	"	"	"	"	
2-Butanone	37	5.0	"	"	"	"	"	"	
n-Hexane	57	5.0	"	"	"	"	"	"	
cis-1,2-Dichloroethene	ND	5.0	"	"	"	"	"	"	
Ethyl acetate	ND	5.0	"	"	"	"	"	"	
Chloroform	ND	5.0	"	"	"	"	"	"	
Tetrahydrofuran	ND	5.0	"	"	"	"	"	"	
1,1,1-Trichloroethane	ND	5.0	"	"	"	"	"	"	
1,2-Dichloroethane	ND	5.0	"	"	"	"	"	"	
Benzene	27	5.0	"	"	"	"	"	"	
Carbon tetrachloride	ND	5.0	"	"	"	"	"	"	
Cyclohexane	44	5.0	"	"	"	"	"	"	
2,2,4-Trimethylpentane	42	5.0	"	"	"	"	"	"	
n-Heptane	28	5.0	"	"	"	"	"	"	
Trichloroethene	ND	5.0	"	"	"	"	"	"	
1,2-Dichloropropane	ND	5.0	"	"	"	"	"	"	
1,4-Dioxane	ND	5.0	"	"	"	"	"	"	
Bromodichloromethane	ND	5.5	"	"	"	"	"	"	
cis-1,3-Dichloropropene	ND	5.0	"	"	"	"	"	"	
4-Methyl-2-pentanone	ND	5.0	"	"	"	"	"	"	

MOBILE GEOCHEMISTRY
H&P

Bradburn, Briller & Johnson, LLC 162 North Franklin Street, 4th Floor Chicago, IL 60606	Project: BBJ020507-11 Project Number: Lyons, Illinois Project Manager: Mr. Andy Bajorat	Reported: 15-Feb-07

Volatile Organic Compounds by EPA TO-15

H&P Mobile Geochemistry

Analyte	Result	Reporting Limit	Units	Dilution Factor	Batch	Prepared	Analyzed	Method	Notes
SB-4 (E702013-14) Vapor Sampled: 03-Feb-07 Received: 05-Feb-07									
trans-1,3-Dichloropropene	ND	5.0	ug/m³ Air	1	EB70706	07-Feb-07	07-Feb-07	EPA TO-15	
Toluene	36	5.0	"	"	"	"	"	"	
1,1,2-Trichloroethane	ND	5.0	"	"	"	"	"	"	
2-Hexanone	ND	5.0	"	"	"	"	"	"	
Dibromochloromethane	ND	5.0	"	"	"	"	"	"	
Tetrachloroethene	ND	5.0	"	"	"	"	"	"	
1,2-Dibromoethane (EDB)	ND	5.0	"	"	"	"	"	"	
Chlorobenzene	ND	5.0	"	"	"	"	"	"	
Ethylbenzene	11	5.0	"	"	"	"	"	"	
m,p-Xylene	7.6	5.0	"	"	"	"	"	"	
Styrene	ND	5.0	"	"	"	"	"	"	
o-Xylene	8.0	5.0	"	"	"	"	"	"	
Bromoform	ND	20	"	"	"	"	"	"	
1,1,2,2-Tetrachloroethane	ND	5.0	"	"	"	"	"	"	
4-Ethyltoluene	ND	5.0	"	"	"	"	"	"	
1,3,5-Trimethylbenzene	ND	5.0	"	"	"	"	"	"	
1,2,4-Trimethylbenzene	ND	5.0	"	"	"	"	"	"	
1,3-Dichlorobenzene	ND	10	"	"	"	"	"	"	
Benzyl chloride	ND	5.0	"	"	"	"	"	"	
1,4-Dichlorobenzene	ND	10	"	"	"	"	"	"	
1,2-Dichlorobenzene	ND	10	"	"	"	"	"	"	
1,2,4-Trichlorobenzene	ND	10	"	"	"	"	"	"	
Hexachlorobutadiene	ND	10	"	"	"	"	"	"	
Surrogate: 1,2-Dichloroethane-d4		*99.0 %*	*80-120*		"	"	"	"	
Surrogate: Toluene-d8		*99.1 %*	*80-120*		"	"	"	"	
Surrogate: 4-Bromofluorobenzene		*100 %*	*80-120*		"	"	"	"	

MOBILE GEOCHEMISTRY

H&P

Bradburn, Beiler & Johnson, LLC	Project BBJ020507-11	
162 North Franklin Street, 4th Floor	Project Number Lyons, Illinois	Reported
Chicago, IL 60606	Project Manager Mr. Andy Bajorat	15-Feb-07

Volatile Organic Compounds by EPA TO-15

H&P Mobile Geochemistry

Analyte	Result	Reporting Limit	Units	Dilution Factor	Batch	Prepared	Analyzed	Method	Notes
SB-11 (E702013-15) Vapor Sampled: 02-Feb-07 Received: 05-Feb-07									
Propene	ND	10	ug/m³ Air	1	EB70706	07-Feb-07	07-Feb-07	EPA TO-15	
Dichlorodifluoromethane	ND	10	"	"	"	"	"	"	
Chloromethane	ND	5.0	"	"	"	"	"	"	
Dichlorotetrafluoroethane	ND	10	"	"	"	"	"	"	
Vinyl chloride	3600	50	"	10	"	"	08-Feb-07	"	
Bromomethane	ND	5.0	"	1	"	"	07-Feb-07	"	
Chloroethane	ND	5.0	"	"	"	"	"	"	
Bromoethene	ND	5.0	"	"	"	"	"	"	
Trichlorofluoromethane	ND	5.0	"	"	"	"	"	"	
Acetone	ND	20	"	"	"	"	"	"	
1,1-Dichloroethene	8.0	5.0	"	"	"	"	"	"	
1,1,2-Trichlorotrifluoroethane	24	10	"	"	"	"	"	"	
Allyl chloride	ND	5.0	"	"	"	"	"	"	
Methylene chloride	ND	5.0	"	"	"	"	"	"	
Carbon disulfide	74	5.0	"	"	"	"	"	"	
trans-1,2-Dichloroethene	110	5.0	"	"	"	"	"	"	
Methyl tert-butyl ether	ND	5.0	"	"	"	"	"	"	
Vinyl acetate	ND	5.0	"	"	"	"	"	"	
1,1-Dichloroethane	ND	5.0	"	"	"	"	"	"	
2-Butanone	11	5.0	"	"	"	"	"	"	
n-Hexane	1800	50	"	10	"	"	08-Feb-07	"	
cis-1,2-Dichloroethene	340	5.0	"	1	"	"	07-Feb-07	"	
Ethyl acetate	ND	5.0	"	"	"	"	"	"	
Chloroform	ND	5.0	"	"	"	"	"	"	
Tetrahydrofuran	ND	5.0	"	"	"	"	"	"	
1,1,1-Trichloroethane	ND	5.0	"	"	"	"	"	"	
1,2-Dichloroethane	ND	5.0	"	"	"	"	"	"	
Benzene	130	5.0	"	"	"	"	"	"	
Carbon tetrachloride	ND	5.0	"	"	"	"	"	"	
Cyclohexane	380	5.0	"	"	"	"	"	"	
2,2,4-Trimethylpentane	ND	5.0	"	"	"	"	"	"	
n-Heptane	1400	50	"	10	"	"	08-Feb-07	"	
Trichloroethene	100	5.0	"	1	"	"	07-Feb-07	"	
1,2-Dichloropropane	ND	5.0	"	"	"	"	"	"	
1,4-Dioxane	ND	5.0	"	"	"	"	"	"	
Bromodichloromethane	ND	5.5	"	"	"	"	"	"	
cis-1,3-Dichloropropene	ND	5.0	"	"	"	"	"	"	
4-Methyl-2-pentanone	ND	5.0	"	"	"	"	"	"	

MOBILE GEOCHEMISTRY
H&P

Bradburn, Briller & Johnson, LLC 162 North Franklin Street, 4th Floor Chicago, IL 60606	Project: BBJ020507-11 Project Number: Lyons, Illinois Project Manager: Mr. Andy Bajorat	Reported: 15-Feb-07

Volatile Organic Compounds by EPA TO-15

H&P Mobile Geochemistry

Analyte	Result	Reporting Limit	Units	Dilution Factor	Batch	Prepared	Analyzed	Method	Notes
SB-11 (E702013-15) Vapor Sampled: 02-Feb-07 Received: 06-Feb-07									
trans-1,3-Dichloropropene	ND	5.0	ug/m³ Air	1	EB70706	07-Feb-07	07-Feb-07	EPA TO-15	
Toluene	54	5.0	"	"	"	"	"	"	
1,1,2-Trichloroethane	ND	5.0	"	"	"	"	"	"	
2-Hexanone	ND	5.0	"	"	"	"	"	"	
Dibromochloromethane	ND	5.0	"	"	"	"	"	"	
Tetrachloroethene	ND	5.0	"	"	"	"	"	"	
1,2-Dibromoethane (EDB)	ND	5.0	"	"	"	"	"	"	
Chlorobenzene	ND	5.0	"	"	"	"	"	"	
Ethylbenzene	14	5.0	"	"	"	"	"	"	
m,p-Xylene	7.7	5.0	"	"	"	"	"	"	
Styrene	8.2	5.0	"	"	"	"	"	"	
o-Xylene	8.2	5.0	"	"	"	"	"	"	
Bromoform	ND	20	"	"	"	"	"	"	
1,1,2,2-Tetrachloroethane	ND	5.0	"	"	"	"	"	"	
4-Ethyltoluene	ND	5.0	"	"	"	"	"	"	
1,3,5-Trimethylbenzene	ND	5.0	"	"	"	"	"	"	
1,2,4-Trimethylbenzene	ND	5.0	"	"	"	"	"	"	
1,3-Dichlorobenzene	ND	10	"	"	"	"	"	"	
Benzyl chloride	ND	5.0	"	"	"	"	"	"	
1,4-Dichlorobenzene	ND	10	"	"	"	"	"	"	
1,2-Dichlorobenzene	ND	10	"	"	"	"	"	"	
1,2,4-Trichlorobenzene	ND	10	"	"	"	"	"	"	
Hexachlorobutadiene	ND	10	"	"	"	"	"	"	
Surrogate: 1,2-Dichloroethane-d4		*98.1 %*	*80-120*		"	"	"	"	
Surrogate: Toluene-d8		*101 %*	*80-120*		"	"	"	"	
Surrogate: 4-Bromofluorobenzene		*98.4 %*	*80-120*		"	"	"	"	

MOBILE GEOCHEMISTRY
H&P

Bradburt, Briller & Johnson, LLC 162 North Franklin Street, 4th Floor Chicago, IL 60606	Project BBJ020507-11 Project Number: Lyons, Illinois Project Manager Mr Andy Bajorat	Reported 15-Feb-07

Soil Gas and Vapor Analysis - Quality Control

H&P Mobile Geochemistry

Analyte	Result	Reporting Limit	Units	Spike Level	Source Result	%REC	%REC Limits	RPD	RPD Limit	Notes
Batch EB70605 - GC										
Blank (EB70605-BLK1)				Prepared & Analyzed: 06-Feb-07						
Methane	ND	10	ppmv							
Batch EL62903 - GC										
Blank (EL62903-BLK1)				Prepared & Analyzed: 12-Jan-08						
Methane	ND	10	ppmv							

MOBILE GEOCHEMISTRY
H&P

Bradburn, Briller & Johnston, LLC 162 North Franklin Street, 4th Floor Chicago, IL 60606	Project: BBJ020507-11 Project Number: Lyons, Illinois Project Manager: Mr. Andy Bajorat	Reported: 15-Feb-07

Volatile Organic Compounds by EPA TO-15 - Quality Control

H&P Mobile Geochemistry

Analyte	Result	Reporting Limit	Units	Spike Level	Source Result	%REC	%REC Limits	RPD	RPD Limit	Notes
Batch EB70704 - TO-15										
Blank (EB70704-BLK1)				Prepared & Analyzed: 06-Feb-07						
Propane	ND	10	ug/m³ Air							
Dichlorodifluoromethane	ND	10	"							
Chloromethane	ND	5.0	"							
Dichlorotetrafluoroethane	ND	10	"							
Vinyl chloride	ND	5.0	"							
Bromomethane	ND	5.0	"							
Chloroethane	ND	5.0	"							
Bromoethene	ND	5.0	"							
Trichlorofluoromethane	ND	5.0	"							
Acetone	ND	20	"							
1,1-Dichloroethene	ND	5.0	"							
1,1,2-Trichlorotrifluoroethane	ND	10	"							
Allyl chloride	ND	5.0	"							
Methylene chloride	ND	5.0	"							
Carbon disulfide	ND	5.0	"							
trans-1,2-Dichloroethene	ND	5.0	"							
Methyl tert-butyl ether	ND	5.0	"							
Vinyl acetate	ND	5.0	"							
1,1-Dichloroethane	ND	5.0	"							
2-Butanone	ND	5.0	"							
n-Hexane	ND	5.0	"							
cis-1,2-Dichloroethene	ND	5.0	"							
Ethyl acetate	ND	5.0	"							
Chloroform	ND	5.0	"							
Tetrahydrofuran	ND	5.0	"							
1,1,1-Trichloroethane	ND	5.0	"							
1,2-Dichloroethane	ND	5.0	"							
Benzene	ND	5.0	"							
Carbon tetrachloride	ND	5.0	"							
Cyclohexane	ND	5.0	"							
2,2,4-Trimethylpentane	ND	5.0	"							
n-Heptane	ND	5.0	"							
Trichloroethene	ND	5.0	"							
1,2-Dichloropropane	ND	5.0	"							

MOBILE GEOCHEMISTRY
H&P

Bradburn, Briller & Johnson, LLC 162 North Franklin Street, 4th Floor Chicago, IL 60606	Project: BBJ020507-11 Project Number: Lyons, Illinois Project Manager: Mr. Andy Bajorat	Reported 15-Feb-07

Volatile Organic Compounds by EPA TO-15 - Quality Control

H&P Mobile Geochemistry

Analyte	Result	Reporting Limit	Units	Spike Level	Source Result	%REC	%REC Limits	RPD	RPD Limit	Notes
Batch EB70704 - TO-15										
Blank (EB70704-BLK1)				Prepared & Analyzed: 06-Feb-07						
1,4-Dioxane	ND	5.0	ug/m³ Air							
Bromodichloromethane	ND	5.5	"							
cis-1,3-Dichloropropene	ND	5.0	"							
4-Methyl-2-pentanone	ND	5.0	"							
trans-1,3-Dichloropropene	ND	5.0	"							
Toluene	ND	5.0	"							
1,1,2-Trichloroethane	ND	5.0	"							
2-Hexanone	ND	5.0	"							
Dibromochloromethane	ND	5.0	"							
Tetrachloroethene	ND	5.0	"							
1,2-Dibromoethane (EDB)	ND	5.0	"							
Chlorobenzene	ND	5.0	"							
Ethylbenzene	ND	5.0	"							
m,p-Xylene	ND	5.0	"							
Styrene	ND	5.0	"							
o-Xylene	ND	5.0	"							
Bromoform	ND	20	"							
1,1,2,2-Tetrachloroethane	ND	5.0	"							
4-Ethyltoluene	ND	5.0	"							
1,3,5-Trimethylbenzene	ND	5.0	"							
1,2,4-Trimethylbenzene	ND	5.0	"							
1,3-Dichlorobenzene	ND	10	"							
Benzyl chloride	ND	5.0	"							
1,4-Dichlorobenzene	ND	10	"							
1,2-Dichlorobenzene	ND	10	"							
1,2,4-Trichlorobenzene	ND	10	"							
Hexachlorobutadiene	ND	10	"							
Surrogate: 1,2-Dichloroethane-d4	*103*		"	*103*		*100*	*80-120*			
Surrogate: Toluene-d8	*95.1*		"	*96.2*		*98.9*	*80-120*			
Surrogate: 4-Bromofluorobenzene	*174*		"	*182*		*95.6*	*80-120*			

MOBILE GEOCHEMISTRY
H&P

Bradburn, Briller & Johnson, LLC 162 North Franklin Street, 4th Floor Chicago, IL 60606	Project: BBJ020507-11 Project Number: Lyons, Illinois Project Manager: Mr. Andy Bajorat	Reported: 15-Feb-07

Volatile Organic Compounds by EPA TO-15 - Quality Control

H&P Mobile Geochemistry

Analyte	Result	Reporting Limit	Units	Spike Level	Source Result	%REC	%REC Limits	RPD	RPD Limit	Notes
Batch EB70704 - TO-15										
LCS (EB70704-BS1)				Prepared & Analyzed: 06-Feb-07						
Propane	34.7	10	ug/m³ Air	35.0		99.1	65-135			
Dichlorodifluoromethane	89.1	10	"	101		88.2	65-135			
Chloromethane	32.9	5.0	"	42.0		78.3	65-135			
Dichlorotetrafluoroethane	122	10	"	142		85.9	65-135			
Vinyl chloride	43.6	5.0	"	52.0		83.7	65-135			
Bromomethane	92.8	5.0	"	79.2		117	65-135			
Chloroethane	63.7	5.0	"	53.6		119	65-135			
Bromoethene	95.7	5.0	"	89.2		107	65-135			
Trichlorofluoromethane	113	5.0	"	113		100	65-135			
Acetone	58.5	20	"	48.4		121	65-135			
1,1-Dichloroethene	82.8	5.0	"	80.8		102	65-135			
1,1,2-Trichlorotrifluoroethane	157	10	"	155		101	65-135			
Allyl chloride	66.6	5.0	"	64.0		104	65-135			
Methylene chloride	74.4	5.0	"	70.8		105	65-135			
Carbon disulfide	64.3	5.0	"	63.2		102	65-135			
trans-1,2-Dichloroethene	84.1	5.0	"	80.8		104	65-135			
Methyl tert-butyl ether	81.1	5.0	"	73.6		110	65-135			
Vinyl acetate	71.6	5.0	"	72.0		99.4	65-135			
1,1-Dichloroethane	86.2	5.0	"	82.4		105	65-135			
2-Butanone	66.5	5.0	"	60.0		111	65-135			
n-Hexane	75.4	5.0	"	72.0		105	65-135			
cis-1,2-Dichloroethene	85.2	5.0	"	80.0		106	65-135			
Ethyl acetate	74.5	5.0	"	73.6		101	65-135			
Chloroform	101	5.0	"	99.2		102	65-135			
Tetrahydrofuran	65.1	5.0	"	60.0		108	65-135			
1,1,1-Trichloroethane	112	5.0	"	111		101	65-135			
1,2-Dichloroethane	84.5	5.0	"	82.4		103	65-135			
Benzene	70.2	5.0	"	64.8		108	65-135			
Carbon tetrachloride	126	5.0	"	128		98.4	65-135			
Cyclohexane	71.9	5.0	"	70.4		102	65-135			
2,2,4-Trimethylpentane	99.0	5.0	"	95.2		104	65-135			
n-Heptane	87.9	5.0	"	83.6		105	65-135			
Trichloroethene	114	5.0	"	110		104	65-135			
1,2-Dichloropropane	98.5	5.0	"	94.4		104	65-135			

MOBILE GEOCHEMISTRY
H&P

Bradburn, Briller & Johnson, LLC 162 North Franklin Street, 4th Floor Chicago, IL 60606	Project: BBJ020507-11 Project Number: Lyons, Illinois Project Manager: Mr Andy Bajorat	Reported 15-Feb-07

Volatile Organic Compounds by EPA TO-15 - Quality Control

H&P Mobile Geochemistry

Analyte	Result	Reporting Limit	Units	Spike Level	Source Result	%REC	%REC Limits	RPD	RPD Limit	Notes
Batch EB70704 - TO-15										
LCS (EB70704-BS1)				Prepared & Analyzed 06-Feb-07						
1,4-Dioxane	78.5	5.0	ug/m³ Air	73.6		107	65-135			
Bromodichloromethane	134	5.5	"	137		97.8	65-135			
cis-1,3-Dichloropropene	91.0	5.0	"	92.4		98.5	65-135			
4-Methyl-2-pentanone	81.8	5.0	"	85.2		96.3	65-135			
trans-1,3-Dichloropropene	73.5	5.0	"	92.4		79.5	65-135			
Toluene	80.2	5.0	"	76.9		104	65-135			
1,1,2-Trichloroethane	114	5.0	"	111		103	65-135			
2-Hexanone	82.9	5.0	"	83.2		99.6	65-135			
Dibromochloromethane	165	5.0	"	174		94.8	65-135			
Tetrachloroethene	148	5.0	"	138		107	65-135			
1,2-Dibromoethane (EDB)	159	5.0	"	157		101	65-135			
Chlorobenzene	99.0	5.0	"	93.6		106	65-135			
Ethylbenzene	95.4	5.0	"	88.4		108	65-135			
m,p-Xylene	92.4	5.0	"	88.4		105	65-135			
Styrene	80.5	5.0	"	86.8		92.7	65-135			
o-Xylene	93.3	5.0	"	88.4		106	65-135			
Bromoform	878	20	"	840		105	65-135			
1,1,2,2-Tetrachloroethane	143	5.0	"	140		102	65-135			
4-Ethyltoluene	103	5.0	"	100		103	65-135			
1,3,5-Trimethylbenzene	94.7	5.0	"	100		94.7	65-135			
1,2,4-Trimethylbenzene	98.0	5.0	"	100		98.0	65-135			
1,3-Dichlorobenzene	122	10	"	122		100	65-135			
Benzyl chloride	94.2	5.0	"	105		89.7	65-135			
1,4-Dichlorobenzene	125	10	"	122		102	65-135			
1,2-Dichlorobenzene	124	10	"	122		102	65-135			
1,2,4-Trichlorobenzene	145	10	"	151		96.0	65-135			
Hexachlorobutadiene	152	10	"	218		69.7	65-135			
Surrogate: 1,2-Dichloroethane-d4	*102*		"	*103*		*99.0*	*80-120*			
Surrogate: Toluene-d8	*94.8*		"	*96.2*		*98.5*	*80-120*			
Surrogate: 4-Bromofluorobenzene	*185*		"	*182*		*102*	*80-120*			

MOBILE GEOCHEMISTRY
H&P

Bradburn, Briller & Johnson, LLC 162 North Franklin Street, 4th Floor Chicago, IL 60606	Project: BBJ020607-11 Project Number: Lyons, Illinois Project Manager: Mr. Andy Bajorat	Reported: 15-Feb-07

Volatile Organic Compounds by EPA TO-15 - Quality Control

H&P Mobile Geochemistry

Analyte	Result	Reporting Limit	Units	Spike Level	Source Result	%REC	%REC Limits	RPD	RPD Limit	Notes
Batch EB70706 - TO-15										
Blank (EB70706-BLK1)				Prepared & Analyzed: 07-Feb-07						
Propene	ND	10	ug/m³ Air							
Dichlorodifluoromethane	ND	10	"							
Chloromethane	ND	5.0	"							
Dichlorotetrafluoroethane	ND	10	"							
Vinyl chloride	ND	5.0	"							
Bromomethane	ND	5.0	"							
Chloroethane	ND	5.0	"							
Bromoethene	ND	5.0	"							
Trichlorofluoromethane	ND	5.0	"							
Acetone	ND	20	"							
1,1-Dichloroethene	ND	5.0	"							
1,1,2-Trichlorotrifluoroethane	ND	10	"							
Allyl chloride	ND	5.0	"							
Methylene chloride	ND	5.0	"							
Carbon disulfide	ND	5.0	"							
trans-1,2-Dichloroethene	ND	5.0	"							
Methyl tert-butyl ether	ND	5.0	"							
Vinyl acetate	ND	5.0	"							
1,1-Dichloroethane	ND	5.0	"							
2-Butanone	ND	5.0	"							
n-Hexane	ND	5.0	"							
cis-1,2-Dichloroethene	ND	5.0	"							
Ethyl acetate	ND	5.0	"							
Chloroform	ND	5.0	"							
Tetrahydrofuran	ND	5.0	"							
1,1,1-Trichloroethane	ND	5.0	"							
1,2-Dichloroethane	ND	5.0	"							
Benzene	ND	5.0	"							
Carbon tetrachloride	ND	5.0	"							
Cyclohexane	ND	5.0	"							
2,2,4-Trimethylpentane	ND	5.0	"							
n-Heptane	ND	5.0	"							
Trichloroethene	ND	5.0	"							
1,2-Dichloropropane	ND	5.0	"							

MOBILE GEOCHEMISTRY
H&P

Bradburn, Briller & Johnson, LLC 152 North Franklin Street, 4th Floor Chicago, IL 60606	Project BBJ020507-11 Project Number Lyons, Illinois Project Manager Mr. Andy Bayont	Reported 15-Feb-07

Volatile Organic Compounds by EPA TO-15 - Quality Control

H&P Mobile Geochemistry

Analyte	Result	Reporting Limit	Units	Spike Level	Source Result	%REC	%REC Limits	RPD	RPD Limit	Notes
Batch EB70706 - TO-15										
Blank (EB70706-BLK1)				Prepared & Analyzed: 07-Feb-07						
1,4-Dioxane	ND	5.0	ug/m³ Air							
Bromodichloromethane	ND	5.5	"							
cis-1,3-Dichloropropene	ND	5.0	"							
4-Methyl-2-pentanone	ND	5.0	"							
trans-1,3-Dichloropropene	ND	5.0	"							
Toluene	ND	5.0	"							
1,1,2-Trichloroethane	ND	5.0	"							
2-Hexanone	ND	5.0	"							
Dibromochloromethane	ND	5.0	"							
Tetrachloroethene	ND	5.0	"							
1,2-Dibromoethane (EDB)	ND	5.0	"							
Chlorobenzene	ND	5.0	"							
Ethylbenzene	ND	5.0	"							
m,p-Xylene	ND	5.0	"							
Styrene	ND	5.0	"							
o-Xylene	ND	5.0	"							
Bromoform	ND	20	"							
1,1,2,2-Tetrachloroethane	ND	5.0	"							
4-Ethyltoluene	ND	5.0	"							
1,3,5-Trimethylbenzene	ND	5.0	"							
1,2,4-Trimethylbenzene	ND	5.0	"							
1,3-Dichlorobenzene	ND	10	"							
Benzyl chloride	ND	5.0	"							
1,4-Dichlorobenzene	ND	10	"							
1,2-Dichlorobenzene	ND	10	"							
1,2,4-Trichlorobenzene	ND	10	"							
Hexachlorobutadiene	ND	10	"							
Surrogate: 1,2-Dichloroethane-d4	*104*		"	*103*		*101*	*80-120*			
Surrogate: Toluene-d8	*95.1*		"	*96.2*		*98.9*	*80-120*			
Surrogate: 4-Bromofluorobenzene	*174*		"	*182*		*95.6*	*80-120*			

MOBILE GEOCHEMISTRY
H&P

Bradburn, Briller & Johnson, LLC 162 North Franklin Street, 4th Floor Chicago, IL 60606	Project: BBJ020507-11 Project Number: Lyons, Illinois Project Manager: Mr. Andy Bajorat	Reported: 15-Feb-07

Volatile Organic Compounds by EPA TO-15 - Quality Control

H&P Mobile Geochemistry

Analyte	Result	Reporting Limit	Units	Spike Level	Source Result	%REC	%REC Limits	RPD	RPD Limit	Notes
Batch EB70706 - TO-15										
LCS (EB70706-BS1)				Prepared & Analyzed: 07-Feb-07						
Propane	35.4	10	ug/m³ Air	35.0		101	65-135			
Dichlorodifluoromethane	90.6	10	"	101		89.7	65-135			
Chloromethane	42.2	5.0	"	42.0		100	65-135			
Dichlorotetrafluoroethane	140	10	"	142		98.6	65-135			
Vinyl chloride	50.4	5.0	"	52.0		96.9	65-135			
Bromomethane	75.4	5.0	"	79.2		95.2	65-135			
Chloroethane	48.3	5.0	"	53.6		90.1	65-135			
Bromoethene	80.2	5.0	"	89.2		89.9	65-135			
Trichlorofluoromethane	105	5.0	"	113		92.9	65-135			
Acetone	47.5	20	"	48.4		98.1	65-135			
1,1-Dichloroethene	83.3	5.0	"	80.8		103	65-135			
1,1,2-Trichlorotrifluoroethane	160	10	"	155		103	65-135			
Allyl chloride	64.9	5.0	"	64.0		101	65-135			
Methylene chloride	74.9	5.0	"	70.8		106	65-135			
Carbon disulfide	65.1	5.0	"	63.2		103	65-135			
trans-1,2-Dichloroethene	84.2	5.0	"	80.8		104	65-135			
Methyl tert-butyl ether	80.0	5.0	"	73.6		109	65-135			
Vinyl acetate	89.2	5.0	"	72.0		124	65-135			
1,1-Dichloroethane	86.6	5.0	"	82.4		105	65-135			
2-Butanone	68.2	5.0	"	60.0		114	65-135			
n-Hexane	76.4	5.0	"	73.0		106	65-135			
cis-1,2-Dichloroethene	84.7	5.0	"	80.0		106	65-135			
Ethyl acetate	76.2	5.0	"	73.6		104	65-135			
Chloroform	102	5.0	"	99.2		103	65-135			
Tetrahydrofuran	63.7	5.0	"	60.0		106	65-135			
1,1,1-Trichloroethane	114	5.0	"	111		103	65-135			
1,2-Dichloroethane	86.6	5.0	"	82.4		105	65-135			
Benzene	69.5	5.0	"	64.8		107	65-135			
Carbon tetrachloride	131	5.0	"	128		102	65-135			
Cyclohexane	72.1	5.0	"	70.4		102	65-135			
2,2,4-Trimethylpentane	100	5.0	"	95.2		105	65-135			
n-Heptane	67.1	5.0	"	63.6		104	65-135			
Trichloroethene	113	5.0	"	110		103	65-135			
1,2-Dichloropropane	96.6	5.0	"	94.4		102	65-135			

MOBILE GEOCHEMISTRY
H&P

Bradburn, Briller & Johnson, LLC 162 North Franklin Street, 4th Floor Chicago, IL 60606	Project BBJ020507-11 Project Number Lyons, Illinois Project Manager Mr. Andy Bayont	Reported 15-Feb-07

Volatile Organic Compounds by EPA TO-15 - Quality Control

H&P Mobile Geochemistry

Analyte	Result	Reporting Limit	Units	Spike Level	Source Result	%REC	%REC Limits	RPD	RPD Limit	Notes
Batch EB70706 - TO-15										
LCS (EB70706-BS1)				Prepared & Analyzed 07-Feb-07						
1,4-Dioxane	76.9	5.0	ug/m³ Air	75.6		104	65-135			
Bromodichloromethane	134	5.5	"	137		97.8	65-135			
cis-1,3-Dichloropropene	89.4	5.0	"	92.4		96.8	65-135			
4-Methyl-2-pentanone	81.3	5.0	"	83.2		97.7	65-135			
trans-1,3-Dichloropropene	72.2	5.0	"	92.4		78.1	65-135			
Toluene	79.3	5.0	"	76.6		103	65-135			
1,1,2-Trichloroethane	112	5.0	"	111		101	65-135			
2-Hexanone	83.5	5.0	"	83.2		100	65-135			
Dibromochloromethane	169	5.0	"	174		97.1	65-135			
Tetrachloroethene	144	5.0	"	138		104	65-135			
1,2-Dibromoethane (EDB)	156	5.0	"	157		99.4	65-135			
Chlorobenzene	102	5.0	"	93.6		109	65-135			
Ethylbenzene	95.8	5.0	"	88.4		108	65-135			
m,p-Xylene	93.2	5.0	"	88.4		105	65-135			
Styrene	78.9	5.0	"	86.8		90.9	65-135			
o-Xylene	94.0	5.0	"	88.4		106	65-135			
Bromoform	903	20	"	840		108	65-135			
1,1,2,2-Tetrachloroethane	145	5.0	"	140		104	65-135			
4-Ethyltoluene	105	5.0	"	100		105	65-135			
1,3,5-Trimethylbenzene	93.3	5.0	"	100		93.3	65-135			
1,2,4-Trimethylbenzene	99.5	5.0	"	100		99.5	65-135			
1,3-Dichlorobenzene	123	10	"	122		101	65-135			
Benzyl chloride	95.5	5.0	"	105		91.9	65-135			
1,4-Dichlorobenzene	127	10	"	122		104	65-135			
1,2-Dichlorobenzene	122	10	"	122		100	65-135			
1,2,4-Trichlorobenzene	147	10	"	151		97.4	65-135			
Hexachlorobutadiene	233	10	"	218		107	65-135			
Surrogate: 1,2-Dichloroethane-d4	*105*		"	*103*		*100*	*80-120*			
Surrogate: Toluene-d8	*93.1*		"	*96.2*		*96.8*	*80-120*			
Surrogate: 4-Bromofluorobenzene	*181*		"	*182*		*99.5*	*80-120*			

MOBILE GEOCHEMISTRY
H&P

Bradburn, Briller & Johnson, LLC 162 North Franklin Street, 4th Floor Chicago, IL 60606	Project: BBJ020507-11 Project Number: Lyons, Illinois Project Manager: Mr. Andy Bajorat	Reported: 15-Feb-07

Volatile Organic Compounds by EPA TO-15 - Quality Control

H&P Mobile Geochemistry

Analyte	Result	Reporting Limit	Units	Spike Level	Source Result	%REC	%REC Limits	RPD	RPD Limit	Notes
Batch EB71305 - TO-15										
Blank (EB71305-BLK1)				Prepared & Analyzed: 12-Feb-07						
Propane	ND	10	ug/m³ Air							
Dichlorodifluoromethane	ND	10	"							
Chloromethane	ND	5.0	"							
Dichlorotetrafluoroethane	ND	10	"							
Vinyl chloride	ND	5.0	"							
Bromomethane	ND	5.0	"							
Chloroethane	ND	5.0	"							
Bromoethane	ND	5.0	"							
Trichlorofluoromethane	ND	5.0	"							
Acetone	ND	20	"							
1,1-Dichloroethene	ND	5.0	"							
1,1,2-Trichlorotrifluoroethane	ND	10	"							
Allyl chloride	ND	5.0	"							
Methylene chloride	ND	5.0	"							
Carbon disulfide	ND	5.0	"							
trans-1,2-Dichloroethene	ND	5.0	"							
Methyl tert-butyl ether	ND	5.0	"							
Vinyl acetate	ND	5.0	"							
1,1-Dichloroethane	ND	5.0	"							
2-Butanone	ND	5.0	"							
n-Hexane	ND	5.0	"							
cis-1,2-Dichloroethene	ND	5.0	"							
Ethyl acetate	ND	5.0	"							
Chloroform	ND	5.0	"							
Tetrahydrofuran	ND	5.0	"							
1,1,1-Trichloroethane	ND	5.0	"							
1,2-Dichloroethane	ND	5.0	"							
Benzene	ND	5.0	"							
Carbon tetrachloride	ND	5.0	"							
Cyclohexane	ND	5.0	"							
2,2,4-Trimethylpentane	ND	5.0	"							
n-Heptane	ND	5.0	"							
Trichloroethene	ND	5.0	"							
1,2-Dichloropropane	ND	5.0	"							

MOBILE GEOCHEMISTRY
H&P

Bradburn, Briller & Johnson, LLC 162 North Franklin Street, 4th Floor Chicago, IL 60606	Project BBJ020507-11 Project Number Lyons, Illinois Project Manager Mr Andy Bajorat	Reported 15-Feb-07

Volatile Organic Compounds by EPA TO-15 - Quality Control

H&P Mobile Geochemistry

Analyte	Result	Reporting Limit	Units	Spike Level	Source Result	%REC	%REC Limits	RPD	RPD Limit	Notes
Batch EB71305 - TO-15										
Blank (EB71305-BLK1)				Prepared & Analyzed: 12-Feb-07						
1,4-Dioxane	ND	5.0	ug/m³ Air							
Bromodichloromethane	ND	5.5	"							
cis-1,3-Dichloropropene	ND	5.0	"							
4-Methyl-2-pentanone	ND	5.0	"							
trans-1,3-Dichloropropene	ND	5.0	"							
Toluene	ND	5.0	"							
1,1,2-Trichloroethane	ND	5.0	"							
2-Hexanone	ND	5.0	"							
Dibromochloromethane	ND	5.0	"							
Tetrachloroethene	ND	5.0	"							
1,2-Dibromoethane (EDB)	ND	5.0	"							
Chlorobenzene	ND	5.0	"							
Ethylbenzene	ND	5.0	"							
m,p-Xylene	ND	5.0	"							
Styrene	ND	5.0	"							
o-Xylene	ND	5.0	"							
Bromoform	ND	20	"							
1,1,2,2-Tetrachloroethane	ND	5.0	"							
4-Ethyltoluene	ND	5.0	"							
1,3,5-Trimethylbenzene	ND	5.0	"							
1,2,4-Trimethylbenzene	ND	5.0	"							
1,3-Dichlorobenzene	ND	10	"							
Benzyl chloride	ND	5.0	"							
1,4-Dichlorobenzene	ND	10	"							
1,2-Dichlorobenzene	ND	10	"							
1,2,4-Trichlorobenzene	ND	10	"							
Hexachlorobutadiene	ND	10	"							
Surrogate: 1,2-Dichloroethane-d4	*97.8*		"	*105*		*93.0*	*80-120*			
Surrogate: Toluene-d8	*93.4*		"	*96.2*		*97.1*	*80-120*			
Surrogate: 4-Bromofluorobenzene	*158*		"	*182*		*86.8*	*80-120*			

MOBILE GEOCHEMISTRY
H&P

Bradburn, Briller & Johnson, LLC 162 North Franklin Street, 4th Floor Chicago, IL 60606	Project: BBJ020507-11 Project Number: Lyons, Illinois Project Manager: Mr. Andy Bajorat	Reported: 15-Feb-07

Volatile Organic Compounds by EPA TO-15 - Quality Control

H&P Mobile Geochemistry

Analyte	Result	Reporting Limit	Units	Spike Level	Source Result	%REC	%REC Limits	RPD	RPD Limit	Notes
Batch EB71305 - TO-15										
LCS (EB71305-BS1)				Prepared & Analyzed: 12-Feb-07						
Propene	32.5	10	ug/m³ Air	35.0		92.9	65-135			
Dichlorodifluoromethane	107	10	"	101		106	65-135			
Chloromethane	44.5	5.0	"	42.0		106	65-135			
Dichlorotetrafluoroethane	157	10	"	142		111	65-135			
Vinyl chloride	52.4	5.0	"	52.0		101	65-135			
Bromomethane	94.8	5.0	"	79.2		120	65-135			
Chloroethane	62.4	5.0	"	53.6		116	65-135			
Bromoethene	95.1	5.0	"	89.2		107	65-135			
Trichlorofluoromethane	115	5.0	"	113		102	65-135			
Acetone	59.4	20	"	48.4		123	65-135			
1,1-Dichloroethene	78.7	5.0	"	80.8		97.4	65-135			
1,1,2-Trichlorotrifluoroethane	165	10	"	155		106	65-135			
Allyl chloride	64.2	5.0	"	64.0		100	65-135			
Methylene chloride	74.0	5.0	"	70.8		103	65-135			
Carbon disulfide	65.5	5.0	"	63.2		104	65-135			
trans-1,2-Dichloroethene	78.0	5.0	"	80.8		96.5	65-135			
Methyl tert-butyl ether	70.2	5.0	"	73.6		95.4	65-135			
Vinyl acetate	63.8	5.0	"	72.0		88.6	65-135			
1,1-Dichloroethane	83.6	5.0	"	82.4		101	65-135			
2-Butanone	58.6	5.0	"	60.0		97.7	65-135			
n-Hexane	72.7	5.0	"	72.0		101	65-135			
cis-1,2-Dichloroethene	81.0	5.0	"	80.0		101	65-135			
Ethyl acetate	69.2	5.0	"	73.6		94.0	65-135			
Chloroform	103	5.0	"	99.2		104	65-135			
Tetrahydrofuran	58.2	5.0	"	60.0		97.0	65-135			
1,1,1-Trichloroethane	111	5.0	"	111		100	65-135			
1,2-Dichloroethane	83.2	5.0	"	82.4		101	65-135			
Benzene	66.1	5.0	"	64.8		102	65-135			
Carbon tetrachloride	133	5.0	"	128		104	65-135			
Cyclohexane	69.6	5.0	"	70.4		98.9	65-135			
2,2,4-Trimethylpentane	117	5.0	"	95.2		123	65-135			
n-Heptane	91.6	5.0	"	83.6		110	65-135			
Trichloroethene	122	5.0	"	110		111	65-135			
1,2-Dichloropropane	98.9	5.0	"	94.4		105	65-135			

MOBILE GEOCHEMISTRY
H&P

Bradburn, Briller & Johnson, LLC 162 North Franklin Street, 4th Floor Chicago, IL 60606	Project BBJ020507-11 Project Number Lyons, Illinois Project Manager Mr Andy Bagorat	Reported 15-Feb-07

Volatile Organic Compounds by EPA TO-15 - Quality Control

H&P Mobile Geochemistry

Analyte	Result	Reporting Limit	Units	Spike Level	Source Result	%REC	%REC Limits	RPD	RPD Limit	Notes
Batch EB71305 - TO-15										
LCS (EB71305-BS1)				Prepared & Analyzed 12-Feb-07						
1,4-Dioxane	73.5	5.0	ug/m³ Air	73.6		99.9	65-135			
Bromodichloromethane	147	5.5	"	137		107	65-135			
cis-1,3-Dichloropropene	90.4	5.0	"	92.4		97.8	65-135			
4-Methyl-2-pentanone	78.3	5.0	"	83.2		94.1	65-135			
trans-1,3-Dichloropropene	74.3	5.0	"	92.4		80.4	65-135			
Toluene	83.8	5.0	"	76.8		109	65-135			
1,1,2-Trichloroethane	122	5.0	"	111		110	65-135			
2-Hexanone	73.9	5.0	"	83.2		88.8	65-135			
Dibromochloromethane	188	5.0	"	174		108	65-135			
Tetrachloroethene	148	5.0	"	138		107	65-135			
1,2-Dibromoethane (EDB)	189	5.0	"	157		108	65-135			
Chlorobenzene	102	5.0	"	93.6		109	65-135			
Ethylbenzene	94.5	5.0	"	88.4		107	65-135			
m,p-Xylene	93.4	5.0	"	88.4		106	65-135			
Styrene	78.3	5.0	"	86.8		90.2	65-135			
o-Xylene	93.9	5.0	"	88.4		106	65-135			
Bromoform	986	20	"	840		117	65-135			
1,1,2,2-Tetrachloroethane	152	5.0	"	140		109	65-135			
4-Ethyltoluene	102	5.0	"	100		102	65-135			
1,3,5-Trimethylbenzene	93.4	5.0	"	100		93.4	65-135			
1,2,4-Trimethylbenzene	97.2	5.0	"	100		97.2	65-135			
1,3-Dichlorobenzene	126	10	"	123		103	65-135			
Benzyl chloride	82.0	5.0	"	105		78.1	65-135			
1,4-Dichlorobenzene	130	10	"	122		107	65-135			
1,2-Dichlorobenzene	127	10	"	122		104	65-135			
1,2,4-Trichlorobenzene	127	10	"	151		84.1	65-135			
Hexachlorobutadiene	174	10	"	218		79.8	65-135			
Surrogate: 1,2-Dichloroethane-d4	*98.5*		"	*103*		*95.6*	*80-120*			
Surrogate: Toluene-d8	*94.7*		"	*96.2*		*98.4*	*80-120*			
Surrogate: 4-Bromofluorobenzene	*176*		"	*182*		*96.7*	*80-120*			

MOBILE GEOCHEMISTRY
H&P

Bradburn, Briller & Johnson, LLC 162 North Franklin Street, 4th Floor Chicago, IL 60606	Project: BBJ020507-11 Project Number: Lyons, Illinois Project Manager: Mr. Andy Bajorat	Reported: 15-Feb-07

Notes and Definitions

E	The concentration indicated for this analyte is an estimated value above the calibration range of the instrument. This value is considered an estimate (CLP E-flag).
DET	Analyte DETECTED
ND	Analyte NOT DETECTED at or above the reporting limit
NR	Not Reported
dry	Sample results reported on a dry weight basis
RPD	Relative Percent Difference

printed 09/18/2007 4:52PM by epa4561 p. 83/439

MOBILE GEOCHEMISTRY

H&P

Chain of Custody Record

☒ 2470 Impala Dr., Carlsbad, CA 92010 · ph 760.804.9678 · fax 760.804.9159
☐ 3825 Industry Avenue, Lakewood, CA 90712 · ph 562.426.6991 · fax 562.426.6995

Date: 2/2/07
H&P Project #: BBJ020507-11
Outside Lab:

Client: BB+J
Address: 162 N. Franklin Fourth Floor
Chicago, IL 60606
Email: abayerat@bbyayap.com Phone: 312-726-8556

Collector: Kevin McCartney + Michele Hargreaves
Page: 1 of 2
Client Project #:
Project Contact: Andy Bayerat
Location: Lyons, IL
Fax: 312-726-8514
Turn around time:

EDF: Yes ☐ No ☐
Global ID:

Sample Receipt
Intact: ☒ Yes ☐ No
Seal Intact: ☐ Yes ☐ No ☒ N/A
Cold: ☐ Yes ☒ No
N/A (Received on Site)

Special Instructions:
- Do NOT test for 1,3-Butadiene for any/all samples
- SB-12 through SB-15, Please hold until further notice

Sample Name	Field Point Name	Purge Vol	Time	Date	Sample Type	Container Type	TPH ☐ gasoline ☐ diesel ☐ ext	418.1 TRPH	8021 for BTEX/MTBE	8260B: BTEX / Oxygenates	8260B: TPH gas	8260B: VOC's	8260B: DTSC/LARWQCB	8260B: Ketones	TO-15: Full List	TO-15: BTEX/MTBE	LCC (specify)	Naphthalene ☐ 8260B ☐ TO-15	Methane	Fixed Gases ☐ CO2 ☐ O2 ☐ N2	Methane			Total # of containers
SB-14			8:55	2/1	SG	400mL									X						X			
SB-15			9:25	2/1	SG	400mL									X						X			
SB-12			10:30	2/1	SG	400mL									X						X			
SB-13			10:45	2/1	SG	400mL									X						X			
SB-5			3:30	2/1	SG	400mL									X						X			
SB-6			4:00	2/1	SG	400mL									X						X			
SB-7	mislabelled as SB-8		4:15	2/1	SG	400mL									X						X			
SB-8	[illegible] 2/5/07		4:30	2/1	SG	400mL									X						X			
SB-9			4:50	2/1	SG	400mL									X						X			
SB-10			5:20	2/1	SG	400mL									X						X			

Relinquished by: (Signature)	(company)	Received by: (Signature)	(company)	Date	Time
[signature] (2/2/07)	BB+J	[signature] on FedEx	H&P	2/5/07	9:00
Relinquished by: (Signature)	(company)	Received by: (Signature)	(company)	Date	Time
Relinquished by: (Signature)	(company)	Received by: (Signature)	(company)	Date	Time

*Signature constitutes authorization to proceed with analysis and acceptance of condition on back.

Sample disposal instruction: ☐ Disposal @ $2.00 each ☐ Return to client ☐ Pickup

printed 09/18/2007 4:52PM by epa4561 p. 84/439

MOBILE GEOCHEMISTRY

H&P

Chain of Custody Record

☒ 2470 Impala Dr., Carlsbad, CA 92010 • ph 760.804.9678 • fax 760.804.9159
☐ 3825 Industry Avenue, Lakewood, CA 90712 • ph 562.426.6991 • fax 562.426.6995

Date: 2/2/07
H&P Project # BBJ020507-11
Outside Lab:

Client: BB+J
Address: 162 N Franklin, Fourth Floor
Chicago, IL 60606
Email: abayard@bbygroup.com Phone: 312-726-8556

Collector: Kevin McCartney + Michele Hargreaves Page: 2 of 2
Client Project #
Project Contact: Andy Bayard
Location: Lyons, Illinois
Fax: 312-726-8564
Turn around time:

EDF: Yes ☐ No ☐
Global ID:

Sample Receipt
Intact: ☐ Yes ☐ No
Seal Intact: ☐ Yes ☐ No ☐ N/A
Cold: ☐ Yes ☐ No
N/A (Received on Site)

Special Instructions:
- Do NOT test for 1,3-Butadiene for any/all samples
- Please hold SB12 through SB-15 until further notice

Sample Name	Field Point Name	Purge Vol	Time	Date	Sample Type	Container Type	TPH ☐ gasoline ☐ diesel ☐ ext	418.1 TRPH	8021 for BTEX/MTBE	8260B: BTEX / Oxygenates	8260B: TPH gas	8260B: VOC's	8260B: DTSC/LARWQCB	8260B: Ketones	TO-15: Full List	TO-15: BTEX/MTBE	LCC (specify)	Naphthalene ☐ 8260B ☐ TO-15	Methane	Fixed Gases ☐ CO2 ☐ O2 ☐ N2	Methane			Total # of containers
SB-1			12:00	2/2	SG	400 mL									X						X			
SB-2			12:15	2/2	SG	400 mL									X						X			
SB-3			12:30	2/2	SG	400 mL									X						X			
SB-4			12:50	2/2	SG	400 mL									X						X			
SB-11			1:10	2/2	SG	400 mL									X						X			

Relinquished by: (Signature)	(company)	Received by: (Signature)	(company)	Date:	Time:
Michele L Hargreaves (2/2/07)	BB+J	[signature] via FedEx	H&P	2/5/07	9:00
Relinquished by: (Signature)	(company)	Received by: (Signature)	(company)	Date:	Time:
Relinquished by: (Signature)	(company)	Received by: (Signature)	(company)	Date:	Time:

*Signature constitutes authorization to proceed with analysis and acceptance of condition on back.

Sample disposal instruction: ☐ Disposal @ $2.00 each ☐ Return to client ☐ Pickup

printed 09/18/2007 4:52PM by epa4561 p. 85/439

0311715101
07-34660 Quarry Reclamation District TIF #4 SR/tech
ORIGINAL
243

REPORT OF PHASE II ENVIRONMENTAL SITE ASSESSMENT AND LIMITED SURFACE FLUX ASSESSMENT

Village of Lyons
c/o Robert K. Bush, Esq.
Ancel Glink Diamond Bush Dicianni & Krafthefer, P.C.
140 South Dearborn Street
Chicago Illinois 60603

RECEIVED
AUG 03 2007
IEPA/BOL

Submitted to:

Village of Lyons
c/o Robert K. Bush, Esq.
Ancel Glink Diamond Bush Dicianni & Krafthefer, P.C.
Chicago, Illinois

Prepared by:

BRADBURNE, BRILLER & JOHNSON, LLC
Chicago, Illinois

ORIGINAL

June 13, 2007

RELEASABLE
AUG 07 2007
REVIEWER MD

B&J

printed 09/18/2007 4:52PM by epa4561 p. 86/439

Privileged and Confidential
Attorney Client Work Product

June 13, 2007

Village of Lyons c/o Robert K. Bush, Esq.
Ancel Glink Diamond Bush Dicianni & Krafthefer, P.C.
140 South Dearborn Street
Chicago Illinois 60603

Subject: **Report of Phase II Environmental Site Assessment**
Lyons Landfill: Future Use Evaluation
Southwest Corner of Ogden and Lawndale Avenues
Lyons, Illinois
BB&J Project No. 0253901

Dear Mr. Bush:

Bradburne, Briller & Johnson, LLC (BB&J) is pleased to submit to the Village of Lyons this *Report of Phase II Environmental Site Assessment* for the parcel of land located at the southwest corner of Ogden and Lawndale Avenues in Lyons, Cook County, Illinois (Subject Property). This project was performed in accordance with the scope of work outlined in BB&J Proposal No. PN7-0117.

We appreciate the opportunity to provide you with our environmental consulting services. If you have any questions or require additional information, please call.

Sincerely,

BRADBURNE, BRILLER & JOHNSON, LLC

Karen Beaman

Karen Beaman
Staff Scientist

Andy Bajorat, CHMM
Senior Scientist

J. Tim Bradburne, P.G.
Principal

RECEIVED
AUG 03 2007
IEPA/BOL

RELEASABLE
AUG 07 2007
REVIEWER MD

515 N. State Street, Suite 2200, Chicago, Illinois
Voice 312.644.8556 Fax 312.644.8555
www.bbjgroup.com

printed 09/18/2007 4:52PM by epa4561 p. 87/439

TABLE OF CONTENTS

1.0 BACKGROUND 1

2.0 OBJECTIVE 1

3.0 SUBSURFACE ASSESSMENT 1
- 3.1 Pre-Mobilization Activities 1
- 3.2 Subsurface Soil Investigation 2
- 3.3 Soil Gas Survey 3
- 3.4 Flux Chamber Survey 4

4.0 FINDINGS AND ANALYTICAL RESULTS 5
- 4.1 Subsurface Geology and Hydrogeology 5
- 4.2 Field Screening Results 5
- 4.3 Laboratory Analytical Results 6
  - 4.3.1 Soil Results 6
  - 4.3.2 Soil Gas Results 8
  - 4.3.3 Flux Chamber Results 8
  - 4.3.4 QA/QC 9

5.0 CONCLUSIONS AND RECOMMENDATIONS 9
- 5.1 Subsurface Soil Investigation 9
- 5.2 Soil Vapor Intrusion Modeling 10
  - 5.2.1 Johnson and Ettinger Calculations 10
  - 5.2.2 Proposed Building on South Portion of Subject Property 11
  - 5.2.3 Soil Gas Conclusions 12
  - 5.2.4 Soil Gas Recommendations 13
- 5.3 Soil Flux Survey 14

TABLES

Table 1: Summary of Soil Laboratory Analytical Results
Table 2: Summary of Soil Gas Laboratory Analytical Results
Table 3: Summary of Flux Chamber Laboratory Analytical Results

RELEASABLE
AUG 07 2007
REVIEWER MD

printed 09/18/2007 4:52PM by epa4561 p. 88/439

TABLE OF CONTENTS (continued)

FIGURES

Figure 1: Site Location Map
Figure 2: Site Plan Showing Sample Locations

APPENDICES

Appendix A: Field Procedures
Appendix B: Soil Boring Logs
Appendix C: Laboratory Analytical Reports

printed 09/18/2007 4:52PM by epa4561 p. 897439

1.0 BACKGROUND

BB&J performed an Additional Limited Phase II Environmental Site Assessment (Phase II ESA) for the landfill property located on the southwest corner of Ogden and Lawndale Avenues in Lyons, Illinois (Subject Property). During a previous soil gas investigation, BB&J identified locations where elevated concentrations of methane and various volatile organic compounds (VOCs) were identified, including (but not limited to) vinyl chloride, trichloroethylene, and gasoline-related constituents. As a result of those findings, additional samples were collected to evaluate possible future uses of the property and to assist in developing recommendations to allow for the redevelopment and future use of this area.

2.0 OBJECTIVE

The objective of this project was to help evaluate management and construction considerations to address environmental conditions related to the redevelopment of the Subject Property for future use.

3.0 SUBSURFACE ASSESSMENT

The scope of work for this project included the collection of soil matrix, soil vapor, and soil flux. The soil matrix data was used to evaluate ingestion and inhalation exposure pathways as provided for in Illinois Environmental Protection Agency's (IEPA) Tiered Approach to Corrective Action (TACO) under an outdoor recreational use (residential) scenario. Soil gas was collected to help establish generalized subsurface conditions beneath the Subject Property and to evaluate possible vapor intrusion concerns under a commercial use scenario. Soil flux sampling was conducted to help evaluate concentrations of constituents of concern (COCs) and associated risks under an outdoor recreational use (residential) scenario. The following sections present a summary of the three facets of the investigation conducted for the Subject Property.

3.1 Pre-Mobilization Activities

Prior to initiating field activities, BB&J prepared a Health and Safety Plan (HSP) for use by BB&J's on-site representative to address suspected site-specific COCs, potential site and work-related hazards, and additional health and safety issues. In addition, and on behalf of BB&J, Terra Trace Environmental Services (Terra Trace) contacted the approved Illinois utility locating companies to clear the underground utilities on May 7, 2007 (over 72 hours prior to field work).

printed 09/18/2007 4:52PM by epa4561 p. 90/439

3.2 Subsurface Soil Investigation

On May 11, 2007, BB&J provided oversight for the advancement of three soil probes utilizing direct-push technology (i.e., Geoprobe) by Terra Trace. See Figure 2 for a site plan showing the soil probe locations. The three soil probes (GP-1, GP-2, and GP-3) were advanced on the southern property boundary of the Subject Property.

Soil samples were collected continuously until the termination depth of each soil probe at 12 feet below ground surface (bgs).. BB&J collected the soil samples, performed visual classification of soil type(s), field screened the samples using a photoionization detector (PID), and submitted select soil samples for laboratory chemical analyses.

Based on field screening results, one worst case[1] soil sample was submitted from each soil probe to First Environmental Laboratories, Inc. of Naperville, Illinois (First Environmental) for chemical analyses. The following samples were submitted:

- GP-1 from 0-2 feet bgs;
- GP-2 from 4-6 feet bgs; and,
- GP-3 from 4-6 feet bgs.

The soil samples collected from GP-1, GP-2, and GP-3 were analyzed for the following:

- VOC by United States Environmental Protection Agency (USEPA) Method 8260B;
- Semivolatile organic compounds (SVOC) by USEPA Method 8270C;
- Polychlorinated biphenyls (PCBs) by USEPA Method 8082;
- Resource Conservation and Recovery Act (RCRA) metals by USEPA Methods 6010B and 7470A/7471A;
- Herbicides by USEPA Method 8151;
- Organochlorine pesticides by USEPA Method 8081A; and,
- pH by USEPA Method 9040B/9045C..

[1] A "worst case" soil sample was submitted based on: 1) the soil sample that exhibited the highest PID screening results; and/or, 2) appeared to exhibit the most prominent staining; and/or, 3) exhibited the strongest potential chemical odor (or, in the absence of an apparent chemical odor, the strongest anomalous odor, as noted).

printed 09/18/2007 4:52PM by epa4561 p. 91/439

During the May 11, 2007 Subsurface Soil Investigation, no ground-water was encountered; therefore, no ground-water samples could be collected from any of the soil probe locations.

An equipment rinsate sample also was collected and analyzed for VOCs, SVOCs, PCBs, RCRA metals, Herbicides, organochlorine pesticides, and pH. The laboratory supplied the trip blank sample for quality assurance/quality control (QA/QC) purposes. The trip blank sample was analyzed for VOCs.

Details of the aforementioned subsurface assessment activities are presented within the Field Procedures (Appendix A).

3.3 Soil Gas Survey

On May 11, 2007, BB&J installed three soil gas probes, SG-16, SG-17, and SG-18[2], in GP-1, GP-2, and GP-3, respectively. The three soil gas probes were located on the southern portion of the Subject Property.

The installation, equilibration time, and sampling procedures utilized by BB&J for the Soil Gas Survey were pursuant to the guidelines identified in the *Advisory – Active Soil Vapor Investigation* Section 2.2.5 A 1 and 2, created by the California Environmental Protection Agency (EPA) Department of Toxic Substances Control (DTSC) and the California Regional Water Quality Control Board – Los Angeles Region (LARWQCB), dated January 28, 2003[3].

Each soil probe used in the Soil Investigation (GP-1, GP-2, and GP-3) was backfilled with bentonite from the termination depth of 12 feet bgs to approximately six feet bgs. A soil gas probe tip and associated tubing was then inserted into the probe hole. Approximately one foot of sand was poured into the soil probe hole on top of the probe tip to a depth of five feet bgs to minimize the disruption of airflow to the probe tip. At least one foot of dry granular bentonite was poured on top of each sand pack to preclude the infiltration of hydrated bentonite grout. The probe was then filled to the surface with hydrated bentonite with the end of the soil gas probe tubing protruding from the subsurface. BB&J allowed for at least 30 minutes for the subsurface conditions to equilibrate before conducting purging and sampling activities.

---

[2] The soil gas probes were identified as SG-16, SG-17, and SG-18 to continue the numbering of soil gas samples collected during previous soil gas investigations at the Subject Property. 15 soil gas samples had previously been collected.

[3] This document was prepared by the California EPA DTSC and LARWQCB to "ensure that consistent methodologies were applied during active soil gas investigations to produce high quality data for regulatory decision-making." As there are no existing regulations for soil gas investigations in Illinois, this document was used as the California EPA DTSC and LARWQCB are two regulatory agencies at the forefront of soil gas investigations in the United States.

printed 09/18/2007 4:52PM by epa4561 p. 92/439

The soil gas samples were collected using 400-milliliter (mL) Summa canisters, which were filled via 1/4-inch diameter poly tubing attached to the soil gas probe. This tubing was connected to a 60-mL plastic syringe with a three-way valve. Approximately 4 mLs per foot, or a total of 40-mL (three times the dead volume), were then purged from the soil gas probe using the syringe. After purging, the syringe was then disconnected. The 400-mL canister was then connected to the tubing using a 1/4-inch swagelok fitting. A leak tracer, consisting of isopropyl alcohol, was then sprayed on paper towels and the towels were placed around the sampling assembly (i.e., the poly tubing and swagelok connection). The valve was then opened on the 400-mL canister and the reading on the vacuum gauge was then recorded. If the gauge read at least -25 inches of mercury, the canister was allowed to fill. When the gauge read zero inches of mercury, the canister was disconnected. The 400-mL canister was labeled with a ball point pen, wrapped in bubble wrap, and returned to the box in which it was shipped. BB&J personnel shipped the 400-mL Summa canister samples to H&P Laboratory for analysis of VOCs by USEPA Method TO-15 and methane by USEPA Method 8015.

3.4 Flux Chamber Survey

Beginning on May 21, 2007, BB&J conducted a Flux Chamber Survey to assess ground surface emission rates (or "flux") of VOCs from the subsurface (soil) beneath the Subject Property and provide data a preliminary risk evaluation based on the proposed outdoor recreational use of the Subject Property. A total of 13 soil flux chambers were utilized to collect soil gas throughout the surface of the Subject Property and in the recreational area on the east adjoining property. BB&J placed six flux chambers (SF-5, SF-6, SF-10, SF-11, SF-12, and SF-13) on the ground surface during the afternoon of May 21, 2007 and packed soil around the flux chamber edges to create an air-tight environment inside the flux chambers. BB&J returned the morning of May 22, 2007 to collect the accumulated gas samples. On May 24, 2007 BB&J placed seven additional soil flux chambers (SF-1, SF-2, SF-3, SF-4, SF-5, SF-7, and SF-8) on the ground surface using the same method to ensure an air-tight environment. BB&J returned on May 25, 2007 to collect the additional soil flux samples. In addition, soil flux chamber SF-9 was placed on the ground on the afternoon of May 25, 2007 and was collected in the morning of May 26, 2007 using the same sampling methodologies described above. For locations of the soil flux sample locations, refer to Figure 2.

As part of the sampling procedures for the flux chambers, an "initial" soil flux sample of the ambient air within the flux chamber was collected for each soil flux location by connecting the 400-mL Summa canister to the soil flux chamber once the flux chamber was placed on the ground and an air-tight environment had been created. The purpose of the "initial" soil flux samples was to evaluate whether any

printed 09/18/2007 4:52PM by epa4561 p. 93/439

VOCs present at the surface of the ground were collected inside the flux chamber at the time the flux chamber was placed on the ground surface. Any subsequent soil flux samples that contained high concentrations of VOCs would then be compared to the "initial" soil flux sample to determine whether the high concentrations of VOCs were from soil gas collected at the time the flux chamber was placed on the ground surface[4].

The flux chambers were then left overnight to collect gas from the subsurface and equilibrate[5]. The following morning, BB&J returned to the Subject Property to collect the incubated flux chamber samples using 400-mL Summa canisters. The soil flux samples were identified by the sample location and the time they were collected. BB&J personnel shipped the Summa canister samples to H&P Laboratory for analysis of VOCs by USEPA Method TO-15 and methane by USEPA Method 8015.

4.0 FINDINGS AND ANALYTICAL RESULTS

The following sections present the subsurface assessment findings and a summary of the laboratory analytical results.

4.1 Subsurface Geology and Hydrogeology

Based on visual classification of the subsurface soil encountered during the assessment, the primary subsurface soil type consisted of orange, tan, and yellow clayey fill with some sand. Copies of the field soil probe logs are presented in Appendix B. No ground water was encountered during the subsurface soil sampling activities.

4.2 Field Screening Results

Based on the field screening results of soil samples, organic vapor readings ranged from 0.0 parts per million (ppm)[6] to 2.3 ppm. Field screening results are presented on the field probe logs contained in Appendix B.

[4] Soil flux samples SF-3 t=0 and SF-9 t=0 were analyzed as the concentrations in the soil flux sample contained high concentrations of VOCs. Results of these samples can be found in section 5.3.
[5] The soil flux chambers were situated on the ground and exposed to soil vapors for at least 8 hours.
[6] Organic vapor readings are based on a calibration of the mini-RAE PID to 100 ppm isobutylene. All background readings were 0.0 ppm.

printed 09/18/2007 4:52PM by epa4561 p. 94/439

4.3 Laboratory Analytical Results

It is BB&J's understanding that the Subject Property may be redeveloped for commercial purposes or as an outdoor recreational area; therefore, soil laboratory analytical data (Appendix C) was compared to the established criteria in the IEPA TACO residential, industrial/commercial, and construction worker Remediation Objectives (ROs) to evaluate the potential risk posed by detected COCs.

In addition, as it is BB&J's understanding that the Subject Property is being considered for commercial development, BB&J utilized USEPA's on-line Johnson and Ettinger (J&E) (Johnson and Ettinger, 1991) calculator[7] to compare the results of the soil gas survey to potential vapor intrusion pathways into the proposed commercial building on the south portion of the Subject Property. In using the J&E calculator, BB&J utilized commercial exposure factors assuming that portions of the Subject Property may be developed for commercial use[8]. Based on conversations with parties with the Client, BB&J presumes that structures that could be considered "residential" will not be constructed at the Subject Property.

A summary of the soil analytical results collected from the south portion of the Subject Property is found in Table 1. A summary of the soil gas analytical results for samples collected from the south portion of the Subject Property are compared to J&E calculated Estimated Risk-based Soil Vapor Standards for a commercial scenario in Table 2. Additionally, a summary of the analytical results and risk assessment calculations for the soil flux samples collected throughout the Subject Property can be found in Table 3.

4.3.1 Soil Results

BB&J compared the soil laboratory analytical results for VOCs, SVOCs, PCBs, RCRA metals, herbicides, and organochlorine pesticides to the IEPA TACO ROs for residential, industrial/commercial, and construction worker exposure pathways [Tables A and B of 35 IAC Section 742 Appendix B], and the Class I [Table C of 35 IAC Section 742 Appendix B] and Class II [Table D of 35 IAC Section 742 Appendix B] ground-water migration. A summary of the soil laboratory analytical results is presented in Table 1.

[7] http://www.epa.gov/athens/learn2model/part-two/onsite/inc_results_forward.htm
[8] When using the J&E calculator to determine the concentrations of soil vapor entering the proposed commercial development, commercial/industrial land use exposure factors were used in the J&E calculator. The specific commercial/industrial default exposure factors used can be found in the USEPA Office of Emergency and Remedial Response *Risk Assessment Guidance For*

printed 09/18/2007 4:52PM by epa4561 p. 95/439

VOCs, PCBs, Herbicides, and Organochlorine Pesticides

Of the three soil samples analyzed, no VOCs, PCBs, herbicides, or organochlorine pesticides were detected above the laboratory reporting limits (RLs).

SVOCs

Of the three soil samples analyzed for SVOCs, multiple SVOCs were reported to be present in the soil sample collected from GP-1 above laboratory RLs. No SVOCs were identified above laboratory RLs for soil samples collected from GP-2 or GP-3. Sixteen different SVOCs were identified in the sample collected from GP-1; however, of these, only the following five exceeded TACO ROs and/or the Soil Component of the Ground-water Ingestion route for Class I or Class II ground-water[9]:

- benzo(a)anthracene [2.63 milligrams per kilograms (mg/kg)] exceeded the TACO RO for the residential ingestion exposure pathway and the Soil Component of the Ground-water Ingestion route for Class I ground-water;
- benzo(a)pyrene, 2.72 mg/kg, exceeded the TACO RO for the residential and industrial/commercial ingestion exposure pathways;
- benzo(b)fluoranthene, 3.33 mg/kg, exceeded the TACO RO for the residential ingestion exposure pathway;
- Carbazole, 0.84 mg/kg, exceeded the Soil Component of the Ground-water Ingestion route for Class I ground-water; and,
- Ideno(1,2,3-cd)pyrene, 1.38 mg/kg, exceeded the TACO RO for the residential ingestion exposure pathway.

RCRA Metals

Multiple RCRA metals were detected in the soil samples from GP-1, GP-2, and GP-3 above laboratory RLs, including:

- Arsenic;
- Barium;
- Cadmium;

Superfund Volume I: Human Health Evaluation Manual (RAGS Volume I), dated March 25, 1991, Summary of Standard Default Exposure Factors, Commercial/Industrial Land Use, Inhalation of Contaminants Exposure Pathway.
[9] As indicated in Title 35 IAC 742, Appendix B, Table B.

printed 09/18/2007 4:52PM by epa4561 p. 96/439

- Chromium;
- Lead; and,
- Mercury.

Of the RCRA metals detected above laboratory RLs, only mercury, detected in the soil sample collected from GP-1 at a concentration of 0.11 mg/kg, exceeded the applicable RO for the construction worker inhalation exposure pathway.

4.3.2 Soil Gas Results

Soil gas samples (SG-16, SG-17, and SG-18) were collected from soil probes GP-1, GP-2, and GP-3, and analyzed for VOCs and methane. Numerous VOCs were detected above laboratory RLs in the soil gas samples by USEPA TO-15 analysis, including:

- Acetone
- Benzene
- 2-Butanone (MEK)
- Carbon disulfide
- Cyclohexane
- 1,2-Dichloroethane
- cis-1,2-Dichloroethene
- Ethylbenzene
- n-Heptane
- n-Hexane
- 2-Hexanone
- 4-Methyl-2-pentanone
- Propene
- Tetrachloroethene (PCE)
- Toluene
- 1,1,1-Trichloroethane
- Trichloroethene (TCE)
- Trimethylbenzene
- Vinyl chloride
- m,p-Xylene
- o-Xylene

In addition, methane was detected above laboratory RLs in each of the three soil gas samples using a modified version of USEPA Method 8015B. Specific locations and concentrations of each of these are presented in Table 2. Further discussion of these results is provided in Section 5.2.

4.3.3 Flux Chamber Results

BB&J used 12 flux chamber devices (SF-1 through SF-12) to assess ground surface emission rates (or "flux") of VOCs from the subsurface (soil) beneath the Subject Property. In addition, one flux chamber device (SF-13) was placed in a park to the east of the Subject Property, across Lawndale Avenue, to obtain background concentrations of VOCs. VOCs were detected in the soil flux samples located throughout the Subject Property using USEPA TO-15 analysis, including:

printed 09/18/2007 4:52PM by epa4561 p. 97/439

- Acetone
- Benzene
- 2- Butanone (MEK)
- Carbon disulfide
- Chloromethane
- cis-1,2-Dichloroethene
- trans-1,2-Dichloroethene
- Ethyl acetate
- n-Heptane
- n-Hexane
- Naphthalene
- Propene
- PCE
- TCE
- 1,2,4-Trimethylbenzene
- Toluene
- m,p-Xylene
- Vinyl chloride

Of the 18 VOCs detected in the soil flux samples only carbon disulfide was present in SF-13, the flux chamber which was located in the park across Lawndale Avenue.

In addition, methane was not detected above laboratory RLs in any of the soil flux samples at the Subject Property using a modified version of USEPA Method 8015B. Specific locations and concentrations of each of these are presented in Table 3. Further discussion of these results is provided in Section 5.3.

4.3.4 QA/QC

An equipment rinsate sample was collected from the Geoprobe liner during the Soil Investigation. No VOCs, SVOCs, herbicides, or organochlorine pesticides were reported in the equipment rinsate sample; however, barium at a concentration of 0.002 mg/L was detected. In addition, no VOCs were reported above the laboratory RLs in the trip blank.

5.0 CONCLUSIONS AND RECOMMENDATIONS

The following sections present BB&J's conclusion and recommendations based on subsurface assessment findings at the Subject Property.

5.1 Subsurface Soil Investigation

During the Phase II ESA, BB&J collected three soil samples from GP-1, GP-2 and GP-3. The soil samples were submitted to First Environmental and analyzed for VOCs, SVOCs, PCBs, RCRA metals, herbicides, organochloride pesticides, and pH.

Multiple SVOCs were detected in the soil sample collected from GP-1 above laboratory RLs. However, only the following five exceeded TACO ROs and/or the Soil Component of the Ground-water Ingestion route for Class I or Class II ground-water:

printed 09/18/2007 4:52PM by epa4561 p. 98/439

- benzo(a)anthracene 2.63 mg/kg exceeded the TACO RO for the residential ingestion exposure pathway and the Soil Component of the Ground-water Ingestion route for Class I ground-water;
- benzo(a)pyrene, 2.72 mg/kg, exceeded the TACO RO for the residential and industrial/commercial ingestion exposure pathways;
- benzo(b)fluoranthene, 3.33 mg/kg, exceeded the TACO RO for the residential ingestion exposure pathway;
- Carbazole, 0.84 mg/kg, exceeded the Soil Component of the Ground-water Ingestion route for Class I ground-water; and,
- Indeno(1,2,3-cd)pyrene, 1.38 mg/kg, exceeded the TACO RO for the residential ingestion exposure pathway.

In addition, multiple RCRA metals were detected in the soil samples collected from GP-1, GP-2 and GP-3 above laboratory RLs. However, of the RCRA metals detected above laboratory RLs, only mercury, detected in the soil sample collected from GP-1 at a concentration of 0.11 mg/kg exceeded the applicable TACO RO for the construction worker inhalation exposure pathway.

5.2 Soil Vapor Intrusion Modeling

Vapor intrusion is the migration of volatile chemicals from the subsurface into overlying buildings. Volatile chemicals in buried wastes and/or impacted ground water can emit vapors that may migrate through subsurface soil and into air spaces of overlying buildings.

5.2.1 Johnson and Ettinger Calculations

BB&J utilized USEPA's on-line J&E calculator[10] to evaluate the vapor intrusion pathway into potential commercial structures. This J&E calculator replicates the implementation that the USEPA Office of Solid Waste and Emergency Response (OSWER) Draft Guidance for Evaluating the Vapor Intrusion to Indoor Air Pathway from Groundwater and Soils (OSWER Vapor Intrusion Guidance) used in developing its Vapor Intrusion Guidance but includes a number of enhancements that are facilitated by web implementation. The J&E calculator has become increasingly popular with regulators and consultants over the last 10 years and several manuscripts have been published on its use. It should be noted that the State of Illinois does not provide any guidance or soil gas standards with regard to vapor intrusion.

[10] http://www.epa.gov/athens/learn2model/part-two/onsite/me_results_forward.htm

printed 09/18/2007 4:52PM by epa4561 p. 99/439

Briefly, the calculator is a one-dimensional analytical solution, which incorporates both advection and diffusion transport mechanisms to produce a unitless "attenuation factor." This attenuation factor is a measure of how soil and building properties limit the intrusion of organic vapors into overlying buildings and is defined as the concentration of the compound in indoor air divided by the concentration of the compound in soil gas or ground water.

Although the J&E calculator is inherently conservative, BB&J also made the following conservative assumptions in running the calculator:

- The highest soil vapor concentration of a given constituent identified site-wide was assumed to be the concentration present site-wide (even if lower concentrations were identified elsewhere) for the proposed commercial building vapor intrusion scenario on the south portion of the Subject Property (i.e., as presented in Table 2);
- OSWER Vapor Intrusion Guidance[11] allows a site risk manager to select media-specific target concentrations for screening at three cancer risk levels: 10^{-4}, 10^{-5}, and 10^{-6}; however, BB&J compared the modeled results to the most conservative of these (10^{-6});
- A less protective, best estimate and more protective target concentration were computed for the maximum soil gas concentration of a given constituent detected at the Subject Property. These computed "backward" target concentrations served as comparison to the detected soil gas concentrations at the Subject Property. The best estimate concentrations are based on the best guesses of depth to the contamination source and residual moisture content for the chosen soil type. The less protective and more protective range of values is computed based on user-specified uncertainty in both depth to the contamination source and unsaturated zone moisture content; and,
- The default J&E calculator uses default exposure factors for residential land use. When using the J&E calculator to determine the concentrations of soil gas entering the proposed building on the south portion of the Subject Property, commercial/industrial land use exposure factors were used in the J&E calculator. The specific commercial/industrial default exposure factors used can be found in the USEPA Office of Emergency and Remedial Response RAGS Volume I, dated March 25, 1991, Summary of Standard Default Exposure Factors, Commercial/Industrial Land Use, Inhalation of Contaminants Exposure Pathway.

Based on the results of the soil gas survey at the Subject Property, BB&J ran the J&E calculator for the constituents reported to be present in at least one soil gas sample (see Section 4.2).

5.2.2 Proposed Building on South Portion of Subject Property

As indicated in Table 2, VOCs, including constituents consistent with historic releases of gasoline, chlorinated solvents and oxygenated solvents, were detected in the soil gas samples collected in the soil

printed 09/18/2007 4:52PM by epa4561 p. 100/439

gas samples. Of the VOCs detected in gas samples SG-16, SG-17, SG-18, only vinyl chloride was estimated to result in indoor concentrations greater than the modeled "more-protective" Target Concentrations for Estimated Risk-based Soil Vapor Standards[12].

Using risk assessment parameters typical of an IEPA or USEPA-type Comprehensive Environmental Response, Compensation, and Liability Act (CERCLA, i.e., Superfund) risk assessment, modeled cancer risks under the most protective scenario slightly exceeded the 10^{-6} bench mark used for risk assessment purposes. Plainly stated, the modeled results indicate a slightly greater than approximately one in a million chance per employee developing cancer directly attributable to vapor intrusion into buildings due to on-site sources. This risk is driven primarily by the presence of vinyl chloride which is a known carcinogen.

In addition to the VOCs detected at the proposed building on the south portion of the Subject Property, as indicated in Table 2, methane was detected in each soil gas sample from the three soil probe locations. However, none of the three soil gas samples contained concentrations within the explosive range for methane.

5.2.3 Soil Gas Conclusions

As indicated above, multiple VOCs, including constituents consistent with historic releases of gasoline, chlorinated solvents and oxygenated solvents, were detected in the soil gas samples collected from the south portion of the Subject Property. Based on modeled results using default exposure factors for commercial scenarios, a cancer risk exceeded the benchmark 10^{-6} (i.e., one in a million) cancer risk. This elevated risk is driven primarily by the presence of vinyl chloride.

In addition to the chronic hazard potentially present at the Subject Property, concentrations of methane were reported to be present in all three soil gas samples; however, none of the samples collected contained concentrations of methane within the explosive range for methane.

[11] http://www.epa.gov/correctiveaction/eis/vapor/complete.pdf
[12] These J&E calculations used commercial/industrial default exposure factors due to the intended commercial use of the proposed community center.

printed 09/18/2007 4:52PM by epa4561 p. 101/439

5.2.4 Soil Gas Recommendations

As indicated in Table 2, vinyl chloride was detected above the modeled "more-protective" Target Concentration for Estimated Risk-based Soil Gas Standards. In particular, vinyl chloride was detected at a concentration greater than twice the modeled "more-protective" Target Concentrations for Estimated Risk-based Soil Gas Standards. Such a concentration suggests that these constituents have the potential to accumulate within the proposed building on the south portion of the Subject Property that would pose a human health risk. However, it should be noted that (1) the Johnson-Ettinger model is inherently conservative and (2) new soil is continually being placed at the Subject Property and, assuming the soil is devoid of VOC impacts, could serve as a barrier to VOC entry into the buildings.

Possible remedies to limit the exposure of this constituent to the proposed building on the south portion of the Subject Property include installation of a subsurface vapor barrier beneath the proposed buildings at the Subject Property combined with engineered venting systems. Both the subsurface vapor barrier and the venting subsurface would require maintenance and upkeep for the lifetime of the buildings. In addition, the venting system would require air permits from IEPA to discharge VOCs into the ambient air.

Although methane was not detected within its explosive range in the three soil gas samples, the presence of methane should be noted and explored further. To ensure that methane would not accumulate beneath or within the proposed building on the south portion of the Subject Property, proper venting of this structure would potentially be required to reduce the potential for explosions to occur. The presence of methane in the gas samples may indicate that material inconsistent with IEPA's definition of clean construction and demolition debris may be present beneath the surface of the Subject Property. As the material decomposes, shifting of the subsurface may occur, causing structural damage to overlying structures, including the proposed building on the south portion of the Subject Property.

The specific sources of the VOCs and methane could not be determined by the scope of this investigation. However, BB&J understands that a gasoline station was formerly located on the northeast portion of the Subject Property near the intersection of Ogden Avenue and Lawndale Avenue. A leaking underground storage tank (LUST) incident was reported for the gasoline station and a No Further Remediation (NFR) letter was issued for the LUST incident. Despite the issuance of the NFR, the gasoline station may still be the source of the gasoline-related compounds, partly or wholly. Sources of the chlorinated solvents and non-chlorinated solvents have not been identified.

printed 09/18/2007 4:52PM by epa4561 p. 102/439

The modeling conducted by BB&J should be regarded as preliminary and should be used for guidance purposes only. Factors that may impact the accuracy of the model include, but are not limited to:

- The limited number of samples collected at the Subject Property relative to the overall size;
- Effects of proposed future grading activities;
- Estimated building air exchange rates used in the model relative to actual building air exchange rates;
- Characteristics of the soil proposed to be placed on top of the existing fill material during proposed grading activities; and,
- The degree to which the concrete slabs crack in the future due to possible subsidence resultant from the continued decay of materials in the subsurface or other unknown subsurface conditions.

Overall, if plans for future use of the Subject Property include the construction of buildings on the southern portion, BB&J would recommend additional soil gas investigation in the footprint of any future building to confirm whether or not there are any COCs for the specific location. If the presence of COCs is not investigated further, then BB&J suggests that a subsurface vapor barrier beneath the proposed buildings at the Subject Property, combined with engineered venting systems be installed.

5.3 Soil Flux Survey

BB&J used 13 flux chamber devices (SF-1 through SF-13) to assess ground surface emission rates (or "flux") of VOCs from the subsurface (soil) beneath the Subject Property in an outdoor recreational (i.e. residential) scenario. Specifically, the flux chamber devices can be used to model cancer risks against a bench mark. Details of the methods used in this calculation can be found in *How to Collect Reliable Soil Gas Data for Upward Risk Assessments, Part 2, Surface Flux Chamber Method* [Hartman, 2003].

The basic approach of the flux chamber method was to use an enclosure or chamber to isolate a surface from the ambient air and collect compounds emanating from the subsurface. Compounds either build-up over time in the static chamber headspace or, in the dynamic chamber method, clean sweep air is added to the chamber at a controlled rate. The effluent air from the chamber is collected using canisters and analyzed for chemicals of concern.

The emission rate of chemicals, ER_i (milligrams per minute per square meter) is calculated as:

printed 09/18/2007 4:52PM by epa4561 p. 103/439

For Static Chambers:

$$ER_i = \frac{C_c \times V_c}{A \times T}$$

It is BB&J's understanding that preliminary redevelopment plans for the Subject Property include paved and unpaved recreational areas, such as baseball fields, soccer fields, basketball courts, and tennis courts. As such, an equivalent outdoor field area can be computed from the measured chamber concentration based upon the fact that the flux into the chamber is the same as the flux into that area (since flux is per unit area). The equation is:

$$\mathbf{C_f = ER_i * A_f / Q}$$

Where:

- C_c is the static chamber concentration after the incubation period (µg/m^3);
- C_f is the area of the field concentration (µg/m^3);
- V_c is the volume of the static chamber (m^3);
- T is the incubation time of the static or dynamic chamber (minute);
- A is the contact area of the static or dynamic chamber to surface soil (m^2);
- A_f is the field area (m^2);
- Q, where **Q = W*H*Ws**, is the volumetric flow rate in the outdoor field area (m^3 /min);
- W is the width field area perpendicular to the wind (m);
- H is the height of the field area perpendicular to the wind (m); and
- Ws is the wind speed (m/second).

Using these parameters and the laboratory analytical data collected from the soil flux canisters, BB&J calculated C_f for each of the constituents detected in the soil flux samples to determine a preliminary risk assessment for the future recreational use of the Subject Property. Further details of the calculations are in Table 3. The following key assumptions were used to complete these calculations for a recreational use scenario:

printed 09/18/2007 4:52PM by epa4561 p. 104/439

- The incubation time (T) for each soil flux sample was the time the soil flux canister was initially placed on the ground to the time the soil flux sample was collected. Every soil flux sample had an incubation time of at least 8 hours;
- The area of the of the field (A_f) is 100 m^2;
- The width of the field (W) is 10 m;
- The height (H) of a person using the field is 1.5 m (approximately 4.9 feet); and,
- The wind speed (W) is 1 m/sec [approximately 2.25 miles per hour (mph)].

Using risk assessment parameters typical of an IEPA or USEPA-type CERCLA (i.e., Superfund) risk assessment, modeled cancer risks in this calculation of each detected VOC were less than the 10^{-6} (one in a million) bench mark used for risk assessment purposes. Furthermore, the assumptions noted above reflect a conservative approach to calculating the modeled cancer risks. For instance, according to the actual wind speed at the Subject Property most likely exceeds 2.25 mph[13]; thus at higher wind speeds, the concentration of a detected constituent would be dissipated and the cancer risk would be reduced. In addition, the calculations are based upon soil flux samples which were collected directly from the bare soil of the Subject Property. Additionally, clean fill and subsurface vapor barriers would likely reduce the potential release of COCs from the subsurface as these barriers would reduce the concentration of constituents detected at the surface of the Subject Property and in turn reduce the cancer risk.

However, it should be noted that the calculations are to be used only as a preliminary assessment of the soil gas conditions at the ground surface of the Subject Property per the controlled conditions of the static measurements used in this calculation. In addition, the model utilized was conservative, and although the flux chambers were located throughout the Subject Property, and in the park across Lawndale Avenue, the findings are only specific to a limited area surrounding the flux chamber.

In comparison with soil gas concentrations detected as part of the Soil Gas Survey and previous soil gas samples collected at the Subject Property, the laboratory data collected and modeled scenarios suggest that the detected constituents present at six feet bgs are significantly dissipated or are absent at the surface of the Subject Property. Possible remedies to further limit the exposure of the detected constituents to the surface of the Subject Property include installation of a subsurface vapor barrier beneath the proposed recreation areas of the Subject Property combined with engineered venting systems. Both the subsurface

[13] According to the Illinois State Climatologist Office, the average wind speed was 9.25 knots or approximately 10.6 mph for the closest municipality to Lyons, IL (Chicago) over a period of 30 years (1961 to 1990) (http://www.sws.uiuc.edu/atmos/statecli/Roses/wind_climatology.htm)

printed 09/18/2007 4:52PM by epa4561 p. 105/439

vapor barrier and the venting subsurface would require maintenance and upkeep for the lifetime of the Subject Property. In addition, the venting system may require air permits from IEPA to discharge VOCs into the ambient air. Based on the calculated risks and given the intended use of the Subject Property for outdoor recreation, BB&J has no further sampling recommendations regarding the soil flux survey. However, if the intended use for the Subject Property changes, further investigation, may be necessary to further investigate risks associated with potential VOCs emitted to the surface of the Subject Property.

printed 09/18/2007 4:52PM by epa4561 p. 106/439

TABLES

Table 1: Summary of Soil Laboratory Analytical Results

				Residential[1]		Industrial-Commercial[2]		Construction Worker[3]		Soil Component of the Ground-Water Ingestion Exposure Route[4]		pH Specific Soil RSs for the Soil Component of the Ground-Water Ingestion Route[5,6]						Background Concentration of Chemicals[7,8]
												Ground-water Migration pH range (7.08 to 7.74)		Ground-water Migration pH range (7.75 to 8.14)		Ground-water Migration pH range (8.15 to 8.74)		
Soil Sample ID / Depth[7]	GP-1 (0.8-2.0) (mg/kg)	GP-2 (4.4-5.0) (mg/kg)	GP-3 (4.0-5.0) (mg/kg)	Ingestion (mg/kg)	Inhalation (mg/kg)	Ingestion (mg/kg)	Inhalation (mg/kg)	Ingestion (mg/kg)	Inhalation (mg/kg)	Class I (mg/kg)	Class II (mg/kg)	Class I (mg/kg)	Class II (mg/kg)	Class I (mg/kg)	Class II (mg/kg)	Class I (mg/kg)	Class II (mg/kg)	(mg/kg)
pH	8.61	8.21	7.93	NA	NA	NA	NA	NA	NA	NA	NA	NA	NA	NA	NA	NA	NA	NA
VOCs	ND	ND	ND	NA	NA	NA	NA	NA	NA	NA	NA	NA	NA	NA	NA	NA	NA	NA
SVOCs																		
Acenaphthene	1.96	ND	ND	4,700	NRO	120,000	NRO	120,000	NRO	679	2,900	NA	NA	NA	NA	NA	NA	0.13
Anthracene	3.52	ND	ND	23,500	NRO	610,000	NRO	610,000	NRO	12,000	50,000	NA	NA	NA	NA	NA	NA	0.40
Benzo(a)anthracene	1.85	ND	ND	0.9	NRO	8	NRO	870	NRO	2	8	NA	NA	NA	NA	NA	NA	1.1
Benzo(a)pyrene	1.72	ND	ND	0.9	NRO	0.9	NRO	87	NRO	4	22	NA	NA	NA	NA	NA	NA	3.1
Benzo(b)fluoranthene	1.33	ND	ND	0.9	NRO	8	NRO	870	NRO	9	38	NA	NA	NA	NA	NA	NA	8.1
Benzo(k)fluoranthene	0.87	ND	ND	9	NRO	74	NRO	1,700	NRO	19	280	NA	NA	NA	NA	NA	NA	1.70
Benzo(ghi)perylene	1.51	ND	ND	NRO	NRO	NRO	NRO	NRO	NRO	NRO	NRO	NA	NA	NA	NA	NA	NA	NRO
Carbazole	0.84	ND	ND	32	NRO	290	NRO	8,200	NRO	0.9	2.9	NA	NA	NA	NA	NA	NA	NRO
Chrysene	1.98	ND	ND	88	NRO	780	NRO	17,000	NRO	140	500	NA	NA	NA	NA	NA	NA	2.39
Dibenz(a,h)anthracene	0.57	ND	ND	0.9	NRO	1	NRO	17	NRO	3	7.6	NA	NA	NA	NA	NA	NA	0.42
Fluoranthene	1.48	ND	ND	3,100	NRO	82,000	NRO	82,000	NRO	4,100	21,000	NA	NA	NA	NA	NA	NA	4.1
Fluorene	0.48	ND	ND	3,100	NRO	82,000	NRO	82,000	NRO	390	2,000	NA	NA	NA	NA	NA	NA	0.016
Indeno(1,2,3-cd)pyrene	1.38	ND	ND	0.9	NRO	9	NRO	870	NRO	14	49	NA	NA	NA	NA	NA	NA	1.8
1-Methylnaphthalene	0.38	ND	ND	1,000	170	41,000	270	4,100	2	12	18	NA	NA	NA	NA	NA	NA	0.3
Phenanthrene	1.77	ND	ND	NRO	NRO	NRO	NRO	NRO	NRO	NRO	NRO	NA	NA	NA	NA	NA	NA	2.5
Pyrene	4.21	ND	ND	2,300	NRO	61,000	NRO	61,000	NRO	4000	21000	NA	NA	NA	NA	NA	NA	3
RCRA metals																		
Arsenic	8.10	1.8	1	NRO	130	13[9]	1,200	81	25,000	NA	NA	30	100	31	120	32	130	15
Barium	95.3	125	35.6	5,500	500,000	140,000	940,000	14,000	570,000	NA	NA	1,800	1,891	3,160	3,100	NRO	NRO	110
Cadmium	0.6	125	0.7	78	1,000	2,000	2,000	200	50,000	NA	NA	50	590	430	4,200	NRO	NRO	0.6
Chromium	8.9	27.8	12.4	230	270	9,100	420	4,100	800	NA	NA	NRO	NRO	NRO	NRO	NRO	NRO	18.2
Lead	35.4	21.5	22	400	NRO	800	5000	700	NRO	NA	NA	107	1,430	107	1,430	107	1,430	36
Mercury[9]	0.11	ND	ND	23	11	610	10	51	0.1	NA	NA	0.4	37	9	40	NRO	NRO	0.08
Herbicides	ND	ND	ND	NA	NA	NA	NA	NA	NA	NA	NA	NA	NA	NA	NA	NA	NA	NA
Organochlorine Pesticides / PCBs	ND	ND	ND	NA	NA	NA	NA	NA	NA	NA	NA	NA	NA	NA	NA	NA	NA	NA

Notes:

1 Title 35 IAC 742, Appendix B, Table A
2 Title 35 IAC 742, Appendix B, Table B
3 Title 35 IAC 742, Appendix B, Table C
4 Title 35 IAC 742, Appendix B, Table D
5 Title 35 IAC 742, Appendix A, Table H.
6 Title 35 IAC 742, Appendix A, Table G.
7 Soil boring depths are presented in feet bgs
8 The ingestion route for industrial/commercial properties defers to the default background standard, established in Title 35 IAC 742, Appendix A, Table B
9 As listed in Title 35 IAC 742, Appendix B, Table B, the value for ingestion is based on Reference Dose for Mercuric chloride (CAS No. 7487-94-7). The value for inhalation is based on Reference Concentration for elemental Mercury (CAS No. 7439-97-6). The inhalation remediation objective only applies at sites where elemental mercury is a constituent of concern.

Black Bold indicates an exceedance of an industrial/commercial or construction worker IEPA TACO RO and/or exceedance of the Soil Component of the Ground Water Ingestion Exposure Route

Green Bold indicates an exceedance of a residential IEPA TACO RO

Acronyms:
bgs - below ground surface
IAC - Illinois Administrative Code
IEPA - Illinois Environmental Protection Agency
mg/kg - milligrams per kilogram
NA - Not applicable
ND - Not detected above laboratory reporting limits

Prepared by: KAB | 8.22.2007
Checked by: [illegible] | 8.11.2007

printed 09/18/2007 4:52PM by epa4561 p. 107/439

Table 2: Summary of Soil Gas Laboratory Analytical Results

				Maximum Concentration Detected at Subject Property	BACKWARD Results of Johnson & Ettinger Vapor Intrusion Model - Estimated Risk-based Soil Gas Standards[1]			Explosive Range	
Soil - Gas ID Soil Sample Depth[2]	SG - 16 8.0 (µg/m³)	SG - 17 8.0 (µg/m³)	SG - 18 8.0 (µg/m³)	(µg/m³)	Less Protective Target Concentrations (µg/m³)	Best Estimate Target Concentrations (µg/m³)	More Protective Target Concentrations (µg/m³)	Lower Explosive Limit (LEL)[3] (%)	Upper Explosive Limit (UEL)[3] (%)
USEPA Method TO-15 (VOCs)									
Acetone	ND	140	ND	140	518,400	291,600	163,100	NA	NA
Benzene	92	69	61	92	15,770	3,831	1,821	NA	NA
2-Butanone (MEK)	32	60	59	60	3,444,000	1,121,000	556,400	NA	NA
Carbon disulfide	70	120	24	120	2,643,000	684,200	349,600	NA	NA
Cyclohexane	52	50	23	52	NMD	NMD	NMD	NA	NA
1,1-Dichloroethane	5.1	12	ND	12	2,576,000	695,200	259,800	NA	NA
cis-1,2-Dichloroethene (cis-1,2-Dichloroethylene)	13	ND	ND	13	181,300	42,650	20,370	NA	NA
Ethylbenzene	9.1	7.1	6.4	9.1	13,000	3,057	1,468	NA	NA
n-Heptane (Heptane)	57	82	19	82	NMD	NMD	NMD	NA	NA
n-Hexane (Hexane)	140	96	37	100	4,213,000	1,272,000	603,500	NA	NA
2-Hexanone	ND	ND	27	27	NMD	NMD	NMD	NA	NA
4-Methyl-2-pentanone (Methylisobutylketone)	ND	ND	7.9	7.9	264,500	98,850	46,120	NA	NA
Propane	1200	990	480	1,200	NMD	NMD	NMD	NA	NA
Tetrachloroethene (Tetrachloroethylene)	67	40	200	200	4,961	1,186	549	NA	NA
Toluene	38	45	22	45	1,777,000	430,800	218,100	NA	NA
Trichloroethene (Trichloroethylene)	13	ND	ND	13	123.9	29.4	14.32	NA	NA
1,2,4-Trimethylbenzene	7.3	6.6	12	12	37,960	8,428	3,858	NA	NA
Vinyl chloride	410	49	ND	410	1,160	298	167.4	NA	NA
m,p-Xylene	14	15	17	17	NMD	NMD	NMD	NA	NA
o-Xylene	6	5.8	7.1	7.1	NA	7,533,000	3,766,000	NA	NA
USEPA Method 8015B	(%)	(%)	(%)	(%)					
Methane	2.0	1.0	0.999	2.0	NMD	NMD	NMD	5.0	15.0

Notes:

[1] Results based upon the calculation in the USEPA's Screening Level Implementation of the Johnson and Ettinger Vapor Intrusion Model and the known maximum concentration detected at the proposed Community Center (http://www.epa.gov/ahe/efam2/models/perl-bin/ionfit/IoFitIE_fin_forward.html). As the proposed future development will be used for commercial purposes, the standard default exposure parameters in the Johnson & Ettinger Vapor Intrusion Model were changed to reflect this use. The list of parameters that were changed can be found in the USEPA Risk Assessment Guidance for Superfund Volume I; Human Health Evaluation Manual (RAGS Volume I), dated March 25, 1991, "Summary of Standard Default Exposure Factors", Commercial/Industrial Use, Inhalation of Contaminants Exposure Pathway.

[2] Depths indicated in feet below ground surface (bgs).

[3] According to the National Fire Protection Association, the LEL for methane is 5.0%, while the UEL is 15%.

Bold indicates an exceedance of a BACKWARD Results of Johnson & Ettinger Vapor Intrusion Model - Estimated Risk-based Soil Gas Standards Target Concentration.

Acronyms:
NA: Not applicable
ND: Not detected
NMD: No model data for constituent
µg/m³: micrograms per cubic meter
USEPA: United States Environmental Protection Agency
VOCs: Volatile organic compounds

Prepared By: [illegible]
Checked By: [illegible]

printed 09/18/2007 4:52PM by epa4561 p. 108/439

Summary of Surface Flux Chamber Fluxes and Calculated Risk

Chamber	Compound	C_i (ug/m3)	C_f (ug/m3)	Delta C_c (ug/m3)	Time (min)	V_c (m^3)	V_s (m^3)	A_c (m^2)	Flux (Eq) (ug/min-m^2)	Flux (Eq) (ug/sec-m^2)	A_s (m^2)	W (m)	H (m)	WS (m/sec)	C_{r-s} (ug/m^3)	C_{r-a} (ug/m^3)	C_{r-s}/C_{r-a}	Risk
SF-1	Carbon disulfide	5	14	9	795	0.0075	0.0004	0.06	0.0014	2.36E-05	100	10	1.5	1	1.57E-04	700	0.0%	2.25E-15
	2-Butanone	5	5.4	0.4	795	0.0075	0.0004	0.06	0.0001	1.05E-06	100	10	1.5	1	6.99E-06	1000	0.0%	6.99E-15
	PCE	5	18	13	795	0.0075	0.0004	0.06	0.0020	3.41E-05	100	10	1.5	1	2.27E-04	0.81	0.0%	2.80E-10
																	Total Risk:	**2.81E-10**

Definitions: C_i: initial concentration
C_f: final concentration
Delta C_c: change in chamber concentration over time
Time: Incubation Time
V_c: Chamber Volume
V_s: Summa Canister Volume
A_c: Chamber surface contact area
Flux (Eq) : Calculated flux per equations in report text
A_s: Area of Field
Q = field ventilation rate = W * H * WS
W = width of field perpendicular to the wind
H = height of box perpendicular to the wind
WS = Wind speed
Cr-s: Calculated air concentration in outside volume
Cr-a: CA-EPA allowed room concentration for 1 in 1 million risk
Cr-s/Cr-a: Ratio of calculated to allowed in %
Risk: Calculated risk

Calculations for flux and room concentration as described in text

Ar	1.86E+06 cm2	1.86E+02	m2
HEIGHT	2.44E+02 cm	2.44E+00	M
ER	5.00E-01 per hour		
Q (0.5/hr)	6.30E+04 cm3/sec	3.78E+00	m3/min

Prepared By: KLM / 6.7.2007
Checked By: AWB / 6.13.2007

printed 09/18/2007 4:52PM by epa4561 p. 109/439

Summary of Surface Flux Chamber Fluxes and Calculated Risk

Chamber	Compound	C_i (ug/m3)	C_f (ug/m3)	Delta C_c (ug/m3)	Time (min)	V_c (m^3)	V_s (m^3)	A_c (m^2)	Flux (Es) (ug/min-m^2)	Flux (En) (ug/sec-m^2)	A_s (m^2)	W (m)	H (m)	WS (m/sec)	C_{r-e} (ug/m^3)	C_{r-a} (ug/m^3)	C_{r-e}/C_{r-a}	Risk
EF-3	Carbon disulfide	5	6.7	0.7	790	0.0075	0.0004	0.08	0.0001	1.66E-06	100	10	1.5	1	1.23E-06	700	0.0%	1.78E-14
	Acetone	5	51	48	790	0.0075	0.0004	0.08	0.0073	1.21E-04	100	10	1.5	1	8.09E-04	350	0.0%	2.31E-12
	TCE	5	13	8	790	0.0075	0.0004	0.08	0.0013	2.11E-05	100	10	1.5	1	1.41E-04	0.022	0.6%	6.39E-09
	PCE	5	973	968	790	0.0075	0.0004	0.08	0.1532	2.55E-03	100	10	1.5	1	1.70E-02	0.81	2.1%	2.10E-08
																	Total Risk:	2.74E-08

Definitions: C_i: initial concentration
C_f: final concentration
Delta C_c: change in chamber concentration over time
Time: Incubation Time
V_c: Chamber volume
V_s: Summa Canister Volume
A_c: Chamber surface contact area
Flux (Es) : Calculated flux per equations in report text
A_s: Area of Field
Q = field ventilation rate = W * H * WS
W = width of field perpendicular to the wind
H = height of box perpendicular to the wind
WS = Wind speed
Cr-a: Calculated air concentration in outside volume
Cr-e: CA-EPA allowed room concentration for 1 in 1 million risk
Cr-a/Cr-e: Ratio of calculated to allowed in %
Risk: Calculated risk

Calculations for flux and room concentration as described in text

Ar	1.66E+06 cm2	1.66E+02	m2
HEIGHT	2.44E+02 cm	2.44E+00	M
ER	5.00E-01 per hour		
Q (0.5/hr)	6.30E+04 cm3/sec	3.78E+00	m3/min

Prepared By: KLM / 6.7.2007
Checked By: AWB / 6.13.2007

printed 09/18/2007 4:52PM by epa4561 p. 110/439

Summary of Surface Flux Chamber Fluxes and Calculated Risk

Chamber	Compound	C_i (ug/m3)	C_f (ug/m3)	Delta C_c (ug/m3)	Time (min)	V_c (m^3)	V_s (m^3)	A_c (m^2)	Flux (Ei) (ug/min-m^2)	Flux (Ei) (ug/sec-m^2)	A_s (m^2)	W (m)	H (m)	WS (m/sec)	C_{r-e} (ug/m^3)	C_{r-a} (ug/m^3)	C_{r-e}/C_{r-a}	Risk
SF-4	Carbon disulfide	5	7	2	780	0.0075	0.0004	0.06	0.0003	5.27E-06	100	10	1.5	1	9.53E-05	700	0.0%	5.02E-14
	Acetone	5	36	31	780	0.0075	0.0004	0.06	0.0049	8.16E-05	100	10	1.5	1	6.45E-04	350	0.0%	1.86E-12
	2-Butanone	4.89	5	0.01	780	0.0075	0.0004	0.06	0.0000	2.84E-08	100	10	1.5	1	1.76E-07	1000	0.0%	1.76E-16
	Ethyl acetate	5	12	7	780	0.0075	0.0004	0.06	0.0011	1.85E-05	100	10	1.5	1	1.23E-04	3200	0.0%	3.85E-14
	m,p-Xylene	6	10	5	780	0.0075	0.0004	0.06	0.0008	1.37E-05	100	10	1.5	1	6.79E-05	7000	0.0%	1.26E-14
	Toluene	5	75	70	780	0.0075	0.0004	0.06	0.0111	1.85E-04	100	10	1.5	1	1.23E-03	400	0.0%	3.08E-12
																	Total Risk:	4.74E-12

Definitions: C_i: Initial concentration
C_f: final concentration
Delta C_c: change in chamber concentration over time
Time: Incubation Time
V_c: Chamber Volume
V_s: Summa Canister Volume
A_c: Chamber surface contact area
Flux (Ei) : Calculated flux per equations in report text
A_s: Area of Field
Q = field ventilation rate = W * H * WS
W = width of field perpendicular to the wind
H = height of box perpendicular to the wind
WS = Wind speed
Cr-e: Calculated air concentration in outside volume
Cr-a: CA-EPA allowed room concentration for 1 in 1 million risk
Cr-e/Cr-a: Ratio of calculated to allowed in %
Risk: Calculated risk

Calculations for flux and room concentration as described in text

Ar	1.86E+06 cm2	1.86E+02	m2	
HEIGHT	2.44E+02 cm	2.44E+00	M	
ER	5.00E-01 per hour			
Q (0.5hr)	6.30E+04 cm3/sec	3.78E+00	m3/min	

Prepared By: KLM / 6.7.2007
Checked By: AWB / 6.13.2007

printed 09/18/2007 4:52PM by epa4561 p. 111/439

Summary of Surface Flux Chamber Fluxes and Calculated Risk

Chamber	Compound	C_i (ug/m3)	C_f (ug/m3)	Delta C_p (ug/m3)	Time (min)	V_c (m^3)	V_s (m^3)	A_c (m^3)	Flux (Eq) (ug/min-m^2)	Flux (Eq) (ug/sec-m^2)	A_f (m^2)	W (m)	H (m)	WS (m/sec)	C_{r-e} (ug/m^3)	C_{r-a} (ug/m^3)	C_{r-e}/C_{r-a}	Risk
SF-5	Carbon disulfide	5	24	19	820	0.0075	0.0004	0.06	0.0029	4.83E-05	100	10	1.5	1	3.22E-04	700	0.0%	4.60E-13
	Chloromethane	5	7.8	2.8	820	0.0075	0.0004	0.06	0.0004	7.11E-06	100	10	1.5	1	4.74E-05	2.4	0.0%	1.98E-11
	Propane	5	16	11	820	0.0075	0.0004	0.06	0.0017	2.79E-05	100	10	1.5	1	1.86E-04	2.4	0.0%	7.76E-11
	Toluene	6	14	9	820	0.0075	0.0004	0.06	0.0014	2.29E-05	100	10	1.5	1	1.52E-04	400	0.0%	3.81E-13
																	Total Risk:	9.92E-11

Definitions: C_i: Initial concentration
C_f: final concentration
Delta C_p: change in chamber concentration over time
Time: Incubation Time
V_c: Chamber Volume
V_s: Summa Canister Volume
A_c: Chamber surface contact area
Flux (Eq) : Calculated flux per equations in report text
A_f: Area of Field
Q = field ventilation rate = W * H * WS
W = width of field perpendicular to the wind
H = height of box perpendicular to the wind
WS = Wind speed
Cr-e: Calculated air concentration in outside volume
Cr-a: CA-EPA allowed room concentration for 1 in 1 million risk
Cr-e/Cr-a: Ratio of calculated to allowed in %
Risk: Calculated risk

Calculations for flux and room concentration as described in text

Ar	1.98E+06 cm2	1.89E+02	m2
HEIGHT	2.44E+02 cm	2.44E+00	M
ER	5.00E-01 per hour		
Q (0.6/hr)	6.30E+04 cm3/sec	3.78E+00	m3/min

Prepared By: KLM / 6.7.2007
Checked By: AWB / 6.13.2007

printed 09/18/2007 4:52PM by epa4561 p. 112/439

Summary of Surface Flux Chamber Fluxes and Calculated Risk

Chamber	Compound	C_i (ug/m3)	C_f (ug/m3)	Delta C_g (ug/m3)	Time (min)	V_g (m^3)	V_c (m^3)	A_c (m^2)	Flux (E_g) (ug/min-m^2)	Flux (Es) (ug/sec-m^2)	A_f (m^2)	W (m)	H (m)	WS (m/sec)	C_{ra} (ug/m^3)	C_{ra} (ug/m^3)	C_{ra}/C_{ra}	Risk
SF-8	Carbon disulfide	5	8.6	0.6	820	0.0075	0.0004	0.08	0.0001	1.52E-06	100	10	1.5	1	1.92E-06	700	0.0%	1.45E-14
	Acetone	5	37	32	820	0.0075	0.0004	0.08	0.0049	8.15E-05	100	10	1.5	1	5.42E-04	360	0.0%	1.68E-12
	PCE	5	9.3	4.3	820	0.0075	0.0004	0.08	0.0007	1.09E-05	100	10	1.5	1	7.26E-05	0.81	0.0%	8.99E-11
																	Total Risk:	8.15E-11

Definitions: C_i: Initial concentration
C_f: final concentration
Delta C_g: change in chamber concentration over time
Time: Incubation Time
V_c: Chamber Volume
V_g: Summa Canister Volume
A_c: Chamber surface contact area
Flux (E_g) : Calculated flux per equations in report text
A_f: Area of Field
Q = field ventilation rate = W * H * WS
W = width of field perpendicular to the wind
H = height of box perpendicular to the wind
WS = Wind speed
Cr-a: Calculated air concentration in outside volume
Cr-a: CA-EPA allowed room concentration for 1 in 1 million risk
Cr-a/Cr-a: Ratio of calculated to allowed in %
Risk: Calculated risk

Calculations for flux and room concentration as described in text

Ar	1.86E+06 cm2	1.86E+02	m2	
HEIGHT	2.44E+02 cm	2.44E+00	M	
ER	6.00E-01 per hour			
Q (0.5/hr)	6.30E+04 cm3/sec	3.78E+03	m3/min	Prepared By: KLM / 6.7.2007 Checked By: AVB / 6.13.2007

printed 09/18/2007 4:52PM by epa4561 p. 113/439

Summary of Surface Flux Chamber Fluxes and Calculated Risk

Chamber	Compound	C_i (ug/m3)	C_f (ug/m3)	Delta C_c (ug/m3)	Time (min)	V_c (m³)	V_s (m³)	A_c (m²)	Flux (Ei) (ug/min-m²)	Flux (Ei) (ug/sec-m²)	A_f (m²)	W (m)	H (m)	WS (m/sec)	C_{ra} (ug/m³)	C_{ra} (ug/m³)	C_{ra}/C_{ra}	Risk
SF-7	PCE	5	14	9	795	0.0075	0.0004	0.09	0.0014	2.35E-05	100	10	1.5	1	1.57E-04	0.81	0.0%	1.94E-10
																	Total Risk:	1.94E-10

Definitions: C_i: Initial concentration
C_f: final concentration
Delta C_c: change in chamber concentration over time
Time: Incubation Time
V_c: Chamber Volume
V_s: Summa Canister Volume
A_c: Chamber surface contact area
Flux (Ei) : Calculated flux per equations in report text
A_f: Area of Field
Q = field ventilation rate = W * H * WS
W = width of field perpendicular to the wind
H = height of box perpendicular to the wind
WS = Wind speed
Cr-a: Calculated air concentration in outside volume
Cr-a: CA-EPA allowed room concentration for 1 in 1 million risk
Cr-a/Cr-a: Ratio of calculated to allowed in %
Risk: Calculated risk

Calculations for flux and room concentration as described in text

Ar	1.86E+06 cm2	1.86E+02	m2
HEIGHT	2.44E+02 cm	2.44E+00	M
ER	5.00E-01 per hour		
Q (0.5/hr)	6.30E+04 cm3/sec	3.78E+00	m3/min

Prepared By: KLM / 6.7.2007
Checked By: AWB / 6.13.2007

printed 09/18/2007 4:52PM by epa4561 p. 114/439

Summary of Surface Flux Chamber Fluxes and Calculated Risk

Chamber	Compound	C_i (ug/m3)	C_f (ug/m3)	Delta C_c (ug/m3)	Time (min)	V_c (m^3)	V_s (m^3)	A_c (m^2)	Flux (Ei) (ug/min-m^2)	Flux (Ei) (ug/sec-m^2)	A_f (m^2)	W (m)	H (m)	WS (m/sec)	C_{r-e} (ug/m^3)	C_{r-a} (ug/m^3)	C_{r-e}/C_{r-a}	Risk
SF-8	2-Butanone	5	6.5	1.5	780	0.0075	0.0004	0.06	0.0002	3.86E-06	100	10	1.5	1	2.64E-05	1000	0.0%	2.64E-14
	Toluene	5	6.2	1.2	780	0.0075	0.0004	0.06	0.0002	3.16E-06	100	10	1.5	1	2.11E-05	400	0.0%	5.27E-14
	Acetone	5	21	16	780	0.0075	0.0004	0.06	0.0025	4.22E-05	100	10	1.5	1	2.81E-04	350	0.0%	8.04E-13
																	Total Risk:	8.83E-13

Definitions: C_i: Initial concentration
C_f: final concentration
Delta C_c: change in chamber concentration over time
Time: incubation Time
V_c: Chamber Volume
V_s: Summa Canister Volume
A_c: Chamber surface contact area
Flux (Ei) : Calculated flux per equations in report text
A_f: Area of Field
Q = field ventilation rate = W * H * WS
W = width of field perpendicular to the wind
H = height of box perpendicular to the wind
WS = Wind speed
Cr-e: Calculated air concentration in outside volume
Cr-a: OA-EPA allowed room concentration for 1 in 1 million risk
Cr-e/Cr-a: Ratio of calculated to allowed in %
Risk: Calculated risk

Calculations for flux and room concentration as described in text

Ar	1.88E+08 cm2	1.88E+02	m2
HEIGHT	2.44E+02 cm	2.44E+00	M
ER	5.00E-01 per hour		
Q (0.5/hr)	6.30E+04 cm3/sec	3.78E+00	m3/min

Prepared By: KLM / 6.7.2007
Checked By: AWB / 6.13.2007

printed 09/18/2007 4:52PM by epa4561 p. 115/439

Summary of Surface Flux Chamber Fluxes and Calculated Risk

Chamber	Compound	C_f (ug/m3)	C_i (ug/m3)	Delta C_c (ug/m3)	Time (min)	V_c (m^3)	V_s (m^3)	A_c (m^2)	Flux (Es) (ug/min-m^2)	Flux (Es) (ug/sec-m^2)	A_r (m^2)	W (m)	H (m)	WS (m/sec)	$C_{i,e}$ (ug/m^3)	$C_{r,e}$ (ug/m^3)	$C_{i,e}/C_{r,e}$	Risk
SG-9	Benzene	5	6.6	1.6	630	0.0075	0.0004	0.06	0.0002	2.77E-06	100	10	1.5	1	2.81E-05	0.31	0.0%	9.10E-11
	Carbon disulfide	6	29	24	630	0.0075	0.0004	0.06	0.0038	6.02E-05	100	10	1.5	1	4.02E-04	700	0.0%	5.74E-13
	cis-1,2 DCE	5	100	95	630	0.0075	0.0004	0.06	0.0143	2.38E-04	100	10	1.5	1	1.59E-03	35	0.0%	4.54E-11
	trans-1,2 DCE	6	11	6	630	0.0075	0.0004	0.06	0.0009	1.51E-05	100	10	1.5	1	1.00E-04	70	0.0%	1.43E-12
	n-Heptane	5	13	8	630	0.0075	0.0004	0.06	0.0012	2.01E-05	100	10	1.5	1	1.34E-04	200	0.0%	6.69E-13
	n-Hexane	5	9.8	4.8	630	0.0075	0.0004	0.06	0.0007	1.20E-05	100	10	1.5	1	8.03E-05	200	0.0%	4.02E-13
	TCE	5	35	30	630	0.0075	0.0004	0.06	0.0045	7.53E-05	100	10	1.5	1	5.02E-04	0.022	2.3%	2.28E-08
	PCE	5	6.3	1.3	630	0.0075	0.0004	0.06	0.0002	3.28E-06	100	10	1.5	1	2.18E-05	0.81	0.0%	2.59E-11
	Vinyl chloride	5	6.8	1.8	630	0.0075	0.0004	0.06	0.0003	4.52E-06	100	10	1.5	1	3.01E-05	0.28	0.0%	1.08E-10
	1,2,4-Trimethylbenzene	5	6.4	1.4	630	0.0075	0.0004	0.06	0.0002	3.51E-06	100	10	1.5	1	2.34E-05	8	0.0%	3.80E-12
	Toluene	5	6.6	1.6	630	0.0075	0.0004	0.06	0.0003	4.52E-06	100	10	1.5	1	3.01E-05	400	0.0%	7.53E-14
	m,p-Xylene	5	6.3	1.3	630	0.0075	0.0004	0.06	0.0002	3.28E-06	100	10	1.5	1	2.18E-05	7000	0.0%	3.11E-15
	Naphthalene	5	13	8	630	0.0075	0.0004	0.06	0.0012	2.01E-05	100	10	1.5	1	1.34E-04	3.1	0.0%	4.32E-11
																	Total Risk:	2.31E-08

Definitions: C_f: initial concentration
C_i: final concentration
Delta C_c: change in chamber concentration over time
Time: Incubation Time
V_c: Chamber Volume
V_s: Summa Canister Volume
A_c: Chamber surface contact area
Flux (Es) : Calculated flux per equations in report text
A_r: Area of Field
Q = field ventilation rate = W * H * WS
W = width of field perpendicular to the wind
H = height of box perpendicular to the wind
WS = Wind speed
$C_{i,e}$: Calculated air concentration in outside volume
$C_{r,e}$: CA-EPA allowed room concentration for 1 in 1 million risk
$C_{i,e}/C_{r,e}$: Ratio of calculated to allowed in %
Risk: Calculated risk

Calculations for flux and room concentration as described in text

Ar	1.86E+06 cm2	1.86E+02	m2	
HEIGHT	2.44E+02 cm	2.44E+00	M	
ER	5.00E-01 per hour			
Q (0.5/hr)	6.30E+04 cm3/sec	3.78E+00	m3/min	

Prepared By: KLM / 6.7.2007
Checked By: AWB / 6.13.2007

printed 09/18/2007 4:52PM by epa4561 p. 116/439

Summary of Surface Flux Chamber Fluxes and Calculated Risk

Chamber	Compound	C_i (ug/m3)	C_f (ug/m3)	Delta C_c (ug/m3)	Time (min)	V_c (m^3)	V_s (m^3)	A_c (m^2)	Flux (Ei) (ug/min-m^2)	Flux (Ei) (ug/sec-m^2)	A_f (m^2)	W (m)	H (m)	WS (m/sec)	C_{-a} (ug/m^3)	C_{-a} (ug/m^3)	C_{-a}/C_{-a}	Risk
SF-10	Carbon disulfide	6	11	6	825	0.0075	0.0004	0.08	0.0006	1.62E-05	100	10	1.5	1	1.01E-04	700	0.0%	1.44E-13
	PCE	5	14	9	825	0.0075	0.0004	0.08	0.0014	2.27E-05	100	10	1.5	1	1.52E-04	0.11	0.0%	1.87E-10
	TCE	6	11	6	825	0.0075	0.0004	0.08	0.0009	1.52E-05	100	10	1.5	1	1.01E-04	0.022	0.5%	4.58E-09
	Propane	5	12	7	825	0.0075	0.0004	0.08	0.0011	1.77E-05	100	10	1.5	1	1.18E-04	2.4	0.0%	4.91E-11
	cis-1,2 DCE	6	8.4	1.4	825	0.0075	0.0004	0.08	0.0002	3.54E-06	100	10	1.5	1	2.36E-05	35	0.0%	6.73E-13
																	Total Risk:	4.82E-08

Definitions: C_i: Initial concentration
C_f: final concentration
Delta C_c: change in chamber concentration over time
Time: Incubation Time
V_c: Chamber Volume
V_s: Summa Canister Volume
A_c: Chamber surface contact area
Flux (Ei) : Calculated flux per equations in report text
A_f: Area of Field
Q = field ventilation rate = W * H * WS
W = width of field perpendicular to the wind
H = height of box perpendicular to the wind
WS = Wind speed
Cr-a: Calculated air concentration in outside volume
Cr-a: CA-EPA allowed room concentration for 1 in 1 million risk
Cr-a/Cr-a: Ratio of calculated to allowed in %
Risk: Calculated risk

Calculations for flux and room concentration as described in text

Ar	1.00E+06 cm2	1.00E+02	m2
HEIGHT	2.44E+02 cm	2.44E+00	M
ER	5.00E-01 per hour		
Q (0.5/hr)	6.20E+04 cm3/sec	3.72E+00	m3/min

Prepared By: KLM / 6.7.2007
Checked By: AWB / 6.13.2007

printed 09/18/2007 4:52PM by epa4561 p. 117/439

Summary of Surface Flux Chamber Fluxes and Calculated Risk

Chamber	Compound	C_i (ug/m3)	C_f (ug/m3)	Delta C_c (ug/m3)	Time (min)	V_c (m^3)	V_s (m^3)	A_c (m^2)	Flux (Er_i) (ug/min-m^2)	Flux (Er_i) (ug/sec-m^2)	A_f (m^2)	W (m)	H (m)	WS (m/sec)	C_{r-e} (ug/m^3)	C_{r-a} (ug/m^3)	C_{r-e}/C_{r-a}	Risk
BF-11	Carbon disulfide	5	7.4	2.4	839	0.0075	0.0004	0.06	0.0004	6.02E-06	180	10	1.5	1	4.02E-05	700	0.0%	5.74E-14
	Acetone	5	26	21	839	0.0075	0.0004	0.06	0.0032	5.27E-05	180	10	1.5	1	3.51E-04	350	0.0%	1.00E-12
	PCE	5	43	38	839	0.0075	0.0004	0.06	0.0057	9.54E-05	180	10	1.5	1	6.36E-04	0.81	0.1%	7.85E-10
																	Total Risk:	7.86E-10

Definitions: C_i: Initial concentration
C_f: final concentration
Delta C_c: change in chamber concentration over time
Time: Incubation Time
V_c: Chamber Volume
V_s: Sample Canister Volume
A_c: Chamber surface contact area
Flux (Er_i) : Calculated flux per equations in report text
A_f: Area of Field
Q = field ventilation rate = W * H * WS
W = width of field perpendicular to the wind
H = height of box perpendicular to the wind
WS = Wind speed
Cr-e: Calculated air concentration in outside volume
Cr-a: OA-EPA allowed room concentration for 1 in 1 million risk
Cr-e/Cr-a: Ratio of calculated to allowed in %
Risk: Calculated risk

Calculations for flux and room concentration as described in text

Ar	1.86E+06 cm2	1.86E+02	m2	m2	
HEIGHT	2.44E+02 cm	2.44E+00	M	M	
ER	8.00E-01 per hour				
Q (0.5/hr)	6.30E+04 cm3/sec	3.78E+00	m3/min	m3/min	Prepared By: KLM / 6.7.2007 Checked By: AMB / 6.13.2007

printed 09/18/2007 4:52PM by epa4561 p. 118/439

Summary of Surface Flux Chamber Fluxes and Calculated Risk

Chamber	Compound	C_i (ug/m3)	C_f (ug/m3)	Delta C_c (ug/m3)	Time (min)	V_c (m^3)	V_s (m^3)	A_c (m^2)	Flux (Eq) (ug/min-m^2)	Flux (Eq) (ug/sec-m^2)	A_f (m^2)	W (m)	H (m)	WS (m/sec)	C_{r-e} (ug/m^3)	C_{r-s} (ug/m^3)	C_{r-e}/C_{r-s}	Risk
SF-13	Carbon disulfide	5	5.9	0.9	820	0.0075	0.0004	0.06	0.0001	2.29E-06	100	10	1.5	1	1.52E-06	700	0.0%	2.18E-14
																	Total Risk:	2.18E-14

Definitions: C_i: Initial concentration
C_f: final concentration
Delta C_c: change in chamber concentration over time
Time: Incubation Time
V_c: Chamber Volume
V_s: Summa Canister Volume
A_c: Chamber surface contact area
Flux (Eq) : Calculated flux per equations in report text
A_f: Area of Field
Q = field ventilation rate = W * H * WS
W = width of field perpendicular to the wind
H = height of box perpendicular to the wind
WS = Wind speed
Cr-e: Calculated air concentration in outside volume
Cr-s: CA-EPA allowed room concentration for 1 in 1 million risk
Cr-e/Cr-s: Ratio of calculated to allowed in %
Risk: Calculated risk

Calculations for flux and room concentration as described in text

Ar	1.66E+06 cm2	1.66E+02	m2
HEIGHT	2.44E+02 cm	2.44E+00	M
ER	5.00E-01 per hour		
Q (0.5/hr)	6.30E+04 cm3/sec	3.78E+00	m3/min

Prepared By: KLM / 6.7.2007
Checked By: AWB / 6.12.2007

printed 09/18/2007 4:52PM by epa4561 p. 119/439

printed 09/18/2007 4:52PM by epa4561 p. 120/439

FIGURES

Source: U.S. Geological Survey Quadrangle Berwyn, Illinois. 7.5 Minute Series (Topographic), Dated 1993.
T 38N
R 12E
S 36

N

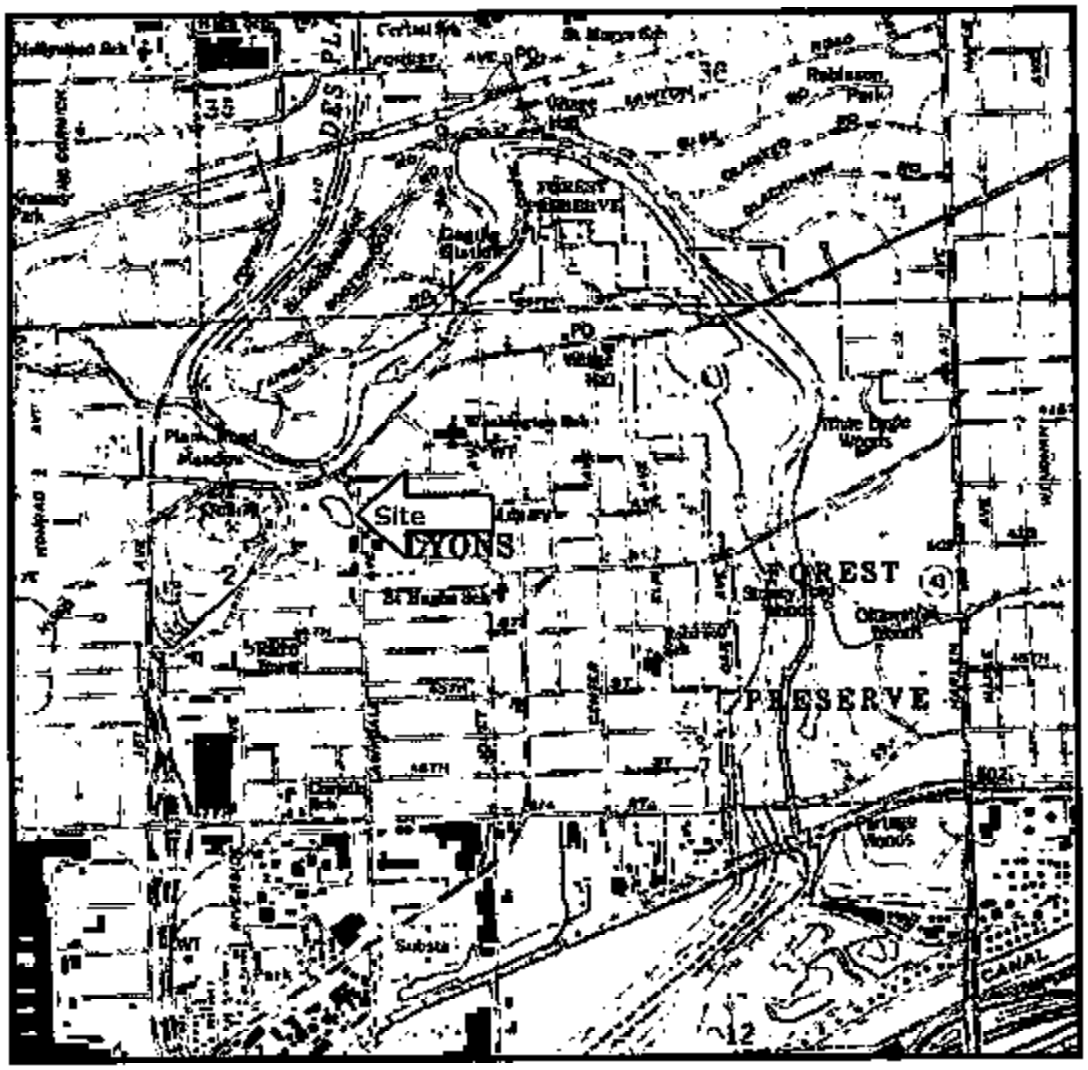

0 1/4 1/2 1 MILE

0 1000 3000 5000 FT

Quadrangle Location

Prepared by/Date: KAB / 6.7.2007
Checked by/Date: KLM / 6.7.2007

Village of Lyons Future Use Development SW Corner of Ogden & Lawndale Avenues Lyons, Illinois	Bradburne, Briller & Johnson, LLC www.bbjgroup.com	Site Location Map Project 0253901 Figure 1

printed 09/18/2007 4:52PM by epa4561 p. 122/439

Based on site reconnaissance by Mr. Kevin McCartney, Ms. Karen Beaman, and Ms. Cynthia Hansen of BBBJ on May 11, 2007.

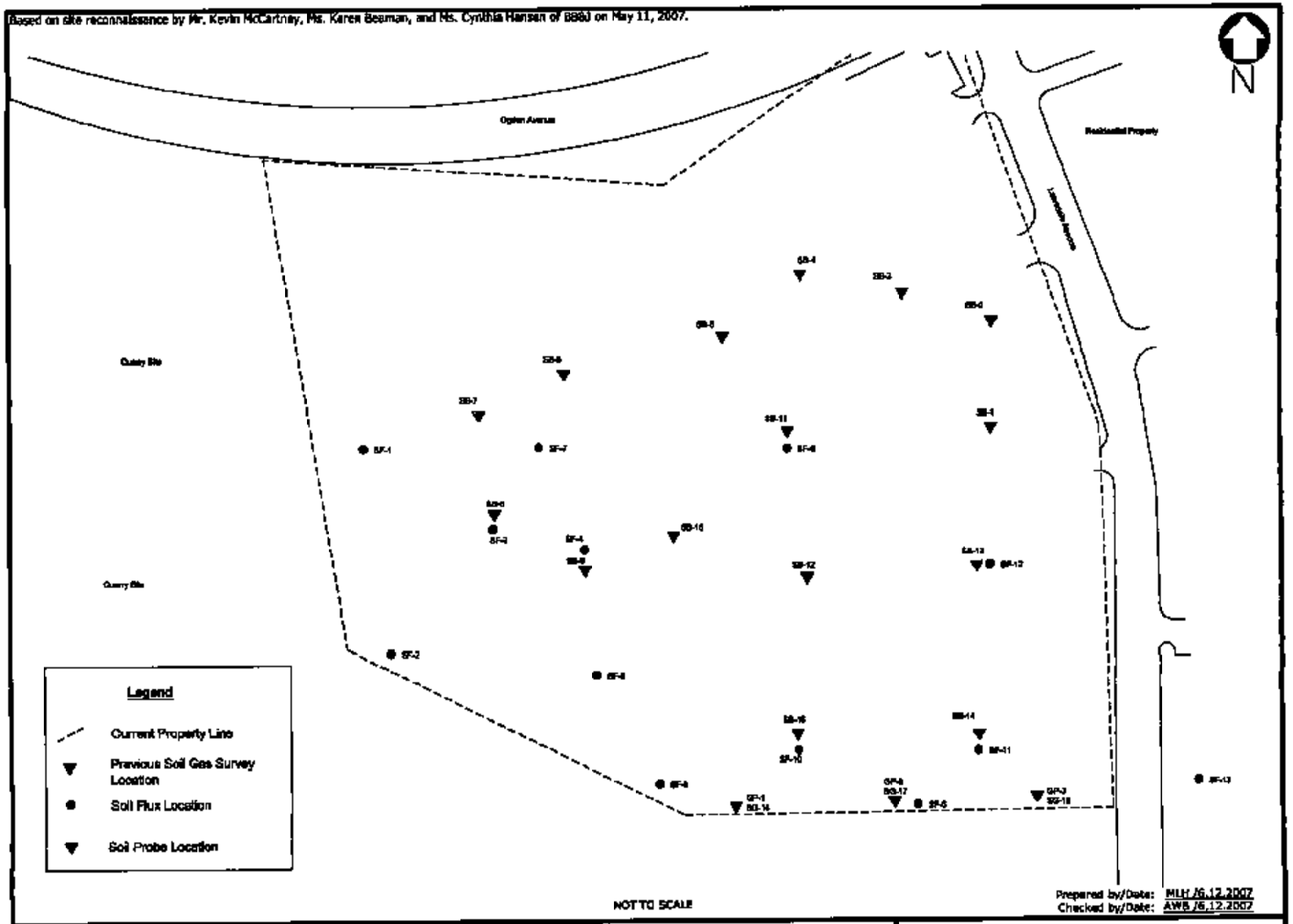

Village of Lyons Future Use Evaluation Southwest Corner of Ogden & Lawndale Avenues Lyons, Illinois	BRADBURNE, BRILLER & JOHNSON, LLC www.bbjgroup.com	Site Plan with Soil, Soil Vapor, and Soil Flux Sampling Locations Project No. 0253901 Figure 2

printed 09/18/2007 4:52PM by epa4561 p. 123/439

APPENDIX A

FIELD PROCEDURES

printed 09/18/2007 4:52PM by epa4561 p. 124/439

APPENDIX A
FIELD PROCEDURES

The media targeted by this subsurface assessment and the sampling methods and protocol are described in this appendix.

A.1 Sampling Equipment

The following sampling equipment was used during field activities at the Subject Property:

- Geoprobe® direct-push technology (DPT) sampling equipment;
- Rig utilizing a 6.25" auger, split spoon samplers, and capable of air rotary drilling;
- A photo-ionization detector (PID), equipped with an 10.6 electron volt (eV) lamp for field-screening soil samples and for health and safety air monitoring;
- Clean, plastic "Ziplock" bags for use in describing soil samples and for field screening purposes;
- Laboratory-supplied containers for the collection of soil gas, soil and ground-water samples targeted for laboratory analyses;
- Phosphate-free soap, potable water and distilled water for equipment cleaning;
- Laboratory-supplied deionized water (purge water) for the preparation of quality assurance/quality control (QA/QC) samples;
- Disposable latex and/or nitrile gloves;
- Sample shipping containers (e.g., coolers); and,
- Sealed trip blanks, prepared by the laboratory using deionized water and shipped with the sample coolers.

A.2 Soil probe/Soil Probe Advancement and Soil Sampling Procedures

This section describes the various types of soil probe and/or soil probe techniques that were used, as well as specific soil sample collection procedures.

A.2.1 DPT Advancement Procedures – Soil Gas

A Geoprobe® DPT sampling machine was used to create borings for the soil gas probes. The machine advances a soil probe by means of a hydraulic hammer that drove the sampler vertically into the ground. Once the boring is created, the 1/4-inch diameter poly tubing and attached soil gas probe can be inserted. Approximately a foot of sand is poured on top of the probe tip to a depth of five feet bgs to minimize disruption of airflow to the sampling tip. At least one foot of dry granular bentonite is poured on top of each sand pack to preclude the infiltration of hydrated bentonite grout. The probe is then filled to the surface with hydrated bentonite with the end of the soil gas probe tubing protruding from the subsurface. At least 30 minutes for the subsurface conditions to equilibrate before conducting purging and sampling activities.

printed 09/18/2007 4:52PM by epa4561 p. 125/439

A.2.2 Hollow Stem Auger Procedures

Soil samples are collected using a 1.5-inch diameter, 18-inch steel sampling hollow stem auger. A hydraulic auger, attached to a truck, is used to drill to a desired depth, then a split spoon barrel (SSB) is advanced to the desired depth and a discrete sample is collected.

A.2.3 Soil Sample Screening and Collection Procedures

Upon retrieval, the soil sample was removed from the sampler and visually classified by field personnel. Each soil sample was split into two portions and placed in re-sealable plastic bags. One bag was placed into a cooler with ice, and the other was kept in a warm environment (approximately 70 degrees Fahrenheit or greater) for approximately 10 minutes in an effort to promote volatilization of potential organic vapors within the soil.

After approximately 10 minutes, headspace screening using a PID was performed on the soil sample kept in the warm environment. The PID was calibrated daily in accordance with the manufacturer's directions. After a minimum of 10 minutes within a warm environment, the probe on the PID was inserted into the soil bag, and a sample of headspace air was withdrawn. The maximum reading was recorded in the field book and/or on the soil probe log. Readings were recorded in parts per million, referencing the calibration vapor used.

Based on field screening and visual observations, field personnel selected a "worst case" soil sample from each location generally based on the following criteria:

- The soil sample that exhibited the highest PID screening results; and/or,
- Appeared to exhibit the most prominent staining; and/or,
- Exhibited the strongest potential chemical odor (or, in the absence of an apparent chemical odor, the strongest anomalous odor, as noted).

The selected soil sample's corresponding soil bag contained in the cooler on ice was then packed in the appropriate laboratory-supplied containers for shipment to the laboratory for chemical analysis.

The soil contained in the soil bag used for field screening also was used for classification. The soil was visually classified by the on-site field personnel in accordance with American Society for Testing and Materials (ASTM) D 2488-93 and described on the appropriate field sampling form(s).

A.3 Soil Flux Chambers

Soil flux chambers are utilized to collect soil gas escaping from the ground surface. The flux chamber is placed on the ground and soil is packed around the flux chamber edges to create an air-tight environment inside the flux chambers. An "initial" soil flux sample of ambient air within the flux chamber is collected for each soil flux location by directly connecting a 400-mL Summa canister to the soil flux chamber. The valve is opened on the 400-mL canister and the reading on the vacuum gauge is recorded. If the gauge read at least -25 inches of mercury, the canister is allowed to fill. When the gauge read zero inches of mercury, the canister is disconnected. After a minimum of eight hours of allowing the flux chamber to equilibrate, BB&J resamples the flux chamber by again connecting the 400-mL Summa canisters to the flux chamber.

printed 09/18/2007 4:52PM by epa4561 p. 126/439

A.4 Probehole Abandonment

Following the advancement of the soil probes, the probeholes were backfilled with bentonite chips to approximately 6 inches below ground surface (bgs) inside the Subject Property. The surface above the probehole was then patched with asphalt or concrete, as necessary, to restore the original surface.

A.5 Quality Assurance/Quality Control

The following sections outline QA/QC protocol, sample containers, sample preservation, sample identification and chain-of-custody procedures implemented during sampling activities.

A.5.1 QA/QC Samples

Trip Blanks

Trip blank samples that consisted of de-ionized water, provided by the analytical laboratory, accompanied the cooler(s) containing the samples from the laboratory, to the field and back to the laboratory. The trip blanks were used to assess potential cross-contamination from the cooler and handling practices, in addition to assessing potential cross-contamination between samples. Trip blanks will be analyzed for BTEX only. One trip blank will be analyzed per cooler.

Equipment Rinsates

Equipment rinsates were collected to evaluate potential cross-contamination of samples during equipment cleaning procedures. The frequency of equipment rinsates was either one per every 20 samples of a particular media sampled (e.g., soil, ground water, etc.) or one for each type of sampling equipment used. The equipment rinsates were collected by pouring deionized water provided by the laboratory over the sampling equipment and into sample containers. The equipment rinsates were shipped with the soil and/or ground-water samples collected that day and were analyzed for the same suite of potential constituents of concern (COCs) as the environmental samples.

A.5.2 Sample Containers and Preservation

Sample containers prepared by a commercial vendor were provided by the laboratory.

A.5.3 Sample Identification

Prior to sample collection, the appropriate container (with preservative, if applicable) was labeled with the following information:

- Sample identification;
- Initials of collector;
- Date and time of collection;
- Analytical parameters requested; and,
- Preservative used.

Samples were packed in coolers (with containerized ice) complete with custody seals and transported via overnight courier to the laboratory. Chain-of-custody documentation outlined as follows accompanied each shipment of samples to the laboratory.

printed 09/18/2007 4:52PM by epa4561 p. 127/439

A.5.4 Chain-of-Custody Procedures

Chain-of-custody began when the pre-cleaned sample containers arrived in the field in coolers with signed and dated custody seals. At the time of sample collection, the labeled samples were placed into an iced cooler. A line-item chain-of-custody form was then completed by the sampler. Chain-of-custody allowed the samples to be traced from the time of collection to their receipt in the laboratory. Upon completion of all line items, the sampler signed, dated, listed the time, and checked the completeness of all descriptive information contained on the form. One copy of the completed chain-of-custody was retained by the sampler. Each individual who subsequently assumed responsibility for the samples signed the chain-of-custody record. The following items were included on the chain-of-custody form:

- Sample identification;
- Signature of sampler;
- Date and time of collection;
- Sample type (i.e., aqueous or soil);
- Sample location;
- Number, size, and type of containers;
- Analytical parameters requested;
- Preservative (where applicable);
- Signatures of personnel involved in the chain of possession; and,
- Dates and times of relinquishment and receipt.

A.6 Cleaning and Disposal of Investigation-Derived Wastes (IDW)

Cleaning procedures were employed to minimize the potential for cross-contamination, off-site migration of potential COCs, and personal exposure to COCs. Solid materials and fluids generated during site assessment activities were containerized on-site. The following sections summarize cleaning procedures and disposal of IDW.

A.6.1 Equipment Cleaning

Equipment involved in field sampling activities was cleaned prior to probehole advancement, sampling, or leaving the Subject Property. During soil sampling, cleaning of the sampling equipment was conducted between each sample interval and included the following:

- Removal of visible sediment using brush and non-phosphate soap and potable water mixture; and,
- Potable water rinse.

A.7 Record Keeping

BB&J field personnel documented the field activities (with corresponding times) and pertinent information in a dedicated project filed logbook. Information that was recorded included: the names and companies of on-site personnel (BB&J, client, subcontractors, etc), weather conditions, and the purpose of activities and details of the fieldwork (e.g., soil conditions, sampling depths, etc.).

printed 09/18/2007 4:52PM by epa4561 p. 128/439

APPENDIX B

SOIL BORING LOGS

Field Boring Log Page 1 of 3

Site File No.	10408 - 0053901	County Cook	
Site File Name	Lyons Landfill - Lyons, IL		
Fed ID No.			
Quadrangle	Berwyn, IL		
UTM (or State Plane) Coordinates			
N. (x)		E(y)	
Latitude	41 ° 48 ' 53 "	Longitude	87 ° 49 ' 38 "
Boring Location	See Figure		
Drilling Equipment	Drill Rig w/Geoprobe®		

Boring No.	GP-1	Monitor Well No.	
Surface Elev.	N/A	Completion Depth	12 feet
Auger Depth	N/A	Rotary Depth	N/A
Date Started	5/11/2007	Date Finished	5/11/2007

**NGVD: National Geodetic Vertical Datum

BB&J Personnel
G - Kevin McCarney, BB&J
G - Karen Beaman, BB&J
G - Cynthia Hansen, BB&J
D - Brian Shoop, TerraTrans

Depth in Feet	DESCRIPTION OF MATERIALS	Graphic Log	Depth in Feet	SAMPLE ID	SAMPLE TYPE	SAMPLE REC.	PENETROMETER (BLOW COUNTS)		OVA OR PID READINGS	REMARKS
1	FILL: Loose white and brown, with gravel; damp		1	A	G	4ft			1.5	Sampled 0-2 feet bgs
2			2							Petroleum odor
3	Loose black ASPHALT, damp		3	B	G				0.4	
4	FILL: Loose white FILL, with gravel; damp		4							
5	FILL: Very stiff black clay; damp		5	C	G				0.4	
6	FILL: Stiff orange and brown silty sand; damp		6			4ft				
7			7	D	G				0.1	
8	FILL: Very stiff gray clay, damp		8							
9	FILL: Loose tan and gray silty sand; damp		9	E	G				0.2	
10			10			4ft				
11	FILL: Loose gray silty sand; moist		11	F	G				0.1	
12			12							
	Boring terminated at 12 feet bgs									
13			13	G						
14			14							
15			15	H						
16			16							
17			17	I						
18			18							
19			19	J						
20			20							

NOTES:

NA: Not Applicable
No: Number
NM: Not Measured
Elev: Elevation
G: Grab
C: Composite
bgs: below ground surface
Fed: Federal
PTR: Penetrometer
ppm: parts per million
D: Dry
ID: Identification
P: Damp
M: Moist
W: Wet
H: Helper
S: Saturated
OV: Organic Vapors
Groundwater

Field Boring Log Page 2 of 3

Site File No.	10408 - 0213901	County Cook	
Site File Name	Lyons Landfill - Lyons, IL		
Fed ID No.			
Quadrangle	Berwyn, IL		
UTM (or State Plane) Coordinates			
N, (x)		E,(y)	
Latitude	41 ° 48 ' 53 "	Longitude	87 ° 49 ' 38 "
Boring Location	See Figure		
Drilling Equipment	Drill Rig w/Geoprobe®		

Boring No.	GP-2	Monitor Well No.	
Surface Elev.	N/A	Completion Depth	12 feet
Auger Depth	N/A	Rotary Depth	N/A
Date Started	5/11/2007	Date Finished	5/11/2007

**NGVD: National Geodetic Vertical Datum

BB&J Personnel
- G - Kevin McCartney, BB&J
- G - Karen Beaman, BB&J
- G - Cynthia Hansen, BB&J
- D - Brian Shoop, TerraTrace

Depth in Feet	DESCRIPTION OF MATERIALS	Graphic Log	Depth in Feet	SAMPLES: SAMPLE ID	SAMPLE TYPE	SAMPLE REC	PENETROMETER (TSF)	(BLOW COUNTS)	OVA OR PID READINGS	REMARKS
1	FILL: Medium dense dark brown with some gravel; moist		1	A	G	48			0.1	Sampled 4-6 feet bgs
2	FILL: Medium dense brown, with some gravel; moist		2							
3	FILL: Loose white gray, with some gravel and sand; moist		3	B	G				2.3	
4			4							
5			5	C	G	48			0.5	
6	FILL: Very stiff greenish-gray clay; damp		6							
7	FILL: Loose yellow-orange clayey sand; damp		7	D	G				0.5	
8			8							
9	FILL: Medium stiff tan orange sandy clay; damp		9	E	G	48			0.2	
10			10							
11	FILL: Loose light gray silty sand; moist		11	F	G				0.4	
12			12							
13	Boring terminated at 12 feet bgs		13	G						
14			14							
15			15	H						
16			16							
17			17	I						
18			18							
19			19	J						
20			20							

NOTES:

NA: Not Applicable	G: Grab	PTR: Penetrometer	P: Damp	S: Saturated
No: Number	C: Composite	ppm: parts per million	M: Moist	OV: Organic Vapors
NM: Not Measured	bgs: below ground surface	D: Dry	W: Wet	▼ Groundwater
Elev: Elevation	Fed: Federal	ID: Identification	H: Helper	

Field Boring Log — Page 3 of 3

Site File No.	10408 - 0253901	County: Cook	
Site File Name	Lyons Landfill - Lyons, IL		
Fed ID No.			
Quadrangle	Berwyn, IL		
UTM (or State Plane) Coordinates			
N. (x)		E.(y)	
Latitude	41 ° 48 ' 53 "	Longitude	87 ° 49 ' 38 "
Boring Location	See Figure		
Drilling Equipment	Drill Rig w/Geoprobe®		

Boring No.	GP-3	Monitor Well No.	
Surface Elev.	N/A	Completion Depth	12 feet
Auger Depth	N/A	Rotary Depth	N/A
Date Started	5/11/2007	Date Finished	5/11/2007

**NGVD: National Geodetic Vertical Datum

BB&J Personnel:
G - Kevin McCartney, BB&J
G - Karen Beeman, BB&J
G - Cynthia Hansen, BB&J
D - Brian Shoop, TerraTrans

Depth in Feet	DESCRIPTION OF MATERIALS	Graphic Log	Depth in Feet	SAMPLE ID	SAMPLE TYPE	SAMPLE REC	PENETROMETER (BLOW COUNTS)	OVA OR PID READINGS	REMARKS
1	FILL: Loose brown, with some gravel; damp		1	A	G	4ft		0.2	Sampled 4-6 feet bgs
2	FILL: Loose white, with some gravel and sand; damp		2						
3			3	B	G			0.1	
4	FILL: Very stiff dark green/gray/black clay; damp		4						
5	FILL: Soft light gray clayey sand, with some gravel; damp		5	C	G	4ft		0.4	
6	FILL: Medium stiff yellow brown silty sand, with trace gravel; damp		6						
7	FILL: Loose white sand with gravel; damp		7	D	G			0.1	
8	FILL: Medium stiff yellow brown silty sand, with trace gravel; damp		8						
9	FILL: Very loose yellow and tan, sand; damp		9	E	G	4ft		0.1	
10			10						
11	FILL: Very loose gray and tan sand; moist		11	F	G			0.1	
12			12						
13	Boring terminated at 12 feet bgs		13						
14			14						
15			15						
16			16						
17			17						
18			18						
19			19						
20			20						

NOTES:

NA: Not Applicable
No: Number
NM: Not Measured
Elev: Elevation
G: Grab
C: Composite
bgs: below ground surface
Fed: Federal
PTR: Penetrometer
ppm: parts per million
D: Dry
ID: Identification
P: Damp
M: Moist
W: Wet
H: Helper
S: Saturated
OV: Organic Vapors
Groundwater

printed 09/18/2007 4:52PM by epa4561 p. 132/439

APPENDIX C

LABORATORY ANALYTICAL REPORTS

MOBILE GEOCHEMISTRY

H&P

24 May 2007

Mr. Kevin McCartney
Bradburne, Briller & Johnson, LLC - Chicago
515 N. State Street, Suite 2200
Chicago, IL 60610
RE: BBJ051507-11

Enclosed are the results of analyses for samples received by the laboratory on 15-May-07 . If you have any questions concerning this report, please feel free to contact me.

Sincerely,

Janis Villarreal
Laboratory Director

H&P Mobile Geochemistry operates under CA Environmental Lab Accreditation Program Numbers 1317, 1561, 1667, 1745, 1746, 2088, 2278, 2543, 2579 and 2595.

2470 Impala Drive, Carlsbad, California 92010 | 760.804.9678 — Fax 760.804.9159
3825 Industry Avenue, Lakewood, California 90712 | 562.426.6991 — Fax 562.426.6995
www.HandPmg.com | 1-800-834-9688

MOBILE GEOCHEMISTRY
H&P

Beadburne, Briller & Johnson, LLC - Chicago 515 N State Street Suite 2200 Chicago, IL 60610	Project BBJ051507-11 Project Number 0253901 Project Manager Mr Kevin McCartney	Reported 24-May-07

ANALYTICAL REPORT FOR SAMPLES

Sample ID	Laboratory ID	Matrix	Date Sampled	Date Received
SG-16	E705046-01	Vapor	11-May-07	15-May-07
SG-17	E705046-02	Vapor	11-May-07	15-May-07
SG-18	E705046-03	Vapor	11-May-07	15-May-07

MOBILE GEOCHEMISTRY
H&P

Bradburne, Briller & Johnson, LLC - Chicago 515 N. State Street, Suite 2200 Chicago, IL 60610	Project: BBJ051507-11 Project Number: 0253901 Project Manager: Mr. Kevin McCartney	Reported: 24-May-07

Methane by GC/FID

H&P Mobile Geochemistry

Analyte	Result	Reporting Limit	Units	Dilution Factor	Batch	Prepared	Analyzed	Method	Notes
SG-16 (E705046-01) Vapor Sampled: 11-May-07 Received: 15-May-07									
Methane	20000	20	ppmv	2	EE71506	15-May-07	15-May-07	Modified EPA 8015B	
SG-17 (E705046-02) Vapor Sampled: 11-May-07 Received: 15-May-07									
Methane	16000	20	ppmv	2	EE71506	15-May-07	15-May-07	Modified EPA 8015B	
SG-18 (E705046-03) Vapor Sampled: 11-May-07 Received: 15-May-07									
Methane	990	10	ppmv	1	EE71506	15-May-07	15-May-07	Modified EPA 8015B	

MOBILE GEOCHEMISTRY
H&P

Bradburne, Briller & Johnson, LLC - Chicago	Project HBJ051507-11	
515 N State Street, Suite 2200	Project Number 0253901	Reported
Chicago, IL 60610	Project Manager Mr Kevin McCartney	24-May-07

Volatile Organic Compounds by EPA TO-15

H&P Mobile Geochemistry

Analyte	Result	Reporting Limit	Units	Dilution Factor	Batch	Prepared	Analyzed	Method	Notes
SG-16 (E705046-01) Vapor Sampled: 11-May-07 Received: 15-May-07									
Propene	1200	10	ug/m³ Air	1	EE72302	22-May-07	22-May-07	EPA TO-15	E
Dichlorodifluoromethane	ND	10	"	"	"	"	"	"	
Chloromethane	ND	5.0	"	"	"	"	"	"	
Dichlorotetrafluoroethane	ND	10	"	"	"	"	"	"	
Vinyl chloride	410	5.0	"	"	"	"	"	"	
Bromomethane	ND	5.0	"	"	"	"	"	"	
Chloroethane	ND	5.0	"	"	"	"	"	"	
Trichlorofluoromethane	ND	5.0	"	"	"	"	"	"	
Acetone	ND	20	"	"	"	"	"	"	
1,1-Dichloroethene	ND	5.0	"	"	"	"	"	"	
1,1,2-Trichlorotrifluoroethane	ND	10	"	"	"	"	"	"	
Methylene chloride	ND	5.0	"	"	"	"	"	"	
Carbon disulfide	70	5.0	"	"	"	"	"	"	
trans-1,2-Dichloroethene	ND	5.0	"	"	"	"	"	"	
Methyl tert-butyl ether	ND	5.0	"	"	"	"	"	"	
Vinyl acetate	ND	5.0	"	"	"	"	"	"	
1,1-Dichloroethane	5.1	5.0	"	"	"	"	"	"	
2-Butanone	32	5.0	"	"	"	"	"	"	
n-Hexane	100	5.0	"	"	"	"	"	"	
cis-1,2-Dichloroethene	13	5.0	"	"	"	"	"	"	
Ethyl acetate	ND	5.0	"	"	"	"	"	"	
Chloroform	ND	5.0	"	"	"	"	"	"	
Tetrahydrofuran	ND	5.0	"	"	"	"	"	"	
1,1,1-Trichloroethane	ND	5.0	"	"	"	"	"	"	
1,2-Dichloroethane	ND	5.0	"	"	"	"	"	"	
Benzene	92	5.0	"	"	"	"	"	"	
Carbon tetrachloride	ND	5.0	"	"	"	"	"	"	
Cyclohexane	52	5.0	"	"	"	"	"	"	
n-Heptane	57	5.0	"	"	"	"	"	"	
Trichloroethene	13	5.0	"	"	"	"	"	"	
1,2-Dichloropropane	ND	5.0	"	"	"	"	"	"	
1,4-Dioxane	ND	5.0	"	"	"	"	"	"	
Bromodichloromethane	ND	5.5	"	"	"	"	"	"	
cis-1,3-Dichloropropene	ND	5.0	"	"	"	"	"	"	
4-Methyl-2-pentanone	ND	5.0	"	"	"	"	"	"	
trans-1,3-Dichloropropene	ND	5.0	"	"	"	"	"	"	
Toluene	38	5.0	"	"	"	"	"	"	
1,1,2-Trichloroethane	ND	5.0	"	"	"	"	"	"	

MOBILE GEOCHEMISTRY
H&P

Bradburne, Brillar & Johnson, LLC - Chicago 515 N. State Street, Suite 2200 Chicago, IL 60610	Project: BBJ051507-11 Project Number: 0253901 Project Manager: Mr. Kevin McCartney	Reported: 24-May-07

Volatile Organic Compounds by EPA TO-15

H&P Mobile Geochemistry

Analyte	Result	Reporting Limit	Units	Dilution Factor	Batch	Prepared	Analyzed	Method	Notes
SG-16 (E705046-01) Vapor Sampled: 11-May-07 Received: 15-May-07									
2-Hexanone	ND	5.0	ug/m³ Air	1	EE72302	22-May-07	22-May-07	EPA TO-15	
Dibromochloromethane	ND	5.0	"	"	"	"	"	"	
Tetrachloroethene	67	5.0	"	"	"	"	"	"	
1,2-Dibromoethane (EDB)	ND	5.0	"	"	"	"	"	"	
Chlorobenzene	ND	5.0	"	"	"	"	"	"	
Ethylbenzene	9.1	5.0	"	"	"	"	"	"	
m,p-Xylene	14	5.0	"	"	"	"	"	"	
Styrene	ND	5.0	"	"	"	"	"	"	
o-Xylene	6.0	5.0	"	"	"	"	"	"	
Bromoform	ND	20	"	"	"	"	"	"	
1,1,2,2-Tetrachloroethane	ND	5.0	"	"	"	"	"	"	
4-Ethyltoluene	ND	5.0	"	"	"	"	"	"	
1,3,5-Trimethylbenzene	ND	5.0	"	"	"	"	"	"	
1,2,4-Trimethylbenzene	7.3	5.0	"	"	"	"	"	"	
1,3-Dichlorobenzene	ND	10	"	"	"	"	"	"	
Benzyl chloride	ND	5.0	"	"	"	"	"	"	
1,4-Dichlorobenzene	ND	10	"	"	"	"	"	"	
1,2-Dichlorobenzene	ND	10	"	"	"	"	"	"	
1,2,4-Trichlorobenzene	ND	10	"	"	"	"	"	"	
Hexachlorobutadiene	ND	10	"	"	"	"	"	"	
Surrogate: 1,2-Dichloroethane-d4		*101 %*		*80-120*	"	"	"	"	
Surrogate: Toluene-d8		*100 %*		*80-120*	"	"	"	"	
Surrogate: 4-Bromofluorobenzene		*104 %*		*80-120*	"	"	"	"	
SG-17 (E705046-02) Vapor Sampled: 11-May-07 Received: 15-May-07									
Propene	990	10	ug/m³ Air	1	EE72302	22-May-07	22-May-07	EPA TO-15	E
Dichlorodifluoromethane	ND	10	"	"	"	"	"	"	
Chloromethane	ND	5.0	"	"	"	"	"	"	
Dichlorotetrafluoroethane	ND	10	"	"	"	"	"	"	
Vinyl chloride	49	5.0	"	"	"	"	"	"	
Bromomethane	ND	5.0	"	"	"	"	"	"	
Chloroethane	ND	5.0	"	"	"	"	"	"	
Trichlorofluoromethane	ND	5.0	"	"	"	"	"	"	
Acetone	140	20	"	"	"	"	"	"	
1,1-Dichloroethene	ND	5.0	"	"	"	"	"	"	
1,1,2-Trichlorotrifluoroethane	ND	10	"	"	"	"	"	"	
Methylene chloride	ND	5.0	"	"	"	"	"	"	

MOBILE GEOCHEMISTRY
H&P

Bradburne, Briller & Johnson, LLC - Chicago	Project BBJ051507-11	
515 N State Street, Suite 2200	Project Number 0253901	Reported
Chicago, IL 60610	Project Manager Mr Kevin McCarney	24-May-07

Volatile Organic Compounds by EPA TO-15

H&P Mobile Geochemistry

Analyte	Result	Reporting Limit	Units	Dilution Factor	Batch	Prepared	Analyzed	Method	Notes
SG-17 (E705046-02) Vapor Sampled: 11-May-07 Received: 15-May-07									
Carbon disulfide	120	5.0	ug/m³ Air	1	EE72302	22-May-07	22-May-07	EPA TO-15	
trans-1,2-Dichloroethene	ND	5.0	"	"	"	"	"	"	
Methyl tert-butyl ether	ND	5.0	"	"	"	"	"	"	
Vinyl acetate	ND	5.0	"	"	"	"	"	"	
1,1-Dichloroethane	12	5.0	"	"	"	"	"	"	
2-Butanone	60	5.0	"	"	"	"	"	"	
n-Hexane	96	5.0	"	"	"	"	"	"	
cis-1,2-Dichloroethene	ND	5.0	"	"	"	"	"	"	
Ethyl acetate	ND	5.0	"	"	"	"	"	"	
Chloroform	ND	5.0	"	"	"	"	"	"	
Tetrahydrofuran	ND	5.0	"	"	"	"	"	"	
1,1,1-Trichloroethane	ND	5.0	"	"	"	"	"	"	
1,2-Dichloroethane	ND	5.0	"	"	"	"	"	"	
Benzene	69	5.0	"	"	"	"	"	"	
Carbon tetrachloride	ND	5.0	"	"	"	"	"	"	
Cyclohexane	50	5.0	"	"	"	"	"	"	
n-Heptane	62	5.0	"	"	"	"	"	"	
Trichloroethene	ND	5.0	"	"	"	"	"	"	
1,2-Dichloropropane	ND	5.0	"	"	"	"	"	"	
1,4-Dioxane	ND	5.0	"	"	"	"	"	"	
Bromodichloromethane	ND	5.5	"	"	"	"	"	"	
cis-1,3-Dichloropropene	ND	5.0	"	"	"	"	"	"	
4-Methyl-2-pentanone	ND	5.0	"	"	"	"	"	"	
trans-1,3-Dichloropropene	ND	5.0	"	"	"	"	"	"	
Toluene	45	5.0	"	"	"	"	"	"	
1,1,2-Trichloroethane	ND	5.0	"	"	"	"	"	"	
2-Hexanone	ND	5.0	"	"	"	"	"	"	
Dibromochloromethane	ND	5.0	"	"	"	"	"	"	
Tetrachloroethene	40	5.0	"	"	"	"	"	"	
1,2-Dibromoethane (EDB)	ND	5.0	"	"	"	"	"	"	
Chlorobenzene	ND	5.0	"	"	"	"	"	"	
Ethylbenzene	7.1	5.0	"	"	"	"	"	"	
m,p-Xylene	15	5.0	"	"	"	"	"	"	
Styrene	ND	5.0	"	"	"	"	"	"	
o-Xylene	5.8	5.0	"	"	"	"	"	"	
Bromoform	ND	20	"	"	"	"	"	"	
1,1,2,2-Tetrachloroethane	ND	5.0	"	"	"	"	"	"	
4-Ethyltoluene	ND	5.0	"	"	"	"	"	"	

MOBILE GEOCHEMISTRY
H&P

Bradburne, Briller & Johnson, LLC - Chicago 515 N. State Street, Suite 2200 Chicago, IL 60610	Project: BBJ051507-11 Project Number: 0253901 Project Manager: Mr. Kevin McCarney	Reported: 24-May-07

Volatile Organic Compounds by EPA TO-15

H&P Mobile Geochemistry

Analyte	Result	Reporting Limit	Units	Dilution Factor	Batch	Prepared	Analyzed	Method	Notes
SG-17 (E705046-02) Vapor Sampled: 11-May-07 Received: 15-May-07									
1,3,5-Trimethylbenzene	ND	5.0	ug/m³ Air	1	EE72302	22-May-07	22-May-07	EPA TO-15	
1,2,4-Trimethylbenzene	6.6	5.0	"	"	"	"	"	"	
1,3-Dichlorobenzene	ND	10	"	"	"	"	"	"	
Benzyl chloride	ND	5.0	"	"	"	"	"	"	
1,4-Dichlorobenzene	ND	10	"	"	"	"	"	"	
1,2-Dichlorobenzene	ND	10	"	"	"	"	"	"	
1,2,4-Trichlorobenzene	ND	10	"	"	"	"	"	"	
Hexachlorobutadiene	ND	10	"	"	"	"	"	"	
Surrogate: 1,2-Dichloroethane-d4		*98.1 %*		*80-120*		"	"	"	
Surrogate: Toluene-d8		*98.0 %*		*80-120*		"	"	"	
Surrogate: 4-Bromofluorobenzene		*100 %*		*80-120*		"	"	"	
SG-18 (E705046-03) Vapor Sampled: 11-May-07 Received: 15-May-07									
Propene	480	10	ug/m³ Air	1	EE72302	22-May-07	22-May-07	EPA TO-15	E
Dichlorodifluoromethane	ND	10	"	"	"	"	"	"	
Chloromethane	ND	5.0	"	"	"	"	"	"	
Dichlorotetrafluoroethane	ND	10	"	"	"	"	"	"	
Vinyl chloride	ND	5.0	"	"	"	"	"	"	
Bromomethane	ND	5.0	"	"	"	"	"	"	
Chloroethane	ND	5.0	"	"	"	"	"	"	
Trichlorofluoromethane	ND	5.0	"	"	"	"	"	"	
Acetone	ND	20	"	"	"	"	"	"	
1,1-Dichloroethene	ND	5.0	"	"	"	"	"	"	
1,1,2-Trichlorotrifluoroethane	ND	10	"	"	"	"	"	"	
Methylene chloride	ND	5.0	"	"	"	"	"	"	
Carbon disulfide	24	5.0	"	"	"	"	"	"	
trans-1,2-Dichloroethene	ND	5.0	"	"	"	"	"	"	
Methyl tert-butyl ether	ND	5.0	"	"	"	"	"	"	
Vinyl acetate	ND	5.0	"	"	"	"	"	"	
1,1-Dichloroethane	ND	5.0	"	"	"	"	"	"	
2-Butanone	59	5.0	"	"	"	"	"	"	
n-Hexane	37	5.0	"	"	"	"	"	"	
cis-1,2-Dichloroethene	ND	5.0	"	"	"	"	"	"	
Ethyl acetate	ND	5.0	"	"	"	"	"	"	
Chloroform	ND	5.0	"	"	"	"	"	"	
Tetrahydrofuran	ND	5.0	"	"	"	"	"	"	
1,1,1-Trichloroethane	ND	5.0	"	"	"	"	"	"	

MOBILE GEOCHEMISTRY
H&P

Bradburne, Briller & Johnson, LLC - Chicago 515 N State Street, Suite 2200 Chicago, IL 60610	Project: BBJ051507-11 Project Number: 0253901 Project Manager: Mr Kevin McCartney	Reported 24-May-07

Volatile Organic Compounds by EPA TO-15

H&P Mobile Geochemistry

Analyte	Result	Reporting Limit	Units	Dilution Factor	Batch	Prepared	Analyzed	Method	Notes
SG-18 (E705046-03) Vapor Sampled: 11-May-07 Received: 15-May-07									
1,2-Dichloroethane	ND	5.0	ug/m³ Air	1	BE72302	22-May-07	22-May-07	EPA TO-15	
Benzene	61	5.0	"	"	"	"	"	"	
Carbon tetrachloride	ND	5.0	"	"	"	"	"	"	
Cyclohexane	23	5.0	"	"	"	"	"	"	
n-Heptane	19	5.0	"	"	"	"	"	"	
Trichloroethene	ND	5.0	"	"	"	"	"	"	
1,2-Dichloropropane	ND	5.0	"	"	"	"	"	"	
1,4-Dioxane	ND	5.0	"			"	"	"	
Bromodichloromethane	ND	6.6	"	"	"	"	"	"	
cis-1,3-Dichloropropene	ND	5.0	"	"	"	"	"	"	
4-Methyl-2-pentanone	7.9	5.0	"	"	"	"	"	"	
trans-1,3-Dichloropropene	ND	5.0	"	"	"	"	"	"	
Toluene	32	5.0	"	"	"	"	"	"	
1,1,2-Trichloroethane	ND	5.0	"	"	"	"	"	"	
2-Hexanone	27	5.0	"	"	"	"	"	"	
Dibromochloromethane	ND	5.0	"	"	"	"	"	"	
Tetrachloroethene	200	5.0	"	"	"	"	"	"	
1,2-Dibromoethane (EDB)	ND	5.0	"	"	"	"	"	"	
Chlorobenzene	ND	5.0	"	"	"	"	"	"	
Ethylbenzene	6.4	5.0	"	"	"	"	"	"	
m,p-Xylene	17	5.0	"	"	"	"	"	"	
Styrene	ND	5.0	"	"	"	"	"	"	
o-Xylene	7.1	5.0	"	"	"	"	"	"	
Bromoform	ND	20	"	"	"	"	"	"	
1,1,2,2-Tetrachloroethane	ND	5.0	"	"	"	"	"	"	
4-Ethyltoluene	ND	5.0	"	"	"	"	"	"	
1,3,5-Trimethylbenzene	ND	5.0	"	"	"	"	"	"	
1,2,4-Trimethylbenzene	12	5.0	"	"	"	"	"	"	
1,3-Dichlorobenzene	ND	10	"	"	"	"	"	"	
Benzyl chloride	ND	6.0	"	"	"	"	"	"	
1,4-Dichlorobenzene	ND	10	"	"	"	"	"	"	
1,2-Dichlorobenzene	ND	10	"	"	"	"	"	"	
1,2,4-Trichlorobenzene	ND	10	"	"	"	"	"	"	
Hexachlorobutadiene	ND	10	"	"	"	"	"	"	
Surrogate: 1,2-Dichloroethane-d4		*100 %*		*80-120*	"	"	"	"	
Surrogate: Toluene-d8		*98.2 %*		*80-120*	"	"	"	"	
Surrogate: 4-Bromofluorobenzene		*98.9 %*		*80-120*	"	"	"	"	

MOBILE GEOCHEMISTRY
H&P

Bradburne, Briller & Johnson, LLC - Chicago 515 N. State Street, Suite 2200 Chicago, IL 60610	Project: BBJ051507-11 Project Number: 0253901 Project Manager: Mr. Kevin McCartney	Reported: 24-May-07

Methane by GC/FID - Quality Control

H&P Mobile Geochemistry

Analyte	Result	Reporting Limit	Units	Spike Level	Source Result	%REC	%REC Limits	RPD	RPD Limit	Notes
Batch EE71506 - GC										
Blank (EE71506-BLK1)				Prepared & Analyzed: 15-May-07						
Methane	ND	10	ppmv							

MOBILE GEOCHEMISTRY
H&P

Bradburne, Briller & Johnson, LLC - Chicago	Project: BBJ051507-11	
515 N State Street, Suite 2200	Project Number: 0253901	Reported:
Chicago, IL 60610	Project Manager: Mr. Kevin McCarney	24-May-07

Volatile Organic Compounds by EPA TO-15 - Quality Control

H&P Mobile Geochemistry

Analyte	Result	Reporting Limit	Units	Spike Level	Source Result	%REC	%REC Limits	RPD	RPD Limit	Notes
Batch EE72302 - TO-15										
Blank (EE72302-BLK1)				Prepared & Analyzed: 22-May-07						
Propene	ND	10	ug/m³ Air							
Dichlorodifluoromethane	ND	10	"							
Chloromethane	ND	5.0	"							
Dichlorotetrafluoroethane	ND	10	"							
Vinyl chloride	ND	5.0	"							
Bromomethane	ND	5.0	"							
Chloroethane	ND	5.0	"							
Trichlorofluoromethane	ND	5.0	"							
Acetone	ND	20	"							
1,1-Dichloroethene	ND	5.0	"							
1,1,2-Trichlorotrifluoroethane	ND	10	"							
Methylene chloride	ND	5.0	"							
Carbon disulfide	ND	5.0	"							
trans-1,2-Dichloroethene	ND	5.0	"							
Methyl tert-butyl ether	ND	5.0	"							
Vinyl acetate	ND	5.0	"							
1,1-Dichloroethane	ND	5.0	"							
2-Butanone	ND	5.0	"							
n-Hexane	ND	5.0	"							
cis-1,2-Dichloroethene	ND	5.0	"							
Ethyl acetate	ND	5.0	"							
Chloroform	ND	5.0	"							
Tetrahydrofuran	ND	5.0	"							
1,1,1-Trichloroethane	ND	5.0	"							
1,2-Dichloroethane	ND	5.0	"							
Benzene	ND	5.0	"							
Carbon tetrachloride	ND	5.0	"							
Cyclohexane	ND	5.0	"							
n-Heptane	ND	5.0	"							
Trichloroethene	ND	5.0	"							
1,2-Dichloropropane	ND	5.0	"							
1,4-Dioxane	ND	5.0	"							
Bromodichloromethane	ND	5.5	"							
cis-1,3-Dichloropropene	ND	5.0	"							

MOBILE GEOCHEMISTRY
H&P

Bradburne, Briller & Johnson, LLC - Chicago 515 N. State Street, Suite 2200 Chicago, IL 60610	Project: BBJ051507-11 Project Number: 0253901 Project Manager: Mr. Kevin McCartney	Reported: 24-May-07

Volatile Organic Compounds by EPA TO-15 - Quality Control

H&P Mobile Geochemistry

Analyte	Result	Reporting Limit	Units	Spike Level	Source Result	%REC	%REC Limits	RPD	RPD Limit	Notes
Batch EE72302 - TO-15										
Blank (EE72302-BLK1)				Prepared & Analyzed: 22-May-07						
4-Methyl-2-pentanone	ND	5.0	ug/m³ Air							
trans-1,3-Dichloropropene	ND	5.0	"							
Toluene	ND	5.0	"							
1,1,2-Trichloroethane	ND	5.0	"							
2-Hexanone	ND	5.0	"							
Dibromochloromethane	ND	5.0	"							
Tetrachloroethene	ND	5.0	"							
1,2-Dibromoethane (EDB)	ND	5.0	"							
Chlorobenzene	ND	5.0	"							
Ethylbenzene	ND	5.0	"							
m,p-Xylene	ND	5.0	"							
Styrene	ND	5.0	"							
o-Xylene	ND	5.0	"							
Bromoform	ND	20	"							
1,1,2,2-Tetrachloroethane	ND	5.0	"							
4-Ethyltoluene	ND	5.0	"							
1,3,5-Trimethylbenzene	ND	5.0	"							
1,2,4-Trimethylbenzene	ND	5.0	"							
1,3-Dichlorobenzene	ND	10	"							
Benzyl chloride	ND	5.0	"							
1,4-Dichlorobenzene	ND	10	"							
1,2-Dichlorobenzene	ND	10	"							
1,2,4-Trichlorobenzene	ND	10	"							
Hexachlorobutadiene	ND	10	"							
Surrogate: 1,3-Dichloroethane-d4	*110*		"	*107*		*107*	*80-120*			
Surrogate: Toluene-d8	*98.3*		"	*96.2*		*102*	*80-120*			
Surrogate: 4-Bromofluorobenzene	*173*		"	*181*		*95.1*	*80-120*			

MOBILE GEOCHEMISTRY
H&P

Bradburne, Briller & Johnson, LLC - Chicago 515 N State Street, Suite 2200 Chicago, IL 60610	Project BBJ051507-11 Project Number 0253901 Project Manager Mr Kevin McCartney	Reported 24-May-07

Volatile Organic Compounds by EPA TO-15 - Quality Control

H&P Mobile Geochemistry

Analyte	Result	Reporting Limit	Units	Spike Level	Source Result	%REC	%REC Limits	RPD	RPD Limit	Notes
Batch EE72302 - TO-15										
LCS (EE72302-BS1)				Prepared & Analyzed: 22-May-07						
Propene	36.3	10	ug/m³ Air	35.0		104	65-135			
Dichlorodifluoromethane	115	10	"	101		114	65-135			
Chloromethane	46.9	5.0	"	42.0		112	65-135			
Dichlorotetrafluoroethane	159	10	"	142		112	65-135			
Vinyl chloride	59.8	5.0	"	52.0		115	65-135			
Bromomethane	87.6	5.0	"	79.2		111	65-135			
Chloroethane	61.5	5.0	"	53.6		115	65-135			
Trichlorofluoromethane	144	5.0	"	113		125	65-135			
Acetone	57.5	20	"	48.4		119	65-135			
1,1-Dichloroethene	81.5	5.0	"	80.8		101	65-135			
1,1,2-Trichlorotrifluoroethane	143	10	"	155		92.3	65-135			
Methylene chloride	68.4	5.0	"	70.8		96.6	65-135			
Carbon disulfide	67.3	5.0	"	63.2		106	65-135			
trans-1,2-Dichloroethene	81.5	5.0	"	80.8		101	65-135			
Methyl tert-butyl ether	73.2	5.0	"	73.6		99.5	65-135			
Vinyl acetate	74.3	5.0	"	72.0		103	65-135			
1,1-Dichloroethane	81.5	5.0	"	82.4		98.9	65-135			
2-Butanone	64.0	5.0	"	60.0		107	65-135			
n-Hexane	76.7	5.0	"	72.0		107	65-135			
cis-1,2-Dichloroethene	78.8	5.0	"	80.0		98.5	65-135			
Ethyl acetate	53.2	5.0	"	73.6		72.3	65-135			
Chloroform	97.0	5.0	"	99.2		97.8	65-135			
Tetrahydrofuran	57.6	5.0	"	60.0		96.0	65-135			
1,1,1-Trichloroethane	105	5.0	"	111		94.6	65-135			
1,2-Dichloroethane	80.4	5.0	"	82.4		97.6	65-135			
Benzene	63.1	5.0	"	64.8		97.4	65-135			
Carbon tetrachloride	120	5.0	"	128		93.8	65-135			
Cyclohexane	73.7	5.0	"	70.4		105	65-135			
n-Heptane	85.1	5.0	"	83.6		102	65-135			
Trichloroethene	103	5.0	"	110		93.6	65-135			
1,2-Dichloropropane	90.5	5.0	"	94.4		95.9	65-135			
1,4-Dioxane	70.3	5.0	"	73.6		95.5	65-135			
Bromodichloromethane	126	5.5	"	137		92.0	65-135			
cis-1,3-Dichloropropene	80.5	5.0	"	92.4		87.1	65-135			

MOBILE GEOCHEMISTRY
H&P

Bradburne, Briller & Johnson, LLC - Chicago 515 N. State Street, Suite 2200 Chicago, IL 60610	Project: BBJ051507-11 Project Number: 0253901 Project Manager: Mr. Kevin McCartney	Reported: 24-May-07

Volatile Organic Compounds by EPA TO-15 - Quality Control

H&P Mobile Geochemistry

Analyte	Result	Reporting Limit	Units	Spike Level	Source Result	%REC	%REC Limits	RPD	RPD Limit	Notes
Batch EE72302 - TO-15										
LCS (EE72302-BS1)				Prepared & Analyzed: 22-May-07						
4-Methyl-2-pentanone	82.6	5.0	ug/m³ Air	83.2		99.3	65-135			
trans-1,3-Dichloropropene	79.1	5.0	"	92.4		85.6	65-135			
Toluene	69.4	5.0	"	76.8		90.4	65-135			
1,1,2-Trichloroethane	97.9	5.0	"	111		88.2	65-135			
2-Hexanone	77.6	5.0	"	83.2		93.3	65-135			
Dibromochloromethane	161	5.0	"	174		92.5	65-135			
Tetrachloroethene	115	5.0	"	138		83.3	65-135			
1,2-Dibromoethane (EDB)	128	5.0	"	157		81.5	65-135			
Chlorobenzene	76.5	5.0	"	93.6		81.7	65-135			
Ethylbenzene	71.8	5.0	"	88.4		81.2	65-135			
m,p-Xylene	141	5.0	"	177		79.7	65-135			
Styrene	64.7	5.0	"	86.8		74.5	65-135			
o-Xylene	67.4	5.0	"	88.4		76.2	65-135			
Bromoform	736	20	"	840		87.6	65-135			
1,1,2,2-Tetrachloroethane	83.6	5.0	"	140		59.7	65-135			QL-1L
4-Ethyltoluene	93.9	5.0	"	100		93.9	65-135			
1,3,5-Trimethylbenzene	68.6	5.0	"	100		68.6	65-135			
1,2,4-Trimethylbenzene	65.1	5.0	"	100		65.1	65-135			
1,3-Dichlorobenzene	73.1	10	"	122		59.9	65-135			QL-1L
Benzyl chloride	81.9	5.0	"	105		78.0	65-135			
1,4-Dichlorobenzene	68.6	10	"	122		56.2	65-135			QL-1L
1,2-Dichlorobenzene	61.7	10	"	122		50.6	65-135			QL-1L
1,2,4-Trichlorobenzene	39.6	10	"	151		26.2	65-135			QL-1L
Hexachlorobutadiene	81.2	10	"	218		37.2	65-135			QL-1L
Surrogate: 1,1-Dichloroethane-d4	*106*		"	*103*		*103*	*80-120*			
Surrogate: Toluene-d8	*95.2*		"	*96.2*		*102*	*80-120*			
Surrogate: 4-Bromofluorobenzene	*189*		"	*182*		*104*	*80-120*			

printed 09/18/2007 4:52PM by epa4561 p. 146/439

MOBILE GEOCHEMISTRY

H&P

Chain of Custody Record

☑ 2470 Impala Dr., Carlsbad, CA 92010 • ph 760.804.9878 • fax 760 804 9159
☐ 3825 Industry Avenue, Lakewood, CA 90712 • ph 562.426.6991 • fax 562.426.6995

Date: 5/11/2007
H&P Project #: BBJ051507-1L
Outside Lab:

Client: BB+J
Address: 515 N. State Street, Suite 2200
Chicago, IL 60610
Email: kenmcartney@bbjgroup.com Phone: 312-644-8556

Collector: Kevin McCartney
Client Project #: PNT-0109
Location: Lyons, IL 0253901, 0253801
Fax: 312-644-8555

Page: 1 of 1
Project Contact: Kevin McCartney
Turn around time: Normal

EDF: Yes ☐ No ☐
Global ID:

Sample Receipt
Intact: ☑ Yes ☐ No
Seal Intact: ☐ Yes ☐ No ☑ N/A
Cold: ☐ Yes ☑ No
N/A (Received on Site)

Special Instructions:
Samples renamed per client's instructions. AM 5/24/07

Sample Name	Field Point Name	Purge Vol	Time	Date	Sample Type	Container Type	TPH ☐ gasoline ☐ diesel ☐ ext	418.1 TRPH	8021 for BTEX/MTBE	8260B: BTEX / Oxygenates	8260B: TPH gas	8260B: VOC's	8260B: DTSC/LARWQCB	8260B: Ketones	TO-15: Full List	TO-15: BTEX/MTBE	LCC (specify)	Naphthalene ☐ 8260B ☐ TO-15	Methane	Fixed Gases ☐ CO2 ☐ O2 ☐ N2				Total # of containers
SG-1	→ SG-16		200	5/11/07	Vapor	400mL									✓				✓					
SG-2	→ SG-17		145												✓				✓					
SG-3	→ SG-18		135												✓				✓					
SG-4	→ CDSG-1		105												✓				✓					
SG-5	→ CDSG-2		120												✓				✓					
SG-6	→ CDSG-3		1245												✓				✓					

Relinquished by: (Signature)	(company)	Received by: (Signature)	(company)	Date	Time
[signature]	BBJ	[signature] via UPS	H&P	5/16/07	10:30
Relinquished by: (Signature)	(company)	Received by: (Signature)	(company)	Date	Time
Relinquished by: (Signature)	(company)	Received by: (Signature)	(company)	Date	Time

*Signature constitutes authorization to proceed with analysis and acceptance of condition on back.

Sample disposal instruction: ☐ Disposal @ $2.00 each ☐ Return to client ☐ Pickup

MOBILE GEOCHEMISTRY

H&P

☑ 2470 Impala Dr., Carlsbad, CA 92010 · ph 760.804.9678 · fax 760.804.9159
☐ 3825 Industry Avenue, Lakewood, CA 90712 · ph 562.426.6991 · fax 562.426.6995

Chain of Custody Record

Date: 5/11/2007
H&P Project #: BBJ051507-11
Outside Lab:

Client: BB+J
Address: 515 N. State Street, Suite 2200
Chicago IL 60610
Email: kmcartney@bbjgroup.com Phone: 312-644-8556

Collector: Kevin McCartney
Client Project #: PN7-0109
Location: Lyons, IL
Fax: 312-644-8555

Page: 1 of 1
Project Contact: Kevin McCartney
Turn around time: Normal

EDF: Yes ☐ No ☐
Global ID:

Sample Receipt
Intact: ☑ Yes ☐ No
Seal Intact: ☐ Yes ☐ No ☑ N/A
Cold: ☐ Yes ☑ No
N/A (Received on Site)

Special Instructions:

DO NOT REPORT 1,3 BUTADIENE KM 5/16

Sample Name	Field Point Name	Purge Vol	Time	Date	Sample Type	Container Type	TPH ☐ gasoline ☐ diesel ☐ ext	418.1 TRPH	8021 for BTEX/MTBE	8260B: BTEX / Oxygenates	8260B: TPH gas	8260B: VOC's	8260B: DTSC/LARWQCB	8260B: Ketones	TO-15: Full List	TO-15: BTEX/MTBE	LCC (specify)	Naphthalene ☐ 8260B ☐ TO-15	Methane	Fixed Gases ☐ CO_2 ☐ O_2 ☐ N_2				Total # of containers
SG-1			200	5/11/07	Vapor	400mL									✓				✓					
SG-2			145												✓				✓					
SG-3			135												✓				✓					
SG-4			105												✓				✓					
SG-5			120												✓				✓					
SG-6			1295												✓				✓					

Relinquished by: (Signature)	(company)	Received by: (Signature)	(company)	Date:	Time:
[signature]	BBJ	[signature] via UPS	H&P	5/16/07	10:30
Relinquished by: (Signature)	(company)	Received by: (Signature)	(company)	Date:	Time:
Relinquished by: (Signature)	(company)	Received by: (Signature)	(company)	Date:	Time:

*Signature constitutes authorization to proceed with analysis and acceptance of condition on back.

Sample disposal instruction: ☐ Disposal @ $2.00 each ☐ Return to client ☐ Pickup

printed 09/18/2007 4:52PM by epa4561 p. 147/439

MOBILE GEOCHEMISTRY

H&P

30 May 2007

Mr. Kevin McCartney
Bradburne, Briller & Johnson, LLC - Chicago
515 N. State Street, Suite 2200
Chicago, IL 60610
RE: BBJ052307-12

Enclosed are the results of analyses for samples received by the laboratory on 23-May-07 . If you have any questions concerning this report, please feel free to contact me.

Sincerely,

Janis Villarreal
Laboratory Director

H&P Mobile Geochemistry operates under CA Environmental Lab Accreditation Program Numbers 1317, 1561, 1687, 1745, 1746, 2086, 2278, 2543, 2579 and 2595.

2470 Impala Drive, Carlsbad, California 92010 | 760.804.9678 — Fax 760.804.9159
3825 Industry Avenue, Lakewood, California 90712 | 562.426.8991 — Fax 562.426.8995
www.HandPmg.com | 1-800-834-9888

MOBILE GEOCHEMISTRY

H&P

Bradburne, Briller & Johnson, LLC - Chicago 515 N. State Street, Suite 2200 Chicago, IL 60610	Project: BBJ052307-12 Project Number: 0253901 / Lyons, IL Project Manager: Mr. Kevin McCartney	Reported: 30-May-07

ANALYTICAL REPORT FOR SAMPLES

Sample ID	Laboratory ID	Matrix	Date Sampled	Date Received
SF-12 T=0	E705070-01	Vapor	21-May-07	23-May-07
SF-11 T=0	E705070-02	Vapor	21-May-07	23-May-07
SF-10 T=0	E705070-03	Vapor	21-May-07	23-May-07
SF-6 T=0	E705070-04	Vapor	21-May-07	23-May-07
SF-5 T=0	E705070-05	Vapor	21-May-07	23-May-07
SF-13 T=0	E705070-06	Vapor	21-May-07	23-May-07
SF-12	E705070-07	Vapor	22-May-07	23-May-07
SF-11	E705070-08	Vapor	22-May-07	23-May-07
SF-10	E705070-09	Vapor	22-May-07	23-May-07
SF-6	E705070-10	Vapor	22-May-07	23-May-07
SF-5	E705070-11	Vapor	22-May-07	23-May-07
SF-13	E705070-12	Vapor	22-May-07	23-May-07

MOBILE GEOCHEMISTRY
H&P

Bradburne, Briller & Johnson, LLC - Chicago 515 N State Street, Suite 2300 Chicago, IL 60610	Project BBJ052307-12 Project Number 0253901 / Lyons, IL Project Manager Mr Kevin McCarney	Reported 30-May-07

Methane by GC/FID

H&P Mobile Geochemistry

Analyte	Result	Reporting Limit	Units	Dilution Factor	Batch	Prepared	Analyzed	Method	Notes
SF-12 T=0 (E705070-01) Vapor Sampled: 21-May-07 Received: 23-May-07									
Methane	ND	10	ppmv	1	EE72405	24-May-07	24-May-07	Modified EPA 8015B	
SF-11 T=0 (E705070-02) Vapor Sampled: 21-May-07 Received: 23-May-07									
Methane	ND	10	ppmv	1	EE72405	24-May-07	24-May-07	Modified EPA 8015B	
SF-10 T=0 (E705070-03) Vapor Sampled: 21-May-07 Received: 23-May-07									
Methane	ND	10	ppmv	1	EE72405	24-May-07	24-May-07	Modified EPA 8015B	
SE-6 T=0 (E705070-04) Vapor Sampled: 21-May-07 Received: 23-May-07									
Methane	ND	10	ppmv	1	EE72405	24-May-07	24-May-07	Modified EPA 8015B	
SF-5 T=0 (E705070-05) Vapor Sampled: 21-May-07 Received: 23-May-07									
Methane	ND	10	ppmv	1	EE72405	24-May-07	24-May-07	Modified EPA 8015B	
SF-13 T=0 (E705070-06) Vapor Sampled: 21-May-07 Received: 23-May-07									
Methane	ND	10	ppmv	1	EE72405	24-May-07	24-May-07	Modified EPA 8015B	
SF-12 (E705070-07) Vapor Sampled: 22-May-07 Received: 23-May-07									
Methane	ND	10	ppmv	1	EE72405	24-May-07	24-May-07	Modified EPA 8015B	
SF-11 (E705070-08) Vapor Sampled: 22-May-07 Received: 23-May-07									
Methane	ND	10	ppmv	1	EE72405	24-May-07	24-May-07	Modified EPA 8015B	
SF-10 (E705070-09) Vapor Sampled: 22-May-07 Received: 23-May-07									
Methane	ND	10	ppmv	1	EE72405	24-May-07	24-May-07	Modified EPA 8015B	

MOBILE GEOCHEMISTRY
H&P

Bradburne, Briller & Johnson, LLC - Chicago 515 N. State Street, Suite 2200 Chicago, IL 60610	Project: BBJ052307-12 Project Number: 0253901 / Lyons, IL Project Manager: Mr. Kevin McCarney	Reported: 30-May-07

Methane by GC/FID

H&P Mobile Geochemistry

Analyte	Result	Reporting Limit	Units	Dilution Factor	Batch	Prepared	Analyzed	Method	Notes
SF-6 (E705070-10) Vapor Sampled: 22-May-07 Received: 23-May-07									
Methane	ND	10	ppmv	1	EE72405	24-May-07	24-May-07	Modified EPA 8015B	
SF-5 (E705070-11) Vapor Sampled: 22-May-07 Received: 23-May-07									
Methane	ND	10	ppmv	1	EE72405	24-May-07	24-May-07	Modified EPA 8015B	
SF-13 (E705070-12) Vapor Sampled: 22-May-07 Received: 23-May-07									
Methane	ND	10	ppmv	1	EE72405	24-May-07	24-May-07	Modified EPA 8015B	

MOBILE GEOCHEMISTRY
H&P

Bradburne, Briller & Johnson, LLC - Chicago 515 N. State Street, Suite 2200 Chicago, IL 60610	Project: BBJ052307-12 Project Number: 0253901 / Lyons, IL Project Manager: Mr. Kevin McCartney	Reported: 30-May-07

Volatile Organic Compounds by EPA TO-15

H&P Mobile Geochemistry

Analyte	Result	Reporting Limit	Units	Dilution Factor	Batch	Prepared	Analyzed	Method	Notes
SF-12 (E705070-07) Vapor Sampled: 23-May-07 Received: 23-May-07									
Propene	ND	10	ug/m³ Air	1	BE72301	24-May-07	24-May-07	EPA TO-15	
Dichlorodifluoromethane	ND	10	"	"	"	"	"	"	
Chloromethane	ND	5.0	"	"	"	"	"	"	
Dichlorotetrafluoroethane	ND	10	"	"	"	"	"	"	
Vinyl chloride	ND	5.0	"	"	"	"	"	"	
Bromomethane	ND	5.0	"	"	"	"	"	"	
Chloroethane	ND	5.0	"	"	"	"	"	"	
Trichlorofluoromethane	ND	5.0	"	"	"	"	"	"	
Acetone	ND	20	"	"	"	"	"	"	
1,1-Dichloroethene	ND	5.0	"	"	"	"	"	"	
1,1,2-Trichlorotrifluoroethane	ND	10	"	"	"	"	"	"	
Methylene chloride	ND	5.0	"	"	"	"	"	"	
Carbon disulfide	ND	5.0	"	"	"	"	"	"	
trans-1,2-Dichloroethene	ND	5.0	"	"	"	"	"	"	
Methyl tert-butyl ether	ND	5.0	"	"	"	"	"	"	
Vinyl acetate	ND	5.0	"	"	"	"	"	"	
1,1-Dichloroethane	ND	5.0	"	"	"	"	"	"	
2-Butanone	ND	5.0	"	"	"	"	"	"	
n-Hexane	ND	5.0	"	"	"	"	"	"	
cis-1,2-Dichloroethene	ND	5.0	"	"	"	"	"	"	
Ethyl acetate	ND	5.0	"	"	"	"	"	"	
Chloroform	ND	5.0	"	"	"	"	"	"	
Tetrahydrofuran	ND	5.0	"	"	"	"	"	"	
1,1,1-Trichloroethane	ND	5.0	"	"	"	"	"	"	
1,2-Dichloroethane	ND	5.0	"	"	"	"	"	"	
Benzene	ND	5.0	"	"	"	"	"	"	
Carbon tetrachloride	ND	5.0	"	"	"	"	"	"	
Cyclohexane	ND	5.0	"	"	"	"	"	"	
n-Heptane	ND	5.0	"	"	"	"	"	"	
Trichloroethene	ND	5.0	"	"	"	"	"	"	
1,2-Dichloropropane	ND	5.0	"	"	"	"	"	"	
1,4-Dioxane	ND	5.0	"	"	"	"	"	"	
Bromodichloromethane	ND	5.5	"	"	"	"	"	"	
cis-1,3-Dichloropropene	ND	5.0	"	"	"	"	"	"	
4-Methyl-2-pentanone	ND	5.0	"	"	"	"	"	"	
trans-1,3-Dichloropropene	ND	5.0	"	"	"	"	"	"	
Toluene	ND	5.0	"	"	"	"	"	"	
1,1,2-Trichloroethane	ND	5.0	"	"	"	"	"	"	

MOBILE GEOCHEMISTRY
H&P

Bradburne, Briller & Johnson, LLC - Chicago	Project: BBJ052307-12	
515 N. State Street, Suite 2200	Project Number: 0253901 / Lyons, IL	Reported:
Chicago, IL 60610	Project Manager: Mr. Kevin McCartney	30-May-07

Volatile Organic Compounds by EPA TO-15

H&P Mobile Geochemistry

Analyte	Result	Reporting Limit	Units	Dilution Factor	Batch	Prepared	Analyzed	Method	Notes
SF-12 (E705070-07) Vapor Sampled: 22-May-07 Received: 23-May-07									
2-Hexanone	ND	5.0	ug/m³ Air	1	EE72501	24-May-07	24-May-07	EPA TO-15	
Dibromochloromethane	ND	5.0	"	"	"	"	"	"	
Tetrachloroethene	ND	5.0	"	"	"	"	"	"	
1,2-Dibromoethane (EDB)	ND	5.0	"	"	"	"	"	"	
Chlorobenzene	ND	5.0	"	"	"	"	"	"	
Ethylbenzene	ND	5.0	"	"	"	"	"	"	
m,p-Xylene	ND	5.0	"	"	"	"	"	"	
Styrene	ND	5.0	"	"	"	"	"	"	
o-Xylene	ND	5.0	"	"	"	"	"	"	
Bromoform	ND	20	"	"	"	"	"	"	
1,1,2,2-Tetrachloroethane	ND	5.0	"	"	"	"	"	"	
4-Ethyltoluene	ND	5.0	"	"	"	"	"	"	
1,3,5-Trimethylbenzene	ND	5.0	"	"	"	"	"	"	
1,2,4-Trimethylbenzene	ND	5.0	"	"	"	"	"	"	
1,3-Dichlorobenzene	ND	10	"	"	"	"	"	"	
Benzyl chloride	ND	5.0	"	"	"	"	"	"	
1,4-Dichlorobenzene	ND	10	"	"	"	"	"	"	
1,2-Dichlorobenzene	ND	10	"	"	"	"	"	"	
1,2,4-Trichlorobenzene	ND	10	"	"	"	"	"	"	
Hexachlorobutadiene	ND	10	"	"	"	"	"	"	
Surrogate: 1,2-Dichloroethane-d4		*104 %*		*80-120*	"	"	"	"	
Surrogate: Toluene-d8		*99.9 %*		*80-120*	"	"	"	"	
Surrogate: 4-Bromofluorobenzene		*81.9 %*		*80-120*	"	"	"	"	
SF-11 (E705070-08) Vapor Sampled: 22-May-07 Received: 23-May-07									
Propene	ND	10	ug/m³ Air	1	EE72501	24-May-07	24-May-07	EPA TO-15	
Dichlorodifluoromethane	ND	10	"	"	"	"	"	"	
Chloromethane	ND	5.0	"	"	"	"	"	"	
Dichlorotetrafluoroethane	ND	10	"	"	"	"	"	"	
Vinyl chloride	ND	5.0	"	"	"	"	"	"	
Bromomethane	ND	5.0	"	"	"	"	"	"	
Chloroethane	ND	5.0	"	"	"	"	"	"	
Trichlorofluoromethane	ND	5.0	"	"	"	"	"	"	
Acetone	28	20	"	"	"	"	"	"	
1,1-Dichloroethene	ND	5.0	"	"	"	"	"	"	
1,1,2-Trichlorotrifluoroethane	ND	10	"	"	"	"	"	"	
Methylene chloride	ND	5.0	"	"	"	"	"	"	

MOBILE GEOCHEMISTRY
H&P

Bradburne, Briller & Johnson, LLC - Chicago 515 N State Street, Suite 2200 Chicago, IL 60610	Project BBJ052307-12 Project Number 0253901 / Lyons, IL Project Manager Mr Kevin McCarney	Reported 30-May-07

Volatile Organic Compounds by EPA TO-15

H&P Mobile Geochemistry

Analyte	Result	Reporting Limit	Units	Dilution Factor	Batch	Prepared	Analyzed	Method	Notes
SF-11 (E705070-08) Vapor Sampled: 22-May-07 Received: 23-May-07									
Carbon disulfide	7.4	5.0	ug/m³ Air	1	6E72501	24-May-07	24-May-07	EPA TO-15	
trans-1,2-Dichloroethene	ND	5.0	"	"	"	"	"	"	
Methyl tert-butyl ether	ND	5.0	"	"	"	"	"	"	
Vinyl acetate	ND	5.0	"	"	"	"	"	"	
1,1-Dichloroethane	ND	5.0	"	"	"	"	"	"	
2-Butanone	ND	5.0	"	"	"	"	"	"	
n-Hexane	ND	5.0	"	"	"	"	"	"	
cis-1,2-Dichloroethene	ND	5.0			"	"	"	"	
Ethyl acetate	ND	5.0	"	"	"	"	"	"	
Chloroform	ND	5.0	"	"	"	"	"	"	
Tetrahydrofuran	ND	5.0	"	"	"	"	"	"	
1,1,1-Trichloroethane	ND	5.0	"	"	"	"	"	"	
1,2-Dichloroethane	ND	5.0	"	"	"	"	"	"	
Benzene	ND	5.0	"	"	"	"	"	"	
Carbon tetrachloride	ND	5.0	"	"	"	"	"	"	
Cyclohexane	ND	5.0	"	"	"	"	"	"	
n-Heptane	ND	5.0	"	"	"	"	"	"	
Trichloroethene	ND	5.0	"	"	"	"	"	"	
1,2-Dichloropropane	ND	5.0	"	"	"	"	"	"	
1,4-Dioxane	ND	5.0	"	"	"	"	"	"	
Bromodichloromethane	ND	5.5	"	"	"	"	"	"	
cis-1,3-Dichloropropene	ND	5.0	"	"	"	"	"	"	
4-Methyl-2-pentanone	ND	5.0	"	"	"	"	"	"	
trans-1,3-Dichloropropene	ND	5.0	"	"	"	"	"	"	
Toluene	ND	5.0	"	"	"	"	"	"	
1,1,2-Trichloroethane	ND	5.0	"	"	"	"	"	"	
2-Hexanone	ND	5.0	"	"	"	"	"	"	
Dibromochloromethane	ND	5.0	"	"	"	"	"	"	
Tetrachloroethene	43	5.0	"	"	"	"	"	"	
1,2-Dibromoethane (EDB)	ND	5.0	"	"	"	"	"	"	
Chlorobenzene	ND	5.0	"	"	"	"	"	"	
Ethylbenzene	ND	5.0	"	"	"	"	"	"	
m,p-Xylene	ND	5.0	"	"	"	"	"	"	
Styrene	ND	5.0	"	"	"	"	"	"	
o-Xylene	ND	5.0	"	"	"	"	"	"	
Bromoform	ND	20	"	"	"	"	"	"	
1,1,2,2-Tetrachloroethane	ND	5.0	"	"	"	"	"	"	
4-Ethyltoluene	ND	5.0	"	"	"	"	"	"	

MOBILE GEOCHEMISTRY
H&P

Bradburne, Briller & Johnson, LLC - Chicago 515 N. State Street, Suite 2200 Chicago, IL 60610	Project: BBJ052307-12 Project Number: 0253901 / Lyons, IL Project Manager: Mr. Kevin McCarney	Reported: 30-May-07

Volatile Organic Compounds by EPA TO-15

H&P Mobile Geochemistry

Analyte	Result	Reporting Limit	Units	Dilution Factor	Batch	Prepared	Analyzed	Method	Notes
SF-11 (E705070-08) Vapor Sampled: 22-May-07 Received: 23-May-07									
1,3,5-Trimethylbenzene	ND	5.0	ug/m³ Air	1	EE72501	24-May-07	24-May-07	EPA TO-15	
1,2,4-Trimethylbenzene	ND	5.0	"	"	"	"	"	"	
1,3-Dichlorobenzene	ND	10	"	"	"	"	"	"	
Benzyl chloride	ND	5.0	"	"	"	"	"	"	
1,4-Dichlorobenzene	ND	10	"	"	"	"	"	"	
1,2-Dichlorobenzene	ND	10	"	"	"	"	"	"	
1,2,4-Trichlorobenzene	ND	10	"	"	"	"	"	"	
Hexachlorobutadiene	ND	10	"	"	"	"	"	"	
Surrogate: 1,2-Dichloroethane-d4		*108 %*		*80-120*		"	"	"	
Surrogate: Toluene-d8		*103 %*		*80-120*		"	"	"	
Surrogate: 4-Bromofluorobenzene		*92.9 %*		*80-120*		"	"	"	
SF-10 (E705070-09) Vapor Sampled: 22-May-07 Received: 23-May-07									
Propane	12	10	ug/m³ Air	1	EE72501	24-May-07	24-May-07	EPA TO-15	
Dichlorodifluoromethane	ND	10	"	"	"	"	"	"	
Chloromethane	ND	5.0	"	"	"	"	"	"	
Dichlorotetrafluoroethane	ND	10	"	"	"	"	"	"	
Vinyl chloride	ND	5.0	"	"	"	"	"	"	
Bromomethane	ND	5.0	"	"	"	"	"	"	
Chloroethane	ND	5.0	"	"	"	"	"	"	
Trichlorofluoromethane	ND	5.0	"	"	"	"	"	"	
Acetone	ND	20	"	"	"	"	"	"	
1,1-Dichloroethene	ND	5.0	"	"	"	"	"	"	
1,1,2-Trichlorotrifluoroethane	ND	10	"	"	"	"	"	"	
Methylene chloride	ND	5.0	"	"	"	"	"	"	
Carbon disulfide	11	5.0	"	"	"	"	"	"	
trans-1,2-Dichloroethene	ND	5.0	"	"	"	"	"	"	
Methyl tert-butyl ether	ND	5.0	"	"	"	"	"	"	
Vinyl acetate	ND	5.0	"	"	"	"	"	"	
1,1-Dichloroethane	ND	5.0	"	"	"	"	"	"	
2-Butanone	ND	5.0	"	"	"	"	"	"	
n-Hexane	ND	5.0	"	"	"	"	"	"	
cis-1,2-Dichloroethene	6.4	5.0	"	"	"	"	"	"	
Ethyl acetate	ND	5.0	"	"	"	"	"	"	
Chloroform	ND	5.0	"	"	"	"	"	"	
Tetrahydrofuran	ND	5.0	"	"	"	"	"	"	
1,1,1-Trichloroethane	ND	5.0	"	"	"	"	"	"	

MOBILE GEOCHEMISTRY
H&P

Bradburne, Briller & Johnson, LLC - Chicago	Project BBJ052307-12	
515 N. State Street, Suite 2200	Project Number 0253901 / Lyons, IL	Reported:
Chicago, IL 60610	Project Manager Mr Kevin McCartney	30-May-07

Volatile Organic Compounds by EPA TO-15

H&P Mobile Geochemistry

Analyte	Result	Reporting Limit	Units	Dilution Factor	Batch	Prepared	Analyzed	Method	Notes
SF-10 (E705070-09) Vapor Sampled: 21-May-07 Received: 23-May-07									
1,2-Dichloroethane	ND	5.0	ug/m³ Air	1	EE72501	24-May-07	24-May-07	EPA TO-15	
Benzene	ND	5.0	"	"	"	"	"	"	
Carbon tetrachloride	ND	5.0	"	"	"	"	"	"	
Cyclohexane	ND	5.0	"	"	"	"	"	"	
n-Heptane	ND	5.0	"	"	"	"	"	"	
Trichloroethene	11	5.0	"	"	"	"	"	"	
1,2-Dichloropropane	ND	5.0	"	"	"	"	"	"	
1,4-Dioxane	ND	5.0	"	"	"	"	"	"	
Bromodichloromethane	ND	5.5	"	"	"	"	"	"	
cis-1,3-Dichloropropene	ND	5.0	"	"	"	"	"	"	
4-Methyl-2-pentanone	ND	5.0	"	"	"	"	"	"	
trans-1,3-Dichloropropene	ND	5.0	"	"	"	"	"	"	
Toluene	ND	5.0	"	"	"	"	"	"	
1,1,2-Trichloroethane	ND	5.0	"	"	"	"	"	"	
2-Hexanone	ND	5.0	"	"	"	"	"	"	
Dibromochloromethane	ND	5.0	"	"	"	"	"	"	
Tetrachloroethene	14	5.0	"	"	"	"	"	"	
1,2-Dibromoethane (EDB)	ND	5.0	"	"	"	"	"	"	
Chlorobenzene	ND	5.0	"	"	"	"	"	"	
Ethylbenzene	ND	5.0	"	"	"	"	"	"	
m,p-Xylene	ND	5.0	"	"	"	"	"	"	
Styrene	ND	5.0	"	"	"	"	"	"	
o-Xylene	ND	5.0	"	"	"	"	"	"	
Bromoform	ND	20	"	"	"	"	"	"	
1,1,2,2-Tetrachloroethane	ND	5.0	"	"	"	"	"	"	
4-Ethyltoluene	ND	5.0	"	"	"	"	"	"	
1,3,5-Trimethylbenzene	ND	5.0	"	"	"	"	"	"	
1,2,4-Trimethylbenzene	ND	5.0	"	"	"	"	"	"	
1,3-Dichlorobenzene	ND	10	"	"	"	"	"	"	
Benzyl chloride	ND	5.0	"	"	"	"	"	"	
1,4-Dichlorobenzene	ND	10	"	"	"	"	"	"	
1,2-Dichlorobenzene	ND	10	"	"	"	"	"	"	
1,2,4-Trichlorobenzene	ND	10	"	"	"	"	"	"	
Hexachlorobutadiene	ND	10	"	"	"	"	"	"	
Surrogate: 1,2-Dichloroethane-d4		*110 %*		*80-120*	"	"	"	"	
Surrogate: Toluene-d8		*102 %*		*80-120*	"	"	"	"	
Surrogate: 4-Bromofluorobenzene		*87.4 %*		*80-120*	"	"	"	"	

MOBILE GEOCHEMISTRY
H&P

Bradburne, Briller & Johnson, LLC - Chicago	Project: BBJ052307-12	
515 N. State Street, Suite 2200	Project Number: 0253901 / Lyons, IL	Reported:
Chicago, IL 60610	Project Manager: Mr. Kevin McCartney	30-May-07

Volatile Organic Compounds by EPA TO-15

H&P Mobile Geochemistry

Analyte	Result	Reporting Limit	Units	Dilution Factor	Batch	Prepared	Analyzed	Method	Notes
SF-6 (E705870-10) Vapor Sampled: 22-May-07 Received: 23-May-07									
Propene	ND	10	ug/m³ Air	1	EB72501	24-May-07	24-May-07	EPA TO-15	
Dichlorodifluoromethane	ND	10	"	"	"	"	"	"	
Chloromethane	ND	5.0	"	"	"	"	"	"	
Dichlorotetrafluoroethane	ND	10	"	"	"	"	"	"	
Vinyl chloride	ND	5.0	"	"	"	"	"	"	
Bromomethane	ND	5.0	"	"	"	"	"	"	
Chloroethane	ND	5.0	"	"	"	"	"	"	
Trichlorofluoromethane	ND	5.0	"	"	"	"	"	"	
Acetone	37	20	"	"	"	"	"	"	
1,1-Dichloroethene	ND	5.0	"	"	"	"	"	"	
1,1,2-Trichlorotrifluoroethane	ND	10	"	"	"	"	"	"	
Methylene chloride	ND	5.0	"	"	"	"	"	"	
Carbon disulfide	5.6	5.0	"	"	"	"	"	"	
trans-1,2-Dichloroethene	ND	5.0	"	"	"	"	"	"	
Methyl tert-butyl ether	ND	5.0	"	"	"	"	"	"	
Vinyl acetate	ND	5.0	"	"	"	"	"	"	
1,1-Dichloroethane	ND	5.0	"	"	"	"	"	"	
2-Butanone	ND	5.0	"	"	"	"	"	"	
n-Hexane	ND	5.0	"	"	"	"	"	"	
cis-1,2-Dichloroethene	ND	5.0	"	"	"	"	"	"	
Ethyl acetate	ND	5.0	"	"	"	"	"	"	
Chloroform	ND	5.0	"	"	"	"	"	"	
Tetrahydrofuran	ND	5.0	"	"	"	"	"	"	
1,1,1-Trichloroethane	ND	5.0	"	"	"	"	"	"	
1,2-Dichloroethane	ND	5.0	"	"	"	"	"	"	
Benzene	ND	5.0	"	"	"	"	"	"	
Carbon tetrachloride	ND	5.0	"	"	"	"	"	"	
Cyclohexane	ND	5.0	"	"	"	"	"	"	
n-Heptane	ND	5.0	"	"	"	"	"	"	
Trichloroethene	ND	5.0	"	"	"	"	"	"	
1,2-Dichloropropane	ND	5.0	"	"	"	"	"	"	
1,4-Dioxane	ND	5.0	"	"	"	"	"	"	
Bromodichloromethane	ND	5.5	"	"	"	"	"	"	
cis-1,3-Dichloropropene	ND	5.0	"	"	"	"	"	"	
4-Methyl-2-pentanone	ND	5.0	"	"	"	"	"	"	
trans-1,3-Dichloropropene	ND	5.0	"	"	"	"	"	"	
Toluene	ND	5.0	"	"	"	"	"	"	
1,1,2-Trichloroethane	ND	5.0	"	"	"	"	"	"	

MOBILE GEOCHEMISTRY
H&P

Bradburne, Briller & Johnsen, LLC - Chicago 515 N State Street, Suite 2200 Chicago, IL 60610	Project BBJ052307-12 Project Number 0253901 / Lyons, IL Project Manager Mr Kevin McCartney	Reported 30-May-07

Volatile Organic Compounds by EPA TO-15

H&P Mobile Geochemistry

Analyte	Result	Reporting Limit	Units	Dilution Factor	Batch	Prepared	Analyzed	Method	Notes
SF-6 (E705070-10) Vapor Sampled: 22-May-07 Received: 23-May-07									
2-Hexanone	ND	5.0	ug/m³ Air	1	EE72501	24-May-07	24-May-07	EPA TO-15	
Dibromochloromethane	ND	5.0	"	"	"	"	"	"	
Tetrachloroethene	9.3	5.0	"	"	"	"	"	"	
1,2-Dibromoethane (EDB)	ND	5.0	"	"	"	"	"	"	
Chlorobenzene	ND	5.0	"	"	"	"	"	"	
Ethylbenzene	ND	5.0	"	"	"	"	"	"	
m,p-Xylene	ND	5.0	"	"	"	"	"	"	
Styrene	ND	5.0	"	"	"	"	"	"	
o-Xylene	ND	5.0	"	"	"	"	"	"	
Bromoform	ND	20	"	"	"	"	"	"	
1,1,2,2-Tetrachloroethane	ND	5.0	"	"	"	"	"	"	
4-Ethyltoluene	ND	5.0	"	"	"	"	"	"	
1,3,5-Trimethylbenzene	ND	5.0	"	"	"	"	"	"	
1,2,4-Trimethylbenzene	ND	5.0	"	"	"	"	"	"	
1,3-Dichlorobenzene	ND	10	"	"	"	"	"	"	
Benzyl chloride	ND	5.0	"	"	"	"	"	"	
1,4-Dichlorobenzene	ND	10	"	"	"	"	"	"	
1,2-Dichlorobenzene	ND	10	"	"	"	"	"	"	
1,2,4-Trichlorobenzene	ND	10	"	"	"	"	"	"	
Hexachlorobutadiene	ND	10	"	"	"	"	"	"	
Surrogate: 1,2-Dichloroethane-d4		*107 %*		*80-120*	"	"	"	"	
Surrogate: Toluene-d8		*103 %*		*80-120*	"	"	"	"	
Surrogate: 4-Bromofluorobenzene		*81.9 %*		*80-120*	"	"	"	"	
SF-5 (E705070-11) Vapor Sampled: 22-May-07 Received: 23-May-07									
Propene	16	10	ug/m³ Air	1	EE72501	24-May-07	24-May-07	EPA TO-15	
Dichlorodifluoromethane	ND	10	"	"	"	"	"	"	
Chloromethane	7.8	5.0	"	"	"	"	"	"	
Dichlorotetrafluoroethane	ND	10	"	"	"	"	"	"	
Vinyl chloride	ND	5.0	"	"	"	"	"	"	
Bromomethane	ND	5.0	"	"	"	"	"	"	
Chloroethane	ND	5.0	"	"	"	"	"	"	
Trichlorofluoromethane	ND	5.0	"	"	"	"	"	"	
Acetone	ND	20	"	"	"	"	"	"	
1,1-Dichloroethene	ND	5.0	"	"	"	"	"	"	
1,1,2-Trichlorotrifluoroethane	ND	10	"	"	"	"	"	"	
Methylene chloride	ND	5.0	"	"	"	"	"	"	

MOBILE GEOCHEMISTRY
H&P

Bradburne, Briller & Johnson, LLC - Chicago	Project: BBJ052307-12	
515 N. State Street, Suite 2200	Project Number: 0253901 / Lyons, IL	Reported:
Chicago, IL 60610	Project Manager: Mr. Kevin McCartney	30-May-07

Volatile Organic Compounds by EPA TO-15

H&P Mobile Geochemistry

Analyte	Result	Reporting Limit	Units	Dilution Factor	Batch	Prepared	Analyzed	Method	Notes
SF-5 (E705070-11) Vapor Sampled: 22-May-07 Received: 23-May-07									
Carbon disulfide	24	5.0	ug/m³ Air	1	E572501	24-May-07	24-May-07	EPA TO-15	
trans-1,2-Dichloroethene	ND	5.0	"	"	"	"	"	"	
Methyl tert-butyl ether	ND	5.0	"	"	"	"	"	"	
Vinyl acetate	ND	5.0	"	"	"	"	"	"	
1,1-Dichloroethane	ND	5.0	"	"	"	"	"	"	
2-Butanone	ND	5.0	"	"	"	"	"	"	
n-Hexane	ND	5.0	"	"	"	"	"	"	
cis-1,2-Dichloroethene	ND	5.0	"	"	"	"	"	"	
Ethyl acetate	ND	5.0	"	"	"	"	"	"	
Chloroform	ND	5.0	"	"	"	"	"	"	
Tetrahydrofuran	ND	5.0	"	"	"	"	"	"	
1,1,1-Trichloroethane	ND	5.0	"	"	"	"	"	"	
1,2-Dichloroethane	ND	5.0	"	"	"	"	"	"	
Benzene	ND	5.0	"	"	"	"	"	"	
Carbon tetrachloride	ND	5.0	"	"	"	"	"	"	
Cyclohexane	ND	5.0	"	"	"	"	"	"	
n-Heptane	ND	5.0	"	"	"	"	"	"	
Trichloroethene	ND	5.0	"	"	"	"	"	"	
1,2-Dichloropropane	ND	5.0	"	"	"	"	"	"	
1,4-Dioxane	ND	5.0	"	"	"	"	"	"	
Bromodichloromethane	ND	5.5	"	"	"	"	"	"	
cis-1,3-Dichloropropene	ND	5.0	"	"	"	"	"	"	
4-Methyl-2-pentanone	ND	5.0	"	"	"	"	"	"	
trans-1,3-Dichloropropene	ND	5.0	"	"	"	"	"	"	
Toluene	14	5.0	"	"	"	"	"	"	
1,1,2-Trichloroethane	ND	5.0	"	"	"	"	"	"	
2-Hexanone	ND	5.0	"	"	"	"	"	"	
Dibromochloromethane	ND	5.0	"	"	"	"	"	"	
Tetrachloroethene	ND	5.0	"	"	"	"	"	"	
1,2-Dibromoethane (EDB)	ND	5.0	"	"	"	"	"	"	
Chlorobenzene	ND	5.0	"	"	"	"	"	"	
Ethylbenzene	ND	5.0	"	"	"	"	"	"	
m,p-Xylene	ND	5.0	"	"	"	"	"	"	
Styrene	ND	5.0	"	"	"	"	"	"	
o-Xylene	ND	5.0	"	"	"	"	"	"	
Bromoform	ND	20	"	"	"	"	"	"	
1,1,2,2-Tetrachloroethane	ND	5.0	"	"	"	"	"	"	
4-Ethyltoluene	ND	5.0	"	"	"	"	"	"	

MOBILE GEOCHEMISTRY
H&P

Bradburne, Briller & Johnson, LLC - Chicago 515 N State Street, Suite 2200 Chicago, IL 60610	Project: BBJ052307-12 Project Number: 0253901 / Lyons, IL Project Manager: Mr Kevin McCartney	Reported 30-May-07

Volatile Organic Compounds by EPA TO-15

H&P Mobile Geochemistry

Analyte	Result	Reporting Limit	Units	Dilution Factor	Batch	Prepared	Analyzed	Method	Notes
SF-5 (E705070-11) Vapor Sampled: 22-May-07 Received: 23-May-07									
1,3,5-Trimethylbenzene	ND	5.0	ug/m³ Air	1	EE72501	24-May-07	24-May-07	EPA TO-15	
1,2,4-Trimethylbenzene	ND	5.0	"	"	"	"	"	"	
1,3-Dichlorobenzene	ND	10	"	"	"	"	"	"	
Benzyl chloride	ND	5.0	"	"	"	"	"	"	
1,4-Dichlorobenzene	ND	10	"	"	"	"	"	"	
1,2-Dichlorobenzene	ND	10	"	"	"	"	"	"	
1,2,4-Trichlorobenzene	ND	10	"	"	"	"	"	"	
Hexachlorobutadiene	ND	10	"	"	"	"	"	"	
Surrogate: 1,2-Dichloroethane-d4		*107 %*		*80-120*	"	"	"	"	
Surrogate: Toluene-d8		*102 %*		*80-120*	"	"	"	"	
Surrogate: 4-Bromofluorobenzene		*94.5 %*		*80-120*	"	"	"	"	
SF-13 (E705070-12) Vapor Sampled: 22-May-07 Received: 23-May-07									
Propene	ND	10	ug/m³ Air	1	EE72501	24-May-07	24-May-07	EPA TO-15	
Dichlorodifluoromethane	ND	10	"	"	"	"	"	"	
Chloromethane	ND	5.0	"	"	"	"	"	"	
Dichlorotetrafluoroethane	ND	10	"	"	"	"	"	"	
Vinyl chloride	ND	5.0	"	"	"	"	"	"	
Bromomethane	ND	5.0	"	"	"	"	"	"	
Chloroethane	ND	5.0	"	"	"	"	"	"	
Trichlorofluoromethane	ND	5.0	"	"	"	"	"	"	
Acetone	ND	20	"	"	"	"	"	"	
1,1-Dichloroethene	ND	5.0	"	"	"	"	"	"	
1,1,2-Trichlorotrifluoroethane	ND	10	"	"	"	"	"	"	
Methylene chloride	ND	5.0	"	"	"	"	"	"	
Carbon disulfide	5.9	5.0	"	"	"	"	"	"	
trans-1,2-Dichloroethene	ND	5.0	"	"	"	"	"	"	
Methyl tert-butyl ether	ND	5.0	"	"	"	"	"	"	
Vinyl acetate	ND	5.0	"	"	"	"	"	"	
1,1-Dichloroethane	ND	5.0	"	"	"	"	"	"	
2-Butanone	ND	5.0	"	"	"	"	"	"	
n-Hexane	ND	5.0	"	"	"	"	"	"	
cis-1,2-Dichloroethene	ND	5.0	"	"	"	"	"	"	
Ethyl acetate	ND	5.0	"	"	"	"	"	"	
Chloroform	ND	5.0	"	"	"	"	"	"	
Tetrahydrofuran	ND	5.0	"	"	"	"	"	"	
1,1,1-Trichloroethane	ND	5.0	"	"	"	"	"	"	

MOBILE GEOCHEMISTRY
H&P

Bradburne, Briller & Johnson, LLC - Chicago	Project: BBJ052307-12	
515 N. State Street, Suite 2200	Project Number: 0253901 / Lyons, IL	Reported:
Chicago, IL 60610	Project Manager: Mr. Kevin McCarney	30-May-07

Volatile Organic Compounds by EPA TO-15

H&P Mobile Geochemistry

Analyte	Result	Reporting Limit	Units	Dilution Factor	Batch	Prepared	Analyzed	Method	Notes
SF-13 (E705070-12) Vapor Sampled: 22-May-07 Received: 23-May-07									
1,2-Dichloroethane	ND	5.0	ug/m³ Air	1	EE72501	24-May-07	24-May-07	EPA TO-15	
Benzene	ND	5.0	"	"	"	"	"	"	
Carbon tetrachloride	ND	5.0	"	"	"	"	"	"	
Cyclohexane	ND	5.0	"	"	"	"	"	"	
n-Heptane	ND	5.0	"	"	"	"	"	"	
Trichloroethene	ND	5.0	"	"	"	"	"	"	
1,2-Dichloropropane	ND	5.0	"	"	"	"	"	"	
1,4-Dioxane	ND	5.0	"	"	"	"	"	"	
Bromodichloromethane	ND	5.5	"	"	"	"	"	"	
cis-1,3-Dichloropropene	ND	5.0	"	"	"	"	"	"	
4-Methyl-2-pentanone	ND	5.0	"	"	"	"	"	"	
trans-1,3-Dichloropropene	ND	5.0	"	"	"	"	"	"	
Toluene	ND	5.0	"	"	"	"	"	"	
1,1,2-Trichloroethane	ND	5.0	"	"	"	"	"	"	
2-Hexanone	ND	5.0	"	"	"	"	"	"	
Dibromochloromethane	ND	5.0	"	"	"	"	"	"	
Tetrachloroethene	ND	5.0	"	"	"	"	"	"	
1,2-Dibromoethane (EDB)	ND	5.0	"	"	"	"	"	"	
Chlorobenzene	ND	5.0	"	"	"	"	"	"	
Ethylbenzene	ND	5.0	"	"	"	"	"	"	
m,p-Xylene	ND	5.0	"	"	"	"	"	"	
Styrene	ND	5.0	"	"	"	"	"	"	
o-Xylene	ND	5.0	"	"	"	"	"	"	
Bromoform	ND	20	"	"	"	"	"	"	
1,1,2,2-Tetrachloroethane	ND	5.0	"	"	"	"	"	"	
4-Ethyltoluene	ND	5.0	"	"	"	"	"	"	
1,3,5-Trimethylbenzene	ND	5.0	"	"	"	"	"	"	
1,2,4-Trimethylbenzene	ND	5.0	"	"	"	"	"	"	
1,3-Dichlorobenzene	ND	10	"	"	"	"	"	"	
Benzyl chloride	ND	5.0	"	"	"	"	"	"	
1,4-Dichlorobenzene	ND	10	"	"	"	"	"	"	
1,2-Dichlorobenzene	ND	10	"	"	"	"	"	"	
1,2,4-Trichlorobenzene	ND	10	"	"	"	"	"	"	
Hexachlorobutadiene	ND	10	"	"	"	"	"	"	
Surrogate: 1,2-Dichloroethane-d4		*108 %*	*80-120*		"	"	"	"	
Surrogate: Toluene-d8		*103 %*	*80-120*		"	"	"	"	
Surrogate: 4-Bromofluorobenzene		*88.5 %*	*80-120*		"	"	"	"	

MOBILE GEOCHEMISTRY
H&P

Bradburne, Briller & Johnson, LLC - Chicago 515 N State Street, Suite 2200 Chicago, IL 60610	Project: BBJ052307-12 Project Number: 0253901 / Lyons, IL Project Manager: Mr Kevin McCarrney	Reported: 30-May-07

Methane by GC/FID - Quality Control

H&P Mobile Geochemistry

Analyte	Result	Reporting Limit	Units	Spike Level	Source Result	%REC	%REC Limits	RPD	RPD Limit	Notes
Batch EE72405 - GC										
Blank (EE72405-BLK1)				Prepared & Analyzed: 24-May-07						
Methane	ND	10	ppmv							

MOBILE GEOCHEMISTRY
H&P

Bradburne, Brillet & Johnson, LLC - Chicago 515 N. State Street, Suite 2200 Chicago, IL 60610	Project: BBJ052307-12 Project Number: 0253901 / Lyons, IL Project Manager: Mr. Kevin McCartney	Reported: 30-May-07

Volatile Organic Compounds by EPA TO-15 - Quality Control

H&P Mobile Geochemistry

Analyte	Result	Reporting Limit	Units	Spike Level	Source Result	%REC	%REC Limits	RPD	RPD Limit	Notes
Batch EE72501 - TO-15										
Blank (EE72501-BLK1)				Prepared & Analyzed: 24-May-07						
Propene	ND	10	ug/m³ Air							
Dichlorodifluoromethane	ND	10	"							
Chloromethane	ND	5.0	"							
Dichlorotetrafluoroethane	ND	10	"							
Vinyl chloride	ND	5.0	"							
Bromomethane	ND	5.0	"							
Chloroethane	ND	5.0	"							
Trichlorofluoromethane	ND	5.0	"							
Acetone	ND	20	"							
1,1-Dichloroethene	ND	5.0	"							
1,1,2-Trichlorotrifluoroethane	ND	10	"							
Methylene chloride	ND	5.0	"							
Carbon disulfide	ND	5.0	"							
trans-1,2-Dichloroethene	ND	5.0	"							
Methyl tert-butyl ether	ND	5.0	"							
Vinyl acetate	ND	5.0	"							
1,1-Dichloroethane	ND	5.0	"							
2-Butanone	ND	5.0	"							
n-Hexane	ND	5.0	"							
cis-1,2-Dichloroethene	ND	5.0	"							
Ethyl acetate	ND	5.0	"							
Chloroform	ND	5.0	"							
Tetrahydrofuran	ND	5.0	"							
1,1,1-Trichloroethane	ND	5.0	"							
1,2-Dichloroethane	ND	5.0	"							
Benzene	ND	5.0	"							
Carbon tetrachloride	ND	5.0	"							
Cyclohexane	ND	5.0	"							
n-Heptane	ND	5.0	"							
Trichloroethene	ND	5.0	"							
1,2-Dichloropropane	ND	5.0	"							
1,4-Dioxane	ND	5.0	"							
Bromodichloromethane	ND	5.5	"							
cis-1,3-Dichloropropene	ND	5.0	"							

MOBILE GEOCHEMISTRY
H&P

Bradburne, Briller & Johnson, LLC - Chicago	Project BBJ0S2307-12	
515 N State Street, Suite 2200	Project Number 0253901 / Lyons, IL	Reported
Chicago, IL 60610	Project Manager Mr Kevin McCartney	30-May-07

Volatile Organic Compounds by EPA TO-15 - Quality Control

H&P Mobile Geochemistry

Analyte	Result	Reporting Limit	Units	Spike Level	Source Result	%REC	%REC Limits	RPD	RPD Limit	Notes
Batch EE72501 - TO-15										
Blank (EE72501-BLK1)				Prepared & Analyzed: 24-May-07						
4-Methyl-2-pentanone	ND	5.0	ug/m³ Air							
trans-1,3-Dichloropropene	ND	5.0	"							
Toluene	ND	5.0	"							
1,1,2-Trichloroethane	ND	5.0	"							
2-Hexanone	ND	5.0	"							
Dibromochloromethane	ND	5.0	"							
Tetrachloroethene	ND	5.0	"							
1,2-Dibromoethane (EDB)	ND	5.0	"							
Chlorobenzene	ND	5.0	"							
Ethylbenzene	ND	5.0	"							
m,p-Xylene	ND	5.0	"							
Styrene	ND	5.0	"							
o-Xylene	ND	5.0	"							
Bromoform	ND	20	"							
1,1,2,2-Tetrachloroethane	ND	5.0	"							
4-Ethyltoluene	ND	5.0	"							
1,3,5-Trimethylbenzene	ND	5.0	"							
1,2,4-Trimethylbenzene	ND	5.0	"							
1,3-Dichlorobenzene	ND	10	"							
Benzyl chloride	ND	5.0	"							
1,4-Dichlorobenzene	ND	10	"							
1,2-Dichlorobenzene	ND	10	"							
1,2,4-Trichlorobenzene	ND	10	"							
Hexachlorobutadiene	ND	10	"							
Surrogate: 1,2-Dichloroethane-d4	*110*		"	*103*		*107*	*80-120*			
Surrogate: Toluene-d8	*98.5*		"	*96.2*		*102*	*80-120*			
Surrogate: 4-Bromofluorobenzene	*176*		"	*182*		*96.7*	*80-120*			

MOBILE GEOCHEMISTRY
H&P

Bradburne, Briller & Johnson, LLC - Chicago 515 N. State Street, Suite 2200 Chicago, IL 60610	Project: BBJ052307-12 Project Number: 0253901 / Lyons, IL Project Manager: Mr. Kevin McCarney	Reported: 30-May-07

Volatile Organic Compounds by EPA TO-15 - Quality Control

H&P Mobile Geochemistry

Analyte	Result	Reporting Limit	Units	Spike Level	Source Result	%REC	%REC Limits	RPD	RPD Limit	Notes
Batch EE72501 - TO-15										
LCS (EE72501-BS1)				Prepared & Analyzed: 24-May-07						
Propene	35.9	10	ug/m³ Air	35.0		103	65-135			
Dichlorodifluoromethane	114	10	"	101		113	65-135			
Chloromethane	47.0	5.0	"	42.0		112	65-135			
Dichlorotetrafluoroethane	158	10	"	142		110	65-135			
Vinyl chloride	56.3	5.0	"	52.0		108	65-135			
Bromomethane	70.9	5.0	"	79.2		89.5	65-135			
Chloroethane	53.9	5.0	"	53.6		101	65-135			
Trichlorofluoromethane	99.1	5.0	"	113		87.7	65-135			
Acetone	39.8	20	"	48.4		82.2	65-135			
1,1-Dichloroethene	72.2	5.0	"	80.8		89.4	65-135			
1,1,2-Trichlorotrifluoroethane	138	10	"	155		89.0	65-135			
Methylene chloride	66.3	5.0	"	70.8		93.6	65-135			
Carbon disulfide	66.2	5.0	"	63.2		105	65-135			
trans-1,2-Dichloroethene	79.2	5.0	"	80.8		98.0	65-135			
Methyl tert-butyl ether	70.5	5.0	"	73.6		95.8	65-135			
Vinyl acetate	72.3	5.0	"	72.0		100	65-135			
1,1-Dichloroethane	77.6	5.0	"	82.4		94.2	65-135			
2-Butanone	62.2	5.0	"	60.0		104	65-135			
n-Hexane	75.6	5.0	"	72.0		105	65-135			
cis-1,2-Dichloroethene	80.1	5.0	"	80.0		100	65-135			
Ethyl acetate	51.8	5.0	"	73.6		70.4	65-135			
Chloroform	96.5	5.0	"	99.2		97.3	65-135			
Tetrahydrofuran	57.0	5.0	"	60.0		95.0	65-135			
1,1,1-Trichloroethane	106	5.0	"	111		95.5	65-135			
1,2-Dichloroethane	78.0	5.0	"	82.4		94.7	65-135			
Benzene	61.1	5.0	"	64.8		94.3	65-135			
Carbon tetrachloride	124	5.0	"	128		96.9	65-135			
Cyclohexane	74.8	5.0	"	70.4		106	65-135			
n-Heptane	85.3	5.0	"	83.6		102	65-135			
Trichloroethene	99.6	5.0	"	110		90.5	65-135			
1,2-Dichloropropane	89.1	5.0	"	94.4		94.4	65-135			
1,4-Dioxane	66.5	5.0	"	73.6		90.4	65-135			
Bromodichloromethane	128	5.5	"	137		93.4	65-135			
cis-1,3-Dichloropropene	83.6	5.0	"	92.4		90.5	65-135			

MOBILE GEOCHEMISTRY
H&P

Bradburne, Briller & Johnson, LLC - Chicago	Project: BBJ052307-12	
515 N State Street, Suite 2200	Project Number: 0253901 / Lyons, IL	Reported
Chicago, IL 60610	Project Manager: Mr Kevin McCartney	30-May-07

Volatile Organic Compounds by EPA TO-15 - Quality Control

H&P Mobile Geochemistry

Analyte	Result	Reporting Limit	Units	Spike Level	Source Result	%REC	%REC Limits	RPD	RPD Limit	Notes
Batch EE72501 - TO-15										
LCS (EE72501-BS1)				Prepared & Analyzed: 24-May-07						
4-Methyl-2-pentanone	82.5	5.0	ug/m³ Air	83.2		99.2	65-135			
trans-1,3-Dichloropropene	82.0	5.0	"	92.4		88.7	65-135			
Toluene	68.4	5.0	"	76.8		89.1	65-135			
1,1,2-Trichloroethane	103	5.0	"	111		92.8	65-135			
2-Hexanone	62.2	5.0	"	83.2		74.8	65-135			
Dibromochloromethane	166	5.0	"	174		95.4	65-135			
Tetrachloroethene	122	5.0	"	138		88.4	65-135			
1,2-Dibromoethane (EDB)	131	5.0	"	157		83.4	65-135			
Chlorobenzene	78.9	5.0	"	93.6		84.3	65-135			
Ethylbenzene	74.0	5.0	"	88.4		83.7	65-135			
m,p-Xylene	146	5.0	"	177		82.5	65-135			
Styrene	66.3	5.0	"	86.8		76.4	65-135			
o-Xylene	68.6	5.0	"	88.4		77.6	65-135			
Bromoform	769	20	"	840		91.9	65-135			
1,1,2,2-Tetrachloroethane	84.7	5.0	"	140		60.5	65-135			QL-1L
4-Ethyltoluene	94.7	5.0	"	100		94.7	65-135			
1,3,5-Trimethylbenzene	71.0	5.0	"	100		71.0	65-135			
1,2,4-Trimethylbenzene	67.8	5.0	"	100		67.8	65-135			
1,3-Dichlorobenzene	71.3	10	"	122		58.4	65-135			QL-1L
Benzyl chloride	84.7	5.0	"	105		80.7	65-135			
1,4-Dichlorobenzene	66.7	10	"	122		54.7	65-135			QL-1L
1,2-Dichlorobenzene	65.3	10	"	122		53.5	65-135			QL-1L
1,2,4-Trichlorobenzene	38.6	10	"	151		25.6	65-135			QL-1L
Hexachlorobutadiene	59.3	10	"	218		27.2	65-135			QL-1L
Surrogate: 1,2-Dichloroethane-d4	*184*		"	*183*		*101*	*80-120*			
Surrogate: Toluene-d8	*96.9*		"	*96.2*		*101*	*80-120*			
Surrogate: 4-Bromofluorobenzene	*184*		"	*182*		*101*	*80-120*			

MOBILE GEOCHEMISTRY
H&P

Bradbourne, Briller & Johnson, LLC - Chicago 515 N. State Street, Suite 2200 Chicago, IL 60610	Project: BBJ052307-12 Project Number: 0253901 / Lyons, IL Project Manager: Mr. Kevin McCartney	Reported: 30-May-07

Notes and Definitions

QL-1L	The LCS and/or LCSD recoveries fell below the established control specifications for this analyte. Any result for this compound is qualified and should be considered an estimate only.
DET	Analyte DETECTED
ND	Analyte NOT DETECTED at or above the reporting limit
NR	Not Reported
dry	Sample results reported on a dry weight basis
RPD	Relative Percent Difference

printed 09/18/2007 4:52PM by epa4561 p. 168/439

MOBILE GEOCHEMISTRY

H&P

Chain of Custody Record

☒ 2470 Impala Dr., Carlsbad, CA 92010 • ph 760.804.9678 • fax 760.304.9159
☐ 3825 Industry Avenue, Lakewood, CA 90712 • ph 562.426.6991 • fax 562.426.6995

Date 5/22/07
H&P Project # BBJ052307-12
Outside Lab:

Client: Bradburne, Briller & Johnson
Address: 515 N State Street, Suite 2200
Chicago, IL 60610
Email: kmccartney@bbjgroup.com Phone: 312-644-8556

Collector: Michele Hargreaves Page: 1 of 1
Client Project # 0253901 Project Contact: Kevin McCartney
Location: Lyons, IL
Fax: 312-644-8555 Turn around time:

EDF: Yes ☐ No ☐
Global ID:

Sample Receipt
Intact: ☐ Yes ☐ No
Seal Intact: ☐ Yes ☐ No ☐ N/A
Cold: ☐ Yes ☐ No
N/A (Received on Site)

Special Instructions:
Please don't report 1,3-Butadiene per Blayne do not run T=0

Sample Name	Field Point Name	Purge Vol	Time	Date	Sample Type	Container Type	TPH ☐ gasoline ☐ diesel ☐ ext	418.1 TRPH	8021 for BTEX/MTBE	8260B BTEX / Oxygenates	8260B TPH gas	8260B VOC's	8260B DTSC/LARWQCB	8260B Ketones	TO-15 Full List	TO-15 BTEX/MTBE	LCC (specify)	Naphthalene ☐ 8260B ☒ TO-15	Methane	Fixed Gases ☐ CO2 ☐ O2 ☐ N2				Total # of containers
SF-12 T=0			3:45 PM	5/21	air	Summa									X				X					
SF-11 T=0			3:50 PM	5/21	air	Summa									X				X					
SF-10 T=0			4:00 PM	5/21	air	Summa									X				X					
SF-6 T=0			4:10 PM	5/21	air	Summa									X				X					
SF-5 T=0			4:20 PM	5/21	air	Summa									X				X					
SF-13 T=0			4:30 PM	5/21	air	Summa									X				X					
SF-12			5:35 am	5/22	air	Summa									X				X					
SF-11			5:40 am	5/22	air	Summa									X				X					
SF-10			5:45 am	5/22	air	Summa									X				X					
SF-6			5:50 am	5/22	air	Summa									X				X					

Relinquished by: (Signature)	(company)	Received by: (Signature)	(company)	Date	Time
Michele L Hargreaves	BBJ	[signature] via UPS	1/tp	5/23/07	12:20pm
Relinquished by: (Signature)	(company)	Received by: (Signature)	(company)	Date	Time
Relinquished by: (Signature)	(company)	Received by: (Signature)	(company)	Date	Time

*Signature constitutes authorization to proceed with analysis and acceptance of condition on back.

Sample disposal instruction: ☐ Disposal @ $2.00 each ☐ Return to client ☐ Pickup

printed 09/18/2007 4:52PM by epa4561 p. 169/439

MOBILE GEOCHEMISTRY

H&P

Chain of Custody Record

☒ 2470 Impala Dr., Carlsbad, CA 92010 · ph 760.804.9678 · fax 760.804.9159
☐ 3825 Industry Avenue, Lakewood, CA 90712 · ph 562.426.6991 · fax 562.426.6995

Date: 5/22/07
H&P Project # BB505230 7-12
Outside Lab:

Client: Broadbourne, Briller & Johnson
Address: 515 N. State Street, Suite 2200
Chicago, IL 60610
Email: kmccartney@bbjgroup.com Phone: 312-644-8556

Collector: Michele Hargreaves
Page: 2 of 2
Client Project # 0253901
Project Contact: Kevin McCartney
Location: Lyons, IL
Fax: 312-644-8555
Turn around time:

EDF: Yes ☐ No ☐
Global ID:

Sample Receipt
Intact: ☐ Yes ☐ No
Seal Intact: ☐ Yes ☐ No ☐ N/A
Cold: ☐ Yes ☐ No
N/A (Received on Site)

Special Instructions:
Please don't report 1,3-Butadiene

Sample Name	Field Point Name	Purge Vol	Time	Date	Sample Type	Container Type	TPH ☐ gasoline ☐ diesel ☐ ext	418.1 TRPH	8021 for BTEX/MTBE	8260B: BTEX / Oxygenates	8260B: TPH gas	8260B: VOC's	8260B: DTSC/LARWQCB	8260B: Ketones	TO-15: Full List	TO-15: BTEX/MTBE	LCC (specify)	Naphthalene ☐ 8260B ☐ TO-15	Methane	Fixed Gases ☐ CO_2 ☐ O_2 ☐ N_2				Total # of containers
SF-5			6 am	5/22	air	Summa									X				X					
SF-13			6 am 10	5/22	air	Summa									X				X					

Relinquished by: (Signature)	(company)	Received by: (Signature)	(company)	Date:	Time:
Michele Hargreaves	BB-J	[signature] via UPS	H&P	5/23/07	12:20pm
Relinquished by: (Signature)	(company)	Received by: (Signature)	(company)	Date:	Time:
Relinquished by: (Signature)	(company)	Received by: (Signature)	(company)	Date:	Time:

*Signature constitutes authorization to proceed with analysis and acceptance of condition on back.

Sample disposal instruction: ☐ Disposal @ $2.00 each ☐ Return to client ☐ Pickup

MOBILE GEOCHEMISTRY

H&P

08 June 2007

Mr. Kevin McCartney
Bradburne, Briller & Johnson, LLC - Chicago
515 N. State Street, Suite 2200
Chicago, IL 60610
RE: BBJ052907-10

Enclosed are the results of analyses for samples received by the laboratory on 29-May-07 . If you have any questions concerning this report, please feel free to contact me.

Sincerely,

J Villarreal

Janis Villarreal
Laboratory Director

H&P Mobile Geochemistry operates under CA Environmental Lab Accreditation Program Numbers 1317, 1561, 1667, 1745, 1746, 2086, 2276, 2543, 2579 and 2595.

2470 Impala Drive, Carlsbad, California 92010 | 760.804.9678 — Fax 760.804.9159
3825 Industry Avenue, Lakewood, California 90712 | 562.426.6991 — Fax 562.426.6995
www.HandPmg.com | 1-800-834-9888

MOBILE GEOCHEMISTRY
H&P

Bradburne, Briller & Johnson, LLC - Chicago 515 N. State Street, Suite 2200 Chicago, IL 60610	Project: BBJ052907-10 Project Number: 0253901 / Lyons, IL Project Manager: Mr. Kevin McCarney	Reported: 08-Jun-07

ANALYTICAL REPORT FOR SAMPLES

Sample ID	Laboratory ID	Matrix	Date Sampled	Date Received
SF-1 t=0	E705084-01	Vapor	24-May-07	29-May-07
SF-7 t=0	E705084-02	Vapor	24-May-07	29-May-07
SF-3 t=0	E705084-03	Vapor	24-May-07	29-May-07
SF-4 t=0	E705084-04	Vapor	24-May-07	29-May-07
SF-2 t=0	E705084-05	Vapor	24-May-07	29-May-07
SF-8 t=0	E705084-06	Vapor	24-May-07	29-May-07
SF-1	E705084-07	Vapor	25-May-07	29-May-07
SF-7	E705084-08	Vapor	25-May-07	29-May-07
SF-3	E705084-09	Vapor	25-May-07	29-May-07
SF-4	E705084-10	Vapor	25-May-07	29-May-07
SF-2	E705084-11	Vapor	25-May-07	29-May-07
SF-8	E705084-12	Vapor	25-May-07	29-May-07
SF-9 t=0	E705084-13	Vapor	25-May-07	29-May-07
SF-9	E705084-14	Vapor	26-May-07	29-May-07

MOBILE GEOCHEMISTRY
H&P

Bradburne, Briller & Johnson, LLC - Chicago 515 N State Street, Suite 2200 Chicago, IL 60610	Project BBJ052907-10 Project Number: 0253901 / Lyons, IL Project Manager Mr Kevin McCanney	Reported: 08-Jun-07

Methane by GC/FID

H&P Mobile Geochemistry

Analyte	Result	Reporting Limit	Units	Dilution Factor	Batch	Prepared	Analyzed	Method	Notes
SF-1 t=0 (E705084-01) Vapor Sampled: 24-May-07 Received: 29-May-07									
Methane	ND	10	ppmv	1	EE72906	29-May-07	29-May-07	Modified EPA 8015B	
SF-7 t=0 (E705084-02) Vapor Sampled: 24-May-07 Received: 29-May-07									
Methane	ND	10	ppmv	1	EE72906	29-May-07	29-May-07	Modified EPA 8015B	
SF-3 t=0 (E705084-03) Vapor Sampled: 24-May-07 Received: 29-May-07									
Methane	ND	10	ppmv	1	EE72906	29-May-07	29-May-07	Modified EPA 8015B	
SF-4 t=0 (E705084-04) Vapor Sampled: 24-May-07 Received: 29-May-07									
Methane	ND	10	ppmv	1	EE72906	29-May-07	29-May-07	Modified EPA 8015B	
SF-2 t=0 (E705084-05) Vapor Sampled: 24-May-07 Received: 29-May-07									
Methane	ND	10	ppmv	1	EE72906	29-May-07	29-May-07	Modified EPA 8015B	
SF-8 t=0 (E705084-06) Vapor Sampled: 24-May-07 Received: 29-May-07									
Methane	ND	10	ppmv	1	EE72906	29-May-07	29-May-07	Modified EPA 8015B	
SF-1 (E705084-07) Vapor Sampled: 25-May-07 Received: 29-May-07									
Methane	ND	10	ppmv	1	EE72906	29-May-07	29-May-07	Modified EPA 8015B	
SF-7 (E705084-08) Vapor Sampled: 25-May-07 Received: 29-May-07									
Methane	ND	10	ppmv	1	EE72906	29-May-07	29-May-07	Modified EPA 8015B	
SF-3 (E705084-09) Vapor Sampled: 25-May-07 Received: 29-May-07									
Methane	ND	10	ppmv	1	EE72906	29-May-07	29-May-07	Modified EPA 8015B	

MOBILE GEOCHEMISTRY
H&P

Bradburne, Briller & Johnson, LLC - Chicago 515 N. State Street, Suite 2200 Chicago, IL 60610	Project: BBJ052907-10 Project Number: 0253901 / Lyons, IL Project Manager: Mr. Kevin McCartney	Reported: 08-Jun-07

Methane by GC/FID

H&P Mobile Geochemistry

Analyte	Result	Reporting Limit	Units	Dilution Factor	Batch	Prepared	Analyzed	Method	Notes
SF-4 (E705084-10) Vapor Sampled: 25-May-07 Received: 29-May-07									
Methane	ND	10	ppmv	1	EE72906	29-May-07	29-May-07	Modified EPA 8015B	
SF-2 (E705084-11) Vapor Sampled: 25-May-07 Received: 29-May-07									
Methane	ND	10	ppmv	1	EE72906	29-May-07	29-May-07	Modified EPA 8015B	
SF-8 (E705084-12) Vapor Sampled: 25-May-07 Received: 29-May-07									
Methane	ND	10	ppmv	1	EE72906	29-May-07	29-May-07	Modified EPA 8015B	
SF-9 t=0 (E705084-13) Vapor Sampled: 25-May-07 Received: 29-May-07									
Methane	ND	10	ppmv	1	EE72906	29-May-07	29-May-07	Modified EPA 8015B	
SF-9 (E705084-14) Vapor Sampled: 26-May-07 Received: 29-May-07									
Methane	ND	10	ppmv	1	EE72906	29-May-07	29-May-07	Modified EPA 8015B	

MOBILE GEOCHEMISTRY
H&P

Bradburne, Briller & Johnson, LLC - Chicago 515 N State Street, Suite 2200 Chicago, IL 60610	Project: BBJ052907-10 Project Number: 0253901 / Lyons, IL Project Manager: Mr Kevin McCarney	Reported 08-Jun-07

Volatile Organic Compounds by EPA TO-15

H&P Mobile Geochemistry

Analyte	Result	Reporting Limit	Units	Dilution Factor	Batch	Prepared	Analyzed	Method	Notes
SF-3 t=0 (E705084-03) Vapor Sampled: 24-May-07 Received: 29-May-07									
Propane	ND	10	ug/m Air	1	EF70604	05-Jun-07	05-Jun-07	EPA TO-15	
Dichlorodifluoromethane	ND	10	"	"	"	"	"	"	
Chloromethane	ND	5.0	"	"	"	"	"	"	
Dichlorotetrafluoroethane	ND	10	"	"	"	"	"	"	
Vinyl chloride	ND	5.0	"	"	"	"	"	"	
Bromomethane	ND	5.0	"	"	"	"	"	"	
Chloroethane	ND	5.0	"	"	"	"	"	"	
Trichlorofluoromethane	ND	5.0	"	"	"	"	"	"	
Acetone	37	20	"	"	"	"	"	"	
1,1-Dichloroethene	ND	5.0	"	"	"	"	"	"	
1,1,2-Trichlorotrifluoroethane	ND	10	"	"	"	"	"	"	
Methylene chloride	ND	5.0	"	"	"	"	"	"	
Carbon disulfide	ND	5.0	"	"	"	"	"	"	
trans-1,2-Dichloroethene	ND	5.0	"	"	"	"	"	"	
Methyl tert-butyl ether	ND	5.0	"	"	"	"	"	"	
Vinyl acetate	ND	5.0	"	"	"	"	"	"	
1,1-Dichloroethane	ND	5.0	"	"	"	"	"	"	
2-Butanone	ND	5.0	"	"	"	"	"	"	
n-Hexane	ND	5.0	"	"	"	"	"	"	
cis-1,2-Dichloroethene	ND	5.0	"	"	"	"	"	"	
Ethyl acetate	ND	5.0	"	"	"	"	"	"	
Chloroform	ND	5.0	"	"	"	"	"	"	
Tetrahydrofuran	ND	5.0	"	"	"	"	"	"	
1,1,1-Trichloroethane	ND	5.0	"	"	"	"	"	"	
1,2-Dichloroethane	ND	5.0	"	"	"	"	"	"	
Benzene	ND	5.0	"	"	"	"	"	"	
Carbon tetrachloride	ND	5.0	"	"	"	"	"	"	
Cyclohexane	ND	5.0	"	"	"	"	"	"	
n-Heptane	ND	5.0	"	"	"	"	"	"	
Trichloroethene	ND	5.0	"	"	"	"	"	"	
1,2-Dichloropropane	ND	5.0	"	"	"	"	"	"	
1,4-Dioxane	ND	5.0	"	"	"	"	"	"	
Bromodichloromethane	ND	5.0	"	"	"	"	"	"	
cis-1,3-Dichloropropene	ND	5.0	"	"	"	"	"	"	
4-Methyl-2-pentanone	ND	5.0	"	"	"	"	"	"	
trans-1,3-Dichloropropene	ND	5.0	"	"	"	"	"	"	
Toluene	11	5.0	"	"	"	"	"	"	
1,1,2-Trichloroethane	ND	5.0	"	"	"	"	"	"	

MOBILE GEOCHEMISTRY
H&P

Bradburne, Briller & Johnson, LLC - Chicago	Project: BBJ052907-10	
515 N. State Street, Suite 2200	Project Number: 0253901 / Lyons, IL	Reported:
Chicago, IL 60610	Project Manager: Mr. Kevin McCartney	08-Jun-07

Volatile Organic Compounds by EPA TO-15

H&P Mobile Geochemistry

Analyte	Result	Reporting Limit	Units	Dilution Factor	Batch	Prepared	Analyzed	Method	Notes
SF-3 t=0 (E705084-03) Vapor Sampled: 24-May-07 Received: 29-May-07									
2-Hexanone	ND	10	ug/m³ Air	1	EF70604	05-Jun-07	05-Jun-07	EPA TO-15	
Dibromochloromethane	ND	5.0	"	"	"	"	"	"	
Tetrachloroethene	ND	5.0	"	"	"	"	"	"	
1,2-Dibromoethane (EDB)	ND	5.0	"	"	"	"	"	"	
Chlorobenzene	ND	5.0	"	"	"	"	"	"	
Ethylbenzene	ND	5.0	"	"	"	"	"	"	
m,p-Xylene	ND	5.0	"	"	"	"	"	"	
Styrene	ND	5.0	"	"	"	"	"	"	
o-Xylene	ND	5.0	"	"	"	"	"	"	
Bromoform	ND	20	"	"	"	"	"	"	
1,1,2,2-Tetrachloroethane	ND	5.0	"	"	"	"	"	"	
4-Ethyltoluene	ND	5.0	"	"	"	"	"	"	
1,3,5-Trimethylbenzene	ND	5.0	"	"	"	"	"	"	
1,2,4-Trimethylbenzene	ND	5.0	"	"	"	"	"	"	
1,3-Dichlorobenzene	ND	10	"	"	"	"	"	"	
Benzyl chloride	ND	5.0	"	"	"	"	"	"	
1,4-Dichlorobenzene	ND	10	"	"	"	"	"	"	
1,2-Dichlorobenzene	ND	10	"	"	"	"	"	"	
1,2,4-Trichlorobenzene	ND	10	"	"	"	"	"	"	
Hexachlorobutadiene	ND	10	"	"	"	"	"	"	
Surrogate: 1,2-Dichloroethane-d4		*96.9 %*	*80-120*		"	"	"	"	
Surrogate: Toluene-d8		*96.8 %*	*80-120*		"	"	"	"	
Surrogate: 4-Bromofluorobenzene		*91.8 %*	*80-120*		"	"	"	"	
SF-1 (E705084-07) Vapor Sampled: 25-May-07 Received: 29-May-07									
Propene	ND	10	ug/m³ Air	1	BE73103	30-May-07	30-May-07	EPA TO-15	
Dichlorodifluoromethane	ND	10	"	"	"	"	"	"	
Chloromethane	ND	5.0	"	"	"	"	"	"	
Dichlorotetrafluoroethane	ND	10	"	"	"	"	"	"	
Vinyl chloride	ND	5.0	"	"	"	"	"	"	
Bromomethane	ND	5.0	"	"	"	"	"	"	
Chloroethane	ND	5.0	"	"	"	"	"	"	
Trichlorofluoromethane	ND	5.0	"	"	"	"	"	"	
Acetone	ND	20	"	"	"	"	"	"	
Isopropyl alcohol	ND	10	"	"	"	"	"	"	
1,1-Dichloroethene	ND	5.0	"	"	"	"	"	"	
Tert-butyl alcohol	ND	20	"	"	"	"	"	"	

MOBILE GEOCHEMISTRY
H&P

Bradburne, Briller & Johnson, LLC - Chicago 515 N State Street, Suite 2200 Chicago, IL 60610	Project BBJ052907-10 Project Number: 0253901 / Lyons, IL Project Manager: Mr Kevin McCartney	Reported 08-Jun-07

Volatile Organic Compounds by EPA TO-15

H&P Mobile Geochemistry

Analyte	Result	Reporting Limit	Units	Dilution Factor	Batch	Prepared	Analyzed	Method	Notes
SF-1 (E705084-07) Vapor Sampled: 25-May-07 Received: 29-May-07									
1,1,2-Trichlorotrifluoroethane	ND	10	ug/m³ Air	1	EE73103	30-May-07	30-May-07	EPA TO-15	
Methylene chloride	ND	5.0	"	"	"	"	"	"	
Carbon disulfide	14	5.0	"	"	"	"	"	"	
trans-1,2-Dichloroethene	ND	5.0	"	"	"	"	"	"	
Methyl tert-butyl ether	ND	5.0	"	"	"	"	"	"	
Vinyl acetate	ND	5.0	"	"	"	"	"	"	
1,1-Dichloroethane	ND	5.0	"	"	"	"	"	"	
2-Butanone	ND	5.0	"	"	"	"	"	"	
n-Hexane	ND	5.0	"	"	"	"	"	"	
cis-1,2-Dichloroethene	ND	5.0	"	"	"	"	"	"	
Di-isopropyl ether	ND	5.0	"	"	"	"	"	"	
Ethyl acetate	ND	5.0	"	"	"	"	"	"	
Chloroform	ND	5.0	"	"	"	"	"	"	
Tetrahydrofuran	ND	5.0	"	"	"	"	"	"	
Ethyl tert-butyl ether	ND	5.0	"	"	"	"	"	"	
1,1,1-Trichloroethane	ND	5.0	"	"	"	"	"	"	
1,2-Dichloroethane	ND	5.0	"	"	"	"	"	"	
Benzene	ND	5.0	"	"	"	"	"	"	
Carbon tetrachloride	ND	5.0	"	"	"	"	"	"	
Cyclohexane	ND	5.0	"	"	"	"	"	"	
Tert-amyl methyl ether	ND	5.0	"	"	"	"	"	"	
n-Heptane	ND	5.0	"	"	"	"	"	"	
Trichloroethene	ND	5.0	"	"	"	"	"	"	
1,2-Dichloropropane	ND	5.0	"	"	"	"	"	"	
1,4-Dioxane	ND	5.0	"	"	"	"	"	"	
Bromodichloromethane	ND	5.0	"	"	"	"	"	"	
cis-1,3-Dichloropropene	ND	5.0	"	"	"	"	"	"	
4-Methyl-2-pentanone	ND	5.0	"	"	"	"	"	"	
trans-1,3-Dichloropropene	ND	5.0	"	"	"	"	"	"	
Toluene	ND	5.0	"	"	"	"	"	"	
1,1,2-Trichloroethane	ND	5.0	"	"	"	"	"	"	
2-Hexanone	ND	10	"	"	"	"	"	"	
Dibromochloromethane	ND	5.0	"	"	"	"	"	"	
Tetrachloroethene	18	5.0	"	"	"	"	"	"	
1,2-Dibromoethane (EDB)	ND	5.0	"	"	"	"	"	"	
Chlorobenzene	ND	5.0	"	"	"	"	"	"	
Ethylbenzene	ND	5.0	"	"	"	"	"	"	
m,p-Xylene	ND	5.0	"	"	"	"	"	"	

MOBILE GEOCHEMISTRY
H&P

Bradburne, Briller & Johnson, LLC - Chicago 515 N. State Street, Suite 2200 Chicago, IL 60610	Project: BBJ052907-10 Project Number: 0253901 / Lyons, IL Project Manager: Mr. Kevin McCartney	Reported: 08-Jun-07

Volatile Organic Compounds by EPA TO-15

H&P Mobile Geochemistry

Analyte	Result	Reporting Limit	Units	Dilution Factor	Batch	Prepared	Analyzed	Method	Notes
SF-1 (E705084-07) Vapor Sampled: 25-May-07 Received: 29-May-07									
Styrene	ND	5.0	ug/m³ Air	1	EE73103	30-May-07	30-May-07	EPA TO-15	
o-Xylene	ND	5.0	"	"	"	"	"	"	
Bromoform	ND	20	"	"	"	"	"	"	
1,1,2,2-Tetrachloroethane	ND	5.0	"	"	"	"	"	"	
4-Ethyltoluene	ND	5.0	"	"	"	"	"	"	
1,3,5-Trimethylbenzene	ND	5.0	"	"	"	"	"	"	
1,2,4-Trimethylbenzene	ND	5.0	"	"	"	"	"	"	
1,3-Dichlorobenzene	ND	10	"	"	"	"	"	"	
Benzyl chloride	ND	5.0	"	"	"	"	"	"	
1,4-Dichlorobenzene	ND	10	"	"	"	"	"	"	
1,2-Dichlorobenzene	ND	10	"	"	"	"	"	"	
1,2,4-Trichlorobenzene	ND	10	"	"	"	"	"	"	
Hexachlorobutadiene	ND	10	"	"	"	"	"	"	
Surrogate: 1,2-Dichloroethane-d4		*99.0 %*		*80-120*	"	"	"	"	
Surrogate: Toluene-d8		*101 %*		*80-120*	"	"	"	"	
Surrogate: 4-Bromofluorobenzene		*101 %*		*80-120*	"	"	"	"	
SF-7 (E705084-08) Vapor Sampled: 25-May-07 Received: 29-May-07									
Propene	ND	10	ug/m³ Air	1	EE73103	30-May-07	30-May-07	EPA TO-15	
Dichlorodifluoromethane	ND	10	"	"	"	"	"	"	
Chloromethane	ND	5.0	"	"	"	"	"	"	
Dichlorotetrafluoroethane	ND	10	"	"	"	"	"	"	
Vinyl chloride	ND	5.0	"	"	"	"	"	"	
Bromomethane	ND	5.0	"	"	"	"	"	"	
Chloroethane	ND	5.0	"	"	"	"	"	"	
Trichlorofluoromethane	ND	5.0	"	"	"	"	"	"	
Acetone	ND	20	"	"	"	"	"	"	
Isopropyl alcohol	ND	10	"	"	"	"	"	"	
1,1-Dichloroethene	ND	5.0	"	"	"	"	"	"	
Tert-butyl alcohol	ND	20	"	"	"	"	"	"	
1,1,2-Trichlorotrifluoroethane	ND	10	"	"	"	"	"	"	
Methylene chloride	ND	5.0	"	"	"	"	"	"	
Carbon disulfide	ND	5.0	"	"	"	"	"	"	
trans-1,2-Dichloroethene	ND	5.0	"	"	"	"	"	"	
Methyl tert-butyl ether	ND	5.0	"	"	"	"	"	"	
Vinyl acetate	ND	5.0	"	"	"	"	"	"	
1,1-Dichloroethane	ND	5.0	"	"	"	"	"	"	

MOBILE GEOCHEMISTRY
H&P

Bradburne, Briller & Johnson, LLC - Chicago 515 N State Street, Suite 2200 Chicago, IL 60610	Project BBJ052907-10 Project Number 0253901 / Lyons, IL Project Manager Mr Kevin McCartney	Reported 08-Jun-07

Volatile Organic Compounds by EPA TO-15

H&P Mobile Geochemistry

Analyte	Result	Reporting Limit	Units	Dilution Factor	Batch	Prepared	Analyzed	Method	Notes
SF-7 (E705084-08) Vapor Sampled: 25-May-07 Received: 29-May-07									
2-Butanone	ND	5.0	ug/m³ Air	1	EE73103	30-May-07	30-May-07	EPA TO-15	
n-Hexane	ND	5.0	"	"	"	"	"	"	
cis-1,2-Dichloroethene	ND	5.0	"	"	"	"	"	"	
Di-isopropyl ether	ND	5.0	"	"	"	"	"	"	
Ethyl acetate	ND	5.0	"	"	"	"	"	"	
Chloroform	ND	5.0	"	"	"	"	"	"	
Tetrahydrofuran	ND	5.0	"	"	"	"	"	"	
Ethyl tert-butyl ether	ND	5.0	"	"	"	"	"	"	
1,1,1-Trichloroethane	ND	5.0	"	"	"	"	"	"	
1,2-Dichloroethane	ND	5.0	"	"	"	"	"	"	
Benzene	ND	5.0	"	"	"	"	"	"	
Carbon tetrachloride	ND	5.0	"	"	"	"	"	"	
Cyclohexane	ND	5.0	"	"	"	"	"	"	
Tert-amyl methyl ether	ND	5.0	"	"	"	"	"	"	
n-Heptane	ND	5.0	"	"	"	"	"	"	
Trichloroethene	ND	5.0	"	"	"	"	"	"	
1,2-Dichloropropane	ND	5.0	"	"	"	"	"	"	
1,4-Dioxane	ND	5.0	"	"	"	"	"	"	
Bromodichloromethane	ND	5.0	"	"	"	"	"	"	
cis-1,3-Dichloropropene	ND	5.0	"	"	"	"	"	"	
4-Methyl-2-pentanone	ND	5.0	"	"	"	"	"	"	
trans-1,3-Dichloropropene	ND	5.0	"	"	"	"	"	"	
Toluene	ND	5.0	"	"	"	"	"	"	
1,1,2-Trichloroethane	ND	5.0	"	"	"	"	"	"	
2-Hexanone	ND	10	"	"	"	"	"	"	
Dibromochloromethane	ND	5.0	"	"	"	"	"	"	
Tetrachloroethene	14	5.0	"	"	"	"	"	"	
1,2-Dibromoethane (EDB)	ND	5.0	"	"	"	"	"	"	
Chlorobenzene	ND	5.0	"	"	"	"	"	"	
Ethylbenzene	ND	5.0	"	"	"	"	"	"	
m,p-Xylene	ND	5.0	"	"	"	"	"	"	
Styrene	ND	5.0	"	"	"	"	"	"	
o-Xylene	ND	5.0	"	"	"	"	"	"	
Bromoform	ND	20	"	"	"	"	"	"	
1,1,2,2-Tetrachloroethane	ND	5.0	"	"	"	"	"	"	
4-Ethyltoluene	ND	5.0	"	"	"	"	"	"	
1,3,5-Trimethylbenzene	ND	5.0	"	"	"	"	"	"	
1,2,4-Trimethylbenzene	ND	5.0	"	"	"	"	"	"	

MOBILE GEOCHEMISTRY
H&P

Bradburne, Briller & Johnson, LLC - Chicago 515 N. State Street, Suite 2200 Chicago, IL 60610	Project: BBJ052907-10 Project Number: 0253901 / Lyons, IL Project Manager: Mr. Kevin McCartney	Reported: 08-Jun-07

Volatile Organic Compounds by EPA TO-15

H&P Mobile Geochemistry

Analyte	Result	Reporting Limit	Units	Dilution Factor	Batch	Prepared	Analyzed	Method	Notes
SF-7 (E705884-08) Vapor Sampled: 25-May-07 Received: 29-May-07									
1,3-Dichlorobenzene	ND	10	ug/m³ Air	1	EE73103	30-May-07	30-May-07	EPA TO-15	
Benzyl chloride	ND	5.0	"	"	"	"	"	"	
1,4-Dichlorobenzene	ND	10	"	"	"	"	"	"	
1,2-Dichlorobenzene	ND	10	"	"	"	"	"	"	
1,2,4-Trichlorobenzene	ND	10	"	"	"	"	"	"	
Hexachlorobutadiene	ND	10	"	"	"	"	"	"	
Surrogate: 1,2-Dichloroethane-d4		*98.1 %*		*80-120*	"	"	"	"	
Surrogate: Toluene-d8		*102 %*		*80-120*	"	"	"	"	
Surrogate: 4-Bromofluorobenzene		*97.3 %*		*80-120*	"	"	"	"	
SF-3 (E705884-09) Vapor Sampled: 25-May-07 Received: 29-May-07									
Propene	ND	10	ug/m³ Air	1	EE73103	30-May-07	30-May-07	EPA TO-15	
Dichlorodifluoromethane	ND	10	"	"	"	"	"	"	
Chloromethane	ND	5.0	"	"	"	"	"	"	
Dichlorotetrafluoroethane	ND	10	"	"	"	"	"	"	
Vinyl chloride	ND	5.0	"	"	"	"	"	"	
Bromomethane	ND	5.0	"	"	"	"	"	"	
Chloroethane	ND	5.0	"	"	"	"	"	"	
Trichlorofluoromethane	ND	5.0	"	"	"	"	"	"	
Acetone	51	20	"	"	"	"	"	"	
Isopropyl alcohol	ND	10	"	"	"	"	"	"	
1,1-Dichloroethene	ND	5.0	"	"	"	"	"	"	
Tert-butyl alcohol	ND	20	"	"	"	"	"	"	
1,1,2-Trichlorotrifluoroethane	ND	10	"	"	"	"	"	"	
Methylene chloride	ND	5.0	"	"	"	"	"	"	
Carbon disulfide	5.7	5.0	"	"	"	"	"	"	
trans-1,2-Dichloroethene	ND	5.0	"	"	"	"	"	"	
Methyl tert-butyl ether	ND	5.0	"	"	"	"	"	"	
Vinyl acetate	ND	5.0	"	"	"	"	"	"	
1,1-Dichloroethane	ND	5.0	"	"	"	"	"	"	
2-Butanone	ND	5.0	"	"	"	"	"	"	
n-Hexane	ND	5.0	"	"	"	"	"	"	
cis-1,2-Dichloroethene	ND	5.0	"	"	"	"	"	"	
Di-isopropyl ether	ND	5.0	"	"	"	"	"	"	
Ethyl acetate	ND	5.0	"	"	"	"	"	"	
Chloroform	ND	5.0	"	"	"	"	"	"	
Tetrahydrofuran	ND	5.0	"	"	"	"	"	"	

MOBILE GEOCHEMISTRY
H&P

Bradburne, Briller & Johnson, LLC - Chicago	Project BBJ053907-10	
515 N State Street Suite 2200	Project Number 0253901 / Lyons, IL	Reported
Chicago, IL 60610	Project Manager Mr Kevin McCartney	08-Jun-07

Volatile Organic Compounds by EPA TO-15

H&P Mobile Geochemistry

Analyte	Result	Reporting Limit	Units	Dilution Factor	Batch	Prepared	Analyzed	Method	Notes
SF-3 (E705084-09) Vapor Sampled: 25-May-07 Received: 29-May-07									
Ethyl tert-butyl ether	ND	5.0	ug/m³ Air	1	EE73105	30-May-07	30-May-07	EPA TO-15	
1,1,1-Trichloroethane	ND	5.0	"	"	"	"	"	"	
1,2-Dichloroethane	ND	5.0	"	"	"	"	"	"	
Benzene	ND	5.0	"	"	"	"	"	"	
Carbon tetrachloride	ND	5.0	"	"	"	"	"	"	
Cyclohexane	ND	5.0	"		"	"	"	"	
Tert-amyl methyl ether	ND	5.0	"	"	"	"	"	"	
n-Heptane	ND	5.0	"	"	"	"	"	"	
Trichloroethene	13	5.0	"	"	"	"	"	"	
1,2-Dichloropropane	ND	5.0	"	"	"	"	"	"	
1,4-Dioxane	ND	5.0	"	"	"	"	"	"	
Bromodichloromethane	ND	5.0	"	"	"	"	"	"	
cis-1,3-Dichloropropene	ND	5.0	"	"	"	"	"	"	
4-Methyl-2-pentanone	ND	5.0	"	"	"	"	"	"	
trans-1,3-Dichloropropene	ND	5.0	"	"	"	"	"	"	
Toluene	ND	5.0	"	"	"	"	"	"	
1,1,2-Trichloroethane	ND	5.0	"	"	"	"	"	"	
2-Hexanone	ND	10	"	"	"	"	"	"	
Dibromochloromethane	ND	5.0	"	"	"	"	"	"	
Tetrachloroethene	970	5.0	"	"	"	"	"	"	
1,2-Dibromoethane (EDB)	ND	5.0	"	"	"	"	"	"	
Chlorobenzene	ND	5.0	"	"	"	"	"	"	
Ethylbenzene	ND	5.0	"	"	"	"	"	"	
m,p-Xylene	ND	5.0	"	"	"	"	"	"	
Styrene	ND	5.0	"	"	"	"	"	"	
o-Xylene	ND	5.0	"	"	"	"	"	"	
Bromoform	ND	20	"	"	"	"	"	"	
1,1,2,2-Tetrachloroethane	ND	5.0	"	"	"	"	"	"	
4-Ethyltoluene	ND	5.0	"	"	"	"	"	"	
1,3,5-Trimethylbenzene	ND	5.0	"	"	"	"	"	"	
1,2,4-Trimethylbenzene	ND	5.0	"	"	"	"	"	"	
1,3-Dichlorobenzene	ND	10	"	"	"	"	"	"	
Benzyl chloride	ND	5.0	"	"	"	"	"	"	
1,4-Dichlorobenzene	ND	10	"	"	"	"	"	"	
1,2-Dichlorobenzene	ND	10	"	"	"	"	"	"	
1,2,4-Trichlorobenzene	ND	10	"	"	"	"	"	"	
Hexachlorobutadiene	ND	10	"	"	"	"	"	"	

MOBILE GEOCHEMISTRY
H&P

Bradburne, Briller & Johnson, LLC - Chicago	Project: BBJ052907-10	
515 N. State Street, Suite 2200	Project Number: 0253901 / Lyons, IL	Reported:
Chicago, IL 60610	Project Manager: Mr. Kevin McCartney	08-Jun-07

Volatile Organic Compounds by EPA TO-15

H&P Mobile Geochemistry

Analyte	Result	Reporting Limit	Units	Dilution Factor	Batch	Prepared	Analyzed	Method	Notes
SF-3 (E705084-09) Vapor Sampled: 25-May-07 Received: 29-May-07									
Surrogate: 1,2-Dichloroethane-d4		*105 %*		*80-120*	*EE73103*	*30-May-07*	*30-May-07*	*EPA TO-15*	
Surrogate: Toluene-d8		*99.1 %*		*80-120*	"	"	"	"	
Surrogate: 4-Bromofluorobenzene		*80.2 %*		*80-120*	"	"	"	"	
SF-4 (E705084-10) Vapor Sampled: 25-May-07 Received: 29-May-07									
Propene	ND	10	ug/m³ Air	1	EE73103	30-May-07	30-May-07	EPA TO-15	
Dichlorodifluoromethane	ND	10	"	"	"	"	"	"	
Chloromethane	ND	5.0	"	"	"	"	"	"	
Dichlorotetrafluoroethane	ND	10	"	"	"	"	"	"	
Vinyl chloride	ND	5.0	"	"	"	"	"	"	
Bromomethane	ND	5.0	"	"	"	"	"	"	
Chloroethane	ND	5.0	"	"	"	"	"	"	
Trichlorofluoromethane	ND	5.0	"	"	"	"	"	"	
Acetone	36	20	"	"	"	"	"	"	
Isopropyl alcohol	ND	10	"	"	"	"	"	"	
1,1-Dichloroethene	ND	5.0	"	"	"	"	"	"	
Tert-butyl alcohol	ND	20	"	"	"	"	"	"	
1,1,2-Trichlorotrifluoroethane	ND	10	"	"	"	"	"	"	
Methylene chloride	ND	5.0	"	"	"	"	"	"	
Carbon disulfide	7.0	5.0	"	"	"	"	"	"	
trans-1,2-Dichloroethene	ND	5.0	"	"	"	"	"	"	
Methyl tert-butyl ether	ND	5.0	"	"	"	"	"	"	
Vinyl acetate	ND	5.0	"	"	"	"	"	"	
1,1-Dichloroethane	ND	5.0	"	"	"	"	"	"	
2-Butanone	ND	5.0	"	"	"	"	"	"	
n-Hexane	ND	5.0	"	"	"	"	"	"	
cis-1,2-Dichloroethene	ND	5.0	"	"	"	"	"	"	
Di-isopropyl ether	ND	5.0	"	"	"	"	"	"	
Ethyl acetate	12	5.0	"	"	"	"	"	"	
Chloroform	ND	5.0	"	"	"	"	"	"	
Tetrahydrofuran	ND	5.0	"	"	"	"	"	"	
Ethyl tert-butyl ether	ND	5.0	"	"	"	"	"	"	
1,1,1-Trichloroethane	ND	5.0	"	"	"	"	"	"	
1,2-Dichloroethane	ND	5.0	"	"	"	"	"	"	
Benzene	ND	5.0	"	"	"	"	"	"	
Carbon tetrachloride	ND	5.0	"	"	"	"	"	"	
Cyclohexane	ND	5.0	"	"	"	"	"	"	
Tert-amyl methyl ether	ND	5.0	"	"	"	"	"	"	

MOBILE GEOCHEMISTRY
H&P

Bradburne, Briller & Johnson, LLC - Chicago 515 N State Street, Suite 2200 Chicago, IL 60610	Project BBJ052907-10 Project Number 0253901 / Lyons, IL Project Manager Mr Kevin McCartney	Reported 08-Jun-07

Volatile Organic Compounds by EPA TO-15

H&P Mobile Geochemistry

Analyte	Result	Reporting Limit	Units	Dilution Factor	Batch	Prepared	Analyzed	Method	Notes
SF-4 (E705084-10) Vapor Sampled: 25-May-07 Received: 29-May-07									
n-Heptane	ND	5.0	ug/m³ Air	1	BE73103	30-May-07	30-May-07	EPA TO-15	
Trichloroethene	ND	5.0	"	"	"	"	"	"	
1,2-Dichloropropane	ND	5.0	"	"	"	"	"	"	
1,4-Dioxane	ND	5.0	"	"	"	"	"	"	
Bromodichloromethane	ND	5.0	"	"	"	"	"	"	
cis-1,3-Dichloropropene	ND	5.0	"						
4-Methyl-2-pentanone	ND	5.0	"	"	"	"	"	"	
trans-1,3-Dichloropropene	ND	5.0							
Toluene	75	5.0	"	"	"	"	"	"	
1,1,2-Trichloroethane	ND	5.0	"	"	"	"	"	"	
2-Hexanone	ND	10	"	"	"	"	"	"	
Dibromochloromethane	ND	5.0	"	"	"	"	"	"	
Tetrachloroethene	ND	5.0	"	"	"	"	"	"	
1,2-Dibromoethane (EDB)	ND	5.0	"	"	"	"	"	"	
Chlorobenzene	ND	5.0	"	"	"	"	"	"	
Ethylbenzene	ND	5.0	"	"	"	"	"	"	
m,p-Xylene	10	5.0	"	"	"	"	"	"	
Styrene	ND	5.0	"	"	"	"	"	"	
o-Xylene	ND	5.0	"	"	"	"	"	"	
Bromoform	ND	20	"	"	"	"	"	"	
1,1,2,2-Tetrachloroethane	ND	5.0	"	"	"	"	"	"	
4-Ethyltoluene	ND	5.0	"	"	"	"	"	"	
1,3,5-Trimethylbenzene	ND	5.0	"	"	"	"	"	"	
1,2,4-Trimethylbenzene	ND	5.0	"	"	"	"	"	"	
1,3-Dichlorobenzene	ND	10	"	"	"	"	"	"	
Benzyl chloride	ND	5.0	"	"	"	"	"	"	
1,4-Dichlorobenzene	ND	10	"	"	"	"	"	"	
1,2-Dichlorobenzene	ND	10	"	"	"	"	"	"	
1,2,4-Trichlorobenzene	ND	10	"	"	"	"	"	"	
Hexachlorobutadiene	ND	10	"	"	"	"	"	"	
Surrogate: 1,2-Dichloroethane-d4		*100 %*	*80-120*		"	"	"	"	
Surrogate: Toluene-d8		*100 %*	*80-120*		"	"	"	"	
Surrogate: 4-Bromofluorobenzene		*104 %*	*80-120*		"	"	"	"	

MOBILE GEOCHEMISTRY
H&P

Bradburne, Briller & Johnson, LLC - Chicago 515 N. State Street, Suite 2200 Chicago, IL 60610	Project: BBJ052907-10 Project Number: 0253901 / Lyons, IL Project Manager: Mr. Kevin McCartney	Reported: 08-Jun-07

Volatile Organic Compounds by EPA TO-15

H&P Mobile Geochemistry

Analyte	Result	Reporting Limit	Units	Dilution Factor	Batch	Prepared	Analyzed	Method	Notes
SF-2 (E705884-11) Vapor Sampled: 25-May-07 Received: 29-May-07									
Propene	ND	10	ug/m³ Air	1	EE73103	30-May-07	30-May-07	EPA TO-15	
Dichlorodifluoromethane	ND	10	"	"	"	"	"	"	
Chloromethane	ND	5.0	"	"	"	"	"	"	
Dichlorotetrafluoroethane	ND	10	"	"	"	"	"	"	
Vinyl chloride	ND	5.0	"	"	"	"	"	"	
Bromomethane	ND	5.0	"	"	"	"	"	"	
Chloroethane	ND	5.0	"	"	"	"	"	"	
Trichlorofluoromethane	ND	5.0	"	"	"	"	"	"	
Acetone	ND	20	"	"	"	"	"	"	
Isopropyl alcohol	ND	10	"	"	"	"	"	"	
1,1-Dichloroethene	ND	5.0	"	"	"	"	"	"	
Tert-butyl alcohol	ND	20	"	"	"	"	"	"	
1,1,2-Trichlorotrifluoroethane	ND	10	"	"	"	"	"	"	
Methylene chloride	ND	5.0	"	"	"	"	"	"	
Carbon disulfide	ND	5.0	"	"	"	"	"	"	
trans-1,2-Dichloroethene	ND	5.0	"	"	"	"	"	"	
Methyl tert-butyl ether	ND	5.0	"	"	"	"	"	"	
Vinyl acetate	ND	5.0	"	"	"	"	"	"	
1,1-Dichloroethane	ND	5.0	"	"	"	"	"	"	
2-Butanone	ND	5.0	"	"	"	"	"	"	
n-Hexane	ND	5.0	"	"	"	"	"	"	
cis-1,2-Dichloroethene	ND	5.0	"	"	"	"	"	"	
Di-isopropyl ether	ND	5.0	"	"	"	"	"	"	
Ethyl acetate	ND	5.0	"	"	"	"	"	"	
Chloroform	ND	5.0	"	"	"	"	"	"	
Tetrahydrofuran	ND	5.0	"	"	"	"	"	"	
Ethyl tert-butyl ether	ND	5.0	"	"	"	"	"	"	
1,1,1-Trichloroethane	ND	5.0	"	"	"	"	"	"	
1,2-Dichloroethane	ND	5.0	"	"	"	"	"	"	
Benzene	ND	5.0	"	"	"	"	"	"	
Carbon tetrachloride	ND	5.0	"	"	"	"	"	"	
Cyclohexane	ND	5.0	"	"	"	"	"	"	
Tert-amyl methyl ether	ND	5.0	"	"	"	"	"	"	
n-Heptane	ND	5.0	"	"	"	"	"	"	
Trichloroethene	ND	5.0	"	"	"	"	"	"	
1,2-Dichloropropane	ND	5.0	"	"	"	"	"	"	
1,4-Dioxane	ND	5.0	"	"	"	"	"	"	
Bromodichloromethane	ND	5.0	"	"	"	"	"	"	

MOBILE GEOCHEMISTRY
H&P

Bradburne, Briller & Johnson, LLC - Chicago 515 N State Street, Suite 2200 Chicago, IL 60610	Project BBJ052907-10 Project Number 0253901 / Lyons, IL Project Manager Mr Kevin McCartney	Reported 08-Jun-07

Volatile Organic Compounds by EPA TO-15

H&P Mobile Geochemistry

Analyte	Result	Reporting Limit	Units	Dilution Factor	Batch	Prepared	Analyzed	Method	Notes
SF-2 (E705084-11) Vapor Sampled: 25-May-07 Received: 29-May-07									
cis-1,3-Dichloropropene	ND	5.0	ug/m³ Air	1	EE73103	30-May-07	30-May-07	EPA TO-15	
4-Methyl-2-pentanone	ND	5.0	"	"	"	"	"	"	
trans-1,3-Dichloropropene	ND	5.0	"	"	"	"	"	"	
Toluene	ND	5.0	"	"	"	"	"	"	
1,1,2-Trichloroethane	ND	5.0	"	"	"	"	"	"	
2-Hexanone	ND	10	"	"	"	"	"	"	
Dibromochloromethane	ND	5.0	"	"	"	"	"	"	
Tetrachloroethene	ND	5.0	"	"	"	"	"	"	
1,2-Dibromoethane (EDB)	ND	5.0	"	"	"	"	"	"	
Chlorobenzene	ND	5.0	"	"	"	"	"	"	
Ethylbenzene	ND	5.0	"	"	"	"	"	"	
m,p-Xylene	ND	5.0	"	"	"	"	"	"	
Styrene	ND	5.0	"	"	"	"	"	"	
o-Xylene	ND	5.0	"	"	"	"	"	"	
Bromoform	ND	20	"	"	"	"	"	"	
1,1,2,2-Tetrachloroethane	ND	5.0	"	"	"	"	"	"	
4-Ethyltoluene	ND	5.0	"	"	"	"	"	"	
1,3,5-Trimethylbenzene	ND	5.0	"	"	"	"	"	"	
1,2,4-Trimethylbenzene	ND	5.0	"	"	"	"	"	"	
1,3-Dichlorobenzene	ND	10	"	"	"	"	"	"	
Benzyl chloride	ND	5.0	"	"	"	"	"	"	
1,4-Dichlorobenzene	ND	10	"	"	"	"	"	"	
1,2-Dichlorobenzene	ND	10	"	"	"	"	"	"	
1,2,4-Trichlorobenzene	ND	10	"	"	"	"	"	"	
Hexachlorobutadiene	ND	10	"	"	"	"	"	"	
Surrogate: 1,2-Dichloroethane-d4		*104 %*		*80-120*	"	"	"	"	
Surrogate: Toluene-d8		*98.1 %*		*80-120*	"	"	"	"	
Surrogate: 4-Bromofluorobenzene		*93.4 %*		*80-120*	"	"	"	"	

MOBILE GEOCHEMISTRY
H&P

Bradburne, Briller & Johnson, LLC - Chicago	Project: BBJ052907-10	
515 N. State Street, Suite 2200	Project Number: 0253901 / Lyons, IL	Reported:
Chicago, IL 60610	Project Manager: Mr. Kevin McCartney	08-Jun-07

Volatile Organic Compounds by EPA TO-15

H&P Mobile Geochemistry

Analyte	Result	Reporting Limit	Units	Dilution Factor	Batch	Prepared	Analyzed	Method	Notes
SF-8 (E705084-12) Vapor Sampled: 25-May-07 Received: 29-May-07									
Propene	ND	10	ug/m³ Air	1	EB73103	30-May-07	30-May-07	EPA TO-15	
Dichlorodifluoromethane	ND	10	"	"	"	"	"	"	
Chloromethane	ND	5.0	"	"	"	"	"	"	
Dichlorotetrafluoroethane	ND	10	"	"	"	"	"	"	
Vinyl chloride	ND	5.0	"	"	"	"	"	"	
Bromomethane	ND	5.0	"	"	"	"	"	"	
Chloroethane	ND	5.0	"	"	"	"	"	"	
Trichlorofluoromethane	ND	5.0	"	"	"	"	"	"	
Acetone	21	20	"	"	"	"	"	"	
Isopropyl alcohol	ND	10	"	"	"	"	"	"	
1,1-Dichloroethene	ND	5.0	"	"	"	"	"	"	
Tert-butyl alcohol	ND	20	"	"	"	"	"	"	
1,1,2-Trichlorotrifluoroethane	ND	10	"	"	"	"	"	"	
Methylene chloride	ND	5.0	"	"	"	"	"	"	
Carbon disulfide	ND	5.0	"	"	"	"	"	"	
trans-1,2-Dichloroethene	ND	5.0	"	"	"	"	"	"	
Methyl tert-butyl ether	ND	5.0	"	"	"	"	"	"	
Vinyl acetate	ND	5.0	"	"	"	"	"	"	
1,1-Dichloroethane	ND	5.0	"	"	"	"	"	"	
2-Butanone	ND	5.0	"	"	"	"	"	"	
n-Hexane	ND	5.0	"	"	"	"	"	"	
cis-1,2-Dichloroethene	ND	5.0	"	"	"	"	"	"	
Di-isopropyl ether	ND	5.0	"	"	"	"	"	"	
Ethyl acetate	ND	5.0	"	"	"	"	"	"	
Chloroform	ND	5.0	"	"	"	"	"	"	
Tetrahydrofuran	ND	5.0	"	"	"	"	"	"	
Ethyl tert-butyl ether	ND	5.0	"	"	"	"	"	"	
1,1,1-Trichloroethane	ND	5.0	"	"	"	"	"	"	
1,2-Dichloroethane	ND	5.0	"	"	"	"	"	"	
Benzene	ND	5.0	"	"	"	"	"	"	
Carbon tetrachloride	ND	5.0	"	"	"	"	"	"	
Cyclohexane	ND	5.0	"	"	"	"	"	"	
Tert-amyl methyl ether	ND	5.0	"	"	"	"	"	"	
n-Heptane	ND	5.0	"	"	"	"	"	"	
Trichloroethene	ND	5.0	"	"	"	"	"	"	
1,2-Dichloropropane	ND	5.0	"	"	"	"	"	"	
1,4-Dioxane	ND	5.0	"	"	"	"	"	"	
Bromodichloromethane	ND	5.0	"	"	"	"	"	"	

MOBILE GEOCHEMISTRY
H&P

Bradburne, Briller & Johnson, LLC - Chicago 515 N State Street, Suite 2200 Chicago, IL 60610	Project: BBJ052907-10 Project Number: 0253901 / Lyons, IL Project Manager: Mr Kevin McCarney	Reported 08-Jun-07

Volatile Organic Compounds by EPA TO-15

H&P Mobile Geochemistry

Analyte	Result	Reporting Limit	Units	Dilution Factor	Batch	Prepared	Analyzed	Method	Notes
SF-8 (E705084-12) Vapor Sampled: 25-May-07 Received: 29-May-07									
cis-1,3-Dichloropropene	ND	5.0	ug/m³ Air	1	BE73103	30-May-07	30-May-07	EPA TO-15	
4-Methyl-2-pentanone	ND	5.0	"	"	"	"	"	"	
trans-1,3-Dichloropropene	ND	5.0	"	"	"	"	"	"	
Toluene	6.2	5.0	"	"	"	"	"	"	
1,1,2-Trichloroethane	ND	5.0	"	"	"	"	"	"	
2-Hexanone	ND	10	"	"	"	"	"	"	
Dibromochloromethane	ND	5.0	"	"	"	"	"	"	
Tetrachloroethene	ND	5.0							
1,2-Dibromoethane (EDB)	ND	5.0	"	"	"	"	"	"	
Chlorobenzene	ND	5.0	"	"	"	"	"	"	
Ethylbenzene	ND	5.0	"	"	"	"	"	"	
m,p-Xylene	ND	5.0	"	"	"	"	"	"	
Styrene	ND	5.0	"	"	"	"	"	"	
o-Xylene	ND	5.0	"	"	"	"	"	"	
Bromoform	ND	20	"	"	"	"	"	"	
1,1,2,2-Tetrachloroethane	ND	5.0	"	"	"	"	"	"	
4-Ethyltoluene	ND	5.0	"	"	"	"	"	"	
1,3,5-Trimethylbenzene	ND	5.0	"	"	"	"	"	"	
1,2,4-Trimethylbenzene	ND	5.0	"	"	"	"	"	"	
1,3-Dichlorobenzene	ND	10	"	"	"	"	"	"	
Benzyl chloride	ND	5.0	"	"	"	"	"	"	
1,4-Dichlorobenzene	ND	10	"	"	"	"	"	"	
1,2-Dichlorobenzene	ND	10	"	"	"	"	"	"	
1,2,4-Trichlorobenzene	ND	10	"	"	"	"	"	"	
Hexachlorobutadiene	ND	10	"	"	"	"	"	"	
Surrogate: 1,2-Dichloroethane-d4		*106 %*		*80-120*	"	"	"	"	
Surrogate: Toluene-d8		*99.1 %*		*80-120*	"	"	"	"	
Surrogate: 4-Bromofluorobenzene		*95.4 %*		*80-120*	"	"	"	"	

MOBILE GEOCHEMISTRY
H&P

Bradburne, Briller & Johnson, LLC - Chicago	Project: BBJ052907-10	
515 N. State Street, Suite 2200	Project Number: 0253901 / Lyons, IL	Reported:
Chicago, IL 60610	Project Manager: Mr. Kevin McCartney	08-Jun-07

Volatile Organic Compounds by EPA TO-15

H&P Mobile Geochemistry

Analyte	Result	Reporting Limit	Units	Dilution Factor	Batch	Prepared	Analyzed	Method	Notes
SF-9 (=0 (E705084-13) Vapor Sampled: 25-May-07 Received: 29-May-07									
Propene	ND	10	ug/m³ Air	1	EF70604	05-Jun-07	05-Jun-07	EPA TO-15	
Dichlorodifluoromethane	ND	10	"	"	"	"	"	"	
Chloromethane	ND	5.0	"	"	"	"	"	"	
Dichlorotetrafluoroethane	ND	10	"	"	"	"	"	"	
Vinyl chloride	ND	5.0	"	"	"	"	"	"	
Bromomethane	ND	5.0	"	"	"	"	"	"	
Chloroethane	ND	5.0	"	"	"	"	"	"	
Trichlorofluoromethane	ND	5.0	"	"	"	"	"	"	
Acetone	78	20	"	"	"	"	"	"	
Isopropyl alcohol	ND	10	"	"	"	"	"	"	
1,1-Dichloroethene	ND	5.0	"	"	"	"	"	"	
Tert-butyl alcohol	ND	20	"	"	"	"	"	"	
1,1,2-Trichlorotrifluoroethane	ND	10	"	"	"	"	"	"	
Methylene chloride	ND	5.0	"	"	"	"	"	"	
Carbon disulfide	ND	5.0	"	"	"	"	"	"	
trans-1,2-Dichloroethene	ND	5.0	"	"	"	"	"	"	
Methyl tert-butyl ether	ND	5.0	"	"	"	"	"	"	
Vinyl acetate	ND	5.0	"	"	"	"	"	"	
1,1-Dichloroethane	ND	5.0	"	"	"	"	"	"	
2-Butanone	9.6	5.0	"	"	"	"	"	"	
n-Hexane	ND	5.0	"	"	"	"	"	"	
cis-1,2-Dichloroethene	ND	5.0	"	"	"	"	"	"	
Di-isopropyl ether	ND	5.0	"	"	"	"	"	"	
Ethyl acetate	ND	5.0	"	"	"	"	"	"	
Chloroform	ND	5.0	"	"	"	"	"	"	
Tetrahydrofuran	ND	5.0	"	"	"	"	"	"	
Ethyl tert-butyl ether	ND	5.0	"	"	"	"	"	"	
1,1,1-Trichloroethane	ND	5.0	"	"	"	"	"	"	
1,2-Dichloroethane	ND	5.0	"	"	"	"	"	"	
Benzene	ND	5.0	"	"	"	"	"	"	
Carbon tetrachloride	ND	5.0	"	"	"	"	"	"	
Cyclohexane	ND	5.0	"	"	"	"	"	"	
Tert-amyl methyl ether	ND	5.0	"	"	"	"	"	"	
n-Heptane	ND	5.0	"	"	"	"	"	"	
Trichloroethene	ND	5.0	"	"	"	"	"	"	
1,2-Dichloropropane	ND	5.0	"	"	"	"	"	"	
1,4-Dioxane	ND	5.0	"	"	"	"	"	"	
Bromodichloromethane	ND	5.0	"	"	"	"	"	"	

MOBILE GEOCHEMISTRY
H&P

Bradburne, Briller & Johnson, LLC - Chicago 315 N State Street Suite 2200 Chicago, IL 60610	Project BBJ052907-10 Project Number 0253901 / Lyons, IL Project Manager Mr Kevin McCartney	Reported 08-Jun-07

Volatile Organic Compounds by EPA TO-15

H&P Mobile Geochemistry

Analyte	Result	Reporting Limit	Units	Dilution Factor	Batch	Prepared	Analyzed	Method	Notes
SF-9 t=0 (E705084-13) Vapor Sampled: 25-May-07 Received: 29-May-07									
cis-1,3-Dichloropropene	ND	5.0	ug/m³ Air	1	EF70604	05-Jun-07	05-Jun-07	EPA TO-15	
4-Methyl-2-pentanone	ND	5.0	"	"	"	"	"	"	
trans-1,3-Dichloropropene	ND	5.0	"	"	"	"	"	"	
Toluene	8.8	5.0	"	"	"	"	"	"	
1,1,2-Trichloroethane	ND	5.0	"	"	"	"	"	"	
2-Hexanone	ND	10	"	"	"	"	"	"	
Dibromochloromethane	ND	5.0	"	"	"	"	"	"	
Tetrachloroethene	ND	5.0	"	"	"	"	"	"	
1,2-Dibromoethane (EDB)	ND	5.0	"	"	"	"	"	"	
Chlorobenzene	ND	5.0	"	"	"	"	"	"	
Ethylbenzene	ND	5.0	"	"	"	"	"	"	
m,p-Xylene	5.4	5.0	"	"	"	"	"	"	
Styrene	ND	5.0	"	"	"	"	"	"	
o-Xylene	ND	5.0	"	"	"	"	"	"	
Bromoform	ND	20	"	"	"	"	"	"	
1,1,2,2-Tetrachloroethane	ND	5.0	"	"	"	"	"	"	
4-Ethyltoluene	ND	5.0	"	"	"	"	"	"	
1,3,5-Trimethylbenzene	ND	5.0	"	"	"	"	"	"	
1,2,4-Trimethylbenzene	ND	5.0	"	"	"	"	"	"	
1,3-Dichlorobenzene	ND	10	"	"	"	"	"	"	
Benzyl chloride	ND	5.0	"	"	"	"	"	"	
1,4-Dichlorobenzene	ND	10	"	"	"	"	"	"	
1,2-Dichlorobenzene	ND	10	"	"	"	"	"	"	
1,2,4-Trichlorobenzene	ND	10	"	"	"	"	"	"	
Hexachlorobutadiene	ND	10	"	"	"	"	"	"	
Surrogate: 1,2-Dichloroethane-d4		*100 %*		*80-120*	"	"	"	"	
Surrogate: Toluene-d8		*95.9 %*		*80-120*	"	"	"	"	
Surrogate: 4-Bromofluorobenzene		*89.6 %*		*80-120*	"	"	"	"	

MOBILE GEOCHEMISTRY
H&P

Brodburne, Briller & Johnson, LLC - Chicago 515 N. State Street, Suite 2200 Chicago, IL 60610	Project: BBJ052907-10 Project Number: 0253901 / Lyons, IL Project Manager: Mr. Kevin McCartney	Reported: 08-Jun-07

Volatile Organic Compounds by EPA TO-15

H&P Mobile Geochemistry

Analyte	Result	Reporting Limit	Units	Dilution Factor	Batch	Prepared	Analyzed	Method	Notes
SF-9 (E705084-14) Vapor Sampled: 26-May-07 Received: 29-May-07									
Propene	ND	10	ug/m³ Air	1	EE73103	30-May-07	30-May-07	EPA TO-15	
Dichlorodifluoromethane	ND	10	"	"	"	"	"	"	
Chloromethane	ND	5.0	"	"	"	"	"	"	
Dichlorotetrafluoroethane	ND	10	"	"	"	"	"	"	
Vinyl chloride	6.8	5.0	"	"	"	"	"	"	
Bromomethane	ND	5.0	"	"	"	"	"	"	
Chloroethane	ND	5.0	"	"	"	"	"	"	
Trichlorofluoromethane	ND	5.0	"	"	"	"	"	"	
Acetone	ND	20	"	"	"	"	"	"	
Isopropyl alcohol	ND	10	"	"	"	"	"	"	
1,1-Dichloroethene	ND	5.0	"	"	"	"	"	"	
Tert-butyl alcohol	ND	20	"	"	"	"	"	"	
1,1,2-Trichlorotrifluoroethane	ND	10	"	"	"	"	"	"	
Methylene chloride	ND	5.0	"	"	"	"	"	"	
Carbon disulfide	29	5.0	"	"	"	"	"	"	
trans-1,2-Dichloroethene	11	5.0	"	"	"	"	"	"	
Methyl tert-butyl ether	ND	5.0	"	"	"	"	"	"	
Vinyl acetate	ND	5.0	"	"	"	"	"	"	
1,1-Dichloroethane	ND	5.0	"	"	"	"	"	"	
2-Butanone	ND	5.0	"	"	"	"	"	"	
n-Hexane	9.8	5.0	"	"	"	"	"	"	
cis-1,2-Dichloroethene	100	5.0	"	"	"	"	"	"	
Di-isopropyl ether	ND	5.0	"	"	"	"	"	"	
Ethyl acetate	ND	5.0	"	"	"	"	"	"	
Chloroform	ND	5.0	"	"	"	"	"	"	
Tetrahydrofuran	ND	5.0	"	"	"	"	"	"	
Ethyl tert-butyl ether	ND	5.0	"	"	"	"	"	"	
1,1,1-Trichloroethane	ND	5.0	"	"	"	"	"	"	
1,2-Dichloroethane	ND	5.0	"	"	"	"	"	"	
Benzene	6.5	5.0	"	"	"	"	"	"	
Carbon tetrachloride	ND	5.0	"	"	"	"	"	"	
Cyclohexane	ND	5.0	"	"	"	"	"	"	
Tert-amyl methyl ether	ND	5.0	"	"	"	"	"	"	
n-Heptane	13	5.0	"	"	"	"	"	"	
Trichloroethene	35	5.0	"	"	"	"	"	"	
1,2-Dichloropropane	ND	5.0	"	"	"	"	"	"	
1,4-Dioxane	ND	5.0	"	"	"	"	"	"	
Bromodichloromethane	ND	5.0	"	"	"	"	"	"	

MOBILE GEOCHEMISTRY
H&P

Bradburne, Baller & Johnson, LLC - Chicago	Project BBJ052907-10	
515 N State Street, Suite 2200	Project Number 0253901 / Lyons, IL	Reported
Chicago, IL 60610	Project Manager Mr. Kevin McCartney	08-Jun-07

Volatile Organic Compounds by EPA TO-15

H&P Mobile Geochemistry

Analyte	Result	Reporting Limit	Units	Dilution Factor	Batch	Prepared	Analyzed	Method	Notes
SF-9 (E705084-14) Vapor Sampled: 26-May-07 Received: 29-May-07									
cis-1,3-Dichloropropene	ND	5.0	ug/m³ Air	1	EE73103	30-May-07	30-May-07	EPA TO-15	
4-Methyl-2-pentanone	ND	5.0	"	"	"	"	"	"	
trans-1,3-Dichloropropene	ND	5.0	"	"	"	"	"	"	
Toluene	6.8	5.0	"	"	"	"	"	"	
1,1,2-Trichloroethane	ND	5.0	"	"	"	"	"	"	
2-Hexanone	ND	10	"	"	"	"	"	"	
Dibromochloromethane	ND	5.0	"	"	"	"	"	"	
Tetrachloroethene	6.4	5.0		"	"	"	"	"	
1,2-Dibromoethane (EDB)	ND	5.0	"	"	"	"	"	"	
Chlorobenzene	ND	5.0	"	"	"	"	"	"	
Ethylbenzene	ND	5.0	"	"	"	"	"	"	
m,p-Xylene	6.3	5.0	"	"	"	"	"	"	
Styrene	ND	5.0	"	"	"	"	"	"	
o-Xylene	ND	5.0	"	"	"	"	"	"	
Bromoform	ND	20	"	"	"	"	"	"	
1,1,2,2-Tetrachloroethane	ND	5.0	"	"	"	"	"	"	
4-Ethyltoluene	ND	5.0	"	"	"	"	"	"	
1,3,5-Trimethylbenzene	ND	5.0	"	"	"	"	"	"	
1,2,4-Trimethylbenzene	6.4	5.0	"	"	"	"	"	"	
1,3-Dichlorobenzene	ND	10	"	"	"	"	"	"	
Benzyl chloride	ND	5.0	"	"	"	"	"	"	
1,4-Dichlorobenzene	ND	10	"	"	"	"	"	"	
1,2-Dichlorobenzene	ND	10	"	"	"	"	"	"	
1,2,4-Trichlorobenzene	ND	10	"	"	"	"	"	"	
Hexachlorobutadiene	ND	10	"	"	"	"	"	"	
Surrogate: 1,2-Dichloroethane-d4		*103 %*		*80-120*	"	"	"	"	
Surrogate: Toluene-d8		*99.6 %*		*80-120*	"	"	"	"	
Surrogate: 4-Bromofluorobenzene		*107 %*		*80-120*	"	"	"	"	

MOBILE GEOCHEMISTRY
H&P

Bradburne, Briller & Johnson, LLC - Chicago	Project: BBJ052907-10	
515 N. State Street, Suite 2200	Project Number: 0253901 / Lyons, IL	Reported:
Chicago, IL 60610	Project Manager: Mr. Kevin McCartney	08-Jun-07

Methane by GC/FID - Quality Control

H&P Mobile Geochemistry

Analyte	Result	Reporting Limit	Units	Spike Level	Source Result	%REC	%REC Limits	RPD	RPD Limit	Notes
Batch EE72906 - GC										
Blank (EE72906-BLK1)				Prepared & Analyzed: 29-May-07						
Methane	ND	10	ppmv							

MOBILE GEOCHEMISTRY
H&P

Bradburne, Briller & Johnson, LLC - Chicago 515 N State Street, Suite 2200 Chicago, IL 60610	Project: BBJ052907-10 Project Number: 0253901 / Lyons, IL Project Manager: Mr Kevin McCartney	Reported: 08-Jun-07

Volatile Organic Compounds by EPA TO-15 - Quality Control

H&P Mobile Geochemistry

Analyte	Result	Reporting Limit	Units	Spike Level	Source Result	%REC	%REC Limits	RPD	RPD Limit	Notes
Batch EE73103 - TO-15										
Blank (EE73103-BLK1)				Prepared & Analyzed: 30-May-07						
Propane	ND	10	ug/m³ Air							
Dichlorodifluoromethane	ND	10	"							
Chloromethane	ND	5.0	"							
Dichlorotetrafluoroethane	ND	10	"							
Vinyl chloride	ND	5.0	"							
Bromomethane	ND	5.0	"							
Chloroethane	ND	5.0	"							
Trichlorofluoromethane	ND	5.0	"							
Acetone	ND	20	"							
1,1-Dichloroethene	ND	5.0	"							
1,1,2-Trichlorotrifluoromethane	ND	10	"							
Methylene chloride	ND	5.0	"							
Carbon disulfide	ND	5.0	"							
trans-1,2-Dichloroethene	ND	5.0	"							
Methyl tert-butyl ether	ND	5.0	"							
Vinyl acetate	ND	5.0	"							
1,1-Dichloroethane	ND	5.0	"							
2-Butanone	ND	5.0	"							
n-Hexane	ND	5.0	"							
cis-1,2-Dichloroethene	ND	5.0	"							
Ethyl acetate	ND	5.0	"							
Chloroform	ND	5.0	"							
Tetrahydrofuran	ND	5.0	"							
1,1,1-Trichloroethane	ND	5.0	"							
1,2-Dichloroethane	ND	5.0	"							
Benzene	ND	5.0	"							
Carbon tetrachloride	ND	5.0	"							
Cyclohexane	ND	5.0	"							
n-Heptane	ND	5.0	"							
Trichloroethene	ND	5.0	"							
1,2-Dichloropropane	ND	5.0	"							
1,4-Dioxane	ND	5.0	"							
Bromodichloromethane	ND	5.5	"							
cis-1,3-Dichloropropene	ND	5.0	"							

MOBILE GEOCHEMISTRY
H&P

Bradburne, Briller & Johnson, LLC - Chicago 515 N. State Street, Suite 2200 Chicago, IL 60610	Project: BBJ052907-10 Project Number: 0253901 / Lyons, IL Project Manager: Mr. Kevin McCartney	Reported: 08-Jun-07

Volatile Organic Compounds by EPA TO-15 - Quality Control

H&P Mobile Geochemistry

Analyte	Result	Reporting Limit	Units	Spike Level	Source Result	%REC	%REC Limits	RPD	RPD Limit	Notes
Batch EE73103 - TO-15										
Blank (EE73103-BLK1)				Prepared & Analyzed: 30-May-07						
4-Methyl-2-pentanone	ND	5.0	ug/m³ Air							
trans-1,3-Dichloropropene	ND	5.0	"							
Toluene	ND	5.0	"							
1,1,2-Trichloroethane	ND	5.0	"							
2-Hexanone	ND	5.0	"							
Dibromochloromethane	ND	5.0	"							
Tetrachloroethene	ND	5.0	"							
1,2-Dibromoethane (EDB)	ND	5.0	"							
Chlorobenzene	ND	5.0	"							
Ethylbenzene	ND	5.0	"							
m,p-Xylene	ND	5.0	"							
Styrene	ND	5.0	"							
o-Xylene	ND	5.0	"							
Bromoform	ND	20	"							
1,1,2,2-Tetrachloroethane	ND	5.0	"							
4-Ethyltoluene	ND	5.0	"							
1,3,5-Trimethylbenzene	ND	5.0	"							
1,2,4-Trimethylbenzene	ND	5.0	"							
1,3-Dichlorobenzene	ND	10	"							
Benzyl chloride	ND	5.0	"							
1,4-Dichlorobenzene	ND	10	"							
1,2-Dichlorobenzene	ND	10	"							
1,2,4-Trichlorobenzene	ND	10	"							
Hexachlorobutadiene	ND	10	"							
Surrogate: 1,1-Dichloroethane-d4	*99.4*		"	*103*		*96.5*	*80-120*			
Surrogate: Toluene-d8	*97.6*		"	*96.2*		*101*	*80-120*			
Surrogate: 4-Bromofluorobenzene	*162*		"	*182*		*89.0*	*80-120*			

MOBILE GEOCHEMISTRY
H&P

Bradburne, Briller & Johnson, LLC - Chicago 515 N State Street, Suite 2200 Chicago, IL 60610	Project: BBJ052907-10 Project Number: 0353901 / Lyons, IL Project Manager: Mr. Kevin McCartney	Reported 08-Jun-07

Volatile Organic Compounds by EPA TO-15 - Quality Control

H&P Mobile Geochemistry

Analyte	Result	Reporting Limit	Units	Spike Level	Source Result	%REC	%REC Limits	RPD	RPD Limit	Notes
Batch EE73103 - TO-15										
LCS (EE73103-BS1)				Prepared & Analyzed: 30-May-07						
Propene	32.3	10	ug/m³ Air	35.0		92.3	65-135			
Dichlorodifluoromethane	104	10	"	101		103	65-135			
Chloromethane	42.7	5.0	"	42.0		102	65-135			
Dichlorotetrafluoroethane	146	10	"	142		103	65-135			
Vinyl chloride	53.5	5.0	"	52.0		103	65-135			
Bromomethane	72.4	5.0	"	79.2		91.4	65-135			
Chloroethane	52.9	5.0	"	53.6		98.7	65-135			
Trichlorofluoromethane	95.4	5.0	"	113		84.4	65-135			
Acetone	40.4	20	"	48.4		83.5	65-135			
1,1-Dichloroethene	70.6	5.0	"	80.8		87.4	65-135			
1,1,2-Trichlorotrifluoroethane	140	10	"	155		90.3	65-135			
Methylene chloride	65.9	5.0	"	70.8		93.1	65-135			
Carbon disulfide	68.3	5.0	"	63.2		108	65-135			
trans-1,2-Dichloroethene	77.8	5.0	"	80.8		96.3	65-135			
Methyl tert-butyl ether	70.1	5.0	"	75.6		93.2	65-135			
Vinyl acetate	67.5	5.0	"	72.0		93.8	65-135			
1,1-Dichloroethane	77.7	5.0	"	82.4		94.3	65-135			
2-Butanone	59.2	5.0	"	60.0		98.7	65-135			
n-Hexane	73.3	5.0	"	72.0		102	65-135			
cis-1,2-Dichloroethene	75.7	5.0	"	80.0		95.9	65-135			
Ethyl acetate	50.2	5.0	"	73.6		68.2	65-135			
Chloroform	93.5	5.0	"	99.2		94.3	65-135			
Tetrahydrofuran	58.5	5.0	"	60.0		97.5	65-135			
1,1,1-Trichloroethane	104	5.0	"	111		93.7	65-135			
1,2-Dichloroethane	75.0	5.0	"	82.4		91.0	65-135			
Benzene	61.2	5.0	"	64.8		94.4	65-135			
Carbon tetrachloride	124	5.0	"	128		96.9	65-135			
Cyclohexane	72.3	5.0	"	70.4		103	65-135			
n-Heptane	81.3	5.0	"	83.6		97.2	65-135			
Trichloroethene	97.9	5.0	"	110		89.0	65-135			
1,2-Dichloropropane	88.9	5.0	"	94.4		92.1	65-135			
1,4-Dioxane	68.6	5.0	"	73.6		93.2	65-135			
Bromodichloromethane	121	5.5	"	137		88.3	65-135			
cis-1,3-Dichloropropene	79.2	5.0	"	92.4		85.7	65-135			

MOBILE GEOCHEMISTRY
H&P

Bradburne, Brillet & Johnson, LLC - Chicago 515 N. State Street, Suite 2200 Chicago, IL 60610	Project: BBJ052907-10 Project Number: 0253901 / Lyons, IL Project Manager: Mr. Kevin McCartney	Reported: 08-Jun-07

Volatile Organic Compounds by EPA TO-15 - Quality Control

H&P Mobile Geochemistry

Analyte	Result	Reporting Limit	Units	Spike Level	Source Result	%REC	%REC Limits	RPD	RPD Limit	Notes
Batch EE73103 - TO-15										
LCS (EE73103-BS1)				Prepared & Analyzed: 30-May-07						
4-Methyl-2-pentanone	76.2	5.0	ug/m³ Air	83.2		91.6	65-135			
trans-1,3-Dichloropropene	76.4	5.0	"	92.4		82.7	65-135			
Toluene	67.7	5.0	"	76.8		88.2	65-135			
1,1,2-Trichloroethane	98.2	5.0	"	111		88.5	65-135			
2-Hexanone	70.9	5.0	"	83.2		85.2	65-135			
Dibromochloromethane	162	5.0	"	174		93.1	65-135			
Tetrachloroethene	119	5.0	"	138		86.2	65-135			
1,2-Dibromoethane (EDB)	130	5.0	"	157		82.8	65-135			
Chlorobenzene	80.0	5.0	"	93.6		85.5	65-135			
Ethylbenzene	75.1	5.0	"	88.4		85.0	65-135			
m,p-Xylene	142	5.0	"	177		80.2	65-135			
Styrene	88.4	5.0	"	86.8		78.8	65-135			
o-Xylene	68.7	5.0	"	88.4		77.7	65-135			
Bromoform	785	20	"	840		93.5	65-135			
1,1,2,2-Tetrachloroethane	86.3	5.0	"	140		61.6	65-135			QL-1L
4-Ethyltoluene	98.9	5.0	"	100		98.9	65-135			
1,3,5-Trimethylbenzene	67.2	5.0	"	100		67.2	65-135			
1,2,4-Trimethylbenzene	67.3	5.0	"	100		67.3	65-135			
1,3-Dichlorobenzene	72.4	10	"	122		59.3	65-135			QL-1L
Benzyl chloride	89.7	5.0	"	105		85.4	65-135			
1,4-Dichlorobenzene	71.9	10	"	122		58.9	65-135			QL-1L
1,2-Dichlorobenzene	66.4	10	"	122		54.4	65-135			QL-1L
1,2,4-Trichlorobenzene	43.1	10	"	151		28.5	65-135			QL-1L
Hexachlorobutadiene	82.5	10	"	218		37.8	65-135			QL-1L
Surrogate: 1,2-Dichloroethane-d4	*100*		"	*103*		*97.1*	*80-130*			
Surrogate: Toluene-d8	*91.7*		"	*96.2*		*95.3*	*80-130*			
Surrogate: 4-Bromofluorobenzene	*199*		"	*182*		*109*	*80-130*			

MOBILE GEOCHEMISTRY
H&P

Bradbourne, Briller & Johnson, LLC - Chicago	Project BBJ052907-10	
515 N State Street Suite 2200	Project Number 0253901 / Lyons, IL	Reported
Chicago, IL 60610	Project Manager Mr Kevin McCartney	08-Jun-07

Volatile Organic Compounds by EPA TO-15 - Quality Control

H&P Mobile Geochemistry

Analyte	Result	Reporting Limit	Units	Spike Level	Source Result	%REC	%REC Limits	RPD	RPD Limit	Notes
Batch EF70604 - TO-15										
Blank (EF70604-BLK2)				Prepared & Analyzed: 05-Jun-07						
Propene	ND	10	ug/m³ Air							
Dichlorodifluoromethane	ND	10	"							
Chloromethane	ND	5.0	"							
Dichlorotetrafluoroethane	ND	10	"							
Vinyl chloride	ND	5.0	"							
Bromomethane	ND	5.0	"							
Chloroethane	ND	5.0	"							
Trichlorofluoromethane	ND	5.0	"							
Acetone	ND	20	"							
1,1-Dichloroethene	ND	5.0	"							
1,1,2-Trichlorotrifluoroethane	ND	10	"							
Methylene chloride	ND	5.0	"							
Carbon disulfide	ND	5.0	"							
trans-1,2-Dichloroethene	ND	5.0	"							
Methyl tert-butyl ether	ND	5.0	"							
Vinyl acetate	ND	5.0	"							
1,1-Dichloroethane	ND	5.0	"							
2-Butanone	ND	5.0	"							
n-Hexane	ND	5.0	"							
cis-1,2-Dichloroethene	ND	5.0	"							
Ethyl acetate	ND	5.0	"							
Chloroform	ND	5.0	"							
Tetrahydrofuran	ND	5.0	"							
1,1,1-Trichloroethane	ND	5.0	"							
1,2-Dichloroethane	ND	5.0	"							
Benzene	ND	5.0	"							
Carbon tetrachloride	ND	5.0	"							
Cyclohexane	ND	5.0	"							
n-Heptane	ND	5.0	"							
Trichloroethene	ND	5.0	"							
1,2-Dichloropropane	ND	5.0	"							
1,4-Dioxane	ND	5.0	"							
Bromodichloromethane	ND	5.0	"							
cis-1,3-Dichloropropene	ND	5.0	"							

MOBILE GEOCHEMISTRY
H&P

Bradburne, Brillet & Johnson, LLC - Chicago 515 N. State Street, Suite 2200 Chicago, IL 60610	Project: BBJ052907-10 Project Number: 0253901 / Lyons, IL Project Manager: Mr. Kevin McCartney	Reported: 08-Jun-07

Volatile Organic Compounds by EPA TO-15 - Quality Control

H&P Mobile Geochemistry

Analyte	Result	Reporting Limit	Units	Spike Level	Source Result	%REC	%REC Limits	RPD	RPD Limit	Notes
Batch EF70604 - TO-15										
Blank (EF70604-BLK2)				Prepared & Analyzed: 05-Jun-07						
4-Methyl-2-pentanone	ND	5.0	ug/m³ Air							
trans-1,3-Dichloropropene	ND	5.0	"							
Toluene	ND	5.0	"							
1,1,2-Trichloroethane	ND	5.0	"							
2-Hexanone	ND	10	"							
Dibromochloromethane	ND	5.0	"							
Tetrachloroethene	ND	5.0	"							
1,2-Dibromoethane (EDB)	ND	5.0	"							
Chlorobenzene	ND	5.0	"							
Ethylbenzene	ND	5.0	"							
m,p-Xylene	ND	5.0	"							
Styrene	ND	5.0	"							
o-Xylene	ND	5.0	"							
Bromoform	ND	20	"							
1,1,2,2-Tetrachloroethane	ND	5.0	"							
4-Ethyltoluene	ND	5.0	"							
1,3,5-Trimethylbenzene	ND	5.0	"							
1,2,4-Trimethylbenzene	ND	5.0	"							
1,3-Dichlorobenzene	ND	10	"							
Benzyl chloride	ND	5.0	"							
1,4-Dichlorobenzene	ND	10	"							
1,2-Dichlorobenzene	ND	10	"							
1,2,4-Trichlorobenzene	ND	10	"							
Hexachlorobutadiene	ND	10	"							
Surrogate: 1,1-Dichloroethane-d4	*101*		"	*100*		*98.1*	*80-120*			
Surrogate: Toluene-d8	*91.5*		"	*96.2*		*95.1*	*80-120*			
Surrogate: 4-Bromofluorobenzene	*172*		"	*182*		*94.5*	*80-120*			

MOBILE GEOCHEMISTRY
H&P

Bradburne, Brüller & Johnson, LLC - Chicago 515 N State Street Suite 2200 Chicago, IL 60610	Project BBJ052907-10 Project Number 0253901 / Lyons IL Project Manager Mr Kevin McCartney	Reported 08-Jun-07

Volatile Organic Compounds by EPA TO-15 - Quality Control

H&P Mobile Geochemistry

Analyte	Result	Reporting Limit	Units	Spike Level	Source Result	%REC	%REC Limits	RPD	RPD Limit	Notes
Batch EF70604 - TO-15										
LCS (EF70604-BS1)				Prepared & Analyzed: 05-Jun-07						
Propene	33.1	10	ug/m³ Air	35.0		94.6	65-135			
Dichlorodifluoromethane	102	10	"	101		101	65-135			
Chloromethane	41.9	5.0	"	42.0		99.8	65-135			
Dichlorotetrafluoroethane	143	10	"	142		101	65-135			
Vinyl chloride	51.1	5.0	"	52.0		98.3	65-135			
Bromomethane	87.1	6.0	"	79.2		110	65-135			
Chloroethane	57.9	5.0	"	53.6		108	65-135			
Trichlorofluoromethane	119	5.0	"	113		105	65-135			
Acetone	57.5	20	"	48.4		119	65-135			
1,1-Dichloroethene	75.1	5.0	"	80.8		92.9	65-135			
1,1,2-Trichlorotrifluoroethane	145	10	"	155		93.5	65-135			
Methylene chloride	66.0	5.0	"	70.8		93.2	65-135			
Carbon disulfide	65.5	5.0	"	63.2		104	65-135			
trans-1,2-Dichloroethene	77.4	5.0	"	80.8		95.8	65-135			
Methyl tert-butyl ether	70.2	5.0	"	73.6		95.4	65-135			
Vinyl acetate	79.9	5.0	"	72.0		111	65-135			
1,1-Dichloroethane	77.2	5.0	"	82.4		93.7	65-135			
2-Butanone	57.2	5.0	"	60.0		95.3	65-135			
n-Hexane	74.0	5.0	"	72.0		103	65-135			
cis-1,2-Dichloroethene	75.6	5.0	"	80.0		94.5	65-135			
Ethyl acetate	52.2	5.0	"	73.6		70.9	65-135			
Chloroform	94.7	5.0	"	99.2		95.5	65-135			
Tetrahydrofuran	59.9	5.0	"	60.0		99.8	65-135			
1,1,1-Trichloroethane	105	5.0	"	111		94.6	65-135			
1,2-Dichloroethane	76.1	5.0	"	82.4		92.4	65-135			
Benzene	61.5	5.0	"	64.8		94.9	65-135			
Carbon tetrachloride	121	5.0	"	128		94.5	65-135			
Cyclohexane	71.1	5.0	"	70.4		101	65-135			
n-Heptane	85.0	6.0	"	83.6		102	65-135			
Trichloroethene	106	5.0	"	110		96.4	65-135			
1,2-Dichloropropane	90.2	5.0	"	94.4		95.6	65-135			
1,4-Dioxane	73.1	5.0	"	73.6		99.3	65-135			
Bromodichloromethane	134	5.0	"	137		97.8	65-135			
cis-1,3-Dichloropropene	87.2	5.0	"	92.4		94.4	65-135			

MOBILE GEOCHEMISTRY
H&P

Bradburne, Brillar & Johnson, LLC - Chicago 515 N. State Street, Suite 2200 Chicago, IL 60610	Project: BBJ052907-10 Project Number: 0253901 / Lyons, IL Project Manager: Mr. Kevin McCartney	Reported: 08-Jun-07

Volatile Organic Compounds by EPA TO-15 - Quality Control

H&P Mobile Geochemistry

Analyte	Result	Reporting Limit	Units	Spike Level	Source Result	%REC	%REC Limits	RPD	RPD Limit	Notes
Batch EF70604 - TO-15										
LCS (EF70604-BS1)				Prepared & Analyzed: 05-Jun-07						
4-Methyl-2-pentanone	82.2	5.0	ug/m³ Air	83.2		98.8	65-135			
trans-1,3-Dichloropropene	81.8	5.0	"	92.4		88.5	65-135			
Toluene	73.4	5.0	"	76.8		95.6	65-135			
1,1,2-Trichloroethane	102	5.0	"	111		91.9	65-135			
2-Hexanone	79.4	10	"	83.2		95.4	65-135			
Dibromochloromethane	177	5.0	"	174		102	65-135			
Tetrachloroethene	130	5.0	"	138		94.2	65-135			
1,2-Dibromoethane (EDB)	138	5.0	"	157		87.9	65-135			
Chlorobenzene	82.0	5.0	"	93.6		87.6	65-135			
Ethylbenzene	79.7	5.0	"	88.4		90.2	65-135			
m,p-Xylene	158	5.0	"	177		89.5	65-135			
Styrene	70.7	5.0	"	86.8		81.5	65-135			
o-Xylene	75.5	5.0	"	88.4		85.4	65-135			
Bromoform	932	20	"	849		111	65-135			
1,1,2,2-Tetrachloroethane	89.7	5.0	"	140		64.1	65-135			QL-1L
4-Ethyltoluene	101	5.0	"	100		101	65-135			
1,3,5-Trimethylbenzene	71.0	5.0	"	100		71.0	65-135			
1,2,4-Trimethylbenzene	71.3	5.0	"	100		71.3	65-135			
1,3-Dichlorobenzene	77.0	10	"	122		63.1	65-135			QL-1L
Benzyl chloride	93.4	5.0	"	105		89.0	65-135			
1,4-Dichlorobenzene	70.3	10	"	122		57.6	65-135			QL-1L
1,2-Dichlorobenzene	66.6	10	"	122		54.6	65-135			QL-1L
1,2,4-Trichlorobenzene	41.7	10	"	151		27.6	65-135			QL-1L
Hexachlorobutadiene	106	10	"	218		48.6	65-135			QL-1L
Surrogate: 1,2-Dichloroethane-d4	*99.5*		"	*103*		*96.6*	*80-120*			
Surrogate: Toluene-d8	*95.2*		"	*96.2*		*99.0*	*80-120*			
Surrogate: 4-Bromofluorobenzene	*180*		"	*182*		*98.9*	*80-130*			

MOBILE GEOCHEMISTRY
H&P

Bradburne, Briller & Johnson, LLC - Chicago	Project BBJ052907-10	
515 N. State Street, Suite 2200	Project Number: 0253901 / Lyons, IL	Reported
Chicago, IL 60610	Project Manager Mr Kevin McCartney	08-Jun-07

Notes and Definitions

QL-IL	The LCS and/or LCSD recoveries fell below the established control specifications for this analyte Any result for this compound is qualified and should be considered an estimate only
DET	Analyte DETECTED
ND	Analyte NOT DETECTED at or above the reporting limit
NR	Not Reported
dry	Sample results reported on a dry weight basis
RPD	Relative Percent Difference

MOBILE GEOCHEMISTRY

H&P

Chain of Custody Record

☒ 2470 Impala Dr., Carlsbad, CA 92010 • ph 760.804.9678 • fax 760.804.9159
☐ 3825 Industry Avenue, Lakewood, CA 90712 • ph 562.426.6991 • fax 562.426.6995

Date: 5/26/07
H&P Project # BB3052907-10
*Outside Lab:

Client: Brandbaine, Buller & Johnson
Address: 615 N. State Street, Suite 2200
Chicago, IL 60610
Email: kmcclintey@bbj-law.com Cellphone: 312-644-8866

Collector: Michele Hargraves
Client Project # 0253901
Location: Lyons, IL
Fax: 312-644-8865

Page: 1 of 2
Project Contact: Kevin McClintey
Turn around time:

EDF: Yes☐ No☐
Global ID:

Sample Receipt
Intact: ☒ Yes ☐ No
Seal Intact: ☐ Yes ☐ No ☒ N/A
Cold: ☐ Yes ☒ No
N/A (Received on Site)

Special Instructions:
Please don't report 1,3-Butadiene
Hold t=0 samples for TO-15 per Blayne Hartman.
Run SF-3 t=0 and SF-9 t=0 per Blayne Hartman. MC

Sample Name	Field Point Name	Purge Vol	Time	Date	Sample Type	Container Type	TPH ☐ gasoline ☐ diesel ☐ ext	418.1 TRPH	8021 for BTEX/MTBE	8260B: BTEX / Oxygenates	8260B: TPH gas	8260B: VOC's	8260B: DTSC/LARWQCB	8260B: Ketones	TO-15: Full List	TO-15: BTEX/MTBE	LCC (specify)	Naphthalene ☐ 8260B ☐ TO-15	Methane	Fixed Gases ☐ CO_2 ☐ O_2 ☐ N_2				Total # of containers
SF-1 t=0			4:05 PM	5/24	air	Summa									X				X					
SF-7 t=0			4:10 PM	5/24	air	Summa									X				X					
SF-3 t=0			4:20 PM	5/24	air	Summa									X				X					
SF-4 t=0			4:26 PM	5/24	air	Summa									X				X					
SF-2 t=0			4:30 PM	5/24	air	Summa									X				X					
SF-8 t=0			4:35 PM	5/24	air	Summa									X				X					
SF-1			5:20 AM	5/26	air	Summa									X				X					
SF-7			5:25 AM	5/26	air	Summa									X				X					
SF-3			5:30 AM	5/26	air	Summa									X				X					
SF-4			5:35 AM	5/26	air	Summa									X				X					

Relinquished by: (Signature)	(company)	Received by: (Signature)	(company)	Date:	Time:
Michele Hargraves	BB+J	via UPS	H&P	5/27/07	10:10am
Relinquished by: (Signature)	(company)	Received by: (Signature)	(company)	Date:	Time:
Relinquished by: (Signature)	(company)	Received by: (Signature)	(company)	Date:	Time:

*Signature constitutes authorization to proceed with analysis and acceptance of condition on back.

Sample disposal instruction: ☐ Disposal @ $2.00 each ☐ Return to client ☐ Pickup

printed 09/18/2007 4:52PM by epa4561 p. 201/439

printed 09/18/2007 4:52PM by epa4561 p. 202/439

MOBILE GEOCHEMISTRY

H&P

Chain of Custody Record

☒ 2470 Impala Dr., Carlsbad, CA 92010 • ph 760.804.9678 • fax 760.804.9159
☐ 3825 Industry Avenue, Lakewood, CA 90712 • ph 562.426.6991 • fax 562.426.6995

Date 5/26/07
H&P Project # BBJ052907-10
Outside Lab:

Client: Bradbourne, Boller + Johnson
Address: 515 N. State Street, Suite 2200
Chicago, IL 60610
Email: kmccartney@bbjgroup.com Phone: 312-644-8556

Collector: Michele Hargreaves
Page 2 of 2
Client Project # 0253901
Project Contact: Kevin McCartney
Location: Lyons, IL
Fax: 312-644-8555
Turn around time:

EDF: Yes ☐ No ☐
Global ID:

Sample Receipt
Intact: ☒ Yes ☐ No
Seal Intact: ☐ Yes ☐ No ☒ N/A
Cold: ☐ Yes ☒ No
N/A (Received on Site)

Special Instructions:
Please don't report 1,3-Butadiene

Sample Name	Field Point Name	Purge Vol	Time	Date	Sample Type	Container Type	TPH ☐ gasoline ☐ diesel ☐ ext	418.1 TRPH	8021 for BTEX/MTBE	8260B BTEX / Oxygenates	8260B TPH gas	8260B VOC's	8260B DTSC/LARWQCB	8260B Ketones	TO-15 Full List	TO-15 BTEX/MTBE	LCC (specify)	Naphthalene ☐ 8260B ☐ TO-15	Methane	Fixed Gases ☐ CO_2 ☐ O_2 ☐ N_2				Total # of containers
SF-2			6:40 am	5/25	cur	Summa									X				X					
SF-8			5:45 am	5/25	cur	Summa									X				X					
SF-9 t=0			3:40 pm	5/25	cur	Summa									X				X					
SF-9			5:30 am	5/26	cur	Summa									X				X					

Relinquished by: (Signature)	(company)	Received by: (Signature)	(company)	Date	Time
Michele Hargreaves	BBJ	Jim K Jim UPS	H&P	5/07/07	10:20am
Relinquished by: (Signature)	(company)	Received by: (Signature)	(company)	Date:	Time
Relinquished by: (Signature)	(company)	Received by: (Signature)	(company)	Date	Time

*Signature constitutes authorization to proceed with analysis and acceptance of condition on back.

Sample disposal instruction: ☐ Disposal @ $2.00 each ☐ Return to client ☐ Pickup

First Environmental Laboratories, Inc.
IL ELAP / NELAC Accreditation # 100292
1600 Shore Road • Naperville, Illinois 60563 • Phone (630) 778-1200 • Fax (630) 778-1233

May 22, 2007

Mr. Kevin McCartney
BRADBURNE, BRILLER & JOHNSON
515 N. State Street
Suite 2200
Chicago, IL 60610

Project ID: Lyons, IL
First Environmental File ID: 7-2097
Date Received: May 11, 2007

Dear Mr. Kevin McCartney:

The above referenced project was analyzed as directed on the enclosed chain of custody record.

All analyses were performed in accordance with established methods and within established holding times. All Quality Control criteria as outlined in the methods and current IL ELAP/NELAP have been met unless otherwise noted. QA/QC documentation and raw data will remain on file for future reference. Our accreditation number is 100292 and our current certificate is number 001728: effective 04/13/07 through 02/28/08.

I thank you for the opportunity to be of service to you and look forward to working with you again in the future. Should you have any questions regarding any of the enclosed analytical data or need additional information, please contact me at (630) 778-1200.

Sincerely,

Stan Zawolski
Project Manager

First Environmental Laboratories, Inc.

IL ELAP / NELAC Accreditation # 100292

1600 Shore Road • Naperville, Illinois 60563 • Phone (630) 778-1200 • Fax (630) 778-1233

Case Narrative

BRADBURNE, BRILLER & JOHNSON

Project ID: **Lyons, IL**

First Environmental File ID: **7-2097**

Date Received: **May 11, 2007**

Flag	Description	Flag	Description
<	Analyte not detected at or above the reporting limit	L+	LCS recovery outside control limits, high bias
B	Analyte detected in associated method blank	L-	LCS recovery outside control limits; low bias.
C	Identification confirmed by GC/MS.	M	MS recovery outside control limits; LCS acceptable.
D	Surrogates diluted out, recovery not available.	M+	MS recovery outside control limits high bias; LCS acceptable.
E	Estimated result, concentration exceeds calibration range.	M-	MS recovery outside control limits low bias; LCS acceptable.
F	Field measurement.	N	Analyte is not part of our NELAC accreditation.
		ND	Analyte was not detected using a library search routine; No calibration standard was analyzed
G	Surrogate recovery outside control limits; matrix effect.	P	Chemical preservation pH adjusted in lab.
H	Analysis holding time exceeded.	Q	The analyte was determined by a GC/MS database search
J	Estimated result; concentration is less than calib range.	S	Analyte was sub-contracted to another laboratory for analysis.
K	RPD outside control limits.	T	Sample temperature upon receipt exceeded 0-6°C
RL	Routine Reporting Limit (Lowest amount that can be detected when routine weights/volumes are used without dilution.)	W	Reporting limit elevated due to sample matrix.

All quality control criteria, as outlined in the methods, have been met except as noted below or on the following analytical report.

Sample Batch Comments:

Sample acceptance criteria were met.

First Environmental Laboratories, Inc.
IL ELAP / NELAC Accreditation # 100292
1600 Shore Road • Naperville, Illinois 60563 • Phone (630) 778-1200 • Fax (630) 778-1233

Analytical Report

Client: BRADBURNE, BRILLER & JOHNSON
Project ID: Lyons, IL
Sample ID: GP-1 (0'-2')
Sample No: 7-2097-001

Date Collected: 05/11/07
Time Collected: 14:05
Date Received: 05/11/07
Date Reported: 05/22/07

Results are reported on a dry weight basis.

Analyte	Result	R.L.	Units	Flags
Solids, Total **Method: 160.3**				
Analysis Date: 05/14/07				
Total Solids	93.02		%	
Volatile Organic Compounds **Method: 5035A/8260B**				
Analysis Date: 05/18/07				
Acetone	< 100	100	ug/kg	
Benzene	< 5.0	5.0	ug/kg	
Bromodichloromethane	< 5.0	5.0	ug/kg	
Bromoform	< 5.0	5.0	ug/kg	
Bromomethane	< 10.0	10.0	ug/kg	
2-Butanone (MEK)	< 10.0	10.0	ug/kg	
Carbon disulfide	< 5.0	5.0	ug/kg	
Carbon tetrachloride	< 5.0	5.0	ug/kg	
Chlorobenzene	< 5.0	5.0	ug/kg	
Chlorodibromomethane	< 5.0	5.0	ug/kg	
Chloroethane	< 10.0	10.0	ug/kg	
Chloroform	< 5.0	5.0	ug/kg	
Chloromethane	< 10.0	10.0	ug/kg	
1,1-Dichloroethane	< 5.0	5.0	ug/kg	
1,2-Dichloroethane	< 5.0	5.0	ug/kg	
1,1-Dichloroethene	< 5.0	5.0	ug/kg	
cis-1,2-Dichloroethene	< 5.0	5.0	ug/kg	
trans-1,2-Dichloroethene	< 5.0	5.0	ug/kg	
1,2-Dichloropropane	< 5.0	5.0	ug/kg	
cis-1,3-Dichloropropene	< 5.0	5.0	ug/kg	
trans-1,3-Dichloropropene	< 5.0	5.0	ug/kg	
Ethylbenzene	< 5.0	5.0	ug/kg	
2-Hexanone	< 10.0	10.0	ug/kg	
Methyl-tert-butylether (MTBE)	< 5.0	5.0	ug/kg	
4-Methyl-2-pentanone (MIBK)	< 10.0	10.0	ug/kg	
Methylene chloride	< 5.0	5.0	ug/kg	
Styrene	< 5.0	5.0	ug/kg	
1,1,2,2-Tetrachloroethane	< 5.0	5.0	ug/kg	
Tetrachloroethene	< 5.0	5.0	ug/kg	
Toluene	< 5.0	5.0	ug/kg	
1,1,1-Trichloroethane	< 5.0	5.0	ug/kg	
1,1,2-Trichloroethane	< 5.0	5.0	ug/kg	
Trichloroethene	< 5.0	5.0	ug/kg	

First Environmental Laboratories, Inc.
IL ELAP / NELAC Accreditation # 100292
1600 Shore Road • Naperville, Illinois 60563 • Phone (630) 778-1200 • Fax (630) 778-1233

Analytical Report

Client: BRADBURNE, BRILLER & JOHNSON
Project ID: Lyons, IL
Sample ID: GP-1 (0'-2')
Sample No: 7-2097-001

Date Collected: 05/11/07
Time Collected: 14:05
Date Received: 05/11/07
Date Reported: 05/22/07

Results are reported on a dry weight basis.

Analyte	Result	R.L.	Units	Flags
Volatile Organic Compounds Method: 5035A/8260B				
Analysis Date: 05/18/07				
Vinyl acetate	< 10.0	10.0	ug/kg	
Vinyl chloride	< 10.0	10.0	ug/kg	
Xylene, Total	< 5.0	5.0	ug/kg	
Semi-Volatile Compounds Method: 8270C		Preparation Method 3540C		
Analysis Date: 05/20/07		Preparation Date: 05/15/07		
Acenaphthene	338	330	ug/kg	
Acenaphthylene	< 330	330	ug/kg	
Anthracene	3,520	330	ug/kg	
Benzidine	< 330	330	ug/kg	
Benzo(a)anthracene	2,630	330	ug/kg	
Benzo(a)pyrene	2,720	90	ug/kg	
Benzo(b)fluoranthene	3,330	330	ug/kg	
Benzo(k)fluoranthene	2,070	330	ug/kg	
Benzo(ghi)perylene	1,310	330	ug/kg	
Benzoic acid	< 330	330	ug/kg	
Benzyl alcohol	< 330	330	ug/kg	
bis(2-Chloroethoxy)methane	< 330	330	ug/kg	
bis(2-Chloroethyl)ether	< 330	330	ug/kg	
bis(2-Chloroisopropyl)ether	< 330	330	ug/kg	
bis(2-Ethylhexyl)phthalate	< 330	330	ug/kg	
4-Bromophenyl phenyl ether	< 330	330	ug/kg	
Butyl benzyl phthalate	< 330	330	ug/kg	
Carbazole	841	330	ug/kg	
4-Chloroaniline	< 330	330	ug/kg	
4-Chloro-3-methylphenol	< 330	330	ug/kg	
2-Chloronaphthalene	< 330	330	ug/kg	
2-Chlorophenol	< 330	330	ug/kg	
4-Chlorophenyl phenyl ether	< 330	330	ug/kg	
Chrysene	3,980	330	ug/kg	
Di-n-butyl phthalate	< 330	330	ug/kg	
Di-n-octylphthalate	< 330	330	ug/kg	
Dibenzo(a,h)anthracene	568	90	ug/kg	
Dibenzofuran	< 330	330	ug/kg	
1,2-Dichlorobenzene	< 330	330	ug/kg	
1,3-Dichlorobenzene	< 330	330	ug/kg	
1,4-Dichlorobenzene	< 330	330	ug/kg	

First Environmental Laboratories, Inc.
IL ELAP / NELAC Accreditation # 100292
1600 Shore Road • Naperville, Illinois 60563 • Phone (630) 778-1200 • Fax (630) 778-1233

Analytical Report

Client: BRADBURNE, BRILLER & JOHNSON
Project ID: Lyons, IL
Sample ID: GP-1 (0'-2')
Sample No: 7-2097-001

Date Collected: 05/11/07
Time Collected: 14:05
Date Received: 05/11/07
Date Reported: 05/22/07

Results are reported on a dry weight basis.

Analyte	Result	R.L.	Units	Flags
Semi-Volatile Compounds **Method: 8270C** Analysis Date: 05/20/07		**Preparation Method 3540C** Preparation Date: 05/15/07		
3,3'-Dichlorobenzidine	< 660	660	ug/kg	
2,4-Dichlorophenol	< 330	330	ug/kg	
Diethyl phthalate	< 330	330	ug/kg	
2,4-Dimethylphenol	< 330	330	ug/kg	
Dimethyl phthalate	< 330	330	ug/kg	
4,6-Dinitro-2-methylphenol	< 1,600	1600	ug/kg	
2,4-Dinitrophenol	< 1,600	1600	ug/kg	
2,4-Dinitrotoluene	< 250	250	ug/kg	
2,6-Dinitrotoluene	< 260	260	ug/kg	
Fluoranthene	3,480	330	ug/kg	
Fluorene	478	330	ug/kg	
Hexachlorobenzene	< 330	330	ug/kg	
Hexachlorobutadiene	< 330	330	ug/kg	
Hexachlorocyclopentadiene	< 330	330	ug/kg	
Hexachloroethane	< 330	330	ug/kg	
Indeno(1,2,3-cd)pyrene	1,380	330	ug/kg	
Isophorone	< 330	330	ug/kg	
2-Methylnaphthalene	< 330	330	ug/kg	
2-Methylphenol	< 330	330	ug/kg	
3 & 4-Methylphenol	< 330	330	ug/kg	
Naphthalene	362	330	ug/kg	
2-Nitroaniline	< 1,600	1600	ug/kg	
3-Nitroaniline	< 1,600	1600	ug/kg	
4-Nitroaniline	< 1,600	1600	ug/kg	
Nitrobenzene	< 260	260	ug/kg	
2-Nitrophenol	< 1,600	1600	ug/kg	
4-Nitrophenol	< 1,600	1600	ug/kg	
n-Nitrosodi-n-propylamine	< 330	330	ug/kg	
n-Nitrosodimethylamine	< 330	330	ug/kg	
n-Nitrosodiphenylamine	< 330	330	ug/kg	
Pentachlorophenol	< 330	330	ug/kg	
Phenanthrene	1,770	330	ug/kg	
Phenol	< 330	330	ug/kg	
Pyrene	4,210	330	ug/kg	
Pyridine	< 330	330	ug/kg	
1,2,4-Trichlorobenzene	< 330	330	ug/kg	

First Environmental Laboratories, Inc.

IL ELAP / NELAC Accreditation # 100292

1600 Shore Road • Naperville, Illinois 60563 • Phone (630) 778-1200 • Fax (630) 778-1233

Analytical Report

Client:	BRADBURNE, BRILLER & JOHNSON	**Date Collected:**	05/11/07
Project ID:	Lyons, IL	**Time Collected:**	14:05
Sample ID:	GP-1 (0'-2')	**Date Received:**	05/11/07
Sample No:	7-2097-001	**Date Reported:**	05/22/07

Results are reported on a dry weight basis.

Analyte	Result	R.L.	Units	Flags
Semi-Volatile Compounds Analysis Date: 05/20/07	**Method: 8270C**	**Preparation Method 3540C** Preparation Date: 05/15/07		
2,4,5-Trichlorophenol	< 330	330	ug/kg	
2,4,6-Trichlorophenol	< 330	330	ug/kg	
Pesticides/PCBs Analysis Date: 05/18/07	**Method: 8081A/8082**	**Preparation Method 3540C** Preparation Date: 05/17/07		
Aldrin	< 8.0	8.0	ug/kg	
Aroclor 1016	< 80.0	80.0	ug/kg	
Aroclor 1221	< 80.0	80.0	ug/kg	
Aroclor 1232	< 80.0	80.0	ug/kg	
Aroclor 1242	< 80.0	80.0	ug/kg	
Aroclor 1248	< 80.0	80.0	ug/kg	
Aroclor 1254	< 160	160	ug/kg	
Aroclor 1260	< 160	160	ug/kg	
alpha-BHC	< 2.0	2.0	ug/kg	
beta-BHC	< 8.0	8.0	ug/kg	
delta-BHC	< 8.0	8.0	ug/kg	
gamma-BHC (Lindane)	< 8.0	8.0	ug/kg	
alpha-Chlordane	< 80.0	80.0	ug/kg	
gamma-Chlordane	< 80.0	80.0	ug/kg	
4,4'-DDD	< 16.0	16.0	ug/kg	
4,4'-DDE	< 16.0	16.0	ug/kg	
4,4'-DDT	< 16.0	16.0	ug/kg	
Dieldrin	< 16.0	16.0	ug/kg	
Endosulfan I	< 8.0	8.0	ug/kg	
Endosulfan II	< 16.0	16.0	ug/kg	
Endosulfan sulfate	< 16.0	16.0	ug/kg	
Endrin	< 16.0	16.0	ug/kg	
Endrin aldehyde	< 16.0	16.0	ug/kg	
Endrin ketone	< 16.0	16.0	ug/kg	
Heptachlor	< 8.0	8.0	ug/kg	
Heptachlor epoxide	< 8.0	8.0	ug/kg	
Methoxychlor	< 80.0	80.0	ug/kg	
Toxaphene	< 160	160	ug/kg	

First Environmental Laboratories, Inc.
IL ELAP / NELAC Accreditation # 100292
1600 Shore Road • Naperville, Illinois 60563 • Phone (630) 778-1200 • Fax (630) 778-1233

Analytical Report

Client: BRADBURNE, BRILLER & JOHNSON
Project ID: Lyons, IL
Sample ID: GP-1 (0'-2')
Sample No: 7-2097-001

Date Collected: 05/11/07
Time Collected: 14:05
Date Received: 05/11/07
Date Reported: 05/22/07

Results are reported on a dry weight basis.

Analyte		Result	R.L.	Units	Flags
Herbicides	**Method: 8321**				
Analysis Date: 05/21/07					
2,4-Dichlorophenoxyacetic acid (2,4-D)		< 100	100	ug/kg	S
Silvex (2,4,5-TP)		< 100	100	ug/kg	S
Total Metals	**Method: 6010B**		**Preparation Method 3050B**		
Analysis Date: 05/18/07			Preparation Date: 05/15/07		
Arsenic		3.1	0.2	mg/kg	
Barium		28.3	0.1	mg/kg	
Cadmium		0.6	0.1	mg/kg	
Chromium		9.9	0.1	mg/kg	
Lead		35.4	0.2	mg/kg	
Selenium		< 0.2	0.2	mg/kg	
Silver		< 0.1	0.1	mg/kg	
Total Metals	**Method: 7470A**				
Analysis Date: 05/15/07					
Mercury		0.10	0.05	mg/kg	
pH @ 25°C, 1:10	**Method: 4500H+B**				
Analysis Date: 05/14/07					
pH @ 25°C, 1:10		8.61		Units	

First Environmental Laboratories, Inc.

IL ELAP / NELAC Accreditation # 100292

1600 Shore Road • Naperville, Illinois 60563 • Phone (630) 778-1200 • Fax (630) 778-1233

Analytical Report

Client:	BRADBURNE, BRILLER & JOHNSON	**Date Collected:**	05/11/07
Project ID:	Lyons, IL	**Time Collected:**	13:55
Sample ID:	GP-2 (4'-6')	**Date Received:**	05/11/07
Sample No:	7-2097-002	**Date Reported:**	05/22/07

Results are reported on a dry weight basis.

Analyte	Result	R.L.	Units	Flags
Solids, Total **Method: 160.3**				
Analysis Date: 05/14/07				
Total Solids	80.88		%	
Volatile Organic Compounds **Method: 5035A/8260B**				
Analysis Date: 05/18/07				
Acetone	< 100	100	ug/kg	
Benzene	< 5.0	5.0	ug/kg	
Bromodichloromethane	< 5.0	5.0	ug/kg	
Bromoform	< 5.0	5.0	ug/kg	
Bromomethane	< 10.0	10.0	ug/kg	
2-Butanone (MEK)	< 10.0	10.0	ug/kg	
Carbon disulfide	< 5.0	5.0	ug/kg	
Carbon tetrachloride	< 5.0	5.0	ug/kg	
Chlorobenzene	< 5.0	5.0	ug/kg	
Chlorodibromomethane	< 5.0	5.0	ug/kg	
Chloroethane	< 10.0	10.0	ug/kg	
Chloroform	< 5.0	5.0	ug/kg	
Chloromethane	< 10.0	10.0	ug/kg	
1,1-Dichloroethane	< 5.0	5.0	ug/kg	
1,2-Dichloroethane	< 5.0	5.0	ug/kg	
1,1-Dichloroethene	< 5.0	5.0	ug/kg	
cis-1,2-Dichloroethene	< 5.0	5.0	ug/kg	
trans-1,2-Dichloroethene	< 5.0	5.0	ug/kg	
1,2-Dichloropropane	< 5.0	5.0	ug/kg	
cis-1,3-Dichloropropene	< 5.0	5.0	ug/kg	
trans-1,3-Dichloropropene	< 5.0	5.0	ug/kg	
Ethylbenzene	< 5.0	5.0	ug/kg	
2-Hexanone	< 10.0	10.0	ug/kg	
Methyl-tert-butylether (MTBE)	< 5.0	5.0	ug/kg	
4-Methyl-2-pentanone (MIBK)	< 10.0	10.0	ug/kg	
Methylene chloride	< 5.0	5.0	ug/kg	
Styrene	< 5.0	5.0	ug/kg	
1,1,2,2-Tetrachloroethane	< 5.0	5.0	ug/kg	
Tetrachloroethene	< 5.0	5.0	ug/kg	
Toluene	< 5.0	5.0	ug/kg	
1,1,1-Trichloroethane	< 5.0	5.0	ug/kg	
1,1,2-Trichloroethane	< 5.0	5.0	ug/kg	
Trichloroethene	< 5.0	5.0	ug/kg	

First Environmental Laboratories, Inc.
IL ELAP / NELAC Accreditation # 100292
1600 Shore Road • Naperville, Illinois 60563 • Phone (630) 778-1200 • Fax (630) 778-1233

Analytical Report

Client: BRADBURNE, BRILLER & JOHNSON
Project ID: Lyons, IL
Sample ID: GP-2 (4'-6')
Sample No: 7-2097-002

Date Collected: 05/11/07
Time Collected: 13:55
Date Received: 05/11/07
Date Reported: 05/22/07

Results are reported on a dry weight basis.

Analyte	Result	R.L.	Units	Flags
Volatile Organic Compounds **Method: 5035A/8260B**				
Analysis Date: 05/18/07				
Vinyl acetate	< 10.0	10.0	ug/kg	
Vinyl chloride	< 10.0	10.0	ug/kg	
Xylene, Total	< 5.0	5.0	ug/kg	
Semi-Volatile Compounds **Method: 8270C**		**Preparation Method 3540C**		
Analysis Date: 05/20/07		Preparation Date: 05/15/07		
Acenaphthene	< 330	330	ug/kg	
Acenaphthylene	< 330	330	ug/kg	
Anthracene	< 330	330	ug/kg	
Benzidine	< 330	330	ug/kg	
Benzo(a)anthracene	< 330	330	ug/kg	
Benzo(a)pyrene	< 90	90	ug/kg	
Benzo(b)fluoranthene	< 330	330	ug/kg	
Benzo(k)fluoranthene	< 330	330	ug/kg	
Benzo(ghi)perylene	< 330	330	ug/kg	
Benzoic acid	< 330	330	ug/kg	
Benzyl alcohol	< 330	330	ug/kg	
bis(2-Chloroethoxy)methane	< 330	330	ug/kg	
bis(2-Chloroethyl)ether	< 330	330	ug/kg	
bis(2-Chloroisopropyl)ether	< 330	330	ug/kg	
bis(2-Ethylhexyl)phthalate	< 330	330	ug/kg	
4-Bromophenyl phenyl ether	< 330	330	ug/kg	
Butyl benzyl phthalate	< 330	330	ug/kg	
Carbazole	< 330	330	ug/kg	
4-Chloroaniline	< 330	330	ug/kg	
4-Chloro-3-methylphenol	< 330	330	ug/kg	
2-Chloronaphthalene	< 330	330	ug/kg	
2-Chlorophenol	< 330	330	ug/kg	
4-Chlorophenyl phenyl ether	< 330	330	ug/kg	
Chrysene	< 330	330	ug/kg	
Di-n-butyl phthalate	< 330	330	ug/kg	
Di-n-octylphthalate	< 330	330	ug/kg	
Dibenzo(a,h)anthracene	< 90	90	ug/kg	
Dibenzofuran	< 330	330	ug/kg	
1,2-Dichlorobenzene	< 330	330	ug/kg	
1,3-Dichlorobenzene	< 330	330	ug/kg	
1,4-Dichlorobenzene	< 330	330	ug/kg	

First Environmental Laboratories, Inc.
IL ELAP / NELAC Accreditation # 100292
1600 Shore Road • Naperville, Illinois 60563 • Phone (630) 778-1200 • Fax (630) 778-1233

Analytical Report

Client:	BRADBURNE, BRILLER & JOHNSON	**Date Collected:**	05/11/07
Project ID:	Lyons, IL	**Time Collected:**	13:55
Sample ID:	GP-2 (4'-6')	**Date Received:**	05/11/07
Sample No:	7-2097-002	**Date Reported:**	05/22/07

Results are reported on a dry weight basis.

Analyte	Result	R.L.	Units	Flags
Semi-Volatile Compounds Analysis Date: 05/20/07	**Method: 8270C**	**Preparation Method 3540C** Preparation Date: 05/15/07		
3,3'-Dichlorobenzidine	< 660	660	ug/kg	
2,4-Dichlorophenol	< 330	330	ug/kg	
Diethyl phthalate	< 330	330	ug/kg	
2,4-Dimethylphenol	< 330	330	ug/kg	
Dimethyl phthalate	< 330	330	ug/kg	
4,6-Dinitro-2-methylphenol	< 1,600	1600	ug/kg	
2,4-Dinitrophenol	< 1,600	1600	ug/kg	
2,4-Dinitrotoluene	< 250	250	ug/kg	
2,6-Dinitrotoluene	< 260	260	ug/kg	
Fluoranthene	< 330	330	ug/kg	
Fluorene	< 330	330	ug/kg	
Hexachlorobenzene	< 330	330	ug/kg	
Hexachlorobutadiene	< 330	330	ug/kg	
Hexachlorocyclopentadiene	< 330	330	ug/kg	
Hexachloroethane	< 330	330	ug/kg	
Indeno(1,2,3-cd)pyrene	< 330	330	ug/kg	
Isophorone	< 330	330	ug/kg	
2-Methylnaphthalene	< 330	330	ug/kg	
2-Methylphenol	< 330	330	ug/kg	
3 & 4-Methylphenol	< 330	330	ug/kg	
Naphthalene	< 330	330	ug/kg	
2-Nitroaniline	< 1,600	1600	ug/kg	
3-Nitroaniline	< 1,600	1600	ug/kg	
4-Nitroaniline	< 1,600	1600	ug/kg	
Nitrobenzene	< 260	260	ug/kg	
2-Nitrophenol	< 1,600	1600	ug/kg	
4-Nitrophenol	< 1,600	1600	ug/kg	
n-Nitrosodi-n-propylamine	< 330	330	ug/kg	
n-Nitrosodimethylamine	< 330	330	ug/kg	
n-Nitrosodiphenylamine	< 330	330	ug/kg	
Pentachlorophenol	< 330	330	ug/kg	
Phenanthrene	< 330	330	ug/kg	
Phenol	< 330	330	ug/kg	
Pyrene	< 330	330	ug/kg	
Pyridine	< 330	330	ug/kg	
1,2,4-Trichlorobenzene	< 330	330	ug/kg	

First Environmental Laboratories, Inc.
IL ELAP / NELAC Accreditation # 100292
1600 Shore Road • Naperville, Illinois 60563 • Phone (630) 778-1200 • Fax (630) 778-1233

Analytical Report

Client:	BRADBURNE, BRILLER & JOHNSON	**Date Collected:**	05/11/07
Project ID:	Lyons, IL	**Time Collected:**	13:55
Sample ID:	GP-2 (4'-6')	**Date Received:**	05/11/07
Sample No:	7-2097-002	**Date Reported:**	05/22/07

Results are reported on a dry weight basis.

Analyte	Result	R.L.	Units	Flags
Semi-Volatile Compounds	**Method: 8270C**	**Preparation Method 3540C**		
Analysis Date: 05/20/07		Preparation Date: 05/15/07		
2,4,5-Trichlorophenol	< 330	330	ug/kg	
2,4,6-Trichlorophenol	< 330	330	ug/kg	
Pesticides/PCBs	**Method: 8081A/8082**	**Preparation Method 3540C**		
Analysis Date: 05/21/07		Preparation Date: 05/18/07		
Aldrin	< 8.0	8.0	ug/kg	
Aroclor 1016	< 80.0	80.0	ug/kg	
Aroclor 1221	< 80.0	80.0	ug/kg	
Aroclor 1232	< 80.0	80.0	ug/kg	
Aroclor 1242	< 80.0	80.0	ug/kg	
Aroclor 1248	< 80.0	80.0	ug/kg	
Aroclor 1254	< 160	160	ug/kg	
Aroclor 1260	< 160	160	ug/kg	
alpha-BHC	< 2.0	2.0	ug/kg	
beta-BHC	< 8.0	8.0	ug/kg	
delta-BHC	< 8.0	8.0	ug/kg	
gamma-BHC (Lindane)	< 8.0	8.0	ug/kg	
alpha-Chlordane	< 80.0	80.0	ug/kg	
gamma-Chlordane	< 80.0	80.0	ug/kg	
4,4'-DDD	< 16.0	16.0	ug/kg	
4,4'-DDE	< 16.0	16.0	ug/kg	
4,4'-DDT	< 16.0	16.0	ug/kg	
Dieldrin	< 16.0	16.0	ug/kg	
Endosulfan I	< 8.0	8.0	ug/kg	
Endosulfan II	< 16.0	16.0	ug/kg	
Endosulfan sulfate	< 16.0	16.0	ug/kg	
Endrin	< 16.0	16.0	ug/kg	
Endrin aldehyde	< 16.0	16.0	ug/kg	
Endrin ketone	< 16.0	16.0	ug/kg	
Heptachlor	< 8.0	8.0	ug/kg	
Heptachlor epoxide	< 8.0	8.0	ug/kg	
Methoxychlor	< 80.0	80.0	ug/kg	
Toxaphene	< 160	160	ug/kg	

First Environmental Laboratories, Inc.

IL ELAP / NELAC Accreditation # 100292

1600 Shore Road • Naperville, Illinois 60563 • Phone (630) 778-1200 • Fax (630) 778-1233

Analytical Report

Client:	BRADBURNE, BRILLER & JOHNSON	**Date Collected:**	05/11/07
Project ID:	Lyons, IL	**Time Collected:**	13:55
Sample ID:	GP-2 (4'-6')	**Date Received:**	05/11/07
Sample No:	7-2097-002	**Date Reported:**	05/22/07

Results are reported on a dry weight basis.

Analyte		Result	R.L.	Units	Flags
Herbicides	**Method: 8321**				
Analysis Date: 05/21/07					
2,4-Dichlorophenoxyacetic acid (2,4-D)		< 100	100	ug/kg	S
Silvex (2,4,5-TP)		< 100	100	ug/kg	S
Total Metals	**Method: 6010B**		**Preparation Method 3050B**		
Analysis Date: 05/18/07			Preparation Date: 05/15/07		
Arsenic		8.2	0.2	mg/kg	
Barium		125	0.1	mg/kg	
Cadmium		0.6	0.1	mg/kg	
Chromium		27.8	0.1	mg/kg	
Lead		21.5	0.2	mg/kg	
Selenium		< 0.2	0.2	mg/kg	
Silver		< 0.1	0.1	mg/kg	
Total Metals	**Method: 7470A**				
Analysis Date: 05/15/07					
Mercury		< 0.05	0.05	mg/kg	
pH @ 25°C, 1:10	**Method: 4500H+B**				
Analysis Date: 05/14/07					
pH @ 25°C, 1:10		8.21		Units	

First Environmental Laboratories, Inc.

IL ELAP / NELAC Accreditation # 100292

1600 Shore Road • Naperville, Illinois 60563 • Phone (630) 778-1200 • Fax (630) 778-1233

Analytical Report

Client: BRADBURNE, BRILLER & JOHNSON
Project ID: Lyons, IL
Sample ID: GP-3 (4'-6')
Sample No: 7-2097-003

Date Collected: 05/11/07
Time Collected: 13:45
Date Received: 05/11/07
Date Reported: 05/22/07

Results are reported on a dry weight basis.

Analyte	Result	R.L.	Units	Flags
Solids, Total Method: 160.3				
Analysis Date: 05/14/07				
Total Solids	83.79		%	
Volatile Organic Compounds Method: 5035A/8260B				
Analysis Date: 05/18/07				
Acetone	< 100	100	ug/kg	
Benzene	< 5.0	5.0	ug/kg	
Bromodichloromethane	< 5.0	5.0	ug/kg	
Bromoform	< 5.0	5.0	ug/kg	
Bromomethane	< 10.0	10.0	ug/kg	
2-Butanone (MEK)	< 10.0	10.0	ug/kg	
Carbon disulfide	< 5.0	5.0	ug/kg	
Carbon tetrachloride	< 5.0	5.0	ug/kg	
Chlorobenzene	< 5.0	5.0	ug/kg	
Chlorodibromomethane	< 5.0	5.0	ug/kg	
Chloroethane	< 10.0	10.0	ug/kg	
Chloroform	< 5.0	5.0	ug/kg	
Chloromethane	< 10.0	10.0	ug/kg	
1,1-Dichloroethane	< 5.0	5.0	ug/kg	
1,2-Dichloroethane	< 5.0	5.0	ug/kg	
1,1-Dichloroethene	< 5.0	5.0	ug/kg	
cis-1,2-Dichloroethene	< 5.0	5.0	ug/kg	
trans-1,2-Dichloroethene	< 5.0	5.0	ug/kg	
1,2-Dichloropropane	< 5.0	5.0	ug/kg	
cis-1,3-Dichloropropene	< 5.0	5.0	ug/kg	
trans-1,3-Dichloropropene	< 5.0	5.0	ug/kg	
Ethylbenzene	< 5.0	5.0	ug/kg	
2-Hexanone	< 10.0	10.0	ug/kg	
Methyl-tert-butylether (MTBE)	< 5.0	5.0	ug/kg	
4-Methyl-2-pentanone (MIBK)	< 10.0	10.0	ug/kg	
Methylene chloride	< 5.0	5.0	ug/kg	
Styrene	< 5.0	5.0	ug/kg	
1,1,2,2-Tetrachloroethane	< 5.0	5.0	ug/kg	
Tetrachloroethene	< 5.0	5.0	ug/kg	
Toluene	< 5.0	5.0	ug/kg	
1,1,1-Trichloroethane	< 5.0	5.0	ug/kg	
1,1,2-Trichloroethane	< 5.0	5.0	ug/kg	
Trichloroethene	< 5.0	5.0	ug/kg	

First Environmental Laboratories, Inc.
IL ELAP / NELAC Accreditation # 100292
1600 Shore Road • Naperville, Illinois 60563 • Phone (630) 778-1200 • Fax (630) 778-1233

Analytical Report

Client:	BRADBURNE, BRILLER & JOHNSON	**Date Collected:**	05/11/07
Project ID:	Lyons, IL	**Time Collected:**	13:45
Sample ID:	GP-3 (4'-6')	**Date Received:**	05/11/07
Sample No:	7-2097-003	**Date Reported:**	05/22/07

Results are reported on a dry weight basis.

Analyte	Result	R.L.	Units	Flags
Volatile Organic Compounds **Method: 5035A/8260B**				
Analysis Date: 05/18/07				
Vinyl acetate	< 10.0	10.0	ug/kg	
Vinyl chloride	< 10.0	10.0	ug/kg	
Xylene, Total	< 5.0	5.0	ug/kg	
Semi-Volatile Compounds **Method: 8270C**		**Preparation Method 3540C**		
Analysis Date: 05/20/07		Preparation Date: 05/15/07		
Acenaphthene	< 330	330	ug/kg	
Acenaphthylene	< 330	330	ug/kg	
Anthracene	< 330	330	ug/kg	
Benzidine	< 330	330	ug/kg	
Benzo(a)anthracene	< 330	330	ug/kg	
Benzo(a)pyrene	< 90	90	ug/kg	
Benzo(b)fluoranthene	< 330	330	ug/kg	
Benzo(k)fluoranthene	< 330	330	ug/kg	
Benzo(ghi)perylene	< 330	330	ug/kg	
Benzoic acid	< 330	330	ug/kg	
Benzyl alcohol	< 330	330	ug/kg	
bis(2-Chloroethoxy)methane	< 330	330	ug/kg	
bis(2-Chloroethyl)ether	< 330	330	ug/kg	
bis(2-Chloroisopropyl)ether	< 330	330	ug/kg	
bis(2-Ethylhexyl)phthalate	< 330	330	ug/kg	
4-Bromophenyl phenyl ether	< 330	330	ug/kg	
Butyl benzyl phthalate	< 330	330	ug/kg	
Carbazole	< 330	330	ug/kg	
4-Chloroaniline	< 330	330	ug/kg	
4-Chloro-3-methylphenol	< 330	330	ug/kg	
2-Chloronaphthalene	< 330	330	ug/kg	
2-Chlorophenol	< 330	330	ug/kg	
4-Chlorophenyl phenyl ether	< 330	330	ug/kg	
Chrysene	< 330	330	ug/kg	
Di-n-butyl phthalate	< 330	330	ug/kg	
Di-n-octylphthalate	< 330	330	ug/kg	
Dibenzo(a,h)anthracene	< 90	90	ug/kg	
Dibenzofuran	< 330	330	ug/kg	
1,2-Dichlorobenzene	< 330	330	ug/kg	
1,3-Dichlorobenzene	< 330	330	ug/kg	
1,4-Dichlorobenzene	< 330	330	ug/kg	

First Environmental Laboratories, Inc.
IL ELAP / NELAC Accreditation # 100292
1600 Shore Road • Naperville, Illinois 60563 • Phone (630) 778-1200 • Fax (630) 778-1233

Analytical Report

Client:	BRADBURNE, BRILLER & JOHNSON	**Date Collected:**	05/11/07
Project ID:	Lyons, IL	**Time Collected:**	13:45
Sample ID:	GP-3 (4'-6')	**Date Received:**	05/11/07
Sample No:	7-2097-003	**Date Reported:**	05/22/07

Results are reported on a dry weight basis.

Analyte	Result	R.L.	Units	Flags
Semi-Volatile Compounds **Method: 8270C** Analysis Date: 05/20/07		**Preparation Method 3540C** Preparation Date: 05/15/07		
3,3'-Dichlorobenzidine	< 660	660	ug/kg	
2,4-Dichlorophenol	< 330	330	ug/kg	
Diethyl phthalate	< 330	330	ug/kg	
2,4-Dimethylphenol	< 330	330	ug/kg	
Dimethyl phthalate	< 330	330	ug/kg	
4,6-Dinitro-2-methylphenol	< 1,600	1600	ug/kg	
2,4-Dinitrophenol	< 1,600	1600	ug/kg	
2,4-Dinitrotoluene	< 250	250	ug/kg	
2,6-Dinitrotoluene	< 260	260	ug/kg	
Fluoranthene	< 330	330	ug/kg	
Fluorene	< 330	330	ug/kg	
Hexachlorobenzene	< 330	330	ug/kg	
Hexachlorobutadiene	< 330	330	ug/kg	
Hexachlorocyclopentadiene	< 330	330	ug/kg	
Hexachloroethane	< 330	330	ug/kg	
Indeno(1,2,3-cd)pyrene	< 330	330	ug/kg	
Isophorone	< 330	330	ug/kg	
2-Methylnaphthalene	< 330	330	ug/kg	
2-Methylphenol	< 330	330	ug/kg	
3 & 4-Methylphenol	< 330	330	ug/kg	
Naphthalene	< 330	330	ug/kg	
2-Nitroaniline	< 1,600	1600	ug/kg	
3-Nitroaniline	< 1,600	1600	ug/kg	
4-Nitroaniline	< 1,600	1600	ug/kg	
Nitrobenzene	< 260	260	ug/kg	
2-Nitrophenol	< 1,600	1600	ug/kg	
4-Nitrophenol	< 1,600	1600	ug/kg	
n-Nitrosodi-n-propylamine	< 330	330	ug/kg	
n-Nitrosodimethylamine	< 330	330	ug/kg	
n-Nitrosodiphenylamine	< 330	330	ug/kg	
Pentachlorophenol	< 330	330	ug/kg	
Phenanthrene	< 330	330	ug/kg	
Phenol	< 330	330	ug/kg	
Pyrene	< 330	330	ug/kg	
Pyridine	< 330	330	ug/kg	
1,2,4-Trichlorobenzene	< 330	330	ug/kg	

First Environmental Laboratories, Inc.
IL ELAP / NELAC Accreditation # 100292
1600 Shore Road • Naperville, Illinois 60563 • Phone (630) 778-1200 • Fax (630) 778-1233

Analytical Report

Client: BRADBURNE, BRILLER & JOHNSON
Project ID: Lyons, IL
Sample ID: GP-3 (4'-6')
Sample No: 7-2097-003

Date Collected: 05/11/07
Time Collected: 13:45
Date Received: 05/11/07
Date Reported: 05/22/07

Results are reported on a dry weight basis.

Analyte	Result	R.L.	Units	Flags
Semi-Volatile Compounds Analysis Date: 05/20/07	**Method: 8270C**	**Preparation Method 3540C** Preparation Date: 05/15/07		
2,4,5-Trichlorophenol	< 330	330	ug/kg	
2,4,6-Trichlorophenol	< 330	330	ug/kg	
Pesticides/PCBs Analysis Date: 05/21/07	**Method: 8081A/8082**	**Preparation Method 3540C** Preparation Date: 05/18/07		
Aldrin	< 8.0	8.0	ug/kg	
Aroclor 1016	< 80.0	80.0	ug/kg	
Aroclor 1221	< 80.0	80.0	ug/kg	
Aroclor 1232	< 80.0	80.0	ug/kg	
Aroclor 1242	< 80.0	80.0	ug/kg	
Aroclor 1248	< 80.0	80.0	ug/kg	
Aroclor 1254	< 160	160	ug/kg	
Aroclor 1260	< 160	160	ug/kg	
alpha-BHC	< 2.0	2.0	ug/kg	
beta-BHC	< 8.0	8.0	ug/kg	
delta-BHC	< 8.0	8.0	ug/kg	
gamma-BHC (Lindane)	< 8.0	8.0	ug/kg	
alpha-Chlordane	< 80.0	80.0	ug/kg	
gamma-Chlordane	< 80.0	80.0	ug/kg	
4,4'-DDD	< 16.0	16.0	ug/kg	
4,4'-DDE	< 16.0	16.0	ug/kg	
4,4'-DDT	< 16.0	16.0	ug/kg	
Dieldrin	< 16.0	16.0	ug/kg	
Endosulfan I	< 8.0	8.0	ug/kg	
Endosulfan II	< 16.0	16.0	ug/kg	
Endosulfan sulfate	< 16.0	16.0	ug/kg	
Endrin	< 16.0	16.0	ug/kg	
Endrin aldehyde	< 16.0	16.0	ug/kg	
Endrin ketone	< 16.0	16.0	ug/kg	
Heptachlor	< 8.0	8.0	ug/kg	
Heptachlor epoxide	< 8.0	8.0	ug/kg	
Methoxychlor	< 80.0	80.0	ug/kg	
Toxaphene	< 160	160	ug/kg	

First Environmental Laboratories, Inc.

IL ELAP / NELAC Accreditation # 100292

1600 Shore Road • Naperville, Illinois 60563 • Phone (630) 778-1200 • Fax (630) 778-1233

Analytical Report

Client: BRADBURNE, BRILLER & JOHNSON
Project ID: Lyons, IL
Sample ID: GP-3 (4'-6')
Sample No: 7-2097-003

Date Collected: 05/11/07
Time Collected: 13:45
Date Received: 05/11/07
Date Reported: 05/22/07

Results are reported on a dry weight basis.

Analyte		Result	R.L.	Units	Flags
Herbicides	**Method: 8321**				
Analysis Date: 05/21/07					
2,4-Dichlorophenoxyacetic acid (2,4-D)		< 100	100	ug/kg	S
Silvex (2,4,5-TP)		< 100	100	ug/kg	S
Total Metals	**Method: 6010B**		**Preparation Method 3050B**		
Analysis Date: 05/18/07			Preparation Date: 05/15/07		
Arsenic		7.0	0.2	mg/kg	
Barium		85.6	0.1	mg/kg	
Cadmium		0.7	0.1	mg/kg	
Chromium		17.4	0.1	mg/kg	
Lead		22.0	0.2	mg/kg	
Selenium		< 0.2	0.2	mg/kg	
Silver		< 0.1	0.1	mg/kg	
Total Metals	**Method: 7470A**				
Analysis Date: 05/15/07					
Mercury		0.11	0.05	mg/kg	
pH @ 25°C, 1:10	**Method: 4500H+B**				
Analysis Date: 05/14/07					
pH @ 25°C, 1:10		7.65		Units	

First Environmental Laboratories, Inc.
IL ELAP / NELAC Accreditation # 100292
1600 Shore Road • Naperville, Illinois 60563 • Phone (630) 778-1200 • Fax (630) 778-1233

Analytical Report

Client:	BRADBURNE, BRILLER & JOHNSON	**Date Collected:**	05/11/07
Project ID:	Lyons, IL	**Time Collected:**	12:00
Sample ID:	Equipment Rinse	**Date Received:**	05/11/07
Sample No:	7-2097-004	**Date Reported:**	05/22/07

Analyte	Result	R.L.	Units	Flags
Volatile Organic Compounds **Method: 5030B/8260B**				
Analysis Date: 05/16/07				
Acetone	< 100	100	ug/L	
Benzene	< 5.0	5.0	ug/L	
Bromodichloromethane	< 1.0	1.0	ug/L	
Bromoform	< 1.0	1.0	ug/L	
Bromomethane	< 5.0	5.0	ug/L	
2-Butanone (MEK)	< 10.0	10.0	ug/L	
Carbon disulfide	< 5.0	5.0	ug/L	
Carbon tetrachloride	< 5.0	5.0	ug/L	
Chlorobenzene	< 5.0	5.0	ug/L	
Chlorodibromomethane	< 1.0	1.0	ug/L	
Chloroethane	< 10.0	10.0	ug/L	
Chloroform	< 1.0	1.0	ug/L	
Chloromethane	< 10.0	10.0	ug/L	
1,1-Dichloroethane	< 5.0	5.0	ug/L	
1,2-Dichloroethane	< 5.0	5.0	ug/L	
1,1-Dichloroethene	< 5.0	5.0	ug/L	
cis-1,2-Dichloroethene	< 5.0	5.0	ug/L	
trans-1,2-Dichloroethene	< 5.0	5.0	ug/L	
1,2-Dichloropropane	< 5.0	5.0	ug/L	
cis-1,3-Dichloropropene	< 1.0	1.0	ug/L	
trans-1,3-Dichloropropene	< 1.0	1.0	ug/L	
Ethylbenzene	< 5.0	5.0	ug/L	
2-Hexanone	< 10.0	10.0	ug/L	
Methyl-tert-butylether (MTBE)	< 5.0	5.0	ug/L	
4-Methyl-2-pentanone (MIBK)	< 10.0	10.0	ug/L	
Methylene chloride	< 5.0	5.0	ug/L	
Styrene	< 5.0	5.0	ug/L	
1,1,2,2-Tetrachloroethane	< 5.0	5.0	ug/L	
Tetrachloroethene	< 5.0	5.0	ug/L	
Toluene	< 5.0	5.0	ug/L	
1,1,1-Trichloroethane	< 5.0	5.0	ug/L	
1,1,2-Trichloroethane	< 5.0	5.0	ug/L	
Trichloroethene	< 5.0	5.0	ug/L	
Vinyl acetate	< 10.0	10.0	ug/L	
Vinyl chloride	< 2.0	2.0	ug/L	
Xylene, Total	< 5.0	5.0	ug/L	

First Environmental Laboratories, Inc.
IL ELAP / NELAC Accreditation # 100292
1600 Shore Road • Naperville, Illinois 60563 • Phone (630) 778-1200 • Fax (630) 778-1233

Analytical Report

Client:	BRADBURNE, BRILLER & JOHNSON	**Date Collected:**	05/11/07
Project ID:	Lyons, IL	**Time Collected:**	12:00
Sample ID:	Equipment Rinse	**Date Received:**	05/11/07
Sample No:	7-2097-004	**Date Reported:**	05/22/07

Analyte	Result	R.L.	Units	Flags
Semi-Volatile Compounds **Method: 8270C** Analysis Date: 05/19/07		**Preparation Method 3510C** Preparation Date: 05/16/07		
Acenaphthene	< 10	10	ug/L	
Acenaphthylene	< 10	10	ug/L	
Anthracene	< 10	10	ug/L	
Benzidine	< 10	10	ug/L	
Benzo(a)anthracene	< 10	10	ug/L	
Benzo(a)pyrene	< 10	10	ug/L	
Benzo(b)fluoranthene	< 10	10	ug/L	
Benzo(k)fluoranthene	< 10	10	ug/L	
Benzo(ghi)perylene	< 10	10	ug/L	
Benzoic acid	< 50	50	ug/L	
Benzyl alcohol	< 20	20	ug/L	
bis(2-Chloroethoxy)methane	< 10	10	ug/L	
bis(2-Chloroethyl)ether	< 10	10	ug/L	
bis(2-Chloroisopropyl)ether	< 10	10	ug/L	
bis(2-Ethylhexyl)phthalate	< 5	5	ug/L	
4-Bromophenyl phenyl ether	< 10	10	ug/L	
Butyl benzyl phthalate	< 10	10	ug/L	
Carbazole	< 10	10	ug/L	
4-Chloroaniline	< 10	10	ug/L	
4-Chloro-3-methylphenol	< 20	20	ug/L	
2-Chloronaphthalene	< 10	10	ug/L	
2-Chlorophenol	< 10	10	ug/L	
4-Chlorophenyl phenyl ether	< 10	10	ug/L	
Chrysene	< 10	10	ug/L	
Di-n-butyl phthalate	< 10	10	ug/L	
Di-n-octylphthalate	< 10	10	ug/L	
Dibenzo(a,h)anthracene	< 10	10	ug/L	
Dibenzofuran	< 10	10	ug/L	
1,2-Dichlorobenzene	< 10	10	ug/L	
1,3-Dichlorobenzene	< 10	10	ug/L	
1,4-Dichlorobenzene	< 10	10	ug/L	
3,3'-Dichlorobenzidine	< 20	20	ug/L	
2,4-Dichlorophenol	< 10	10	ug/L	
Diethyl phthalate	< 10	10	ug/L	
2,4-Dimethylphenol	< 10	10	ug/L	
Dimethyl phthalate	< 10	10	ug/L	

First Environmental Laboratories, Inc.

IL ELAP / NELAC Accreditation # 100292

1600 Shore Road • Naperville, Illinois 60563 • Phone (630) 778-1200 • Fax (630) 778-1233

Analytical Report

Client:	BRADBURNE, BRILLER & JOHNSON	**Date Collected:**	05/11/07
Project ID:	Lyons, IL	**Time Collected:**	12:00
Sample ID:	Equipment Rinse	**Date Received:**	05/11/07
Sample No:	7-2097-004	**Date Reported:**	05/22/07

Analyte	Result	R.L.	Units	Flags
Semi-Volatile Compounds **Method: 8270C**		**Preparation Method 3510C**		
Analysis Date: 05/19/07		Preparation Date: 05/16/07		
4,6-Dinitro-2-methylphenol	< 50	50	ug/L	
2,4-Dinitrophenol	< 10	10	ug/L	
2,4-Dinitrotoluene	< 10	10	ug/L	
2,6-Dinitrotoluene	< 10	10	ug/L	
Fluoranthene	< 10	10	ug/L	
Fluorene	< 10	10	ug/L	
Hexachlorobenzene	< 10	10	ug/L	
Hexachlorobutadiene	< 10	10	ug/L	
Hexachlorocyclopentadiene	< 10	10	ug/L	
Hexachloroethane	< 5	5	ug/L	
Indeno(1,2,3-cd)pyrene	< 10	10	ug/L	
Isophorone	< 10	10	ug/L	
2-Methylnaphthalene	< 10	10	ug/L	
2-Methylphenol	< 10	10	ug/L	
3 & 4-Methylphenol	< 10	10	ug/L	
Naphthalene	< 10	10	ug/L	
2-Nitroaniline	< 50	50	ug/L	
3-Nitroaniline	< 50	50	ug/L	
4-Nitroaniline	< 20	20	ug/L	
Nitrobenzene	< 10	10	ug/L	
2-Nitrophenol	< 10	10	ug/L	
4-Nitrophenol	< 50	50	ug/L	
n-Nitrosodimethylamine	< 10	10	ug/L	
n-Nitrosodi-n-propylamine	< 10	10	ug/L	
n-Nitrosodiphenylamine	< 10	10	ug/L	
Pentachlorophenol	< 10	10	ug/L	
Phenanthrene	< 10	10	ug/L	
Phenol	< 10	10	ug/L	
Pyrene	< 10	10	ug/L	
1,2,4-Trichlorobenzene	< 10	10	ug/L	
2,4,5-Trichlorophenol	< 10	10	ug/L	
2,4,6-Trichlorophenol	< 10	10	ug/L	

First Environmental Laboratories, Inc.
IL ELAP / NELAC Accreditation # 100292
1600 Shore Road • Naperville, Illinois 60563 • Phone (630) 778-1200 • Fax (630) 778-1233

Analytical Report

Client: BRADBURNE, BRILLER & JOHNSON
Project ID: Lyons, IL
Sample ID: Equipment Rinse
Sample No: 7-2097-004

Date Collected: 05/11/07
Time Collected: 12:00
Date Received: 05/11/07
Date Reported: 05/22/07

Analyte		Result	R.L.	Units	Flags
Pesticides/PCBs	**Method: 8081A/8082**		**Preparation Method 3510C**		
Analysis Date: 05/21/07			Preparation Date: 05/16/07		
Aldrin		< 0.05	0.05	ug/L	
Aroclor 1016		< 0.50	0.50	ug/L	
Aroclor 1221		< 0.50	0.50	ug/L	
Aroclor 1232		< 0.50	0.50	ug/L	
Aroclor 1242		< 0.50	0.50	ug/L	
Aroclor 1248		< 0.50	0.50	ug/L	
Aroclor 1254		< 0.50	0.50	ug/L	
Aroclor 1260		< 0.50	0.50	ug/L	
alpha-BHC		< 0.05	0.05	ug/L	
beta-BHC		< 0.05	0.05	ug/L	
delta-BHC		< 0.05	0.05	ug/L	
gamma-BHC (Lindane)		< 0.05	0.05	ug/L	
alpha-Chlordane		< 0.50	0.50	ug/L	
gamma-Chlordane		< 0.50	0.50	ug/L	
4,4'-DDD		< 0.10	0.10	ug/L	
4,4'-DDE		< 0.10	0.10	ug/L	
4,4'-DDT		< 0.10	0.10	ug/L	
Dieldrin		< 0.10	0.10	ug/L	
Endosulfan I		< 0.05	0.05	ug/L	
Endosulfan II		< 0.10	0.10	ug/L	
Endosulfan sulfate		< 0.10	0.10	ug/L	
Endrin		< 0.10	0.10	ug/L	
Endrin aldehyde		< 0.10	0.10	ug/L	
Endrin ketone		< 0.10	0.10	ug/L	
Heptachlor		< 0.05	0.05	ug/L	
Heptachlor epoxide		< 0.05	0.05	ug/L	
Methoxychlor		< 0.50	0.50	ug/L	
Toxaphene		< 1.0	1.0	ug/L	
Herbicides Method 8321A	**Method: 8321A**				
Analysis Date: 05/17/07					
2,4-D		< 0.2	0.2	ug/L	S
Silvex (2,4,5-TP)		< 0.10	0.1	ug/L	S
Total Metals	**Method: 7470A**				
Analysis Date: 05/15/07					
Mercury		< 0.0005	0.0005	mg/L	

First Environmental Laboratories, Inc.
IL ELAP / NELAC Accreditation # 100292
1600 Shore Road • Naperville, Illinois 60563 • Phone (630) 778-1200 • Fax (630) 778-1233

Analytical Report

Client:	BRADBURNE, BRILLER & JOHNSON	**Date Collected:**	05/11/07
Project ID:	Lyons, IL	**Time Collected:**	12:00
Sample ID:	Equipment Rinse	**Date Received:**	05/11/07
Sample No:	7-2097-004	**Date Reported:**	05/22/07

Analyte	Result	R.L.	Units	Flags
Total Metals Method: 6010B		**Preparation Method 3010A**		
Analysis Date: 05/16/07		Preparation Date: 05/14/07		
Arsenic	< 0.002	0.002	mg/L	
Barium	0.002	0.001	mg/L	
Cadmium	< 0.001	0.001	mg/L	
Chromium	< 0.001	0.001	mg/L	
Lead	< 0.002	0.002	mg/L	
Selenium	< 0.002	0.002	mg/L	
Silver	< 0.001	0.001	mg/L	

First Environmental Laboratories, Inc.
IL ELAP / NELAC Accreditation # 100292
1600 Shore Road • Naperville, Illinois 60563 • Phone (630) 778-1200 • Fax (630) 778-1233

Analytical Report

Client:	BRADBURNE, BRILLER & JOHNSON	**Date Collected:**	05/11/07
Project ID:	Lyons, IL	**Time Collected:**	0:00
Sample ID:	Trip Blank	**Date Received:**	05/11/07
Sample No:	7-2097-005	**Date Reported:**	05/22/07

Analyte	Result	R.L.	Units	Flags
Volatile Organic Compounds **Method: 5030B/8260B**				
Analysis Date: 05/16/07				
Acetone	< 100	100	ug/L	
Benzene	< 5.0	5.0	ug/L	
Bromodichloromethane	< 1.0	1.0	ug/L	
Bromoform	< 1.0	1.0	ug/L	
Bromomethane	< 5.0	5.0	ug/L	
2-Butanone (MEK)	< 10.0	10.0	ug/L	
Carbon disulfide	< 5.0	5.0	ug/L	
Carbon tetrachloride	< 5.0	5.0	ug/L	
Chlorobenzene	< 5.0	5.0	ug/L	
Chlorodibromomethane	< 1.0	1.0	ug/L	
Chloroethane	< 10.0	10.0	ug/L	
Chloroform	< 1.0	1.0	ug/L	
Chloromethane	< 10.0	10.0	ug/L	
1,1-Dichloroethane	< 5.0	5.0	ug/L	
1,2-Dichloroethane	< 5.0	5.0	ug/L	
1,1-Dichloroethene	< 5.0	5.0	ug/L	
cis-1,2-Dichloroethene	< 5.0	5.0	ug/L	
trans-1,2-Dichloroethene	< 5.0	5.0	ug/L	
1,2-Dichloropropane	< 5.0	5.0	ug/L	
cis-1,3-Dichloropropene	< 1.0	1.0	ug/L	
trans-1,3-Dichloropropene	< 1.0	1.0	ug/L	
Ethylbenzene	< 5.0	5.0	ug/L	
2-Hexanone	< 10.0	10.0	ug/L	
Methyl-tert-butylether (MTBE)	< 5.0	5.0	ug/L	
4-Methyl-2-pentanone (MIBK)	< 10.0	10.0	ug/L	
Methylene chloride	< 5.0	5.0	ug/L	
Styrene	< 5.0	5.0	ug/L	
1,1,2,2-Tetrachloroethane	< 5.0	5.0	ug/L	
Tetrachloroethene	< 5.0	5.0	ug/L	
Toluene	< 5.0	5.0	ug/L	
1,1,1-Trichloroethane	< 5.0	5.0	ug/L	
1,1,2-Trichloroethane	< 5.0	5.0	ug/L	
Trichloroethene	< 5.0	5.0	ug/L	
Vinyl acetate	< 10.0	10.0	ug/L	
Vinyl chloride	< 2.0	2.0	ug/L	
Xylene, Total	< 5.0	5.0	ug/L	

CHAIN OF CUSTODY RECORD

Page ___ of ___ pgs

First Environmental Laboratories, Inc.

First Environmental Laboratories
1600 Shore Road, Suite D
Naperville, Illinois 60563
Phone: (630) 778-1200 • Fax: (630) 778-1233
24 Hr. Pager (708) 569-7507
E-mail: info@firstenv.com
IEPA Certification# 100292

Company Name: BBJ
Street Address: 515 N. State St., Suite 2200
City: Chicago State: IL Zip: 60610
Phone: 312-644-8556 Fax: 312-644-8555 e-mail: Kmccartney@bbjgroup
Send Report To: Kevin McCartney Via: Fax ☐ e-mail ☑
Sampled By: Kevin McCartney

Project I.D.: Lyons, IL
P.O. #:

Matrix Codes: S = Soil W = Water O = Other

Analyses

Date/Time Taken	Sample Description	Matrix	VOCs - 8260B	SVOCs - 8270C	PCBs - 8082	RCRA metals - 6010B	Hebicides - 8151	organochlorine pesticides - 8081A	pH 9040B/9045C	Comments	Lab I.D.
5.11.07/205	GP-1 [0'-2']	S	✓	✓	✓	✓	✓	✓	✓		7-2017-001
5.11.07/155	GP-2 [4'-6']	S	✓	✓	✓	✓	✓	✓	✓		002
5.11.07/145	GP-3 [4'-6']	S	✓	✓	✓	✓	✓	✓	✓		003
5.11.07/1200	Equipment Rinse	W	✓	✓	✓	✓	✓	✓			004
	Trip Blank	W	✓								005

FOR LAB USE ONLY:

Cooler Temperature: 0.1-6°C Yes ✓ No ___ °C
Received within 6 hrs. of collection: ___
Ice Present: Yes ✓ No ___

Sample Refrigerated: Yes ___ No ___
Refrigerator Temperature: ___ °C
5035 Vials Frozen: Yes ___ No ___
Freezer Temperature: ___ °C

Containers Received Preserved: ☑ Yes ☐ No

Notes and Special Instructions:

Relinquished By: [signature] Date/Time 5/6/07 350 Received By: [signature] Date/Time 5/11/07 3:50
Relinquished By: ___ Date/Time ___ Received By: ___ Date/Time ___

Rev. 304

printed 09/18/2007 4:52PM by epa4561 p. 226/439

printed 09/18/2007 4:52PM by epa4561 p. 227/439

07-34660 0311715101
Quarry Reclamation
District TIF #4
ORIGINAL
SR/tec
3 of 3

REPORT OF
PHASE II ENVIRONMENTAL SITE ASSESSMENT

Village of Lyons
c/o Robert K. Bush, Esq.
Ancel Glink Diamond Bush Dicianni & Krafthefer, P.C.
140 South Dearborn Street
Chicago Illinois 60603

Submitted to:

Village of Lyons
c/o Robert K. Bush, Esq.
Ancel Glink Diamond Bush Dicianni & Krafthefer, P.C.
Chicago, Illinois

ORIGINAL

Prepared by:

BRADBURNE, BRILLER & JOHNSON, LLC
Chicago, Illinois

RECEIVED
AUG 03 2007
IEPA/BOL

June 13, 2007

RELEASABLE
AUG 07 2007
VIEWER MD

B&J

printed 09/18/2007 4:52PM by epa4561 p. 228/439

Privileged and Confidential

June 13, 2007

Village of Lyons c/o Robert K. Bush, Esq.
Ancel Glink Diamond Bush Dicianni & Krafthefer, P.C.
140 South Dearborn Street
Chicago Illinois 60603

Subject: **Report of Phase II Environmental Site Assessment**
Lyons Landfill: Strategy and Sampling – Commercial Development
Southwest Corner of Ogden and Lawndale Avenues
Lyons, Illinois
BB&J Project No. 0253801

Dear Mr. Bush:

Bradburne, Briller & Johnson, LLC (BB&J) is pleased to submit the Village of Lyons this *Report of Phase II Environmental Site Assessment* for the parcel of land located at the southwest corner of Ogden and Lawndale Avenues in Lyons, Cook County, Illinois (Subject Property). This project was performed in accordance with the scope of work outlined in BB&J Proposal No. PN7-0109.

We appreciate the opportunity to provide you with our environmental consulting services. If you have any questions or require additional information, please call.

Sincerely,

BRADBURNE, BRILLER & JOHNSON, LLC

Karen Beaman
Staff Scientist

Andy Bajorat, CHMM
Senior Scientist

J. Tim Bradburne, P.G.
Principal

RECEIVED
AUG 0 3 2007
IEPA/BOL

515 N. State Street, Suite 2200, Chicago, Illinois
Voice 312.644.8556 Fax 312.644.8555
www.bbjgroup.com

RELEASABLE
AUG 0 7 2007
REVIEWER MD

printed 09/18/2007 4:52PM by epa4561 p. 229/439

TABLE OF CONTENTS

1.0 BACKGROUND 1

2.0 OBJECTIVE 1

3.0 SUBSURFACE ASSESSMENT 1
- 3.1 Pre-Mobilization Activities 1
- 3.2 Soil Gas Survey 2
- 3.3 Subsurface Soil Investigation 3
- 3.4 Ground-Water Investigation 5

4.0 FINDINGS AND ANALYTICAL RESULTS 5
- 4.1 Subsurface Geology and Hydrogeology 5
- 4.2 Field Screening Results 6
- 4.3 Laboratory Analytical Results 6
  - 4.3.1 Soil Gas 7
  - 4.3.2 Soil Investigation 7
  - 4.3.3 Ground Water 10
  - 4.3.4 QA/QC 11

5.0 CONCLUSIONS AND RECOMMENDATIONS 11
- 5.1 Soil Gas Survey 11
  - 5.1.1 Johnson and Ettinger Calculations 11
  - 5.1.2 Proposed Commercial Buildings 12
  - 5.1.3 Soil Gas Conclusions 13
- 5.2 Subsurface Soil Investigation 15
  - 5.2.1 Ground Water 16

TABLES

Table 1: Summary of Soil Gas Laboratory Analytical Results
Table 2: Summary of Soil Laboratory Analytical Results
Table 3: Summary of Ground-Water Analytical Results
Table 4: Monitoring Well Construction and Development Data
Table 5: Monitoring Well and Ground-Water Elevation Data

printed 09/18/2007 4:52PM by epa4561 p. 230/439

TABLE OF CONTENTS (continued)

FIGURES

Figure 1: Site Location Map
Figure 2: Soil Boring, Monitoring Wells, and Soil Gas Locations
Figure 3: Ground-Water Potentiometric Map
Figure 4: Monitoring Well Diagrams

APPENDICES

Appendix A: Field Procedures
Appendix B: Soil Boring Logs
Appendix C: Laboratory Analytical Reports
Appendix D: Village of Lyons Ordinance 5-18-99-3

printed 09/18/2007 4:52PM by epa4561 p. 231/439

1.0 BACKGROUND

BB&J performed a Phase II environmental Site Assessment (Phase II ESA) for the parcel of land located on the southwest corner of Ogden and Lawndale Avenues in Lyons, Illinois (Subject Property). A site location map is provided as Figure 1.

During a previous soil gas investigation, BB&J identified locations where elevated concentrations of methane and various volatile organic compounds (VOCs) were detected, including (but not limited to) vinyl chloride, trichloroethylene, and gasoline-related constituents. This previous investigation was conducted to assist with the evaluation of possible development options for the Subject Property. BB&J understands that a portion of the Subject Property along Ogden Avenue, which was the subject of this investigation, is intended for redevelopment for commercial purposes.

2.0 OBJECTIVE

The objective of this project was to help evaluate management and construction considerations to address environmental conditions related to the redevelopment of the Subject Property for commercial purposes.

3.0 SUBSURFACE ASSESSMENT

The following sections present a summary of the subsurface assessment activities conducted for the Subject Property. Details of the subsurface assessment activity procedures are presented within the Field Procedures (Appendix A).

3.1 Pre-Mobilization Activities

Prior to initiating field activities, BB&J prepared a Health and Safety Plan (HSP) for use by BB&J's on-site representative to address known and suspected site-specific constituents of concern (COCs), potential site and work-related hazards, and additional health and safety issues. In addition, and on behalf of BB&J, HH Holmes of Wheeling, Illinois (HH Holmes) and Terra Trace Environmental Services (Terra Trace) contacted the approved Illinois utility locating companies to clear the underground utilities on May 7, 2007 (over 72 hours prior to field work).

printed 09/18/2007 4:52PM by epa4561 p. 232/439

3.2 Soil Gas Survey

On May 11, 2007, BB&J oversaw the installation of three soil gas probes: CDSG-1, CDSG-2, and CDSG-3. Using direct-push technology (i.e., Geoprobe), Terra Trace created three holes in the subsurface located in each of the approximate centers of the proposed commercial buildings on the north portion of the Subject Property. Refer to Figure 2 for a site plan showing soil gas locations.

The installation, equilibration time, and sampling procedures utilized by BB&J for the Soil Gas Survey were pursuant to the guidelines identified in the *Active Soil Gas Investigation Advisory* Section 2.2.5 A 1 and 2, created by the California Environmental Protection Agency (EPA), dated January 28, 2003[1]. By use of direct-push technology (i.e., Geoprobe), a soil probe was advanced to a depth of 6 feet below ground surface (bgs) to create a hole for the soil vapor probe. Soil probes CDSG-1, CDSG-2, and CDSG-3 were installed to the bottom of the hole at an approximate depth of six feet bgs. Approximately one foot of sand was poured on top of the probe tip to a depth of five feet bgs to minimize disruption of airflow to the sampling tip. At least one foot of dry granular bentonite was poured on top of each sand pack to preclude the infiltration of hydrated bentonite grout. The probe was then filled to the surface with hydrated bentonite with the end of the soil gas probe tubing protruding from the subsurface. BB&J allowed for at least 30 minutes for the subsurface conditions to equilibrate before conducting purging and sampling activities.

The soil gas samples were collected using 400-milliliter (mL) Summa canisters, which were filled via 1/4-inch diameter poly tubing attached to the soil gas probe. This tubing was connected to a 60-mL plastic syringe with a three-way valve. Approximately 4 mLs per foot, or a total of 40 mLs (three times the dead volume), were then purged from the soil gas probe using the syringe. After purging, the syringe was then disconnected. The 400-mL canister was then connected to the tubing using a 1/4-inch swagelok fitting. A leak tracer, consisting of isopropyl alcohol, was then sprayed on paper towels and the towels were placed around the sampling assembly (i.e., the poly tubing and swagelok connection). The valve was then opened on the 400-mL canister and the reading on the vacuum gauge was then recorded. If the gauge read at least -25 inches of mercury, the canister was allowed to fill. When the gauge read zero inches of mercury, the canister was disconnected. The 400-mL canister was labeled with a ball point pen, wrapped

[1] This document was prepared by the California EPA Department of Toxic Substance Control (DTSC) and the Los Angeles Regional Water Quality Control Board (LARWQCB) to "ensure that consistent methodologies were applied during active soil gas investigations to produce high quality data for regulatory decision-making." As there are no existing regulations for soil gas investigations in Illinois, this document was used as the California EPA DTSC and LARWQCB are two regulatory agencies at the forefront of soil gas investigations in the United States.

printed 09/18/2007 4:52PM by epa4561 p. 233/439

in bubble wrap, and returned to the box in which it was shipped. BB&J personnel shipped the 400-mL Summa canister samples to H&P Laboratory for analysis of VOCs by United States Environmental Protection Agency (USEPA) Method TO-15 and methane by USEPA Method 8015.

3.3 Subsurface Soil Investigation

On May 14, 2007 through May 18, 2007, BB&J provided oversight for the advancement of 11 soil borings utilizing a hollow stem auger (SB-1 through SB-3[2], and SB-5 through SB-12), and the installation of four permanent monitoring wells (MW-5, MW-9, MW-10, and MW-12) by HH Holmes. The 11 soil borings and four permanent monitoring wells were advanced near the corners of the proposed three commercial buildings on the north portion of the Subject Property. The soil borings were located as follows:

- Three soil borings were advanced in the location of the most western proposed commercial building (SB-1 through SB-3);
- One soil boring, SB-5, was advanced in the location of the proposed entrance drive between the proposed western and central buildings;
- Four soil borings, SB-6 through SB-9, were advanced in the location of the center proposed commercial building; and,
- Three soil probes, SB-10 through SB-12, were advanced in the location of the most eastern proposed commercial building. Refer to Figure 2 for a site plan showing soil boring locations.

Soil samples were collected concurrently with the geotechnical investigation at the Subject Property and in accordance with BB&J's field procedures, as summarized in Attachment A. BB&J collected the soil samples, performed visual classification of soil type(s), field screened the samples using a photoionization detector (PID), and submitted select soil samples for laboratory chemical analyses.

As described in BB&J Proposal PN7-0109, two to three soil samples from six of the 11 soil borings were submitted from the following depths to First Environmental Laboratories, Inc. of Naperville, Illinois (First Environmental) for chemical analyses:

- Near surface (i.e. 0 to 2 feet bgs);
- Bottom of each boring; and,

[2] No boring designated "SB-4" was advanced during this investigation due to site access constraints.

printed 09/18/2007 4:52PM by epa4561 p. 234/439

- One or more additional depths based on field observations and field screening.

The exceptions to this protocol are as follows:

- BB&J submitted a sample collected from the vicinity of SB-5 based on observed black, pooling liquid at the surface.
- Due to a lack of recovery, BB&J was not able to submit a "near surface" sample for SB-10; BB&J, however, did submit a sample from 6.5 to 7 feet bgs, the nearest surface sample possible for the boring.

As such, the following soil samples were selected for laboratory analyses:

SB-3
- 1-2.5 feet bgs
- 3.5-5 feet bgs
- 13.5-15 feet bgs

SB-5
- 3.5-5 feet bgs
- 6-7.5 feet bgs

Vicinity SB-5
- 0-1 feet bgs

SB-7
- 1-2.5 feet bgs
- 6.5-7 feet bgs
- 58.5-60 feet bgs

SB-9
- 1-2.5 feet bgs
- 6-7.5 feet bgs
- 18.5-20 feet bgs

SB-10
- 6.5-7 feet bgs
- 8.5-10 feet bgs
- 18.5-20 feet bgs

SB-12
- 1-2.5 feet bgs
- 8.5-10 feet bgs
- 13.5-15 feet bgs

Each of the soil samples collected from the soil borings were analyzed for the following:

- VOCs by USEPA Method 8260B;
- Semivolatile organic compounds (SVOC) by USEPA Method 8270C;
- Polychlorinated biphenyls (PCBs) by USEPA Method 8082;
- Resource Conservation and Recovery Act (RCRA) metals by USEPA Methods 6010B and 7470A/7471A;
- Herbicides by USEPA Method 8151;

printed 09/18/2007 4:52PM by epa4561 p. 235/439

- Organochlorine pesticides by USEPA Method 8051A;and,
- pH by USEPA Method 4500H+B.

In addition, an equipment rinsate sample also was collected and analyzed for VOCs, SVOCs, PCBs, RCRA metals, herbicides, organochlorine pesticides and pH. The laboratory supplied the trip blank sample for quality assurance/quality control (QA/QC) purposes. The trip blank sample was analyzed for VOCs.

3.4 Ground-Water Investigation

On May 17, 2007, BB&J provided oversight for the installation of four permanent monitoring wells (MW-5, MW-9, MW-10, and MW-12) in their respective soil boring locations by HH Holmes. Refer to Figure 2 for a site plan showing permanent monitoring well locations. On May 18, 2007, BB&J purged each of the four permanent monitoring wells, allowed the well to recharge, and collected ground-water samples from each of the wells. The samples collected were analyzed for the following:

- VOCs by USEPA Method 8260B;
- SVOCs by USEPA Method 8270C;
- PCBs by USEPA Method 8082;
- RCRA metals by USEPA Methods 6010B and 7470A/7471A;
- Herbicides by USEPA Method 8151;
- Organochlorine pesticides by USEPA Method 8051A;and,
- pH by USEPA Method 4500H+B.

Details of the aforementioned subsurface assessment activities are presented within the Field Procedures (Appendix A).

4.0 FINDINGS AND ANALYTICAL RESULTS

The following sections present the subsurface assessment findings and a summary of the laboratory analytical results.

4.1 Subsurface Geology and Hydrogeology

Based on visual classification of the subsurface soil encountered during the assessment, the primary subsurface soil type consisted of stiff and medium stiff, gray and brown clay fill. Traces of sand and

printed 09/18/2007 4:52PM by epa4561 p. 236/439

gravel were encountered throughout the borings, at depths of 0 to 60 feet bgs. Additionally, occasional ash and asphalt debris was encountered. Auger refusal, believed to be the top of bedrock, was encountered at depths of 5 to 6 feet bgs on the western portion of the Subject Property, at a maximum depth of 60 feet bgs in the central portion of the Subject Property, and generally around 20 or 40 feet bgs on the eastern portion of the Subject Property. Copies of the field soil probe logs are presented in Appendix B. Ground-water was encountered approximately 5 feet bgs in MW-5, 18 feet bgs in MW-9, 13 feet bgs in MW-10, and 19 feet bgs in MW-12.

Based upon measured ground-water elevations, as shown in the Potentiometric Map as Figure 3, the ground-water at the Subject Property appears to generally flow to the east-southeast. Ground-water elevations were calculated from a land survey of permanent monitoring wells MW-5, MW-9, MW-10, and MW-12, performed on May 18, 2007, by BB&J (see Figure 4, for the Monitoring Well Diagrams, Table 4 for the Monitoring Well Construction and Development Data and Table 5 for the Monitoring Well and Ground-Water Elevation Data).

4.2 Field Screening Results

Based on the field screening results of soil samples, organic vapor readings ranged from 0.0 parts per million (ppm)[3] to 57.8 ppm. Field screening results are presented on the field probe logs contained in Appendix B.

4.3 Laboratory Analytical Results

It is BB&J's understanding that the Subject Property is being considered for commercial purposes. Therefore, BB&J utilized USEPA's on-line Johnson and Ettinger (J&E) (Johnson and Ettinger, 1991) calculator[4] to compare the results of the soil gas survey to potential vapor intrusion pathways into the proposed commercial buildings. In using the J&E calculator, BB&J utilized commercial exposure factors as the Subject Property is being developed for commercial use[5].

[3] Organic vapor readings are based on a calibration of the mini-RAE PID to 100 ppm isobutylene. All background readings were 0.0 ppm.
[4] http://www.epa.gov/athens/learn2model/part-two/onsite/jne_results_forward.htm
[5] The default J&E calculator uses default exposure factors for residential land use. When using the J&E calculator to determine the concentrations of soil gas entering the proposed community center, commercial/industrial land use exposure factors were used in the J&E calculator. The specific commercial/industrial default exposure factors used can be found in the USEPA Office of Emergency and Remedial Response *Risk Assessment Guidance For Superfund Volume I: Human Health Evaluation Manual* (RAGS Volume I), dated March 25, 1991, Summary of Standard Default Exposure Factors, Commercial/Industrial Land Use, Inhalation of Contaminants Exposure Pathway.

printed 09/18/2007 4:52PM by epa4561 p. 237/439

In addition, as the Subject Property is intended for commercial use, the soil and ground-water laboratory analytical data (Appendix C) was compared to the established criteria in the Illinois Environmental Protection Agency (IEPA) Tiered Approach to Corrective Action (TACO) industrial/commercial and construction worker Remediation Objectives (ROs) to evaluate the potential risk posed by detected constituents of concern (COCs).

A summary of the soil gas analytical results for samples collected from proposed commercial building locations were compared to J&E calculated Estimated Risk-based Soil Gas Standards for a commercial scenario is in Table 1. A summary of the soil analytical results is found in Table 2. A summary of the ground-water analytical results is found in Table 3.

4.3.1 Soil Gas

Soil gas samples (CDSG-1, CDSG-2, and CDSG-3) were analyzed for VOCs and methane. VOCs were detected in soil gas samples in the proposed locations of the commercial buildings by USEPA TO-15 analysis, including:

- Acetone
- Benzene
- 2-Butanone
- Carbon disulfide
- Chloromethane
- Cyclohexane
- 1,2-Dichloroethane
- cis-1,2-Dichloroethene
- Ethylbenzene
- n-Heptane
- n-Hexane
- 2-Hexanone
- 4-Methyl-2-pentanone
- Propene
- Tetrachloroethene (PCE)
- Toluene
- Trichloroethene (TCE)
- 1,2,4-Trimethylbenzene
- Vinyl chloride
- m,p-Xylene
- o-Xylene

In addition, methane was detected in each of the three soil gas samples using a modified version of USEPA Method 8015B. Specific locations and concentrations of each of these are presented in Figure 2, and Table 1. Further discussion of these results is provided in Section 5.0.

4.3.2 Soil Investigation

BB&J compared the laboratory analytical results for VOCs, SVOCs, PCBs, RCRA metals, herbicides, and organochlorine pesticides to the IEPA TACO ROs for industrial/commercial and construction worker exposure pathways [Table B of 35 IAC Section 742 Appendix B] Class I and Class II [Table D of 35 IAC

printed 09/18/2007 4:52PM by epa4561 p. 238/439

Section 742 Appendix B] ground-water migration. A summary of the soil laboratory analytical results is presented in Table 2.

PCBs and Herbicides

No PCBs or herbicides were detected at concentrations above applicable RLs in the soil samples collected.

VOCs

VOCs were detected above laboratory RLs in soil samples collected at various soil boring locations and depths at the Subject Property. However, of the VOCs identified above laboratory RLs, only benzene collected from SB-7 (6-7.5 feet bgs) [(1.12 milligram per kilogram (mg/kg)] and vinyl chloride collected from SB-3 (3.5-5 feet bgs) (0.0269 mg/kg) exceeded the Soil Component of the Ground-water Ingestion Exposure Route for Class I ground-water. In addition, the benzene collected from SB-7 (6-7.5 feet bgs) also exceeded the Soil Component of the Ground-water Ingestion Exposure Route for Class II ground-water. Additionally, only total xylene concentrations reported for the samples collected from SB-7 (6-7.5 feet bgs) and SB-7 (58.5-60 feet bgs) exceeded the TACO RO for the construction worker inhalation exposure route.

SVOCs

SVOCs were detected above laboratory RLs in 12 of the 18 soil samples collected at various soil boring locations and depths throughout the Subject Property. Of these 12 samples, five exhibited one or more SVOCs at concentration exceeding one or more applicable TACO ROs. Specifically, the samples reported to contain PAHs at concentration exceeding one or more applicable TACO ROs were:

- SB-3 (3.5-5);
- Vicinity SB-5 (0-1);
- SB-5 (3.5-5);
- SB-7 (7-7.5); and
- SB-7 (58.5-60).

Of the SVOCs identified above laboratory RLs, the following SVOCs and concentrations exceeded one or more applicable TACO ROs:

printed 09/18/2007 4:52PM by epa4561 p. 239/439

- Benzo(a)anthracene at a concentration of 34.6 mg/kg exceeded the exceeded the TACO RO for the industrial/commercial ingestion exposure route and the Soil Component of the Ground-water Ingestion Exposure Route for Class I and Class II ground-water;

- Benzo(a)pyrene at concentrations of 2.05 mg/kg, 2.39 mg/kg, 3.72 mg/kg, and 35 mg/kg exceeded the TACO RO for the industrial/commercial ingestion exposure route. Additionally, the 35 mg/kg concentration exceeded the TACO RO for the construction worker ingestion exposure route and the Soil Component of the Ground-water Ingestion Exposure Route for Class I ground-water;

- Benzo(b)fluoranthene at a concentration of 29.8 mg/kg exceeded the TACO RO for the industrial/commercial ingestion exposure route and the Soil Component of the Ground-water Ingestion Exposure Route for Class I and Class II ground-water;

- Carbazole at a concentration of 3.25 mg/kg and 20.8 mg/kg exceeded the Soil Component of the Ground-water Ingestion Exposure Route for Class I and Class II ground-water;

- Dibenzo(a,h)anthracene at a concentration of 7.73 mg/kg exceeded the TACO RO for the industrial/commercial ingestion exposure route and the Soil Component of the Ground-water Ingestion Exposure Route for Class I and Class II ground-water;

- Ideno(1,2,3-cd)pyrene at a concentration of 18.9 mg/kg exceeded the TACO RO for the industrial/commercial ingestion exposure route and the Soil Component of the Ground-water Ingestion Exposure Route for Class I ground-water; and,

- Naphthalene at a concentration of 4.71 mg/kg, 106 mg/kg and 403 mg/kg exceeded the TACO RO for the construction worker inhalation exposure route. Additionally, the 106 mg/kg and 403 mg/kg concentrations exceeded the Soil Component of the Ground-water Ingestion Exposure Route for Class I and Class II ground-water, and the 403 mg/kg concentration exceeded the TACO RO for the industrial/commercial inhalation exposure route.

RCRA Metals

Various RCRA metals were detected above laboratory RLs in soil samples collected at soil boring locations and depths throughout the Subject Property. However, of the RCRA metals identified above laboratory RLs, only arsenic exceeded the applicable TACO RO for the industrial/commercial ingestion exposure route in the sample collected from SB-3 from a depth of 13.5-15 feet bgs (31 mg/kg). In addition, this soil sample exceeded the Soil Component of the Ground-water Ingestion Exposure Route for Class I ground-water. Concentrations of mercury in soil samples collected from SB-3 from a depth of 3.5-5 feet bgs, SB-7 from a depth of 6-7.5 feet bgs (0.28 mg/kg), and SB-7 from a depth of 58.5-60 feet bgs (2.66 mg/kg) exceeded the applicable TACO RO for the construction worker inhalation exposure route, and the Soil Component of the Ground-water Ingestion Exposure Route for Class I and Class II ground-water. In addition, mercury in the soil sample collected from SB-5 (6-7.5 feet bgs) Soil Component of the Ground-water Ingestion Exposure Route for Class I ground-water, while a soil sample

printed 09/18/2007 4:52PM by epa4561 p. 240/439

collected from SB-12 from a depth of 13.5-15 feet bgs exceeded the Soil Component of the Ground-water Ingestion Exposure Route for Class I and Class II ground-water.

Organochlorine Pesticides

Several organochlorine pesticides were detected in several soil samples collected from SB-3 (1-2.5 feet bgs and SB-3 (3.5-5 feet bgs) above laboratory RLs, including 4,4'-DDD, 4,4'-DDE, and 4,4'-DDT. However, of the organochlorine pesticides identified above laboratory RLs, none were reported to be present above any applicable TACO ROs.

4.3.3 Ground Water

Ground-water samples were collected from permanent monitoring wells MW-5, MW-9, MW-10, and MW-12, and analyzed for VOCs, SVOCs, PCBs, RCRA metals, herbicides, and organochlorine pesticides. BB&J compared the laboratory analytical results to the IEPA TACO ROs for the Class I and Class II ground-water RO [Table E of 35 IAC 742, Appendix B]. A summary of the ground-water laboratory analytical results is presented in Table 3.

VOCs, PCBs, Herbicides, Organochlorine Pesticides[6]

Of the four ground-water samples analyzed for VOCs, PCBs, herbicides and organochlorine pesticides, none were detected above the laboratory RLs.

SVOCs

Of the four ground-water samples analyzed for SVOCs, only naphthalene from the ground-water sample collected at MW-12 was detected above laboratory RLs at a concentration of 0.011 mg/L. However, the concentration of naphthalene detected did not exceed the ground-water TACO RO for Class I ground-water ingestion.

RCRA Metals

Of the four ground-water samples analyzed for RCRA metals, one or more of the following metals were detected in ground-water samples collected at MW-5, MW-9, MW-10, and MW-12 at concentrations

printed 09/18/2007 4:52PM by epa4561 p. 241/439

above the applicable laboratory RLs: arsenic, barium, cadmium, chromium and lead. Of these, cadmium was detected in the ground-water sample from MW-5 at a concentration that exceeded the ground-water TACO RO for Class I ground-water and lead was detected in ground-water samples from MW-10 and MW-12 that exceeded the ground-water TACO RO for Class I and Class II ground water.

4.3.4 QA/QC

No VOCs, SVOCs, RCRA metals, herbicides, or organochlorine pesticides were reported in the equipment rinsate sample, and no VOCs were reported in the trip blank.

5.0 CONCLUSIONS AND RECOMMENDATIONS

The following sections present BB&J's conclusion and recommendations based on Phase II ESA findings at the Subject Property.

5.1 Soil Gas Survey

Vapor intrusion is the migration of volatile chemicals from the subsurface into overlying buildings. Volatile chemicals in buried wastes and/or impacted ground water can emit vapors that may migrate through subsurface soil and into air spaces of overlying buildings.

5.1.1 Johnson and Ettinger Calculations

BB&J utilized USEPA's on-line J&E calculator[7] to evaluate the vapor intrusion pathway into the proposed commercial buildings on the north portion of the Subject Property. This J&E calculator replicates the implementation that the USEPA Office of Solid Waste and Emergency Response (OSWER) Draft Guidance for Evaluating the Vapor Intrusion to Indoor Air Pathway from Groundwater and Soils (OSWER Vapor Intrusion Guidance) used in developing its Vapor Intrusion Guidance but includes a number of enhancements that are facilitated by web implementation. The J&E calculator has become increasingly popular with regulators and consultants over the last 10 years and several manuscripts have been published on its use. It should be noted that the State of Illinois does not provide any guidance or soil gas standards with regard to vapor intrusion.

---

[6] Due to a lack of water from MW-5, BB&J was unable to collect sufficient amounts of water for the laboratory to analyze SVOCs, PCBs, herbicides, or pesticides in the ground water at MW-5.
[7] http://www.epa.gov/athens/learn2model/part-two/onsite/jne_results_forward.htm

printed 09/18/2007 4:52PM by epa4561 p. 242/439

Briefly, the calculator is a one-dimensional analytical solution, which incorporates both advection and diffusion transport mechanisms to produce a unitless "attenuation factor." This attenuation factor is a measure of how soil and building properties limit the intrusion of organic vapors into overlying buildings and is defined as the concentration of the compound in indoor air divided by the concentration of the compound in soil gas or ground water.

Although the J&E calculator is inherently conservative, BB&J also made the following conservative assumptions in running the calculator:

- The highest soil vapor concentration of a given constituent identified site-wide was assumed to be the concentration present site-wide (even if lower concentrations were identified elsewhere) for the proposed commercial buildings vapor intrusion scenario on the north portion of the Subject Property (i.e., as presented in Table 2);
- OSWER Vapor Intrusion Guidance[8] allows a site risk manager to select media-specific target concentrations for screening at three cancer risk levels: 10^{-4}, 10^{-5}, and 10^{-6}; however, BB&J compared the modeled results to the most conservative of these (10^{-6});
- A less protective, best estimate and more protective target concentration were computed for the maximum soil gas concentration of a given constituent detected at the Subject Property. These computed "backward" target concentrations served as comparison to the detected soil gas concentrations at the Subject Property. The best estimate concentrations are based on the best guesses of depth to the contamination source and residual moisture content for the chosen soil type. The less protective and more protective range of values is computed based on user-specified uncertainty in both depth to the contamination source and unsaturated zone moisture content; and,
- The default J&E calculator uses default exposure factors for residential land use. When using the J&E calculator to determine the concentrations of soil gas entering the proposed building on the south portion of the Subject Property, commercial/industrial land use exposure factors were used in the J&E calculator. The specific commercial/industrial default exposure factors used can be found in the USEPA Office of Emergency and Remedial Response RAGS Volume I, dated March 25, 1991, Summary of Standard Default Exposure Factors, Commercial/Industrial Land Use, Inhalation of Contaminants Exposure Pathway.

Based on the results of the soil gas survey at the Subject Property, BB&J ran the J&E calculator for the constituents reported to be present in at least one soil gas sample (see Section 4.2).

5.1.2 Proposed Commercial Buildings

As indicated in Table 2, multiple VOCs, including constituents consistent with historic releases of gasoline, chlorinated solvents and oxygenated solvents, were detected in the soil gas samples collected in

printed 09/18/2007 4:52PM by epa4561 p. 243/439

the soil gas samples. Of the VOCs detected in gas samples CDSG-1, CDSG-2, and CDSG-3, only PCE and TCE detected in CDSG-2 was estimated to result in indoor concentrations greater than the modeled "more-protective" Target Concentrations for Estimated Risk-based Soil Vapor Standards[9].

Using risk assessment parameters typical of an IEPA or USEPA-type Comprehensive Environmental Response, Compensation, and Liability Act (CERCLA, i.e., Superfund) risk assessment, modeled cancer risks under the most protective scenario slightly exceeded the 10^{-6} bench mark used for risk assessment purposes. Plainly stated, the modeled results indicate a slightly greater than approximately one in a million chance per employee developing cancer directly attributable to vapor intrusion into the buildings due to on-site sources. This risk is driven primarily by the presence of TCE and PCE, which are known or suspected carcinogens.

In addition to the VOCs detected at the proposed building on the south portion of the Subject Property, as indicated in Table 2 methane was detected in each soil gas sample from the three soil probe locations. However, none of the three soil gas samples contained concentrations within the explosive range for methane.

5.1.3 Soil Gas Conclusions

As indicated above, multiple VOCs, including constituents consistent with historic releases of gasoline, chlorinated solvents and oxygenated solvents, were detected in the soil gas samples collected from the north portion of the Subject Property. Based on modeled results using default exposure factors for commercial scenarios, a cancer risk exceeded the benchmark 10^{-6} (i.e., one in a million) cancer risk in the commercial scenario. This elevated risk is driven primarily by the presence of PCE and TCE.

In addition to the chronic hazard potentially present at the Subject Property, concentrations of methane were reported to be present in all three soil gas samples; however, none of the samples collected contained concentrations of methane within the explosive range for methane.

Such concentrations suggest that these constituents have the potential to accumulate within the proposed building on the south portion of the Subject Property at concentrations that would pose a human health risk. However, it should be noted that (1) the Johnson-Ettinger model is inherently conservative and (2)

[9] http://www.epa.gov/correctiveaction/eis/vapor/complete.pdf

printed 09/18/2007 4:52PM by epa4561 p. 244/439

new soil is continually being placed at the Subject Property and, assuming the soil is devoid of VOC impacts, could serve as a barrier to VOC entry into the buildings.

Possible remedies to limit the exposure of this constituent to the proposed building on the south portion of the Subject Property include installation of a subsurface vapor barrier beneath the proposed buildings at the Subject Property combined with engineered venting systems. Both the subsurface vapor barrier and the venting subsurface would require maintenance and upkeep for the lifetime of the buildings. In addition, the venting system may require air permits from IEPA to discharge VOCs into the ambient air.

Although methane was not detected within its explosive range in the three soil gas samples, the presence of methane should be noted and explored further. To ensure that methane would not accumulate beneath or within the proposed building on the south portion of the Subject Property, proper venting of this structure would potentially be required to reduce the potential for explosions to occur. The presence of methane in the gas samples may indicate that material inconsistent with IEPA's definition of clean construction and demolition debris may be present beneath the surface of the Subject Property. As the material decomposes, shifting of the subsurface may occur, causing structural damage to overlying structures.

The specific sources of the VOCs and methane could not be determined by the scope of this investigation. However, BB&J understands that a gasoline station was formerly located on the northeast portion of the Subject Property near the intersection of Ogden Avenue and Lawndale Avenue. A leaking underground storage tank (LUST) incident was reported for the gasoline station and a No Further Remediation (NFR) letter was issued for the LUST incident. Despite the issuance of the NFR, the gasoline station may still be the source of the gasoline-related compounds, partly or wholly. Sources of the chlorinated solvents and non-chlorinated solvents have not been identified.

The modeling conducted by BB&J should be regarded as preliminary and should be used for guidance purposes only. Factors that may impact the accuracy of the model include, but are not limited to:

- The limited number of samples collected at the Subject Property relative to the overall size;
- Effects of proposed future grading activities;

[9] These I&E calculations used commercial/industrial default exposure factors due to the intended commercial use of Subject Property.

printed 09/18/2007 4:52PM by epa4561 p. 245/439

- Estimated building air exchange rates used in the model relative to actual building air exchange rates;
- Characteristics of the soil proposed to be placed on top of the existing fill material during proposed grading activities; and,
- The degree to which the concrete slabs crack in the future due to possible subsidence resultant from the continued decay of materials in the subsurface or other unknown subsurface conditions.

5.2 Subsurface Soil Investigation

During the Phase II ESA, BB&J collected 18 soil samples from 11 soil probe locations throughout the north portion of the Subject Property. The samples were submitted to First Environmental and analyzed for VOCs, SVOCs, RCRA metals, herbicides, organochlorine pesticides and pH.

No PCBs or herbicides were detected at concentrations above applicable RLs in the soil samples collected. However, multiple SVOCs and metals were detected above laboratory RLs in soil samples collected at various soil boring locations and depths throughout the Subject Property and at concentrations exceeding one or more applicable TACO ROs, including the ingestion exposure route and migration to ground-water ingestion exposure routes.

No discernable pattern appeared to exist with respect to the locations or depths where the exceedances were encountered; however, given that backfill material present at the Subject Property has been contributed from a variety of off-site sources, such heterogeneity would be expected. Given the heterogeneity of the impacts, delineating source areas followed by treatment or source removal would not likely be a cost-efficient proposition.

Consequently, BB&J recommends eliminating the ingestion exposure pathway by installing an engineered barrier of some kind. Given the future intended use as a commercial development, (1) covering the entirety of the Subject Property with either a building slab or asphalt parking lot, (2) incorporating an institutional control (i.e., deed restriction) at each of the commercial parcels to restrict future use to commercial, (3) incorporating the engineered barriers into the institutional control, and (4) providing for operation and maintenance of the barriers, all of which would be in perpetuity, these actions would result in eliminating this pathway. With respect to the migration to ground-water concerns, it should be noted that the Village of Lyons currently has an ordinance restricting the use of ground water in place, thereby effectively eliminating this pathway. Specifically, Ordinance 5-18-99-3 was accepted on

printed 09/18/2007 4:52PM by epa4561 p. 246/439

May 18, 1999 by the president and board of trustees of the Village of Lyons and states that "the use or attempt to use as a potable water supply groundwater from within the corporate limits of the Village of Lyons by the installation of drilling of wells or by any other method is hereby prohibited, including withdrawal by the Village of Lyons." A copy of this use restriction can be found in Appendix D.

5.2.1 Ground Water

During the Phase II ESA, BB&J collected ground-water samples from four permanent monitoring wells. The ground-water samples were submitted to First Environmental and analyzed for VOCs, SVOCs, RCRA metals, herbicides, organochlorine pesticides and pH.

Of the four ground-water samples analyzed for VOCs, PCBs, herbicides and organochlorine pesticides, none were detected above the laboratory RLs.

Of the four ground-water samples analyzed for SVOCs, only naphthalene from the ground-water sample collected at MW-12 was detected above laboratory RLs at a concentration of 0.011 mg/L. However, the concentration of naphthalene detected did not exceed the ground-water TACO RO for Class I ground-water ingestion. The detected concentrations of naphthalene do not suggest the presence of free product.

Of the four ground-water samples analyzed for RCRA metals, one or more of the following metals were detected in ground-water samples collected at MW-5, MW-9, MW-10, and MW-12 at concentrations above the applicable laboratory RLs: arsenic, barium, cadmium, chromium and lead. Of these, cadmium was detected in the ground-water sample from MW-5 at a concentration that exceeded the ground-water TACO RO for Class I ground-water and lead was detected in ground-water samples from MW-10 and MW-12 that exceeded the ground-water TACO RO for Class I and Class II ground-water.

Although concentrations of cadmium and lead exceeded TACO ROs, the Village of Lyons already has in place an ordinance. Ordinance 5-18-99-3 was accepted on May 18, 1999 by the president and board of trustees of the Village of Lyons and states that "the use or attempt to use as a potable water supply groundwater from within the corporate limits of the Village of Lyons by the installation of drilling of wells or by any other method is hereby prohibited, including withdrawal by the Village of Lyons." A copy of this use restriction can be found in Appendix D. Due to the fact that a restriction on the ground-water for the Subject Property currently exists, BB&J does not recommend further investigation with respect to ground-water.

printed 09/18/2007 4:52PM by epa4561 p. 2477439

TABLES

Table 1: Summary of Soil Gas Laboratory Analytical Results

Soil - Gas ID Soil Sample Depth[3]	CDSG - 1 6.0 (ug/m³)	CDSG - 2 6.0 (ug/m³)	CDSG - 3 6.0 (ug/m³)	Maximum Concentration Detected at Subject Property (ug/m³)	BACKWARD Results of Johnson & Ettinger Vapor Intrusion Model - Estimated Risk-based Soil Gas Standards[1] Less Protective Target Concentrations (ug/m³)	Best Estimate Target Concentrations (ug/m³)	More Protective Target Concentrations (ug/m³)	Explosive Range Lower Explosive Limit (LEL)[2] (%)	Upper Explosive Limit (UEL)[2] (%)
USEPA Method TO-15 (VOCs)									
Acetone	120	620	250	620	819,400	291,900	163,100	NA	NA
Benzene	15	330	58	330	18,770	3,891	1,921	NA	NA
2-Butanone (MEK)	27	190	58	190	3,444,000	1,121,000	586,400	NA	NA
Carbon disulfide	5.8	260	ND	260	2,842,000	664,200	349,000	NA	NA
Chloromethane (Methyl Chloride)	ND	34	ND	34	6,655.0	2,338.0	1,297.0	NA	NA
Cyclohexane	ND	89	270	270	NMD	NMD	NMD	NA	NA
1,1-Dichloroethane	ND	ND	6.1	6.1	2,875,000	608,500	289,600	NA	NA
cis-1,2-Dichloroethene (cis-1,2-Dichloroethylene)	ND	6.4	30	30	161,300	42,930	20,370	NA	NA
Ethylbenzene	5.8	13	8.5	13	13,000	3,867	1,468	NA	NA
n-Heptane (Heptane)	51	56	74	88	NMD	NMD	NMD	NA	NA
n-Hexane (Hexane)	25	180	240	240	4,212,000	1,272,000	603,500	NA	NA
2-Hexanone	ND	ND	ND	ND	NMD	NMD	NMD	NA	NA
4-Methyl-2-pentanone (Methyl isobutylketone)	ND	5.5	18	18	354,500	95,660	46,120	NA	NA
Propane	17	1,800	1,800	1,800	NMD	NMD	NMD	NA	NA
Tetrachloroethene (Tetrachloroethylene)	18	1,500	12	1,500	4,951	1,168	549	NA	NA
Toluene	16	78	49	78	1,777,000	430,500	215,200	NA	NA
Trichloroethene (Trichloroethylene)	ND	29	11	29	122.9	29.4	14.82	NA	NA
1,2,4-Trimethylbenzene	ND	12	ND	12	37,080	8,422	3,825	NA	NA
Vinyl chloride	ND	ND	110	110	1,160	299	157.4	NA	NA
m,p-Xylene	15	28	18	28	NMD	NMD	NMD	NA	NA
o-Xylene	5.6	11	12	12	NA	7,839,000	3,765,000	NA	NA
USEPA Method 8015B	(%)	(%)	(%)	(%)					
Methane	0.0011	0.11	1.8	1.8	NMD	NMD	NMD	5.0	15.0

Notes:

[1] Results based upon the calculation in the USEPA's Screening Level Implementation of the Johnson and Ettinger Vapor Intrusion Model and the known maximum concentration detected at the proposed Community Center (http://www.epa.gov/ethweb/osw2model/part-iv/vrsoilsf.inf#_Rs_forward.htm). As the proposed commercial development will be used for commercial purposes, the standard default exposure parameters in the Johnson & Ettinger Vapor Intrusion Model were changed to reflect this use. The list of parameters that were changed can be found in the USEPA Risk Assessment Guidance for Superfund Volume I; Human Health Evaluation Manual (RAGS Volume I), dated March 25, 1991, "Summary of Standard Default Exposure Factors", Commercial/Industrial Use, Inhalation of Contaminants Exposure Pathway.

[2] According to the National Fire Protection Association, the LEL for methane is 5.0% , while the UEL is 15%.

[3] Depths indicated in feet below ground surface (bgs).

Bold Indicates an exceedance of a BACKWARD Results of Johnson & Ettinger Vapor Intrusion Model - Estimated Risk-based Soil Gas Standards Target Concentration.

Acronyms

NA: Not applicable
ND: Not detected
NMD: No model data for constituent
ug/m³: micrograms per cubic meter
USEPA: United States Environmental Protection Agency
VOCs: Volatile organic compounds

Prepared By: [illegible]
Checked By: [illegible]

printed 09/18/2007 4:52PM by epa4561 p. 248/439

printed 09/18/2007 4:52PM by epa4561 p. 249/439

Table 2: Summary of Soil Laboratory Analytical Results

printed 09/18/2007 4:52PM by epa4561 p. 250/439

Table 3: Summary of Ground-Water Laboratory Analytical Results

Ground-Water ID	MW-5 (mg/L)	MW-9 (mg/L)	MW-10 (mg/L)	MW-12 (mg/L)	Ground-Water ROs for the Ground-Water Component of the Ground-Water Ingestion Route[1] Class I (mg/L)	Class II (mg/L)
pH @ 25°C	7.50	7.56	7.48	7.52	NA	NA
SVOCs (PAHs)						
Naphthalene	INS	ND	ND	0.011	0.14	0.22
VOCs	ND	ND	ND	ND	NA	NA
PCBs	INS	ND	ND	ND	NA	NA
RCRA Metals						
Arsenic	0.01	ND	ND	ND	0.05	0.2
Barium	0.239	0.101	0.097	0.095	2.0	2.0
Cadmium	0.005	ND	ND	ND	0.005	0.05
Chromium	0.006	0.002	0.005	0.010	0.1	1.0
Lead	ND	ND	0.009	0.024	0.0075	0.1
Herbicides	INS	ND	ND	ND	NA	NA
Pesticides	INS	ND	ND	ND	NA	NA

Notes:
[1] Title 35 Illinois Administrative Code (IAC) 742, Appendix B, Table E

Acronyms:
INS - Insufficient water available for analysis
mg/L - milligrams per liter
NA - Not applicable
ND - Not detected above laboratory reporting limits
NS - Not sampled
PAH - Polynuclear aromatic hydrocarbons
RCRA - Resource Conservation and Recovery Act
RO - Remediation Objectives
SVOC - Semivolatile organic compounds
VOC - Volatile organic compounds

Prepared by: KAB / 6.4.2007
Checked by: AWB / 6.11.2007

Table 4: Monitoring Well Construction and Development Data

Monitoring Well Identification	Date Installed	Screened Interval (feet BGS)	Soil Horizon(s) Screened[1]	Materials of Construction	Date Developed	Water Column Length[2] (feet)	Well Casing Volume[3] (gallons)	Water Development Volume[4] (gallons)	Actual Development Volume[5] (gallons)
MW-5	5/17/2007	2.15 – 5.65	Clay Fill	SCH 40 PVC	5/18/2007	3.55	0.579	2.90	1.00
MW-9	5/17/2007	8.79–18.79	Clay Fill	SCH 40 PVC	5/18/2007	2.39	0.390	1.95	0.75
MW-10	5/17/2007	5.36 – 15.36	Clay Fill	SCH 40 PVC	5/18/2007	5.37	0.875	4.38	2.00
MW-12	5/17/2007	9.32 – 19.32	Clay Fill	SCH 40 PVC	5/18/2007	3.91	0.673	3.19	3.50

Notes:

1: Classification(s) of soil surrounding the screened portion of the monitoring well.
2: The monitoring wells were gauged by BB&J personnel on May 18, 2007 using an electronic interface probe.
3: Well casing volume, in gallons, is equal to the water column length in feet x 7.48 x π x R^2, where R = water column radius (1 inch) and π = 3.14159.
4: Well development volume is equal to the calculated well casing volume x 5.
5: Approximate volume of ground water removed from monitoring well during development. Actual Development Volume may be less than the Water Development Volume if the well ran dry during purging.

Acronyms:

BGS: Below Grade Surface
MW: Monitoring Well
SCH: Schedule
PVC: Polyvinyl chloride

Prepared By/Date: KAB / 6.11.2007
Checked By/Date: AWB / 6.11.2007

printed 09/18/2007 4:52PM by epa4561 p. 251/439

Table 5: Monitoring Well and Ground-Water Elevation Data[1]

Monitoring Well Identification[2]	Date Gauged	Material Of Well Construction	Well Depth (feet TOC)	Screened Interval (feet BGS)	Depth To Ground Water (feet TOC)	Depth To Ground Water (feet BGS)	Ground Surface Elevation (feet)	Top Of Casing Elevation (feet)	Ground-Water Elevation (feet)
MW-5	5/18/2007	SCH 40 PVC	8.74	2.15 – 5.65	5.19	2.1	104.76	104.64	99.45
MW-9	5/18/2007	SCH 40 PVC	20.41	8.81–18.81	18.02	16.4	106.44	108.06	90.04
MW-10	5/18/2007	SCH 40 PVC	18.35	5.36 – 15.36	12.98	9.99	101.53	104.52	91.54
MW-12	5/18/2007	SCH 40 PVC	22.65	9.32 – 19.32	18.74	15.41	105.58	108.91	90.17

Notes:

[1]: Reference point elevation is relative to assumed datum of telephone pole on the southwest side of the garage.
[2]: Monitoring wells are 2 inches in diameter.

Acronyms:

TOC: Top of Casing
BGS: Below Grade Surface
MW: Monitoring Well
SCH: Schedule
PVC: polyvinyl chloride
NA: Not applicable

Prepared By/Date: KAB / 6.11.2007
Checked By/Date: AWB / 6.11.2007

printed 09/18/2007 4:52PM by epa4561 p. 252/439

printed 09/18/2007 4:52PM by epa4561 p. 253/439

FIGURES

Source: U.S. Geological Survey Quadrangle Berwyn, Illinois. 7.5 Minute Series (Topographic), Dated 1993.
T 38N
R 12E
S 36

N

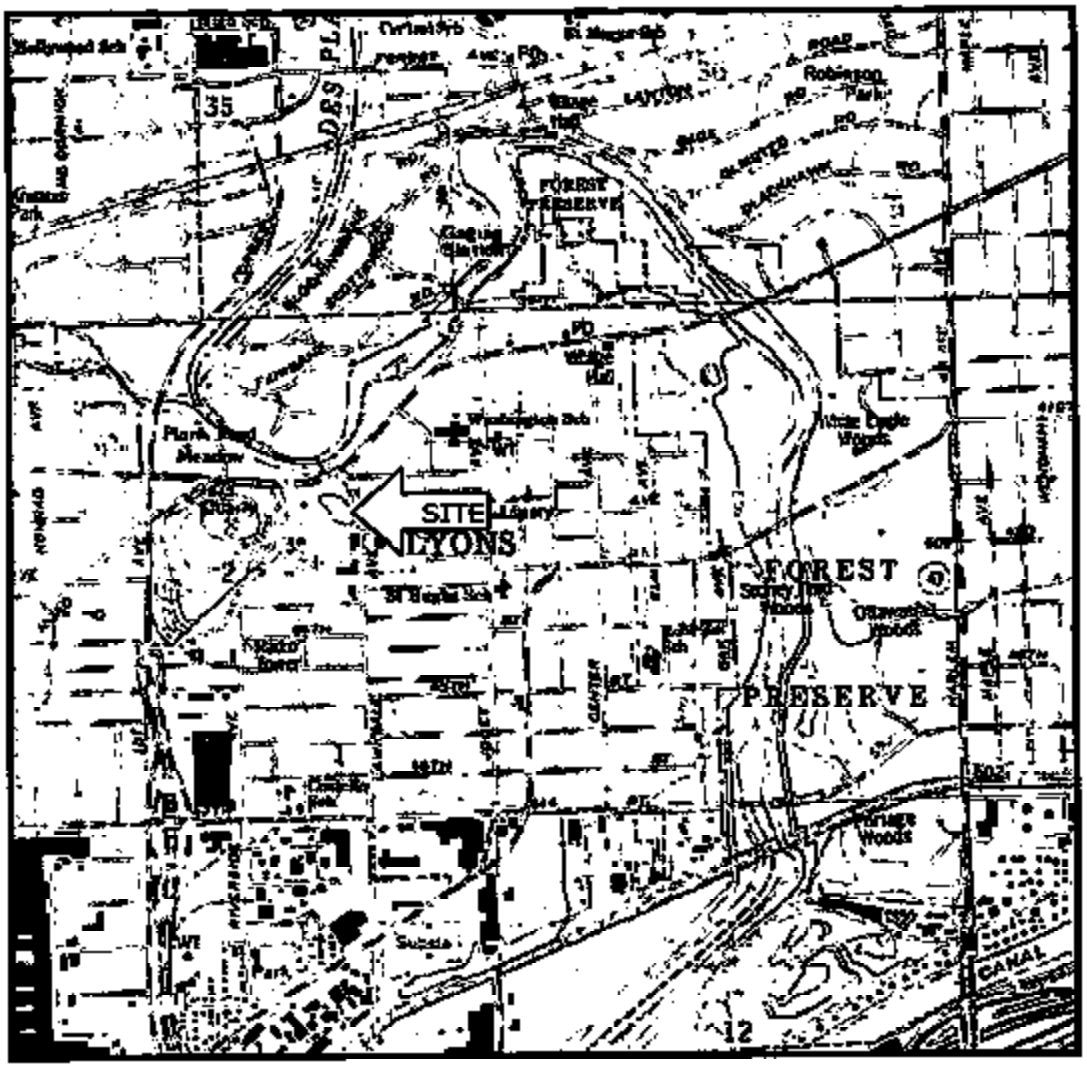

0 1/4 1/2 1 MILE

0 1000 3000 5000 FT

Quadrangle Location

Prepared by/Date: KAB / 6.7.2007
Checked by/Date: KLM / 6.7.2007

Village of Lyons, IL Commercial Development Southwest Corner of Ogden & Lawndale Avenues Lyons, Illinois	Bradburne, Briller & Johnson, LLC www.bbjgroup.com	Site Location Map Project No. 0253801 Figure 1

Site reconnaissance performed by Ms. Karen Beaman and Mr. Kevin McCartney of BB&J on May 11, 2007.
Reference: Alternate Site Plan #2 by Mackie Consultants, LLC, 2007.

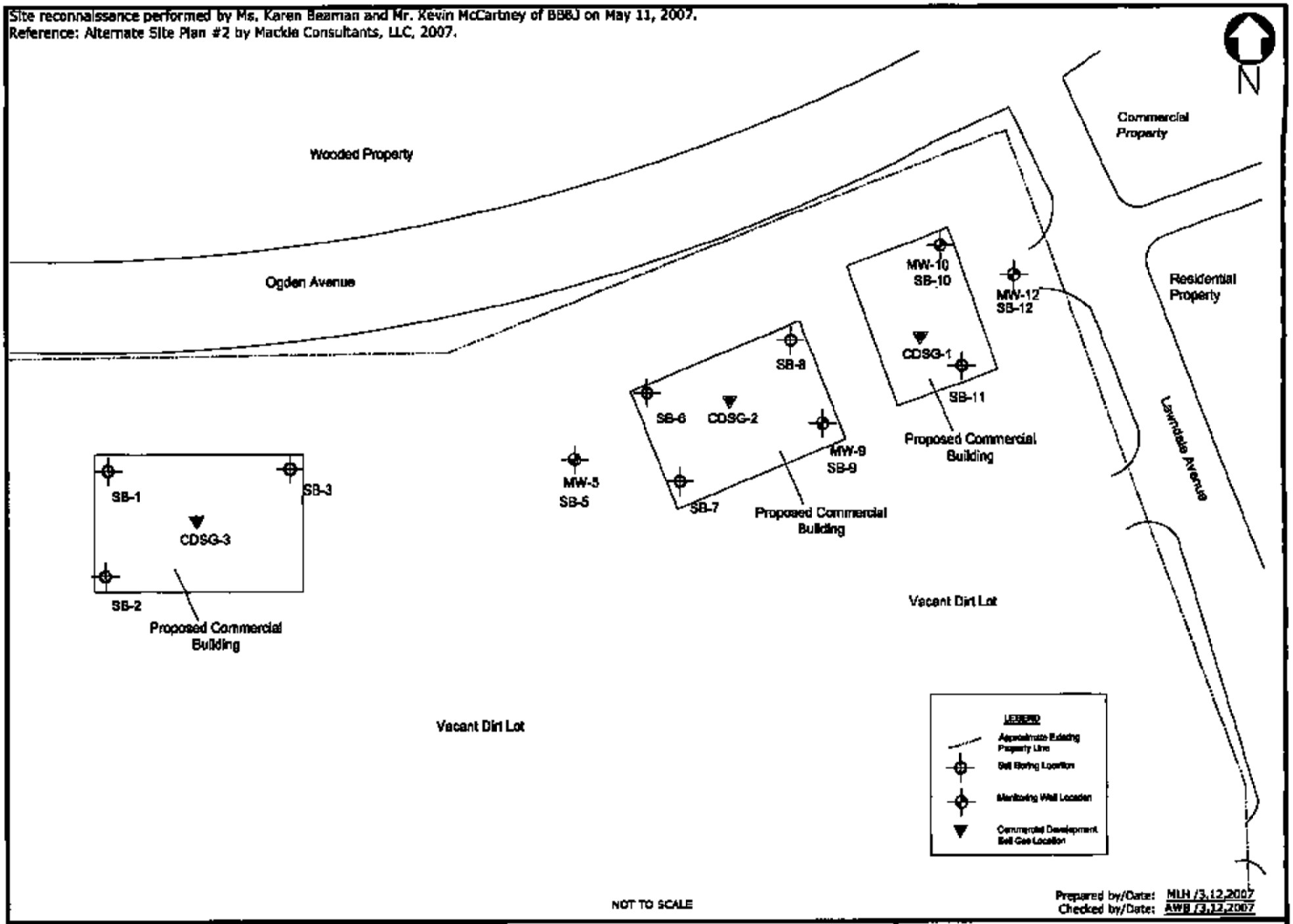

Village of Lyons Commercial Development Southwest Corner of Ogden & Lawndale Avenues Lyons, Illinois	BRADBURNE, BRILLER & JOHNSON, LLC www.bbjgroup.com	Soil Boring, Monitoring Well, and Soil Gas Locations Project No. 0253801 Figure 2

printed 09/18/2007 4:52PM by epa4561 p. 255/439

Site reconnaissance performed by Ms. Karen Beaman and Mr. Michael Couvreur of BB&J on May 18, 2007.
Reference: Alternate Site Plan #2 by Mackie Consultants, LLC, 2007. Ground-water potentiometric map created using Surfer version 6.0.

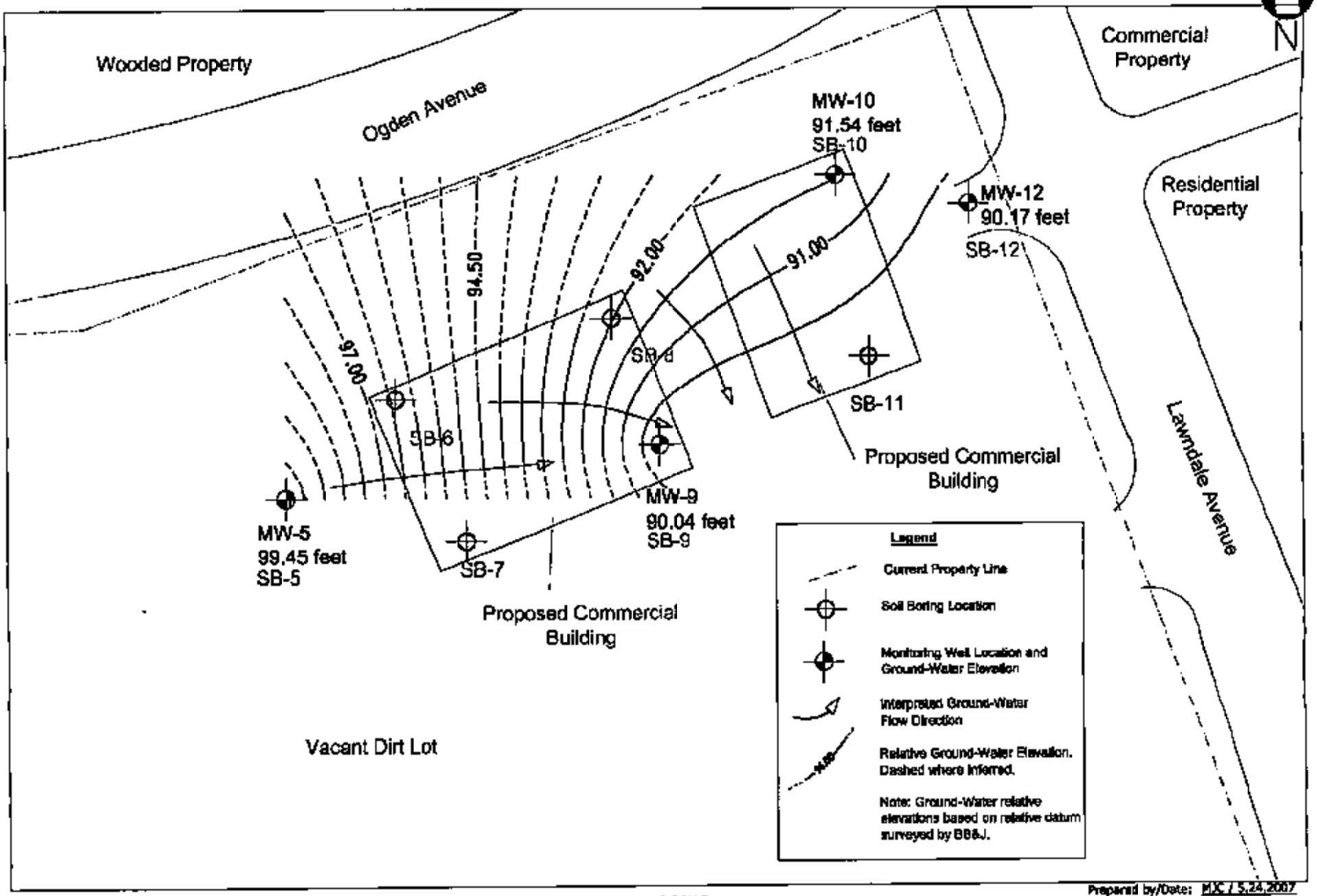

NOT TO SCALE

Prepared by/Date: MJC / 5.24.2007
Checked by/Date: AWB / 5.11.2007

Village of Lyons
Commercial Development
Southwest Corner of Ogden & Lawndale Avenues
Lyons, Illinois

BRADBURNE, BRILLER & JOHNSON, LLC
www.bbjgroup.com

Ground-Water Potentiometric Map

Project No. 0253801

Figure 3

printed 09/18/2007 4:52PM by epa4561 p. 256/439

TYPE II MONITORING WELL INSTALLATION DIAGRAM - Stick-Up TYPE

WELL IDENTIFICATION	MW- 5
PROJECT NAME	Lyons - Commercial Development
PROJECT NUMBER	0253801
DATE INSTALLED	5/17/2007

GROUND SURFACE ELEVATION:	101.55
TOP OF RISER ELEVATION (FT)*:	104.64
ELEVATION REFERENCE:	NGVD X SITE DATUM
DRILLING CONTRACTOR:	HH Holmes
DRILLERS NAME:	Mike & Nick
DRILLING METHODS:	Hollow Stem Auger
Diameter Outer:	8.75 in. Inner: 4.25 in.
Depth:	0 to 5 ft.
LOGGED BY:	Karen Beaumo

WELL MATERIALS (size or amount, type, manufacturer):

Riser:	PVC	INSIDE DIA:	2 in.
Screen:	PVC	INSIDE DIA:	2 in.
		SLOT SIZE:	0.10 in.
Cement:	No Cement		
Sand:	#5 Silica Filter Sand		
Bentonite:	Bentonite Chips		
COVER:	Steel Stickup Cover		
CHECKED BY:	Kevin McCartney		

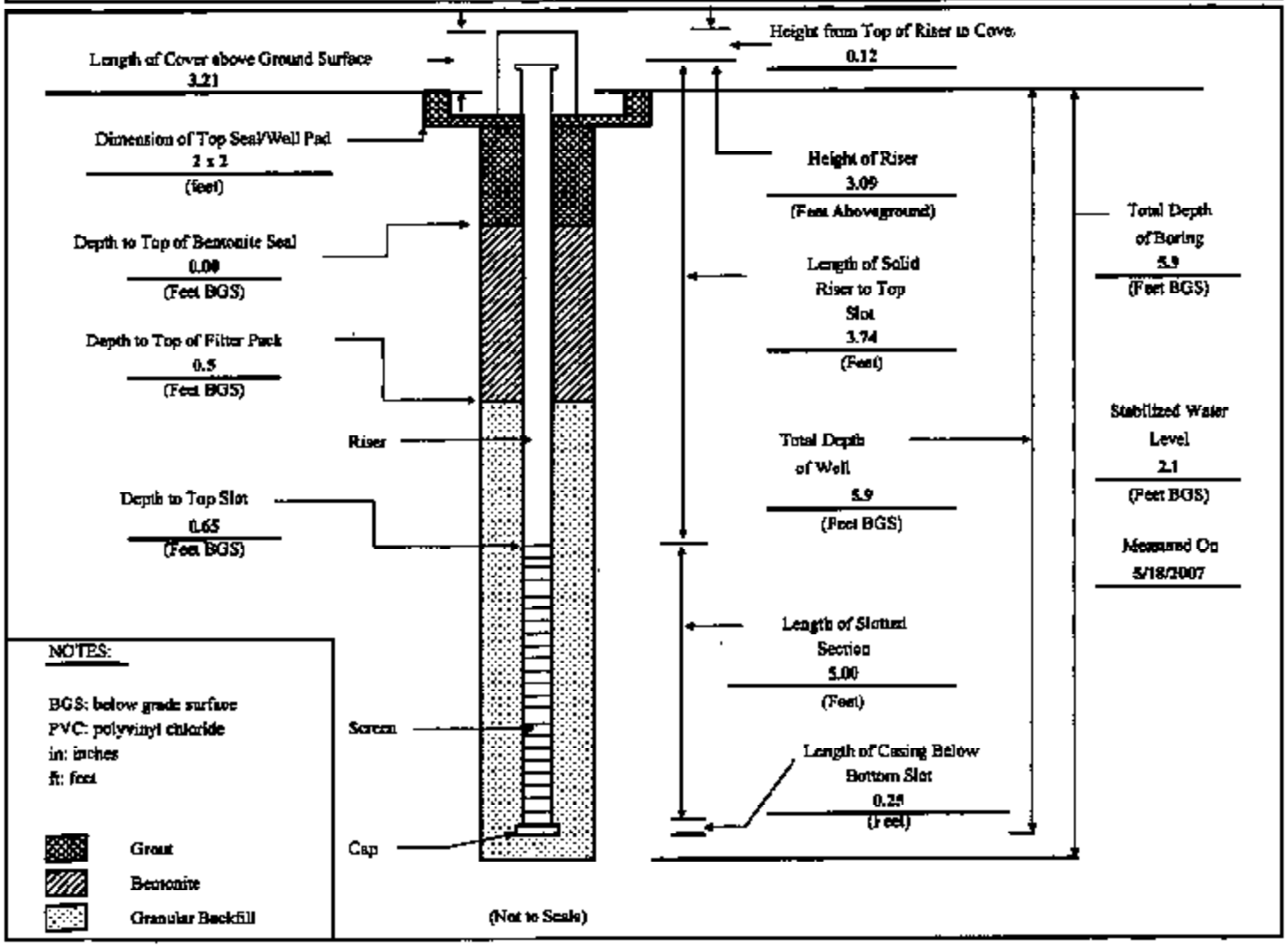

NOTES:

BGS: below grade surface
PVC: polyvinyl chloride
in: inches
ft: feet

GENERAL COMMENTS:

TYPE II MONITORING WELL INSTALLATION DIAGRAM - Stick-Up TYPE

WELL IDENTIFICATION	**MW- 9**
PROJECT NAME	Lyons - Commercial Development
PROJECT NUMBER	0253001
DATE INSTALLED	5/17/2007

GROUND SURFACE ELEVATION:	106.44	WELL MATERIALS (size or amount, type, manufacturer):	
TOP OF RISER ELEVATION (FT)*:	108.06	Riser:	PVC INSIDE DIA: 2 in
ELEVATION REFERENCE:	NGVD X SITE DATUM	Screen:	PVC INSIDE DIA: 2 in
DRILLING CONTRACTOR:	HH Holmes		SLOT SIZE: 0.10 in
DRILLERS NAME:	Mike & Nick	Cement:	No Cement
DRILLING METHODS:	Hollow Stem Auger	Sand:	#5 Silica Filter Sand
Diameter Outer: 8.75 in.	Inner: 4.25 in.	Bentonite:	Bentonite Chips
Depth: 0 to 20 ft.		COVER:	Steel Stickup Cover
LOGGED BY:	Karen Beaman	CHECKED BY:	Kevin McCartney

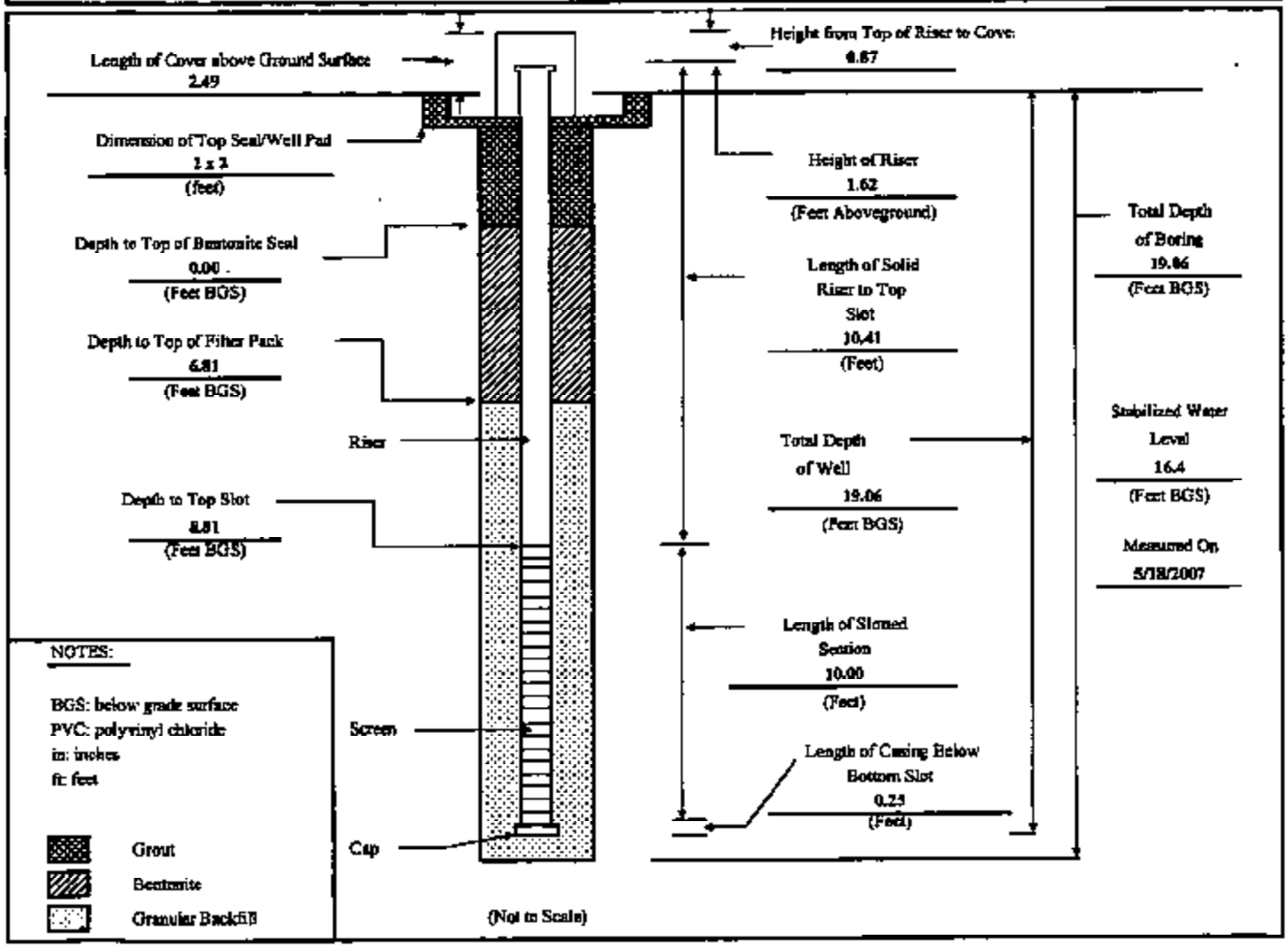

NOTES:

BGS: below grade surface
PVC: polyvinyl chloride
in: inches
ft: feet

GENERAL COMMENTS:

TYPE II MONITORING WELL INSTALLATION DIAGRAM - Stick-Up TYPE

WELL IDENTIFICATION: **MW- 10**	PROJECT NAME: Lyons - Commercial Development
	PROJECT NUMBER: 0253801
	DATE INSTALLED: 5/17/2007

GROUND SURFACE ELEVATION: 101.53
TOP OF RISER ELEVATION (FT)*: 104.52
ELEVATION REFERENCE: ___ NGVD X SITE DATUM
DRILLING CONTRACTOR: HH Bolues
DRILLERS NAME: Mike & Nick
DRILLING METHODS: Hollow Stem Auger
Diameter Outer: 8.75 in. Inner: 4.25 in.
Depth: 0 to 20 ft.
LOGGED BY: Karen Beaman

WELL MATERIALS (size or amount, type, manufacturer):
Riser: PVC INSIDE DIA: 2 in.
Screen: PVC INSIDE DIA: 2 in.
SLOT SIZE: 0.10 in.
Cement: No Cement
Sand: #5 Silica Filter Sand
Bentonite: Bentonite Chips
COVER: Steel Stickup Cover
CHECKED BY: Kevin McCartney

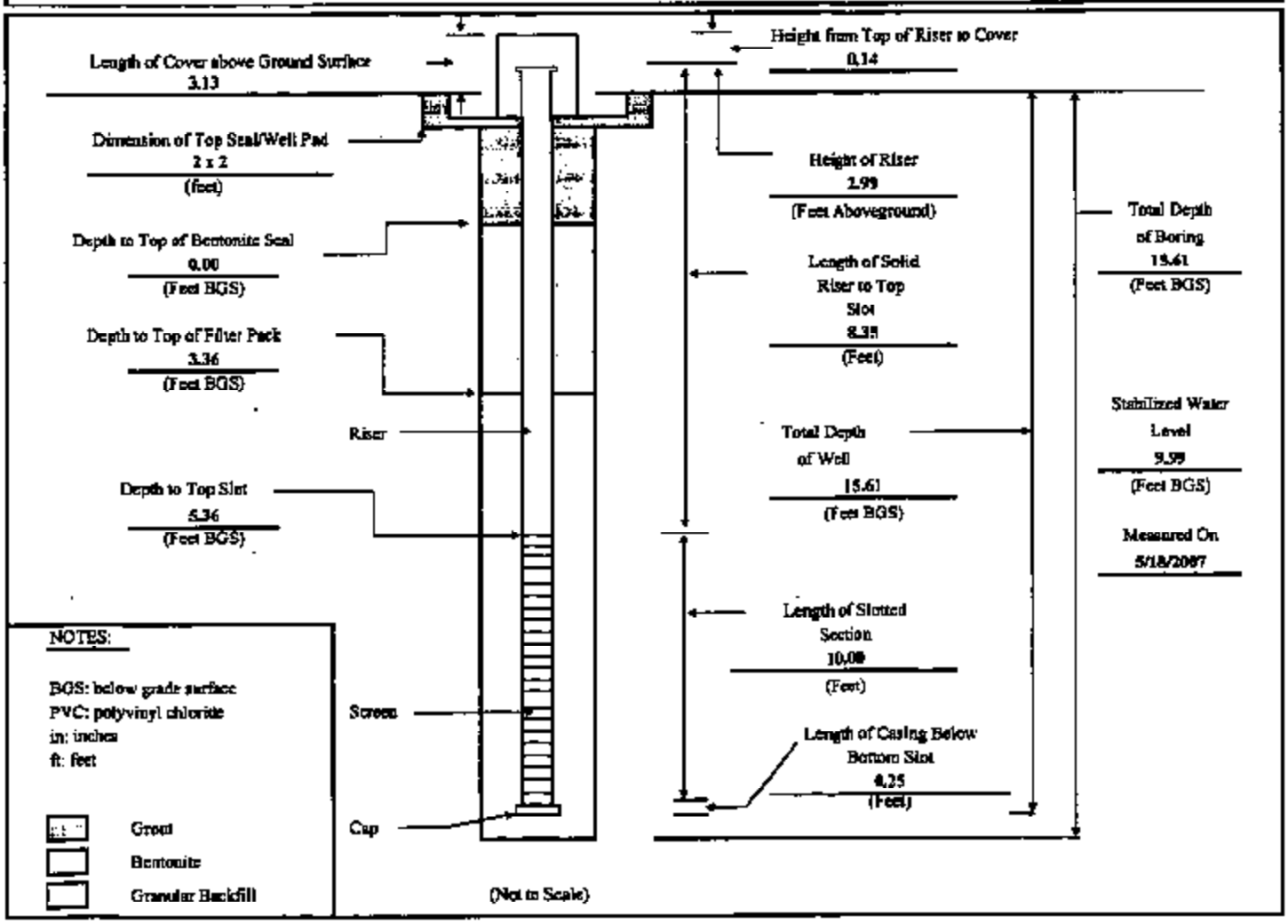

NOTES:

BGS: below grade surface
PVC: polyvinyl chloride
in: inches
ft: feet

GENERAL COMMENTS:

TYPE II MONITORING WELL INSTALLATION DIAGRAM - Stick-Up TYPE

WELL IDENTIFICATION	**MW- 12**
PROJECT NAME	Lyons - Commercial Development
PROJECT NUMBER	0253801
DATE INSTALLED	5/17/2007

GROUND SURFACE ELEVATION: 104.76
TOP OF RISER ELEVATION (FT)*: 104.64
ELEVATION REFERENCE: ___ NGVD X SITE DATUM
DRILLING CONTRACTOR: HB Holmes
DRILLERS NAME: Mike & Nick
DRILLING METHODS: Hollow Stem Auger
Diameter Outer: 8.75 in. Inner: 4.25 in.
Depth: 0 to 20 ft.
LOGGED BY: Karen Beaman

WELL MATERIALS (size or amount, type, manufacturer):
Riser: PVC INSIDE DIA: 2 in.
Screen: PVC INSIDE DIA: 2 in.
SLOT SIZE: 0.10 in.
Cement: No Cement
Sand: #3 Silica Filter Sand
Bentonite: Bentonite Chips
COVER: Steel Stickup Cover
CHECKED BY: Kevin McCartney

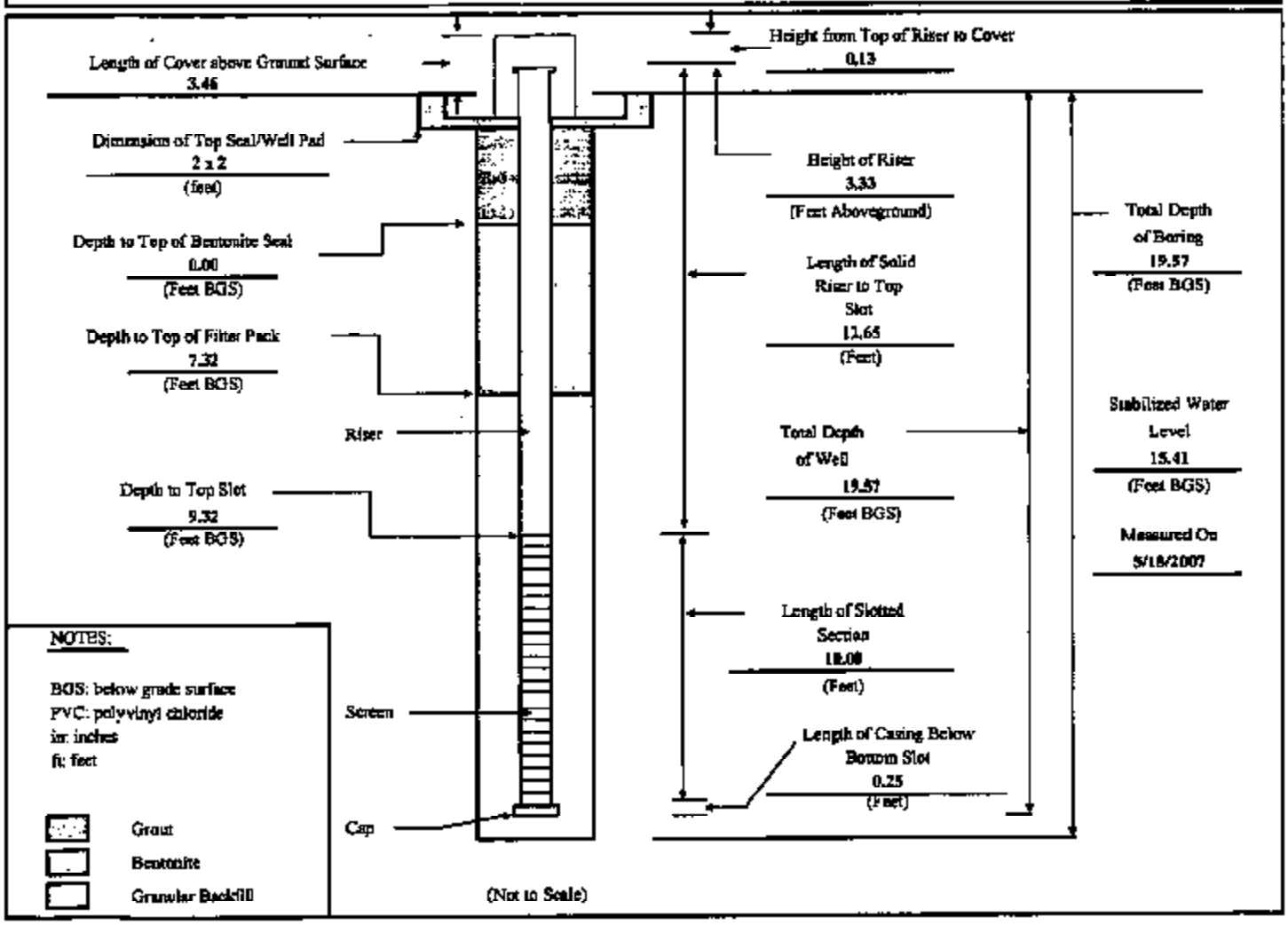

NOTES:

BGS: below grade surface
PVC: polyvinyl chloride
in: inches
ft: feet

GENERAL COMMENTS:

printed 09/18/2007 4:52PM by epa4561 p. 261/439

APPENDIX A

FIELD PROCEDURES

printed 09/18/2007 4:52PM by epa4561 p. 262/439

APPENDIX A
FIELD PROCEDURES

The media targeted by this subsurface assessment and the sampling methods and protocol are described in this appendix.

A.1 Sampling Equipment

The following sampling equipment was used during field activities at the Subject Property:

- Geoprobe® direct-push technology (DPT) sampling equipment
- Rig utilizing a 6.25" auger, split spoon samplers, and capable of air rotary drilling;
- A photo-ionization detector (PID), equipped with an 10.6 electron volt (eV) lamp for field-screening soil samples and for health and safety air monitoring;
- Clean, plastic "Ziplock" bags for use in describing soil samples and for field screening purposes;
- Laboratory-supplied containers for the collection of soil and ground-water samples targeted for laboratory analyses;
- Electronic interface probe for determining depth to ground water and depth to bottom of monitoring well;
- Phosphate-free soap, potable water and distilled water for equipment cleaning;
- Laboratory-supplied deionized water (purge water) for the preparation of quality assurance/quality control (QA/QC) samples;
- Disposable latex and/or nitrile gloves;
- One 55-gallon drum used to collect purge water from permanent monitoring wells;
- Sample shipping containers (e.g., coolers); and,
- Sealed trip blanks, prepared by the laboratory using deionized water and shipped with the sample coolers.

A.2 Soil probe/Soil Probe Advancement and Soil Sampling Procedures

This section describes the various types of soil probe and/or soil probe techniques that were used, as well as specific soil sample collection procedures.

A.2.1 DPT Advancement Procedures

A Geoprobe® DPT sampling machine was used to create borings for the soil gas probes. The machine advances a soil probe by means of a hydraulic hammer that drove the sampler vertically into the ground. Once the boring is created, the 1/4-inch diameter poly tubing and attached soil gas probe can be inserted. Approximately a foot of sand is poured on top of the probe tip to a depth of five feet bgs to minimize disruption of airflow to the sampling tip. At least one foot of dry granular bentonite is poured on top of

printed 09/18/2007 4:52PM by epa4561 p. 263/439

each sand pack to preclude the infiltration of hydrated bentonite grout. The probe is then filled to the surface with hydrated bentonite with the end of the soil gas probe tubing protruding from the subsurface. At least 30 minutes for the subsurface conditions to equilibrate before conducting purging and sampling activities.

A.2.2 Hollow Stem Auger Procedures

Soil samples are collected using a 1.5-inch diameter, 18-inch steel sampling hollow stem auger. A hydraulic auger, attached to a truck, is used to drill to a desired depth, then a split spoon barrel (SSB) is advanced to the desired depth and a discrete sample is collected.

A.2.3 Soil Sample Screening and Collection Procedures

Upon retrieval, the soil sample was removed from the sampler and visually classified by field personnel. Each soil sample was split into two portions and placed in re-sealable plastic bags. One bag was placed into a cooler with ice, and the other was kept in a warm environment (approximately 70 degrees Fahrenheit or greater) for approximately 10 minutes in an effort to promote volatilization of potential organic vapors within the soil.

After approximately 10 minutes, headspace screening using a PID was performed on the soil sample kept in the warm environment. The PID was calibrated daily in accordance with the manufacturer's directions. After a minimum of 10 minutes within a warm environment, the probe on the PID was inserted into the soil bag, and a sample of headspace air was withdrawn. The maximum reading was recorded in the field book and/or on the soil probe log. Readings were recorded in parts per million, referencing the calibration gas used.

Based on field screening and visual observations, field personnel selected a "worst case" soil sample from each location generally based on the following criteria:

- The soil sample that exhibited the highest PID screening results; and/or,
- Appeared to exhibit the most prominent staining; and/or,
- Exhibited the strongest potential chemical odor (or, in the absence of an apparent chemical odor, the strongest anomalous odor, as noted).

The selected soil sample's corresponding soil bag contained in the cooler on ice was then packed in the appropriate laboratory-supplied containers for shipment to the laboratory for chemical analysis.

The soil contained in the soil bag used for field screening also was used for classification. The soil was visually classified by the on-site field personnel in accordance with American Society for Testing and Materials (ASTM) D 2488-93 and described on the appropriate field sampling form(s).

A.2.4 Ground-Water Sample Collection Procedures

Monitoring well covers are removed using a socket wrench. Prior to sampling, ground water is purged from each permanent monitoring well using a 1.5-inch by 3.5-foot plastic, disposable bailer. The purged water is put into a 5-gallon bucket and ultimately disposed of in a 55-gallon drum and treated as waste. Upon collection, the ground-water samples are placed into pre-cleaned, laboratory-supplied containers with the proper preservative(s). Sampling was performed wearing clean, disposable latex or nitrile gloves.

printed 09/18/2007 4:52PM by epa4561 p. 264/439

A.3 Probehole Abandonment

Following the advancement of the soil probes, the probeholes were backfilled with bentonite chips to approximately 6 inches below ground surface (bgs) inside the Subject Property. The surface above the probehole was then patched with asphalt or concrete, as necessary, to restore the original surface.

A.4 Quality Assurance/Quality Control

The following sections outline QA/QC protocol, sample containers, sample preservation, sample identification and chain-of-custody procedures implemented during sampling activities.

A.4.1 QA/QC Samples

Trip Blanks

Trip blank samples that consisted of de-ionized water, provided by the analytical laboratory, accompanied the cooler(s) containing the samples from the laboratory, to the field and back to the laboratory. The trip blanks were used to assess potential cross-contamination from the cooler and handling practices, in addition to assessing potential cross-contamination between samples. Trip blanks will be analyzed for BTEX only. One trip blank will be analyzed per cooler.

Equipment Rinsates

Equipment rinsates were collected to evaluate potential cross-contamination of samples during equipment cleaning procedures. The frequency of equipment rinsates was either one per every 20 samples of a particular media sampled (e.g., soil, ground water, etc.) or one for each type of sampling equipment used. The equipment rinsates were collected by pouring deionized water provided by the laboratory over the sampling equipment and into sample containers. The equipment rinsates were shipped with the soil and/or ground-water samples collected that day and were analyzed for the same suite of potential constituents of concern (COCs) as the environmental samples.

A.4.2 Sample Containers and Preservation

Sample containers prepared by a commercial vendor were provided by the laboratory.

A.4.3 Sample Identification

Prior to sample collection, the appropriate container (with preservative, if applicable) was labeled with the following information:

- Sample identification;
- Initials of collector;
- Date and time of collection;
- Analytical parameters requested; and,
- Preservative used.

Samples were packed in coolers (with containerized ice) complete with custody seals and transported via overnight courier to the laboratory. Chain-of-custody documentation outlined as follows accompanied each shipment of samples to the laboratory.

printed 09/18/2007 4:52PM by epa4561 p. 265/439

A.4.4 Chain-of-Custody Procedures

Chain-of-custody began when the pre-cleaned sample containers arrived in the field in coolers with signed and dated custody seals. At the time of sample collection, the labeled samples were placed into an iced cooler. A line-item chain-of-custody form was then completed by the sampler. Chain-of-custody allowed the samples to be traced from the time of collection to their receipt in the laboratory. Upon completion of all line items, the sampler signed, dated, listed the time, and checked the completeness of all descriptive information contained on the form. One copy of the completed chain-of-custody was retained by the sampler. Each individual who subsequently assumed responsibility for the samples signed the chain-of-custody record. The following items were included on the chain-of-custody form:

- Sample identification;
- Signature of sampler;
- Date and time of collection;
- Sample type (i.e., aqueous or soil);
- Sample location;
- Number, size, and type of containers;
- Analytical parameters requested;
- Preservative (where applicable);
- Signatures of personnel involved in the chain of possession; and,
- Dates and times of relinquishment and receipt.

A.5 Cleaning and Disposal of Investigation-Derived Wastes (IDW)

Cleaning procedures were employed to minimize the potential for cross-contamination, off-site migration of potential COCs, and personal exposure to COCs. Solid materials and fluids generated during site assessment activities were containerized on-site. The following sections summarize cleaning procedures and disposal of IDW.

A.5.1 Equipment Cleaning

Equipment involved in field sampling activities was cleaned prior to probehole advancement, sampling, or leaving the Subject Property. During soil sampling, cleaning of the sampling equipment was conducted between each sample interval and included the following:

- Removal of visible sediment using brush and non-phosphate soap and potable water mixture; and,
- Potable water rinse.

A.6 Record Keeping

BB&J field personnel documented the field activities (with corresponding times) and pertinent information in a dedicated project filed logbook. Information that was recorded included: the names and companies of on-site personnel (BB&J, client, subcontractors, etc), weather conditions, and the purpose of activities and details of the fieldwork (e.g., soil conditions, sampling depths, etc.).

printed 09/18/2007 4:52PM by epa4561 p. 266/439

APPENDIX B

SOIL BORING LOGS

Field Boring Log

Site File No. 10408 - 0253801 County Cook
Site File Name Lyons Landfill - Lyons, IL
Fed ID No.
Quadrangle Berwyn, IL
UTM (or State Plane) Coordinates
N. (x) E.(y)
Latitude 41 ° 48 ' 53 " Longitude 87 ° 49 ' 38 "
Boring Location See Figure
Drilling Equipment Hollow Stem Auger

Boring No. SB-1
Surface Elev. N/A
Auger Depth 3.5 feet
Date Started 5/15/2007

Monitor Well No. N/A
Completion Depth 5 feet
Rotary Depth N/A
Date Finished 5/15/2007

**NGVD: National Geodetic Vertical Datum

BB&J Personnel
G - Kevin McCartney, BB&J
G - Karen Beaman, BB&J
D - Nick, HH Holmes
D - Mike, HH Holmes

Depth in Feet	DESCRIPTION OF MATERIALS	Graphic Log	Depth in Feet	SAMPLE ID	SAMPLE TYPE	SAMPLE RECOVERY (IN)	PENETROMETER	N VALUES (BLOW COUNTS)	OVA OR PID READINGS (PPM)	REMARKS
1			1	A	G					No topsoil
2	FILL: Stiff brown sandy clay with gravel; damp		2			18		10 13 16	13.9	Sampled 1-2.5 feet bgs
3			3	B	G			29		
4	FILL: Stiff brown and black sandy clay with lots of gravel; damp		4			18		10 21 24	5.0	Sampled 3.5-5 feet bgs
5			5	C	G					Auger Refusal (believed to be top of bedrock)
6	Auger Refusal at 5 feet bgs		6					45		
7			7	D	G					
8			8							
9			9	E	G					
10			10							
11			11	F	G					
12			12							
13			13	G	G					
14			14							
15			15	H	G					
16			16							
17			17	I						
18			18							
19			19	J						
20			20							

NOTES:

NA: Not Applicable
No: Number
NM: Not Measured
Elev: Elevation
G: Grab
C: Composite
bgs: below ground surface
Fed: Federal
PTR: Penetrometer
ppm: parts per million
D: Dry
ID: Identification
F: Damp
M: Moist
W: Wet
H: Helper
S: Saturated
OV: Organic Vapors
Groundwater

Copyright: Bradburne, Britler & Johnson, LLC Version 1.0 10/25/06

Field Boring Log

Site File No. 10408 - 0253801 County Cook
Site File Name Lyons Landfill - Lyons, IL
Fed ID No.
Quadrangle Berwyn, IL
UTM (or State Plane) Coordinates
N. (x) E.(y)
Latitude 41 ° 48 ' 53 " Longitude 87 ° 49 ' 38 "
Boring Location See Figure
Drilling Equipment Hollow Stem Auger

Boring No. SB-2
Surface Elev. N/A
Auger Depth 3.5 feet
Date Started 5/15/2007

Monitor Well No. N/A
Completion Depth 6 feet
Rotary Depth N/A
Date Finished 5/15/2007

**NGVD: National Geodetic Vertical Datum

BB&J Personnel
G - Kevin McCartney, BB&J
G - Karen Beaman, BB&J
D - Nick, HH Holmes
D - Mike, HH Holmes

Depth in Feet	DESCRIPTION OF MATERIALS	Graphic Log	Depth in Feet	SAMPLE ID	SAMPLE TYPE	SAMPLE RECOVERY (IN)	PENETROMETER	N VALUES (BLOW COUNTS)	OVA OR PID READINGS (PPM)	REMARKS
1	FILL: Semi-stiff brown silty clay with some gravel; damp		1	A	G					No topsoil
2			2			18		2 10 4	23.6	Sampled 1-2.5 feet bgs
3	FILL: Soft tan and brown sandy clay with trace gravel; damp		3	B	G			14		
4			4			18		4 3 4	12.5	Sampled 3.5-5 feet bgs
5			5	C	G			7		
6	Auger Refusal at 6 feet bgs		6					50/2		Auger Refusal (believed to be top of bedrock)
7			7	D	G					
8			8							
9			9	E	G					
10			10							
11			11	F	G					
12			12							
13			13	G	G					
14			14							
15			15	H	G					
16			16							
17			17	I						
18			18							
19			19	J						
20			20							

NOTES:

NA: Not Applicable
No: Number
NM: Not Measured
Elev: Elevation
G: Grab
C: Composite
bgs: below ground surface
Fed: Federal
PTR: Penetrometer
ppm: parts per million
D: Dry
ID: Identification
P: Damp
M: Moist
W: Wet
H: Helper
S: Saturated
OV: Organic Vapors
Groundwater

Copyright: Broadburne, Briller & Johnson, LLC Version 1.0 10/25/96

printed 09/18/2007 4:52PM by epa4561 p. 269/439

Field Boring Log

Site File No. 10408 - 0253801 County Cook
Site File Name Lyons Landfill - Lyons, IL
Fed ID No.
Quadrangle Berwyn, IL
UTM (or State Plane) Coordinates
N. (x) E.(y)
Latitude 41 ° 48 ' 53 " Longitude 87 ° 49 ' 38 "
Boring Location See Figure
Drilling Equipment Hollow Stem Auger

Boring No. SB-3
Surface Elev. N/A
Auger Depth 13.5 feet
Date Started 5/15/2007

Monitor Well No. N/A
Completion Depth 15 feet
Rotary Depth N/A
Date Finished 5/15/2007

**NGVD: National Geodetic Vertical Datum

BB&J Personnel
G - Kevin McCartney, BB&J
G - Karen Beaman, BB&J
D - Nick, HH Holmes
D - Mike, HH Holmes

Depth in Feet	DESCRIPTION OF MATERIALS	Graphic Log	Depth in feet	SAMPLE ID	SAMPLE TYPE	SAMPLE RECOVERY (IN)	PENETROMETER	N VALUES (BLOW COUNTS)	OVA OR PID READINGS (PPM)	REMARKS
										No topsoil
1	FILL: Stiff brown sandy clay with some gravel; damp		1	A	G					
2			2			18		4 15 29	0.4	Sampled 1-2.5 feet bgs
3	FILL: Stiff tan silty clay with gravel; damp		3	B	G			44		
4	FILL: Loose black and white sand with gravel; damp		4					10		Petroleum odor
5			5	C	G	18		18 15	1.3	Sampled 3.5-5 feet bgs
6	FILL: Stiff brown sandy clay with some gravel; damp		6					33		
7			7	D	G	18		3 5 7	0.4	Sampled 6-7.5 feet bgs
8			8					12		
9			9	E	G			4		
10			10			18		4 6	0.2	Sampled 8.5-10 feet bgs
11			11	F	G			10		
12			12							Minor staining/rusting from 6-15 feet bgs
13			13	G	G					
14			14					2		
15			15	H	G	18		5 25	58	Sampled 13.5-15 feet bgs
16	No Recovery		16					30		
17			17	I						
18			18							
19			19	J				50/4		Auger Refusal (believed to be top of bedrock)
	Auger Refusal at 19 feet bgs									
20			20							

NOTES:

NA: Not Applicable
No: Number
NM: Not Measured
Elev: Elevation
G: Grab
C: Composite
bgs: below ground surface
Fed: Federal
PTR: Penetrometer
ppm: parts per million
D: Dry
ID: Identification
P: Damp
M: Moist
W: Wet
H: Helper
S: Saturated
OV: Organic Vapors
Groundwater

Copyright: Bradburne, Briller & Johnson, LLC Version 1.0 10/23/06

Field Boring Log

Site File No. 10408 - 0253801 County Cook
Site File Name Lyons Landfill - Lyons, IL
Fed ID No.
Quadrangle Berwyn, IL
UTM (or State Plane) Coordinates
N. (x) E.(y)
Latitude 41 ° 48 ' 53 " Longitude 87 ° 49 ' 38 "
Boring Location See Figure
Drilling Equipment Drill Rig w/Geoprobe®

Boring No. SB-5
Surface Elev. N/A
Auger Depth 6 feet
Date Started 5/17/2007

Monitor Well No. MW-5
Completion Depth 8 feet
Rotary Depth N/A
Date Finished 5/17/2007

**NGVD: National Geodetic Vertical Datum

BB&J Personnel
G - Michele Hargreaves, BB&J
G - Karen Beaman, BB&J
D - Nick, HH Holmes
D - Mike, HH Holmes

Depth in Feet	DESCRIPTION OF MATERIALS	Graphic Log	Depth in Feet	SAMPLE ID	SAMPLE TYPE	SAMPLE RECOVERY (IN)	PENETROMETER	N VALUES (BLOW COUNTS)	OVA OR PID READINGS (PPM)	REMARKS
1	FILL: Loose black sand with gravel; damp		1	A	G					No topsoil
2			2			18		N/A	N/A	No sample from 1-2.5 feet bgs
3	FILL: Loose black sand; saturated		3	B	G					
4			4							
5			5	C	G	18		4	5.5	Sampled 3.5-5 feet bgs
6			6							
7	FILL: Stiff dark brown clay; damp		7	D	G	18		50/1	1.1	Sampled 6-7.5 feet bgs Orange rocks found at 7 feet bgs
8			8							Ground-water encountered at 8 feet
9	Auger Refusal at 8 feet bgs		9	E	G					Auger Refusal (believed to be top of bedrock)
10			10							
11			11	F	G					
12			12							
13			13	G	O					
14			14							
15			15	H	O					
16			16							
17			17	I						
18			18							
19			19	J						
20			20							

NOTES:

NA: Not Applicable
No: Number
NM: Not Measured
Elev: Elevation
G: Grab
C: Composite
bgs: below ground surface
Fed: Federal
PTR: Penetrometer
ppm: parts per million
D: Dry
ID: Identification
P: Damp
M: Moist
W: Wet
H: Helper
S: Saturated
OV: Organic Vapors
Groundwater

Copyright: Bradburne, Briller & Johnson, LLC Version 1.0 10/25/06

Field Boring Log

Site File No. 10408 - 0353801 County Cook
Site File Name Lyons Landfill - Lyons, IL
Fed ID No.
Quadrangle Berwyn, IL
UTM (or State Plane) Coordinates
N. (x) E.(y)
Latitude 41 ° 48 ' 53 " Longitude 87 ° 49 ' 38 "
Boring Location See Figure
Drilling Equipment Hollow Stem Auger

Boring No. SB-6
Surface Elev. N/A
Auger Depth 33.5 feet
Date Started 5/15/2007

Monitor Well No. N/A
Completion Depth 38 feet
Rotary Depth N/A
Date Finished 5/15/2007

**NGVD: National Geodetic Vertical Datum

BB&J Personnel
KG - Kevin McCarney, BB&J
KG - Karen Beaman, BB&J
ID - Nick, HH Holmes
ID - Mike, HH Holmes

Depth in Feet	DESCRIPTION OF MATERIALS	Graphic Log	Depth in Feet	SAMPLE ID	SAMPLE TYPE	SAMPLE RECOVERY (IN)	PENETROMETER	N VALUES (BLOW COUNTS)	OVA OR PID READINGS (PPM)	REMARKS
										No topsoil
1	FILL: Loose tan sand; damp		1	A	G			4		
2			2			18		7	4.7	Sampled 1-2.5 feet bgs Petroleum odor
3			3	B	G			27		
4	FILL: Loose gray sand with gravel; damp		4					34		
5			5	C	G	18		15 22 36	2.4	Sampled 3.5-5 feet bgs
6			6					58		
7			7	D	G	18		7 9 5	2.1	Sampled 6-7.5 feet bgs
8			8					14		
9			9	E	G	18		3 2 3	0.5	Sampled 8.5-10 feet bgs
10			10							
11	FILL: Stiff brown and black clay with gravel; damp		11	F	G			5		Minor staining/rusting from 6-38 feet bgs
12			12							
13			13	G	G					
14			14			18		3 4 4	6.4	Sampled 13.5-15 feet bgs
15			15	H	G			8		
16			16							
17			17	I						
18			18							
19			19	J		18		3 3 3	18	Sampled 18.5-20 feet bgs
20			20					6		

NOTES:

NA: Not Applicable
No: Number
NM: Not Measured
Elev: Elevation
G: Grab
C: Composite
bgs: below ground surface
Fed: Federal
PTR: Penetrometer
ppm: parts per million
D: Dry
ID: Identification
P: Damp
M: Moist
W: Wet
H: Helper
S: Saturated
OV: Organic Vapors
Groundwater

Copyright: Broadburne, Briller & Johnson, LLC Version 1.0 10/23/06

Field Boring Log

Site File No. 10408 - 0253801 County Cook
Site File Name Lyons Landfill - Lyons, IL
Fed ID No.
Quadrangle Berwyn, IL
UTM (or State Plane) Coordinates
N. (x) E.(y)
Latitude 41 ° 48 ' 53 " Longitude 87 ° 49 ' 38 "
Boring Location See Figure
Drilling Equipment Hollow Stem Auger

Boring No. SB-6 Monitor Well No. N/A
Surface Elev. N/A Completion Depth 38 feet
Auger Depth 33.5 feet Rotary Depth N/A
Date Started 5/15/2007 Date Finished 5/15/2007
**NGVD: National Geodetic Vertical Datum

BB&J Personnel
G - Kevin McCartney, BB&J
G - Karen Beaman, BB&J
D - Nick, HH Holmes
D - Mike, HH Holmes

Depth in Feet	DESCRIPTION OF MATERIALS	Graphic Log	Depth in feet	SAMPLE ID	SAMPLE TYPE	SAMPLE RECOVERY (IN)	PENETROMETER	N VALUES (BLOW COUNTS)	OVA OR PID READINGS (PPM)	REMARKS
21	FILL: Stiff brown and black clay with gravel; damp		21	A	G					
22			22							
23			23	B	G					
24	FILL: Medium stiff brown clay with trace sand and gravel; damp		24			18		3	1.2	Sampled 23.5-25 feet bgs
25			25	C	G			3		
26			26					6		
27			27	D	G					
28			28							
29	FILL: Soft brown clay with trace black rocks; damp		29	E	G	18		3	0.6	Sampled 28.5-30 feet bgs
30			30					4		
31			31	F	G			6		
32			32					10		
33			33	G	G					
34	FILL: Soft brown sandy clay with some gravel; damp		34			18		6	0.4	Sampled 33.5-35 feet bgs
35			35	H	G			9		
36			36					10		
37			37	I				19		
38			38					60/4		Auger Refusal (believed to be top of bedrock)
39	Auger Refusal at 38 feet bgs		39	J						
40			40							

NOTES:

NA: Not Applicable
No: Number
NM: Not Measured
Elev: Elevation
G: Grab
C: Composite
bgs: below ground surface
Fed: Federal
PTR: Penetrometer
ppm: parts per million
D: Dry
ID: Identification
P: Damp
M: Moist
W: Wet
H: Helper
S: Saturated
OV: Organic Vapors
Groundwater

Field Boring Log

Site File No. 10408 - 0253801 County Cook
Site File Name Lyons Landfill - Lyons, IL
Fed ID No.
Quadrangle Berwyn, IL
UTM (or State Plane) Coordinates
N.(x) E.(y)
Latitude 41 ° 48 ' 53 " Longitude 87 ° 49 ' 38 "
Boring Location See Figure
Drilling Equipment Hollow Stem Auger

Boring No. SB-7
Surface Elev. N/A
Auger Depth 38.5 feet
Date Started 5/14/2007

Monitor Well No. N/A
Completion Depth 60 feet
Rotary Depth N/A
Date Finished 5/14/2007

**NGVD: National Geodetic Vertical Datum

BB&J Personnel
G - Kevin McCarney, BB&J
G - Karen Beaman, BB&J
D - Nick, HH Holmes
D - Mike, HH Holmes

Depth in Feet	DESCRIPTION OF MATERIALS	Graphic Log	Depth in Feet	SAMPLE ID	SAMPLE TYPE	SAMPLE RECOVERY (IN)	PENETROMETER	N VALUES (BLOW COUNTS)	OVA OR PID READINGS (PPM)	REMARKS
										No topsoil
1	FILL: Loose gray and brown clay; damp		1	A	G					
2			2			18		8 23 31	N/A	Sampled 1-2.5 feet bgs
3			3	B	G			59		
4			4			18		5 43	N/A	No sample from 3.5-5 feet bgs
5			5	C	G			N/A 43		
6	FILL: Stiff black silty clay with ash; damp		6							
7			7	D	G	18		13 14 11	35.4	Sampled 6-7.5 feet bgs
8			8					25		
9	FILL: Semi-stiff black with blue silty clay with ash; damp		9	E	G	18		4 6 7	7.1	Sampled 8.5-10 feet bgs
10			10							
11	No recovery		11	F	G			13		
12			12							
13			13	G	G					
14	FILL: Semi-stiff black silty clay with ash; damp		14			18		0 5 5	N/A	No sample from 13.5 to 15 feet bgs
15			15	H	G					
16			16					10		
17			17	I						
18			18							
19			19	J		18		7 4 20 24	N/A	No sample from 18.5 to 20 feet bgs
20			20							

NOTES:

NA: Not Applicable
No: Number
NM: Not Measured
Elev: Elevation
G: Grab
C: Composite
bgs: below ground surface
Fed: Federal
PTR: Penetrometer
ppm: parts per million
D: Dry
ID: Identification
P: Damp
M: Moist
W: Wet
H: Helper
S: Saturated
OV: Organic Vapors
Groundwater

Field Boring Log

Site File No. 10408 - 053801 County Cook
Site File Name Lyons Landfill - Lyons, IL
Fed ID No.
Quadrangle Berwyn, IL
UTM (or State Plane) Coordinates
N. (x) E.(y)
Latitude 41 ° 48 ' 53 " Longitude 87 ° 49 ' 38 "
Boring Location See Figure
Drilling Equipment Hollow Stem Auger

Boring No. SB-7
Surface Elev. N/A
Auger Depth 58.5 feet
Date Started 5/14/2007

Monitor Well No. N/A
Completion Depth 60 feet
Rotary Depth N/A
Date Finished 5/14/2007

**NGVD: National Geodetic Vertical Datum

BB&J Personnel
G - Kevin McCartney, BB&J
O - Karen Bauman, BB&J
D - Nick, HH Holmes
D - Mike, HH Holmes

Depth in Feet	DESCRIPTION OF MATERIALS	Graphic Log	Depth in Feet	SAMPLES: SAMPLE ID	SAMPLES: SAMPLE TYPE	SAMPLES: SAMPLE RECOVERY (IN)	SAMPLES: PENETROMETER	SAMPLES: N VALUES (BLOW COUNTS)	SAMPLES: OVA OR PID READINGS (PPM)	REMARKS
21	FILL: Semi-stiff black silty clay with ash; damp		21	A	G					
22			22							
23			23	B	G					
24			24			18		15 16 6 22	N/A	Sampled 23.5-25 feet bgs
25			25	C	G					
26			26							
27			27	D	G					
28			28							
29	FILL: Medium-stiff brown clay with trace sand; damp		29	E	G	18		5 8 10 18	N/A	No sample from 28.5 to 30 feet bgs
30			30							
31			31	F	G					
32			32							
33			33	G	G					
34			34			18		3 3 5 8	3.6	Sampled 33.5-35 feet bgs
35			35	H	G					
36			36							
37			37	I						
38			38							
39			39	J		18		3 5 6 11	10.0	Sampled 38.5-40 feet bgs
40			40							

NOTES:

NA: Not Applicable
No: Number
NM: Not Measured
Elev: Elevation
G: Grab
C: Composite
bgs: below ground surface
Fed: Federal
PTR: Penetrometer
ppm: parts per million
D: Dry
ID: Identification
P: Damp
M: Moist
W: Wet
H: Helper
S: Saturated
OV: Organic Vapors
Groundwater

Field Boring Log

Site File No. 10408 - 0253801 County Cook
Site File Name Lyons Landfill - Lyons, IL
Fed ID No.
Quadrangle Berwyn, IL
UTM (or State Plane) Coordinates
N. (x) E.(y)
Latitude 41 ° 48 ' 53 " Longitude 87 ° 49 ' 38 "
Boring Location See Figure
Drilling Equipment Hollow Stem Auger

Boring No. SB-7 Monitor Well No. N/A
Surface Elev. N/A Completion Depth 60 feet
Auger Depth 58.5 feet Rotary Depth N/A
Date Started 5/14/2007 Date Finished 5/14/2007
**NGVD: National Geodetic Vertical Datum

HH&J Personnel
G - Kevin McCartney, HH&J
G - Karen Bearman, HH&J
D - Nick, HH Holmes
D - Mike, HH Holmes

Depth in Feet	DESCRIPTION OF MATERIALS	Graphic Log	Depth in Feet	SAMPLE ID	SAMPLE TYPE	SAMPLE RECOVERY (IN)	PENETROMETER	N VALUES (BLOW COUNTS)	OVA OR PID READINGS (PPM)	REMARKS
41	FILL: Medium-stiff brown clay with trace sand; damp		41	A	G					
42			42							
43			43	B	G					
44			44			18		3 6 15	16.7	Sampled 43.5-45 feet bgs Petroleum odor and some silt
45			45	C	G			21		
46			46							
47			47	D	G					
48			48							
49	Very soft tan sandy CLAY (CL), damp		49	E	G	18		8 7 4	26.1	Sampled 48.5-50 feet bgs Cement/Paint-like substance observed at 50 feet bgs
50			50							
51			51	F	G			11		
52			52							
53			53	G	G					
54			54			10		7 2 12	N/A	No sample from 53.5 to 55 feet bgs
55			55	H	G			14		
56			56							
57			57	I						
58			58							
59			59	J		18		6 60/4	13.0	Sampled 58.5-60 feet bgs Auger Refusal (believed to be top of bedrock)
60			60							

Auger Refusal at 60 feet bgs

NOTES:

NA: Not Applicable
No: Number
NM: Not Measured
Elev: Elevation
G: Grab
C: Composite
bgs: below ground surface
Fed: Federal
PTR: Penetrometer
ppm: parts per million
D: Dry
ID: Identification
P: Damp
M: Moist
W: Wet
H: Helper
S: Saturated
OV: Organic Vapors
Groundwater

Field Boring Log

Site File No. 10408 - 0253801 County Cook
Site File Name Lyons Landfill - Lyons, IL
Fed ID No.
Quadrangle Berwyn, IL
UTM (or State Plane) Coordinates
N. (x) E.(y)
Latitude 41 ° 48 ' 53 " Longitude 87 ° 49 ' 38 "
Boring Location See Figure
Drilling Equipment/Hollow Stem Auger

Boring No. SB-8 Monitor Well No. N/A
Surface Elev. N/A Completion Depth 40 feet
Auger Depth 38.5 feet Rotary Depth N/A
Date Started 5/14/2007 Date Finished 5/14/2007
**NGVD: National Geodetic Vertical Datum

BB&J Personnel
G - Kevin McCartney, BB&J
G - Karen Beeman, BB&J
D - Nick, HH Holmes
D - Mike, HH Holmes

Depth in Feet	DESCRIPTION OF MATERIALS	Graphic Log	Depth in Feet	SAMPLE ID	SAMPLE TYPE	SAMPLE RECOVERY (IN)	PENETROMETER	N VALUES (BLOW COUNTS)	OVA OR PID READINGS (PPM)	REMARKS
										No topsoil
1	FILL: Dense black clay with ash and sand, very rocky; damp		1	A	G					
2			2			18		N/A	N/A	No sample from 1 to 2.5 feet bgs
3			3	B	G					
4	FILL: Loose white gravel; damp		4			18		15	1.1	Sampled 3.5-5 feet bgs
5			5	C	G			13 / 11		
6			6					24		
7	FILL: Loose gray and light brown clay with gravel; damp		7	D	G	18		21 / 49 / 28	4.2	Sampled 6-7.5 feet bgs
8			8					77		
9	FILL: Loose brown sandy clay with gravel; damp		9	E	G	18		10 / 10	0.6	Sampled 8.5-10 feet bgs Glass debris observed
10			10					5		
11	No recovery		11	F	G			15		
12			12							
13			13	G	G					
14			14			18		2	N/A	No sample from 13.5 to 15 feet bgs
15			15	H	G			4 / 5		
16			16					9		
17			17	I						
18			18							
19	FILL: Medium dense brown sandy clay; damp		19	J		18		3 / 4	0.8	Sampled 18.5-20 feet bgs Petroleum odor
20			20					4 / 8		

NOTES:

NA: Not Applicable
No: Number
NM: Not Measured
Elev: Elevation
G: Grab
C: Composite
bgs: below ground surface
Fed: Federal
PTR: Penetrometer
ppm: parts per million
D: Dry
ID: Identification
P: Damp
M: Moist
W: Wet
H: Helper
S: Saturated
OV: Organic Vapors
Groundwater

Field Boring Log

Site File No. 10408 - 0753801 County Cook
Site File Name Lyons Landfill - Lyons, IL
Fed ID No.
Quadrangle Berwyn, IL
UTM (or State Plane) Coordinates
N. (x) E.(y)
Latitude 41 ° 48 ' 53 " Longitude 87 ° 49 ' 38 "
Boring Location See Figure
Drilling Equipment Hollow Stem Auger

Boring No. SB-8
Surface Elev. N/A
Auger Depth 38.5 feet
Date Started 5/14/2007

Monitor Well No. N/A
Completion Depth 40 feet
Rotary Depth N/A
Date Finished 5/14/2007

**NGVD: National Geodetic Vertical Datum

BB&J Personnel
G - Kevin McCartney, BB&J
G - Karen Brennan, BB&J
D - Nick, HH Holmes
D - Mike, HH Holmes

Depth in Feet	DESCRIPTION OF MATERIALS	Graphic Log	Depth in feet	SAMPLE ID	SAMPLE TYPE	SAMPLE RECOVERY (IN)	PENETROMETER	N VALUES (BLOW COUNTS)	OVA OR PID READINGS (PPM)	REMARKS
21	Soft brown CLAY (CL), moist		21	A	G					
22			22							
23			23	B	G					
24			24			18		2 4 3 7	14	Sampled 23.5-25 feet bgs
25			25	C	G					
26			26							
27			27	D	G					
28			28							
29	Medium stiff brown CLAY (CL), with some gravel, moist		29	E	G	18		2 3 3 6	8	Sampled 28.5-30 feet bgs
30			30							
31			31	F	G					
32			32							
33			33	G	G					
34			34			18		2 3 4 7	34	Sampled 33.5-35 feet bgs
35	Medium stiff brown and green-orange CLAY (CL), with trace gravel, moist		35	H	G					
36			36							
37			37	I						
38			38							
39			39	J		18		3 5 7 13	1.4	Sampled 38.5-40 feet bgs
40			40							Auger Refusal (believed to be top of bedrock)

Auger Refusal at 40 feet bgs

NOTES:

NA: Not Applicable
No: Number
NM: Not Measured
Elev: Elevation
G: Grab
C: Composite
bgs: below ground surface
Fed: Federal
PTR: Penetrometer
ppm: parts per million
D: Dry
ID: Identification
P: Damp
M: Moist
W: Wet
H: Helper
S: Saturated
OV: Organic Vapors
Groundwater

Field Boring Log

Page 12 of 13

Site File No. 10408 - 0253801 County Cook
Site File Name Lyons Landfill - Lyons, IL
Fed ID No.
Quadrangle Berwyn, IL
UTM (or State Plane) Coordinates
N. (x) E.(y)
Latitude 41 ° 48 ' 53 " Longitude 87 ° 49 ' 38 "
Boring Location See Figure
Drilling Equipment Hollow Stem Auger

Boring No. SB-9 Monitor Well No. MW-9
Surface Elev. N/A Completion Depth 20 feet
Auger Depth 18.5 feet Rotary Depth N/A
Date Started 5/17/2007 Date Finished 5/17/2007
**NGVD: National Geodetic Vertical Datum

BB&J Personnel
G - Michele Hargreaves, BB&J
G - Karen Beaman, BB&J
D - Nick, FH Holmes
D - Mike, FH Holmes

Depth in Feet	DESCRIPTION OF MATERIALS	Graphic Log	Depth in Feet	SAMPLE ID	SAMPLE TYPE	SAMPLE RECOVERY (IN)	PENETROMETER	N VALUES (BLOW CONNTS)	OVA OR PID READINGS (PPM)	REMARKS
1	FILL: Loose brown sandy gravel; damp		1	A	G					No topsoil
2	FILL: Loose white and gray gravel; damp		2			18		50	7.6	Sampled 1-2.5 feet bgs
3	FILL: Stiff brown clay with some gravel; damp		3	B	G					
4			4			18		48	0.6	Sampled 3.5-5 feet bgs
5			5	C	G					
6			6							
7	FILL: Loose white and gray gravel; damp		7	D	G	18		35	2.5	Sampled 6-7.5 feet bgs
8			8							
9			9	E	G	18		19	1.1	Sampled 8.5-10 feet bgs
10	FILL: Loose black asphalt; damp		10							
11	No recovery		11	F	G					
12			12							
13			13	G	G					
14	Loose, light brown SAND (SP), damp		14			18		12	1.2	Sampled 13.5-15 feet bgs
15			15	H	G					
16			16							
17			17	I						
18			18							Ground-water encountered at 18 feet bgs
19			19	J		18		87/1	1.6	Sampled 18.5-20 feet bgs
20	Soft brown sandy CLAY (SC), with gravel, damp		20							Auger Refusal (believed to be top of bedrock)

Auger Refusal at 20 feet bgs

NOTES:

NA: Not Applicable
No: Number
NM: Not Measured
Elev: Elevation
G: Grab
C: Composite
bgs: below ground surface
Fed: Federal
PTR: Penetrometer
ppm: parts per million
D: Dry
ID: Identification
F: Damp
M: Moist
W: Wet
H: Helper
S: Saturated
OV: Organic Vapors
Groundwater

Field Boring Log

Site File No. 10408 - 025380| County Cook
Site File Name Lyons Landfill - Lyons, IL
Fed ID No.
Quadrangle Berwyn, IL
UTM (or State Plane) Coordinates
N. (x) E.(y)
Latitude 41 ° 48 ' 53 " Longitude 87 ° 49 ' 38 "
Boring Location See Figure
Drilling Equipment Hollow Stem Auger

Boring No. SB-10 Monitor Well No. MW-10
Surface Elev. N/A Completion Depth 20 feet
Auger Depth 18.5 feet Rotary Depth N/A
Date Started 5/17/2007 Date Finished 5/17/2007
**NGVD: National Geodetic Vertical Datum

BB&J Personnel
G - Kevin McCartney, BB&J
G - Karen Beaman, BB&J
D - Nick, HH Holmes
D - Mike, HH Holmes

Depth in Feet	DESCRIPTION OF MATERIALS	Graphic Log	Depth in Feet	SAMPLE ID	SAMPLE TYPE	SAMPLE RECOVERY (IN)	PENETROMETER	N VALUES (BLOW COUNTS)	OVA OR PID READINGS (PPM)	REMARKS
1	FILL: Loose white and light brown clay, with gravel; damp		1	A	G					No topsoil
2			2			18		10 20 15	N/A	No sample from 1-2.5 feet bgs
3	FILL: Semi-dense black clayey sand; damp		3	B	G			13		
4			4			18		5 7 8	N/A	No sample from 3.5-5 feet bgs Petroleum odor
5			5	C	G					
6	FILL: Medium soft brown clay with trace sand; damp		6					15		
7			7	D	G	18		4 3 3	0.3	Sampled 6-7.5 feet bgs
8	Loose tan SAND (SP), moist		8					6		
9			9	E	G	18		7 11 15	2.2	Sampled 8.5-10 feet bgs
10			10							
11			11	F	G			26		
12			12							
13			13	G	G					Ground-water encountered at 13 feet bgs
14			14							
15			15	H	G	18		N/A	0.2	Sampled 13.5-15 feet bgs
16			16							
17			17	I						
18			18							
19			19	J				7 4 20	0.5	Sampled 18.5-20 feet bgs Auger Refusal (believed to be top of bedrock)
20			20							
	Auger Refusal at 20 feet bgs							24		

NOTES:

NA: Not Applicable
No: Number
NM: Not Measured
Elev: Elevation
G: Grab
C: Composite
bgs: below ground surface
Fed: Federal
PTR: Penetrometer
ppm: parts per million
D: Dry
ID: Identification
F: Damp
M: Moist
W: Wet
H: Helper
S: Saturated
OV: Organic Vapors
Groundwater

Field Boring Log

Site File No. 10608 - 0253801 County Cook
Site File Name Lyons Landfill - Lyons, IL
Fed ID No.
Quadrangle Berwyn, IL
UTM (or State Plane) Coordinates
N. (x) E.(y)
Latitude 41 ° 48 ' 53 " Longitude 87 ° 49 ' 38 "
Boring Location See Figure
Drilling Equipment Hollow Stem Auger

Boring No. SB-11 Monitor Well No. N/A
Surface Elev. N/A Completion Depth 22 feet
Auger Depth 18.5 feet Rotary Depth N/A
Date Started 5/17/2007 Date Finished 5/17/2007
**NGVD: National Geodetic Vertical Datum

BB&J Personnel
G - Michele Hargreaves, BB&J
G - Karen Beaman, BB&J
D - Nick, BH Holmes
D - Mike, BH Holmes

Depth in Feet	DESCRIPTION OF MATERIALS	Graphic Log	Depth in Feet	SAMPLE ID	SAMPLE TYPE	SAMPLE RECOVERY (IN)	PENETROMETER	N VALUES (BLOW COUNTS)	OVA OR HD READINGS (PPM)	REMARKS
1	FILL: Very stiff brown sandy clay, with some gravel; damp		1	A	G					No topsoil
2			2			18		61	0.4	Sampled 1-2.5 feet bgs
3			3	B	G					
4	FILL: Stiff gray sandy clay, with some gravel; damp		4			12		NA	1.3	Sampled 3.5-5 feet bgs
5			5	C	G					
6	FILL: Stiff black and gray silty clay; damp		6							
7			7	D	G	18		6	0.4	Sampled 6-7.5 feet bgs
8			8							
9			9	E	G	18		6	0.2	Sampled 8.5-10 feet bgs
10			10							
11	FILL: Very stiff brown sandy clay, with some gravel; damp		11	F	G					
12			12							
13			13	G	G					
14			14			18		27	58	Sampled 13.5-15 feet bgs
15			15	H	G					
16	FILL: Medium dense brown and gray silty clay; damp		16							
17			17	I						
18			18							
19	FILL: Dense brown silty sand; moist		19	J		18				Sampled 18.5-20 feet bgs
20			20					48		Auger Refusal (believed to be top of bedrock)

Auger Refusal at 22 feet bgs

NOTES:

NA: Not Applicable
No: Number
NM: Not Measured
Elev: Elevation
G: Grab
C: Composite
bgs: below ground surface
Fed: Federal
PTR: Penetrometer
ppm: parts per million
D: Dry
ID: Identification
P: Damp
M: Moist
W: Wet
H: Helper
S: Saturated
OV: Organic Vapors
Groundwater

Field Boring Log

Site File No. 10408 - 025380 | County Cook | Boring No. GP-12 | Monitor Well No. MW-12

Site File Name Lyons Landfill - Lyons, IL | Surface Elev. N/A | Completion Depth 20 feet

Fed ID No. | Auger Depth 18.5 feet | Rotary Depth N/A

Quadrangle Berwyn, IL | Date Started 5/17/2007 | Date Finished 5/17/2007

UTM (or State Plane) Coordinates | **NGVD: National Geodetic Vertical Datum

N. (x) | E.(y)

Latitude 41 ° 48 ' 53 " Longitude 87 ° 49 ' 38 "

Boring Location See Figure

Drilling Equipment Hollow Stem Auger

BB&J Personnel:
G - Michele Hargreaves, BB&J
G - Karen Bessum, BB&J
D - Nick, HJ Holmes
D - Miles, HK Holmes

Depth in Feet	DESCRIPTION OF MATERIALS	Graphic Log	Depth in Feet	SAMPLE ID	SAMPLE TYPE	SAMPLE RECOVERY (IN)	PENETROMETER	N VALUES (BLOW COUNTS)	OVA OR PID READINGS (PPM)	REMARKS
1	FILL: Loose white gravel; moist		1	A	G					No topsoil
2			2			18		61	24	Sampled 1-2.5 feet bgs
3	FILL: Loose tan and brown sandy gravel; damp		3	B	G					
4			4			18		N/A	4.9	Sampled 3.5-5 feet bgs Petroleum odor
5			5	C	G					
6	FILL: Loose white gravel; damp		6							
7	FILL: Semi-stiff tan sandy clay; damp		7	D	G	18		6	2.1	Sampled 6-7.5 feet bgs
8	FILL: Soft black clay; damp		8							
9			9	E	G	18		6	9.1	Sampled 8.5-10 feet bgs
10	Soft greenish-black clay FILL, damp		10							
11	FILL: Soft black clay; damp		11	F	G					
12			12							
13			13	G	G					
14	Loose tan SAND (SP), moist		14							
15			15	H	G	18		27	9	Sampled 13.5-15 feet bgs
16			16							
17			17	I						
18			18							
19	Loose gray SAND (SP), wet		19	J		18		50	1.2	Groundwater encountered at 19 feet bgs
20			20							Auger Refusal (believed to be top of bedrock)

Auger Refusal at 20 feet bgs

NOTES:

NA: Not Applicable
No: Number
NM: Not Measured
Elev: Elevation
G: Grab
C: Composite
bgs: below ground surface
Fed: Federal
PTR: Penetrometer
ppm: parts per million
D: Dry
ID: Identification
F: Damp
M: Moist
W: Wet
H: Helper
S: Saturated
OV: Organic Vapors
Groundwater

printed 09/18/2007 4:52PM by epa4561 p. 282/439

APPENDIX C

LABORATORY ANALYTICAL REPORTS

MOBILE GEOCHEMISTRY
H&P

24 May 2007

Mr. Kevin McCartney
Bradburne, Briller & Johnson, LLC - Chicago
515 N. State Street, Suite 2200
Chicago, IL 60610
RE: BBJ051507-11

Enclosed are the results of analyses for samples received by the laboratory on 15-May-07 . If you have any questions concerning this report, please feel free to contact me.

Sincerely,

Janis Villarreal
Laboratory Director

H&P Mobile Geochemistry operates under CA Environmental Lab Accreditation Program Numbers 1317, 1561, 1687, 1745, 1746, 2088, 2278, 2543, 2579 and 2595.

2470 Impala Drive, Carlsbad, California 92010 | 760.804.9678 — Fax 760.804.9159
3825 Industry Avenue, Lakewood, California 90712 | 562.426.6991 — Fax 562.426.6995
www.HandPmg.com | 1-800-834-9888

MOBILE GEOCHEMISTRY
H&P

Headburns, Briller & Johnson, LLC - Chicago	Project BBJ051507-11	
515 N State Street Suite 2200	Project Number 0253801	Reported
Chicago, IL 60610	Project Manager Mr Kevin McCartney	24-May-07

ANALYTICAL REPORT FOR SAMPLES

Sample ID	Laboratory ID	Matrix	Date Sampled	Date Received
CDSG-1	E705046-04	Vapor	11-May-07	15-May-07
CDSG-2	E705046-05	Vapor	11-May-07	15-May-07
CDSG-3	E705046-06	Vapor	11-May-07	15-May-07

MOBILE GEOCHEMISTRY
H&P

Bradburne, Briller & Johnson, LLC - Chicago 515 N. State Street, Suite 2200 Chicago, IL 60610	Project: BBJ051507-11 Project Number: 0253801 Project Manager: Mr. Kevin McCartney	Reported: 24-May-07

Methane by GC/FID

H&P Mobile Geochemistry

Analyte	Result	Reporting Limit	Units	Dilution Factor	Batch	Prepared	Analyzed	Method	Notes
CDSG-1 (E705046-04) Vapor Sampled: 11-May-07 Received: 15-May-07									
Methane	11	10	ppmv	1	EE71506	15-May-07	15-May-07	Modified EPA 8015B	
CDSG-2 (E705046-05) Vapor Sampled: 11-May-07 Received: 15-May-07									
Methane	1100	10	ppmv	1	EE71506	15-May-07	15-May-07	Modified EPA 8015B	
CDSG-3 (E705046-06) Vapor Sampled: 11-May-07 Received: 15-May-07									
Methane	18000	20	ppmv	2	EE71506	15-May-07	15-May-07	Modified EPA 8015B	

MOBILE GEOCHEMISTRY
H&P

Bradbume, Briller & Johnson, LLC - Chicago	Project: BBJ051507-11	
515 N State Street, Suite 2200	Project Number: 0253801	Reported
Chicago, IL 60610	Project Manager: Mr Kevin McCartney	24-May-07

Volatile Organic Compounds by EPA TO-15

H&P Mobile Geochemistry

Analyte	Result	Reporting Limit	Units	Dilution Factor	Batch	Prepared	Analyzed	Method	Notes
CDSG-1 (E705046-04) Vapor Sampled: 11-May-07 Received: 15-May-07									
Propene	17	10	ug/m³ Air	1	BE72302	22-May-07	22-May-07	EPA TO-15	
Dichlorodifluoromethane	ND	10	"	"	"	"	"	"	
Chloromethane	ND	5.0	"	"	"	"	"	"	
Dichlorotetrafluoromethane	ND	10	"	"	"	"	"	"	
Vinyl chloride	ND	5.0	"	"	"	"	"	"	
Bromomethane	ND	5.0	"	"	"	"	"	"	
Chloroethane	ND	5.0	"	"	"	"	"	"	
Trichlorofluoromethane	ND	5.0	"	"	"	"	"	"	
Acetone	120	20	"	"	"	"	"	"	
1,1-Dichloroethene	ND	5.0	"	"	"	"	"	"	
1,1,2-Trichlorotrifluoroethane	ND	10	"	"	"	"	"	"	
Methylene chloride	ND	5.0	"	"	"	"	"	"	
Carbon disulfide	5.8	5.0	"	"	"	"	"	"	
trans-1,2-Dichloroethene	ND	5.0	"	"	"	"	"	"	
Methyl tert-butyl ether	ND	5.0	"	"	"	"	"	"	
Vinyl acetate	ND	5.0	"	"	"	"	"	"	
1,1-Dichloroethane	ND	5.0	"	"	"	"	"	"	
2-Butanone	27	5.0	"	"	"	"	"	"	
n-Hexane	25	5.0	"	"	"	"	"	"	
cis-1,2-Dichloroethene	ND	5.0	"	"	"	"	"	"	
Ethyl acetate	ND	5.0	"	"	"	"	"	"	
Chloroform	ND	5.0	"	"	"	"	"	"	
Tetrahydrofuran	ND	5.0	"	"	"	"	"	"	
1,1,1-Trichloroethane	ND	5.0	"	"	"	"	"	"	
1,2-Dichloroethane	ND	5.0	"	"	"	"	"	"	
Benzene	15	5.0	"	"	"	"	"	"	
Carbon tetrachloride	ND	5.0	"	"	"	"	"	"	
Cyclohexane	ND	5.0	"	"	"	"	"	"	
n-Heptane	51	5.0	"	"	"	"	"	"	
Trichloroethene	ND	5.0	"	"	"	"	"	"	
1,2-Dichloropropane	ND	5.0	"	"	"	"	"	"	
1,4-Dioxane	ND	5.0	"	"	"	"	"	"	
Bromodichloromethane	ND	5.5	"	"	"	"	"	"	
cis-1,3-Dichloropropene	ND	5.0	"	"	"	"	"	"	
4-Methyl-2-pentanone	ND	5.0	"	"	"	"	"	"	
trans-1,3-Dichloropropene	ND	5.0	"	"	"	"	"	"	
Toluene	18	5.0	"	"	"	"	"	"	
1,1,2-Trichloroethane	ND	5.0	"	"	"	"	"	"	

MOBILE GEOCHEMISTRY
H&P

Bradburne, Briller & Johnson, LLC - Chicago	Project: BBJ051507-11	
515 N. State Street, Suite 2200	Project Number: 0253801	Reported:
Chicago, IL 60610	Project Manager: Mr. Kevin McCartney	24-May-07

Volatile Organic Compounds by EPA TO-15

H&P Mobile Geochemistry

Analyte	Result	Reporting Limit	Units	Dilution Factor	Batch	Prepared	Analyzed	Method	Notes
CDSG-1 (E705046-04) Vapor Sampled: 11-May-07 Received: 15-May-07									
2-Hexanone	ND	5.0	ug/m³ Air	1	EE72302	22-May-07	22-May-07	EPA TO-15	
Dibromochloromethane	ND	5.0	"	"	"	"	"	"	
Tetrachloroethene	16	5.0	"	"	"	"	"	"	
1,2-Dibromoethane (EDB)	ND	5.0	"	"	"	"	"	"	
Chlorobenzene	ND	5.0	"	"	"	"	"	"	
Ethylbenzene	6.6	5.0	"	"	"	"	"	"	
m,p-Xylene	15	5.0	"	"	"	"	"	"	
Styrene	ND	5.0	"	"	"	"	"	"	
o-Xylene	6.8	5.0	"	"	"	"	"	"	
Bromoform	ND	20	"	"	"	"	"	"	
1,1,2,2-Tetrachloroethane	ND	5.0	"	"	"	"	"	"	
4-Ethyltoluene	ND	5.0	"	"	"	"	"	"	
1,3,5-Trimethylbenzene	ND	5.0	"	"	"	"	"	"	
1,2,4-Trimethylbenzene	ND	5.0	"	"	"	"	"	"	
1,3-Dichlorobenzene	ND	10	"	"	"	"	"	"	
Benzyl chloride	ND	5.0	"	"	"	"	"	"	
1,4-Dichlorobenzene	ND	10	"	"	"	"	"	"	
1,2-Dichlorobenzene	ND	10	"	"	"	"	"	"	
1,2,4-Trichlorobenzene	ND	10	"	"	"	"	"	"	
Hexachlorobutadiene	ND	10	"	"	"	"	"	"	
Surrogate: 1,2-Dichloroethane-d4		*101 %*		*80-120*	"	"	"	"	
Surrogate: Toluene-d8		*98.0 %*		*80-120*	"	"	"	"	
Surrogate: 4-Bromofluorobenzene		*98.9 %*		*80-120*	"	"	"	"	
CDSG-2 (E705046-05) Vapor Sampled: 11-May-07 Received: 15-May-07									
Propene	1600	100	ug/m³ Air	10	EE72302	22-May-07	23-May-07	EPA TO-15	
Dichlorodifluoromethane	ND	10	"	1	"	"	22-May-07	"	
Chloromethane	34	5.0	"	"	"	"	"	"	
Dichlorotetrafluoroethane	ND	10	"	"	"	"	"	"	
Vinyl chloride	ND	5.0	"	"	"	"	"	"	
Bromomethane	ND	5.0	"	"	"	"	"	"	
Chloroethane	ND	5.0	"	"	"	"	"	"	
Trichlorofluoromethane	ND	5.0	"	"	"	"	"	"	
Acetone	620	20	"	"	"	"	"	"	
1,1-Dichloroethene	ND	5.0	"	"	"	"	"	"	
1,1,2-Trichlorotrifluoroethane	ND	10	"	"	"	"	"	"	
Methylene chloride	ND	5.0	"	"	"	"	"	"	

MOBILE GEOCHEMISTRY
H&P

Bradburne, Briller & Johnson, LLC - Chicago 515 N State Street, Suite 2200 Chicago, IL 60610	Project: BBJ051507-11 Project Number: 0253801 Project Manager: Mr Kevin McCartney	Reported: 24-May-07

Volatile Organic Compounds by EPA TO-15

H&P Mobile Geochemistry

Analyte	Result	Reporting Limit	Units	Dilution Factor	Batch	Prepared	Analyzed	Method	Notes
CDSG-2 (E705046-05) Vapor Sampled: 11-May-07 Received: 15-May-07									
Carbon disulfide	260	5.0	ug/m³ Air	1	EE72302	22-May-07	22-May-07	EPA TO-15	
trans-1,2-Dichloroethene	ND	5.0	"	"	"	"	"	"	
Methyl tert-butyl ether	ND	5.0	"	"	"	"	"	"	
Vinyl acetate	ND	5.0	"	"	"	"	"	"	
1,1-Dichloroethane	ND	5.0	"	"	"	"	"	"	
2-Butanone	160	5.0	"	"		"	"	"	
n-Hexane	180	5.0	"	"	"	"	"	"	
cis-1,2-Dichloroethene	0.4	5.0	"	"	"	"	"	"	
Ethyl acetate	ND	5.0	"	"	"	"	"	"	
Chloroform	ND	5.0	"	"	"	"	"	"	
Tetrahydrofuran	ND	5.0	"	"	"	"	"	"	
1,1,1-Trichloroethane	ND	5.0	"	"	"	"	"	"	
1,2-Dichloroethane	ND	5.0	"	"	"	"	"	"	
Benzene	330	5.0	"	"	"	"	"	"	
Carbon tetrachloride	ND	5.0	"	"	"	"	"	"	
Cyclohexane	89	5.0	"	"	"	"	"	"	
n-Heptane	86	5.0	"	"	"	"	"	"	
Trichloroethene	29	5.0	"	"	"	"	"	"	
1,2-Dichloropropane	ND	5.0	"	"	"	"	"	"	
1,4-Dioxane	ND	5.0	"	"	"	"	"	"	
Bromodichloromethane	ND	5.5	"	"	"	"	"	"	
cis-1,3-Dichloropropene	ND	5.0	"	"	"	"	"	"	
4-Methyl-2-pentanone	5.8	5.0	"	"	"	"	"	"	
trans-1,3-Dichloropropene	ND	5.0	"	"	"	"	"	"	
Toluene	78	5.0	"	"	"	"	"	"	
1,1,2-Trichloroethane	ND	5.0	"	"	"	"	"	"	
2-Hexanone	ND	5.0	"	"	"	"	"	"	
Dibromochloromethane	ND	5.0	"	"	"	"	"	"	
Tetrachloroethene	1500	25	"	5	"	"	23-May-07	"	
1,2-Dibromoethane (EDB)	ND	5.0	"	1	"	"	22-May-07	"	
Chlorobenzene	ND	5.0	"	"	"	"	"	"	
Ethylbenzene	13	5.0	"	"	"	"	"	"	
m,p-Xylene	28	5.0	"	"	"	"	"	"	
Styrene	ND	5.0	"	"	"	"	"	"	
o-Xylene	11	5.0	"	"	"	"	"	"	
Bromoform	ND	20	"	"	"	"	"	"	
1,1,2,2-Tetrachloroethane	ND	5.0	"	"	"	"	"	"	
4-Ethyltoluene	ND	5.0	"	"	"	"	"	"	

MOBILE GEOCHEMISTRY
H&P

Bradburne, Brillar & Johnson, LLC - Chicago 515 N. State Street, Suite 2200 Chicago, IL 60610	Project: BBJ051507-11 Project Number: 0253801 Project Manager: Mr. Kevin McCartney	Reported: 24-May-07

Volatile Organic Compounds by EPA TO-15

H&P Mobile Geochemistry

Analyte	Result	Reporting Limit	Units	Dilution Factor	Batch	Prepared	Analyzed	Method	Notes
CDSG-2 (E705046-05) Vapor Sampled: 11-May-07 Received: 15-May-07									
1,3,5-Trimethylbenzene	ND	5.0	ug/m³ Air	1	EE72302	22-May-07	22-May-07	EPA TO-15	
1,2,4-Trimethylbenzene	12	5.0	"	"	"	"	"	"	
1,3-Dichlorobenzene	ND	10	"	"	"	"	"	"	
Benzyl chloride	ND	5.0	"	"	"	"	"	"	
1,4-Dichlorobenzene	ND	10	"	"	"	"	"	"	
1,2-Dichlorobenzene	ND	10	"	"	"	"	"	"	
1,2,4-Trichlorobenzene	ND	10	"	"	"	"	"	"	
Hexachlorobutadiene	ND	10	"	"	"	"	"	"	
Surrogate: 1,2-Dichloroethane-d4		*109 %*		*80-120*		"	"	"	
Surrogate: Toluene-d8		*96.5 %*		*80-120*		"	"	"	
Surrogate: 4-Bromofluorobenzene		*103 %*		*80-120*		"	"	"	
CDSG-3 (E705046-06) Vapor Sampled: 11-May-07 Received: 15-May-07									
Propene	1500	10	ug/m³ Air	1	EE72302	22-May-07	22-May-07	EPA TO-15	E
Dichlorodifluoromethane	ND	10	"	"	"	"	"	"	
Chloromethane	ND	5.0	"	"	"	"	"	"	
Dichlorotetrafluoroethane	ND	10	"	"	"	"	"	"	
Vinyl chloride	110	5.0	"	"	"	"	"	"	
Bromomethane	ND	5.0	"	"	"	"	"	"	
Chloroethane	ND	5.0	"	"	"	"	"	"	
Trichlorofluoromethane	ND	5.0	"	"	"	"	"	"	
Acetone	250	20	"	"	"	"	"	"	
1,1-Dichloroethene	ND	5.0	"	"	"	"	"	"	
1,1,2-Trichlorotrifluoroethane	ND	10	"	"	"	"	"	"	
Methylene chloride	ND	5.0	"	"	"	"	"	"	
Carbon disulfide	ND	5.0	"	"	"	"	"	"	
trans-1,2-Dichloroethene	ND	5.0	"	"	"	"	"	"	
Methyl tert-butyl ether	ND	5.0	"	"	"	"	"	"	
Vinyl acetate	ND	5.0	"	"	"	"	"	"	
1,1-Dichloroethane	6.1	5.0	"	"	"	"	"	"	
2-Butanone	68	5.0	"	"	"	"	"	"	
n-Hexane	240	5.0	"	"	"	"	"	"	
cis-1,2-Dichloroethene	30	5.0	"	"	"	"	"	"	
Ethyl acetate	ND	5.0	"	"	"	"	"	"	
Chloroform	ND	5.0	"	"	"	"	"	"	
Tetrahydrofuran	ND	5.0	"	"	"	"	"	"	
1,1,1-Trichloroethane	ND	5.0	"	"	"	"	"	"	

MOBILE GEOCHEMISTRY
H&P

Bradburne, Briller & Johnson, LLC - Chicago 515 N State Street, Suite 2200 Chicago, IL 60610	Project: BBJ051507-11 Project Number: 0253801 Project Manager: Mr Kevin McCartney	Reported 24-May-07

Volatile Organic Compounds by EPA TO-15

H&P Mobile Geochemistry

Analyte	Result	Reporting Limit	Units	Dilution Factor	Batch	Prepared	Analyzed	Method	Notes
CDSG-3 (E705046-06) Vapor Sampled: 11-May-07 Received: 15-May-07									
1,2-Dichloroethane	ND	5.0	ug/m³ Air	1	EE72302	22-May-07	22-May-07	EPA TO-15	
Benzene	58	5.0	"	"	"	"	"	"	
Carbon tetrachloride	ND	5.0	"	"	"	"	"	"	
Cyclohexane	270	5.0	"	"	"	"	"	"	
n-Heptane	74	5.0	"	"	"	"	"	"	
Trichloroethene	11	5.0	"	"	"	"	"	"	
1,2-Dichloropropane	ND	5.0	"	"	"	"	"	"	
1,4-Dioxane	ND	5.0	"	"	"	"	"	"	
Bromodichloromethane	ND	5.5	"	"	"	"	"	"	
cis-1,3-Dichloropropene	ND	5.0	"	"	"	"	"	"	
4-Methyl-2-pentanone	16	5.0	"	"	"	"	"	"	
trans-1,3-Dichloropropene	ND	5.0	"	"	"	"	"	"	
Toluene	49	5.0	"	"	"	"	"	"	
1,1,2-Trichloroethane	ND	5.0	"	"	"	"	"	"	
2-Hexanone	ND	5.0	"	"	"	"	"	"	
Dibromochloromethane	ND	5.0	"	"	"	"	"	"	
Tetrachloroethene	12	5.0	"	"	"	"	"	"	
1,2-Dibromoethane (EDB)	ND	5.0	"	"	"	"	"	"	
Chlorobenzene	ND	5.0	"	"	"	"	"	"	
Ethylbenzene	9.5	5.0	"	"	"	"	"	"	
m,p-Xylene	18	5.0	"	"	"	"	"	"	
Styrene	ND	5.0	"	"	"	"	"	"	
o-Xylene	12	5.0	"	"	"	"	"	"	
Bromoform	ND	20	"	"	"	"	"	"	
1,1,2,2-Tetrachloroethane	ND	5.0	"	"	"	"	"	"	
4-Ethyltoluene	ND	5.0	"	"	"	"	"	"	
1,3,5-Trimethylbenzene	ND	5.0	"	"	"	"	"	"	
1,2,4-Trimethylbenzene	ND	5.0	"	"	"	"	"	"	
1,3-Dichlorobenzene	ND	10	"	"	"	"	"	"	
Benzyl chloride	ND	5.0	"	"	"	"	"	"	
1,4-Dichlorobenzene	ND	10	"	"	"	"	"	"	
1,2-Dichlorobenzene	ND	10	"	"	"	"	"	"	
1,2,4-Trichlorobenzene	ND	10	"	"	"	"	"	"	
Hexachlorobutadiene	ND	10	"	"	"	"	"	"	
Surrogate: 1,2-Dichloroethane-d4		*101 %*		*80-120*	"	"	"	"	
Surrogate: Toluene-d8		*104 %*		*80-120*	"	"	"	"	
Surrogate: 4-Bromofluorobenzene		*100 %*		*80-120*	"	"	"	"	

MOBILE GEOCHEMISTRY
H&P

Bradburne, Briller & Johnson, LLC - Chicago	Project: BBJ051507-11	
515 N. State Street, Suite 2200	Project Number: 0253801	Reported:
Chicago, IL 60610	Project Manager: Mr. Kevin McCartney	24-May-07

Methane by GC/FID - Quality Control

H&P Mobile Geochemistry

Analyte	Results	Reporting Limit	Units	Spike Level	Source Result	%REC	%REC Limits	RPD	RPD Limit	Notes
Batch EE71506 - GC										
Blank (EE71506-BLK1)				Prepared & Analyzed: 15-May-07						
Methane	ND	10	ppmv							

MOBILE GEOCHEMISTRY
H&P

Bradburne, Briller & Johnson, LLC - Chicago 515 N State Street, Suite 2200 Chicago, IL 60610	Project: BBJ051507-11 Project Number: 0253801 Project Manager: Mr Kevin McCartney	Reported 24-May-07

Volatile Organic Compounds by EPA TO-15 - Quality Control

H&P Mobile Geochemistry

Analyte	Result	Reporting Limit	Units	Spike Level	Source Result	%REC	%REC Limits	RPD	RPD Limit	Notes
Batch EE72302 - TO-15										
Blank (EE72302-BLK1)				Prepared & Analyzed: 22-May-07						
Propane	ND	10	ug/m³ Air							
Dichlorodifluoromethane	ND	10	"							
Chloromethane	ND	5.0	"							
Dichlorotetrafluoroethane	ND	10	"							
Vinyl chloride	ND	5.0	"							
Bromomethane	ND	5.0	"							
Chloroethane	ND	5.0	"							
Trichlorofluoromethane	ND	5.0	"							
Acetone	ND	20	"							
1,1-Dichloroethene	ND	5.0	"							
1,1,2-Trichlorotrifluoroethane	ND	10	"							
Methylene chloride	ND	5.0	"							
Carbon disulfide	ND	5.0	"							
trans-1,2-Dichloroethene	ND	5.0	"							
Methyl tert-butyl ether	ND	5.0	"							
Vinyl acetate	ND	5.0	"							
1,1-Dichloroethane	ND	5.0	"							
2-Butanone	ND	5.0	"							
n-Hexane	ND	5.0	"							
cis-1,2-Dichloroethene	ND	5.0	"							
Ethyl acetate	ND	5.0	"							
Chloroform	ND	5.0	"							
Tetrahydrofuran	ND	5.0	"							
1,1,1-Trichloroethane	ND	5.0	"							
1,2-Dichloroethane	ND	5.0	"							
Benzene	ND	5.0	"							
Carbon tetrachloride	ND	5.0	"							
Cyclohexane	ND	5.0	"							
n-Heptane	ND	5.0	"							
Trichloroethene	ND	5.0	"							
1,2-Dichloropropane	ND	5.0	"							
1,4-Dioxane	ND	5.0	"							
Bromodichloromethane	ND	5.5	"							
cis-1,3-Dichloropropene	ND	5.0	"							

MOBILE GEOCHEMISTRY
H&P

Bradburne, Briller & Johnson, LLC - Chicago	Project: BBJ051507-11	
515 N. State Street, Suite 2200	Project Number: 0253801	Reported:
Chicago, IL 60610	Project Manager: Mr. Kevin McCartney	24-May-07

Volatile Organic Compounds by EPA TO-15 - Quality Control

H&P Mobile Geochemistry

Analyte	Result	Reporting Limit	Units	Spike Level	Source Result	%REC	%REC Limits	RPD	RPD Limit	Notes
Batch EE72302 - TO-15										
Blank (EE72302-BLK1)				Prepared & Analyzed: 22-May-07						
4-Methyl-2-pentanone	ND	5.0	ug/m³ Air							
trans-1,3-Dichloropropene	ND	5.0	"							
Toluene	ND	5.0	"							
1,1,2-Trichloroethane	ND	5.0	"							
2-Hexanone	ND	5.0	"							
Dibromochloromethane	ND	5.0	"							
Tetrachloroethene	ND	5.0	"							
1,2-Dibromoethane (EDB)	ND	5.0	"							
Chlorobenzene	ND	5.0	"							
Ethylbenzene	ND	5.0	"							
m,p-Xylene	ND	5.0	"							
Styrene	ND	5.0	"							
o-Xylene	ND	5.0	"							
Bromoform	ND	20	"							
1,1,2,2-Tetrachloroethane	ND	5.0	"							
4-Ethyltoluene	ND	5.0	"							
1,3,5-Trimethylbenzene	ND	5.0	"							
1,2,4-Trimethylbenzene	ND	5.0	"							
1,3-Dichlorobenzene	ND	10	"							
Benzyl chloride	ND	5.0	"							
1,4-Dichlorobenzene	ND	10	"							
1,2-Dichlorobenzene	ND	10	"							
1,2,4-Trichlorobenzene	ND	10	"							
Hexachlorobutadiene	ND	10	"							
Surrogate: 1,2-Dichloroethane-d4	*110*		"	*103*		*107*	*80-120*			
Surrogate: Toluene-d8	*98.3*		"	*96.2*		*102*	*80-120*			
Surrogate: 4-Bromofluorobenzene	*173*		"	*182*		*95.1*	*80-120*			

MOBILE GEOCHEMISTRY
H&P

Bradburne, Briller & Johnson, LLC - Chicago 515 N State Street, Suite 2200 Chicago, IL 60610	Project: BBJ051507-11 Project Number: 0253801 Project Manager: Mr Kevin McCarney	Reported 24-May-07

Volatile Organic Compounds by EPA TO-15 - Quality Control

H&P Mobile Geochemistry

Analyte	Result	Reporting Limit	Units	Spike Level	Source Result	%REC	%REC Limits	RPD	RPD Limit	Notes
Batch EE72302 - TO-15										
LCS (EE72302-BS1)				Prepared & Analyzed: 22-May-07						
Propene	36.3	10	ug/m³ Air	35.0		104	65-135			
Dichlorodifluoromethane	115	10	"	101		114	65-135			
Chloromethane	46.9	5.0	"	42.0		112	65-135			
Dichlorotetrafluoroethane	159	10	"	142		112	65-135			
Vinyl chloride	59.8	5.0	"	52.0		115	65-135			
Bromomethane	87.6	5.0	"	79.2		111	65-135			
Chloroethane	61.5	5.0	"	53.6		115	65-135			
Trichlorofluoromethane	141	5.0	"	113		125	65-135			
Acetone	57.5	20	"	48.4		119	65-135			
1,1-Dichloroethene	81.5	5.0	"	80.8		101	65-135			
1,1,2-Trichlorotrifluoromethane	143	10	"	155		92.3	65-135			
Methylene chloride	68.4	5.0	"	70.8		96.6	65-135			
Carbon disulfide	67.3	5.0	"	63.2		106	65-135			
trans-1,2-Dichloroethene	81.5	5.0	"	80.8		101	65-135			
Methyl tert-butyl ether	73.2	5.0	"	73.6		99.5	65-135			
Vinyl acetate	74.3	5.0	"	72.0		103	65-135			
1,1-Dichloroethane	81.5	5.0	"	82.4		98.9	65-135			
2-Butanone	64.0	5.0	"	60.0		107	65-135			
n-Hexane	78.7	5.0	"	72.0		107	65-135			
cis-1,2-Dichloroethene	78.8	5.0	"	80.0		98.5	65-135			
Ethyl acetate	53.2	5.0	"	73.6		72.3	65-135			
Chloroform	97.0	5.0	"	99.2		97.8	65-135			
Tetrahydrofuran	57.6	5.0	"	60.0		96.0	65-135			
1,1,1-Trichloroethane	105	5.0	"	111		94.6	65-135			
1,2-Dichloroethane	80.4	5.0	"	82.4		97.6	65-135			
Benzene	63.1	5.0	"	64.8		97.4	65-135			
Carbon tetrachloride	120	5.0	"	128		93.8	65-135			
Cyclohexane	73.7	5.0	"	70.4		105	65-135			
n-Heptane	85.1	5.0	"	83.6		102	65-135			
Trichloroethene	103	5.0	"	110		93.6	65-135			
1,2-Dichloropropane	90.5	5.0	"	94.4		95.9	65-135			
1,4-Dioxane	70.3	5.0	"	73.6		95.5	65-135			
Bromodichloromethane	126	5.5	"	137		92.0	65-135			
cis-1,3-Dichloropropene	80.5	5.0	"	92.4		87.1	65-135			

MOBILE GEOCHEMISTRY
H&P

Bradburne, Briller & Johnson, LLC - Chicago 515 N. State Street, Suite 2200 Chicago, IL 60610	Project: BBJ051507-11 Project Number: 0253801 Project Manager: Mr. Kevin McCartney	Reported: 24-May-07

Volatile Organic Compounds by EPA TO-15 - Quality Control

H&P Mobile Geochemistry

Analyte	Result	Reporting Limit	Units	Spike Level	Source Result	%REC	%REC Limits	RPD	RPD Limit	Notes
Batch EE72302 - TO-15										
LCS (EE72302-BS1)				Prepared & Analyzed: 22-May-07						
4-Methyl-2-pentanone	82.6	5.0	ug/m³ Air	83.2		99.3	65-135			
trans-1,3-Dichloropropene	79.1	5.0	"	92.4		85.6	65-135			
Toluene	69.4	5.0	"	76.8		90.4	65-135			
1,1,2-Trichloroethane	97.9	5.0	"	111		88.2	65-135			
2-Hexanone	77.6	5.0	"	83.2		93.3	65-135			
Dibromochloromethane	161	5.0	"	174		92.5	65-135			
Tetrachloroethene	115	5.0	"	138		83.3	65-135			
1,2-Dibromoethane (EDB)	128	5.0	"	157		81.5	65-135			
Chlorobenzene	76.5	5.0	"	93.6		81.7	65-135			
Ethylbenzene	71.8	5.0	"	88.4		81.2	65-135			
m,p-Xylene	141	5.0	"	177		79.7	65-135			
Styrene	64.7	5.0	"	86.8		74.5	65-135			
o-Xylene	67.4	5.0	"	88.4		76.2	65-135			
Bromoform	736	20	"	840		87.6	65-135			
1,1,2,2-Tetrachloroethane	83.6	5.0	"	140		59.7	65-135			QL-1L
4-Ethyltoluene	93.9	5.0	"	100		93.9	65-135			
1,3,5-Trimethylbenzene	68.6	5.0	"	100		68.6	65-135			
1,2,4-Trimethylbenzene	65.1	5.0	"	100		65.1	65-135			
1,3-Dichlorobenzene	73.1	10	"	122		59.9	65-135			QL-1L
Benzyl chloride	81.9	5.0	"	105		78.0	65-135			
1,4-Dichlorobenzene	68.6	10	"	122		56.2	65-135			QL-1L
1,2-Dichlorobenzene	61.7	10	"	122		50.6	65-135			QL-1L
1,2,4-Trichlorobenzene	39.6	10	"	151		26.2	65-135			QL-1L
Hexachlorobutadiene	81.2	10	"	218		37.2	65-135			QL-1L
Surrogate: 1,3-Dichloroethane-d4	*106*		"	*103*		*103*	*80-120*			
Surrogate: Toluene-d8	*98.2*		"	*96.2*		*102*	*80-120*			
Surrogate: 4-Bromofluorobenzene	*189*		"	*182*		*104*	*80-120*			

MOBILE GEOCHEMISTRY
H&P

Bradburne, Briller & Johnson, LLC - Chicago	Project BBJ051507-11	
515 N State Street, Suite 2200	Project Number 0253801	Reported
Chicago, IL 60610	Project Manager Mr Kevin McCartney	24-May-07

Notes and Definitions

QL-1L	The LCS and/or LCSD recoveries fell below the established control specifications for this analyte. Any result for this compound is qualified and should be considered an estimate only
E	The concentration indicated for this analyte is an estimated value above the calibration range of the instrument. This value is considered an estimate (CLP E-flag).
DET	Analyte DETECTED
ND	Analyte NOT DETECTED at or above the reporting limit
NR	Not Reported
dry	Sample results reported on a dry weight basis
RPD	Relative Percent Difference

MOBILE GEOCHEMISTRY

H&P

Chain of Custody Record

☑ 2470 Impala Dr., Carlsbad, CA 92010 · ph 760.804.9678 · fax 760.804.9159
☐ 3825 Industry Avenue, Lakewood, CA 90712 · ph 562.426.6991 · fax 562.426.6995

Date: 5/11/2007
H&P Project #: BBJ051507-11
Outside Lab:

Client: BB&J
Address: 515 N. State Street, Suite 2200
Chicago IL 60610
Email: kmcartney@bbjgroup.com Phone: 312-644-8556

Collector: Kevin McCartney
Client Project #: PN7-0109
Location: Lyons, IL 0253901, 0253801
Fax: 312-644-8555

Page: 1 of 1
Project Contact: Kevin McCartney
Turn around time: Normal

EDF: Yes ☐ No ☐
Global ID:

Sample Receipt
Intact: ☒ Yes ☐ No
Seal Intact: ☐ Yes ☐ No ☒ N/A
Cold: ☐ Yes ☒ No
N/A (Received on Site)

Special Instructions:
Samples renamed per clients instructions. AM 5/24/07

Sample Name	Field Point Name	Purge Vol	Time	Date	Sample Type	Container Type	TPH ☐ gasoline ☐ diesel ☐ ext	418.1 TRPH	8021 for BTEX/MTBE	8260B: BTEX / Oxygenates	8260B: TPH gas	8260B: VOC's	8260B: DTSC/LAR/WQCB	8260B: Ketones	TO-15: Full List	TO-15: BTEX/MTBE	LCC (specify)	Naphthalene ☐ 8260B ☐ TO-15	Methane	Fixed Gases ☐ CO2 ☐ O2 ☐ N2				Total # of containers
SG-1	→ SG-16		200	5/11/07	Vapor	6L Can									✓				✓					
SG-2	→ SG-17		145												✓				✓					
SG-3	→ SG-18		135												✓				✓					
SG-4	→ CDSG-1		105												✓				✓					
SG-5	→ CDSG-2		120												✓				✓					
SG-6	→ CDSG-3		1245												✓				✓					

Relinquished by: (Signature)	(company)	Received by: (Signature)	(company)	Date:	Time:
[signature]	BBJ	[signature] via UPS	H&P	5/16/07	10:30
Relinquished by: (Signature)	(company)	Received by: (Signature)	(company)	Date:	Time:
Relinquished by: (Signature)	(company)	Received by: (Signature)	(company)	Date:	Time:

*Signature constitutes authorization to proceed with analysis and acceptance of condition on back.

Sample disposal instruction: ☐ Disposal @ $2.00 each ☐ Return to client ☐ Pickup

printed 09/18/2007 4:52PM by epa4561 p. 297/439

MOBILE GEOCHEMISTRY

H&P

☑ 2470 Impala Dr., Carlsbad, CA 92010 • ph 760.804.9678 • fax 760.804.9159
☐ 3825 Industry Avenue, Lakewood, CA 90712 • ph 562.426.6991 • fax 562.426.6995

Chain of Custody Record

Date: 5/11/2007
H&P Project #: BBJ051507-11
Outside Lab:

Client: BBJ + J
Address: 515 N. State Street, Suite 2200, Chicago IL 60610
Email: kmcarthy@bbjgroup.com Phone: 312-644-8556

Collector: Kevin McCarthy
Client Project #: PNT-0109
Location: Lyons, IL
Fax: 312-644-8585

Page: 1 of 1
Project Contact: Kevin McCarthy
Turn around time: Normal

EDF: Yes ☐ No ☐
Global ID:

Sample Receipt
Intact: ☑ Yes ☐ No
Seal Intact: ☐ Yes ☐ No ☑ N/A
Cold: ☐ Yes ☑ No
N/A (Received on Site)

Special Instructions:

DO NOT REPORT 1,3 BUTADIENE KM 5/14.

Sample Name	Field Point Name	Purge Vol	Time	Date	Sample Type	Container Type	TPH ☐ gasoline ☐ diesel ☐ oil	418.1 TRPH	8021 for BTEX/MTBE	8260B: BTEX / Oxygenates	TPH gas	VOC's	DTSC/LARWQCB	Ketones	TO-15: Full List	BTEX/MTBE	LCC (specify)	Naphthalene ☐ 8260B ☐ TO-15	Methane	Fixed Gases ☐ CO_2 ☐ O_2 ☐ N_2				Total # of containers
SG-1			200	5/11/07	Vapor	400ml									✓				✓					
SG-2			1445												✓				✓					
SG-3			135												✓				✓					
SG-4			105												✓				✓					
SG-5			120												✓				✓					
SG-6			1245												✓				✓					

Relinquished by: (Signature)	(company)	Received by: (Signature)	(company)	Date	Time
[signature]	BBJ	[signature] via UPS	H&P	5/16/07	10:30
Relinquished by: (Signature)	(company)	Received by: (Signature)	(company)	Date:	Time
Relinquished by: (Signature)	(company)	Received by: (Signature)	(company)	Date:	Time

*Signature constitutes authorization to proceed with analysis and acceptance of condition on back.

Sample disposal instructions: ☐ Disposal @ $2.00 each ☐ Return to client ☐ Pickup

printed 09/18/2007 4:52PM by epa4561 p. 298/439

First Environmental Laboratories, Inc.
IL ELAP / NELAC Accreditation # 100292
1600 Shore Road • Naperville, Illinois 60563 • Phone (630) 778-1200 • Fax (630) 778-1233

May 24, 2007

Mr. Kevin McCartney
BRADBURNE, BRILLER & JOHNSON
515 N. State Street
Suite 2200
Chicago, IL 60610

Project ID: Lyons, IL
First Environmental File ID: 7-2142
Date Received: May 15, 2007

Dear Mr. Kevin McCartney:

The above referenced project was analyzed as directed on the enclosed chain of custody record.

All analyses were performed in accordance with established methods and within established holding times. All Quality Control criteria as outlined in the methods and current IL ELAP/NELAP have been met unless otherwise noted. QA/QC documentation and raw data will remain on file for future reference. Our accreditation number is 100292 and our current certificate is number 001728: effective 04/13/07 through 02/28/08.

I thank you for the opportunity to be of service to you and look forward to working with you again in the future. Should you have any questions regarding any of the enclosed analytical data or need additional information, please contact me at (630) 778-1200.

Sincerely,

Stan Zawoński
Project Manager

First Environmental Laboratories, Inc.

IL ELAP / NELAC Accreditation # 100292

1600 Shore Road • Naperville, Illinois 60563 • Phone (630) 778-1200 • Fax (630) 778-1233

Case Narrative

BRADBURNE, BRILLER & JOHNSON

Project ID: **Lyons, IL**

First Environmental File ID: **7-2142**

Date Received: **May 15, 2007**

Flag	Description	Flag	Description
<	Analyte not detected at or above the reporting limit.	L+	LCS recovery outside control limits; high bias.
B	Analyte detected in associated method blank.	L-	LCS recovery outside control limits, low bias
C	Identification confirmed by GC/MS	M	MS recovery outside control limits; LCS acceptable
D	Surrogates diluted out; recovery not available	M+	MS recovery outside control limits high bias; LCS acceptable
E	Estimated result; concentration exceeds calibration range.	M-	MS recovery outside control limits low bias; LCS acceptable.
F	Field measurement.	N	Analyte is not part of our NELAC accreditation.
		ND	Analyte was not detected using a library search routine; No calibration standard was analyzed.
G	Surrogate recovery outside control limits; matrix effect.	P	Chemical preservation pH adjusted in lab.
H	Analysis holding time exceeded	Q	The analyte was determined by a GC/MS database search
J	Estimated result; concentration is less than calib range.	S	Analyte was sub-contracted to another laboratory for analysis
K	RPD outside control limits.	T	Sample temperature upon receipt exceeded 0-6°C
RL	Routine Reporting Limit (Lowest amount that can be detected when routine weights/volumes are used without dilution.)	W	Reporting limit elevated due to sample matrix.

All quality control criteria, as outlined in the methods, have been met except as noted below or on the following analytical report.

Sample Batch Comments:

Sample acceptance criteria were met.

Method Comments

Lab Number	Sample ID	Comments:
7-2142-002	SB-7 (6.5-7)	*Semi-Volatile Compounds* The reporting limits are elevated due to matrix interference.
7-2142-002	SB-7 (6.5-7)	*Volatile Organic Compounds* The reporting limits are elevated due to matrix interference.
7-2142-003	SB-7 (48.5-60)	*Semi-Volatile Compounds* The reporting limits are elevated due to matrix interference.
7-2142-003	SB-7 (48.5-60)	*Volatile Organic Compounds* The reporting limits are elevated due to matrix interference.

First Environmental Laboratories, Inc.
IL ELAP / NELAC Accreditation # 100292
1600 Shore Road • Naperville, Illinois 60563 • Phone (630) 778-1200 • Fax (630) 778-1233

Analytical Report

Client: BRADBURNE, BRILLER & JOHNSON
Project ID: Lyons, IL
Sample ID: SB-7 (1-2.5)
Sample No: 7-2142-001

Date Collected: 05/15/07
Time Collected: 9:00
Date Received: 05/15/07
Date Reported: 05/24/07

Results are reported on a dry weight basis.

Analyte	Result	R.L.	Units	Flags
Solids, Total Method: 160.3				
Analysis Date: 05/18/07				
Total Solids	91.51		%	
Volatile Organic Compounds Method: 5035A/8260B				
Analysis Date: 05/21/07				
Acetone	< 100	100	ug/kg	
Benzene	< 5.0	5.0	ug/kg	
Bromodichloromethane	< 5.0	5.0	ug/kg	
Bromoform	< 5.0	5.0	ug/kg	
Bromomethane	< 10.0	10.0	ug/kg	
2-Butanone (MEK)	< 10.0	10.0	ug/kg	
Carbon disulfide	< 5.0	5.0	ug/kg	
Carbon tetrachloride	< 5.0	5.0	ug/kg	
Chlorobenzene	< 5.0	5.0	ug/kg	
Chlorodibromomethane	< 5.0	5.0	ug/kg	
Chloroethane	< 10.0	10.0	ug/kg	
Chloroform	< 5.0	5.0	ug/kg	
Chloromethane	< 10.0	10.0	ug/kg	
1,1-Dichloroethane	< 5.0	5.0	ug/kg	
1,2-Dichloroethane	< 5.0	5.0	ug/kg	
1,1-Dichloroethene	< 5.0	5.0	ug/kg	
cis-1,2-Dichloroethene	< 5.0	5.0	ug/kg	
trans-1,2-Dichloroethene	< 5.0	5.0	ug/kg	
1,2-Dichloropropane	< 5.0	5.0	ug/kg	
cis-1,3-Dichloropropene	< 5.0	5.0	ug/kg	
trans-1,3-Dichloropropene	< 5.0	5.0	ug/kg	
Ethylbenzene	< 5.0	5.0	ug/kg	
2-Hexanone	< 10.0	10.0	ug/kg	
Methyl-tert-butylether (MTBE)	< 5.0	5.0	ug/kg	
4-Methyl-2-pentanone (MIBK)	< 10.0	10.0	ug/kg	
Methylene chloride	< 5.0	5.0	ug/kg	
Styrene	< 5.0	5.0	ug/kg	
1,1,2,2-Tetrachloroethane	< 5.0	5.0	ug/kg	
Tetrachloroethene	< 5.0	5.0	ug/kg	
Toluene	< 5.0	5.0	ug/kg	
1,1,1-Trichloroethane	< 5.0	5.0	ug/kg	
1,1,2-Trichloroethane	< 5.0	5.0	ug/kg	
Trichloroethene	< 5.0	5.0	ug/kg	

First Environmental Laboratories, Inc.
IL ELAP / NELAC Accreditation # 100292
1600 Shore Road • Naperville, Illinois 60563 • Phone (630) 778-1200 • Fax (630) 778-1233

Analytical Report

Client: BRADBURNE, BRILLER & JOHNSON
Project ID: Lyons, IL
Sample ID: SB-7 (1-2.5)
Sample No: 7-2142-001

Date Collected: 05/15/07
Time Collected: 9:00
Date Received: 05/15/07
Date Reported: 05/24/07

Results are reported on a dry weight basis.

Analyte	Result	R.L.	Units	Flags
Volatile Organic Compounds Analysis Date: 05/21/07	**Method: 5035A/8260B**			
Vinyl acetate	< 10.0	10.0	ug/kg	
Vinyl chloride	< 10.0	10.0	ug/kg	
Xylene, Total	< 5.0	5.0	ug/kg	
Semi-Volatile Compounds Analysis Date: 05/18/07	**Method: 8270C**	**Preparation Method 3540C** Preparation Date: 05/17/07		
Acenaphthene	< 330	330	ug/kg	
Acenaphthylene	< 330	330	ug/kg	
Anthracene	< 330	330	ug/kg	
Benzidine	< 330	330	ug/kg	
Benzo(a)anthracene	464	330	ug/kg	
Benzo(a)pyrene	413	90	ug/kg	
Benzo(b)fluoranthene	411	330	ug/kg	
Benzo(k)fluoranthene	388	330	ug/kg	
Benzo(ghi)perylene	< 330	330	ug/kg	
Benzoic acid	< 330	330	ug/kg	
Benzyl alcohol	< 330	330	ug/kg	
bis(2-Chloroethoxy)methane	< 330	330	ug/kg	
bis(2-Chloroethyl)ether	< 330	330	ug/kg	
bis(2-Chloroisopropyl)ether	< 330	330	ug/kg	
bis(2-Ethylhexyl)phthalate	< 330	330	ug/kg	
4-Bromophenyl phenyl ether	< 330	330	ug/kg	
Butyl benzyl phthalate	< 330	330	ug/kg	
Carbazole	< 330	330	ug/kg	
4-Chloroaniline	< 330	330	ug/kg	
4-Chloro-3-methylphenol	< 330	330	ug/kg	
2-Chloronaphthalene	< 330	330	ug/kg	
2-Chlorophenol	< 330	330	ug/kg	
4-Chlorophenyl phenyl ether	< 330	330	ug/kg	
Chrysene	479	330	ug/kg	
Di-n-butyl phthalate	< 330	330	ug/kg	
Di-n-octylphthalate	< 330	330	ug/kg	
Dibenzo(a,h)anthracene	< 90	90	ug/kg	
Dibenzofuran	< 330	330	ug/kg	
1,2-Dichlorobenzene	< 330	330	ug/kg	
1,3-Dichlorobenzene	< 330	330	ug/kg	
1,4-Dichlorobenzene	< 330	330	ug/kg	

First Environmental Laboratories, Inc.
IL ELAP / NELAC Accreditation # 100292
1600 Shore Road • Naperville, Illinois 60563 • Phone (630) 778-1200 • Fax (630) 778-1233

Analytical Report

Client: BRADBURNE, BRILLER & JOHNSON
Project ID: Lyons, IL
Sample ID: SB-7 (1-2.5)
Sample No: 7-2142-001

Date Collected: 05/15/07
Time Collected: 9:00
Date Received: 05/15/07
Date Reported: 05/24/07

Results are reported on a dry weight basis.

Analyte	Result	R.L.	Units	Flags
Semi-Volatile Compounds **Method: 8270C** Analysis Date: 05/18/07		**Preparation Method 3540C** Preparation Date: 05/17/07		
3,3'-Dichlorobenzidine	< 660	660	ug/kg	
2,4-Dichlorophenol	< 330	330	ug/kg	
Diethyl phthalate	< 330	330	ug/kg	
2,4-Dimethylphenol	< 330	330	ug/kg	
Dimethyl phthalate	< 330	330	ug/kg	
4,6-Dinitro-2-methylphenol	< 1,600	1600	ug/kg	
2,4-Dinitrophenol	< 1,600	1600	ug/kg	
2,4-Dinitrotoluene	< 250	250	ug/kg	
2,6-Dinitrotoluene	< 260	260	ug/kg	
Fluoranthene	1,110	330	ug/kg	
Fluorene	< 330	330	ug/kg	
Hexachlorobenzene	< 330	330	ug/kg	
Hexachlorobutadiene	< 330	330	ug/kg	
Hexachlorocyclopentadiene	< 330	330	ug/kg	
Hexachloroethane	< 330	330	ug/kg	
Indeno(1,2,3-cd)pyrene	< 330	330	ug/kg	
Isophorone	< 330	330	ug/kg	
2-Methylnaphthalene	< 330	330	ug/kg	
2-Methylphenol	< 330	330	ug/kg	
3 & 4-Methylphenol	< 330	330	ug/kg	
Naphthalene	< 330	330	ug/kg	
2-Nitroaniline	< 1,600	1600	ug/kg	
3-Nitroaniline	< 1,600	1600	ug/kg	
4-Nitroaniline	< 1,600	1600	ug/kg	
Nitrobenzene	< 260	260	ug/kg	
2-Nitrophenol	< 1,600	1600	ug/kg	
4-Nitrophenol	< 1,600	1600	ug/kg	
n-Nitrosodi-n-propylamine	< 330	330	ug/kg	
n-Nitrosodimethylamine	< 330	330	ug/kg	
n-Nitrosodiphenylamine	< 330	330	ug/kg	
Pentachlorophenol	< 330	330	ug/kg	
Phenanthrene	774	330	ug/kg	
Phenol	< 330	330	ug/kg	
Pyrene	895	330	ug/kg	
Pyridine	< 330	330	ug/kg	
1,2,4-Trichlorobenzene	< 330	330	ug/kg	

First Environmental Laboratories, Inc.
IL ELAP / NELAC Accreditation # 100292
1600 Shore Road • Naperville, Illinois 60563 • Phone (630) 778-1200 • Fax (630) 778-1233

Analytical Report

Client:	BRADBURNE, BRILLER & JOHNSON	**Date Collected:**	05/15/07
Project ID:	Lyons, IL	**Time Collected:**	9:00
Sample ID:	SB-7 (1-2.5)	**Date Received:**	05/15/07
Sample No:	7-2142-001	**Date Reported:**	05/24/07

Results are reported on a dry weight basis.

Analyte	Result	R.L.	Units	Flags
Semi-Volatile Compounds Analysis Date: 05/18/07	**Method: 8270C**	**Preparation Method 3540C** Preparation Date: 05/17/07		
2,4,5-Trichlorophenol	< 330	330	ug/kg	
2,4,6-Trichlorophenol	< 330	330	ug/kg	
Pesticides/PCBs Analysis Date: 05/23/07	**Method: 8081A/8082**	**Preparation Method 3540C** Preparation Date: 05/18/07		
Aldrin	< 8.0	8.0	ug/kg	
Aroclor 1016	< 80.0	80.0	ug/kg	
Aroclor 1221	< 80.0	80.0	ug/kg	
Aroclor 1232	< 80.0	80.0	ug/kg	
Aroclor 1242	< 80.0	80.0	ug/kg	
Aroclor 1248	< 80.0	80.0	ug/kg	
Aroclor 1254	< 160	160	ug/kg	
Aroclor 1260	< 160	160	ug/kg	
alpha-BHC	< 2.0	2.0	ug/kg	
beta-BHC	< 8.0	8.0	ug/kg	
delta-BHC	< 8.0	8.0	ug/kg	
gamma-BHC (Lindane)	< 8.0	8.0	ug/kg	
alpha-Chlordane	< 80.0	80.0	ug/kg	
gamma-Chlordane	< 80.0	80.0	ug/kg	
4,4'-DDD	< 16.0	16.0	ug/kg	
4,4'-DDE	< 16.0	16.0	ug/kg	
4,4'-DDT	< 16.0	16.0	ug/kg	
Dieldrin	< 16.0	16.0	ug/kg	
Endosulfan I	< 8.0	8.0	ug/kg	
Endosulfan II	< 16.0	16.0	ug/kg	
Endosulfan sulfate	< 16.0	16.0	ug/kg	
Endrin	< 16.0	16.0	ug/kg	
Endrin aldehyde	< 16.0	16.0	ug/kg	
Endrin ketone	< 16.0	16.0	ug/kg	
Heptachlor	< 8.0	8.0	ug/kg	
Heptachlor epoxide	< 8.0	8.0	ug/kg	
Methoxychlor	< 80.0	80.0	ug/kg	
Toxaphene	< 160	160	ug/kg	

First Environmental Laboratories, Inc.

IL ELAP / NELAC Accreditation # 100292

1600 Shore Road • Naperville, Illinois 60563 • Phone (630) 778-1200 • Fax (630) 778-1233

Analytical Report

Client:	BRADBURNE, BRILLER & JOHNSON	**Date Collected:**	05/15/07
Project ID:	Lyons, IL	**Time Collected:**	9:00
Sample ID:	SB-7 (1-2.5)	**Date Received:**	05/15/07
Sample No:	7-2142-001	**Date Reported:**	05/24/07

Results are reported on a dry weight basis.

Analyte		Result	R.L.	Units	Flags
Herbicides	**Method: 8321**				
Analysis Date: 05/20/07					
2,4-Dichlorophenoxyacetic acid (2,4-D)		< 100	100	ug/kg	S
Silvex (2,4,5-TP)		< 100	100	ug/kg	S
Total Metals	**Method: 6010B**		**Preparation Method 3050B**		
Analysis Date: 05/18/07			Preparation Date: 05/17/07		
Arsenic		3.2	0.2	mg/kg	
Barium		35.3	0.1	mg/kg	
Cadmium		0.2	0.1	mg/kg	
Chromium		8.2	0.1	mg/kg	
Lead		3.3	0.2	mg/kg	
Selenium		< 0.2	0.2	mg/kg	
Silver		< 0.1	0.1	mg/kg	
Total Metals	**Method: 7470A**				
Analysis Date: 05/17/07					
Mercury		< 0.05	0.05	mg/kg	
pH @ 25°C, 1:10	**Method: 4500H+B**				
Analysis Date: 05/17/07					
pH @ 25°C, 1:10		10.5		Units	

First Environmental Laboratories, Inc.
IL ELAP / NELAC Accreditation # 100292
1600 Shore Road • Naperville, Illinois 60563 • Phone (630) 778-1200 • Fax (630) 778-1233

Analytical Report

Client: BRADBURNE, BRILLER & JOHNSON
Project ID: Lyons, IL
Sample ID: SB-7 (6.5-7)
Sample No: 7-2142-002

Date Collected: 05/15/07
Time Collected: 9:05
Date Received: 05/15/07
Date Reported: 05/24/07

Results are reported on a dry weight basis.

Analyte	Result	R.L.	Units	Flags
Solids, Total **Method: 160.3**				
Analysis Date: 05/18/07				
Total Solids	89.27		%	
Volatile Organic Compounds **Method: 5035A/8260B**				
Analysis Date: 05/21/07				
Acetone	< 5,000	100	ug/kg	
Benzene	1,120	5.0	ug/kg	
Bromodichloromethane	< 500	5.0	ug/kg	
Bromoform	< 500	5.0	ug/kg	
Bromomethane	< 500	10.0	ug/kg	
2-Butanone (MEK)	< 500	10.0	ug/kg	
Carbon disulfide	< 500	5.0	ug/kg	
Carbon tetrachloride	< 500	5.0	ug/kg	
Chlorobenzene	< 500	5.0	ug/kg	
Chlorodibromomethane	< 500	5.0	ug/kg	
Chloroethane	< 500	10.0	ug/kg	
Chloroform	< 500	5.0	ug/kg	
Chloromethane	< 500	10.0	ug/kg	
1,1-Dichloroethane	< 500	5.0	ug/kg	
1,2-Dichloroethane	< 500	5.0	ug/kg	
1,1-Dichloroethene	< 500	5.0	ug/kg	
cis-1,2-Dichloroethene	< 500	5.0	ug/kg	
trans-1,2-Dichloroethene	< 500	5.0	ug/kg	
1,2-Dichloropropane	< 500	5.0	ug/kg	
cis-1,3-Dichloropropene	< 500	5.0	ug/kg	
trans-1,3-Dichloropropene	< 500	5.0	ug/kg	
Ethylbenzene	1,520	5.0	ug/kg	
2-Hexanone	< 500	10.0	ug/kg	
Methyl-tert-butylether (MTBE)	< 500	5.0	ug/kg	
4-Methyl-2-pentanone (MIBK)	< 500	10.0	ug/kg	
Methylene chloride	< 500	5.0	ug/kg	
Styrene	< 500	5.0	ug/kg	
1,1,2,2-Tetrachloroethane	< 500	5.0	ug/kg	
Tetrachloroethene	< 500	5.0	ug/kg	
Toluene	1,890	5.0	ug/kg	
1,1,1-Trichloroethane	< 500	5.0	ug/kg	
1,1,2-Trichloroethane	< 500	5.0	ug/kg	
Trichloroethene	946	5.0	ug/kg	

First Environmental Laboratories, Inc.
IL ELAP / NELAC Accreditation # 100292
1600 Shore Road • Naperville, Illinois 60563 • Phone (630) 778-1200 • Fax (630) 778-1233

Analytical Report

Client: BRADBURNE, BRILLER & JOHNSON
Project ID: Lyons, IL
Sample ID: SB-7 (6.5-7)
Sample No: 7-2142-002

Date Collected: 05/15/07
Time Collected: 9:05
Date Received: 05/15/07
Date Reported: 05/24/07

Results are reported on a dry weight basis.

Analyte	Result	R.L.	Units	Flags
Volatile Organic Compounds **Method: 5035A/8260B**				
Analysis Date: 05/21/07				
Vinyl acetate	< 500	10.0	ug/kg	
Vinyl chloride	< 500	10.0	ug/kg	
Xylene, Total	7,520	5.0	ug/kg	
Semi-Volatile Compounds **Method: 8270C**		**Preparation Method 3540C**		
Analysis Date: 05/18/07		Preparation Date: 05/17/07		
Acenaphthene	20,600	330	ug/kg	
Acenaphthylene	1,700	330	ug/kg	
Anthracene	30,400	330	ug/kg	
Benzidine	< 3,300	330	ug/kg	
Benzo(a)anthracene	34,600	330	ug/kg	
Benzo(a)pyrene	35,000	90	ug/kg	
Benzo(b)fluoranthene	29,800	330	ug/kg	
Benzo(k)fluoranthene	26,700	330	ug/kg	
Benzo(ghi)perylene	18,400	330	ug/kg	
Benzoic acid	< 3,300	330	ug/kg	
Benzyl alcohol	< 3,300	330	ug/kg	
bis(2-Chloroethoxy)methane	< 3,300	330	ug/kg	
bis(2-Chloroethyl)ether	< 3,300	330	ug/kg	
bis(2-Chloroisopropyl)ether	< 3,300	330	ug/kg	
bis(2-Ethylhexyl)phthalate	< 3,300	330	ug/kg	
4-Bromophenyl phenyl ether	< 3,300	330	ug/kg	
Butyl benzyl phthalate	< 3,300	330	ug/kg	
Carbazole	20,800	330	ug/kg	
4-Chloroaniline	< 3,300	330	ug/kg	
4-Chloro-3-methylphenol	< 3,300	330	ug/kg	
2-Chloronaphthalene	< 3,300	330	ug/kg	
2-Chlorophenol	< 3,300	330	ug/kg	
4-Chlorophenyl phenyl ether	< 3,300	330	ug/kg	
Chrysene	31,000	330	ug/kg	
Di-n-butyl phthalate	< 3,300	330	ug/kg	
Di-n-octylphthalate	< 3,300	330	ug/kg	
Dibenzo(a,h)anthracene	7,730	90	ug/kg	
Dibenzofuran	14,400	330	ug/kg	
1,2-Dichlorobenzene	< 3,300	330	ug/kg	
1,3-Dichlorobenzene	< 3,300	330	ug/kg	
1,4-Dichlorobenzene	< 3,300	330	ug/kg	

First Environmental Laboratories, Inc.
IL ELAP / NELAC Accreditation # 100292
1600 Shore Road • Naperville, Illinois 60563 • Phone (630) 778-1200 • Fax (630) 778-1233

Analytical Report

Client: BRADBURNE, BRILLER & JOHNSON
Project ID: Lyons, IL
Sample ID: SB 7 (6.5-7)
Sample No: 7-2142-002

Date Collected: 05/15/07
Time Collected: 9:05
Date Received: 05/15/07
Date Reported: 05/24/07

Results are reported on a dry weight basis.

Analyte	Result	R.L.	Units	Flags
Semi-Volatile Compounds Method: 8270C		Preparation Method 3540C		
Analysis Date: 05/18/07		Preparation Date: 05/17/07		
3,3'-Dichlorobenzidine	< 6,600	660	ug/kg	
2,4-Dichlorophenol	< 3,300	330	ug/kg	
Diethyl phthalate	< 3,300	330	ug/kg	
2,4-Dimethylphenol	< 3,300	330	ug/kg	
Dimethyl phthalate	< 3,300	330	ug/kg	
4,6-Dinitro-2-methylphenol	< 16,000	1600	ug/kg	
2,4-Dinitrophenol	< 16,000	1600	ug/kg	
2,4-Dinitrotoluene	< 2,500	250	ug/kg	
2,6 Dinitrotoluene	< 2,600	260	ug/kg	
Fluoranthene	88,300	330	ug/kg	
Fluorene	22,300	330	ug/kg	
Hexachlorobenzene	< 3,300	330	ug/kg	
Hexachlorobutadiene	< 3,300	330	ug/kg	
Hexachlorocyclopentadiene	< 3,300	330	ug/kg	
Hexachloroethane	< 3,300	330	ug/kg	
Indeno(1,2,3-cd)pyrene	18,900	330	ug/kg	
Isophorone	< 3,300	330	ug/kg	
2-Methylnaphthalene	13,900	330	ug/kg	
2-Methylphenol	< 3,300	330	ug/kg	
3 & 4-Methylphenol	< 3,300	330	ug/kg	
Naphthalene	106,000	330	ug/kg	
2-Nitroaniline	< 16,000	1600	ug/kg	
3-Nitroaniline	< 16,000	1600	ug/kg	
4-Nitroaniline	< 16,000	1600	ug/kg	
Nitrobenzene	< 2,600	260	ug/kg	
2-Nitrophenol	< 16,000	1600	ug/kg	
4-Nitrophenol	< 16,000	1600	ug/kg	
n-Nitrosodi-n-propylamine	< 3,300	330	ug/kg	
n-Nitrosodimethylamine	< 3,300	330	ug/kg	
n-Nitrosodiphenylamine	< 3,300	330	ug/kg	
Pentachlorophenol	< 3,300	330	ug/kg	
Phenanthrene	114,000	330	ug/kg	
Phenol	< 3,300	330	ug/kg	
Pyrene	69,000	330	ug/kg	
Pyridine	< 3,300	330	ug/kg	
1,2,4-Trichlorobenzene	< 3,300	330	ug/kg	

First Environmental Laboratories, Inc.
IL ELAP / NELAC Accreditation # 100292
1600 Shore Road • Naperville, Illinois 60563 • Phone (630) 778-1200 • Fax (630) 778-1233

Analytical Report

Client: BRADBURNE, BRILLER & JOHNSON
Project ID: Lyons, IL
Sample ID: SB-7 (6.5-7)
Sample No: 7-2142-002

Date Collected: 05/15/07
Time Collected: 9:05
Date Received: 05/15/07
Date Reported: 05/24/07

Results are reported on a dry weight basis.

Analyte	Result	R.L.	Units	Flags
Semi-Volatile Compounds	**Method: 8270C**	**Preparation Method 3540C**		
Analysis Date: 05/18/07		Preparation Date: 05/17/07		
2,4,5-Trichlorophenol	< 3,300	330	ug/kg	
2,4,6-Trichlorophenol	< 3,300	330	ug/kg	
Pesticides/PCBs	**Method: 8081A/8082**	**Preparation Method 3540C**		
Analysis Date: 05/23/07		Preparation Date: 05/18/07		
Aldrin	< 8.0	8.0	ug/kg	
Aroclor 1016	< 80.0	80.0	ug/kg	
Aroclor 1221	< 80.0	80.0	ug/kg	
Aroclor 1232	< 80.0	80.0	ug/kg	
Aroclor 1242	< 80.0	80.0	ug/kg	
Aroclor 1248	< 80.0	80.0	ug/kg	
Aroclor 1254	< 160	160	ug/kg	
Aroclor 1260	< 160	160	ug/kg	
alpha-BHC	< 2.0	2.0	ug/kg	
beta-BHC	< 8.0	8.0	ug/kg	
delta-BHC	< 8.0	8.0	ug/kg	
gamma-BHC (Lindane)	< 8.0	8.0	ug/kg	
alpha-Chlordane	< 80.0	80.0	ug/kg	
gamma-Chlordane	< 80.0	80.0	ug/kg	
4,4'-DDD	< 16.0	16.0	ug/kg	
4,4'-DDE	< 16.0	16.0	ug/kg	
4,4'-DDT	< 16.0	16.0	ug/kg	
Dieldrin	< 16.0	16.0	ug/kg	
Endosulfan I	< 8.0	8.0	ug/kg	
Endosulfan II	< 16.0	16.0	ug/kg	
Endosulfan sulfate	< 16.0	16.0	ug/kg	
Endrin	< 16.0	16.0	ug/kg	
Endrin aldehyde	< 16.0	16.0	ug/kg	
Endrin ketone	< 16.0	16.0	ug/kg	
Heptachlor	< 8.0	8.0	ug/kg	
Heptachlor epoxide	< 8.0	8.0	ug/kg	
Methoxychlor	< 80.0	80.0	ug/kg	
Toxaphene	< 160	160	ug/kg	

First Environmental Laboratories, Inc.
IL ELAP / NELAC Accreditation # 100292
1600 Shore Road • Naperville, Illinois 60563 • Phone (630) 778-1200 • Fax (630) 778-1233

Analytical Report

Client: BRADBURNE, BRILLER & JOHNSON
Project ID: Lyons, IL
Sample ID: SB-7 (6.5-7)
Sample No: 7-2142-002

Date Collected: 05/15/07
Time Collected: 9:05
Date Received: 05/15/07
Date Reported: 05/24/07

Results are reported on a dry weight basis.

Analyte		Result	R.L.	Units	Flags
Herbicides	**Method: 8321**				
Analysis Date: 05/20/07					
2,4-Dichlorophenoxyacetic acid (2,4-D)		< 100	100	ug/kg	S
Silvex (2,4,5-TP)		< 100	100	ug/kg	S
Total Metals	**Method: 6010B**		**Preparation Method 3050B**		
Analysis Date: 05/18/07			Preparation Date: 05/17/07		
Arsenic		6.6	0.2	mg/kg	
Barium		40.0	0.1	mg/kg	
Cadmium		0.7	0.1	mg/kg	
Chromium		20.2	0.1	mg/kg	
Lead		32.7	0.2	mg/kg	
Selenium		< 0.2	0.2	mg/kg	
Silver		< 0.1	0.1	mg/kg	
Total Metals	**Method: 7470A**				
Analysis Date: 05/17/07					
Mercury		0.28	0.05	mg/kg	
pH @ 25°C, 1:10	**Method: 4500H+B**				
Analysis Date: 05/17/07					
pH @ 25°C, 1:10		10.1		Units	

First Environmental Laboratories, Inc.
IL ELAP / NELAC Accreditation # 100292
1600 Shore Road • Naperville, Illinois 60563 • Phone (630) 778-1200 • Fax (630) 778-1233

Analytical Report

Client: BRADBURNE, BRILLER & JOHNSON
Project ID: Lyons, IL
Sample ID: SB-7 (48.5-60)
Sample No: 7-2142-003

Date Collected: 05/15/07
Time Collected: 9:10
Date Received: 05/15/07
Date Reported: 05/24/07

Results are reported on a dry weight basis.

Analyte	Result	R.L.	Units	Flags
Solids, Total **Method: 160.3**				
Analysis Date: 05/18/07				
Total Solids	86.41		%	
Volatile Organic Compounds **Method: 5035A/8260B**				
Analysis Date: 05/21/07				
Acetone	< 5,000	100	ug/kg	
Benzene	< 500	5.0	ug/kg	
Bromodichloromethane	< 500	5.0	ug/kg	
Bromoform	< 500	5.0	ug/kg	
Bromomethane	< 500	10.0	ug/kg	
2-Butanone (MEK)	< 500	10.0	ug/kg	
Carbon disulfide	< 500	5.0	ug/kg	
Carbon tetrachloride	< 500	5.0	ug/kg	
Chlorobenzene	< 500	5.0	ug/kg	
Chlorodibromomethane	< 500	5.0	ug/kg	
Chloroethane	< 500	10.0	ug/kg	
Chloroform	< 500	5.0	ug/kg	
Chloromethane	< 500	10.0	ug/kg	
1,1-Dichloroethane	< 500	5.0	ug/kg	
1,2-Dichloroethane	< 500	5.0	ug/kg	
1,1-Dichloroethene	< 500	5.0	ug/kg	
cis-1,2-Dichloroethene	< 500	5.0	ug/kg	
trans-1,2-Dichloroethene	< 500	5.0	ug/kg	
1,2-Dichloropropane	< 500	5.0	ug/kg	
cis-1,3-Dichloropropene	< 500	5.0	ug/kg	
trans-1,3-Dichloropropene	< 500	5.0	ug/kg	
Ethylbenzene	3,980	5.0	ug/kg	
2-Hexanone	< 500	10.0	ug/kg	
Methyl-tert-butylether (MTBE)	< 500	5.0	ug/kg	
4-Methyl-2-pentanone (MIBK)	< 500	10.0	ug/kg	
Methylene chloride	< 500	5.0	ug/kg	
Styrene	< 500	5.0	ug/kg	
1,1,2,2-Tetrachloroethane	< 500	5.0	ug/kg	
Tetrachloroethene	< 500	5.0	ug/kg	
Toluene	6,310	5.0	ug/kg	
1,1,1-Trichloroethane	< 500	5.0	ug/kg	
1,1,2-Trichloroethane	< 500	5.0	ug/kg	
Trichloroethene	< 500	5.0	ug/kg	

First Environmental Laboratories, Inc.
IL ELAP / NELAC Accreditation # 100292
1600 Shore Road • Naperville, Illinois 60563 • Phone (630) 778-1200 • Fax (630) 778-1233

Analytical Report

Client: BRADBURNE, BRILLER & JOHNSON
Project ID: Lyons, IL
Sample ID: SB-7 (48.5-60)
Sample No: 7-2142-003

Date Collected: 05/15/07
Time Collected: 9:10
Date Received: 05/15/07
Date Reported: 05/24/07

Results are reported on a dry weight basis.

Analyte	Result	R.L.	Units	Flags
Volatile Organic Compounds Analysis Date: 05/21/07	**Method: 5035A/8260B**			
Vinyl acetate	< 500	10.0	ug/kg	
Vinyl chloride	< 500	10.0	ug/kg	
Xylene, Total	54,500	5.0	ug/kg	
Semi-Volatile Compounds Analysis Date: 05/18/07	**Method: 8270C**	**Preparation Method 3540C** Preparation Date: 05/17/07		
Acenaphthene	5,240	330	ug/kg	
Acenaphthylene	3,070	330	ug/kg	
Anthracene	5,260	330	ug/kg	
Benzidine	< 3,300	330	ug/kg	
Benzo(a)anthracene	1,250	330	ug/kg	J
Benzo(a)pyrene	774	90	ug/kg	J
Benzo(b)fluoranthene	808	330	ug/kg	J
Benzo(k)fluoranthene	< 3,300	330	ug/kg	
Benzo(ghi)perylene	< 3,300	330	ug/kg	
Benzoic acid	< 3,300	330	ug/kg	
Benzyl alcohol	< 3,300	330	ug/kg	
bis(2-Chloroethoxy)methane	< 3,300	330	ug/kg	
bis(2-Chloroethyl)ether	< 3,300	330	ug/kg	
bis(2-Chloroisopropyl)ether	< 3,300	330	ug/kg	
bis(2-Ethylhexyl)phthalate	< 3,300	330	ug/kg	
4-Bromophenyl phenyl ether	< 3,300	330	ug/kg	
Butyl benzyl phthalate	< 3,300	330	ug/kg	
Carbazole	3,250	330	ug/kg	
4-Chloroaniline	< 3,300	330	ug/kg	
4-Chloro-3-methylphenol	< 3,300	330	ug/kg	
2-Chloronaphthalene	< 3,300	330	ug/kg	
2-Chlorophenol	< 3,300	330	ug/kg	
4-Chlorophenyl phenyl ether	< 3,300	330	ug/kg	
Chrysene	1,340	330	ug/kg	J
Di-n-butyl phthalate	< 3,300	330	ug/kg	
Di-n-octylphthalate	< 3,300	330	ug/kg	
Dibenzo(a,h)anthracene	< 3,300	90	ug/kg	
Dibenzofuran	6,860	330	ug/kg	
1,2-Dichlorobenzene	< 3,300	330	ug/kg	
1,3-Dichlorobenzene	< 3,300	330	ug/kg	
1,4-Dichlorobenzene	< 3,300	330	ug/kg	

First Environmental Laboratories, Inc.
IL ELAP / NELAC Accreditation # 100292
1600 Shore Road • Naperville, Illinois 60563 • Phone (630) 778-1200 • Fax (630) 778-1233

Analytical Report

Client: BRADBURNE, BRILLER & JOHNSON
Project ID: Lyons, IL
Sample ID: SB-7 (48.5-60)
Sample No: 7-2142-003

Date Collected: 05/15/07
Time Collected: 9:10
Date Received: 05/15/07
Date Reported: 05/24/07

Results are reported on a dry weight basis.

Analyte	Result	R.L.	Units	Flags
Semi-Volatile Compounds Method: 8270C		Preparation Method 3540C		
Analysis Date: 05/18/07		Preparation Date: 05/17/07		
3,3'-Dichlorobenzidine	< 6,600	660	ug/kg	
2,4-Dichlorophenol	< 3,300	330	ug/kg	
Diethyl phthalate	< 3,300	330	ug/kg	
2,4-Dimethylphenol	7,130	330	ug/kg	
Dimethyl phthalate	< 3,300	330	ug/kg	
4,6-Dinitro-2-methylphenol	< 16,000	1600	ug/kg	
2,4-Dinitrophenol	< 16,000	1600	ug/kg	
2,4-Dinitrotoluene	< 2,500	250	ug/kg	
2,6-Dinitrotoluene	< 2,600	260	ug/kg	
Fluoranthene	4,560	330	ug/kg	
Fluorene	6,670	330	ug/kg	
Hexachlorobenzene	< 3,300	330	ug/kg	
Hexachlorobutadiene	< 3,300	330	ug/kg	
Hexachlorocyclopentadiene	< 3,300	330	ug/kg	
Hexachloroethane	< 3,300	330	ug/kg	
Indeno(1,2,3-cd)pyrene	< 3,300	330	ug/kg	
Isophorone	< 3,300	330	ug/kg	
2-Methylnaphthalene	33,800	330	ug/kg	
2-Methylphenol	6,630	330	ug/kg	
3 & 4-Methylphenol	20,400	330	ug/kg	
Naphthalene	403,000	330	ug/kg	
2-Nitroaniline	< 16,000	1600	ug/kg	
3-Nitroaniline	< 16,000	1600	ug/kg	
4-Nitroaniline	< 16,000	1600	ug/kg	
Nitrobenzene	< 2,600	260	ug/kg	
2-Nitrophenol	< 16,000	1600	ug/kg	
4-Nitrophenol	< 16,000	1600	ug/kg	
n-Nitrosodi-n-propylamine	< 3,300	330	ug/kg	
n-Nitrosodimethylamine	< 3,300	330	ug/kg	
n-Nitrosodiphenylamine	< 3,300	330	ug/kg	
Pentachlorophenol	< 3,300	330	ug/kg	
Phenanthrene	14,200	330	ug/kg	
Phenol	7,740	330	ug/kg	
Pyrene	3,100	330	ug/kg	
Pyridine	< 3,300	330	ug/kg	
1,2,4-Trichlorobenzene	< 3,300	330	ug/kg	

First Environmental Laboratories, Inc.
IL ELAP / NELAC Accreditation # 100292
1600 Shore Road • Naperville, Illinois 60563 • Phone (630) 778-1200 • Fax (630) 778-1233

Analytical Report

Client:	BRADBURNE, BRILLER & JOHNSON	**Date Collected:**	05/15/07
Project ID:	Lyons, IL	**Time Collected:**	9:10
Sample ID:	SB-7 (48.5-60)	**Date Received:**	05/15/07
Sample No:	7-2142-003	**Date Reported:**	05/24/07

Results are reported on a dry weight basis.

Analyte	Result	R.L.	Units	Flags
Semi-Volatile Compounds Analysis Date: 05/18/07	**Method: 8270C**	**Preparation Method 3540C** Preparation Date: 05/17/07		
2,4,5-Trichlorophenol	< 3,300	330	ug/kg	
2,4,6-Trichlorophenol	< 3,300	330	ug/kg	
Pesticides/PCBs Analysis Date: 05/23/07	**Method: 8081A/8082**	**Preparation Method 3540C** Preparation Date: 05/18/07		
Aldrin	< 8.0	8.0	ug/kg	
Aroclor 1016	< 80.0	80.0	ug/kg	
Aroclor 1221	< 80.0	80.0	ug/kg	
Aroclor 1232	< 80.0	80.0	ug/kg	
Aroclor 1242	< 80.0	80.0	ug/kg	
Aroclor 1248	< 80.0	80.0	ug/kg	
Aroclor 1254	< 160	160	ug/kg	
Aroclor 1260	< 160	160	ug/kg	
alpha-BHC	< 4.0	2.0	ug/kg	W
beta-BHC	< 8.0	8.0	ug/kg	
delta-BHC	< 8.0	8.0	ug/kg	
gamma-BHC (Lindane)	< 8.0	8.0	ug/kg	
alpha-Chlordane	< 80.0	80.0	ug/kg	
gamma-Chlordane	< 80.0	80.0	ug/kg	
4,4'-DDD	< 16.0	16.0	ug/kg	
4,4'-DDE	< 16.0	16.0	ug/kg	
4,4'-DDT	< 16.0	16.0	ug/kg	
Dieldrin	< 16.0	16.0	ug/kg	
Endosulfan I	< 8.0	8.0	ug/kg	
Endosulfan II	< 16.0	16.0	ug/kg	
Endosulfan sulfate	< 16.0	16.0	ug/kg	
Endrin	< 16.0	16.0	ug/kg	
Endrin aldehyde	< 16.0	16.0	ug/kg	
Endrin ketone	< 16.0	16.0	ug/kg	
Heptachlor	< 8.0	8.0	ug/kg	
Heptachlor epoxide	< 8.0	8.0	ug/kg	
Methoxychlor	< 80.0	80.0	ug/kg	
Toxaphene	< 160	160	ug/kg	

First Environmental Laboratories, Inc.
IL ELAP / NELAC Accreditation # 100292
1600 Shore Road • Naperville, Illinois 60563 • Phone (630) 778-1200 • Fax (630) 778-1233

Analytical Report

Client:	BRADBURNE, BRILLER & JOHNSON	**Date Collected:**	05/15/07
Project ID:	Lyons, IL	**Time Collected:**	9:10
Sample ID:	SB-7 (48.5-60)	**Date Received:**	05/15/07
Sample No:	7-2142-003	**Date Reported:**	05/24/07

Results are reported on a dry weight basis.

Analyte		Result	R.L.	Units	Flags
Herbicides	**Method: 8321**				
Analysis Date: 05/20/07					
2,4-Dichlorophenoxyacetic acid (2,4-D)		< 100	100	ug/kg	S
Silvex (2,4,5-TP)		< 100	100	ug/kg	S
Total Metals	**Method: 6010B**		**Preparation Method 3050B**		
Analysis Date: 05/18/07			Preparation Date: 05/17/07		
Arsenic		6.6	0.2	mg/kg	
Barium		21.6	0.1	mg/kg	
Cadmium		0.2	0.1	mg/kg	
Chromium		5.6	0.1	mg/kg	
Lead		5.9	0.2	mg/kg	
Selenium		< 0.2	0.2	mg/kg	
Silver		< 0.1	0.1	mg/kg	
Total Metals	**Method: 7470A**				
Analysis Date: 05/21/07					
Mercury		2.66	0.05	mg/kg	
pH @ 25°C, 1:10	**Method: 4500H+B**				
Analysis Date: 05/17/07					
pH @ 25°C, 1:10		10.1		Units	

First Environmental Laboratories, Inc.
IL ELAP / NELAC Accreditation # 100292
1600 Shore Road • Naperville, Illinois 60563 • Phone (630) 778-1200 • Fax (630) 778-1233

Analytical Report

Client: BRADBURNE, BRILLER & JOHNSON
Project ID: Lyons, IL
Sample ID: SB-12 (1-2.5)
Sample No: 7-2142-004

Date Collected: 05/15/07
Time Collected: 13:30
Date Received: 05/15/07
Date Reported: 05/24/07

Results are reported on a dry weight basis.

Analyte	Result	R.L.	Units	Flags
Solids, Total Method: 160.3				
Analysis Date: 05/18/07				
Total Solids	77.58		%	
Volatile Organic Compounds Method: 5035A/8260B				
Analysis Date: 05/21/07				
Acetone	< 100	100	ug/kg	
Benzene	< 5.0	5.0	ug/kg	
Bromodichloromethane	< 5.0	5.0	ug/kg	
Bromoform	< 5.0	5.0	ug/kg	
Bromomethane	< 10.0	10.0	ug/kg	
2-Butanone (MEK)	< 10.0	10.0	ug/kg	
Carbon disulfide	< 5.0	5.0	ug/kg	
Carbon tetrachloride	< 5.0	5.0	ug/kg	
Chlorobenzene	< 5.0	5.0	ug/kg	
Chlorodibromomethane	< 5.0	5.0	ug/kg	
Chloroethane	< 10.0	10.0	ug/kg	
Chloroform	< 5.0	5.0	ug/kg	
Chloromethane	< 10.0	10.0	ug/kg	
1,1-Dichloroethane	< 5.0	5.0	ug/kg	
1,2-Dichloroethane	< 5.0	5.0	ug/kg	
1,1-Dichloroethene	< 5.0	5.0	ug/kg	
cis-1,2-Dichloroethene	< 5.0	5.0	ug/kg	
trans-1,2-Dichloroethene	< 5.0	5.0	ug/kg	
1,2-Dichloropropane	< 5.0	5.0	ug/kg	
cis-1,3-Dichloropropene	< 5.0	5.0	ug/kg	
trans-1,3-Dichloropropene	< 5.0	5.0	ug/kg	
Ethylbenzene	< 5.0	5.0	ug/kg	
2-Hexanone	< 10.0	10.0	ug/kg	
Methyl-tert-butylether (MTBE)	< 5.0	5.0	ug/kg	
4-Methyl-2-pentanone (MIBK)	< 10.0	10.0	ug/kg	
Methylene chloride	< 5.0	5.0	ug/kg	
Styrene	< 5.0	5.0	ug/kg	
1,1,2,2-Tetrachloroethane	< 5.0	5.0	ug/kg	
Tetrachloroethene	< 5.0	5.0	ug/kg	
Toluene	< 5.0	5.0	ug/kg	
1,1,1-Trichloroethane	< 5.0	5.0	ug/kg	
1,1,2-Trichloroethane	< 5.0	5.0	ug/kg	
Trichloroethene	< 5.0	5.0	ug/kg	

First Environmental Laboratories, Inc.
IL ELAP / NELAC Accreditation # 100292
1600 Shore Road • Naperville, Illinois 60563 • Phone (630) 778-1200 • Fax (630) 778-1233

Analytical Report

Client: BRADBURNE, BRILLER & JOHNSON
Project ID: Lyons, IL
Sample ID: SB-12 (1-2.5)
Sample No: 7-2142-004

Date Collected: 05/15/07
Time Collected: 13:30
Date Received: 05/15/07
Date Reported: 05/24/07

Results are reported on a dry weight basis.

Analyte	Result	R.L.	Units	Flags
Volatile Organic Compounds Method: 5035A/8260B				
Analysis Date: 05/21/07				
Vinyl acetate	< 10.0	10.0	ug/kg	
Vinyl chloride	< 10.0	10.0	ug/kg	
Xylene, Total	< 5.0	5.0	ug/kg	
Semi-Volatile Compounds Method: 8270C		Preparation Method 3540C		
Analysis Date: 05/18/07		Preparation Date: 05/17/07		
Acenaphthene	< 330	330	ug/kg	
Acenaphthylene	< 330	330	ug/kg	
Anthracene	< 330	330	ug/kg	
Benzidine	< 330	330	ug/kg	
Benzo(a)anthracene	< 330	330	ug/kg	
Benzo(a)pyrene	< 90	90	ug/kg	
Benzo(b)fluoranthene	< 330	330	ug/kg	
Benzo(k)fluoranthene	< 330	330	ug/kg	
Benzo(ghi)perylene	< 330	330	ug/kg	
Benzoic acid	< 330	330	ug/kg	
Benzyl alcohol	< 330	330	ug/kg	
bis(2-Chloroethoxy)methane	< 330	330	ug/kg	
bis(2-Chloroethyl)ether	< 330	330	ug/kg	
bis(2-Chloroisopropyl)ether	< 330	330	ug/kg	
bis(2-Ethylhexyl)phthalate	< 330	330	ug/kg	
4-Bromophenyl phenyl ether	< 330	330	ug/kg	
Butyl benzyl phthalate	< 330	330	ug/kg	
Carbazole	< 330	330	ug/kg	
4-Chloroaniline	< 330	330	ug/kg	
4-Chloro-3-methylphenol	< 330	330	ug/kg	
2-Chloronaphthalene	< 330	330	ug/kg	
2-Chlorophenol	< 330	330	ug/kg	
4-Chlorophenyl phenyl ether	< 330	330	ug/kg	
Chrysene	< 330	330	ug/kg	
Di-n-butyl phthalate	< 330	330	ug/kg	
Di-n-octylphthalate	< 330	330	ug/kg	
Dibenzo(a,h)anthracene	< 90	90	ug/kg	
Dibenzofuran	< 330	330	ug/kg	
1,2-Dichlorobenzene	< 330	330	ug/kg	
1,3-Dichlorobenzene	< 330	330	ug/kg	
1,4-Dichlorobenzene	< 330	330	ug/kg	

First Environmental Laboratories, Inc.
IL ELAP / NELAC Accreditation # 100292
1600 Shore Road • Naperville, Illinois 60563 • Phone (630) 778-1200 • Fax (630) 778-1233

Analytical Report

Client:	BRADBURNE, BRILLER & JOHNSON	**Date Collected:**	05/15/07
Project ID:	Lyons, IL	**Time Collected:**	13:30
Sample ID:	SB-12 (1 2.5)	**Date Received:**	05/15/07
Sample No:	7-2142-004	**Date Reported:**	05/24/07

Results are reported on a dry weight basis.

Analyte	Result	R.L.	Units	Flags
Semi-Volatile Compounds **Method: 8270C** Analysis Date: 05/18/07		**Preparation Method 3540C** Preparation Date: 05/17/07		
3,3'-Dichlorobenzidine	< 660	660	ug/kg	
2,4-Dichlorophenol	< 330	330	ug/kg	
Diethyl phthalate	< 330	330	ug/kg	
2,4-Dimethylphenol	< 330	330	ug/kg	
Dimethyl phthalate	< 330	330	ug/kg	
4,6-Dinitro-2-methylphenol	< 1,600	1600	ug/kg	
2,4-Dinitrophenol	< 1,600	1600	ug/kg	
2,4-Dinitrotoluene	< 250	250	ug/kg	
2,6-Dinitrotoluene	< 260	260	ug/kg	
Fluoranthene	< 330	330	ug/kg	
Fluorene	< 330	330	ug/kg	
Hexachlorobenzene	< 330	330	ug/kg	
Hexachlorobutadiene	< 330	330	ug/kg	
Hexachlorocyclopentadiene	< 330	330	ug/kg	
Hexachloroethane	< 330	330	ug/kg	
Indeno(1,2,3-cd)pyrene	< 330	330	ug/kg	
Isophorone	< 330	330	ug/kg	
2-Methylnaphthalene	< 330	330	ug/kg	
2-Methylphenol	< 330	330	ug/kg	
3 & 4-Methylphenol	< 330	330	ug/kg	
Naphthalene	1,290	330	ug/kg	
2-Nitroaniline	< 1,600	1600	ug/kg	
3-Nitroaniline	< 1,600	1600	ug/kg	
4-Nitroaniline	< 1,600	1600	ug/kg	
Nitrobenzene	< 260	260	ug/kg	
2-Nitrophenol	< 1,600	1600	ug/kg	
4-Nitrophenol	< 1,600	1600	ug/kg	
n-Nitrosodi-n-propylamine	< 330	330	ug/kg	
n-Nitrosodimethylamine	< 330	330	ug/kg	
n-Nitrosodiphenylamine	< 330	330	ug/kg	
Pentachlorophenol	< 330	330	ug/kg	
Phenanthrene	< 330	330	ug/kg	
Phenol	< 330	330	ug/kg	
Pyrene	< 330	330	ug/kg	
Pyridine	< 330	330	ug/kg	
1,2,4-Trichlorobenzene	< 330	330	ug/kg	

First Environmental Laboratories, Inc.
IL ELAP / NELAC Accreditation # 100292
1600 Shore Road • Naperville, Illinois 60563 • Phone (630) 778-1200 • Fax (630) 778-1233

Analytical Report

Client: BRADBURNE, BRILLER & JOHNSON
Project ID: Lyons, IL
Sample ID: SB-12 (1-2.5)
Sample No: 7-2142-004

Date Collected: 05/15/07
Time Collected: 13:30
Date Received: 05/15/07
Date Reported: 05/24/07

Results are reported on a dry weight basis.

Analyte	Result	R.L.	Units	Flags
Semi-Volatile Compounds Analysis Date: 05/18/07	**Method: 8270C**	**Preparation Method 3540C** Preparation Date: 05/17/07		
2,4,5-Trichlorophenol	< 330	330	ug/kg	
2,4,6-Trichlorophenol	< 330	330	ug/kg	
Pesticides/PCBs Analysis Date: 05/23/07	**Method: 8081A/8082**	**Preparation Method 3540C** Preparation Date: 05/18/07		
Aldrin	< 8.0	8.0	ug/kg	
Aroclor 1016	< 80.0	80.0	ug/kg	
Aroclor 1221	< 80.0	80.0	ug/kg	
Aroclor 1232	< 80.0	80.0	ug/kg	
Aroclor 1242	< 80.0	80.0	ug/kg	
Aroclor 1248	< 80.0	80.0	ug/kg	
Aroclor 1254	< 160	160	ug/kg	
Aroclor 1260	< 160	160	ug/kg	
alpha-BHC	< 2.0	2.0	ug/kg	
beta-BHC	< 8.0	8.0	ug/kg	
delta-BHC	< 8.0	8.0	ug/kg	
gamma-BHC (Lindane)	< 8.0	8.0	ug/kg	
alpha-Chlordane	< 80.0	80.0	ug/kg	
gamma-Chlordane	< 80.0	80.0	ug/kg	
4,4'-DDD	< 16.0	16.0	ug/kg	
4,4'-DDE	< 16.0	16.0	ug/kg	
4,4'-DDT	< 16.0	16.0	ug/kg	
Dieldrin	< 16.0	16.0	ug/kg	
Endosulfan I	< 8.0	8.0	ug/kg	
Endosulfan II	< 16.0	16.0	ug/kg	
Endosulfan sulfate	< 16.0	16.0	ug/kg	
Endrin	< 16.0	16.0	ug/kg	
Endrin aldehyde	< 16.0	16.0	ug/kg	
Endrin ketone	< 16.0	16.0	ug/kg	
Heptachlor	< 8.0	8.0	ug/kg	
Heptachlor epoxide	< 8.0	8.0	ug/kg	
Methoxychlor	< 80.0	80.0	ug/kg	
Toxaphene	< 160	160	ug/kg	

First Environmental Laboratories, Inc.

IL BLAP / NELAC Accreditation # 100292

1600 Shore Road • Naperville, Illinois 60563 • Phone (630) 778-1200 • Fax (630) 778-1233

Analytical Report

Client: BRADBURNE, BRILLER & JOHNSON
Project ID: Lyons, IL
Sample ID: SB 12 (1-2.5)
Sample No: 7-2142-004

Date Collected: 05/15/07
Time Collected: 13:30
Date Received: 05/15/07
Date Reported: 05/24/07

Results are reported on a dry weight basis.

Analyte		Result	R.L.	Units	Flags
Herbicides	**Method: 8321**				
Analysis Date: 05/20/07					
2,4-Dichlorophenoxyacetic acid (2,4-D)		< 100	100	ug/kg	S
Silvex (2,4,5-TP)		< 100	100	ug/kg	S
Total Metals	**Method: 6010B**		**Preparation Method 3050B**		
Analysis Date: 05/18/07			Preparation Date: 05/17/07		
Arsenic		3.9	0.2	mg/kg	
Barium		25.1	0.1	mg/kg	
Cadmium		0.5	0.1	mg/kg	
Chromium		2.3	0.1	mg/kg	
Lead		11.9	0.2	mg/kg	
Selenium		< 0.2	0.2	mg/kg	
Silver		< 0.1	0.1	mg/kg	
Total Metals	**Method: 7470A**				
Analysis Date: 05/18/07					
Mercury		< 0.05	0.05	mg/kg	
pH @ 25°C, 1:10	**Method: 4500H+B**				
Analysis Date: 05/17/07					
pH @ 25°C, 1:10		10.0		Units	

First Environmental Laboratories, Inc.
IL ELAP / NELAC Accreditation # 100292
1600 Shore Road • Naperville, Illinois 60563 • Phone (630) 778-1200 • Fax (630) 778-1233

Analytical Report

Client: BRADBURNE, BRILLER & JOHNSON
Project ID: Lyons, IL
Sample ID: SB-12 (8.5-10)
Sample No: 7-2142-005

Date Collected: 05/15/07
Time Collected: 13:45
Date Received: 05/15/07
Date Reported: 05/24/07

Results are reported on a dry weight basis.

Analyte		Result	R.L.	Units	Flags
Solids, Total	**Method: 160.3**				
Analysis Date: 05/18/07					
Total Solids		90.12		%	
Volatile Organic Compounds	**Method: 5035A/8260B**				
Analysis Date: 05/21/07					
Acetone		< 100	100	ug/kg	
Benzene		< 5.0	5.0	ug/kg	
Bromodichloromethane		< 5.0	5.0	ug/kg	
Bromoform		< 5.0	5.0	ug/kg	
Bromomethane		< 10.0	10.0	ug/kg	
2-Butanone (MEK)		< 10.0	10.0	ug/kg	
Carbon disulfide		< 5.0	5.0	ug/kg	
Carbon tetrachloride		< 5.0	5.0	ug/kg	
Chlorobenzene		< 5.0	5.0	ug/kg	
Chlorodibromomethane		< 5.0	5.0	ug/kg	
Chloroethane		< 10.0	10.0	ug/kg	
Chloroform		< 5.0	5.0	ug/kg	
Chloromethane		< 10.0	10.0	ug/kg	
1,1-Dichloroethane		< 5.0	5.0	ug/kg	
1,2-Dichloroethane		< 5.0	5.0	ug/kg	
1,1-Dichloroethene		< 5.0	5.0	ug/kg	
cis-1,2-Dichloroethene		< 5.0	5.0	ug/kg	
trans-1,2-Dichloroethene		< 5.0	5.0	ug/kg	
1,2-Dichloropropane		< 5.0	5.0	ug/kg	
cis-1,3-Dichloropropene		< 5.0	5.0	ug/kg	
trans-1,3-Dichloropropene		< 5.0	5.0	ug/kg	
Ethylbenzene		< 5.0	5.0	ug/kg	
2-Hexanone		< 10.0	10.0	ug/kg	
Methyl-tert-butylether (MTBE)		< 5.0	5.0	ug/kg	
4-Methyl-2-pentanone (MIBK)		< 10.0	10.0	ug/kg	
Methylene chloride		< 5.0	5.0	ug/kg	
Styrene		< 5.0	5.0	ug/kg	
1,1,2,2-Tetrachloroethane		< 5.0	5.0	ug/kg	
Tetrachloroethene		< 5.0	5.0	ug/kg	
Toluene		< 5.0	5.0	ug/kg	
1,1,1-Trichloroethane		< 5.0	5.0	ug/kg	
1,1,2-Trichloroethane		< 5.0	5.0	ug/kg	
Trichloroethene		< 5.0	5.0	ug/kg	

First Environmental Laboratories, Inc.
IL ELAP / NELAC Accreditation # 100292
1600 Shore Road • Naperville, Illinois 60563 • Phone (630) 778-1200 • Fax (630) 778-1233

Analytical Report

Client: BRADBURNE, BRILLER & JOHNSON
Project ID: Lyons, IL
Sample ID: SB-12 (8.5-10)
Sample No: 7-2142-005

Date Collected: 05/15/07
Time Collected: 13:45
Date Received: 05/15/07
Date Reported: 05/24/07

Results are reported on a dry weight basis.

Analyte	Result	R.L.	Units	Flags
Volatile Organic Compounds Method: 5035A/8260B				
Analysis Date: 05/21/07				
Vinyl acetate	< 10.0	10.0	ug/kg	
Vinyl chloride	< 10.0	10.0	ug/kg	
Xylene, Total	< 5.0	5.0	ug/kg	
Semi-Volatile Compounds Method: 8270C		Preparation Method 3540C		
Analysis Date: 05/18/07		Preparation Date: 05/17/07		
Acenaphthene	< 330	330	ug/kg	
Acenaphthylene	< 330	330	ug/kg	
Anthracene	< 330	330	ug/kg	
Benzidine	< 330	330	ug/kg	
Benzo(a)anthracene	< 330	330	ug/kg	
Benzo(a)pyrene	< 90	90	ug/kg	
Benzo(b)fluoranthene	< 330	330	ug/kg	
Benzo(k)fluoranthene	< 330	330	ug/kg	
Benzo(ghi)perylene	< 330	330	ug/kg	
Benzoic acid	< 330	330	ug/kg	
Benzyl alcohol	< 330	330	ug/kg	
bis(2-Chloroethoxy)methane	< 330	330	ug/kg	
bis(2-Chloroethyl)ether	< 330	330	ug/kg	
bis(2-Chloroisopropyl)ether	< 330	330	ug/kg	
bis(2-Ethylhexyl)phthalate	< 330	330	ug/kg	
4-Bromophenyl phenyl ether	< 330	330	ug/kg	
Butyl benzyl phthalate	< 330	330	ug/kg	
Carbazole	< 330	330	ug/kg	
4-Chloroaniline	< 330	330	ug/kg	
4-Chloro-3-methylphenol	< 330	330	ug/kg	
2-Chloronaphthalene	< 330	330	ug/kg	
2-Chlorophenol	< 330	330	ug/kg	
4-Chlorophenyl phenyl ether	< 330	330	ug/kg	
Chrysene	< 330	330	ug/kg	
Di-n-butyl phthalate	< 330	330	ug/kg	
Di-n-octylphthalate	< 330	330	ug/kg	
Dibenzo(a,h)anthracene	< 90	90	ug/kg	
Dibenzofuran	< 330	330	ug/kg	
1,2-Dichlorobenzene	< 330	330	ug/kg	
1,3-Dichlorobenzene	< 330	330	ug/kg	
1,4-Dichlorobenzene	< 330	330	ug/kg	

First Environmental Laboratories, Inc.
IL ELAP / NELAC Accreditation # 100292
1600 Shore Road • Naperville, Illinois 60563 • Phone (630) 778-1200 • Fax (630) 778-1233

Analytical Report

Client: BRADBURNE, BRILLER & JOHNSON
Project ID: Lyons, IL
Sample ID: SB-12 (8.5-10)
Sample No: 7-2142-005

Date Collected: 05/15/07
Time Collected: 13:45
Date Received: 05/15/07
Date Reported: 05/24/07

Results are reported on a dry weight basis.

Analyte	Result	R.L.	Units	Flags
Semi-Volatile Compounds Analysis Date: 05/18/07	**Method: 8270C**	**Preparation Method 3540C** Preparation Date: 05/17/07		
3,3'-Dichlorobenzidine	< 660	660	ug/kg	
2,4-Dichlorophenol	< 330	330	ug/kg	
Diethyl phthalate	< 330	330	ug/kg	
2,4-Dimethylphenol	< 330	330	ug/kg	
Dimethyl phthalate	< 330	330	ug/kg	
4,6-Dinitro-2-methylphenol	< 1,600	1600	ug/kg	
2,4-Dinitrophenol	< 1,600	1600	ug/kg	
2,4-Dinitrotoluene	< 250	250	ug/kg	
2,6-Dinitrotoluene	< 260	260	ug/kg	
Fluoranthene	< 330	330	ug/kg	
Fluorene	< 330	330	ug/kg	
Hexachlorobenzene	< 330	330	ug/kg	
Hexachlorobutadiene	< 330	330	ug/kg	
Hexachlorocyclopentadiene	< 330	330	ug/kg	
Hexachloroethane	< 330	330	ug/kg	
Indeno(1,2,3-cd)pyrene	< 330	330	ug/kg	
Isophorone	< 330	330	ug/kg	
2-Methylnaphthalene	< 330	330	ug/kg	
2-Methylphenol	< 330	330	ug/kg	
3 & 4-Methylphenol	< 330	330	ug/kg	
Naphthalene	1,460	330	ug/kg	
2-Nitroaniline	< 1,600	1600	ug/kg	
3-Nitroaniline	< 1,600	1600	ug/kg	
4-Nitroaniline	< 1,600	1600	ug/kg	
Nitrobenzene	< 260	260	ug/kg	
2-Nitrophenol	< 1,600	1600	ug/kg	
4-Nitrophenol	< 1,600	1600	ug/kg	
n-Nitrosodi-n-propylamine	< 330	330	ug/kg	
n-Nitrosodimethylamine	< 330	330	ug/kg	
n-Nitrosodiphenylamine	< 330	330	ug/kg	
Pentachlorophenol	< 330	330	ug/kg	
Phenanthrene	< 330	330	ug/kg	
Phenol	< 330	330	ug/kg	
Pyrene	< 330	330	ug/kg	
Pyridine	< 330	330	ug/kg	
1,2,4-Trichlorobenzene	< 330	330	ug/kg	

First Environmental Laboratories, Inc.
IL ELAP / NELAC Accreditation # 100292
1600 Shore Road • Naperville, Illinois 60563 • Phone (630) 778-1200 • Fax (630) 778-1233

Analytical Report

Client: BRADBURNE, BRILLER & JOHNSON
Project ID: Lyons, IL
Sample ID: SB-12 (8.5-10)
Sample No: 7-2142-005

Date Collected: 05/15/07
Time Collected: 13:45
Date Received: 05/15/07
Date Reported: 05/24/07

Results are reported on a dry weight basis.

Analyte	Result	R.L.	Units	Flags
Semi-Volatile Compounds Analysis Date: 05/18/07	**Method: 8270C**	**Preparation Method 3540C** Preparation Date: 05/17/07		
2,4,5-Trichlorophenol	< 330	330	ug/kg	
2,4,6-Trichlorophenol	< 330	330	ug/kg	
Pesticides/PCBs Analysis Date: 05/23/07	**Method: 8081A/8082**	**Preparation Method 3540C** Preparation Date: 05/18/07		
Aldrin	< 8.0	8.0	ug/kg	
Aroclor 1016	< 80.0	80.0	ug/kg	
Aroclor 1221	< 80.0	80.0	ug/kg	
Aroclor 1232	< 80.0	80.0	ug/kg	
Aroclor 1242	< 80.0	80.0	ug/kg	
Aroclor 1248	< 80.0	80.0	ug/kg	
Aroclor 1254	< 160	160	ug/kg	
Aroclor 1260	< 160	160	ug/kg	
alpha-BHC	< 2.0	2.0	ug/kg	
beta-BHC	< 8.0	8.0	ug/kg	
delta-BHC	< 8.0	8.0	ug/kg	
gamma-BHC (Lindane)	< 8.0	8.0	ug/kg	
alpha-Chlordane	< 80.0	80.0	ug/kg	
gamma-Chlordane	< 80.0	80.0	ug/kg	
4,4'-DDD	< 16.0	16.0	ug/kg	
4,4'-DDE	< 16.0	16.0	ug/kg	
4,4'-DDT	< 16.0	16.0	ug/kg	
Dieldrin	< 16.0	16.0	ug/kg	
Endosulfan I	< 8.0	8.0	ug/kg	
Endosulfan II	< 16.0	16.0	ug/kg	
Endosulfan sulfate	< 16.0	16.0	ug/kg	
Endrin	< 16.0	16.0	ug/kg	
Endrin aldehyde	< 16.0	16.0	ug/kg	
Endrin ketone	< 16.0	16.0	ug/kg	
Heptachlor	< 8.0	8.0	ug/kg	
Heptachlor epoxide	< 8.0	8.0	ug/kg	
Methoxychlor	< 80.0	80.0	ug/kg	
Toxaphene	< 160	160	ug/kg	

First Environmental Laboratories, Inc.

IL ELAP / NELAC Accreditation # 100292

1600 Shore Road • Naperville, Illinois 60563 • Phone (630) 778-1200 • Fax (630) 778-1233

Analytical Report

Client: BRADBURNE, BRILLER & JOHNSON
Project ID: Lyons, IL
Sample ID: SB-12 (8.5-10)
Sample No: 7-2142-005

Date Collected: 05/15/07
Time Collected: 13:45
Date Received: 05/15/07
Date Reported: 05/24/07

Results are reported on a dry weight basis.

Analyte		Result	R.L.	Units	Flags
Herbicides	**Method: 8321**				
Analysis Date: 05/20/07					
2,4-Dichlorophenoxyacetic acid (2,4-D)		< 100	100	ug/kg	S
Silvex (2,4,5-TP)		< 100	100	ug/kg	S
Total Metals	**Method: 6010B**		**Preparation Method 3050B**		
Analysis Date: 05/18/07			Preparation Date: 05/17/07		
Arsenic		6.0	0.2	mg/kg	
Barium		11.0	0.1	mg/kg	
Cadmium		0.4	0.1	mg/kg	
Chromium		5.8	0.1	mg/kg	
Lead		5.2	0.2	mg/kg	
Selenium		< 0.2	0.2	mg/kg	
Silver		< 0.1	0.1	mg/kg	
Total Metals	**Method: 7470A**				
Analysis Date: 05/18/07					
Mercury		< 0.05	0.05	mg/kg	
pH @ 25°C, 1:10	**Method: 4500H+B**				
Analysis Date: 05/17/07					
pH @ 25°C, 1:10		9.30		Units	

First Environmental Laboratories, Inc.
IL ELAP / NELAC Accreditation # 100292
1600 Shore Road • Naperville, Illinois 60563 • Phone (630) 778-1200 • Fax (630) 778-1233

Analytical Report

Client: BRADBURNE, BRILLER & JOHNSON
Project ID: Lyons, IL
Sample ID: SB-12 (13.5-15)
Sample No: 7-2142-006

Date Collected: 05/15/07
Time Collected: 14:00
Date Received: 05/15/07
Date Reported: 05/24/07

Results are reported on a dry weight basis.

Analyte	Result	R.L.	Units	Flags
Solids, Total Method: 160.3				
Analysis Date: 05/18/07				
Total Solids	92.34		%	
Volatile Organic Compounds Method: 5035A/8260B				
Analysis Date: 05/21/07				
Acetone	< 100	100	ug/kg	
Benzene	< 5.0	5.0	ug/kg	
Bromodichloromethane	< 5.0	5.0	ug/kg	
Bromoform	< 5.0	5.0	ug/kg	
Bromomethane	< 10.0	10.0	ug/kg	
2-Butanone (MEK)	< 10.0	10.0	ug/kg	
Carbon disulfide	< 5.0	5.0	ug/kg	
Carbon tetrachloride	< 5.0	5.0	ug/kg	
Chlorobenzene	< 5.0	5.0	ug/kg	
Chlorodibromomethane	< 5.0	5.0	ug/kg	
Chloroethane	< 10.0	10.0	ug/kg	
Chloroform	< 5.0	5.0	ug/kg	
Chloromethane	< 10.0	10.0	ug/kg	
1,1-Dichloroethane	< 5.0	5.0	ug/kg	
1,2-Dichloroethane	< 5.0	5.0	ug/kg	
1,1-Dichloroethene	< 5.0	5.0	ug/kg	
cis-1,2-Dichloroethene	< 5.0	5.0	ug/kg	
trans-1,2-Dichloroethene	< 5.0	5.0	ug/kg	
1,2-Dichloropropane	< 5.0	5.0	ug/kg	
cis-1,3-Dichloropropene	< 5.0	5.0	ug/kg	
trans-1,3-Dichloropropene	< 5.0	5.0	ug/kg	
Ethylbenzene	< 5.0	5.0	ug/kg	
2-Hexanone	< 10.0	10.0	ug/kg	
Methyl-tert-butylether (MTBE)	< 5.0	5.0	ug/kg	
4-Methyl-2-pentanone (MIBK)	< 10.0	10.0	ug/kg	
Methylene chloride	< 5.0	5.0	ug/kg	
Styrene	< 5.0	5.0	ug/kg	
1,1,2,2-Tetrachloroethane	< 5.0	5.0	ug/kg	
Tetrachloroethene	< 5.0	5.0	ug/kg	
Toluene	< 5.0	5.0	ug/kg	
1,1,1-Trichloroethane	< 5.0	5.0	ug/kg	
1,1,2-Trichloroethane	< 5.0	5.0	ug/kg	
Trichloroethene	< 5.0	5.0	ug/kg	

First Environmental Laboratories, Inc.
IL ELAP / NELAC Accreditation # 100292
1600 Shore Road • Naperville, Illinois 60563 • Phone (630) 778-1200 • Fax (630) 778-1233

Analytical Report

Client: BRADBURNE, BRILLER & JOHNSON
Project ID: Lyons, IL
Sample ID: SB-12 (13.5-15)
Sample No: 7-2142-006

Date Collected: 05/15/07
Time Collected: 14:00
Date Received: 05/15/07
Date Reported: 05/24/07

Results are reported on a dry weight basis.

Analyte	Result	R.L.	Units	Flags
Volatile Organic Compounds	**Method: 5035A/8260B**			
Analysis Date: 05/21/07				
Vinyl acetate	< 10.0	10.0	ug/kg	
Vinyl chloride	< 10.0	10.0	ug/kg	
Xylene, Total	< 5.0	5.0	ug/kg	
Semi-Volatile Compounds	**Method: 8270C**	**Preparation Method 3540C**		
Analysis Date: 05/18/07		Preparation Date: 05/17/07		
Acenaphthene	< 330	330	ug/kg	
Acenaphthylene	< 330	330	ug/kg	
Anthracene	< 330	330	ug/kg	
Benzidine	< 330	330	ug/kg	
Benzo(a)anthracene	< 330	330	ug/kg	
Benzo(a)pyrene	< 90	90	ug/kg	
Benzo(b)fluoranthene	< 330	330	ug/kg	
Benzo(k)fluoranthene	< 330	330	ug/kg	
Benzo(ghi)perylene	< 330	330	ug/kg	
Benzoic acid	< 330	330	ug/kg	
Benzyl alcohol	< 330	330	ug/kg	
bis(2-Chloroethoxy)methane	< 330	330	ug/kg	
bis(2-Chloroethyl)ether	< 330	330	ug/kg	
bis(2-Chloroisopropyl)ether	< 330	330	ug/kg	
bis(2-Ethylhexyl)phthalate	< 330	330	ug/kg	
4-Bromophenyl phenyl ether	< 330	330	ug/kg	
Butyl benzyl phthalate	< 330	330	ug/kg	
Carbazole	< 330	330	ug/kg	
4-Chloroaniline	< 330	330	ug/kg	
4-Chloro-3-methylphenol	< 330	330	ug/kg	
2-Chloronaphthalene	< 330	330	ug/kg	
2-Chlorophenol	< 330	330	ug/kg	
4-Chlorophenyl phenyl ether	< 330	330	ug/kg	
Chrysene	< 330	330	ug/kg	
Di-n-butyl phthalate	< 330	330	ug/kg	
Di-n-octylphthalate	< 330	330	ug/kg	
Dibenzo(a,h)anthracene	< 90	90	ug/kg	
Dibenzofuran	< 330	330	ug/kg	
1,2-Dichlorobenzene	< 330	330	ug/kg	
1,3-Dichlorobenzene	< 330	330	ug/kg	
1,4-Dichlorobenzene	< 330	330	ug/kg	

First Environmental Laboratories, Inc.
IL ELAP / NELAC Accreditation # 100292
1600 Shore Road • Naperville, Illinois 60563 • Phone (630) 778-1200 • Fax (630) 778-1233

Analytical Report

Client: BRADBURNE, BRILLER & JOHNSON
Project ID: Lyons, IL
Sample ID: SB-12 (13.5-15)
Sample No: 7-2142-006

Date Collected: 05/15/07
Time Collected: 14:00
Date Received: 05/15/07
Date Reported: 05/24/07

Results are reported on a dry weight basis.

Analyte	Result	R.L.	Units	Flags
Semi-Volatile Compounds Analysis Date: 05/18/07	**Method: 8270C**	**Preparation Method 3540C** Preparation Date: 05/17/07		
3,3'-Dichlorobenzidine	< 660	660	ug/kg	
2,4-Dichlorophenol	< 330	330	ug/kg	
Diethyl phthalate	< 330	330	ug/kg	
2,4-Dimethylphenol	< 330	330	ug/kg	
Dimethyl phthalate	< 330	330	ug/kg	
4,6-Dinitro-2-methylphenol	< 1,600	1600	ug/kg	
2,4-Dinitrophenol	< 1,600	1600	ug/kg	
2,4-Dinitrotoluene	< 250	250	ug/kg	
2,6-Dinitrotoluene	< 260	260	ug/kg	
Fluoranthene	< 330	330	ug/kg	
Fluorene	< 330	330	ug/kg	
Hexachlorobenzene	< 330	330	ug/kg	
Hexachlorobutadiene	< 330	330	ug/kg	
Hexachlorocyclopentadiene	< 330	330	ug/kg	
Hexachloroethane	< 330	330	ug/kg	
Indeno(1,2,3-cd)pyrene	< 330	330	ug/kg	
Isophorone	< 330	330	ug/kg	
2-Methylnaphthalene	< 330	330	ug/kg	
2-Methylphenol	< 330	330	ug/kg	
3 & 4-Methylphenol	< 330	330	ug/kg	
Naphthalene	< 330	330	ug/kg	
2-Nitroaniline	< 1,600	1600	ug/kg	
3-Nitroaniline	< 1,600	1600	ug/kg	
4-Nitroaniline	< 1,600	1600	ug/kg	
Nitrobenzene	< 260	260	ug/kg	
2-Nitrophenol	< 1,600	1600	ug/kg	
4-Nitrophenol	< 1,600	1600	ug/kg	
n-Nitrosodi-n-propylamine	< 330	330	ug/kg	
n-Nitrosodimethylamine	< 330	330	ug/kg	
n-Nitrosodiphenylamine	< 330	330	ug/kg	
Pentachlorophenol	< 330	330	ug/kg	
Phenanthrene	< 330	330	ug/kg	
Phenol	< 330	330	ug/kg	
Pyrene	< 330	330	ug/kg	
Pyridine	< 330	330	ug/kg	
1,2,4-Trichlorobenzene	< 330	330	ug/kg	

First Environmental Laboratories, Inc.
IL ELAP / NELAC Accreditation # 100292
1600 Shore Road • Naperville, Illinois 60563 • Phone (630) 778-1200 • Fax (630) 778-1233

Analytical Report

Client: BRADBURNE, BRILLER & JOHNSON
Project ID: Lyons, IL
Sample ID: SB-12 (13.5-15)
Sample No: 7-2142-006

Date Collected: 05/15/07
Time Collected: 14:00
Date Received: 05/15/07
Date Reported: 05/24/07

Results are reported on a dry weight basis.

Analyte	Result	R.L.	Units	Flags
Semi-Volatile Compounds Analysis Date: 05/18/07	**Method: 8270C**	**Preparation Method 3540C** Preparation Date: 05/17/07		
2,4,5-Trichlorophenol	< 330	330	ug/kg	
2,4,6-Trichlorophenol	< 330	330	ug/kg	
Pesticides/PCBs Analysis Date: 05/23/07	**Method: 8081A/8082**	**Preparation Method 3540C** Preparation Date: 05/18/07		
Aldrin	< 8.0	8.0	ug/kg	
Aroclor 1016	< 80.0	80.0	ug/kg	
Aroclor 1221	< 80.0	80.0	ug/kg	
Aroclor 1232	< 80.0	80.0	ug/kg	
Aroclor 1242	< 80.0	80.0	ug/kg	
Aroclor 1248	< 80.0	80.0	ug/kg	
Aroclor 1254	< 160	160	ug/kg	
Aroclor 1260	< 160	160	ug/kg	
alpha-BHC	< 4.0	2.0	ug/kg	W
beta-BHC	< 8.0	8.0	ug/kg	
delta-BHC	< 8.0	8.0	ug/kg	
gamma-BHC (Lindane)	< 8.0	8.0	ug/kg	
alpha-Chlordane	< 80.0	80.0	ug/kg	
gamma-Chlordane	< 80.0	80.0	ug/kg	
4,4'-DDD	< 16.0	16.0	ug/kg	
4,4'-DDE	< 16.0	16.0	ug/kg	
4,4'-DDT	< 16.0	16.0	ug/kg	
Dieldrin	< 16.0	16.0	ug/kg	
Endosulfan I	< 8.0	8.0	ug/kg	
Endosulfan II	< 16.0	16.0	ug/kg	
Endosulfan sulfate	< 16.0	16.0	ug/kg	
Endrin	< 16.0	16.0	ug/kg	
Endrin aldehyde	< 16.0	16.0	ug/kg	
Endrin ketone	< 16.0	16.0	ug/kg	
Heptachlor	< 8.0	8.0	ug/kg	
Heptachlor epoxide	< 8.0	8.0	ug/kg	
Methoxychlor	< 80.0	80.0	ug/kg	
Toxaphene	< 160	160	ug/kg	

First Environmental Laboratories, Inc.

IL ELAP / NELAC Accreditation # 100292

1600 Shore Road • Naperville, Illinois 60563 • Phone (630) 778-1200 • Fax (630) 778-1233

Analytical Report

Client:	BRADBURNE, BRILLER & JOHNSON	**Date Collected:**	05/15/07
Project ID:	Lyons, IL	**Time Collected:**	14:00
Sample ID:	SB-12 (13.5-15)	**Date Received:**	05/15/07
Sample No:	7-2142-006	**Date Reported:**	05/24/07

Results are reported on a dry weight basis.

Analyte		Result	R.L.	Units	Flags
Herbicides	**Method: 8321**				
Analysis Date: 05/20/07					
2,4-Dichlorophenoxyacetic acid (2,4-D)		< 100	100	ug/kg	S
Silvex (2,4,5-TP)		< 100	100	ug/kg	S
Total Metals	**Method: 6010B**		**Preparation Method 3050B**		
Analysis Date: 05/18/07			Preparation Date: 05/17/07		
Arsenic		3.9	0.2	mg/kg	
Barium		3.2	0.1	mg/kg	
Cadmium		0.2	0.1	mg/kg	
Chromium		1.9	0.1	mg/kg	
Lead		2.4	0.2	mg/kg	
Selenium		< 0.2	0.2	mg/kg	
Silver		< 0.1	0.1	mg/kg	
Total Metals	**Method: 7470A**				
Analysis Date: 05/18/07					
Mercury		0.09	0.05	mg/kg	
pH @ 25°C, 1:10	**Method: 4500H+B**				
Analysis Date: 05/17/07					
pH @ 25°C, 1:10		9.30		Units	

First Environmental Laboratories, Inc.
IL ELAP / NELAC Accreditation # 100292
1600 Shore Road • Naperville, Illinois 60563 • Phone (630) 778-1200 • Fax (630) 778-1233

Analytical Report

Client: BRADBURNE, BRILLER & JOHNSON
Project ID: Lyons, IL
Sample ID: SB-3 (1-2.5)
Sample No: 7-2142-007

Date Collected: 05/15/07
Time Collected: 14:15
Date Received: 05/15/07
Date Reported: 05/24/07

Results are reported on a dry weight basis.

Analyte	Result	R.L.	Units	Flags
Solids, Total Method: 160.3				
Analysis Date: 05/18/07				
Total Solids	88.85		%	
Volatile Organic Compounds Method: 5035A/8260B				
Analysis Date: 05/21/07				
Acetone	< 100	100	ug/kg	
Benzene	< 5.0	5.0	ug/kg	
Bromodichloromethane	< 5.0	5.0	ug/kg	
Bromoform	< 5.0	5.0	ug/kg	
Bromomethane	< 10.0	10.0	ug/kg	
2-Butanone (MEK)	< 10.0	10.0	ug/kg	
Carbon disulfide	< 5.0	5.0	ug/kg	
Carbon tetrachloride	< 5.0	5.0	ug/kg	
Chlorobenzene	< 5.0	5.0	ug/kg	
Chlorodibromomethane	< 5.0	5.0	ug/kg	
Chloroethane	< 10.0	10.0	ug/kg	
Chloroform	< 5.0	5.0	ug/kg	
Chloromethane	< 10.0	10.0	ug/kg	
1,1-Dichloroethane	< 5.0	5.0	ug/kg	
1,2-Dichloroethane	< 5.0	5.0	ug/kg	
1,1-Dichloroethene	< 5.0	5.0	ug/kg	
cis-1,2-Dichloroethene	10.7	5.0	ug/kg	
trans-1,2-Dichloroethene	< 5.0	5.0	ug/kg	
1,2-Dichloropropane	< 5.0	5.0	ug/kg	
cis-1,3-Dichloropropene	< 5.0	5.0	ug/kg	
trans-1,3-Dichloropropene	< 5.0	5.0	ug/kg	
Ethylbenzene	< 5.0	5.0	ug/kg	
2-Hexanone	< 10.0	10.0	ug/kg	
Methyl-tert-butylether (MTBE)	< 5.0	5.0	ug/kg	
4-Methyl-2-pentanone (MIBK)	< 10.0	10.0	ug/kg	
Methylene chloride	< 5.0	5.0	ug/kg	
Styrene	< 5.0	5.0	ug/kg	
1,1,2,2-Tetrachloroethane	< 5.0	5.0	ug/kg	
Tetrachloroethene	< 5.0	5.0	ug/kg	
Toluene	< 5.0	5.0	ug/kg	
1,1,1-Trichloroethane	< 5.0	5.0	ug/kg	
1,1,2-Trichloroethane	< 5.0	5.0	ug/kg	
Trichloroethene	< 5.0	5.0	ug/kg	

First Environmental Laboratories, Inc.
IL ELAP / NELAC Accreditation # 100292
1600 Shore Road • Naperville, Illinois 60563 • Phone (630) 778-1200 • Fax (630) 778-1233

Analytical Report

Client: BRADBURNE, BRILLER & JOHNSON
Project ID: Lyons, IL
Sample ID: SB-3 (1-2.5)
Sample No: 7-2142-007

Date Collected: 05/15/07
Time Collected: 14:15
Date Received: 05/15/07
Date Reported: 05/24/07

Results are reported on a dry weight basis.

Analyte	Result	R.L.	Units	Flags
Volatile Organic Compounds Analysis Date: 05/21/07	**Method: 5035A/8260B**			
Vinyl acetate	< 10.0	10.0	ug/kg	
Vinyl chloride	< 10.0	10.0	ug/kg	
Xylene, Total	< 5.0	5.0	ug/kg	
Semi-Volatile Compounds Analysis Date: 05/20/07	**Method: 8270C**	**Preparation Method 3540C** Preparation Date: 05/17/07		
Acenaphthene	< 330	330	ug/kg	
Acenaphthylene	< 330	330	ug/kg	
Anthracene	< 330	330	ug/kg	
Benzidine	< 330	330	ug/kg	
Benzo(a)anthracene	< 330	330	ug/kg	
Benzo(a)pyrene	302	90	ug/kg	
Benzo(b)fluoranthene	339	330	ug/kg	
Benzo(k)fluoranthene	< 330	330	ug/kg	
Benzo(ghi)perylene	< 330	330	ug/kg	
Benzoic acid	< 330	330	ug/kg	
Benzyl alcohol	< 330	330	ug/kg	
bis(2-Chloroethoxy)methane	< 330	330	ug/kg	
bis(2-Chloroethyl)ether	< 330	330	ug/kg	
bis(2-Chloroisopropyl)ether	< 330	330	ug/kg	
bis(2-Ethylhexyl)phthalate	< 330	330	ug/kg	
4-Bromophenyl phenyl ether	< 330	330	ug/kg	
Butyl benzyl phthalate	< 330	330	ug/kg	
Carbazole	< 330	330	ug/kg	
4-Chloroaniline	< 330	330	ug/kg	
4-Chloro-3-methylphenol	< 330	330	ug/kg	
2-Chloronaphthalene	< 330	330	ug/kg	
2-Chlorophenol	< 330	330	ug/kg	
4-Chlorophenyl phenyl ether	< 330	330	ug/kg	
Chrysene	340	330	ug/kg	
Di-n-butyl phthalate	< 330	330	ug/kg	
Di-n-octylphthalate	< 330	330	ug/kg	
Dibenzo(a,h)anthracene	< 90	90	ug/kg	
Dibenzofuran	< 330	330	ug/kg	
1,2-Dichlorobenzene	< 330	330	ug/kg	
1,3-Dichlorobenzene	< 330	330	ug/kg	
1,4-Dichlorobenzene	< 330	330	ug/kg	

First Environmental Laboratories, Inc.
IL ELAP / NELAC Accreditation # 100292
1600 Shore Road • Naperville, Illinois 60563 • Phone (630) 778-1200 • Fax (630) 778-1233

Analytical Report

Client: BRADBURNE, BRILLER & JOHNSON
Project ID: Lyons, IL
Sample ID: SB-3 (1-2.5)
Sample No: 7-2142-007

Date Collected: 05/15/07
Time Collected: 14:15
Date Received: 05/15/07
Date Reported: 05/24/07

Results are reported on a dry weight basis.

Analyte	Result	R.L.	Units	Flags
Semi-Volatile Compounds **Method: 8270C** Analysis Date: 05/20/07		**Preparation Method 3540C** Preparation Date: 05/17/07		
3,3'-Dichlorobenzidine	< 660	660	ug/kg	
2,4-Dichlorophenol	< 330	330	ug/kg	
Diethyl phthalate	< 330	330	ug/kg	
2,4-Dimethylphenol	< 330	330	ug/kg	
Dimethyl phthalate	< 330	330	ug/kg	
4,6-Dinitro-2-methylphenol	< 1,600	1600	ug/kg	
2,4-Dinitrophenol	< 1,600	1600	ug/kg	
2,4-Dinitrotoluene	< 250	250	ug/kg	
2,6-Dinitrotoluene	< 260	260	ug/kg	
Fluoranthene	658	330	ug/kg	
Fluorene	< 330	330	ug/kg	
Hexachlorobenzene	< 330	330	ug/kg	
Hexachlorobutadiene	< 330	330	ug/kg	
Hexachlorocyclopentadiene	< 330	330	ug/kg	
Hexachloroethane	< 330	330	ug/kg	
Indeno(1,2,3-cd)pyrene	< 330	330	ug/kg	
Isophorone	< 330	330	ug/kg	
2-Methylnaphthalene	< 330	330	ug/kg	
2-Methylphenol	< 330	330	ug/kg	
3 & 4-Methylphenol	< 330	330	ug/kg	
Naphthalene	< 330	330	ug/kg	
2-Nitroaniline	< 1,600	1600	ug/kg	
3-Nitroaniline	< 1,600	1600	ug/kg	
4-Nitroaniline	< 1,600	1600	ug/kg	
Nitrobenzene	< 260	260	ug/kg	
2-Nitrophenol	< 1,600	1600	ug/kg	
4-Nitrophenol	< 1,600	1600	ug/kg	
n-Nitrosodi-n-propylamine	< 330	330	ug/kg	
n-Nitrosodimethylamine	< 330	330	ug/kg	
n-Nitrosodiphenylamine	< 330	330	ug/kg	
Pentachlorophenol	< 330	330	ug/kg	
Phenanthrene	430	330	ug/kg	
Phenol	< 330	330	ug/kg	
Pyrene	643	330	ug/kg	
Pyridine	< 330	330	ug/kg	
1,2,4-Trichlorobenzene	< 330	330	ug/kg	

First Environmental Laboratories, Inc.
IL ELAP / NELAC Accreditation # 100292
1600 Shore Road • Naperville, Illinois 60563 • Phone (630) 778-1200 • Fax (630) 778-1233

Analytical Report

Client: BRADBURNE, BRILLER & JOHNSON
Project ID: Lyons, IL
Sample ID: SB-3 (1-2.5)
Sample No: 7-2142-007

Date Collected: 05/15/07
Time Collected: 14:15
Date Received: 05/15/07
Date Reported: 05/24/07

Results are reported on a dry weight basis.

Analyte	Result	R.L.	Units	Flags
Semi-Volatile Compounds Analysis Date: 05/20/07	**Method: 8270C**	**Preparation Method 3540C** Preparation Date: 05/17/07		
2,4,5-Trichlorophenol	< 330	330	ug/kg	
2,4,6-Trichlorophenol	< 330	330	ug/kg	
Pesticides/PCBs Analysis Date: 05/23/07	**Method: 8081A/8082**	**Preparation Method 3540C** Preparation Date: 05/18/07		
Aldrin	< 8.0	8.0	ug/kg	
Aroclor 1016	< 80.0	80.0	ug/kg	
Aroclor 1221	< 80.0	80.0	ug/kg	
Aroclor 1232	< 80.0	80.0	ug/kg	
Aroclor 1242	< 80.0	80.0	ug/kg	
Aroclor 1248	< 80.0	80.0	ug/kg	
Aroclor 1254	< 160	160	ug/kg	
Aroclor 1260	< 160	160	ug/kg	
alpha-BHC	< 4.0	2.0	ug/kg	W
beta-BHC	< 8.0	8.0	ug/kg	
delta-BHC	< 8.0	8.0	ug/kg	
gamma-BHC (Lindane)	< 8.0	8.0	ug/kg	
alpha-Chlordane	< 80.0	80.0	ug/kg	
gamma-Chlordane	< 80.0	80.0	ug/kg	
4,4'-DDD	< 16.0	16.0	ug/kg	
4,4'-DDE	17.8	16.0	ug/kg	
4,4'-DDT	< 16.0	16.0	ug/kg	
Dieldrin	< 16.0	16.0	ug/kg	
Endosulfan I	< 8.0	8.0	ug/kg	
Endosulfan II	< 16.0	16.0	ug/kg	
Endosulfan sulfate	< 16.0	16.0	ug/kg	
Endrin	< 16.0	16.0	ug/kg	
Endrin aldehyde	< 16.0	16.0	ug/kg	
Endrin ketone	< 16.0	16.0	ug/kg	
Heptachlor	< 8.0	8.0	ug/kg	
Heptachlor epoxide	< 8.0	8.0	ug/kg	
Methoxychlor	< 80.0	80.0	ug/kg	
Toxaphene	< 160	160	ug/kg	

First Environmental Laboratories, Inc.
IL ELAP / NELAC Accreditation # 100292
1600 Shore Road • Naperville, Illinois 60563 • Phone (630) 778-1200 • Fax (630) 778-1233

Analytical Report

Client: BRADBURNE, BRILLER & JOHNSON
Project ID: Lyons, IL
Sample ID: SB-3 (1-2.5)
Sample No: 7-2142-007

Date Collected: 05/15/07
Time Collected: 14:15
Date Received: 05/15/07
Date Reported: 05/24/07

Results are reported on a dry weight basis.

Analyte		Result	R.L.	Units	Flags
Herbicides	**Method: 8321**				
Analysis Date: 05/20/07					
2,4-Dichlorophenoxyacetic acid (2,4-D)		< 100	100	ug/kg	S
Silvex (2,4,5-TP)		< 100	100	ug/kg	S
Total Metals	**Method: 6010B**		**Preparation Method 3050B**		
Analysis Date: 05/18/07			Preparation Date: 05/17/07		
Arsenic		7.1	0.2	mg/kg	
Barium		40.0	0.1	mg/kg	
Cadmium		0.8	0.1	mg/kg	
Chromium		12.9	0.1	mg/kg	
Lead		138	0.2	mg/kg	
Selenium		< 0.2	0.2	mg/kg	
Silver		< 0.1	0.1	mg/kg	
Total Metals	**Method: 7470A**				
Analysis Date: 05/18/07					
Mercury		< 0.05	0.05	mg/kg	
pH @ 25°C, 1:10	**Method: 4500H+B**				
Analysis Date: 05/17/07					
pH @ 25°C, 1:10		8.92		Units	

First Environmental Laboratories, Inc.
IL ELAP / NELAC Accreditation # 100292
1600 Shore Road • Naperville, Illinois 60563 • Phone (630) 778-1200 • Fax (630) 778-1233

Analytical Report

Client: BRADBURNE, BRILLER & JOHNSON
Project ID: Lyons, IL
Sample ID: SB-3 (3.5-5)
Sample No: 7-2142-008

Date Collected: 05/15/07
Time Collected: 14:30
Date Received: 05/15/07
Date Reported: 05/24/07

Results are reported on a dry weight basis.

Analyte	Result	R.L.	Units	Flags
Solids, Total Method: 160.3				
Analysis Date: 05/18/07				
Total Solids	93.27		%	
Volatile Organic Compounds Method: 5035A/8260B				
Analysis Date: 05/21/07				
Acetone	< 100	100	ug/kg	
Benzene	< 5.0	5.0	ug/kg	
Bromodichloromethane	< 5.0	5.0	ug/kg	
Bromoform	< 5.0	5.0	ug/kg	
Bromomethane	< 10.0	10.0	ug/kg	
2-Butanone (MEK)	< 10.0	10.0	ug/kg	
Carbon disulfide	< 5.0	5.0	ug/kg	
Carbon tetrachloride	< 5.0	5.0	ug/kg	
Chlorobenzene	< 5.0	5.0	ug/kg	
Chlorodibromomethane	< 5.0	5.0	ug/kg	
Chloroethane	< 10.0	10.0	ug/kg	
Chloroform	< 5.0	5.0	ug/kg	
Chloromethane	< 10.0	10.0	ug/kg	
1,1-Dichloroethane	< 5.0	5.0	ug/kg	
1,2-Dichloroethane	< 5.0	5.0	ug/kg	
1,1-Dichloroethene	< 5.0	5.0	ug/kg	
cis-1,2-Dichloroethene	< 5.0	5.0	ug/kg	
trans-1,2-Dichloroethene	< 5.0	5.0	ug/kg	
1,2-Dichloropropane	< 5.0	5.0	ug/kg	
cis-1,3-Dichloropropene	< 5.0	5.0	ug/kg	
trans-1,3-Dichloropropene	< 5.0	5.0	ug/kg	
Ethylbenzene	< 5.0	5.0	ug/kg	
2-Hexanone	< 10.0	10.0	ug/kg	
Methyl-tert-butylether (MTBE)	< 5.0	5.0	ug/kg	
4-Methyl-2-pentanone (MIBK)	< 10.0	10.0	ug/kg	
Methylene chloride	< 5.0	5.0	ug/kg	
Styrene	< 5.0	5.0	ug/kg	
1,1,2,2-Tetrachloroethane	< 5.0	5.0	ug/kg	
Tetrachloroethene	< 5.0	5.0	ug/kg	
Toluene	< 5.0	5.0	ug/kg	
1,1,1-Trichloroethane	< 5.0	5.0	ug/kg	
1,1,2-Trichloroethane	< 5.0	5.0	ug/kg	
Trichloroethene	< 5.0	5.0	ug/kg	

First Environmental Laboratories, Inc.
IL ELAP / NELAC Accreditation # 100292
1600 Shore Road • Naperville, Illinois 60563 • Phone (630) 778-1200 • Fax (630) 778-1233

Analytical Report

Client: BRADBURNE, BRILLER & JOHNSON
Project ID: Lyons, IL
Sample ID: SB-3 (3.5-5)
Sample No: 7-2142-008

Date Collected: 05/15/07
Time Collected: 14:30
Date Received: 05/15/07
Date Reported: 05/24/07

Results are reported on a dry weight basis.

Analyte	Result	R.L.	Units	Flags
Volatile Organic Compounds **Method: 5035A/8260B**				
Analysis Date: 05/21/07				
Vinyl acetate	< 10.0	10.0	ug/kg	
Vinyl chloride	26.9	10.0	ug/kg	
Xylene, Total	< 5.0	5.0	ug/kg	
Semi-Volatile Compounds **Method: 8270C**		**Preparation Method 3540C**		
Analysis Date: 05/20/07		Preparation Date: 05/17/07		
Acenaphthene	381	330	ug/kg	
Acenaphthylene	< 330	330	ug/kg	
Anthracene	1,530	330	ug/kg	
Benzidine	< 330	330	ug/kg	
Benzo(a)anthracene	2,270	330	ug/kg	
Benzo(a)pyrene	2,390	90	ug/kg	
Benzo(b)fluoranthene	2,030	330	ug/kg	
Benzo(k)fluoranthene	2,570	330	ug/kg	
Benzo(ghi)perylene	1,170	330	ug/kg	
Benzoic acid	< 330	330	ug/kg	
Benzyl alcohol	< 330	330	ug/kg	
bis(2-Chloroethoxy)methane	< 330	330	ug/kg	
bis(2-Chloroethyl)ether	< 330	330	ug/kg	
bis(2-Chloroisopropyl)ether	< 330	330	ug/kg	
bis(2-Ethylhexyl)phthalate	< 330	330	ug/kg	
4-Bromophenyl phenyl ether	< 330	330	ug/kg	
Butyl benzyl phthalate	< 330	330	ug/kg	
Carbazole	476	330	ug/kg	
4-Chloroaniline	< 330	330	ug/kg	
4-Chloro-3-methylphenol	< 330	330	ug/kg	
2-Chloronaphthalene	< 330	330	ug/kg	
2-Chlorophenol	< 330	330	ug/kg	
4-Chlorophenyl phenyl ether	< 330	330	ug/kg	
Chrysene	2,580	330	ug/kg	
Di-n-butyl phthalate	< 330	330	ug/kg	
Di-n-octylphthalate	< 330	330	ug/kg	
Dibenzo(a,h)anthracene	500	90	ug/kg	
Dibenzofuran	< 330	330	ug/kg	
1,2-Dichlorobenzene	< 330	330	ug/kg	
1,3-Dichlorobenzene	< 330	330	ug/kg	
1,4-Dichlorobenzene	< 330	330	ug/kg	

First Environmental Laboratories, Inc.
IL ELAP / NELAC Accreditation # 100292
1600 Shore Road • Naperville, Illinois 60563 • Phone (630) 778-1200 • Fax (630) 778-1233

Analytical Report

Client: BRADBURNE, BRILLER & JOHNSON
Project ID: Lyons, IL
Sample ID: SB-3 (3.5-5)
Sample No: 7-2142-008

Date Collected: 05/15/07
Time Collected: 14:30
Date Received: 05/15/07
Date Reported: 05/24/07

Results are reported on a dry weight basis.

Analyte	Result	R.L.	Units	Flags
Semi-Volatile Compounds Analysis Date: 05/20/07	**Method: 8270C**	**Preparation Method 3540C** Preparation Date: 05/17/07		
3,3'-Dichlorobenzidine	< 660	660	ug/kg	
2,4-Dichlorophenol	< 330	330	ug/kg	
Diethyl phthalate	< 330	330	ug/kg	
2,4-Dimethylphenol	< 330	330	ug/kg	
Dimethyl phthalate	< 330	330	ug/kg	
4,6-Dinitro-2-methylphenol	< 1,600	1600	ug/kg	
2,4-Dinitrophenol	< 1,600	1600	ug/kg	
2,4-Dinitrotoluene	< 250	250	ug/kg	
2,6 Dinitrotoluene	< 260	260	ug/kg	
Fluoranthene	3,420	330	ug/kg	
Fluorene	404	330	ug/kg	
Hexachlorobenzene	< 330	330	ug/kg	
Hexachlorobutadiene	< 330	330	ug/kg	
Hexachlorocyclopentadiene	< 330	330	ug/kg	
Hexachloroethane	< 330	330	ug/kg	
Indeno(1,2,3-cd)pyrene	1,200	330	ug/kg	
Isophorone	< 330	330	ug/kg	
2-Methylnaphthalene	< 330	330	ug/kg	
2-Methylphenol	< 330	330	ug/kg	
3 & 4-Methylphenol	< 330	330	ug/kg	
Naphthalene	546	330	ug/kg	
2-Nitroaniline	< 1,600	1600	ug/kg	
3-Nitroaniline	< 1,600	1600	ug/kg	
4-Nitroaniline	< 1,600	1600	ug/kg	
Nitrobenzene	< 260	260	ug/kg	
2-Nitrophenol	< 1,600	1600	ug/kg	
4-Nitrophenol	< 1,600	1600	ug/kg	
n-Nitrosodi-n-propylamine	< 330	330	ug/kg	
n-Nitrosodimethylamine	< 330	330	ug/kg	
n-Nitrosodiphenylamine	< 330	330	ug/kg	
Pentachlorophenol	< 330	330	ug/kg	
Phenanthrene	2,870	330	ug/kg	
Phenol	< 330	330	ug/kg	
Pyrene	3,210	330	ug/kg	
Pyridine	< 330	330	ug/kg	
1,2,4-Trichlorobenzene	< 330	330	ug/kg	

First Environmental Laboratories, Inc.
IL ELAP / NELAC Accreditation # 100292
1600 Shore Road • Naperville, Illinois 60563 • Phone (630) 778-1200 • Fax (630) 778-1233

Analytical Report

Client: BRADBURNE, BRILLER & JOHNSON
Project ID: Lyons, IL
Sample ID: SB-3 (3.5-5)
Sample No: 7-2142-008

Date Collected: 05/15/07
Time Collected: 14:30
Date Received: 05/15/07
Date Reported: 05/24/07

Results are reported on a dry weight basis.

Analyte	Result	R.L.	Units	Flags
Semi-Volatile Compounds Analysis Date: 05/20/07	**Method: 8270C**	**Preparation Method 3540C** Preparation Date: 05/17/07		
2,4,5-Trichlorophenol	< 330	330	ug/kg	
2,4,6-Trichlorophenol	< 330	330	ug/kg	
Pesticides/PCBs Analysis Date: 05/23/07	**Method: 8081A/8082**	**Preparation Method 3540C** Preparation Date: 05/18/07		
Aldrin	< 8.0	8.0	ug/kg	
Aroclor 1016	< 80.0	80.0	ug/kg	
Aroclor 1221	< 80.0	80.0	ug/kg	
Aroclor 1232	< 80.0	80.0	ug/kg	
Aroclor 1242	< 80.0	80.0	ug/kg	
Aroclor 1248	< 80.0	80.0	ug/kg	
Aroclor 1254	< 160	160	ug/kg	
Aroclor 1260	< 160	160	ug/kg	
alpha-BHC	< 4.0	2.0	ug/kg	W
beta-BHC	< 8.0	8.0	ug/kg	
delta-BHC	< 8.0	8.0	ug/kg	
gamma-BHC (Lindane)	< 8.0	8.0	ug/kg	
alpha-Chlordane	< 80.0	80.0	ug/kg	
gamma-Chlordane	< 80.0	80.0	ug/kg	
4,4'-DDD	23.3	16.0	ug/kg	
4,4'-DDE	< 16.0	16.0	ug/kg	
4,4'-DDT	29.8	16.0	ug/kg	
Dieldrin	< 16.0	16.0	ug/kg	
Endosulfan I	< 8.0	8.0	ug/kg	
Endosulfan II	< 16.0	16.0	ug/kg	
Endosulfan sulfate	< 16.0	16.0	ug/kg	
Endrin	< 16.0	16.0	ug/kg	
Endrin aldehyde	< 16.0	16.0	ug/kg	
Endrin ketone	< 16.0	16.0	ug/kg	
Heptachlor	< 8.0	8.0	ug/kg	
Heptachlor epoxide	< 8.0	8.0	ug/kg	
Methoxychlor	< 80.0	80.0	ug/kg	
Toxaphene	< 160	160	ug/kg	

First Environmental Laboratories, Inc.
IL ELAP / NELAC Accreditation # 100292
1600 Shore Road • Naperville, Illinois 60563 • Phone (630) 778-1200 • Fax (630) 778-1233

Analytical Report

Client: BRADBURNE, BRILLER & JOHNSON
Project ID: Lyons, IL
Sample ID: SB-3 (3.5-5)
Sample No: 7-2142-008

Date Collected: 05/15/07
Time Collected: 14:30
Date Received: 05/15/07
Date Reported: 05/24/07

Results are reported on a dry weight basis.

Analyte		Result	R.L.	Units	Flags
Herbicides	**Method: 8321**				
Analysis Date: 05/20/07					
2,4-Dichlorophenoxyacetic acid (2,4-D)		< 100	100	ug/kg	S
Silvex (2,4,5-TP)		< 100	100	ug/kg	S
Total Metals	**Method: 6010B**		**Preparation Method 3050B**		
Analysis Date: 05/18/07			Preparation Date: 05/17/07		
Arsenic		5.9	0.2	mg/kg	
Barium		49.4	0.1	mg/kg	
Cadmium		1.0	0.1	mg/kg	
Chromium		21.6	0.1	mg/kg	
Lead		86.5	0.2	mg/kg	
Selenium		< 0.2	0.2	mg/kg	
Silver		< 0.1	0.1	mg/kg	
Total Metals	**Method: 7470A**				
Analysis Date: 05/18/07					
Mercury		0.12	0.05	mg/kg	
pH @ 25°C, 1:10	**Method: 4500H+B**				
Analysis Date: 05/17/07					
pH @ 25°C, 1:10		8.14		Units	

First Environmental Laboratories, Inc.
IL ELAP / NELAC Accreditation # 100292
1600 Shore Road • Naperville, Illinois 60563 • Phone (630) 778-1200 • Fax (630) 778-1233

Analytical Report

Client: BRADBURNE, BRILLER & JOHNSON
Project ID: Lyons, IL
Sample ID: SB-3 (13.5-15)
Sample No: 7-2142-009

Date Collected: 05/15/07
Time Collected: 14:45
Date Received: 05/15/07
Date Reported: 05/24/07

Results are reported on a dry weight basis.

Analyte	Result	R.L.	Units	Flags
Solids, Total **Method: 160.3**				
Analysis Date: 05/18/07				
Total Solids	88.28		%	
Volatile Organic Compounds **Method: 5035A/8260B**				
Analysis Date: 05/21/07				
Acetone	< 100	100	ug/kg	
Benzene	< 5.0	5.0	ug/kg	
Bromodichloromethane	< 5.0	5.0	ug/kg	
Bromoform	< 5.0	5.0	ug/kg	
Bromomethane	< 10.0	10.0	ug/kg	
2-Butanone (MEK)	< 10.0	10.0	ug/kg	
Carbon disulfide	< 5.0	5.0	ug/kg	
Carbon tetrachloride	< 5.0	5.0	ug/kg	
Chlorobenzene	< 5.0	5.0	ug/kg	
Chlorodibromomethane	< 5.0	5.0	ug/kg	
Chloroethane	< 10.0	10.0	ug/kg	
Chloroform	< 5.0	5.0	ug/kg	
Chloromethane	< 10.0	10.0	ug/kg	
1,1-Dichloroethane	< 5.0	5.0	ug/kg	
1,2-Dichloroethane	< 5.0	5.0	ug/kg	
1,1-Dichloroethene	< 5.0	5.0	ug/kg	
cis-1,2-Dichloroethene	< 5.0	5.0	ug/kg	
trans-1,2-Dichloroethene	< 5.0	5.0	ug/kg	
1,2-Dichloropropane	< 5.0	5.0	ug/kg	
cis-1,3-Dichloropropene	< 5.0	5.0	ug/kg	
trans-1,3-Dichloropropene	< 5.0	5.0	ug/kg	
Ethylbenzene	< 5.0	5.0	ug/kg	
2-Hexanone	< 10.0	10.0	ug/kg	
Methyl-tert-butylether (MTBE)	< 5.0	5.0	ug/kg	
4-Methyl-2-pentanone (MIBK)	< 10.0	10.0	ug/kg	
Methylene chloride	< 5.0	5.0	ug/kg	
Styrene	< 5.0	5.0	ug/kg	
1,1,2,2-Tetrachloroethane	< 5.0	5.0	ug/kg	
Tetrachloroethene	< 5.0	5.0	ug/kg	
Toluene	8.2	5.0	ug/kg	
1,1,1-Trichloroethane	< 5.0	5.0	ug/kg	
1,1,2-Trichloroethane	< 5.0	5.0	ug/kg	
Trichloroethene	< 5.0	5.0	ug/kg	

First Environmental Laboratories, Inc.
IL ELAP / NELAC Accreditation # 100292
1600 Shore Road • Naperville, Illinois 60563 • Phone (630) 778-1200 • Fax (630) 778-1233

Analytical Report

Client: BRADBURNE, BRILLER & JOHNSON
Project ID: Lyons, IL
Sample ID: SB-3 (13.5 15)
Sample No: 7-2142-009

Date Collected: 05/15/07
Time Collected: 14:45
Date Received: 05/15/07
Date Reported: 05/24/07

Results are reported on a dry weight basis.

Analyte	Result	R.L.	Units	Flags
Volatile Organic Compounds Analysis Date: 05/21/07	**Method: 5035A/8260B**			
Vinyl acetate	< 10.0	10.0	ug/kg	
Vinyl chloride	< 10.0	10.0	ug/kg	
Xylene, Total	5.6	5.0	ug/kg	
Semi-Volatile Compounds Analysis Date: 05/20/07	**Method: 8270C**	**Preparation Method 3540C** Preparation Date: 05/17/07		
Acenaphthene	< 330	330	ug/kg	
Acenaphthylene	< 330	330	ug/kg	
Anthracene	< 330	330	ug/kg	
Benzidine	< 330	330	ug/kg	
Benzo(a)anthracene	< 330	330	ug/kg	
Benzo(a)pyrene	< 90	90	ug/kg	
Benzo(b)fluoranthene	< 330	330	ug/kg	
Benzo(k)fluoranthene	< 330	330	ug/kg	
Benzo(ghi)perylene	< 330	330	ug/kg	
Benzoic acid	< 330	330	ug/kg	
Benzyl alcohol	< 330	330	ug/kg	
bis(2-Chloroethoxy)methane	< 330	330	ug/kg	
bis(2-Chloroethyl)ether	< 330	330	ug/kg	
bis(2-Chloroisopropyl)ether	< 330	330	ug/kg	
bis(2-Ethylhexyl)phthalate	< 330	330	ug/kg	
4-Bromophenyl phenyl ether	< 330	330	ug/kg	
Butyl benzyl phthalate	< 330	330	ug/kg	
Carbazole	< 330	330	ug/kg	
4-Chloroaniline	< 330	330	ug/kg	
4-Chloro-3-methylphenol	< 330	330	ug/kg	
2-Chloronaphthalene	< 330	330	ug/kg	
2-Chlorophenol	< 330	330	ug/kg	
4-Chlorophenyl phenyl ether	< 330	330	ug/kg	
Chrysene	< 330	330	ug/kg	
Di-n-butyl phthalate	< 330	330	ug/kg	
Di-n-octylphthalate	< 330	330	ug/kg	
Dibenzo(a,h)anthracene	< 90	90	ug/kg	
Dibenzofuran	< 330	330	ug/kg	
1,2-Dichlorobenzene	< 330	330	ug/kg	
1,3-Dichlorobenzene	< 330	330	ug/kg	
1,4-Dichlorobenzene	< 330	330	ug/kg	

First Environmental Laboratories, Inc.
IL ELAP / NELAC Accreditation # 100292
1600 Shore Road • Naperville, Illinois 60563 • Phone (630) 778-1200 • Fax (630) 778-1233

Analytical Report

Client: BRADBURNE, BRILLER & JOHNSON
Project ID: Lyons, IL
Sample ID: SB-3 (13.5-15)
Sample No: 7-2142-009

Date Collected: 05/15/07
Time Collected: 14:45
Date Received: 05/15/07
Date Reported: 05/24/07

Results are reported on a dry weight basis.

Analyte	Result	R.L.	Units	Flags
Semi-Volatile Compounds **Method: 8270C** Analysis Date: 05/20/07		**Preparation Method 3540C** Preparation Date: 05/17/07		
3,3'-Dichlorobenzidine	< 660	660	ug/kg	
2,4-Dichlorophenol	< 330	330	ug/kg	
Diethyl phthalate	< 330	330	ug/kg	
2,4-Dimethylphenol	< 330	330	ug/kg	
Dimethyl phthalate	< 330	330	ug/kg	
4,6-Dinitro-2-methylphenol	< 1,600	1600	ug/kg	
2,4-Dinitrophenol	< 1,600	1600	ug/kg	
2,4-Dinitrotoluene	< 250	250	ug/kg	
2,6-Dinitrotoluene	< 260	260	ug/kg	
Fluoranthene	< 330	330	ug/kg	
Fluorene	< 330	330	ug/kg	
Hexachlorobenzene	< 330	330	ug/kg	
Hexachlorobutadiene	< 330	330	ug/kg	
Hexachlorocyclopentadiene	< 330	330	ug/kg	
Hexachloroethane	< 330	330	ug/kg	
Indeno(1,2,3-cd)pyrene	< 330	330	ug/kg	
Isophorone	< 330	330	ug/kg	
2-Methylnaphthalene	< 330	330	ug/kg	
2-Methylphenol	< 330	330	ug/kg	
3 & 4-Methylphenol	< 330	330	ug/kg	
Naphthalene	< 330	330	ug/kg	
2-Nitroaniline	< 1,600	1600	ug/kg	
3-Nitroaniline	< 1,600	1600	ug/kg	
4-Nitroaniline	< 1,600	1600	ug/kg	
Nitrobenzene	< 260	260	ug/kg	
2-Nitrophenol	< 1,600	1600	ug/kg	
4-Nitrophenol	< 1,600	1600	ug/kg	
n-Nitrosodi-n-propylamine	< 330	330	ug/kg	
n-Nitrosodimethylamine	< 330	330	ug/kg	
n-Nitrosodiphenylamine	< 330	330	ug/kg	
Pentachlorophenol	< 330	330	ug/kg	
Phenanthrene	< 330	330	ug/kg	
Phenol	< 330	330	ug/kg	
Pyrene	< 330	330	ug/kg	
Pyridine	< 330	330	ug/kg	
1,2,4-Trichlorobenzene	< 330	330	ug/kg	

First Environmental Laboratories, Inc.
IL ELAP / NELAC Accreditation # 100292
1600 Shore Road • Naperville, Illinois 60563 • Phone (630) 778-1200 • Fax (630) 778-1233

Analytical Report

Client: BRADBURNE, BRILLER & JOHNSON
Project ID: Lyons, IL
Sample ID: SB-3 (13.5-15)
Sample No: 7-2142-009

Date Collected: 05/15/07
Time Collected: 14:45
Date Received: 05/15/07
Date Reported: 05/24/07

Results are reported on a dry weight basis.

Analyte	Result	R.L.	Units	Flags
Semi-Volatile Compounds Analysis Date: 05/20/07	**Method: 8270C**	**Preparation Method 3540C** Preparation Date: 05/17/07		
2,4,5-Trichlorophenol	< 330	330	ug/kg	
2,4,6-Trichlorophenol	< 330	330	ug/kg	
Pesticides/PCBs Analysis Date: 05/23/07	**Method: 8081A/8082**	**Preparation Method 3540C** Preparation Date: 05/18/07		
Aldrin	< 8.0	8.0	ug/kg	
Aroclor 1016	< 80.0	80.0	ug/kg	
Aroclor 1221	< 80.0	80.0	ug/kg	
Aroclor 1232	< 80.0	80.0	ug/kg	
Aroclor 1242	< 80.0	80.0	ug/kg	
Aroclor 1248	< 80.0	80.0	ug/kg	
Aroclor 1254	< 160	160	ug/kg	
Aroclor 1260	< 160	160	ug/kg	
alpha-BHC	< 2.0	2.0	ug/kg	
beta-BHC	< 8.0	8.0	ug/kg	
delta-BHC	< 8.0	8.0	ug/kg	
gamma-BHC (Lindane)	< 8.0	8.0	ug/kg	
alpha-Chlordane	< 80.0	80.0	ug/kg	
gamma-Chlordane	< 80.0	80.0	ug/kg	
4,4'-DDD	< 16.0	16.0	ug/kg	
4,4'-DDE	< 16.0	16.0	ug/kg	
4,4'-DDT	< 16.0	16.0	ug/kg	
Dieldrin	< 16.0	16.0	ug/kg	
Endosulfan I	< 8.0	8.0	ug/kg	
Endosulfan II	< 16.0	16.0	ug/kg	
Endosulfan sulfate	< 16.0	16.0	ug/kg	
Endrin	< 16.0	16.0	ug/kg	
Endrin aldehyde	< 16.0	16.0	ug/kg	
Endrin ketone	< 16.0	16.0	ug/kg	
Heptachlor	< 8.0	8.0	ug/kg	
Heptachlor epoxide	< 8.0	8.0	ug/kg	
Methoxychlor	< 80.0	80.0	ug/kg	
Toxaphene	< 160	160	ug/kg	

First Environmental Laboratories, Inc.
IL ELAP / NELAC Accreditation # 100292
1600 Shore Road • Naperville, Illinois 60563 • Phone (630) 778-1200 • Fax (630) 778-1233

Analytical Report

Client:	BRADBURNE, BRILLER & JOHNSON	**Date Collected:**	05/15/07
Project ID:	Lyons, IL	**Time Collected:**	14:45
Sample ID:	SB-3 (13.5-15)	**Date Received:**	05/15/07
Sample No:	7-2142-009	**Date Reported:**	05/24/07

Results are reported on a dry weight basis.

Analyte		Result	R.L.	Units	Flags
Herbicides	**Method: 8321**				
Analysis Date: 05/20/07					
2,4-Dichlorophenoxyacetic acid (2,4-D)		< 100	100	ug/kg	S
Silvex (2,4,5-TP)		< 100	100	ug/kg	S
Total Metals	**Method: 6010B**		**Preparation Method 3050B**		
Analysis Date: 05/18/07			Preparation Date: 05/17/07		
Arsenic		31.0	0.2	mg/kg	
Barium		44.6	0.1	mg/kg	
Cadmium		1.0	0.1	mg/kg	
Chromium		12.0	0.1	mg/kg	
Lead		22.0	0.2	mg/kg	
Selenium		< 0.2	0.2	mg/kg	
Silver		< 0.1	0.1	mg/kg	
Total Metals	**Method: 7470A**				
Analysis Date: 05/18/07					
Mercury		< 0.05	0.05	mg/kg	
pH @ 25°C, 1:10	**Method: 4500H+B**				
Analysis Date: 05/17/07					
pH @ 25°C, 1:10		8.32		Units	

First Environmental Laboratories, Inc.

IL ELAP / NELAC Accreditation # 100292

1600 Shore Road • Naperville, Illinois 60563 • Phone (630) 778-1200 • Fax (630) 778-1233

Analytical Report

Client:	BRADBURNE, BRILLER & JOHNSON	**Date Collected:**	05/15/07
Project ID:	Lyons, IL	**Time Collected:**	0:00
Sample ID:	Trip Blank	**Date Received:**	05/15/07
Sample No:	7-2142-010	**Date Reported:**	05/24/07

Analyte	Result	R.L.	Units	Flags
Volatile Organic Compounds **Method: 5030B/8260B**				
Analysis Date: 05/21/07				
Acetone	< 100	100	ug/L	
Benzene	< 5.0	5.0	ug/L	
Bromodichloromethane	< 1.0	1.0	ug/L	
Bromoform	< 1.0	1.0	ug/L	
Bromomethane	< 5.0	5.0	ug/L	
2-Butanone (MEK)	< 10.0	10.0	ug/L	
Carbon disulfide	< 5.0	5.0	ug/L	
Carbon tetrachloride	< 5.0	5.0	ug/L	
Chlorobenzene	< 5.0	5.0	ug/L	
Chlorodibromomethane	< 1.0	1.0	ug/L	
Chloroethane	< 10.0	10.0	ug/L	
Chloroform	< 1.0	1.0	ug/L	
Chloromethane	< 10.0	10.0	ug/L	
1,1-Dichloroethane	< 5.0	5.0	ug/L	
1,2-Dichloroethane	< 5.0	5.0	ug/L	
1,1-Dichloroethene	< 5.0	5.0	ug/L	
cis-1,2-Dichloroethene	< 5.0	5.0	ug/L	
trans-1,2-Dichloroethene	< 5.0	5.0	ug/L	
1,2-Dichloropropane	< 5.0	5.0	ug/L	
cis-1,3-Dichloropropene	< 1.0	1.0	ug/L	
trans-1,3-Dichloropropene	< 1.0	1.0	ug/L	
Ethylbenzene	< 5.0	5.0	ug/L	
2-Hexanone	< 10.0	10.0	ug/L	
Methyl-tert-butylether (MTBE)	< 5.0	5.0	ug/L	
4-Methyl-2-pentanone (MIBK)	< 10.0	10.0	ug/L	
Methylene chloride	< 5.0	5.0	ug/L	
Styrene	< 5.0	5.0	ug/L	
1,1,2,2-Tetrachloroethane	< 5.0	5.0	ug/L	
Tetrachloroethene	< 5.0	5.0	ug/L	
Toluene	< 5.0	5.0	ug/L	
1,1,1-Trichloroethane	< 5.0	5.0	ug/L	
1,1,2-Trichloroethane	< 5.0	5.0	ug/L	
Trichloroethene	< 5.0	5.0	ug/L	
Vinyl acetate	< 10.0	10.0	ug/L	
Vinyl chloride	< 2.0	2.0	ug/L	
Xylene, Total	< 5.0	5.0	ug/L	

CHAIN OF CUSTODY RECORD

Page ___ of ___ pgs

First Environmental Laboratories, Inc.

First Environmental Laboratories
1600 Shore Road, Suite D
Naperville, Illinois 60563
Phone: (630) 778-1280 • Fax: (630) 778-1233
24 Hr. Pager (708) 569-7507
E-mail: info@firsteav.com
IEPA Certification# 100292

Company Name: Bradburne, Briller, + Johnson, LLC
Street Address: 515 N. State St. Suite 2200
City: Chicago State: IL Zip: 60610
Phone: 312-644-8556 Fax: 312-644-8555 e-mail: kmccartney@bbjgroup.com
Send Report To: Via: Fax ☐ e-mail ☑
Sampled By: Kevin McCartney

Project I.D.: Lyons, IL
P.O. #:

Matrix Codes: S = Soil W = Water O = Other

Date/Time Taken	Sample Description	Matrix	VOCs (8260B)	SVOCs (8270C)	PCB (8082)	RCRA Metals (6010B/7470A)	Hexavalent (3060)	Organochlorine pest. (8081A)	pH (9040B/9045C)		Comments	Lab I.D.
5/15 9am	SB-7 (1-2.5)	S	✓	✓	✓	✓	✓	✓	✓			7-2142-001
5/15 9:05am	SB-7 (6.5-7)	S	✓	✓	✓	✓	✓	✓	✓			002
5/15 9:10am	SB-7 (48.5-50)	S	✓	✓	✓	✓	✓	✓	✓			003
5/15 1:30pm	SB-12 (1-2.5) SB-10	S	✓	✓	✓	✓	✓	✓	✓			004
5/15 1:45pm	SB-12 (6.5-7.0)	S	✓	✓	✓	✓	✓	✓	✓			005
5/15 2pm	SB-12 (13.5-15)	S	✓	✓	✓	✓	✓	✓	✓			006
5/15 2:15pm	SB-3 (1-2.5)	S	✓	✓	✓	✓	✓	✓	✓			007
5/15 2:30pm	SB-3 (3.5-5)	S	✓	✓	✓	✓	✓	✓	✓			008
5/15 2:45pm	SB-3 (13.5-15)	S	✓	✓	✓	✓	✓	✓	✓			009
	trip blank		✓									010

FOR LAB USE ONLY:

Cooler Temperature: 0.1-6°C Yes ✓ No__ ____°C
Received within 6 hrs. of collection: ____
Ice Present: Yes ✓ No__

Sample Refrigerated: Yes__ No__
Refrigerator Temperature: ____°C
5035 Vials Frozen: Yes__ No__
Freezer Temperature: ____°C

Containers Received Preserved: ☑ Yes ☐ No

Notes and Special Instructions:

Relinquished By: [signature] Date/Time 5/15/07 7:00 Received By: [signature] Date/Time 5/15/07 7:00
Relinquished By: ____ Date/Time ____ Received By: ____ Date/Time ____

Rev. 006

printed 09/18/2007 4:52PM by epa4561 p. 347/439

First Environmental Laboratories, Inc.
IL ELAP / NELAC Accreditation # 100292
1600 Shore Road • Naperville, Illinois 60563 • Phone (630) 778-1200 • Fax (630) 778-1233

May 31, 2007

Mr. Kevin McCartney
BRADBURNE, BRILLER & JOHNSON
515 N. State Street
Suite 2200
Chicago, IL 60610

Project ID: Lyons, IL
First Environmental File ID: 7-2204
Date Received: May 18, 2007

Dear Mr. Kevin McCartney:

The above referenced project was analyzed as directed on the enclosed chain of custody record.

All analyses were performed in accordance with established methods and within established holding times. All Quality Control criteria as outlined in the methods and current IL ELAP/NELAP have been met unless otherwise noted. QA/QC documentation and raw data will remain on file for future reference. Our accreditation number is 100292 and our current certificate is number 001728: effective 04/13/07 through 02/28/08.

I thank you for the opportunity to be of service to you and look forward to working with you again in the future. Should you have any questions regarding any of the enclosed analytical data or need additional information, please contact me at (630) 778-1200.

Sincerely,

Stan Zaworski
Project Manager

First Environmental Laboratories, Inc.
IL ELAP / NELAC Accreditation # 100292
1600 Shore Road • Naperville, Illinois 60563 • Phone (630) 778-1200 • Fax (630) 778-1233

Case Narrative

BRADBURNE, BRILLER & JOHNSON

Project ID: **Lyons, IL**

First Environmental File ID: **7-2204**

Date Received: **May 18, 2007**

Flag	Description	Flag	Description
<	Analyte not detected at or above the reporting limit.	L+	LCS recovery outside control limits; high bias.
B	Analyte detected in associated method blank.	L-	LCS recovery outside control limits; low bias.
C	Identification confirmed by GC/MS.	M	MS recovery outside control limits; LCS acceptable.
D	Surrogates diluted out; recovery not available.	M+	MS recovery outside control limits high bias; LCS acceptable.
E	Estimated result; concentration exceeds calibration range.	M-	MS recovery outside control limits low bias; LCS acceptable.
F	Field measurement.	N	Analyte is not part of our NELAC accreditation.
		ND	Analyte was not detected using a library search routine; No calibration standard was analyzed.
G	Surrogate recovery outside control limits; matrix effect.	P	Chemical preservation pH adjusted in lab.
H	Analysis holding time exceeded.	Q	The analyte was determined by a GC/MS database search.
J	Estimated result; concentration is less than calib range.	S	Analyte was sub-contracted to another laboratory for analysis.
K	RPD outside control limits.	T	Sample temperature upon receipt exceeded 0-6°C
RL	Routine Reporting Limit (Lowest amount that can be detected when routine weights/volumes are used without dilution.)	W	Reporting limit elevated due to sample matrix.

All quality control criteria, as outlined in the methods, have been met except as noted below or on the following analytical report.

Sample Batch Comments:

Sample acceptance criteria were met.

Method Comments

Lab Number	Sample ID	Comments:
7-2204-001	SB-10 (6.5-7)	*Volatile Organic Compounds* Surrogate recovery outside control limits; high bias due to matrix interference.
7-2204-002	SB-10 (8.5-10)	*Volatile Organic Compounds* Surrogate recovery outside control limits; high bias due to matrix interference.
7-2204-004	SB-5 vicinity	*Semi-Volatile Compounds* The reporting limits are elevated due to matrix interference.
7-2204-004	SB-5 vicinity	*Volatile Organic Compounds* The reporting limits are elevated due to matrix interference.
7-2204-005	SB-5 (3.5-5)	*Semi-Volatile Compounds* The reporting limits are elevated due to matrix interference.
7-2204-005	SB-5 (3.5-5)	*Volatile Organic Compounds* The reporting limits are elevated due to matrix interference.

First Environmental Laboratories, Inc.
IL ELAP / NELAC Accreditation # 100292
1600 Shore Road • Naperville, Illinois 60563 • Phone (630) 778-1200 • Fax (630) 778-1233

Case Narrative

BRADBURNE, BRILLER & JOHNSON

Project ID: **Lyons, IL**

First Environmental File ID: **7-2204**

Date Received: **May 18, 2007**

Flag	Description	Flag	Description
<	Analyte not detected at or above the reporting limit.	L+	LCS recovery outside control limits; high bias.
B	Analyte detected in associated method blank.	L-	LCS recovery outside control limits; low bias.
C	Identification confirmed by GC/MS.	M	MS recovery outside control limits; LCS acceptable.
D	Surrogates diluted out; recovery not available.	M+	MS recovery outside control limits high bias; LCS acceptable.
E	Estimated result; concentration exceeds calibration range.	M-	MS recovery outside control limits low bias; LCS acceptable.
F	Field measurement.	N	Analyte is not part of our NELAC accreditation.
		ND	Analyte was not detected using a library search routine; No calibration standard was analyzed.
G	Surrogate recovery outside control limits; matrix effect.	P	Chemical preservation pH adjusted in lab.
H	Analysis holding time exceeded.	Q	The analyte was determined by a GC/MS database search
J	Estimated result, concentration is less than calib range.	S	Analyte was sub-contracted to another laboratory for analysis.
K	RPD outside control limits.	T	Sample temperature upon receipt exceeded 0-6°C
RL	Routine Reporting Limit (Lowest amount that can be detected when routine weights/volumes are used without dilution.)	W	Reporting limit elevated due to sample matrix.

All quality control criteria, as outlined in the methods, have been met except as noted below or on the following analytical report.

7-2204-009 SB-9 (6-7.5) *Volatile Organic Compounds*
The reporting limits are elevated due to matrix interference.

First Environmental Laboratories, Inc.
IL ELAP / NELAC Accreditation # 100292
1600 Shore Road • Naperville, Illinois 60563 • Phone (630) 778-1200 • Fax (630) 778-1233

Analytical Report

Client:	BRADBURNE, BRILLER & JOHNSON	**Date Collected:**	05/17/07
Project ID:	Lyons, IL	**Time Collected:**	15:45
Sample ID:	SB-10 (6.5-7)	**Date Received:**	05/18/07
Sample No:	7-2204-001	**Date Reported:**	05/31/07

Results are reported on a dry weight basis.

Analyte	Result	R.L.	Units	Flags
Solids, total **Method: 160.3**				
Analysis Date: 05/21/07				
Total Solids	64.42		%	
Volatile Organic Compounds **Method: 5035A/8260B**				
Analysis Date: 05/23/07				
Acetone	< 100	100	ug/kg	
Benzene	< 5.0	5.0	ug/kg	
Bromodichloromethane	< 5.0	5.0	ug/kg	
Bromoform	< 5.0	5.0	ug/kg	
Bromomethane	< 10.0	10.0	ug/kg	
2-Butanone (MEK)	< 10.0	10.0	ug/kg	
Carbon disulfide	< 5.0	5.0	ug/kg	
Carbon tetrachloride	< 5.0	5.0	ug/kg	
Chlorobenzene	< 5.0	5.0	ug/kg	
Chlorodibromomethane	< 5.0	5.0	ug/kg	
Chloroethane	< 10.0	10.0	ug/kg	
Chloroform	< 5.0	5.0	ug/kg	
Chloromethane	< 10.0	10.0	ug/kg	
1,1-Dichloroethane	< 5.0	5.0	ug/kg	
1,2-Dichloroethane	< 5.0	5.0	ug/kg	
1,1-Dichloroethene	< 5.0	5.0	ug/kg	
cis-1,2-Dichloroethene	< 5.0	5.0	ug/kg	
trans-1,2-Dichloroethene	< 5.0	5.0	ug/kg	
1,2-Dichloropropane	< 5.0	5.0	ug/kg	
cis-1,3-Dichloropropene	< 5.0	5.0	ug/kg	
trans-1,3-Dichloropropene	< 5.0	5.0	ug/kg	
Ethylbenzene	< 5.0	5.0	ug/kg	
2-Hexanone	< 10.0	10.0	ug/kg	
Methyl-tert-butylether (MTBE)	< 5.0	5.0	ug/kg	
4-Methyl-2-pentanone (MIBK)	< 10.0	10.0	ug/kg	
Methylene chloride	< 5.0	5.0	ug/kg	
Styrene	< 5.0	5.0	ug/kg	
1,1,2,2-Tetrachloroethane	< 5.0	5.0	ug/kg	
Tetrachloroethene	< 5.0	5.0	ug/kg	
Toluene	< 5.0	5.0	ug/kg	
1,1,1-Trichloroethane	< 5.0	5.0	ug/kg	
1,1,2-Trichloroethane	< 5.0	5.0	ug/kg	
Trichloroethene	< 5.0	5.0	ug/kg	

First Environmental Laboratories, Inc.
IL ELAP / NELAC Accreditation # 100292
1600 Shore Road • Naperville, Illinois 60563 • Phone (630) 778-1200 • Fax (630) 778-1233

Analytical Report

Client:	BRADBURNE, BRILLER & JOHNSON	**Date Collected:**	05/17/07
Project ID:	Lyons, IL	**Time Collected:**	15:45
Sample ID:	SB-10 (6.5-7)	**Date Received:**	05/18/07
Sample No:	7-2204-001	**Date Reported:**	05/31/07

Results are reported on a dry weight basis.

Analyte	Result	R.L.	Units	Flags
Volatile Organic Compounds **Method: 5035A/8260B**				
Analysis Date: 05/23/07				
Vinyl acetate	< 10.0	10.0	ug/kg	
Vinyl chloride	< 10.0	10.0	ug/kg	
Xylene, Total	< 5.0	5.0	ug/kg	
Semi-Volatile Compounds **Method: 8270C**		**Preparation Method 3540C**		
Analysis Date: 05/22/07		Preparation Date: 05/21/07		
Acenaphthene	< 330	330	ug/kg	
Acenaphthylene	< 330	330	ug/kg	
Anthracene	< 330	330	ug/kg	
Benzidine	< 330	330	ug/kg	
Benzo(a)anthracene	< 330	330	ug/kg	
Benzo(a)pyrene	< 90	90	ug/kg	
Benzo(b)fluoranthene	< 330	330	ug/kg	
Benzo(k)fluoranthene	< 330	330	ug/kg	
Benzo(ghi)perylene	< 330	330	ug/kg	
Benzoic acid	< 330	330	ug/kg	
Benzyl alcohol	< 330	330	ug/kg	
bis(2-Chloroethoxy)methane	< 330	330	ug/kg	
bis(2-Chloroethyl)ether	< 330	330	ug/kg	
bis(2-Chloroisopropyl)ether	< 330	330	ug/kg	
bis(2-Ethylhexyl)phthalate	< 330	330	ug/kg	
4-Bromophenyl phenyl ether	< 330	330	ug/kg	
Butyl benzyl phthalate	< 330	330	ug/kg	
Carbazole	< 330	330	ug/kg	
4-Chloroaniline	< 330	330	ug/kg	
4-Chloro-3-methylphenol	< 330	330	ug/kg	
2-Chloronaphthalene	< 330	330	ug/kg	
2-Chlorophenol	< 330	330	ug/kg	
4-Chlorophenyl phenyl ether	< 330	330	ug/kg	
Chrysene	< 330	330	ug/kg	
Di-n-butyl phthalate	< 330	330	ug/kg	
Di-n-octylphthalate	< 330	330	ug/kg	
Dibenzo(a,h)anthracene	< 90	90	ug/kg	
Dibenzofuran	< 330	330	ug/kg	
1,2-Dichlorobenzene	< 330	330	ug/kg	
1,3-Dichlorobenzene	< 330	330	ug/kg	
1,4-Dichlorobenzene	< 330	330	ug/kg	

First Environmental Laboratories, Inc.
IL ELAP / NELAC Accreditation # 100292
1600 Shore Road • Naperville, Illinois 60563 • Phone (630) 778-1200 • Fax (630) 778-1233

Analytical Report

Client:	BRADBURNE, BRILLER & JOHNSON	**Date Collected:**	05/17/07
Project ID:	Lyons, IL	**Time Collected:**	15:45
Sample ID:	SB-10 (6.5-7)	**Date Received:**	05/18/07
Sample No:	7-2204-001	**Date Reported:**	05/31/07

Results are reported on a dry weight basis.

Analyte	Result	R.L.	Units	Flags
Semi-Volatile Compounds Analysis Date: 05/22/07	**Method: 8270C**	**Preparation Method 3540C** Preparation Date: 05/21/07		
3,3'-Dichlorobenzidine	< 660	660	ug/kg	
2,4-Dichlorophenol	< 330	330	ug/kg	
Diethyl phthalate	< 330	330	ug/kg	
2,4-Dimethylphenol	< 330	330	ug/kg	
Dimethyl phthalate	< 330	330	ug/kg	
4,6-Dinitro-2-methylphenol	< 1,600	1600	ug/kg	
2,4-Dinitrophenol	< 1,600	1600	ug/kg	
2,4-Dinitrotoluene	< 250	250	ug/kg	
2,6-Dinitrotoluene	< 260	260	ug/kg	
Fluoranthene	< 330	330	ug/kg	
Fluorene	< 330	330	ug/kg	
Hexachlorobenzene	< 330	330	ug/kg	
Hexachlorobutadiene	< 330	330	ug/kg	
Hexachlorocyclopentadiene	< 330	330	ug/kg	
Hexachloroethane	< 330	330	ug/kg	
Indeno(1,2,3-cd)pyrene	< 330	330	ug/kg	
Isophorone	< 330	330	ug/kg	
2-Methylnaphthalene	< 330	330	ug/kg	
2-Methylphenol	< 330	330	ug/kg	
3 & 4-Methylphenol	< 330	330	ug/kg	
Naphthalene	< 330	330	ug/kg	
2-Nitroaniline	< 1,600	1600	ug/kg	
3-Nitroaniline	< 1,600	1600	ug/kg	
4-Nitroaniline	< 1,600	1600	ug/kg	
Nitrobenzene	< 260	260	ug/kg	
2-Nitrophenol	< 1,600	1600	ug/kg	
4-Nitrophenol	< 1,600	1600	ug/kg	
n-Nitrosodi-n-propylamine	< 330	330	ug/kg	
n-Nitrosodimethylamine	< 330	330	ug/kg	
n-Nitrosodiphenylamine	< 330	330	ug/kg	
Pentachlorophenol	< 330	330	ug/kg	
Phenanthrene	< 330	330	ug/kg	
Phenol	< 330	330	ug/kg	
Pyrene	< 330	330	ug/kg	
Pyridine	< 330	330	ug/kg	
1,2,4-Trichlorobenzene	< 330	330	ug/kg	

First Environmental Laboratories, Inc.
IL ELAP / NELAC Accreditation # 100292
1600 Shore Road • Naperville, Illinois 60563 • Phone (630) 778-1200 • Fax (630) 778-1233

Analytical Report

Client:	BRADBURNE, BRILLER & JOHNSON	**Date Collected:**	05/17/07
Project ID:	Lyons, IL	**Time Collected:**	15:45
Sample ID:	SB-10 (6.5-7)	**Date Received:**	05/18/07
Sample No:	7-2204-001	**Date Reported:**	05/31/07

Results are reported on a dry weight basis.

Analyte	Result	R.L.	Units	Flags
Semi-Volatile Compounds Analysis Date: 05/22/07	**Method: 8270C**	**Preparation Method 3540C** Preparation Date: 05/21/07		
2,4,5-Trichlorophenol	< 330	330	ug/kg	
2,4,6-Trichlorophenol	< 330	330	ug/kg	
Pesticides/PCBs Analysis Date: 05/31/07	**Method: 8081A/8082**	**Preparation Method 3540C** Preparation Date: 05/21/07		
Aldrin	< 8.0	8.0	ug/kg	
Aroclor 1016	< 80.0	80.0	ug/kg	
Aroclor 1221	< 80.0	80.0	ug/kg	
Aroclor 1232	< 80.0	80.0	ug/kg	
Aroclor 1242	< 80.0	80.0	ug/kg	
Aroclor 1248	< 80.0	80.0	ug/kg	
Aroclor 1254	< 160	160	ug/kg	
Aroclor 1260	< 160	160	ug/kg	
alpha-BHC	< 2.0	2.0	ug/kg	
beta-BHC	< 8.0	8.0	ug/kg	
delta-BHC	< 8.0	8.0	ug/kg	
gamma-BHC (Lindane)	< 8.0	8.0	ug/kg	
alpha-Chlordane	< 80.0	80.0	ug/kg	
gamma-Chlordane	< 80.0	80.0	ug/kg	
4,4'-DDD	< 16.0	16.0	ug/kg	
4,4'-DDE	< 16.0	16.0	ug/kg	
4,4'-DDT	< 16.0	16.0	ug/kg	
Dieldrin	< 16.0	16.0	ug/kg	
Endosulfan I	< 8.0	8.0	ug/kg	
Endosulfan II	< 16.0	16.0	ug/kg	
Endosulfan sulfate	< 16.0	16.0	ug/kg	
Endrin	< 16.0	16.0	ug/kg	
Endrin aldehyde	< 16.0	16.0	ug/kg	
Endrin ketone	< 16.0	16.0	ug/kg	
Heptachlor	< 8.0	8.0	ug/kg	
Heptachlor epoxide	< 8.0	8.0	ug/kg	
Methoxychlor	< 80.0	80.0	ug/kg	
Toxaphene	< 160	160	ug/kg	
pH @ 25°C, 1:10 Analysis Date: 05/22/07	**Method: 4500H+B**			
pH @ 25°C, 1:10	10.0		Units	

First Environmental Laboratories, Inc.

IL ELAP / NELAC Accreditation # 100292

1600 Shore Road • Naperville, Illinois 60563 • Phone (630) 778-1200 • Fax (630) 778-1233

Analytical Report

Client:	BRADBURNE, BRILLER & JOHNSON	**Date Collected:**	05/17/07
Project ID:	Lyons, IL	**Time Collected:**	15:45
Sample ID:	SB-10 (6.5-7)	**Date Received:**	05/18/07
Sample No:	7-2204-001	**Date Reported:**	05/31/07

Results are reported on a dry weight basis.

Analyte		Result	R.L.	Units	Flags
Total Metals	**Method: 6010B**		**Preparation Method 3050B**		
Analysis Date: 05/24/07			Preparation Date: 05/18/07		
Arsenic		2.6	0.2	mg/kg	
Barium		27.2	0.1	mg/kg	
Cadmium		0.3	0.1	mg/kg	
Chromium		4.3	0.1	mg/kg	
Lead		6.1	0.2	mg/kg	
Selenium		< 0.2	0.2	mg/kg	
Silver		< 0.1	0.1	mg/kg	
Total Metals	**Method: 7470A**				
Analysis Date: 05/23/07					
Mercury		< 0.05	0.05	mg/kg	
Herbicides	**Method: 8321**				
Analysis Date: 05/22/07					
2,4-Dichlorophenoxyacetic acid (2,4-D)		< 100	100	ug/kg	S
Silvex (2,4,5-TP)		< 100	100	ug/kg	S

First Environmental Laboratories, Inc.
IL ELAP / NELAC Accreditation # 100292
1600 Shore Road • Naperville, Illinois 60563 • Phone (630) 778-1200 • Fax (630) 778-1233

Analytical Report

Client: BRADBURNE, BRILLER & JOHNSON
Project ID: Lyons, IL
Sample ID: SB-10 (8.5-10)
Sample No: 7-2204-002

Date Collected: 05/17/07
Time Collected: 15:55
Date Received: 05/18/07
Date Reported: 05/31/07

Results are reported on a dry weight basis.

Analyte	Result	R.L.	Units	Flags
Solids, total Method: 160.3				
Analysis Date: 05/21/07				
Total Solids	82.12		%	
Volatile Organic Compounds Method: 5035A/8260B				
Analysis Date: 05/23/07				
Acetone	< 100	100	ug/kg	
Benzene	< 5.0	5.0	ug/kg	
Bromodichloromethane	< 5.0	5.0	ug/kg	
Bromoform	< 5.0	5.0	ug/kg	
Bromomethane	< 10.0	10.0	ug/kg	
2-Butanone (MEK)	< 10.0	10.0	ug/kg	
Carbon disulfide	< 5.0	5.0	ug/kg	
Carbon tetrachloride	< 5.0	5.0	ug/kg	
Chlorobenzene	< 5.0	5.0	ug/kg	
Chlorodibromomethane	< 5.0	5.0	ug/kg	
Chloroethane	< 10.0	10.0	ug/kg	
Chloroform	< 5.0	5.0	ug/kg	
Chloromethane	< 10.0	10.0	ug/kg	
1,1-Dichloroethane	< 5.0	5.0	ug/kg	
1,2-Dichloroethane	< 5.0	5.0	ug/kg	
1,1-Dichloroethene	< 5.0	5.0	ug/kg	
cis-1,2-Dichloroethene	< 5.0	5.0	ug/kg	
trans-1,2-Dichloroethene	< 5.0	5.0	ug/kg	
1,2-Dichloropropane	< 5.0	5.0	ug/kg	
cis-1,3-Dichloropropene	< 5.0	5.0	ug/kg	
trans-1,3-Dichloropropene	< 5.0	5.0	ug/kg	
Ethylbenzene	< 5.0	5.0	ug/kg	
2-Hexanone	< 10.0	10.0	ug/kg	
Methyl-tert-butylether (MTBE)	< 5.0	5.0	ug/kg	
4-Methyl-2-pentanone (MIBK)	< 10.0	10.0	ug/kg	
Methylene chloride	< 5.0	5.0	ug/kg	
Styrene	< 5.0	5.0	ug/kg	
1,1,2,2-Tetrachloroethane	< 5.0	5.0	ug/kg	
Tetrachloroethene	< 5.0	5.0	ug/kg	
Toluene	8.8	5.0	ug/kg	
1,1,1-Trichloroethane	< 5.0	5.0	ug/kg	
1,1,2-Trichloroethane	< 5.0	5.0	ug/kg	
Trichloroethene	< 5.0	5.0	ug/kg	

First Environmental Laboratories, Inc.
IL ELAP / NELAC Accreditation # 100292
1600 Shore Road • Naperville, Illinois 60563 • Phone (630) 778-1200 • Fax (630) 778-1233

Analytical Report

Client: BRADBURNE, BRILLER & JOHNSON
Project ID: Lyons, IL
Sample ID: SB-10 (8.5-10)
Sample No: 7-2204-002

Date Collected: 05/17/07
Time Collected: 15:55
Date Received: 05/18/07
Date Reported: 05/31/07

Results are reported on a dry weight basis.

Analyte	Result	R.L.	Units	Flags
Volatile Organic Compounds Method: 5035A/8260B				
Analysis Date: 05/23/07				
Vinyl acetate	< 10.0	10.0	ug/kg	
Vinyl chloride	< 10.0	10.0	ug/kg	
Xylene, Total	6.0	5.0	ug/kg	
Semi-Volatile Compounds Method: 8270C		Preparation Method 3540C		
Analysis Date: 05/22/07		Preparation Date: 05/21/07		
Acenaphthene	< 330	330	ug/kg	
Acenaphthylene	< 330	330	ug/kg	
Anthracene	< 330	330	ug/kg	
Benzidine	< 330	330	ug/kg	
Benzo(a)anthracene	< 330	330	ug/kg	
Benzo(a)pyrene	< 90	90	ug/kg	
Benzo(b)fluoranthene	< 330	330	ug/kg	
Benzo(k)fluoranthene	< 330	330	ug/kg	
Benzo(ghi)perylene	< 330	330	ug/kg	
Benzoic acid	< 330	330	ug/kg	
Benzyl alcohol	< 330	330	ug/kg	
bis(2-Chloroethoxy)methane	< 330	330	ug/kg	
bis(2-Chloroethyl)ether	< 330	330	ug/kg	
bis(2-Chloroisopropyl)ether	< 330	330	ug/kg	
bis(2-Ethylhexyl)phthalate	< 330	330	ug/kg	
4-Bromophenyl phenyl ether	< 330	330	ug/kg	
Butyl benzyl phthalate	< 330	330	ug/kg	
Carbazole	< 330	330	ug/kg	
4-Chloroaniline	< 330	330	ug/kg	
4-Chloro-3-methylphenol	< 330	330	ug/kg	
2-Chloronaphthalene	< 330	330	ug/kg	
2-Chlorophenol	< 330	330	ug/kg	
4-Chlorophenyl phenyl ether	< 330	330	ug/kg	
Chrysene	< 330	330	ug/kg	
Di-n-butyl phthalate	< 330	330	ug/kg	
Di-n-octylphthalate	< 330	330	ug/kg	
Dibenzo(a,h)anthracene	< 90	90	ug/kg	
Dibenzofuran	< 330	330	ug/kg	
1,2-Dichlorobenzene	< 330	330	ug/kg	
1,3-Dichlorobenzene	< 330	330	ug/kg	
1,4-Dichlorobenzene	< 330	330	ug/kg	

First Environmental Laboratories, Inc.
IL ELAP / NELAC Accreditation # 100292
1600 Shore Road • Naperville, Illinois 60563 • Phone (630) 778-1200 • Fax (630) 778-1233

Analytical Report

Client: BRADBURNE, BRILLER & JOHNSON
Project ID: Lyons, IL
Sample ID: SB-10 (8.5-10)
Sample No: 7-2204-002

Date Collected: 05/17/07
Time Collected: 15:55
Date Received: 05/18/07
Date Reported: 05/31/07

Results are reported on a dry weight basis.

Analyte	Result	R.L.	Units	Flags
Semi-Volatile Compounds **Method: 8270C**		**Preparation Method 3540C**		
Analysis Date: 05/22/07		Preparation Date: 05/21/07		
3,3'-Dichlorobenzidine	< 660	660	ug/kg	
2,4-Dichlorophenol	< 330	330	ug/kg	
Diethyl phthalate	< 330	330	ug/kg	
2,4-Dimethylphenol	< 330	330	ug/kg	
Dimethyl phthalate	< 330	330	ug/kg	
4,6-Dinitro-2-methylphenol	< 1,600	1600	ug/kg	
2,4-Dinitrophenol	< 1,600	1600	ug/kg	
2,4-Dinitrotoluene	< 250	250	ug/kg	
2,6-Dinitrotoluene	< 260	260	ug/kg	
Fluoranthene	< 330	330	ug/kg	
Fluorene	< 330	330	ug/kg	
Hexachlorobenzene	< 330	330	ug/kg	
Hexachlorobutadiene	< 330	330	ug/kg	
Hexachlorocyclopentadiene	< 330	330	ug/kg	
Hexachloroethane	< 330	330	ug/kg	
Indeno(1,2,3-cd)pyrene	< 330	330	ug/kg	
Isophorone	< 330	330	ug/kg	
2-Methylnaphthalene	< 330	330	ug/kg	
2-Methylphenol	< 330	330	ug/kg	
3 & 4-Methylphenol	< 330	330	ug/kg	
Naphthalene	< 330	330	ug/kg	
2-Nitroaniline	< 1,600	1600	ug/kg	
3-Nitroaniline	< 1,600	1600	ug/kg	
4-Nitroaniline	< 1,600	1600	ug/kg	
Nitrobenzene	< 260	260	ug/kg	
2-Nitrophenol	< 1,600	1600	ug/kg	
4-Nitrophenol	< 1,600	1600	ug/kg	
n-Nitrosodi-n-propylamine	< 330	330	ug/kg	
n-Nitrosodimethylamine	< 330	330	ug/kg	
n-Nitrosodiphenylamine	< 330	330	ug/kg	
Pentachlorophenol	< 330	330	ug/kg	
Phenanthrene	< 330	330	ug/kg	
Phenol	< 330	330	ug/kg	
Pyrene	< 330	330	ug/kg	
Pyridine	< 330	330	ug/kg	
1,2,4-Trichlorobenzene	< 330	330	ug/kg	

First Environmental Laboratories, Inc.
IL ELAP / NELAC Accreditation # 100292
1600 Shore Road • Naperville, Illinois 60563 • Phone (630) 778-1200 • Fax (630) 778-1233

Analytical Report

Client: BRADBURNE, BRILLER & JOHNSON
Project ID: Lyons, IL
Sample ID: SB-10 (8.5-10)
Sample No: 7-2204-002

Date Collected: 05/17/07
Time Collected: 15:55
Date Received: 05/18/07
Date Reported: 05/31/07

Results are reported on a dry weight basis.

Analyte	Result	R.L.	Units	Flags
Semi-Volatile Compounds Analysis Date: 05/22/07	**Method: 8270C**	**Preparation Method 3540C** Preparation Date: 05/21/07		
2,4,5-Trichlorophenol	< 330	330	ug/kg	
2,4,6-Trichlorophenol	< 330	330	ug/kg	
Pesticides/PCBs Analysis Date: 05/31/07	**Method: 8081A/8082**	**Preparation Method 3540C** Preparation Date: 05/21/07		
Aldrin	< 8.0	8.0	ug/kg	
Aroclor 1016	< 80.0	80.0	ug/kg	
Aroclor 1221	< 80.0	80.0	ug/kg	
Aroclor 1232	< 80.0	80.0	ug/kg	
Aroclor 1242	< 80.0	80.0	ug/kg	
Aroclor 1248	< 80.0	80.0	ug/kg	
Aroclor 1254	< 160	160	ug/kg	
Aroclor 1260	< 160	160	ug/kg	
alpha-BHC	< 2.0	2.0	ug/kg	
beta-BHC	< 8.0	8.0	ug/kg	
delta-BHC	< 8.0	8.0	ug/kg	
gamma-BHC (Lindane)	< 8.0	8.0	ug/kg	
alpha-Chlordane	< 80.0	80.0	ug/kg	
gamma-Chlordane	< 80.0	80.0	ug/kg	
4,4'-DDD	< 16.0	16.0	ug/kg	
4,4'-DDE	< 16.0	16.0	ug/kg	
4,4'-DDT	< 16.0	16.0	ug/kg	
Dieldrin	< 16.0	16.0	ug/kg	
Endosulfan I	< 8.0	8.0	ug/kg	
Endosulfan II	< 16.0	16.0	ug/kg	
Endosulfan sulfate	< 16.0	16.0	ug/kg	
Endrin	< 16.0	16.0	ug/kg	
Endrin aldehyde	< 16.0	16.0	ug/kg	
Endrin ketone	< 16.0	16.0	ug/kg	
Heptachlor	< 8.0	8.0	ug/kg	
Heptachlor epoxide	< 8.0	8.0	ug/kg	
Methoxychlor	< 80.0	80.0	ug/kg	
Toxaphene	< 160	160	ug/kg	
pH @ 25°C, 1:10 Analysis Date: 05/22/07	**Method: 4500H+B**			
pH @ 25°C, 1:10	8.97		Units	

First Environmental Laboratories, Inc.
IL ELAP / NELAC Accreditation # 100292
1600 Shore Road • Naperville, Illinois 60563 • Phone (630) 778-1200 • Fax (630) 778-1233

Analytical Report

Client: BRADBURNE, BRILLER & JOHNSON
Project ID: Lyons, IL
Sample ID: SB-10 (8.5-10)
Sample No: 7-2204-002

Date Collected: 05/17/07
Time Collected: 15:55
Date Received: 05/18/07
Date Reported: 05/31/07

Results are reported on a dry weight basis.

Analyte		Result	R.L.	Units	Flags
Total Metals	**Method: 6010B**		**Preparation Method 3050B**		
Analysis Date: 05/24/07			Preparation Date: 05/18/07		
Arsenic		4.9	0.2	mg/kg	
Barium		55.3	0.1	mg/kg	
Cadmium		0.4	0.1	mg/kg	
Chromium		16.9	0.1	mg/kg	
Lead		10.8	0.2	mg/kg	
Selenium		< 0.2	0.2	mg/kg	
Silver		< 0.1	0.1	mg/kg	
Total Metals	**Method: 7470A**				
Analysis Date: 05/23/07					
Mercury		< 0.05	0.05	mg/kg	
Herbicides	**Method: 8321**				
Analysis Date: 05/22/07					
2,4-Dichlorophenoxyacetic acid (2,4-D)		< 100	100	ug/kg	S
Silvex (2,4,5-TP)		< 100	100	ug/kg	S

First Environmental Laboratories, Inc.
IL ELAP / NELAC Accreditation # 100292
1600 Shore Road • Naperville, Illinois 60563 • Phone (630) 778-1200 • Fax (630) 778-1233

Analytical Report

Client:	BRADBURNE, BRILLER & JOHNSON	**Date Collected:**	05/17/07
Project ID:	Lyons, IL	**Time Collected:**	16:00
Sample ID:	SB-10 (18.5-20)	**Date Received:**	05/18/07
Sample No:	7-2204-003	**Date Reported:**	05/31/07

Results are reported on a dry weight basis.

Analyte	Result	R.L.	Units	Flags
Solids, total **Method: 160.3**				
Analysis Date: 05/21/07				
Total Solids	81.01		%	
Volatile Organic Compounds **Method: 5035A/8260B**				
Analysis Date: 05/24/07				
Acetone	< 100	100	ug/kg	
Benzene	< 5.0	5.0	ug/kg	
Bromodichloromethane	< 5.0	5.0	ug/kg	
Bromoform	< 5.0	5.0	ug/kg	
Bromomethane	< 10.0	10.0	ug/kg	
2-Butanone (MEK)	< 10.0	10.0	ug/kg	
Carbon disulfide	< 5.0	5.0	ug/kg	
Carbon tetrachloride	< 5.0	5.0	ug/kg	
Chlorobenzene	< 5.0	5.0	ug/kg	
Chlorodibromomethane	< 5.0	5.0	ug/kg	
Chloroethane	< 10.0	10.0	ug/kg	
Chloroform	< 5.0	5.0	ug/kg	
Chloromethane	< 10.0	10.0	ug/kg	
1,1-Dichloroethane	< 5.0	5.0	ug/kg	
1,2-Dichloroethane	< 5.0	5.0	ug/kg	
1,1-Dichloroethene	< 5.0	5.0	ug/kg	
cis-1,2-Dichloroethene	< 5.0	5.0	ug/kg	
trans-1,2-Dichloroethene	< 5.0	5.0	ug/kg	
1,2-Dichloropropane	< 5.0	5.0	ug/kg	
cis-1,3-Dichloropropene	< 5.0	5.0	ug/kg	
trans-1,3-Dichloropropene	< 5.0	5.0	ug/kg	
Ethylbenzene	< 5.0	5.0	ug/kg	
2-Hexanone	< 10.0	10.0	ug/kg	
Methyl-tert-butylether (MTBE)	< 5.0	5.0	ug/kg	
4-Methyl-2-pentanone (MIBK)	< 10.0	10.0	ug/kg	
Methylene chloride	< 5.0	5.0	ug/kg	
Styrene	< 5.0	5.0	ug/kg	
1,1,2,2-Tetrachloroethane	< 5.0	5.0	ug/kg	
Tetrachloroethene	< 5.0	5.0	ug/kg	
Toluene	< 5.0	5.0	ug/kg	
1,1,1-Trichloroethane	< 5.0	5.0	ug/kg	
1,1,2-Trichloroethane	< 5.0	5.0	ug/kg	
Trichloroethene	< 5.0	5.0	ug/kg	

First Environmental Laboratories, Inc.
IL ELAP / NELAC Accreditation # 100292
1600 Shore Road • Naperville, Illinois 60563 • Phone (630) 778-1200 • Fax (630) 778-1233

Analytical Report

Client:	BRADBURNE, BRILLER & JOHNSON	**Date Collected:**	05/17/07
Project ID:	Lyons, IL	**Time Collected:**	16:00
Sample ID:	SB-10 (18.5-20)	**Date Received:**	05/18/07
Sample No:	7-2204-003	**Date Reported:**	05/31/07

Results are reported on a dry weight basis.

Analyte	Result	R.L.	Units	Flags
Volatile Organic Compounds Analysis Date: 05/24/07	**Method: 5035A/8260B**			
Vinyl acetate	< 10.0	10.0	ug/kg	
Vinyl chloride	< 10.0	10.0	ug/kg	
Xylene, Total	< 5.0	5.0	ug/kg	
Semi-Volatile Compounds Analysis Date: 05/23/07	**Method: 8270C**	**Preparation Method 3540C** Preparation Date: 05/21/07		
Acenaphthene	< 330	330	ug/kg	
Acenaphthylene	< 330	330	ug/kg	
Anthracene	< 330	330	ug/kg	
Benzidine	< 330	330	ug/kg	
Benzo(a)anthracene	< 330	330	ug/kg	
Benzo(a)pyrene	< 90	90	ug/kg	
Benzo(b)fluoranthene	< 330	330	ug/kg	
Benzo(k)fluoranthene	< 330	330	ug/kg	
Benzo(ghi)perylene	< 330	330	ug/kg	
Benzoic acid	< 330	330	ug/kg	
Benzyl alcohol	< 330	330	ug/kg	
bis(2-Chloroethoxy)methane	< 330	330	ug/kg	
bis(2-Chloroethyl)ether	< 330	330	ug/kg	
bis(2-Chloroisopropyl)ether	< 330	330	ug/kg	
bis(2-Ethylhexyl)phthalate	< 330	330	ug/kg	
4-Bromophenyl phenyl ether	< 330	330	ug/kg	
Butyl benzyl phthalate	< 330	330	ug/kg	
Carbazole	< 330	330	ug/kg	
4-Chloroaniline	< 330	330	ug/kg	
4-Chloro-3-methylphenol	< 330	330	ug/kg	
2-Chloronaphthalene	< 330	330	ug/kg	
2-Chlorophenol	< 330	330	ug/kg	
4-Chlorophenyl phenyl ether	< 330	330	ug/kg	
Chrysene	< 330	330	ug/kg	
Di-n-butyl phthalate	< 330	330	ug/kg	
Di-n-octylphthalate	< 330	330	ug/kg	
Dibenzo(a,h)anthracene	< 90	90	ug/kg	
Dibenzofuran	< 330	330	ug/kg	
1,2-Dichlorobenzene	< 330	330	ug/kg	
1,3-Dichlorobenzene	< 330	330	ug/kg	
1,4-Dichlorobenzene	< 330	330	ug/kg	

First Environmental Laboratories, Inc.
IL ELAP / NELAC Accreditation # 100292
1600 Shore Road • Naperville, Illinois 60563 • Phone (630) 778-1200 • Fax (630) 778-1233

Analytical Report

Client: BRADBURNE, BRILLER & JOHNSON
Project ID: Lyons, IL
Sample ID: SB-10 (18.5-20)
Sample No: 7-2204-003

Date Collected: 05/17/07
Time Collected: 16:00
Date Received: 05/18/07
Date Reported: 05/31/07

Results are reported on a dry weight basis.

Analyte	Result	R.L.	Units	Flags
Semi-Volatile Compounds Analysis Date: 05/23/07	**Method: 8270C**	**Preparation Method 3540C** Preparation Date: 05/21/07		
3,3'-Dichlorobenzidine	< 660	660	ug/kg	
2,4-Dichlorophenol	< 330	330	ug/kg	
Diethyl phthalate	< 330	330	ug/kg	
2,4-Dimethylphenol	< 330	330	ug/kg	
Dimethyl phthalate	< 330	330	ug/kg	
4,6-Dinitro-2-methylphenol	< 1,600	1600	ug/kg	
2,4-Dinitrophenol	< 1,600	1600	ug/kg	
2,4-Dinitrotoluene	< 250	250	ug/kg	
2,6-Dinitrotoluene	< 260	260	ug/kg	
Fluoranthene	< 330	330	ug/kg	
Fluorene	< 330	330	ug/kg	
Hexachlorobenzene	< 330	330	ug/kg	
Hexachlorobutadiene	< 330	330	ug/kg	
Hexachlorocyclopentadiene	< 330	330	ug/kg	
Hexachloroethane	< 330	330	ug/kg	
Indeno(1,2,3-cd)pyrene	< 330	330	ug/kg	
Isophorone	< 330	330	ug/kg	
2-Methylnaphthalene	< 330	330	ug/kg	
2-Methylphenol	< 330	330	ug/kg	
3 & 4-Methylphenol	< 330	330	ug/kg	
Naphthalene	< 330	330	ug/kg	
2-Nitroaniline	< 1,600	1600	ug/kg	
3-Nitroaniline	< 1,600	1600	ug/kg	
4-Nitroaniline	< 1,600	1600	ug/kg	
Nitrobenzene	< 260	260	ug/kg	
2-Nitrophenol	< 1,600	1600	ug/kg	
4-Nitrophenol	< 1,600	1600	ug/kg	
n-Nitrosodi-n-propylamine	< 330	330	ug/kg	
n-Nitrosodimethylamine	< 330	330	ug/kg	
n-Nitrosodiphenylamine	< 330	330	ug/kg	
Pentachlorophenol	< 330	330	ug/kg	
Phenanthrene	< 330	330	ug/kg	
Phenol	< 330	330	ug/kg	
Pyrene	< 330	330	ug/kg	
Pyridine	< 330	330	ug/kg	
1,2,4-Trichlorobenzene	< 330	330	ug/kg	

First Environmental Laboratories, Inc.
IL ELAP / NELAC Accreditation # 100292
1600 Shore Road • Naperville, Illinois 60563 • Phone (630) 778-1200 • Fax (630) 778-1233

Analytical Report

Client: BRADBURNE, BRILLER & JOHNSON
Project ID: Lyons, IL
Sample ID: SB-10 (18.5-20)
Sample No: 7-2204-003

Date Collected: 05/17/07
Time Collected: 16:00
Date Received: 05/18/07
Date Reported: 05/31/07

Results are reported on a dry weight basis.

Analyte	Result	R.L.	Units	Flags
Semi-Volatile Compounds Analysis Date: 05/23/07	**Method: 8270C**	**Preparation Method 3540C** Preparation Date: 05/21/07		
2,4,5-Trichlorophenol	< 330	330	ug/kg	
2,4,6-Trichlorophenol	< 330	330	ug/kg	
Pesticides/PCBs Analysis Date: 05/31/07	**Method: 8081A/8082**	**Preparation Method 3540C** Preparation Date: 05/21/07		
Aldrin	< 8.0	8.0	ug/kg	
Aroclor 1016	< 80.0	80.0	ug/kg	
Aroclor 1221	< 80.0	80.0	ug/kg	
Aroclor 1232	< 80.0	80.0	ug/kg	
Aroclor 1242	< 80.0	80.0	ug/kg	
Aroclor 1248	< 80.0	80.0	ug/kg	
Aroclor 1254	< 160	160	ug/kg	
Aroclor 1260	< 160	160	ug/kg	
alpha-BHC	< 2.0	2.0	ug/kg	
beta-BHC	< 8.0	8.0	ug/kg	
delta-BHC	< 8.0	8.0	ug/kg	
gamma-BHC (Lindane)	< 8.0	8.0	ug/kg	
alpha-Chlordane	< 80.0	80.0	ug/kg	
gamma-Chlordane	< 80.0	80.0	ug/kg	
4,4'-DDD	< 16.0	16.0	ug/kg	
4,4'-DDE	< 16.0	16.0	ug/kg	
4,4'-DDT	< 16.0	16.0	ug/kg	
Dieldrin	< 16.0	16.0	ug/kg	
Endosulfan I	< 8.0	8.0	ug/kg	
Endosulfan II	< 16.0	16.0	ug/kg	
Endosulfan sulfate	< 16.0	16.0	ug/kg	
Endrin	< 16.0	16.0	ug/kg	
Endrin aldehyde	< 16.0	16.0	ug/kg	
Endrin ketone	< 16.0	16.0	ug/kg	
Heptachlor	< 8.0	8.0	ug/kg	
Heptachlor epoxide	< 8.0	8.0	ug/kg	
Methoxychlor	< 80.0	80.0	ug/kg	
Toxaphene	< 160	160	ug/kg	
pH @ 25°C, 1:10 Analysis Date: 05/22/07	**Method: 4500H+B**			
pH @ 25°C, 1:10	9.35		Units	

First Environmental Laboratories, Inc.
IL ELAP / NELAC Accreditation # 100292
1600 Shore Road • Naperville, Illinois 60563 • Phone (630) 778-1200 • Fax (630) 778-1233

Analytical Report

Client: BRADBURNE, BRILLER & JOHNSON
Project ID: Lyons, IL
Sample ID: SB-10 (18.5-20)
Sample No: 7-2204-003

Date Collected: 05/17/07
Time Collected: 16:00
Date Received: 05/18/07
Date Reported: 05/31/07

Results are reported on a dry weight basis.

Analyte		Result	R.L.	Units	Flags
Total Metals	**Method: 6010B**		**Preparation Method 3050B**		
Analysis Date: 05/24/07			Preparation Date: 05/18/07		
Arsenic		1.5	0.2	mg/kg	
Barium		3.7	0.1	mg/kg	
Cadmium		< 0.1	0.1	mg/kg	
Chromium		3.3	0.1	mg/kg	
Lead		1.2	0.2	mg/kg	
Selenium		< 0.2	0.2	mg/kg	
Silver		< 0.1	0.1	mg/kg	
Total Metals	**Method: 7470A**				
Analysis Date: 05/23/07					
Mercury		< 0.05	0.05	mg/kg	
Herbicides	**Method: 8321**				
Analysis Date: 05/22/07					
2,4-Dichlorophenoxyacetic acid (2,4-D)		< 100	100	ug/kg	S
Silvex (2,4,5-TP)		< 100	100	ug/kg	S

First Environmental Laboratories, Inc.
IL ELAP / NELAC Accreditation # 100292
1600 Shore Road • Naperville, Illinois 60563 • Phone (630) 778-1200 • Fax (630) 778-1233

Analytical Report

Client: BRADBURNE, BRILLER & JOHNSON
Project ID: Lyons, IL
Sample ID: SB-5 vicinity
Sample No: 7-2204-004

Date Collected: 05/17/07
Time Collected: 16:05
Date Received: 05/18/07
Date Reported: 05/31/07

Results are reported on a dry weight basis.

Analyte	Result	R.L.	Units	Flags
Solids, total **Method: 160.3**				
Analysis Date: 05/21/07				
Total Solids	93.76		%	
Volatile Organic Compounds **Method: 5035A/8260B**				
Analysis Date: 05/23/07				
Acetone	< 500	100	ug/kg	
Benzene	< 30.0	5.0	ug/kg	
Bromodichloromethane	< 50.0	5.0	ug/kg	
Bromoform	< 50.0	5.0	ug/kg	
Bromomethane	< 50.0	10.0	ug/kg	
2-Butanone (MEK)	< 50.0	10.0	ug/kg	
Carbon disulfide	< 50.0	5.0	ug/kg	
Carbon tetrachloride	< 50.0	5.0	ug/kg	
Chlorobenzene	< 50.0	5.0	ug/kg	
Chlorodibromomethane	< 50.0	5.0	ug/kg	
Chloroethane	< 50.0	10.0	ug/kg	
Chloroform	< 50.0	5.0	ug/kg	
Chloromethane	< 50.0	10.0	ug/kg	
1,1-Dichloroethane	< 50.0	5.0	ug/kg	
1,2-Dichloroethane	< 50.0	5.0	ug/kg	
1,1-Dichloroethene	< 50.0	5.0	ug/kg	
cis-1,2-Dichloroethene	< 50.0	5.0	ug/kg	
trans-1,2-Dichloroethene	< 50.0	5.0	ug/kg	
1,2-Dichloropropane	< 50.0	5.0	ug/kg	
cis-1,3-Dichloropropene	< 50.0	5.0	ug/kg	
trans-1,3-Dichloropropene	< 50.0	5.0	ug/kg	
Ethylbenzene	< 50.0	5.0	ug/kg	
2-Hexanone	< 50.0	10.0	ug/kg	
Methyl-tert-butylether (MTBE)	< 50.0	5.0	ug/kg	
4-Methyl-2-pentanone (MIBK)	< 50.0	10.0	ug/kg	
Methylene chloride	< 50.0	5.0	ug/kg	
Styrene	< 50.0	5.0	ug/kg	
1,1,2,2-Tetrachloroethane	< 50.0	5.0	ug/kg	
Tetrachloroethene	< 50.0	5.0	ug/kg	
Toluene	< 50.0	5.0	ug/kg	
1,1,1-Trichloroethane	< 50.0	5.0	ug/kg	
1,1,2-Trichloroethane	< 50.0	5.0	ug/kg	
Trichloroethene	< 50.0	5.0	ug/kg	

First Environmental Laboratories, Inc.
IL ELAP / NELAC Accreditation # 100292
1600 Shore Road • Naperville, Illinois 60563 • Phone (630) 778-1200 • Fax (630) 778-1233

Analytical Report

Client:	BRADBURNE, BRILLER & JOHNSON	**Date Collected:**	05/17/07
Project ID:	Lyons, IL	**Time Collected:**	16:05
Sample ID:	SB-5 vicinity	**Date Received:**	05/18/07
Sample No:	7-2204-004	**Date Reported:**	05/31/07

Results are reported on a dry weight basis.

Analyte	Result	R.L.	Units	Flags
Volatile Organic Compounds Analysis Date: 05/23/07	**Method: 5035A/8260B**			
Vinyl acetate	< 50.0	10.0	ug/kg	
Vinyl chloride	< 50.0	10.0	ug/kg	
Xylene, Total	< 50.0	5.0	ug/kg	
Semi-Volatile Compounds Analysis Date: 05/24/07	**Method: 8270C**	**Preparation Method 3540C** Preparation Date: 05/21/07		
Acenaphthene	< 1,650	330	ug/kg	
Acenaphthylene	< 1,650	330	ug/kg	
Anthracene	2,800	330	ug/kg	
Benzidine	< 1,650	330	ug/kg	
Benzo(a)anthracene	4,090	330	ug/kg	
Benzo(a)pyrene	3,720	90	ug/kg	
Benzo(b)fluoranthene	5,050	330	ug/kg	
Benzo(k)fluoranthene	3,020	330	ug/kg	
Benzo(ghi)perylene	< 1,650	330	ug/kg	
Benzoic acid	< 1,650	330	ug/kg	
Benzyl alcohol	< 1,650	330	ug/kg	
bis(2-Chloroethoxy)methane	< 1,650	330	ug/kg	
bis(2-Chloroethyl)ether	< 1,650	330	ug/kg	
bis(2-Chloroisopropyl)ether	< 1,650	330	ug/kg	
bis(2-Ethylhexyl)phthalate	< 1,650	330	ug/kg	
4-Bromophenyl phenyl ether	< 1,650	330	ug/kg	
Butyl benzyl phthalate	< 1,650	330	ug/kg	
Carbazole	< 1,650	330	ug/kg	
4-Chloroaniline	< 1,650	330	ug/kg	
4-Chloro-3-methylphenol	< 1,650	330	ug/kg	
2-Chloronaphthalene	< 1,650	330	ug/kg	
2-Chlorophenol	< 1,650	330	ug/kg	
4-Chlorophenyl phenyl ether	< 1,650	330	ug/kg	
Chrysene	3,860	330	ug/kg	
Di-n-butyl phthalate	< 1,650	330	ug/kg	
Di-n-octylphthalate	< 1,650	330	ug/kg	
Dibenzo(a,h)anthracene	583	90	ug/kg	
Dibenzofuran	< 1,650	330	ug/kg	
1,2-Dichlorobenzene	< 1,650	330	ug/kg	
1,3-Dichlorobenzene	< 1,650	330	ug/kg	
1,4-Dichlorobenzene	< 1,650	330	ug/kg	

First Environmental Laboratories, Inc.
IL ELAP / NELAC Accreditation # 100292
1600 Shore Road • Naperville, Illinois 60563 • Phone (630) 778-1200 • Fax (630) 778-1233

Analytical Report

Client: BRADBURNE, BRILLER & JOHNSON
Project ID: Lyons, IL
Sample ID: SB-5 vicinity
Sample No: 7-2204-004

Date Collected: 05/17/07
Time Collected: 16:05
Date Received: 05/18/07
Date Reported: 05/31/07

Results are reported on a dry weight basis.

Analyte	Result	R.L.	Units	Flags
Semi-Volatile Compounds Analysis Date: 05/24/07	**Method: 8270C**	**Preparation Method 3540C** Preparation Date: 05/21/07		
3,3'-Dichlorobenzidine	< 3,300	660	ug/kg	
2,4-Dichlorophenol	< 1,650	330	ug/kg	
Diethyl phthalate	< 1,650	330	ug/kg	
2,4-Dimethylphenol	< 1,650	330	ug/kg	
Dimethyl phthalate	< 1,650	330	ug/kg	
4,6-Dinitro-2-methylphenol	< 8,000	1600	ug/kg	
2,4-Dinitrophenol	< 8,000	1600	ug/kg	
2,4-Dinitrotoluene	< 1,250	250	ug/kg	
2,6-Dinitrotoluene	< 1,300	260	ug/kg	
Fluoranthene	8,590	330	ug/kg	
Fluorene	1,980	330	ug/kg	
Hexachlorobenzene	< 1,650	330	ug/kg	
Hexachlorobutadiene	< 1,650	330	ug/kg	
Hexachlorocyclopentadiene	< 1,650	330	ug/kg	
Hexachloroethane	< 1,650	330	ug/kg	
Indeno(1,2,3-cd)pyrene	< 1,650	330	ug/kg	
Isophorone	< 1,650	330	ug/kg	
2-Methylnaphthalene	< 1,650	330	ug/kg	
2-Methylphenol	< 1,650	330	ug/kg	
3 & 4-Methylphenol	< 1,650	330	ug/kg	
Naphthalene	< 1,650	330	ug/kg	
2-Nitroaniline	< 8,000	1600	ug/kg	
3-Nitroaniline	< 8,000	1600	ug/kg	
4-Nitroaniline	< 8,000	1600	ug/kg	
Nitrobenzene	< 1,300	260	ug/kg	
2-Nitrophenol	< 8,000	1600	ug/kg	
4-Nitrophenol	< 8,000	1600	ug/kg	
n-Nitrosodi-n-propylamine	< 1,650	330	ug/kg	
n-Nitrosodimethylamine	< 1,650	330	ug/kg	
n-Nitrosodiphenylamine	< 1,650	330	ug/kg	
Pentachlorophenol	< 1,650	330	ug/kg	
Phenanthrene	8,640	330	ug/kg	
Phenol	< 1,650	330	ug/kg	
Pyrene	6,840	330	ug/kg	
Pyridine	< 1,650	330	ug/kg	
1,2,4-Trichlorobenzene	< 1,650	330	ug/kg	

First Environmental Laboratories, Inc.
IL ELAP / NELAC Accreditation # 100292
1600 Shore Road • Naperville, Illinois 60563 • Phone (630) 778-1200 • Fax (630) 778-1233

Analytical Report

Client: BRADBURNE, BRILLER & JOHNSON
Project ID: Lyons, IL
Sample ID: SB-5 vicinity
Sample No: 7-2204-004

Date Collected: 05/17/07
Time Collected: 16:05
Date Received: 05/18/07
Date Reported: 05/31/07

Results are reported on a dry weight basis.

Analyte	Result	R.L.	Units	Flags
Semi-Volatile Compounds Analysis Date: 05/24/07	**Method: 8270C**	**Preparation Method 3540C** Preparation Date: 05/21/07		
2,4,5-Trichlorophenol	< 1,650	330	ug/kg	
2,4,6-Trichlorophenol	< 1,650	330	ug/kg	
Pesticides/PCBs Analysis Date: 05/31/07	**Method: 8081A/8082**	**Preparation Method 3540C** Preparation Date: 05/21/07		
Aldrin	< 8.0	8.0	ug/kg	
Aroclor 1016	< 80.0	80.0	ug/kg	
Aroclor 1221	< 80.0	80.0	ug/kg	
Aroclor 1232	< 80.0	80.0	ug/kg	
Aroclor 1242	< 80.0	80.0	ug/kg	
Aroclor 1248	< 80.0	80.0	ug/kg	
Aroclor 1254	< 160	160	ug/kg	
Aroclor 1260	< 160	160	ug/kg	
alpha-BHC	< 2.0	2.0	ug/kg	
beta-BHC	< 8.0	8.0	ug/kg	
delta-BHC	< 8.0	8.0	ug/kg	
gamma-BHC (Lindane)	< 8.0	8.0	ug/kg	
alpha-Chlordane	< 80.0	80.0	ug/kg	
gamma-Chlordane	< 80.0	80.0	ug/kg	
4,4'-DDD	< 16.0	16.0	ug/kg	
4,4'-DDE	< 16.0	16.0	ug/kg	
4,4'-DDT	< 16.0	16.0	ug/kg	
Dieldrin	< 16.0	16.0	ug/kg	
Endosulfan I	< 8.0	8.0	ug/kg	
Endosulfan II	< 16.0	16.0	ug/kg	
Endosulfan sulfate	< 16.0	16.0	ug/kg	
Endrin	< 16.0	16.0	ug/kg	
Endrin aldehyde	< 16.0	16.0	ug/kg	
Endrin ketone	< 16.0	16.0	ug/kg	
Heptachlor	< 8.0	8.0	ug/kg	
Heptachlor epoxide	< 8.0	8.0	ug/kg	
Methoxychlor	< 80.0	80.0	ug/kg	
Toxaphene	< 160	160	ug/kg	
pH @ 25°C, 1:10 Analysis Date: 05/22/07	**Method: 4500H+B**			
pH @ 25°C, 1:10	9.36		Units	

First Environmental Laboratories, Inc.
IL ELAP / NELAC Accreditation # 100292
1600 Shore Road • Naperville, Illinois 60563 • Phone (630) 778-1200 • Fax (630) 778-1233

Analytical Report

Client: BRADBURNE, BRILLER & JOHNSON
Project ID: Lyons, IL
Sample ID: SB-5 vicinity
Sample No: 7-2204-004

Date Collected: 05/17/07
Time Collected: 16:05
Date Received: 05/18/07
Date Reported: 05/31/07

Results are reported on a dry weight basis.

Analyte		Result	R.L.	Units	Flags
Total Metals	**Method: 6010B**		**Preparation Method 3050B**		
Analysis Date: 05/24/07			Preparation Date: 05/18/07		
Arsenic		5.0	0.2	mg/kg	
Barium		32.5	0.1	mg/kg	
Cadmium		0.4	0.1	mg/kg	
Chromium		7.9	0.1	mg/kg	
Lead		19.7	0.2	mg/kg	
Selenium		< 0.2	0.2	mg/kg	
Silver		< 0.1	0.1	mg/kg	
Total Metals	**Method: 7470A**				
Analysis Date: 05/23/07					
Mercury		< 0.05	0.05	mg/kg	
Herbicides	**Method: 8321**				
Analysis Date: 05/22/07					
2,4-Dichlorophenoxyacetic acid (2,4-D)		< 100	100	ug/kg	S
Silvex (2,4,5-TP)		< 100	100	ug/kg	S

First Environmental Laboratories, Inc.
IL ELAP / NELAC Accreditation # 100292
1600 Shore Road • Naperville, Illinois 60563 • Phone (630) 778-1200 • Fax (630) 778-1233

Analytical Report

Client: BRADBURNE, BRILLER & JOHNSON
Project ID: Lyons, IL
Sample ID: SB-5 (3.5-5)
Sample No: 7-2204-005

Date Collected: 05/17/07
Time Collected: 16:10
Date Received: 05/18/07
Date Reported: 05/31/07

Results are reported on a dry weight basis.

Analyte	Result	R.L.	Units	Flags
Solids, total **Method: 160.3**				
Analysis Date: 05/21/07				
Total Solids	89.55		%	
Volatile Organic Compounds **Method: 5035A/8260B**				
Analysis Date: 05/23/07				
Acetone	< 500	100	ug/kg	
Benzene	< 30.0	5.0	ug/kg	
Bromodichloromethane	< 50.0	5.0	ug/kg	
Bromoform	< 50.0	5.0	ug/kg	
Bromomethane	< 50.0	10.0	ug/kg	
2-Butanone (MEK)	< 50.0	10.0	ug/kg	
Carbon disulfide	< 50.0	5.0	ug/kg	
Carbon tetrachloride	< 50.0	5.0	ug/kg	
Chlorobenzene	< 50.0	5.0	ug/kg	
Chlorodibromomethane	< 50.0	5.0	ug/kg	
Chloroethane	< 50.0	10.0	ug/kg	
Chloroform	< 50.0	5.0	ug/kg	
Chloromethane	< 50.0	10.0	ug/kg	
1,1-Dichloroethane	< 50.0	5.0	ug/kg	
1,2-Dichloroethane	< 50.0	5.0	ug/kg	
1,1-Dichloroethene	< 50.0	5.0	ug/kg	
cis-1,2-Dichloroethene	< 50.0	5.0	ug/kg	
trans-1,2-Dichloroethene	< 50.0	5.0	ug/kg	
1,2-Dichloropropane	< 50.0	5.0	ug/kg	
cis-1,3-Dichloropropene	< 50.0	5.0	ug/kg	
trans-1,3-Dichloropropene	< 50.0	5.0	ug/kg	
Ethylbenzene	< 50.0	5.0	ug/kg	
2-Hexanone	< 50.0	10.0	ug/kg	
Methyl-tert-butylether (MTBE)	< 50.0	5.0	ug/kg	
4-Methyl-2-pentanone (MIBK)	< 50.0	10.0	ug/kg	
Methylene chloride	< 50.0	5.0	ug/kg	
Styrene	< 50.0	5.0	ug/kg	
1,1,2,2-Tetrachloroethane	< 50.0	5.0	ug/kg	
Tetrachloroethene	< 50.0	5.0	ug/kg	
Toluene	< 50.0	5.0	ug/kg	
1,1,1-Trichloroethane	< 50.0	5.0	ug/kg	
1,1,2-Trichloroethane	< 50.0	5.0	ug/kg	
Trichloroethene	< 50.0	5.0	ug/kg	

First Environmental Laboratories, Inc.
IL ELAP / NELAC Accreditation # 100292
1600 Shore Road • Naperville, Illinois 60563 • Phone (630) 778-1200 • Fax (630) 778-1233

Analytical Report

Client: BRADBURNE, BRILLER & JOHNSON
Project ID: Lyons, IL
Sample ID: SB-5 (3.5-5)
Sample No: 7-2204-005

Date Collected: 05/17/07
Time Collected: 16:10
Date Received: 05/18/07
Date Reported: 05/31/07

Results are reported on a dry weight basis.

Analyte	Result	R.L.	Units	Flags
Volatile Organic Compounds Method: 5035A/8260B				
Analysis Date: 05/23/07				
Vinyl acetate	< 50.0	10.0	ug/kg	
Vinyl chloride	< 50.0	10.0	ug/kg	
Xylene, Total	< 50.0	5.0	ug/kg	
Semi-Volatile Compounds Method: 8270C		Preparation Method 3540C		
Analysis Date: 05/25/07		Preparation Date: 05/21/07		
Acenaphthene	< 2,640	330	ug/kg	
Acenaphthylene	< 2,640	330	ug/kg	
Anthracene	< 2,640	330	ug/kg	
Benzidine	< 2,640	330	ug/kg	
Benzo(a)anthracene	< 2,640	330	ug/kg	
Benzo(a)pyrene	2,050	90	ug/kg	
Benzo(b)fluoranthene	< 2,640	330	ug/kg	
Benzo(k)fluoranthene	< 2,640	330	ug/kg	
Benzo(ghi)perylene	< 2,640	330	ug/kg	
Benzoic acid	< 2,640	330	ug/kg	
Benzyl alcohol	< 2,640	330	ug/kg	
bis(2-Chloroethoxy)methane	< 2,640	330	ug/kg	
bis(2-Chloroethyl)ether	< 2,640	330	ug/kg	
bis(2-Chloroisopropyl)ether	< 2,640	330	ug/kg	
bis(2-Ethylhexyl)phthalate	< 2,640	330	ug/kg	
4-Bromophenyl phenyl ether	< 2,640	330	ug/kg	
Butyl benzyl phthalate	< 2,640	330	ug/kg	
Carbazole	< 2,640	330	ug/kg	
4-Chloroaniline	< 2,640	330	ug/kg	
4-Chloro-3-methylphenol	< 2,640	330	ug/kg	
2-Chloronaphthalene	< 2,640	330	ug/kg	
2-Chlorophenol	< 2,640	330	ug/kg	
4-Chlorophenyl phenyl ether	< 2,640	330	ug/kg	
Chrysene	< 2,640	330	ug/kg	
Di-n-butyl phthalate	< 2,640	330	ug/kg	
Di-n-octylphthalate	< 2,640	330	ug/kg	
Dibenzo(a,h)anthracene	< 2,640	90	ug/kg	
Dibenzofuran	< 2,640	330	ug/kg	
1,2-Dichlorobenzene	< 2,640	330	ug/kg	
1,3-Dichlorobenzene	< 2,640	330	ug/kg	
1,4-Dichlorobenzene	< 2,640	330	ug/kg	

First Environmental Laboratories, Inc.
IL ELAP / NELAC Accreditation # 100292
1600 Shore Road • Naperville, Illinois 60563 • Phone (630) 778-1200 • Fax (630) 778-1233

Analytical Report

Client:	BRADBURNE, BRILLER & JOHNSON	**Date Collected:**	05/17/07
Project ID:	Lyons, IL	**Time Collected:**	16:10
Sample ID:	SB-5 (3.5-5)	**Date Received:**	05/18/07
Sample No:	7-2204-005	**Date Reported:**	05/31/07

Results are reported on a dry weight basis.

Analyte	Result	R.L.	Units	Flags
Semi-Volatile Compounds Analysis Date: 05/25/07	**Method: 8270C**	**Preparation Method 3540C** Preparation Date: 05/21/07		
3,3'-Dichlorobenzidine	< 5,280	660	ug/kg	
2,4-Dichlorophenol	< 2,640	330	ug/kg	
Diethyl phthalate	< 2,640	330	ug/kg	
2,4-Dimethylphenol	< 2,640	330	ug/kg	
Dimethyl phthalate	< 2,640	330	ug/kg	
4,6-Dinitro-2-methylphenol	< 12,800	1600	ug/kg	
2,4-Dinitrophenol	< 12,800	1600	ug/kg	
2,4-Dinitrotoluene	< 2,000	250	ug/kg	
2,6-Dinitrotoluene	< 2,080	260	ug/kg	
Fluoranthene	3,690	330	ug/kg	
Fluorene	< 2,640	330	ug/kg	
Hexachlorobenzene	< 2,640	330	ug/kg	
Hexachlorobutadiene	< 2,640	330	ug/kg	
Hexachlorocyclopentadiene	< 2,640	330	ug/kg	
Hexachloroethane	< 2,640	330	ug/kg	
Indeno(1,2,3-cd)pyrene	< 2,640	330	ug/kg	
Isophorone	< 2,640	330	ug/kg	
2-Methylnaphthalene	< 2,640	330	ug/kg	
2-Methylphenol	< 2,640	330	ug/kg	
3 & 4-Methylphenol	< 2,640	330	ug/kg	
Naphthalene	4,710	330	ug/kg	
2-Nitroaniline	< 12,800	1600	ug/kg	
3-Nitroaniline	< 12,800	1600	ug/kg	
4-Nitroaniline	< 12,800	1600	ug/kg	
Nitrobenzene	< 2,080	260	ug/kg	
2-Nitrophenol	< 12,800	1600	ug/kg	
4-Nitrophenol	< 12,800	1600	ug/kg	
n-Nitrosodi-n-propylamine	< 2,640	330	ug/kg	
n-Nitrosodimethylamine	< 2,640	330	ug/kg	
n-Nitrosodiphenylamine	< 2,640	330	ug/kg	
Pentachlorophenol	< 2,640	330	ug/kg	
Phenanthrene	< 2,640	330	ug/kg	
Phenol	< 2,640	330	ug/kg	
Pyrene	3,490	330	ug/kg	
Pyridine	< 2,640	330	ug/kg	
1,2,4-Trichlorobenzene	< 2,640	330	ug/kg	

First Environmental Laboratories, Inc.
IL ELAP / NELAC Accreditation # 100292
1600 Shore Road • Naperville, Illinois 60563 • Phone (630) 778-1200 • Fax (630) 778-1233

Analytical Report

Client:	BRADBURNE, BRILLER & JOHNSON	**Date Collected:**	05/17/07
Project ID:	Lyons, IL	**Time Collected:**	16:10
Sample ID:	SB-5 (3.5-5)	**Date Received:**	05/18/07
Sample No:	7-2204-005	**Date Reported:**	05/31/07

Results are reported on a dry weight basis.

Analyte	Result	R.L.	Units	Flags
Semi-Volatile Compounds	**Method: 8270C**	**Preparation Method 3540C**		
Analysis Date: 05/25/07		Preparation Date: 05/21/07		
2,4,5-Trichlorophenol	< 2,640	330	ug/kg	
2,4,6-Trichlorophenol	< 2,640	330	ug/kg	
Pesticides/PCBs	**Method: 8081A/8082**	**Preparation Method 3540C**		
Analysis Date: 05/31/07		Preparation Date: 05/21/07		
Aldrin	< 8.0	8.0	ug/kg	
Aroclor 1016	< 80.0	80.0	ug/kg	
Aroclor 1221	< 80.0	80.0	ug/kg	
Aroclor 1232	< 80.0	80.0	ug/kg	
Aroclor 1242	< 80.0	80.0	ug/kg	
Aroclor 1248	< 80.0	80.0	ug/kg	
Aroclor 1254	< 160	160	ug/kg	
Aroclor 1260	< 160	160	ug/kg	
alpha-BHC	< 2.0	2.0	ug/kg	
beta-BHC	< 8.0	8.0	ug/kg	
delta-BHC	< 8.0	8.0	ug/kg	
gamma-BHC (Lindane)	< 8.0	8.0	ug/kg	
alpha-Chlordane	< 80.0	80.0	ug/kg	
gamma-Chlordane	< 80.0	80.0	ug/kg	
4,4'-DDD	< 16.0	16.0	ug/kg	
4,4'-DDE	< 16.0	16.0	ug/kg	
4,4'-DDT	< 16.0	16.0	ug/kg	
Dieldrin	< 16.0	16.0	ug/kg	
Endosulfan I	< 8.0	8.0	ug/kg	
Endosulfan II	< 16.0	16.0	ug/kg	
Endosulfan sulfate	< 16.0	16.0	ug/kg	
Endrin	< 16.0	16.0	ug/kg	
Endrin aldehyde	< 16.0	16.0	ug/kg	
Endrin ketone	< 16.0	16.0	ug/kg	
Heptachlor	< 8.0	8.0	ug/kg	
Heptachlor epoxide	< 8.0	8.0	ug/kg	
Methoxychlor	< 80.0	80.0	ug/kg	
Toxaphene	< 160	160	ug/kg	
pH @ 25°C, 1:10	**Method: 4500H+B**			
Analysis Date: 05/22/07				
pH @ 25°C, 1:10	9.61		Units	

First Environmental Laboratories, Inc.
IL ELAP / NELAC Accreditation # 100292
1600 Shore Road • Naperville, Illinois 60563 • Phone (630) 778-1200 • Fax (630) 778-1233

Analytical Report

Client: BRADBURNE, BRILLER & JOHNSON
Project ID: Lyons, IL
Sample ID: SB-5 (3.5-5)
Sample No: 7-2204-005

Date Collected: 05/17/07
Time Collected: 16:10
Date Received: 05/18/07
Date Reported: 05/31/07

Results are reported on a dry weight basis.

Analyte		Result	R.L.	Units	Flags
Total Metals	**Method: 6010B**		**Preparation Method 3050B**		
Analysis Date: 05/24/07			Preparation Date: 05/18/07		
Arsenic		1.8	0.2	mg/kg	
Barium		15.2	0.1	mg/kg	
Cadmium		0.3	0.1	mg/kg	
Chromium		7.1	0.1	mg/kg	
Lead		22.2	0.2	mg/kg	
Selenium		< 0.2	0.2	mg/kg	
Silver		< 0.1	0.1	mg/kg	
Total Metals	**Method: 7470A**				
Analysis Date: 05/23/07					
Mercury		< 0.05	0.05	mg/kg	
Herbicides	**Method: 8321**				
Analysis Date: 05/22/07					
2,4-Dichlorophenoxyacetic acid (2,4-D)		< 100	100	ug/kg	S
Silvex (2,4,5-TP)		< 100	100	ug/kg	S

First Environmental Laboratories, Inc.
IL ELAP / NELAC Accreditation # 100292
1600 Shore Road • Naperville, Illinois 60563 • Phone (630) 778-1200 • Fax (630) 778-1233

Analytical Report

Client:	BRADBURNE, BRILLER & JOHNSON	**Date Collected:**	05/17/07
Project ID:	Lyons, IL	**Time Collected:**	16:15
Sample ID:	SB-5 (6-7.5)	**Date Received:**	05/18/07
Sample No:	7-2204-006	**Date Reported:**	05/31/07

Results are reported on a dry weight basis.

Analyte	Result	R.L.	Units	Flags
Solids, total **Method: 160.3**				
Analysis Date: 05/21/07				
Total Solids	85.63		%	
Volatile Organic Compounds **Method: 5035A/8260B**				
Analysis Date: 05/23/07				
Acetone	< 100	100	ug/kg	
Benzene	< 5.0	5.0	ug/kg	
Bromodichloromethane	< 5.0	5.0	ug/kg	
Bromoform	< 5.0	5.0	ug/kg	
Bromomethane	< 10.0	10.0	ug/kg	
2-Butanone (MEK)	< 10.0	10.0	ug/kg	
Carbon disulfide	< 5.0	5.0	ug/kg	
Carbon tetrachloride	< 5.0	5.0	ug/kg	
Chlorobenzene	< 5.0	5.0	ug/kg	
Chlorodibromomethane	< 5.0	5.0	ug/kg	
Chloroethane	< 10.0	10.0	ug/kg	
Chloroform	< 5.0	5.0	ug/kg	
Chloromethane	< 10.0	10.0	ug/kg	
1,1-Dichloroethane	< 5.0	5.0	ug/kg	
1,2-Dichloroethane	< 5.0	5.0	ug/kg	
1,1-Dichloroethene	< 5.0	5.0	ug/kg	
cis-1,2-Dichloroethene	< 5.0	5.0	ug/kg	
trans-1,2-Dichloroethene	< 5.0	5.0	ug/kg	
1,2-Dichloropropane	< 5.0	5.0	ug/kg	
cis-1,3-Dichloropropene	< 5.0	5.0	ug/kg	
trans-1,3-Dichloropropene	< 5.0	5.0	ug/kg	
Ethylbenzene	< 5.0	5.0	ug/kg	
2-Hexanone	< 10.0	10.0	ug/kg	
Methyl-tert-butylether (MTBE)	< 5.0	5.0	ug/kg	
4-Methyl-2-pentanone (MIBK)	< 10.0	10.0	ug/kg	
Methylene chloride	< 5.0	5.0	ug/kg	
Styrene	< 5.0	5.0	ug/kg	
1,1,2,2-Tetrachloroethane	< 5.0	5.0	ug/kg	
Tetrachloroethene	< 5.0	5.0	ug/kg	
Toluene	< 5.0	5.0	ug/kg	
1,1,1-Trichloroethane	< 5.0	5.0	ug/kg	
1,1,2-Trichloroethane	< 5.0	5.0	ug/kg	
Trichloroethene	< 5.0	5.0	ug/kg	

First Environmental Laboratories, Inc.
IL ELAP / NELAC Accreditation # 100292
1600 Shore Road • Naperville, Illinois 60563 • Phone (630) 778-1200 • Fax (630) 778-1233

Analytical Report

Client: BRADBURNE, BRILLER & JOHNSON
Project ID: Lyons, IL
Sample ID: SB-5 (6-7.5)
Sample No: 7-2204-006

Date Collected: 05/17/07
Time Collected: 16:15
Date Received: 05/18/07
Date Reported: 05/31/07

Results are reported on a dry weight basis.

Analyte	Result	R.L.	Units	Flags
Volatile Organic Compounds Method: 5035A/8260B				
Analysis Date: 05/23/07				
Vinyl acetate	< 10.0	10.0	ug/kg	
Vinyl chloride	< 10.0	10.0	ug/kg	
Xylene, Total	< 5.0	5.0	ug/kg	
Semi-Volatile Compounds Method: 8270C		Preparation Method 3540C		
Analysis Date: 05/24/07		Preparation Date: 05/21/07		
Acenaphthene	< 330	330	ug/kg	
Acenaphthylene	< 330	330	ug/kg	
Anthracene	< 330	330	ug/kg	
Benzidine	< 330	330	ug/kg	
Benzo(a)anthracene	< 330	330	ug/kg	
Benzo(a)pyrene	< 90	90	ug/kg	
Benzo(b)fluoranthene	< 330	330	ug/kg	
Benzo(k)fluoranthene	< 330	330	ug/kg	
Benzo(ghi)perylene	< 330	330	ug/kg	
Benzoic acid	< 330	330	ug/kg	
Benzyl alcohol	< 330	330	ug/kg	
bis(2-Chloroethoxy)methane	< 330	330	ug/kg	
bis(2-Chloroethyl)ether	< 330	330	ug/kg	
bis(2-Chloroisopropyl)ether	< 330	330	ug/kg	
bis(2-Ethylhexyl)phthalate	< 330	330	ug/kg	
4-Bromophenyl phenyl ether	< 330	330	ug/kg	
Butyl benzyl phthalate	< 330	330	ug/kg	
Carbazole	< 330	330	ug/kg	
4-Chloroaniline	< 330	330	ug/kg	
4-Chloro-3-methylphenol	< 330	330	ug/kg	
2-Chloronaphthalene	< 330	330	ug/kg	
2-Chlorophenol	< 330	330	ug/kg	
4-Chlorophenyl phenyl ether	< 330	330	ug/kg	
Chrysene	< 330	330	ug/kg	
Di-n-butyl phthalate	< 330	330	ug/kg	
Di-n-octylphthalate	< 330	330	ug/kg	
Dibenzo(a,h)anthracene	< 90	90	ug/kg	
Dibenzofuran	< 330	330	ug/kg	
1,2-Dichlorobenzene	< 330	330	ug/kg	
1,3-Dichlorobenzene	< 330	330	ug/kg	
1,4-Dichlorobenzene	< 330	330	ug/kg	

First Environmental Laboratories, Inc.
IL ELAP / NELAC Accreditation # 100292
1600 Shore Road • Naperville, Illinois 60563 • Phone (630) 778-1200 • Fax (630) 778-1233

Analytical Report

Client: BRADBURNE, BRILLER & JOHNSON
Project ID: Lyons, IL
Sample ID: SB-5 (6-7.5)
Sample No: 7-2204-006

Date Collected: 05/17/07
Time Collected: 16:15
Date Received: 05/18/07
Date Reported: 05/31/07

Results are reported on a dry weight basis.

Analyte	Result	R.L.	Units	Flags
Semi-Volatile Compounds Method: 8270C Analysis Date: 05/24/07		**Preparation Method 3540C** Preparation Date: 05/21/07		
3,3'-Dichlorobenzidine	< 660	660	ug/kg	
2,4-Dichlorophenol	< 330	330	ug/kg	
Diethyl phthalate	< 330	330	ug/kg	
2,4-Dimethylphenol	< 330	330	ug/kg	
Dimethyl phthalate	< 330	330	ug/kg	
4,6-Dinitro-2-methylphenol	< 1,600	1600	ug/kg	
2,4-Dinitrophenol	< 1,600	1600	ug/kg	
2,4-Dinitrotoluene	< 250	250	ug/kg	
2,6-Dinitrotoluene	< 260	260	ug/kg	
Fluoranthene	< 330	330	ug/kg	
Fluorene	< 330	330	ug/kg	
Hexachlorobenzene	< 330	330	ug/kg	
Hexachlorobutadiene	< 330	330	ug/kg	
Hexachlorocyclopentadiene	< 330	330	ug/kg	
Hexachloroethane	< 330	330	ug/kg	
Indeno(1,2,3-cd)pyrene	< 330	330	ug/kg	
Isophorone	< 330	330	ug/kg	
2-Methylnaphthalene	< 330	330	ug/kg	
2-Methylphenol	< 330	330	ug/kg	
3 & 4-Methylphenol	< 330	330	ug/kg	
Naphthalene	< 330	330	ug/kg	
2-Nitroaniline	< 1,600	1600	ug/kg	
3-Nitroaniline	< 1,600	1600	ug/kg	
4-Nitroaniline	< 1,600	1600	ug/kg	
Nitrobenzene	< 260	260	ug/kg	
2-Nitrophenol	< 1,600	1600	ug/kg	
4-Nitrophenol	< 1,600	1600	ug/kg	
n-Nitrosodi-n-propylamine	< 330	330	ug/kg	
n-Nitrosodimethylamine	< 330	330	ug/kg	
n-Nitrosodiphenylamine	< 330	330	ug/kg	
Pentachlorophenol	< 330	330	ug/kg	
Phenanthrene	< 330	330	ug/kg	
Phenol	< 330	330	ug/kg	
Pyrene	< 330	330	ug/kg	
Pyridine	< 330	330	ug/kg	
1,2,4-Trichlorobenzene	< 330	330	ug/kg	

First Environmental Laboratories, Inc.
IL ELAP / NELAC Accreditation # 100292
1600 Shore Road • Naperville, Illinois 60563 • Phone (630) 778-1200 • Fax (630) 778-1233

Analytical Report

Client: BRADBURNE, BRILLER & JOHNSON
Project ID: Lyons, IL
Sample ID: SB-5 (6-7.5)
Sample No: 7-2204-006

Date Collected: 05/17/07
Time Collected: 16:15
Date Received: 05/18/07
Date Reported: 05/31/07

Results are reported on a dry weight basis.

Analyte	Result	R.L.	Units	Flags
Semi-Volatile Compounds Analysis Date: 05/24/07	**Method: 8270C**	**Preparation Method 3540C** Preparation Date: 05/21/07		
2,4,5-Trichlorophenol	< 330	330	ug/kg	
2,4,6-Trichlorophenol	< 330	330	ug/kg	
Pesticides/PCBs Analysis Date: 05/31/07	**Method: 8081A/8082**	**Preparation Method 3540C** Preparation Date: 05/21/07		
Aldrin	< 8.0	8.0	ug/kg	
Aroclor 1016	< 80.0	80.0	ug/kg	
Aroclor 1221	< 80.0	80.0	ug/kg	
Aroclor 1232	< 80.0	80.0	ug/kg	
Aroclor 1242	< 80.0	80.0	ug/kg	
Aroclor 1248	< 80.0	80.0	ug/kg	
Aroclor 1254	< 160	160	ug/kg	
Aroclor 1260	< 160	160	ug/kg	
alpha-BHC	< 2.0	2.0	ug/kg	
beta-BHC	< 8.0	8.0	ug/kg	
delta-BHC	< 8.0	8.0	ug/kg	
gamma-BHC (Lindane)	< 8.0	8.0	ug/kg	
alpha-Chlordane	< 80.0	80.0	ug/kg	
gamma-Chlordane	< 80.0	80.0	ug/kg	
4,4'-DDD	< 16.0	16.0	ug/kg	
4,4'-DDE	< 16.0	16.0	ug/kg	
4,4'-DDT	< 16.0	16.0	ug/kg	
Dieldrin	< 16.0	16.0	ug/kg	
Endosulfan I	< 8.0	8.0	ug/kg	
Endosulfan II	< 16.0	16.0	ug/kg	
Endosulfan sulfate	< 16.0	16.0	ug/kg	
Endrin	< 16.0	16.0	ug/kg	
Endrin aldehyde	< 16.0	16.0	ug/kg	
Endrin ketone	< 16.0	16.0	ug/kg	
Heptachlor	< 8.0	8.0	ug/kg	
Heptachlor epoxide	< 8.0	8.0	ug/kg	
Methoxychlor	< 80.0	80.0	ug/kg	
Toxaphene	< 160	160	ug/kg	
pH @ 25°C, 1:10 Analysis Date: 05/22/07	**Method: 4500H+B**			
pH @ 25°C, 1:10	8.66		Units	

First Environmental Laboratories, Inc.
IL ELAP / NELAC Accreditation # 100292
1600 Shore Road • Naperville, Illinois 60563 • Phone (630) 778-1200 • Fax (630) 778-1233

Analytical Report

Client: BRADBURNE, BRILLER & JOHNSON
Project ID: Lyons, IL
Sample ID: SB-5 (6-7.5)
Sample No: 7-2204-006

Date Collected: 05/17/07
Time Collected: 16:15
Date Received: 05/18/07
Date Reported: 05/31/07

Results are reported on a dry weight basis.

Analyte		Result	R.L.	Units	Flags
Total Metals	**Method: 6010B**		**Preparation Method 3050B**		
Analysis Date: 05/24/07			Preparation Date: 05/18/07		
Arsenic		7.7	0.2	mg/kg	
Barium		51.4	0.1	mg/kg	
Cadmium		0.6	0.1	mg/kg	
Chromium		9.5	0.1	mg/kg	
Lead		21.7	0.2	mg/kg	
Selenium		< 0.2	0.2	mg/kg	
Silver		< 0.1	0.1	mg/kg	
Total Metals	**Method: 7470A**				
Analysis Date: 05/23/07					
Mercury		0.06	0.05	mg/kg	
Herbicides	**Method: 8321**				
Analysis Date: 05/22/07					
2,4-Dichlorophenoxyacetic acid (2,4-D)		< 100	100	ug/kg	S
Silvex (2,4,5-TP)		< 100	100	ug/kg	S

First Environmental Laboratories, Inc.
IL ELAP / NELAC Accreditation # 100292
1600 Shore Road • Naperville, Illinois 60563 • Phone (630) 778-1200 • Fax (630) 778-1233

Analytical Report

Client: BRADBURNE, BRILLER & JOHNSON
Project ID: Lyons, IL
Sample ID: Rinsate
Sample No: 7-2204-007

Date Collected: 05/17/07
Time Collected: 16:15
Date Received: 05/18/07
Date Reported: 05/31/07

Analyte	Result	R.L.	Units	Flags
Volatile Organic Compounds **Method: 5030B/8260B**				
Analysis Date: 05/23/07				
Acetone	< 100	100	ug/L	
Benzene	< 5.0	5.0	ug/L	
Bromodichloromethane	< 1.0	1.0	ug/L	
Bromoform	< 1.0	1.0	ug/L	
Bromomethane	< 5.0	5.0	ug/L	
2-Butanone (MEK)	< 10.0	10.0	ug/L	
Carbon disulfide	< 5.0	5.0	ug/L	
Carbon tetrachloride	< 5.0	5.0	ug/L	
Chlorobenzene	< 5.0	5.0	ug/L	
Chlorodibromomethane	< 1.0	1.0	ug/L	
Chloroethane	< 10.0	10.0	ug/L	
Chloroform	< 1.0	1.0	ug/L	
Chloromethane	< 10.0	10.0	ug/L	
1,1-Dichloroethane	< 5.0	5.0	ug/L	
1,2-Dichloroethane	< 5.0	5.0	ug/L	
1,1-Dichloroethene	< 5.0	5.0	ug/L	
cis-1,2-Dichloroethene	< 5.0	5.0	ug/L	
trans-1,2-Dichloroethene	< 5.0	5.0	ug/L	
1,2-Dichloropropane	< 5.0	5.0	ug/L	
cis-1,3-Dichloropropene	< 1.0	1.0	ug/L	
trans-1,3-Dichloropropene	< 1.0	1.0	ug/L	
Ethylbenzene	< 5.0	5.0	ug/L	
2-Hexanone	< 10.0	10.0	ug/L	
Methyl-tert-butylether (MTBE)	< 5.0	5.0	ug/L	
4-Methyl-2-pentanone (MIBK)	< 10.0	10.0	ug/L	
Methylene chloride	< 5.0	5.0	ug/L	
Styrene	< 5.0	5.0	ug/L	
1,1,2,2-Tetrachloroethane	< 5.0	5.0	ug/L	
Tetrachloroethene	< 5.0	5.0	ug/L	
Toluene	< 5.0	5.0	ug/L	
1,1,1-Trichloroethane	< 5.0	5.0	ug/L	
1,1,2-Trichloroethane	< 5.0	5.0	ug/L	
Trichloroethene	< 5.0	5.0	ug/L	
Vinyl acetate	< 10.0	10.0	ug/L	
Vinyl chloride	< 2.0	2.0	ug/L	
Xylene, Total	< 5.0	5.0	ug/L	

First Environmental Laboratories, Inc.
IL ELAP / NELAC Accreditation # 100292
1600 Shore Road • Naperville, Illinois 60563 • Phone (630) 778-1200 • Fax (630) 778-1233

Analytical Report

Client:	BRADBURNE, BRILLER & JOHNSON	**Date Collected:**	05/17/07
Project ID:	Lyons, IL	**Time Collected:**	16:15
Sample ID:	Rinsate	**Date Received:**	05/18/07
Sample No:	7-2204-007	**Date Reported:**	05/31/07

Analyte	Result	R.L.	Units	Flags
Semi-Volatile Compounds **Method: 8270C**		**Preparation Method 3510C**		
Analysis Date: 05/24/07		Preparation Date: 05/23/07		
Acenaphthene	< 10	10	ug/L	
Acenaphthylene	< 10	10	ug/L	
Anthracene	< 10	10	ug/L	
Benzidine	< 10	10	ug/L	
Benzo(a)anthracene	< 10	10	ug/L	
Benzo(a)pyrene	< 10	10	ug/L	
Benzo(b)fluoranthene	< 10	10	ug/L	
Benzo(k)fluoranthene	< 10	10	ug/L	
Benzo(ghi)perylene	< 10	10	ug/L	
Benzoic acid	< 50	50	ug/L	
Benzyl alcohol	< 20	20	ug/L	
bis(2-Chloroethoxy)methane	< 10	10	ug/L	
bis(2-Chloroethyl)ether	< 10	10	ug/L	
bis(2-Chloroisopropyl)ether	< 10	10	ug/L	
bis(2-Ethylhexyl)phthalate	< 5	5	ug/L	
4-Bromophenyl phenyl ether	< 10	10	ug/L	
Butyl benzyl phthalate	< 10	10	ug/L	
Carbazole	< 10	10	ug/L	
4-Chloroaniline	< 10	10	ug/L	
4-Chloro-3-methylphenol	< 20	20	ug/L	
2-Chloronaphthalene	< 10	10	ug/L	
2-Chlorophenol	< 10	10	ug/L	
4-Chlorophenyl phenyl ether	< 10	10	ug/L	
Chrysene	< 10	10	ug/L	
Di-n-butyl phthalate	< 10	10	ug/L	
Di-n-octylphthalate	< 10	10	ug/L	
Dibenzo(a,h)anthracene	< 10	10	ug/L	
Dibenzofuran	< 10	10	ug/L	
1,2-Dichlorobenzene	< 10	10	ug/L	
1,3-Dichlorobenzene	< 10	10	ug/L	
1,4-Dichlorobenzene	< 10	10	ug/L	
3,3'-Dichlorobenzidine	< 20	20	ug/L	
2,4-Dichlorophenol	< 10	10	ug/L	
Diethyl phthalate	< 10	10	ug/L	
2,4-Dimethylphenol	< 10	10	ug/L	
Dimethyl phthalate	< 10	10	ug/L	

First Environmental Laboratories, Inc.
IL ELAP / NELAC Accreditation # 100292
1600 Shore Road • Naperville, Illinois 60563 • Phone (630) 778-1200 • Fax (630) 778-1233

Analytical Report

Client: BRADBURNE, BRILLER & JOHNSON
Project ID: Lyons, IL
Sample ID: Rinsate
Sample No: 7-2204-007

Date Collected: 05/17/07
Time Collected: 16:15
Date Received: 05/18/07
Date Reported: 05/31/07

Analyte	Result	R.L.	Units	Flags
Semi-Volatile Compounds **Method: 8270C** Analysis Date: 05/24/07		**Preparation Method 3510C** Preparation Date: 05/23/07		
4,6-Dinitro-2-methylphenol	< 50	50	ug/L	
2,4-Dinitrophenol	< 10	10	ug/L	
2,4-Dinitrotoluene	< 10	10	ug/L	
2,6-Dinitrotoluene	< 10	10	ug/L	
Fluoranthene	< 10	10	ug/L	
Fluorene	< 10	10	ug/L	
Hexachlorobenzene	< 10	10	ug/L	
Hexachlorobutadiene	< 10	10	ug/L	
Hexachlorocyclopentadiene	< 10	10	ug/L	
Hexachloroethane	< 5	5	ug/L	
Indeno(1,2,3-cd)pyrene	< 10	10	ug/L	
Isophorone	< 10	10	ug/L	
2-Methylnaphthalene	< 10	10	ug/L	
2-Methylphenol	< 10	10	ug/L	
3 & 4-Methylphenol	< 10	10	ug/L	
Naphthalene	< 10	10	ug/L	
2-Nitroaniline	< 50	50	ug/L	
3-Nitroaniline	< 50	50	ug/L	
4-Nitroaniline	< 20	20	ug/L	
Nitrobenzene	< 10	10	ug/L	
2-Nitrophenol	< 10	10	ug/L	
4-Nitrophenol	< 50	50	ug/L	
n-Nitrosodimethylamine	< 10	10	ug/L	
n-Nitrosodi-n-propylamine	< 10	10	ug/L	
n-Nitrosodiphenylamine	< 10	10	ug/L	
Pentachlorophenol	< 10	10	ug/L	
Phenanthrene	< 10	10	ug/L	
Phenol	< 10	10	ug/L	
Pyrene	< 10	10	ug/L	
1,2,4-Trichlorobenzene	< 10	10	ug/L	
2,4,5-Trichlorophenol	< 10	10	ug/L	
2,4,6-Trichlorophenol	< 10	10	ug/L	

First Environmental Laboratories, Inc.
IL ELAP / NELAC Accreditation # 100292
1600 Shore Road • Naperville, Illinois 60563 • Phone (630) 778-1200 • Fax (630) 778-1233

Analytical Report

Client:	BRADBURNE, BRILLER & JOHNSON	**Date Collected:**	05/17/07
Project ID:	Lyons, IL	**Time Collected:**	16:15
Sample ID:	Rinsate	**Date Received:**	05/18/07
Sample No:	7-2204-007	**Date Reported:**	05/31/07

Analyte	Result	R.L.	Units	Flags
Pesticides/PCBs	**Method: 8081A/8082**	**Preparation Method 3510C**		
Analysis Date: 05/25/07		Preparation Date: 05/21/07		
Aldrin	< 0.05	0.05	ug/L	
Aroclor 1016	< 0.50	0.50	ug/L	
Aroclor 1221	< 0.50	0.50	ug/L	
Aroclor 1232	< 0.50	0.50	ug/L	
Aroclor 1242	< 0.50	0.50	ug/L	
Aroclor 1248	< 0.50	0.50	ug/L	
Aroclor 1254	< 0.50	0.50	ug/L	
alpha-BHC	< 0.05	0.05	ug/L	
beta-BHC	< 0.05	0.05	ug/L	
delta-BHC	< 0.05	0.05	ug/L	
gamma-BHC (Lindane)	< 0.05	0.05	ug/L	
alpha-Chlordane	< 0.50	0.50	ug/L	
gamma-Chlordane	< 0.50	0.50	ug/L	
4,4'-DDD	< 0.10	0.10	ug/L	
4,4'-DDE	< 0.10	0.10	ug/L	
4,4'-DDT	< 0.10	0.10	ug/L	
Dieldrin	< 0.10	0.10	ug/L	
Endosulfan I	< 0.05	0.05	ug/L	
Endosulfan II	< 0.10	0.10	ug/L	
Endosulfan sulfate	< 0.10	0.10	ug/L	
Endrin	< 0.10	0.10	ug/L	
Endrin aldehyde	< 0.10	0.10	ug/L	
Endrin ketone	< 0.10	0.10	ug/L	
Heptachlor	< 0.05	0.05	ug/L	
Heptachlor epoxide	< 0.05	0.05	ug/L	
Methoxychlor	< 0.50	0.50	ug/L	
Toxaphene	< 1.0	1.0	ug/L	
pH @ 25°C	**Method: 4500H+,B**			
Analysis Date: 05/18/07 15:30				
pH @ 25°C	7.68		Units	

First Environmental Laboratories, Inc.
IL ELAP / NELAC Accreditation # 100292
1600 Shore Road • Naperville, Illinois 60563 • Phone (630) 778-1200 • Fax (630) 778-1233

Analytical Report

Client:	BRADBURNE, BRILLER & JOHNSON	**Date Collected:**	05/17/07
Project ID:	Lyons, IL	**Time Collected:**	16:15
Sample ID:	Rinsate	**Date Received:**	05/18/07
Sample No:	7-2204-007	**Date Reported:**	05/31/07

Analyte		Result	R.L.	Units	Flags
Total Metals	**Method: 6010B**		**Preparation Method 3010A**		
Analysis Date: 05/24/07			Preparation Date: 05/21/07		
Arsenic		< 0.002	0.002	mg/L	
Barium		0.002	0.001	mg/L	
Cadmium		< 0.001	0.001	mg/L	
Chromium		< 0.001	0.001	mg/L	
Lead		< 0.002	0.002	mg/L	
Selenium		< 0.002	0.002	mg/L	
Silver		< 0.001	0.001	mg/L	
Total Metals	**Method: 7470A**				
Analysis Date: 05/23/07					
Mercury		< 0.0005	0.0005	mg/L	
Herbicides Method 8321A	**Method: 8321A**				
Analysis Date: 05/23/07					
2,4-D		< 0.2	0.2	ug/L	S
Silvex (2,4,5-TP)		< 0.10	0.1	ug/L	S

First Environmental Laboratories, Inc.
IL ELAP / NELAC Accreditation # 100292
1600 Shore Road • Naperville, Illinois 60563 • Phone (630) 778-1200 • Fax (630) 778-1233

Analytical Report

Client: BRADBURNE, BRILLER & JOHNSON
Project ID: Lyons, IL
Sample ID: SB-9 (1-2.5)
Sample No: 7-2204-008

Date Collected: 05/17/07
Time Collected: 16:45
Date Received: 05/18/07
Date Reported: 05/31/07

Results are reported on a dry weight basis.

Analyte	Result	R.L.	Units	Flags
Solids, total	**Method: 160.3**			
Analysis Date: 05/21/07				
Total Solids	95		%	
Volatile Organic Compounds	**Method: 5035A/8260B**			
Analysis Date: 05/23/07				
Acetone	< 100	100	ug/kg	
Benzene	< 5.0	5.0	ug/kg	
Bromodichloromethane	< 5.0	5.0	ug/kg	
Bromoform	< 5.0	5.0	ug/kg	
Bromomethane	< 10.0	10.0	ug/kg	
2-Butanone (MEK)	< 10.0	10.0	ug/kg	
Carbon disulfide	< 5.0	5.0	ug/kg	
Carbon tetrachloride	< 5.0	5.0	ug/kg	
Chlorobenzene	< 5.0	5.0	ug/kg	
Chlorodibromomethane	< 5.0	5.0	ug/kg	
Chloroethane	< 10.0	10.0	ug/kg	
Chloroform	< 5.0	5.0	ug/kg	
Chloromethane	< 10.0	10.0	ug/kg	
1,1-Dichloroethane	< 5.0	5.0	ug/kg	
1,2-Dichloroethane	< 5.0	5.0	ug/kg	
1,1-Dichloroethene	< 5.0	5.0	ug/kg	
cis-1,2-Dichloroethene	< 5.0	5.0	ug/kg	
trans-1,2-Dichloroethene	< 5.0	5.0	ug/kg	
1,2-Dichloropropane	< 5.0	5.0	ug/kg	
cis-1,3-Dichloropropene	< 5.0	5.0	ug/kg	
trans-1,3-Dichloropropene	< 5.0	5.0	ug/kg	
Ethylbenzene	< 5.0	5.0	ug/kg	
2-Hexanone	< 10.0	10.0	ug/kg	
Methyl-tert-butylether (MTBE)	< 5.0	5.0	ug/kg	
4-Methyl-2-pentanone (MIBK)	< 10.0	10.0	ug/kg	
Methylene chloride	< 5.0	5.0	ug/kg	
Styrene	< 5.0	5.0	ug/kg	
1,1,2,2-Tetrachloroethane	< 5.0	5.0	ug/kg	
Tetrachloroethene	< 5.0	5.0	ug/kg	
Toluene	< 5.0	5.0	ug/kg	
1,1,1-Trichloroethane	< 5.0	5.0	ug/kg	
1,1,2-Trichloroethane	< 5.0	5.0	ug/kg	
Trichloroethene	< 5.0	5.0	ug/kg	

First Environmental Laboratories, Inc.
IL ELAP / NELAC Accreditation # 100292
1600 Shore Road • Naperville, Illinois 60563 • Phone (630) 778-1200 • Fax (630) 778-1233

Analytical Report

Client: BRADBURNE, BRILLER & JOHNSON
Project ID: Lyons, IL
Sample ID: SB-9 (1-2.5)
Sample No: 7-2204-008

Date Collected: 05/17/07
Time Collected: 16:45
Date Received: 05/18/07
Date Reported: 05/31/07

Results are reported on a dry weight basis.

Analyte	Result	R.L.	Units	Flags
Volatile Organic Compounds Analysis Date: 05/23/07	**Method: 5035A/8260B**			
Vinyl acetate	< 10.0	10.0	ug/kg	
Vinyl chloride	< 10.0	10.0	ug/kg	
Xylene, Total	< 5.0	5.0	ug/kg	
Semi-Volatile Compounds Analysis Date: 05/24/07	**Method: 8270C**	**Preparation Method 3540C** Preparation Date: 05/21/07		
Acenaphthene	< 330	330	ug/kg	
Acenaphthylene	< 330	330	ug/kg	
Anthracene	< 330	330	ug/kg	
Benzidine	< 330	330	ug/kg	
Benzo(a)anthracene	372	330	ug/kg	
Benzo(a)pyrene	403	90	ug/kg	
Benzo(b)fluoranthene	451	330	ug/kg	
Benzo(k)fluoranthene	366	330	ug/kg	
Benzo(ghi)perylene	< 330	330	ug/kg	
Benzoic acid	< 330	330	ug/kg	
Benzyl alcohol	< 330	330	ug/kg	
bis(2-Chloroethoxy)methane	< 330	330	ug/kg	
bis(2-Chloroethyl)ether	< 330	330	ug/kg	
bis(2-Chloroisopropyl)ether	< 330	330	ug/kg	
bis(2-Ethylhexyl)phthalate	< 330	330	ug/kg	
4-Bromophenyl phenyl ether	< 330	330	ug/kg	
Butyl benzyl phthalate	< 330	330	ug/kg	
Carbazole	< 330	330	ug/kg	
4-Chloroaniline	< 330	330	ug/kg	
4-Chloro-3-methylphenol	< 330	330	ug/kg	
2-Chloronaphthalene	< 330	330	ug/kg	
2-Chlorophenol	< 330	330	ug/kg	
4-Chlorophenyl phenyl ether	< 330	330	ug/kg	
Chrysene	403	330	ug/kg	
Di-n-butyl phthalate	< 330	330	ug/kg	
Di-n-octylphthalate	< 330	330	ug/kg	
Dibenzo(a,h)anthracene	< 90	90	ug/kg	
Dibenzofuran	< 330	330	ug/kg	
1,2-Dichlorobenzene	< 330	330	ug/kg	
1,3-Dichlorobenzene	< 330	330	ug/kg	
1,4-Dichlorobenzene	< 330	330	ug/kg	

First Environmental Laboratories, Inc.
IL ELAP / NELAC Accreditation # 100292
1600 Shore Road • Naperville, Illinois 60563 • Phone (630) 778-1200 • Fax (630) 778-1233

Analytical Report

Client: BRADBURNE, BRILLER & JOHNSON
Project ID: Lyons, IL
Sample ID: SB-9 (1-2.5)
Sample No: 7-2204-008

Date Collected: 05/17/07
Time Collected: 16:45
Date Received: 05/18/07
Date Reported: 05/31/07

Results are reported on a dry weight basis.

Analyte	Result	R.L.	Units	Flags
Semi-Volatile Compounds Analysis Date: 05/24/07	**Method: 8270C**	**Preparation Method 3540C** Preparation Date: 05/21/07		
3,3'-Dichlorobenzidine	< 660	660	ug/kg	
2,4-Dichlorophenol	< 330	330	ug/kg	
Diethyl phthalate	< 330	330	ug/kg	
2,4-Dimethylphenol	< 330	330	ug/kg	
Dimethyl phthalate	< 330	330	ug/kg	
4,6-Dinitro-2-methylphenol	< 1,600	1600	ug/kg	
2,4-Dinitrophenol	< 1,600	1600	ug/kg	
2,4-Dinitrotoluene	< 250	250	ug/kg	
2,6-Dinitrotoluene	< 260	260	ug/kg	
Fluoranthene	902	330	ug/kg	
Fluorene	< 330	330	ug/kg	
Hexachlorobenzene	< 330	330	ug/kg	
Hexachlorobutadiene	< 330	330	ug/kg	
Hexachlorocyclopentadiene	< 330	330	ug/kg	
Hexachloroethane	< 330	330	ug/kg	
Indeno(1,2,3-cd)pyrene	< 330	330	ug/kg	
Isophorone	< 330	330	ug/kg	
2-Methylnaphthalene	< 330	330	ug/kg	
2-Methylphenol	< 330	330	ug/kg	
3 & 4-Methylphenol	< 330	330	ug/kg	
Naphthalene	< 330	330	ug/kg	
2-Nitroaniline	< 1,600	1600	ug/kg	
3-Nitroaniline	< 1,600	1600	ug/kg	
4-Nitroaniline	< 1,600	1600	ug/kg	
Nitrobenzene	< 260	260	ug/kg	
2-Nitrophenol	< 1,600	1600	ug/kg	
4-Nitrophenol	< 1,600	1600	ug/kg	
n-Nitrosodi-n-propylamine	< 330	330	ug/kg	
n-Nitrosodimethylamine	< 330	330	ug/kg	
n-Nitrosodiphenylamine	< 330	330	ug/kg	
Pentachlorophenol	< 330	330	ug/kg	
Phenanthrene	570	330	ug/kg	
Phenol	< 330	330	ug/kg	
Pyrene	728	330	ug/kg	
Pyridine	< 330	330	ug/kg	
1,2,4-Trichlorobenzene	< 330	330	ug/kg	

First Environmental Laboratories, Inc.
IL ELAP / NELAC Accreditation # 100292
1600 Shore Road • Naperville, Illinois 60563 • Phone (630) 778-1200 • Fax (630) 778-1233

Analytical Report

Client: BRADBURNE, BRILLER & JOHNSON
Project ID: Lyons, IL
Sample ID: SB-9 (1-2.5)
Sample No: 7-2204-008

Date Collected: 05/17/07
Time Collected: 16:45
Date Received: 05/18/07
Date Reported: 05/31/07

Results are reported on a dry weight basis.

Analyte	Result	R.L.	Units	Flags
Semi-Volatile Compounds Analysis Date: 05/24/07	**Method: 8270C**	**Preparation Method 3540C** Preparation Date: 05/21/07		
2,4,5-Trichlorophenol	< 330	330	ug/kg	
2,4,6-Trichlorophenol	< 330	330	ug/kg	
Pesticides/PCBs Analysis Date: 05/31/07	**Method: 8081A/8082**	**Preparation Method 3540C** Preparation Date: 05/21/07		
Aldrin	< 8.0	8.0	ug/kg	
Aroclor 1016	< 80.0	80.0	ug/kg	
Aroclor 1221	< 80.0	80.0	ug/kg	
Aroclor 1232	< 80.0	80.0	ug/kg	
Aroclor 1242	< 80.0	80.0	ug/kg	
Aroclor 1248	< 80.0	80.0	ug/kg	
Aroclor 1254	< 160	160	ug/kg	
Aroclor 1260	< 160	160	ug/kg	
alpha-BHC	< 2.0	2.0	ug/kg	
beta-BHC	< 8.0	8.0	ug/kg	
delta-BHC	< 8.0	8.0	ug/kg	
gamma-BHC (Lindane)	< 8.0	8.0	ug/kg	
alpha-Chlordane	< 80.0	80.0	ug/kg	
gamma-Chlordane	< 80.0	80.0	ug/kg	
4,4'-DDD	< 16.0	16.0	ug/kg	
4,4'-DDE	< 16.0	16.0	ug/kg	
4,4'-DDT	< 16.0	16.0	ug/kg	
Dieldrin	< 16.0	16.0	ug/kg	
Endosulfan I	< 8.0	8.0	ug/kg	
Endosulfan II	< 16.0	16.0	ug/kg	
Endosulfan sulfate	< 16.0	16.0	ug/kg	
Endrin	< 16.0	16.0	ug/kg	
Endrin aldehyde	< 16.0	16.0	ug/kg	
Endrin ketone	< 16.0	16.0	ug/kg	
Heptachlor	< 8.0	8.0	ug/kg	
Heptachlor epoxide	< 8.0	8.0	ug/kg	
Methoxychlor	< 80.0	80.0	ug/kg	
Toxaphene	< 160	160	ug/kg	
pH @ 25°C, 1:10 Analysis Date: 05/22/07	**Method: 4500H+B**			
pH @ 25°C, 1:10	9.53		Units	

First Environmental Laboratories, Inc.
IL ELAP / NELAC Accreditation # 100292
1600 Shore Road • Naperville, Illinois 60563 • Phone (630) 778-1200 • Fax (630) 778-1233

Analytical Report

Client: BRADBURNE, BRILLER & JOHNSON
Project ID: Lyons, IL
Sample ID: SB-9 (1-2.5)
Sample No: 7-2204-008

Date Collected: 05/17/07
Time Collected: 16:45
Date Received: 05/18/07
Date Reported: 05/31/07

Results are reported on a dry weight basis.

Analyte	Result	R.L.	Units	Flags
Total Metals Method: 6010B		Preparation Method 3050B		
Analysis Date: 05/24/07		Preparation Date: 05/18/07		
Arsenic	2.4	0.2	mg/kg	
Barium	14.6	0.1	mg/kg	
Cadmium	0.2	0.1	mg/kg	
Chromium	5.2	0.1	mg/kg	
Lead	10.1	0.2	mg/kg	
Selenium	< 0.2	0.2	mg/kg	
Silver	< 0.1	0.1	mg/kg	
Total Metals Method: 7470A				
Analytic Date: 05/23/07				
Mercury	< 0.05	0.05	mg/kg	
Herbicides Method: 8321				
Analysis Date: 05/22/07				
2,4-Dichlorophenoxyacetic acid (2,4-D)	< 100	100	ug/kg	S
Silvex (2,4,5-TP)	< 100	100	ug/kg	S

First Environmental Laboratories, Inc.
IL ELAP / NELAC Accreditation # 100292
1600 Shore Road • Naperville, Illinois 60563 • Phone (630) 778-1200 • Fax (630) 778-1233

Analytical Report

Client: BRADBURNE, BRILLER & JOHNSON
Project ID: Lyons, IL
Sample ID: SB-9 (6-7.5)
Sample No: 7-2204-009

Date Collected: 05/17/07
Time Collected: 16:50
Date Received: 05/18/07
Date Reported: 05/31/07

Results are reported on a dry weight basis.

Analyte	Result	R.L.	Units	Flags
Solids, total Method: 160.3				
Analysis Date: 05/21/07				
Total Solids	96.52		%	
Volatile Organic Compounds Method: 5035A/8260B				
Analysis Date: 05/23/07				
Acetone	< 500	100	ug/kg	
Benzene	< 30.0	5.0	ug/kg	
Bromodichloromethane	< 50.0	5.0	ug/kg	
Bromoform	< 50.0	5.0	ug/kg	
Bromomethane	< 50.0	10.0	ug/kg	
2-Butanone (MEK)	< 50.0	10.0	ug/kg	
Carbon disulfide	< 50.0	5.0	ug/kg	
Carbon tetrachloride	< 50.0	5.0	ug/kg	
Chlorobenzene	< 50.0	5.0	ug/kg	
Chlorodibromomethane	< 50.0	5.0	ug/kg	
Chloroethane	< 50.0	10.0	ug/kg	
Chloroform	< 50.0	5.0	ug/kg	
Chloromethane	< 50.0	10.0	ug/kg	
1,1-Dichloroethane	< 50.0	5.0	ug/kg	
1,2-Dichloroethane	< 50.0	5.0	ug/kg	
1,1-Dichloroethene	< 50.0	5.0	ug/kg	
cis-1,2-Dichloroethene	< 50.0	5.0	ug/kg	
trans-1,2-Dichloroethene	< 50.0	5.0	ug/kg	
1,2-Dichloropropane	< 50.0	5.0	ug/kg	
cis-1,3-Dichloropropene	< 50.0	5.0	ug/kg	
trans-1,3-Dichloropropene	< 50.0	5.0	ug/kg	
Ethylbenzene	< 50.0	5.0	ug/kg	
2-Hexanone	< 50.0	10.0	ug/kg	
Methyl-tert-butylether (MTBE)	< 50.0	5.0	ug/kg	
4-Methyl-2-pentanone (MIBK)	< 50.0	10.0	ug/kg	
Methylene chloride	< 50.0	5.0	ug/kg	
Styrene	< 50.0	5.0	ug/kg	
1,1,2,2-Tetrachloroethane	< 50.0	5.0	ug/kg	
Tetrachloroethene	< 50.0	5.0	ug/kg	
Toluene	< 50.0	5.0	ug/kg	
1,1,1-Trichloroethane	< 50.0	5.0	ug/kg	
1,1,2-Trichloroethane	< 50.0	5.0	ug/kg	
Trichloroethene	< 50.0	5.0	ug/kg	

First Environmental Laboratories, Inc.
IL ELAP / NELAC Accreditation # 100292
1600 Shore Road • Naperville, Illinois 60563 • Phone (630) 778-1200 • Fax (630) 778-1233

Analytical Report

Client: BRADBURNE, BRILLER & JOHNSON
Project ID: Lyons, IL
Sample ID: SB-9 (6-7.5)
Sample No: 7-2204-009

Date Collected: 05/17/07
Time Collected: 16:50
Date Received: 05/18/07
Date Reported: 05/31/07

Results are reported on a dry weight basis.

Analyte	Result	R.L.	Units	Flags
Volatile Organic Compounds	**Method: 5035A/8260B**			
Analysis Date: 05/23/07				
Vinyl acetate	< 50.0	10.0	ug/kg	
Vinyl chloride	< 50.0	10.0	ug/kg	
Xylene, Total	< 50.0	5.0	ug/kg	
Semi-Volatile Compounds	**Method: 8270C**	**Preparation Method 3540C**		
Analysis Date: 05/24/07		Preparation Date: 05/21/07		
Acenaphthene	< 330	330	ug/kg	
Acenaphthylene	< 330	330	ug/kg	
Anthracene	< 330	330	ug/kg	
Benzidine	< 330	330	ug/kg	
Benzo(a)anthracene	< 330	330	ug/kg	
Benzo(a)pyrene	< 90	90	ug/kg	
Benzo(b)fluoranthene	< 330	330	ug/kg	
Benzo(k)fluoranthene	< 330	330	ug/kg	
Benzo(ghi)perylene	< 330	330	ug/kg	
Benzoic acid	< 330	330	ug/kg	
Benzyl alcohol	< 330	330	ug/kg	
bis(2-Chloroethoxy)methane	< 330	330	ug/kg	
bis(2-Chloroethyl)ether	< 330	330	ug/kg	
bis(2-Chloroisopropyl)ether	< 330	330	ug/kg	
bis(2-Ethylhexyl)phthalate	< 330	330	ug/kg	
4-Bromophenyl phenyl ether	< 330	330	ug/kg	
Butyl benzyl phthalate	< 330	330	ug/kg	
Carbazole	< 330	330	ug/kg	
4-Chloroaniline	< 330	330	ug/kg	
4-Chloro-3-methylphenol	< 330	330	ug/kg	
2-Chloronaphthalene	< 330	330	ug/kg	
2-Chlorophenol	< 330	330	ug/kg	
4-Chlorophenyl phenyl ether	< 330	330	ug/kg	
Chrysene	< 330	330	ug/kg	
Di-n-butyl phthalate	< 330	330	ug/kg	
Di-n-octylphthalate	< 330	330	ug/kg	
Dibenzo(a,h)anthracene	< 90	90	ug/kg	
Dibenzofuran	< 330	330	ug/kg	
1,2-Dichlorobenzene	< 330	330	ug/kg	
1,3-Dichlorobenzene	< 330	330	ug/kg	
1,4-Dichlorobenzene	< 330	330	ug/kg	

First Environmental Laboratories, Inc.
IL ELAP / NELAC Accreditation # 100292
1600 Shore Road • Naperville, Illinois 60563 • Phone (630) 778-1200 • Fax (630) 778-1233

Analytical Report

Client: BRADBURNE, BRILLER & JOHNSON
Project ID: Lyons, IL
Sample ID: SB-9 (6-7.5)
Sample No: 7-2204-009

Date Collected: 05/17/07
Time Collected: 16:50
Date Received: 05/18/07
Date Reported: 05/31/07

Results are reported on a dry weight basis.

Analyte	Result	R.L.	Units	Flags
Semi-Volatile Compounds Analysis Date: 05/24/07	**Method: 8270C**	**Preparation Method 3540C** Preparation Date: 05/21/07		
3,3'-Dichlorobenzidine	< 660	660	ug/kg	
2,4-Dichlorophenol	< 330	330	ug/kg	
Diethyl phthalate	< 330	330	ug/kg	
2,4-Dimethylphenol	< 330	330	ug/kg	
Dimethyl phthalate	< 330	330	ug/kg	
4,6-Dinitro-2-methylphenol	< 1,600	1600	ug/kg	
2,4-Dinitrophenol	< 1,600	1600	ug/kg	
2,4-Dinitrotoluene	< 250	250	ug/kg	
2,6-Dinitrotoluene	< 260	260	ug/kg	
Fluoranthene	< 330	330	ug/kg	
Fluorene	< 330	330	ug/kg	
Hexachlorobenzene	< 330	330	ug/kg	
Hexachlorobutadiene	< 330	330	ug/kg	
Hexachlorocyclopentadiene	< 330	330	ug/kg	
Hexachloroethane	< 330	330	ug/kg	
Indeno(1,2,3-cd)pyrene	< 330	330	ug/kg	
Isophorone	< 330	330	ug/kg	
2-Methylnaphthalene	< 330	330	ug/kg	
2-Methylphenol	< 330	330	ug/kg	
3 & 4-Methylphenol	< 330	330	ug/kg	
Naphthalene	467	330	ug/kg	
2-Nitroaniline	< 1,600	1600	ug/kg	
3-Nitroaniline	< 1,600	1600	ug/kg	
4-Nitroaniline	< 1,600	1600	ug/kg	
Nitrobenzene	< 260	260	ug/kg	
2-Nitrophenol	< 1,600	1600	ug/kg	
4-Nitrophenol	< 1,600	1600	ug/kg	
n-Nitrosodi-n-propylamine	< 330	330	ug/kg	
n-Nitrosodimethylamine	< 330	330	ug/kg	
n-Nitrosodiphenylamine	< 330	330	ug/kg	
Pentachlorophenol	< 330	330	ug/kg	
Phenanthrene	< 330	330	ug/kg	
Phenol	< 330	330	ug/kg	
Pyrene	< 330	330	ug/kg	
Pyridine	< 330	330	ug/kg	
1,2,4-Trichlorobenzene	< 330	330	ug/kg	

First Environmental Laboratories, Inc.
IL ELAP / NELAC Accreditation # 100292
1600 Shore Road • Naperville, Illinois 60563 • Phone (630) 778-1200 • Fax (630) 778-1233

Analytical Report

Client: BRADBURNE, BRILLER & JOHNSON
Project ID: Lyons, IL
Sample ID: SB-9 (6-7.5)
Sample No: 7-2204-009

Date Collected: 05/17/07
Time Collected: 16:50
Date Received: 05/18/07
Date Reported: 05/31/07

Results are reported on a dry weight basis.

Analyte	Result	R.L.	Units	Flags
Semi-Volatile Compounds Analysis Date: 05/24/07	**Method: 8270C**	**Preparation Method 3540C** Preparation Date: 05/21/07		
2,4,5-Trichlorophenol	< 330	330	ug/kg	
2,4,6-Trichlorophenol	< 330	330	ug/kg	
Pesticides/PCBs Analysis Date: 05/31/07	**Method: 8081A/8082**	**Preparation Method 3540C** Preparation Date: 05/22/07		
Aldrin	< 8.0	8.0	ug/kg	
Aroclor 1016	< 80.0	80.0	ug/kg	
Aroclor 1221	< 80.0	80.0	ug/kg	
Aroclor 1232	< 80.0	80.0	ug/kg	
Aroclor 1242	< 80.0	80.0	ug/kg	
Aroclor 1248	< 80.0	80.0	ug/kg	
Aroclor 1254	< 160	160	ug/kg	
Aroclor 1260	< 160	160	ug/kg	
alpha-BHC	< 2.0	2.0	ug/kg	
beta-BHC	< 8.0	8.0	ug/kg	
delta-BHC	< 8.0	8.0	ug/kg	
gamma-BHC (Lindane)	< 8.0	8.0	ug/kg	
alpha-Chlordane	< 80.0	80.0	ug/kg	
gamma-Chlordane	< 80.0	80.0	ug/kg	
4,4'-DDD	< 16.0	16.0	ug/kg	
4,4'-DDE	< 16.0	16.0	ug/kg	
4,4'-DDT	< 16.0	16.0	ug/kg	
Dieldrin	< 16.0	16.0	ug/kg	
Endosulfan I	< 8.0	8.0	ug/kg	
Endosulfan II	< 16.0	16.0	ug/kg	
Endosulfan sulfate	< 16.0	16.0	ug/kg	
Endrin	< 16.0	16.0	ug/kg	
Endrin aldehyde	< 16.0	16.0	ug/kg	
Endrin ketone	< 16.0	16.0	ug/kg	
Heptachlor	< 8.0	8.0	ug/kg	
Heptachlor epoxide	< 8.0	8.0	ug/kg	
Methoxychlor	< 80.0	80.0	ug/kg	
Toxaphene	< 160	160	ug/kg	
pH @ 25°C, 1:10 Analysis Date: 05/22/07	**Method: 4500H+B**			
pH @ 25°C, 1:10	9.88		Units	

First Environmental Laboratories, Inc.
IL ELAP / NELAC Accreditation # 100292
1600 Shore Road • Naperville, Illinois 60563 • Phone (630) 778-1200 • Fax (630) 778-1233

Analytical Report

Client:	BRADBURNE, BRILLER & JOHNSON	**Date Collected:**	05/17/07
Project ID:	Lyons, IL	**Time Collected:**	16:50
Sample ID:	SB-9 (6-7.5)	**Date Received:**	05/18/07
Sample No:	7-2204-009	**Date Reported:**	05/31/07

Results are reported on a dry weight basis.

Analyte		Result	R.L.	Units	Flags
Total Metals	**Method: 6010B**		**Preparation Method 3050B**		
Analysis Date: 05/24/07			Preparation Date: 05/18/07		
Arsenic		0.9	0.2	mg/kg	
Barium		3.1	0.1	mg/kg	
Cadmium		< 0.1	0.1	mg/kg	
Chromium		2.3	0.1	mg/kg	
Lead		< 0.2	0.2	mg/kg	
Selenium		< 0.2	0.2	mg/kg	
Silver		< 0.1	0.1	mg/kg	
Total Metals	**Method: 7470A**				
Analysis Date: 05/23/07					
Mercury		< 0.05	0.05	mg/kg	
Herbicides	**Method: 8321**				
Analysis Date: 05/22/07					
2,4-Dichlorophenoxyacetic acid (2,4-D)		< 100	100	ug/kg	S
Silvex (2,4,5-TP)		< 100	100	ug/kg	S

First Environmental Laboratories, Inc.
IL ELAP / NELAC Accreditation # 100292
1600 Shore Road • Naperville, Illinois 60563 • Phone (630) 778-1200 • Fax (630) 778-1233

Analytical Report

Client: BRADBURNE, BRILLER & JOHNSON
Project ID: Lyons, IL
Sample ID: SB-9 (18.5-20)
Sample No: 7-2204-010

Date Collected: 05/17/07
Time Collected: 17:00
Date Received: 05/18/07
Date Reported: 05/31/07

Results are reported on a dry weight basis.

Analyte	Result	R.L.	Units	Flags
Solids, total Method: 160.3				
Analysis Date: 05/21/07				
Total Solids	92.8		%	
Volatile Organic Compounds Method: 5035A/8260B				
Analysis Date: 05/24/07				
Acetone	< 100	100	ug/kg	
Benzene	< 5.0	5.0	ug/kg	
Bromodichloromethane	< 5.0	5.0	ug/kg	
Bromoform	< 5.0	5.0	ug/kg	
Bromomethane	< 10.0	10.0	ug/kg	
2-Butanone (MEK)	< 10.0	10.0	ug/kg	
Carbon disulfide	< 5.0	5.0	ug/kg	
Carbon tetrachloride	< 5.0	5.0	ug/kg	
Chlorobenzene	< 5.0	5.0	ug/kg	
Chlorodibromomethane	< 5.0	5.0	ug/kg	
Chloroethane	< 10.0	10.0	ug/kg	
Chloroform	< 5.0	5.0	ug/kg	
Chloromethane	< 10.0	10.0	ug/kg	
1,1-Dichloroethane	< 5.0	5.0	ug/kg	
1,2-Dichloroethane	< 5.0	5.0	ug/kg	
1,1-Dichloroethene	< 5.0	5.0	ug/kg	
cis-1,2-Dichloroethene	< 5.0	5.0	ug/kg	
trans-1,2-Dichloroethene	< 5.0	5.0	ug/kg	
1,2-Dichloropropane	< 5.0	5.0	ug/kg	
cis-1,3-Dichloropropene	< 5.0	5.0	ug/kg	
trans-1,3-Dichloropropene	< 5.0	5.0	ug/kg	
Ethylbenzene	< 5.0	5.0	ug/kg	
2-Hexanone	< 10.0	10.0	ug/kg	
Methyl-tert-butylether (MTBE)	< 5.0	5.0	ug/kg	
4-Methyl-2-pentanone (MIBK)	< 10.0	10.0	ug/kg	
Methylene chloride	< 5.0	5.0	ug/kg	
Styrene	< 5.0	5.0	ug/kg	
1,1,2,2-Tetrachloroethane	< 5.0	5.0	ug/kg	
Tetrachloroethene	< 5.0	5.0	ug/kg	
Toluene	< 5.0	5.0	ug/kg	
1,1,1-Trichloroethane	< 5.0	5.0	ug/kg	
1,1,2-Trichloroethane	< 5.0	5.0	ug/kg	
Trichloroethene	< 5.0	5.0	ug/kg	

First Environmental Laboratories, Inc.
IL ELAP / NELAC Accreditation # 100292
1600 Shore Road • Naperville, Illinois 60563 • Phone (630) 778-1200 • Fax (630) 778-1233

Analytical Report

Client: BRADBURNE, BRILLER & JOHNSON
Project ID: Lyons, IL
Sample ID: SB-9 (18.5-20)
Sample No: 7-2204-010

Date Collected: 05/17/07
Time Collected: 17:00
Date Received: 05/18/07
Date Reported: 05/31/07

Results are reported on a dry weight basis.

Analyte	Result	R.L.	Units	Flags
Volatile Organic Compounds Method: 5035A/8260B				
Analysis Date: 05/24/07				
Vinyl acetate	< 10.0	10.0	ug/kg	
Vinyl chloride	< 10.0	10.0	ug/kg	
Xylene, Total	< 5.0	5.0	ug/kg	
Semi-Volatile Compounds Method: 8270C		Preparation Method 3540C		
Analysis Date: 05/24/07		Preparation Date: 05/21/07		
Acenaphthene	< 330	330	ug/kg	
Acenaphthylene	< 330	330	ug/kg	
Anthracene	< 330	330	ug/kg	
Benzidine	< 330	330	ug/kg	
Benzo(a)anthracene	< 330	330	ug/kg	
Benzo(a)pyrene	< 90	90	ug/kg	
Benzo(b)fluoranthene	< 330	330	ug/kg	
Benzo(k)fluoranthene	< 330	330	ug/kg	
Benzo(ghi)perylene	< 330	330	ug/kg	
Benzoic acid	< 330	330	ug/kg	
Benzyl alcohol	< 330	330	ug/kg	
bis(2-Chloroethoxy)methane	< 330	330	ug/kg	
bis(2-Chloroethyl)ether	< 330	330	ug/kg	
bis(2-Chloroisopropyl)ether	< 330	330	ug/kg	
bis(2-Ethylhexyl)phthalate	< 330	330	ug/kg	
4-Bromophenyl phenyl ether	< 330	330	ug/kg	
Butyl benzyl phthalate	< 330	330	ug/kg	
Carbazole	< 330	330	ug/kg	
4-Chloroaniline	< 330	330	ug/kg	
4-Chloro-3-methylphenol	< 330	330	ug/kg	
2-Chloronaphthalene	< 330	330	ug/kg	
2-Chlorophenol	< 330	330	ug/kg	
4-Chlorophenyl phenyl ether	< 330	330	ug/kg	
Chrysene	< 330	330	ug/kg	
Di-n-butyl phthalate	< 330	330	ug/kg	
Di-n-octylphthalate	< 330	330	ug/kg	
Dibenzo(a,h)anthracene	< 90	90	ug/kg	
Dibenzofuran	< 330	330	ug/kg	
1,2-Dichlorobenzene	< 330	330	ug/kg	
1,3-Dichlorobenzene	< 330	330	ug/kg	
1,4-Dichlorobenzene	< 330	330	ug/kg	

First Environmental Laboratories, Inc.
IL ELAP / NELAC Accreditation # 100292
1600 Shore Road • Naperville, Illinois 60563 • Phone (630) 778-1200 • Fax (630) 778-1233

Analytical Report

Client: BRADBURNE, BRILLER & JOHNSON
Project ID: Lyons, IL
Sample ID: SB-9 (18.5-20)
Sample No: 7-2204-010

Date Collected: 05/17/07
Time Collected: 17:00
Date Received: 05/18/07
Date Reported: 05/31/07

Results are reported on a dry weight basis.

Analyte	Result	R.L.	Units	Flags
Semi-Volatile Compounds Analysis Date: 05/24/07	**Method: 8270C**	**Preparation Method 3540C** Preparation Date: 05/21/07		
3,3'-Dichlorobenzidine	< 660	660	ug/kg	
2,4-Dichlorophenol	< 330	330	ug/kg	
Diethyl phthalate	< 330	330	ug/kg	
2,4-Dimethylphenol	< 330	330	ug/kg	
Dimethyl phthalate	< 330	330	ug/kg	
4,6-Dinitro-2-methylphenol	< 1,600	1600	ug/kg	
2,4-Dinitrophenol	< 1,600	1600	ug/kg	
2,4-Dinitrotoluene	< 250	250	ug/kg	
2,6-Dinitrotoluene	< 260	260	ug/kg	
Fluoranthene	< 330	330	ug/kg	
Fluorene	< 330	330	ug/kg	
Hexachlorobenzene	< 330	330	ug/kg	
Hexachlorobutadiene	< 330	330	ug/kg	
Hexachlorocyclopentadiene	< 330	330	ug/kg	
Hexachloroethane	< 330	330	ug/kg	
Indeno(1,2,3-cd)pyrene	< 330	330	ug/kg	
Isophorone	< 330	330	ug/kg	
2-Methylnaphthalene	< 330	330	ug/kg	
2-Methylphenol	< 330	330	ug/kg	
3 & 4-Methylphenol	< 330	330	ug/kg	
Naphthalene	756	330	ug/kg	
2-Nitroaniline	< 1,600	1600	ug/kg	
3-Nitroaniline	< 1,600	1600	ug/kg	
4-Nitroaniline	< 1,600	1600	ug/kg	
Nitrobenzene	< 260	260	ug/kg	
2-Nitrophenol	< 1,600	1600	ug/kg	
4-Nitrophenol	< 1,600	1600	ug/kg	
n-Nitrosodi-n-propylamine	< 330	330	ug/kg	
n-Nitrosodimethylamine	< 330	330	ug/kg	
n-Nitrosodiphenylamine	< 330	330	ug/kg	
Pentachlorophenol	< 330	330	ug/kg	
Phenanthrene	< 330	330	ug/kg	
Phenol	< 330	330	ug/kg	
Pyrene	< 330	330	ug/kg	
Pyridine	< 330	330	ug/kg	
1,2,4-Trichlorobenzene	< 330	330	ug/kg	

First Environmental Laboratories, Inc.
IL ELAP / NELAC Accreditation # 100292
1600 Shore Road • Naperville, Illinois 60563 • Phone (630) 778-1200 • Fax (630) 778-1233

Analytical Report

Client: BRADBURNE, BRILLER & JOHNSON
Project ID: Lyons, IL
Sample ID: SB-9 (18.5-20)
Sample No: 7-2204-010

Date Collected: 05/17/07
Time Collected: 17:00
Date Received: 05/18/07
Date Reported: 05/31/07

Results are reported on a dry weight basis.

Analyte	Result	R.L.	Units	Flags
Semi-Volatile Compounds Analysis Date: 05/24/07	**Method: 8270C**	**Preparation Method 3540C** Preparation Date: 05/21/07		
2,4,5-Trichlorophenol	< 330	330	ug/kg	
2,4,6-Trichlorophenol	< 330	330	ug/kg	
Pesticides/PCBs Analysis Date: 05/31/07	**Method: 8081A/8082**	**Preparation Method 3540C** Preparation Date: 05/22/07		
Aldrin	< 8.0	8.0	ug/kg	
Aroclor 1016	< 80.0	80.0	ug/kg	
Aroclor 1221	< 80.0	80.0	ug/kg	
Aroclor 1232	< 80.0	80.0	ug/kg	
Aroclor 1242	< 80.0	80.0	ug/kg	
Aroclor 1248	< 80.0	80.0	ug/kg	
Aroclor 1254	< 160	160	ug/kg	
Aroclor 1260	< 160	160	ug/kg	
alpha-BHC	< 2.0	2.0	ug/kg	
beta-BHC	< 8.0	8.0	ug/kg	
delta-BHC	< 8.0	8.0	ug/kg	
gamma-BHC (Lindane)	< 8.0	8.0	ug/kg	
alpha-Chlordane	< 80.0	80.0	ug/kg	
gamma-Chlordane	< 80.0	80.0	ug/kg	
4,4'-DDD	< 16.0	16.0	ug/kg	
4,4'-DDE	< 16.0	16.0	ug/kg	
4,4'-DDT	< 16.0	16.0	ug/kg	
Dieldrin	< 16.0	16.0	ug/kg	
Endosulfan I	< 8.0	8.0	ug/kg	
Endosulfan II	< 16.0	16.0	ug/kg	
Endosulfan sulfate	< 16.0	16.0	ug/kg	
Endrin	< 16.0	16.0	ug/kg	
Endrin aldehyde	< 16.0	16.0	ug/kg	
Endrin ketone	< 16.0	16.0	ug/kg	
Heptachlor	< 8.0	8.0	ug/kg	
Heptachlor epoxide	< 8.0	8.0	ug/kg	
Methoxychlor	< 80.0	80.0	ug/kg	
Toxaphene	< 160	160	ug/kg	
pH @ 25°C, 1:10 Analysis Date: 05/22/07	**Method: 4500H+B**			
pH @ 25°C, 1:10	9.74		Units	

First Environmental Laboratories, Inc.
IL ELAP / NELAC Accreditation # 100292
1600 Shore Road • Naperville, Illinois 60563 • Phone (630) 778-1200 • Fax (630) 778-1233

Analytical Report

Client:	BRADBURNE, BRILLER & JOHNSON	**Date Collected:**	05/17/07
Project ID:	Lyons, IL	**Time Collected:**	17:00
Sample ID:	SB-9 (18.5-20)	**Date Received:**	05/18/07
Sample No:	7-2204-010	**Date Reported:**	05/31/07

Results are reported on a dry weight basis.

Analyte		Result	R.L.	Units	Flags
Total Metals	**Method: 6010B**		**Preparation Method 3050B**		
Analysis Date: 05/24/07			Preparation Date: 05/18/07		
Arsenic		4.4	0.2	mg/kg	
Barium		6.5	0.1	mg/kg	
Cadmium		0.2	0.1	mg/kg	
Chromium		3.3	0.1	mg/kg	
Lead		2.9	0.2	mg/kg	
Selenium		< 0.2	0.2	mg/kg	
Silver		< 0.1	0.1	mg/kg	
Total Metals	**Method: 7470A**				
Analysis Date: 05/23/07					
Mercury		< 0.05	0.05	mg/kg	
Herbicides	**Method: 8321**				
Analysis Date: 05/22/07					
2,4-Dichlorophenoxyacetic acid (2,4-D)		< 100	100	ug/kg	S
Silvex (2,4,5-TP)		< 100	100	ug/kg	S

First Environmental Laboratories, Inc.
IL ELAP / NELAC Accreditation # 100292
1600 Shore Road • Naperville, Illinois 60563 • Phone (630) 778-1200 • Fax (630) 778-1233

Analytical Report

Client:	BRADBURNE, BRILLER & JOHNSON	**Date Collected:**	05/17/07
Project ID:	Lyons, IL	**Time Collected:**	
Sample ID:	Trip Blank	**Date Received:**	05/18/07
Sample No:	7-2204-011	**Date Reported:**	05/31/07

Analyte	Result	R.L.	Units	Flags
Volatile Organic Compounds **Method: 5030B/8260B**				
Analysis Date: 05/23/07				
Acetone	< 100	100	ug/L	
Benzene	< 5.0	5.0	ug/L	
Bromodichloromethane	< 1.0	1.0	ug/L	
Bromoform	< 1.0	1.0	ug/L	
Bromomethane	< 5.0	5.0	ug/L	
2-Butanone (MEK)	< 10.0	10.0	ug/L	
Carbon disulfide	< 5.0	5.0	ug/L	
Carbon tetrachloride	< 5.0	5.0	ug/L	
Chlorobenzene	< 5.0	5.0	ug/L	
Chlorodibromomethane	< 1.0	1.0	ug/L	
Chloroethane	< 10.0	10.0	ug/L	
Chloroform	< 1.0	1.0	ug/L	
Chloromethane	< 10.0	10.0	ug/L	
1,1-Dichloroethane	< 5.0	5.0	ug/L	
1,2-Dichloroethane	< 5.0	5.0	ug/L	
1,1-Dichloroethene	< 5.0	5.0	ug/L	
cis-1,2-Dichloroethene	< 5.0	5.0	ug/L	
trans-1,2-Dichloroethene	< 5.0	5.0	ug/L	
1,2-Dichloropropane	< 5.0	5.0	ug/L	
cis-1,3-Dichloropropene	< 1.0	1.0	ug/L	
trans-1,3-Dichloropropene	< 1.0	1.0	ug/L	
Ethylbenzene	< 5.0	5.0	ug/L	
2-Hexanone	< 10.0	10.0	ug/L	
Methyl-tert-butylether (MTBE)	< 5.0	5.0	ug/L	
4-Methyl-2-pentanone (MIBK)	< 10.0	10.0	ug/L	
Methylene chloride	< 5.0	5.0	ug/L	
Styrene	< 5.0	5.0	ug/L	
1,1,2,2-Tetrachloroethane	< 5.0	5.0	ug/L	
Tetrachloroethene	< 5.0	5.0	ug/L	
Toluene	< 5.0	5.0	ug/L	
1,1,1-Trichloroethane	< 5.0	5.0	ug/L	
1,1,2-Trichloroethane	< 5.0	5.0	ug/L	
Trichloroethene	< 5.0	5.0	ug/L	
Vinyl acetate	< 10.0	10.0	ug/L	
Vinyl chloride	< 2.0	2.0	ug/L	
Xylene, Total	< 5.0	5.0	ug/L	

CHAIN OF CUSTODY RECORD

Page 1 of 1 pgs

First Environmental Laboratories, Inc.

First Environmental Laboratories
1600 Shore Road, Suite D
Naperville, Illinois 60563
Phone: (630) 778-1200 • Fax: (630) 778-1233
24 Hr. Pager (708) 569-7507
E-mail: info@firstenv.com
IEPA Certification# 100292

Company Name: BB+J
Street Address: 515 N. State Street
City: Chicago State: IL Zip: 60610
Phone: 312-644-8556 Fax: 312-644-8555 e-mail: kmccartney@bbjgroup.com
Send Report To: Kevin McCartney Via: Fax ☐ e-mail ☑
Sampled By: Michele Hargreaves + Karen Beaman

Project I.D.: Lyons, IL
P.O. #:

Matrix Codes: S = Soil W = Water O = Other

Analyses

Date/Time Taken	Sample Description	Matrix	VOC (8260B)	SVOC (8270C)	PCB (8082)	PCB+MBTX (8010B/8021/8082)	Herbicides (8151)	Org. Cl. Pest. (8081A)	pH (9040B/9045C)		Comments	Lab I.D.
5/17 3:45	SB-18 (6.5-7) 10 (5.5)	S	✓	✓	✓	✓	✓	✓	✓		7-2204	001
3:55	SB-18 (8.5-10) 10 (5.5)	S	✓	✓	✓	✓	✓	✓	✓			002
4:00	SB-18 (18.5-20) 10 (5.5)	S	✓	✓	✓	✓	✓	✓	✓			003
4:05	SB-5 vicinity	S	✓	✓	✓	✓	✓	✓	✓			004
4:10	SB-5 (3.5-5)	S	✓	✓	✓	✓	✓	✓	✓			005
4:15	SB-5 (6-7.5)	S	✓	✓	✓	✓	✓	✓	✓			006
4:30	Rinsate	W	✓	✓	✓	✓	✓	✓	✓			007
4:45	SB-9 (1-2.5)	S	✓	✓	✓	✓	✓	✓	✓			008
4:50	SB-9 (6-7.5)	S	✓	✓	✓	✓	✓	✓	✓			009
5:00	SB-9 (18.5-20)	S	✓	✓	✓	✓	✓	✓	✓			010
	trip blank		✓									011

FOR LAB USE ONLY:

Cooler Temperature: 0.1-6°C Yes ✓ No __ 6.6 °C
Received within 6 hrs. of collection: ____
Ice Present: Yes ✓ No __

Sample Refrigerated: Yes __ No __
Refrigerator Temperature: ____ °C
5035 Vials Frozen: Yes __ No __
Freezer Temperature: ____ °C

Containers Received Preserved: ☑ Yes ☐ No

Notes and Special Instructions.

Relinquished By: Michele Hargreaves Date/Time 5/18/07 8:20AM Received By: M [illegible] Date/Time 5/18/07 8:20
Relinquished By: ____ Date/Time ____ Received By: ____ Date/Time ____

Rev. 4/06

printed 09/18/2007 4:52PM by epa4561 p. 402/439

First Environmental Laboratories, Inc.
IL ELAP / NELAC Accreditation # 100292
1600 Shore Road • Naperville, Illinois 60563 • Phone (630) 778-1200 • Fax (630) 778-1233

June 04, 2007

Mr. Kevin McCartney
BRADBURNE, BRILLER & JOHNSON
515 N. State Street
Suite 2200
Chicago, IL 60610

Project ID: Lyons, IL (Monitoring Wells)
First Environmental File ID: 7-2232
Date Received: May 18, 2007

Dear Mr. Kevin McCartney:

The above referenced project was analyzed as directed on the enclosed chain of custody record.

All analyses were performed in accordance with established methods and within established holding times. All Quality Control criteria as outlined in the methods and current IL ELAP/NELAP have been met unless otherwise noted. QA/QC documentation and raw data will remain on file for future reference. Our accreditation number is 100292 and our current certificate is number 001728: effective 04/13/07 through 02/28/08.

I thank you for the opportunity to be of service to you and look forward to working with you again in the future. Should you have any questions regarding any of the enclosed analytical data or need additional information, please contact me at (630) 778-1200.

Sincerely,

Stan Zawonski
Project Manager

First Environmental Laboratories, Inc.

IL ELAP / NELAC Accreditation # 100292

1600 Shore Road • Naperville, Illinois 60563 • Phone (630) 778-1200 • Fax (630) 778-1233

Case Narrative

BRADBURNE, BRILLER & JOHNSON

Project ID: **Lyons, IL (Monitoring Wells)**

First Environmental File ID: **7-2232**

Date Received: **May 18, 2007**

Flag	Description	Flag	Description
<	Analyte not detected at or above the reporting limit.	L+	LCS recovery outside control limits; high bias.
B	Analyte detected in associated method blank.	L-	LCS recovery outside control limits; low bias.
C	Identification confirmed by GC/MS.	M	MS recovery outside control limits; LCS acceptable.
D	Surrogates diluted out; recovery not available.	M+	MS recovery outside control limits high bias; LCS acceptable.
E	Estimated result; concentration exceeds calibration range.	M-	MS recovery outside control limits low bias; LCS acceptable.
F	Field measurement.	N	Analyte is not part of our NELAC accreditation.
		ND	Analyte was not detected using a library search routine; No calibration standard was analyzed.
G	Surrogate recovery outside control limits; matrix effect.	P	Chemical preservation pH adjusted in lab.
H	Analysis holding time exceeded.	Q	The analyte was determined by a GC/MS database search.
J	Estimated result; concentration is less than calib range.	S	Analyte was sub-contracted to another laboratory for analysis.
K	RPD outside control limits.	T	Sample temperature upon receipt exceeded 0-6°C
RL	Routine Reporting Limit (Lowest amount that can be detected when routine weights/volumes are used without dilution.)	W	Reporting limit elevated due to sample matrix.

All quality control criteria, as outlined in the methods, have been met except as noted below or on the following analytical report.

Sample Batch Comments:

Sample acceptance criteria were met.

First Environmental Laboratories, Inc.
IL ELAP / NELAC Accreditation # 100292
1600 Shore Road • Naperville, Illinois 60563 • Phone (630) 778-1200 • Fax (630) 778-1233

Analytical Report

Client:	BRADBURNE, BRILLER & JOHNSON	**Date Collected:**	05/18/07
Project ID:	Lyons, IL (Monitoring Wells)	**Time Collected:**	12:30
Sample ID:	MW-9	**Date Received:**	05/18/07
Sample No:	7-2232-001	**Date Reported:**	06/04/07

Analyte	Result	R.L.	Units	Flags
Volatile Organic Compounds **Method: 5030B/8260B**				
Analysis Date: 05/23/07				
Acetone	< 100	100	ug/L	
Benzene	< 5.0	5.0	ug/L	
Bromodichloromethane	< 1.0	1.0	ug/L	
Bromoform	< 1.0	1.0	ug/L	
Bromomethane	< 5.0	5.0	ug/L	
2-Butanone (MEK)	< 10.0	10.0	ug/L	
Carbon disulfide	< 5.0	5.0	ug/L	
Carbon tetrachloride	< 5.0	5.0	ug/L	
Chlorobenzene	< 5.0	5.0	ug/L	
Chlorodibromomethane	< 1.0	1.0	ug/L	
Chloroethane	< 10.0	10.0	ug/L	
Chloroform	< 1.0	1.0	ug/L	
Chloromethane	< 10.0	10.0	ug/L	
1,1-Dichloroethane	< 5.0	5.0	ug/L	
1,2-Dichloroethane	< 5.0	5.0	ug/L	
1,1-Dichloroethene	< 5.0	5.0	ug/L	
cis-1,2-Dichloroethene	< 5.0	5.0	ug/L	
trans-1,2-Dichloroethene	< 5.0	5.0	ug/L	
1,2-Dichloropropane	< 5.0	5.0	ug/L	
cis-1,3-Dichloropropene	< 1.0	1.0	ug/L	
trans-1,3-Dichloropropene	< 1.0	1.0	ug/L	
Ethylbenzene	< 5.0	5.0	ug/L	
2-Hexanone	< 10.0	10.0	ug/L	
Methyl-tert-butylether (MTBE)	< 5.0	5.0	ug/L	
4-Methyl-2-pentanone (MIBK)	< 10.0	10.0	ug/L	
Methylene chloride	< 5.0	5.0	ug/L	
Styrene	< 5.0	5.0	ug/L	
1,1,2,2-Tetrachloroethane	< 5.0	5.0	ug/L	
Tetrachloroethene	< 5.0	5.0	ug/L	
Toluene	< 5.0	5.0	ug/L	
1,1,1-Trichloroethane	< 5.0	5.0	ug/L	
1,1,2-Trichloroethane	< 5.0	5.0	ug/L	
Trichloroethene	< 5.0	5.0	ug/L	
Vinyl acetate	< 10.0	10.0	ug/L	
Vinyl chloride	< 2.0	2.0	ug/L	
Xylene, Total	< 5.0	5.0	ug/L	

First Environmental Laboratories, Inc.
IL ELAP / NELAC Accreditation # 100292
1600 Shore Road • Naperville, Illinois 60563 • Phone (630) 778-1200 • Fax (630) 778-1233

Analytical Report

Client:	BRADBURNE, BRILLER & JOHNSON	**Date Collected:**	05/18/07
Project ID:	Lyons, IL (Monitoring Wells)	**Time Collected:**	12:30
Sample ID:	MW-9	**Date Received:**	05/18/07
Sample No:	7-2232-001	**Date Reported:**	06/04/07

Analyte	Result	R.L.	Units	Flags
Semi-Volatile Compounds Analysis Date: 05/27/07	**Method: 8270C**	**Preparation Method 3510C** Preparation Date: 05/24/07		
Benzidine	< 10	10	ug/L	
Benzoic acid	< 50	50	ug/L	
Benzyl alcohol	< 20	20	ug/L	
bis(2-Chloroethoxy)methane	< 10	10	ug/L	
bis(2-Chloroethyl)ether	< 10	10	ug/L	
bis(2-Chloroisopropyl)ether	< 10	10	ug/L	
bis(2-Ethylhexyl)phthalate	< 5	5	ug/L	
4-Bromophenyl phenyl ether	< 10	10	ug/L	
Butyl benzyl phthalate	< 10	10	ug/L	
Carbazole	< 10	10	ug/L	
4-Chloroaniline	< 10	10	ug/L	
4-Chloro-3-methylphenol	< 20	20	ug/L	
2-Chloronaphthalene	< 10	10	ug/L	
2-Chlorophenol	< 10	10	ug/L	
4-Chlorophenyl phenyl ether	< 10	10	ug/L	
Dibenzofuran	< 10	10	ug/L	
Di-n-butyl phthalate	< 10	10	ug/L	
1,2-Dichlorobenzene	< 10	10	ug/L	
1,3-Dichlorobenzene	< 10	10	ug/L	
1,4-Dichlorobenzene	< 10	10	ug/L	
2,4-Dichlorophenol	< 10	10	ug/L	
Diethyl phthalate	< 10	10	ug/L	
2,4-Dimethylphenol	< 10	10	ug/L	
Dimethyl phthalate	< 10	10	ug/L	
4,6-Dinitro-2-methylphenol	< 50	50	ug/L	
2,4-Dinitrophenol	< 10	10	ug/L	
2,4-Dinitrotoluene	< 10	10	ug/L	
2,6-Dinitrotoluene	< 10	10	ug/L	
Di-n-octylphthalate	< 10	10	ug/L	
Hexachlorobenzene	< 10	10	ug/L	
Hexachlorobutadiene	< 10	10	ug/L	
Hexachlorocyclopentadiene	< 10	10	ug/L	
Hexachloroethane	< 5	5	ug/L	
Isophorone	< 10	10	ug/L	
2-Methylnaphthalene	< 10	10	ug/L	
2-Methylphenol	< 10	10	ug/L	

First Environmental Laboratories, Inc.
IL ELAP / NELAC Accreditation # 100292
1600 Shore Road • Naperville, Illinois 60563 • Phone (630) 778-1200 • Fax (630) 778-1233

Analytical Report

Client:	BRADBURNE, BRILLER & JOHNSON	**Date Collected:**	05/18/07
Project ID:	Lyons, IL (Monitoring Wells)	**Time Collected:**	12:30
Sample ID:	MW-9	**Date Received:**	05/18/07
Sample No:	7-2232-001	**Date Reported:**	06/04/07

Analyte	Result	R.L.	Units	Flags
Semi-Volatile Compounds **Method: 8270C** Analysis Date: 05/27/07		**Preparation Method 3510C** Preparation Date: 05/24/07		
3 & 4-Methylphenol	< 10	10	ug/L	
2-Nitroaniline	< 50	50	ug/L	
3-Nitroaniline	< 50	50	ug/L	
4-Nitroaniline	< 20	20	ug/L	
Nitrobenzene	< 10	10	ug/L	
2-Nitrophenol	< 10	10	ug/L	
4-Nitrophenol	< 50	50	ug/L	
n-Nitrosodimethylamine	< 10	10	ug/L	
n-Nitrosodiphenylamine	< 10	10	ug/L	
n-Nitrosodi-n-propylamine	< 10	10	ug/L	
Pentachlorophenol	< 10	10	ug/L	
Phenol	< 10	10	ug/L	
1,2,4-Trichlorobenzene	< 10	10	ug/L	
2,4,5-Trichlorophenol	< 10	10	ug/L	
2,4,6-Trichlorophenol	< 10	10	ug/L	
Polynuclear Aromatic Hydrocarbons **Method: 8270C** Analysis Date: 05/25/07		**Preparation Method 3510C** Preparation Date: 05/24/07		
Acenaphthene	< 10	10	ug/L	
Acenaphthylene	< 10	10	ug/L	
Anthracene	< 5	5	ug/L	
Benzo(a)anthracene	< 0.13	0.13	ug/L	
Benzo(a)pyrene	< 0.2	0.2	ug/L	
Benzo(b)fluoranthene	< 0.18	0.18	ug/L	
Benzo(k)fluoranthene	< 0.17	0.17	ug/L	
Benzo(ghi)perylene	< 0.4	0.4	ug/L	
Chrysene	< 1.5	1.5	ug/L	
Dibenzo(a,h)anthracene	< 0.3	0.3	ug/L	
Fluoranthene	< 2	2	ug/L	
Fluorene	< 2	2	ug/L	
Indeno(1,2,3-cd)pyrene	< 0.3	0.3	ug/L	
Naphthalene	< 10	10	ug/L	
Phenanthrene	< 5	5	ug/L	
Pyrene	< 2	2	ug/L	

First Environmental Laboratories, Inc.
IL ELAP / NELAC Accreditation # 100292
1600 Shore Road • Naperville, Illinois 60563 • Phone (630) 778-1200 • Fax (630) 778-1233

Analytical Report

Client:	BRADBURNE, BRILLER & JOHNSON	**Date Collected:**	05/18/07
Project ID:	Lyons, IL (Monitoring Wells)	**Time Collected:**	12:30
Sample ID:	MW-9	**Date Received:**	05/18/07
Sample No:	7-2232-001	**Date Reported:**	06/04/07

Analyte		Result	R.L.	Units	Flags
Pesticides/PCBs Analysis Date: 05/25/07	**Method: 8081A/8082**		**Preparation Method 3510C** Preparation Date: 05/24/07		
Aldrin		< 0.05	0.05	ug/L	
Aroclor 1016		< 0.50	0.50	ug/L	
Aroclor 1221		< 0.50	0.50	ug/L	
Aroclor 1232		< 0.50	0.50	ug/L	
Aroclor 1242		< 0.50	0.50	ug/L	
Aroclor 1248		< 0.50	0.50	ug/L	
Aroclor 1254		< 0.50	0.50	ug/L	
Aroclor 1260		< 0.50	0.50	ug/L	
alpha BHC		< 0.05	0.05	ug/L	
beta-BHC		< 0.05	0.05	ug/L	
delta-BHC		< 0.05	0.05	ug/L	
gamma-BHC (Lindane)		< 0.05	0.05	ug/L	
alpha-Chlordane		< 0.50	0.50	ug/L	
gamma-Chlordane		< 0.50	0.50	ug/L	
4,4'-DDD		< 0.10	0.10	ug/L	
4,4'-DDE		< 0.10	0.10	ug/L	
4,4'-DDT		< 0.10	0.10	ug/L	
Dieldrin		< 0.10	0.10	ug/L	
Endosulfan I		< 0.05	0.05	ug/L	
Endosulfan II		< 0.10	0.10	ug/L	
Endosulfan sulfate		< 0.10	0.10	ug/L	
Endrin		< 0.10	0.10	ug/L	
Endrin aldehyde		< 0.10	0.10	ug/L	
Endrin ketone		< 0.10	0.10	ug/L	
Heptachlor		< 0.05	0.05	ug/L	
Heptachlor epoxide		< 0.05	0.05	ug/L	
Methoxychlor		< 0.50	0.50	ug/L	
Toxaphene		< 1.0	1.0	ug/L	
Herbicides Method 8321A Analysis Date: 05/25/07	**Method: 8321A**				
2,4-D		< 0.2	0.2	ug/L	S
Silvex (2,4,5-TP)		< 0.10	0.1	ug/L	S
Total Metals Analysis Date: 05/23/07	**Method: 7470A**				
Mercury		< 0.0005	0.0005	mg/L	

First Environmental Laboratories, Inc.
IL ELAP / NELAC Accreditation # 100292
1600 Shore Road • Naperville, Illinois 60563 • Phone (630) 778-1200 • Fax (630) 778-1233

Analytical Report

Client:	BRADBURNE, BRILLER & JOHNSON	**Date Collected:**	05/18/07
Project ID:	Lyons, IL (Monitoring Wells)	**Time Collected:**	12:30
Sample ID:	MW-9	**Date Received:**	05/18/07
Sample No:	7-2232-001	**Date Reported:**	06/04/07

Analyte		Result	R.L.	Units	Flags
Total Metals	**Method: 6010B**		**Preparation Method 3010A**		
Analysis Date: 05/22/07			Preparation Date: 05/21/07		
Arsenic		< 0.002	0.002	mg/L	
Barium		0.101	0.001	mg/L	
Cadmium		< 0.001	0.001	mg/L	
Chromium		0.002	0.001	mg/L	
Lead		< 0.002	0.002	mg/L	
Selenium		< 0.002	0.002	mg/L	
Silver		< 0.001	0.001	mg/L	
pH @ 25°C	**Method: 4500H+,B**				
Analysis Date: 05/21/07 13:00					
pH @ 25°C		7.56		Units	

First Environmental Laboratories, Inc.
IL ELAP / NELAC Accreditation # 100292
1600 Shore Road • Naperville, Illinois 60563 • Phone (630) 778-1200 • Fax (630) 778-1233

Analytical Report

Client:	BRADBURNE, BRILLER & JOHNSON	**Date Collected:**	05/18/07
Project ID:	Lyons, IL (Monitoring Wells)	**Time Collected:**	13:00
Sample ID:	MW-12	**Date Received:**	05/18/07
Sample No:	7-2232-002	**Date Reported:**	06/04/07

Analyte	Result	R.L.	Units	Flags
Volatile Organic Compounds **Method: 5030B/8260B**				
Analysis Date: 05/23/07				
Acetone	< 100	100	ug/L	
Benzene	< 5.0	5.0	ug/L	
Bromodichloromethane	< 1.0	1.0	ug/L	
Bromoform	< 1.0	1.0	ug/L	
Bromomethane	< 5.0	5.0	ug/L	
2-Butanone (MEK)	< 10.0	10.0	ug/L	
Carbon disulfide	< 5.0	5.0	ug/L	
Carbon tetrachloride	< 5.0	5.0	ug/L	
Chlorobenzene	< 5.0	5.0	ug/L	
Chlorodibromomethane	< 1.0	1.0	ug/L	
Chloroethane	< 10.0	10.0	ug/L	
Chloroform	< 1.0	1.0	ug/L	
Chloromethane	< 10.0	10.0	ug/L	
1,1-Dichloroethane	< 5.0	5.0	ug/L	
1,2-Dichloroethane	< 5.0	5.0	ug/L	
1,1-Dichloroethene	< 5.0	5.0	ug/L	
cis-1,2-Dichloroethene	< 5.0	5.0	ug/L	
trans-1,2-Dichloroethene	< 5.0	5.0	ug/L	
1,2-Dichloropropane	< 5.0	5.0	ug/L	
cis-1,3-Dichloropropene	< 1.0	1.0	ug/L	
trans-1,3-Dichloropropene	< 1.0	1.0	ug/L	
Ethylbenzene	< 5.0	5.0	ug/L	
2-Hexanone	< 10.0	10.0	ug/L	
Methyl-tert-butylether (MTBE)	< 5.0	5.0	ug/L	
4-Methyl-2-pentanone (MIBK)	< 10.0	10.0	ug/L	
Methylene chloride	< 5.0	5.0	ug/L	
Styrene	< 5.0	5.0	ug/L	
1,1,2,2-Tetrachloroethane	< 5.0	5.0	ug/L	
Tetrachloroethene	< 5.0	5.0	ug/L	
Toluene	< 5.0	5.0	ug/L	
1,1,1-Trichloroethane	< 5.0	5.0	ug/L	
1,1,2-Trichloroethane	< 5.0	5.0	ug/L	
Trichloroethene	< 5.0	5.0	ug/L	
Vinyl acetate	< 10.0	10.0	ug/L	
Vinyl chloride	< 2.0	2.0	ug/L	
Xylene, Total	< 5.0	5.0	ug/L	

First Environmental Laboratories, Inc.
IL ELAP / NELAC Accreditation # 100292
1600 Shore Road • Naperville, Illinois 60563 • Phone (630) 778-1200 • Fax (630) 778-1233

Analytical Report

Client: BRADBURNE, BRILLER & JOHNSON
Project ID: Lyons, IL (Monitoring Wells)
Sample ID: MW-12
Sample No: 7-2232-002

Date Collected: 05/18/07
Time Collected: 13:00
Date Received: 05/18/07
Date Reported: 06/04/07

Analyte	Result	R.L.	Units	Flags
Semi-Volatile Compounds **Method: 8270C** Analysis Date: 05/27/07		**Preparation Method 3510C** Preparation Date: 05/24/07		
Benzidine	< 10	10	ug/L	
Benzoic acid	< 50	50	ug/L	
Benzyl alcohol	< 20	20	ug/L	
bis(2-Chloroethoxy)methane	< 10	10	ug/L	
bis(2-Chloroethyl)ether	< 10	10	ug/L	
bis(2-Chloroisopropyl)ether	< 10	10	ug/L	
bis(2-Ethylhexyl)phthalate	< 5	5	ug/L	
4-Bromophenyl phenyl ether	< 10	10	ug/L	
Butyl benzyl phthalate	< 10	10	ug/L	
Carbazole	< 10	10	ug/L	
4-Chloroaniline	< 10	10	ug/L	
4-Chloro-3-methylphenol	< 20	20	ug/L	
2-Chloronaphthalene	< 10	10	ug/L	
2-Chlorophenol	< 10	10	ug/L	
4-Chlorophenyl phenyl ether	< 10	10	ug/L	
Dibenzofuran	< 10	10	ug/L	
Di-n-butyl phthalate	< 10	10	ug/L	
1,2-Dichlorobenzene	< 10	10	ug/L	
1,3-Dichlorobenzene	< 10	10	ug/L	
1,4-Dichlorobenzene	< 10	10	ug/L	
2,4-Dichlorophenol	< 10	10	ug/L	
Diethyl phthalate	< 10	10	ug/L	
2,4-Dimethylphenol	< 10	10	ug/L	
Dimethyl phthalate	< 10	10	ug/L	
4,6-Dinitro-2-methylphenol	< 50	50	ug/L	
2,4-Dinitrophenol	< 10	10	ug/L	
2,4-Dinitrotoluene	< 10	10	ug/L	
2,6-Dinitrotoluene	< 10	10	ug/L	
Di-n-octylphthalate	< 10	10	ug/L	
Hexachlorobenzene	< 10	10	ug/L	
Hexachlorobutadiene	< 10	10	ug/L	
Hexachlorocyclopentadiene	< 10	10	ug/L	
Hexachloroethane	< 5	5	ug/L	
Isophorone	< 10	10	ug/L	
2-Methylnaphthalene	< 10	10	ug/L	
2-Methylphenol	< 10	10	ug/L	

First Environmental Laboratories, Inc.
IL ELAP / NELAC Accreditation # 100292
1600 Shore Road • Naperville, Illinois 60563 • Phone (630) 778-1200 • Fax (630) 778-1233

Analytical Report

Client:	BRADBURNE, BRILLER & JOHNSON	**Date Collected:**	05/18/07
Project ID:	Lyons, IL (Monitoring Wells)	**Time Collected:**	13:00
Sample ID:	MW-12	**Date Received:**	05/18/07
Sample No:	7-2232-002	**Date Reported:**	06/04/07

Analyte	Result	R.L.	Units	Flags
Semi-Volatile Compounds Method: 8270C Analysis Date: 05/27/07		**Preparation Method 3510C** Preparation Date: 05/24/07		
3 & 4-Methylphenol	< 10	10	ug/L	
2-Nitroaniline	< 50	50	ug/L	
3-Nitroaniline	< 50	50	ug/L	
4-Nitroaniline	< 20	20	ug/L	
Nitrobenzene	< 10	10	ug/L	
2-Nitrophenol	< 10	10	ug/L	
4-Nitrophenol	< 50	50	ug/L	
n-Nitrosodimethylamine	< 10	10	ug/L	
n-Nitrosodiphenylamine	< 10	10	ug/L	
n-Nitrosodi-n-propylamine	< 10	10	ug/L	
Pentachlorophenol	< 10	10	ug/L	
Phenol	< 10	10	ug/L	
1,2,4-Trichlorobenzene	< 10	10	ug/L	
2,4,5-Trichlorophenol	< 10	10	ug/L	
2,4,6-Trichlorophenol	< 10	10	ug/L	
Polynuclear Aromatic Hydrocarbons Method: 8270C Analysis Date: 05/26/07		**Preparation Method 3510C** Preparation Date: 05/24/07		
Acenaphthene	< 10	10	ug/L	
Acenaphthylene	< 10	10	ug/L	
Anthracene	< 5	5	ug/L	
Benzo(a)anthracene	< 0.13	0.13	ug/L	
Benzo(a)pyrene	< 0.2	0.2	ug/L	
Benzo(b)fluoranthene	< 0.18	0.18	ug/L	
Benzo(k)fluoranthene	< 0.17	0.17	ug/L	
Benzo(ghi)perylene	< 0.4	0.4	ug/L	
Chrysene	< 1.5	1.5	ug/L	
Dibenzo(a,h)anthracene	< 0.3	0.3	ug/L	
Fluoranthene	< 2	2	ug/L	
Fluorene	< 2	2	ug/L	
Indeno(1,2,3-cd)pyrene	< 0.3	0.3	ug/L	
Naphthalene	11	10	ug/L	
Phenanthrene	< 5	5	ug/L	
Pyrene	< 2	2	ug/L	

First Environmental Laboratories, Inc.
IL ELAP / NELAC Accreditation # 100292
1600 Shore Road • Naperville, Illinois 60563 • Phone (630) 778-1200 • Fax (630) 778-1233

Analytical Report

Client:	BRADBURNE, BRILLER & JOHNSON	**Date Collected:**	05/18/07
Project ID:	Lyons, IL (Monitoring Wells)	**Time Collected:**	13:00
Sample ID:	MW-12	**Date Received:**	05/18/07
Sample No:	7-2232-002	**Date Reported:**	06/04/07

Analyte	Result	R.L.	Units	Flags
Pesticides/PCBs Method: 8081A/8082		Preparation Method 3510C		
Analysis Date: 05/25/07		Preparation Date: 05/24/07		
Aldrin	< 0.05	0.05	ug/L	
Aroclor 1016	< 0.50	0.50	ug/L	
Aroclor 1221	< 0.50	0.50	ug/L	
Aroclor 1232	< 0.50	0.50	ug/L	
Aroclor 1242	< 0.50	0.50	ug/L	
Aroclor 1248	< 0.50	0.50	ug/L	
Aroclor 1254	< 0.50	0.50	ug/L	
Aroclor 1260	< 0.50	0.50	ug/L	
alpha-BHC	< 0.05	0.05	ug/L	
beta-BHC	< 0.05	0.05	ug/L	
delta-BHC	< 0.05	0.05	ug/L	
gamma-BHC (Lindane)	< 0.05	0.05	ug/L	
alpha-Chlordane	< 0.50	0.50	ug/L	
gamma-Chlordane	< 0.50	0.50	ug/L	
4,4'-DDD	< 0.10	0.10	ug/L	
4,4'-DDE	< 0.10	0.10	ug/L	
4,4'-DDT	< 0.10	0.10	ug/L	
Dieldrin	< 0.10	0.10	ug/L	
Endosulfan I	< 0.05	0.05	ug/L	
Endosulfan II	< 0.10	0.10	ug/L	
Endosulfan sulfate	< 0.10	0.10	ug/L	
Endrin	< 0.10	0.10	ug/L	
Endrin aldehyde	< 0.10	0.10	ug/L	
Endrin ketone	< 0.10	0.10	ug/L	
Heptachlor	< 0.05	0.05	ug/L	
Heptachlor epoxide	< 0.05	0.05	ug/L	
Methoxychlor	< 0.50	0.50	ug/L	
Toxaphene	< 1.0	1.0	ug/L	
Herbicides Method 8321A Method: 8321A				
Analysis Date: 05/25/07				
2,4-D	< 0.2	0.2	ug/L	S
Silvex (2,4,5-TP)	< 0.10	0.1	ug/L	S
Total Metals Method: 7470A				
Analysis Date: 05/23/07				
Mercury	< 0.0005	0.0005	mg/L	

First Environmental Laboratories, Inc.
IL ELAP / NELAC Accreditation # 100292
1600 Shore Road • Naperville, Illinois 60563 • Phone (630) 778-1200 • Fax (630) 778-1233

Analytical Report

Client:	BRADBURNE, BRILLER & JOHNSON	**Date Collected:**	05/18/07
Project ID:	Lyons, IL (Monitoring Wells)	**Time Collected:**	13:00
Sample ID:	MW-12	**Date Received:**	05/18/07
Sample No:	7-2232-002	**Date Reported:**	06/04/07

Analyte	Result	R.L.	Units	Flags
Total Metals	**Method: 6010B**	**Preparation Method 3010A**		
Analysis Date: 05/22/07		Preparation Date: 05/21/07		
Arsenic	< 0.002	0.002	mg/L	
Barium	0.095	0.001	mg/L	
Cadmium	< 0.001	0.001	mg/L	
Chromium	0.010	0.001	mg/L	
Lead	0.024	0.002	mg/L	
Selenium	< 0.002	0.002	mg/L	
Silver	< 0.001	0.001	mg/L	
pH @ 25°C	**Method: 4500H+,B**			
Analysis Date: 05/21/07 13:00				
pH @ 25°C	7.52		Units	

First Environmental Laboratories, Inc.
IL ELAP / NELAC Accreditation # 100292
1600 Shore Road • Naperville, Illinois 60563 • Phone (630) 778-1200 • Fax (630) 778-1233

Analytical Report

Client: BRADBURNE, BRILLER & JOHNSON
Project ID: Lyons, IL (Monitoring Wells)
Sample ID: MW-10
Sample No: 7-2232-003

Date Collected: 05/18/07
Time Collected: 13:30
Date Received: 05/18/07
Date Reported: 06/04/07

Analyte	Result	R.L.	Units	Flags
Volatile Organic Compounds **Method: 5030B/8260B**				
Analysis Date: 05/23/07				
Acetone	< 100	100	ug/L	
Benzene	< 5.0	5.0	ug/L	
Bromodichloromethane	< 1.0	1.0	ug/L	
Bromoform	< 1.0	1.0	ug/L	
Bromomethane	< 5.0	5.0	ug/L	
2-Butanone (MEK)	< 10.0	10.0	ug/L	
Carbon disulfide	< 5.0	5.0	ug/L	
Carbon tetrachloride	< 5.0	5.0	ug/L	
Chlorobenzene	< 5.0	5.0	ug/L	
Chlorodibromomethane	< 1.0	1.0	ug/L	
Chloroethane	< 10.0	10.0	ug/L	
Chloroform	< 1.0	1.0	ug/L	
Chloromethane	< 10.0	10.0	ug/L	
1,1-Dichloroethane	< 5.0	5.0	ug/L	
1,2-Dichloroethane	< 5.0	5.0	ug/L	
1,1-Dichloroethene	< 5.0	5.0	ug/L	
cis-1,2-Dichloroethene	< 5.0	5.0	ug/L	
trans-1,2-Dichloroethene	< 5.0	5.0	ug/L	
1,2-Dichloropropane	< 5.0	5.0	ug/L	
cis-1,3-Dichloropropene	< 1.0	1.0	ug/L	
trans-1,3-Dichloropropene	< 1.0	1.0	ug/L	
Ethylbenzene	< 5.0	5.0	ug/L	
2-Hexanone	< 10.0	10.0	ug/L	
Methyl-tert-butylether (MTBE)	< 5.0	5.0	ug/L	
4-Methyl-2-pentanone (MIBK)	< 10.0	10.0	ug/L	
Methylene chloride	< 5.0	5.0	ug/L	
Styrene	< 5.0	5.0	ug/L	
1,1,2,2-Tetrachloroethane	< 5.0	5.0	ug/L	
Tetrachloroethene	< 5.0	5.0	ug/L	
Toluene	< 5.0	5.0	ug/L	
1,1,1-Trichloroethane	< 5.0	5.0	ug/L	
1,1,2-Trichloroethane	< 5.0	5.0	ug/L	
Trichloroethene	< 5.0	5.0	ug/L	
Vinyl acetate	< 10.0	10.0	ug/L	
Vinyl chloride	< 2.0	2.0	ug/L	
Xylene, Total	< 5.0	5.0	ug/L	

First Environmental Laboratories, Inc.
IL ELAP / NELAC Accreditation # 100292
1600 Shore Road • Naperville, Illinois 60563 • Phone (630) 778-1200 • Fax (630) 778-1233

Analytical Report

Client:	BRADBURNE, BRILLER & JOHNSON	**Date Collected:**	05/18/07
Project ID:	Lyons, IL (Monitoring Wells)	**Time Collected:**	13:30
Sample ID:	MW-10	**Date Received:**	05/18/07
Sample No:	7-2232-003	**Date Reported:**	06/04/07

Analyte	Result	R.L.	Units	Flags
Semi-Volatile Compounds **Method: 8270C** Analysis Date: 05/27/07		**Preparation Method 3510C** Preparation Date: 05/24/07		
Benzidine	< 10	10	ug/L	
Benzoic acid	< 50	50	ug/L	
Benzyl alcohol	< 20	20	ug/L	
bis(2-Chloroethoxy)methane	< 10	10	ug/L	
bis(2-Chloroethyl)ether	< 10	10	ug/L	
bis(2-Chloroisopropyl)ether	< 10	10	ug/L	
bis(2-Ethylhexyl)phthalate	< 5	5	ug/L	
4-Bromophenyl phenyl ether	< 10	10	ug/L	
Butyl benzyl phthalate	< 10	10	ug/L	
Carbazole	< 10	10	ug/L	
4-Chloroaniline	< 10	10	ug/L	
4-Chloro-3-methylphenol	< 20	20	ug/L	
2-Chloronaphthalene	< 10	10	ug/L	
2-Chlorophenol	< 10	10	ug/L	
4-Chlorophenyl phenyl ether	< 10	10	ug/L	
Dibenzofuran	< 10	10	ug/L	
Di-n-butyl phthalate	< 10	10	ug/L	
1,2-Dichlorobenzene	< 10	10	ug/L	
1,3-Dichlorobenzene	< 10	10	ug/L	
1,4-Dichlorobenzene	< 10	10	ug/L	
2,4-Dichlorophenol	< 10	10	ug/L	
Diethyl phthalate	< 10	10	ug/L	
2,4-Dimethylphenol	< 10	10	ug/L	
Dimethyl phthalate	< 10	10	ug/L	
4,6-Dinitro-2-methylphenol	< 50	50	ug/L	
2,4-Dinitrophenol	< 10	10	ug/L	
2,4-Dinitrotoluene	< 10	10	ug/L	
2,6-Dinitrotoluene	< 10	10	ug/L	
Di-n-octylphthalate	< 10	10	ug/L	
Hexachlorobenzene	< 10	10	ug/L	
Hexachlorobutadiene	< 10	10	ug/L	
Hexachlorocyclopentadiene	< 10	10	ug/L	
Hexachloroethane	< 5	5	ug/L	
Isophorone	< 10	10	ug/L	
2-Methylnaphthalene	< 10	10	ug/L	
2-Methylphenol	< 10	10	ug/L	

First Environmental Laboratories, Inc.
IL ELAP / NELAC Accreditation # 100292
1600 Shore Road • Naperville, Illinois 60563 • Phone (630) 778-1200 • Fax (630) 778-1233

Analytical Report

Client:	BRADBURNE, BRILLER & JOHNSON	**Date Collected:**	05/18/07
Project ID:	Lyons, IL (Monitoring Wells)	**Time Collected:**	13:30
Sample ID:	MW-10	**Date Received:**	05/18/07
Sample No:	7-2232-003	**Date Reported:**	06/04/07

Analyte		Result	R.L.	Units	Flags
Semi-Volatile Compounds Analysis Date: 05/27/07	**Method: 8270C**		**Preparation Method 3510C** Preparation Date: 05/24/07		
3 & 4-Methylphenol		< 10	10	ug/L	
2-Nitroaniline		< 50	50	ug/L	
3-Nitroaniline		< 50	50	ug/L	
4-Nitroaniline		< 20	20	ug/L	
Nitrobenzene		< 10	10	ug/L	
2-Nitrophenol		< 10	10	ug/L	
4-Nitrophenol		< 50	50	ug/L	
n-Nitrosodimethylamine		< 10	10	ug/L	
n-Nitrosodiphenylamine		< 10	10	ug/L	
n-Nitrosodi-n-propylamine		< 10	10	ug/L	
Pentachlorophenol		< 10	10	ug/L	
Phenol		< 10	10	ug/L	
1,2,4-Trichlorobenzene		< 10	10	ug/L	
2,4,5-Trichlorophenol		< 10	10	ug/L	
2,4,6-Trichlorophenol		< 10	10	ug/L	
Polynuclear Aromatic Hydrocarbons Analysis Date: 05/26/07	**Method: 8270C**		**Preparation Method 3510C** Preparation Date: 05/24/07		
Acenaphthene		< 10	10	ug/L	
Acenaphthylene		< 10	10	ug/L	
Anthracene		< 5	5	ug/L	
Benzo(a)anthracene		< 0.13	0.13	ug/L	
Benzo(a)pyrene		< 0.2	0.2	ug/L	
Benzo(b)fluoranthene		< 0.18	0.18	ug/L	
Benzo(k)fluoranthene		< 0.17	0.17	ug/L	
Benzo(ghi)perylene		< 0.4	0.4	ug/L	
Chrysene		< 1.5	1.5	ug/L	
Dibenzo(a,h)anthracene		< 0.3	0.3	ug/L	
Fluoranthene		< 2	2	ug/L	
Fluorene		< 2	2	ug/L	
Indeno(1,2,3-cd)pyrene		< 0.3	0.3	ug/L	
Naphthalene		< 10	10	ug/L	
Phenanthrene		< 5	5	ug/L	
Pyrene		< 2	2	ug/L	

First Environmental Laboratories, Inc.
IL ELAP / NELAC Accreditation # 100292
1600 Shore Road • Naperville, Illinois 60563 • Phone (630) 778-1200 • Fax (630) 778-1233

Analytical Report

Client:	BRADBURNE, BRILLER & JOHNSON	**Date Collected:**	05/18/07
Project ID:	Lyons, IL (Monitoring Wells)	**Time Collected:**	13:30
Sample ID:	MW-10	**Date Received:**	05/18/07
Sample No:	7-2232-003	**Date Reported:**	06/04/07

Analyte	Result	R.L.	Units	Flags
Pesticides/PCBs Method: 8081A/8082		Preparation Method 3510C		
Analysis Date: 05/25/07		Preparation Date: 05/24/07		
Aldrin	< 0.05	0.05	ug/L	
Aroclor 1016	< 0.50	0.50	ug/L	
Aroclor 1221	< 0.50	0.50	ug/L	
Aroclor 1232	< 0.50	0.50	ug/L	
Aroclor 1242	< 0.50	0.50	ug/L	
Aroclor 1248	< 0.50	0.50	ug/L	
Aroclor 1254	< 0.50	0.50	ug/L	
Aroclor 1260	< 0.50	0.50	ug/L	
alpha BHC	< 0.05	0.05	ug/L	
beta-BHC	< 0.05	0.05	ug/L	
delta-BHC	< 0.05	0.05	ug/L	
gamma-BHC (Lindane)	< 0.05	0.05	ug/L	
alpha-Chlordane	< 0.50	0.50	ug/L	
gamma-Chlordane	< 0.50	0.50	ug/L	
4,4'-DDD	< 0.10	0.10	ug/L	
4,4'-DDE	< 0.10	0.10	ug/L	
4,4'-DDT	< 0.10	0.10	ug/L	
Dieldrin	< 0.10	0.10	ug/L	
Endosulfan I	< 0.05	0.05	ug/L	
Endosulfan II	< 0.10	0.10	ug/L	
Endosulfan sulfate	< 0.10	0.10	ug/L	
Endrin	< 0.10	0.10	ug/L	
Endrin aldehyde	< 0.10	0.10	ug/L	
Endrin ketone	< 0.10	0.10	ug/L	
Heptachlor	< 0.05	0.05	ug/L	
Heptachlor epoxide	< 0.05	0.05	ug/L	
Methoxychlor	< 0.50	0.50	ug/L	
Toxaphene	< 1.0	1.0	ug/L	
Herbicides Method 8321A Method: 8321A				
Analysis Date: 05/25/07				
2,4-D	< 0.2	0.2	ug/L	S
Silvex (2,4,5-TP)	< 0.10	0.1	ug/L	S
Total Metals Method: 7470A				
Analysis Date: 05/23/07				
Mercury	< 0.0005	0.0005	mg/L	

First Environmental Laboratories, Inc.
IL ELAP / NELAC Accreditation # 100292
1600 Shore Road • Naperville, Illinois 60563 • Phone (630) 778-1200 • Fax (630) 778-1233

Analytical Report

Client:	BRADBURNE, BRILLER & JOHNSON	**Date Collected:**	05/18/07
Project ID:	Lyons, IL (Monitoring Wells)	**Time Collected:**	13:30
Sample ID:	MW-10	**Date Received:**	05/18/07
Sample No:	7-2232-003	**Date Reported:**	06/04/07

Analyte		Result	R.L.	Units	Flags
Total Metals	**Method: 6010B**		**Preparation Method 3010A**		
Analysis Date: 05/22/07			Preparation Date: 05/21/07		
Arsenic		< 0.002	0.002	mg/L	
Barium		0.097	0.001	mg/L	
Cadmium		< 0.001	0.001	mg/L	
Chromium		0.005	0.001	mg/L	
Lead		0.009	0.002	mg/L	
Selenium		< 0.002	0.002	mg/L	
Silver		< 0.001	0.001	mg/L	
pH @ 25°C	**Method: 4500H+,B**				
Analysis Date: 05/21/07 13:00					
pH @ 25°C		7.48		Units	

First Environmental Laboratories, Inc.
IL ELAP / NELAC Accreditation # 100292
1600 Shore Road • Naperville, Illinois 60563 • Phone (630) 778-1200 • Fax (630) 778-1233

Analytical Report

Client:	BRADBURNE, BRILLER & JOHNSON	**Date Collected:**	05/18/07
Project ID:	Lyons, IL (Monitoring Wells)	**Time Collected:**	14:00
Sample ID:	MW-5	**Date Received:**	05/18/07
Sample No:	7-2232-004	**Date Reported:**	06/04/07

Analyte	Result	R.L.	Units	Flags
Volatile Organic Compounds Method: 5030B/8260B				
Analysis Date: 05/23/07				
Acetone	< 100	100	ug/L	
Benzene	< 5.0	5.0	ug/L	
Bromodichloromethane	< 1.0	1.0	ug/L	
Bromoform	< 1.0	1.0	ug/L	
Bromomethane	< 5.0	5.0	ug/L	
2-Butanone (MEK)	< 10.0	10.0	ug/L	
Carbon disulfide	< 5.0	5.0	ug/L	
Carbon tetrachloride	< 5.0	5.0	ug/L	
Chlorobenzene	< 5.0	5.0	ug/L	
Chlorodibromomethane	< 1.0	1.0	ug/L	
Chloroethane	< 10.0	10.0	ug/L	
Chloroform	< 1.0	1.0	ug/L	
Chloromethane	< 10.0	10.0	ug/L	
1,1-Dichloroethane	< 5.0	5.0	ug/L	
1,2-Dichloroethane	< 5.0	5.0	ug/L	
1,1-Dichloroethene	< 5.0	5.0	ug/L	
cis-1,2-Dichloroethene	< 5.0	5.0	ug/L	
trans-1,2-Dichloroethene	< 5.0	5.0	ug/L	
1,2-Dichloropropane	< 5.0	5.0	ug/L	
cis-1,3-Dichloropropene	< 1.0	1.0	ug/L	
trans-1,3-Dichloropropene	< 1.0	1.0	ug/L	
Ethylbenzene	< 5.0	5.0	ug/L	
2-Hexanone	< 10.0	10.0	ug/L	
Methyl-tert-butylether (MTBE)	< 5.0	5.0	ug/L	
4-Methyl-2-pentanone (MIBK)	< 10.0	10.0	ug/L	
Methylene chloride	< 5.0	5.0	ug/L	
Styrene	< 5.0	5.0	ug/L	
1,1,2,2-Tetrachloroethane	< 5.0	5.0	ug/L	
Tetrachloroethene	< 5.0	5.0	ug/L	
Toluene	< 5.0	5.0	ug/L	
1,1,1-Trichloroethane	< 5.0	5.0	ug/L	
1,1,2-Trichloroethane	< 5.0	5.0	ug/L	
Trichloroethene	< 5.0	5.0	ug/L	
Vinyl acetate	< 10.0	10.0	ug/L	
Vinyl chloride	< 2.0	2.0	ug/L	
Xylene, Total	< 5.0	5.0	ug/L	

First Environmental Laboratories, Inc.
IL ELAP / NELAC Accreditation # 100292
1600 Shore Road • Naperville, Illinois 60563 • Phone (630) 778-1200 • Fax (630) 778-1233

Analytical Report

Client:	BRADBURNE, BRILLER & JOHNSON	**Date Collected:**	05/18/07
Project ID:	Lyons, IL (Monitoring Wells)	**Time Collected:**	14:00
Sample ID:	MW-5	**Date Received:**	05/18/07
Sample No:	7-2232-004	**Date Reported:**	06/04/07

Analyte		Result	R.L.	Units	Flags
Total Metals	**Method: 7470A**				
Analysis Date: 05/23/07					
Mercury		< 0.0005	0.0005	mg/L	
Total Metals	**Method: 6010B**		**Preparation Method 3010A**		
Analysis Date: 05/24/07			Preparation Date: 05/21/07		
Arsenic		0.010	0.002	mg/L	
Barium		0.239	0.001	mg/L	
Cadmium		0.006	0.001	mg/L	
Chromium		0.006	0.001	mg/L	
Lead		< 0.002	0.002	mg/L	
Selenium		< 0.002	0.002	mg/L	
Silver		< 0.001	0.001	mg/L	
pH @ 25°C	**Method: 4500H+,B**				
Analysis Date: 05/21/07 13:00					
pH @ 25°C		7.50		Units	

First Environmental Laboratories, Inc.
IL ELAP / NELAC Accreditation # 100292
1600 Shore Road • Naperville, Illinois 60563 • Phone (630) 778-1200 • Fax (630) 778-1233

Analytical Report

Client:	BRADBURNE, BRILLER & JOHNSON	**Date Collected:**	05/18/07
Project ID:	Lyons, IL (Monitoring Wells)	**Time Collected:**	0:00
Sample ID:	Trip Blank	**Date Received:**	05/18/07
Sample No:	7-2232-005	**Date Reported:**	06/04/07

Analyte	Result	R.L.	Units	Flags
Volatile Organic Compounds **Method: 5030B/8260B**				
Analysis Date: 05/23/07				
Acetone	< 100	100	ug/L	
Benzene	< 5.0	5.0	ug/L	
Bromodichloromethane	< 1.0	1.0	ug/L	
Bromoform	< 1.0	1.0	ug/L	
Bromomethane	< 5.0	5.0	ug/L	
2-Butanone (MEK)	< 10.0	10.0	ug/L	
Carbon disulfide	< 5.0	5.0	ug/L	
Carbon tetrachloride	< 5.0	5.0	ug/L	
Chlorobenzene	< 5.0	5.0	ug/L	
Chlorodibromomethane	< 1.0	1.0	ug/L	
Chloroethane	< 10.0	10.0	ug/L	
Chloroform	< 1.0	1.0	ug/L	
Chloromethane	< 10.0	10.0	ug/L	
1,1-Dichloroethane	< 5.0	5.0	ug/L	
1,2-Dichloroethane	< 5.0	5.0	ug/L	
1,1-Dichloroethene	< 5.0	5.0	ug/L	
cis-1,2-Dichloroethene	< 5.0	5.0	ug/L	
trans-1,2-Dichloroethene	< 5.0	5.0	ug/L	
1,2-Dichloropropane	< 5.0	5.0	ug/L	
cis-1,3-Dichloropropene	< 1.0	1.0	ug/L	
trans-1,3-Dichloropropene	< 1.0	1.0	ug/L	
Ethylbenzene	< 5.0	5.0	ug/L	
2-Hexanone	< 10.0	10.0	ug/L	
Methyl-tert-butylether (MTBE)	< 5.0	5.0	ug/L	
4-Methyl-2-pentanone (MIBK)	< 10.0	10.0	ug/L	
Methylene chloride	< 5.0	5.0	ug/L	
Styrene	< 5.0	5.0	ug/L	
1,1,2,2-Tetrachloroethane	< 5.0	5.0	ug/L	
Tetrachloroethene	< 5.0	5.0	ug/L	
Toluene	< 5.0	5.0	ug/L	
1,1,1-Trichloroethane	< 5.0	5.0	ug/L	
1,1,2-Trichloroethane	< 5.0	5.0	ug/L	
Trichloroethene	< 5.0	5.0	ug/L	
Vinyl acetate	< 10.0	10.0	ug/L	
Vinyl chloride	< 2.0	2.0	ug/L	
Xylene, Total	< 5.0	5.0	ug/L	

First Environmental Laboratories, Inc.
IL ELAP / NELAC Accreditation # 100292
1600 Shore Road • Naperville, Illinois 60563 • Phone (630) 778-1200 • Fax (630) 778-1233

Analytical Report

Client:	BRADBURNE, BRILLER & JOHNSON	**Date Collected:**	05/18/07
Project ID:	Lyons, IL (Monitoring Wells)	**Time Collected:**	14:15
Sample ID:	Quarry Well	**Date Received:**	05/18/07
Sample No:	7-2232-006	**Date Reported:**	06/04/07

Analyte	Result	R.L.	Units	Flags
Volatile Organic Compounds **Method: 5030B/8260B**				
Analysis Date: 05/23/07				
Acetone	< 100	100	ug/L	
Benzene	< 5.0	5.0	ug/L	
Bromodichloromethane	< 1.0	1.0	ug/L	
Bromoform	< 1.0	1.0	ug/L	
Bromomethane	< 5.0	5.0	ug/L	
2-Butanone (MEK)	< 10.0	10.0	ug/L	
Carbon disulfide	< 5.0	5.0	ug/L	
Carbon tetrachloride	< 5.0	5.0	ug/L	
Chlorobenzene	< 5.0	5.0	ug/L	
Chlorodibromomethane	< 1.0	1.0	ug/L	
Chloroethane	< 10.0	10.0	ug/L	
Chloroform	< 1.0	1.0	ug/L	
Chloromethane	< 10.0	10.0	ug/L	
1,1-Dichloroethane	< 5.0	5.0	ug/L	
1,2-Dichloroethane	< 5.0	5.0	ug/L	
1,1-Dichloroethene	< 5.0	5.0	ug/L	
cis-1,2-Dichloroethene	< 5.0	5.0	ug/L	
trans-1,2-Dichloroethene	< 5.0	5.0	ug/L	
1,2-Dichloropropane	< 5.0	5.0	ug/L	
cis-1,3-Dichloropropene	< 1.0	1.0	ug/L	
trans-1,3-Dichloropropene	< 1.0	1.0	ug/L	
Ethylbenzene	< 5.0	5.0	ug/L	
2-Hexanone	< 10.0	10.0	ug/L	
Methyl-tert-butylether (MTBE)	< 5.0	5.0	ug/L	
4-Methyl-2-pentanone (MIBK)	< 10.0	10.0	ug/L	
Methylene chloride	< 5.0	5.0	ug/L	
Styrene	< 5.0	5.0	ug/L	
1,1,2,2-Tetrachloroethane	< 5.0	5.0	ug/L	
Tetrachloroethene	< 5.0	5.0	ug/L	
Toluene	< 5.0	5.0	ug/L	
1,1,1-Trichloroethane	< 5.0	5.0	ug/L	
1,1,2-Trichloroethane	< 5.0	5.0	ug/L	
Trichloroethene	< 5.0	5.0	ug/L	
Vinyl acetate	< 10.0	10.0	ug/L	
Vinyl chloride	< 2.0	2.0	ug/L	
Xylene, Total	< 5.0	5.0	ug/L	

First Environmental Laboratories, Inc.
IL ELAP / NELAC Accreditation # 100292
1600 Shore Road • Naperville, Illinois 60563 • Phone (630) 778-1200 • Fax (630) 778-1233

Analytical Report

Client:	BRADBURNE, BRILLER & JOHNSON	**Date Collected:**	05/18/07
Project ID:	Lyons, IL (Monitoring Wells)	**Time Collected:**	14:15
Sample ID:	Quarry Well	**Date Received:**	05/18/07
Sample No:	7-2232-006	**Date Reported:**	06/04/07

Analyte	Result	R.L.	Units	Flags
Semi-Volatile Compounds **Method: 8270C**		**Preparation Method 3510C**		
Analysis Date: 05/27/07		Preparation Date: 05/24/07		
Benzidine	< 10	10	ug/L	
Benzoic acid	< 50	50	ug/L	
Benzyl alcohol	< 20	20	ug/L	
bis(2-Chloroethoxy)methane	< 10	10	ug/L	
bis(2-Chloroethyl)ether	< 10	10	ug/L	
bis(2-Chloroisopropyl)ether	< 10	10	ug/L	
bis(2-Ethylhexyl)phthalate	< 5	5	ug/L	
4-Bromophenyl phenyl ether	< 10	10	ug/L	
Butyl benzyl phthalate	< 10	10	ug/L	
Carbazole	< 10	10	ug/L	
4-Chloroaniline	< 10	10	ug/L	
4-Chloro-3-methylphenol	< 20	20	ug/L	
2-Chloronaphthalene	< 10	10	ug/L	
2-Chlorophenol	< 10	10	ug/L	
4-Chlorophenyl phenyl ether	< 10	10	ug/L	
Dibenzofuran	< 10	10	ug/L	
Di-n-butyl phthalate	< 10	10	ug/L	
1,2-Dichlorobenzene	< 10	10	ug/L	
1,3-Dichlorobenzene	< 10	10	ug/L	
1,4-Dichlorobenzene	< 10	10	ug/L	
2,4-Dichlorophenol	< 10	10	ug/L	
Diethyl phthalate	< 10	10	ug/L	
2,4-Dimethylphenol	< 10	10	ug/L	
Dimethyl phthalate	< 10	10	ug/L	
4,6-Dinitro-2-methylphenol	< 50	50	ug/L	
2,4-Dinitrophenol	< 10	10	ug/L	
2,4-Dinitrotoluene	< 10	10	ug/L	
2,6-Dinitrotoluene	< 10	10	ug/L	
Di-n-octylphthalate	< 10	10	ug/L	
Hexachlorobenzene	< 10	10	ug/L	
Hexachlorobutadiene	< 10	10	ug/L	
Hexachlorocyclopentadiene	< 10	10	ug/L	
Hexachloroethane	< 5	5	ug/L	
Isophorone	< 10	10	ug/L	
2-Methylnaphthalene	< 10	10	ug/L	
2-Methylphenol	< 10	10	ug/L	

First Environmental Laboratories, Inc.
IL ELAP / NELAC Accreditation # 100292
1600 Shore Road • Naperville, Illinois 60563 • Phone (630) 778-1200 • Fax (630) 778-1233

Analytical Report

Client:	BRADBURNE, BRILLER & JOHNSON	**Date Collected:**	05/18/07
Project ID:	Lyons, IL (Monitoring Wells)	**Time Collected:**	14:15
Sample ID:	Quarry Well	**Date Received:**	05/18/07
Sample No:	7-2232-006	**Date Reported:**	06/04/07

Analyte		Result	R.L.	Units	Flags
Semi-Volatile Compounds Analysis Date: 05/27/07	**Method: 8270C**		**Preparation Method 3510C** Preparation Date: 05/24/07		
3 & 4-Methylphenol		< 10	10	ug/L	
2-Nitroaniline		< 50	50	ug/L	
3-Nitroaniline		< 50	50	ug/L	
4-Nitroaniline		< 20	20	ug/L	
Nitrobenzene		< 10	10	ug/L	
2-Nitrophenol		< 10	10	ug/L	
4-Nitrophenol		< 50	50	ug/L	
n-Nitrosodimethylamine		< 10	10	ug/L	
n-Nitrosodiphenylamine		< 10	10	ug/L	
n-Nitrosodi-n-propylamine		< 10	10	ug/L	
Pentachlorophenol		< 10	10	ug/L	
Phenol		< 10	10	ug/L	
1,2,4-Trichlorobenzene		< 10	10	ug/L	
2,4,5-Trichlorophenol		< 10	10	ug/L	
2,4,6-Trichlorophenol		< 10	10	ug/L	
Polynuclear Aromatic Hydrocarbons Analysis Date: 05/26/07	**Method: 8270C**		**Preparation Method 3510C** Preparation Date: 05/24/07		
Acenaphthene		< 10	10	ug/L	
Acenaphthylene		< 10	10	ug/L	
Anthracene		< 5	5	ug/L	
Benzo(a)anthracene		< 0.13	0.13	ug/L	
Benzo(a)pyrene		< 0.2	0.2	ug/L	
Benzo(b)fluoranthene		< 0.18	0.18	ug/L	
Benzo(k)fluoranthene		< 0.17	0.17	ug/L	
Benzo(ghi)perylene		< 0.4	0.4	ug/L	
Chrysene		< 1.5	1.5	ug/L	
Dibenzo(a,h)anthracene		< 0.3	0.3	ug/L	
Fluoranthene		< 2	2	ug/L	
Fluorene		< 2	2	ug/L	
Indeno(1,2,3-cd)pyrene		< 0.3	0.3	ug/L	
Naphthalene		< 10	10	ug/L	
Phenanthrene		< 5	5	ug/L	
Pyrene		< 2	2	ug/L	

First Environmental Laboratories, Inc.
IL ELAP / NELAC Accreditation # 100292
1600 Shore Road • Naperville, Illinois 60563 • Phone (630) 778-1200 • Fax (630) 778-1233

Analytical Report

Client:	BRADBURNE, BRILLER & JOHNSON	**Date Collected:**	05/18/07
Project ID:	Lyons, IL (Monitoring Wells)	**Time Collected:**	14:15
Sample ID:	Quarry Well	**Date Received:**	05/18/07
Sample No:	7-2232-006	**Date Reported:**	06/04/07

Analyte	Result	R.L.	Units	Flags
Pesticides/PCBs	**Method: 8081A/8082**	**Preparation Method 3510C**		
Analysis Date: 05/25/07		Preparation Date: 05/24/07		
Aldrin	< 0.05	0.05	ug/L	
Aroclor 1016	< 0.50	0.50	ug/L	
Aroclor 1221	< 0.50	0.50	ug/L	
Aroclor 1232	< 0.50	0.50	ug/L	
Aroclor 1242	< 0.50	0.50	ug/L	
Aroclor 1248	< 0.50	0.50	ug/L	
Aroclor 1254	< 0.50	0.50	ug/L	
Aroclor 1260	< 0.50	0.50	ug/L	
alpha BHC	< 0.05	0.05	ug/L	
beta-BHC	< 0.05	0.05	ug/L	
delta-BHC	< 0.05	0.05	ug/L	
gamma-BHC (Lindane)	< 0.05	0.05	ug/L	
alpha-Chlordane	< 0.50	0.50	ug/L	
gamma-Chlordane	< 0.50	0.50	ug/L	
4,4'-DDD	< 0.10	0.10	ug/L	
4,4'-DDE	< 0.10	0.10	ug/L	
4,4'-DDT	< 0.10	0.10	ug/L	
Dieldrin	< 0.10	0.10	ug/L	
Endosulfan I	< 0.05	0.05	ug/L	
Endosulfan II	< 0.10	0.10	ug/L	
Endosulfan sulfate	< 0.10	0.10	ug/L	
Endrin	< 0.10	0.10	ug/L	
Endrin aldehyde	< 0.10	0.10	ug/L	
Endrin ketone	< 0.10	0.10	ug/L	
Heptachlor	< 0.05	0.05	ug/L	
Heptachlor epoxide	< 0.05	0.05	ug/L	
Methoxychlor	< 0.50	0.50	ug/L	
Toxaphene	< 1.0	1.0	ug/L	
Herbicides Method 8321A	**Method: 8321A**			
Analysis Date: 05/25/07				
2,4-D	< 0.2	0.2	ug/L	S
Silvex (2,4,5-TP)	< 0.10	0.1	ug/L	S
Total Metals	**Method: 7470A**			
Analysis Date: 05/23/07				
Mercury	< 0.0005	0.0005	mg/L	

First Environmental Laboratories, Inc.
IL ELAP / NELAC Accreditation # 100292
1600 Shore Road • Naperville, Illinois 60563 • Phone (630) 778-1200 • Fax (630) 778-1233

Analytical Report

Client: BRADBURNE, BRILLER & JOHNSON
Project ID: Lyons, IL (Monitoring Wells)
Sample ID: Quarry Well
Sample No: 7-2232-006

Date Collected: 05/18/07
Time Collected: 14:15
Date Received: 05/18/07
Date Reported: 06/04/07

Analyte		Result	R.L.	Units	Flags
Total Metals	**Method: 6010B**		**Preparation Method 3010A**		
Analysis Date: 05/24/07			Preparation Date: 05/21/07		
Arsenic		< 0.002	0.002	mg/L	
Barium		0.043	0.001	mg/L	
Cadmium		< 0.001	0.001	mg/L	
Chromium		< 0.001	0.001	mg/L	
Lead		< 0.002	0.002	mg/L	
Selenium		< 0.002	0.002	mg/L	
Silver		< 0.001	0.001	mg/L	
pH @ 25°C	**Method: 4500H+,B**				
Analysis Date: 05/21/07 13:00					
pH @ 25°C		7.40		Units	

First Environmental Laboratories, Inc.
IL ELAP / NELAC Accreditation # 100292
1600 Shore Road • Naperville, Illinois 60563 • Phone (630) 778-1200 • Fax (630) 778-1233

Analytical Report

Client:	BRADBURNE, BRILLER & JOHNSON	**Date Collected:**	05/18/07
Project ID:	Lyons, IL (Monitoring Wells)	**Time Collected:**	14:30
Sample ID:	Quarry Discharge	**Date Received:**	05/18/07
Sample No:	7-2232-007	**Date Reported:**	06/04/07

Analyte	Result	R.L.	Units	Flags
Volatile Organic Compounds **Method: 5030B/8260B**				
Analysis Date: 05/23/07				
Acetone	< 100	100	ug/L	
Benzene	< 5.0	5.0	ug/L	
Bromodichloromethane	< 1.0	1.0	ug/L	
Bromoform	< 1.0	1.0	ug/L	
Bromomethane	< 5.0	5.0	ug/L	
2-Butanone (MEK)	< 10.0	10.0	ug/L	
Carbon disulfide	< 5.0	5.0	ug/L	
Carbon tetrachloride	< 5.0	5.0	ug/L	
Chlorobenzene	< 5.0	5.0	ug/L	
Chlorodibromomethane	< 1.0	1.0	ug/L	
Chloroethane	< 10.0	10.0	ug/L	
Chloroform	< 1.0	1.0	ug/L	
Chloromethane	< 10.0	10.0	ug/L	
1,1-Dichloroethane	< 5.0	5.0	ug/L	
1,2-Dichloroethane	< 5.0	5.0	ug/L	
1,1-Dichloroethene	< 5.0	5.0	ug/L	
cis-1,2-Dichloroethene	< 5.0	5.0	ug/L	
trans-1,2-Dichloroethene	< 5.0	5.0	ug/L	
1,2-Dichloropropane	< 5.0	5.0	ug/L	
cis-1,3-Dichloropropene	< 1.0	1.0	ug/L	
trans-1,3-Dichloropropene	< 1.0	1.0	ug/L	
Ethylbenzene	< 5.0	5.0	ug/L	
2-Hexanone	< 10.0	10.0	ug/L	
Methyl-tert-butylether (MTBE)	< 5.0	5.0	ug/L	
4-Methyl-2-pentanone (MIBK)	< 10.0	10.0	ug/L	
Methylene chloride	< 5.0	5.0	ug/L	
Styrene	< 5.0	5.0	ug/L	
1,1,2,2-Tetrachloroethane	< 5.0	5.0	ug/L	
Tetrachloroethene	< 5.0	5.0	ug/L	
Toluene	< 5.0	5.0	ug/L	
1,1,1-Trichloroethane	< 5.0	5.0	ug/L	
1,1,2-Trichloroethane	< 5.0	5.0	ug/L	
Trichloroethene	< 5.0	5.0	ug/L	
Vinyl acetate	< 10.0	10.0	ug/L	
Vinyl chloride	< 2.0	2.0	ug/L	
Xylene, Total	< 5.0	5.0	ug/L	

First Environmental Laboratories, Inc.
IL ELAP / NELAC Accreditation # 100292
1600 Shore Road • Naperville, Illinois 60563 • Phone (630) 778-1200 • Fax (630) 778-1233

Analytical Report

Client: BRADBURNE, BRILLER & JOHNSON
Project ID: Lyons, IL (Monitoring Wells)
Sample ID: Quarry Discharge
Sample No: 7-2232-007

Date Collected: 05/18/07
Time Collected: 14:30
Date Received: 05/18/07
Date Reported: 06/04/07

Analyte	Result	R.L.	Units	Flags
Semi-Volatile Compounds Analysis Date: 05/27/07	**Method: 8270C**	**Preparation Method 3510C** Preparation Date: 05/24/07		
Benzidine	< 10	10	ug/L	
Benzoic acid	< 50	50	ug/L	
Benzyl alcohol	< 20	20	ug/L	
bis(2-Chloroethoxy)methane	< 10	10	ug/L	
bis(2-Chloroethyl)ether	< 10	10	ug/L	
bis(2-Chloroisopropyl)ether	< 10	10	ug/L	
bis(2-Ethylhexyl)phthalate	< 5	5	ug/L	
4-Bromophenyl phenyl ether	< 10	10	ug/L	
Butyl benzyl phthalate	< 10	10	ug/L	
Carbazole	< 10	10	ug/L	
4-Chloroaniline	< 10	10	ug/L	
4-Chloro-3-methylphenol	< 20	20	ug/L	
2-Chloronaphthalene	< 10	10	ug/L	
2-Chlorophenol	< 10	10	ug/L	
4-Chlorophenyl phenyl ether	< 10	10	ug/L	
Dibenzofuran	< 10	10	ug/L	
Di-n-butyl phthalate	< 10	10	ug/L	
1,2-Dichlorobenzene	< 10	10	ug/L	
1,3-Dichlorobenzene	< 10	10	ug/L	
1,4-Dichlorobenzene	< 10	10	ug/L	
2,4-Dichlorophenol	< 10	10	ug/L	
Diethyl phthalate	< 10	10	ug/L	
2,4-Dimethylphenol	< 10	10	ug/L	
Dimethyl phthalate	< 10	10	ug/L	
4,6-Dinitro-2-methylphenol	< 50	50	ug/L	
2,4-Dinitrophenol	< 10	10	ug/L	
2,4-Dinitrotoluene	< 10	10	ug/L	
2,6-Dinitrotoluene	< 10	10	ug/L	
Di-n-octylphthalate	< 10	10	ug/L	
Hexachlorobenzene	< 10	10	ug/L	
Hexachlorobutadiene	< 10	10	ug/L	
Hexachlorocyclopentadiene	< 10	10	ug/L	
Hexachloroethane	< 5	5	ug/L	
Isophorone	< 10	10	ug/L	
2-Methylnaphthalene	< 10	10	ug/L	
2-Methylphenol	< 10	10	ug/L	

First Environmental Laboratories, Inc.
IL ELAP / NELAC Accreditation # 100292
1600 Shore Road • Naperville, Illinois 60563 • Phone (630) 778-1200 • Fax (630) 778-1233

Analytical Report

Client:	BRADBURNE, BRILLER & JOHNSON	**Date Collected:**	05/18/07
Project ID:	Lyons, IL (Monitoring Wells)	**Time Collected:**	14:30
Sample ID:	Quarry Discharge	**Date Received:**	05/18/07
Sample No:	7-2232-007	**Date Reported:**	06/04/07

Analyte		Result	R.L.	Units	Flags
Semi-Volatile Compounds Analysis Date: 05/27/07	**Method: 8270C**		**Preparation Method 3510C** Preparation Date: 05/24/07		
3 & 4-Methylphenol		< 10	10	ug/L	
2-Nitroaniline		< 50	50	ug/L	
3-Nitroaniline		< 50	50	ug/L	
4-Nitroaniline		< 20	20	ug/L	
Nitrobenzene		< 10	10	ug/L	
2-Nitrophenol		< 10	10	ug/L	
4-Nitrophenol		< 50	50	ug/L	
n-Nitrosodimethylamine		< 10	10	ug/L	
n-Nitrosodiphenylamine		< 10	10	ug/L	
n-Nitrosodi-n-propylamine		< 10	10	ug/L	
Pentachlorophenol		< 10	10	ug/L	
Phenol		< 10	10	ug/L	
1,2,4-Trichlorobenzene		< 10	10	ug/L	
2,4,5-Trichlorophenol		< 10	10	ug/L	
2,4,6-Trichlorophenol		< 10	10	ug/L	
Polynuclear Aromatic Hydrocarbons Analysis Date: 05/26/07	**Method: 8270C**		**Preparation Method 3510C** Preparation Date: 05/24/07		
Acenaphthene		< 10	10	ug/L	
Acenaphthylene		< 10	10	ug/L	
Anthracene		< 5	5	ug/L	
Benzo(a)anthracene		< 0.13	0.13	ug/L	
Benzo(a)pyrene		< 0.2	0.2	ug/L	
Benzo(b)fluoranthene		< 0.18	0.18	ug/L	
Benzo(k)fluoranthene		< 0.17	0.17	ug/L	
Benzo(ghi)perylene		< 0.4	0.4	ug/L	
Chrysene		< 1.5	1.5	ug/L	
Dibenzo(a,h)anthracene		< 0.3	0.3	ug/L	
Fluoranthene		< 2	2	ug/L	
Fluorene		< 2	2	ug/L	
Indeno(1,2,3-cd)pyrene		< 0.3	0.3	ug/L	
Naphthalene		< 10	10	ug/L	
Phenanthrene		< 5	5	ug/L	
Pyrene		< 2	2	ug/L	

First Environmental Laboratories, Inc.
IL ELAP / NELAC Accreditation # 100292
1600 Shore Road • Naperville, Illinois 60563 • Phone (630) 778-1200 • Fax (630) 778-1233

Analytical Report

Client:	BRADBURNE, BRILLER & JOHNSON	**Date Collected:**	05/18/07
Project ID:	Lyons, IL (Monitoring Wells)	**Time Collected:**	14:30
Sample ID:	Quarry Discharge	**Date Received:**	05/18/07
Sample No:	7-2232-007	**Date Reported:**	06/04/07

Analyte		Result	R.L.	Units	Flags
Pesticides/PCBs Analysis Date: 05/25/07	**Method: 8081A/8082**		**Preparation Method 3510C** Preparation Date: 05/24/07		
Aldrin		< 0.05	0.05	ug/L	
Aroclor 1016		< 0.50	0.50	ug/L	
Aroclor 1221		< 0.50	0.50	ug/L	
Aroclor 1232		< 0.50	0.50	ug/L	
Aroclor 1242		< 0.50	0.50	ug/L	
Aroclor 1248		< 0.50	0.50	ug/L	
Aroclor 1254		< 0.50	0.50	ug/L	
Aroclor 1260		< 0.50	0.50	ug/L	
alpha-BHC		< 0.05	0.05	ug/L	
beta-BHC		< 0.05	0.05	ug/L	
delta-BHC		< 0.05	0.05	ug/L	
gamma-BHC (Lindane)		< 0.05	0.05	ug/L	
alpha-Chlordane		< 0.50	0.50	ug/L	
gamma-Chlordane		< 0.50	0.50	ug/L	
4,4'-DDD		< 0.10	0.10	ug/L	
4,4'-DDE		< 0.10	0.10	ug/L	
4,4'-DDT		< 0.10	0.10	ug/L	
Dieldrin		< 0.10	0.10	ug/L	
Endosulfan I		< 0.05	0.05	ug/L	
Endosulfan II		< 0.10	0.10	ug/L	
Endosulfan sulfate		< 0.10	0.10	ug/L	
Endrin		< 0.10	0.10	ug/L	
Endrin aldehyde		< 0.10	0.10	ug/L	
Endrin ketone		< 0.10	0.10	ug/L	
Heptachlor		< 0.05	0.05	ug/L	
Heptachlor epoxide		< 0.05	0.05	ug/L	
Methoxychlor		< 0.50	0.50	ug/L	
Toxaphene		< 1.0	1.0	ug/L	
Herbicides Method 8321A Analysis Date: 05/25/07	**Method: 8321A**				
2,4-D		< 0.2	0.2	ug/L	S
Silvex (2,4,5-TP)		< 0.10	0.1	ug/L	S
Total Metals Analysis Date: 05/23/07	**Method: 7470A**				
Mercury		< 0.0005	0.0005	mg/L	

First Environmental Laboratories, Inc.
IL ELAP / NELAC Accreditation # 100292
1600 Shore Road • Naperville, Illinois 60563 • Phone (630) 778-1200 • Fax (630) 778-1233

Analytical Report

Client:	BRADBURNE, BRILLER & JOHNSON	**Date Collected:**	05/18/07
Project ID:	Lyons, IL (Monitoring Wells)	**Time Collected:**	14:30
Sample ID:	Quarry Discharge	**Date Received:**	05/18/07
Sample No:	7-2232-007	**Date Reported:**	06/04/07

Analyte		Result	R.L.	Units	Flags
Total Metals	**Method: 6010B**		**Preparation Method 3010A**		
Analysis Date: 05/24/07			Preparation Date: 05/21/07		
Arsenic		< 0.002	0.002	mg/L	
Barium		0.043	0.001	mg/L	
Cadmium		< 0.001	0.001	mg/L	
Chromium		< 0.001	0.001	mg/L	
Lead		< 0.002	0.002	mg/L	
Selenium		< 0.002	0.002	mg/L	
Silver		< 0.001	0.001	mg/L	
pH @ 25°C	**Method: 4500H+,B**				
Analysis Date: 05/21/07 13:00					
pH @ 25°C		8.20		Units	

printed 09/18/2007 4:52PM by epa4561 p. 433/439

CHAIN OF CUSTODY RECORD

First Environmental Laboratories, Inc.

First Environmental Laboratories
1600 Shore Road, Suite D
Naperville, Illinois 60563
Phone: (630) 778-1300 • Fax: (630) 778-1333
24 Hr. Pager (708) 569-7507
E-mail: info@firstenv.com
IEPA Certification# 100292

Company Name: Bradburne, Briller + Johnson
Street Address: 345 N. State Street Suite 2200
City: Chicago State: IL Zip: 60610
Phone: 312-644-8556 Fax: 312-644-8555 e-mail: kmccartney@bbjgroup.com
Send Report To: Kevin McCartney Via: Fax ☐ e-mail ☑
Sampled By: Mike Cameron + Karen Beaman

Project I.D.: Lyons, IL (Monitoring wells)
P.O. #:

Matrix Codes: S = Soil W = Water O = Other

Analyses

Date/Time Taken	Sample Description	Matrix	VOCs (8260B)	SVOCs (8270C)	PCBs (8082)	Pesticides (8081A)	Metals (8151)	Org. Cl. Pest. (8151A)	pH (150.1 Method)		Comments	Lab I.D.
12:30	MW-9	W	✓	✓	✓	✓	✓	✓	✓			2272-001
1:00	MW-12	W	✓	✓	✓	✓	✓	✓	✓			002
1:30	MW-10	W	✓	✓	✓	✓	✓	✓	✓			003
2:00	MW-5 (MS)	W	✓	✓	✓	✓	✓	✓	✓		INSUFFICIENT VOLUME	004
	trip blank		✓									005
2:15	Quarry Well	W	✓	✓	✓	✓	✓	✓	✓		Hold Sample per request	006
2:30	Quarry Discharge	W	✓	✓	✓	✓	✓	✓	✓		Hold 5/21/07 (TB)	007

FOR LAB USE ONLY:

Cooler Temperature: 0.1-6°C Yes ✓ No__ 4.7 °C
Received within 6 hrs. of collection ____
Ice Present: Yes ✓ No__

Sample Refrigerated: Yes__ No__
Refrigerator Temperature: ____ °C
5035 Vials Frozen: Yes__ No__
Freezer Temperature: ____ °C

Containers Received Preserved: ☐ Yes ☐ No

Notes and Special Instructions: Please hold the "Quarry Well" and "Quarry Discharge" samples till further notice

Relinquished By: Karen Beaman Date/Time 5/18/07 5:15 Received By: [signature] Date/Time 5/18/07 5:15
Relinquished By: ____ Date/Time ____ Received By: ____ Date/Time ____

Rev. 406

printed 09/18/2007 4:52PM by epa4561 p. 434/439

APPENDIX D

VILLAGE OF LYONS ORDINANCE 5-18-99-3

Municipality: Lyons

County: Cook

LPC Number: 31715020

OC: 00012803

printed 09/18/2007 4:52PM by epa4561 p. 436/439

CERTIFICATION

STATE OF ILLINOIS)
COUNTY OF COOK)
VILLAGE OF LYONS)

I, WILLIAM J. POLICH, VILLAGE CLERK of the Village of Lyons DO HEREBY CERTIFY that the foregoing:

ORDINANCE NO. 5-18-99-3

is a true and correct copy of AN ORDINANCE now on file in my office, which said ORDINANCE was approved and passed by the President and Board of Trustees of the Village of Lyons, Illinois aforesaid, on the 18TH day of MAY, 1999.

I DO HEREBY FURTHER CERTIFY that the original of which the foregoing is a true and correct copy, is entrusted to my care and safekeeping.

IN WITNESS WHEREOF, I have hereunto set my hand and affixed the Corporate Seal of the Village of Lyons aforesaid, at the Village of Lyons, in the County of Cook and the State of Illinois, this 26TH day of MAY, 1999.

William J. Polich

William J. Polich
Village Clerk, C.M.C.
Lyons, Illinois

RELEASABLE
DEC 1 1 2003
REVIEWER MM

printed 09/18/2007 4:52PM by epa4561 p. 437/439

VILLAGE OF LYONS

ORDINANCE NO. 5-18-99-3

AN ORDINANCE AMMENDING VILLAGE ORDINANCE ARTICLE 7, CHAPTER 4, SECTION 2 WHICH PROHIBITS WELLS FOR POTABLE WATER SUPPLY

ADOPTED BY THE PRESIDENT
AND BOARD OF TRUSTEES
OF THE
VILLAGE OF LYONS

THIS 18TH DAY OF MAY, 1999

Published in pamphlet form by the authority of the President and Board of Trustees of the Village of Lyons, Cook County, Illinois this 18th day of May, 1999

ORDINANCE NO. 2-18-99-5

AN ORDINANCE AMMENDING VILLAGE
ORDINANCE ARTICLE 7, CHAPTER 4, SECTION 2
WHICH PROHIBITS THE USE OF GROUNDWATER SUPPLY BY THE INSTALLATION
OR USE OF POTABLE WATER WELLS OR ANY OTHER

WHEREAS, certain properties in the Village of Lyons, Illinois have been used over a period of time for commercial/industrial purposes; and

WHEREAS, because of said use, concentrations of certain chemical constituents in the groundwater beneath the Village may exceed Class 1 groundwater quality standards for potable resource groundwater as set forth in 35 Illinois Administrative Code 620 or Tier 1 residential remediation objectives as set forth in 35 Illinois Administrative Code 742; and

WHEREAS, the Village of Lyons desires to limit potential threats to human health from groundwater contamination while facilitating the redevelopment and productive use of Properties that are the source of said chemical constituents;

NOW, THEREFORE BE IT ORDAINED BY THE VILLAGE BOARD OF THE CITY VILLAGE OF LYONS:

Section One. Article 7, Chapter 4, Section 2 of the ordinances of the Village of Lyons is repealed and replaced in its entirety by the following:

7-4-2. Use of groundwater as a potable water supply is prohibited.
The use or attempt to use as a potable water supply groundwater from within the corporate limits of the Village of Lyons by the installation or drilling of wells or by any other method is hereby prohibited, including withdrawal by the Village of Lyons.

A. Penalties.
Any person violating the Provisions of this ordinance shall be subject to a fine of up to $750.00 for each violation.

B. Definitions.
Person is any individual, partnership, co-partnership, firm, company, limited liability company, corporation, association, joint stock company, trust estate, political subdivision, or any other legal entity, or their legal representatives, agents or assigns.
Potable water is any water used for human or domestic consumption including but not limited to, water used for drinking, bathing, swimming, washing dishes or preparing foods.

Memorandum of Understanding. The President of the Village of Lyons is hereby authorized and directed to enter into a Memorandum of Understanding with the Illinois Environmental Protection Agency (Illinois EPA) in which the Village assumes responsibility for tracking remediated sites, notifying the Illinois EPA of changes to this ordinance and taking certain precautions when siting public potable water supply wells.

Section Two: Severability. If any provision of this ordinance or its application to any person or under any circumstances is adjudged invalid, such adjudication shall not affect the validity of the ordinance as a whole or of any portion not adjudged invalid.

Section Three: Effective Date. This ordinance shall be in full force and effect from and after its passage, approval and publication in pamphlet form as provided by law.

PASSED THIS 18th DAY OF MAY, 1999

AYES: 5

NAYS: 0

ABSENT: One (Trustee TVRDIK)

APPROVED THIS 18th DAY
OF MAY, 1999

David A. Visk
Village President

ATTEST:

William J. Polich, C.M.C.
Village Clerk